STATE	STATE PROJECT REFERENCE NO.	SHEET NO.	TOTAL SHEETS
N.C.	41665.1C	1	

STATE PROJ. NO.	F.A. PROJ. NO.	DESCRIPTION
41665.1C		PE
41665.1C		R/W & UTILITY
41665.1C		CONST.

STATE OF NORTH CAROLINA
DIVISION OF HIGHWAYS

WILKES COUNTY

LOCATION: BRIDGE BRIDGE NO. 694 ON SR 1304 (BOONE TRAIL RD) OVER NORTH PRONG LEWIS FORK CREEK

TYPE OF WORK: GRADING, PAVING, DRAINAGE, SIGNING, AND STRUCTURE

PROJECT: 41665.1C

CONTRACT: 70000013754

FINAL PLANS

See Sheet 1A For Index of Sheets
See Sheet 1B For Conventional Symbols

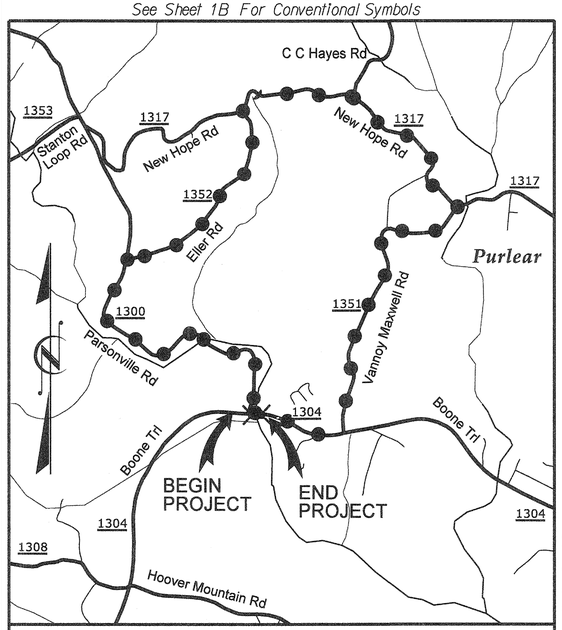

VICINITY MAP ***NTS***

OFF-SITE DETOUR

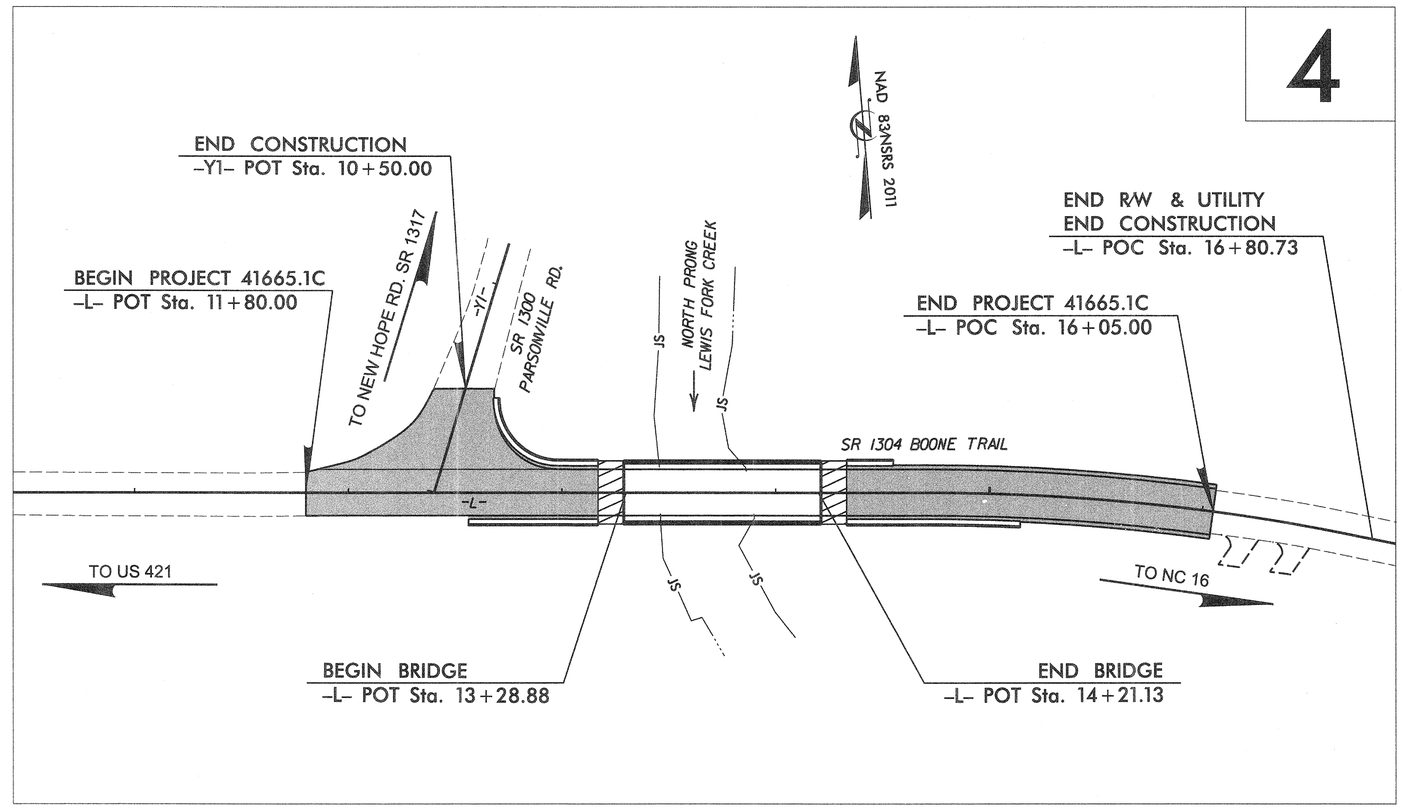

NCDOT CONTACT:
JAMI GUYNN
HIGHWAY DIVISION 11
BRIDGE PROGRAM MANAGER
336-903-9220

GRAPHIC SCALES

30 15 0 30 60
PLANS

20 10 0 20 40
PROFILE (HORIZONTAL)

4 2 0 4 8
PROFILE (VERTICAL)

DESIGN DATA

ADT 2008 = 1400
ADT 2025 = 2800
DHV = %
D = %
T = 6% *
V = 60 MPH
* TTST = DUAL
FUNC CLASS = MINOR COLLECTOR SUBREGIONAL TIER

PROJECT LENGTH

LENGTH ROADWAY PROJECT	=	0.063 MILES
LENGTH STRUCTURES PROJECT	=	0.017 MILES
TOTAL LENGTH PROJECT	=	0.080 MILES

Prepared In the Office of:
THE LOUIS BERGER GROUP, Inc.
1001 Wade Avenue, Suite 400
Raleigh, North Carolina 27605
License No.: F-0840

2012 STANDARD SPECIFICATIONS

RIGHT OF WAY DATE:

LETTING DATE:
APRIL 17, 2014

DEAN D. HATFIELD, PE
PROJECT ENGINEER

WILLIAM E. TILLITT, PE
PROJECT DESIGN ENGINEER

HYDRAULICS ENGINEER
NORTH CAROLINA PROFESSIONAL SEAL 032134 ENGINEER WALTER ROBERTS
SIGNATURE: P.E. 3/17/14

ROADWAY DESIGN ENGINEER
NORTH CAROLINA PROFESSIONAL SEAL 031972 ENGINEER WILLIAM E. TILLITT
SIGNATURE: P.E. 3/17/14

DIVISION OF HIGHWAYS
STATE OF NORTH CAROLINA

P.E.
STATE HIGHWAY DESIGN ENGINEER

3/17/2014 11:14:24 AM
G:\CKE Projects\CKE21004 Limited Services Division Offices\Wilkes Site 694\Roadway\Proj\960694_RDY_00_TSH.dgn
G:\CADD\Plot\CKE21004\CKE21004_rdy.tbl

PROJECT REFERENCE NO.	SHEET NO.
41665.1C	1A

ROADWAY DESIGN ENGINEER

NORTH CAROLINA PROFESSIONAL SEAL 031972 ENGINEER WILLIAM E. TILLETT

3/17/2014

REGISTERED ENGINEER

STATE OF NORTH CAROLINA
DIVISION OF HIGHWAYS

INDEX OF SHEETS

INDEX OF SHEETS

SHEET NUMBER	SHEET
1	TITLE SHEET
1-A	INDEX OF SHEETS, GENERAL NOTES, AND LIST OF STANDARD DRAWINGS
1-B	CONVENTIONAL SYMBOLS
1-C	SURVEY CONTROL
2	PAVEMENT SCHEDULE, TYPICAL SECTIONS, AND WEDGING DETAILS
3	SUMMARY OF QUANTITIES
3A	SUMMARIES OF EARTHWORK, GUARDRAIL & SUMMARY OF DRAINAGE QUANTITIES
4	PLAN SHEET
5	PROFILE SHEET
TMP-1 THRU TMP-2	TRAFFIC MANAGEMENT PLANS
PMP-1 THRU PMP-2	PAVEMENT MARKING PLANS
EC-1 THRU EC-2	EROSION CONTROL PLANS
UO-1 THRU UO-8	UTLITIES BY OTHERS PLANS
X-1 THRU X-11	CROSS-SECTIONS
S-1 THRU S-15	STRUCTURE PLANS

GENERAL NOTES

GENERAL NOTES: 2012 SPECIFICATIONS
EFFECTIVE: 01-17-12
REVISED: 11/01/11

GRADING AND SURFACING OR RESURFACING AND WIDENING:

THE GRADE LINES SHOWN DENOTE THE FINISHED ELEVATION OF THE PROPOSED SURFACING AT GRADE POINTS SHOWN ON THE TYPICAL SECTIONS. WHERE NO GRADE LINES ARE SHOWN, THE PROFILES SHOWN DENOTE THE TOP ELEVATION OF THE EXISTING PAVEMENT ALONG THE CENTER LINE OF SURVEY ON WHICH THE PROPOSED RESURFACING WILL BE PLACED. GRADE LINES MAY BE ADJUSTED BY THE ENGINEER IN ORDER TO SECURE A PROPER TIE-IN.

CLEARING:

CLEARING ON THIS PROJECT SHALL BE PERFORMED TO THE LIMITS ESTABLISHED BY METHOD II.

SUPERELEVATION:

ALL CURVES ON THIS PROJECT SHALL BE SUPERELEVATED IN ACCORDANCE WITH STD. NO. 225.04 USING THE RATE OF SUPERELEVATION AND RUNOFF SHOWN ON THE PLANS. SUPERELEVATION IS TO BE REVOLVED ABOUT THE GRADE POINTS SHOWN ON THE TYPICAL SECTIONS.

SHOULDER CONSTRUCTION:

ASPHALT, EARTH, AND CONCRETE SHOULDER CONSTRUCTION ON THE HIGH SIDE OF SUPERELEVATED CURVES SHALL BE IN ACCORDANCE WITH STD. NO. 560.01.

SIDE ROADS:

THE CONTRACTOR WILL BE REQUIRED TO DO ALL NECESSARY WORK TO PROVIDE SUITABLE CONNECTIONS WITH ALL ROADS, STREETS, AND DRIVES ENTERING THIS PROJECT. THIS WORK WILL BE PAID FOR AT THE CONTRACT UNIT PRICE FOR THE PARTICULAR ITEMS INVOLVED.

GUARDRAIL:

THE GUARDRAIL LOCATIONS SHOWN ON THE PLANS MAY BE ADJUSTED DURING CONSTRUCTION AS DIRECTED BY THE ENGINEER. THE CONTRACTOR SHOULD CONSULT WITH THE ENGINEER PRIOR TO ORDERING GUARDRAIL MATERIAL.

TEMPORARY SHORING:

SHORING REQUIRED FOR THE MAINTENANCE OF TRAFFIC WILL BE PAID FOR AS "EXTRA WORK" IN ACCORDANCE WITH SECTION 104-7.

END BENTS:

THE ENGINEER SHALL CHECK THE STRUCTURE END BENT PLANS, DETAILS, AND CROSS-SECTION PRIOR TO SETTING OF THE SLOPE STAKES FOR THE EMBANKMENT OR EXCAVATION APPROACHING A BRIDGE.

UTILITIES:

UTILITY OWNERS ON THIS PROJECT ARE

DUKE POWER, WILKES TELEPHONE, WEST WILKES WATER & CHARTER (CABLE)

ANY RELOCATION OF EXISTING UTILITIES WILL BE ACCOMPLISHED BY OTHERS.

RIGHT-OF-WAY MARKERS:

ALL RIGHT-OF-WAY MARKERS ON THIS PROJECT SHALL BE PLACED BY CONTRACT.

ROADWAY ENGLISH STANDARD DRAWINGS

2012 ROADWAY ENGLISH STANDARD DRAWINGS

The following Roadway Standards as appear in "Roadway Standard Drawings" Highway Design Branch - N. C. Department of Transportation - Raleigh, N. C., Dated January, 2012 are applicable to this project and by reference hereby are considered a part of these plans:

STD.NO.	TITLE
DIVISION 2 - EARTHWORK	
200.02	Method of Clearing - Method II
225.04	Method of Obtaining Superelevation - Two Lane Pavement
DIVISION 3 - PIPE CULVERTS	
300.01	Method of Pipe Installation
DIVISION 5 - SUBGRADE, BASES AND SHOULDERS	
560.01	Method of Shoulder Construction - High Side of Superelevated Curve - Method I
DIVISION 8 - INCIDENTALS	
840.18	Concrete Grated Drop Inlet Type 'B' - 12" thru 36" Pipe
840.20	Frames and Wide Slot Flat Grates
840.25	Anchorage for Frames - Brick or Concrete or Precast
840.27	Brick Grated Drop Inlet Type 'B' - 12" thru 36" Pipe
846.04	Drop Inlet Installation in Shoulder Berm Gutter
862.01	Guardrail Placement
862.02	Guardrail Installation
862.03	Structure Anchor Units
876.02	Guide for Rip Rap at Pipe Outlets
876.04	Drainage Ditches with Class 'B' Rip Rap

3/17/2014 9:49:26 AM
$PENTBL1$
G:\CKE Projects\CKE2104 Limited Services Division Offices\Wilkes Site 694\Roadway\Proj\960694_RDY_01A.dgn

PROJECT REFERENCE NO.	SHEET NO.
41665JC	1B

Note: Not to Scale

**S.U.E. = Subsurface Utility Engineering*

STATE OF NORTH CAROLINA
DIVISION OF HIGHWAYS

CONVENTIONAL PLAN SHEET SYMBOLS

BOUNDARIES AND PROPERTY:

- State Line
- County Line
- Township Line
- City Line
- Reservation Line
- Property Line
- Existing Iron Pin — EIP
- Property Corner
- Property Monument — ECM
- Parcel/Sequence Number — 123
- Existing Fence Line
- Proposed Woven Wire Fence
- Proposed Chain Link Fence
- Proposed Barbed Wire Fence
- Existing Wetland Boundary — WLB
- Proposed Wetland Boundary — WLB
- Existing Endangered Animal Boundary — EAB
- Existing Endangered Plant Boundary — EPB
- Known Soil Contamination: Area or Site
- Potential Soil Contamination: Area or Site

BUILDINGS AND OTHER CULTURE:

- Gas Pump Vent or U/G Tank Cap
- Sign — S
- Well — W
- Small Mine
- Foundation
- Area Outline
- Cemetery
- Building
- School
- Church
- Dam

HYDROLOGY:

- Stream or Body of Water
- Hydro, Pool or Reservoir
- Jurisdictional Stream — JS
- Buffer Zone 1 — BZ 1
- Buffer Zone 2 — BZ 2
- Flow Arrow
- Disappearing Stream
- Spring
- Wetland
- Proposed Lateral, Tail, Head Ditch — FLOW
- False Sump

RAILROADS:

- Standard Gauge — CSX TRANSPORTATION
- RR Signal Milepost — MILEPOST 35
- Switch — SWITCH
- RR Abandoned
- RR Dismantled

RIGHT OF WAY:

- Baseline Control Point
- Existing Right of Way Marker
- Existing Right of Way Line
- Proposed Right of Way Line — RW
- Proposed Right of Way Line with Iron Pin and Cap Marker — RW
- Proposed Right of Way Line with Concrete or Granite Marker — RW
- Existing Control of Access — CA
- Proposed Control of Access — CA
- Existing Easement Line — E
- Proposed Temporary Construction Easement — E
- Proposed Temporary Drainage Easement — TDE
- Proposed Permanent Drainage Easement — PDE
- Proposed Permanent Drainage / Utility Easement — DUE
- Proposed Permanent Utility Easement — PUE
- Proposed Temporary Utility Easement — TUE
- Proposed Aerial Utility Easement — AUE
- Proposed Permanent Easement with Iron Pin and Cap Marker

ROADS AND RELATED FEATURES:

- Existing Edge of Pavement
- Existing Curb
- Proposed Slope Stakes Cut — C
- Proposed Slope Stakes Fill — F
- Proposed Curb Ramp — CR
- Existing Metal Guardrail
- Proposed Guardrail
- Existing Cable Guiderail
- Proposed Cable Guiderail
- Equality Symbol
- Pavement Removal

VEGETATION:

- Single Tree
- Single Shrub
- Hedge
- Woods Line
- Orchard
- Vineyard — Vineyard

EXISTING STRUCTURES:

MAJOR:

- Bridge, Tunnel or Box Culvert — CONC
- Bridge Wing Wall, Head Wall and End Wall — CONC WW

MINOR:

- Head and End Wall — CONC HW
- Pipe Culvert
- Footbridge
- Drainage Box: Catch Basin, DI or JB — CB
- Paved Ditch Gutter
- Storm Sewer Manhole — S
- Storm Sewer — S

UTILITIES:

POWER:

- Existing Power Pole
- Proposed Power Pole
- Existing Joint Use Pole
- Proposed Joint Use Pole
- Power Manhole — P
- Power Line Tower
- Power Transformer
- U/G Power Cable Hand Hole
- H-Frame Pole
- Recorded U/G Power Line — P
- Designated U/G Power Line (S.U.E.*) — P

TELEPHONE:

- Existing Telephone Pole
- Proposed Telephone Pole
- Telephone Manhole — T
- Telephone Booth
- Telephone Pedestal — T
- Telephone Cell Tower
- U/G Telephone Cable Hand Hole — HH
- Recorded U/G Telephone Cable — T
- Designated U/G Telephone Cable (S.U.E.*) — T
- Recorded U/G Telephone Conduit — TC
- Designated U/G Telephone Conduit (S.U.E.*) — TC
- Recorded U/G Fiber Optics Cable — T FO
- Designated U/G Fiber Optics Cable (S.U.E.*) — T FO

WATER:

- Water Manhole — W
- Water Meter
- Water Valve
- Water Hydrant
- Recorded U/G Water Line — W
- Designated U/G Water Line (S.U.E.*) — W
- Above Ground Water Line — A/G Water

TV:

- TV Satellite Dish
- TV Pedestal — C
- TV Tower
- U/G TV Cable Hand Hole — HH
- Recorded U/G TV Cable — TV
- Designated U/G TV Cable (S.U.E.*) — TV
- Recorded U/G Fiber Optic Cable — TV FO
- Designated U/G Fiber Optic Cable (S.U.E.*) — TV FO

GAS:

- Gas Valve
- Gas Meter
- Recorded U/G Gas Line — G
- Designated U/G Gas Line (S.U.E.*) — G
- Above Ground Gas Line — A/G Gas

SANITARY SEWER:

- Sanitary Sewer Manhole
- Sanitary Sewer Cleanout
- U/G Sanitary Sewer Line — SS
- Above Ground Sanitary Sewer — A/G Sanitary Sewer
- Recorded SS Forced Main Line — FSS
- Designated SS Forced Main Line (S.U.E.*) — FSS

MISCELLANEOUS:

- Utility Pole
- Utility Pole with Base
- Utility Located Object
- Utility Traffic Signal Box — S
- Utility Unknown U/G Line — ?UTL
- U/G Tank; Water, Gas, Oil
- Underground Storage Tank, Approx. Loc. — UST
- A/G Tank; Water, Gas, Oil
- Geoenvironmental Boring
- U/G Test Hole (S.U.E.*)
- Abandoned According to Utility Records — AATUR
- End of Information — E.O.I.

04/16/11
3/17/2014 9:49:27 AM
$PENTBLL$
G:\CKE Projects\CKE21004 Limited Services Division Offices\Wilkes Site 694\Roadway\Proj\960694_RDY_01_1B.dgn

PROJECT REFERENCE NO.	SHEET NO.
41665JC	1C
R/W SHEET NO.	

0' 30' 60'

SURVEY CONTROL SHEET

DATUM DESCRIPTION

THE LOCALIZED COORDINATE SYSTEM DEVELOPED FOR THIS PROJECT IS BASED ON THE STATE PLANE COORDINATES ESTABLISHED BY NCDOT FOR MONUMENT "GPS B694-2"
WITH NAD 83/NSRS 2011 STATE PLANE GRID COORDINATES OF
NORTHING: 893776.0297(ft) EASTING: 1320278.2243(ft)
ELEVATION: 1219.11(ft)
THE AVERAGE COMBINED GRID FACTOR USED ON THIS PROJECT (GROUND TO GRID) IS: 0.9999518302
THE N.C. LAMBERT GRID BEARING AND LOCALIZED HORIZONTAL GROUND DISTANCE FROM "GPS B694-1" TO -L- STATION 10+00 IS N 82°4'48" W 265.58'
ALL LINEAR DIMENSIONS ARE LOCALIZED HORIZONTAL DISTANCES
VERTICAL DATUM USED IS NAVD 88

B6941 (GPS B694-1) N 893782.4238 E 1319946.3011 ELEV 1215.82 STA 5+00.00

COURSE FROM B6941 TO B6942 S 88°53'47.11" E DIST 331.98

B6942 (GPS B694-2) N 893776.0297 E 1320278.2243 ELEV 1219.11 STA 8+31.98

-L-

POT	STA	10+00.00	N	893,819.0180	E	1,319,683.2500
P.C.	STA	14+69.57	N	893,780.7680	E	1,320,151.2565
P.T.	STA	16+68.25	N	893,745.0824	E	1,320,346.3778
POT	STA	17+09.96	N	893,733.5475	E	1,320,386.4565

-Y1-

POT	STA	10+00.00	N	893,799.4629	E	1,319,922.5158
POT	STA	11+19.81	N	893,910.7100	E	1,319,966.9975

BM #1 ELEVATION = 1210.11
N 893967. E 1320207.
BL STATION 7+57.00 190' LEFT
4 PRONG SYCAMORE TREE

BM #1

NAD 83/NSRS 2011

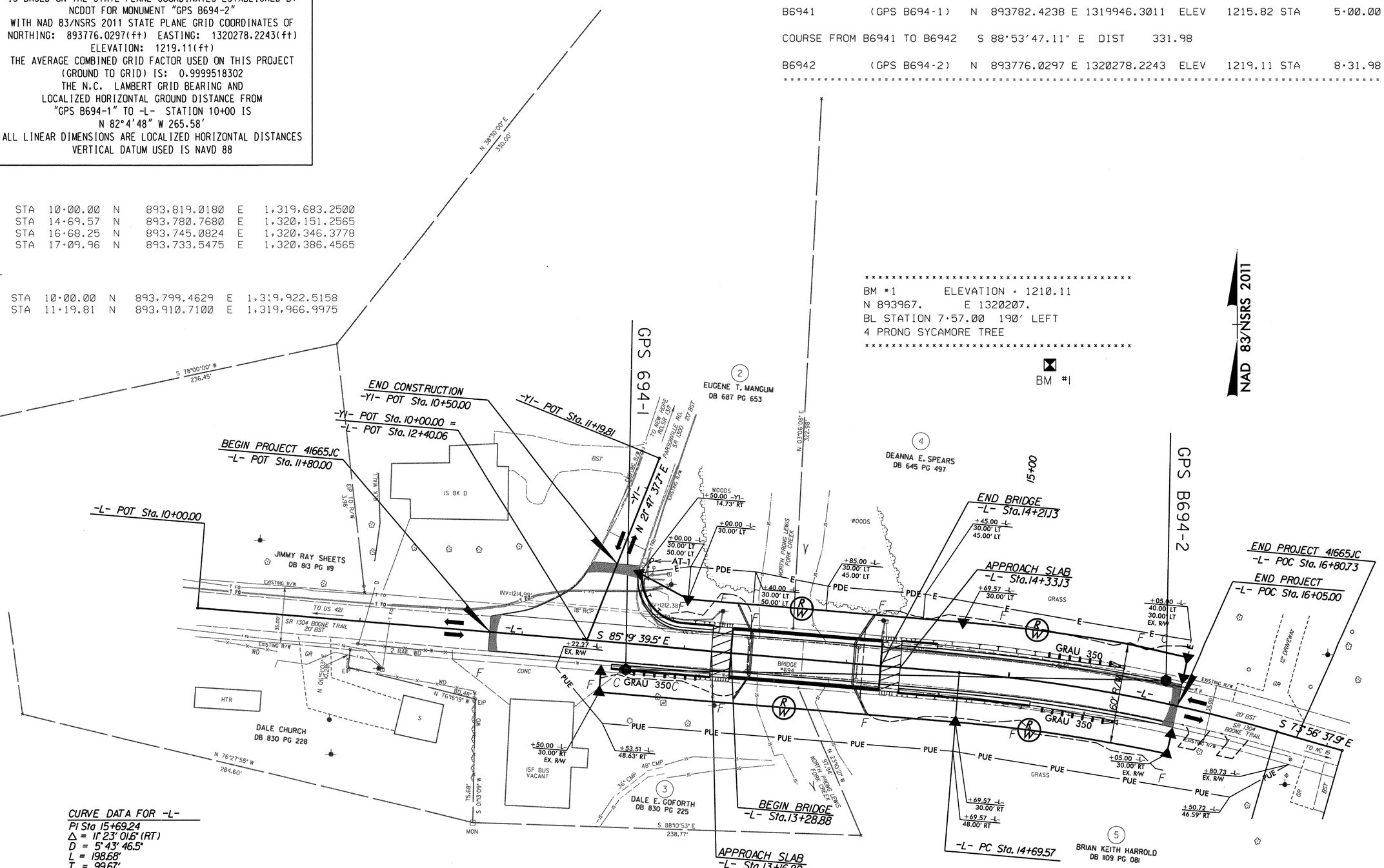

THE LOUIS BERGER GROUP, Inc.
1001 Wade Avenue, Suite 400
Raleigh, North Carolina 27605

ROADWAY PLANS

REVISIONS

3/17/2014 9:49:29 AM
G:\CKE Projects\CKE21004 Limited Services Division Offices\Wilkes Site 694\Roadway\Proj\960694_RDY_01_1C.dgn
G:\CADD\Plot\CKE21004\CKE21004_rdy.tbl

THE LOUIS BERGER GROUP, Inc.
1001 Wade Avenue, Suite 400
Raleigh, North Carolina 27605

PROJECT REFERENCE NO.	SHEET NO.
41665.JC	2
R/W SHEET NO.	

ROADWAY DESIGN ENGINEER — NORTH CAROLINA PROFESSIONAL SEAL 031972 ENGINEER WILLIAM E. HEST — REGISTERED ENGINEER

PAVEMENT DESIGN ENGINEER — NORTH CAROLINA PROFESSIONAL SEAL 16003 ENGINEER DENNIS D. MAYFIELD — REGISTERED ENGINEER

N.T.S

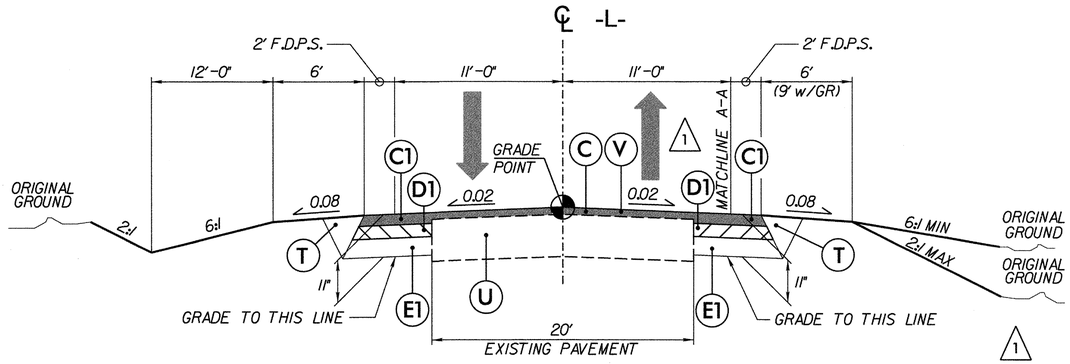

TYPICAL SECTION No. 1

–L– STA 11+80.00 TO –L– STA 13+10.00

△1 MILL EXISTING PAVEMENT FOR TIE-IN
–L– STA 12+90.00 TO –L– STA 13+10.00

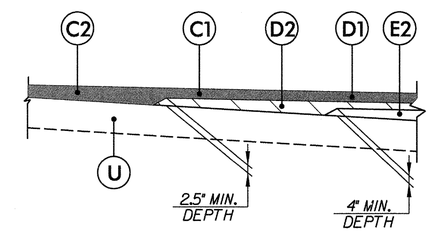

DETAIL SHOWING METHOD OF WEDGING

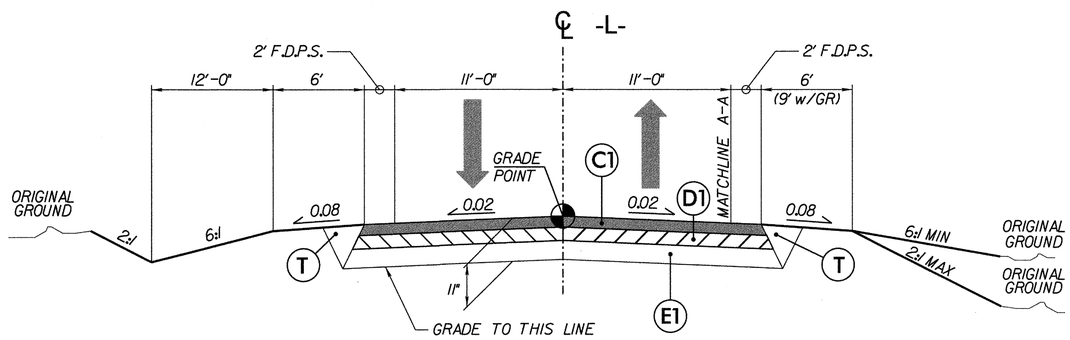

TYPICAL SECTION No. 2

–L– STA 13+10.00 TO –L– STA 13+28.88 (BEGIN BRIDGE)
–L– STA 14+21.13 (END BRIDGE) TO –L– STA 16+05.00

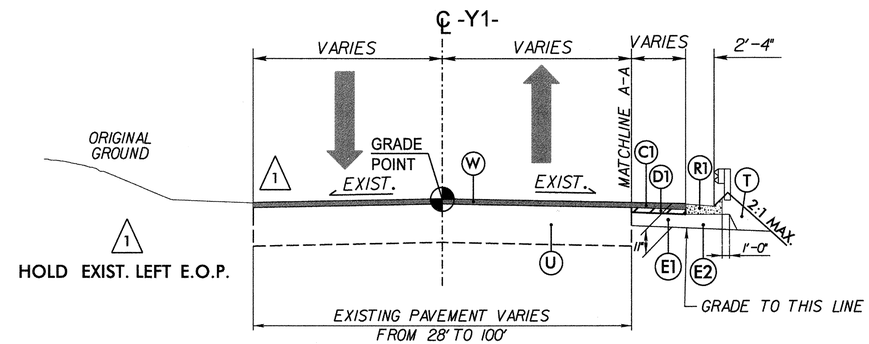

TYPICAL SECTION No. 4

–Y1– STA. 10+11.89 TO STA. 10+50.00

Note: Pavement edge slopes are 1:1 unless shown otherwise.

PAVEMENT SCHEDULE	
ITEM	DESCRIPTION
C	Prop. Approx 1.5" Asphalt Concrete Surface Course, Type S9.5B, at an Average Rate of 168 lbs. Per sq. yard.
C1	Prop. Approx 3.0" Asphalt Concrete Surface Course, Type S9.5B, at an Average Rate of 168 lbs. Per sq. yard in each of two layers.
C2	Prop. Var. Depth Asphalt Concrete Surface Course, Type S9.5B, at an Average Rate of 112 lbs. Per sq. yard Per 1" Depth, to be placed in layers not less than 1.5" or greater than 2" in depth.
D1	Prop. Approx 4.0" Asphalt Concrete Intermediate Course, Type I19.0B, at an Average Rate of 456 lbs. Per sq. yard.
D2	Prop. Var. Depth Asphalt Concrete Intermediate Course, Type I19.0B, at an Average Rate of 114 lbs. Per sq. yard Per 1" Depth, to be placed in layers not less than 2.5" or greater than 4.0" in depth.
E1	Prop. Approx 4.0" Asphalt Concrete Base Course, Type B25.0B, at an Average Rate of 456 lbs. Per sq. yard.
E2	Prop. Var. Depth Asphalt Concrete Base Course, Type B25.0B, at an Average Rate of 114 lbs. Per sq. yard Per 1" Depth, to be placed in layers not less than 4" or greater than 5.5" in depth.
R1	Shoulder Berm Gutter
T	Earth Material
U	Existing Pavement
V	Var. Depth Milling Existing Asphalt Pavement, 0" to 1.5" Depth
W	Var. Depth Asphalt Pavement

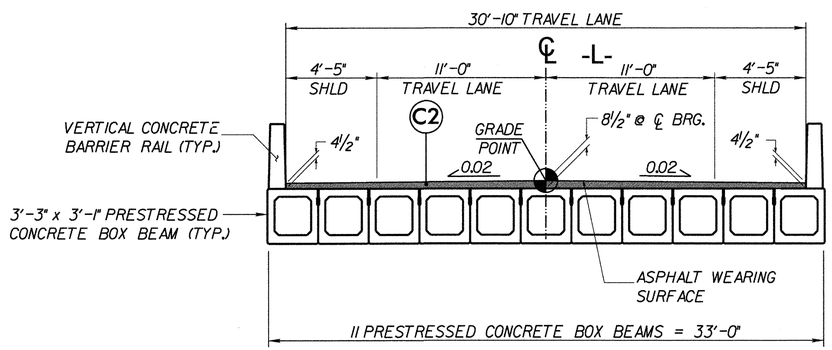

TYPICAL SECTION No. 3

–L– STA 13+28.88 (BEGIN BRIDGE) TO –L– STA 14+21.13 (END BRIDGE)

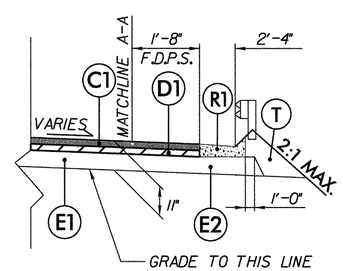

DETAIL A–A SHOULDER BERM GUTTER

TO BE USED IN CONJUNCTION WITH TYPICAL SECTIONS 1, 2, 3, & 4
Y1– STA 10+50.00 RT TO –L– STA 13+18.00 LT
–L– STA 12+56.27 TO –L– STA 13+18.00 RT
–L– STA 14+32.00 TO –L– STA 15+15.00 RT
–L– STA 14+32.00 TO –L– STA 14+55.00 LT

REVISIONS

3/17/2014 9:49:31 AM
G:\CKE Projects\CKE21004 Limited Services Division Offices\Wilkes Site 694\Roadway\Proj\960694_RDY_02_TYP.dgn
G:\CADD\Plots\CKE21004\CKE21004_rdy.tbl

STATE OF NORTH CAROLINA
DIVISION OF HIGHWAYS

"N" = DISTANCE FROM EDGE OF LANE TO FACE OF GUARDRAIL.
TOTAL SHOULDER WIDTH = DISTANCE FROM EDGE OF TRAVEL LANE TO SHOULDER BREAK POINT.
FLARE LENGTH = DISTANCE FROM LAST SECTION OF PARALLEL GUARDRAIL TO END OF GUARDRAIL.
W = TOTAL WIDTH OF FLARE FROM BEGINNING OF TAPER TO END OF GUARDRAIL.
G = GATING IMPACT ATTENUATOR TYPE 350
NG = NON-GATING IMPACT ATTENUATOR TYPE 350

GUARDRAIL SUMMARY

SURVEY LINE	BEG. STA.	END STA.	LOCATION	LENGTH			WARRANT POINT		"N" DIST. FROM E.O.L.	TOTAL SHOUL. WIDTH	FLARE LENGTH		W		ANCHORS									IMPACT ATTENUATOR TYPE 350			SINGLE FACED GUARDRAIL	REMOVE EXISTING GUARDRAIL	REMOVE AND STOCKPILE EXISTING GUARDRAIL	REMARKS
				STRAIGHT	SHOP CURVED	DOUBLE FACED	APPROACH END	TRAILING END			APPROACH END	TRAILING END	APPROACH END	TRAILING END	XI MOD	XI	GRAU 350	M-350	TYPE-III	CAT-1	VI MOD	B-77	AT-1	EA	G	NG				
-Y1-/-L-	10+48.88	13+28.88	LT	37.5'	50'	–	–	–	3'	6'	–	–	–	–	–	–	–	–	1	–	–	–	1	–	–	–	–	–	–	–
-L-	12+60.13	13+28.88	RT	68.75'	–	–	–	–	3'	6'	–	–	–	–	–	–	1	–	1	–	–	–	–	–	–	–	–	–	–	–
-L-	14+21.13	15+71.13	LT	150.0'	–	–	–	–	–	–	–	–	–	–	–	–	1	–	1	–	–	–	–	–	–	–	–	–	–	–
-L-	14+21.13	15+71.13	RT	150.0'	–	–	–	–	–	–	–	–	–	–	–	–	1	–	1	–	–	–	–	–	–	–	–	–	–	–
–	–	–	–	–	–	–	–	–	–	–	–	–	–	–	–	–	–	–	–	–	–	–	–	–	–	–	–			–
			SUB-TOTAL	406.25'	50'										DEDUCTIONS FOR GUARDRAIL ANCHOR UNITS															
	DEDUCTIONS FOR GUARDRAIL ANCHOR UNITS			231.25'											TYPE GRAU 350			3 @ 50.00' =		150'										
															TYPE III			4 @ 18.75' =		75'										
			TOTAL	175.0'	50'										AT-1			1 @ 6.25' =		6.25'										
			SAY	175.0'	50'													TOTAL =		231.25'										

NOTE: INVERT ELEVATIONS INDICATED ARE FOR BID PURPOSES ONLY AND SHALL NOT BE USED FOR PROJECT CONSTRUCTION STAKEOUT.
SEE "STANDARDS SPECIFICATIONS FOR ROADS AND STRUCTURES, SECTION 300-5".

LIST OF PIPES, ENDWALLS, ETC. (FOR PIPES 48" & UNDER)

STATION	LOCATION (LT,RT, OR CL)	STRUCTURE NO. FROM	STRUCTURE NO. TO	TOP ELEVATION	INVERT ELEVATION	INVERT ELEVATION	SLOPE CRITICAL
-L- 14+35	RT	0401		1214.67			
		0401	0402		1211.92	1211.79	
-L- 14+35	LT	0402		1214.78			
		0402	0403		1211.79	1205.75	
-L- 13+15	RT	0404		1215.23			
		0404	0405		1212.48	1212.34	
-L- 13+15	LT	0405		1215.23			
		0405	0406		1212.09	1205.05	
-L- 12+78	LT	0407		1215.95			
		0407	0405		1212.38	1212.19	
SHEET TOTALS							

Size / Thickness or Gauge columns — DRAINAGE PIPE (RCP, CSP, CAAP, HDPE, or PVC): 12", 15", 18", 24", 30", 36", 42", 48", DO NOT USE RCP, DO NOT USE CSP, DO NOT USE CAAP, DO NOT USE HDPE (no entries). R.C. PIPE CLASS IV: 12"–48" (no entries). ** " R.C. PIPE (CLASS V); ***" R.C. PIPE CULVERTS, CONTRACTOR DESIGN; ***" R.C. PIPE CULVERTS, CONTRACTOR DESIGN; 18" SIDE DRAIN PIPE; ENDWALLS STD. 838.01, STD. 838.11 OR STD. 838.80 (UNLESS NOTED OTHERWISE) CU. YDS. R.C.P. / C.S.P. (no entries).

STATION / STRUCTURE	C.S. PIPE 12" .064	15" .064	18" .064	24" .064	30" .079	36" .079	42" .109	48" .109	R.C. PIPE CLASS III 12"	15"	18"	24"	30"	36"	42"	48"
0401–0402										24						
0402–0403		28														
0404–0405										28						
0405–0406			28													
0407–0405											36					
SHEET TOTALS		28	28							52	36					

Other columns (no entries): QUANTITIES FOR DRAINAGE STRUCTURES * TOTAL L.F. FOR PAY QUANTITY SHALL BE COL. 'A' + (1.3 X COL.'B') — LIN. *FT. A: 5.0' THRU 10.0', B: 10.0' AND ABOVE; C.B. STD. 840.01 OR STD. 840.02; FRAME, GRATES AND HOOD STANDARD 840.03 TYPE OF GRATE E, F, G; CONCRETE TRASITIONAL SECTION: DROP INLET, CATCH BASIN; D.I. STD. 840.14 OR STD. 840.15; D.I. FRAME & GRATE STD. 840.16; G.D.I. TYPE "A" STD. 840.17 OR 840.26; G.D.I. TYPE "D" STD. 840.19 OR 840.28; G.D.I. FRAME WITH TWO GRATE STD. 840.22; G.D.I. (N.S.) FRAME WITH GRATE STD. 840.24; G.D.I. (N.S.) FRAME WITH TWO GRATES STD. 840.29; J.B. STD. 840.31 OR 840.32; TB G.D.I STD. 840.35; F.E.S. FLARED END SECTION STD; CONVERT TO MH; CONC. & BRICK PIPE PLUG, C.Y. STD. 840.71; CONC. COLLARS CL. "B" C.Y. STD 840.72; PIPE REMOVAL LIN. FT.

STATION	STRUCTURE	PER EACH (0' THRU 5.0')	G.D.I. TYPE "B" STD. 840.18 OR 840.27	G.D.I. FRAME WITH TWO GRATES STD. 840.20	DRAINAGE PIPE ELBOWS NO. & SIZE	REMARKS
-L- 14+35	0401	1	1	1		
	0401–0402					
-L- 14+35	0402	1	1	1		
	0402–0403				2 @ 15" CSP	
-L- 13+15	0404	1	1	1		
	0404–0405					
-L- 13+15	0405	1	1	1		
	0405–0406				2 @ 18" CSP	
-L- 12+78	0407	1	1	1		
	0407–0405					
					2 @ 15" CSP	
SHEET TOTALS		5	5	5	2 @ 18" CSP	

ABBREVIATIONS

- C.B. CATCH BASIN
- N.D.I. NARROW DROP INLET
- D.I. DROP INLET
- G.D.I. GRATED DROP INLET
- G.D.I. (N.S.) GRATED DROP INLET (NARROW SLOT)
- J.B. JUNCTION BOX
- M.H. MANHOLE
- T.B.D.I. TRAFFIC BEARING DROP INLET
- T.B.J.B. TRAFFIC BEARING JUNCTION BOX

SUMMARY OF EARTHWORK (IN CUBIC YARDS)

STATION	STATION	UNCL. EXCAV.	EMBANK. +%	BORROW	WASTE
-L- 11+80.00	13+30.00	20	22	2	–
-L- 14+20.00	16+05.00	221	263	42	–
–	–	–	–	–	–
-Y1- 10+11.89	10+50.00	0	0	–	–
–	–	–	–	–	–
–	–	–	–	–	–
PROJECT TOTALS:		241	285	44	–
		–	–	–	–
–		–	–	–	–
–		–	–	–	–
–		–	–	–	–
LOSS DUE TO CLEARING & GRUBBING		-15	–	–	–
–		–	–	–	–
GRAND TOTALS:		226	285	44	–
–		–	–	–	–
SAY:		230	–	50	–

DDE = 5 CY
CONTINGENCY ITEMS
UNDERCUT EXCAVATION 50 CY
SELECT GRANULAR MATERIAL 50 CY
GEOTEXTILE FOR SOIL STABILIZATION 50 SY
CLASS IV SUBGRADE STABILIZATION 50 TON
INCIDENTAL STONE BASE 50 TON

Note: Approximate quantities only. Unclassified Excavation, Fine Grading, and Clearing and Grubbing will be paid for at the contract lump sum price for "Grading."

SHOULDER BERM GUTTER SUMMARY

SURVEY LINE	STATION	STATION	LOCATION LT/RT/CL	LENGTH FT
-L-	12+56.27	13+18.00	RT	61.7'
-L-	14+32.00	15+15.00	RT	83.0'
-Y1 /L-	10+50.00	13+18.00	LT	63.0'
-L-	14+32.00	14+55.00	LT	23.0'
			TOTAL:	230.7'
			SAY:	231.0'

REVISIONS

3/17/2014 9:49:35 AM
G:\CKE Projects\CKE21004 Limited Services Division Offices\Wilkes Site 694\Roadway\Proj\960694_RDY_03A_SUMMARY.dgn
G:\CADD\Plot\CKE21004\CKE21004_rdy.tbl

PROJECT REFERENCE NO.	SHEET NO.
41665JC	4
R/W SHEET NO.	

ROADWAY DESIGN ENGINEER — NORTH CAROLINA PROFESSIONAL SEAL 031972 ENGINEER WILLIAM E. TRILLI — REGISTERED ENGINEER

HYDRAULICS ENGINEER — NORTH CAROLINA PROFESSIONAL SEAL 032134 ENGINEER — 3-17-14 — REGISTERED ENGINEER

0' 30' 60'

NAD 83/NSRS 2011

BM #1 ELEVATION = 1210.11
N 893967, E 1320207,
BL STATION 7+57.00 190' LEFT
4 PRONG SYCAMORE TREE

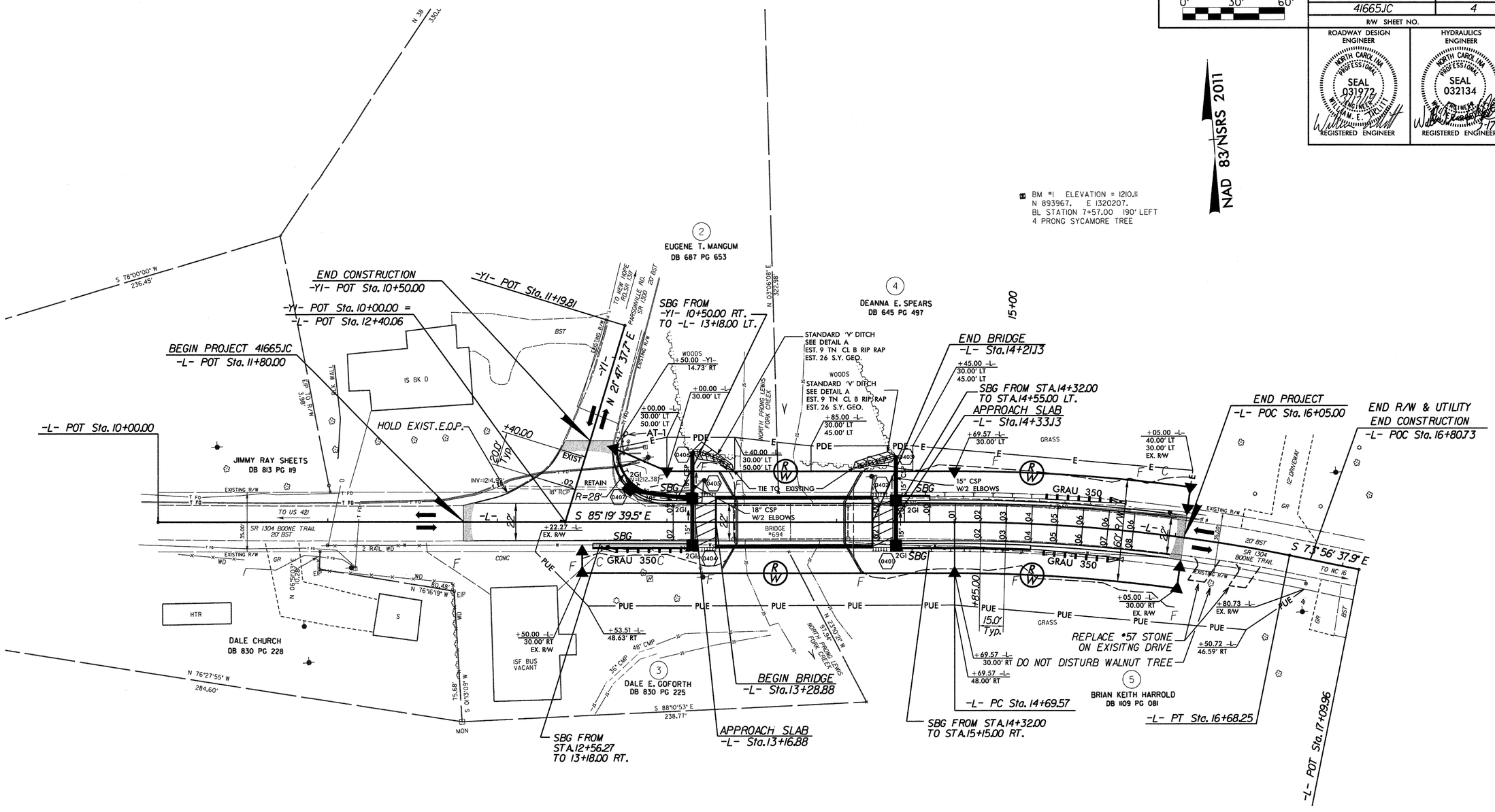

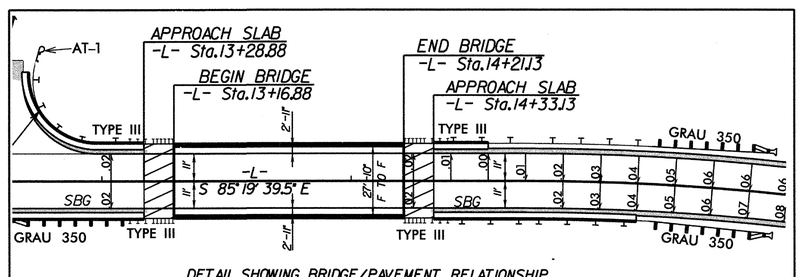

DETAIL SHOWING BRIDGE/PAVEMENT RELATIONSHIP

CURVE DATA FOR -L-
PI Sta 15+69.24
Δ = 11° 23' 01.6" (RT)
D = 5° 43' 46.5"
L = 198.68'
T = 99.67'
R = 1,000.00'
Se = EXIST.

DETAIL A
STANDARD 'V' DITCH
(Not to Scale)

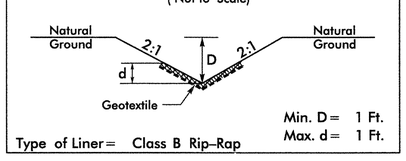

FROM -L- STA. 13+15 TO STA. 13+40 LT
FROM -L- STA. 14+10 TO STA. 14+35 LT

SEE SHEET 5 FOR PROFILE
SEE SHEETS S-1 THRU S-15 FOR STRUCTURE PLANS

THE LOUIS BERGER GROUP, Inc.
1001 Wade Avenue, Suite 400
Raleigh, North Carolina 27605

ROADWAY PLANS

REVISIONS

3/17/2014 11:14:57 AM
G:\CKE Projects\CKE21004 Limited Services Division Offices\Wilkes Site 694\Roadway\Proj\960694_RDY_04_PSH.dgn
G:\CADD\Plots\ORI100X1100_rdy.tbl

THE LOUIS BERGER GROUP, Inc.
1001 Wade Avenue, Suite 400
Raleigh, North Carolina 27605

PROJECT REFERENCE NO.	SHEET NO.
41665.JC	5

ROADWAY DESIGN ENGINEER — NORTH CAROLINA PROFESSIONAL SEAL 031972 ENGINEER WILLIAM E. POLLIT — REGISTERED ENGINEER

HYDRAULICS ENGINEER — NORTH CAROLINA PROFESSIONAL SEAL 032134 ENGINEER WILLIAM ROBERSON — 3-17-14 — REGISTERED ENGINEER

0 20 40 HORIZONTAL
0 4 8 VERTICAL

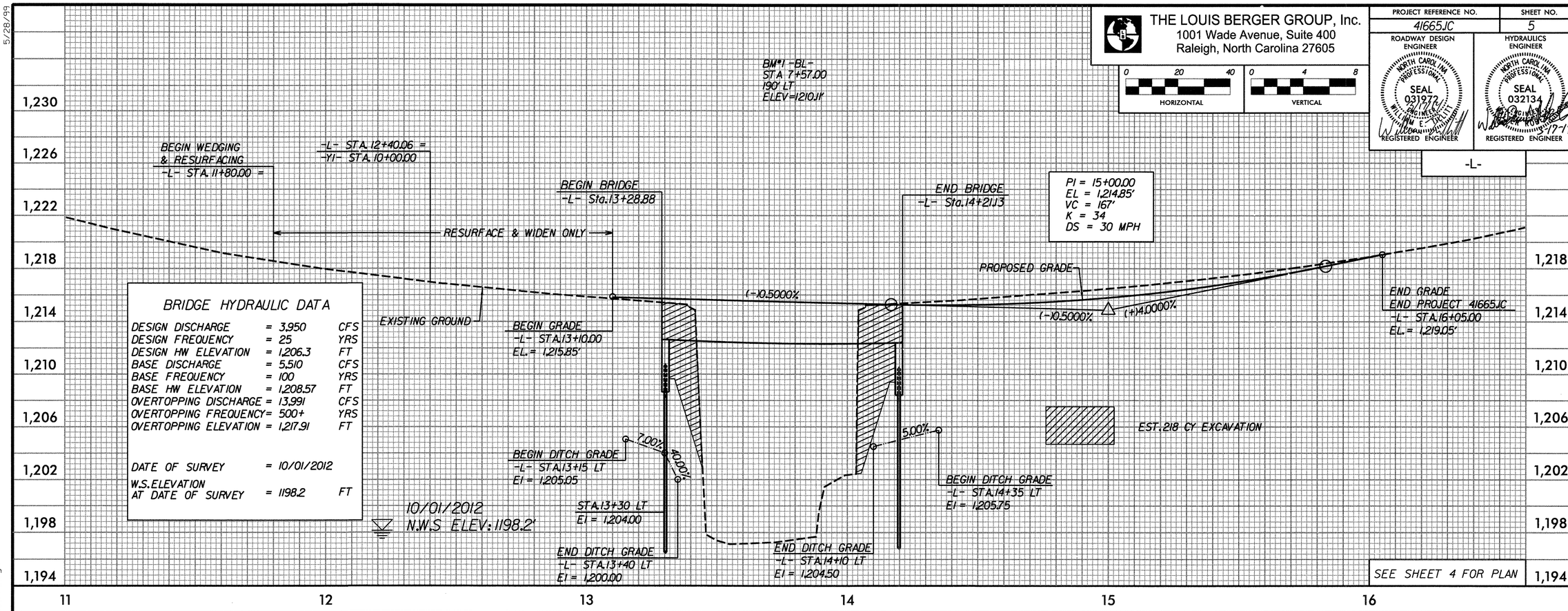

BRIDGE HYDRAULIC DATA

DESIGN DISCHARGE	= 3,950	CFS
DESIGN FREQUENCY	= 25	YRS
DESIGN HW ELEVATION	= 1,206.3	FT
BASE DISCHARGE	= 5,510	CFS
BASE FREQUENCY	= 100	YRS
BASE HW ELEVATION	= 1,208.57	FT
OVERTOPPING DISCHARGE	= 13,991	CFS
OVERTOPPING FREQUENCY	= 500+	YRS
OVERTOPPING ELEVATION	= 1,217.91	FT
DATE OF SURVEY	= 10/01/2012	
W.S.ELEVATION AT DATE OF SURVEY	= 1198.2	FT

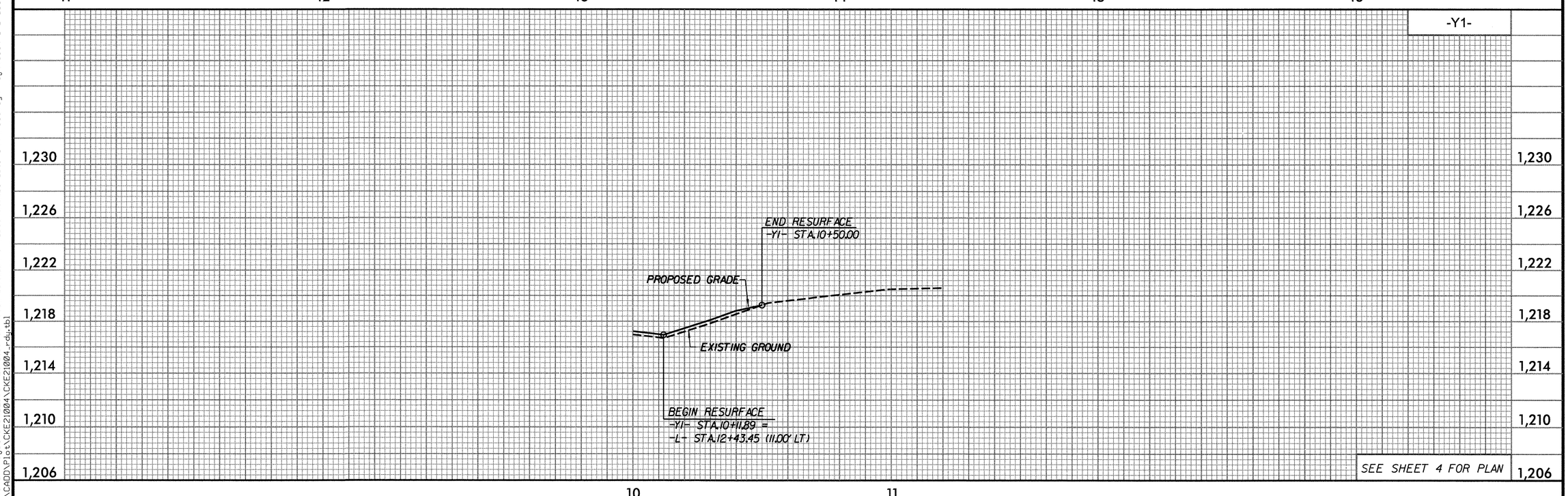

5/28/99

3/17/2014 9:49:39 AM
G:\CKE Projects\CKE21004 Limited Services Division Offices\Wilkes Site 694\Roadway\Proj\960694_RDY_05_PFL.dgn
G:\CADD\Plot\CKE21004\CKE21004_rdy.tbl

STATE OF NORTH CAROLINA
DIVISION OF HIGHWAYS

TRANSPORTATION MANAGEMENT PLAN

WILKES COUNTY

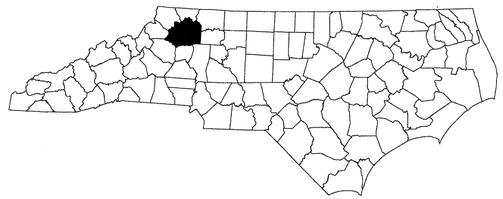

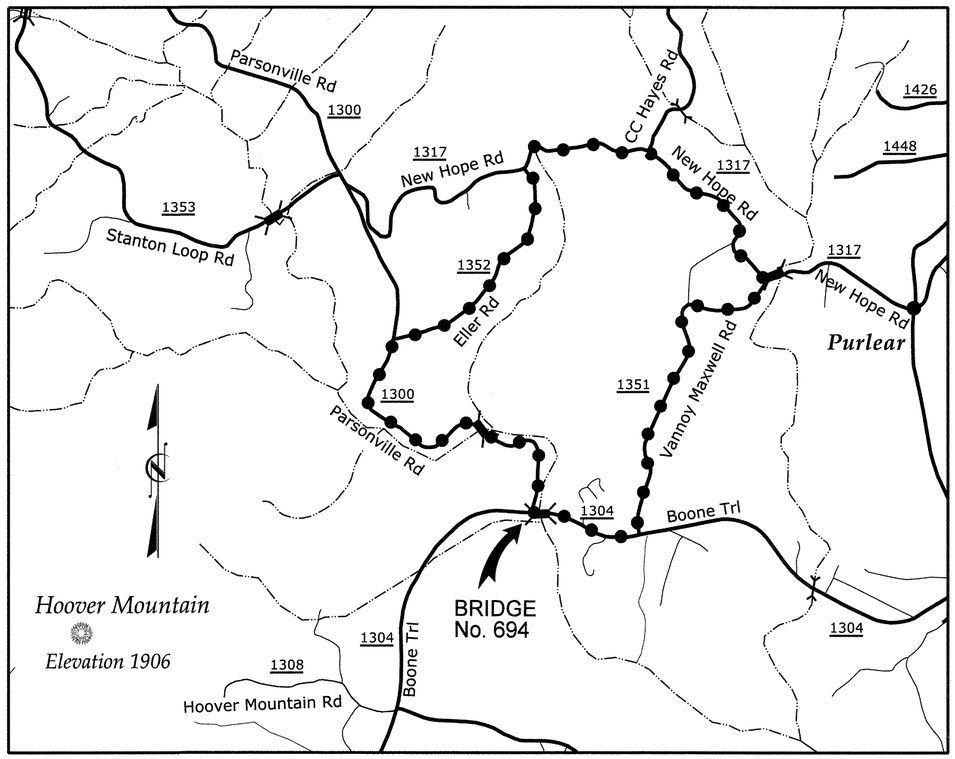

VICINITY MAP NTS

OFF-SITE DETOUR

LOCATION: BRIDGE NO. 694 ON SR 1304 (BOONE TRAIL RD) OVER N. PRONG LEWIS FORK CREEK

WORK ZONE SAFETY & MOBILITY
"from the MOUNTAINS to the COAST"

N.C.D.O.T. WORK ZONE TRAFFIC CONTROL
1561 MAIL SERVICE CENTER (MSC) RALEIGH, NC 27699-1561
750 N. GREENFIELD PARKWAY, GARNER, NC 27529 (DELIVERY)
PHONE: (919) 773-2800 FAX: (919) 771-2745

J. S. BOURNE, P.E. STATE TRAFFIC MANAGEMENT ENGINEER
G. L. GETTIER, P.E. TRAFFIC CONTROL PROJECT ENGINEER
J.W. GILSTRAP TRAFFIC CONTROL PROJECT DESIGN ENGINEER

DIVISION OF HIGHWAYS * STATE OF NORTH CAROLINA * DEPARTMENT OF TRANSPORTATION * WORK ZONE TRAFFIC CONTROL

INDEX OF SHEETS

SHEET NO.	TITLE
TMP-1	TITLE SHEET, AND INDEX OF SHEETS
TMP-1A	LIST OF APPLICABLE ROADWAY STANDARD DRAWINGS, AND LEGEND
TMP-1B	TRANSPORTATION OPERATIONS PLAN: (MANAGEMENT STRATEGIES, GENERAL NOTES AND LOCAL NOTES, PROJECT PHASING AND SPECIAL SIGN DETAIL)
TMP-2	TEMPORARY TRAFFIC CONTROL DETAIL

Prepared In the Office of:
THE LOUIS BERGER GROUP, Inc.
1001 Wade Avenue, Suite 400
Raleigh, North Carolina 27605
License No.: F-0840

DEAN D. HATFIELD, PE
PROJECT ENGINEER

WILLIAM E. TILLITT, PE
PROJECT DESIGN ENGINEER

APPROVED:
DATE:

SEAL

SHEET NO.
TMP-1

PROJECT: 41665.1C

3/17/2014 9:49:43 AM
G:\CKE Projects\CKE21004 Limited Services Division Offices\Wilkes Site 694\Roadway\Proj\960694_RDY_06_TMP1.dgn
CKE21004_rdy-pmp.tbl

PROJ. REFERENCE NO.	SHEET NO.
41665.1C	TMP-1A

ROADWAY STANDARD DRAWINGS

THE FOLLOWING ROADWAY STANDARDS AS SHOWN IN "ROADWAY STANDARD DRAWINGS" - PROJECT SERVICES UNIT - N.C. DEPARTMENT OF TRANSPORTATION - RALEIGH, N.C., DATED JANUARY 2012 ARE APPLICABLE TO THIS PROJECT AND BY REFERENCE HEREBY ARE CONSIDERED A PART OF THESE PLANS:

STD. NO.	TITLE
1101.01	WORK ZONE WARNING SIGNS
1101.03	TEMPORARY ROAD CLOSURES
1101.05	WORK ZONE VEHICLE ACCESSES
1101.11	TRAFFIC CONTROL DESIGN TABLES
1110.01	STATIONARY WORK ZONE SIGNS
1145.01	BARRICADES
1150.01	FLAGGING DEVICES

LEGEND

GENERAL

DIRECTION OF TRAFFIC FLOW

NORTH ARROW

TRAFFIC CONTROL DEVICES

BARRICADE (TYPE III)

TEMPORARY SIGNING

STATIONARY SIGN

TEMPORARY PAVEMENT MARKING

N/A

THE LOUIS BERGER GROUP, Inc.
1001 Wade Avenue, Suite 400
Raleigh, North Carolina 27605

APPROVED:_____ DATE:_____

SEAL

NORTH CAROLINA PROFESSIONAL SEAL 031972 ENGINEER WILLIAM E. HILLIARD III

DIVISION OF HIGHWAYS STATE OF NORTH CAROLINA DEPARTMENT OF TRANSPORTATION WORK ZONE TRAFFIC CONTROL

ROADWAY STANDARD DRAWINGS & LEGEND

3/17/2014 9:49:46 AM
G:\CKE Projects\CKE21004 Limited Services Division Offices\Wilkes Site 694\Roadway\Proj\9606694_RDY_06_TMP1A.dgn
CKE21004_rdy-pmp.tbl

PROJ. REFERENCE NO.	SHEET NO.
41665.1C	TMP-1B

MANAGEMENT STRATEGIES

TRAFFIC WILL BE DETOURED OFFSITE DURING CONSTRUCTION ALONG A ROUTE DETERMINED BY NCDOT.

THE OFFSITE DETOUR WILL INCLUDE SR 1351 (VANNOY MAXWELL RD), SR 1448 (NEW HOPE RD), SR 1352 (ELLER RD), AND SR 1300 (PARSONVILLE RD). (SEE SHEET TMP-2)

PROJECT PHASING

STEP 1:
- INSTALL OFF SITE DETOUR AND ROAD CLOSURE SIGNING (PROVIDED BY CONTRACTOR).

- USING RDWY STD 1101.03, SHEETS 1-2 OF 9, CLOSE SR 1304 (BOONE TRAIL RD) TO THRU TRAFFIC FROM -L- STA. 12+75+/- TO -L- STA. 17+00+/- AND PLACE TRAFFIC ONTO OFF SITE DETOUR AS SHOWN. MAINTAIN ACCESS AT ALL TIMES TO SR 1300 (PARSONVILLE RD) AND EXISTING DRIVEWAY AT -L- STA 12+05+/- RT.

STEP 2:
- REMOVE EXISTING BRIDGE No. 694 AND APPROACHES AND CONSTRUCT THE PROPOSED BRIDGE AND ROADWAY UP TO BUT NOT INCLUDING THE FINAL LAYER OF SURFACE COURSE FROM -L- STA. 12+75+/- TO -L- STA. 16+80+/-.

- USING FLAGGERS (RDWY STD 1101.02, SHEET 1 OF 15), CONSTRUCT -L- FROM -L- STA 11+10+/- TO -L- STA 12+75+/-, UP TO, BUT NOT INCLUDING THE FINAL LAYER OF SURFACE COURSE. CONSTRUCT -Y1- IMPROVEMENTS AND PLACE FINAL LAYER OF SURFACE COURSE AND FINAL PAVEMENT MARKINGS FROM -L- STA 11+10+/- TO -L- STA 16+80+/- AND ON -Y1-. (SEE CONSTRUCTION AND PAVEMENT MARKING PLANS)

STEP 3:
- OPEN TO FINAL TRAFFIC PATTERN.

- REMOVE ALL TRAFFIC CONTROL DEVICES, SIGNING, AND DETOUR ROUTE SIGNING.

SPECIAL SIGN DETAIL

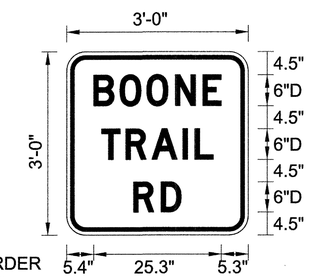

BORDER
R=3"
TH=0.75"
IN=0.75"
BLACK ON FLUORESCENT ORANGE

LETTER POSITIONS

5.4	B 5.1	O 5.4	O 5.6	N 5.5	E 3.7	5.3

6.9	T 4.8	R 5.2	A 6.1	I 2.4	L 3.6	7.0

13.2	R 5.5	D 4.0	13.3

NOTE:

1. LETTER SPACINGS ARE TO START OF NEXT LETTER.
2. LEGEND AND BORDER SHALL BE DIRECT APPLIED BLACK NON-REFLECTIVE SHEETING.
3. BACKGROUND SHALL BE TYPE VII, VIII, OR IX (PRISMATIC) FLUORESCENT ORANGE RETROREFLECTIVE SHEETING.

GENERAL NOTES / LOCAL NOTES

CHANGES MAY BE REQUIRED WHEN PHYSICAL DIMENSIONS IN THE DETAIL DRAWINGS, STANDARD DETAILS, AND ROADWAY DETAILS ARE NOT ATTAINABLE TO MEET FIELD CONDITIONS OR RESULT IN DUPLICATE OR UNDESIRED OVERLAPPING OF DEVICES. MODIFICATION MAY INCLUDE: MOVING, SUPPLEMENTING, COVERING, OR REMOVAL OF DEVICES AS DIRECTED BY THE ENGINEER.

THE FOLLOWING GENERAL NOTES APPLY AT ALL TIMES FOR THE DURATION OF THE CONSTRUCTION PROJECT EXCEPT WHEN OTHERWISE NOTED IN THE PLAN OR DIRECTED BY THE ENGINEER.

PAVEMENT EDGE DROP OFF REQUIREMENTS

A) BACKFILL AT A 6:1 SLOPE UP TO THE EDGE AND ELEVATION OF EXISTING PAVEMENT IN AREAS ADJACENT TO AN OPENED TRAVEL LANE THAT HAS AN EDGE OF PAVEMENT DROP-OFF AS FOLLOWS:

BACKFILL DROP-OFFS THAT EXCEED 2 INCHES ON ROADWAYS WITH POSTED SPEED LIMITS OF 45 MPH OR GREATER.

BACKFILL DROP-OFFS THAT EXCEED 3 INCHES ON ROADWAYS WITH POSTED SPEED LIMITS LESS THAN 45 MPH.

BACKFILL WITH SUITABLE COMPACTED MATERIAL, AS APPROVED BY THE ENGINEER, AT NO EXPENSE TO THE DEPARTMENT.

TRAFFIC PATTERN ALTERATIONS

B) NOTIFY THE ENGINEER TWENTY ONE (21) CALENDAR DAYS PRIOR TO ANY TRAFFIC PATTERN ALTERATION.

SIGNING

C) PROVIDE SIGNING AND DEVICES REQUIRED TO CLOSE THE ROAD ACCORDING TO THE ROADWAY STANDARD DRAWINGS AND TRAFFIC CONTROL PLANS.

PROVIDE SIGNING REQUIRED FOR THE OFF-SITE DETOUR ROUTE AS SHOWN IN THE TRAFFIC CONTROL PLANS.

D) COVER OR REMOVE ALL SIGNS AND DEVICES REQUIRED TO CLOSE THE ROAD WHEN ROAD CLOSURE IS NOT IN OPERATION.

COVER OR REMOVE ALL SIGNS REQUIRED FOR THE OFF-SITE DETOUR WHEN THE DETOUR IS NOT IN OPERATION.

E) ENSURE ALL NECESSARY SIGNING IS IN PLACE PRIOR TO ALTERING ANY TRAFFIC PATTERN.

TRAFFIC CONTROL DEVICES

F) PLACE TYPE III BARRICADES, WITH "ROAD CLOSED" SIGN R11-2 ATTACHED, OF SUFFICIENT LENGTH TO CLOSE ENTIRE ROADWAY.

G) TIE PROPOSED PAVEMENT MARKING LINES TO EXISING AVEMENT MARKING LINES.

THE LOUIS BERGER GROUP, Inc.
1001 Wade Avenue, Suite 400
Raleigh, North Carolina 27605

APPROVED: _____ DATE: _____

SEAL

NORTH CAROLINA PROFESSIONAL SEAL 031972 ENGINEER WILLIAM E. TILLITT

DIVISION OF HIGHWAYS STATE OF NORTH CAROLINA DEPARTMENT OF TRANSPORTATION WORK ZONE TRAFFIC CONTROL

TRANSPORTATION OPERATIONS PLAN

3/17/2014 9:49:48 AM
G:\CKE Projects\CKE21004 Limited Services Division Offices\Wilkes Site 694\Roadway\Proj\960694_RDY_06_TMP1B.dgn
CKE21004_rdu-pmp.tbl

PROJ. REFERENCE NO.	SHEET NO.
41665.1C	TMP-2

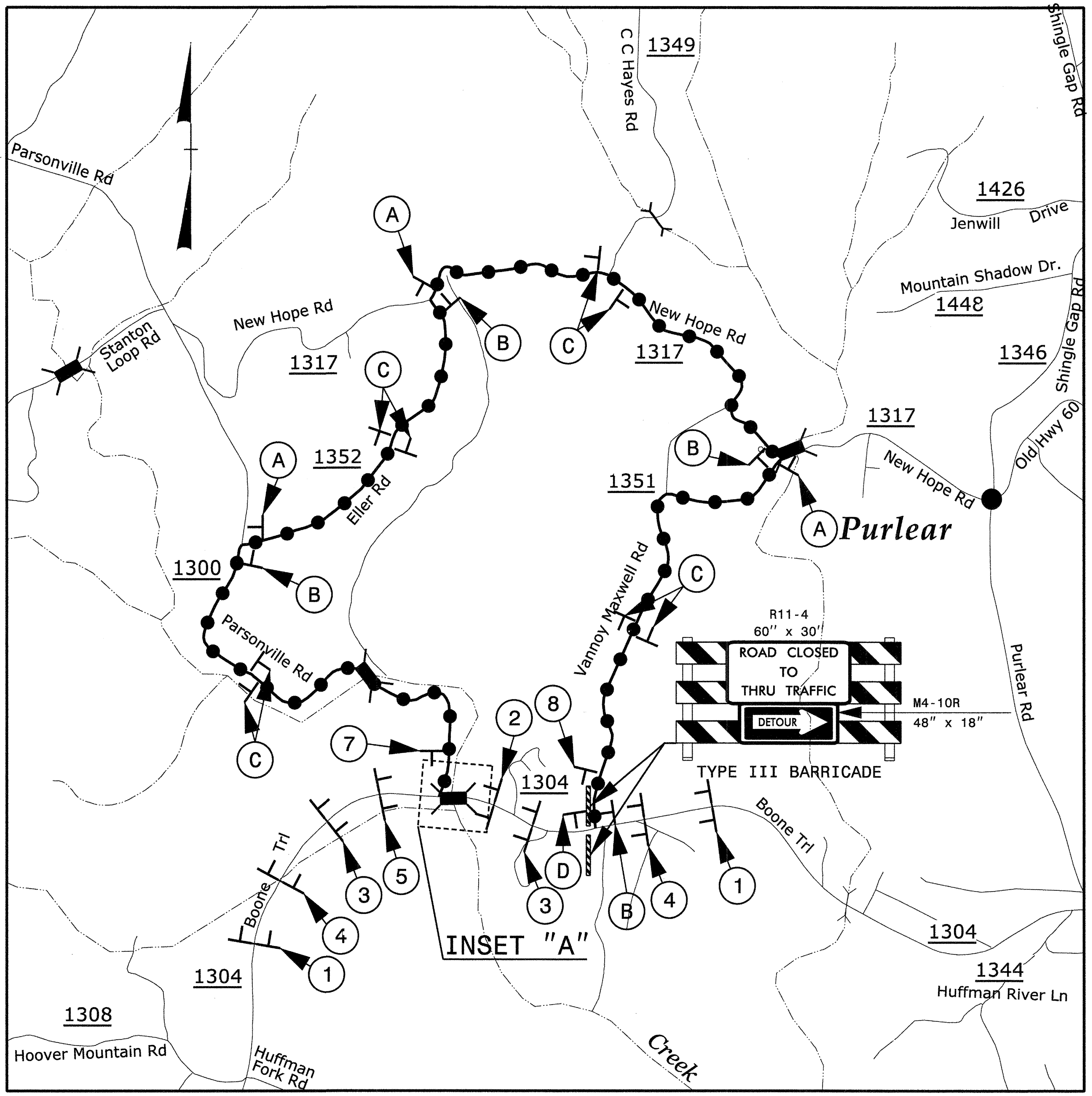

VICINITY MAP NTS

OFFSITE DETOUR

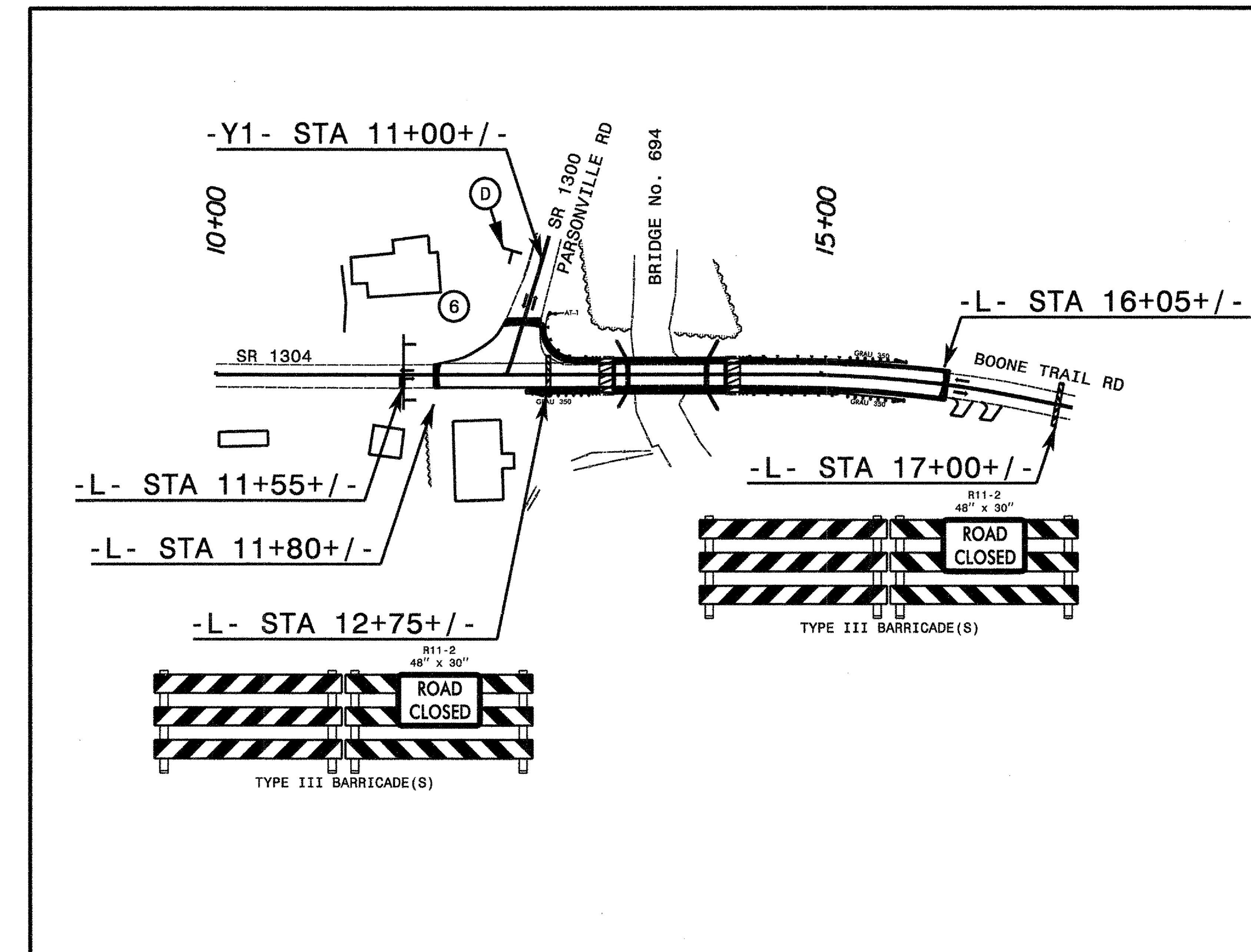

INSET "A"

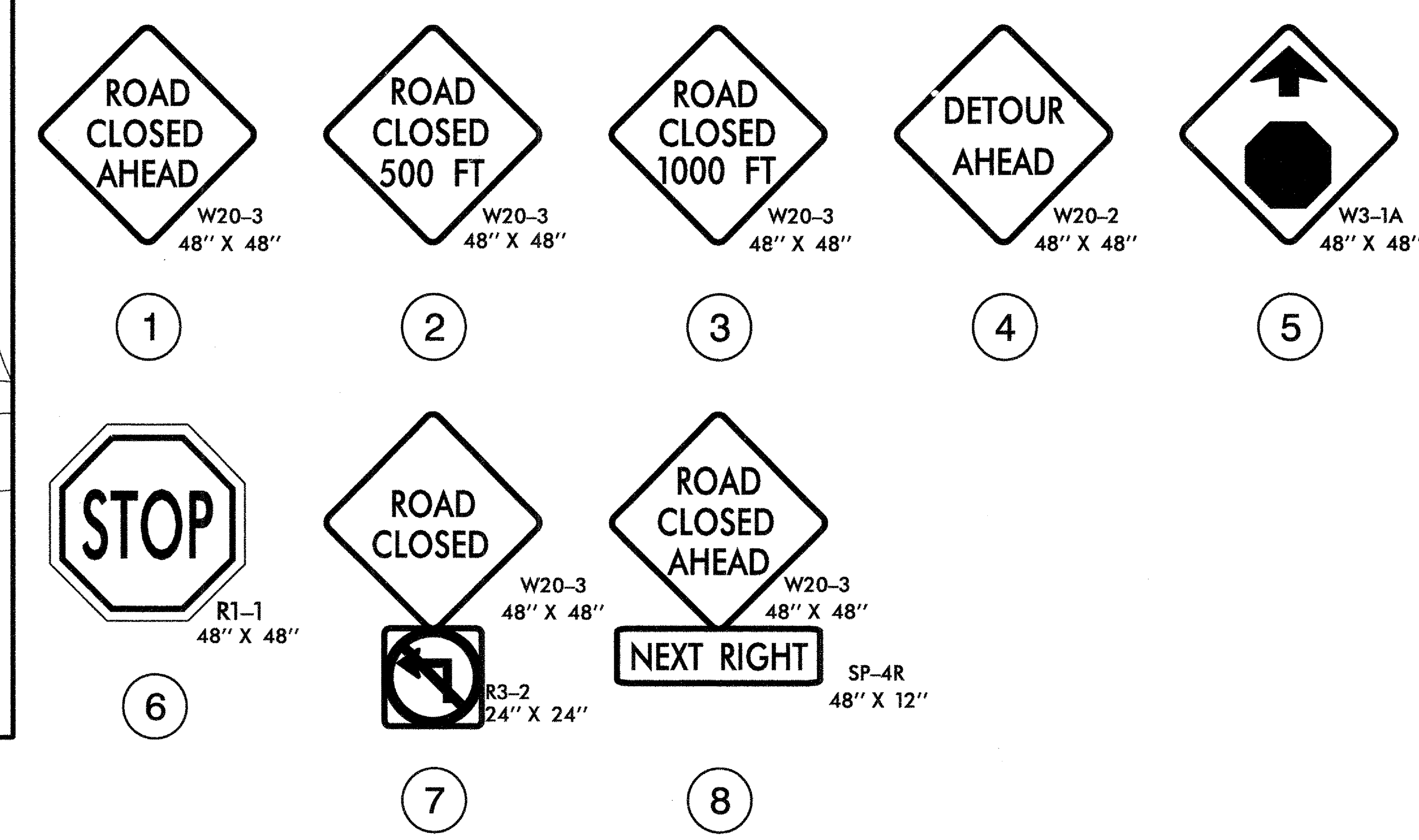

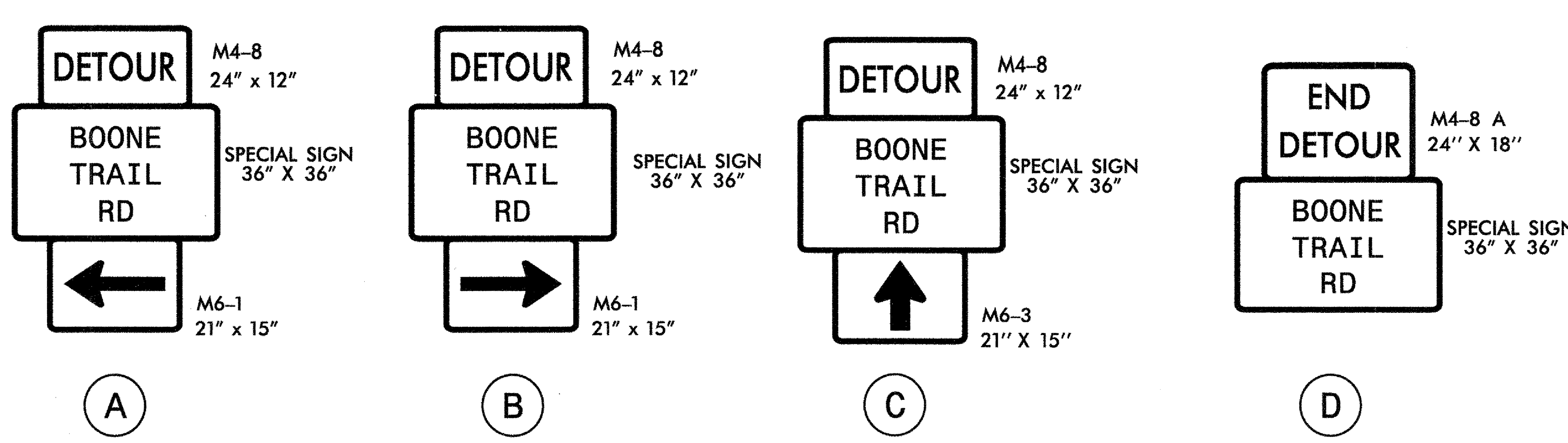

NOTES:

- FOR CONSTRUCTION PHASING NOTES, SEE SHEET TMP-1B.
- ALL DETOUR SIGN LOCATIONS ARE APPROXIMATE. FOR SIGNS 1-8, SEE ROADWAY STANDARD DRAWING NO. 1101.03, SHEETS 1 OF 9 AND 2 OF 9 FOR SIGN PLACEMENT AND APPLICABLE NOTES.

THE LOUIS BERGER GROUP, Inc.
1001 Wade Avenue, Suite 400
Raleigh, North Carolina 27605

APPROVED:__________ DATE:__________

SEAL

NORTH CAROLINA PROFESSIONAL SEAL 031972 ENGINEER WILLIAM E. TILLITT

DIVISION OF HIGHWAYS STATE OF NORTH CAROLINA DEPARTMENT OF TRANSPORTATION WORK ZONE TRAFFIC CONTROL

TEMPORARY TRAFFIC CONTROL DETAIL

$$$$$$SYSTIME$$$$$
$$$$$$$$$$DGN$$$$$$$$$$$$$$$$
$$$$USERNAME$$$$

PROJECT REFERENCE NO.	SHEET NO.
41665JC	PMP-1
R/W SHEET NO.	

NORTH CAROLINA PROFESSIONAL SEAL 031972 ENGINEER WILLIAM E. TILLETT

REGISTERED ENGINEER

STATE OF NORTH CAROLINA
DEPARTMENT OF TRANSPORTATION

PAVEMENT MARKING AND SIGNING PLANS

LOCATION: BRIDGE NO. 694 ON SR 1304 OVER NORTH PRONG LEWIS FORK CREEK, WILKES COUNTY

ROADWAY STANDARD DRAWINGS

THE FOLLOWING ROADWAY STANDARDS AS APPEAR IN "ROADWAY STANDARD DRAWINGS"-PROJECT SERVICES UNIT-N.C. DEPARTMENT OF TRANSPORTATION-RALEIGH, N.C., DATED JANUARY 2012 ARE APPLICABLE TO THIS PROJECT AND BY REFERENCE HEREBY ARE CONSIDERED A PART OF THESE PLANS:

STD. NO.	TITLE
1205.01	PAVEMENT MARKINGS - LINE TYPES & OFFSETS
1205.02	PAVEMENT MARKINGS - 2 LANE & MULTILANE ROADWAYS
1205.04	PAVEMENT MARKINGS - INTERSECTIONS
1205.12	PAVEMENT MARKINGS - BRIDGES
1250.01	RAISED PAVEMENT MARKERS - INSTALLATION SPACING
1250.02	RAISED PAVEMENT MARKERS - (PERMANENT AND TEMPORARY)

PAVEMENT MARKING SCHEDULE

ASPHALT PAVEMENT DESIGN
(AS SHOWN)

PAVEMENT MARKING LINES

P4 - PAINT - WHITE STOPBAR (24")
PA - PAINT - WHITE EDGELINE (4")
PI - PAINT - YELLOW DOUBLE CENTER LINE (4")
PD - PAINT - 3 FT. - 9 FT./SP WHITE MINISKIP (4")

GENERAL NOTES

THE FOLLOWING NOTES APPLY AT ALL TIMES FOR THE DURATION OF THE CONSTRUCTION PROJECT, EXCEPT WHEN NOTED IN THE PLAN, OR DIRECTED BY THE ENGINEER.

A) INSTALL PAVEMENT MARKINGS AND PAVEMENT MARKERS ON THE FINAL SURFACE AS FOLLOWS:

ASPHALT PAVEMENT DESIGN:

ROAD NAME	MARKING	MARKER
-L- BOONE TRAIL	PAINT	SNOW-PLOWABLE
-Y1- PARSONVILLE RD	PAINT	NONE

B) TIE PROPOSED PAVEMENT MARKING LINES TO EXISTING PAVEMENT MARKING LINES.

C) REMOVE/ REPLACE ANY CONFLICTING/ DAMAGED PAVEMENT MARKINGS AND MARKERS.

D) PASSING ZONES WILL BE DETERMINED IN THE FIELD AND MUST BE APPROVED BY THE ENGINEER.

INDEX

SHEET NO.	DESCRIPTION
PMP-1	PAVEMENT MARKING PLAN COVER SHEET
PMP-2	PAVEMENT MARKING AND SIGNING DETAIL

THE LOUIS BERGER GROUP, Inc.
1001 Wade Avenue, Suite 400
Raleigh, North Carolina 27605

ROADWAY PLANS

REVISIONS

3/17/2014 9:49:53 AM
G:\CKE Projects\CKE21004 Limited Services Division Offices\Wilkes Site 694\Roadway\Proj\9600694_RDY_07_PMP1.dgn
CKE21004_rdy_pmp.tbl

PROJECT REFERENCE NO.	SHEET NO.
41665JC	PMP-2
R/W SHEET NO.	

NORTH CAROLINA PROFESSIONAL SEAL 031972 ENGINEER WILLIAM E. TILLETT

REGISTERED ENGINEER

0' 30' 60'

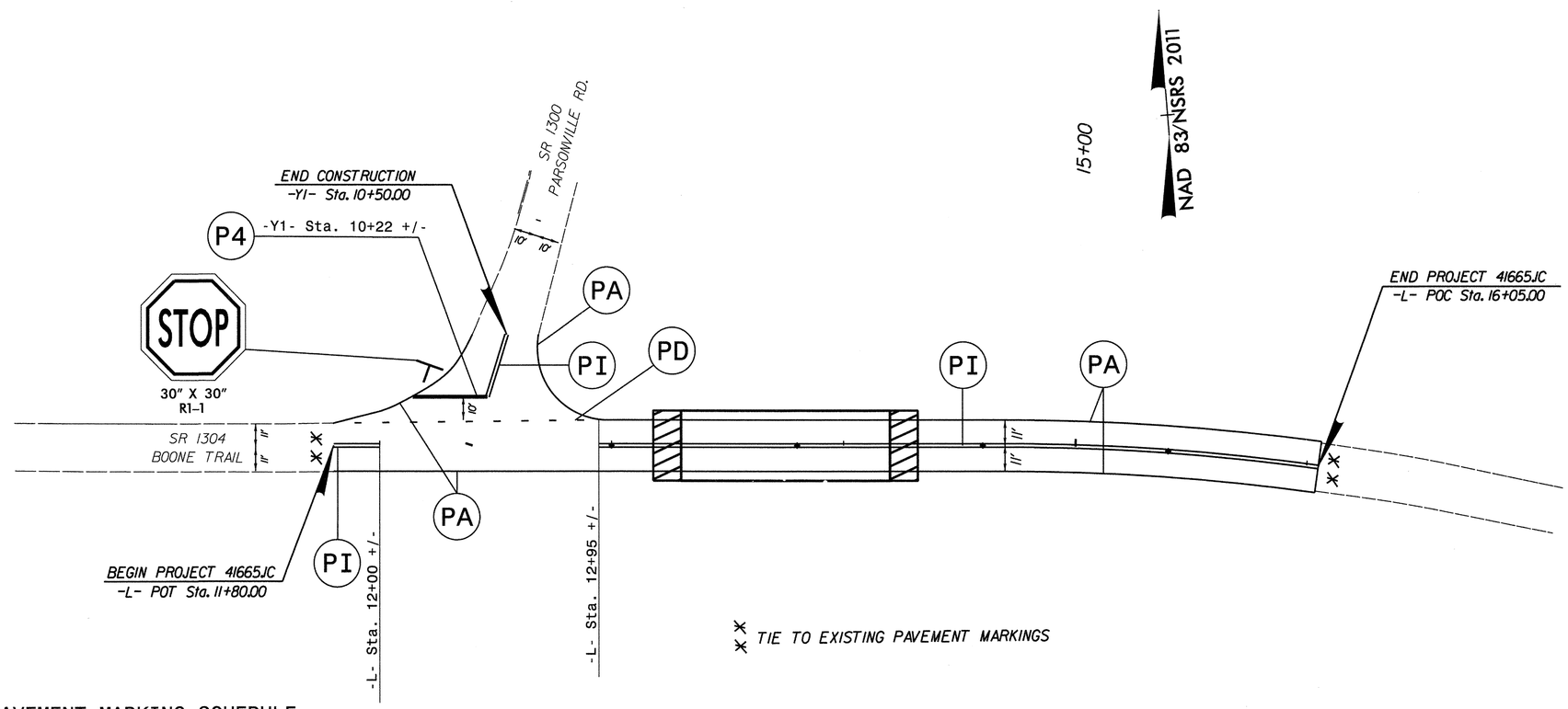

PAVEMENT MARKING SCHEDULE

- P4 - PAINT - WHITE STOPBAR (24")
- PA - PAINT - WHITE EDGELINE (4")
- PI - PAINT - YELLOW DOUBLE CENTER LINE (4")
- PD - PAINT - 2 FT. WHITE MINISKIP (4")

PAVEMENT MARKING AND
SIGNING DETAIL
SR 1304 (BOONE TRAIL RD)

REVISIONS

3/17/2014 9:49:55 AM
G:\CKE Projects\CKE21004 Limited Services Division Offices\Wilkes Site 694\Roadway\Proj\960694_RDY_07_PMP2.dgn
CKE21004_rdy_pmp.tbl

THE LOUIS BERGER GROUP, Inc.
1001 Wade Avenue, Suite 400
Raleigh, North Carolina 27605

ROADWAY PLANS

PROJECT REFERENCE NO.	SHEET NO.
41665.JC	EC-1
R/W SHEET NO.	

0' 30' 60'

SEE SHEET 5 FOR PROFILE

THESE EROSION AND SEDIMENT CONTROL PLANS COMPLY WITH THE REGULATIONS SET FORTH BY THE NCG-010000 GENERAL CONSTRUCTION PERMIT EFFECTIVE AUGUST 3, 2011 ISSUED BY THE NORTH CAROLINA DEPARTMENT OF ENVIRONMENT AND NATURAL RESOURCES DIVISION OF WATER QUALITY.

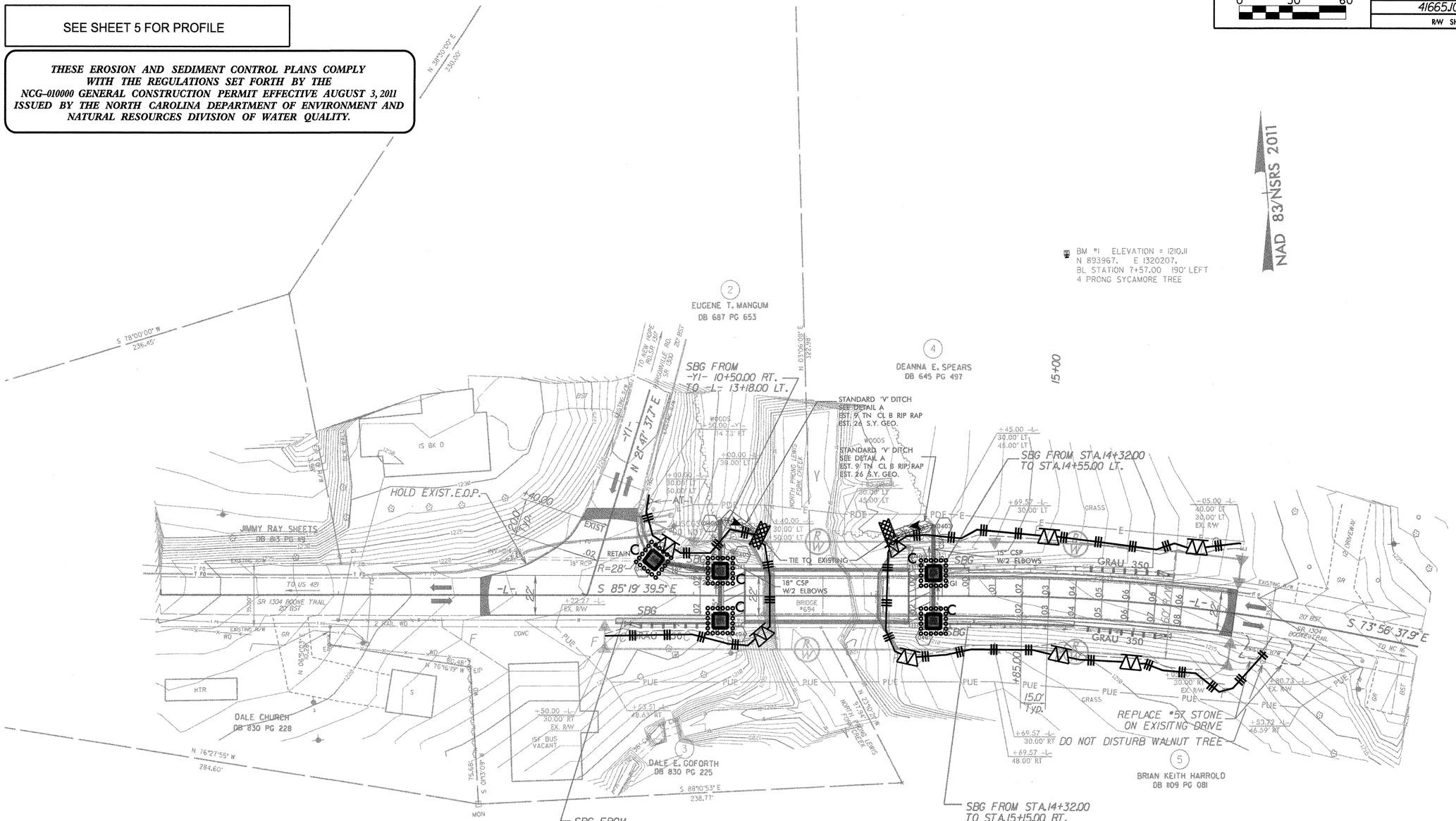

NOTE: ANY DEVIATION FROM OPTIONS GIVEN WILL REQUIRE PRIOR APPROVAL BY ENGINEER.

ADDITIONAL EROSION CONTROL DEVICES MAY NEED TO BE INSTALLED AS DIRECTED BY THE ENGINEER.

Std. #	Description	Symbol
1605.01	Temporary Silt Fence	
1606.01	Special Sediment Control Fence	
1632.03	Rock Inlet Sediment Trap: Type C	C
1633.01	Temporary Rock Silt Check Type-A	
1633.02	Temporary Rock Silt Check Type-B	

2012 STANDARD DRAWINGS

1604.01	Railroad Erosion Control Detail	1632.01	Rock Inlet Sediment Trap Type A
1605.01	Temporary Silt Fence	1632.02	Rock Inlet Sediment Trap Type B
1606.01	Special Sediment Control Fence	1632.03	Rock Inlet Sediment Trap Type C
1607.01	Gravel Construction Entrance	1633.01	Temporary Rock Silt Check Type A
1622.01	Temporary Berms and Slope Drains	1633.02	Temporary Rock Silt Check Type B
1630.01	Riser Basin	1634.01	Temporary Rock Sediment Dam Type A
1630.02	Silt Basin Type B	1634.02	Temporary Rock Sediment Dam Type B
1630.03	Temporary Silt Ditch	1635.01	Rock Pipe Inlet Sediment Trap Type A
1630.04	Stilling Basin	1635.02	Rock Pipe Inlet Sediment Trap Type B
1630.05	Temporary Diversion	1640.01	Coir Fiber Baffle
1630.06	Special Stilling Basin	1645.01	Temporary Stream Crossing
1631.01	Matting Installation		

DETAIL A

STANDARD 'V' DITCH

(Not to Scale)

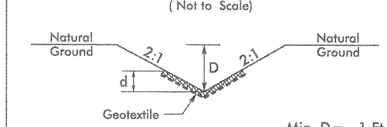

Min. D = 1 Ft.
Max. d = 1 Ft.

Type of Liner = Class B Rip-Rap

FROM -L- STA. 13+15 TO STA. 13+40 LT
FROM -L- STA. 14+10 TO STA. 14+35 LT

Walter D. Roberts III, PE
LEVEL III: Designer of Erosion and Sediment Control Plans
Certification Number: 3514

ROADSIDE ENVIRONMENTAL UNIT
DEPARTMENT OF TRANSPORTATION
DIVISION OF HIGHWAYS
RALEIGH, N.C.

2012 STANDARD SPECIFICATIONS

THE LOUIS BERGER GROUP, Inc.
1001 Wade Avenue, Suite 400
Raleigh, North Carolina 27605

ROADWAY PLANS

REVISIONS

3/17/2014 9:49:57 AM
G:\CKE Projects\CKE21004 Limited Services Division Offices\Wilkes Site 694\Roadway\Proj\960694_RDY_08_EC1.dgn
G:\CADD\Plots\CKE21004\CKE21004_rdy_EC.tbl

PROJECT REFERENCE NO.	SHEET NO.
41665.JC	EC-2
R/W SHEET NO.	

STATE OF NORTH CAROLINA
DIVISION OF HIGHWAYS

SOIL STABILIZATION TIMEFRAMES

SITE DESCRIPTION	STABILIZATION TIME	TIMEFRAME EXCEPTIONS
PERIMETER DIKES, SWALES, DITCHES AND SLOPES	7 DAYS	NONE
HIGH QUALITY WATER (HOW) ZONES	7 DAYS	NONE
SLOPES STEEPER THAN 3:1	7 DAYS	IF SLOPES ARE 10' OR LESS IN LENGTH AND ARE NOT STEEPER THAN 2:1, 14 DAYS ARE ALLOWED.
SLOPES 3:1 OR FLATTER	14 DAYS	7 DAYS FOR SLOPES GREATER THAN 50' IN LENGTH.
ALL OTHER AREAS WITH SLOPES FLATTER THAN 4:1	14 DAYS	NONE, EXCEPT FOR PERIMETERS AND HOW ZONES.

THE LOUIS BERGER GROUP, Inc.
1001 Wade Avenue, Suite 400
Raleigh, North Carolina 27605

ROADWAY PLANS

REVISIONS

3/17/2014 9:49:59 AM
G:\CKE Projects\CKE21004 Limited Services Division Offices\Wilkes Site 694\Roadway\Proj\960694_RDY_08_EC2.dgn
G:\CADD\Plot\CKE21004\CKE21004_rdy_EC.tbl

T.I.P. NO.	SHEET NO.
41665.1C	UO-1

STATE OF NORTH CAROLINA
DIVISION OF HIGHWAYS

UTILITY BY OTHERS PLANS
WILKES COUNTY

LOCATION: BRIDGE BRIDGE NO. 694 ON SR 1304 (BOONE TRAIL RD) OVER NORTH PRONG LEWIS FORK CREEK

TYPE OF WORK: UTILITY CONSTRUCTION (BY OTHERS)

TIP PROJECT: 41665.1C

See Sheet 1A For Index of Sheets
See Sheet 1B For Conventional Symbols

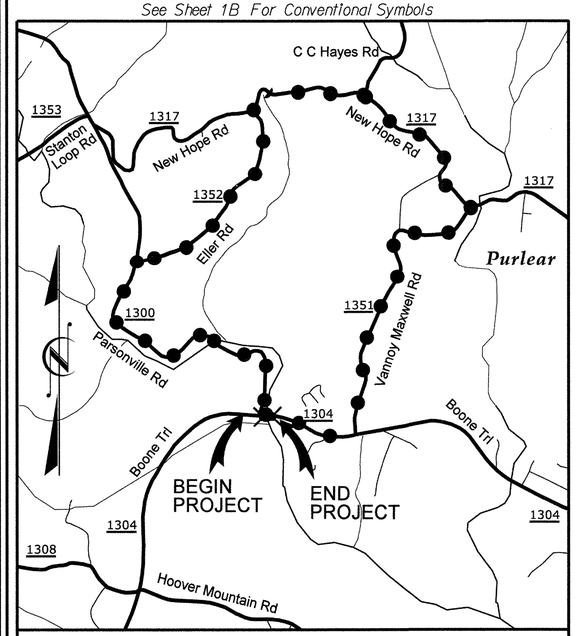

VICINITY MAP ***NTS***

OFF-SITE DETOUR

4

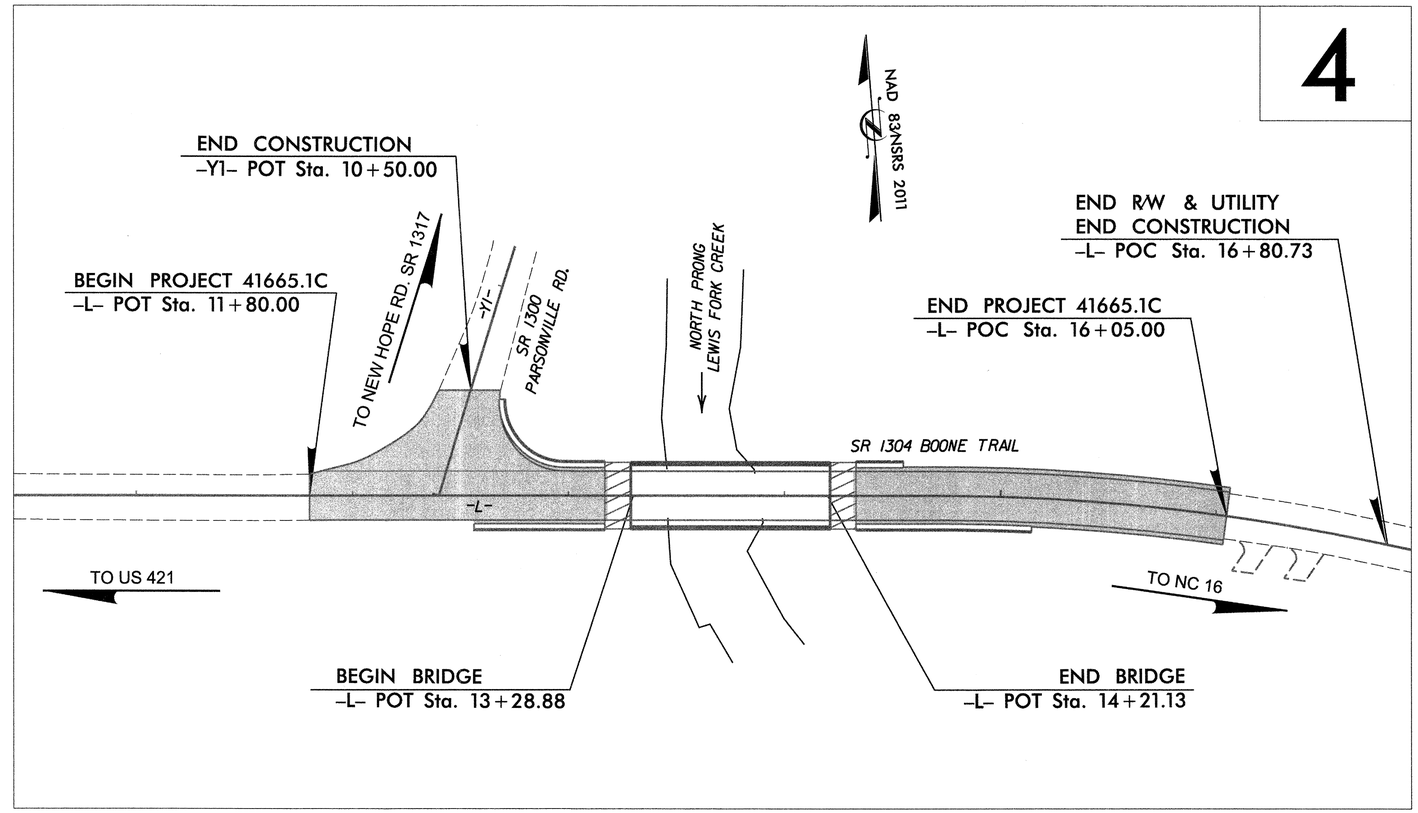

GRAPHIC SCALES

30 15 0 30 60
PLANS

20 10 0 20 40
PROFILE (HORIZONTAL)

4 2 0 4 8
PROFILE (VERTICAL)

INDEX OF SHEETS

SHEET NO.	*DESCRIPTION*
UO-1	*TITLE SHEET*
UO-2	*SYMBOLOGY SHEET*
UO-3 THRU UO-6	*WATER LINE-UTILITY PLANS*
UO-7	*WILKES TELECOMMUNICATIONS UTILITY PLANS*
UO-8	*DUKE ENERGY UTILITY PLANS*

UTILITY OWNERS ON PROJECT

(1) WATER
WEST WILKES WATER ASSOCIATION, INC
JEFF WEAVER
336-838-5614
(2) WILKES TELECOMMUNICATIONS
DOUG COX
336-973-3103
(3) DUKE ENERGY
PAULA BUTNER
336-917-2525
(4) CHARTER COMMUNICATIONS
CHIP CLEARY
336-927-7960

SEAL

NORTH CAROLINA PROFESSIONAL SEAL 16003 ENGINEER DEAN D. HATFIELD

Dean Hatfield, P.E. *PROJECT ENGINEER*

Prepared In the Office of:

THE LOUIS BERGER GROUP, Inc.
1001 Wade Avenue, Suite 400
Raleigh, North Carolina 27605

09/08/99

3/17/2014 9:26:27 AM
G:\CKE Projects\CKE21004 Limited Services Division Offices\Wilkes Site 694\Utilities\960694_UO-1.dgn
G:\CADD\Plot\CKE21004\CKE21004_UTL.tbl

PROJECT REFERENCE NO.	SHEET NO.
41665.1C	U0-2

STATE OF NORTH CAROLINA
DIVISION OF HIGHWAYS

UTILITIES PLAN SHEET SYMBOLS

PROPOSED WATER SYMBOLS

- Water Line (Sized as Shown) — 12" WL
- 11¼ Degree Bend
- 22½ Degree Bend
- 45 Degree Bend
- 90 Degree Bend
- Plug
- Tee
- Cross
- Reducer
- Gate Valve — GV
- Butterfly Valve — BV
- Tapping Valve — TGV
- Line Stop — LS
- Line Stop with Bypass — LS/BP
- Blow Off — BO
- Fire Hydrant — PFH
- Relocate Fire Hydrant — RFH
- Remove Fire Hydrant — REM FH
- Water Meter — PWM
- Relocate Water Meter — RWM
- Remove Water Meter — REM WM
- Water Pump Station — PS(W)
- RPZ Backflow Preventer — PBPZ
- DCV Backflow Preventer — PBFP
- Relocate RPZ Backflow Preventer — RBPZ
- Relocate DCV Backflow Preventer — RBFP

PROPOSED SEWER SYMBOLS

- Gravity Sewer Line (Sized as Shown) — 12" SS
- Force Main Sewer Line (Sized as Shown) — 12" FSS
- Manhole (Sized per Note)
- Sewer Pump Station — PS(SS)

PROPOSED MISCELLANOUS UTILITIES SYMBOLS

- Power Pole
- Telephone Pole
- Joint Use Pole
- Telephone Pedestal — TEL PED
- Utility Line by Others (Type as Shown) — PROP O/H POW LINES
- Trenchless Installation — 12" TL INSTALL
- Encasement by Open Cut — 24" ENCAS BY OC
- Encasement — 24" ENCASEMENT
- Thrust Block
- Air Release Valve — AR
- Utility Vault — UV
- Concrete Pier — CP
- Steel Pier — SP
- Plan Note — NOTE
- Pay Item Note — PAY ITEM

EXISTING UTILITIES SYMBOLS

- Power Pole
- Telephone Pole
- Joint Use Pole
- Utility Pole
- Utility Pole with Base
- H-Frame Pole
- Power Transmission Line Tower
- Water Manhole
- Power Manhole
- Telephone Manhole
- Sanitary Sewer Manhole
- Hand Hole for Cable
- Power Transformer
- Telephone Pedestal
- CATV Pedestal
- Gas Valve
- Gas Meter
- Located Miscellaneous Utility Object
- Abandoned According to Utility Records — AATUR
- End of Information — E.O.I.
- *Underground Power Line — P
- *Underground Telephone Cable — T
- *Underground Telephone Conduit — TC
- *Underground Fiber Optics Telephone Cable — T FO
- *Underground TV Cable — TV
- *Underground Fiber Optics TV Cable — TV FO
- *Underground Gas Pipeline — G
- Aboveground Gas Pipeline — A/G Gas
- *Underground Water Line — W
- Aboveground Water Line — A/G Water
- *Underground Gravity Sanitary Sewer Line — SS
- Aboveground Gravity Sanitary Sewer Line — A/G Sanitary Sewer
- *Underground SS Forced Main Line — FSS
- Underground Unknown Utility Line — ?UTL
- SUE Test Hole
- Water Meter
- Water Valve
- Fire Hydrant
- Sanitary Sewer Cleanout

*For Existing Utilities

- Utility Line Drawn from Record (Type as Shown) — W
- Designated Utility Line (Type as Shown)

REV: 2/1/2012

5/14/99
3/17/2014 9:26:34 AM
G:\CKE Projects\CKE21004 Limited Services Division Offices\Wilkes Site 694\Utilities\960694_U0-2.dgn
G:\CADD\Plot\CKE21004\CKE21004_UTL.tbl

PROJECT REFERENCE NO.	SHEET NO.
41665JC	U0-3
R/W SHEET NO.	

0' 30' 60'

NORTH CAROLINA PROFESSIONAL SEAL 16003 ENGINEER JEFFREY ALAN PARNELL

REGISTERED ENGINEER

NAD 83/NSRS 2011

BM #1 ELEVATION = 1210.11
N 893967. E 1320207.
BL STATION 7+57.00 190' LEFT
4 PRONG SYCAMORE TREE

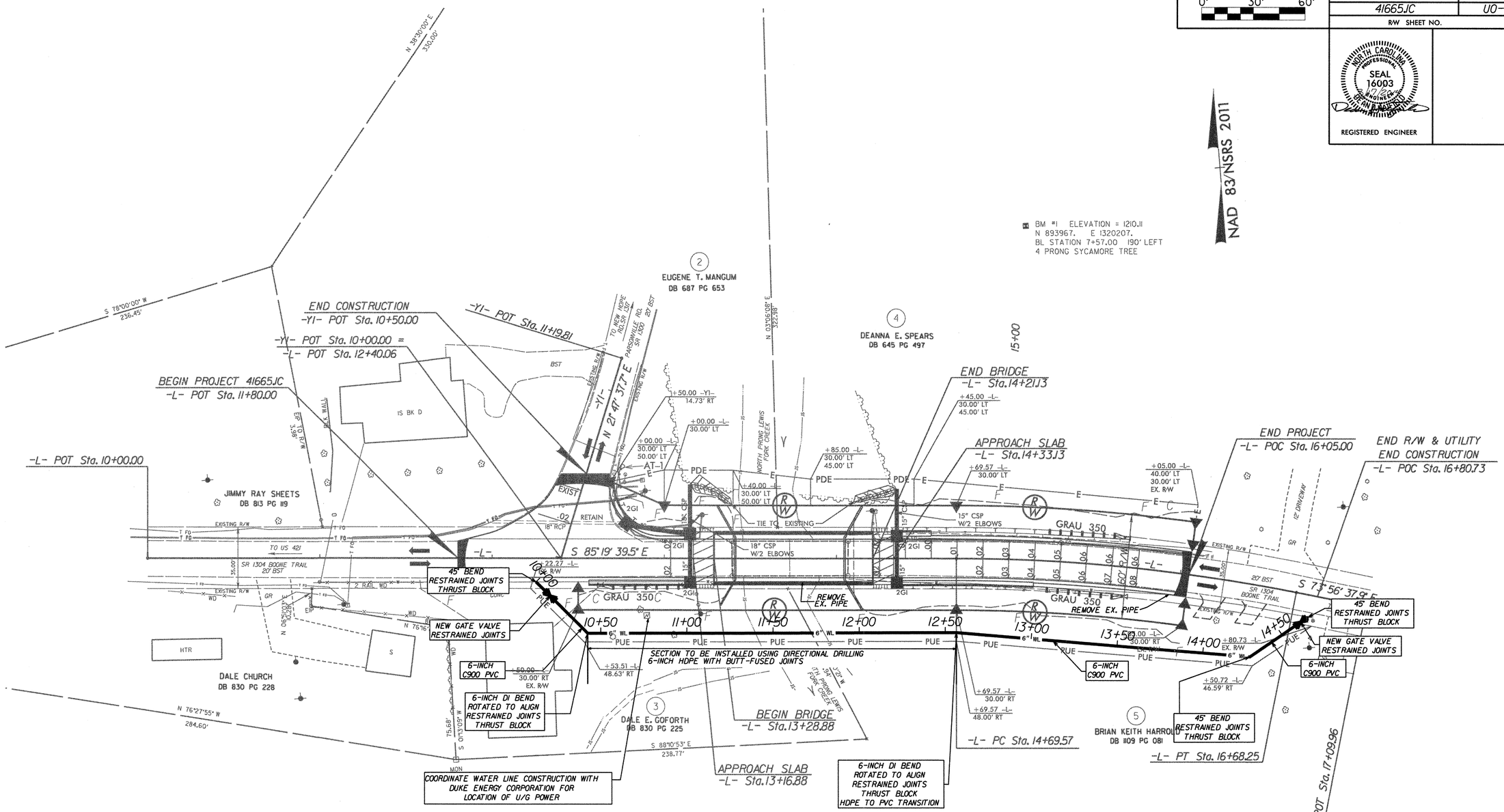

CURVE DATA FOR -L-

PI Sta 15+69.24
Δ = 11° 23' 01.6" (RT)
D = 5° 43' 46.5"
L = 198.68'
T = 99.67'
R = 1,000.00'
Se = EXIST.

THE LOUIS BERGER GROUP, Inc.
1001 Wade Avenue, Suite 400
Raleigh, North Carolina 27605

ROADWAY PLANS

REVISIONS

3/17/2014 9:26:36 AM
G:\CKE Projects\CKE21004 Limited Services Division Offices\Wilkes Site 694\Utilities\960694_U0-3.dgn
G:\CADD\Plot\CKE21004\CKE21004_UTL.tbl

PROJECT REFERENCE NO.	SHEET NO.
41665.1C	U0-4

DESIGNED BY: TP
DRAWN BY:
CHECKED BY: JD
APPROVED BY: DH
REVISED:

NORTH CAROLINA DEPARTMENT OF TRANSPORTATION

UTILITIES ENGINEERING SEC.
PHONE:(919)707-6690
FAX:(919)250-4151

NORTH CAROLINA PROFESSIONAL SEAL 16003 ENGINEER JOHN D. HAMPTON

REGISTERED ENGINEER

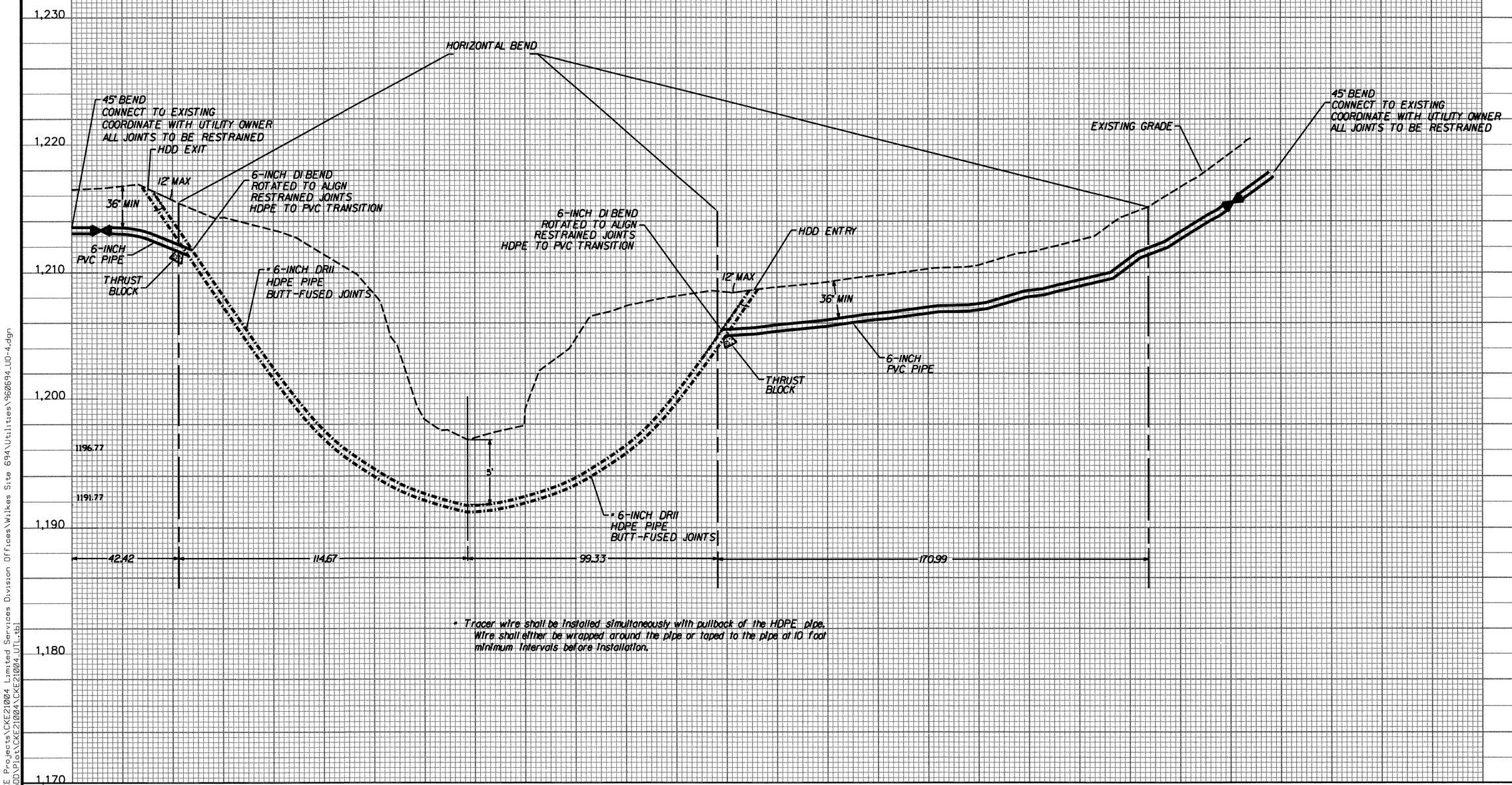

* Tracer wire shall be installed simultaneously with pullback of the HDPE pipe. Wire shall either be wrapped around the pipe or taped to the pipe at 10 foot minimum intervals before installation.

5/14/99

3/17/2014 9:26:39 AM
G:\CKE Projects\CKE21004 Limited Services Division Offices\Wilkes Site 694\Utilities\960694_U0-4.dgn
G:\CADD\Plots\CKE21004\CKE21004_UTL.tbl

PROJECT REFERENCE NO.	SHEET NO.
41665JC	U0-5
R/W SHEET NO.	

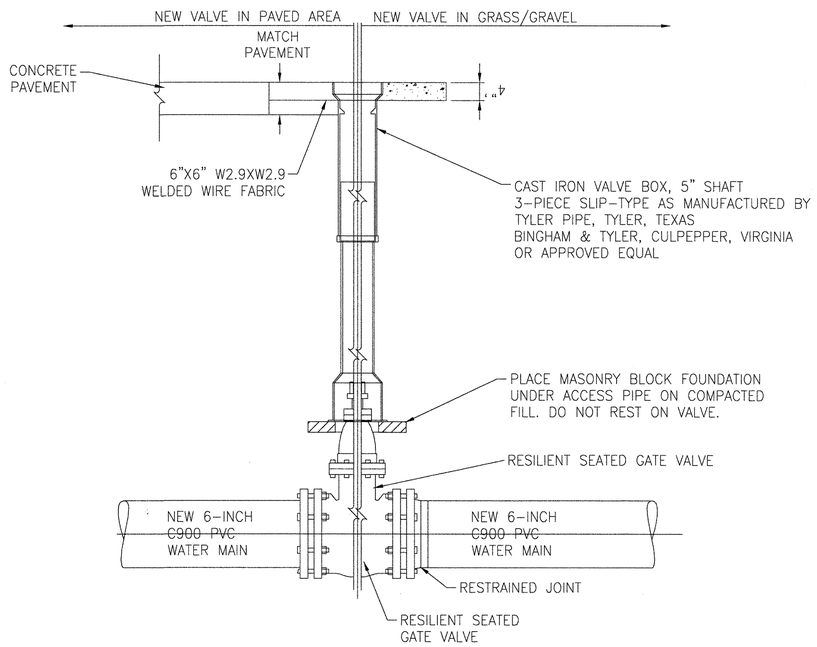

WATER GATE VALVE INSTALLATION DETAIL

N.T.S.

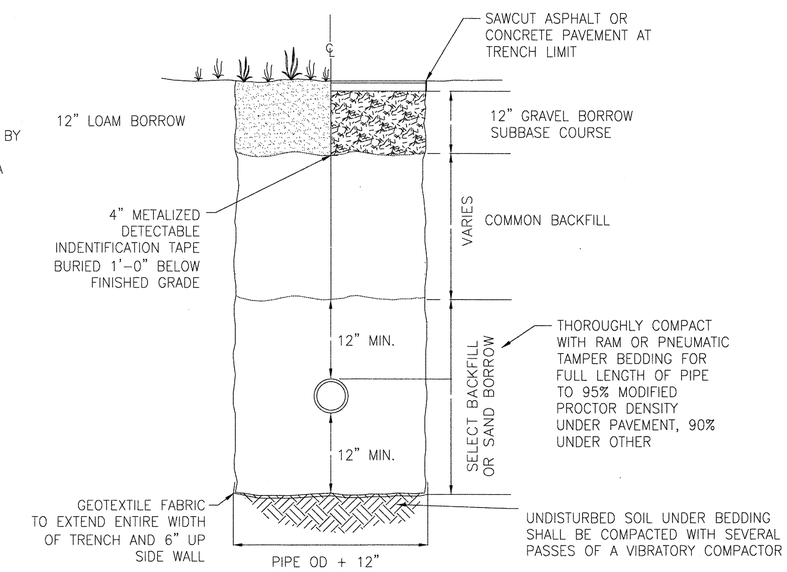

PIPE TRENCH DETAIL

N.T.S.

GENERAL NOTES:

1. COORDINATE WITH UTILITY OWNER FOR LOCATION OF ISOLATION VALVES ON EXISTING WATER MAINS AND BYPASS REQUIREMENTS.
2. COORDINATE WITH UTILITY OWNER FOR CONNECTIONS TO EXISTING WATER MAINS. SERVICE INTERRUPTIONS SHALL NOT BE MORE THAN 24 HOURS.
3. HIGH-DENSITY POLYETHYLENE (HDPE) PIPE SHALL DR-11 MANUFACTURED USING PE4710 RESIN.
4. ALL HDPE PIPE SHALL BE CONSTRUCTED USING BUTT-FUSED JOINTS. BOLTED JOINING TO BE USED FOR TRANSITION TO PVC PIPE USING HDPE FLANGE ADAPTER WITH DUCTILE IRON BACK-UP RING.
5. TRACER WIRE SHALL BE INSTALLED SIMULTANEOUSLY WITH PULLBACK OF HDPE PIPE. WIRE SHALL EITHER BE WRAPPED AROUND THE PIPE OR TAPED TO THE PIPE AT 10 FOOT MINIMUM INTERVALS BEFORE INSTALLATION.
6. ALL PVC PIPE SHALL BE C900 DR-18 PIPE WITH RESTRAINED JOINTS UNLESS OTHERWISE DIRECTED BY THE UTILITY OWNER.
7. ALL FITTINGS ON THE PVC MAIN AND AT THE TRANSITION FROM HDPE TO PVC SHALL BE DUCTILE IRON WITH A RATED WORKING PRESSURE OF 350 PSI AND RESTRAINED JOINTS.
8. ACCEPTABLE JOINT RESTRAINT FOR VALVES AND DUCTILE IRON FITTINGS INCLUDE RODS AND THRUST COLLARS, MEGALUG MECHANICAL JOINT RESTRAINTS, OR APPROVED EQUAL.
9. CONTRACTOR SHALL BE RESPONSIBLE FOR TESTING AND DISINFECTION OF NEW WATER MAINS.

REVISIONS

3/17/2014 9:26:40 AM
G:\CKE Projects\CKE21004 Limited Services Division Offices\Wilkes Site 694\Utilities\960694_U0-5.dgn
G:\CADD\Plots\CKE21004\CKE21004_UTL.tbl

THE LOUIS BERGER GROUP, Inc.
1001 Wade Avenue, Suite 400
Raleigh, North Carolina 27605

ROADWAY PLANS

PROJECT REFERENCE NO.	SHEET NO.
41665JC	U0-6
R/W SHEET NO.	

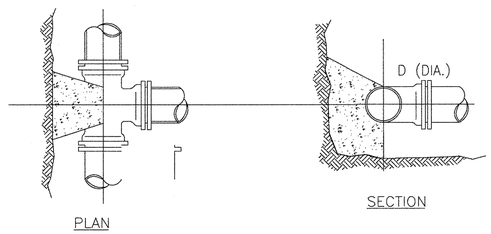

TEES

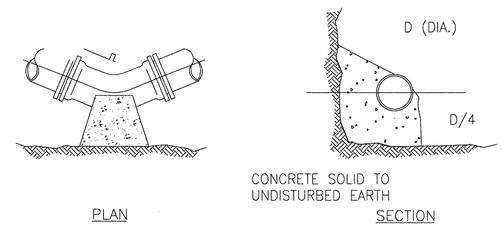

HORIZONTAL BENDS

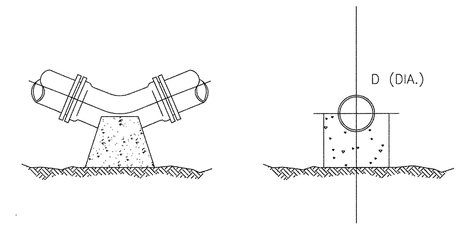

VERTICAL BENDS

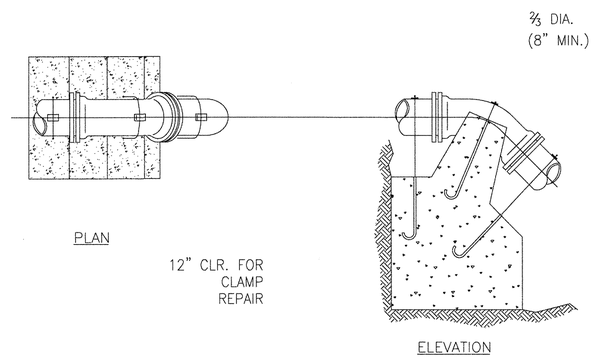

CONC. ANCHORAGE

TYPICAL THRUST BLOCK

NOT TO SCALE

TEES							
	PIPE SIZE-D (DIA.)						
	2"	4"	6"	8"	12"	16"	20"
A	2"	4"	8"	10"	1'-0"	1'-3"	1'-6"
B	4"	6"	8"	10"	1'-2"	1'-4"	1'-6"
C	6"	8"	10"	1'-0"	1'-3"	1'-6"	1'-8"
E	4"	6"	8"	10"	1'-2"	1'-6"	1'-10"

		ANCHORAGES PIPE						
BEND		PIPE SIZE-D (DIA.)						
		2"	4"	6"	8"	12"	16"	20"
1/8	R	1'-8"	2'-2"	2'-6"	3'-0"	4'-6"	5'-4"	6'-0"
	S	2'-6"	2'-3"	2'-6"	2'-9"	3'-6"	2'-6"	5'-6"
	T	1'-0"	2'-0"	3'-0"	4'-0"	4'-9"	7'-0"	9'-6"
1/16	R	1'-4"	1'-4"	2'-0"	2'-8"	4'-0"	4'-6"	5'-0"
	S	1'-3"	1'-3"	1'-9"	2'-3"	2'-6"	3'-2"	3'-8"
	T	1'-0"	1'-8"	2'-6"	3'-4"	4'-0"	6'-0"	8'-6"
1/32	R	1'-0"	1'-2"	1'-6"	2'-0"	3'-0"	3'-8"	4'-3"
	S	1'-0"	1'-0"	1'-3"	1'-9"	2'-0"	2'-4"	2'-6"
	T	1'-0"	1'-6"	2'-0"	2'-6"	3'-0"	4'-6"	5'-9"

HORTIZONTAL BENDS								
BEND		PIPE SIZE-D (DIA.)						
		2"	4"	6"	8"	12"	16"	20"
1/4	X	4.5"	9"	1'-0"	1'-4"	1'-11"	2'-8"	3'-4"
	Y	9"	18"	2'-0"	2'-8"	3'-10"	5'-6"	6'-8"
	Z	8"	8"	1'-0"	1'-4"	2'-1"	2'-1"	2'-1"
1/8	X	8"	8"	1'-0"	1'-0"	1'-0"	1'-3"	1'-6"
	Y	8"	10"	1'-0"	1'-6"	2'-0"	2'-6"	3'-0"
	Z	4"	6"	8"	10"	1'-2"	1'-4"	1'-6"
1/16	X	8"	8"	1'-0"	1'-0"	1'-0"	1'-3"	1'-6"
	Y	8"	10"	1'-0"	1'-4"	1'-6"	1'-9"	2'-6"
	Z	4"	6"	8"	10"	1'-2"	1'-4"	1'-6"
1/32	X	8"	8"	1'-0"	1'-0"	1'-0"	1'-2"	1'-4"
	Y	8"	10"	1'-0"	1'-0"	1'-2"	1'-4"	1'-6"
	Z	4"	6"	8"	10"	1'-2"	1'-4"	1'-6"

VERTICAL BENDS								
BEND		PIPE SIZE-D (DIA.)						
		2"	4"	6"	8"	12"	16"	20"
1/4	X	2'-9"	2'-9"	2'-9"	3'-0"	3'-4"	4'-7"	6'-1"
	Y	7"	7"	7"	1'-2"	1'-10"	2'-8"	3'-0"
	Z	1'-0"	1'-0"	1'-0"	1'-2"	1'-5"	2'-4"	2'-6"
1/8	L	8"	1'-0"	1'-3"	1'-8"	2'-6"	3'-6"	4'-8"
	M	4"	6"	7"	8"	11"	1'-4"	1'-6"
	N	7"	7"	7"	8"	11"	1'-4"	1'-6"
1/16	L	8"	8"	9"	1'-0"	1'-9"	2'-6"	3'-0"
	M	4"	6"	7"	7"	10"	1'-0"	1'-2"
	N	7"	7"	7"	7"	8"	10"	1'-0"
1/32	L	8"	8"	8"	8"	1'-0"	1'-4"	1'-9"
	M	4"	6"	7"	7"	10"	1'-0"	1'-2"
	N	7"	7'	7"	7"	8"	10"	1'-0"

NOTES

1. CONCRETE THRUST BLOCKS SHALL BEAR AGAINST UNDISTURBED EARTH. IN AREAS WHERE BEARING SOILS HAVE BEEN DISTURBED, RESTRAINED JOINTS SHALL BE USED.
2. ALL FORCE MAIN BENDS, TEES, MAIN TAPS, AND END CAPS SHALL REQUIRE A CONCRETE THRUST BLOCK.
3. WHERE UNDISTURBED EARTH BACKING IS NOT AVAILABLE THRUST RESTRAINT RODS SHALL BE USED WITH BLOCK.
4. CONCRETE TO HAVE MINIMUM COMPRESSIVE STRENGTH OF 4000 PSI AT 28 DAYS.
5. CONCRETE SHALL NOT BE ALLOWED TO RUN.

THE LOUIS BERGER GROUP, Inc.
1001 Wade Avenue, Suite 400
Raleigh, North Carolina 27605

ROADWAY PLANS

REVISIONS

3/17/2014 9:26:41 AM
G:\CKE Projects\CKE21004 Limited Services Division Offices\Wilkes Site 694\Utilities\960694_U0-6.dgn
G:\CADD\Plot\CKE21004\CKE21004_UTL.tbl

0' 30' 60'	PROJECT REFERENCE NO.	SHEET NO.
	41665JC	U0-7
	R/W SHEET NO.	

Wilkes Telecommunications
1400 River Street
Wilkesboro, NC 28697
Phone: 336-973-3103
Toll Free: 877-973-3104

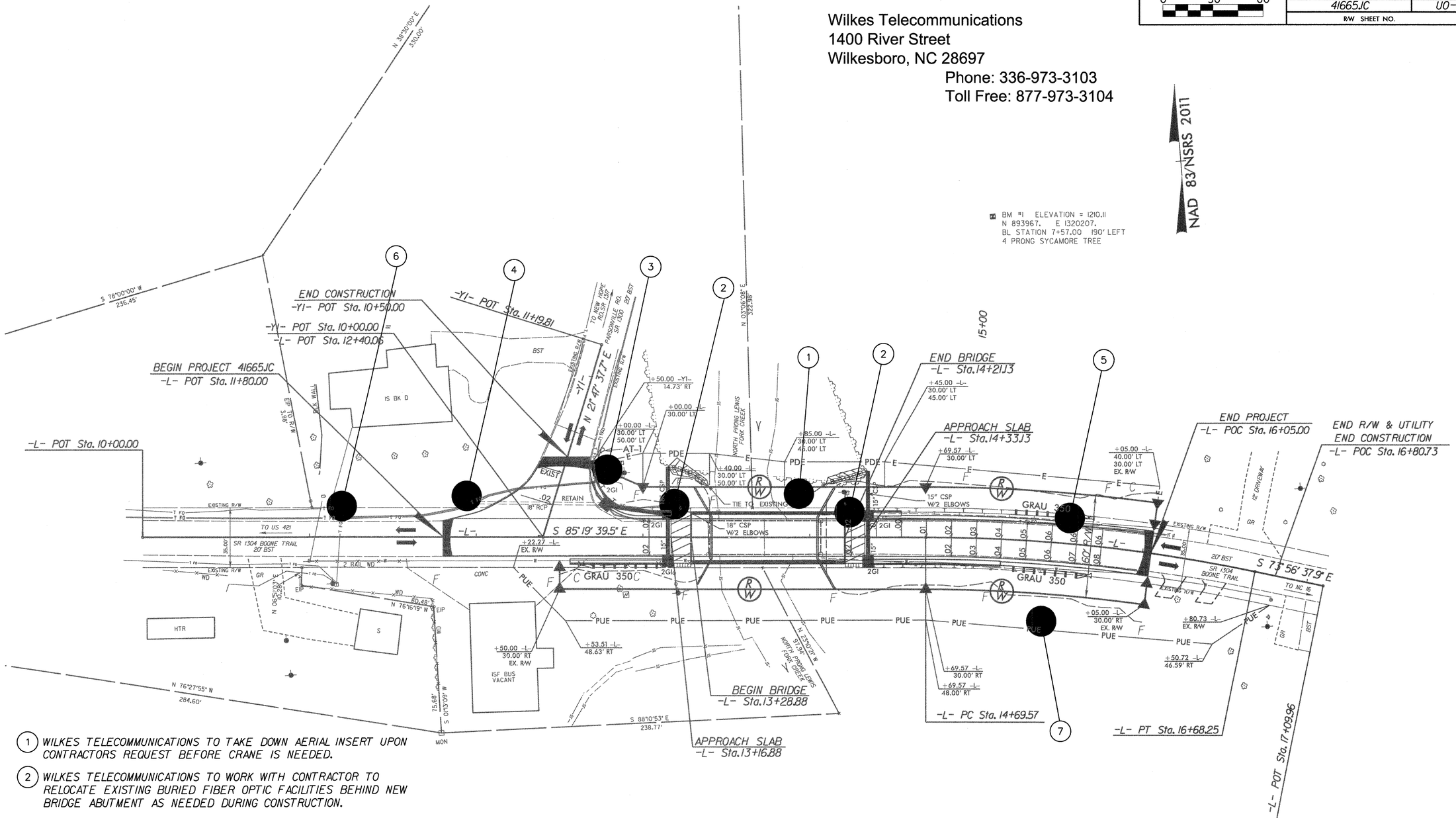

1. WILKES TELECOMMUNICATIONS TO TAKE DOWN AERIAL INSERT UPON CONTRACTORS REQUEST BEFORE CRANE IS NEEDED.
2. WILKES TELECOMMUNICATIONS TO WORK WITH CONTRACTOR TO RELOCATE EXISTING BURIED FIBER OPTIC FACILITIES BEHIND NEW BRIDGE ABUTMENT AS NEEDED DURING CONSTRUCTION.
3. WILKES TELECOMMUNICATIONS TO WORK WITH CONTRACTOR TO RAISE EXISTING BURIED FIBER OPTIC FACILITIES AND HAND HOLES IN THIS AREA. THIS AREA TO BE FILLED.
4. WILKES TELECOMMUNICATIONS TO LOWER EXISTING BURIED FIBER OPTIC FACILITIES TO BE UNDER EXPRESSWAY GUTTER.
5. EXISTING BURIED FIBER OPTIC FACILITIES TO BE UNDER PROPOSED PAVEMENT IN THIS AREA.
6. WILKES TELECOMMUNICATIONS TO LOWER/RELOCATE EXISTING BURIED FIBER OPTIC FACILITIES TO BE UNDER EXPRESSWAY GUTTER.
7. PROPOSED 6 INCH WATER LINE.

** NOTE:
PLEASE CONTACT WILKES TELECOMMUNICATIONS ENGINEERING DEPARTMENT @ 336-973-7100 2 WEEKS BEFORE ANY WORK BEGINS TO COORDINATE RELOCATION OF FIBER OPTIC FACILITIES.

**NOTE:
PLEASE CALL 811 AND/OR 336-973-4000 FOR LOCATES OF WILKES TELECOMMUNICATIONS FIBER OPTIC FACILITIES BEFORE WORK ZONE SIGNS OR ANY DIGGING IS PREFORMED.

THE LOUIS BERGER GROUP, Inc.
1001 Wade Avenue, Suite 400
Raleigh, North Carolina 27605

ROADWAY PLANS

REVISIONS

3/17/2014 9:26:43 AM
G:\CKE Projects\CKE21004 Limited Services Division Offices\Wilkes Site 694\Utilities\960694_U0-7.dgn
G:\CADD\Plot\CKE21004\CKE21004_UTL.tbl

0' 30' 60'	PROJECT REFERENCE NO.	SHEET NO.
	41665JC	U0-8
	R/W SHEET NO.	

USP: Enter Up Stream Protection, Location, DeviceType, and Facility ID of the Blocking Device
USP: 100L RECLOSER FID# 38997887 POLE # M295
USP:

WZS: Remember "Your Circle of Safety"
WZS: PG 14
WZS:

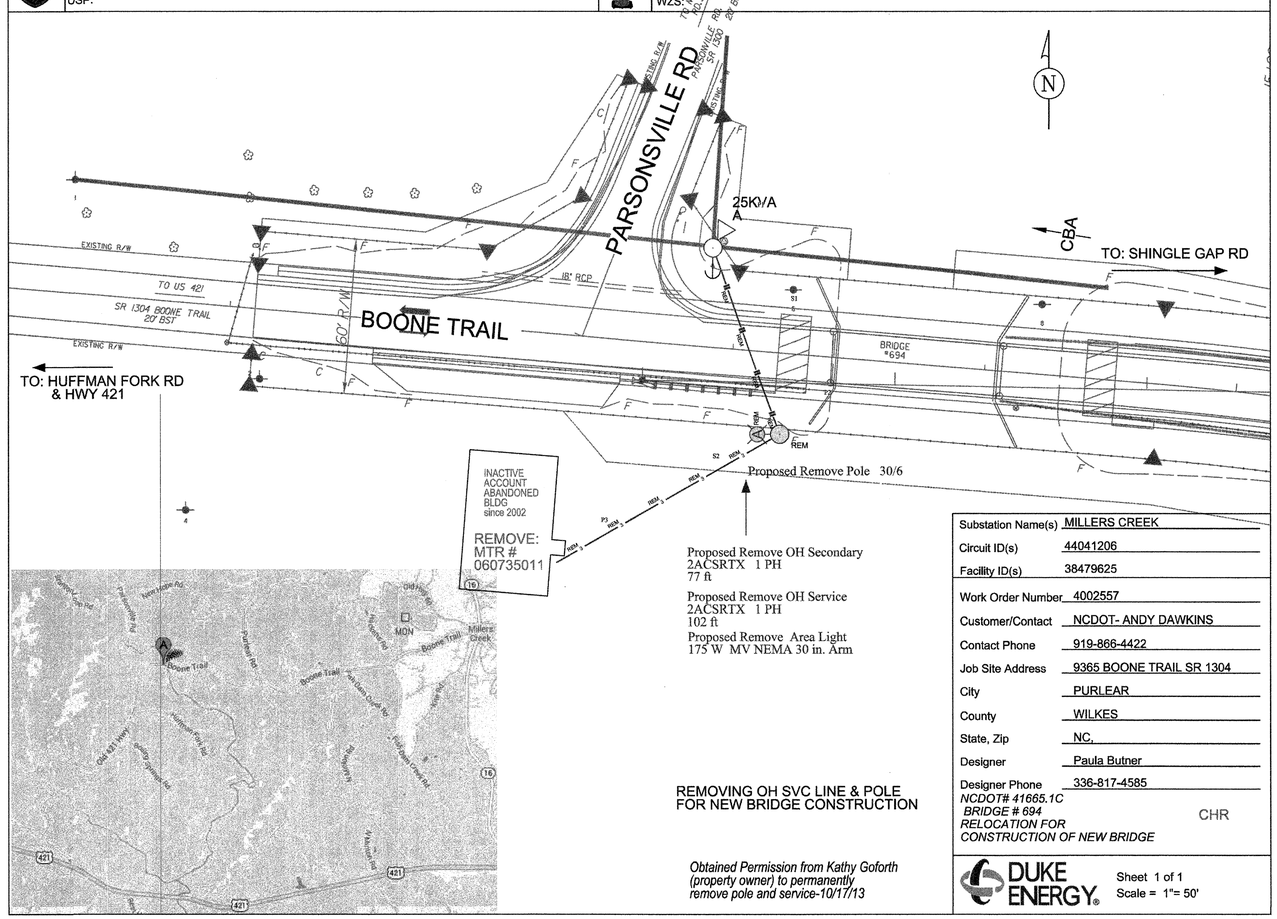

Substation Name(s)	MILLERS CREEK
Circuit ID(s)	44041206
Facility ID(s)	38479625
Work Order Number	4002557
Customer/Contact	NCDOT- ANDY DAWKINS
Contact Phone	919-866-4422
Job Site Address	9365 BOONE TRAIL SR 1304
City	PURLEAR
County	WILKES
State, Zip	NC,
Designer	Paula Butner
Designer Phone	336-817-4585

NCDOT# 41665.1C
BRIDGE # 694
RELOCATION FOR
CONSTRUCTION OF NEW BRIDGE

CHR

REMOVING OH SVC LINE & POLE
FOR NEW BRIDGE CONSTRUCTION

Obtained Permission from Kathy Goforth (property owner) to permanently remove pole and service-10/17/13

DUKE ENERGY®

Sheet 1 of 1
Scale = 1"= 50'

THE LOUIS BERGER GROUP, Inc.
1001 Wade Avenue, Suite 400
Raleigh, North Carolina 27605

ROADWAY PLANS

REVISIONS

3/17/2014 9:26:45 AM
G:\CKE Projects\CKE21004 Limited Services Division Offices\Wilkes Site 694\Utilities\960694_U0-8.dgn
G:\CADD\Plot\CKE21004\CKE21004_UTL.tbl