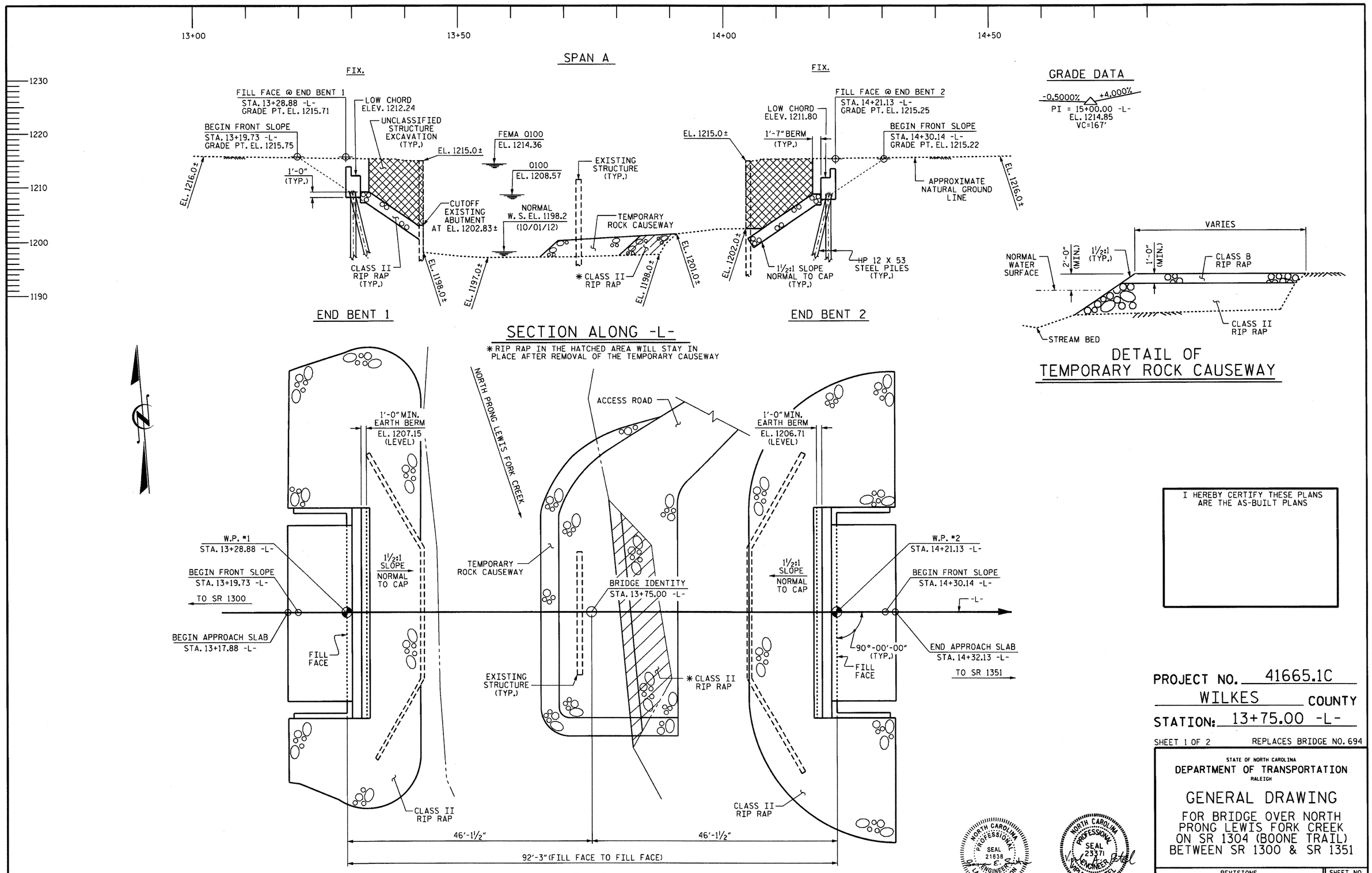

I HEREBY CERTIFY THESE PLANS ARE THE AS-BUILT PLANS

PROJECT NO. 41665.1C

WILKES COUNTY

STATION: 13+75.00 -L-

SHEET 1 OF 2 REPLACES BRIDGE NO. 694

STATE OF NORTH CAROLINA
DEPARTMENT OF TRANSPORTATION
RALEIGH

GENERAL DRAWING

FOR BRIDGE OVER NORTH PRONG LEWIS FORK CREEK ON SR 1304 (BOONE TRAIL) BETWEEN SR 1300 & SR 1351

NORTH CAROLINA PROFESSIONAL SEAL 21638 ENGINEER LAURA E. SUTTON 3/7/14

NORTH CAROLINA PROFESSIONAL SEAL 23371 ENGINEER VIPUL A. PATEL 3/7/14

REVISIONS								SHEET NO.
NO.	BY:	DATE:	NO.	BY:	DATE:			S-1
1			3					TOTAL SHEETS
2			4					15

DRAWN BY : T. H. CARROLL DATE : 1/15/14
CHECKED BY : V. A. PATEL DATE : 1/16/14
DESIGN ENGINEER OF RECORD: V. A. PATEL DATE : 3/4/14

07-MAR-2014 09:47
S:\DPG3\DivisionLets\Div11\BR*694Wilkes\Plans\41665.1C_SD.GD.dgn
vpatel

HYDRAULIC DATA

DESIGN DISCHARGE	= 3950 CFS
FREQUENCY OF DESIGN FLOOD	= 25 YRS.
DESIGN HIGH WATER ELEVATION	= 1206.3
DRAINAGE AREA	= 23.8 SQ. MI.
BASE DISCHARGE (Q100)	= 5510 CFS
BASE HIGH WATER ELEVATION	= 1208.57
FEMA BASE DISCHARGE (Q100)	= 11369 CFS
FEMA BASE HIGH WATER ELEVATION	= 1214.36

OVERTOPPING FLOOD DATA

OVERTOPPING DISCHARGE	= 13991 CFS
FREQUENCY OF OVERTOPPING FLOOD	= 500+ YRS.
OVERTOPPING FLOOD ELEVATION	= 1217.91

BM #1 : 190' LEFT OF STA. 7+57.00 -BL-, EL. 1210.11

NOTES

ASSUMED LIVE LOAD = HL 93 OR ALTERNATE LOADING.

THIS BRIDGE HAS BEEN DESIGNED IN ACCORDANCE WITH THE AASHTO LRFD BRIDGE DESIGN SPECIFICATIONS.

THIS BRIDGE IS LOCATED IN SEISMIC ZONE 1.

FOR OTHER DESIGN DATA AND GENERAL NOTES, SEE SHEET SN.

FOR SUBMITTAL OF WORKING DRAWINGS, SEE SPECIAL PROVISIONS.

FOR FALSEWORK AND FORMWORK, SEE SPECIAL PROVISIONS.

FOR CRANE SAFETY, SEE SPECIAL PROVISIONS.

FOR GROUT FOR STRUCTURES, SEE SPECIAL PROVISIONS.

FOR EROSION CONTROL MEASURES, SEE EROSION CONTROL PLANS.

FOR UTILITY INFORMATION, SEE UTILITY PLANS AND SPECIAL PROVISIONS.

THIS STRUCTURE HAS BEEN DESIGNED IN ACCORDANCE WITH "HEC 18-EVALUATING SCOUR AT BRIDGES".

REMOVAL OF THE EXISTING BRIDGE SHALL BE PERFORMED SO AS NOT TO ALLOW DEBRIS TO FALL INTO THE WATER. THE CONTRACTOR SHALL REMOVE THE BRIDGE AND SUBMIT PLANS FOR DEMOLITION IN ACCORDANCE WITH ARTICLE 402-2 OF THE STANDARD SPECIFICATIONS.

THE MATERIAL SHOWN IN THE CROSS-HATCHED AREA ON SHEET S-1 SHALL BE EXCAVATED FOR A DISTANCE OF 35 FT. EACH SIDE OF CENTERLINE ROADWAY AS DIRECTED BY THE ENGINEER. THIS WORK WILL BE PAID FOR AT THE CONTRACT LUMP SUM PRICE FOR UNCLASSIFIED STRUCTURE EXCAVATION. SEE SECTION 412 OF THE STANDARD SPECIFICATIONS.

THE EXISTING STRUCTURE CONSISTING OF 2 SPANS (2 @ 31'-3") WITH A 20' CLEAR ROADWAY WIDTH AND REINFORCED CONCRETE DECK GIRDERS ON END BENTS WITH REINFORCED CONCRETE ABUTMENTS AND INTERIOR BENT WITH REINFORCED CONCRETE POST AND WEB LOCATED AT PROPOSED STRUCTURE SHALL BE REMOVED. THE EXISTING BRIDGE IS PRESENTLY POSTED FOR LOAD LIMIT. SHOULD THE STRUCTURAL INTEGRITY OF THE BRIDGE DETERIORATE DURING CONSTRUCTION OF THE PROPOSED BRIDGE, A LOAD LIMIT MAY BE POSTED AND MAY BE REDUCED AS FOUND NECESSARY DURING THE LIFE OF THE PROJECT.

THE SUBSTRUCTURE OF THE EXISTING BRIDGE INDICATED ON THE PLANS IS FROM THE BEST INFORMATION AVAILABLE. SINCE THIS INFORMATION IS SHOWN FOR THE CONVENIENCE OF THE CONTRACTOR, THE CONTRACTOR SHALL HAVE NO CLAIM WHATSOEVER AGAINST THE DEPARTMENT OF TRANSPORTATION FOR ANY DELAYS OR ADDITIONAL COST INCURRED BASED ON DIFFERENCES BETWEEN THE EXISTING BRIDGE SUBSTRUCTURE SHOWN ON THE PLANS AND THE ACTUAL CONDITIONS AT THE PROJECT SITE.

ASPHALT WEARING SURFACE IS INCLUDED IN ROADWAY QUANTITY ON ROADWAY PLANS.

AT THE CONTRACTOR'S OPTION, AND UPON REMOVAL OF THE CAUSEWAY, THE CLASS II RIP RAP USED IN THE CAUSEWAY MAY BE PLACED AS RIP RAP SLOPE PROTECTION. SEE SPECIAL PROVISIONS FOR "CONSTRUCTION, MAINTENANCE AND REMOVAL OF TEMPORARY ACCESS AT STATION 13+75.00 -L-."

FOR PILES, SEE SECTION 450 OF THE STANDARD SPECIFICATIONS.

PILES AT END BENT 1 AND 2 ARE DESIGNED FOR A FACTORED RESISTANCE OF 105 TONS PER PILE.

DRIVE PILES AT END BENT 1 AND 2 TO A REQUIRED DRIVING RESISTANCE OF 175 TONS PER PILE.

STEEL H-PILE POINTS ARE REQUIRED FOR STEEL H-PILES AT END BENT 1 AND 2. FOR STEEL PILE POINTS, SEE SECTION 450 OF THE STANDARD SPECIFICATIONS.

IT HAS BEEN ESTIMATED THAT A HAMMER WITH AN EQUIVALENT ENERGY IN THE RANGE OF 15-25 FT-KIPS PER BLOW WILL BE REQUIRED TO DRIVE PILES AT END BENT 1 AND 2. THIS ESTIMATED ENERGY RANGE DOES NOT RELEASE THE CONTRACTOR FROM PROVIDING DRIVING EQUIPMENT IN ACCORDANCE WITH SUBARTICLE 450-3(D)(2) OF THE STANDARD SPECIFICATIONS.

TOTAL BILL OF MATERIAL

	CONSTRUCTION, MAINTENANCE & REMOVAL OF TEMPORARY ACCESS	REMOVAL OF EXISTING STRUCTURE	UNCLASSIFIED STRUCTURE EXCAVATION	CLASS A CONCRETE	BRIDGE APPROACH SLABS	REINFORCING STEEL	HP 12 X 53 STEEL PILES		STEEL PILE POINTS	VERTICAL CONCRETE BARRIER RAIL	RIP RAP CLASS II (2'-0" THICK)	GEOTEXTILE FOR DRAINAGE	ELASTOMERIC BEARINGS	3'-0" X 2'-9" PRESTRESSED CONCRETE BOX BEAMS	
	LUMP SUM	LUMP SUM	LUMP SUM	CU.YDS.	LUMP SUM	LBS.	NO.	LIN.FT.	EACH	LIN.FT.	TONS	SQ. YDS.	LUMP SUM	NO.	LIN.FT.
SUPERSTRUCTURE					LUMP SUM					180.00			LUMP SUM	11	990.00
END BENT 1				25.6		3,591	7	90	7		170	190			
END BENT 2				25.6		3,591	7	90	7		175	195			
TOTAL	LUMP SUM	LUMP SUM	LUMP SUM	51.2	LUMP SUM	7,182	14	180	14	180.00	345	385	LUMP SUM	11	990.00

PROJECT NO. 41665.1C

WILKES COUNTY

STATION: 13+75.00 -L-

SHEET 2 OF 2

STATE OF NORTH CAROLINA
DEPARTMENT OF TRANSPORTATION
RALEIGH

GENERAL DRAWING
FOR BRIDGE OVER NORTH PRONG LEWIS FORK CREEK ON SR 1304 (BOONE TRAIL) BETWEEN SR 1300 & SR 1351

NORTH CAROLINA PROFESSIONAL SEAL 23371 ENGINEER VIPUL A. PATEL
3/10/14

REVISIONS						SHEET NO.
NO.	BY:	DATE:	NO.	BY:	DATE:	S-2
1			3			TOTAL SHEETS
2			4			15

DRAWN BY : T. H. CARROLL DATE : 1/15/14
CHECKED BY : V. A. PATEL DATE : 3/4/14
DESIGN ENGINEER OF RECORD: V. A. PATEL DATE : 3/4/14

10-MAR-2014 10:06
S:\DPG3\Divisionlets\Div11\BR*694Wilkes\Plans\41665.1C.SD.GD.dgn

LOAD AND RESISTANCE FACTOR RATING (LRFD) SUMMARY FOR BOX BEAM UNITS

LEVEL		VEHICLE	WEIGHT (W) (TONS)	CONTROLLING LOAD RATING	MINIMUM RATING FACTORS (RF)	TONS = W X RF	STRENGTH I LIMIT STATE											SERVICE III LIMIT STATE						COMMENT NUMBER
							LIVELOAD FACTORS	MOMENT					SHEAR					LIVELOAD FACTORS	MOMENT					
								DISTRIBUTION FACTORS (DF)	RATING FACTOR	SPAN	GIRDER LOCATION	DISTANCE FROM LEFT END OF SPAN (ft)	DISTRIBUTION FACTORS (DF)	RATING FACTOR	SPAN	GIRDER LOCATION	DISTANCE FROM LEFT END OF SPAN (ft)		DISTRIBUTION FACTORS (DF)	RATING FACTOR	SPAN	GIRDER LOCATION	DISTANCE FROM LEFT END OF SPAN (ft)	
DESIGN LOAD RATING		HL-93(Inv)	N/A	(1)	1.109	--	1.75	0.272	1.47	A	EL	44.25	0.493	1.26	A	EL	4.425	0.80	0.272	**1.11**	A	EL	**44.25**	
		HL-93(Opr)	N/A	--	1.633	--	1.35	0.272	1.90	A	EL	44.25	0.493	1.63	A	EL	4.425	N/A	--	--	--	--	--	
		HS-20(Inv)	36.000	(2)	1.507	54.255	1.75	0.272	1.99	A	EL	44.25	0.493	1.65	A	EL	4.425	0.80	0.272	**1.51**	A	EL	**44.25**	
		HS-20(Opr)	36.000	--	2.140	77.039	1.35	0.272	2.59	A	EL	44.25	0.493	2.14	A	EL	4.425	N/A	--	--	--	--	--	
LEGAL LOAD RATING	SV	SNSH	13.500	--	3.519	47.501	1.4	0.272	5.82	A	EL	44.25	0.493	5.05	A	EL	4.425	0.80	0.272	3.52	A	EL	44.25	
		SNGARBS2	20.000	--	2.572	51.430	1.4	0.272	4.25	A	EL	44.25	0.493	3.55	A	EL	4.425	0.80	0.272	2.57	A	EL	44.25	
		SNAGRIS2	22.000	--	2.415	53.122	1.4	0.272	4.00	A	EL	44.25	0.493	3.27	A	EL	4.425	0.80	0.272	2.41	A	EL	44.25	
		SNCOTTS3	27.250	--	1.749	47.674	1.4	0.272	2.89	A	EL	44.25	0.493	2.52	A	EL	4.425	0.80	0.272	1.75	A	EL	44.25	
		SNAGGRS4	34.925	--	1.443	50.381	1.4	0.272	2.39	A	EL	44.25	0.493	2.06	A	EL	4.425	0.80	0.272	1.44	A	EL	44.25	
		SNS5A	35.550	--	1.412	50.195	1.4	0.272	2.34	A	EL	44.25	0.493	2.07	A	EL	4.425	0.80	0.272	1.41	A	EL	44.25	
		SNS6A	39.950	--	1.287	51.435	1.4	0.272	2.13	A	EL	44.25	0.493	1.88	A	EL	4.425	0.80	0.272	1.29	A	EL	44.25	
		SNS7B	42.000	--	1.226	51.483	1.4	0.272	2.03	A	EL	44.25	0.493	1.83	A	EL	4.425	0.80	0.272	1.23	A	EL	44.25	
	TTST	TNAGRIT3	33.000	--	1.568	51.733	1.4	0.272	2.59	A	EL	44.25	0.493	2.24	A	EL	4.425	0.80	0.272	1.57	A	EL	44.25	
		TNT4A	33.075	--	1.572	52.007	1.4	0.272	2.60	A	EL	44.25	0.493	2.20	A	EL	4.425	0.80	0.272	1.57	A	EL	44.25	
		TNT6A	41.600	--	1.278	53.170	1.4	0.272	2.11	A	EL	44.25	0.493	1.92	A	EL	4.425	0.80	0.272	1.28	A	EL	44.25	
		TNT7A	42.000	--	1.281	53.782	1.4	0.272	2.12	A	EL	44.25	0.493	1.89	A	EL	4.425	0.80	0.272	1.28	A	EL	44.25	
		TNT7B	42.000	--	1.315	55.229	1.4	0.272	2.18	A	EL	44.25	0.493	1.79	A	EL	4.425	0.80	0.272	1.31	A	EL	44.25	
		TNAGRIT4	43.000	--	1.258	54.101	1.4	0.272	2.08	A	EL	44.25	0.493	1.74	A	EL	4.425	0.80	0.272	1.26	A	EL	44.25	
		TNAGT5A	45.000	--	1.190	53.537	1.4	0.272	1.97	A	EL	44.25	0.493	1.71	A	EL	4.425	0.80	0.272	1.19	A	EL	44.25	
		TNAGT5B	45.000	(3)	1.178	53.027	1.4	0.272	1.95	A	EL	44.25	0.493	1.66	A	EL	4.425	0.80	0.272	**1.18**	A	EL	**44.25**	

LOAD FACTORS:

DESIGN LOAD RATING FACTORS	LIMIT STATE	γ_{DC}	γ_{DW}
	STRENGTH I	1.25	1.50
	SERVICE III	1.00	1.00

NOTES:

MINIMUM RATING FACTORS ARE BASED ON THE STRENGTH I AND SERVICE III LIMIT STATES.

ALLOWABLE STRESSES FOR SERVICE III LIMIT STATE ARE AS REQUIRED FOR DESIGN.

(#) CONTROLLING LOAD RATING

(1) DESIGN LOAD RATING (HL-93)

(2) DESIGN LOAD RATING (HS-20)

(3) LEGAL LOAD RATING **

** SEE CHART FOR VEHICLE TYPE

GIRDER LOCATION

I - INTERIOR GIRDER
EL - EXTERIOR LEFT GIRDER
ER - EXTERIOR RIGHT GIRDER

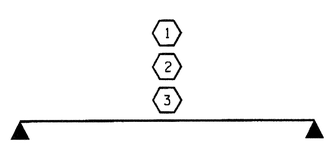

LRFR SUMMARY

PROJECT NO. 41665.1C
WILKES COUNTY
STATION: 13+75.00 -L-

STATE OF NORTH CAROLINA
DEPARTMENT OF TRANSPORTATION
RALEIGH

STANDARD
LRFR SUMMARY FOR
90' BOX BEAM UNIT
90° SKEW
(NON-INTERSTATE TRAFFIC)

NORTH CAROLINA PROFESSIONAL SEAL 23371 ENGINEER VIPUL A. PATEL
3/10/14

REVISIONS						SHEET NO.
NO.	BY:	DATE:	NO.	BY:	DATE:	S-3
1			3			TOTAL SHEETS
2			4			15

ASSEMBLED BY : T. H. CARROLL DATE : 1/15/14
CHECKED BY : V. A. PATEL DATE : 3/4/14
DRAWN BY : TMG 11/11
CHECKED BY : AAC 11/11

10-MAR-2014 10:33
S:\DPG3\DivisionLets\Div11\BR*694Wilkes\Plans\41665.1C_SD_LR.dgn

STD. NO. 33LRFR1_90S_90L

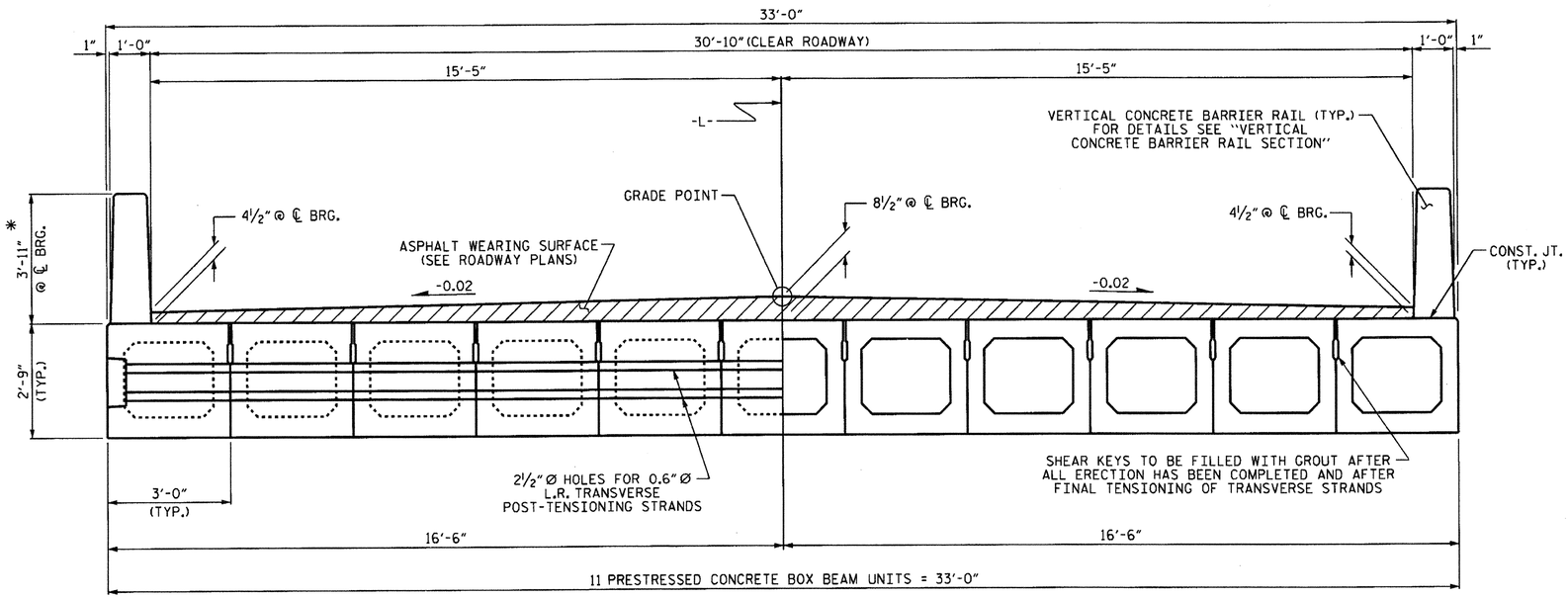

HALF SECTION
AT INTERMEDIATE DIAPHRAGMS

HALF SECTION
THROUGH VOIDS

TYPICAL SECTION

*THE MAXIMUM BARRIER RAIL HEIGHT AND ASPHALT THICKNESS IS SHOWN. THE HEIGHT OF THE BARRIER RAIL AND ASPHALT THICKNESS VARIES WHILE THE TOP OF THE BARRIER RAIL FOLLOWS THE PROFILE OF THE GUTTERLINE. FOR RAIL HEIGHT DETAILS AND ASPHALT THICKNESS, SEE THE "VERTICAL CONCRETE BARRIER RAIL SECTION" DETAIL.

FIXED END

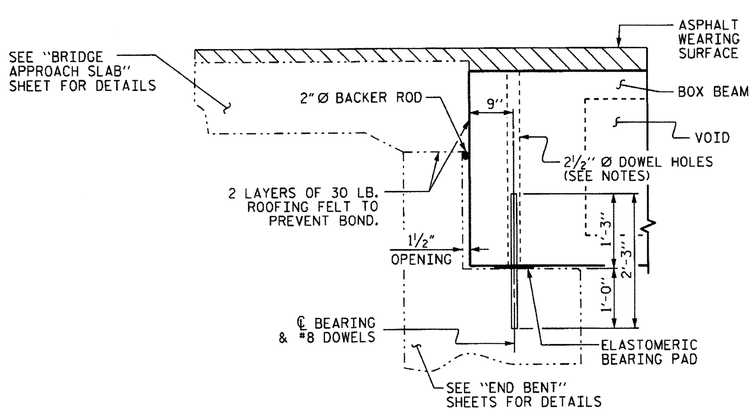

SECTION AT END BENT

NOTES

ALL PRESTRESSING STRANDS SHALL BE 7-WIRE LOW RELAXATION GRADE 270 STRANDS AND SHALL CONFORM TO AASHTO M203 EXCEPT FOR SAMPLING REQUIREMENTS WHICH SHALL BE IN ACCORDANCE WITH THE STANDARD SPECIFICATIONS.

ALL REINFORCING STEEL CAST WITH THE BOX BEAM SECTIONS SHALL BE GRADE 60 AND SHALL BE INCLUDED IN THE UNIT PRICE BID FOR PRESTRESSED CONCRETE BOX BEAMS.

RECESSES FOR TRANSVERSE STRANDS SHALL BE GROUTED AFTER THE TENSIONING OF THE STRANDS.

THE 2½" Ø DOWEL HOLES AT FIXED ENDS OF BOX BEAM SECTIONS SHALL BE FILLED WITH NON-SHRINK GROUT.

THE BACKER RODS SHALL CONFORM TO THE REQUIREMENTS OF TYPE M BOND BREAKER. SEE SECTION 1028 OF THE STANDARD SPECIFICATIONS.

THE TRANSFER OF LOAD FROM THE ANCHORAGES TO THE BOX BEAM UNIT SHALL BE DONE WHEN THE CONCRETE HAS REACHED A COMPRESSIVE STRENGTH OF NOT LESS THAN 6000 PSI.

ALL REINFORCING STEEL IN VERTICAL CONCRETE BARRIER RAILS SHALL BE EPOXY COATED.

PRESTRESSING STRANDS SHALL BE CUT FLUSH WITH THE BOX BEAM UNIT ENDS.

APPLY EPOXY PROTECTIVE COATING TO BOX BEAM UNIT ENDS.

VERTICAL GROOVED CONTRACTION JOINTS, ½" IN DEPTH, SHALL BE TOOLED IN ALL EXPOSED FACES OF THE BARRIER RAIL AND IN ACCORDANCE WITH ARTICLE 825-10(B) OF THE STANDARD SPECIFICATIONS. A VERTICAL CONTRACTION JOINT SHALL BE LOCATED AT EACH THIRD POINT BETWEEN BARRIER RAIL EXPANSION JOINTS. ONLY ONE CONTRACTION JOINT IS REQUIRED AT MIDPOINT OF BARRIER RAIL SEGMENTS LESS THAN 20 FEET IN LENGTH AND NO CONTRACTION JOINTS ARE REQUIRED FOR THOSE SEGMENTS LESS THAN 10 FEET IN LENGTH.

THE LOCATION OF THE VOID DRAINS MAY BE SHIFTED SLIGHTLY WHERE NECESSARY TO CLEAR PRESTRESSING STRANDS OR TRANSVERSE REINFORCING STEEL.

FOR GROUT FOR STRUCTURES, SEE SPECIAL PROVISIONS.

PROJECT NO. 41665.1C
WILKES COUNTY
STATION: 13+75.00 -L-

SHEET 1 OF 5

STATE OF NORTH CAROLINA
DEPARTMENT OF TRANSPORTATION
RALEIGH

STANDARD
3'-0" X 2'-9"
PRESTRESSED CONCRETE
BOX BEAM UNIT
90° SKEW

NORTH CAROLINA PROFESSIONAL SEAL 023371 ENGINEER VIPUL A. PATEL
3/10/14

REVISIONS						SHEET NO.
NO.	BY:	DATE:	NO.	BY:	DATE:	S-4
1			3			TOTAL SHEETS
2			4			15

ASSEMBLED BY : T. H. CARROLL DATE : 1/16/14
CHECKED BY : V. A. PATEL DATE : 3/4/14
DRAWN BY : DGE 8/11
CHECKED BY : TMG 11/11

10-MAR-2014 10:06
S:\DPG3\DivisionLets\Div11\BR*694#Wilkes\Plans\41665.1C_SD_BX.dgn

STD. NO. STD.33PCBB_33_90S

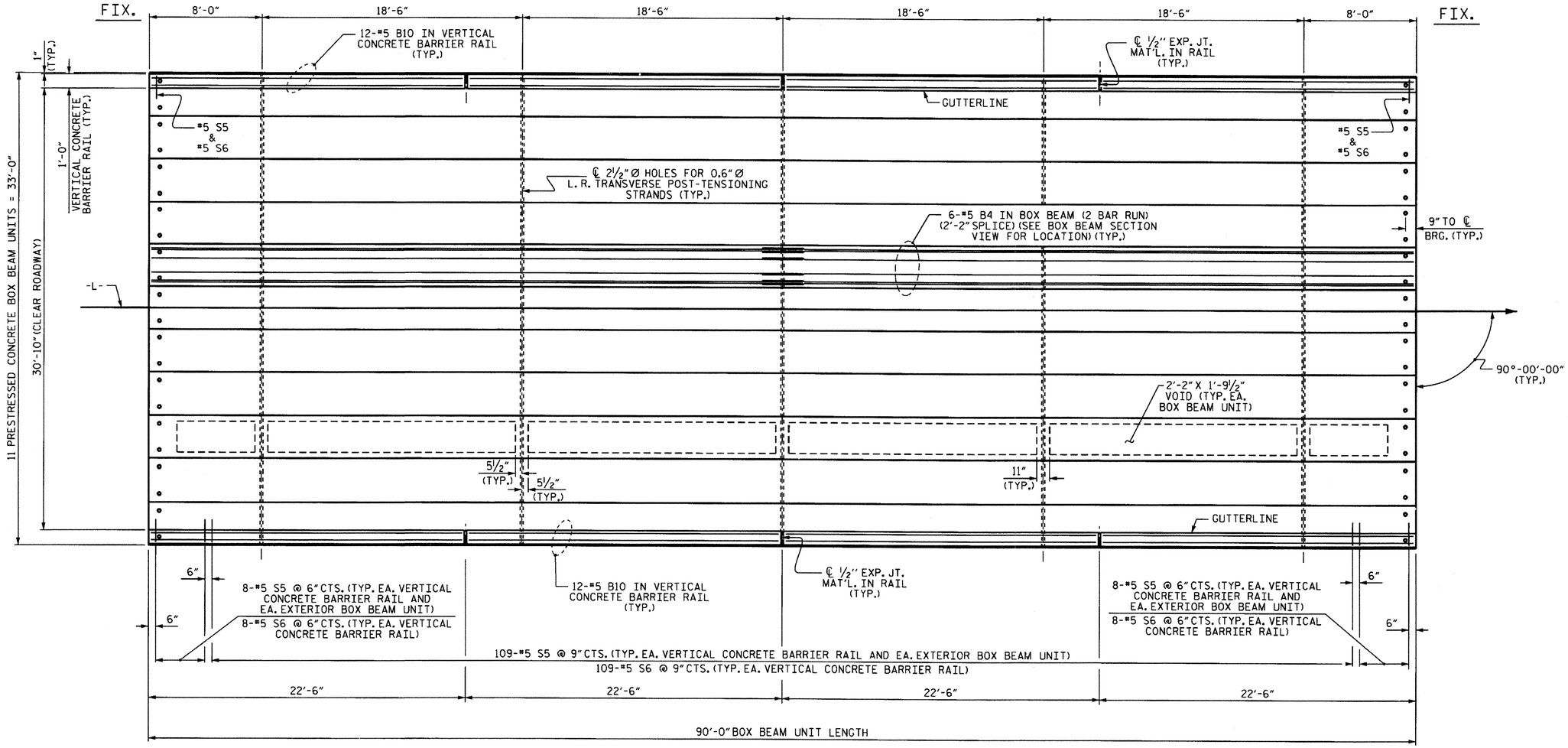

PLAN OF UNIT

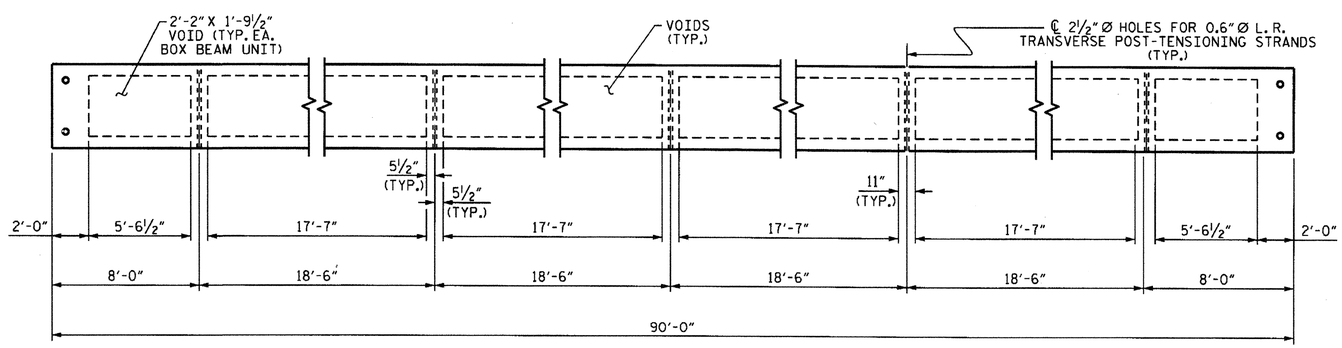

DIAPHRAGM AND VOID LAYOUT

PROJECT NO. 41665.1C

WILKES COUNTY

STATION: 13+75.00 -L-

SHEET 2 OF 5

STATE OF NORTH CAROLINA
DEPARTMENT OF TRANSPORTATION
RALEIGH

PLAN OF 90' UNIT
30'-10" CLEAR ROADWAY
90° SKEW

NORTH CAROLINA PROFESSIONAL SEAL 23371 ENGINEER VIRAL A. PATEL
3/10/14

REVISIONS						SHEET NO.
NO.	BY:	DATE:	NO.	BY:	DATE:	S-5
1			3			TOTAL SHEETS
2			4			15

ASSEMBLED BY : T. H. CARROLL DATE : 1/16/14
CHECKED BY : V. A. PATEL DATE : 3/4/14

DRAWN BY : DGE 8/10
CHECKED BY : TMG 11/11

10-MAR-2014 10:06
S:\DPG3\DivisionLets\Div11\BR*694Wilkes\Plans\41665.1C_SD_BX.dgn
thcarroll

STD.NO.33PCBB_33_90S_90L

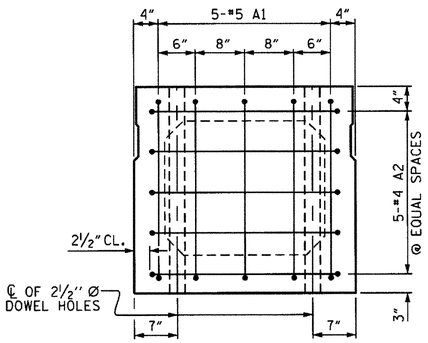

END ELEVATION

SHOWING PLACEMENT OF #5 & #4 "A" BARS AND LOCATION OF DOWEL HOLES.
(INTERIOR BOX BEAM SECTION SHOWN-EXTERIOR SECTION SIMILAR EXCEPT SHEAR KEY LOCATION. STRAND LAYOUT NOT SHOWN.)

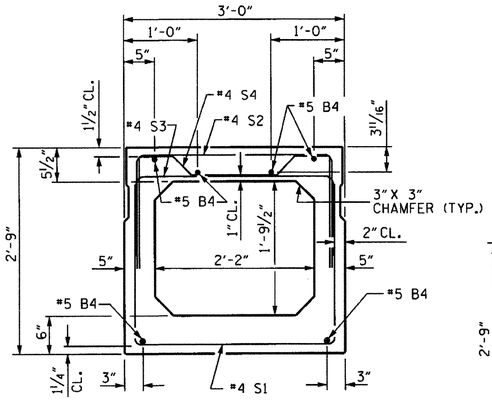

INTERIOR BOX BEAM SECTION

(STRAND LAYOUT NOT SHOWN)

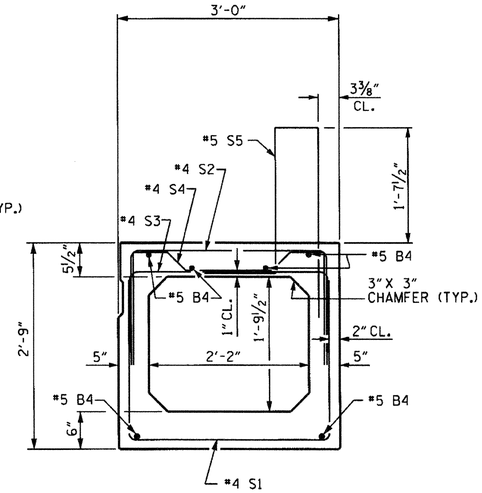

EXTERIOR BOX BEAM SECTION

(STRAND LAYOUT NOT SHOWN)

0.6" Ø LOW RELAXATION STRAND LAYOUT

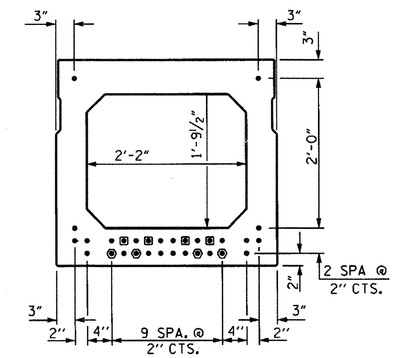

TYPICAL STRAND LOCATION

(30 STRANDS REQUIRED)

DEBONDING LEGEND

- ● FULLY BONDED STRANDS
- ▣ STRANDS DEBONDED FOR 4'-0" FROM END OF GIRDER
- ⬢ STRANDS DEBONDED FOR 12'-0" FROM END OF GIRDER

BOND SHALL BE BROKEN ON STRANDS AS SHOWN FOR THE SPECIFIED LENGTH FROM EACH END OF THE BOX BEAM. SEE STANDARD SPECIFICATIONS ARTICLE 1078-7.

BAR TYPES

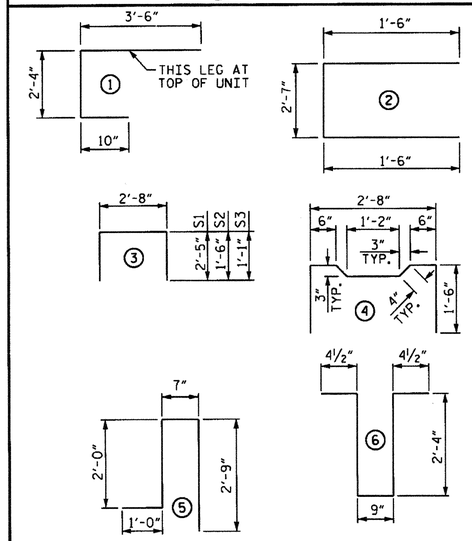

ALL BAR DIMENSIONS ARE OUT TO OUT.

BILL OF MATERIAL FOR ONE BOX BEAM SECTION

				EXTERIOR UNIT		INTERIOR UNIT	
BAR	NUMBER	SIZE	TYPE	LENGTH	WEIGHT	LENGTH	WEIGHT
A1	10	#5	1	6'-8"	70	6'-8"	70
A2	40	#4	2	5'-7"	149	5'-7"	149
B4	12	#5	STR	45'-11"	575	45'-11"	575
K1	15	#4	6	6'-2"	62	6'-2"	62
K2	10	#4	STR	2'-7"	17	2'-7"	17
S1	73	#4	3	7'-6"	366	7'-6"	366
S2	73	#4	3	5'-8"	276	5'-8"	276
S3	127	#4	3	4'-10"	410	4'-10"	410
S4	54	#4	4	5'-10"	210	5'-10"	210
✱ S5	125	#5	5	6'-4"	826	--	--
REINFORCING STEEL				LBS.	2,135	LBS.	2,135
✱ EPOXY COATED REINF. STEEL				LBS.	826		
8,000 P.S.I. CONCRETE				CU. YDS.	16.0	CU. YDS.	15.9
0.6" Ø L.R. STRANDS				No.	30	No.	30

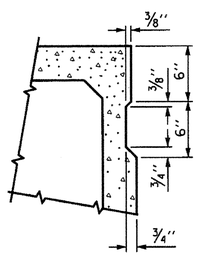

SHEAR KEY DETAIL

NOTE: OMIT SHEAR KEY ON OUTSIDE FACE OF EXTERIOR BOX BEAMS.

GRADE 270 STRANDS	
	0.6" Ø L.R.
AREA (SQUARE INCHES)	0.217
ULTIMATE STRENGTH (LBS. PER STRAND)	58,600
APPLIED PRESTRESS (LBS. PER STRAND)	43,950

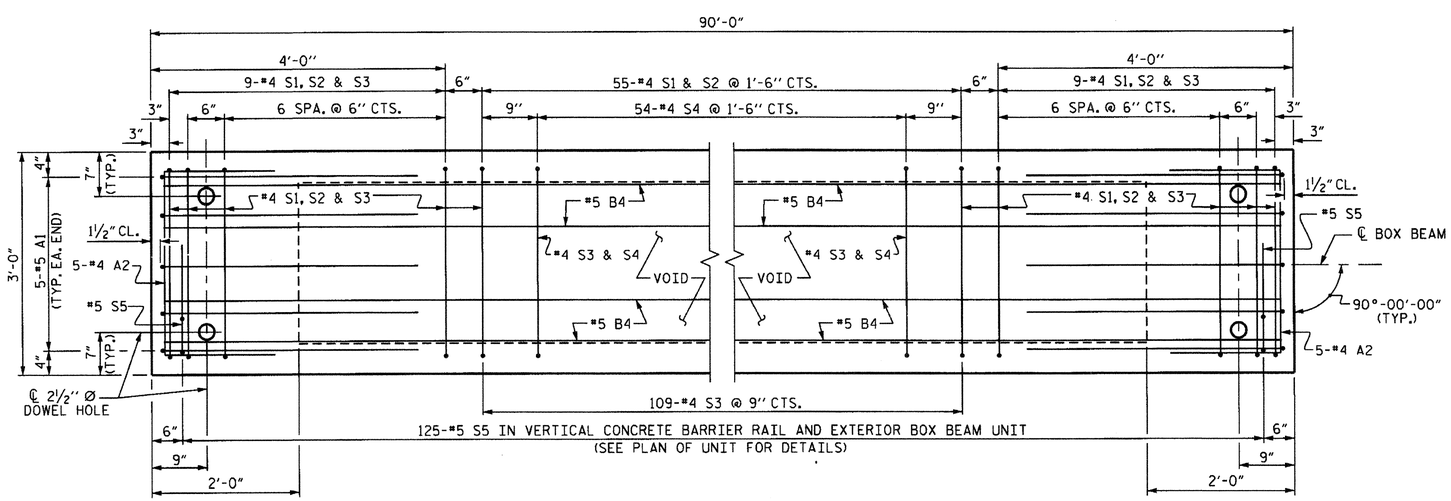

PLAN OF BOX BEAM

EXTERIOR UNIT SHOWN, INTERIOR UNIT SIMILAR EXCEPT OMIT #5 S5 BARS.
FOR LOCATION OF DIAPHRAGMS, SEE PLAN OF UNIT.
FOR REINFORCING STEEL IN DIAPHRAGMS, SEE DIAPHRAGM DETAILS.

NORTH CAROLINA PROFESSIONAL SEAL 23371 ENGINEER VIPUL A. PATEL
3/10/14

PROJECT NO. 41665.1C
WILKES COUNTY
STATION: 13+75.00 -L-

SHEET 3 OF 5

STATE OF NORTH CAROLINA
DEPARTMENT OF TRANSPORTATION
RALEIGH

STANDARD
3'-0" X 2'-9"
PRESTRESSED CONCRETE
BOX BEAM UNIT
90° SKEW

REVISIONS						SHEET NO.
NO.	BY:	DATE:	NO.	BY:	DATE:	S-6
1			3			TOTAL SHEETS
2			4			15

ASSEMBLED BY : T. H. CARROLL DATE : 1/16/14
CHECKED BY : V. A. PATEL DATE : 3/4/14
DRAWN BY : DGE 10/11
CHECKED BY : TMG 11/11

10-MAR-2014 10:06
S:\DPG3\DivisionLets\Div11\BR*694Wilkes\Plans\41665.1C_SD_BX.dgn
thcarroll

STD. NO. 33PCBB4_90S_90L

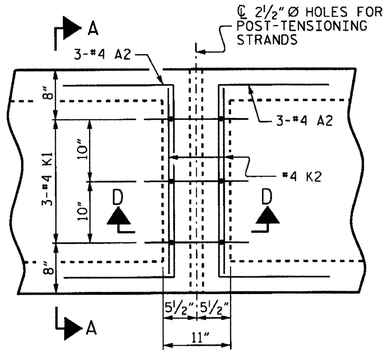

PLAN

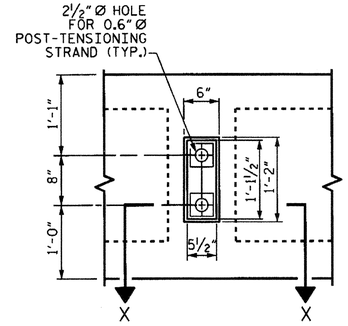

VIEW Y-Y

SHOWING ELEVATION VIEW OF GROUTED RECESS

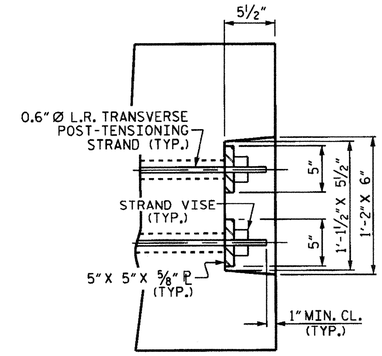

DETAIL "C"

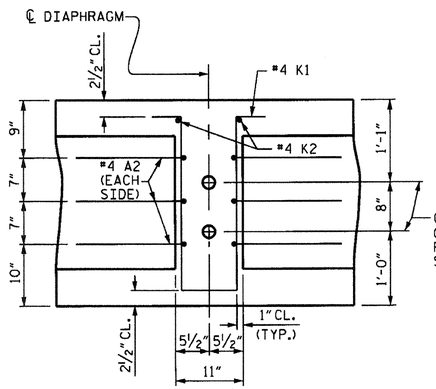

SECTION D-D

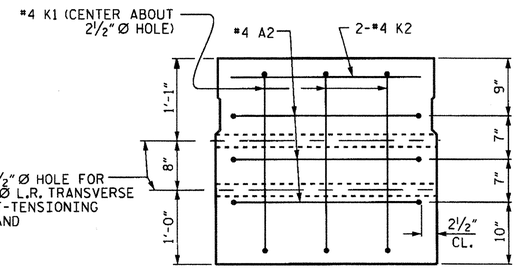

SECTION A-A

VOIDS NOT SHOWN

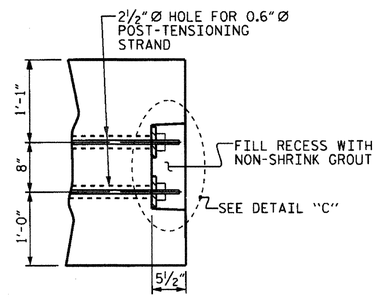

PART SECTION AT RECESS

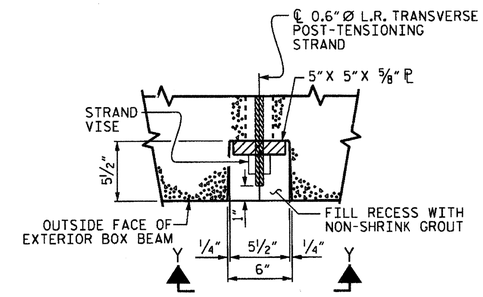

SECTION X-X

SHOWING PLAN VIEW OF GROUTED RECESS

GROUTED RECESS DETAIL AT END OF POST-TENSIONED STRANDS OF EXTERIOR BOX BEAM

DOUBLE DIAPHRAGM DETAILS

#4 "S" BARS NOT SHOWN. #4 "S" BARS MAY BE SHIFTED SLIGHTLY TO CLEAR 2½" Ø HOLE.

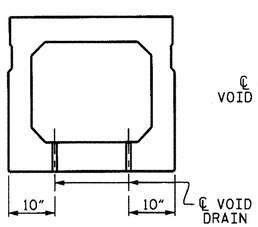

SECTION B-B

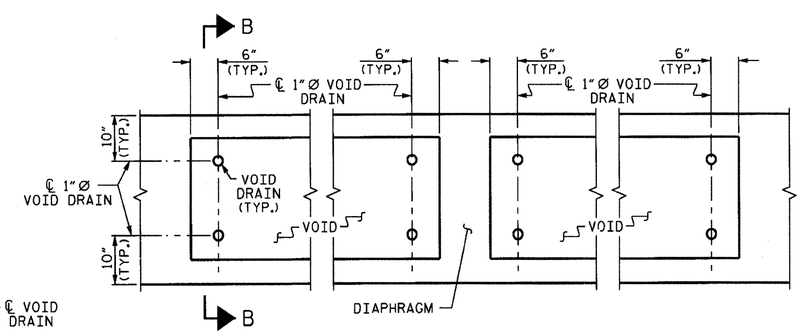

PART PLAN

VOID DRAIN DETAILS

(DIMENSIONS SHOWN ARE TYPICAL FOR EACH VOID)

DEAD LOAD DEFLECTION AND CAMBER	
	3'-0" x 2'-9"
90' BOX BEAM UNIT	0.6" Ø L.R. STRAND
CAMBER (SLAB ALONE IN PLACE)	3¾" ↑
DEFLECTION DUE TO SUPERIMPOSED DEAD LOAD**	¾" ↓
FINAL CAMBER	3" ↑

** INCLUDES FUTURE WEARING SURFACE

PROJECT NO. 41665.1C

WILKES COUNTY

STATION: 13+75.00 -L-

SHEET 4 OF 5

STATE OF NORTH CAROLINA
DEPARTMENT OF TRANSPORTATION
RALEIGH

STANDARD
3'-0" X 2'-9"
PRESTRESSED CONCRETE
BOX BEAM UNIT
90° SKEW

NORTH CAROLINA PROFESSIONAL SEAL 23371 ENGINEER VIMAL A. PATEL
3/10/14

REVISIONS						SHEET NO.
NO.	BY:	DATE:	NO.	BY:	DATE:	S-7
1			3			TOTAL SHEETS
2			4			15

ASSEMBLED BY : T. H. CARROLL DATE : 1/16/14
CHECKED BY : V. A. PATEL DATE : 3/4/14

DRAWN BY : DGE 10/11
CHECKED BY : TMG 11/11

10-MAR-2014 10:06
S:\DPG3\DivisionLets\Div11\BR*694Wilkes\Plans\41665.1C_SD_BX.dgn

STD.NO.33PCBB5_90S

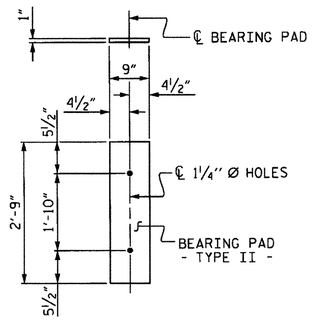

FIXED END

(TYPE II - 22 REQ'D)

ELASTOMERIC BEARING DETAILS

ELASTOMER IN ALL BEARINGS SHALL BE 60 DUROMETER HARDNESS.

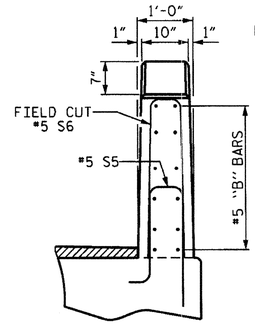

END VIEW

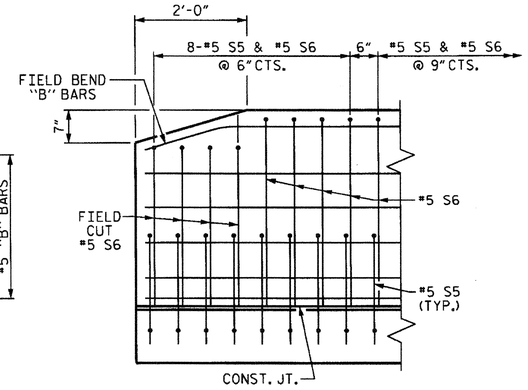

SIDE VIEW

END OF RAIL DETAILS

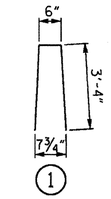

BAR TYPE

BAR DIMENSIONS ARE OUT TO OUT

BOX BEAM UNITS REQUIRED

	NUMBER	LENGTH	TOTAL LENGTH
EXTERIOR B.B.	2	90'-0"	180'-0"
INTERIOR B.B.	9	90'-0"	810'-0"
TOTAL	11	———	990'-0"

BILL OF MATERIAL FOR VERTICAL CONCRETE BARRIER RAIL

BAR	BARS PER PAIR OF EXTERIOR UNITS	SIZE	TYPE	LENGTH	WEIGHT
	90' UNIT				
*B10	96	#5	STR	22'-1"	2211
* S6	250	#5	1	7'-2"	1869
* EPOXY COATED REINFORCING STEEL			LBS.		4,080
CLASS AA CONCRETE			CU.YDS.		24.2
TOTAL VERTICAL CONCRETE BARRIER RAIL			LIN. FT.		180.00

GUTTERLINE ASPHALT THICKNESS & RAIL HEIGHT

	ASPHALT OVERLAY THICKNESS @ MID-SPAN	RAIL HEIGHT @ MID-SPAN
90' UNITS	1½"	3'-8"

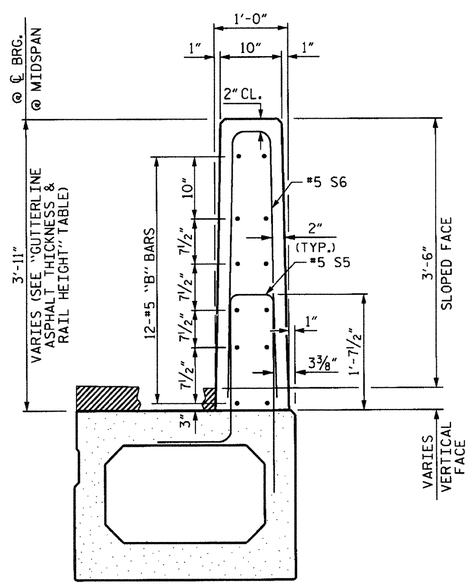

SECTION THRU RAIL

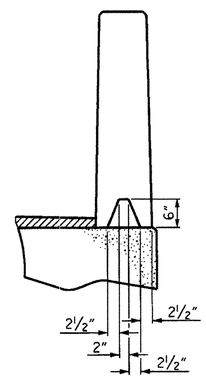

SECTION S-S

AT DAM IN OPEN JOINT
(THIS IS TO BE USED ONLY WHEN SLIP FORM IS USED)

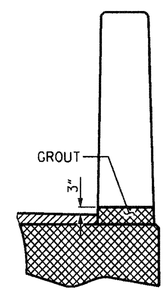

SECTION T-T

AT OPEN JOINT AT BENT
(THIS IS TO BE USED WHERE FOAM JOINT IS NOT USED)

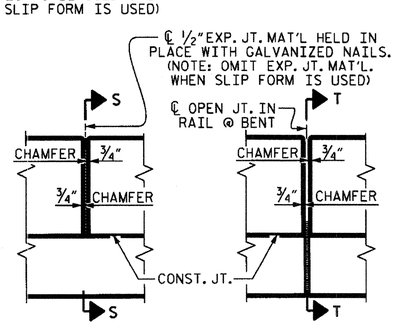

ELEVATION AT EXPANSION JOINTS

VERTICAL CONCRETE BARRIER RAIL DETAILS

PROJECT NO. 41665.1C

WILKES COUNTY

STATION: 13+75.00 -L-

SHEET 5 OF 5

STATE OF NORTH CAROLINA
DEPARTMENT OF TRANSPORTATION
RALEIGH

STANDARD
3'-0" X 2'-9"
PRESTRESSED CONCRETE
BOX BEAM UNIT
90° SKEW

NORTH CAROLINA PROFESSIONAL SEAL 23371 ENGINEER VIPUL A. PATEL
3/10/14

REVISIONS							SHEET NO.
NO.	BY:	DATE:	NO.	BY:	DATE:		S-8
1			3				TOTAL SHEETS
2			4				15

ASSEMBLED BY : T. H. CARROLL DATE : 1/16/14
CHECKED BY : V. A. PATEL DATE : 3/4/14

DRAWN BY : DGE 10/11
CHECKED BY : TMG 11/11

10-MAR-2014 10:06
S:\DPC3\Divisions\Div11\BB*694\Wilkes\Plans\41665.1C_SD_BX.dgn

STD. NO. 33PCBB8_90S

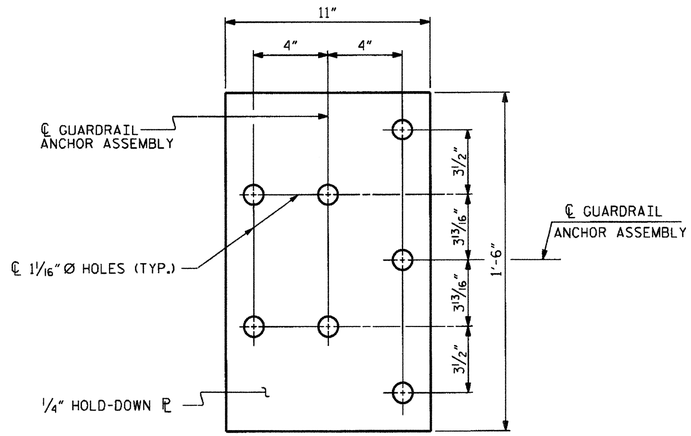

PLAN

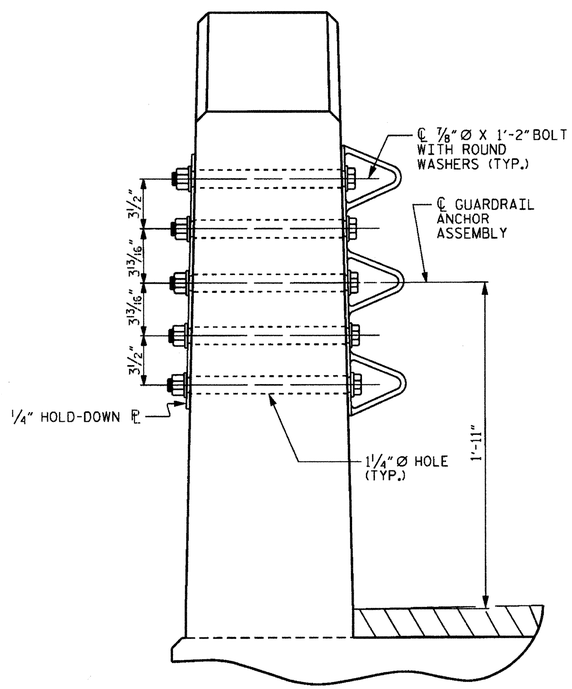

SECTION E-E

GUARDRAIL ANCHOR ASSEMBLY DETAILS

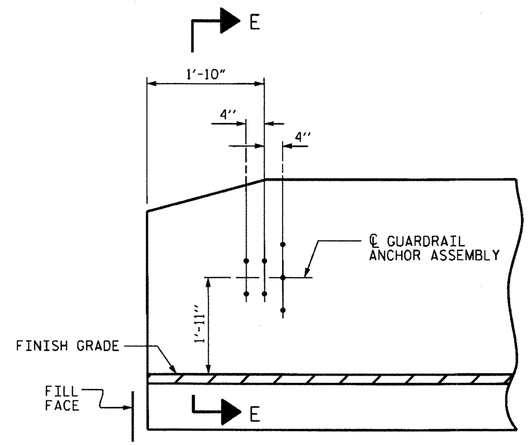

ELEVATION

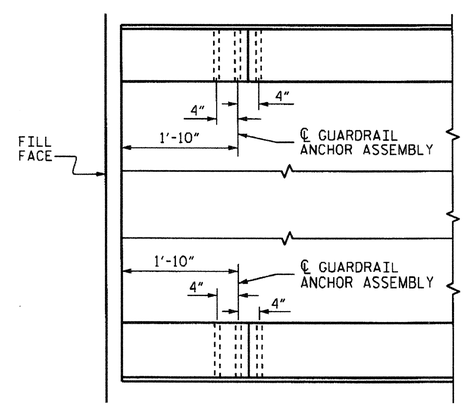

PLAN

LOCATION OF ANCHORS FOR GUARDRAIL

END BENT 1 SHOWN, END BENT 2 SIMILAR.

NOTES

THE GUARDRAIL ANCHOR ASSEMBLY SHALL CONSIST OF A 1/4" HOLD DOWN PLATE AND 7 - 7/8" Ø BOLTS WITH NUTS AND WASHERS.

THE HOLD-DOWN PLATE SHALL CONFORM TO AASHTO M270 GRADE 36. AFTER FABRICATION, THE HOLD-DOWN PLATE SHALL BE HOT-DIP GALVANIZED IN ACCORDANCE WITH AASHTO M111.

BOLTS SHALL CONFORM TO THE REQUIREMENTS OF ASTM A307 AND NUTS SHALL CONFORM TO THE REQUIREMENTS OF AASHTO M291. BOLTS, NUTS AND WASHERS SHALL BE GALVANIZED. (AT THE CONTRACTOR'S OPTION, STAINLESS STEEL BOLTS, NUTS AND WASHERS MAY BE USED AS AN ALTERNATE FOR THE 7/8" Ø GALVANIZED BOLTS, NUTS AND WASHERS. THEY SHALL CONFORM TO OR EXCEED THE MECHANICAL REQUIREMENTS OF ASTM A307. THE USE OF THIS ALTERNATE SHALL BE APPROVED BY THE ENGINEER.)

THE GUARDRAIL ANCHOR ASSEMBLY IS REQUIRED AT ALL POINTS WHERE APPROACH GUARDRAIL IS TO BE ATTACHED TO THE END OF BARRIER RAIL. FOR POINTS OF ATTACHMENT, SEE SKETCH.

AFTER INSTALLATION, THE EXPOSED THREAD OF THE BOLT SHALL BE BURRED WITH A SHARP POINTED TOOL.

THE COST OF THE GUARDRAIL ANCHOR ASSEMBLY SHALL BE INCLUDED IN THE UNIT CONTRACT PRICE BID FOR VERTICAL CONCRETE BARRIER RAIL.

THE VERTICAL REINFORCING BARS MAY BE SHIFTED SLIGHTLY IN THE VERTICAL CONCRETE BARRIER RAIL TO CLEAR ASSEMBLY BOLTS.

THE 1 1/4" Ø HOLES SHALL BE FORMED OR DRILLED WITH A CORE BIT. IMPACT TOOLS WILL NOT BE PERMITTED. ANY CONCRETE DAMAGED BY THIS WORK SHALL BE REPAIRED TO THE SATISFACTION OF THE ENGINEER.

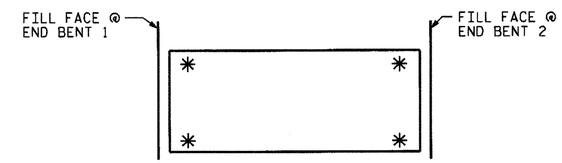

SKETCH SHOWING POINTS OF ATTACHMENT

✳ DENOTES GUARDRAIL ANCHOR ASSEMBLY

PROJECT NO. 41665.1C

WILKES COUNTY

STATION: 13+75.00 -L-

STATE OF NORTH CAROLINA
DEPARTMENT OF TRANSPORTATION
RALEIGH

STANDARD
GUARDRAIL ANCHORAGE FOR VERTICAL CONCRETE BARRIER RAIL

NORTH CAROLINA PROFESSIONAL SEAL 23371 ENGINEER VIPUL A. PATEL
3/10/14

REVISIONS						SHEET NO.
NO.	BY:	DATE:	NO.	BY:	DATE:	S-9
1			3			TOTAL SHEETS
2			4			15

ASSEMBLED BY : T. H. CARROLL		DATE : 1/16/14	
CHECKED BY : V. A. PATEL		DATE : 3/4/14	
DRAWN BY : MAA 5/10	REV. 10/1/11	MAA/GM	
CHECKED BY : GM 5/10	REV. 12/5/11	MAA/GM	
	REV. 6/13	MAA/GM	

10-MAR-2014 10:06
S:\DPG3\DivisionLets\Div11\BR*694Wilkes\Plans\41665.1C_SD_GR.dgn
thoracoll

STD. NO. GRA3

NOTES

STIRRUPS IN CAP MAY BE SHIFTED AS NECESSARY TO CLEAR DOWELS.

THE CONCRETE IN THE SHADED AREA OF THE WING SHALL BE POURED AFTER THE VERTICAL CONCRETE BARRIER RAIL IS CAST IF SLIP FORMING IS USED.

FOR PILE SPLICE DETAILS, SEE SHEET 4 OF 4.

FOR WING DETAILS, SEE SHEET 3 OF 4.

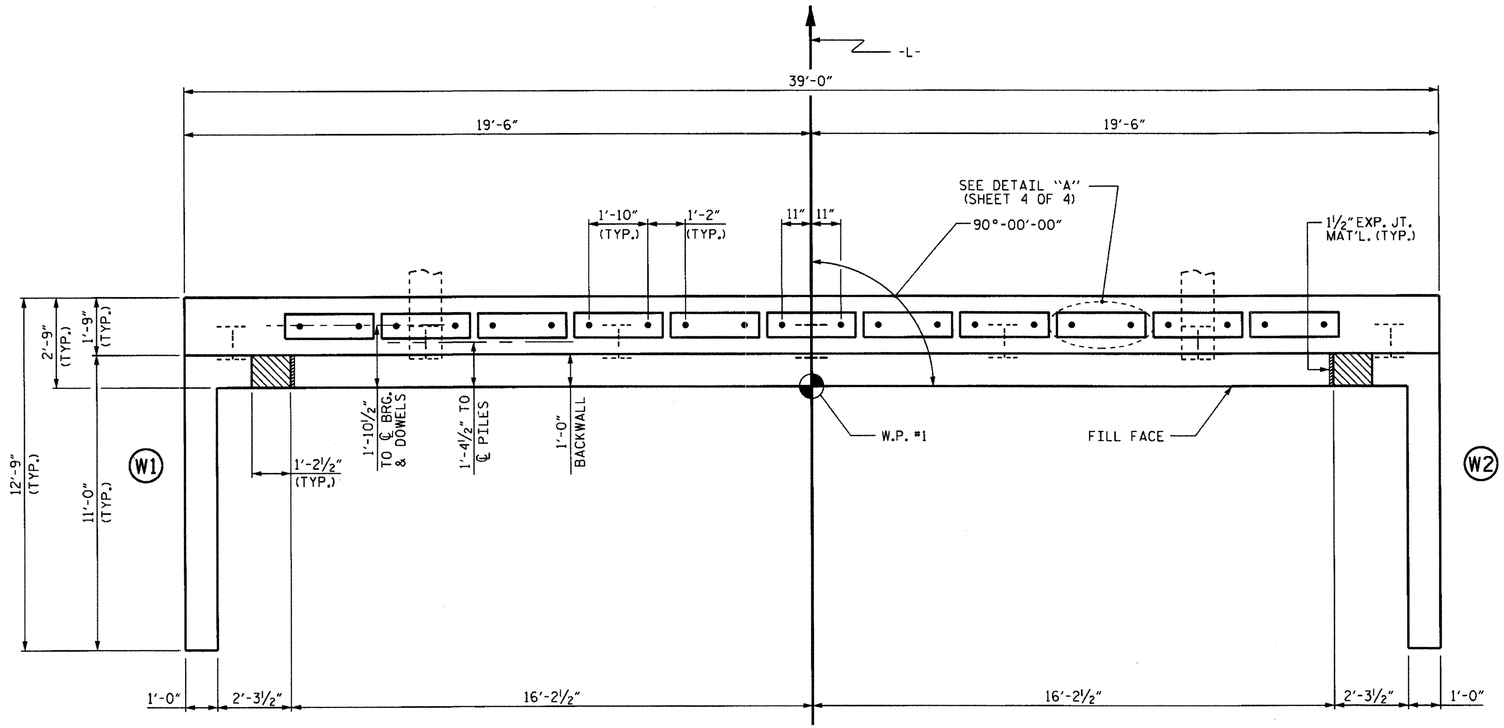

PLAN

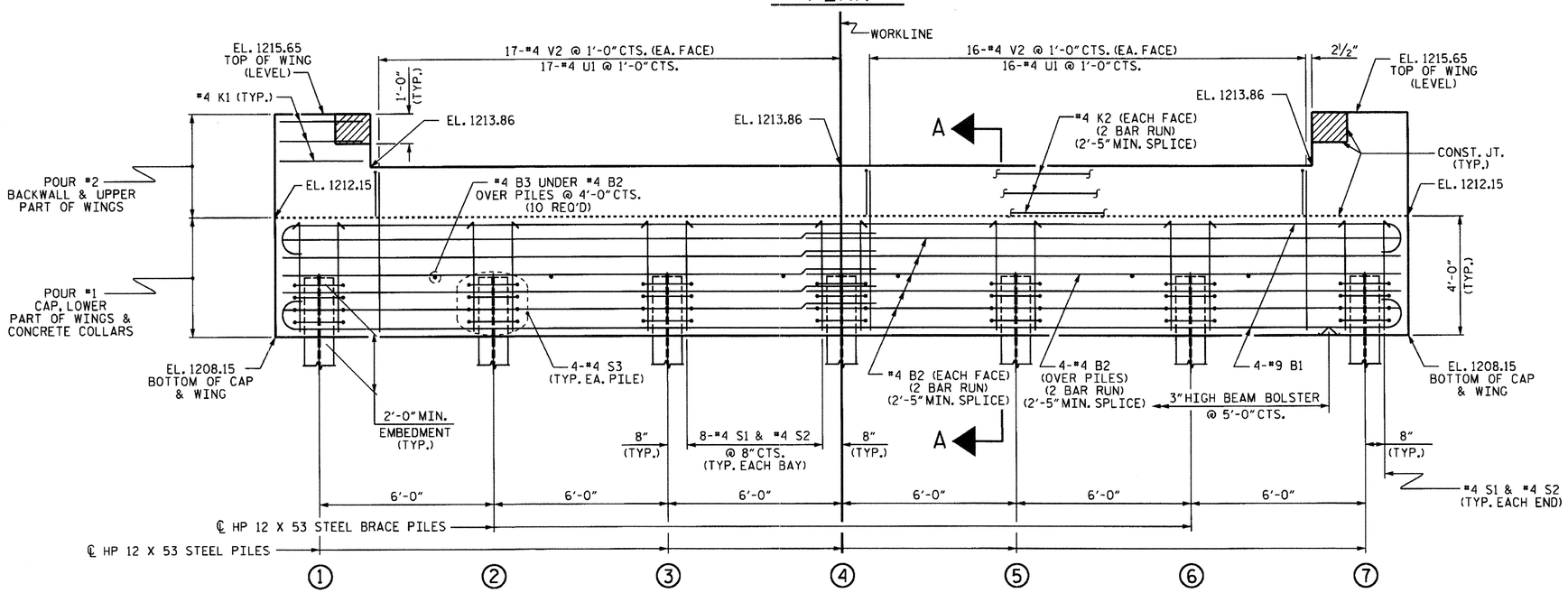

ELEVATION

WINGS NOT SHOWN FOR CLARITY.
FOR SECTION A-A, SEE SHEET 4 OF 4.
CONCRETE COLLARS FOR STEEL PILES NOT SHOWN IN PLAN AND ELEVATION VIEWS FOR CLARITY.
SEE "CORROSION PROTECTION FOR STEEL PILES DETAIL", SHEET 4 OF 4.

PROJECT NO. 41665.1C
WILKES COUNTY
STATION: 13+75.00 -L-

SHEET 1 OF 4

STATE OF NORTH CAROLINA
DEPARTMENT OF TRANSPORTATION
RALEIGH

SUBSTRUCTURE

END BENT 1

NORTH CAROLINA PROFESSIONAL SEAL 23371 ENGINEER V. A. PATEL
3/10/14

REVISIONS								SHEET NO.
NO.	BY:	DATE:	NO.	BY:	DATE:			S-10
1			3					TOTAL SHEETS
2			4					15

ASSEMBLED BY : T. H. CARROLL	DATE : 1/16/14
CHECKED BY : V. A. PATEL	DATE : 3/4/14
DRAWN BY : WJH 12/11	
CHECKED BY : AAC 12/11	

10-MAR-2014 10:06
S:\DPG3\Division Lets\Div11\BR*694\Wilkes\Plans\41665.1C_SD_E*.dgn

STD. NO. EB_33_90S4_33BB

NOTES

STIRRUPS IN CAP MAY BE SHIFTED AS NECESSARY TO CLEAR DOWELS.

THE CONCRETE IN THE SHADED AREA OF THE WING SHALL BE POURED AFTER THE VERTICAL CONCRETE BARRIER RAIL IS CAST IF SLIP FORMING IS USED.

FOR PILE SPLICE DETAILS, SEE SHEET 4 OF 4.

FOR WING DETAILS, SEE SHEET 3 OF 4.

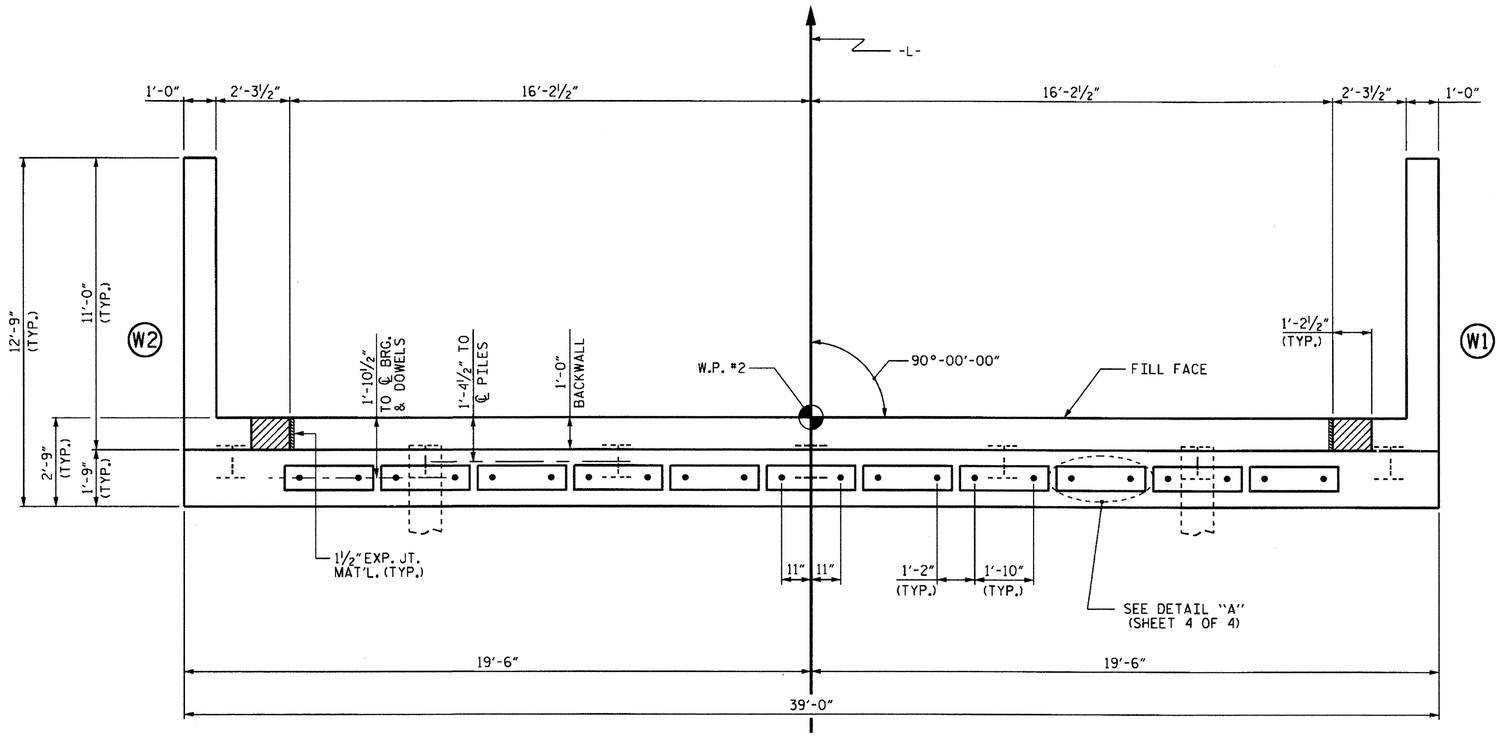

PLAN

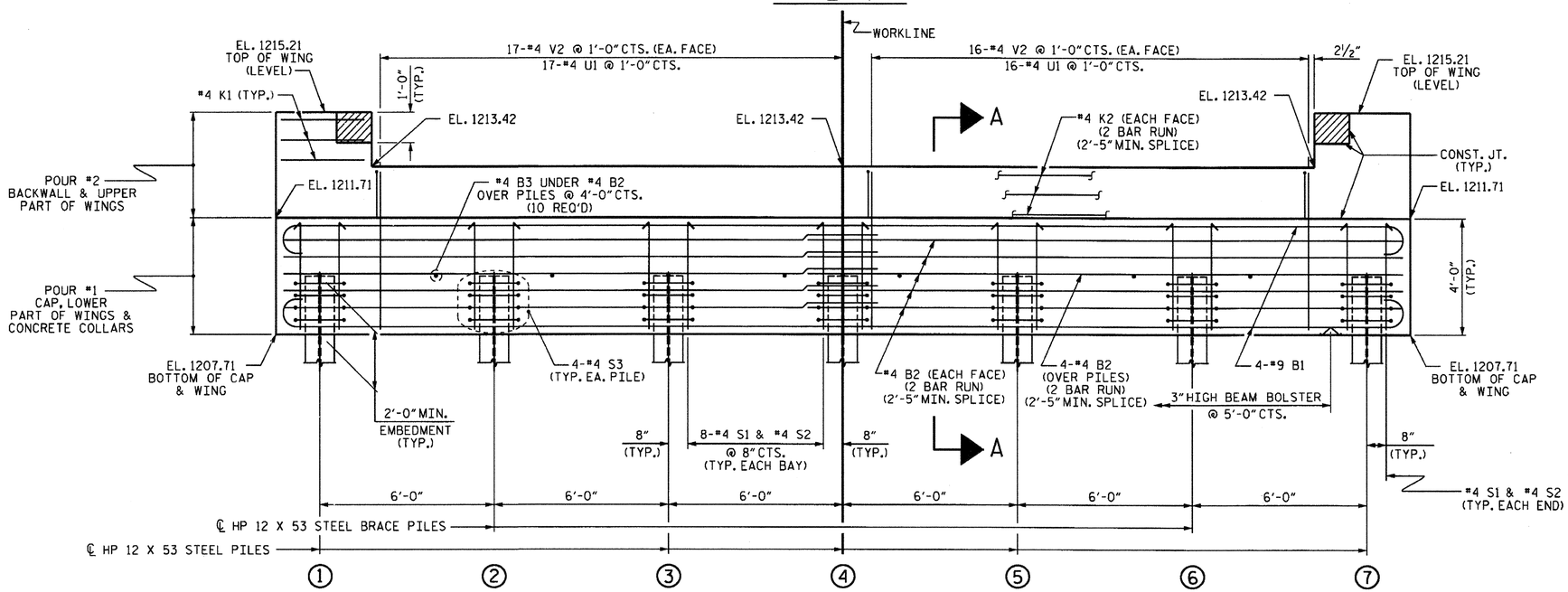

ELEVATION

WINGS NOT SHOWN FOR CLARITY.
FOR SECTION A-A, SEE SHEET 4 OF 4.
CONCRETE COLLARS FOR STEEL PILES NOT SHOWN IN PLAN AND ELEVATION VIEWS FOR CLARITY.
SEE "CORROSION PROTECTION FOR STEEL PILES DETAIL", SHEET 4 OF 4.

PROJECT NO. 41665.1C
WILKES COUNTY
STATION: 13+75.00 -L-

SHEET 2 OF 4

STATE OF NORTH CAROLINA
DEPARTMENT OF TRANSPORTATION
RALEIGH

SUBSTRUCTURE

END BENT 2

NORTH CAROLINA PROFESSIONAL SEAL 023371 ENGINEER VIPUL A. PATEL
3/10/14

REVISIONS							
NO.	BY:	DATE:	NO.	BY:	DATE:	SHEET NO. S-11
1			3			TOTAL SHEETS 15
2			4			

ASSEMBLED BY : T. H. CARROLL DATE : 1/16/14
CHECKED BY : V. A. PATEL DATE : 3/4/14
DRAWN BY : WJH 12/11
CHECKED BY : AAC 12/11

10-MAR-2014 10:06
S:\DPG3\Division Lets\Div11\BR*694Wilkes\Plans\41665.1C_SD_E*.dgn

STD NO. EB 33 90S4 33BB

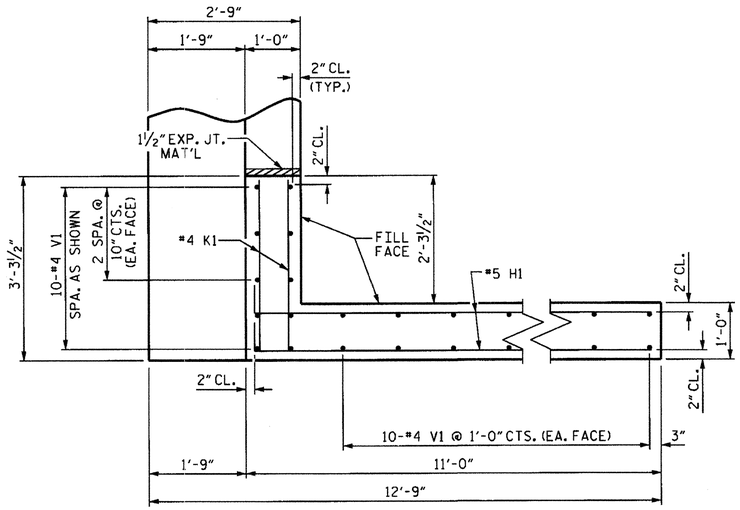

PLAN OF WING (W1)

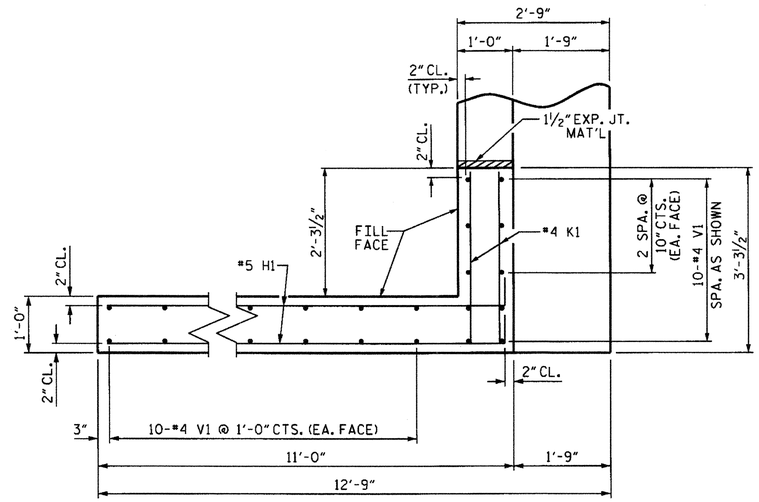

PLAN OF WING (W2)

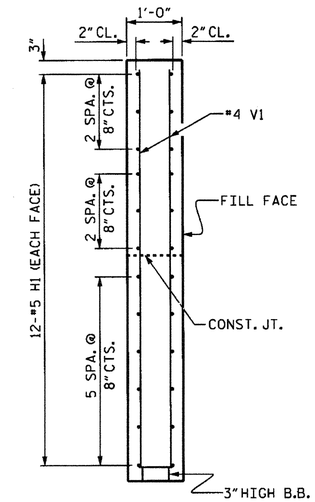

SECTION X-X

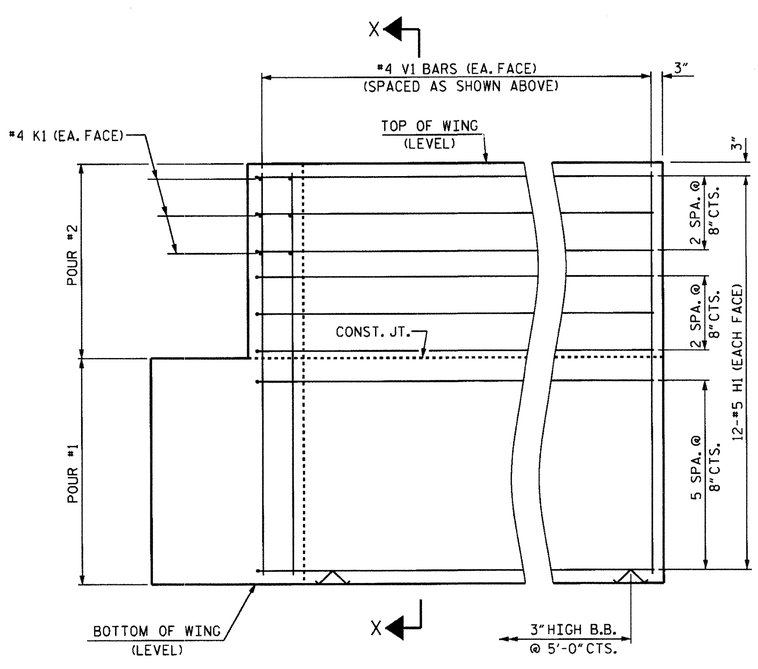

ELEVATION OF WING (W1)

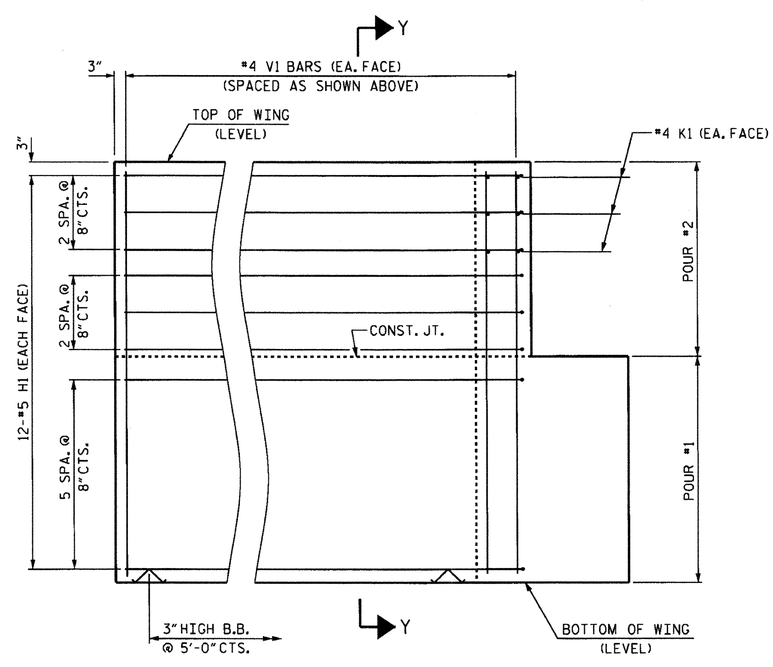

ELEVATION OF WING (W2)

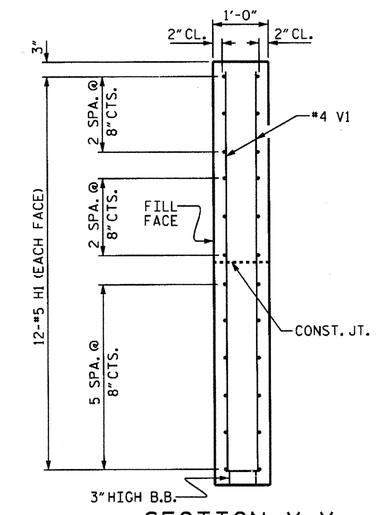

SECTION Y-Y

WING DETAILS

PROJECT NO. 41665.1C

WILKES COUNTY

STATION: 13+75.00 -L-

SHEET 3 OF 4

STATE OF NORTH CAROLINA
DEPARTMENT OF TRANSPORTATION
RALEIGH

SUBSTRUCTURE

END BENT
WING DETAILS

NORTH CAROLINA PROFESSIONAL SEAL 23371 ENGINEER VIRUL A. PATEL
3/10/14

REVISIONS						SHEET NO.
NO.	BY:	DATE:	NO.	BY:	DATE:	S-12
1			3			TOTAL SHEETS
2			4			15

ASSEMBLED BY : T.H. CARROLL	DATE : 1/16/14
CHECKED BY : V.A. PATEL	DATE : 3/4/14
DRAWN BY : WJH 12/11	
CHECKED BY : AAC 12/11	

10-MAR-2014 10:06
S:\DPG3\Division_Ets\Div11\BR*694Wilkes\Plans\41665.1C_SD_E*.dgn

STD NO. EB 33 90S4 33BB

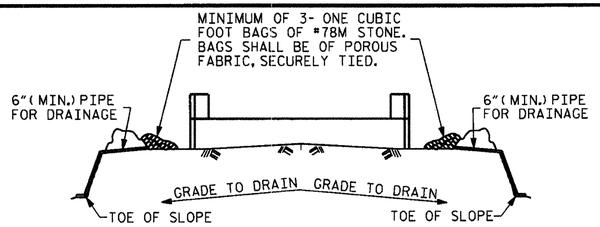

BAGGED STONE AND PIPE SHALL BE PLACED IMMEDIATELY AFTER COMPLETION OF END BENT EXCAVATION. PIPE MAY BE EITHER CONCRETE, CORRUGATED STEEL, CORRUGATED ALUMINUM ALLOY, OR CORRUGATED PLASTIC. PERFORATED PIPE WILL NOT BE ALLOWED.

BAGGED STONE SHALL REMAIN IN PLACE UNTIL THE ENGINEER DIRECTS THAT IT BE REMOVED. THE CONTRACTOR SHALL REMOVE AND DISPOSE OF SILT ACCUMULATIONS AT BAGGED STONE WHEN SO DIRECTED BY THE ENGINEER. BAGS SHALL BE REMOVED AND REPLACED WHENEVER THE ENGINEER DETERMINES THAT THEY HAVE DETERIORATED AND LOST THEIR EFFECTIVENESS.

NO SEPARATE PAYMENT WILL BE MADE FOR THIS WORK AND THE ENTIRE COST OF THIS WORK SHALL BE INCLUDED IN THE UNIT CONTRACT PRICE BID FOR THE SEVERAL PAY ITEMS.

TEMPORARY DRAINAGE AT END BENT

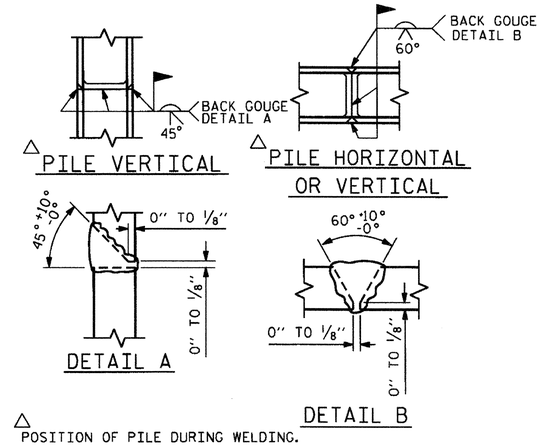

PILE SPLICE DETAILS

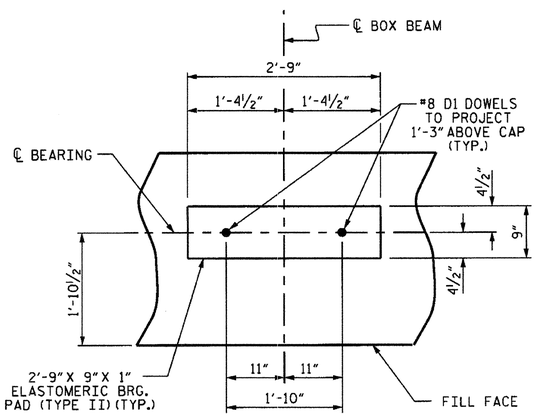

DETAIL "A"

(END BENT 1 SHOWN, END BENT 2 SIMILAR BY ROTATION)

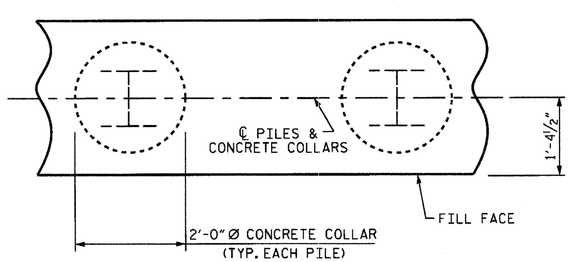

PLAN

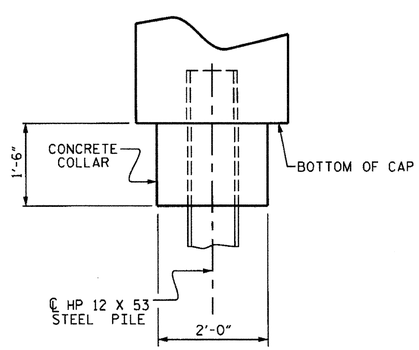

ELEVATION

CORROSION PROTECTION FOR STEEL PILES DETAIL

(END BENT 1 SHOWN, END BENT 2 SIMILAR BY ROTATION)

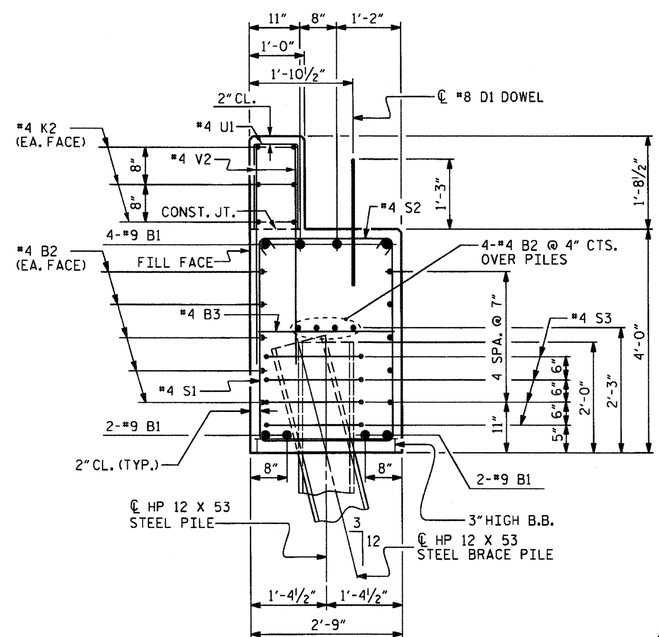

SECTION A-A

(CONCRETE COLLAR NOT SHOWN FOR CLARITY. SEE "CORROSION PROTECTION FOR STEEL PILES DETAIL.")

BAR TYPES

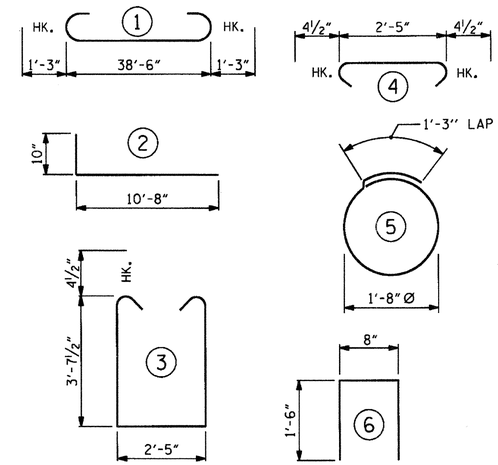

ALL BAR DIMENSIONS ARE OUT TO OUT.

END BENT 1		END BENT 2	
HP 12 X 53 STEEL PILES		HP 12 X 53 STEEL PILES	
NO: 7	LIN. FT. 90	NO: 7	LIN. FT. 90
STEEL PILE POINTS	EA. 7	STEEL PILE POINTS	EA. 7

BILL OF MATERIAL FOR ONE END BENT

BAR	NO.	SIZE	TYPE	LENGTH	WEIGHT
B1	8	#9	1	41'-0"	1115
B2	28	#4	STR	20'-7"	385
B3	10	#4	STR	2'-5"	16
D1	22	#8	STR	2'-3"	132
H1	48	#5	2	11'-6"	576
K1	12	#4	STR	2'-11"	23
K2	12	#4	STR	20'-7"	165
S1	50	#4	3	10'-5"	348
S2	50	#4	4	3'-2"	106
S3	28	#4	5	6'-6"	122
U1	33	#4	6	3'-8"	81
V1	60	#4	STR	7'-2"	287
V2	66	#4	STR	5'-4"	235
REINFORCING STEEL (FOR ONE END BENT)				LBS.	3,591

CLASS A CONCRETE BREAKDOWN (FOR ONE END BENT)		
POUR #1 CAP, LOWER PART OF WINGS & COLLARS	C.Y.	20.1
POUR #2 BACKWALL & UPPER PART OF WINGS	C.Y.	5.5
TOTAL CLASS A CONCRETE	C.Y.	25.6

ASSEMBLED BY : T. H. CARROLL DATE : 1/16/14
CHECKED BY : V. A. PATEL DATE : 3/4/14
DRAWN BY : WJH 12/11
CHECKED BY : AAC 12/11

10-MAR-2014 10:06
S:\DP03\Division_Lets\Div11\BR-694Wilkes\Plans\41665.1C_SD_E*.dgn

NORTH CAROLINA PROFESSIONAL SEAL 23371 ENGINEER VIPUL A. PATEL
3/10/14

PROJECT NO. 41665.1C
WILKES COUNTY
STATION: 13+75.00 -L-

SHEET 4 OF 4

STATE OF NORTH CAROLINA
DEPARTMENT OF TRANSPORTATION
RALEIGH

SUBSTRUCTURE

END BENT 1 & 2 DETAILS

REVISIONS								SHEET NO.
NO.	BY:	DATE:	NO.	BY:	DATE:			S-13
1			3					TOTAL SHEETS
2			4					15

STD. NO. EB_33_90S4_33BB

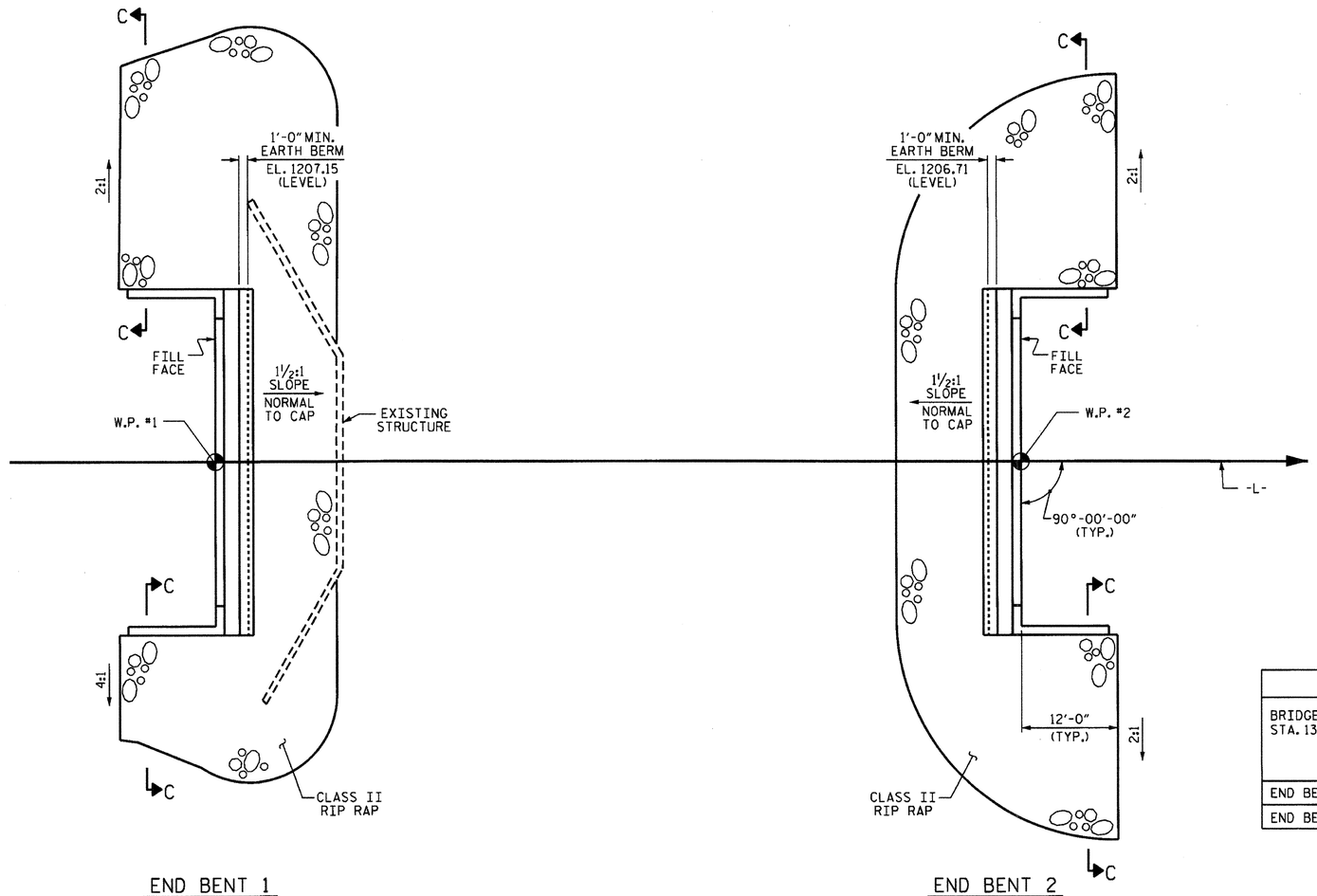

END BENT 1

END BENT 2

PLAN

ESTIMATED QUANTITIES		
BRIDGE @ STA. 13+75.00 -L-	RIP RAP CLASS II (2'-0" THICK)	GEOTEXTILE FOR DRAINAGE
	TONS	SQUARE YARDS
END BENT 1	170	190
END BENT 2	175	195

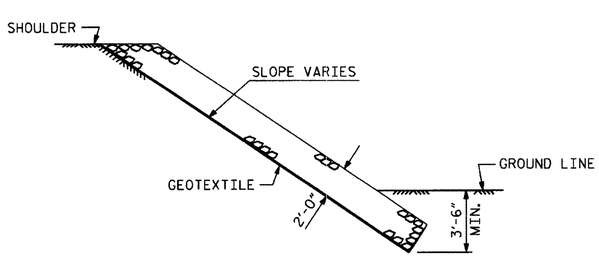

SECTION C-C

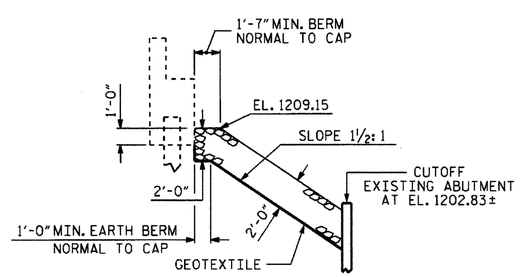

℄ SECTION
BERM RIP RAPPED @ END BENT 1

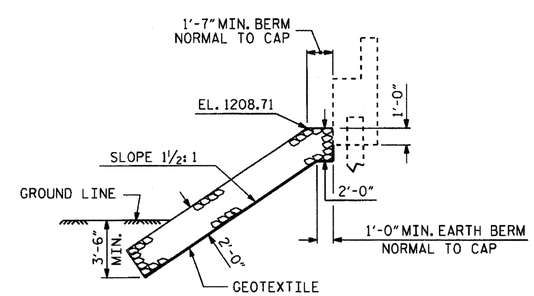

℄ SECTION
BERM RIP RAPPED @ END BENT 1

PROJECT NO. 41665.1C
WILKES COUNTY
STATION: 13+75.00 -L-

STATE OF NORTH CAROLINA
DEPARTMENT OF TRANSPORTATION
RALEIGH

STANDARD

RIP RAP DETAILS

NORTH CAROLINA PROFESSIONAL SEAL 23371 ENGINEER VISUL A. PATEL
3/10/14

REVISIONS							SHEET NO.
NO.	BY:	DATE:	NO.	BY:	DATE:		S-14
1			3				TOTAL SHEETS
2			4				15

ASSEMBLED BY : T. H. CARROLL	DATE : 1/16/14
CHECKED BY : V. A. PATEL	DATE : 3/4/14
DRAWN BY : REK 1/84	REV. 5/1/06R TLA/GM
CHECKED BY : RDU 1/84	REV. 10/1/11 MAA/GM
	REV. 12/21/11 MAA/GM

10-MAR-2014 10:06
S:\DPG3\DivisionLets\Div11\BR*694\Wilkes\Plans\41665.1C_SD_RR.dgn

STD. NO. RR1

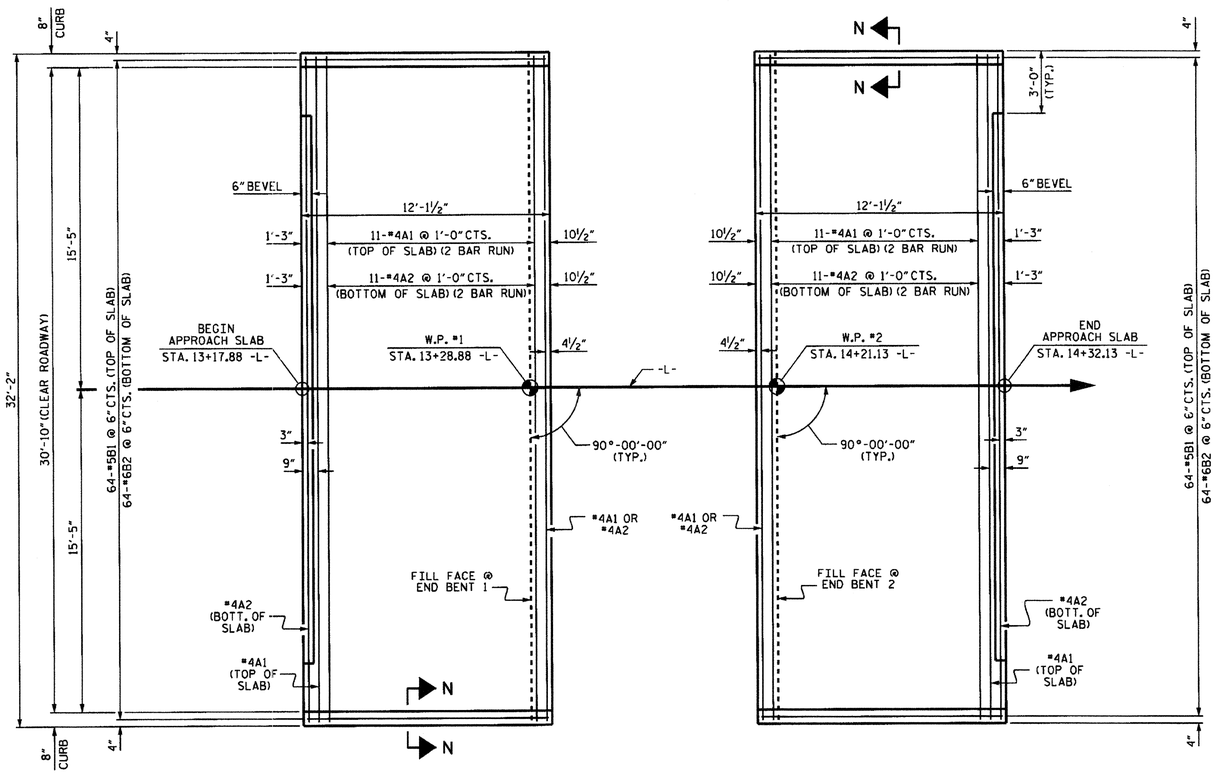

PLAN @ END BENT 1

PLAN @ END BENT 2

DIMENSIONS SHOWN ARE TYPICAL FOR BOTH APPROACH SLABS

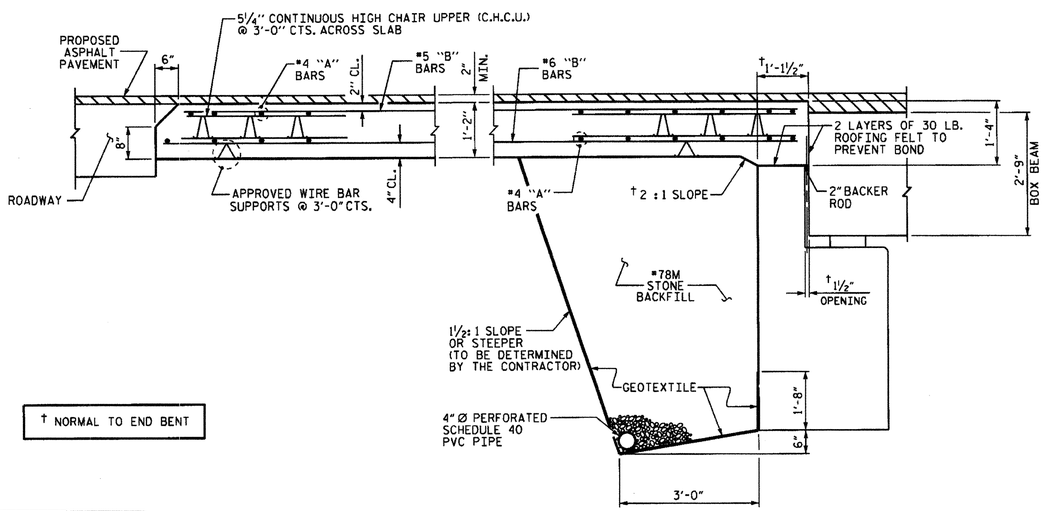

† NORMAL TO END BENT

SECTION THRU SLAB

NOTES

FOR BRIDGE APPROACH FILL INCLUDING GEOTEXTILE, 4" Ø DRAINAGE PIPE, AND #78M STONE BACKFILL, SEE ROADWAY PLANS.

GEOTEXTILE SHALL BE TYPE 1 IN ACCORDANCE WITH THE STANDARD SPECIFICATIONS SECTION 1056.

#78M STONE BACKFILL (CLASS V SELECT MATERIAL) SHALL BE IN ACCORDANCE WITH STANDARD SPECIFICATIONS SECTION 1016.

#78M STONE BACKFILL IS TO BE CONTINUOUS ALONG FILL FACE OF BACKWALL FROM OUTSIDE EDGE TO OUTSIDE EDGE OF APPROACH SLAB.

FOR THE 4" Ø DRAINAGE PIPE OUTLET(S), SEE ROADWAY STANDARD DRAWINGS.

AREA BETWEEN THE WINGWALL AND APPROACH SLAB SHALL BE GRADED TO DRAIN THE WATER AWAY FROM THE FILL FACE OF THE BRIDGE AND SHALL BE PAVED. SEE ROADWAY PLANS.

APPROACH SLAB GROOVING IS NOT REQUIRED.

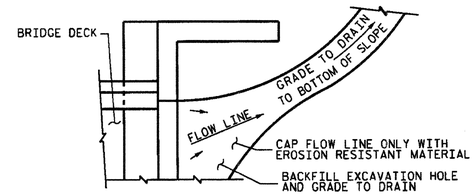

NOTE: IF THE APPROACH SLAB IS NOT CONSTRUCTED IMMEDIATELY AFTER THE BACKFILLING OF THE END BENT EXCAVATION, GRADE TO DRAIN TO THE BOTTOM OF THE SLOPE AND PROVIDE EROSION RESISTANT MATERIAL, SUCH AS FIBERGLASS ROVING OR AS DIRECTED BY THE ENGINEER TO PREVENT SOIL EROSION AND TO PROTECT THE AREA ADJACENT TO THE STRUCTURE. THE CONTRACTOR WILL BE REQUIRED TO REMOVE THESE MATERIALS PRIOR TO CONSTRUCTION OF THE APPROACH SLAB.

TEMPORARY DRAINAGE DETAIL

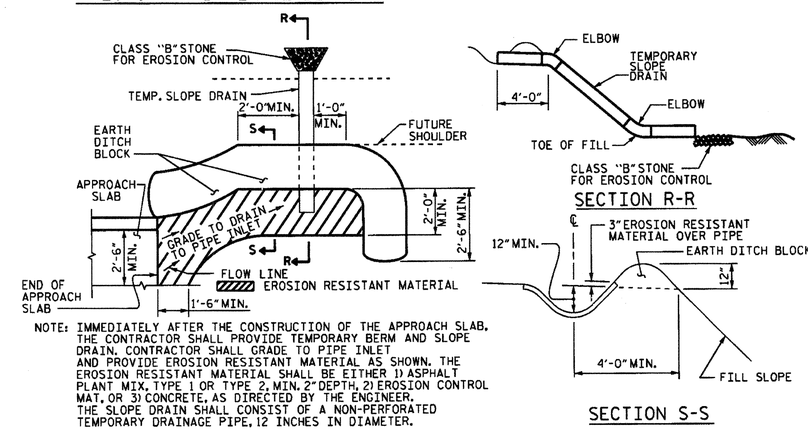

NOTE: IMMEDIATELY AFTER THE CONSTRUCTION OF THE APPROACH SLAB, THE CONTRACTOR SHALL PROVIDE TEMPORARY BERM AND SLOPE DRAIN. CONTRACTOR SHALL GRADE TO PIPE INLET AND PROVIDE EROSION RESISTANT MATERIAL AS SHOWN. THE EROSION RESISTANT MATERIAL SHALL BE EITHER 1) ASPHALT PLANT MIX, TYPE 1 OR TYPE 2, MIN. 2" DEPTH, 2) EROSION CONTROL MAT, OR 3) CONCRETE, AS DIRECTED BY THE ENGINEER. THE SLOPE DRAIN SHALL CONSIST OF A NON-PERFORATED TEMPORARY DRAINAGE PIPE, 12 INCHES IN DIAMETER.

PLAN VIEW

TEMPORARY BERM AND SLOPE DRAIN DETAILS

(TO BE USED WHEN SHOULDER BERM GUTTER IS REQUIRED)

BILL OF MATERIAL

APPROACH SLAB AT EB 1

BAR	NO.	SIZE	TYPE	LENGTH	WEIGHT
* A1	26	#4	STR	16'-11"	294
A2	26	#4	STR	16'-9"	291
* B1	64	#5	STR	11'-2"	745
B2	64	#6	STR	11'-8"	1121
REINFORCING STEEL				LBS.	1,412
* EPOXY COATED REINFORCING STEEL				LBS.	1,039
CLASS AA CONCRETE				C. Y.	17.2

APPROACH SLAB AT EB 2

BAR	NO.	SIZE	TYPE	LENGTH	WEIGHT
* A1	26	#4	STR	16'-11"	294
A2	26	#4	STR	16'-9"	291
* B1	64	#5	STR	11'-2"	745
B2	64	#6	STR	11'-8"	1121
REINFORCING STEEL				LBS.	1,412
* EPOXY COATED REINFORCING STEEL				LBS.	1,039
CLASS AA CONCRETE				C. Y.	17.2

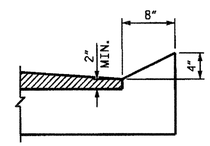

SECTION N-N

CURB DETAILS

SPLICE LENGTHS		
BAR SIZE	EPOXY COATED	UNCOATED
#4	2'-0"	1'-9"
#5	2'-6"	2'-2"
#6	3'-10"	2'-7"

NORTH CAROLINA PROFESSIONAL SEAL 23371 ENGINEER PAUL A. PATEL
3/10/14

PROJECT NO. 41665.1C

WILKES COUNTY

STATION: 13+75.00 -L-

STATE OF NORTH CAROLINA
DEPARTMENT OF TRANSPORTATION
RALEIGH

STANDARD
BRIDGE APPROACH SLAB
FOR PRESTRESSED CONCRETE
BOX BEAM UNIT
(SUB-REGIONAL TIER)
90° SKEW

REVISIONS							SHEET NO.
NO.	BY:	DATE:	NO.	BY:	DATE:		S-15
1			3				TOTAL SHEETS
2			4				15

ASSEMBLED BY : T. H. CARROLL	DATE : 1/16/14
CHECKED BY : V. A. PATEL	DATE : 3/4/14
DRAWN BY : MAA 11/11	
CHECKED BY : AAC 11/11	

10-MAR-2014 10:06
S:\DPG3\DivisionLets\Div11\BR*694Wilkes\Plans\41665.1C_SD_AS.dgn
thcarroll

STD. NO. BAS_BB_33_90S

STANDARD NOTES

DESIGN DATA:

SPECIFICATIONS	A.A.S.H.T.O. (CURRENT)
LIVE LOAD	SEE PLANS
IMPACT ALLOWANCE	SEE A.A.S.H.T.O.
STRESS IN EXTREME FIBER OF	
STRUCTURAL STEEL - AASHTO M270 GRADE 36	20,000 LBS. PER SQ. IN.
- AASHTO M270 GRADE 50W	27,000 LBS. PER SQ. IN.
- AASHTO M270 GRADE 50	27,000 LBS. PER SQ. IN.
REINFORCING STEEL IN TENSION	
GRADE 60	24,000 LBS. PER SQ. IN.
CONCRETE IN COMPRESSION	1,200 LBS. PER SQ. IN.
CONCRETE IN SHEAR	SEE A.A.S.H.T.O.
STRUCTURAL TIMBER - TREATED OR	
UNTREATED - EXTREME FIBER STRESS	1,800 LBS. PER SQ. IN.
COMPRESSION PERPENDICULAR TO GRAIN OF TIMBER	375 LBS. PER SQ. IN.
EQUIVALENT FLUID PRESSURE OF EARTH	30 LBS. PER CU. FT. (MINIMUM)

MATERIAL AND WORKMANSHIP:

EXCEPT AS MAY OTHERWISE BE SPECIFIED ON PLANS OR IN THE SPECIAL PROVISIONS, ALL MATERIAL AND WORKMANSHIP SHALL BE IN ACCORDANCE WITH THE 2012 "STANDARD SPECIFICATIONS FOR ROADS AND STRUCTURES" OF THE N. C. DEPARTMENT OF TRANSPORTATION.

STEEL SHEET PILING FOR PERMANENT OR TEMPORARY APPLICATIONS SHALL BE HOT ROLLED.

CONCRETE:

UNLESS OTHERWISE REQUIRED ON PLANS, CLASS A CONCRETE SHALL BE USED FOR ALL PORTIONS OF ALL STRUCTURES WITH THE EXCEPTION THAT: CLASS AA CONCRETE SHALL BE USED IN BRIDGE SUPERSTRUCTURES, ABUTMENT BACKWALLS, AND APPROACH SLABS; AND CLASS B CONCRETE SHALL BE USED FOR SLOPE PROTECTION AND RIP RAP.

CONCRETE CHAMFERS:

UNLESS OTHERWISE NOTED ON THE PLANS, ALL EXPOSED CORNERS ON STRUCTURES SHALL BE CHAMFERED 3/4" WITH THE FOLLOWING EXCEPTIONS: TOP CORNERS OF CURBS MAY BE ROUNDED TO 1-1/2" RADIUS WHICH IS BUILT INTO CURB FORMS; CORNERS OF TRANSVERSE FLOOR EXPANSION JOINTS SHALL BE ROUNDED WITH A 1/4" FINISHING TOOL UNLESS OTHERWISE REQUIRED ON PLANS; AND CORNERS OF EXPANSION JOINTS IN THE ROADWAY FACES AND TOPS OF CURBS AND SIDEWALKS SHALL BE ROUNDED TO A 1/4" RADIUS WITH A FINISHING STONE OR TOOL UNLESS OTHERWISE REQUIRED ON PLANS.

DOWELS:

DOWELS WHEN INDICATED ON PLANS AS FOR CULVERT EXTENSIONS, SHALL BE EMBEDDED AT LEAST 12" INTO THE OLD CONCRETE AND GROUTED INTO PLACE WITH 1:2 CEMENT MORTAR.

ALLOWANCE FOR DEAD LOAD DEFLECTION, SETTLEMENT, ETC. IN CASTING SUPERSTRUCTURES:

BRIDGES SHALL BE BUILT ON THE GRADE OR VERTICAL CURVE SHOWN ON PLANS. SLABS, CURBS AND PARAPETS SHALL CONFORM TO THE GRADE OR CURVE.

ALL DIMENSIONS WHICH ARE GIVEN IN SECTION AND ARE AFFECTED BY DEAD LOAD DEFLECTIONS ARE DIMENSIONS AT CENTER LINE OF BEARING UNLESS OTHERWISE NOTED ON PLANS. IN SETTING FORMS FOR STEEL BEAM BRIDGES AND PRESTRESSED CONCRETE GIRDER BRIDGES, ADJUSTMENTS SHALL BE MADE DUE TO THE DEAD LOAD DEFLECTIONS FOR THE ELEVATIONS SHOWN. WHERE BLOCKS ARE SHOWN OVER BEAMS FOR BUILDING UP TO THE SLAB, THE VERTICAL DIMENSIONS OF THE BLOCKS SHALL BE ADJUSTED BETWEEN BEARINGS TO COMPENSATE FOR DEAD LOAD DEFLECTIONS, VERTICAL CURVE ORDINATE, AND ACTUAL BEAM CAMBER. WHERE BOTTOM OF SLAB IS IN LINE WITH BOTTOM OF TOP FLANGES, DEPTH OF SLAB BETWEEN BEARINGS SHALL BE ADJUSTED TO COMPENSATE FOR DEAD LOAD DEFLECTION, VERTICAL CURVE ORDINATE, AND ACTUAL BEAM CAMBER.

IN SETTING FALSEWORK AND FORMS FOR REINFORCED CONCRETE SPANS, AN ALLOWANCE SHALL BE MADE FOR DEAD LOAD DEFLECTIONS, SETTLEMENT OF FALSEWORK, AND PERMANENT CAMBER WHICH SHALL BE PROVIDED FOR IN ADDITION TO THE ELEVATIONS SHOWN. AFTER REMOVAL OF THE FALSEWORK, THE FINISHED STRUCTURES SHALL CONFORM TO THE PROFILE AND ELEVATIONS SHOWN ON THE PLANS AND CONSTRUCTION ELEVATIONS FURNISHED BY THE ENGINEER.

DETAILED DRAWINGS FOR FALSEWORK OR FORMS FOR BRIDGE SUPERSTRUCTURE AND ANY STRUCTURE OR PARTS OF A STRUCTURE AS NOTED ON THE PLANS SHALL BE SUBMITTED TO THE ENGINEER FOR APPROVAL BEFORE CONSTRUCTION OF THE FALSEWORK OR FORMS IS STARTED.

REINFORCING STEEL:

ALL REINFORCING STEEL SHALL BE DEFORMED. DIMENSIONS RELATIVE TO PLACEMENT OF REINFORCING ARE TO CENTERS OF BARS UNLESS OTHERWISE INDICATED IN THE PLANS. DIMENSIONS ON BAR DETAILS ARE TO CENTERS OF BARS OR ARE OUT TO OUT AS INDICATED ON PLANS.

WIRE BAR SUPPORTS SHALL BE PROVIDED FOR REINFORCING STEEL WHERE INDICATED ON THE PLANS. WHEN BAR SUPPORT PIECES ARE PLACED IN CONTINUOUS LINES, THEY SHALL BE SO PLACED THAT THE ENDS OF THE SUPPORTING WIRES SHALL BE LAPPED TO LOCK LEGS ON ADJOINING PIECES.

STRUCTURAL STEEL:

AT THE CONTRACTOR'S OPTION, HE MAY SUBSTITUTE 7/8" Ø SHEAR STUDS FOR THE 3/4" Ø STUDS SPECIFIED ON THE PLANS. THIS SUBSTITUTION SHALL BE MADE AT THE RATE OF 3 - 7/8" Ø STUDS FOR 4 - 3/4" Ø STUDS, AND STUD SPACING CHANGES SHALL BE MADE AS NECESSARY TO PROVIDE THE SAME EQUIVALENT NUMBER OF 7/8" Ø STUDS ALONG THE BEAM AS SHOWN FOR 3/4" Ø STUDS BASED ON THE RATIO OF 3 - 7/8" Ø STUDS FOR 4 - 3/4" Ø STUDS. STUDS OF THE LENGTH SPECIFIED ON THE PLANS MUST BE PROVIDED. THE MAXIMUM SPACING SHALL BE 2'-0".

EXCEPT AT THE INTERIOR SUPPORTS OF CONTINUOUS BEAMS WHERE THE COVER PLATE IS IN CONTACT WITH BEARING PLATE, THE CONTRACTOR MAY, AT HIS OPTION, SUBSTITUTE FOR THE COVER PLATES DESIGNATED ON THE PLANS COVER PLATES OF THE EQUIVALENT AREA PROVIDED THESE PLATES ARE AT LEAST 5/16" IN THICKNESS AND DO NOT EXCEED A WIDTH EQUAL TO THE FLANGE WIDTH LESS 2" OR A THICKNESS EQUAL TO 2 TIMES THE FLANGE THICKNESS. THE SIZE OF FILLET WELDS SHALL CONFORM TO THE REQUIREMENTS OF THE CURRENT ANSI/AASHTO/AWS "BRIDGE WELDING CODE". ELECTROSLAG WELDING WILL NOT BE PERMITTED.

WITH THE SOLE EXCEPTION OF EDGES AT SURFACES WHICH BEAR ON OTHER SURFACES, ALL SHARP EDGES AND ENDS OF SHAPES AND PLATES SHALL BE SLIGHTLY ROUNDED BY SUITABLE MEANS TO A RADIUS OF APPROXIMATELY 1/16 INCH OR EQUIVALENT FLAT SURFACE AT A SUITABLE ANGLE PRIOR TO PAINTING, GALVANIZING, OR METALLIZING.

HANDRAILS AND POSTS:

METAL STANDARDS AND FACES OF THE CONCRETE END POSTS FOR THE METAL RAIL SHALL BE SET NORMAL TO THE GRADE OF THE CURB, UNLESS OTHERWISE SHOWN ON PLANS. THE METAL RAIL AND TOPS OF CONCRETE POSTS USED WITH THE ALUMINUM RAIL SHALL BE BUILT PARALLEL TO THE GRADE OF THE CURB.

METAL HANDRAILS SHALL BE IN ACCORDANCE WITH THE PLANS. RAILS SHALL BE AS MANUFACTURED FOR BRIDGE RAILING. CASTINGS SHALL BE OF A UNIFORM APPEARANCE. FINS AND OTHER DEFORMATIONS RESULTING FROM CASTING OR OTHERWISE SHALL BE REMOVED IN A MANNER SO THAT A UNIFORM COLORING OF THE COMPLETED CASTING SHALL BE OBTAINED. CASTINGS WITH DISCOLORATIONS OR OF NON-UNIFORM COLORING WILL NOT BE ACCEPTED. CERTIFIED MILL REPORTS ARE REQUIRED FOR METAL RAILS AND POSTS.

SPECIAL NOTES:

GENERALLY, IN CASE OF DISCREPANCY, THIS STANDARD SHEET OF NOTES SHALL GOVERN OVER THE SPECIFICATIONS, BUT THE REMAINDER OF THE PLANS SHALL GOVERN OVER NOTES HEREON, AND SPECIAL PROVISIONS SHALL GOVERN OVER ALL. SEE SPECIFICATIONS ARTICLE 105-4.

ENGLISH

JANUARY, 1990