STATE OF NORTH CAROLINA
DEPARTMENT OF TRANSPORTATION
HIGHWAY DIVISION 11

PROPOSAL

DATE AND TIME OF BID OPENING: JUNE 25, 2015 AT 10:00 AM

CONTRACT ID: DK00156

WBS ELEMENT NO.: 45357.3.FD22

FEDERAL AID NO.: BRZ-1809(5)

COUNTY: SURRY

TIP NO.: BD-5111V

MILES: 0.130

ROUTE NO.: SR 1809

LOCATION: REPLACE BRIDGE NO. 244 ON SR 1809 (OLD WESTFIELD ROAD) OVER SR 1856 (OLD US 52)

TYPE OF WORK: GRADING, DRAINAGE, PAVING AND STRUCTURE

NOTICE:
ALL BIDDERS SHALL COMPLY WITH ALL APPLICABLE LAWS REGULATING THE PRACTICE OF GENERAL CONTRACTING AS CONTAINED IN CHAPTER 87 OF THE GENERAL STATUTES OF NORTH CAROLINA WHICH REQUIRES THE BIDDER TO BE LICENSED BY THE N.C. LICENSING BOARD FOR CONTRACTORS WHEN BIDDING ON ANY NON-FEDERAL AID PROJECT WHERE THE BID IS $30,000 OR MORE, EXCEPT FOR CERTAIN SPECIALTY WORK AS DETERMINED BY THE LICENSING BOARD. BIDDERS SHALL ALSO COMPLY WITH ALL OTHER APPLICABLE LAWS REGULATING THE PRACTICES OF ELECTRICAL, PLUMBING, HEATING AND AIR CONDITIONING AND REFRIGERATION CONTRACTING AS CONTAINED IN CHAPTER 87 OF THE GENERAL STATUTES OF NORTH CAROLINA. NOTWITHSTANDING THESE LIMITATIONS ON BIDDING, THE BIDDER WHO IS AWARDED ANY FEDERAL - AID FUNDED PROJECT SHALL COMPLY WITH CHAPTER 87 OF THE GENERAL STATUTES OF NORTH CAROLINA FOR LICENSING REQUIREMENTS WITHIN 60 CALENDAR DAYS OF BID OPENING.

BIDS WILL BE RECEIVED AS SHOWN BELOW:

THIS IS A STRUCTURE PROJECT. **BID BONDS ARE REQUIRED.**

_____

NAME OF BIDDER **NC CONTRACTOR'S LICENSE NUMBER**

_____

ADDRESS OF BIDDER

INSTRUCTIONS TO BIDDERS

PLEASE READ ALL INSTRUCTIONS CAREFULLY BEFORE PREPARING AND SUBMITTING YOUR BID.

All bids shall be prepared and submitted in accordance with the following requirements, except that bids may be prepared by electronic means as described elsewhere in the proposal. Failure to comply with any requirement shall cause the bid to be considered irregular and shall be grounds for rejection of the bid.

1. The bid sheet furnished by NCDOT with the proposal shall be used and shall not be altered in any manner. **DO NOT SEPARATE THE BID SHEET FROM THE PROPOSAL!**
2. All entries on the bid sheet, including signatures, shall be written in ink.
3. The Bidder shall submit a unit price for every item on the bid form. The unit prices for the various contract items shall be written in figures. ****Unit Prices shall be rounded off by the bidder to contain no more than FOUR decimal places.****
4. An amount bid shall be entered on the bid sheet for every item. The amount bid for each item shall be determined by multiplying each unit bid by the quantity for that item, and shall be written in figures in the "Amount Bid" column of the sheet.
5. The total amount bid shall be written in figures in the proper place on the bid sheet. The total amount shall be determined by adding the amounts bid for each item.
6. Changes in any entry shall be made by marking through the entry in ink and making the correct entry adjacent thereto in ink. A representative of the Bidder shall initial the change in ink.
7. The bid shall be properly executed. All bids shall show the following information:
   a. Name of individual, firm, corporation, partnership, or joint venture submitting bid.
   b. Name and signature of individual or representative submitting bid and position or title.
   c. Name, signature, and position or title of witness.
   d. Contractor's License Number (if Applicable)
8. Bids submitted by corporations shall bear the seal of the corporation.
9. The bid shall not contain any unauthorized additions, deletions, or conditional bids.
10. The bidder shall not add any provision reserving the right to accept or reject an award, or to enter into a contract pursuant to an award.
11. **THE PROPOSAL WITH THE BID SHEET STILL ATTACHED SHALL BE PLACED IN A SEALED ENVELOPE AND SHALL HAVE BEEN DELIVERED TO AND RECEIVED IN THE DIVISION ENGINEER'S OFFICE AT 801 STATESVILLE ROAD, P.O. BOX 250, NORTH WILKESBORO, NORTH CAROLINA 28659 BY 10:00 AM ON JUNE 25, 2015.**
12. The sealed bid must display the following statement on the front of the sealed envelope:

    QUOTE NO: DK00156 - BD-5111V

13. If delivered by mail, the sealed envelope shall be placed in another sealed envelope and the outer envelope shall be addressed as follows:

JOE L. LAWS, PE, DIVISION PROJECT MANAGER
N.C. DEPARTMENT OF TRANSPORTATION
P.O. BOX 250
801 STATESVILLE ROAD
NORTH WILKESBORO, NORTH CAROLINA 28659

AWARD OF CONTRACT

The award of the contract, if it be awarded, will be made to the lowest responsible Bidder in accordance with Section 102 of the *2012 Standard Specifications for Roads and Structures*. The lowest responsible Bidder will be notified that his bid has been accepted and that he has been awarded the contract. NCDOT reserves the right to reject all bids.

TABLE OF CONTENTS

INSTRUCTIONS TO BIDDERS....2
NCDOT STANDARD NOTES FOR ALL FEDERALLY FUNDED PROJECTS....6

GENERAL....8

SCOPE OF WORK....8
LOCATION AND DESCRIPTION....8
CONTRACT TIME AND LIQUIDATED DAMAGES....8
INTERMEDIATE CONTRACT TIME NUMBER 1 AND LIQUIDATED DAMAGES....9
INTERMEDIATE CONTRACT TIME NUMBER 2 AND LIQUIDATED DAMAGES....9
INTERMEDIATE CONTRACT TIME NUMBER 3 AND LIQUIDATED DAMAGES....9
INTERMEDIATE CONTRACT TIME NUMBER 4 AND LIQUIDATED DAMAGES....10
INTERMEDIATE CONTRACT TIME NUMBER 5 AND LIQUIDATED DAMAGES....10
PREPARATION AND SUBMISSION OF BIDS....11
COMPUTER BID PREPARATION (OPTIONAL)....11
BID BOND....12
EXECUTION OF SIGNATURE SHEETS AND DEBARMENT CERTIFICATION....12
CONTRACT PAYMENT AND PERFORMANCE BOND....12
WORKMEN'S COMPENSATION INSURANCE....13
LIABILITY INSURANCE....13
LICENSES....14
SUBLETTING OF CONTRACT....14
DEFAULT OF CONTRACT....14
PARTIAL PAYMENT....14
RETAINAGE AND PROMPT PAYMENT....15
MANDATORY SUBCONTRACTOR INFORMATION....16
LEGAL RELATIONS AND RESPONSIBILITY TO PUBLIC....16
BANKRUPTCY....17
EXTENSION OF CONTRACT TIME....17
CLAIMS FOR ADDITIONAL COMPENSATION OR EXTENSION OF TIME....17
CONTRACTOR CLAIM SUBMITTAL FORM....17
PROSECUTION AND PROGRESS....17
PLAN, DETAIL AND QUANTITY ADJUSTMENTS....18
TEMPORARY SUSPENSION OF WORK....18
AUTHORITY OF THE ENGINEER....18
APPROVAL OF PERSONNEL....19
SUPERVISION BY CONTRACTOR....19
CONTRACTOR PERSONNEL....20
INSPECTION....20
MATERIALS AND TESTING....20

PROJECT SPECIAL PROVISIONS - GENERAL....21

NO MAJOR CONTRACT ITEMS....21
SPECIALTY ITEMS....21
DISADVANTAGED BUSINESS ENTERPRISE (DIVISIONS)....21
DBE GOAL....23
CERTIFICATION FOR FEDERAL-AID CONTRACTS....33
U.S. DEPARTMENT OF TRANSPORTATION HOTLINE....33
SUBMISSION OF RECORDS - FEDERAL-AID PROJECTS....34
SUBSURFACE INFORMATION....34
LOCATING EXISTING UNDERGROUND UTILITIES....34
MAINTENANCE OF THE PROJECT....34
GIFTS FROM VENDORS AND CONTRACTORS....35
EROSION AND SEDIMENT CONTROL/STORMWATER CERTIFICATION....35
EMPLOYMENT....40
STATE HIGHWAY ADMINISTRATOR TITLE CHANGE....41

PROJECT SPECIAL PROVISIONS - ROADWAY....42

GENERAL NOTES....42

CLEARING AND GRUBBING - METHOD III....43
SHOULDER AND FILL SLOPE MATERIAL....43
PIPE INSTALLATION....43
BRIDGE APPROACH FILLS....43
INCIDENTAL STONE BASE....46
ASPHALT PAVEMENTS - SUPERPAVE....46
ASPHALT BINDER CONTENT OF ASPHALT PLANT MIXES....48
ASPHALT PLANT MIXTURES....49
PRICE ADJUSTMENT - ASPHALT BINDER FOR PLANT MIX....49
FINAL SURFACE TESTING NOT REQUIRED....49
GUARDRAIL ANCHOR UNITS, TYPE 350 (TL-3)....49
MATERIALS....51
SHOULDER AND SLOPE BORROW....62

UNIT PROVISIONS....63

TRAFFIC CONTROL....63
UTILITY SPECIAL PROVISIONS....64
STABILIZATION REQUIREMENTS....70
PERMANENT VEGETATION ESTABLISHMENT....70
SEEDING AND MULCHING (WEST)....71
TEMPORARY SEEDING....72
BASIS OF PAYMENT....73
FERTILIZER TOPDRESSING....73
SUPPLEMENTAL SEEDING....73
MOWING....73
MINIMIZE REMOVAL OF VEGETATION....73
STOCKPILE AREAS....73
ACCESS AND HAUL ROADS....73
WASTE AND BORROW SOURCES....74
RESPONSE FOR EROSION CONTROL....74
COIR FIBER MAT....75
PERMANENT SOIL REINFORCEMENT MAT....76
COIR FIBER WATTLES WITH POLYACRYLAMIDE (PAM)....77
SIGNALS AND ITS SPECIAL PROVISIONS....80
FALSEWORK AND FORMWORK....108
SUBMITTAL OF WORKING DRAWINGS....115
CRANE SAFETY....121
GROUT FOR STRUCTURES....121
MAINTENANCE AND PROTECTION OF TRAFFIC BENEATH PROPOSED STRUCTURE AT STATION 13+58.65 -L-....123
REMOVAL OF EXISTING STRUCTURE AT STA. 13+58.65 -L-....124
CONCRETE STAIN....124

PERMITS....1

STANDARD SPECIAL PROVISIONS....1

AVAILABILITY OF FUNDS – TERMINATION OF CONTRACTS....1
NCDOT GENERAL SEED SPECIFICATION FOR SEED QUALITY....1
ERRATA....4
PLANT AND PEST QUARANTINES....5
AWARD OF CONTRACT....6
MINORITY AND FEMALE EMPLOYMENT REQUIREMENTS....6
REQUIRED CONTRACT PROVISIONS FEDERAL - AID CONSTRUCTION CONTRACTS....8
SUBMISSION OF RECORDS - FEDERAL-AID PROJECTS....16
ON-THE-JOB TRAINING....17

BID FORM....20

***AWARD LIMITS ON MULTIPLE PROJECTS*....24**

EXECUTION OF BID....25

LISTING OF DBE SUBCONTRACTORS.....34
LETTER OF INTENT TO PERFORM AS A SUBCONTRACTOR.....35
ATTACHMENT A – GEOTECHNICAL……. .....A1 – A19

NCDOT STANDARD NOTES FOR ALL FEDERALLY FUNDED PROJECTS

A. *NCDOT Standard Specifications* – The January *2012 North Carolina Department of Transportation Standard Specifications for Roads and Structures*, herein referred to as the 'Standard Specifications', shall apply to all portions of this project except as may be modified by this document.

B. *Bidder Prequalification* – Bidders are required to be prequalified with NCDOT for their specific discipline. Contractors wishing to become prequalified may obtain information through the NCDOT website at: http://www.ncdot.gov/business/.

C. *Disadvantaged Business Enterprise References* – Since this is a Federal-aid project with DBE participation, only those requirements and goals set forth by NCDOT Goal Setting Committee are applicable. References to any municipal requirements or to N.C. General Statute 143-128.2 shall not apply to this project. Refer to Special Provision SP1 G63.

D. *Award of Contract* – The contract will be awarded to the lowest responsible, responsive bidder. Alternate items will not be considered in determining the low bidder and will only be evaluated after the award of the contract is made.

E. *Contractor Licensing* – On all Federal-aid contracts, non-licensed contractors are permitted to submit bids, however, they must be licensed prior to performing any work. They are permitted 60 days, after bid opening, to become licensed by the North Carolina Licensing Board. If they fail to do so within 60 days, their bid will be considered non-responsive and will be rejected. If the successful bidder does not hold the proper license to perform any plumbing, heating, air conditioning, or electrical work in this contract, he will be required to sublet such work to a contractor properly licensed in accordance with *Article 2 of Chapter 87 of the General Statutes* (licensing of heating, plumbing, and air conditioning contractors) and *Article 4 of Chapter 87 of the General Statutes* (licensing of electrical contractors).

F. *Bonds* – Please note that all Bid Bonds, Payment Bonds, and Performance Bonds required for this project, shall be those found on the NCDOT website.

The Bid Bond forms, designated as MISC 5:

http://www.ncdot.org/doh/preconstruct/ps/word/BIDBOND.doc

The Payment and Performance Bonds, listed as MISC 6M, are located at:

http://www.ncdot.org/doh/preconstruct/ps/contracts/Letting/ppb2.html

G. *Liability Insurance* – In addition to any insurance requirements as may be required by the municipality, the Contractor is obligated to comply with Article 107-15 of the *Standard Specifications* including the dollar limits set forth.

H. *Buy America* – This project shall be governed by the Buy America requirements, for the use of domestic steel and iron products, as outlined in the *Standard Specifications*.

I. *Proprietary Items* – When a proprietary (brand name) product, whether material, equipment or procedure, are specified in the plans or specifications, they are used only to denote the style, type, character, and quality desired of the product. They do not restrict the bidder from proposing other brands, makes, or manufacturers, which are determined to be of equal quality. Approval or disapproval of those products will be

made by the Engineer prior to beginning the work as to which product(s) or material(s) are acceptable for use.

J. *Retainage by Municipalities* – This municipality will not retain any amount or percentage from progress payments or final estimates due contractors on federally funded projects.

Retainage by Contractors – Contractors are NOT permitted to retain any amount or percentage from monies due their subcontractors or material suppliers on federally funded projects except as permitted by Subarticle 109-4(B) of the *Standard Specifications*.

K. *Traffic Control* – The requirements of the *Manual on Uniform Traffic Control Devices (MUTCD) – FHWA*, as amended by the *NCDOT Supplement to MUTCD*, shall apply. Traffic Control, both vehicular and pedestrian, shall be maintained throughout the project as required by these specifications as modified by the project plans or special provisions.

GENERAL

SCOPE OF WORK

This work shall consist of furnishing and installing a prestressed concrete cored slab, removal of the existing structure; clearing and grubbing; comprehensive grading; installation of guardrail; roadway base course and pavement; placement of substructure and superstructure; grading within limits of the project; placement of rip rap; temporary erosion control; seeding and mulching; drainage; temporary work zone devices and signing; and all other incidental items necessary to complete the project as specified and shown on the plans. The Department shall be responsible for placement of final pavement markings.

Only the construction centerline, control points with a reference station and benchmark location shall be furnished by the Department on an initial one time basis. All other engineering, surveying, layout and measurements shall be the responsibility of the contractor.

LOCATION AND DESCRIPTION

The existing bridge, consisting of 3 spans; 1@40'-3", 1@40', 1@40'-3" with a reinforced concrete floor on I-beam superstructure with a clear roadway width of 24'-0" on a substructure consisting of reinforced concrete spill through end bents and reinforced concrete post and beam bents and is located on SR 1809 over SR 1856 (Old US 52) in Pilot Mountain, Surry County. This bridge shall be replaced by a bridge with approach slabs and consisting of 3 spans; 1@43'-9", 1@50', and 1@30'-9" prestressed concrete cored slabs on end bent caps on steel piles and bents on pile footings on a 90°55'43" skew and a 33'-0" clear roadway width and roadway approaches.

(SEE BRIDGE LOCATION MAP)

CONTRACT TIME AND LIQUIDATED DAMAGES

The date of availability is **July 20, 2015**.

No work will be permitted and no contract will be executed until all required bonds and prerequisite conditions and certifications have been satisfied. No work will be permitted prior to issuance of the purchase order.

The completion date for this project is June 12, 2016. No extensions will be authorized except as authorized by Article 108-10 of the *Standard Specifications.*

Except where otherwise provided by the contract, observation periods required by the contract will not be a part of the work to be completed by the completion date and/or intermediate contract times stated in the contract. The acceptable completion of the observation periods that extend beyond the final completion date shall be a part of the work covered by the performance and payment bonds.

Liquidated damages for this contract are Five Hundred Dollars ($500.00) per calendar day. These liquidated damages will not be cumulative with any liquidated damages which may become chargeable under Intermediate Contract Time Number 1.

INTERMEDIATE CONTRACT TIME NUMBER 1 AND LIQUIDATED DAMAGES

The Contractor will be required to complete all work included in this contract for removing and replacing Bridge No. 244 and shall place and maintain traffic on same as follows:

The date of availability for this intermediate contract time is July 20, 2015.

The completion date for this intermediate contract time is December 18, 2015.

Liquidated damages for this intermediate contract time are Seven Hundred Fifty Dollars ($750.00) per calendar day.

INTERMEDIATE CONTRACT TIME NUMBER 2 AND LIQUIDATED DAMAGES

The Contractor will be required to complete all work included in this contract for removing the temporary detour ramps, placing final asphalt concrete surface course, placing final pavement marking, and final seeding and mulching of disturbed areas as follows:

The date of availability for this intermediate contract time is the actual completion date of all work associated with the replacement of Bridge No. 244 as noted in ICT Number 1.

The completion date for this intermediate contract time is April 15, 2016.

Liquidated damages for this intermediate contract time are Seven Hundred Fifty Dollars ($750.00) per calendar day.

INTERMEDIATE CONTRACT TIME NUMBER 3 AND LIQUIDATED DAMAGES

The Contractor will be required to complete that work required under the Project Special Provisions entitled *Permanent Vegetation Establishment*, included elsewhere in this proposal, as follows:

The date of availability for this intermediate contract time is the actual completion date of all work as described in ICT Number 2.

The completion date for this intermediate contract time is June 12, 2016.

Liquidated damages for this intermediate contract time are Two Hundred Dollars ($200.00) per calendar day.

Upon apparent completion of all the work required to be completed by this intermediate date, a final inspection will be held and upon acceptance, the Department will assume responsibility for the maintenance of all work. The Contractor will be responsible for and shall make corrections of all damages to the completed roadway caused by his planting operations, whether occurring prior to or after placing traffic through the project.

INTERMEDIATE CONTRACT TIME NUMBER 4 AND LIQUIDATED DAMAGES

The Contractor shall complete the required work of installing, maintaining and removing the traffic control devices for lane closures and restoring traffic to the existing traffic pattern. The Contractor shall not close or narrow a lane of traffic on **SR 1809 (Old Westfield Road)**, **SR 1856 (Old US 52)**, and **Temporary Detour Ramps** during the following time restrictions:

DAY AND TIME RESTRICTIONS

Monday through Saturday
6:00 A.M. TO 8:30 A.M.
and
4:00 P.M. TO 6:00 P.M.

The time of availability for this intermediate contract time will be the time the Contractor begins to install traffic control devices required for the lane closures according to the time restrictions stated herein.

The completion time for this intermediate contract time will be the time the Contractor is required to complete the removal of traffic control devices required for the lane closures according to the time restrictions stated herein and restore traffic to the existing traffic pattern.

The liquidated damages are One Thousand Dollars ($1,000.00) per hour.

INTERMEDIATE CONTRACT TIME NUMBER 5 AND LIQUIDATED DAMAGES

The Contractor shall complete the required work of installing, maintaining and removing the traffic control devices for road closure and restoring traffic to the existing traffic pattern. The Contractor shall not close **SR 1856 (Old US 52)** during the following time restrictions:

DAY AND TIME RESTRICTIONS

Monday through Sunday
6:00 A.M. TO 9:00 P.M.

The Contractor shall not be allowed to the close SR 1856 (Old US 52) until such time that Bridge No. 156 on Cook School Road has been replaced and opened to traffic.

The time of availability for this intermediate contract time will be the time the Contractor begins to install traffic control devices required for the road closures according to the time restrictions stated herein.

The completion time for this intermediate contract time will be the time the Contractor is required to complete the removal of traffic control devices required for the road closure according to the time restrictions stated herein and restore traffic to the existing traffic pattern.

The liquidated damages are One Thousand Dollars ($1,000.00) per hour.

PREPARATION AND SUBMISSION OF BIDS

The entire bid proposal package, properly signed and executed, must be returned in order for the bid to be considered as responsive. **Incomplete proposal packages may be considered unresponsive.** Bid proposals shall be completed in ink and any corrections shall have one strike through with the correction initialed by the bidder.

Effective July 1, 2014, Division Let contracts should only be awarded to firms listed in the Directory of Transportation Firms as either a Bidder or PO Prime Contractor. After this date, firms that are prequalified as subcontractors only cannot bid on Division Let projects. Applications and details on becoming a prequalified Bidder or PO Prime Contractor can be found at: https://connect.ncdot.gov/business/Prequal/Pages/default.aspx

Any firm that wishes to bid on this project as the prime contractor must be prequalified for the type of work they wish to perform prior to submitting their bid.

All bids shall be prepared and submitted in accordance with the listed requirements of Article 102-8 of the *2012 Standard Specifications*.

In accordance with GS 136-28.1(b), if the total bid amount of the contract exceeds **$2,500,000**, the bid will not be considered for award.

COMPUTER BID PREPARATION (OPTIONAL)

The bidder may elect to prepare his bid and MBE/WBE or DBE participation electronically by means of a personal computer. For electronic bid preparation the Contractor shall download the Expedite program from the NCDOT "Project Letting" website. Then download the appropriate .ebs electronic file of line items and quantities unique to each project from the Division Office's website.

The only entries into the program which will be permitted by the Bidder are the appropriate unit or lump sum prices for those items which must be bid in order to provide a complete bid for the project, and any MBE/WBE or DBE participation in the appropriate section of the Expedite program. When these entries have been made, the program will automatically prepare a complete set of itemized proposal sheets which will include the amount bid for the various items and the total amount bid for the project in addition to the unit or lump sum prices bid. The computer generated itemized proposal sheets shall be printed and signed by a duly authorized representative in accordance with Article 102-8(A)(8). This set of itemized proposal sheets, when submitted together with the appropriate proposal, will constitute the bid and shall be delivered to the appropriate Division Office or location specified in the INSTRUCTIONS TO BIDDERS. If the Bidder submits his bid on computer generated itemized proposal sheets, bid prices shall not be written on the itemized proposal sheets bound in the proposal. The computer generated itemized proposal sheets (.ebs bid file) shall also be copied to a compact disk (CD) furnished by the Contractor and shall be submitted to the Department with the bid.

In the case of a discrepancy between the unit or lump sum prices submitted on the itemized proposal sheets and those contained on the CD furnished by the Contractor, the unit or lump sum prices submitted on the printed and signed itemized proposal sheets shall prevail.

The requirements of the INSTRUCTIONS TO BIDDERS will apply to the preparation of bids except that a bid may be submitted on computer generated itemized proposal sheets in which case the entries on the itemized proposal sheets will not be required to be in ink. Changes to any entry on the computer generated itemized proposal sheets shall be made in accordance with requirement Number (6) of the INSTRUCTIONS TO BIDDERS. When the computer generated itemized proposal sheets are not signed and received with the proposal, the bid will be considered irregular.

BID BOND

A Bid Bond is required for the submission of bids for this project.

EXECUTION OF SIGNATURE SHEETS AND DEBARMENT CERTIFICATION

The Bidder's attention is directed to the various sheets in the contract proposal, which are to be completed and/or signed by the Bidder. A list of these sheets is shown below. The signature sheets are located behind the Bid Form(s) in the contract proposal.

1. Execution of Bid including Non-Collusion Affidavit, Debarment Certification, & Gift Ban
2. MBE/WBE/DBE Subcontract Listing Form

The Bidder shall certify his and to the best of his knowledge all subcontractors, material suppliers and vendors utilized herein current status concerning suspension, debarment, voluntary exclusion, or determination of ineligibility by any federal agency, in accordance with the "Debarment Certification" located behind the signature sheets in the proposal forms. Execution of the bid signature sheets in conjunction with any applicable statements concerning exceptions, when such statements have been made on the "Debarment Certification", constitutes the Bidders certification of "status" under penalty of perjury under the laws of the United States.

CONTRACT PAYMENT AND PERFORMANCE BOND

A performance bond in the amount of **one hundred percent (100%)** of the contract amount, conditioned upon the faithful performance of the contract in accordance with specifications and conditions of the contract is required for Construction contracts of **$300,000.00** or more. Such bond shall be solely for the protection of the North Carolina Department of Transportation and the State of North Carolina.

A payment bond in the amount of **one hundred percent (100%)** of the contract amount, conditioned upon the prompt payment for all labor or materials for which the Contractor, or his subcontractors, is liable is required for Construction contracts greater than **$300,000.00**. The payment bond shall be solely for the protection of persons or firms furnishing materials or performing labor for this contract for which the Contractor is liable.

The successful bidder, **within fourteen (14) days after notice of award,** shall provide the Department with a contract payment bond and a contract performance bond each in an amount equal to 100 percent of the amount of the contract.

WORKMEN'S COMPENSATION INSURANCE

The contractor shall defend, indemnify and hold harmless the North Carolina Department of Transportation, its officers and employees from any claim, demand, suit, liability, judgment and expense (including attorney's fees and other costs of litigation) arising out of or relating to injury, disease, or death of persons or damage to or loss of property resulting from or in connection with the negligent performance of this contract by the contractor, its agents, employees, and subcontractors or any one for whom the contractor may be responsible. The obligations, indemnities and liabilities assumed by the contractor under this paragraph shall not extend to any liability caused by the negligence of the Department of Transportation or its employees. The contractor's liability shall not be limited by any provisions or limits of insurance set forth in this contract.

The contractor shall indemnify and hold harmless the Department of Transportation from any claim, demand, suit, liability, judgment, and expense involving damage or loss to the contractor's equipment (including vandalism, theft, fire and acts of God) arising out of or relating to work performed under this agreement. The obligations, indemnities and liabilities assumed by the contractor under this paragraph shall not extend to any liability caused by the negligence of the Department of Transportation or its employees. The contractor's liability shall not be limited by any provisions or limits of insurance set forth in this contract.

The contractor further agrees to indemnify the Department of Transportation for any damages to the roadway, highway signs, highway equipment and other property owned or in possession of the Department of Transportation, brought about by reason of the negligent operation of the leased equipment. The contractor further agrees to indemnify and save harmless the Department of Transportation, its officers and employees from any claims or amounts recovered by any of the contractor's employees under the Worker's Compensation Act.

Pursuant to N.C.G.S. § 97-19, all contractors of the Department of Transportation are, prior to beginning services, required to show proof of coverage issued by a workers' compensation insurance carrier, or a certificate of compliance issued by the Department of Insurance for self-insured subcontractors stating that it has complied with N.C.G.S. § 97-93 irrespective of whether subcontractors have regularly in service fewer than three employees in the same business within the State of North Carolina, and subcontractors shall be hereinafter liable under the Workers' Compensation Act for payment of compensation and other benefits to its employees for any injury or death due to an accident arising out of and in the course of performance of the work insured by the subcontractor.

Proof of insurance shall be furnished to the Engineer prior to beginning work.

LIABILITY INSURANCE

Provide liability insurance in accordance with Article 107-15 of the *2012 Standard Specifications*.

Revise the *2012 Standard Specifications* as follows:

Page 1-60, Article 107-15 Liability Insurance, line 23, replace the first sentence of the fourth paragraph with the following:

Upon award of the contract, provide evidence of the above insurance requirements to the Engineer.

LICENSES

The contractor must be properly licensed as required by the State of North Carolina. The General Statutes of North Carolina (G.S. 87-1) require the contractor to be licensed by the State for any contract totaling **$30,000.00** or more.

SUBLETTING OF CONTRACT

Revise the *2012 Standard Specifications* as follows:

Page 1-66, Article 108-6 Subletting of Contract, line 37, add the following as the second sentence of the first paragraph:

All requests to sublet work shall be submitted within 30 days of the date of availability or prior to expiration of 20% of the contract time, whichever date is later, unless otherwise approved by the Engineer.

Page 1-67, Article 108-6 Subletting of Contract, line 7, add the following as the second sentence of the fourth paragraph:

Purchasing materials for subcontractors is not included in the percentage of work required to be performed by the Contractor. If the Contractor sublets items of work but elects to purchase material for the subcontractor, the value of the material purchased will be included in the total dollar amount considered to have been sublet.

DEFAULT OF CONTRACT

The Department of Transportation shall have the right to declare a default of contract for breach by the Contractor of any material term or condition of the contract. Default of contract shall be in accordance with the terms, conditions, and procedures of Article **108-9** of the *Standard Specifications.*

PARTIAL PAYMENT

The Contractor may submit a request for payment at the end of each work request. Compensation for all pay items shall be in accordance with the *Standard Specifications*. One

hundred percent (100%) payment shall be made after successful completion of the work as verified by the final inspection.

Requests for payment can be made on the form furnished to the Contractor by the Department of Transportation. The form shall be completely and legibly filled out with all appropriate information supplied and shall be signed by an authorized representative of the Contractor.

Minority Business Enterprise (MBE), Women's Business Enterprise (WBE) and/or Disadvantage Business Enterprise (DBE) participation shall be listed on the appropriate form (DBE-IS) and shall accompany all requests for payment. If there is no participation the word **"None"** or the figure **"0"** shall be entered. Requests for payment will not be processed without the submission of the DBE-IS form. One hundred percent (100%) payment shall be made after successful completion of the work as verified by the final inspection.

RETAINAGE AND PROMPT PAYMENT

Prompt Payment of Monies Due Subcontractors, Second Tier Subcontractors and Material Suppliers and Release of Retainage

Contractors at all levels; prime, subcontractor, or second tier contractor, shall within seven calendar days of receipt of monies, resulting from work performed on the project or services rendered, pay subcontractors, second tier subcontractors, or material suppliers, as appropriate. This seven-day period begins upon knowledgeable receipt by the contracting firm obligated to make a subsequent periodic or final payment. These prompt payment requirements will be met if each firm mails the payment to the next level firm by evidence of postmark within the seven-day period.

This provision for prompt payment shall be incorporated into each subcontract or second tier subcontract issued for work performed on the project or for services provided.

The Contractor may withhold up to 3% retainage if any subcontractor does not obtain a payment and performance bond for their portion of the work. If any retainage is held on subcontractors, all retainage shall be released within seven calendar days of satisfactory completion of all work. For the purpose of release of retainage, satisfactory completion is defined as completion of all physical elements and corresponding documentation as defined in the contract, as well as agreement between the parties as to the final quantities for all work performed in the subcontract. The Department will provide internal controls to expedite the determination and processing of the final quantities for the satisfactorily completed subcontract portions of the project.

Failure of any entity to make prompt payment as defined herein may result in (1) withholding of money due to that entity in the next partial payment until such assurances are made satisfactory to this provision; or (2) removal of an approved contractor from the prequalified bidders list or the removal of other entities from the approved subcontractors list.

MANDATORY SUBCONTRACTOR INFORMATION

The Contractor is to provide a list of all proposed subcontractors he or she plans to use on this project. This list shall include all subcontractors that will be used, not only MBE, WBE or DBE firms. Only pre-approved subcontractors that are registered with the NCDOT may be used. A listing of all contractors (prime or subcontractor) may be found at the following website: https://partner.ncdot.gov/VendorDirectory/default.html

Subcontract Approval Form (Form SAF) must be completed for each subcontractor that will be used and returned prior to the work being performed by the subcontractor. This form can be found at the following website: http://www.ncdot.org/doh/operations/dp_chief_eng/constructionunit/saf.xls

If the proposed subcontractor cannot fulfill their obligation and a substitute must be used, then an appropriate form for the replacement subcontractor must delivered to the administrating officer before the new subcontractor is used.

LEGAL RELATIONS AND RESPONSIBILITY TO PUBLIC

Laws to be Observed

In accordance with 107-1 of the *Standard Specifications*, The Contractor shall keep himself fully informed of all Federal and State laws, all local laws, ordinances, and regulations, and all orders and decreed of bodies or tribunals having any jurisdiction or authority which may in any manner affect those engaged or employed in the work, or which in any way affect the conduct of the work. He shall at all times observe and comply with all such laws, ordinances, regulations, orders, and decrees; and shall indemnify and hold harmless the Board of Transportation and the Department of Transportation and their agents and employees from any claim or liability arising from or based on the violation of any such law, ordinance, regulations, order, or decree, by the Contractor or by his agents and employees.

Responsibility For Damage Claims

In accordance with 107-14 of the *Standard Specifications*, The Contractor shall indemnify and save harmless the Board of Transportation and its members and the Department of Transportation and its officers, agents, and employees from all suits, actions, or claims of any character brought for any injury or damages received or sustained by any person, persons, or property by reason of any act of the Contractor, Subcontractor, its agents or employees, in the performance of the contract.

Safety and Accident Protection

In accordance with 107-21 of the *Standard Specifications*, The Contractor shall comply with all applicable Federal, State, and local laws, ordinances, and regulations governing safety, health, and sanitation, and shall provide all safeguards, safety devices, and protective equipment, and shall take any other needed actions, on his own responsibility that are reasonably necessary to

protect the life and health of employees on the job and the safety of the public, and to protect property in connection with the performance of the work covered by the contract.

All Contractors' personnel, all subcontractors and their personnel, and any material suppliers and their personnel shall wear a reflective vest or outer garment conforming to the requirements of MUTCD at all times while on the project.

BANKRUPTCY

The Department of Transportation, at its option, may terminate the contract upon the filing by the contractor of any petition for protection under the provisions of the Federal Bankruptcy Act.

EXTENSION OF CONTRACT TIME

Failure on the part of the Contractor to furnish bonds or certifications or to satisfy preliminary requirements necessary to issue the purchase order will not constitute grounds for extension of the contract time. If the Contractor has fulfilled all preliminary requirements for the issuance of a purchase order, and the purchase order authorization is not available by the date of availability, the Contractor shall be granted an extension equal to the number of calendar days the purchase order authorization is delayed after the date of availability.

CLAIMS FOR ADDITIONAL COMPENSATION OR EXTENSION OF TIME

Any claims for additional compensation and/or extensions of the completion date shall be submitted to the Division Engineer with detailed justification within thirty (30) days after receipt of the final invoice payment. The failure of the Contractor to submit the claim(s) within thirty days shall be a bar to recovery.

CONTRACTOR CLAIM SUBMITTAL FORM

If the Contractor elects to file a written claim or requests an extension of contract time, it shall be submitted on the Contractor Claim Submittal Form (CCSF) available through the Construction Unit or http://ncdot.org/doh/operations/dp_chief_eng/constructionunit/formsmanuals/.

PROSECUTION AND PROGRESS

The Contractor will be required to prosecute the work in a continuous and uninterrupted manner from the time he begins the work until completion and final acceptance of the project. The contractor will not be permitted to suspend his operations except for reasons beyond his control except where the Engineer has authorized a suspension of the contractor's operations in writing.

The Contractor shall pursue the work diligently with workmen in sufficient numbers, abilities, and supervision, and with equipment, materials, and methods of construction as may be required

to complete the work described in the contract by the completion date and in accordance with Section 108 of the *Standard Specifications.*

In the event that the Contractor's operations are suspended in violation of the above provisions, the sum of **Seven Hundred Fifty Dollars ($750.00)** will be charged the Contractor for each and every calendar day that such suspension takes place. The said amount is hereby agreed upon as liquidated damages due to extra engineering and maintenance costs and due to increased public hazard resulting from a suspension of the work. Liquidated damages chargeable due to suspension of the work will be additional to any liquidated damages that may become chargeable due to failure to complete the work on time.

PLAN, DETAIL AND QUANTITY ADJUSTMENTS

The Department reserves the right to make, at any time during the progress of the work, such alterations in plans or the details of construction as may be found necessary or desirable by the Engineer to complete the project.

TEMPORARY SUSPENSION OF WORK

In accordance with Article **108-7** of the *2012 Standard Specifications*, the Engineer will have the authority to suspend the work wholly or in part, any written order for such periods as he may deem necessary for any of the following reasons.

1. Conditions considered unfavorable for the suitable prosecution of the work, or
2. The Contractor’s failure for correct conditions unsafe for workmen or the general public, or
3. The Contractor has not carried out orders given to him by the Engineer, or
4. The Contractor’s failure to perform any provisions of the contract.

No extension of the completion date will be allowed for the above suspensions except as may be provided for in Article 108-10.

AUTHORITY OF THE ENGINEER

The Engineer for this project shall be the Division Engineer, Division 11, Division of Highways, North Carolina Department of Transportation, acting directly or through his duly authorized representatives.

The Engineer will decide all questions which may arise as to the quality and acceptability of work performed and as to the rate of progress of the work; all questions which may arise as to the interpretation of the contract; and all questions as to the acceptable fulfillment of the contract on the part of the Contractor. His decision shall be final and he shall have executive authority to enforce and make effective such decisions and orders as the Contractor fails to carry out promptly.

APPROVAL OF PERSONNEL

The State shall have the right to approve or reject the project engineer and other supervisory personnel, assigned to a project.

The Engineers or any subcontractor for the Engineers which are employed to provide engineering services for this project shall not engage the services of any person or persons, now in the employment of the State during the time of this Agreement, without written consent of the State.

In the event of engagement, the Engineers or their subcontractors shall restrict such person or persons from working on any of the Engineers' contracted projects in which the person or persons were formerly involved while employed by the State. This restriction period shall be for the duration of the contracted project with which the person or persons was involved. "Involvement" shall be defined as active participation in any of the following activities:

- Drafting the contract;
- Defining the scope of the contract;
- Selection of the Engineers' firm for services;
- Negotiation of the cost of the contract (including calculating man-hours or fees); and
- Administration of the contract.

An exception to these terms may be granted when recommended by the Secretary and approved by the Board of Transportation. Failure to comply with the terms stated above in this section shall be grounds for termination of this contract.

SUPERVISION BY CONTRACTOR

At all times during the life of the project the Contractor shall provide one permanent employee who shall have the authority and capability for overall responsibility of the project and who shall be personally available at the work site within 24 hours notice. Such employee shall be fully authorized to conduct all business with the subcontractors, to negotiate and execute all supplemental agreements, and to execute the orders or directions of the Engineer.

At all times that work is actually being performed, the Contractor shall have present on the project one competent individual who is authorized to act in a supervisory capacity over all work on the project, including work subcontracted. The individual who has been so authorized shall be experienced in the type of work being performed and shall be fully capable of managing, directing, and coordinating the work; of reading and thoroughly understanding the contract; and receiving and carrying out directions from the Engineer or his authorized representatives. He shall be an employee of the Contractor unless otherwise approved by the Engineer.

The Contractor may, at his option, designate one employee to meet the requirements of both positions. However, whenever the designated employee is absent from the work site, an authorized individual qualified to act in a supervisory capacity on the project shall be present.

CONTRACTOR PERSONNEL

The Department will not be responsible in any way to the Contractor's personnel for damages, destruction or loss, from any cause, to the Contractor's equipment, supplies, materials or tools or the personal property of the Contractor's personnel. The Contractor will be responsible for all repairs, regardless of cost, resulting from the negligence of the Contractor or Contractor's employees. The Department will not participate in the cost of such repairs.

INSPECTION

All work shall be subject to inspection by the Engineer at any time. Routinely, the Engineer will make periodic inspections of the completed work. It will be the responsibility of the Contractor to keep the Engineer informed of his proposed work plan and to submit written reports of work accomplished on a frequency to be determined by the Engineer.

MATERIALS AND TESTING

The Engineer reserves the right to perform all sampling and testing in accordance with Section 106 of the *Standard Specifications* and the Department's "Materials and Test Manual." However the Engineer may reduce the frequency of sampling and testing where he deems it appropriate for the project under construction.

The Contractor shall furnish the applicable certifications and documentation for all materials as required by the *Standard Specifications*. Material that is not properly certified will not be accepted.

PROJECT SPECIAL PROVISIONS - GENERAL

NO MAJOR CONTRACT ITEMS

(2-19-02) (Rev 8-21-07) SP1 G31

None of the items included in this contract will be major items.

SPECIALTY ITEMS

(7-1-95)(Rev. 1-17-12) 108-6 SP1 G37

Items listed below will be the specialty items for this contract (see Article 108-6 of the *2012 Standard Specifications*).

Line #	Description
27-32	Guardrail
36-38	Signing
54-72	Utility Construction
73-95	Erosion Control
96-109	Signals/ITS System

DISADVANTAGED BUSINESS ENTERPRISE (DIVISIONS)

Description

The purpose of this Special Provision is to carry out the U.S. Department of Transportation's policy of ensuring nondiscrimination in the award and administration of contracts financed in whole or in part with Federal funds. This provision is guided by 49 CFR Part 26.

Definitions

Additional DBE Subcontractors - Any DBE submitted at the time of bid that will not be used to meet the DBE goal. No submittal of a Letter of Intent is required.

Committed DBE Subcontractor - Any DBE submitted at the time of bid that is being used to meet the DBE goal by submission of a Letter of Intent. Or any DBE used as a replacement for a previously committed DBE firm.

Contract Goal Requirement - The approved DBE participation at time of award, but not greater than the advertised contract goal.

DBE Goal - A portion of the total contract, expressed as a percentage, that is to be performed by committed DBE subcontractor(s).

Disadvantaged Business Enterprise (DBE) - A firm certified as a Disadvantaged Business Enterprise through the North Carolina Unified Certification Program.

Goal Confirmation Letter - Written documentation from the Department to the bidder confirming the Contractor's approved, committed DBE participation along with a listing of the committed DBE firms.

Manufacturer - A firm that operates or maintains a factory or establishment that produces on the premises, the materials or supplies obtained by the Contractor.

Regular Dealer - A firm that owns, operates, or maintains a store, warehouse, or other establishment in which the materials or supplies required for the performance of the contract are bought, kept in stock, and regularly sold to the public in the usual course of business. A regular dealer engages in, as its principal business and in its own name, the purchase and sale or lease of the products in question. A regular dealer in such bulk items as steel, cement, gravel, stone, and petroleum products need not keep such products in stock, if it owns and operates distribution equipment for the products. Brokers and packagers are not regarded as manufacturers or regular dealers within the meaning of this section.

North Carolina Unified Certification Program (NCUCP) - A program that provides comprehensive services and information to applicants for DBE certification, such that an applicant is required to apply only once for a DBE certification that will be honored by all recipients of USDOT funds in the state and not limited to the Department of Transportation only. The Certification Program is in accordance with 49 CFR Part 26.

United States Department of Transportation (USDOT) - Federal agency responsible for issuing regulations (49 CFR Part 26) and official guidance for the DBE program.

Forms and Websites Referenced in this Provision

DBE Payment Tracking System - On-line system in which the Contractor enters the payments made to DBE subcontractors who have performed work on the project. https://apps.dot.state.nc.us/Vendor/PaymentTracking/

DBE-IS *Subcontractor Payment Information* - Form for reporting the payments made to all DBE firms working on the project. This form is for paper bid projects only. http://www.ncdot.org/doh/forms/files/DBE-IS.xls

RF-1 *DBE Replacement Request Form* - Form for replacing a committed DBE.
https://apps.dot.state.nc.us/_includes/download/external.html?pdf=http%3A//www.ncdot.gov/doh/forms/files/RF-1.pdf

SAF *Subcontract Approval Form* - Form required for approval to sublet the contract. http://www.ncdot.org/doh/operations/dp_chief_eng/constructionunit/saf.xls

JC-1 *Joint Check Notification Form* - Form and procedures for joint check notification. The form acts as a written joint check agreement among the parties providing full and prompt disclosure of the expected use of joint checks.
https://apps.dot.state.nc.us/_includes/download/external.html?pdf=http%3A//www.ncdot.gov/doh/forms/files/JC-1.pdf

Letter of Intent - Form signed by the Contractor and the DBE subcontractor, manufacturer or regular dealer that affirms that a portion of said contract is going to be performed by the signed DBE for the amount listed at the time of bid.
http://www.ncdot.org/doh/preconstruct/ps/contracts/letterofintent.pdf

Listing of DBE Subcontractors Form - Form for entering DBE subcontractors on a project that will meet this DBE goal. This form is for paper bids only.
http://www.ncdot.gov/doh/preconstruct/ps/word/MISC2.doc

Subcontractor Quote Comparison Sheet - Spreadsheet for showing all subcontractor quotes in the work areas where DBEs quoted on the project. This sheet is submitted with good faith effort packages.
http://www.ncdot.gov/business/ocs/goodfaith/excel/Ex_Subcontractor_Quote_Comparison.xls

DBE Goal

The following DBE goal for participation by Disadvantaged Business Enterprises is established for this contract:

Disadvantaged Business Enterprises: **6.0%**

(A) *If the DBE goal is more than zero*, the Contractor shall exercise all necessary and reasonable steps to ensure that DBEs participate in at least the percent of the contract as set forth above as the DBE goal.

(B) *If the DBE goal is zero*, the Contractor shall make an effort to recruit and use DBEs during the performance of the contract. Any DBE participation obtained shall be reported to the Department.

Directory of Transportation Firms (Directory)

Real-time information is available about firms doing business with the Department and firms that are certified through NCUCP in the Directory of Transportation Firms. Only firms identified in the Directory as DBE certified shall be used to meet the DBE goal. The Directory can be found at the following link. https://partner.ncdot.gov/VendorDirectory/default.html

The listing of an individual firm in the directory shall not be construed as an endorsement of the firm's capability to perform certain work.

Listing of DBE Subcontractors

At the time of bid, bidders shall submit all DBE participation that they anticipate to use during the life of the contract. Only those identified to meet the DBE goal will be considered committed, even though the listing shall include both committed DBE subcontractors and additional DBE subcontractors. Additional DBE subcontractor participation submitted at the time of bid will be used toward the overall race-neutral goal. Only those firms with current DBE certification at the time of bid opening will be acceptable for listing in the bidder's submittal of DBE participation. The Contractor shall indicate the following required information:

Blank forms will not be deemed to represent zero participation. Bids submitted that do not have DBE participation indicated on the appropriate form will not be read publicly during the opening of bids. The Department will not consider these bids for award and the proposal will be rejected.

(A) *If the DBE goal is more than zero,*

(1) Bidders, at the time the bid proposal is submitted, shall submit a listing of DBE participation, including the names and addresses on *Listing of DBE Subcontractors* contained elsewhere in the contract documents in order for the bid to be considered responsive. Bidders shall indicate the total dollar value of the DBE participation for the contract.

(2) If bidders have no DBE participation, they shall indicate this on the *Listing of DBE Subcontractors* by entering the word "None" or the number "0." This form shall be completed in its entirety.

(3) The bidder shall be responsible for ensuring that the DBE is certified at the time of bid by checking the Directory of Transportation Firms. If the firm is not certified at the time of the bid-letting, that DBE's participation will not count towards achieving the DBE goal.

(B) *If the DBE goal is zero,* bidders, at the time the bid proposal is submitted, shall enter the word "None"; or the number "0"; or if there is participation, add the value on the *Listing of DBE Subcontractors* contained elsewhere in the contract documents.

DBE Prime Contractor

When a certified DBE firm bids on a contract that contains a DBE goal, the DBE firm is responsible for meeting the goal or making good faith efforts to meet the goal, just like any other bidder. In most cases, a DBE bidder on a contract will meet the DBE goal by virtue of the work it performs on the contract with its own forces. However, all the work that is performed by the DBE bidder and any other DBE subcontractors will count toward the DBE goal. The DBE bidder shall list itself along with any DBE subcontractors, if any, in order to receive credit toward the DBE goal.

For example, if the DBE goal is 45% and the DBE bidder will only perform 40% of the contract work, the prime will list itself at 40%, and the additional 5% shall be obtained through additional DBE participation with DBE subcontractors or documented through a good faith effort.

DBE prime contractors shall also follow Sections A or B listed under *Listing of DBE Subcontractor* just as a non-DBE bidder would.

Written Documentation – Letter of Intent

The bidder shall submit written documentation for each DBE that will be used to meet the DBE goal of the contract, indicating the bidder's commitment to use the DBE in the contract. This documentation shall be submitted on the Department's form titled *Letter of Intent*.

The documentation shall be received in the office of the Engineer no later than 12:00 noon of the sixth calendar day following opening of bids, unless the sixth day falls on Saturday, Sunday or an official state holiday. In that situation, it is due in the office of the Engineer no later than 12:00 noon on the next official state business day.

If the bidder fails to submit the Letter of Intent from each committed DBE to be used toward the DBE goal, or if the form is incomplete (i.e. both signatures are not present), the DBE participation will not count toward meeting the DBE goal. If the lack of this participation drops the commitment below the DBE goal, the Contractor shall submit evidence of good faith efforts, completed in its entirety, to the Engineer no later than 12:00 noon on the eighth calendar day following opening of bids, unless the eighth day falls on Saturday, Sunday or an official state holiday. In that situation, it is due in the office of the Engineer no later than 12:00 noon on the next official state business day.

Submission of Good Faith Effort

If the bidder fails to meet or exceed the DBE goal the apparent lowest responsive bidder shall submit to the Department documentation of adequate good faith efforts made to reach the DBE goal.

One complete set and three copies of this information shall be received in the office of the Engineer no later than 12:00 noon of the sixth calendar day following opening of bids, unless the sixth day falls on Saturday, Sunday or an official state holiday. In that situation, it is due in the office of the Engineer no later than 12:00 noon on the next official state business day.

Note: Where the information submitted includes repetitious solicitation letters, it will be acceptable to submit a representative letter along with a distribution list of the firms that were solicited. Documentation of DBE quotations shall be a part of the good faith effort submittal. This documentation may include written subcontractor quotations, telephone log notations of verbal quotations, or other types of quotation documentation.

Consideration of Good Faith Effort for Projects with DBE Goals More Than Zero

Adequate good faith efforts mean that the bidder took all necessary and reasonable steps to achieve the goal which, by their scope, intensity, and appropriateness, could reasonably be expected to obtain sufficient DBE participation. Adequate good faith efforts also mean that the bidder actively and aggressively sought DBE participation. Mere *pro forma* efforts are not considered good faith efforts.

The Department will consider the quality, quantity, and intensity of the different kinds of efforts a bidder has made. Listed below are examples of the types of actions a bidder will take in making a good faith effort to meet the goal and are not intended to be exclusive or exhaustive, nor is it intended to be a mandatory checklist.

(A) Soliciting through all reasonable and available means (e.g. attendance at pre-bid meetings, advertising and/or written notices through the use of the NCDOT Directory of Transportation Firms) the interest of all certified DBEs who have the capability to perform the work of the contract. The bidder must solicit this interest within at least 10 days prior to bid opening to allow the DBEs to respond to the solicitation. Solicitation shall provide the opportunity to DBEs within the Division and surrounding Divisions

where the project is located. The bidder must determine with certainty if the DBEs are interested by taking appropriate steps to follow up initial solicitations.

(B) Selecting portions of the work to be performed by DBEs in order to increase the likelihood that the DBE goals will be achieved. This includes, where appropriate, breaking out contract work items into economically feasible units to facilitate DBE participation, even when the prime contractor might otherwise prefer to perform these work items with its own forces.

(C) Providing interested DBEs with adequate information about the plans, specifications, and requirements of the contract in a timely manner to assist them in responding to a solicitation.

(D) (1) Negotiating in good faith with interested DBEs. It is the bidder's responsibility to make a portion of the work available to DBE subcontractors and suppliers and to select those portions of the work or material needs consistent with the available DBE subcontractors and suppliers, so as to facilitate DBE participation. Evidence of such negotiation includes the names, addresses, and telephone numbers of DBEs that were considered; a description of the information provided regarding the plans and specifications for the work selected for subcontracting; and evidence as to why additional agreements could not be reached for DBEs to perform the work.

(2) A bidder using good business judgment would consider a number of factors in negotiating with subcontractors, including DBE subcontractors, and would take a firm's price and capabilities as well as contract goals into consideration. However, the fact that there may be some additional costs involved in finding and using DBEs is not in itself sufficient reason for a bidder's failure to meet the contract DBE goal, as long as such costs are reasonable. Also, the ability or desire of a prime contractor to perform the work of a contract with its own organization does not relieve the bidder of the responsibility to make good faith efforts. Bidding contractors are not, however, required to accept higher quotes from DBEs if the price difference is excessive or unreasonable.

(E) Not rejecting DBEs as being unqualified without sound reasons based on a thorough investigation of their capabilities. The bidder's standing within its industry, membership in specific groups, organizations, or associates and political or social affiliations (for example, union vs. non-union employee status) are not legitimate causes for the rejection or non-solicitation of bids in the bidder's efforts to meet the project goal.

(F) Making efforts to assist interested DBEs in obtaining bonding, lines of credit, or insurance as required by the recipient or bidder.

(G) Making efforts to assist interested DBEs in obtaining necessary equipment, supplies, materials, or related assistance or services.

(H) Effectively using the services of available minority/women community organizations; minority/women contractors' groups; Federal, State, and local minority/women business assistance offices; and other organizations as allowed on a case-by-case basis to provide assistance in the recruitment and placement of DBEs. Contact within 7 days from the bid

opening NCDOT's Business Development Manager in the Business Opportunity and Work Force Development Unit to give notification of the bidder's inability to get DBE quotes.

(I) Any other evidence that the bidder submits which shows that the bidder has made reasonable good faith efforts to meet the DBE goal.

In addition, the Department may take into account the following:

(1) Whether the bidder's documentation reflects a clear and realistic plan for achieving the DBE goal.

(2) The bidders' past performance in meeting the DBE goals.

(3) The performance of other bidders in meeting the DBE goal. For example, when the apparent successful bidder fails to meet the DBE goal, but others meet it, you may reasonably raise the question of whether, with additional reasonable efforts the apparent successful bidder could have met the goal. If the apparent successful bidder fails to meet the DBE goal, but meets or exceeds the average DBE participation obtained by other bidders, the Department may view this, in conjunction with other factors, as evidence of the apparent successful bidder having made a good faith effort.

If the Department does not award the contract to the apparent lowest responsive bidder, the Department reserves the right to award the contract to the next lowest responsive bidder that can satisfy to the Department that the DBE goal can be met or that an adequate good faith effort has been made to meet the DBE goal.

Non-Good Faith Appeal

The Engineer will notify the contractor verbally and in writing of non-good faith. A contractor may appeal a determination of non-good faith made by the Goal Compliance Committee. If a contractor wishes to appeal the determination made by the Committee, they shall provide written notification to the Engineer. The appeal shall be made within 2 business days of notification of the determination of non-good faith.

Counting DBE Participation Toward Meeting DBE Goal

(A) Participation

The total dollar value of the participation by a committed DBE will be counted toward the contract goal requirement. The total dollar value of participation by a committed DBE will be based upon the value of work actually performed by the DBE and the actual payments to DBE firms by the Contractor.

(B) Joint Checks

Prior notification of joint check use shall be required when counting DBE participation for services or purchases that involves the use of a joint check. Notification shall be

through submission of Form JC-1 *(Joint Check Notification Form)* and the use of joint checks shall be in accordance with the Department's Joint Check Procedures.

(C) Subcontracts (Non-Trucking)

A DBE may enter into subcontracts. Work that a DBE subcontracts to another DBE firm may be counted toward the contract goal requirement. Work that a DBE subcontracts to a non-DBE firm does not count toward the contract goal requirement. If a DBE contractor or subcontractor subcontracts a significantly greater portion of the work of the contract than would be expected on the basis of standard industry practices, it shall be presumed that the DBE is not performing a commercially useful function. The DBE may present evidence to rebut this presumption to the Department. The Department's decision on the rebuttal of this presumption is subject to review by the Federal Highway Administration but is not administratively appealable to USDOT.

(D) Joint Venture

When a DBE performs as a participant in a joint venture, the Contractor may count toward its contract goal requirement a portion of the total value of participation with the DBE in the joint venture, that portion of the total dollar value being a distinct clearly defined portion of work that the DBE performs with its forces.

(E) Suppliers

A contractor may count toward its DBE requirement 60 percent of its expenditures for materials and supplies required to complete the contract and obtained from a DBE regular dealer and 100 percent of such expenditures from a DBE manufacturer.

(F) Manufacturers and Regular Dealers

A contractor may count toward its DBE requirement the following expenditures to DBE firms that are not manufacturers or regular dealers:

(1) The fees or commissions charged by a DBE firm for providing a *bona fide* service, such as professional, technical, consultant, or managerial services, or for providing bonds or insurance specifically required for the performance of a DOT-assisted contract, provided the fees or commissions are determined to be reasonable and not excessive as compared with fees and commissions customarily allowed for similar services.

(2) With respect to materials or supplies purchased from a DBE, which is neither a manufacturer nor a regular dealer, count the entire amount of fees or commissions charged for assistance in the procurement of the materials and supplies, or fees or transportation charges for the delivery of materials or supplies required on a job site (but not the cost of the materials and supplies themselves), provided the fees are determined to be reasonable and not excessive as compared with fees customarily allowed for similar services.

Commercially Useful Function

(A) DBE Utilization

The Contractor may count toward its contract goal requirement only expenditures to DBEs that perform a commercially useful function in the work of a contract. A DBE performs a commercially useful function when it is responsible for execution of the work of the contract and is carrying out its responsibilities by actually performing, managing, and supervising the work involved. To perform a commercially useful function, the DBE shall also be responsible with respect to materials and supplies used on the contract, for negotiating price, determining quality and quantity, ordering the material and installing (where applicable) and paying for the material itself. To determine whether a DBE is performing a commercially useful function, the Department will evaluate the amount of work subcontracted, industry practices, whether the amount the firm is to be paid under the contract is commensurate with the work it is actually performing and the DBE credit claimed for its performance of the work, and any other relevant factors.

(B) DBE Utilization in Trucking

The following factors will be used to determine if a DBE trucking firm is performing a commercially useful function.

(1) The DBE shall be responsible for the management and supervision of the entire trucking operation for which it is responsible on a particular contract, and there shall not be a contrived arrangement for the purpose of meeting DBE goals.

(2) The DBE shall itself own and operate at least one fully licensed, insured, and operational truck used on the contract.

(3) The DBE receives credit for the total value of the transportation services it provides on the contract using trucks it owns, insures, and operates using drivers it employs.

(4) The DBE may subcontract the work to another DBE firm, including an owner-operator who is certified as a DBE. The DBE who subcontracts work to another DBE receives credit for the total value of the transportation services the subcontracted DBE provides on the contract.

(5) The DBE may also subcontract the work to a non-DBE firm, including from an owner-operator. The DBE who subcontracts the work to a non-DBE is entitled to credit for the total value of transportation services provided by the non-DBE subcontractor not to exceed the value of transportation services provided by DBE-owned trucks on the contract. Additional participation by non-DBE subcontractors receives credit only for the fee or commission it receives as a result of the subcontract arrangement. The value of services performed under subcontract agreements between the DBE and the Contractor will not count towards the DBE contract requirement.

(6) A DBE may lease truck(s) from an established equipment leasing business open to the general public. The lease must indicate that the DBE has exclusive use of and control over the truck. This requirement does not preclude the leased truck from working for others during the term of the lease with the consent of the DBE, so long as the lease gives the DBE absolute priority for use of the leased truck. This type of lease may count toward the DBE's credit as long as the driver is under the DBE's payroll.

(7) Subcontracted/leased trucks shall display clearly on the dashboard the name of the DBE that they are subcontracted/leased to and their own company name if it is not identified on the truck itself. Magnetic door signs are not permitted.

DBE Replacement

When a Contractor has relied on a commitment to a DBE firm (or an approved substitute DBE firm) to meet all or part of a contract goal requirement, the contractor shall not terminate the DBE for convenience. This includes, but is not limited to, instances in which the Contractor seeks to perform the work of the terminated subcontractor with another DBE subcontractor, a non-DBE subcontractor, or with the Contractor's own forces or those of an affiliate. A DBE may only be terminated after receiving the Engineer's written approval based upon a finding of good cause for the termination.

All requests for replacement of a committed DBE firm shall be submitted to the Engineer for approval on Form RF-1 *(DBE Replacement Request)*. If the Contractor fails to follow this procedure, the Contractor may be disqualified from further bidding for a period of up to 6 months.

The Contractor shall comply with the following for replacement of a committed DBE:

(A) Performance Related Replacement

When a committed DBE is terminated for good cause as stated above, an additional DBE that was submitted at the time of bid may be used to fulfill the DBE commitment. A good faith effort will only be required for removing a committed DBE if there were no additional DBEs submitted at the time of bid to cover the same amount of work as the DBE that was terminated.

If a replacement DBE is not found that can perform at least the same amount of work as the terminated DBE, the Contractor shall submit a good faith effort documenting the steps taken. Such documentation shall include, but not be limited to, the following:

(1) Copies of written notification to DBEs that their interest is solicited in contracting the work defaulted by the previous DBE or in subcontracting other items of work in the contract.

(2) Efforts to negotiate with DBEs for specific subbids including, at a minimum:

(a) The names, addresses, and telephone numbers of DBEs who were contacted.

(b) A description of the information provided to DBEs regarding the plans and specifications for portions of the work to be performed.

(3) A list of reasons why DBE quotes were not accepted.

(4) Efforts made to assist the DBEs contacted, if needed, in obtaining bonding or insurance required by the Contractor.

(B) Decertification Replacement

(1) When a committed DBE is decertified by the Department after the SAF (*Subcontract Approval Form*) has been received by the Department, the Department will not require the Contractor to solicit replacement DBE participation equal to the remaining work to be performed by the decertified firm. The participation equal to the remaining work performed by the decertified firm will count toward the contract goal requirement.

(2) When a committed DBE is decertified prior to the Department receiving the SAF (*Subcontract Approval Form*) for the named DBE firm, the Contractor shall take all necessary and reasonable steps to replace the DBE subcontractor with another DBE subcontractor to perform at least the same amount of work to meet the DBE goal requirement. If a DBE firm is not found to do the same amount of work, a good faith effort must be submitted to NCDOT (see A herein for required documentation).

Changes in the Work

When the Engineer makes changes that result in the reduction or elimination of work to be performed by a committed DBE, the Contractor will not be required to seek additional participation. When the Engineer makes changes that result in additional work to be performed by a DBE based upon the Contractor's commitment, the DBE shall participate in additional work to the same extent as the DBE participated in the original contract work.

When the Engineer makes changes that result in extra work, which has more than a minimal impact on the contract amount, the Contractor shall seek additional participation by DBEs unless otherwise approved by the Engineer.

When the Engineer makes changes that result in an alteration of plans or details of construction, and a portion or all of the work had been expected to be performed by a committed DBE, the Contractor shall seek participation by DBEs unless otherwise approved by the Engineer.

When the Contractor requests changes in the work that result in the reduction or elimination of work that the Contractor committed to be performed by a DBE, the Contractor shall seek additional participation by DBEs equal to the reduced DBE participation caused by the changes.

Reports and Documentation

A SAF (*Subcontract Approval Form*) shall be submitted for all work which is to be performed by a DBE subcontractor. The Department reserves the right to require copies of actual subcontract agreements involving DBE subcontractors.

When using transportation services to meet the contract commitment, the Contractor shall submit a proposed trucking plan in addition to the SAF. The plan shall be submitted prior to beginning construction on the project. The plan shall include the names of all trucking firms proposed for use, their certification type(s), the number of trucks owned by the firm, as well as the individual truck identification numbers, and the line item(s) being performed.

Within 30 calendar days of entering into an agreement with a DBE for materials, supplies or services, not otherwise documented by the SAF as specified above, the Contractor shall furnish the Engineer a copy of the agreement. The documentation shall also indicate the percentage (60% or 100%) of expenditures claimed for DBE credit.

Reporting Disadvantaged Business Enterprise Participation

The Contractor shall provide the Engineer with an accounting of payments made to all DBE firms, including material suppliers and contractors at all levels (prime, subcontractor, or second tier subcontractor). This accounting shall be furnished to the Engineer for any given month by the end of the following month. Failure to submit this information accordingly may result in the following action:

(A) Withholding of money due in the next partial pay estimate; or

(B) Removal of an approved contractor from the prequalified bidders' list or the removal of other entities from the approved subcontractors list.

While each contractor (prime, subcontractor, 2nd tier subcontractor) is responsible for accurate accounting of payments to DBEs, it shall be the prime contractor's responsibility to report all monthly and final payment information in the correct reporting manner.

Failure on the part of the Contractor to submit the required information in the time frame specified may result in the disqualification of that contractor and any affiliate companies from further bidding until the required information is submitted.

Failure on the part of any subcontractor to submit the required information in the time frame specified may result in the disqualification of that contractor and any affiliate companies from being approved for work on future projects until the required information is submitted.

Contractors reporting transportation services provided by non-DBE lessees shall evaluate the value of services provided during the month of the reporting period only.

At any time, the Engineer can request written verification of subcontractor payments.

The Contractor shall report the accounting of payments on the Department's DBE-IS *(Subcontractor Payment Information)* with each invoice. Invoices will not be processed for payment until the DBE-IS is received.

Failure to Meet Contract Requirements

Failure to meet contract requirements in accordance with Subarticle 102-15(J) of the *2012 Standard Specifications* may be cause to disqualify the Contractor.

Failure to Meet Contract Requirements

Failure to meet contract requirements in accordance with Subarticle 102-15(J) of the *2012 Standard Specifications* may be cause to disqualify the Contractor.

CERTIFICATION FOR FEDERAL-AID CONTRACTS

(3-21-90) SP1 G85

The prospective participant certifies, by signing and submitting this bid or proposal, to the best of his or her knowledge and belief, that:

(A) No Federal appropriated funds have been paid or will be paid, by or on behalf of the undersigned, to any person for influencing or attempting to influence an officer or employee of any Federal agency, a Member of Congress, an officer or employee of Congress, or an employee of a Member of Congress in connection with the awarding of any Federal contract, the making of any Federal grant, the making of any Federal loan, the entering into of any cooperative agreement, and the extension, continuation, renewal, amendment, or modification of any Federal contract, grant, loan, or cooperative agreement.

(B) If any funds other than Federal appropriated funds have been paid or will be paid to any person for influencing or attempting to influence an officer or employee of any Federal agency, a Member of Congress, an officer or employee of Congress, or an employee of a Member of Congress in connection with this Federal contract, grant, loan, or cooperative agreement, the undersigned shall complete and submit Standard Form-LLL, *Disclosure Form to Report Lobbying*, in accordance with its instructions.

This certification is a material representation of fact upon which reliance was placed when this transaction was made or entered into. Submission of this certification is a prerequisite for making or entering into this transaction imposed by *Section 1352, Title 31, U.S. Code*. Any person who fails to file the required certification shall be subject to a civil penalty of not less than $10,000 and not more than $100,000 for each such failure.

The prospective participant also agrees by submitting his or her bid or proposal that he or she shall require that the language of this certification be included in all lower tier subcontracts, which exceed $100,000 and that all such subrecipients shall certify and disclose accordingly.

U.S. DEPARTMENT OF TRANSPORTATION HOTLINE

(11-22-94) 108-5 SP1 G100

To report bid rigging activities call: **1-800-424-9071**

The U.S. Department of Transportation (DOT) operates the above toll-free hotline Monday through Friday, 8:00 a.m. to 5:00 p.m. eastern time. Anyone with knowledge of possible bid rigging, bidder collusion, or other fraudulent activities should use the hotline to report such activities.

The hotline is part of the DOT's continuing effort to identify and investigate highway construction contract fraud and abuse is operated under the direction of the DOT Inspector General. All information will be treated confidentially and caller anonymity will be respected.

SUBMISSION OF RECORDS - FEDERAL-AID PROJECTS

(7-17-07) SP1 G103

The Contractor's attention is directed to the Standard Special Provision entitled *Required Contract Provisions-Federal-Aid Construction Contracts* contained elsewhere in this proposal.

This project is located on a roadway classified as a local road or rural minor collector, therefore the requirements of Paragraph IV - Payment of Predetermined Minimum Wage and Paragraph V - Statements and Payrolls are exempt from this contract.

SUBSURFACE INFORMATION

(7-1-95) SP1 G112 C

Subsurface information is available on the structure portion of this project only.

LOCATING EXISTING UNDERGROUND UTILITIES

(3-20-12) 105 SP1 G115

Revise the *2012 Standard Specifications* as follows:

Page 1-43, Article 105-8, line 28, after the first sentence, add the following:

Identify excavation locations by means of pre-marking with white paint, flags, or stakes or provide a specific written description of the location in the locate request.

MAINTENANCE OF THE PROJECT

(11-20-07) (Rev. 1-17-12) 104-10 SP1 G125

Revise the *2012 Standard Specifications* as follows:

Page 1-35, Article 104-10 Maintenance of the Project, line 25, add the following after the first sentence of the first paragraph:

All guardrail/guiderail within the project limits shall be included in this maintenance.

Page 1-35, Article 104-10 Maintenance of the Project, line 30, add the following as the last sentence of the first paragraph:

The Contractor shall perform weekly inspections of guardrail and guiderail and shall report damages to the Engineer on the same day of the weekly inspection. *Where damaged guardrail or guiderail is repaired or replaced as a result of maintaining the project in* accordance with this article, such repair or replacement shall be performed within 7 consecutive calendar days of such inspection report.

Page 1-35, Article 104-10 Maintenance of the Project, lines 42-44, replace the last sentence of the last paragraph with the following:

The Contractor will not be directly compensated for any maintenance operations necessary, except for maintenance of guardrail/guiderail, as this work will be considered incidental to the work covered by the various contract items. The provisions of Article 104-7, Extra Work, and Article 104-8, Compensation and Record Keeping will apply to authorized maintenance of guardrail/guiderail. Performance of weekly inspections of guardrail/guiderail, and the damage reports required as described above, will be considered to be an incidental part of the work being paid for by the various contract items.

GIFTS FROM VENDORS AND CONTRACTORS

(12-15-09) 107-1 SP1 G152

By Executive Order 24, issued by Governor Perdue, and *N.C.G.S.§ 133-32,* it is unlawful for any vendor or contractor (i.e. architect, bidder, contractor, construction manager, design professional, engineer, landlord, offeror, seller, subcontractor, supplier, or vendor), to make gifts or to give favors to any State employee of the Governor's Cabinet Agencies (i.e. Administration, Commerce, Correction, Crime Control and Public Safety, Cultural Resources, Environment and Natural Resources, Health and Human Services, Juvenile Justice and Delinquency Prevention, Revenue, Transportation, and the Office of the Governor). This prohibition covers those vendors and contractors who:

(A) Have a contract with a governmental agency; or
(B) Have performed under such a contract within the past year; or
(C) Anticipate bidding on such a contract in the future.

For additional information regarding the specific requirements and exemptions, vendors and contractors are encouraged to review Executive Order 24 and *N.C.G.S. § 133-32.*

Executive Order 24 also encouraged and invited other State Agencies to implement the requirements and prohibitions of the Executive Order to their agencies. Vendors and contractors should contact other State Agencies to determine if those agencies have adopted Executive Order 24.

EROSION AND SEDIMENT CONTROL/STORMWATER CERTIFICATION

(1-16-07) (Rev 9-18-12) 105-16, 225-2, 16 SP1 G180

General

Schedule and conduct construction activities in a manner that will minimize soil erosion and the resulting sedimentation and turbidity of surface waters. Comply with the requirements herein regardless of whether or not a National Pollution discharge Elimination System (NPDES) permit for the work is required.

Establish a chain of responsibility for operations and subcontractors' operations to ensure that the *Erosion and Sediment Control/Stormwater Pollution Prevention Plan* is implemented and maintained over the life of the contract.

(A) *Certified Supervisor* - Provide a certified Erosion and Sediment Control/Stormwater Supervisor to manage the Contractor and subcontractor operations, insure compliance with Federal, State and Local ordinances and regulations, and manage the Quality Control Program.

(B) *Certified Foreman* - Provide a certified, trained foreman for each construction operation that increases the potential for soil erosion or the possible sedimentation and turbidity of surface waters.

(C) *Certified Installer* - Provide a certified installer to install or direct the installation for erosion or sediment/stormwater control practices.

(D) *Certified Designer* - Provide a certified designer for the design of the erosion and sediment control/stormwater component of reclamation plans and, if applicable, for the design of the project erosion and sediment control/stormwater plan.

Roles and Responsibilities

(A) *Certified Erosion and Sediment Control/Stormwater Supervisor* - The Certified Supervisor shall be Level II and responsible for ensuring the erosion and sediment control/stormwater plan is adequately implemented and maintained on the project and for conducting the quality control program. The Certified Supervisor shall be on the project within 24 hours notice from initial exposure of an erodible surface to the project's final acceptance. Perform the following duties:

(1) Manage Operations - Coordinate and schedule the work of subcontractors so that erosion and sediment control/stormwater measures are fully executed for each operation and in a timely manner over the duration of the contract.

(a) Oversee the work of subcontractors so that appropriate erosion and sediment control/stormwater preventive measures are conformed to at each stage of the work.
(b) Prepare the required National Pollutant Discharge Elimination System (NPDES) Inspection Record and submit to the Engineer.
(c) Attend all weekly or monthly construction meetings to discuss the findings of the NPDES inspection and other related issues.
(d) Implement the erosion and sediment control/stormwater site plans requested.
(e) Provide any needed erosion and sediment control/stormwater practices for the Contractor's temporary work not shown on the plans, such as, but not limited to work platforms, temporary construction, pumping operations, plant and storage yards, and cofferdams.
(f) Acquire applicable permits and comply with requirements for borrow pits, dewatering, and any temporary work conducted by the Contractor in jurisdictional areas.
(g) Conduct all erosion and sediment control/stormwater work in a timely and workmanlike manner.
(h) Fully perform and install erosion and sediment control/stormwater work prior to any suspension of the work.

(i) Coordinate with Department, Federal, State and Local Regulatory agencies on resolution of erosion and sediment control/stormwater issues due to the Contractor's operations.

(j) Ensure that proper cleanup occurs from vehicle tracking on paved surfaces or any location where sediment leaves the Right-of-Way.

(k) Have available a set of erosion and sediment control/stormwater plans that are initialed and include the installation date of Best Management Practices. These practices shall include temporary and permanent groundcover and be properly updated to reflect necessary plan and field changes for use and review by Department personnel as well as regulatory agencies.

(2) Requirements set forth under the NPDES Permit - The Department's NPDES Stormwater permit (NCS000250) outlines certain objectives and management measures pertaining to construction activities. The permit references *NCG010000, General Permit to Discharge Stormwater* under the NPDES, and states that the Department shall incorporate the applicable requirements into its delegated Erosion and Sediment Control Program for construction activities disturbing one or more acres of land. The Department further incorporates these requirements on all contracted bridge and culvert work at jurisdictional waters, regardless of size. Some of the requirements are, but are not limited to:

(a) Control project site waste to prevent contamination of surface or ground waters of the state, i.e. from equipment operation/maintenance, construction materials, concrete washout, chemicals, litter, fuels, lubricants, coolants, hydraulic fluids, any other petroleum products, and sanitary waste.

(b) Inspect erosion and sediment control/stormwater devices and stormwater discharge outfalls at least once every 7 calendar days, twice weekly for construction related *Federal Clean Water Act, Section 303(d)* impaired streams with turbidity violations, and within 24 hours after a significant rainfall event of 0.5 inch that occurs within a 24 hour period.

(c) Maintain an onsite rain gauge or use the Department's Multi-Sensor Precipitation Estimate website to maintain a daily record of rainfall amounts and dates.

(d) Maintain erosion and sediment control/stormwater inspection records for review by Department and Regulatory personnel upon request.

(e) Implement approved reclamation plans on all borrow pits, waste sites and staging areas.

(f) Maintain a log of turbidity test results as outlined in the Department's Procedure for Monitoring Borrow Pit Discharge.

(g) Provide secondary containment for bulk storage of liquid materials.

(h) Provide training for employees concerning general erosion and sediment control/stormwater awareness, the Department's NPDES Stormwater Permit NCS000250 requirements, and the applicable requirements of the *General Permit, NCG010000*.

(i) Report violations of the NPDES permit to the Engineer immediately who will notify the Division of Water Quality Regional Office within 24 hours of becoming aware of the violation.

(3) Quality Control Program - Maintain a quality control program to control erosion, prevent sedimentation and follow provisions/conditions of permits. The quality control program shall:

(a) Follow permit requirements related to the Contractor and subcontractors' construction activities.
(b) Ensure that all operators and subcontractors on site have the proper erosion and sediment control/stormwater certification.
(c) Notify the Engineer when the required certified erosion and sediment control/stormwater personnel are not available on the job site when needed.
(d) Conduct the inspections required by the NPDES permit.
(e) Take corrective actions in the proper timeframe as required by the NPDES permit for problem areas identified during the NPDES inspections.
(f) Incorporate erosion control into the work in a timely manner and stabilize disturbed areas with mulch/seed or vegetative cover on a section-by-section basis.
(g) Use flocculants approved by state regulatory authorities where appropriate and where required for turbidity and sedimentation reduction.
(h) Ensure proper installation and maintenance of temporary erosion and sediment control devices.
(i) Remove temporary erosion or sediment control devices when they are no longer necessary as agreed upon by the Engineer.
(j) The Contractor's quality control and inspection procedures shall be subject to review by the Engineer. Maintain NPDES inspection records and make records available at all times for verification by the Engineer.

(B) *Certified Foreman* - At least one Certified Foreman shall be onsite for each type of work listed herein during the respective construction activities to control erosion, prevent sedimentation and follow permit provisions:

(1) Foreman in charge of grading activities
(2) Foreman in charge of bridge or culvert construction over jurisdictional areas
(3) Foreman in charge of utility activities

The Contractor may request to use the same person as the Level II Supervisor and Level II Foreman. This person shall be onsite whenever construction activities as described above are taking place. This request shall be approved by the Engineer prior to work beginning.

The Contractor may request to name a single Level II Foreman to oversee multiple construction activities on small bridge or culvert replacement projects. This request shall be approved by the Engineer prior to work beginning.

(C) *Certified Installers* - Provide at least one onsite, Level I Certified Installer for each of the following erosion and sediment control/stormwater crew:

(1) Seeding and Mulching
(2) Temporary Seeding
(3) Temporary Mulching

(4) Sodding
(5) Silt fence or other perimeter erosion/sediment control device installations
(6) Erosion control blanket installation
(7) Hydraulic tackifier installation
(8) Turbidity curtain installation
(9) Rock ditch check/sediment dam installation
(10) Ditch liner/matting installation
(11) Inlet protection
(12) Riprap placement
(13) Stormwater BMP installations (such as but not limited to level spreaders, retention/detention devices)
(14) Pipe installations within jurisdictional areas

If a Level I *Certified Installer* is not onsite, the Contractor may substitute a Level II Foreman for a Level I Installer, provided the Level II Foreman is not tasked to another crew requiring Level II Foreman oversight.

(D) *Certified Designer* - Include the certification number of the Level III-B Certified Designer on the erosion and sediment control/stormwater component of all reclamation plans and if applicable, the certification number of the Level III-A Certified Designer on the design of the project erosion and sediment control/stormwater plan.

Preconstruction Meeting

Furnish the names of the *Certified Erosion and Sediment Control/Stormwater Supervisor, Certified Foremen, Certified Installers* and *Certified Designer* and notify the Engineer of changes in certified personnel over the life of the contract within 2 days of change.

Ethical Responsibility

Any company performing work for the North Carolina Department of Transportation has the ethical responsibility to fully disclose any reprimand or dismissal of an employee resulting from improper testing or falsification of records.

Revocation or Suspension of Certification

Upon recommendation of the Chief Engineer to the certification entity, certification for *Supervisor, Certified Foremen, Certified Installers* and *Certified Designer* may be revoked or suspended with the issuance of an *Immediate Corrective Action (ICA), Notice of Violation (NOV),* or C*ease and Desist Order* for erosion and sediment control/stormwater related issues.

The Chief Engineer may recommend suspension or permanent revocation of certification due to the following:

(A) Failure to adequately perform the duties as defined within this certification provision.
(B) Issuance of an ICA, NOV, or Cease and Desist Order.
(C) Failure to fully perform environmental commitments as detailed within the permit conditions and specifications.
(D) Demonstration of erroneous documentation or reporting techniques.

(E) Cheating or copying another candidate's work on an examination.
(F) Intentional falsification of records.
(G) Directing a subordinate under direct or indirect supervision to perform any of the above actions.
(H) Dismissal from a company for any of the above reasons.
(I) Suspension or revocation of one's certification by another entity.

Suspension or revocation of a certification will be sent by certified mail to the certificant and the Corporate Head of the company that employs the certificant.

A certificant has the right to appeal any adverse action which results in suspension or permanent revocation of certification by responding, in writing, to the Chief Engineer within 10 calendar days after receiving notice of the proposed adverse action.

Chief Engineer
1537 Mail Service Center
Raleigh, NC 27699-1537

Failure to appeal within 10 calendar days will result in the proposed adverse action becoming effective on the date specified on the certified notice. Failure to appeal within the time specified will result in a waiver of all future appeal rights regarding the adverse action taken. The certificant will not be allowed to perform duties associated with the certification during the appeal process.

The Chief Engineer will hear the appeal and make a decision within 7 days of hearing the appeal. Decision of the Chief Engineer will be final and will be made in writing to the certificant.

If a certification is temporarily suspended, the certificant shall pass any applicable written examination and any proficiency examination, at the conclusion of the specified suspension period, prior to having the certification reinstated.

Measurement and Payment

Certified Erosion and Sediment Control/Stormwater Supervisor, Certified Foremen, Certified Installers and *Certified Designer* will be incidental to the project for which no direct compensation will be made.

EMPLOYMENT

(11-15-11) (Rev. 1-17-12) 108, 102 SP1 G184

Revise the *2012 Standard Specifications* as follows:

Page 1-20, Subarticle 102-15(O), delete and replace with the following:

(O) Failure to restrict a former Department employee as prohibited by Article 108-5.

Page 1-65, Article 108-5 Character of Workmen, Methods, and Equipment, line 32, delete all of line 32, the first sentence of the second paragraph and the first word of the second sentence of the second paragraph.

STATE HIGHWAY ADMINISTRATOR TITLE CHANGE
(9-18-12) SP1 G185

Revise the *2012 Standard Specifications* as follows:

Replace all references to “State Highway Administrator” with “Chief Engineer”.

PROJECT SPECIAL PROVISIONS - ROADWAY

GENERAL NOTES

2012 SPECIFICATIONS
EFFECTIVE: 01-17-12
GRADING AND SURFACING OR RESURFACING AND WIDENING: REVISED: 7/30/12

THE GRADE LINES SHOWN DENOTE THE FINISHED ELEVATION OF THE PROPOSED SURFACING AT GRADE POINTS SHOWN ON THE TYPICAL SECTIONS. WHERE NO GRADE LINES SHOWN, THE PROFILES SHOWN DENOTE THE TOP ELEVATION OF THE EXISTING PAVEMENT ALONG THE CENTER LINE OF SURVEY ON WHICH THE PROPOSED RESURFACING WILL PLACED. GRADE LINES MAY BE ADJUSTED BY THE ENGINEER IN ORDER TO SECURE A PROPER TIE-IN.

CLEARING:

CLEARING ON THIS PROJECT SHALL BE PERFORMED TO THE LIMITS ESTABLISHED BY METHOD III.

SUPERELEVATION:

ALL CURVES ON THIS PROJECT SHALL BE SUPERELEVATED IN ACCORDANCE WITH STD. NO. 225.04 USING THE RATE OF SUPERELEVATION AND RUNOFF SHOWN ON THE PLANS. SUPERELEVATION IS TO BE REVOLVED ABOUT THE GRADE POINTS SHOWN ON THE TYPICAL SECTIONS.

SHOULDER CONSTRUCTION:

ASPHALT, EARTH, AND CONCRETE SHOULDER CONSTRUCTION ON THE HIGH SIDE OF SUPERELEVATED CURVES SHALL BE IN ACCORDANCE WITH STD. NO. 560.01.

GUARDRAIL:

THE GUARDRAIL LOCATIONS SHOWN ON THE PLANS MAY BE ADJUSTED CONSTRUCTION AS DIRECTED BY THE ENGINEER. THE CONTRACTOR SHOULD CONSULT WITH THE ENGINEER PRIOR TO ORDERING GUARDRAIL MATERIAL.

END BENTS:

THE ENGINEER SHALL CHECK THE STRUCTURE END BENT PLANS, DETAILS, AND CROSS-SECTION PRIOR TO SETTING OF THE SLOPE STAKES FOR THE EMBANKMENT OR EXCAVATION APPROACHING A BRIDGE.

UTILITIES:

UTILITY OWNERS ON THIS PROJECT ARE

A) CenturyLink – Telephone/Fiber Optic
B) Surry Telephone – Telephone
C) Duke Energy Progress – Power
D) Time Warner – Fiber Optic/CATV
E) AT&T Toll – Telephone
F) Town of Pilot Mountain – Water and Gravity Sanitary Sewer

ANY RELOCATION OF EXISTING UTILITIES WILL BE ACCOMPLISHED BY OTHERS, EXCEPT AS SHONWN ON THE PLANS.

CLEARING AND GRUBBING - METHOD III

(4-6-06) (Rev. 1-17-12) 200 SP2 R02B

Perform clearing on this project to the limits established by Method "III" shown on Standard Drawing No. 200.03 of the *2012 Roadway Standard Drawings*.

SHOULDER AND FILL SLOPE MATERIAL

(5-21-02) 235, 560 SP2 R45 A

Description

Perform the required shoulder and slope construction for this project in accordance with the applicable requirements of Section 560 and Section 235 of the *2012 Standard Specifications*.

Measurement and Payment

Where the material has been obtained from an authorized stockpile or from a borrow source and *Borrow Excavation* is not included in the contract, no direct payment will be made for this work, as the cost of this work will be part of the work being paid at the contract lump sum price for *Grading*. If *Borrow Excavation* is included in this contract and the material has been obtained from an authorized stockpile or from a borrow source, measurement and payment will be as provided in Section 230 of the *2012 Standard Specifications* fo r *Borrow Excavation*.

PIPE INSTALLATION

(11-20-12) 300 SP3 R01

Revise the *2012 Standard Specifications* as follows:

Page 3-1, Article 300-2, Materials, line 23-24, replace sentence with:

Provide foundation conditioning geotextile in accordance with Section 1056 for Type 4 geotextile.

BRIDGE APPROACH FILLS

(10-19-10) (Rev. 1-17-12) 422 SP4 R02

Description

Bridge approach fills include bridge approach fills for sub regional tier bridges and reinforced bridge approach fills. Construct bridge approach fills in accordance with the contract and Standard Drawing No. 422.10 or 422.11 of the *2012 Roadway Standard Drawings*. Define "geosynthetics" as geotextiles or geomembranes.

Materials

Refer to Division 10 of the *2012 Standard Specifications*.

Item	Section
Anchor Pins	1056-2
Geotextiles	1056
Portland Cement Concrete	1000
Select Material	1016
Subsurface Drainage Materials	1044
Wire Staples	1060-8(D)

For bridge approach fills for sub regional tier bridges, provide Type 1 geotextile for filtration geotextiles. For reinforced bridge approach fills, provide Type 5 geotextile for geotextile reinforcement and Type 1 geotextile and No. 78M stone for drains. Use Class B concrete for concrete pads.

Use Class III or V select material for reinforced bridge approach fills and only Class V select material (standard size No. 78M stone) for bridge approach fills for sub regional tier bridges. Provide PVC pipes, fittings and outlet pipes for subsurface drainage materials. For drains and PVC pipes behind end bents, use pipes with perforations that meet AASHTO M 278.

Use PVC, HDPE or linear low density polyethylene (LLDPE) geomembranes for reinforced bridge approach fills. For PVC geomembranes, provide grade PVC30 geomembranes that meet ASTM D7176. For HDPE and LLDPE geomembranes, use geomembranes with a nominal thickness of at least 30 mils that meet Geosynthetic Research Institute Standard Specifications GM13 or GM17, respectively. Handle and store geomembranes in accordance with Article 1056-2 of the *2012 Standard Specifications*. Provide material certifications for geomembranes in accordance with Article 1056-3 of the *2012 Standard Specifications*.

Construction Methods

Excavate as necessary for bridge approach fills in accordance with the contract. Notify the Engineer when foundation excavation is complete. Do not place geomembranes or filtration geotextiles until excavation dimensions and foundation material are approved. Attach geomembranes and filtration geotextiles to end bent cap back and wing walls with adhesives, tapes or other approved methods. Glue or weld geomembrane seams to prevent leakage.

For reinforced bridge approach fills, place geotextile reinforcement within 3" of locations shown in Standard Drawing No. 422.10 of the *2012 Roadway Standard Drawings* and in slight tension free of kinks, folds, wrinkles or creases. Install geotextile reinforcement with the orientation, dimensions and number of layers shown in Standard Drawing No. 422.10 of the *2012 Roadway Standard Drawings*. Place first layer of geotextile reinforcement directly on geomembranes with no void or material in between. Install geotextile reinforcement with the machine direction (MD) parallel to the roadway centerline. The MD is the direction of the length or long dimension of the geotextile roll. Do not splice or overlap geotextile reinforcement in the MD so seams are perpendicular to the roadway centerline. Wrap geotextile reinforcement at end bent cap back and wing walls as shown in Standard Drawing No. 422.10 of the *2012 Roadway Standard Drawings* and directed by the Engineer. Extend geotextile reinforcement at least 4 ft back behind end bent cap back and wing walls into select material.

Overlap adjacent geotextiles at least 18" with seams oriented parallel to the roadway centerline. Hold geotextiles in place with wire staples or anchor pins as needed. Contact the Engineer when existing or future obstructions such as foundations, pavements, pipes, inlets or utilities will

interfere with geosynthetics.

For reinforced bridge approach fills, construct one foot square drains consisting of 4" diameter continuous perforated PVC pipes surrounded by No. 78M stone wrapped in Type 1 geotextiles. Install drains in accordance with Standard Drawing No. 422.10 of the *2012 Roadway Standard Drawings*. For bridge approach fills for sub regional tier bridges, install 4" diameter continuous perforated PVC drain pipes in accordance with Standard Drawing No. 422.11 of the *2012 Roadway Standard Drawings*.

Use solvent cement to connect PVC pipes so joints do not leak. Connect perforated pipes to outlet pipes just behind wing walls. Provide drain pipes and drains with positive drainage towards outlets. Place pipe sleeves in or under wing walls for outlet pipes so positive drainage is maintained. Use sleeves that can withstand wing wall loads.

Place select material in 8" to 10" thick lifts. Use only hand operated compaction equipment to compact select material for bridge approach fills. Compact Class III select material in accordance with Subarticle 235-3(C) of the *2012 Standard Specifications*. Compact No. 78M stone with a vibratory compactor to the satisfaction of the Engineer. Do not displace or damage geosynthetics, drain pipes or drains when placing and compacting select material. End dumping directly on geosynthetics is not permitted. Do not operate heavy equipment on geosynthetics, drain pipes or drains until they are covered with at least 8" of select material. Replace any damaged geosynthetics, drain pipes or drains to the satisfaction of the Engineer.

Cover open ends of outlet pipes with rodent screens as shown in Standard Drawing No. 815.03 of the *2012 Roadway Standard Drawings*. Connect ends of outlet pipes to concrete pads or existing drainage structures as directed by the Engineer. Construct concrete pads with an Ordinary surface finish that meets Subarticle 825-6(B) of the *2012 Standard Specifications*.

Measurement and Payment

Reinforced Bridge Approach Fill, Station ____ will be paid at the contract lump sum price. The contract lump sum price for *Reinforced Bridge Approach Fill, Station* ____ will be full compensation for labor, tools, equipment and reinforced bridge approach fill materials, excavating, backfilling, hauling and removing excavated materials, compacting select material, connecting outlet pipes to existing drainage structures and supplying select materials, geosynthetics, drains, pipe sleeves and outlet components and any incidentals necessary to construct all reinforced bridge approach fills at each bridge.

Bridge Approach Fill - Sub Regional Tier, Station ____ will be paid at the contract lump sum price. The contract lump sum price for *Bridge Approach Fill - Sub Regional Tier, Station* ____ will be full compensation for labor, tools, equipment and bridge approach fill materials, excavating, backfilling, hauling and removing excavated materials, compacting No. 78M stone, connecting outlet pipes to existing drainage structures and supplying No. 78M stone, filtration geotextiles, drain pipes, pipe sleeves and outlet components and any incidentals necessary to construct all bridge approach fills at each sub regional tier bridge.

Payment will be made under:

Pay Item	Pay Unit
Reinforced Bridge Approach Fill, Station ____	Lump Sum
Bridge Approach Fill - Sub Regional Tier, Station ____	Lump Sum

INCIDENTAL STONE BASE

(7-1-95) (Rev.8-21-12) 545 SP5 R28R

Description

Place incidental stone base on driveways, mailboxes, etc. immediately after paving and do not have the paving operations exceed stone base placement by more than one week without written permission of the Engineer.

Materials and Construction

Provide and place incidental stone base in accordance with Section 545 of the *2012 Standard Specifications*.

Measurement and Payment

Incidental Stone Base will be measured and paid in accordance with Article 545-6 of the *2012 Standard Specifications*.

ASPHALT PAVEMENTS - SUPERPAVE

(6-19-12) (Rev. 4-21-15) 605, 609, 610, 650, 660 SP6 R01

Revise the *2012 Standard Specifications* as follows:

Page 6-3, Article 605-7 APPLICATION RATES AND TEMPERATURES, replace this article, including Table 601-1, with the following:

Apply tack coat uniformly across the existing surface at target application rates shown in Table 605-1.

TABLE 605-1
APPLICATION RATES FOR TACK COAT

Existing Surface	Target Rate (gal/sy)
	Emulsified Asphalt
New Asphalt	0.04 ± 0.01
Oxidized or Milled Asphalt	0.06 ± 0.01
Concrete	0.08 ± 0.01

Apply tack coat at a temperature within the ranges shown in Table 605-2. Tack coat shall not be overheated during storage, transport or at application.

TABLE 605-2 APPLICATION TEMPERATURE FOR TACK COAT	
Asphalt Material	**Temperature Range**
Asphalt Binder, Grade PG 64-22	350 - 400°F
Emulsified Asphalt, Grade RS-1H	130 - 160°F
Emulsified Asphalt, Grade CRS-1	130 - 160°F
Emulsified Asphalt, Grade CRS-1H	130 - 160°F
Emulsified Asphalt, Grade HFMS-1	130 - 160°F
Emulsified Asphalt, Grade CRS-2	130 - 160°F

Page 6-7, Article 609-3 FIELD VERIFICATION OF MIXTURE AND JOB MIX FORMULA ADJUSTMENTS, lines 35-37, delete the second sentence of the second paragraph.

Page 6-18, Article 610-1 DESCRIPTION, lines 40-41, delete the last sentence of the last paragraph.

Page 6-19, Subarticle 610-3(A) Mix Design-General, line 5, add the following as the first paragraph:

Warm mix asphalt (WMA) is allowed for use at the Contractor's option in accordance with the NCDOT Approved Products List for WMA Technologies available at:

https://connect.ncdot.gov/resources/Materials/MaterialsResources/Warm%20Mix%20Asphalt%20Approved%20List.pdf

Page 6-21, Subarticle 610-3(C) Job Mix Formula (JMF), replace Table 610-1 with the following:

TABLE 610-1 DESIGN MIXING TEMPERATURE AT THE ASPHALT PLANT[A]		
Binder Grade	**HMA JMF Temperature**	**WMA JMF Temperature Range**
PG 64-22	300ºF	225 - 275ºF
PG 70-22	315ºF	240 - 290ºF
PG 76-22	335ºF	260 - 310ºF

A. The mix temperature, when checked in the truck at the roadway, shall be within plus 15º and minus 25º of the temperature specified on the JMF.

Page 6-21, Subarticle 610-3(C) Job Mix Formula (JMF), lines 4-6, delete first sentence of the second paragraph. Line 7, in the second sentence of the second paragraph, replace "275ºF" with "275ºF or greater."

Page 6-22, Article 610-4 WEATHER, TEMPERATURE AND SEASONAL LIMITATIONS FOR PRODUCING AND PLACING ASPHALT MIXTURES, lines 15-17, replace the second sentence of the first paragraph with the following:

Do not place asphalt material when the air or surface temperatures, measured at the location of the paving operation away from artificial heat, do not meet Table 610-5.

Page 6-23, Article 610-4 WEATHER, TEMPERATURE AND SEASONAL LIMITATIONS FOR PRODUCING AND PLACING ASPHALT MIXTURES, replace Table 610-5 with the following:

TABLE 610-5 PLACEMENT TEMPERATURES FOR ASPHALT	
Asphalt Concrete Mix Type	**Minimum Surface and Air Temperature**
B25.0B, C	35°F
I19.0B, C, D	35°F
SF9.5A, S9.5B	40°F[A]
S9.5C, S12.5C	45°F[A]
S9.5D, S12.5D	50°F

A. For the final layer of surface mixes containing recycled asphalt shingles (RAS), the minimum surface and air temperature shall be 50ºF.

Page 6-26, Article 610-7 HAULING OF ASPHALT MIXTURE, lines 22-23, in the fourth sentence of the first paragraph replace "so as to overlap the top of the truck bed and" with "to".

Page 6-41, Subarticle 650-3(B) Mix Design Criteria, replace Table 650-1 with the following:

TABLE 650-1 OGAFC GRADATION CRITERIA			
Grading Requirements	**Total Percent Passing**		
Sieve Size (mm)	*Type FC-1*	*Type FC-1 Modified*	*Type FC-2 Modified*
19.0	-	-	100
12.5	100	100	**80** - 100
9.50	75 - 100	75 - 100	55 - **80**
4.75	25 - 45	25 - 45	15 - **30**
2.36	5 - 15	5 - 15	5 - **15**
0.075	1.0 - 3.0	1.0 - 3.0	2.0 - 4.0

ASPHALT BINDER CONTENT OF ASPHALT PLANT MIXES

(11-21-00) (Rev. 7-17-12) 609 SP6 R15

The approximate asphalt binder content of the asphalt concrete plant mixtures used on this project will be as follows:

Asphalt Concrete Base Course	Type B 25.0__	4.4%
Asphalt Concrete Surface Course	Type SF 9.5A	6.7%

The actual asphalt binder content will be established during construction by the Engineer within the limits established in the *2012 Standard Specifications.*

ASPHALT PLANT MIXTURES

(7-1-95) 609 SP6 R20

Place asphalt concrete base course material in trench sections with asphalt pavement spreaders made for the purpose or with other equipment approved by the Engineer.

PRICE ADJUSTMENT - ASPHALT BINDER FOR PLANT MIX

(11-21-00) 620 SP6 R25

Price adjustments for asphalt binder for plant mix will be made in accordance with Section 620 of the *2012 Standard Specifications.*

The base price index for asphalt binder for plant mix is **$483.08** per ton.

This base price index represents an average of F.O.B. selling prices of asphalt binder at supplier's terminals on **May 1, 2015**.

FINAL SURFACE TESTING NOT REQUIRED

(5-18-04) (Rev. 5-15-12) 610 SP6 R45

Final surface testing is not required on this project.

GUARDRAIL ANCHOR UNITS, TYPE 350 (TL-3)

(4-20-04) (Rev. 2-17-15) 862 SP8 R65

Description

Furnish and install guardrail anchor units in accordance with the details in the plans, the applicable requirements of Section 862 of the *2012 Standard Specifications*, and at locations shown in the plans.

Materials

The Contractor may at his option, furnish any one of the guardrail anchor units or approved equal.

Guardrail anchor unit (X-Tension) as manufactured by:

Barrier Systems, Inc.
c/o Transportation Equipment Services Inc.
420 Boardwalk Dr.
Youngsville, NC 27596
Telephone: 877-499-8727

Guardrail anchor unit (ET-Plus) as manufactured by:

Trinity Industries, Inc.
2525 N. Stemmons Freeway
Dallas, Texas 75207
Telephone: 800-644-7976

The guardrail anchor unit (SKT 350) as manufactured by:

Road Systems, Inc.
3616 Old Howard County Airport
Big Spring, Texas 79720
Telephone: 915-263-2435

Prior to installation the Contractor shall submit to the Engineer:

(A) FHWA acceptance letter for each guardrail anchor unit certifying it meets the requirements of NCHRP Report 350, Test Level 3, in accordance with Article 106-2 of the *2012 Standard Specifications*.

(B) Certified working drawings and assembling instructions from the manufacturer for each guardrail anchor unit in accordance with Article 105-2 of the *2012 Standard Specifications*.

No modifications shall be made to the guardrail anchor unit without the express written permission from the manufacturer. Perform installation in accordance with the details in the plans, and details and assembling instructions furnished by the manufacturer.

Construction Methods

Guardrail end delineation is required on all approach and trailing end sections for both temporary and permanent installations. Guardrail end delineation consists of yellow reflective sheeting applied to the entire end section of the guardrail in accordance with Article 1088-3 of the *2012 Standard Specifications* and is incidental to the cost of the guardrail anchor unit.

Measurement and Payment

Measurement and payment will be made in accordance with Article 862-6 of the *2012 Standard Specifications*.

Payment will be made under:

Pay Item	**Pay Unit**
Guardrail Anchor Units, Type 350	Each

MATERIALS

(2-21-12) (Rev. 5-19-15) 1000, 1002, 1005, 1024, 1050, 1056, 1074, 1078, 1080, 1081, 1086, 1084, 1087, 1092 SP10 R01

Revise the *2012 Standard Specifications* as follows:

Page 10-1, Article 1000-1, DESCRIPTION, lines 9-10, replace the last sentence of the first paragraph with the following:

Type IL, IP, IS or IT blended cement may be used instead of Portland cement.

Page 10-1, Article 1000-1, DESCRIPTION, line 14, add the following:

If any change is made to the mix design, submit a new mix design (with the exception of an approved pozzolan source change).

If any major change is made to the mix design, also submit new test results showing the mix design conforms to the criteria. Define a major change to the mix design as:

(1) A source change in coarse aggregate, fine aggregate or cement.

(2) A pozzolan class or type change (e.g. Class F fly ash to Class C fly ash).

(3) A quantitative change in coarse aggregate (applies to an increase or decrease greater than 5%), fine aggregate (applies to an increase or decrease greater than 5%), water (applies to an increase only), cement (applies to a decrease only), or pozzolan (applies to an increase or decrease greater than 5%).

Use materials which do not produce a mottled appearance through rusting or other staining of the finished concrete surface.

Page 10-5, Table 1000-1, REQUIREMENTS FOR CONCRETE, replace with the following:

TABLE 1000-1
REQUIREMENTS FOR CONCRETE

Class of Concrete	Min. Comp. Strength at 28 days	Maximum Water-Cement Ratio				Consistency Max. Slump		Cement Content			
		Air-Entrained Concrete		Non Air-Entrained Concrete		Vibrated	Non-Vibrated	Vibrated		Non- Vibrated	
		Rounded Aggregate	Angular Aggre-gate	Rounded Aggregate	Angular Aggre-gate			Min.	Max.	Min.	Max.
Units	*psi*					*inch*	*inch*	*lb/cy*	*lb/cy*	*lb/cy*	*lb/cy*
AA	4,500	0.381	0.426	-	-	3.5	-	639	715	-	-
AA Slip Form	4,500	0.381	0.426	-	-	1.5	-	639	715	-	-
Drilled Pier	4,500	-	-	0.450	0.450	-	5-7 dry 7-9 wet	-	-	640	800
A	3,000	0.488	0.532	0.550	0.594	3.5	4	564	-	602	-
B	2,500	0.488	0.567	0.559	0.630	1.5 machine-placed 2.5 hand-placed	4	508	-	545	-
Sand Light-weight	4,500	-	0.420	-	-	4	-	715	-	-	-
Latex Modified	3,000 7 day	0.400	0.400	-	-	6	-	658	-	-	-
Flowable Fill excavatable	150 max. at 56 days	as needed	as needed	as needed	as needed	-	Flow-able	-	-	40	100
Flowable Fill non-excavatable	125	as needed	as needed	as needed	as needed	-	Flow-able	-	-	100	as needed
Pavement	4,500 design, field 650 flexural, design only	0.559	0.559	-	-	1.5 slip form 3.0 hand place	-	526	-	-	-
Precast	See Table 1077-1	as needed	as needed	-	-	6	as needed	as needed	as needed	as needed	as needed
Prestress	per contract	See Table 1078-1	See Table 1078-1	-	-	8	-	564	as needed	-	-

Page 10-1, Article 1000-2, MATERIALS, line 16; Page 10-8, Subarticle 1000-7(A), Materials, line 8; and Page 10-18, Article 1002-2, MATERIALS, line 9, add the following to the table of item references:

Item	**Section**
Type IL Blended Cement	1024-1

Page 10-19, Article 1002-3, SHOTCRETE FOR TEMPORARY SUPPORT OF EXCAVATIONS, line 30, add the following at the end of Section 1002:

(H) Handling and Storing Test Panels

Notify the Area Materials Engineer when preconstruction or production test panels are made within 24 hours of shooting the panels. Field cure and protect test panels from damage in accordance with ASTM C1140 until the Department transports panels to the Materials and Tests Regional Laboratory for coring.

Page 10-1, Subarticle 1000-3(A), Composition and Design, lines 25-27, replace the second paragraph with the following:

Fly ash may be substituted for cement in the mix design up to 30% at a rate of 1.0 lb of fly ash to each pound of cement replaced.

Page 10-2, Subarticle 1000-3(A), Composition and Design, lines 12-21, delete the third paragraph through the sixth paragraph beginning with "If any change is made to the mix design, submit…" through "…(applies to a decrease only)."

Page 10-6, Subarticle 1000-4(I), Use of Fly Ash, lines 36-2, replace the first paragraph with the following:

Fly ash may be substituted for cement in the mix design up to 30% at a rate of 1.0 lb of fly ash to each pound of cement replaced. Use Table 1000-1 to determine the maximum allowable water-cementitious material (cement + fly ash) ratio for the classes of concrete listed.

Page 10-7, Table 1000-3, MAXIMUM WATER-CEMENTITIOUS MATERIAL RATIO, delete the table.

Page 10-7, Article 1000-5, HIGH EARLY STRENGTH PORTLAND CEMENT CONCRETE, lines 30-31, delete the second sentence of the third paragraph.

Page 10-23, Table 1005-1, AGGREGATE GRADATION-COARSE AGGREGATE, replace with the following:

TABLE 1005-1
AGGREGATE GRADATION - COARSE AGGREGATE

Std. Size #	2"	1 1/2"	1"	3/4"	1/2"	3/8"	#4	#8	#10	#16	#40	#200	Remarks
	Percentage of Total by Weight Passing												
4	100	90-100	20-55	0-15	-	0-5	-	-	-	-	-	**A**	Asphalt Plant Mix
467M	100	95-100	-	35-70	-	0-30	0-5	-	-	-	-	**A**	Asphalt Plant Mix
5	-	100	90-100	20-55	0-10	0-5	-	-	-	-	-	**A**	AST, Sediment Control Stone
57	-	100	95-100	-	25-60	-	0-10	0-5	-	-	-	**A**	AST, Str. Concrete, Shoulder Drain, Sediment Control Stone
57M	-	100	95-100	-	25-45	-	0-10	0-5	-	-	-	**A**	AST, Concrete Pavement
6M	-	-	100	90-100	20-55	0-20	0-8	-	-	-	-	**A**	AST
67	-	-	100	90-100	-	20-55	0-10	0-5	-	-	-	**A**	AST, Str. Concrete, Asphalt Plant Mix
78M	-	-	-	100	98-100	75-100	20-45	0-15	-	-	-	**A**	Asphalt Plant Mix, AST, Str. Conc, Weep Hole Drains
14M	-	-	-	-	-	100	35-70	5-20	-	0-8	-	**A**	Asphalt Plant Mix, AST, Weep Hole Drains, Str. Concrete
9	-	-	-	-	-	100	85-100	10-40	-	0-10	-	**A**	AST
ABC	-	100	75-97	-	55-80	-	35-55	-	25-45	-	14-30	4-12[B]	Aggregate Base Course, Aggregate Stabilization
ABC (M)	-	100	75-100	-	45-79	-	20-40	-	0-25	-	-	0-12[B]	Maintenance Stabilization
Light-weight[C]	-	-	-	-	100	80-100	5-40	0-20	-	0-10	-	0-2.5	AST

A. See Subarticle 1005-4(A).
B. See Subarticle 1005-4(B).
C. For Lightweight Aggregate used in Structural Concrete, see Subarticle 1014-2(E)(6).

Page 10-40, Tables 1018-1 and 1018-2, PIEDMONT, WESTERN AND COASTAL AREA CRITERIA FOR ACCEPTANCE OF BORROW MATERIAL, under second column in both tables, replace second row with the following:

Acceptable, but not to be used in the top 3 ft of embankment or backfill

Page 10-46, Article 1024-1, PORTLAND CEMENT, line 33, add the following as the ninth paragraph:

Use Type IL blended cement that meets AASHTO M 240, except that the limestone content is limited to between 5 and 12% by weight and the constituents shall be interground. Class F fly ash can replace a portion of Type IL blended cement and shall be replaced as outlined in Subarticle 1000-4(I) for Portland cement. For mixes that contain cement with alkali content between 0.6% and 1.0% and for mixes that contain a reactive aggregate documented by the Department, use a pozzolan in the amount shown in Table 1024-1.

Page 10-46, Table 1024-1, POZZOLANS FOR USE IN PORTLAND CEMENT CONCRETE, replace with the following:

TABLE 1024-1 POZZOLANS FOR USE IN PORTLAND CEMENT CONCRETE	
Pozzolan	**Rate**
Class F Fly Ash	20% - 30% by weight of required cement content with 1.0 lb Class F fly ash per lb of cement replaced
Ground Granulated Blast Furnace Slag	35%-50% by weight of required cement content with 1.0 lb slag per lb of cement replaced
Microsilica	4%-8% by weight of required cement content with 1.0 lb microsilica per lb of cement replaced

Page 10-47, Subarticle 1024-3(B), Approved Sources, lines 16-18, replace the second sentence of the second paragraph with the following:

Tests shall be performed by AASHTO's designated National Transportation Product Evaluation Program (NTPEP) laboratory for concrete admixture testing.

Page 10-65, Article 1050-1, GENERAL, line 41, replace the first sentence with the following:

All fencing material and accessories shall meet Section 106.

Page 10-73, Article 1056-1, DESCRIPTION, lines 7-8, delete the first sentence of the second paragraph and replace with the following:

Use geotextile fabrics that are on the NCDOT Approved Products List.

Page 10-73, Article 1056-2, HANDLING AND STORING, line 17, replace "mechanically stabilized earth (MSE) wall faces" with "temporary wall faces".

Page 10-73, Article 1056-4, GEOTEXTILES, line 33, add the following after the first sentence in the second paragraph:

Geotextiles will be identified by the product name printed directly on the geotextile. When geotextiles are not marked with a product name or marked with only a manufacturing plant identification code, geotextiles will be identified by product labels attached to the geotextile wrapping. When identification is based on labels instead of markings, unwrap geotextiles just before use in the presence of the Engineer to confirm that the product labels on both ends of the outside of the geotextile outer wrapping match the labels affixed to both ends of the inside of the geotextile roll core. Partial geotextile roles without the product name printed on the geotextile or product labels affixed to the geotextile roll core may not be used.

Page 10-74, Table 1056-1, GEOTEXTILE REQUIREMENTS, replace with the following:

TABLE 1056-1
GEOTEXTILE REQUIREMENTS

Property	**Requirement**					**Test Method**
	Type 1	**Type 2**	**Type 3[A]**	**Type 4**	**Type 5[B]**	
Typical Application	*Shoulder Drains*	*Under Rip Rap*	*Temporary Silt Fence*	*Soil Stabilization*	*Temporary Walls*	
Elongation (MD & CD)	≥ 50%	≥ 50%	≤ 25%	< 50%	< 50%	ASTM D4632
Grab Strength (MD & CD)	Table 1[D], Class 3	Table 1[D], Class 1	100 lb[C]	Table 1[D], Class 3	-	ASTM D4632
Tear Strength (MD & CD)			-			ASTM D4533
Puncture Strength			-			ASTM D6241
Ultimate Tensile Strength (MD & CD)	-	-	-	-	2,400 lb/ft[C] (unless required otherwise in the contract)	ASTM D4595
Permittivity	Table 2[D], 15% to 50% *in Situ* Soil Passing No. 200[E]		Table 7[D]	Table 5[D]	$0.20\ sec^{-1}$,[C]	ASTM D4491
Apparent Opening Size					0.60 mm[F]	ASTM D4751
UV Stability (Retained Strength)					70%[C, G]	ASTM D4355

A. Minimum roll width of 36" required.
B. Minimum roll width of 13 ft required.
C. MARV per Article 1056-3.
D. AASHTO M 288.
E. US Sieve No. per AASHTO M 92.
F. Maximum average roll value.
G. After 500 hours of exposure.

Page 10-74, Article 1056-5, GEOCOMPOSITES, lines 7-8, replace the first sentence with the following:

Provide geocomposite drain strips with a width of at least 12" and Type 1 geotextiles attached to drainage cores that meet Table 1056-2.

Page 10-115, Subarticle 1074-7(B), Gray Iron Castings, lines 10-11, replace the first two sentences with the following:

Supply gray iron castings meeting all facets of AASHTO M 306 excluding proof load. Proof load testing will only be required for new casting designs during the design process, and conformance to M306 loading (40,000 lbs.) will be required only when noted on the design documents.

Page 10-126, Table 1078-1, REQUIREMENTS FOR CONCRETE, replace with the following:

TABLE 1078-1 REQUIREMENTS FOR CONCRETE		
Property	**28 Day Design Compressive Strength 6,000 psi or less**	**28 Day Design Compressive Strength greater than 6,000 psi**
Maximum Water/Cementitious Material Ratio	0.45	0.40
Maximum Slump without HRWR	3.5"	3.5"
Maximum Slump with HRWR	8"	8"
Air Content (upon discharge into forms)	5 + 2%	5 + 2%

Page 10-151, Article 1080-4, INSPECTION AND SAMPLING, lines 18-22, replace (B), (C) and (D) with the following:

(B) At least 3 panels prepared as specified in 5.5.10 of AASHTO M 300, Bullet Hole Immersion Test.

(C) At least 3 panels of 4"x6"x1/4" for the Elcometer Adhesion Pull Off Test, ASTM D4541.

(D) A certified test report from an approved independent testing laboratory for the Salt Fog Resistance Test, Cyclic Weathering Resistance Test, and Bullet Hole Immersion Test as specified in AASHTO M 300.

(E) A certified test report from an approved independent testing laboratory that the product has been tested for slip coefficient and meets AASHTO M253, Class B.

Page 10-161, Subarticle 1081-1(A), Classifications, lines 29-33, delete first 3 sentences of the description for Type 2 and replace with the following:

Type 2 - A low-modulus, general-purpose adhesive used in epoxy mortar repairs. It may be used to patch spalled, cracked or broken concrete where vibration, shock or expansion and contraction are expected.

Page 10-162, Subarticle 1081-1(A), Classifications, lines 4-7, delete the second and third sentences of the description for Type 3A. **Lines 16-22,** delete Types 6A, 6B and 6C.

Page 10-162, Subarticle 1081-1(B), Requirements, lines 26-30, replace the second paragraph with the following:

For epoxy resin systems used for embedding dowel bars, threaded rods, rebar, anchor bolts and other fixtures in hardened concrete, the manufacturer shall submit test results showing that the bonding system will obtain 125% of the specified required yield strength of the fixture. Furnish certification that, for the particular bolt grade, diameter and embedment depth required, the anchor system will not fail by adhesive failure and that there is no movement of the anchor bolt. For certification and anchorage, use 3,000 psi as the minimum Portland cement concrete compressive strength used in this test. Use adhesives that meet Section 1081.

List the properties of the adhesive on the container and include density, minimum and maximum temperature application, setting time, shelf life, pot life, shear strength and compressive strength.

Page 10-163, Table 1081-1, PROPERTIES OF MIXED EPOXY RESIN SYSTEMS, replace with the following:

TABLE 1081-1
PROPERTIES OF MIXED EPOXY RESIN SYSTEMS

Property	Type 1	Type 2	Type 3	Type 3A	Type 4A	Type 4B	Type 5
Viscosity-Poises at 77°F ± 2°F	Gel	10-30	25-75	Gel	40-150	40-150	1-6
Spindle No.	-	3	4	--	4	4	2
Speed (RPM)	-	20	20	--	10	10	50
Pot Life (Minutes)	20-50	30-60	20-50	5-50	40-80	40-80	20-60
Minimum Tensile Strength at 7 days (psi)	1,500	2,000	4,000	4,000	1,500	1,500	4,000
Tensile Elongation at 7 days (%)	30 min.	30 min.	2-5	2-5	5-15	5-15	2-5
Min. Compressive Strength of 2". mortar cubes at 24 hours	3,000 (Neat)	4,000-	6,000-	6,000 (Neat)	3,000	3,000	6,000
Min. Compressive Strength of 2" mortar cubes at 7 days	5,000 (Neat)	-	-	-	-	5,000	-
Maximum Water Absorption (%)	1.5	1.0	1.0	1.5	1.0	1.0	1.0
Min. Bond Strength Slant Shear Test at 14 days (psi)	1,500	1,500	2,000	2,000	1,500	1,500	1,500

Page 10-164, Subarticle 1081-1(E), Prequalification, lines 31-33, replace the second sentence of the first paragraph with the following:

Manufacturers choosing to supply material for Department jobs must submit an application through the Value Management Unit with the following information for each type and brand name:

Page 10-164, Subarticle 1081-1(E)(3), line 37, replace with the following:

(3) Type of the material in accordance with Articles 1081-1 and 1081-4,

Page 10-165, Subarticle 1081-1(E)(6), line 1, in the first sentence of the first paragraph replace “AASHTO M 237” with “the specifications”.

Page 10-165, Subarticle 1081-1(E), Prequalification, line 9-10, delete the second sentence of the last paragraph.

Page 10-165, Subarticle 1081-1(F), Acceptance, line 14, in the first sentence of the first paragraph replace "Type 1" with "Type 3".

Page 10-169, Subarticle 1081-3(G), Anchor Bolt Adhesives, delete this subarticle.

Page 10-170, Article 1081-3, HOT BITUMEN, line 9, add the following at the end of Section 1081:

1081-4 EPOXY RESIN ADHESIVE FOR BONDING TRAFFIC MARKINGS

(A) General

This section covers epoxy resin adhesive for bonding traffic markers to pavement surfaces.

(B) Classification

The types of epoxies and their uses are as shown below:

Type I – Rapid Setting, High Viscosity, Epoxy Adhesive. This type of adhesive provides rapid adherence to traffic markers to the surface of pavement.

Type II – Standard Setting, High Viscosity, Epoxy Adhesive. This type of adhesive is recommended for adherence of traffic markers to pavement surfaces when rapid set is not required.

Type III – Rapid Setting, Low Viscosity, Water Resistant, Epoxy Adhesive. This type of rapid setting adhesive, due to its low viscosity, is appropriate only for use with embedded traffic markers.

Type IV – Standard Set Epoxy for Blade Deflecting-Type Plowable Markers.

(C) Requirements

Epoxies shall conform to the requirements set forth in AASHTO M 237.

(D) Prequalification

Refer to Subarticle 1081-1(E).

(E) Acceptance

Refer to Subarticle 1081-1(F).

Page 10-173, Article 1084-2, STEEL SHEET PILES, lines 37-38, replace first paragraph with the following:

Steel sheet piles detailed for permanent applications shall be hot rolled and meet ASTM A572 or ASTM A690 unless otherwise required by the plans. Steel sheet piles shall be coated as required by the plans. Galvanized sheet piles shall be coated in accordance with Section 1076. Metallized sheet piles shall be metallized in accordance to the Project Special Provision "Thermal Sprayed Coatings (Metallization)" with an 8 mil, 99.9% aluminum alloy coating and a 0.5 mil seal coating. Any portion of the metallized sheet piling encased in concrete shall receive a barrier coat. The barrier coat shall be an approved waterborne coating with a low-viscosity which readily absorbs into the pores of the aluminum thermal sprayed coating. The waterborne coating shall be applied at a spreading rate that results in a theoretical 1.5 mil dry film thickness. The manufacturer shall issue a letter of certification that the resin chemistry

of the waterborne coating is compatible with the 99.9% aluminum thermal sprayed alloy and suitable for tidal water applications.

Page 10-174, Subarticle 1086-1(B)(1), Epoxy, lines 18-24, replace with the following:

The epoxy shall meet Article 1081-4.

The 2 types of epoxy adhesive which may be used are Type I, Rapid Setting, and Type II, Standard Setting. Use Type II when the pavement temperature is above 60°F or per the manufacturer's recommendations whichever is more stringent. Use Type I when the pavement temperature is between 50°F and 60°F or per the manufacturer's recommendations whichever is more stringent. Epoxy adhesive Type I, Cold Set, may be used to attach temporary pavement markers to the pavement surface when the pavement temperature is between 32°F and 50°F or per the manufacturer's recommendations whichever is more stringent.

Page 10-175, Subarticle 1086-2(E), Epoxy Adhesives, line 27, replace "Section 1081" with "Article 1081-4".

Page 10-177, Subarticle 1086-3(E), Epoxy Adhesives, line 22, replace "Section 1081" with "Article 1081-4".

Page 10-179, Subarticle 1087-4(A), Composition, lines 39-41, replace the third paragraph with the following:

All intermixed and drop-on glass beads shall not contain more than 75 ppm arsenic or 200 ppm lead.

Page 10-180, Subarticle 1087-4(B), Physical Characteristics, line 8, replace the second paragraph with the following:

All intermixed and drop-on glass beads shall comply with NCGS § 136-30.2 and 23 USC § 109(r).

Page 10-181, Subarticle 1087-7(A), Intermixed and Drop-on Glass Beads, line 24, add the following after the first paragraph:

Use X-ray Fluorescence for the normal sampling procedure for intermixed and drop-on beads, without crushing, to check for any levels of arsenic and lead. If any arsenic or lead is detected, the sample shall be crushed and repeat the test using X-ray Fluorescence. If the X-ray Fluorescence test shows more than a LOD of 5 ppm, test the beads using United States Environmental Protection Agency Method 6010B, 6010C or 3052 for no more than 75 ppm arsenic or 200 ppm lead.

Page 10-204, Table 1092-3 MINIMUM COEFFICIENT OF RETROREFLECTION fOR NC GRADE A, replace with the following:

TABLE 1092-3 MINIMUM COEFFICIENT OF RETROREFLECTION FOR NC GRADE A (Candelas Per Lux Per Square Meter)								
Observation Angle, degrees	**Entrance Angle, degrees**	**White**	**Yellow**	**Green**	**Red**	**Blue**	**Fluorescent Yellow Green**	**Fluorescent Yellow**
0.2	-4.0	525	395	52	95	30	420	315
0.2	30.0	215	162	22	43	10	170	130
0.5	-4.0	310	230	31	56	18	245	185
0.5	30.0	135	100	14	27	6	110	81
1.0	-4.0	120	60	8	16	3.6	64	48
1.0	30.0	45	34	4.5	9	2	36	27

SHOULDER AND SLOPE BORROW

(3-19-13) 1019 SP10 R10

Use soil in accordance with Section 1019 of the *2012 Standard Specifications*. Use soil consisting of loose, friable, sandy material with a PI greater than 6 and less than 25 and a pH ranging from 5.5 to 7.0.

Soil with a pH ranging from 4.0 to 5.5 will be accepted without further testing if additional limestone is provided in accordance with the application rates shown in Table 1019-1A. Soil type is identified during the soil analysis. Soils with a pH above 7.0 require acidic amendments to be added. Submit proposed acidic amendments to the Engineer for review and approval. Soils with a pH below 4.0 or that do not meet the PI requirements shall not be used.

TABLE 1019-1A ADDITIONAL LIMESTONE APPLICATION RATE TO RAISE pH			
pH TEST RESULT	**Sandy Soils Additional Rate (lbs. / Acre)**	**Silt Loam Soils Additional Rate (lbs. / Acre)**	**Clay Loam Soils Additional Rate (lbs. / Acre)**
4.0 - 4.4	1,000	4,000	6,000
4.5 - 4.9	500	3,000	5,000
5.0 - 5.4	NA	2,000	4,000

Note: Limestone application rates shown in this table are in addition to the standard rate of 4000 lbs. / acre required for seeding and mulching.

No direct payment will be made for providing additional lime or acidic amendments for Ph adjustment.

UNIT PROVISIONS

TRAFFIC CONTROL

(4-2012) SPECIAL

The Contractor will be required to give the Engineer a minimum of two (2) weeks written notice before starting work. The Contractor will be responsible for erection and maintenance of all stationary work zone signing for offsite detours if required by the Engineer. The Contractor will be responsible for furnishing, installing, and maintaining all temporary work zone signing shown on NCDOT Roadway Standard Drawing No. 1101.03 sheets 1 of 9 and 2 of 9 which will be required to maintain traffic at all times during the life of the project. The Department will be responsible for placement of final pavement markings.

All materials used for traffic control shall meet the applicable requirements for Division 10 of the January 2012 Standard Specifications for Roads and Structures.

Temporary work zone signing and devices shall be placed in accordance with the Manual on Uniform Traffic Control Devices and *NCDOT 2012 Roadway Standard Drawings*.

Payment for all temporary work zone signing and devices and other incidental work related to traffic control will be made under the contract line items “Work Zone Signs (Stationary)”, “Work Zone Signs (Portable)”, “Work Zone Signs (Barricade Mounted)”, “Flashing Arrow Board”, “Drums”, “Barricades (Type III)”, “Flagger (By Day)”, and “TMA”.

UTILITY SPECIAL PROVISIONS
(2-19-2015) SPECIAL

Project: BD-5111V (Bridge #244)
County: Surry

PROJECT SPECIAL PROVISIONS
Town of Pilot Mountain; Water and Sanitary Sewer
February 19, 2015

2/19/15

GENERAL CONSTRUCTION REQUIREMENTS:

Specifications:

The proposed utility construction shall meet the applicable requirements of the NC Department of Transportation "Standard Specifications for Roads and Structures" dated January 2012, the current Town of Pilot Mountain standard specifications and the provisions outlined below.

Meet the installation standards of the AWWA or ASTM for water line construction.

Construct gravity sanitary sewer in conformance with *NCDENR Gravity Sewer Minimum Design Criteria.*

Prior to abandoning the 2 inch water line as shown on sheet UC-4, the Contractor shall confirm with the Town of Pilot Mountain that the Town has reconnected all water services along that 2 inch water line.

Owner and Owner's Requirements:

The existing water mains and sanitary sewer mains are owned by the Town of Pilot Mountain Public Works (PMPW). The primary contact person for PMPW is **Mr. Ron Holt (336) 368-2247**. The contractor shall provide access for the owner's representatives to all phases of construction. The owner shall also be notified two (2) weeks prior to commencement of any work and one (1) week prior to service interruption. Interruption of water service on main lines shall be limited to a maximum of 4 hours during regular working hours unless approved otherwise by PMPW.

Only PMPW personnel shall operate valves and hydrants except in the case of an emergency. Notify PMPW immediately of an emergency requiring valve or hydrant operation. **Emergency Contact: (336) 755-5023** if Mr. Holt cannot be reached at the above phone number.

Any cracked, damaged, or defective pipe, fittings, or other attachments discovered as a result of the pressure test, shall be removed and replaced with sound material. The tests shall be repeated until test results are satisfactory.

Utility Locations Shown on the Plans:

The locations, sizes, and type material of the existing utilities shown on the plans are from the best available information. The contractor will be responsible for determining the exact location, size, and type of material of the existing facilities necessary for the

construction of the proposed utilities and to avoid damage to existing facilities. All water and sanitary sewer services disturbed during construction shall be reconnected, even if not shown on the plans. Contractor is to make the Engineer aware of any plan discrepancies.

All proposed utility construction shall meet the applicable requirements of the NC Department of Transportation's "Standard Specifications for Roads and Structures" dated January 2012. Division 15 of the Standard Specifications is revised as follows:

Provide access for Department personnel and the owner's representatives to all phases of construction. Notify Department personnel and utility owner two weeks prior to commencement of any work and one week prior to service interruption. Keep utility owner's representatives informed of the work progress and provide opportunity for inspection of construction and testing. The water and sewer lines on this project belong to Pilot Mountain Public Works (PMPW). Any work on these lines must be coordinated through the Engineer and the utility owner before beginning.

Ductile iron water pipe shall be of the thickness and pressure rating class shown on the utility plans and shall conform to ANSI A21.51 (AWWA C151). Pipe shall be either mechanical joint of or push-on-joint and installed with rubber gaskets in accordance with ANSI A21.11 (AWWA C111). All water pipe shall be provided and installed in accordance with Articles 1036 and 1510 of the Standard Specifications. All water pipe on this project shall be ductile iron unless otherwise specified on the utility construction plans.

Ductile iron pipe fittings shall be installed in accordance with the applicable utility provisions herein, as shown on the utility plans and/or as directed by the Engineer.

Ductile iron bends and tees shall be in accordance with the applicable requirements of ANSI A21.10 (AWWA C110). Joints for such bends and tees shall be in accordance with ANSI A21.11 (AWWA C111) and be epoxy lined. All ductile iron pipe fittings shall have a minimum working pressure of 250 PSI.

For the purpose of identification of buried plastic or non-metallic pressurized pipes during future trenching or location, a continuous "detectable" identification wire shall be installed. The wire shall be a minimum 12 gauge, single strand, coated copper wire that is suitable for underground use. The wire shall be buried continuously along the pipe.

Abandon/remove the existing 12" AC water line in accordance with Federal, State and local regulations.

All water services being installed or relocated shall be provided with copper tubing. PE tubing or piping will not be used on this project. Copper water tubing shall be Type K, soft copper manufactured in accordance with ASTM B88. The minimum pressure rating for the copper water pipe shall be 65 PSI. Valves on water mains that are being

abandoned shall either be removed or closed and the top of the valve box removed and backfilled in accordance with NCDOT standards.

PVC gravity sewer pipe shall meet the requirements of ASTM 3034 with a minimum SDR of 35. Joints shall be push on type.

Material Specifications:

When brand names of materials have been determined, the Contractor shall obtain approval, through the engineer and the owner prior to their use and/or installation.

Then Contractor shall furnish, but is not limited to furnishing, catalog cuts and/or shop drawings of the materials. Thirty days shall be allowed for the engineer's review of each submittal. Eight copies of each catalog cut and/or shop drawing (signed and sealed) shall be submitted.

Adjustable Pipe Roller - Bridge Attachment Supports:

Water line bridge attachment supports shall be adequate to support the operational 6" water line. Supports shall provide the required thrust restraint and lateral support needed to securely and safely operate the water line. Contractor shall obtain approval of the proposed supports from the Owner and Engineer prior to beginning work associated with the water line attachment to the bridge. Threaded rods, nuts and washers shall be stainless steel.

Hardware:

Bolts, nuts and washers shall be high strength and stainless steel in accordance with Article 1072-5 of the NCDOT Standard Specifications.

Threaded Rods:

The threaded rods shall be of approved ¾" stainless steel type, threaded continuously and conforming to ASTM-A36 or A-575. The threaded rods shall be of a proper length so as to place the main at the vertical location shown on the plans. Threaded rods shall be installed using an adhesive bonding system in accordance with Section 420-13 of the NCODT Standard Specifications

Pipe rollers:

The pipe rollers shall be approved non-conductive, polyether type polyurethane capable of supporting restrained joint ductile iron water pipe. The pipe rollers shall be used in conjunction with Roll-On Shields. Roll-On Shields shall be fiberglass reinforced plastic such as FRP Type #240 or approved equal. The Roll-On Shields shall cover the entire circumference of the water pipe at the roller locations.

Project: BD-5111V (Bridge #244)
County: Surry

Compensation:

No direct payment will be made for construction work required by the preceding provisions which are general requirements applying to utility construction, and all of the requirements stated will be considered incidental work, paid for at the contract unit prices of the various utility items included in the contract.

Restrained Joint Ductile Iron Pipe:

Restrained Joint Ductile Iron Water Line shall be installed in accordance with the applicable utility provisions herein, as shown on the utility plans and/or as directed by the Engineer.

Restrained Joint Ductile Iron Water Line shall be pressure class as shown on the utility plans and shall conform to ANSI A21.51 (AWWA C151). All joints for such pipe shall be in accordance with ANSI A21.11 (AWWA C111). Pipe thickness shall be in accordance with ANSI A21.50 (AWWA C150) and based on laying conditions and internal pressures stated on the plans.

Cement mortar lining and seal coating for pipe shall be in accordance with ANSI A21.4 (AWWA C104). Bituminous outside coating shall be in accordance with ANSI A21.51 (AWWA C151).

Water line installed as a part of the bridge attachment from the vertical bend at approximately -W2- 11+40 to the vertical bend at approximately -W2- 13+10 shall have manufactured restrained joints except where standard pipe length cannot be used and the pipe must be field cut. Field installed restraint shall be used at those locations.

Restrained Joint Ductile Iron Water line, installed in accordance with the plans and provisions herein and accepted, will be measured along the pipe from end to end, with no deductions for fittings and valves, and paid for at the contract unit price per linear foot for, "__ Water line". Such prices and payments will be full compensation for all materials, excavation, equipment, labor, installation, backfilling and incidentals necessary to complete the work as required.

Above Ground Water Line Insulation:

Contractor shall install water line insulation at the bridge attachment location where the potential for freezing of the water line exists. Insulation installation shall be as directed by the Owner and shall not adversely affect the support and rollers installed to attach to the bridge.

Project: BD-5111V (Bridge #244)
County: Surry

Foundation Conditioning Material:

Foundation conditioning material for utility lines shall be installed in accordance with the applicable utility provisions herein, Section 1505-3 of the Standard Specifications and as shown on the utility construction plans or as directed by the Engineer.

Foundation conditioning material shall meet the requirements of Section 1016 of the Standard Specifications, and the classifications shall be Class VI in accordance with Article 1016-3. Foundation conditioning material shall be installed in accordance with Articles 300-4 and 300-7 of the Standard Specifications.

No direct payment will be paid for undercut excavation for utility installation. Payment at the contract unit price for Select Material, Class VI will be full compensation for all work of pipe undercut excavation.

Foundation conditioning material installed in accordance with the plans and provisions herein and accepted will be measured and paid for at the contract unit price per ton for "Foundation Conditioning". Such prices and payments will be full compensation for all materials, equipment, labor, compaction and installing the foundation conditioning material in accordance with the Standard Specifications, and incidentals necessary to complete the work as required.

UTILITY CONFLICTS

(3-12-2014) SPECIAL

General:

The following utility companies have facilities that will be in conflict with the construction of this project:

A. CenturyLink – Telephone/Fiber Optic
B. Surry Telephone – Telephone
C. Duke Energy Progress – Power
D. Time Warner – Fiber Optic/CATV
E. AT&T Toll – Telephone
F. Town of Pilot Mountain – Water and Gravity Sanitary Sewer

The conflicting facilities of these concerns will be adjusted prior to the date of availability, unless otherwise noted and are therefore listed in these special provisions for the benefit of the Contractor. All utility work listed herein will be done by the utility owners. All utilities are shown on the plans from the best available information.

The Contractor's attention is directed to Article 105.8 of the Standard Specifications.

Utilities Requiring Adjustment:

Utility relocations are shown on the Utilities by Others Plans.

A) CenturyLink Telephone – Telephone
   1) CenturyLink Telephone has aerial cables, poles and pedestals not in conflict. However there is fill going around CenturyLink's pole at approximate Sta. 15+65 36' RT. Jerone Mabe with CenturyLink has verified that the pole can handle the fill with required clearance and stability.
   2) Contact person for CenturyLink is Mr. Jerone Mabe at (276) 340–9593.

B) Surry Telephone – Telephone
   1) Surry Telephone has aerial cables, poles and pedestals in joint use with CenturyLink and is not in conflict.
   2) Contact person for Surry Telephone is Mr. Andy Hull at (336) 374–4502

C) Duke Energy – Power
   1) Duke Energy will remove the aerial power lines, poles and guys on the east and west side of the bridge and reroute power and place new poles with guys as necessary. This work will be completed by the availability date.
   2) Contact person for Duke Energy is Ms. Lydia Hoots at (336) 917–2524

D) Time Warner – Fiber Optic/ CATV
   1) Time Warner has an aerial cable attached to Duke Energy's poles and will relocate with Duke Energy.
   2) Contact person for Time Warner is Mr. Steve Wyatt at (336) 231–6104.

E) AT&T (Toll) – Telephone
   1) AT&T (Toll) has abandoned underground cables within the northerly right of way of Old US 52 and has been abandoned in place. There were underground markers visible however, the lines were not mapped on drawings.
   2) Contact person for AT&T is Mr. Jim Brooks at (336) 788–0150.

F) Town of Pilot Mountain – Waterline, and Gravity Sanitary Sewer
   1) Town of Pilot Mountain Public Works has cast 2", 4", and 6" cast waterline along the eastern side of Old Westfield Road with a 6" bridge attachment and is to be replaced as necessary. Gate valve sleeves and water meters are to be adjusted as necessary. 12" AC waterline and 8" PVC gravity sanitary sewer, and manholes are in the right of way on the eastern and western side Old US 52 and are to be removed and replaced as necessary. See UC plans for special provisions and relocation.
   2) Contact person for Town of Pilot Mountain Public Works is Mr. Ronald Holt at (336) 755–5023.

STABILIZATION REQUIREMENTS

Stabilization for this project shall comply with the time frame guidelines as specified by the NCG-010000 general construction permit effective August 3, 2011 issued by the North Carolina Department of Environment and Natural resources Division of Water Quality. Temporary or permanent ground cover stabilization shall occur within 7 calendar days from the last land-disturbing activity, with the following exceptions in which temporary or permanent ground cover shall be provided in 14 calendar days from the last land-disturbing activity:

- Slopes between 2:1 and 3:1, with a slope length of 10 ft. or less
- Slopes 3:1 or flatter, with a slope of length of 50 ft. or less
- Slopes 4:1 or flatter

The stabilization timeframe for High Quality Water (HQW) Zones shall be 7 calendar days with no exceptions for slope grades or lengths. High Quality Water Zones (HQW) Zones are defined by North Carolina Administrative Code 15A NCAC 04A.0105 (25). Temporary and permanent ground cover stabilization shall be achieved in accordance with the provisions in this contract and as directed.

PERMANENT VEGETATION ESTABLISHMENT

(2-16-12) (Rev. 10-15-13) 104 SP1 G16

Establish a permanent stand of the vegetation mixture shown in the contract. During the period between initial vegetation planting and final project acceptance, perform all work necessary to establish permanent vegetation on all erodible areas within the project limits, as well as, in borrow and waste pits. This work shall include erosion control device maintenance and installation, repair seeding and mulching, supplemental seeding and mulching, mowing, and fertilizer topdressing, as directed. All work shall be performed in accordance with the applicable section of the *2012 Standard Specifications*. All work required for initial vegetation planting shall be performed as a part of the work necessary for the completion and acceptance of the Intermediate Contract Time (ICT). Between the time of ICT and Final Project acceptance,

or otherwise referred to as the vegetation establishment period, the Department will be responsible for preparing the required National Pollutant Discharge Elimination System (NPDES) inspection records.

Once the Engineer has determined that the permanent vegetation establishment requirement has been achieved at an 80% vegetation density (the amount of established vegetation per given area to stabilize the soil) and no erodible areas exist within the project limits, the Contractor will be notified to remove the remaining erosion control devices that are no longer needed. The Contractor will be responsible for, and shall correct any areas disturbed by operations performed in permanent vegetation establishment and the removal of temporary erosion control measures, whether occurring prior to or after placing traffic on the project.

Payment for *Response for Erosion Control, Seeding and Mulching, Repair Seeding, Supplemental Seeding, Mowing, Fertilizer Topdressing, Silt Excavation,* and *Stone for Erosion Control* will be made at contract unit prices for the affected items. Work required that is not represented by contract line items will be paid in accordance with Articles 104-7 or 104-3 of the *2012 Standard Specifications*. No additional compensation will be made for maintenance and removal of temporary erosion control items.

SEEDING AND MULCHING (West)

The kinds of seed and fertilizer, and the rates of application of seed, fertilizer, and limestone, shall be as stated below. During periods of overlapping dates, the kind of seed to be used shall be determined. All rates are in pounds per acre.

Shoulder and Median Areas

August 1 - June 1		**May 1 - September 1**	
20#	Kentucky Bluegrass	20#	Kentucky Bluegrass
75#	Hard Fescue	75#	Hard Fescue
25#	Rye Grain	10#	German or Browntop Millet
500#	Fertilizer	500#	Fertilizer
4000#	Limestone	4000#	Limestone

Areas Beyond the Mowing Pattern, Waste and Borrow Areas:

August 1 - June 1		**May 1 - September 1**	
100#	Tall Fescue	100#	Tall Fescue
15#	Kentucky Bluegrass	15#	Kentucky Bluegrass
30#	Hard Fescue	30#	Hard Fescue
25#	Rye Grain	10#	German or Browntop Millet
500#	Fertilizer	500#	Fertilizer
4000#	Limestone	4000#	Limestone

Approved Tall Fescue Cultivars

2nd Millennium	Duster	Magellan	Rendition
Avenger	Endeavor	Masterpiece	Scorpion

Barlexas	Escalade	Matador	Shelby
Barlexas II	Falcon II, III, IV & V	Matador GT	Signia
Barrera	Fidelity	Millennium	Silverstar
Barrington	Finesse II	Montauk	Southern Choice II
Biltmore	Firebird	Mustang 3	Stetson
Bingo	Focus	Olympic Gold	Tarheel
Bravo	Grande II	Padre	Titan Ltd
Cayenne	Greenkeeper	Paraiso	Titanium
Chapel Hill	Greystone	Picasso	Tomahawk
Chesapeake	Inferno	Piedmont	Tacer
Constitution	Justice	Pure Gold	Trooper
Chipper	Jaguar 3	Prospect	Turbo
Coronado	Kalahari	Quest	Ultimate
Coyote	Kentucky 31	Rebel Exeda	Watchdog
Davinci	Kitty Hawk	Rebel Sentry	Wolfpack
Dynasty	Kitty Hawk 2000	Regiment II	
Dominion	Lexington	Rembrandt	

Approved Kentucky Bluegrass Cultivars:

Alpine	Bariris	Envicta	Rugby
Apollo	Bedazzled	Impact	Rugby II
Arcadia	Bordeaux	Kenblue	Showcase
Arrow	Champagne	Midnight	Sonoma
Award	Chicago II	Midnight II	

Approved Hard Fescue Cultivars:

Chariot	Nordic	Rhino	Warwick
Firefly	Oxford	Scaldis II	
Heron	Reliant II	Spartan II	
Minotaur	Reliant IV	Stonehenge	

On cut and fill slopes 2:1 or steeper add 20# Sericea Lespedeza January 1 - December 31.

Fertilizer shall be 10-20-20 analysis. A different analysis of fertilizer may be used provided the 1-2-2 ratio is maintained and the rate of application adjusted to provide the same amount of plant food as a 10-20-20 analysis and as directed.

TEMPORARY SEEDING

Fertilizer shall be the same analysis as specified for *Seeding and Mulching* and applied at the rate of 400 pounds and seeded at the rate of 50 pounds per acre. German Millet, or Browntop Millet shall be used in summer months and rye grain during the remainder of the year. The Engineer will determine the exact dates for using each kind of seed.

BASIS OF PAYMENT

Payment for "Seeding and Mulching" will be included in the lump sum bid price for "Excavation and Embankment". This price shall be full compensation for all materials, tools, equipment, labor, and for all incidentals necessary to complete the work.

FERTILIZER TOPDRESSING

Fertilizer used for topdressing shall be 16-8-8 grade and shall be applied at the rate of 500 pounds per acre. A different analysis of fertilizer may be used provided the 2-1-1 ratio is maintained and the rate of application adjusted to provide the same amount of plant food as 16-8-8 analysis and as directed.

SUPPLEMENTAL SEEDING

The kinds of seed and proportions shall be the same as specified for *Seeding and Mulching*, and the rate of application may vary from 25# to 75# per acre. The actual rate per acre will be determined prior to the time of topdressing and the Contractor will be notified in writing of the rate per acre, total quantity needed, and areas on which to apply the supplemental seed. Minimum tillage equipment, consisting of a sod seeder shall be used for incorporating seed into the soil as to prevent disturbance of existing vegetation. A clodbuster (ball and chain) may be used where degree of slope prevents the use of a sod seeder.

MOWING

The minimum mowing height on this project shall be six inches.

MINIMIZE REMOVAL OF VEGETATION

The Contractor shall minimize removal of vegetation at stream banks and disturbed areas within the project limits as directed.

STOCKPILE AREAS

The Contractor shall install and maintain erosion control devices sufficient to contain sediment around any erodible material stockpile areas as directed.

ACCESS AND HAUL ROADS

At the end of each working day, the Contractor shall install or re-establish temporary diversions or earth berms across access/haul roads to direct runoff into sediment devices. Silt fence sections that are temporarily removed shall be reinstalled across access/haul roads at the end of each working day.

WASTE AND BORROW SOURCES

Payment for temporary erosion control measures, except those made necessary by the Contractor's own negligence or for his own convenience, will be paid for at the appropriate contract unit price for the devices or measures utilized in borrow sources and waste areas.

No additional payment will be made for erosion control devices or permanent seeding and mulching in any commercial borrow or waste pit. All erosion and sediment control practices that may be required on a commercial borrow or waste site will be done at the Contractor's expense.

RESPONSE FOR EROSION CONTROL

Description

Furnish the labor, materials, tools and equipment necessary to move personnel, equipment, and supplies to the project necessary for the pursuit of any or all of the following work as shown herein, by an approved subcontractor.

Section	Erosion Control Item	Unit
1605	Temporary Silt Fence	LF
SP	Special Sediment Control Fence	LF/TON
1615	Temporary Mulching	ACR
1620	Seed - Temporary Seeding	LB
1620	Fertilizer - Temporary Seeding	TN
1631	Matting for Erosion Control	SY
SP	Coir Fiber Mat	SY
SP	Coir Fiber Baffles	LF
SP	Permanent Soil Reinforcement Mat	SY
1660	Seeding and Mulching	ACR
1661	Seed - Repair Seeding	LB
1661	Fertilizer - Repair Seeding	TON
1662	Seed - Supplemental Seeding	LB
1665	Fertilizer Topdressing	TON
SP	Safety/Highly Visible Fencing	LF
SP	Response for Erosion Control	EA

Construction Methods

Provide an approved subcontractor who performs an erosion control action as described in Form 1675. Each erosion control action may include one or more of the above work items.

Measurement and Payment

Response for Erosion Control will be measured and paid for by counting the actual number of times the subcontractor moves onto the project, including borrow and waste sites, and satisfactorily completes an erosion control action described in Form 1675. The provisions of Article 104-5 of the *Standard Specifications* will not apply to this item of work.

Payment will be made under:

Pay Item	**Pay Unit**
Response for Erosion Control	Each

COIR FIBER MAT

Description

Furnish material, install and maintain coir fiber mat in locations shown on the plans or in locations as directed. Work includes providing all materials, excavating and backfilling, and placing and securing coir fiber mat with stakes, steel reinforcement bars or staples as directed.

Materials

Provide coir fiber mat to meet the following requirements:

100% coconut fiber (coir) twine woven into high strength matrix

Thickness -	0.30 in. minimum
Tensile Strength	1348 x 626 lb/ft minimum
Elongation	34% x 38% maximum
Flexibility (mg-cm)	65030 x 29590
Flow Velocity	Observed 11 ft/sec
Weight	20 oz/SY
Size	6.6 x 164 ft (120 SY)
“C” Factor	0.002
Open Area (measured)	50%

Anchors: Stakes, reinforcement bars, or staples shall be used as anchors.

Wooden Stakes:
Provide hardwood stakes 12"- 24" long with a 2" x 2" nominal square cross section. One end of the stake must be sharpened or beveled to facilitate driving through the coir fiber mat and down into the underlying soil. The other end of the stake needs to have a 1"- 2" long head at the top with a 1"- 2" notch following to catch and secure the coir fiber mat.

Steel Reinforcement Bars:
Provide uncoated #10 steel reinforcement bars 24" nominal length. The bars shall have a 4" diameter bend at one end with a 4" straight section at the tip to catch and secure the coir fiber mat.

Staples:

Provide staples made of 0.125" diameter new steel wire formed into a *u* shape not less than 12" in length with a throat of 1" in width.

Construction Methods

Place the coir fiber mat immediately upon final grading. Provide a smooth soil surface free from stones, clods, or debris that will prevent the contact of the mat with the soil. Unroll the mat and apply without stretching such that it will lie smoothly but loosely on the soil surface.

For stream relocation applications, take care to preserve the required line, grade, and cross section of the area covered. Bury the top slope end of each piece of mat in a narrow trench at least 6 in. deep and tamp firmly. Where one roll of matting ends and a second roll begins, overlap the end of the upper roll over the buried end of the second roll so there is a 6 in. overlap. Construct check trenches at least 12 in. deep every 50 ft.longitudinally along the edges of the mat or as directed. Fold over and bury mat to the full depth of the trench, close and tamp firmly. Overlap mat at least 6 in. where 2 or more widths of mat are installed side by side.

Place anchors across the mat at the ends approximately 1 ft. apart. Place anchors along the outer edges and down the center of the mat 3 ft. apart.

Adjustments in the trenching or anchoring requirements to fit individual site conditions may be required.

Measurement and Payment

Coir Fiber Mat will be measured and paid for as the actual number of square yards measured along the surface of the ground over which coir fiber mat is installed and accepted.

No measurement will be made for anchor items.

Payment will be made under:

Pay Item	**Pay Unit**
Coir Fiber Mat	Square Yard

PERMANENT SOIL REINFORCEMENT MAT

Description

This work consists of furnishing and placing Permanent Soil Reinforcement Mat, of the type specified, over previously prepared areas as directed.

Materials

The product shall be a permanent erosion control reinforcement mat and shall be constructed of synthetic or a combination of coconut and synthetic fibers evenly distributed throughout the mat between a bottom UV stabilized netting and a heavy duty UV stabilized top net. The matting shall be stitched together with UV stabilized polypropylene thread to form a permanent three-dimensional structure. The mat shall have the following minimum physical properties:

Property	Test Method	Value	Unit
Light Penetration	ASTM D6567	9	%
Thickness	ASTM D6525	0.40	in
Mass Per Unit Area	ASTM D6566	0.55	lb/sy
Tensile Strength	ASTM D6818	385	lb/ft
Elongation (Maximum)	ASTM D6818	49	%
Resiliency	ASTM D1777	>70	%
UV Stability *	ASTM D4355	>80	%
Porosity (Permanent Net)	ECTC Guidelines	>85	%
Maximum Permissible Shear Stress (Vegetated)	Performance Bench Test	>8.0	lb/ft2
Maximum Allowable Velocity (Vegetated)	Performance Bench Test	>16.0	ft/s

*ASTM D1682 Tensile Strength and % strength retention of material after 1000 hours of exposure.

Submit a certification (Type 1, 2, or 3) from the manufacturer showing:

(A) the chemical and physical properties of the mat used, and
(B) conformance of the mat with this specification.

Construction Methods

Matting shall be installed in accordance with Subarticle 1631-3(B) of the *Standard Specifications*.

All areas to be protected with the mat shall be brought to final grade and seeded in accordance with Section 1660 of the *Standard Specifications*. The surface of the soil shall be smooth, firm, stable and free of rocks, clods, roots or other obstructions that would prevent the mat from lying in direct contact with the soil surface. Areas where the mat is to be placed will not need to be mulched.

Measurement and Payment

Permanent Soil Reinforcement Mat will be measured and paid for as the actual number of square yards measured along the surface of the ground over which Permanent Soil Reinforcement Mat is installed and accepted. Overlaps will not be included in the measurement, and will be considered as incidental to the work. Such payment shall be full compensation for furnishing and installing the mat, including overlaps, and for all required maintenance.

Payment will be made under:

Pay Item	Pay Unit
Permanent Soil Reinforcement Mat	Square Yard

COIR FIBER WATTLES WITH POLYACRYLAMIDE (PAM)

Description

Coir Fiber Wattles are tubular products consisting of coir fibers (coconut fibers) encased in coir fiber netting. Coir Fiber Wattles are used on slopes or channels to intercept runoff and act as a

velocity break. Coir Fiber Wattles are to be placed at locations shown on the plans or as directed. Installation shall follow the detail provided in the plans and as directed. Work includes furnishing materials, installation of coir fiber wattles, matting installation, PAM application, and removing wattles.

Materials

Coir Fiber Wattle shall meet the following specifications:

100% Coir (Coconut) Fibers
Minimum Diameter 12 in.
Minimum Density 3.5 lb/ft3 +/- 10%
Net Material Coir Fiber
Net Openings 2 in. x 2 in.
Net Strength 90 lbs.
Minimum Weight 2.6 lbs./ft. +/- 10%

Anchors: Stakes shall be used as anchors.

Wooden Stakes:

Provide hardwood stakes a minimum of 2-ft. long with a 2 in. x 2 in. nominal square cross section. One end of the stake must be sharpened or beveled to facilitate driving down into the underlying soil.

Matting shall meet the requirements of Article 1060-8 of the Standard Specifications, or shall meet specifications provided elsewhere in this contract.

Provide staples made of 0.125" diameter new steel wire formed into a u shape not less than 12" in length with a throat of 1" in width.

Polyacrylamide (PAM) shall be applied in powder form and shall be anionic or neutrally charged. Soil samples shall be obtained in areas where the wattles will be placed, and from offsite material used to construct the roadway, and analyzed for the appropriate PAM flocculant to be utilized with each wattle. The PAM product used shall be listed on the North Carolina Department of Environment and Natural Resources (NCDENR) Division of Water Quality (DWQ) web site as an approved PAM product for use in North Carolina.

Construction Methods

Coir Fiber Wattles shall be secured to the soil by wire staples approximately every 1 linear foot and at the end of each section of wattle. A minimum of 4 stakes shall be installed on the downstream side of the wattle with a maximum spacing of 2 linear feet along the wattle, and according to the detail. Install a minimum of 2 stakes on the upstream side of the wattle according to the detail provided in the plans. Stakes shall be driven into the ground a minimum of 10 in. with no more than 2 in. projecting from the top of the wattle. Drive stakes at an angle according to the detail provided in the plans.

Only install coir fiber wattle(s) to a height in ditch so flow will not wash around wattle and scour ditch slopes and according to the detail provided in the plans and as directed. Overlap adjoining sections of wattles a minimum of 6 in.

Installation of matting shall be in accordance with the detail provided in the plans, and in accordance with Article 1631-3 of the *Standard Specifications*, or in accordance with specifications provided elsewhere in this contract.

Apply PAM over the lower center portion of the coir fiber wattle where the water is going to flow over at a rate of 2 ounces per wattle, and 1 ounce of PAM on matting on each side of the wattle. PAM applications shall be done during construction activities after every rainfall event that is equal to or exceeds 0.50 in.

The Contractor shall maintain the coir fiber wattles until the project is accepted or until the wattles are removed, and shall remove and dispose of silt accumulations at the wattles when so directed in accordance with the requirements of Section 1630 of the *Standard Specifications*.

Measurement and Payment

Coir Fiber Wattles will be measured and paid for by the actual number of linear feet of wattles which are installed and accepted. Such price and payment will be full compensation for all work covered by this section, including, but not limited to, furnishing all materials, labor, equipment and incidentals necessary to install the *Coir Fiber Wattles*.

Matting will be measured and paid for in accordance with Article 1631-4 of the *Standard Specifications*, or in accordance with specifications provided elsewhere in this contract.

Polyacrylamide(PAM) will be measured and paid for by the actual weight in pounds of PAM applied to the coir fiber wattles. Such price and payment will be full compensation for all work covered by this section, including, but not limited to, furnishing all materials, labor, equipment and incidentals necessary to apply the *Polyacrylamide(PAM)*.

Payment will be made under:

Pay Item	**Pay Unit**
Polyacrylamide (PAM)	Pound
Coir Fiber Wattle	Linear Foot

SIGNALS AND ITS SPECIAL PROVISIONS

(2-21-2015) SPECIAL

BD-5111V **TS-1** ***Surry* County**

Signals and Intelligent Transportation Systems
Project Special Provisions
(Version 12.4)

Prepared By:
21-Feb-15

Contents

1. 2012 STANDARD SPECIFICATIONS FOR ROADS & STRUCTURES 2
1.1. POLYMER CONCRETE (PC) JUNCTION BOXES (1091-5(B)) 2
1.2. SUBMITTAL REQUIREMENTS (1098-1(B)) 2
1.3. JUNCTION BOXES (1098-5) 2
1.4. CONTROLLERS WITH CABINETS – MATERIAL (1751-2) 2
2. SIGNAL HEADS 2
2.1. MATERIALS 2
A. General: 2
B. Vehicle Signal Heads: 4
C. Signal Cable: 6
3. CONTROLLERS WITH CABINETS 6
3.1. MATERIALS – TYPE 2070L CONTROLLERS 6
3.2. MATERIALS – GENERAL CABINETS 7
3.3. MATERIALS – TYPE 170E CABINETS 8
A. Type 170 E Cabinets General: 8
B. Type 170 E Cabinet Electrical Requirements: 8
C. Type 170 E Cabinet Physical Requirements: 16
D. Model 2018 Enhanced Conflict Monitor: 18
3.4. MATERIALS – TYPE 170 DETECTOR SENSOR UNITS 28

1. 2012 STANDARD SPECIFICATIONS FOR ROADS & STRUCTURES

The 2012 Standard Specifications are revised as follows:

1.1. Polymer Concrete (PC) Junction Boxes (1091-5(B))

Page 10-202, revise paragraph starting on line 9 to read "Provide polymer concrete (PC) boxes which have bolted covers and open bottoms. Provide vertical extensions of 6" to 12" as required by project special provisions."

Page 10-202, revise sentence beginning on line 14 to read "Other thermoplastic materials may be used for components which are not normally exposed to sunlight."

1.2. Submittal Requirements (1098-1(B))

Page 10-208, replace paragraph on line 34 with the following:

Submit for approval catalog cuts and/or shop drawings for materials proposed for use on the project. Allow 40 days for review of each submittal. Do not fabricate or order material until receipt of Engineer's approval.

Submit 4 copies of each catalog cut and/or drawing and show for each component the material description, brand name, stock-number, size, rating, manufacturing specification and the intended use (identified by labeling all components with the corresponding contract line item number). Present the submittals neatly arranged in the same order as the contract bid items. Electronic submittals of catalog cuts and drawings may be accepted in lieu of hard copies.

One hard copy and an electronic (PDF) copy of reviewed submittals will be returned to the Engineer from the ITS and Signals Unit.

1.3. Junction Boxes (1098-5)

Page 10-212, sub-Section 1098-5(C) Oversized Junction Boxes

Revise sentence to read, "Provide oversized junction boxes and covers with minimum inside dimensions of 28"(l) x 15"(w) x 22"(h)."

1.4. Controllers with Cabinets – Material (1751-2)

Page 17-37, Section 1751-2 Material

Add the following paragraph:

When the plans or specifications require a Type 2070L controller, contractor may provide a Type 2070E controller. Unless otherwise allowed by the Engineer, provide controllers of only one type.

2. SIGNAL HEADS

2.1. MATERIALS

A. General:

Fabricate vehicle signal head housings and end caps from die-cast aluminum. Fabricate 12-inch and 16-inch pedestrian signal head housings and end caps from die-cast aluminum. Fabricate 9-inch pedestrian signal head housings, end caps, and visors from virgin polycarbonate material. Provide visor mounting screws, door latches, and hinge pins fabricated from stainless steel. Provide interior screws, fasteners, and metal parts fabricated from stainless steel or corrosion resistant material.

Fabricate tunnel and traditional visors from sheet aluminum.

Paint all surfaces inside and outside of signal housings and doors. Paint outside surfaces of tunnel and traditional visors, messenger cable mounting assemblies, pole and pedestal mounting assemblies, and pedestrian pushbutton housings. Have electrostatically-applied, fused-polyester paint in highway yellow (Federal Standard 595C, Color Chip Number 13538) a minimum of 2.5 to 3.5 mils thick. Do not apply paint to the latching hardware or rigid vehicle signal head mounting brackets for mast-arm attachments.

Have the interior surfaces of tunnel and traditional visors painted an alkyd urea black synthetic baking enamel with a minimum gloss reflectance and meeting the requirements of MIL-E-10169, "Enamel Heat Resisting, Instrument Black."

Where required, provide polycarbonate signal heads and visors that comply with the provisions pertaining to the aluminum signal heads listed on the QPL with the following exceptions:

Fabricate signal head housings, end caps, and visors from virgin polycarbonate material. Provide UV stabilized polycarbonate plastic with a minimum thickness of 0.1 ± 0.01 inches that is highway yellow (Federal Standard 595C, Color Chip 13538). Ensure the color is incorporated into the plastic material before molding the signal head housings and end caps. Ensure the plastic formulation provides the following physical properties in the assembly (tests may be performed on separately molded specimens):

Test	Required	Method
Specific Gravity	1.17 minimum	ASTM D 792
Flammability	Self-extinguishing	ASTM D 635
Tensile Strength, yield, PSI	8500 minimum	ASTM D 638
Izod impact strength, ft-lb/in [notched, 1/8 inch]	12 minimum	ASTM D 256

For pole mounting, provide side of pole mounting assemblies with framework and all other hardware necessary to make complete, watertight connections of the signal heads to the poles and pedestals. Fabricate the mounting assemblies and frames from aluminum with all necessary hardware, screws, washers, etc. to be stainless steel. Provide mounting fittings that match the positive locking device on the signal head with the serrations integrally cast into the brackets. Provide upper and lower pole plates that have a 1 ¼-inch vertical conduit entrance hubs with the hubs capped on the lower plate and 1 ½-inch horizontal hubs. Ensure that the assemblies provide rigid attachments to poles and pedestals so as to allow no twisting or swaying of the signal heads. Ensure that all raceways are free of sharp edges and protrusions, and can accommodate a minimum of ten Number 14 AWG conductors.

For pedestal mounting, provide a post-top slipfitter mounting assembly that matches the positive locking device on the signal head with serrations integrally cast into the slipfitter. Provide stainless steel hardware, screws, washers, etc. Provide a minimum of six 3/8 X 3/4-inch long square head bolts for attachment to pedestal. Provide a center post for multi-way slipfitters.

For light emitting diode (LED) traffic signal modules, provide the following requirements for inclusion on the Department's Qualified Products List for traffic signal equipment.

1. Sample submittal,
2. Third-party independent laboratory testing results for each submitted module with evidence of testing and conformance with all of the Design Qualification Testing specified in section 6.4 of each of the following Institute of Transportation Engineers (ITE) specifications:

- Vehicle Traffic Control Signal Heads – Light Emitting Diode (LED) Circular Signal Supplement
- Vehicle Traffic Control Signal Heads – Light Emitting Diode (LED) Vehicle Arrow Traffic Signal Supplement
- Pedestrian Traffic Control Signal Indications –Light Emitting Diode (LED) Signal Modules.

(Note: The Department currently recognizes two approved independent testing laboratories. They are Intertek ETL Semko and Light Metrics, Incorporated with Garwood Laboratories. Independent laboratory tests from other laboratories may be considered as part of the QPL submittal at the discretion of the Department,

3. Evidence of conformance with the requirements of these specifications,
4. A manufacturer's warranty statement in accordance with the required warranty, and
5. Submittal of manufacturer's design and production documentation for the model, including but not limited to, electrical schematics, electronic component values, proprietary part numbers, bill of materials, and production electrical and photometric test parameters.
6. Evidence of approval of the product to bear the Intertek ETL Verified product label for LED traffic signal modules.

In addition to meeting the performance requirements for the minimum period of 60 months, provide a written warranty against defects in materials and workmanship for the modules for a period of 60 months after installation of the modules. During the warranty period, the manufacturer must provide new replacement modules within 45 days of receipt of modules that have failed at no cost to the State. Repaired or refurbished modules may not be used to fulfill the manufacturer's warranty obligations. Provide manufacturer's warranty documentation to the Department during evaluation of product for inclusion on Qualified Products List (QPL).

B. Vehicle Signal Heads:

Comply with the ITE standard "Vehicle Traffic Control Signal Heads". Provide housings with provisions for attaching backplates.

Provide visors that are 8 inches in length for 8-inch vehicle signal head sections. Provide visors that are 10 inches in length for 12-inch vehicle signal heads.

Provide a termination block with one empty terminal for field wiring for each indication plus one empty terminal for the neutral conductor. Have all signal sections wired to the termination block. Provide barriers between the terminals that have terminal screws with a minimum Number 8 thread size and that will accommodate and secure spade lugs sized for a Number 10 terminal screw.

Mount termination blocks in the yellow signal head sections on all in-line vehicle signal heads. Mount the termination block in the red section on five-section vehicle signal heads.

Furnish vehicle signal head interconnecting brackets. Provide one-piece aluminum brackets less than 4.5 inches in height and with no threaded pipe connections. Provide hand holes on the bottom of the brackets to aid in installing wires to the signal heads. Lower brackets that carry no wires and are used only for connecting the bottom signal sections together may be flat in construction.

For messenger cable mounting, provide messenger cable hangers, wire outlet bodies, balance adjusters, bottom caps, wire entrance fitting brackets, and all other hardware necessary to make complete, watertight connections of the vehicle signal heads to the messenger cable. Fabricate mounting assemblies from malleable iron or steel and provide serrated rings made of aluminum. Provide messenger cable hangers and balance adjusters that are galvanized before being painted. Fabricate balance adjuster eyebolt and eyebolt nut from stainless steel or galvanized malleable iron. Provide messenger cable hangers with U-bolt clamps. Fabricate washers, screws, bolts, clevis pins, cotter pins, nuts, and U-bolt clamps from stainless steel.

For mast-arm mounting, provide rigid vehicle signal head mounting brackets and all other hardware necessary to make complete, watertight connections of the vehicle signal heads to the mast arms and to provide a means for vertically adjusting the vehicle signal heads to proper alignment. Fabricate the mounting assemblies from aluminum, and provide serrated rings made of aluminum. Provide stainless steel cable attachment assemblies to secure the brackets to the mast arms. Ensure all fastening hardware and fasteners are fabricated from stainless steel.

Provide LED vehicular traffic signal modules (hereafter referred to as modules) that consist of an assembly that uses LEDs as the light source in lieu of an incandescent lamp for use in traffic signal sections. Use LEDs that are aluminum indium gallium phosphorus (AlInGaP) technology for red and yellow indications and indium gallium nitride (InGaN) for green indications. Install the ultra bright type LEDs that are rated for 100,000 hours of continuous operation from -40°F to +165°F. Design modules to have a minimum useful life of 60 months and to meet all parameters of this specification during this period of useful life.

For the modules, provide spade terminals crimped to the lead wires and sized for a #10 screw connection to the existing terminal block in a standard signal head. Do not provide other types of crimped terminals with a spade adapter.

Ensure the power supply is integral to the module assembly. On the back of the module, permanently mark the date of manufacture (month & year) or some other method of identifying date of manufacture.

Tint the red, yellow and green lenses to correspond with the wavelength (chromaticity) of the LED. Transparent tinting films are unacceptable. Provide a lens that is integral to the unit with a smooth outer surface.

1. LED Circular Signal Modules:

Provide modules in the following configurations: 12-inch circular sections, and 8-inch circular sections. All makes and models of LED modules purchased for use on the State Highway System shall appear on the current NCDOT Traffic Signal Qualified Products List (QPL).

Provide the manufacturer's model number and the product number (assigned by the Department) for each module that appears on the 2012 or most recent Qualified Products List. In addition, provide manufacturer's certification in accordance with Article 106-3 of the *Standard Specifications,* that each module meets or exceeds the ITE "Vehicle Traffic Control Signal Heads – Light Emitting Diode (LED) Circular Signal Supplement" dated June 27, 2005 (hereafter referred to as VTCSH Circular Supplement) and other requirements stated in this specification.

Provide modules that meet the following requirements when tested under the procedures outlined in the VTCSH Circular Supplement:

Module Type	Max. Wattage at 165° F	Nominal Wattage at 77° F
12-inch red circular	17	11
8-inch red circular	13	8
12-inch green circular	15	15
8-inch green circular	12	12

For yellow circular signal modules, provide modules tested under the procedures outlined in the VTCSH Circular Supplement to insure power required at 77° F is 22 Watts or less for the 12-inch circular module and 13 Watts or less for the 8-inch circular module.

Note: Use a wattmeter having an accuracy of ±1% to measure the nominal wattage and maximum wattage of a circular traffic signal module. Power may also be derived from voltage, current and power factor measurements.

C. Signal Cable:

Furnish 16-4 and 16-7 signal cable that complies with IMSA specification 20-1 except provide the following conductor insulation colors:

- For 16-4 cable: white, yellow, red, and green
- For 16-7 cable: white, yellow, red, green, yellow with black stripe tracer, red with black stripe tracer, and green with black stripe tracer. Apply continuous stripe tracer on conductor insulation with a longitudinal or spiral pattern.

Provide a ripcord to allow the cable jacket to be opened without using a cutter. IMSA specification 19-1 will not be acceptable. Provide a cable jacket labeled with the IMSA specification number and provide conductors constructed of stranded copper.

3. CONTROLLERS WITH CABINETS

3.1. MATERIALS – TYPE 2070L CONTROLLERS

Conform to CALTRANS *Transportation Electrical Equipment Specifications* (TEES) (dated August 16, 2002, plus Errata 1 dated October 27, 2003 and Errata 2 dated June 08, 2004) except as required herein.

Furnish Model 2070L controllers. Ensure that removal of the CPU module from the controller will place the intersection into flash.

The Department will provide software at the beginning of the burning-in period. Contractor shall give 5 working days notice before needing software. Program software provided by the Department.

Provide model 2070L controllers with the latest version of OS9 operating software and device drivers, composed of the unit chassis and at a minimum the following modules and assemblies:

- MODEL 2070 1B, CPU Module, Single Board
- MODEL 2070-2A, Field I/O Module (FI/O)
  - Note: Configure the Field I/O Module to disable both the External WDT Shunt/Toggle Switch and SP3 (SP3 active indicator is “off”)
- MODEL 2070-3B, Front Panel Module (FP), Display B (8x40)

- MODEL 2070-4A, Power Supply Module, 10 AMP
- MODEL 2070-7A, Async Serial Com Module (9-pin RS-232)

Furnish one additional MODEL 2070-7A, Async Serial Com Module (9-pin RS-232) for all master controller locations.

For each master location and central control center, furnish a U.S. Robotics V.92 or approved equivalent auto-dial/auto-answer external modem to accomplish the interface to the Department-furnished microcomputers. Include all necessary hardware to ensure telecommunications.

3.2. MATERIALS – GENERAL CABINETS

Provide a moisture resistant coating on all circuit boards.

Provide one 20 mm diameter radial lead UL-recognized metal oxide varistor (MOV) between each load switch field terminal and equipment ground. Electrical performance is outlined below.

PROPERTIES OF MOV SURGE PROTECTOR	
Maximum Continuous Applied Voltage at 185° F	150 VAC (RMS) 200 VDC
Maximum Peak 8x20µs Current at 185° F	6500 A
Maximum Energy Rating at 185° F	80 J
Voltage Range 1 mA DC Test at 77° F	212-268 V
Max. Clamping Voltage 8x20µs, 100A at 77° F	395 V
Typical Capacitance (1 MHz) at 77° F	1600 pF

Provide a power line surge protector that is a two-stage device that will allow connection of the radio frequency interference filter between the stages of the device. Ensure that a maximum continuous current is at least 10A at 120V. Ensure that the device can withstand a minimum of 20 peak surge current occurrences at 20,000A for an 8x20 microsecond waveform. Provide a maximum clamp voltage of 395V at 20,000A with a nominal series inductance of 200µh. Ensure that the voltage does not exceed 395V. Provide devices that comply with the following:

Frequency (Hz)	Minimum Insertion Loss (dB)
60	0
10,000	30
50,000	55
100,000	50
500,000	50
2,000,000	60
5,000,000	40
10,000,000	20
20,000,000	25

3.3. MATERIALS – TYPE 170E CABINETS

A. Type 170 E Cabinets General:

Conform to the city of Los Angeles' Specification No. 54-053-08, *Traffic Signal Cabinet Assembly Specification* (dated July 2008), except as required herein.

Furnish model 336S pole mounted cabinets configured for 8 vehicle phases, 4 pedestrian phases, and 6 overlaps. Do not reassign load switches to accommodate overlaps unless shown on electrical details. Provide 336S pole mounted cabinets that are 46" high with 40" high internal rack assemblies.

Furnish model 332 base mounted cabinets configured for 8 vehicle phases, 4 pedestrian phases, and 6 overlaps. When overlaps are required, provide auxiliary output files for the overlaps. Do not reassign load switches to accommodate overlaps unless shown on electrical details.

Provide model 200 load switches, model 222 loop detector sensors, model 252 AC isolators, and model 242 DC isolators according to the electrical details. As a minimum, provide one (1) model 2018 conflict monitor, one (1) model 206L power supply unit, two (2) model 204 flashers, one (1) DC isolator (located in slot I14), and four (4) model 430 flash transfer relays (provide seven (7) model 430 flash transfer relays if auxiliary output file is installed) with each cabinet.

B. Type 170 E Cabinet Electrical Requirements:

Provide a cabinet assembly designed to ensure that upon leaving any cabinet switch or conflict monitor initiated flashing operation, the controller starts up in the programmed start up phases and start up interval.

Furnish two sets of non-fading cabinet wiring diagrams and schematics in a paper envelope or container and placed in the cabinet drawer.

All AC+ power is subject to radio frequency signal suppression.

Provide surge suppression in the cabinet for each type of cabinet device. Provide surge protection for the full capacity of the cabinet input file. Provide surge suppression devices that

operate properly over a temperature range of -40º F to +185º F. Ensure the surge suppression devices provide both common and differential modes of protection.

Provide a pluggable power line surge protector that is installed on the back of the PDA (power distribution assembly) chassis to filter and absorb power line noise and switching transients. Ensure the device incorporates LEDs for failure indication and provides a dry relay contact closure for the purpose of remote sensing. Ensure the device meets the following specifications:

Peak Surge Current (Single pulse, 8x20µs)……..20,000A

Occurrences (8x20µs waveform)……..10 minimum @ 20,000A

Maximum Clamp Voltage……395VAC

Operating Current……..15 amps

Response Time……..< 5 nanoseconds

Provide a loop surge suppressor for each set of loop terminals in the cabinet. Ensure the device meets the following specifications:

Peak Surge Current (6 times, 8x20µs)

(Differential Mode)……400A

(Common Mode)……1,000A

Occurrences (8x20µs waveform)……..500 min @ 200A

Maximum Clamp Voltage

(Differential Mode @400A)……35V

(Common Mode @1,000A)……35V

Response Time……..< 5 nanoseconds

Maximum Capacitance……..35 pF

Provide a data communications surge suppressor for each communications line entering or leaving the cabinet. Ensure the device meets the following specifications:

Peak Surge Current (Single pulse, 8x20µs)……..10,000A

Occurrences (8x20µs waveform)……..100 min @ 2,000A

Maximum Clamp Voltage……Rated for equipment protected

Response Time……..< 1 nanosecond

Maximum Capacitance……1,500 pF

Maximum Series Resistance……15Ω

Provide a DC signal surge suppressor for each DC input channel in the cabinet. Ensure the device meets the following specifications:

Peak Surge Current (Single pulse, 8x20µs)……..10,000A

Occurrences (8x20µs waveform)……..100 @ 2,000A

Maximum Clamp Voltage……..30V

Response Time……..< 1 nanosecond

Provide a 120 VAC signal surge suppressor for each AC+ interconnect signal input. Ensure the device meets the following specifications:

Peak Surge Current (Single pulse, 8x20µs)……..20,000A

Maximum Clamp Voltage……350VAC

Response Time……..< 200 nanoseconds

Discharge Voltage……<200 Volts @ 1,000A

Insulation Resistance……≥100 MΩ

Provide conductors for surge protection wiring that are of sufficient size (ampacity) to withstand maximum overcurrents which could occur before protective device thresholds are attained and current flow is interrupted.

If additional surge protected power outlets are needed to accommodate fiber transceivers, modems, etc., install a UL listed, industrial, heavy-duty type power outlet strip with a minimum rating of 15 A / 125 VAC, 60 Hz. Provide a strip that has a minimum of 3 grounded outlets. Ensure the power outlet strip plugs into one of the controller unit receptacles located on the rear of the PDA. Ensure power outlet strip is mounted securely; provide strain relief if necessary.

Provide a door switch in the front and a door switch in the rear of the cabinet that will provide the controller unit with a Door Ajar alarm when either the front or the rear door is open. Ensure the door switches apply DC ground to the Input File when either the front door or the rear door is open.

BD-5111V **TS-11** ***Surry* County**

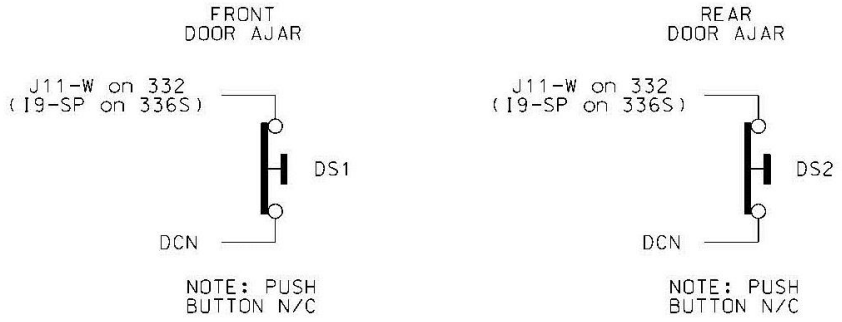

Furnish a fluorescent fixture in the rear across the top of the cabinet and another fluorescent fixture in the front across the top of the cabinet at a minimum. Ensure that the fixtures provide sufficient light to illuminate all terminals, labels, switches, and devices in the cabinet. Conveniently locate the fixtures so as not to interfere with a technician's ability to perform work on any devices or terminals in the cabinet. Provide a protective diffuser to cover exposed bulbs. Install 16 watt T-4 lamps in the fluorescent fixtures. Provide a door switch to provide power to each fixture when the respective door is open. Wire the fluorescent fixtures to the 15 amp ECB (equipment circuit breaker).

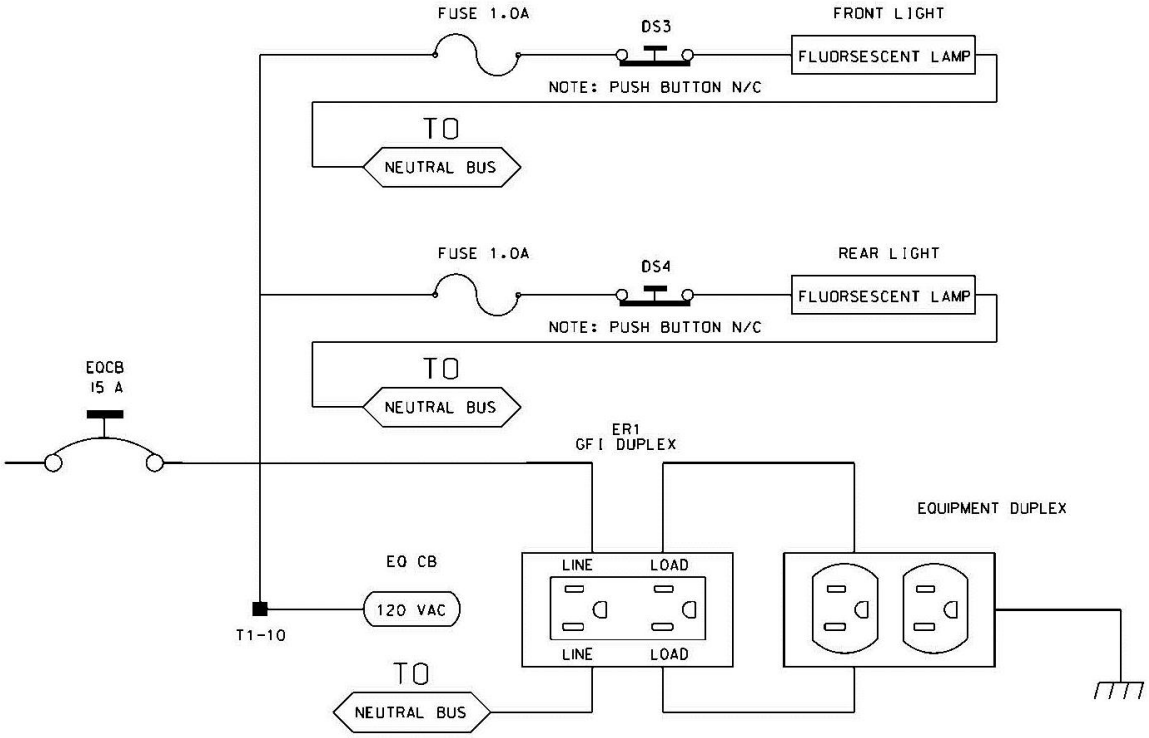

Furnish a police panel with a police panel door. For model 336S cabinets, mount the police panel on the rear door. Ensure that the police panel door permits access to the police panel when the main door is closed. Ensure that no rainwater can enter the cabinet even with the police panel door open. Provide a police panel door hinged on the right side as viewed from the front. Provide a police panel

door lock that is keyed to a standard police/fire call box key. In addition to the requirements of LA Specification No. 54-053-08, provide the police panel with a toggle switch connected to switch the intersection operation between normal stop-and-go operation (AUTO) and manual operation (MANUAL). Ensure that manual control can be implemented using inputs and software such that the controller provides full programmed clearance times for the yellow clearance and red clearance for each phase while under manual control.

Provide a 1/4-inch locking phone jack in the police panel for a hand control to manually control the intersection. Provide sufficient room in the police panel for storage of a hand control and cord.

Ensure the 336S cabinet Input File is wired as follows:

336S Cabinet Port-Bit/C-1 Pin Assignment														
Slot #	1	2	3	4	5	6	7	8	9	10	11	12	13	14
C-1 (Spares)	59	60	61	62	63	64	65	66	75	76	77	78	79	80
Port	3-2	1-1	3-4	1-3	3-1	1-2	3-3	1-4	2-5	5-5	5-6	5-1	5-2	6-7
C-1	56	39	58	41	55	40	57	42	51	71	72	67	68	81
Port	2-1	1-5	2-3	1-7	2-2	1-6	2-4	1-8	2-6	5-7	5-8	5-3	5-4	6-8
C-1	47	43	49	45	48	44	50	46	52	73	74	69	70	82

For model 332 base mounted cabinets, ensure terminals J14-E and J14-K are wired together on the rear of the Input File. Connect TB9-12 (J14 Common) on the Input Panel to T1-2 (AC-) on the rear of the PDA.

Provide detector test switches mounted at the top of the cabinet rack or other convenient location which may be used to place a call on each of eight phases based on the chart below. Provide three positions for each switch: On (place call), Off (normal detector operation), and Momentary On (place momentary call and return to normal detector operation after switch is released). Ensure that the switches are located such that the technician can read the controller display and observe the intersection.

Connect detector test switches for cabinets as follows:

BD-5111V

TS-13

Surry County

336S Cabinet		332 Cabinet	
Detector Call Switches	**Terminals**	**Detector Call Switches**	**Terminals**
Phase 1	I1-F	Phase 1	I1-W
Phase 2	I2-F	Phase 2	I4-W
Phase 3	I3-F	Phase 3	I5-W
Phase 4	I4-F	Phase 4	I8-W
Phase 5	I5-F	Phase 5	J1-W
Phase 6	I6-F	Phase 6	J4-W
Phase 7	I7-F	Phase 7	J5-W
Phase 8	I8-F	Phase 8	J8-W

Provide the PCB 28/56 connector for the conflict monitor unit (CMU) with 28 independent contacts per side, dual-sided with 0.156 inch contact centers. Provide the PCB 28/56 connector contacts with solder eyelet terminations. Ensure all connections to the PCB 28/56 connector are soldered to the solder eyelet terminations.

Ensure that all cabinets have the CMU connector wired according to the 332 cabinet connector pin assignments (include all wires for auxiliary output file connection). Wire pins 13, 16, R, and U of the CMU connector to a separate 4 pin plug, P1, as shown below. Provide a second plug, P2, which will mate with P1 and is wired to the auxiliary output file as shown below. Provide an additional plug, P3, which will mate with P1 and is wired to the pedestrian yellow circuits as shown below. When no auxiliary output file is installed in the cabinet, provide wires for the green and yellow inputs for channels 11, 12, 17, and 18, the red inputs for channels 17 and 18, and the wires for the P2 plug. Terminate the two-foot wires with ring type lugs, insulated, and bundled for optional use.

	P1		P2		P3	
PIN	**FUNCTION**	**CONN TO**	**FUNCTION**	**CONN TO**	**FUNCTION**	**CONN TO**
1	CH-9G	CMU-13	OLA-GRN	A123	2P-YEL	114
2	CH-9Y	CMU-16	OLA-YEL	A122	4P-YEL	105
3	CH-10G	CMU-R	OLB-GRN	A126	6P-YEL	120
4	CH-10Y	CMU-U	OLB-YEL	A125	8P-YEL	111

Do not provide the P20 terminal assembly (red monitor board) or red interface ribbon cable as specified in LA Specification No. 54-053-08.

Provide a P20 connector that mates with and is compatible with the red interface connector mounted on the front of the conflict monitor. Ensure that the P20 connector and the red interface

connector on the conflict monitor are center polarized to ensure proper connection. Ensure that removal of the P20 connector will cause the conflict monitor to recognize a latching fault condition and place the cabinet into flashing operation.

Wire the P20 connector to the output file and auxiliary output file using 22 AWG stranded wires. Ensure the length of these wires is a minimum of 42 inches in length. Provide a durable braided sleeve around the wires to organize and protect the wires.

Wire the P20 connector to the traffic signal red displays to provide inputs to the conflict monitor as shown below. Ensure the pedestrian Don't Walk circuits are wired to channels 13 through 16 of the P20 connector. When no auxiliary output file is installed in the cabinet, provide wires for channels 9 through 12 reds. Provide a wire for special function 1. Terminate the unused wires with ring type lugs, insulated, and bundled for optional use.

	P20 Connector				
PIN	**FUNCTION**	**CONN TO**	**PIN**	**FUNCTION**	**CONN TO**
1	Channel 15 Red	119	2	Channel 16 Red	110
3	Channel 14 Red	104	4	Chassis GND	01-9
5	Channel 13 Red	113	6	N/C	
7	Channel 12 Red	AUX 101	8	Spec Function 1	
9	Channel 10 Red	AUX 124	10	Channel 11 Red	AUX 114
11	Channel 9 Red	AUX 121	12	Channel 8 Red	107
13	Channel 7 Red	122	14	Channel 6 Red	134
15	Channel 5 Red	131	16	Channel 4 Red	101
17	Channel 3 Red	116	18	Channel 2 Red	128
19	Channel 1 Red	125	20	Red Enable	01-14

Ensure the controller unit outputs to the auxiliary output file are pre-wired to the C5 connector. When no auxiliary output file is installed in the cabinet, connect the C5 connector to a storage socket located on the Input Panel or on the rear of the PDA.

Do not wire pin 12 of the load switch sockets.

In addition to the requirements of LA Specification No. 54-053-08, ensure relay K1 on the Power Distribution Assembly (PDA) is a four pole relay and K2 on the PDA is a two pole relay.

Provide a two pole, ganged circuit breaker for the flash bus circuit. Ensure the flash bus circuit breaker is an inverse time circuit breaker rated for 10 amps at 120 VAC with a minimum of 10,000 RMS symmetrical amperes short circuit current rating. Do not provide the auxiliary switch feature on the flash bus circuit breaker. Ensure the ganged flash bus circuit breaker is certified by the circuit breaker manufacturer to provide gang tripping operation.

BD-5111V **TS-15** ***Surry* County**

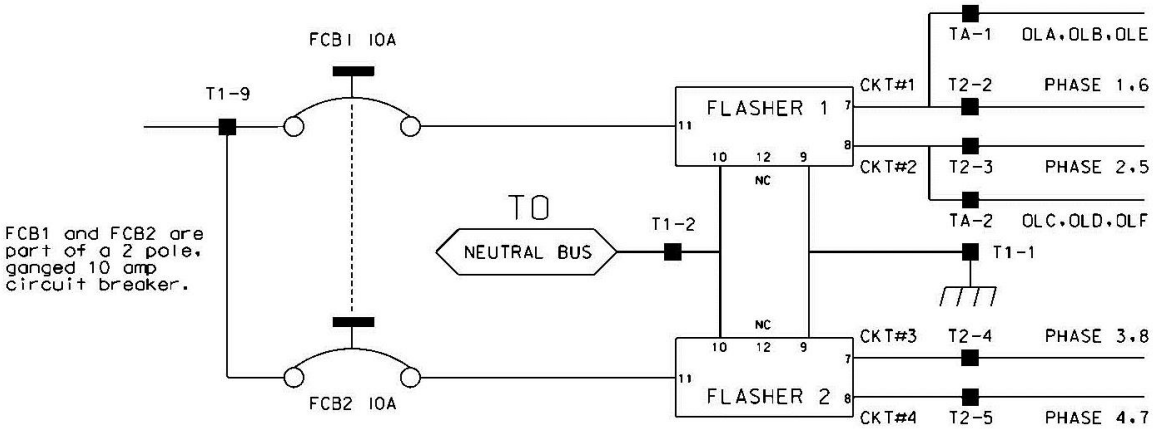

Ensure auxiliary output files are wired as follows:

AUXILIARY OUTPUT FILE TERMINAL BLOCK TA ASSIGNMENTS	
POSITION	**FUNCTION**
1	Flasher Unit #1, Circuit 1/FTR1 (OLA, OLB)/FTR3 (OLE)
2	Flasher Unit #1, Circuit 2/FTR2 (OLC, OLD)/FTR3 (OLF)
3	Flash Transfer Relay Coils
4	AC -
5	Power Circuit 5
6	Power Circuit 5
7	Equipment Ground Bus
8	NC

Provide four spare load resistors mounted in each cabinet. Ensure each load resistor is rated as shown in the table below. Wire one side of each load resistor to AC-. Connect the other side of each resistor to a separate terminal on a four (4) position terminal block. Mount the load resistors and terminal block either inside the back of Output File No. 1 or on the upper area of the Service Panel.

ACCEPTABLE LOAD RESISTOR VALUES	
VALUE (ohms)	**WATTAGE**
1.5K – 1.9 K	25W (min)
2.0K – 3.0K	10W (min)

Provide Model 200 load switches, Model 204 flashers, Model 242 DC isolators, Model 252 AC isolators, and Model 206L power supply units that conform to CALTRANS' "*Transportation Electrical Equipment Specifications*" dated March 12, 2009 with Erratum 1.

C. Type 170 E Cabinet Physical Requirements:

Do not mold, cast, or scribe the name "City of Los Angeles" on the outside of the cabinet door as specified in LA Specification No. 54-053-08. Do not provide a Communications Terminal Panel as specified in LA Specification No. 54-053-08. Do not provide terminal block TBB on the Service Panel. Do not provide Cabinet Verification Test Program software or associated test jigs as specified in LA Specification No. 54-053-08.

Furnish unpainted, natural, aluminum cabinet shells. Ensure that all non-aluminum hardware on the cabinet is stainless steel or a Department approved non-corrosive alternate.

Ensure the lifting eyes, gasket channels, police panel, and all supports welded to the enclosure and doors are fabricated from 0.125 inch minimum thickness aluminum sheet and meet the same standards as the cabinet and doors.

Provide front and rear doors with latching handles that allow padlocking in the closed position. Furnish 0.75 inch minimum diameter stainless steel handles with a minimum 0.5 inch shank. Place the padlocking attachment at 4.0 inches from the handle shank center to clear the lock and key. Provide an additional 4.0 inches minimum gripping length.

Provide Corbin #2 locks on the front and rear doors. Provide one (1) Corbin #2 and one (1) police master key with each cabinet. Ensure main door locks allow removal of keys in the locked position only.

Provide a surge protection panel with 16 loop surge protection devices and designed to allow sufficient free space for wire connection/disconnection and surge protection device replacement. For model 332 cabinets, provide an additional 20 loop surge protection devices. Provide an additional two AC+ interconnect surge devices to protect one slot and eight DC surge protection devices to protect four slots. Provide no protection devices on slot I14.

For pole mounted cabinets, mount surge protection devices for the AC+ interconnect inputs, inductive loop detector inputs, and low voltage DC inputs on a swing down panel assembly fabricated from sturdy aluminum. Attach the swing down panel to the bottom rear cabinet rack assembly using thumb screws. Ensure the swing down panel allows for easy removal of the input file without removing the surge protection panel assembly or its parts. Have the surge protection devices mounted horizontally on the panel and soldered to the feed through terminals of four 14 position terminal blocks with #8 screws mounted on the other side. Ensure the top row of terminals is connected to the upper slots and the bottom row of terminals is connected to the bottom slots. Provide a 15 position copper equipment ground bus attached to the field terminal side (outside) of

the swing down panel for termination of loop lead-in shield grounds. Ensure that a Number 4 AWG green wire connects the surge protection panel assembly ground bus to the main cabinet equipment ground.

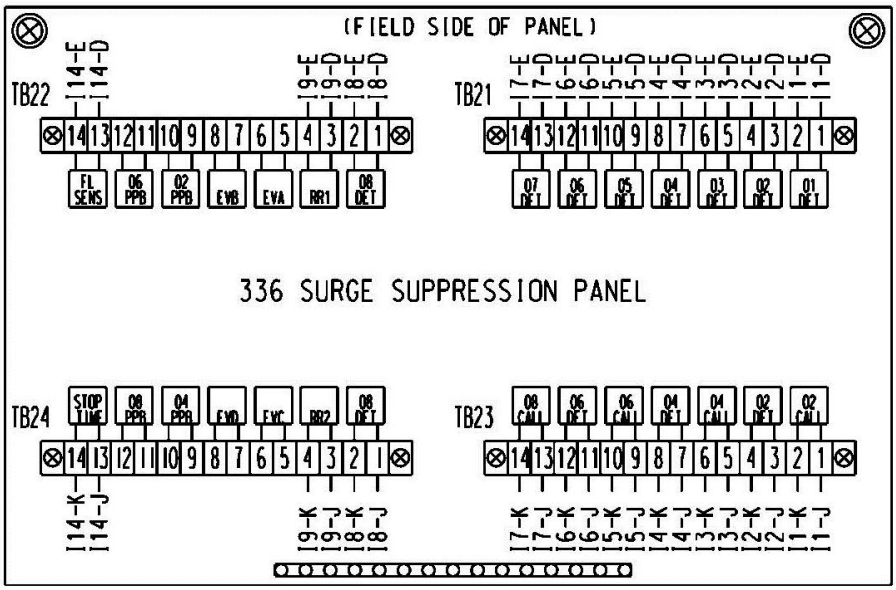

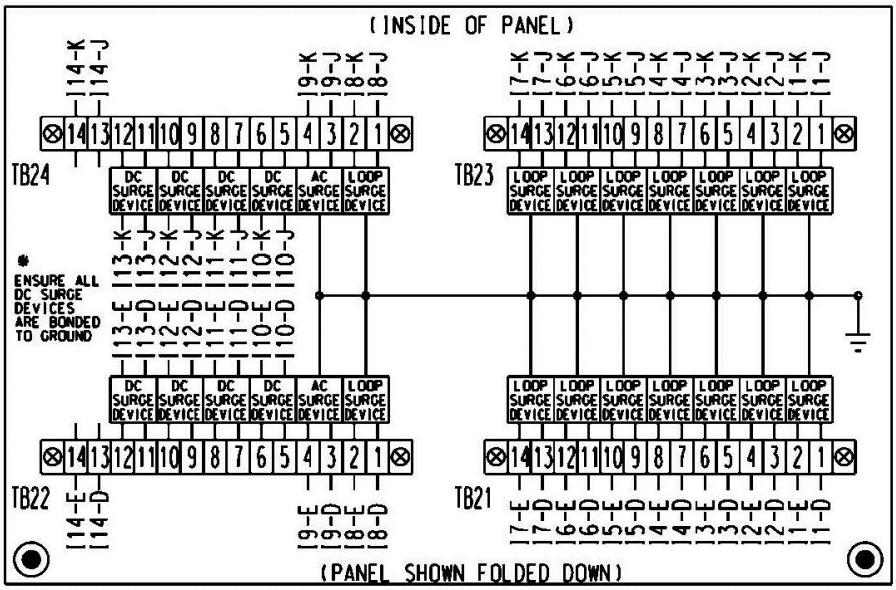

For base mounted cabinets, mount surge protection panels on the left side of the cabinet as viewed from the rear. Attach each panel to the cabinet rack assembly using bolts and make it easily removable. Mount the surge protection devices in vertical rows on each panel and connect the

devices to one side of 12 position, double row terminal blocks with #8 screws. For each surge protection panel, terminate all grounds from the surge protection devices on a copper equipment ground bus attached to the surge protection panel. Wire the terminals to the rear of a standard input file using spade lugs for input file protection.

Provide permanent labels that indicate the slot and the pins connected to each terminal that may be viewed from the rear cabinet door. Label and orient terminals so that each pair of inputs is next to each other. Indicate on the labeling the input file (I or J), the slot number (1-14) and the terminal pins of the input slots (either D & E for upper or J & K for lower).

Provide a minimum 14 x 16 inch pull out, hinged top shelf located immediately below controller mounting section of the cabinet. Ensure the shelf is designed to fully expose the table surface outside the controller at a height approximately even with the bottom of the controller. Ensure the shelf has a storage bin interior which is a minimum of 1 inch deep and approximately the same dimensions as the shelf. Provide an access to the storage area by lifting the hinged top of the shelf. Fabricate the shelf and slide from aluminum or stainless steel and ensure the assembly can support the 2070L controller plus 15 pounds of additional weight. Ensure shelf has a locking mechanism to secure it in the fully extended position and does not inhibit the removal of the 2070L controller or removal of cards inside the controller when fully extended. Provide a locking mechanism that is easily released when the shelf is to be returned to its non-use position directly under the controller.

D. Model 2018 Enhanced Conflict Monitor:

Furnish Model 2018 Enhanced Conflict Monitors that provide monitoring of 18 channels. Ensure each channel consists of a green, yellow, and red field signal input. Ensure that the conflict monitor meets or exceeds CALTRANS' Transportation Electrical Equipment Specifications dated March 12, 2009, with Erratum 1 (hereafter referred to as CALTRANS' 2009 TEES) for a model 210 monitor unit and other requirements stated in this specification.

Ensure the conflict monitor is provided with an 18 channel conflict programming card. Pin EE and Pin T of the conflict programming card shall be connected together. Pin 16 of the conflict programming card shall be floating. Ensure that the absence of the conflict programming card will cause the conflict monitor to trigger (enter into fault mode), and remain in the triggered state until the programming card is properly inserted and the conflict monitor is reset.

Provide a conflict monitor that incorporates LED indicators into the front panel to dynamically display the status of the monitor under normal conditions and to provide a comprehensive review of field inputs with monitor status under fault conditions. Ensure that the monitor indicates the channels that were active during a conflict condition and the channels that experienced a failure for all other per channel fault conditions detected. Ensure that these indications and the status of each channel are retained until the Conflict Monitor is reset. Furnish LED indicators for the following:

- AC Power (Green LED indicator)
- VDC Failed (Red LED indicator)
- WDT Error (Red LED indicator)
- Conflict (Red LED indicator)
- Red Fail (Red LED indicator)
- Dual Indication (Red LED indicator)

- Yellow/Clearance Failure (Red LED indicator)
- PCA/PC Ajar (Red LED indicator)
- Monitor Fail/Diagnostic Failure (Red LED indicator)
- 54 Channel Status Indicators (1 Red, 1 Yellow, and 1 Green LED indicator for each of the 18 channels)

Provide a switch to set the Red Fail fault timing. Ensure that when the switch is in the ON position the Red Fail fault timing value is set to 1350 +/- 150ms (2018 mode). Ensure that when the switch is in the OFF position the Red Fail fault timing value is set to 850 +/- 150ms (210 mode).

Provide a switch to set the Watchdog fault timing. Ensure that when the switch is in the ON position the Watchdog fault timing value is set to 1.0 +/- 0.1s (2018 mode). Ensure that when the switch is in the OFF position the Watchdog fault timing value is set to 1.5 +/- 0.1s (210 mode).

Provide a jumper or switch to set the AC line brown-out levels. Ensure that when the jumper is present or the switch is in the ON position the AC line dropout voltage threshold is 98 +/- 2 Vrms, the AC line restore voltage threshold is 103 +/- 2 Vrms, and the AC line brown-out timing value is set to 400 +/- 50ms (2018 mode). Ensure that when the jumper is not present or the switch is in the OFF position the AC line dropout voltage threshold is 92 +/- 2 Vrms, the AC line restore voltage threshold is 98 +/- 2 Vrms, and the AC line brown-out timing value is set to 80 +/- 17ms (210 mode).

Provide a jumper or switch that will enable and disable the Watchdog Latch function. Ensure that when the jumper is not present or the switch is in the OFF position the Watchdog Latch function is disabled. In this mode of operation, a Watchdog fault will be reset following a power loss, brownout, or power interruption. Ensure that when the jumper is present or the switch is in the ON position the Watchdog Latch function is enabled. In this mode of operation, a Watchdog fault will be retained until a Reset command is issued.

Provide a jumper that will reverse the active polarity for pin #EE (output relay common). Ensure that when the jumper is not present pin #EE (output relay common) will be considered 'Active' at a voltage greater than 70 Vrms and 'Not Active' at a voltage less than 50 Vrms (Caltrans mode). Ensure that when the jumper is present pin #EE (output relay common) will be considered 'Active' at a voltage less than 50 Vrms and 'Not Active' at a voltage greater than 70 Vrms (Failsafe mode).

In addition to the connectors required by CALTRANS' 2009 TEES, provide the conflict monitor with a red interface connector mounted on the front of the monitor. Ensure the connector is a 20 pin, right angle, center polarized, male connector with latching clip locks and polarizing keys. Ensure the right angle solder tails are designed for a 0.062" thick printed circuit board. Keying of the connector shall be between pins 3 and 5, and between 17 and 19. Ensure the connector has two rows of pins with the odd numbered pins on one row and the even pins on the other row. Ensure the connector pin row spacing is 0.10" and pitch is 0.10". Ensure the mating length of the connector pins is 0.24". Ensure the pins are finished with gold plating 30μ" thick.

BD-5111V **TS-20** ***Surry* County**

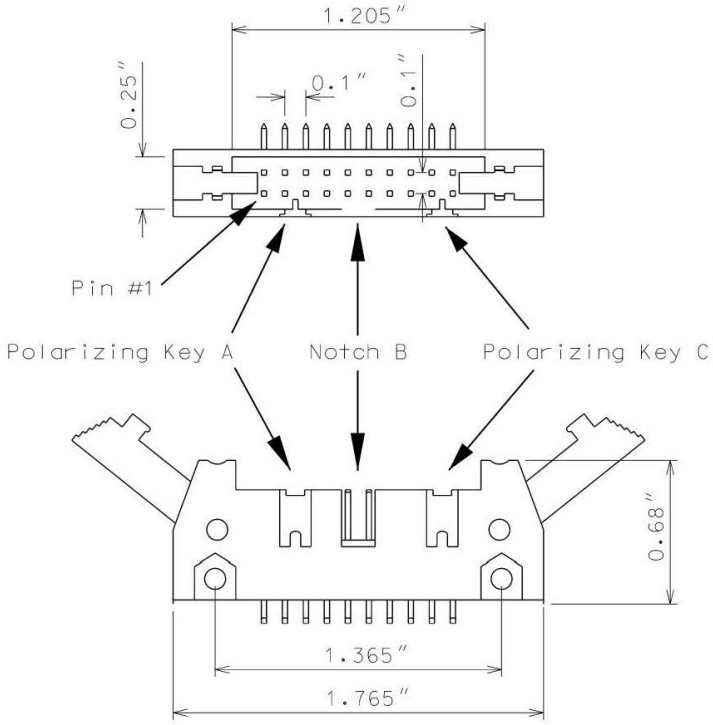

Ensure the red interface connector pins on the monitor have the following functions:

Pin #	Function	Pin #	Function
1	Channel 15 Red	2	Channel 16 Red
3	Channel 14 Red	4	Chassis Ground
5	Channel 13 Red	6	Special Function 2
7	Channel 12 Red	8	Special Function 1
9	Channel 10 Red	10	Channel 11 Red
11	Channel 9 Red	12	Channel 8 Red
13	Channel 7 Red	14	Channel 6 Red
15	Channel 5 Red	16	Channel 4 Red
17	Channel 3 Red	18	Channel 2 Red
19	Channel 1 Red	20	Red Enable

Ensure that removal of the P20 cable connector will cause the conflict monitor to recognize a latching fault condition and place the cabinet into flashing operation.

Provide Special Function 1 and Special Function 2 inputs to the unit which shall disable only Red Fail Monitoring when either input is sensed active. A Special Function input shall be sensed active when the input voltage exceeds 70 Vrms with a minimum duration of 550 ms. A Special Function input shall be sensed not active when the input voltage is less than 50 Vrms or the duration is less than 250 ms. A Special Function input is undefined by these specifications and may or may not be sensed active when the input voltage is between 50 Vrms and 70 Vrms or the duration is between 250 ms and 550 ms.

Ensure the conflict monitor recognizes field signal inputs for each channel that meet the following requirements:

- consider a Red input greater than 70 Vrms and with a duration of at least 500 ms as an "on" condition;
- consider a Red input less than 50 Vrms or with a duration of less than 200 ms as an "off" condition (no valid signal);
- consider a Red input between 50 Vrms and 70 Vrms or with a duration between 200 ms and 500 ms to be undefined by these specifications;
- consider a Green or Yellow input greater than 25 Vrms and with a duration of at least 500 ms as an "on" condition;
- consider a Green or Yellow input less than 15 Vrms or with a duration of less than 200 ms as an "off" condition; and
- consider a Green or Yellow input between 15 Vrms and 25 Vrms or with a duration between 200 ms and 500 ms to be undefined by these specifications.

Provide a conflict monitor that recognizes the faults specified by CALTRANS' 2009 TEES and the following additional faults. Ensure the conflict monitor will trigger upon detection of a fault and will remain in the triggered (in fault mode) state until the unit is reset at the front panel or through the external remote reset input for the following failures:

1. **Red Monitoring or Absence of Any Indication (Red Failure):** A condition in which no "on" voltage signal is detected on any of the green, yellow, or red inputs to a given monitor channel. If a signal is not detected on at least one input (R, Y, or G) of a conflict monitor channel for a period greater than 1000 ms when used with a 170 controller and 1500 ms when used with a 2070L controller, ensure monitor will trigger and put the intersection into flash. If the absence of any indication condition lasts less that 750 ms when used with a 170 controller and 1200 ms when used with a 2070L controller, ensure conflict monitor will not trigger. Red fail monitoring shall be enabled on a per channel basis by the use of switches located on the conflict monitor. Have red monitoring occur when all of the following input conditions are in effect:

    a) Red Enable input to monitor is active (Red Enable voltages are "on" at greater than 70 Vrms, off at less than 50 Vrms, undefined between 50 and 70 Vrms), and

    b) Neither Special Function 1 nor Special Function 2 inputs are active.

c) Pin #EE (output relay common) is not active

2. **Short/Missing Yellow Indication Fault (Clearance Error):** Yellow indication following a green is missing or shorter than 2.7 seconds (with ± 0.1-second accuracy). If a channel fails to detect an "on" signal at the Yellow input for a minimum of 2.7 seconds (± 0.1 second) following the detection of an "on" signal at a Green input for that channel, ensure that the monitor triggers and generates a clearance/short yellow error fault indication. Short/missing yellow (clearance) monitoring shall be enabled on a per channel basis by the use of switches located on the conflict monitor. This fault shall not occur when the channel is programmed for Yellow Inhibit, when the Red Enable signal is inactive or pin #EE (output relay common) is active.

3. **Dual Indications on the Same Channel:** In this condition, more than one indication (R,Y,G) is detected as "on" at the same time on the same channel. If dual indications are detected for a period greater than 500 ms, ensure that the conflict monitor triggers and displays the proper failure indication (Dual Ind fault). If this condition is detected for less than 200 ms, ensure that the monitor does not trigger. G-Y-R dual indication monitoring shall be enabled on a per channel basis by the use of switches located on the conflict monitor. G-Y dual indication monitoring shall be enabled for all channels by use of a switch located on the conflict monitor. This fault shall not occur when the Red Enable signal is inactive or pin #EE (output relay common) is active.

4. **Configuration Settings Change:** The configuration settings are comprised of (as a minimum) the permissive diode matrix, dual indication switches, yellow disable jumpers, any option switches, any option jumpers, and the Watchdog Enable switch. Ensure the conflict monitor compares the current configuration settings with the previous stored configuration settings on power-up, on reset, and periodically during operation. If any of the configuration settings are changed, ensure that the conflict monitor triggers and causes the program card indicator to flash. Ensure that configuration change faults are only reset by depressing and holding the front panel reset button for a minimum of three seconds. Ensure the external remote reset input does not reset configuration change faults.

Ensure the conflict monitor will trigger and the AC Power indicator will flash at a rate of 2 Hz ± 20% with a 50% duty cycle when the AC Line voltage falls below the "drop-out" level. Ensure the conflict monitor will resume normal operation when the AC Line voltage returns above the "restore" level. Ensure the AC Power indicator will remain illuminated when the AC voltage returns above the "restore" level. Should an AC Line power interruption occur while the monitor is in the fault mode, then upon restoration of AC Line power, the monitor will remain in the fault mode and the correct fault and channel indicators will be displayed.

Provide a flash interval of at least 6 seconds and at most 10 seconds in duration following a power-up, an AC Line interruption, or a brownout restore. Ensure the conflict monitor will suspend all fault monitoring functions, close the Output relay contacts, and flash the AC indicator at a rate of 4 Hz ± 20% with a 50% duty cycle during this interval. Ensure the termination of the flash interval after at least 6 seconds if the Watchdog input has made 5 transitions between the True and False state and the AC Line voltage is greater than the "restore" level. If the watchdog input has not made

5 transitions between the True and False state within 10 ± 0.5 seconds, the monitor shall enter a WDT error fault condition.

Ensure the conflict monitor will monitor an intersection with a minimum of four approaches using the four-section Flashing Yellow Arrow (FYA) vehicle traffic signal as outlined by the NCHRP 3-54 research project for protected-permissive left turn signal displays. Ensure the conflict monitor will operate in the FYA mode and FYAc (Compact) mode as specified below to monitor each channel for the following fault conditions: Conflict, Red Fail, Dual Indication, and Clearance. Provide a switch to select between the FYA mode and FYAc mode. Provide a switch to select each FYA phase movement for monitoring.

FYA mode

FYA Signal Head	Phase 1	Phase 3	Phase 5	Phase 7
Red Arrow	Channel 9 Red	Channel 10 Red	Channel 11 Red	Channel 12 Red
Yellow Arrow	Channel 9 Yellow	Channel 10 Yellow	Channel 11 Yellow	Channel 12 Yellow
Flashing Yellow Arrow	Channel 9 Green	Channel 10 Green	Channel 11 Green	Channel 12 Green
Green Arrow	Channel 1 Green	Channel 3 Green	Channel 5 Green	Channel 7 Green

FYAc mode

FYA Signal Head	Phase 1	Phase 3	Phase 5	Phase 7
Red Arrow	Channel 1 Red	Channel 3 Red	Channel 5 Red	Channel 7 Red
Yellow Arrow	Channel 1 Yellow	Channel 3 Yellow	Channel 5 Yellow	Channel 7 Yellow
Flashing Yellow Arrow	Channel 1 Green	Channel 3 Green	Channel 5 Green	Channel 7 Green
Green Arrow	Channel 9 Green	Channel 9 Yellow	Channel 10 Green	Channel 10 Yellow

Ensure that the conflict monitor will log at least nine of the most recent events detected by the monitor in non-volatile EEPROM memory (or equivalent). For each event, record at a minimum the time, date, type of event, status of each field signal indication with RMS voltage, and specific channels involved with the event. Ensure the conflict monitor will log the following events: monitor reset, configuration, previous fault, and AC line. Furnish the signal sequence log that shows all channel states (Greens, Yellows, and Reds) and the Red Enable State for a minimum of 2 seconds prior to the current fault trigger point. Ensure the display resolution of the inputs for the signal sequence log is not greater than 50 ms.

For conflict monitors used within an Ethernet communications system, provide a conflict monitor with an Ethernet 10/100 Mbps, RJ-45 port for data communication access to the monitor by a local notebook computer and remotely via a workstation or notebook computer device connected to the signal system local area network. The Ethernet port shall be electrically isolated from the conflict monitor's electronics and shall provide a minimum of 1500 Vrms isolation. Integrate monitor with Ethernet network in cabinet. Provide software to retrieve the time and date from a network server in order to synchronize the on-board times between the conflict monitor and the controller. Furnish and install the following Windows based, graphic user interface software on workstations and notebook computers where the signal system client software is installed: 1) software to view and retrieve all event log information, 2) software that will search and display a list of conflict monitor IP addresses and IDs on the network, and 3) software to change the conflict monitor's network parameters such as IP address and subnet mask.

For non-Ethernet connected monitors, provide a RS-232C/D compliant port (DB-9 female connector) on the front panel of the conflict monitor in order to provide communications from the conflict monitor to the 170/2070L controller or to a Department-furnished laptop computer. Electrically isolate the port interface electronics from all monitor electronics, excluding Chassis Ground. Ensure that the controller can receive all event log information through a controller Asynchronous Communications Interface Adapter (Type 170E) or Async Serial Comm Module (2070). Furnish and connect a serial cable from the conflict monitor's DB-9 connector to Comm Port 1 of the 2070 controller. Ensure conflict monitor communicates with the controller. Provide a Windows based graphic user interface software to communicate directly through the same monitor RS-232C/D compliant port to retrieve and view all event log information to a Department-furnished laptop computer. The RS-232C/D compliant port on the monitor shall allow the monitor to function as a DCE device with pin connections as follows:

BD-5111V

TS-25

***Surry* County**

Conflict Monitor RS-232C/D (DB-9 Female) Pinout		
Pin Number	**Function**	**I/O**
1	DCD	O
2	TX Data	O
3	RX Data	I
4	DTR	I
5	Ground	-
6	DSR	O
7	CTS	I
8	RTS	O
9	NC	-

BD-5111V

TS-26

***Surry* County**

MONITOR BOARD EDGE CONNECTOR

Pin #	Function (Back Side)	Pin #	Function (Component Side)
1	Channel 2 Green	A	Channel 2 Yellow
2	Channel 13 Green	B	Channel 6 Green
3	Channel 6 Yellow	C	Channel 15 Green
4	Channel 4 Green	D	Channel 4 Yellow
5	Channel 14 Green	E	Channel 8 Green
6	Channel 8 Yellow	F	Channel 16 Green
7	Channel 5 Green	H	Channel 5 Yellow
8	Channel 13 Yellow	J	Channel 1 Green
9	Channel 1 Yellow	K	Channel 15 Yellow
10	Channel 7 Green	L	Channel 7 Yellow
11	Channel 14 Yellow	M	Channel 3 Green
12	Channel 3 Yellow	N	Channel 16 Yellow
13	Channel 9 Green	P	Channel 17 Yellow
14	Channel 17 Green	R	Channel 10 Green
15	Channel 11 Yellow	S	Channel 11 Green
16	Channel 9 Yellow	T	Channel 18 Yellow
17	Channel 18 Green	U	Channel 10 Yellow
--		--	
18	Channel 12 Yellow	V	Channel 12 Green
19	Channel 17 Red	W	Channel 18 Red
20	Chassis Ground	X	Not Assigned
21	AC-	Y	DC Common
22	Watchdog Timer	Z	External Test Reset
23	+24VDC	AA	+24VDC
24	Tied to Pin 25	BB	Stop Time (Output)
25	Tied to Pin 24	CC	Not Assigned
26	Not Assigned	DD	Not Assigned
27	Relay Output, Side #3, N.O.	EE	Relay Output,Side #2,Common
28	Relay Output, Side #1, N.C.	FF	AC+

-- Slotted for keying between Pins 17/U and 18/V

BD-5111V

TS-27

***Surry* County**

CONFLICT PROGRAM CARD PIN ASSIGNMENTS

Pin #	Function (Back Side)	Pin #	Function (Component Side)
1	Channel 2 Green	A	Channel 1 Green
2	Channel 3 Green	B	Channel 2 Green
3	Channel 4 Green	C	Channel 3 Green
4	Channel 5 Green	D	Channel 4 Green
5	Channel 6 Green	E	Channel 5 Green
6	Channel 7 Green	F	Channel 6 Green
7	Channel 8 Green	H	Channel 7 Green
8	Channel 9 Green	J	Channel 8 Green
9	Channel 10 Green	K	Channel 9 Green
10	Channel 11 Green	L	Channel 10 Green
11	Channel 12 Green	M	Channel 11 Green
12	Channel 13 Green	N	Channel 12 Green
13	Channel 14 Green	P	Channel 13 Green
14	Channel 15 Green	R	Channel 14 Green
15	Channel 16 Green	S	Channel 15 Green
16	N/C	T	PC AJAR
17	Channel 1 Yellow	U	Channel 9 Yellow
18	Channel 2 Yellow	V	Channel 10 Yellow
19	Channel 3 Yellow	W	Channel 11 Yellow
20	Channel 4 Yellow	X	Channel 12 Yellow
21	Channel 5 Yellow	Y	Channel 13 Yellow
22	Channel 6 Yellow	Z	Channel 14 Yellow
23	Channel 7 Yellow	AA	Channel 15 Yellow
24	Channel 8 Yellow	BB	Channel 16 Yellow
--		--	
25	Channel 17 Green	CC	Channel 17 Yellow
26	Channel 18 Green	DD	Channel 18 Yellow
27	Channel 16 Green	EE	PC AJAR (Program Card)
28	Yellow Inhibit Common	FF	Channel 17 Green

-- Slotted for keying between Pins 24/BB and 25/CC

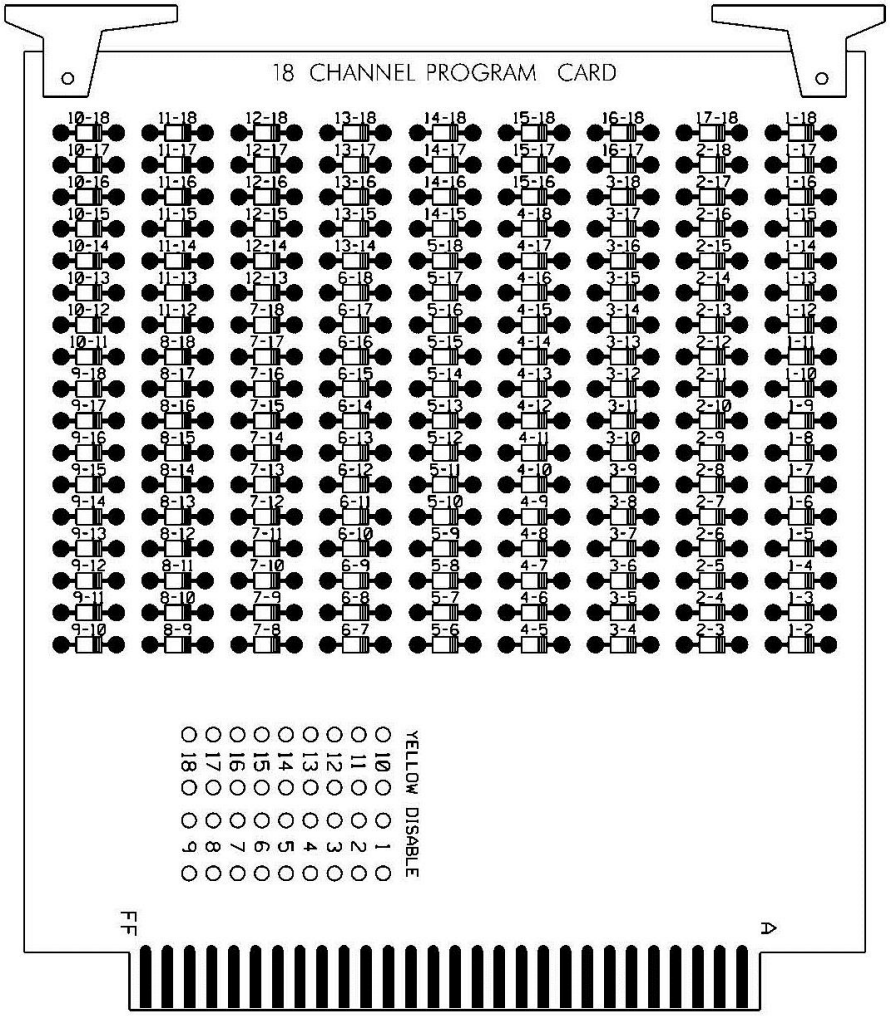

3.4. MATERIALS – TYPE 170 DETECTOR SENSOR UNITS

Furnish detector sensor units that comply with Chapter 5 Section 1, "General Requirements," and Chapter 5 Section 2, "Model 222 & 224 Loop Detector Sensor Unit Requirements," of the CALTRANS "Transportation Electrical Equipment Specifications" dated March 12, 2009 with Erratum 1.

Project Special Provisions
Structure

Table of Contents

		Page #
Falsework and Formwork (4-5-12)	.....	1
Submittal of Working Drawings (8-9-13)	.....	7
Crane Safety (8-15-05)	.....	14
Grout for Structures (9-30-11)	.....	14
Maintenance & Protection of Traffic Beneath Proposed Structure at Station 13+58.65 -L- (8-13-04)	.....	16
Removal of Existing Structure at Sta. 13+58.65 -L- (SPECIAL)	.....	17
Concrete Stain (SPECIAL)	.....	17

NORTH CAROLINA PROFESSIONAL SEAL 13014 ENGINEER QUANG H. NGUYEN

Quang H. Nguyen 10-7-14

FALSEWORK AND FORMWORK

(4-5-12)

1.0 DESCRIPTION

Use this Special Provision as a guide to develop temporary works submittals required by the Standard Specifications or other provisions; no additional submittals are required herein. Such temporary works include, but are not limited to, falsework and formwork.

Falsework is any temporary construction used to support the permanent structure until it becomes self-supporting. Formwork is the temporary structure or mold used to retain plastic or fluid concrete in its designated shape until it hardens. Access scaffolding is a temporary structure that functions as a work platform that supports construction personnel, materials, and tools, but is not intended to support the structure. Scaffolding systems that are used to temporarily support permanent structures (as opposed to functioning as work platforms) are considered to be falsework under the definitions given. Shoring is a component of falsework such as horizontal, vertical, or inclined support members. Where the term “temporary works” is used, it includes all of the temporary facilities used in bridge construction that do not become part of the permanent structure.

Design and construct safe and adequate temporary works that will support all loads imposed and provide the necessary rigidity to achieve the lines and grades shown on the plans in the final structure.

2.0 MATERIALS

Select materials suitable for temporary works; however, select materials that also ensure the safety and quality required by the design assumptions. The Engineer has authority to reject material on the basis of its condition, inappropriate use, safety, or nonconformance with the plans. Clearly identify allowable loads or stresses for all materials or manufactured devices on the plans. Revise the plan and notify the Engineer if any change to materials or material strengths is required.

3.0 DESIGN REQUIREMENTS

A. Working Drawings

Provide working drawings for items as specified in the contract, or as required by the Engineer, with design calculations and supporting data in sufficient detail to permit a structural and safety review of the proposed design of the temporary work.

On the drawings, show all information necessary to allow the design of any component to be checked independently as determined by the Engineer.

When concrete placement is involved, include data such as the drawings of proposed sequence, rate of placement, direction of placement, and location of all construction joints. Submit the number of copies as called for by the contract.

When required, have the drawings and calculations prepared under the guidance of, and sealed by, a North Carolina Registered Professional Engineer who is knowledgeable in temporary works design.

If requested by the Engineer, submit with the working drawings manufacturer's catalog data listing the weight of all construction equipment that will be supported on the temporary work. Show anticipated total settlements and/or deflections of falsework and forms on the working drawings. Include falsework footing settlements, joint take-up, and deflection of beams or girders.

As an option for the Contractor, overhang falsework hangers may be uniformly spaced, at a maximum of 36 inches, provided the following conditions are met:

Member Type (PCG)	Member Depth, (inches)	Max. Overhang Width, (inches)	Max. Slab Edge Thickness, (inches)	Max. Screed Wheel Weight, (lbs.)	Bracket Min. Vertical Leg Extension, (inches)
II	36	39	14	2000	26
III	45	42	14	2000	35
IV	54	45	14	2000	44
MBT	63	51	12	2000	50
MBT	72	55	12	1700	48

Overhang width is measured from the centerline of the girder to the edge of the deck slab.

For Type II, III & IV prestressed concrete girders (PCG), 45-degree cast-in-place half hangers and rods must have a minimum safe working load of 6,000 lbs.

For MBT prestressed concrete girders, 45-degree angle holes for falsework hanger rods shall be cast through the girder top flange and located, measuring along the top of the member, 1'-2 W' from the edge of the top flange. Hanger hardware and rods must have a minimum safe working load of 6,000 lbs.

The overhang bracket provided for the diagonal leg shall have a minimum safe working load of 3,750 lbs. The vertical leg of the bracket shall extend to the point that the heel bears on the girder bottom flange, no closer than 4 inches from the bottom of the member. However, for 72-inch members, the heel of the bracket shall bear on the web, near the bottom flange transition.

Provide adequate overhang falsework and determine the appropriate adjustments for deck geometry, equipment, casting procedures and casting conditions.

If the optional overhang falsework spacing is used, indicate this on the falsework submittal and advise the girder producer of the proposed details. Failure to notify the Engineer of hanger type and hanger spacing on prestressed concrete girder casting drawings may delay the approval of those drawings.

Falsework hangers that support concentrated loads and are installed at the edge of thin top flange concrete girders (such as bulb tee girders) shall be spaced so as not to exceed 75% of the manufacturer's stated safe working load. Use of dual leg hangers (such as Meadow Burke HF-42 and HF-43) are not allowed on concrete girders with thin top flanges. Design the falsework and forms supporting deck slabs and overhangs on girder bridges so that there will be no differential settlement between the girders and the deck forms during placement of deck concrete.

When staged construction of the bridge deck is required, detail falsework and forms for screed and fluid concrete loads to be independent of any previous deck pour components when the mid-span girder deflection due to deck weight is greater than¥.!".

Note on the working drawings any anchorages, connectors, inserts, steel sleeves or other such devices used as part of the falsework or formwork that remains in the permanent structure. If the plan notes indicate that the structure contains the necessary corrosion protection required for a Corrosive Site, epoxy coat, galvanize or metalize these devices. Electroplating will not be allowed. Any coating required by the Engineer will be considered incidental to the various pay items requiring temporary works.

Design falsework and formwork requiring submittals in accordance with the 1995 AASHTO *Guide Design Specifications for Bridge Temporary Works* except as noted herein.

1. Wind Loads

   Table 2.2 of Article 2.2.5.1 is modified to include wind velocities up to 110 mph. In addition, Table 2.2A is included to provide the maximum wind speeds by county in North Carolina.

Table 2.2 - Wind Pressure Values

Height Zone feet above ground	Pressure, lb/ft^2 for Indicated Wind Velocity, mph				
	70	80	90	100	110
0 to 30	15	20	25	30	35
30 to 50	20	25	30	35	40
50 to 100	25	30	35	40	45
over 100	30	35	40	45	50

2. Time of Removal

   The following requirements replace those of Article 3.4.8.2.

   Do not remove forms until the concrete has attained strengths required in Article 420-16 of the Standard Specifications and these Special Provisions.

   Do not remove forms until the concrete has sufficient strength to prevent damage to the surface.

Table 2.2A - Steady State Maximum Wind Speeds by Counties in North Carolina

COUNTY	25 YR (mph)	COUNTY	25 YR (mph)	COUNTY	25 YR (mph)
Alamance	70	Franklin	70	Pamlico	100
Alexander	70	Gaston	70	Pasquotank	100
Alleghany	70	Gates	90	Pender	100
Anson	70	Graham	80	Perquimans	100
Ashe	70	Granville	70	Person	70
Avery	70	Greene	80	Pitt	90
Beaufort	100	Guilford	70	Polk	80
Bertie	90	Halifax	80	Randolph	70
Bladen	90	Harnett	70	Richmond	70
Brunswick	100	Haywood	80	Robeson	80
Buncombe	80	Henderson	80	Rockingham	70
Burke	70	Hertford	90	Rowan	70
Cabarrus	70	Hoke	70	Rutherford	70
Caldwell	70	Hyde	110	Sampson	90
Camden	100	Iredell	70	Scotland	70
Carteret	110	Jackson	80	Stanley	70
Caswell	70	Johnston	80	Stokes	70
Catawba	70	Jones	100	Surry	70
Cherokee	80	Lee	70	Swain	80
Chatham	70	Lenoir	90	Transylvania	80
Chowan	90	Lincoln	70	Tyrell	100
Clay	80	Macon	80	Union	70
Cleveland	70	Madison	80	Vance	70
Columbus	90	Martin	90	Wake	70
Craven	100	McDowell	70	Warren	70
Cumberland	80	Mecklenburg	70	Washington	100
Currituck	100	Mitchell	70	Watauga	70
Dare	110	Montgomery	70	Wayne	80
Davidson	70	Moore	70	Wilkes	70
Davie	70	Nash	80	Wilson	80
Duplin	90	New Hanover	100	Yadkin	70
Durham	70	Northampton	80	Yancey	70
Edgecombe	80	Onslow	100		
Forsyth	70	Orange	70		

B. Review and Approval

The Engineer is responsible for the review and approval of temporary works' drawings.

Submit the working drawings sufficiently in advance of proposed use to allow for their review, revision (if needed), and approval without delay to the work.

The time period for review of the working drawings does not begin until complete drawings and design calculations, when required, are received by the Engineer.

Do not start construction of any temporary work for which working drawings are required until the drawings have been approved. Such approval does not relieve the Contractor of the responsibility for the accuracy and adequacy of the working drawings.

4.0 CONSTRUCTION REQUIREMENTS

All requirements of Section 420 of the Standard Specifications apply.

Construct temporary works in conformance with the approved working drawings. Ensure that the quality of materials and workmanship employed is consistent with that assumed in the design of the temporary works. Do not weld falsework members to any portion of the permanent structure unless approved. Show any welding to the permanent structure on the approved construction drawings.

Provide tell-tales attached to the forms and extending to the ground, or other means, for accurate measurement of falsework settlement. Make sure that the anticipated compressive settlement and/or deflection of falsework does not exceed 1 inch. For cast-in-place concrete structures, make sure that the calculated deflection of falsework flexural members does not exceed 1/240 of their span regardless of whether or not the deflection is compensated by camber strips.

A. Maintenance and Inspection

Inspect and maintain the temporary work in an acceptable condition throughout the period of its use. Certify that the manufactured devices have been maintained in a condition to allow them to safely carry their rated loads. Clearly mark each piece so that its capacity can be readily determined at the job site.

Perform an in-depth inspection of an applicable portion(s) of the temporary works, in the presence of the Engineer, not more than 24 hours prior to the beginning of each concrete placement. Inspect other temporary works at least once a month to ensure that they are functioning properly. Have a North Carolina Registered Professional Engineer inspect the cofferdams, shoring, sheathing, support of excavation structures, and support systems for load tests prior to loading.

B. Foundations

Determine the safe bearing capacity of the foundation material on which the supports for temporary works rest. If required by the Engineer, conduct load tests to verify proposed bearing capacity values that are marginal or in other high-risk situations.

The use of the foundation support values shown on the contract plans of the permanent structure is permitted if the foundations are on the same level and on the same soil as those of the permanent structure.

Allow for adequate site drainage or soil protection to prevent soil saturation and washout of the soil supporting the temporary works supports.

If piles are used, the estimation of capacities and later confirmation during construction using standard procedures based on the driving characteristics of the pile is permitted. If preferred, use load tests to confirm the estimated capacities; or, if required by the Engineer conduct load tests to verify bearing capacity values that are marginal or in other high risk situations.

The Engineer reviews and approves the proposed pile and soil bearing capacities.

5.0 REMOVAL

Unless otherwise permitted, remove and keep all temporary works upon completion of the work. Do not disturb or otherwise damage the finished work.

Remove temporary works in conformance with the contract documents. Remove them in such a manner as to permit the structure to uniformly and gradually take the stresses due to its own weight.

6.0 METHOD OF MEASUREMENT

Unless otherwise specified, temporary works will not be directly measured.

7.0 BASIS OF PAYMENT

Payment at the contract unit prices for the various pay items requiring temporary works will be full compensation for the above falsework and formwork.

SUBMITTAL OF WORKING DRAWINGS
(8-9-13)

8.0 GENERAL

Submit working drawings in accordance with Article 105-2 of the *Standard Specifications* and this provision. For this provision, "submittals" refers to only those listed in this provision. The list of submittals contained herein does not represent a list of required submittals for the project. Submittals are only necessary for those items as required by the contract. Make submittals that are not specifically noted in this provision directly to the Resident Engineer. Either the Structure Design Unit or the Geotechnical Engineering Unit or both units will jointly review submittals.

If a submittal contains variations from plan details or specifications or significantly affects project cost, field construction or operations, discuss the submittal with and submit all copies to the Resident Engineer. State the reason for the proposed variation in the submittal. To minimize review time, make sure all submittals are complete when initially submitted. Provide a contact name and information with each submittal. Direct any questions regarding submittal requirements to the Resident Engineer, Structure Design Unit contacts or the Geotechnical Engineering Unit contacts noted below.

In order to facilitate in-plant inspection by NCDOT and approval of working drawings, provide the name, address and telephone number of the facility where fabrication will actually be done if different than shown on the title block of the submitted working drawings. This includes, but is not limited to, precast concrete items, prestressed concrete items and fabricated steel or aluminum items.

9.0 ADDRESSES AND CONTACTS

For submittals to the Structure Design Unit, use the following addresses:

Via US mail:

Mr. G. R. Perfetti, P. E.
State Structures Engineer
North Carolina Department
of Transportation
Structures Management Unit
1581 Mail Service Center
Raleigh, NC 27699-1581

Attention: Mr. P. D. Lambert, P. E.

Via other delivery service:

Mr. G. R. Perfetti, P. E.
State Structures Engineer
North Carolina Department
of Transportation
Structures Management Unit
1000 Birch Ridge Drive
Raleigh, NC 27610

Attention: Mr. P. D. Lambert, P. E.

Submittals may also be made via email.

Send submittals to:

plambert@ncdot.gov (Paul Lambert)

Send an additional e-copy of the submittal to the following address:

jgaither@ncdot.gov (James Gaither)

jlbolden@ncdot.gov (James Bolden)

For submittals to the Geotechnical Engineering Unit, use the following addresses:

For projects in Divisions 1-7, use the following Eastern Regional Office address:

Via US mail:

Mr. K. J. Kim, Ph. D., P. E.
Eastern Regional Geotechnical Manager
North Carolina Department of Transportation
Geotechnical Engineering Unit
Eastern Regional Office
1570 Mail Service Center
Raleigh, NC 27699-1570

Via other delivery service:

Mr. K. J. Kim, Ph. D., P. E.
Eastern Regional Geotechnical Manager
North Carolina Department of Transportation
Geotechnical Engineering Unit
Eastern Regional Office
3301 Jones Sausage Road, Suite 100
Garner, NC 27529

For projects in Divisions 8-14, use the following Western Regional Office address:

Via US mail:

Mr. Eric Williams, P. E.
Western Regional Geotechnical Manager
North Carolina Department of Transportation
Geotechnical Engineering Unit
Western Regional Office
5253 Z Max Boulevard
Harrisburg, NC 28075

Via other delivery service:

Mr. Eric Williams, P. E.
Western Region Geotechnical Manager
North Carolina Department of Transportation
Geotechnical Engineering Unit
Western Regional Office
5253 Z Max Boulevard
Harrisburg, NC 28075

The status of the review of structure-related submittals sent to the Structure Design Unit can be viewed from the Unit's web site, via the "Contractor Submittal" link.

Direct any questions concerning submittal review status, review comments or drawing markups to the following contacts:

Primary Structures Contact: Paul Lambert (919) 707 – 6407
(919) 250 – 4082 facsimile
plambert@ncdot.gov

Secondary Structures Contacts: James Gaither (919) 707 – 6409
James Bolden (919) 707 – 6408

Eastern Regional Geotechnical Contact (Divisions 1-7):
K. J. Kim (919) 662 – 4710
(919) 662 – 3095 facsimile
kkim@ncdot.gov

Western Regional Geotechnical Contact (Divisions 8-14):
Eric Williams (704) 455 – 8902
(704) 455 – 8912 facsimile
ewilliams@ncdot.gov

10.0 SUBMITTAL COPIES

Furnish one complete copy of each submittal, including all attachments, to the Resident Engineer. At the same time, submit the number of hard copies shown below of the same complete submittal directly to the Structure Design Unit and/or the Geotechnical Engineering Unit.

The first table below covers "Structure Submittals". The Resident Engineer will receive review comments and drawing markups for these submittals from the Structure Design Unit. The second table in this section covers "Geotechnical Submittals". The Resident Engineer will receive review comments and drawing markups for these submittals from the Geotechnical Engineering Unit.

Unless otherwise required, submit one set of supporting calculations to either the Structure Design Unit or the Geotechnical Engineering Unit unless both units require submittal copies in which case submit a set of supporting calculations to each unit. Provide additional copies of any submittal as directed.

STRUCTURE SUBMITTALS

Submittal	Copies Required by Structure Design Unit	Copies Required by Geotechnical Engineering Unit	Contract Reference Requiring Submittal [1]
Arch Culvert Falsework	5	0	Plan Note, SN Sheet & "Falsework and Formwork"
Box Culvert Falsework [7]	5	0	Plan Note, SN Sheet & "Falsework and Formwork"
Cofferdams	6	2	Article 410-4
Foam Joint Seals [6]	9	0	"Foam Joint Seals"
Expansion Joint Seals (hold down plate type with base angle)	9	0	"Expansion Joint Seals"
Expansion Joint Seals (modular)	2, then 9	0	"Modular Expansion Joint Seals"
Falsework & Forms [2] (substructure)	8	0	Article 420-3 & "Falsework and Formwork"
Falsework & Forms (superstructure)	8	0	Article 420-3 & "Falsework and Formwork"
Girder Erection over Railroad	5	0	Railroad Provisions
Maintenance and Protection of Traffic Beneath Proposed Structure	8	0	"Maintenance and Protection of Traffic Beneath Proposed Structure

			at Station ___”
Metal Bridge Railing	8	0	Plan Note
Metal Stay-in-Place Forms	8	0	Article 420-3
Metalwork for Elastomeric Bearings [4,5]	7	0	Article 1072-8
Miscellaneous Metalwork [4,5]	7	0	Article 1072-8
Optional Disc Bearings [4]	8	0	“Optional Disc Bearings”
Overhead and Digital Message Signs (DMS) (metalwork and foundations)	13	0	Applicable Provisions
Placement of Equipment on Structures (cranes, etc.)	7	0	Article 420-20
Pot Bearings [4]	8	0	“Pot Bearings”
Precast Concrete Box Culverts	2, then 1 reproducible	0	“Optional Precast Reinforced Concrete Box Culvert at Station ___”
Prestressed Concrete Cored Slab (detensioning sequences) [3]	6	0	Article 1078-11
Prestressed Concrete Deck Panels	6 and 1 reproducible	0	Article 420-3
Prestressed Concrete Girder (strand elongation and detensioning sequences)	6	0	Articles 1078-8 and 1078-11
Removal of Existing Structure over Railroad	5	0	Railroad Provisions
Revised Bridge Deck Plans (adaptation to prestressed deck panels)	2, then 1 reproducible	0	Article 420-3
Revised Bridge Deck Plans (adaptation to modular expansion joint seals)	2, then 1 reproducible	0	“Modular Expansion Joint Seals”
Sound Barrier Wall (precast items)	10	0	Article 1077-2 & “Sound Barrier Wall”
Sound Barrier Wall Steel Fabrication Plans [5]	7	0	Article 1072-8 & “Sound Barrier Wall”
Structural Steel [4]	2, then 7	0	Article 1072-8

Temporary Detour Structures	10	2	Article 400-3 & "Construction, Maintenance and Removal of Temporary Structure at Station ____"
TFE Expansion Bearings [4]	8	0	Article 1072-8

FOOTNOTES

1. References are provided to help locate the part of the contract where the submittals are required. References in quotes refer to the provision by that name. Articles refer to the *Standard Specifications*.
2. Submittals for these items are necessary only when required by a note on plans.
3. Submittals for these items may not be required. A list of pre-approved sequences is available from the producer or the Materials & Tests Unit.
4. The fabricator may submit these items directly to the Structure Design Unit.
5. The two sets of preliminary submittals required by Article 1072-8 of the *Standard Specifications* are not required for these items.
6. Submittals for Fabrication Drawings are not required. Submittals for Catalogue Cuts of Proposed Material are required. See Section 5.A of the referenced provision.
7. Submittals are necessary only when the top slab thickness is 18" or greater.

GEOTECHNICAL SUBMITTALS

Submittal	Copies Required by Geotechnical Engineering Unit	Copies Required by Structure Design Unit	Contract Reference Requiring Submittal [1]
Drilled Pier Construction Plans [2]	1	0	Subarticle 411-3(A)
Crosshole Sonic Logging (CSL) Reports [2]	1	0	Subarticle 411-5(A)(2)
Pile Driving Equipment Data Forms [2,3]	1	0	Subarticle 450-3(D)(2)
Pile Driving Analyzer (PDA) Reports [2]	1	0	Subarticle 450-3(F)(3)
Retaining Walls [4]	8 drawings, 2 calculations	2 drawings	Applicable Provisions
Temporary Shoring [4]	5 drawings, 2 calculations	2 drawings	"Temporary Shoring" & "Temporary Soil Nail Walls"

FOOTNOTES

1. References are provided to help locate the part of the contract where the submittals are required. References in quotes refer to the provision by that name. Subarticles refer to the *Standard Specifications*.

2. Submit one hard copy of submittal to the Resident or Bridge Maintenance Engineer. Submit a second copy of submittal electronically (PDF via email) or by facsimile, US mail or other delivery service to the appropriate Geotechnical Engineering Unit regional office. Electronic submission is preferred.

3. The Pile Driving Equipment Data Form is available from:
https://connect.ncdot.gov/resources/Geological/Pages/Geotech_Forms_Details.aspx
See second page of form for submittal instructions.

4. Electronic copy of submittal is required. See referenced provision.

CRANE SAFETY
(8-15-05)

Comply with the manufacturer specifications and limitations applicable to the operation of any and all cranes and derricks. Prime contractors, sub-contractors, and fully operated rental companies shall comply with the current Occupational Safety and Health Administration regulations (OSHA).

Submit all items listed below to the Engineer prior to beginning crane operations involving critical lifts. A critical lift is defined as any lift that exceeds 75 percent of the manufacturer's crane chart capacity for the radius at which the load will be lifted or requires the use of more than one crane. Changes in personnel or equipment must be reported to the Engineer and all applicable items listed below must be updated and submitted prior to continuing with crane operations.

CRANE SAFETY SUBMITTAL LIST

Competent Person: Provide the name and qualifications of the "Competent Person" responsible for crane safety and lifting operations. The named competent person will have the responsibility and authority to stop any work activity due to safety concerns.

Riggers: Provide the qualifications and experience of the persons responsible for rigging operations. Qualifications and experience should include, but not be limited to, weight calculations, center of gravity determinations, selection and inspection of sling and rigging equipment, and safe rigging practices.

Crane Inspections: Inspection records for all cranes shall be current and readily accessible for review upon request.

Certifications: **By July 1, 2006**, crane operators performing critical lifts shall be certified by NC CCO (National Commission for the Certification of Crane Operators), or satisfactorily complete the Carolinas AGC's Professional Crane Operator's Proficiency Program. Other approved nationally accredited programs will be considered upon request. All crane operators shall also have a current CDL medical card. Submit a list of anticipated critical lifts and corresponding crane operator(s). Include current certification for the type of crane operated (small hydraulic, large hydraulic, small lattice, large lattice) and medical evaluations for each operator.

GROUT FOR STRUCTURES
(9-30-11)

1.0 DESCRIPTION

This special provision addresses grout for use in pile blockouts, grout pockets, shear keys, dowel holes and recesses for structures. This provision does not apply to grout placed in post-tensioning ducts for bridge beams, girders, or decks. Mix and place grout in accordance with the manufacturer's recommendations, the applicable sections of the Standard Specifications and this provision.

2.0 MATERIAL REQUIREMENTS

Use a Department approved pre-packaged, non-shrink, non-metallic grout. Contact the Materials and Tests Unit for a list of approved pre-packaged grouts and consult the manufacturer to determine if the pre-packaged grout selected is suitable for the required application.

When using an approved pre-packaged grout, a grout mix design submittal is not required.

The grout shall be free of soluble chlorides and contain less than one percent soluble sulfate. Supply water in compliance with Article 1024-4 of the Standard Specifications.

Aggregate may be added to the mix only where recommended or permitted by the manufacturer and Engineer. The quantity and gradation of the aggregate shall be in accordance with the manufacturer's recommendations.

Admixtures, if approved by the Department, shall be used in accordance with the manufacturer's recommendations. The manufacture date shall be clearly stamped on each container. Admixtures with an expired shelf life shall not be used.

The Engineer reserves the right to reject material based on unsatisfactory performance.

Initial setting time shall not be less than 10 minutes when tested in accordance with ASTM C266.

Test the expansion and shrinkage of the grout in accordance with ASTM C1090. The grout shall expand no more than 0.2% and shall exhibit no shrinkage. Furnish a Type 4 material certification showing results of tests conducted to determine the properties listed in the Standard Specifications and to assure the material is non-shrink.

Unless required elsewhere in the contract the compressive strength at 3 days shall be at least 5000 psi. Compressive strength in the laboratory shall be determined in accordance with ASTM C109 except the test mix shall contain only water and the dry manufactured material. Compressive strength in the field will be determined by molding and testing 4" x 8" cylinders in accordance with AASHTO T22. Construction loading and traffic loading shall not be allowed until the 3 day compressive strength is achieved.

When tested in accordance with ASTM C666, Procedure A, the durability factor of the grout shall not be less than 80.

3.0 SAMPLING AND PLACEMENT

Place and maintain components in final position until grout placement is complete and accepted. Concrete surfaces to receive grout shall be free of defective concrete, laitance, oil, grease and other foreign matter. Saturate concrete surfaces with clean water and remove excess water prior to placing grout.

Do not place grout if the grout temperature is less than 50°F or more than 90°F or if the air temperature measured at the location of the grouting operation in the shade away from artificial heat is below 45°F.

Provide grout at a rate that permits proper handling, placing and finishing in accordance with the manufacturer's recommendations unless directed otherwise by the Engineer. Use grout free of any lumps and undispersed cement. Agitate grout continuously before placement.

Control grout delivery so the interval between placing batches in the same component does not exceed 20 minutes.

The Engineer will determine the locations to sample grout and the number and type of samples collected for field and laboratory testing. The compressive strength of the grout will be considered the average compressive strength test results of 3 cube or 2 cylinder specimens at 28 days.

4.0 BASIS OF PAYMENT

No separate payment will be made for "Grout for Structures". The cost of the material, equipment, labor, placement, and any incidentals necessary to complete the work shall be considered incidental to the structure item requiring grout.

MAINTENANCE AND PROTECTION OF TRAFFIC BENEATH PROPOSED STRUCTURE AT STATION 13+58.65 -L-

(8-13-04)

1. GENERAL

Maintain traffic on **SR 1856** as shown in Traffic Control Plans and as directed by the Engineer.

Maintain existing vertical clearances at all times during construction.

Submit plans and calculations for review and approval for protecting traffic and bracing girders, as described herein, at the above station before beginning work at this location. Have the drawings and design calculations prepared, signed, and sealed by a North Carolina Registered Professional Engineer. The approval of the Engineer will not relieve the Contractor of the responsibility for the safety of the method or equipment.

2. PROTECTION OF TRAFFIC

Protect traffic from any operation that affords the opportunity for construction materials, equipment, tools, etc. to be dropped into the path of traffic beneath the structure. Based on Contractor means and methods determine and clearly define all dead and live loads for this system, which, at a minimum, shall be installed between beams or girders over any travelway or shoulder area where traffic is maintained. Install the protective system before beginning any construction operations over traffic. In addition, for these same areas, keep the overhang falsework in place until after the rails have been poured.

3. BRACING GIRDERS

Brace girders to resist wind forces, weight of forms and other temporary loads, especially those eccentric to the vertical axis of the member during all stages of erection and

construction. Before casting of intermediate diaphragms, decks, or connecting steel diaphragms do not allow the horizontal movement of girders to exceed ½ inch.

4. BASIS OF PAYMENT

Payment at the contract unit prices for the various pay items will be full compensation for the above work.

REMOVAL OF EXISTING STRUCTURE AT STA. 13+58.65 -L-

(SPECIAL)

The existing structure shall be removed in accordance with the Standard Specifications except as noted below:

Upon removal, all steel beams, diaphragms, H-pile posts, I-beam caps, and bridge plaques shall be salvaged from the structure and remain as the property of the North Carolina Department of Transportation. Deliver the salvaged material to Yadkin Bridge Maintenance Yard. Contact Gary Robbins at 336-835-4941 at least one week prior to delivery. Bridge Maintenance Unit shall provide the manpower and equipment to unload the salvaged material. All salvaged material shall be removed carefully without damage.

No separate measurement will be made for this work and the entire cost of this work shall be included in the lump sum price bid for "Removal of Existing Structure at Station 13+58.65 -L-"

CONCRETE STAIN

(SPECIAL)

1.0 DESCRIPTION

The work covered by this item consists of the field preparation and application of a concrete penetrating stain to concrete surfaces as indicated on the plans or as directed by the Engineer. The stain shall be applied in two uniform coats and shall provide protection from water and chlorides.

2.0 MATERIAL REQUIREMENTS

A. Material shall be delivered in original sealed containers, clearly labeled with manufacturer's name and batch number of the material.

B. The stain shall be a water-based emulsion with inorganic oxide toning pigments which carries its color and water repellant protection into the surface of the concrete.

C. The coating shall conform to the following requirements:

Physical Properties:

CONDITIONS	RESULTS	TEST METHOD
Dry time@ 75°, 50% R.H.	20 Min. Max.	ASTM D1640
Recoat time@ 75°, 50% R.H.	12 Hour Max.	ASTM D1640

The penetrating stain material shall not oxidize and shall show no appreciable change in color after 1,000 hours when tested according to ASTM D1729. It shall have excellent resistance to acids, alkalies, gasoline, and mineral spirits when tested according to ASTM D543. It shall allow moisture vapor from the concrete interior to pass through the coating when tested according to ASTM E398 or D1653. It shall reduce the absorption rate of exterior moisture into the pores of the concrete surface.

D. The color of the applied concrete surface shall be FS-26405. Color chip shall be submitted to the Engineer to be applied to the sample area as described in the construction methods section.

E. The Contractor shall submit five (5) catalog cut sheets to the Engineer for approval. The technical data provided shall indicate that the material supplied is in accordance with the specifications.

3.0 CONSTRUCTION

A. The Contractor shall prepare a sample area of approximately 2 feet by 2 feet and shall apply the concrete penetrating stain, FS-26405 color, to this area as directed by the Engineer. The sample area shall be prepared and stain applied in the same manner as will occur on the actual finished surfaces. Upon the Engineer's approval, the sample area shall serve as a standard of acceptance for all further work.

B. Concrete surfaces shall be prepared in accordance with the stain manufacturer's recommendations and as directed by the Engineer. Surfaces must be clean and free of oil, grease, laitance, efflorescence and any other contaminants that could prevent good adhesion. All concrete surfaces to which the stain is to be applied shall receive a high pressure power washing with water set at 3000 psi prior to application unless the manufacturer’s recommendations prohibits this type of surface preparation.

C. The concrete penetration shall be mixed and applied in accordance with the manufacturer’s recommendations and as directed by the Engineer.

D. In order to apply stain, both the concrete and air temperatures must be between 45°F and 90°F and within manufacturer's specifications. Stain shall not be applied unless weather conditions will permit complete drying of material prior to rain, fog, dew or temperatures beyond the prescribed limits.

E. Stain shall not be applied to damp concrete surfaces.

F. Stain may be applied by brush, spray or roller. Once a method has been adopted, the method must be utilized throughout the application process. Material should not be flooded on the surface but applied evenly avoiding rundowns or overlaps.

G. Stain shall be applied in two thin coats (minimum) providing a uniform appearance. The first coat must be allowed to become tack free before the second coat is applied. The final coat shall be consistent with the quality and appearance of the approved sample area. Note that care should be taken to provide a uniform appearance between the precast concrete surface (prestressed concrete girders/cored slab units) and the cast-in-place concrete surfaces (curb and parapets). Additional coats of stain may be required to provide this uniform appearance.

H. Adequate protection shall be provided to protect adjacent persons, vehicles and property from concrete surface preparation activities and from overspray during staining operations.

4.0 MEASUREMENT AND PAYMENT

Concrete staining will be measured and paid for at the contract price bid per square foot for ***"Concrete Stain."*** Price and payment will be full compensation for all above work including but not limited to materials, equipment, tools, labor and incidentals necessary to complete the work.

PERMITS

Attachment G: Low/Minimal Impact Bridge Project Data Sheet

1	TIP NO		B-5111V		B-5111Z		B-5111AA
2	WBS Element No.		45357.1.22		45357.1.26		45357.1.27
3	County		Surry		Ashe		Watauga
4	Bridge Number		244		2		38
5	Description		Replace Bridge # 244 on SR 1809 over SR 1856		Repalce Bridge # 2 on SR 1106 over Old Field Creek		Replace Bridge # 38 on SR 1337 over Meat Camp Creek
6	Stream	Basin	N/A		New River		New River
7		Classification	N/A		C,Trout,ORW		C, Trout, +
8		SIN	N/A		10-1-22-(0.7)		10-1-10
9		Type	N/A		Inland		Inland
10		Size	N/A		32'		19'
11	Existing Structure	Type	3-Spans		1-Span		1-Span
12		Size	1@40', 2@40'3"		1@36'8"		1@35'6"
13		Suff. Rating	3		17		6
14	Proposed Structure	Type	Bridge		Bridge		Bridge
15		Size	100'		85'		60'
16	Stream	USACE (LF)	0		0		0
17		NCDWQ Impacts (LF)	0		0		0
18	Wetlands	USACE Impacts (AC)	0		0		0
19		Non 404 Impacts (AC)	0		0		0
20		CAMA Impacts (SF)	N/A		N/A		N/A
21	NC DWQ Buffers Impacts (SF)		N/A		N/A		N/A
22	Buffer Applicaton Required (Y/N)		NO		NO		NO
23	State Stormwater Permit Required (Y/N)		NO		Yes		No
24	T&E	Habitat	N/A		No		No
25		Species Present	N/A		No		No
26		Bio Conclusion	N/A		No		No
27	Moratorium	Type	N/A		Trout		Trout
28		Dates	N/A		Oct 15 - Apr 15		Oct 15 - Apr 15
29	Trout Waters	Native/Hatchery	No		Native		Native
30		Trout Species Present	No		BRK/BWN		BRK/BWN
31		Trout Conditions (Y/N)	No		Yes		Yes
32		WRC Reviewer	McHenry		McHenry		McHenry
33	CAMA	AECs	N/A		N/A		N/A
34	Essential Fish	Habitat	No		No		No
35	Nav.	Opening	No		No		No
36	USCG	Permit	No		No		No
37	Historic	Properties	No		No		No
38	Archaeological	Resources	No		Survey Required		No
39	Tribal	Lands	No		No		No
40	4(f)	Resources	No		No		No
41	6(f) [LWCF]	Resources	No		No		No
42	Wild and	Scenic River	No		No		No
43	Federal	Lands	No		No		No
44	TVA	Area	No		No		No
45	FEMA	Buyout	No		No		No
46	FEMA	Flood Study	No		No		No
47	USTs	Haz Mats	No		No		No
48		Relocatees	No		No		No
49	Location	LAT	36.39306		36.30611		36.27861
50		LONG	-80.47278		-81.50833		-81.66444
51	Project Comments		Sidewalks & Bicycle Lane				

Completed by: Jami C Guyer Date: 03/12/13
Lead Engineer

J. Heath Slaughter Date: 3/12/13
Division Environmental Officer

JTP
F/ 309-085(P02)
cc: B. Bodey
K. Skinner
H. Woodall

NCDENR

North Carolina Department of Environment and Natural Resources
Division of Water Resources

Pat McCrory
Governor

Thomas A. Reeder
Director

John E. Skvarla III
Secretary

RECEIVED
MAR 24 2014
PWSS
RALEIGH, NC

March 19, 2014

RONALD HOLT, DIR., PUBLIC WORKS
TOWN OF PILOT MOUNTAIN
124 W MAIN STREET BOX 1
PILOT MOUNTAIN, NC 27041

Re: **Authorization to Construct**
NCDOT PROJECT BD-5111V (BRIDGE #244)
PILOT MOUNTAIN, TOWN OF
SURRYCOUNTY, NC0286025

Authorization to Construct (This is not a Final Approval)

Dear Applicant:

This letter is to confirm that a complete Engineer's Report and a Water System Management Plan have been received, and that engineering plans and specifications have been approved by the Department for **NCDOT PROJECT BD-5111V (BRIDGE #244), Serial No. 14-00163.**

The Authorization to Construct is valid for 24 months from the **Issue Date** (refer to next page). Authorization to Construct may be extended if the Rules Governing Public Water Supplies and site conditions have not changed (see Rule .0305). The Authorization to Construct and the engineering plans and specifications approval letter shall be posted at the primary entrance of the job site before and during construction.

Upon completion of the construction or modification, and prior **to placing the new construction or modification into service**, the applicant must submit an Engineer's Certification and Applicant Certification directly to SHASHI BHATTA of this office.

- **Engineer Certification:** in accordance with Rule .0303 (a), the applicant shall submit a certification statement signed and sealed by a registered professional engineer stating that construction was completed in accordance with approved engineering plans and specifications, including any provisions stipulated in the Department's engineering plan and specification approval letter.
- **Applicant Certification:** in accordance with Rule .0303 (c), the applicant shall submit a signed certification statement indicating that the requirements for an Operation and Maintenance Plan and Emergency Management Plan have been satisfied in accordance with Rule .0307 (d) and (e) and that the system has a certified operator in accordance with Rule .1300. The "Applicant Certification" form is available at http://www.deh.enr.state.nc.us/pws/ (click on Plan Review Forms, under Plan Review heading).

If this Authorization to Construct is for a new public water system, the owner must submit a completed **application for an Operating Permit** and the appropriate fee. For a copy of the application for an Operating Permit please call (919) 707-9085.

Once the certifications and permit application and fee, (if applicable), are received and determined adequate, the Department will issue a Final Approval letter to the applicant. In accordance with Rule .0309 (a), **no portion of this project shall be placed into service until the Department has issued Final Approval.**

Sincerely,

Siraj Chohan, P.E.
Plan Review Team Leader

cc: Eric Hudson, Acting Regional Engineer
Rummel, Klepper And Kahl

Public Water Supply Section - Jessica C. Godreau, Chief
1634 Mail Service Center, Raleigh, North Carolina 27699-1634
Phone: 919-707-9100 \ FAX: 919-715-4374 \ Lab Form FAX: 919-715-6637 \ Internet: www.ncwater.org/pws
An Equal Opportunity \ Affirmative Action Employer

North Carolina Department of Environment and Natural Resources
Division of Water Resources

Public Water System Authorization to Construct

Public Water System Name and Water System No.:	PILOT MOUNTAIN, TOWN OF NC0286025
Project Name:	NCDOT PROJECT BD-5111V (BRIDGE #244)
Serial No.:	14-00163
Issue Date:	03/19/2014
Expiration Date:	24 Months after Issue Date

In accordance with NCAC 18C .0305, this Authorization to Construct must be posted at the primary entrance to the job site during construction.

NCDENR
North Carolina Department of Environment and Natural Resources
Division of Water Resources

Pat McCrory
Governor

Thomas A. Reeder
Director

John E. Skvarla, II
Secretary

March 19, 2014

Mr. Ronald Holt, Public Works Director
Town of Pilot Mountain
124 W. Main Street
Pilot Mountain, North Carolina 27041

Re: Engineering Plans and Specifications Approval
Water Main Replacement
NCDOT Project BD-5111V (Bridge No. 244)
Town of Pilot Mountain
Water System No.: NC0286025, Surry County
Serial No. 14-00163

Dear Mr. Holt:

Enclosed please find one copy of the "Application for Approval..." together with one copy of the referenced engineering plans and specifications bearing the Division of Water Resources stamp of approval for the referenced project. These engineering plans and specifications are approved under Division of Water Resources Serial Number 14-00163, dated March 19, 2014.

Engineering plans and specifications prepared by Bryan M. Badey, P.E., call for the relocation of approximately 340 feet of 12-inch, 385 feet of 6-inch, 70 feet of 4-inch, 10 feet of 2-inch water main, a hydrant, valves and other appurtenances near Old Westfield Road bridge area (Bridge no. 244, NCDOT Project BD-5111V) over Old US 52 due to NCDOT's planned Bridge No. 244 replacement.

Please note that in accordance with 15A NCAC 18C .0309(a), no construction, alteration, or expansion of a water system shall be placed into service or made available for human consumption until the Public Water Supply Section has issued Final Approval. Final Approval will be issued and mailed to the applicant upon receipt of both an Engineer's Certification and an Applicant's Certification submitted in accordance 15 A NCAC 18C .0303 (a) and (c).

These plans and specifications in the foregoing application are approved insofar as the protection of public health is concerned as provided in the rules, standards and criteria adopted under the authority of Chapter 130A-317 of the General Statutes. This approval does not constitute a warranty of the design, construction or future operation of the water system.

One copy of the "Application for Approval..." and a copy of the plans and specifications with a seal of approval from the department are enclosed. One copy of the approved documents in a digital format (CD) is being forwarded to our Winston Salem Regional Office. The second copy of the CD is being retained for our records.

Mr. Ronald Holt, Public Works Director
Page 2 of 2
March 19, 2014

If the Public Water Supply Section can be of further service, please call (919) 707-9100.

Sincerely,

Siraj Chohan, P.E.
Plan Review Team Leader

SMC/SMB

Enclosures: Approval Documents

cc: Eric Hudson, P.E., Winston Salem Regional Office
Surry County Health Department
Rummel, Klepper & Kahl, LLP

STANDARD SPECIAL PROVISIONS

AVAILABILITY OF FUNDS – TERMINATION OF CONTRACTS

(5-20-08) Z-2

General Statute 143C-6-11. (h) Highway Appropriation is hereby incorporated verbatim in this contract as follows:

(h) Amounts Encumbered. – Transportation project appropriations may be encumbered in the amount of allotments made to the Department of Transportation by the Director for the estimated payments for transportation project contract work to be performed in the appropriation fiscal year. The allotments shall be multiyear allotments and shall be based on estimated revenues and shall be subject to the maximum contract authority contained in *General Statute 143C-6-11(c)*. Payment for transportation project work performed pursuant to contract in any fiscal year other than the current fiscal year is subject to appropriations by the General Assembly. Transportation project contracts shall contain a schedule of estimated completion progress, and any acceleration of this progress shall be subject to the approval of the Department of Transportation provided funds are available. The State reserves the right to terminate or suspend any transportation project contract, and any transportation project contract shall be so terminated or suspended if funds will not be available for payment of the work to be performed during that fiscal year pursuant to the contract. In the event of termination of any contract, the contractor shall be given a written notice of termination at least 60 days before completion of scheduled work for which funds are available. In the event of termination, the contractor shall be paid for the work already performed in accordance with the contract specifications.

Payment will be made on any contract terminated pursuant to the special provision in accordance with Subarticle 108-13(E) of the *2012 Standard Specifications*.

NCDOT GENERAL SEED SPECIFICATION FOR SEED QUALITY

(5-17-11) Z-3

Seed shall be sampled and tested by the North Carolina Department of Agriculture and Consumer Services, Seed Testing Laboratory. When said samples are collected, the vendor shall supply an independent laboratory report for each lot to be tested. Results from seed so sampled shall be final. Seed not meeting the specifications shall be rejected by the Department of Transportation and shall not be delivered to North Carolina Department of Transportation warehouses. If seed has been delivered it shall be available for pickup and replacement at the supplier's expense.

Any re-labeling required by the North Carolina Department of Agriculture and Consumer Services, Seed Testing Laboratory, that would cause the label to reflect as otherwise specified herein shall be rejected by the North Carolina Department of Transportation.

Seed shall be free from seeds of the noxious weeds Johnsongrass, Balloonvine, Jimsonweed, Witchweed, Itchgrass, Serrated Tussock, Showy Crotalaria, Smooth Crotalaria, Sicklepod, Sandbur, Wild Onion, and Wild Garlic. Seed shall not be labeled with the above weed species on the seed analysis label. Tolerances as applied by the Association of Official Seed Analysts will NOT be allowed for the above noxious weeds except for Wild Onion and Wild Garlic.

Tolerances established by the Association of Official Seed Analysts will generally be recognized. However, for the purpose of figuring pure live seed, the found pure seed and found germination percentages as reported by the North Carolina Department of Agriculture and Consumer Services, Seed Testing Laboratory will be used. Allowances, as established by the NCDOT, will be recognized for minimum pure live seed as listed on the following pages.

The specifications for restricted noxious weed seed refers to the number per pound as follows:

Restricted Noxious **Weed**	Limitations per Lb. Of Seed	Restricted Noxious **Weed**	Limitations per Lb. of Seed
Blessed Thistle	4 seeds	Cornflower (Ragged Robin)	27 seeds
Cocklebur	4 seeds	Texas Panicum	27 seeds
Spurred Anoda	4 seeds	Bracted Plantain	54 seeds
Velvetleaf	4 seeds	Buckhorn Plantain	54 seeds
Morning-glory	8 seeds	Broadleaf Dock	54 seeds
Corn Cockle	10 seeds	Curly Dock	54 seeds
Wild Radish	12 seeds	Dodder	54 seeds
Purple Nutsedge	27 seeds	Giant Foxtail	54 seeds
Yellow Nutsedge	27 seeds	Horsenettle	54 seeds
Canada Thistle	27 seeds	Quackgrass	54 seeds
Field Bindweed	27 seeds	Wild Mustard	54 seeds
Hedge Bindweed	27 seeds		

Seed of Pensacola Bahiagrass shall not contain more than 7% inert matter, Kentucky Bluegrass, Centipede and Fine or Hard Fescue shall not contain more than 5% inert matter whereas a maximum of 2% inert matter will be allowed on all other kinds of seed. In addition, all seed shall not contain more than 2% other crop seed nor more than 1% total weed seed. The germination rate as tested by the North Carolina Department of Agriculture shall not fall below 70%, which includes both dormant and hard seed. Seed shall be labeled with not more than 7%, 5% or 2% inert matter (according to above specifications), 2% other crop seed and 1% total weed seed.

Exceptions may be made for minimum pure live seed allowances when cases of seed variety shortages are verified. Pure live seed percentages will be applied in a verified shortage situation. Those purchase orders of deficient seed lots will be credited with the percentage that the seed is deficient.

FURTHER SPECIFICATIONS FOR EACH SEED GROUP ARE GIVEN BELOW:

Minimum 85% pure live seed; maximum 1% total weed seed; maximum 2% total other crop seed; maximum 144 restricted noxious weed seed per pound. Seed less than 83% pure live seed will not be approved.

Sericea Lespedeza
Oats (seeds)

Minimum 80% pure live seed; maximum 1% total weed seed; maximum 2% total other crop; maximum 144 restricted noxious weed seed per pound. Seed less than 78% pure live seed will not be approved.

Tall Fescue (all approved varieties)
Kobe Lespedeza
Korean Lespedeza
Weeping Lovegrass
Carpetgrass
Bermudagrass
Browntop Millet
German Millet – Strain R
Clover – Red/White/Crimson

Minimum 78% pure live seed; maximum 1% total weed seed; maximum 2% total other crop seed; maximum 144 restricted noxious weed seed per pound. Seed less than 76% pure live seed will not be approved.

Common or Sweet Sundangrass

Minimum 76% pure live seed; maximum 1% total weed seed; maximum 2% total other crop seed; maximum 144 restricted noxious weed seed per pound. Seed less than 74% pure live seed will not be approved.

Rye (grain; all varieties)
Kentucky Bluegrass (all approved varieties)
Hard Fescue (all approved varieties)
Shrub (bicolor) Lespedeza

Minimum 70% pure live seed; maximum 1% total weed seed; maximum 2% total other crop seed; maximum 144 noxious weed seed per pound. Seed less than 70% pure live seed will not be approved.

Centipedegrass
Crownvetch
Pensacola Bahiagrass
Creeping Red Fescue
Japanese Millet
Reed Canary Grass
Zoysia

Minimum 70% pure live seed; maximum 1% total weed seed; maximum 2% total other crop seed; maximum 5% inert matter; maximum 144 restricted noxious weed seed per pound.

Barnyard Grass
Big Bluestem
Little Bluestem
Bristly Locust
Birdsfoot Trefoil
Indiangrass
Orchardgrass
Switchgrass
Yellow Blossom Sweet Clover

ERRATA
(1-17-12) (Rev. 1-21-14) Z-4

Revise the *2012 Standard Specifications* as follows:

Division 2

Page 2-7, line 31, Article 215-2 Construction Methods, replace "Article 107-26" with "Article 107-25".

Page 2-17, Article 226-3, Measurement and Payment, line 2, delete "pipe culverts,".

Page 2-20, Subarticle 230-4(B), Contractor Furnished Sources, change references as follows: Line 1, replace "(4) Buffer Zone" with "(c) Buffer Zone"; **Line 12,** replace "(5) Evaluation for Potential Wetlands and Endangered Species" with "(d) Evaluation for Potential Wetlands and Endangered Species"; and **Line 33,** replace "(6) Approval" with "(4) Approval".

Division 3

Page 3-1, after line 15, Article 300-2 Materials, replace "1032-9(F)" with "1032-6(F)".

Division 4

Page 4-77, line 27, Subarticle 452-3(C) Concrete Coping, replace "sheet pile" with "reinforcement".

Division 6

Page 6-7, line 31, Article 609-3 Field Verification of Mixture and Job Mix Formula Adjustments, replace "30" with "45".

Page 6-10, line 42, Subarticle 609-6(C)(2), replace "Subarticle 609-6(E)" with "Subarticle 609-6(D)".

Page 6-11, Table 609-1 Control Limits, replace "Max. Spec. Limit" for the Target Source of $P_{0.075}/P_{be}$ Ratio with "1.0".

Page 6-40, Article 650-2 Materials, replace "Subarticle 1012-1(F)" with "Subarticle 1012-1(E)"

Division 8

Page 8-23, line 10, Article 838-2 Materials, replace "Portland Cement Concrete, Class B" with "Portland Cement Concrete, Class A".

Division 10

Page 10-166, Article 1081-3 Hot Bitumen, replace "Table 1081-16" with "Table 1081-2", replace "Table 1081-17" with "Table 1081-3", and replace "Table 1081-18" with "Table 1081-4".

Division 12

Page 12-7, Table 1205-3, add "FOR THERMOPLASTIC" to the end of the title.

Page 12-8, Subarticle 1205-5(B), line 13, replace "Table 1205-2" with "Table 1205-4".

Page 12-8, Table 1205-4 and 1205-5, replace "THERMOPLASTIC" in the title of these tables with "POLYUREA".

Page 12-9, Subarticle 1205-6(B), line 21, replace "Table 1205-4" with "Table 1205-6".

Page 12-11, Subarticle 1205-8(C), line 25, replace "Table 1205-5" with "Table 1205-7".

Division 15

Page 15-4, Subarticle 1505-3(F) Backfilling, line 26, replace "Subarticle 235-4(C)" with "Subarticle 235-3(C)".

Page 15-6, Subarticle 1510-3(B), after line 21, replace the allowable leakage formula with the following: $W = LD\sqrt{P} \div 148{,}000$

Page 15-6, Subarticle 1510-3(B), line 32, delete "may be performed concurrently or" and replace with "shall be performed".

Page 15-17, Subarticle 1540-3(E), line 27, delete "Type 1".

Division 17

Page 17-26, line 42, Subarticle 1731-3(D) Termination and Splicing within Interconnect Center, delete this subarticle.

Revise the *2012 Roadway Standard Drawings* as follows:

1633.01 Sheet 1 of 1, English Standard Drawing for Matting Installation, replace "1633.01" with "1631.01".

END ERRATA

PLANT AND PEST QUARANTINES

(Imported Fire Ant, Gypsy Moth, Witchweed, And Other Noxious Weeds)

(3-18-03) (Rev. 10-15-13) Z-04a

Within Quarantined Area

This project may be within a county regulated for plant and/or pests. If the project or any part of the Contractor's operations is located within a quarantined area, thoroughly clean all equipment prior to moving out of the quarantined area. Comply with federal/state regulations by obtaining a certificate or limited permit for any regulated article moving from the quarantined area.

Originating in a Quarantined County

Obtain a certificate or limited permit issued by the N.C. Department of Agriculture/United States Department of Agriculture. Have the certificate or limited permit accompany the article when it arrives at the project site.

Contact

Contact the N.C. Department of Agriculture/United States Department of Agriculture at 1-800-206-9333, 919-733-6932, or *http://www.ncagr.gov/plantind/* to determine those specific project sites located in the quarantined area or for any regulated article used on this project originating in a quarantined county.

Regulated Articles Include

1. Soil, sand, gravel, compost, peat, humus, muck, and decomposed manure, separately or with other articles. This includes movement of articles listed above that may be associated with cut/waste, ditch pulling, and shoulder cutting.
2. Plants with roots including grass sod.

3. Plant crowns and roots.
4. Bulbs, corms, rhizomes, and tubers of ornamental plants.
5. Hay, straw, fodder, and plant litter of any kind.
6. Clearing and grubbing debris.
7. Used agricultural cultivating and harvesting equipment.
8. Used earth-moving equipment.
9. Any other products, articles, or means of conveyance, of any character, if determined by an inspector to present a hazard of spreading imported fire ant, gypsy moth, witchweed or other noxious weeds.

AWARD OF CONTRACT

(6-28-77) Z-6

"The North Carolina Department of Transportation, in accordance with the provisions of *Title VI of the Civil Rights Act of 1964* (78 Stat. 252) and the Regulations of the Department of Transportation (*49 C.F.R., Part 21*), issued pursuant to such act, hereby notifies all bidders that it will affirmatively insure that the contract entered into pursuant to this advertisement will be awarded to the lowest responsible bidder without discrimination on the ground of race, color, or national origin".

MINORITY AND FEMALE EMPLOYMENT REQUIREMENTS

Z-7

NOTICE OF REQUIREMENTS FOR AFFIRMATIVE ACTION TO ENSURE EQUAL EMPLOYMENT OPPORTUNITY (*EXECUTIVE NUMBER 11246*)

1. The goals and timetables for minority and female participation, expressed in percentage terms for the Contractor's aggregate workforce in each trade on all construction work in the covered area, see as shown on the attached sheet entitled "Employment Goals for Minority and Female participation".

These goals are applicable to all the Contractor's construction work (whether or not it is Federal or federally assisted) performed in the covered area. If the Contractor performs construction work in a geographical area located outside of the covered area, it shall apply the goals established for such geographical area where the work is actually performed. With regard to this second area, the Contractor also is subject to the goals for both its federally involved and nonfederally involved construction.

The Contractor's compliance with the Executive Order and the regulations in *41 CFR Part 60-4* shall be based on its implementation of the Equal Opportunity Clause, specific affirmative action obligations required by the specifications set forth in *41 CFR 60-4.3(a)*, and its effort to meet the goals. The hours of minority and female employment and training must be substantially uniform throughout the length of the contract, and in each trade and the Contractor shall make a good faith effort to employ minorities and women evenly on each of its projects. The transfer of minority or female employees or trainees from Contractor to Contractor or from project to project or the sole purpose of meeting the Contractor's goals shall be a violation of the contract, the executive Order and the regulations *in 41 CFR Part 60-4*. Compliance with the goals will be measured against the total work hours performed.

2. As used in this Notice and in the contract resulting from this solicitation, the "covered area" is the county or counties shown on the cover sheet of the proposal form and contract.

EMPLOYMENT GOALS FOR MINORITY AND FEMALE PARTICIPATION

Economic Areas

Area 023 29.7%
Bertie County
Camden County
Chowan County
Gates County
Hertford County
Pasquotank County
Perquimans County

Area 024 31.7%
Beaufort County
Carteret County
Craven County
Dare County
Edgecombe County
Green County
Halifax County
Hyde County
Jones County
Lenoir County
Martin County
Nash County
Northampton County
Pamlico County
Pitt County
Tyrrell County
Washington County
Wayne County
Wilson County

Area 025 23.5%
Columbus County
Duplin County
Onslow County
Pender County

Area 026 33.5%
Bladen County
Hoke County
Richmond County
Robeson County
Sampson County
Scotland County

Area 027 24.7%
Chatham County
Franklin County
Granville County
Harnett County
Johnston County
Lee County
Person County
Vance County
Warren County

Area 028 15.5%
Alleghany County
Ashe County
Caswell County
Davie County
Montgomery County
Moore County
Rockingham County
Surry County
Watauga County
Wilkes County

Area 029 15.7%
Alexander County
Anson County
Burke County
Cabarrus County
Caldwell County
Catawba County
Cleveland County
Iredell County
Lincoln County
Polk County
Rowan County
Rutherford County
Stanly County

Area 0480 8.5%
Buncombe County
Madison County

Area 030 6.3%
Avery County
Cherokee County
Clay County
Graham County
Haywood County
Henderson County
Jackson County
McDowell County
Macon County
Mitchell County
Swain County
Transylvania County
Yancey County

SMSA Areas

Area 5720 26.6%
Currituck County

Area 9200 20.7%
Brunswick County
New Hanover County

Area 2560 24.2%
Cumberland County

Area 6640 22.8%
Durham County
Orange County
Wake County

Area 1300 16.2%
Alamance County

Area 3120 16.4%
Davidson County
Forsyth County
Guilford County
Randolph County
Stokes County
Yadkin County

Area 1520 18.3%
Gaston County
Mecklenburg County
Union County

Goals for Female

Participation in Each Trade

(Statewide) 6.9%

REQUIRED CONTRACT PROVISIONS FEDERAL - AID CONSTRUCTION CONTRACTS

FHWA - 1273 Electronic Version - May 1, 2012 Z-8

I. General
II. Nondiscrimination
III. Nonsegregated Facilities
IV. Davis-Bacon and Related Act Provisions
V. Contract Work Hours and Safety Standards Act Provisions
VI. Subletting or Assigning the Contract
VII. Safety: Accident Prevention
VIII. False Statements Concerning Highway Projects
IX. Implementation of Clean Air Act and Federal Water Pollution Control Act
X. Compliance with Governmentwide Suspension and Debarment Requirements
XI. Certification Regarding Use of Contract Funds for Lobbying

ATTACHMENTS

A. Employment and Materials Preference for Appalachian Development Highway System or Appalachian Local Access Road Contracts (included in Appalachian contracts only)

I. GENERAL

1. Form FHWA-1273 must be physically incorporated in each construction contract funded under Title 23 (excluding emergency contracts solely intended for debris removal). The contractor (or subcontractor) must insert this form in each subcontract and further require its inclusion in all lower tier subcontracts (excluding purchase orders, rental agreements and other agreements for supplies or services).

   The applicable requirements of Form FHWA-1273 are incorporated by reference for work done under any purchase order, rental agreement or agreement for other services. The prime contractor shall be responsible for compliance by any subcontractor, lower-tier subcontractor or service provider.

   Form FHWA-1273 must be included in all Federal-aid design-build contracts, in all subcontracts and in lower tier subcontracts (excluding subcontracts for design services, purchase orders, rental agreements and other agreements for supplies or services). The design-builder shall be responsible for compliance by any subcontractor, lower-tier subcontractor or service provider.

   Contracting agencies may reference Form FHWA-1273 in bid proposal or request for proposal documents, however, the Form FHWA-1273 must be physically incorporated (not referenced) in all contracts, subcontracts and lower-tier subcontracts (excluding purchase orders, rental agreements and other agreements for supplies or services related to a construction contract).
2. Subject to the applicability criteria noted in the following sections, these contract provisions shall apply to all work performed on the contract by the contractor's own organization and with the assistance of workers under the contractor's immediate superintendence and to all work performed on the contract by piecework, station work, or by subcontract.
3. A breach of any of the stipulations contained in these Required Contract Provisions may be sufficient grounds for withholding of progress payments, withholding of final payment, termination of the contract, suspension / debarment or any other action determined to be appropriate by the contracting agency and FHWA.

4. Selection of Labor: During the performance of this contract, the contractor shall not use convict labor for any purpose within the limits of a construction project on a Federal-aid highway unless it is labor performed by convicts who are on parole, supervised release, or probation. The term Federal-aid highway does not include roadways functionally classified as local roads or rural minor collectors.

II. NONDISCRIMINATION

The provisions of this section related to 23 CFR Part 230 are applicable to all Federal-aid construction contracts and to all related construction subcontracts of $10,000 or more. The provisions of 23 CFR Part 230 are not applicable to material supply, engineering, or architectural service contracts.

In addition, the contractor and all subcontractors must comply with the following policies: Executive Order 11246, 41 CFR 60, 29 CFR 1625-1627, Title 23 USC Section 140, the Rehabilitation Act of 1973, as amended (29 USC 794), Title VI of the Civil Rights Act of 1964, as amended, and related regulations including 49 CFR Parts 21, 26 and 27; and 23 CFR Parts 200, 230, and 633.

The contractor and all subcontractors must comply with: the requirements of the Equal Opportunity Clause in 41 CFR 60-1.4(b) and, for all construction contracts exceeding $10,000, the Standard Federal Equal Employment Opportunity Construction Contract Specifications in 41 CFR 60-4.3.

Note: The U.S. Department of Labor has exclusive authority to determine compliance with Executive Order 11246 and the policies of the Secretary of Labor including 41 CFR 60, and 29 CFR 1625-1627. The contracting agency and the FHWA have the authority and the responsibility to ensure compliance with Title 23 USC Section 140, the Rehabilitation Act of 1973, as amended (29 USC 794), and Title VI of the Civil Rights Act of 1964, as amended, and related regulations including 49 CFR Parts 21, 26 and 27; and 23 CFR Parts 200, 230, and 633.

The following provision is adopted from 23 CFR 230, Appendix A, with appropriate revisions to conform to the U.S. Department of Labor (US DOL) and FHWA requirements.

1. **Equal Employment Opportunity:** Equal employment opportunity (EEO) requirements not to discriminate and to take affirmative action to assure equal opportunity as set forth under laws, executive orders, rules, regulations (28 CFR 35, 29 CFR 1630, 29 CFR 1625-1627, 41 CFR 60 and 49 CFR 27) and orders of the Secretary of Labor as modified by the provisions prescribed herein, and imposed pursuant to 23 U.S.C. 140 shall constitute the EEO and specific affirmative action standards for the contractor's project activities under this contract. The provisions of the Americans with Disabilities Act of 1990 (42 U.S.C. 12101 et seq.) set forth under 28 CFR 35 and 29 CFR 1630 are incorporated by reference in this contract. In the execution of this contract, the contractor agrees to comply with the following minimum specific requirement activities of EEO:
   a. The contractor will work with the contracting agency and the Federal Government to ensure that it has made every good faith effort to provide equal opportunity with respect to all of its terms and conditions of employment and in their review of activities under the contract.
   b. The contractor will accept as its operating policy the following statement:
   "It is the policy of this Company to assure that applicants are employed, and that employees are treated during employment, without regard to their race, religion, sex, color, national origin, age or disability. Such action shall include: employment, upgrading, demotion, or transfer; recruitment or recruitment advertising; layoff or termination; rates of pay or other forms of compensation; and selection for training, including apprenticeship, pre-apprenticeship, and/or on-the-job training."
2. **EEO Officer:** The contractor will designate and make known to the contracting officers an EEO Officer who will have the responsibility for and must be capable of effectively administering and promoting an active EEO program and who must be assigned adequate authority and responsibility to do so.
3. **Dissemination of Policy:** All members of the contractor's staff who are authorized to hire, supervise, promote, and discharge employees, or who recommend such action, or who are substantially involved in such action, will be made fully cognizant of, and will implement, the contractor's EEO policy and contractual responsibilities to provide EEO in each grade and classification of employment. To ensure that the above agreement will be met, the following actions will be taken as a minimum:
   a. Periodic meetings of supervisory and personnel office employees will be conducted before the start of work and then not less often than once every six months, at which time the contractor's EEO policy and its implementation will be reviewed and explained. The meetings will be conducted by the EEO Officer.
   b. All new supervisory or personnel office employees will be given a thorough indoctrination by the EEO Officer, covering all major aspects of the contractor's EEO obligations within thirty days following their reporting for duty with the contractor.
   c. All personnel who are engaged in direct recruitment for the project will be instructed by the EEO Officer in the contractor's procedures for locating and hiring minorities and women.
   d. Notices and posters setting forth the contractor's EEO policy will be placed in areas readily accessible to employees, applicants for employment and potential employees.
   e. The contractor's EEO policy and the procedures to implement such policy will be brought to the attention of employees by means of meetings, employee handbooks, or other appropriate means.
4. **Recruitment:** When advertising for employees, the contractor will include in all advertisements for employees the notation: "An Equal Opportunity Employer." All such advertisements will be placed in publications having a large circulation among minorities and women in the area from which the project work force would normally be derived.
   a. The contractor will, unless precluded by a valid bargaining agreement, conduct systematic and direct recruitment through public and private employee referral sources likely to yield qualified minorities and women. To meet this requirement, the contractor will identify sources of potential minority group employees, and establish with such identified sources procedures whereby minority and women applicants may be referred to the contractor for employment consideration.
   b. In the event the contractor has a valid bargaining agreement providing for exclusive hiring hall referrals, the contractor is expected to observe the provisions of that agreement to the extent that the system meets the contractor's compliance with EEO contract provisions. Where implementation of such an agreement has the effect of discriminating against minorities or women, or obligates the contractor to do the same, such implementation violates Federal nondiscrimination provisions.
   c. The contractor will encourage its present employees to refer minorities and women as applicants for employment. Information and procedures with regard to referring such applicants will be discussed with employees.
5. **Personnel Actions:** Wages, working conditions, and employee benefits shall be established and administered, and personnel actions of every type, including hiring, upgrading, promotion, transfer, demotion, layoff, and termination, shall be taken without regard to race, color, religion, sex, national origin, age or disability. The following procedures shall be followed:
   a. The contractor will conduct periodic inspections of project sites to insure that working conditions and employee facilities do not indicate discriminatory treatment of project site personnel.
   b. The contractor will periodically evaluate the spread of wages paid within each classification to determine any evidence of discriminatory wage practices.

c. The contractor will periodically review selected personnel actions in depth to determine whether there is evidence of discrimination. Where evidence is found, the contractor will promptly take corrective action. If the review indicates that the discrimination may extend beyond the actions reviewed, such corrective action shall include all affected persons.

d. The contractor will promptly investigate all complaints of alleged discrimination made to the contractor in connection with its obligations under this contract, will attempt to resolve such complaints, and will take appropriate corrective action within a reasonable time. If the investigation indicates that the discrimination may affect persons other than the complainant, such corrective action shall include such other persons. Upon completion of each investigation, the contractor will inform every complainant of all of their avenues of appeal.

6. **Training and Promotion:**
   a. The contractor will assist in locating, qualifying, and increasing the skills of minorities and women who are applicants for employment or current employees. Such efforts should be aimed at developing full journey level status employees in the type of trade or job classification involved.
   b. Consistent with the contractor's work force requirements and as permissible under Federal and State regulations, the contractor shall make full use of training programs, i.e., apprenticeship, and on-the-job training programs for the geographical area of contract performance. In the event a special provision for training is provided under this contract, this subparagraph will be superseded as indicated in the special provision. The contracting agency may reserve training positions for persons who receive welfare assistance in accordance with 23 U.S.C. 140(a).
   c The contractor will advise employees and applicants for employment of available training programs and entrance requirements for each.
   d. The contractor will periodically review the training and promotion potential of employees who are minorities and women and will encourage eligible employees to apply for such training and promotion.
7. **Unions:** If the contractor relies in whole or in part upon unions as a source of employees, the contractor will use good faith efforts to obtain the cooperation of such unions to increase opportunities for minorities and women. Actions by the contractor, either directly or through a contractor's association acting as agent, will include the procedures set forth below:
   a. The contractor will use good faith efforts to develop, in cooperation with the unions, joint training programs aimed toward qualifying more minorities and women for membership in the unions and increasing the skills of minorities and women so that they may qualify for higher paying employment.
   b. The contractor will use good faith efforts to incorporate an EEO clause into each union agreement to the end that such union will be contractually bound to refer applicants without regard to their race, color, religion, sex, national origin, age or disability.
   c. The contractor is to obtain information as to the referral practices and policies of the labor union except that to the extent such information is within the exclusive possession of the labor union and such labor union refuses to furnish such information to the contractor, the contractor shall so certify to the contracting agency and shall set forth what efforts have been made to obtain such information.
   d. In the event the union is unable to provide the contractor with a reasonable flow of referrals within the time limit set forth in the collective bargaining agreement, the contractor will, through independent recruitment efforts, fill the employment vacancies without regard to race, color, religion, sex, national origin, age or disability; making full efforts to obtain qualified and/or qualifiable minorities and women. The failure of a union to provide sufficient referrals (even though it is obligated to provide exclusive referrals under the terms of a collective bargaining agreement) does not relieve the contractor from the requirements of this paragraph. In the event the union referral practice prevents the contractor from meeting the obligations pursuant to Executive Order 11246, as amended, and these special provisions, such contractor shall immediately notify the contracting agency.
8. **Reasonable Accommodation for Applicants / Employees with Disabilities:** The contractor must be familiar with the requirements for and comply with the Americans with Disabilities Act and all rules and regulations established there under. Employers must provide reasonable accommodation in all employment activities unless to do so would cause an undue hardship.
9. **Selection of Subcontractors, Procurement of Materials and Leasing of Equipment:** The contractor shall not discriminate on the grounds of race, color, religion, sex, national origin, age or disability in the selection and retention of subcontractors, including procurement of materials and leases of equipment. The contractor shall take all necessary and reasonable steps to ensure nondiscrimination in the administration of this contract.
   a. The contractor shall notify all potential subcontractors and suppliers and lessors of their EEO obligations under this contract.
   b. The contractor will use good faith efforts to ensure subcontractor compliance with their EEO obligations.
10. **Assurance Required by 49 CFR 26.13(b):**
   a. The requirements of 49 CFR Part 26 and the State DOT's U.S. DOT-approved DBE program are incorporated by reference.
   b. The contractor or subcontractor shall not discriminate on the basis of race, color, national origin, or sex in the performance of this contract. The contractor shall carry out applicable requirements of 49 CFR Part 26 in the award and administration of DOT-assisted contracts. Failure by the contractor to carry out these requirements is a material breach of this contract, which may result in the termination of this contract or such other remedy as the contracting agency deems appropriate.
11. **Records and Reports:** The contractor shall keep such records as necessary to document compliance with the EEO requirements. Such records shall be retained for a period of three years following the date of the final payment to the contractor for all contract work and shall be available at reasonable times and places for inspection by authorized representatives of the contracting agency and the FHWA.
   a. The records kept by the contractor shall document the following:
      (1) The number and work hours of minority and non-minority group members and women employed in each work classification on the project;
      (2) The progress and efforts being made in cooperation with unions, when applicable, to increase employment opportunities for minorities and women; and
      (3) The progress and efforts being made in locating, hiring, training, qualifying, and upgrading minorities and women;
   b. The contractors and subcontractors will submit an annual report to the contracting agency each July for the duration of the project, indicating the number of minority, women, and non-minority group employees currently engaged in each work classification required by the contract work. This information is to be reported on Form FHWA-1391. The staffing data should represent the project work force on board in all or any part of the last payroll period preceding the end of July. If on-the-job training is being required by special provision, the contractor will be required to collect and report training data. The employment data should reflect the work force on board during all or any part of the last payroll period preceding the end of July.

III. NONSEGREGATED FACILITIES

This provision is applicable to all Federal-aid construction contracts and to all related construction subcontracts of $10,000 or more.

The contractor must ensure that facilities provided for employees are provided in such a manner that segregation on the basis of race, color, religion, sex, or national origin cannot result. The contractor may neither require such segregated use by written or oral policies nor tolerate such use by employee custom. The contractor's obligation extends further to ensure that its employees are not assigned to perform their services at any location, under the contractor's control, where the facilities are segregated. The term "facilities" includes waiting rooms, work areas, restaurants and other eating areas, time clocks, restrooms, washrooms, locker rooms, and other storage or dressing areas, parking lots, drinking fountains, recreation or

entertainment areas, transportation, and housing provided for employees. The contractor shall provide separate or single-user restrooms and necessary dressing or sleeping areas to assure privacy between sexes.

IV. DAVIS-BACON AND RELATED ACT PROVISIONS

This section is applicable to all Federal-aid construction projects exceeding $2,000 and to all related subcontracts and lower-tier subcontracts (regardless of subcontract size). The requirements apply to all projects located within the right-of-way of a roadway that is functionally classified as Federal-aid highway. This excludes roadways functionally classified as local roads or rural minor collectors, which are exempt. Contracting agencies may elect to apply these requirements to other projects.

The following provisions are from the U.S. Department of Labor regulations in 29 CFR 5.5 "Contract provisions and related matters" with minor revisions to conform to the FHWA-1273 format and FHWA program requirements.

1. **Minimum wages**
   a. All laborers and mechanics employed or working upon the site of the work, will be paid unconditionally and not less often than once a week, and without subsequent deduction or rebate on any account (except such payroll deductions as are permitted by regulations issued by the Secretary of Labor under the Copeland Act (29 CFR part 3)), the full amount of wages and bona fide fringe benefits (or cash equivalents thereof) due at time of payment computed at rates not less than those contained in the wage determination of the Secretary of Labor which is attached hereto and made a part hereof, regardless of any contractual relationship which may be alleged to exist between the contractor and such laborers and mechanics.

   Contributions made or costs reasonably anticipated for bona fide fringe benefits under section 1(b)(2) of the Davis-Bacon Act on behalf of laborers or mechanics are considered wages paid to such laborers or mechanics, subject to the provisions of paragraph 1.d. of this section; also, regular contributions made or costs incurred for more than a weekly period (but not less often than quarterly) under plans, funds, or programs which cover the particular weekly period, are deemed to be constructively made or incurred during such weekly period. Such laborers and mechanics shall be paid the appropriate wage rate and fringe benefits on the wage determination for the classification of work actually performed, without regard to skill, except as provided in 29 CFR 5.5(a)(4). Laborers or mechanics performing work in more than one classification may be compensated at the rate specified for each classification for the time actually worked therein: Provided, That the employer's payroll records accurately set forth the time spent in each classification in which work is performed. The wage determination (including any additional classification and wage rates conformed under paragraph 1.b. of this section) and the Davis-Bacon poster (WH–1321) shall be posted at all times by the contractor and its subcontractors at the site of the work in a prominent and accessible place where it can be easily seen by the workers.

   b. (1) The contracting officer shall require that any class of laborers or mechanics, including helpers, which is not listed in the wage determination and which is to be employed under the contract shall be classified in conformance with the wage determination. The contracting officer shall approve an additional classification and wage rate and fringe benefits therefore only when the following criteria have been met:
      (i) The work to be performed by the classification requested is not performed by a classification in the wage determination; and
      (ii) The classification is utilized in the area by the construction industry; and
      (iii) The proposed wage rate, including any bona fide fringe benefits, bears a reasonable relationship to the wage rates contained in the wage determination.

   (2) If the contractor and the laborers and mechanics to be employed in the classification (if known), or their representatives, and the contracting officer agree on the classification and wage rate (including the amount designated for fringe benefits where appropriate), a report of the action taken shall be sent by the contracting officer to the Administrator of the Wage and Hour Division, Employment Standards Administration, U.S. Department of Labor, Washington, DC 20210. The Administrator, or an authorized representative, will approve, modify, or disapprove every additional classification action within 30 days of receipt and so advise the contracting officer or will notify the contracting officer within the 30-day period that additional time is necessary.

   (3) In the event the contractor, the laborers or mechanics to be employed in the classification or their representatives, and the contracting officer do not agree on the proposed classification and wage rate (including the amount designated for fringe benefits, where appropriate), the contracting officer shall refer the questions, including the views of all interested parties and the recommendation of the contracting officer, to the Wage and Hour Administrator for determination. The Wage and Hour Administrator, or an authorized representative, will issue a determination within 30 days of receipt and so advise the contracting officer or will notify the contracting officer within the 30-day period that additional time is necessary.

   (4) The wage rate (including fringe benefits where appropriate) determined pursuant to paragraphs 1.b.(2) or 1.b.(3) of this section, shall be paid to all workers performing work in the classification under this contract from the first day on which work is performed in the classification.

   c. Whenever the minimum wage rate prescribed in the contract for a class of laborers or mechanics includes a fringe benefit which is not expressed as an hourly rate, the contractor shall either pay the benefit as stated in the wage determination or shall pay another bona fide fringe benefit or an hourly cash equivalent thereof.

   d. If the contractor does not make payments to a trustee or other third person, the contractor may consider as part of the wages of any laborer or mechanic the amount of any costs reasonably anticipated in providing bona fide fringe benefits under a plan or program, Provided, That the Secretary of Labor has found, upon the written request of the contractor, that the applicable standards of the Davis-Bacon Act have been met. The Secretary of Labor may require the contractor to set aside in a separate account assets for the meeting of obligations under the plan or program.

2. **Withholding.** The contracting agency shall upon its own action or upon written request of an authorized representative of the Department of Labor, withhold or cause to be withheld from the contractor under this contract, or any other Federal contract with the same prime contractor, or any other federally-assisted contract subject to Davis-Bacon prevailing wage requirements, which is held by the same prime contractor, so much of the accrued payments or advances as may be considered necessary to pay laborers and mechanics, including apprentices, trainees, and helpers, employed by the contractor or any subcontractor the full amount of wages required by the contract. In the event of failure to pay any laborer or mechanic, including any apprentice, trainee, or helper, employed or working on the site of the work, all or part of the wages required by the contract, the contracting agency may, after written notice to the contractor, take such action as may be necessary to cause the suspension of any further payment, advance, or guarantee of funds until such violations have ceased.

3. **Payrolls and basic records**
   a. Payrolls and basic records relating thereto shall be maintained by the contractor during the course of the work and preserved for a period of three years thereafter for all laborers and mechanics working at the site of the work. Such records shall contain the name, address, and social security number of each such worker, his or her correct classification, hourly rates of wages paid (including rates of contributions or costs anticipated for bona fide fringe benefits or cash equivalents thereof of the types described in section 1(b)(2)(B) of the Davis-Bacon Act), daily and weekly number of hours worked, deductions made and actual wages paid. Whenever the Secretary of Labor has found under 29 CFR 5.5(a)(1)(iv) that the wages of any laborer or mechanic include the amount of any costs reasonably anticipated in providing benefits

under a plan or program described in section 1(b)(2)(B) of the Davis-Bacon Act, the contractor shall maintain records which show that the commitment to provide such benefits is enforceable, that the plan or program is financially responsible, and that the plan or program has been communicated in writing to the laborers or mechanics affected, and records which show the costs anticipated or the actual cost incurred in providing such benefits. Contractors employing apprentices or trainees under approved programs shall maintain written evidence of the registration of apprenticeship programs and certification of trainee programs, the registration of the apprentices and trainees, and the ratios and wage rates prescribed in the applicable programs.

b. (1) The contractor shall submit weekly for each week in which any contract work is performed a copy of all payrolls to the contracting agency. The payrolls submitted shall set out accurately and completely all of the information required to be maintained under 29 CFR 5.5(a)(3)(i), except that full social security numbers and home addresses shall not be included on weekly transmittals. Instead the payrolls shall only need to include an individually identifying number for each employee (e.g. , the last four digits of the employee's social security number). The required weekly payroll information may be submitted in any form desired. Optional Form WH–347 is available for this purpose from the Wage and Hour Division Web site at http://www.dol.gov/esa/whd/forms/ wh347instr.htm or its successor site. The prime contractor is responsible for the submission of copies of payrolls by all subcontractors. Contractors and subcontractors shall maintain the full social security number and current address of each covered worker, and shall provide them upon request to the contracting agency for transmission to the State DOT, the FHWA or the Wage and Hour Division of the Department of Labor for purposes of an investigation or audit of compliance with prevailing wage requirements. It is not a violation of this section for a prime contractor to require a subcontractor to provide addresses and social security numbers to the prime contractor for its own records, without weekly submission to the contracting agency.

(2) Each payroll submitted shall be accompanied by a "Statement of Compliance," signed by the contractor or subcontractor or his or her agent who pays or supervises the payment of the persons employed under the contract and shall certify the following:

(i) That the payroll for the payroll period contains the information required to be provided under §5.5 (a)(3)(ii) of Regulations, 29 CFR part 5, the appropriate information is being maintained under §5.5 (a)(3)(i) of Regulations, 29 CFR part 5, and that such information is correct and complete;

(ii) That each laborer or mechanic (including each helper, apprentice, and trainee) employed on the contract during the payroll period has been paid the full weekly wages earned, without rebate, either directly or indirectly, and that no deductions have been made either directly or indirectly from the full wages earned, other than permissible deductions as set forth in Regulations, 29 CFR part 3;

(iii) That each laborer or mechanic has been paid not less than the applicable wage rates and fringe benefits or cash equivalents for the classification of work performed, as specified in the applicable wage determination incorporated into the contract.

(3) The weekly submission of a properly executed certification set forth on the reverse side of Optional Form WH–347 shall satisfy the requirement for submission of the "Statement of Compliance" required by paragraph 3.b.(2) of this section.

(4) The falsification of any of the above certifications may subject the contractor or subcontractor to civil or criminal prosecution under section 1001 of title 18 and section 231 of title 31 of the United States Code.

c. The contractor or subcontractor shall make the records required under paragraph 3.a. of this section available for inspection, copying, or transcription by authorized representatives of the contracting agency, the State DOT, the FHWA, or the Department of Labor, and shall permit such representatives to interview employees during working hours on the job. If the contractor or subcontractor fails to submit the required records or to make them available, the FHWA may, after written notice to the contractor, the contracting agency or the State DOT, take such action as may be necessary to cause the suspension of any further payment, advance, or guarantee of funds. Furthermore, failure to submit the required records upon request or to make such records available may be grounds for debarment action pursuant to 29 CFR 5.12.

4. **Apprentices and trainees**

a. Apprentices (programs of the USDOL). Apprentices will be permitted to work at less than the predetermined rate for the work they performed when they are employed pursuant to and individually registered in a bona fide apprenticeship program registered with the U.S. Department of Labor, Employment and Training Administration, Office of Apprenticeship Training, Employer and Labor Services, or with a State Apprenticeship Agency recognized by the Office, or if a person is employed in his or her first 90 days of probationary employment as an apprentice in such an apprenticeship program, who is not individually registered in the program, but who has been certified by the Office of Apprenticeship Training, Employer and Labor Services or a State Apprenticeship Agency (where appropriate) to be eligible for probationary employment as an apprentice.

The allowable ratio of apprentices to journeymen on the job site in any craft classification shall not be greater than the ratio permitted to the contractor as to the entire work force under the registered program. Any worker listed on a payroll at an apprentice wage rate, who is not registered or otherwise employed as stated above, shall be paid not less than the applicable wage rate on the wage determination for the classification of work actually performed. In addition, any apprentice performing work on the job site in excess of the ratio permitted under the registered program shall be paid not less than the applicable wage rate on the wage determination for the work actually performed. Where a contractor is performing construction on a project in a locality other than that in which its program is registered, the ratios and wage rates (expressed in percentages of the journeyman's hourly rate) specified in the contractor's or subcontractor's registered program shall be observed.

Every apprentice must be paid at not less than the rate specified in the registered program for the apprentice's level of progress, expressed as a percentage of the journeymen hourly rate specified in the applicable wage determination. Apprentices shall be paid fringe benefits in accordance with the provisions of the apprenticeship program. If the apprenticeship program does not specify fringe benefits, apprentices must be paid the full amount of fringe benefits listed on the wage determination for the applicable classification. If the Administrator determines that a different practice prevails for the applicable apprentice classification, fringes shall be paid in accordance with that determination.

In the event the Office of Apprenticeship Training, Employer and Labor Services, or a State Apprenticeship Agency recognized by the Office, withdraws approval of an apprenticeship program, the contractor will no longer be permitted to utilize apprentices at less than the applicable predetermined rate for the work performed until an acceptable program is approved.

b. Trainees (programs of the USDOL). Except as provided in 29 CFR 5.16, trainees will not be permitted to work at less than the predetermined rate for the work performed unless they are employed pursuant to and individually registered in a program which has received prior approval, evidenced by formal certification by the U.S. Department of Labor, Employment and Training Administration.

The ratio of trainees to journeymen on the job site shall not be greater than permitted under the plan approved by the Employment and Training Administration.

Every trainee must be paid at not less than the rate specified in the approved program for the trainee's level of progress, expressed as a percentage of the journeyman hourly rate specified in the applicable wage determination. Trainees shall be paid fringe benefits in accordance with the provisions of the trainee program. If the trainee program does not mention fringe benefits, trainees shall be paid the full amount of fringe benefits listed on the wage determination unless the Administrator of the Wage and Hour Division determines that there is an apprenticeship program associated with the corresponding journeyman wage rate on the wage determination which provides for less than full fringe benefits for apprentices. Any employee listed on the payroll at a trainee rate who is not registered and participating in a training plan approved by the Employment and Training Administration shall be paid not less than the applicable wage rate on the wage

determination for the classification of work actually performed. In addition, any trainee performing work on the job site in excess of the ratio permitted under the registered program shall be paid not less than the applicable wage rate on the wage determination for the work actually performed.

In the event the Employment and Training Administration withdraws approval of a training program, the contractor will no longer be permitted to utilize trainees at less than the applicable predetermined rate for the work performed until an acceptable program is approved.

c. Equal employment opportunity. The utilization of apprentices, trainees and journeymen under this part shall be in conformity with the equal employment opportunity requirements of Executive Order 11246, as amended, and 29 CFR part 30.

d. Apprentices and Trainees (programs of the U.S. DOT). Apprentices and trainees working under apprenticeship and skill training programs which have been certified by the Secretary of Transportation as promoting EEO in connection with Federal-aid highway construction programs are not subject to the requirements of paragraph 4 of this Section IV. The straight time hourly wage rates for apprentices and trainees under such programs will be established by the particular programs. The ratio of apprentices and trainees to journeymen shall not be greater than permitted by the terms of the particular program.

5. **Compliance with Copeland Act requirements.** The contractor shall comply with the requirements of 29 CFR part 3, which are incorporated by reference in this contract.
6. **Subcontracts.** The contractor or subcontractor shall insert Form FHWA-1273 in any subcontracts and also require the subcontractors to include Form FHWA-1273 in any lower tier subcontracts. The prime contractor shall be responsible for the compliance by any subcontractor or lower tier subcontractor with all the contract clauses in 29 CFR 5.5.
7. **Contract termination:** debarment. A breach of the contract clauses in 29 CFR 5.5 may be grounds for termination of the contract, and for debarment as a contractor and a subcontractor as provided in 29 CFR 5.12.
8. **Compliance with Davis-Bacon and Related Act requirements.** All rulings and interpretations of the Davis-Bacon and Related Acts contained in 29 CFR parts 1, 3, and 5 are herein incorporated by reference in this contract.
9. **Disputes concerning labor standards.** Disputes arising out of the labor standards provisions of this contract shall not be subject to the general disputes clause of this contract. Such disputes shall be resolved in accordance with the procedures of the Department of Labor set forth in 29 CFR parts 5, 6, and 7. Disputes within the meaning of this clause include disputes between the contractor (or any of its subcontractors) and the contracting agency, the U.S. Department of Labor, or the employees or their representatives.
10. **Certification of eligibility.**
    a. By entering into this contract, the contractor certifies that neither it (nor he or she) nor any person or firm who has an interest in the contractor's firm is a person or firm ineligible to be awarded Government contracts by virtue of section 3(a) of the Davis-Bacon Act or 29 CFR 5.12(a)(1).
    b. No part of this contract shall be subcontracted to any person or firm ineligible for award of a Government contract by virtue of section 3(a) of the Davis-Bacon Act or 29 CFR 5.12(a)(1).
    c. The penalty for making false statements is prescribed in the U.S. Criminal Code, 18 U.S.C. 1001.

V. CONTRACT WORK HOURS AND SAFETY STANDARDS ACT

The following clauses apply to any Federal-aid construction contract in an amount in excess of $100,000 and subject to the overtime provisions of the Contract Work Hours and Safety Standards Act. These clauses shall be inserted in addition to the clauses required by 29 CFR 5.5(a) or 29 CFR 4.6. As used in this paragraph, the terms laborers and mechanics include watchmen and guards.

1. **Overtime requirements.** No contractor or subcontractor contracting for any part of the contract work which may require or involve the employment of laborers or mechanics shall require or permit any such laborer or mechanic in any workweek in which he or she is employed on such work to work in excess of forty hours in such workweek unless such laborer or mechanic receives compensation at a rate not less than one and one-half times the basic rate of pay for all hours worked in excess of forty hours in such workweek.
2. **Violation; liability for unpaid wages; liquidated damages.** In the event of any violation of the clause set forth in paragraph (1.) of this section, the contractor and any subcontractor responsible therefor shall be liable for the unpaid wages. In addition, such contractor and subcontractor shall be liable to the United States (in the case of work done under contract for the District of Columbia or a territory, to such District or to such territory), for liquidated damages. Such liquidated damages shall be computed with respect to each individual laborer or mechanic, including watchmen and guards, employed in violation of the clause set forth in paragraph (1.) of this section, in the sum of $10 for each calendar day on which such individual was required or permitted to work in excess of the standard workweek of forty hours without payment of the overtime wages required by the clause set forth in paragraph (1.) of this section.
3. **Withholding for unpaid wages and liquidated damages.** The FHWA or the contacting agency shall upon its own action or upon written request of an authorized representative of the Department of Labor withhold or cause to be withheld, from any moneys payable on account of work performed by the contractor or subcontractor under any such contract or any other Federal contract with the same prime contractor, or any other federally-assisted contract subject to the Contract Work Hours and Safety Standards Act, which is held by the same prime contractor, such sums as may be determined to be necessary to satisfy any liabilities of such contractor or subcontractor for unpaid wages and liquidated damages as provided in the clause set forth in paragraph (2.) of this section.
4. **Subcontracts.** The contractor or subcontractor shall insert in any subcontracts the clauses set forth in paragraph (1.) through (4.) of this section and also a clause requiring the subcontractors to include these clauses in any lower tier subcontracts. The prime contractor shall be responsible for compliance by any subcontractor or lower tier subcontractor with the clauses set forth in paragraphs (1.) through (4.) of this section.

VI. SUBLETTING OR ASSIGNING THE CONTRACT

This provision is applicable to all Federal-aid construction contracts on the National Highway System.

1. The contractor shall perform with its own organization contract work amounting to not less than 30 percent (or a greater percentage if specified elsewhere in the contract) of the total original contract price, excluding any specialty items designated by the contracting agency. Specialty items may be performed by subcontract and the amount of any such specialty items performed may be deducted from the total original contract price before computing the amount of work required to be performed by the contractor's own organization (23 CFR 635.116).
    a. The term “perform work with its own organization” refers to workers employed or leased by the prime contractor, and equipment owned or rented by the prime contractor, with or without operators. Such term does not include employees or equipment of a subcontractor or lower tier subcontractor, agents of the prime contractor, or any other assignees. The term may include payments for the costs of hiring leased employees from an employee leasing firm meeting all relevant Federal and State regulatory requirements. Leased employees may only be included in this term if the prime contractor meets all of the following conditions:
    (1) the prime contractor maintains control over the supervision of the day-to-day activities of the leased employees;
    (2) the prime contractor remains responsible for the quality of the work of the leased employees;
    (3) the prime contractor retains all power to accept or exclude individual employees from work on the project; and

(4) the prime contractor remains ultimately responsible for the payment of predetermined minimum wages, the submission of payrolls, statements of compliance and all other Federal regulatory requirements.

b. "Specialty Items" shall be construed to be limited to work that requires highly specialized knowledge, abilities, or equipment not ordinarily available in the type of contracting organizations qualified and expected to bid or propose on the contract as a whole and in general are to be limited to minor components of the overall contract.

2. The contract amount upon which the requirements set forth in paragraph (1) of Section VI is computed includes the cost of material and manufactured products which are to be purchased or produced by the contractor under the contract provisions.
3. The contractor shall furnish (a) a competent superintendent or supervisor who is employed by the firm, has full authority to direct performance of the work in accordance with the contract requirements, and is in charge of all construction operations (regardless of who performs the work) and (b) such other of its own organizational resources (supervision, management, and engineering services) as the contracting officer determines is necessary to assure the performance of the contract.
4. No portion of the contract shall be sublet, assigned or otherwise disposed of except with the written consent of the contracting officer, or authorized representative, and such consent when given shall not be construed to relieve the contractor of any responsibility for the fulfillment of the contract. Written consent will be given only after the contracting agency has assured that each subcontract is evidenced in writing and that it contains all pertinent provisions and requirements of the prime contract.
5. The 30% self-performance requirement of paragraph (1) is not applicable to design-build contracts; however, contracting agencies may establish their own self-performance requirements.

VII. SAFETY: ACCIDENT PREVENTION

This provision is applicable to all Federal-aid construction contracts and to all related subcontracts.

1. In the performance of this contract the contractor shall comply with all applicable Federal, State, and local laws governing safety, health, and sanitation (23 CFR 635). The contractor shall provide all safeguards, safety devices and protective equipment and take any other needed actions as it determines, or as the contracting officer may determine, to be reasonably necessary to protect the life and health of employees on the job and the safety of the public and to protect property in connection with the performance of the work covered by the contract.
2. It is a condition of this contract, and shall be made a condition of each subcontract, which the contractor enters into pursuant to this contract, that the contractor and any subcontractor shall not permit any employee, in performance of the contract, to work in surroundings or under conditions which are unsanitary, hazardous or dangerous to his/her health or safety, as determined under construction safety and health standards (29 CFR 1926) promulgated by the Secretary of Labor, in accordance with Section 107 of the Contract Work Hours and Safety Standards Act (40 U.S.C. 3704).
3. Pursuant to 29 CFR 1926.3, it is a condition of this contract that the Secretary of Labor or authorized representative thereof, shall have right of entry to any site of contract performance to inspect or investigate the matter of compliance with the construction safety and health standards and to carry out the duties of the Secretary under Section 107 of the Contract Work Hours and Safety Standards Act (40 U.S.C.3704).

VIII. FALSE STATEMENTS CONCERNING HIGHWAY PROJECTS

This provision is applicable to all Federal-aid construction contracts and to all related subcontracts.

In order to assure high quality and durable construction in conformity with approved plans and specifications and a high degree of reliability on statements and representations made by engineers, contractors, suppliers, and workers on Federal-aid highway projects, it is essential that all persons concerned with the project perform their functions as carefully, thoroughly, and honestly as possible. Willful falsification, distortion, or misrepresentation with respect to any facts related to the project is a violation of Federal law. To prevent any misunderstanding regarding the seriousness of these and similar acts, Form FHWA-1022 shall be posted on each Federal-aid highway project (23 CFR 635) in one or more places where it is readily available to all persons concerned with the project:

18 U.S.C. 1020 reads as follows:

"Whoever, being an officer, agent, or employee of the United States, or of any State or Territory, or whoever, whether a person, association, firm, or corporation, knowingly makes any false statement, false representation, or false report as to the character, quality, quantity, or cost of the material used or to be used, or the quantity or quality of the work performed or to be performed, or the cost thereof in connection with the submission of plans, maps, specifications, contracts, or costs of construction on any highway or related project submitted for approval to the Secretary of Transportation; or

Whoever knowingly makes any false statement, false representation, false report or false claim with respect to the character, quality, quantity, or cost of any work performed or to be performed, or materials furnished or to be furnished, in connection with the construction of any highway or related project approved by the Secretary of Transportation; or

Whoever knowingly makes any false statement or false representation as to material fact in any statement, certificate, or report submitted pursuant to provisions of the Federal-aid Roads Act approved July 1, 1916, (39 Stat. 355), as amended and supplemented;

Shall be fined under this title or imprisoned not more than 5 years or both."

IX. IMPLEMENTATION OF CLEAN AIR ACT AND FEDERAL WATER POLLUTION CONTROL ACT

This provision is applicable to all Federal-aid construction contracts and to all related subcontracts.

By submission of this bid/proposal or the execution of this contract, or subcontract, as appropriate, the bidder, proposer, Federal-aid construction contractor, or subcontractor, as appropriate, will be deemed to have stipulated as follows:

1. That any person who is or will be utilized in the performance of this contract is not prohibited from receiving an award due to a violation of Section 508 of the Clean Water Act or Section 306 of the Clean Air Act.
2. That the contractor agrees to include or cause to be included the requirements of paragraph (1) of this Section X in every subcontract, and further agrees to take such action as the contracting agency may direct as a means of enforcing such requirements.

X. CERTIFICATION REGARDING DEBARMENT, SUSPENSION, INELIGIBILITY AND VOLUNTARY EXCLUSION

This provision is applicable to all Federal-aid construction contracts, design-build contracts, subcontracts, lower-tier subcontracts, purchase orders, lease agreements, consultant contracts or any other covered transaction requiring FHWA approval or that is estimated to cost $25,000 or more – as defined in 2 CFR Parts 180 and 1200.

1. **Instructions for Certification – First Tier Participants:**
   a. By signing and submitting this proposal, the prospective first tier participant is providing the certification set out below.
   b. The inability of a person to provide the certification set out below will not necessarily result in denial of participation in this covered transaction. The prospective first tier participant shall submit an explanation of why it cannot provide the certification set out below. The certification or explanation will be considered in connection with the department or agency's determination whether to enter into this

transaction. However, failure of the prospective first tier participant to furnish a certification or an explanation shall disqualify such a person from participation in this transaction.

c. The certification in this clause is a material representation of fact upon which reliance was placed when the contracting agency determined to enter into this transaction. If it is later determined that the prospective participant knowingly rendered an erroneous certification, in addition to other remedies available to the Federal Government, the contracting agency may terminate this transaction for cause of default.

d. The prospective first tier participant shall provide immediate written notice to the contracting agency to whom this proposal is submitted if any time the prospective first tier participant learns that its certification was erroneous when submitted or has become erroneous by reason of changed circumstances.

e. The terms "covered transaction," "debarred," "suspended," "ineligible," "participant," "person," "principal," and "voluntarily excluded," as used in this clause, are defined in 2 CFR Parts 180 and 1200. “First Tier Covered Transactions” refers to any covered transaction between a grantee or subgrantee of Federal funds and a participant (such as the prime or general contract). “Lower Tier Covered Transactions” refers to any covered transaction under a First Tier Covered Transaction (such as subcontracts). “First Tier Participant” refers to the participant who has entered into a covered transaction with a grantee or subgrantee of Federal funds (such as the prime or general contractor). “Lower Tier Participant” refers any participant who has entered into a covered transaction with a First Tier Participant or other Lower Tier Participants (such as subcontractors and suppliers).

f. The prospective first tier participant agrees by submitting this proposal that, should the proposed covered transaction be entered into, it shall not knowingly enter into any lower tier covered transaction with a person who is debarred, suspended, declared ineligible, or voluntarily excluded from participation in this covered transaction, unless authorized by the department or agency entering into this transaction.

g. The prospective first tier participant further agrees by submitting this proposal that it will include the clause titled "Certification Regarding Debarment, Suspension, Ineligibility and Voluntary Exclusion-Lower Tier Covered Transactions," provided by the department or contracting agency, entering into this covered transaction, without modification, in all lower tier covered transactions and in all solicitations for lower tier covered transactions exceeding the $25,000 threshold.

h. A participant in a covered transaction may rely upon a certification of a prospective participant in a lower tier covered transaction that is not debarred, suspended, ineligible, or voluntarily excluded from the covered transaction, unless it knows that the certification is erroneous. A participant is responsible for ensuring that its principals are not suspended, debarred, or otherwise ineligible to participate in covered transactions. To verify the eligibility of its principals, as well as the eligibility of any lower tier prospective participants, each participant may, but is not required to, check the Excluded Parties List System website (https://www.epls.gov/), which is compiled by the General Services Administration.

i. Nothing contained in the foregoing shall be construed to require the establishment of a system of records in order to render in good faith the certification required by this clause. The knowledge and information of the prospective participant is not required to exceed that which is normally possessed by a prudent person in the ordinary course of business dealings.

j. Except for transactions authorized under paragraph (f) of these instructions, if a participant in a covered transaction knowingly enters into a lower tier covered transaction with a person who is suspended, debarred, ineligible, or voluntarily excluded from participation in this transaction, in addition to other remedies available to the Federal Government, the department or agency may terminate this transaction for cause or default.

* * * * *

2. **Certification Regarding Debarment, Suspension, Ineligibility and Voluntary Exclusion – First Tier Participants:**

a. The prospective first tier participant certifies to the best of its knowledge and belief, that it and its principals:

(1) Are not presently debarred, suspended, proposed for debarment, declared ineligible, or voluntarily excluded from participating in covered transactions by any Federal department or agency;

(2) Have not within a three-year period preceding this proposal been convicted of or had a civil judgment rendered against them for commission of fraud or a criminal offense in connection with obtaining, attempting to obtain, or performing a public (Federal, State or local) transaction or contract under a public transaction; violation of Federal or State antitrust statutes or commission of embezzlement, theft, forgery, bribery, falsification or destruction of records, making false statements, or receiving stolen property;

(3) Are not presently indicted for or otherwise criminally or civilly charged by a governmental entity (Federal, State or local) with commission of any of the offenses enumerated in paragraph (a)(2) of this certification; and

(4) Have not within a three-year period preceding this application/proposal had one or more public transactions (Federal, State or local) terminated for cause or default.

b. Where the prospective participant is unable to certify to any of the statements in this certification, such prospective participant shall attach an explanation to this proposal.

2. **Instructions for Certification - Lower Tier Participants:**

(Applicable to all subcontracts, purchase orders and other lower tier transactions requiring prior FHWA approval or estimated to cost $25,000 or more - 2 CFR Parts 180 and 1200)

a. By signing and submitting this proposal, the prospective lower tier is providing the certification set out below.

b. The certification in this clause is a material representation of fact upon which reliance was placed when this transaction was entered into. If it is later determined that the prospective lower tier participant knowingly rendered an erroneous certification, in addition to other remedies available to the Federal Government, the department, or agency with which this transaction originated may pursue available remedies, including suspension and/or debarment.

c. The prospective lower tier participant shall provide immediate written notice to the person to which this proposal is submitted if at any time the prospective lower tier participant learns that its certification was erroneous by reason of changed circumstances.

d. The terms "covered transaction," "debarred," "suspended," "ineligible," "participant," "person," "principal," and "voluntarily excluded," as used in this clause, are defined in 2 CFR Parts 180 and 1200. You may contact the person to which this proposal is submitted for assistance in obtaining a copy of those regulations. “First Tier Covered Transactions” refers to any covered transaction between a grantee or subgrantee of Federal funds and a participant (such as the prime or general contract). “Lower Tier Covered Transactions” refers to any covered transaction under a First Tier Covered Transaction (such as subcontracts). “First Tier Participant” refers to the participant who has entered into a covered transaction with a grantee or subgrantee of Federal funds (such as the prime or general contractor). “Lower Tier Participant” refers any participant who has entered into a covered transaction with a First Tier Participant or other Lower Tier Participants (such as subcontractors and suppliers).

e. The prospective lower tier participant agrees by submitting this proposal that, should the proposed covered transaction be entered into, it shall not knowingly enter into any lower tier covered transaction with a person who is debarred, suspended, declared ineligible, or voluntarily excluded from participation in this covered transaction, unless authorized by the department or agency with which this transaction originated.

f. The prospective lower tier participant further agrees by submitting this proposal that it will include this clause titled "Certification Regarding Debarment, Suspension, Ineligibility and Voluntary Exclusion-Lower Tier Covered Transaction," without modification, in all lower tier covered transactions and in all solicitations for lower tier covered transactions exceeding the $25,000 threshold.

g. A participant in a covered transaction may rely upon a certification of a prospective participant in a lower tier covered transaction that is not debarred, suspended, ineligible, or voluntarily excluded from the covered transaction, unless it knows that the certification is erroneous. A participant is responsible for ensuring that its principals are not suspended, debarred, or otherwise ineligible to participate in covered transactions. To verify the eligibility of its principals, as well as the eligibility of any lower tier prospective participants, each participant may, but is not required to, check the Excluded Parties List System website (https://www.epls.gov/), which is compiled by the General Services Administration.

h. Nothing contained in the foregoing shall be construed to require establishment of a system of records in order to render in good faith the certification required by this clause. The knowledge and information of participant is not required to exceed that which is normally possessed by a prudent person in the ordinary course of business dealings.

i. Except for transactions authorized under paragraph e of these instructions, if a participant in a covered transaction knowingly enters into a lower tier covered transaction with a person who is suspended, debarred, ineligible, or voluntarily excluded from participation in this transaction, in addition to other remedies available to the Federal Government, the department or agency with which this transaction originated may pursue available remedies, including suspension and/or debarment.

* * * * *

Certification Regarding Debarment, Suspension, Ineligibility and Voluntary Exclusion--Lower Tier Participants:

1. The prospective lower tier participant certifies, by submission of this proposal, that neither it nor its principals is presently debarred, suspended, proposed for debarment, declared ineligible, or voluntarily excluded from participating in covered transactions by any Federal department or agency.
2. Where the prospective lower tier participant is unable to certify to any of the statements in this certification, such prospective participant shall attach an explanation to this proposal.

* * * * *

XI. CERTIFICATION REGARDING USE OF CONTRACT FUNDS FOR LOBBYING

This provision is applicable to all Federal-aid construction contracts and to all related subcontracts which exceed $100,000 (49 CFR 20).

1. The prospective participant certifies, by signing and submitting this bid or proposal, to the best of his or her knowledge and belief, that:
   a. No Federal appropriated funds have been paid or will be paid, by or on behalf of the undersigned, to any person for influencing or attempting to influence an officer or employee of any Federal agency, a Member of Congress, an officer or employee of Congress, or an employee of a Member of Congress in connection with the awarding of any Federal contract, the making of any Federal grant, the making of any Federal loan, the entering into of any cooperative agreement, and the extension, continuation, renewal, amendment, or modification of any Federal contract, grant, loan, or cooperative agreement.
   b. If any funds other than Federal appropriated funds have been paid or will be paid to any person for influencing or attempting to influence an officer or employee of any Federal agency, a Member of Congress, an officer or employee of Congress, or an employee of a Member of Congress in connection with this Federal contract, grant, loan, or cooperative agreement, the undersigned shall complete and submit Standard Form-LLL, "Disclosure Form to Report Lobbying," in accordance with its instructions.
2. This certification is a material representation of fact upon which reliance was placed when this transaction was made or entered into. Submission of this certification is a prerequisite for making or entering into this transaction imposed by 31 U.S.C. 1352. Any person who fails to file the required certification shall be subject to a civil penalty of not less than $10,000 and not more than $100,000 for each such failure.
3. The prospective participant also agrees by submitting its bid or proposal that the participant shall require that the language of this certification be included in all lower tier subcontracts, which exceed $100,000 and that all such recipients shall certify and disclose accordingly.

SUBMISSION OF RECORDS - FEDERAL-AID PROJECTS

(7-17-07) (8-21-12) SP1 G103

The Contractor's attention is directed to the Standard Special Provision entitled *Required Contract Provisions-Federal-Aid Construction Contracts* contained elsewhere in this proposal.

This project is located on a roadway classified as a local road or rural minor collector, therefore the requirements of Paragraph IV - Davis Bacon and Related Act Provisions are exempt from this contract.

ON-THE-JOB TRAINING

(10-16-07) (Rev. 5-21-13) Z-10

Description

The North Carolina Department of Transportation will administer a custom version of the Federal On-the-Job Training (OJT) Program, commonly referred to as the Alternate OJT Program. All contractors (existing and newcomers) will be automatically placed in the Alternate Program. Standard OJT requirements typically associated with individual projects will no longer be applied at the project level. Instead, these requirements will be applicable on an annual basis for each contractor administered by the OJT Program Manager.

On the Job Training shall meet the requirements of 23 CFR 230.107 (b), 23 USC – Section 140, this provision and the On-the-Job Training Program Manual.

The Alternate OJT Program will allow a contractor to train employees on Federal, State and privately funded projects located in North Carolina. However, priority shall be given to training employees on NCDOT Federal-Aid funded projects.

Minorities and Women

Developing, training and upgrading of minorities and women toward journeyman level status is a primary objective of this special training provision. Accordingly, the Contractor shall make every effort to enroll minority and women as trainees to the extent that such persons are available within a reasonable area of recruitment. This training commitment is not intended, and shall not be used, to discriminate against any applicant for training, whether a member of a minority group or not.

Assigning Training Goals

The Department, through the OJT Program Manager, will assign training goals for a calendar year based on the contractors' past three years' activity and the contractors' anticipated upcoming year's activity with the Department. At the beginning of each year, all contractors eligible will be contacted by the Department to determine the number of trainees that will be assigned for the upcoming calendar year. At that time the Contractor shall enter into an agreement with the Department to provide a self-imposed on-the-job training program for the calendar year. This agreement will include a specific number of annual training goals agreed to by both parties. The number of training assignments may range from 1 to 15 per contractor per calendar year. The Contractor shall sign an agreement to fulfill their annual goal for the year. A sample agreement is available at www.ncbowd.com/section/on-the-job-training.

Training Classifications

The Contractor shall provide on-the-job training aimed at developing full journeyman level workers in the construction craft/operator positions. Preference shall be given to providing training in the following skilled work classifications:

Equipment Operators	Office Engineers
Truck Drivers	Estimators
Carpenters	Iron / Reinforcing Steel Workers
Concrete Finishers	Mechanics

Pipe Layers Welders

The Department has established common training classifications and their respective training requirements that may be used by the contractors. However, the classifications established are not all-inclusive. Where the training is oriented toward construction applications, training will be allowed in lower-level management positions such as office engineers and estimators. Contractors shall submit new classifications for specific job functions that their employees are performing. The Department will review and recommend for acceptance to FHWA the new classifications proposed by contractors, if applicable. New classifications shall meet the following requirements:

Proposed training classifications are reasonable and realistic based on the job skill classification needs, and

The number of training hours specified in the training classification is consistent with common practices and provides enough time for the trainee to obtain journeyman level status.

The Contractor may allow trainees to be trained by a subcontractor provided that the Contractor retains primary responsibility for meeting the training and this provision is made applicable to the subcontract. However, only the Contractor will receive credit towards the annual goal for the trainee.

Where feasible, 25 percent of apprentices or trainees in each occupation shall be in their first year of apprenticeship or training. The number of trainees shall be distributed among the work classifications on the basis of the contractor's needs and the availability of journeymen in the various classifications within a reasonable area of recruitment.

No employee shall be employed as a trainee in any classification in which they have successfully completed a training course leading to journeyman level status or in which they have been employed as a journeyman.

Records and Reports

The Contractor shall maintain enrollment, monthly and completion reports documenting company compliance under these contract documents. These documents and any other information as requested shall be submitted to the OJT Program Manager.

Upon completion and graduation of the program, the Contractor shall provide each trainee with a certification Certificate showing the type and length of training satisfactorily completed.

Trainee Interviews

All trainees enrolled in the program will receive an initial and Trainee/Post graduate interview conducted by the OJT program staff.

Trainee Wages

Contractors shall compensate trainees on a graduating pay scale based upon a percentage of the prevailing minimum journeyman wages (Davis-Bacon Act). Minimum pay shall be as follows:

60 percent	of the journeyman wage for the first half of the training period
75 percent	of the journeyman wage for the third quarter of the training period
90 percent	of the journeyman wage for the last quarter of the training period

In no instance shall a trainee be paid less than the local minimum wage. The Contractor shall adhere to the minimum hourly wage rate that will satisfy both the NC Department of Labor (NCDOL) and the Department.

Achieving or Failing to Meet Training Goals

The Contractor will be credited for each trainee employed by him on the contract work who is currently enrolled or becomes enrolled in an approved program and who receives training for at least 50 percent of the specific program requirement. Trainees will be allowed to be transferred between projects if required by the Contractor's scheduled workload to meet training goals.

If a contractor fails to attain their training assignments for the calendar year, they may be taken off the NCDOT's Bidders List.

Measurement and Payment

No compensation will be made for providing required training in accordance with these contract documents.

NORTH CAROLINA DEPARTMENT OF TRANSPORTATION
BID FORM

WBS Element: 45357.3.FD22 **Contract Number: DK00156**

DESCRIPTION: Replace Bridge No. 244 on SR 1809 (Old Westfield Rd) over SR 1856 (Old US 52) in Surry County

LINE	ITEM NUMBER	SECT.	DESCRIPTION	QUANT.	UNIT	UNIT BID	AMOUNT BID
1	0000100000-N	800	MOBILIZATION	1	LS		
2	0000400000-N	801	CONSTRUCTION SURVEYING	1	LS		
3	0030000000-N	SP	BRIDGE APPROACH FILL - SUB REGIONAL TIER, STATION 13+58.65 -L-	1	LS		
4	0043000000-N	226	GRADING	1	LS		
5	0050000000-E	226	SUPPLEMENTARY CLEARING & GRUBBING	1	ACR		
6	0318000000-E	300	FOUNDATION CONDITIONING MATERIAL, MINOR STRUCTURES	65	TON		
7	0320000000-E	300	FOUNDATION CONDITIONING GEOTEXTILE	195	SY		
8	0335200000-E	310	15" DRAINAGE PIPE	488	LF		
9	0335300000-E	310	18" DRAINAGE PIPE	40	LF		
10	0343000000-E	310	15" SIDE DRAIN PIPE	69	LF		
11	0995000000-E	340	PIPE REMOVAL	75	LF		
12	1220000000-E	545	INCIDENTAL STONE BASE	20	TON		
13	1330000000-E	607	INCIDENTAL MILLING	400	SY		
14	1489000000-E	610	ASPHALT CONC BASE COURSE, TYPE B25.0B	1160	TON		
15	1498000000-E	610	ASPHALT CONC SURFACE COURSE, TYPE I19.0B	100	TON		
16	1525000000-E	610	ASPHALT CONC SURFACE COURSE, TYPE SF9.5A	620	TON		
17	1575000000-E	620	ASPHALT BINDER FOR PLANT MIX	100	TON		
18	2000000000-N	806	RIGHT OF WAY MARKERS	35	EA		
19	2286000000-N	840	MASONRY DRAINAGE STRUCTURES	6	EA		
20	2366000000-N	840	FRAME WITH TWO GRATES, STD 840.24	3	EA		
21	2367000000-N	840	FRAME WITH TWO GRATES, STD 840.29	2	EA		
22	2549000000-E	846	2'-6" CONCRETE CURB & GUTTER	80	LF		
23	2556000000-E	846	SHOULDER BERM GUTTER	200	LF		
24	2612000000-E	848	6" CONCRETE DRIVEWAY	10	SY		
25	2696000000-E	SP	PRECAST CONCRETE BARRIER	120	LF		
26	2830000000-N	858	ADJUSTMENT OF MANHOLES	1	EA		
27	3030000000-E	862	STEEL BM GUARDRAIL	587.5	LF		
28	3045000000-E	862	STEEL BM GUARDRAIL, SHOP CURVED	187.5	LF		
29	3195000000-E	862	GUARDRAIL ANCHOR UNITS, TYPE AT-1	6	EA		
30	3215000000-N	862	GUARDRAIL ANCHOR UNITS, TYPE III	4	EA		
31	3270000000-N	SP	GUARDRAIL ANCHOR UNITS, TYPE 350	2	EA		
32	3317000000-N	862	GUARDRAIL ANCHOR UNITS, TYPE B-77	4	EA		
33	3360000000-N	864	REMOVE EXISTING GUARDRAIL	340	LF		
34	3649000000-E	876	RIP RAP, CLASS B	60	TON		
35	3656000000-E	876	GEOTEXTILE FOR DRAINAGE	265	SY		
36	4400000000-E	1110	WORK ZONE SIGNS (STATIONARY)	516	SF		
37	4405000000-E	1110	WORK ZONE SIGNS (PORTABLE)	96	SF		
38	4410000000-E	1110	WORK ZONE SIGNS (BARRICADE MOUNTED)	208	SF		
39	4420000000-N	1120	PORTABLE CHANGEABLE MESSAGE SIGN	1	EA		
40	4430000000-N	1130	DRUMS	100	EA		

****CONTINUED ON PAGE 2****

NORTH CAROLINA DEPARTMENT OF TRANSPORTATION
BID FORM

WBS Element: 45357.3.FD22 **Contract Number: DK00156**

DESCRIPTION: Replace Bridge No. 244 on SR 1809 (Old Westfield Rd) over SR 1856 (Old US 52) in Surry County

LINE	ITEM NUMBER	SECT.	DESCRIPTION	QUANT.	UNIT	UNIT BID	AMOUNT BID
41	4430000000-N	1130	CONES	100	EA		
42	4445000000-E	1145	BARRICADES (TYPE III)	152	LF		
43	4455000000-N	1150	FLAGGER	240	DAY		
44	4465000000-N	1160	TEMPORARY CRASH CUSHIONS	4	EA		
45	4480000000-N	1165	TMA	2	EA		
46	4485000000-E	1170	PORTABLE CONCRETE BARRIER	258	LF		
47	4510000000-N	SP	LAW ENFORCEMENT	240	HR		
48	4516000000-N	1180	SKINNY DRUM	100	EA		
49	4650000000-N	1251	TEMPORARY RAISED PAVEMENT MARKERS	34	EA		
50	4810000000-E	1205	PAINT PAVEMENT MARKING LINES (4")	21,468	LF		
51	4835000000-E	1205	PAINT PAVEMENT MARKING LINES (24")	150	LF		
52	4845000000-N	1205	PAINT PAVEMENT MARKING SYMBOL	6	EA		
53	4850000000-E	1205	REMOVAL OF PAVEMENT MARKING LINES (4")	800	LF		
54	5325200000-E	1510	2" WATER LINE	13	LF		
55	5325400000-E	1510	4" WATER LINE	71	LF		
56	5325600000-E	1510	6" WATER LINE	386	LF		
57	5326200000-E	1510	12" WATER LINE	419	LF		
58	5536000000-E	1515	2" VALVE	1	EA		
59	5540000000-E	1515	6" VALVE	2	EA		
60	5648000000-N	1515	RELOCATE WATER METER	1	EA		
61	5672000000-N	1515	RELOCATE FIRE HYDRANT	1	EA		
62	5691300000-E	1520	8" SANITARY GRAVITY SEWER	287	LF		
63	5775000000-E	1525	4' DIA UTILITY MANHOLE	5	EA		
64	5781000000-E	1525	UTILITY MANHOLE WALL, 4' DIA	15	LF		
65	5798000000-E	1530	ABANDON **" UTILITY PIPE (2")	337	LF		
66	5798000000-E	1530	ABANDON **" UTILITY PIPE (4")	107	LF		
67	5800000000-E	1530	ABANDON 6" UTILITY PIPE	343	LF		
68	5801000000-E	1530	ABANDON 8" UTILITY PIPE	290	LF		
69	5804000000-E	1530	ABANDON 12" UTILITY PIPE	417	LF		
70	5828000000-N	1530	REMOVE UTILITY MANHOLE	1	EA		
71	5882000000-N	SP	GENERIC UTILITY ITEM (ADJUSTABLE PIPE ROLLER)	18	EA		
72	5890000000-N	1510	GENERIC UTILITY ITEM (2" DI PLUG)	1	EA		
73	6000000000-E	1605	TEMPORARY SILT FENCE	1,865	LF		
74	6006000000-E	1610	STONE FOR EROSION CONTROL, CLASS A	65	TON		
75	6009000000-E	1610	STONE FOR EROSION CONTROL, CLASS B	75	TON		
76	6012000000-E	1610	SEDIMENT CONTROL STONE	55	TON		
77	6015000000-E	1615	TEMPORARY MULCHING	0.5	ACR		
78	6018000000-E	1620	SEED FOR TEMPORARY SEEDING	50	LB		
79	6021000000-E	1620	FERTILIZER FOR TEMPORARY SEEDING	0.25	TON		
80	6024000000-E	1622	TEMPORARY SLOPE DRAINS	200	LF		

****CONTINUED ON PAGE 3****

NORTH CAROLINA DEPARTMENT OF TRANSPORTATION
BID FORM

WBS Element: 45357.3.FD22 **Contract Number: DK00156**

DESCRIPTION: Replace Bridge No. 244 on SR 1809 (Old Westfield Rd) over SR 1856 (Old US 52) in Surry County

LINE	ITEM NUMBER	SECT.	DESCRIPTION	QUANT.	UNIT	UNIT BID	AMOUNT BID
81	6030000000-E	1630	SILT EXCAVATION	130	CY		
82	6036000000-E	1631	MATTING FOR EROSION CONTROL	1,470	SY		
83	6037000000-E	SP	COIR FIBER MAT	100	SY		
84	6038000000-E	SP	PERMANENT SOIL REINFORCEMENT MAT	120	SY		
85	6042000000-E	1632	1/4" HARDWARE CLOTH	120	LF		
86	6071010000-E	SP	COIR FIBER WATTLE	190	LF		
87	6071020000-E	SP	POLYACRYLAMIDE (PAM)	20	LB		
88	6084000000-E	1660	SEEDING & MULCHING	0.5	ACR		
89	6087000000-E	1660	MOWING	0.5	ACR		
90	6090000000-E	1661	SEED FOR REPAIR SEEDING	50	LB		
91	6093000000-E	1661	FERTILIZER FOR REPAIR SEEDING	0.25	TON		
92	6096000000-E	1662	SEED FOR SUPPLEMENTAL SEEDING	50	LB		
93	6108000000-E	1665	FERTILIZER TOPDRESSING	0.50	TON		
94	6114000000-N	1667	SPECIALIZED HAND MOWING	10	MHR		
95	6117000000-N	SP	RESPONSE FOR EROSION CONTROL	9	EA		
96	7060000000-E	1705	SIGNAL CABLE	560	LF		
97	7120000000-E	1705	VEHICLE SIGNAL HEAD (12", 3 SECTION)	8	EA		
98	7264000000-E	1710	MESSENGER CABLE (3/8")	350	LF		
99	7300000000-E	1715	UNPAVED TRENCHING (1,2")	700	LF		
100	7324000000-N	1716	JUNCTION BOX (STANDARD SIZE)	9	EA		
101	7360000000-N	1720	WOOD POLE	4	EA		
102	7372000000-N	1721	GUY ASSEMBLY	8	EA		
103	7408000000-E	1722	1" RISER WITH WEATHERHEAD	1	EA		
104	7420000000-E	1722	2" RISER WITH WEATHERHEAD	5	EA		
105	7444000000-E	1725	INDUCTIVE LOOP SAWCUT	415	LF		
106	7456000000-E	1726	LEAD-IN CABLE (14-2)	1,650	LF		
107	7768000000-N	1751	CONTROLLER WITH CABINET (TYPE 2070L, POLE MOUNTED)	1	EA		
108	7780000000-N	1751	DETECTOR CARD (TYPE 2070L)	4	EA		
109	8021000000-N	SP	REMOVAL OF EXISTING STRUCTURE AT STATION 13+58.65 -L-	1	LS		
110	8070000000-E	410	FOUNDATION EXCAVATION	1	LS		
111	8112730000-N	450	PDA TESTING	1	EA		
112	8121000000-N	412	UNCLASSIFIED STRUCTURE EXCAVATION AT STATION 13+58.65 -L-	1	LS		
113	8175000000-E	420	CLASS AA CONCRETE (BRIDGE)	67.8	CY		
114	8182000000-E	420	CLASS A CONCRETE (BRIDGE)	134.3	CY		
115	8210000000-N	422	BRIDGE APPROACH SLABS, STATION 13+58.65 -L-	1	LS		
116	8217000000-E	425	REINFORCING STEEL (BRIDGE)	19,468	LB		
117	8224000000-E	425	EPOXY COATED REINFORCING STEEL (BRIDGE)	2,233	LB		

****CONTINUED ON PAGE 4****

NORTH CAROLINA DEPARTMENT OF TRANSPORTATION
BID FORM

WBS Element: 45357.3.FD22 Contract Number: DK00156

DESCRIPTION: Replace Bridge No. 244 on SR 1809 (Old Westfield Rd) over SR 1856 (Old US 52) in Surry County

LINE	ITEM NUMBER	SECT.	DESCRIPTION	QUANT.	UNIT	UNIT BID	AMOUNT BID
118	8238000000-E	425	SPIRAL COLUMN REINFORCING STEEL (BRIDGE)	2,640	LB		
119	8364000000-E	450	HP 12X53 STEEL PILES	840.0	LF		
120	8384000000-E	450	HP 14X73 STEEL PILES	1,380.0	LF		
121	8391000000-N	450	STEEL PILE POINTS	37	EA		
122	8475000000-E	460	TWO BAR METAL RAIL	258.75	LF		
123	8517000000-E	460	1'-2"X 2'-6" CONCRETE PARAPET	273.75	LF		
124	8531000000-E	462	4" SLOPE PROTECTION	507	SY		
125	8657000000-N	430	ELASTOMERIC BEARINGS	1	LS		
126	8762000000-E	430	3'-0" X 1'-9" PRESTRESSED CONC CORED SLABS	1,992.0	LF		
127	8892000000-E	SP	CONCRETE STAIN	2,341	SF		

TOTAL BID FOR PROJECT: _____

THIS SECTION TO BE COMPLETED BY NORTH CAROLINA DEPARTMENT OF TRANSPORTATION

This bid has been reviewed in accordance with Article 103-1 of the Standard Specifications for Roads and Structures 2012.

Reviewed by _____ _____***(date)***

AWARD LIMITS ON MULTIPLE PROJECTS

It is the desire of the Proposer to be awarded contracts, the value of which will not exceed a total of $_____, for those projects indicated below on which bids are being opened on the same date as shown in the Proposal Form. Individual projects shall be indicated by placing the project number and county in the appropriate place below. Projects not selected will not be subject to an award limit.

_____	_____
(Project Number)	(County)
_____	_____
(Project Number)	(County)
_____	_____
(Project Number)	(County)
_____	_____
(Project Number)	(County)

*If a Proposer desires to limit the total amount of work awarded to him in this letting, he shall state such limit in the space provided above in the second line of this form.

It is agreed that in the event that I am (we are) the successful bidder on indicated projects, the total value of which is more that the above stipulated award limits, the Board of Transportation will award me (us) projects from among those indicated which have a total value not exceeding the award limit and which will result in the best advantage to the Department of Transportation.

_____
**Signature of Authorized Person

**Only those persons authorized to sign bids under the provisions of Article 102-8, Item 8, shall be authorized to sign this form.

EXECUTION OF BID

NON-COLLUSION AFFIDAVIT, DEBARMENT CERTIFICATION AND GIFT BAN CERTIFICATION

CORPORATION

The person executing the bid, on behalf of the Bidder, being duly sworn, solemnly swears (or affirms) that neither he, nor any official, agent or employee of the bidder has entered into any agreement, participated in any collusion, or otherwise taken any action which is in restraint of free competitive bidding in connection with any bid or contract, that the bidder has not been convicted of violating *N.C.G.S. § 133-24* within the last three years, and that the Bidder intends to do the work with its own bonafide employees or subcontractors and is not bidding for the benefit of another contractor.

In addition, execution of this bid in the proper manner also constitutes the Bidder's certification of status under penalty of perjury under the laws of the United States in accordance with the Debarment Certification attached, provided that the Debarment Certification also includes any required statements concerning exceptions that are applicable.

N.C.G.S. § 133-32 and Executive Order 24 prohibit the offer to, or acceptance by, any State Employee of any gift from anyone with a contract with the State, or from any person seeking to do business with the State. By execution of any response in this procurement, you attest, for your entire organization and its employees or agents, that you are not aware that any such gift has been offered, accepted, or promised by any employees of your organization.

SIGNATURE OF CONTRACTOR

_____

Full name of Corporation

_____

Address as Prequalified

Attest_____ By_____

Secretary/Assistant Secretary
Select appropriate title

President/Vice President/Assistant Vice President
Select appropriate title

_____ _____

Print or type Signer's name Print or type Signer's name

CORPORATE SEAL

AFFIDAVIT MUST BE NOTARIZED

Subscribed and sworn to before me this the

_____ day of _____, 20_____.

_____

Signature of Notary Public

NOTARY SEAL

of _____County.

State of _____

My Commission Expires: _____

EXECUTION OF BID

NON-COLLUSION AFFIDAVIT, DEBARMENT CERTIFICATION AND GIFT BAN CERTIFICATION

PARTNERSHIP

The person executing the bid, on behalf of the Bidder, being duly sworn, solemnly swears (or affirms) that neither he, nor any official, agent or employee of the bidder has entered into any agreement, participated in any collusion, or otherwise taken any action which is in restraint of free competitive bidding in connection with any bid or contract, that the bidder has not been convicted of violating *N.C.G.S. § 133-24* within the last three years, and that the Bidder intends to do the work with its own bonafide employees or subcontractors and is not bidding for the benefit of another contractor.

In addition, execution of this bid in the proper manner also constitutes the Bidder's certification of status under penalty of perjury under the laws of the United States in accordance with the Debarment Certification attached, provided that the Debarment Certification also includes any required statements concerning exceptions that are applicable.

N.C.G.S. § 133-32 and Executive Order 24 prohibit the offer to, or acceptance by, any State Employee of any gift from anyone with a contract with the State, or from any person seeking to do business with the State. By execution of any response in this procurement, you attest, for your entire organization and its employees or agents, that you are not aware that any such gift has been offered, accepted, or promised by any employees of your organization.

SIGNATURE OF CONTRACTOR

_____
Full Name of Partnership

_____
Address as Prequalified

_____ By_____
Signature of Witness Signature of Partner

_____ _____
Print or type Signer's name Print or type Signer's name

AFFIDAVIT MUST BE NOTARIZED

Subscribed and sworn to before me this the

_____ day of _____, 20_____.

_____
Signature of Notary Public

NOTARY SEAL

of _____County.

State of _____

My Commission Expires: _____

EXECUTION OF BID

NON-COLLUSION AFFIDAVIT, DEBARMENT CERTIFICATION AND GIFT BAN CERTIFICATION

LIMITED LIABILITY COMPANY

The person executing the bid, on behalf of the Bidder, being duly sworn, solemnly swears (or affirms) that neither he, nor any official, agent or employee of the bidder has entered into any agreement, participated in any collusion, or otherwise taken any action which is in restraint of free competitive bidding in connection with any bid or contract, that the bidder has not been convicted of violating *N.C.G.S. § 133-24* within the last three years, and that the Bidder intends to do the work with its own bonafide employees or subcontractors and is not bidding for the benefit of another contractor.

In addition, execution of this bid in the proper manner also constitutes the Bidder's certification of status under penalty of perjury under the laws of the United States in accordance with the Debarment Certification attached, provided that the Debarment Certification also includes any required statements concerning exceptions that are applicable.

N.C.G.S. § 133-32 and Executive Order 24 prohibit the offer to, or acceptance by, any State Employee of any gift from anyone with a contract with the State, or from any person seeking to do business with the State. By execution of any response in this procurement, you attest, for your entire organization and its employees or agents, that you are not aware that any such gift has been offered, accepted, or promised by any employees of your organization.

SIGNATURE OF CONTRACTOR

_____
Full Name of Firm

_____
Address as Prequalified

_____ Signature of Manager_____
Signature of Witness Individually

_____ _____
Print or type Signer's name Print or type Signer's name

AFFIDAVIT MUST BE NOTARIZED

Subscribed and sworn to before me this the

_____ day of _____, 20_____.

_____
Signature of Notary Public **NOTARY SEAL**

of _____County.

State of _____

My Commission Expires: _____

EXECUTION OF BID

NON-COLLUSION AFFIDAVIT, DEBARMENT CERTIFICATION AND GIFT BAN CERTIFICATION

JOINT VENTURE (2) or (3)

The person executing the bid, on behalf of the Bidder, being duly sworn, solemnly swears (or affirms) that neither he, nor any official, agent or employee of the bidder has entered into any agreement, participated in any collusion, or otherwise taken any action which is in restraint of free competitive bidding in connection with any bid or contract, that the bidder has not been convicted of violating *N.C.G.S. § 133-24* within the last three years, and that the Bidder intends to do the work with its own bonafide employees or subcontractors and is not bidding for the benefit of another contractor.

In addition, execution of this bid in the proper manner also constitutes the Bidder's certification of status under penalty of perjury under the laws of the United States in accordance with the Debarment Certification attached, provided that the Debarment Certification also includes any required statements concerning exceptions that are applicable.

N.C.G.S. § 133-32 and Executive Order 24 prohibit the offer to, or acceptance by, any State Employee of any gift from anyone with a contract with the State, or from any person seeking to do business with the State. By execution of any response in this procurement, you attest, for your entire organization and its employees or agents, that you are not aware that any such gift has been offered, accepted, or promised by any employees of your organization.

SIGNATURE OF CONTRACTOR

Instructions**: 2 Joint Venturers** Fill in lines (1), (2) and (3) and execute. **3 Joint Venturers** Fill in lines (1), (2), (3) and (4) and execute. On Line (1), fill in the name of the Joint Venture Company. On Line (2), fill in the name of one of the joint venturers and execute below in the appropriate manner. On Line (3), print or type the name of the other joint venturer and execute below in the appropriate manner. On Line (4), fill in the name of the third joint venturer, if applicable and execute below in the appropriate manner.

(1) _____

Name of Joint Venture

(2) _____

Name of Contractor

_____

Address as Prequalified

_____ _____

Signature of Witness or Attest By Signature of Contractor

_____ _____

Print or type Signer's name Print or type Signer's name

If Corporation, affix Corporate Seal and

(3) _____

Name of Contractor

_____

Address as Prequalified

_____ _____

Signature of Witness or Attest By Signature of Contractor

_____ _____

Print or type Signer's name Print or type Signer's name

If Corporation, affix Corporate Seal and

(4) _____

Name of Contractor (for 3 Joint Venture only)

_____

Address as Prequalified

_____ _____

Signature of Witness or Attest By Signature of Contractor

_____ _____

Print or type Signer's name Print or type Signer's name

If Corporation, affix Corporate Seal

NOTARY SEAL
Affidavit must be notarized for Line (2)
Subscribed and sworn to before me this the
_____ day of _____, 20_____.

_____
Signature of Notary Public
of _____County.
State of _____
My Commission Expires: _____

NOTARY SEAL
Affidavit must be notarized for Line (3)
Subscribed and sworn to before me this the
_____ day of _____, 20_____.

_____
Signature of Notary Public
of _____County.
State of _____
My Commission Expires: _____

NOTARY SEAL
Affidavit must be notarized for Line (4)
Subscribed and sworn to before me this the
_____ day of _____, 20_____.

_____
Signature of Notary Public
of _____County.
State of _____
My Commission Expires: _____

EXECUTION OF BID

NON-COLLUSION AFFIDAVIT, DEBARMENT CERTIFICATION AND GIFT BAN CERTIFICATION

INDIVIDUAL DOING BUSINESS UNDER A FIRM NAME

The person executing the bid, on behalf of the Bidder, being duly sworn, solemnly swears (or affirms) that neither he, nor any official, agent or employee of the bidder has entered into any agreement, participated in any collusion, or otherwise taken any action which is in restraint of free competitive bidding in connection with any bid or contract, that the bidder has not been convicted of violating *N.C.G.S. § 133-24* within the last three years, and that the Bidder intends to do the work with its own bonafide employees or subcontractors and is not bidding for the benefit of another contractor.

In addition, execution of this bid in the proper manner also constitutes the Bidder's certification of status under penalty of perjury under the laws of the United States in accordance with the Debarment Certification attached, provided that the Debarment Certification also includes any required statements concerning exceptions that are applicable.

N.C.G.S. § 133-32 and Executive Order 24 prohibit the offer to, or acceptance by, any State Employee of any gift from anyone with a contract with the State, or from any person seeking to do business with the State. By execution of any response in this procurement, you attest, for your entire organization and its employees or agents, that you are not aware that any such gift has been offered, accepted, or promised by any employees of your organization.

SIGNATURE OF CONTRACTOR

Name of Contractor _____
Individual Name

Trading and doing business as _____
Full name of Firm

_____
Address as Prequalified

_____ _____
Signature of Witness Signature of Contractor, Individually

_____ _____
Print or type Signer's name Print or type Signer's name

AFFIDAVIT MUST BE NOTARIZED

Subscribed and sworn to before me this the

_____ day of _____, 20_____.

_____
Signature of Notary Public

NOTARY SEAL

of _____County.

State of _____

My Commission Expires: _____

EXECUTION OF BID

NON-COLLUSION AFFIDAVIT, DEBARMENT CERTIFICATION AND GIFT BAN CERTIFICATION

INDIVIDUAL DOING BUSINESS IN HIS OWN NAME

The person executing the bid, on behalf of the Bidder, being duly sworn, solemnly swears (or affirms) that neither he, nor any official, agent or employee of the bidder has entered into any agreement, participated in any collusion, or otherwise taken any action which is in restraint of free competitive bidding in connection with any bid or contract, that the bidder has not been convicted of violating *N.C.G.S. § 133-24* within the last three years, and that the Bidder intends to do the work with its own bonafide employees or subcontractors and is not bidding for the benefit of another contractor.

In addition, execution of this bid in the proper manner also constitutes the Bidder's certification of status under penalty of perjury under the laws of the United States in accordance with the Debarment Certification attached, provided that the Debarment Certification also includes any required statements concerning exceptions that are applicable.

N.C.G.S. § 133-32 and Executive Order 24 prohibit the offer to, or acceptance by, any State Employee of any gift from anyone with a contract with the State, or from any person seeking to do business with the State. By execution of any response in this procurement, you attest, for your entire organization and its employees or agents, that you are not aware that any such gift has been offered, accepted, or promised by any employees of your organization.

SIGNATURE OF CONTRACTOR

Name of Contractor _____

Print or type Individual Name

_____

Address as Prequalified

_____

Signature of Contractor, Individually

_____

Print or type Signer's name

_____

Signature of Witness

_____

Print or type Signer's name

AFFIDAVIT MUST BE NOTARIZED

Subscribed and sworn to before me this the

_____ day of _____, 20_____.

_____

Signature of Notary Public

NOTARY SEAL

of _____County.

State of _____

My Commission Expires: _____

DEBARMENT CERTIFICATION

Conditions for certification:

1. The prequalified bidder shall provide immediate written notice to the Department if at any time the bidder learns that his certification was erroneous when he submitted his debarment certification or explanation filed with the Department, or has become erroneous because of changed circumstances.

2. The terms *covered transaction, debarred, suspended, ineligible, lower tier covered transaction, participant, person, primary covered transaction, principal, proposal, and voluntarily excluded*, as used in this provision, have the meanings set out in the Definitions and Coverage sections of the rules implementing Executive Order 12549. A copy of the Federal Rules requiring this certification and detailing the definitions and coverages may be obtained from the Contract Officer of the Department.

3. The prequalified bidder agrees by submitting this form, that he will not knowingly enter into any lower tier covered transaction with a person who is debarred, suspended, declared ineligible, or voluntarily excluded from participation in NCDOT contracts, unless authorized by the Department.

4. For Federal Aid projects, the prequalified bidder further agrees that by submitting this form he will include the Federal-Aid Provision titled *Required Contract Provisions Federal-Aid Construction Contract (Form FHWA PR 1273)* provided by the Department, without subsequent modification, in all lower tier covered transactions.

5. The prequalified bidder may rely upon a certification of a participant in a lower tier covered transaction that he is not debarred, suspended, ineligible, or voluntarily excluded from the covered transaction, unless he knows that the certification is erroneous. The bidder may decide the method and frequency by which he will determine the eligibility of his subcontractors.

6. Nothing contained in the foregoing shall be construed to require establishment of a system of records in order to render in good faith the certification required by this provision. The knowledge and information of a participant is not required to exceed that which is normally possessed by a prudent person in the ordinary course of business dealings.

7. Except as authorized in paragraph 6 herein, the Department may terminate any contract if the bidder knowingly enters into a lower tier covered transaction with a person who is suspended, debarred, ineligible, or voluntarily excluded from participation in this transaction, in addition to other remedies available by the Federal Government.

DEBARMENT CERTIFICATION

The prequalified bidder certifies to the best of his knowledge and belief, that he and his principals:

a. Are not presently debarred, suspended, proposed for debarment, declared ineligible, or voluntarily excluded from covered transactions by any Federal department or agency;

b. Have not within a three-year period preceding this proposal been convicted of or had a civil judgment rendered against them for commission of fraud or a criminal offense in connection with obtaining, attempting to obtain, or performing a public (Federal, State or local) transaction or contract under a public transaction; violation of Federal or State antitrust statutes or commission of embezzlement, theft, forgery, bribery, falsification or destruction of records; making false statements; or receiving stolen property;

c. Are not presently indicted for or otherwise criminally or civilly charged by a governmental entity (Federal, State or local) with commission of any of the offenses enumerated in paragraph b. of this certification; and

d. Have not within a three-year period preceding this proposal had one or more public transactions (Federal, State or local) terminated for cause or default.

e. Will submit a revised Debarment Certification immediately if his status changes and will show in his bid proposal an explanation for the change in status.

If the prequalified bidder cannot certify that he is not debarred, he shall provide an explanation with this submittal. An explanation will not necessarily result in denial of participation in a contract.

Failure to submit a non-collusion affidavit and debarment certification will result in the prequalified bidder's bid being considered non-responsive.

☐ Check here if an explanation is attached to this certification.

Contract No: DK00000

County: Surry

ACCEPTED BY THE
DEPARTMENT OF TRANSPORTATION

_____
Contract Officer

_____
Date

M-2

LISTING OF DBE SUBCONTRACTORS

Sheet _____ of _____

Firm Name and Address	Item No.	Item Description	* Agreed upon Unit Price	** Dollar Volume of Item
Name Address				
Name Address				
Name Address				
Name Address				
Name Address				
Name Address				
Name Address				

This form must be completed in order for the Bid to be considered responsive and be publicly read.
Bidders with no DBE participation must so indicate this on the form by entering the word or number *zero*.

Rev 11-1-12

LISTING OF DBE SUBCONTRACTORS

LISTING OF DBE SUBCONTRACTORS (CONT.)

LISTING OF DBE SUBCONTRACTORS

Sheet _____ of _____

Firm Name and Address	Item No.	Item Description	* Agreed upon Unit Price	** Dollar Volume of Item
Name Address				
Name Address				
Name Address				
Name Address				
Name Address				

* The Dollar Volume shown in this column shall be the Actual Price Agreed Upon by the Prime Contractor and the DBE subcontractor, and these prices will be used to determine the percentage of the DBE participation in the contract.

** Dollar Volume of DBE Subcontractor $ _____

Percentage of Total Contract Bid Price _____ %

** - Must have entry even if figure to be entered is zero.

** - *If firm is a Material Supplier Only, show Dollar Volume as 60% of Agreed Upon Amount from Letter of Intent.*
If firm is a Manufacturer, show Dollar Volume as 100% of Agreed Upon Amount from Letter of Intent.

This form must be completed in order for the Bid to be considered responsive and be publicly read.
Bidders with no DBE participation must so indicate this on the form by entering the word or number *zero*.

Rev 11-1-12

LETTER OF INTENT TO PERFORM AS A SUBCONTRACTOR

CONTRACT:	NAME OF BIDDER:

The undersigned intends to perform work in connection with the above contract upon execution of the bid and subsequent award of contract by the Local Public Agency as:

Name of MBE/WBE/DBE Subcontractor_____
Address_____
City_____State_____Zip_____

Please check all that apply:
Minority Business Enterprise (MBE)____
Women Business Enterprise (WBE)_____
Disadvantaged Business Enterprise (DBE)____

The MBE /WBE /DBE status of the above named subcontractor is certified by the North Carolina Department of Transportation. The above named subcontractor is prepared to perform the described work listed on the attached MBE/WBE/DBE Commitment Items sheet, in connection with the above contract upon execution of the bid and subsequent award of contract by the Local Public Agency. The above named subcontractor is prepared to perform the described work at the estimated Commitment Total for Subcontractor Price identified on the MBE/WBE/DBE Commitment Items sheet and amount indicated below.

Commitment Total based on estimated Unit Prices and Quantities on the "attached" MBE/WBE/DBE Commitment Items sheet:

Amount **$** _____

The above named bidder and subcontractor mutually accepts the Commitment Total estimated for the Unit Prices and Quantities. This commitment total is based on estimated quantities only and most likely will vary up or down as the project is completed. Final compensation will be based on actual quantities of work performed and accepted during the pursuance of work. The above listed amount represents the entire dollar amount quoted based on these estimated quantities. No conversations, verbal agreements, and/or other forms of non-written representations shall serve to add, delete, or modify the terms as stated.

This document shall not serve in any manner as an actual subcontract between the two parties. A separate subcontractor agreement will describe in detail the contractual obligations of the bidder and the MBE/WBE/DBE subcontractor.

Affirmation

The above named MBE/ WBE/ DBE subcontractor affirms that it will perform the portion(s) of the contract for the estimated dollar value as stated above.

Name of MBE/ WBE/ DBE Subcontractor	**Name of Bidder**
Signature / Title	**Signature / Title**
Date	**Date**