BRIDGE NO. 100 WILKES COUNTY BD-5111P

F.A. PROJECT NO. BRZ-1317 (5)

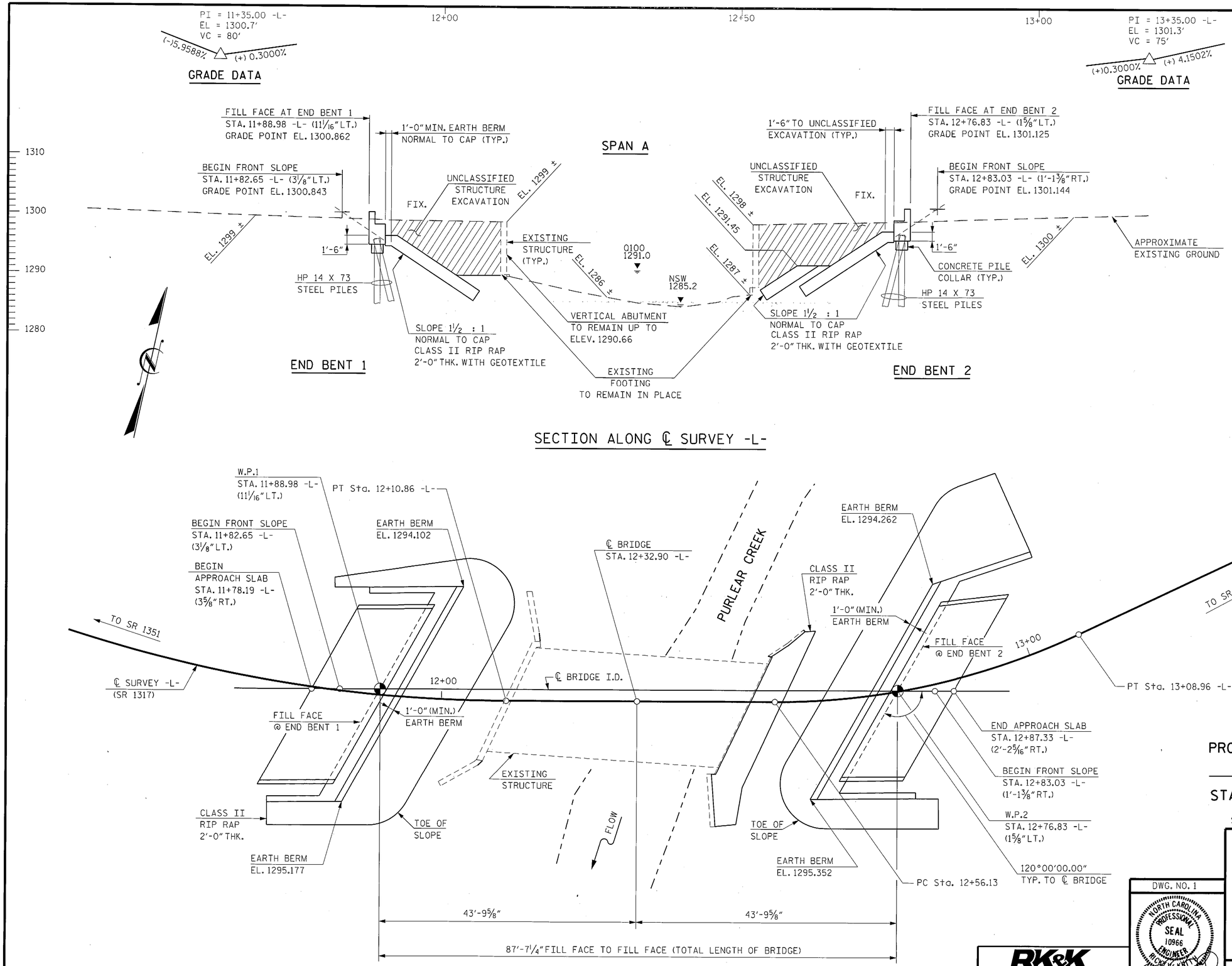

PLAN

PILES NOT SHOWN IN PLAN VIEW

HORIZONTAL CURVE DATA

PI Sta 10+42.61	PI Sta 11+45.49
Δ = 26° 21' 41.5" (LT)	Δ = 32° 04' 31.2" (LT)
D = 38° 11' 49.9"	D = 23° 52' 23.7"
L = 69.01'	L = 134.36'
T = 35.13'	T = 68.99'
R = 150.00'	R = 240.00'

PI Sta 12+82.98	PI Sta 14+13.27
Δ = 25° 13' 31.2" (LT)	Δ = 29° 06' 28.0" (RT)
D = 47° 44' 47.3"	D = 32° 44' 25.6"
L = 52.83'	L = 88.90'
T = 26.85'	T = 45.43'
R = 120.00'	R = 175.00'

HYDRAULIC DATA

DESIGN DISCHARGE = 900 cfs
DESIGN FREQUENCY = 25 yr.
DESIGN HIGH WATER ELEVATION = 1,290.3'
DRAINAGE AREA = 3.0 sq. mi.
BASIC DISCHARGE (Q 100) = 1200 cfs
BASIC HIGH WATER ELEVATION = 1291.0'

OVERTOPPING FLOOD DATA

EL = 1,301.0 *
FREQUENCY = > 500 yr.
DISCHARGE = 7,330 cfs

* OVERTOPPING ELEVATION IS AT APPROX. STA. 11+50 -L- RIGHT (HIGH SIDE OF ROADWAY AT END OF GUARDRAIL)

PROJECT NO. BD-5111P
WILKES COUNTY
STATION: STA. 12+32.90 -L-

SHEET 1 OF 4 REPLACES BRIDGE NO. 100

STATE OF NORTH CAROLINA
DEPARTMENT OF TRANSPORTATION
RALEIGH

GENERAL DRAWING
FOR BRIDGE OVER
PURLEAR CREEK
ON SR 1317 NEW HOPE ROAD
BETWEEN SR 1351 AND SR 1346

DWG. NO. 1

NORTH CAROLINA PROFESSIONAL SEAL 10966 ENGINEER R.V. KEITH
10/18/2012

RK&K
RUMMEL, KLEPPER & KAHL, LLP
900 RIDGEFIELD DRIVE SUITE 350
RALEIGH, NORTH CAROLINA 27609-3960
NC LICENSE NUMBER: F-0112

REVISIONS						SHEET NO.
NO.	BY:	DATE:	NO.	BY:	DATE:	S-1
1			3			TOTAL SHEETS
2			4			19

DRAWN BY : F.D. WEEDEN DATE : MAY. 2012
CHECKED BY : R.V. KEITH DATE : MAY. 2012

M:\projects\2009\09085_NCDOT_Div_OnCall\E01\B5111P\Design\Structures\GENERAL_P.dgn

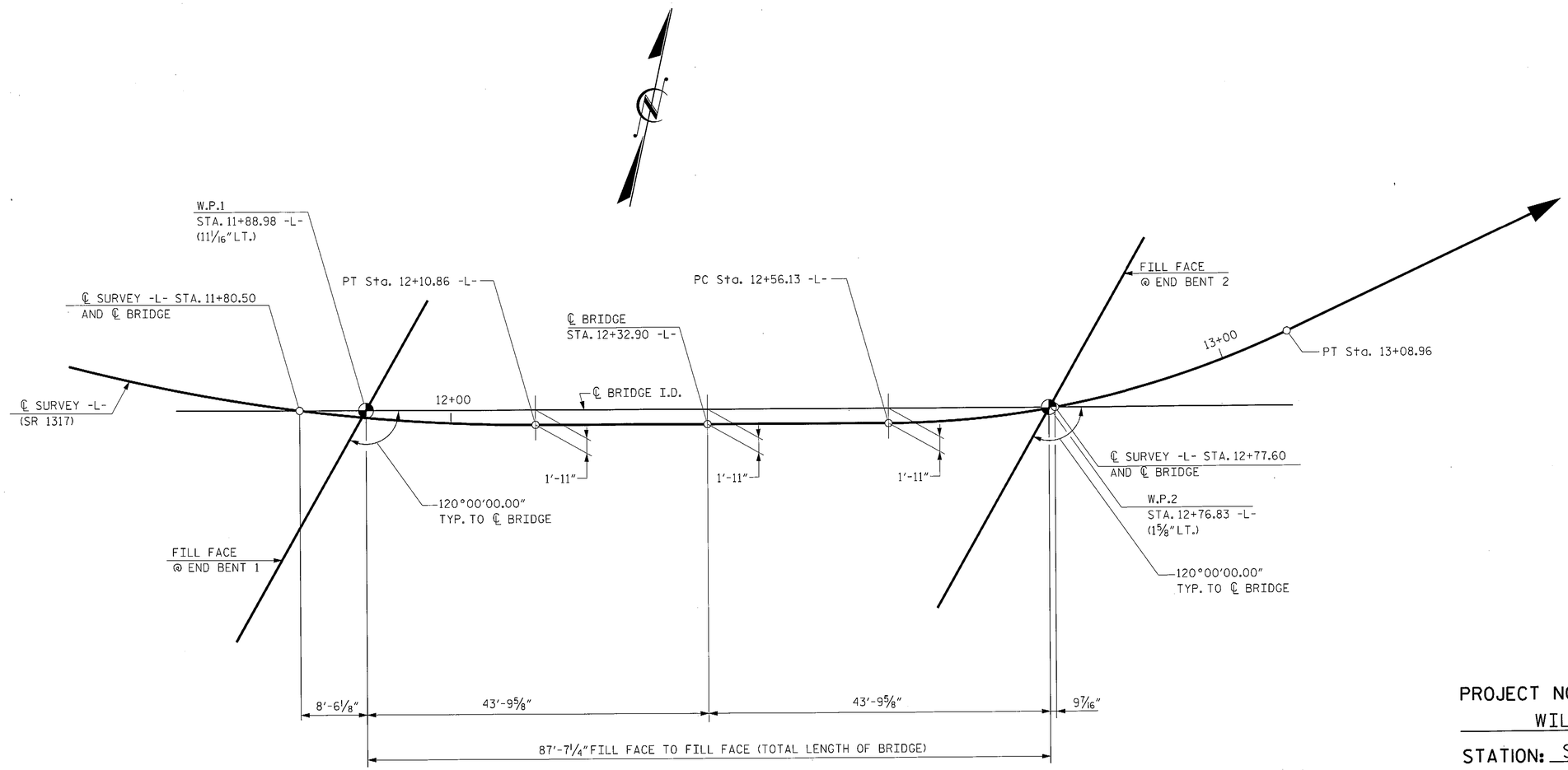

BRIDGE LAYOUT

PROJECT NO. BD-5111P

WILKES COUNTY

STATION: STA. 12+32.90 -L-

SHEET 2 OF 4

STATE OF NORTH CAROLINA
DEPARTMENT OF TRANSPORTATION
RALEIGH

GENERAL DRAWING
FOR BRIDGE OVER
PURLEAR CREEK
ON SR 1317 NEW HOPE ROAD
BETWEEN SR 1351 AND SR 1346

DWG. NO. 2

NORTH CAROLINA PROFESSIONAL SEAL 10966 ENGINEER RICHARD V. KEITH
6/1/2012

RK&K
RUMMEL, KLEPPER & KAHL, LLP
900 RIDGEFIELD DRIVE SUITE 350
RALEIGH, NORTH CAROLINA 27609-3960
NC LICENSE NUMBER: F-0112

REVISIONS								SHEET NO.
NO.	BY:	DATE:	NO.	BY:	DATE:			S-2
1			3					TOTAL SHEETS
2			4					19

DRAWN BY : F.D. WEEDEN DATE : MAY. 2012
CHECKED BY : R.V. KEITH DATE : MAY. 2012

M:\projects\2009\09085_NCDOT_Div_OnCall\E01\B5111P\Design\Structures\LAYOUT_P.dgn

BENCH MARK : EL. 1301.60 5/8 "REBAR AND CAP IN GROUND STA. 11+01.04 -L- 31.07' RT.

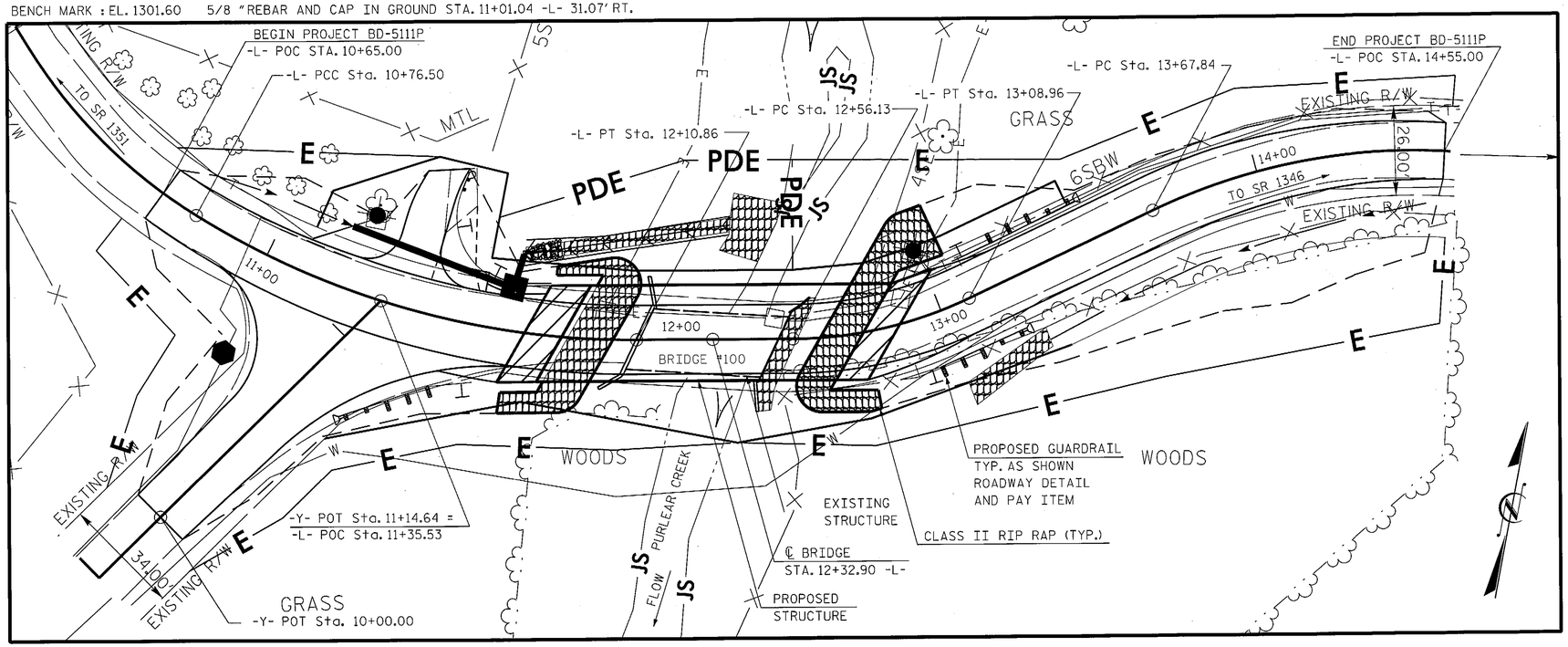

FOR UTILITY INFORMATION,
SEE UTILITY PLANS AND SPECIAL PROVISIONS

LOCATION SKETCH

TOTAL BILL OF MATERIALS

	REMOVAL OF EXISTING STRUCTURE	UNCLASSIFIED STRUCTURE EXCAVATION	CLASS A CONCRETE	BRIDGE APPROACH SLABS	REINFORCING STEEL	HP 14 X 73 STEEL PILES		STEEL PILE POINTS	VERTICAL CONCRETE BARRIER RAIL	RIP RAP CLASS II (2'-0" THICK)	GEOTEXTILE FOR DRAINAGE	ELASTOMERIC BEARINGS	3'-0" X 2'-9" PRESTRESSED CONCRETE BOX BEAMS	
	LUMP SUM	LUMP SUM	CU. YDS.	LUMP SUM	LBS.	NO.	LIN. FT.	EA.	LIN. FT.	TONS	SQ. YDS.	LUMP SUM	NO.	LIN. FT.
SUPERSTRUCTURE				LUMP SUM					170.00			LUMP SUM	10	850.0
END BENT NO. 1		LUMP SUM	18.4		3,245	5	75.0	5		140	155			
END BENT NO. 2		LUMP SUM	18.6		3,288	5	75.0	5		133	148			
TOTAL	LUMP SUM	LUMP SUM	37.0	LUMP SUM	6,533	10	150.0	10	170.00	273	303	LUMP SUM	10	850.0

PROJECT NO. BD-5111P
WILKES COUNTY
STATION: STA. 12+32.90 -L-

SHEET 3 OF 4

STATE OF NORTH CAROLINA
DEPARTMENT OF TRANSPORTATION
RALEIGH

GENERAL DRAWING
FOR BRIDGE OVER
PURLEAR CREEK
ON SR 1317 NEW HOPE ROAD
BETWEEN SR 1351 AND SR 1346

DWG. NO. 3

NORTH CAROLINA PROFESSIONAL SEAL 10966 ENGINEER R.V. KEITH
6/1/2012

RK&K
RUMMEL, KLEPPER & KAHL, LLP
900 RIDGEFIELD DRIVE SUITE 350
RALEIGH, NORTH CAROLINA 27609-3960
NC LICENSE NUMBER: F-0112

REVISIONS						SHEET NO.
NO.	BY:	DATE:	NO.	BY:	DATE:	S-3
1			3			TOTAL SHEETS
2			4			19

DRAWN BY : F.D. WEEDEN DATE : MAY. 2012
CHECKED BY : R.V. KEITH DATE : MAY. 2012

M:\projects\2009\09085_NCDOT_Div_OnCall\E01\B5111P\Design\Structures\typlocl_P.dgn

NOTES:

ASSUMED LIVE LOAD = HL-93 OR ALTERNATE LOADING.

FOR OTHER DESIGN DATA AND GENERAL NOTES, SEE SHEET SN.

FOR EROSION CONTROL MEASURES, SEE EROSION CONTROL PLANS.

THIS BRIDGE HAS BEEN DESIGNED IN ACCORDANCE WITH THE AASHTO LRFD BRIDGE DESIGN SPECIFICATIONS.

THIS BRIDGE IS LOCATED IN SEISMIC ZONE 1.

THE EXISTING STRUCTURE CONSISTING OF 1 SPAN @ 41'-0" WITH AN ASPHALT WEARING SURFACE OVER A TIMBER FLOOR ON I-BEAM SUPERSTRUCTURE AND A CLEAR ROADWAY WIDTH OF 17.8' ON A SUBSTRUCTURE CONSISTING OF REINFORCED CONCRETE ABUTMENTS AND LOCATED AT THE PROPOSED STRUCTURE LOCATION SHALL BE REMOVED. SEE SPECIAL PROVISION FOR "REMOVAL OF EXISTING STRUCTURE AT STA. 12+32.90 -L-".

REMOVAL OF THE EXISTING BRIDGE SHALL BE PERFORMED SO AS NOT TO ALLOW DEBRIS TO FALL INTO THE WATER. THE CONTRACTOR SHALL REMOVE THE BRIDGE AND SUBMIT PLANS FOR DEMOLITION IN ACCORDANCE WITH ARTICLE 402-2 OF THE STANDARD SPECIFICATIONS. SEE SECTION 412 OF STANDARD SPECIFICATIONS.

THE MATERIAL SHOWN IN THE CROSS-HATCHED AREA SHALL BE EXCAVATED FOR A DISTANCE OF 30 FEET EACH SIDE OF CENTERLINE ROADWAY AS DIRECTED BY THE ENGINEER. THIS WORK WILL BE PAID FOR AT THE CONTRACT LUMP SUM PRICE FOR UNCLASSIFIED STRUCTURE EXCAVATION. SEE SECTION 412 OF THE STANDARD SPECIFICATIONS.

THE SUBSTRUCTURE OF THE EXISTING BRIDGE INDICATED ON THE PLANS IS FROM THE BEST INFORMATION AVAILABLE. SINCE THIS INFORMATION IS SHOWN FOR THE CONVENIENCE OF THE CONTRACTOR, THE CONTRACTOR SHALL HAVE NO CLAIM WHATSOEVER AGAINST THE DEPARTMENT OF TRANSPORTATION FOR ANY DELAYS OR ADDITIONAL COST INCURRED BASED ON DIFFERENCES BETWEEN THE EXISTING BRIDGE SUBSTRUCTURE SHOWN ON THE PLANS AND THE ACTUAL CONDITIONS AT THE PROJECT SITE.

ASPHALT WEARING SURFACE IS INCLUDED IN ROADWAY QUANTITY ON ROADWAY PLANS.

THIS STRUCTURE HAS BEEN DESIGNED IN ACCORDANCE WITH HEC 18, "EVALUATING SCOUR AT BRIDGES", MAY, 2001.

THE CONTRACTOR SHALL PROVIDE INDEPENDENT ASSURANCE SAMPLES OF REINFORCING STEEL AS FOLLOWS: FOR PROJECTS REQUIRING UP TO 400 TONS OF REINFORCING STEEL, ONE 30 INCH SAMPLE OF EACH SIZE BAR USED, AND FOR PROJECTS REQUIRING OVER 400 TONS OF REINFORCING STEEL, TWO 30 INCH SAMPLES OF EACH SIZE BAR USED. THE BARS FROM WHICH THE SAMPLES ARE TAKEN MUST THEN BE SPLICED WITH REPLACEMENT BARS OF THE SIZE AND LENGTH OF THE SAMPLE PLUS A MINIMUM LAP SPLICE OF THIRTY BAR DIAMETERS. PAYMENT FOR THE SAMPLES OF REINFORCING STEEL SHALL BE CONSIDERED INCIDENTAL TO VARIOUS PAY ITEMS.

INASMUCH AS THE PAINT SYSTEM ON THE EXISTING STRUCTURAL STEEL CONTAINS LEAD, THE CONTRACTOR'S ATTENTION IS DIRECTED TO ARTICLE 107-1 OF THE STANDARD SPECIFICATIONS. ANY COSTS RESULTING FROM COMPLIANCE WITH APPLICABLE STATE OR FEDERAL REGULATIONS PERTAINING TO HANDLING OF MATERIALS CONTAINING LEAD BASED PAINT SHALL BE INCLUDED IN THE BID PRICE FOR "REMOVAL OF EXISTING STRUCTURE AT STATION 12+32.90 -L-".

FOR SUBMITTAL OF WORKING DRAWINGS, SEE SPECIAL PROVISIONS.

FOR FALSEWORK AND FORMWORK, SEE SPECIAL PROVISIONS.

FOR CRANE SAFETY, SEE SPECIAL PROVISIONS.

FOR GROUT FOR STRUCTURES, SEE SPECIAL PROVISIONS.

FOUNDATION NOTES:

FOR PILES, SEE SECTION 450 OF THE STANDARD SPECIFICATIONS.

PILES AT END BENT NO. 1 AND END BENT NO. 2 ARE DESIGNED FOR A FACTORED RESISTANCE OF 125 TONS PER PILE.

DRIVE PILES AT END BENT NO. 1 AND END BENT NO. 2 TO A REQUIRED DRIVING RESISTANCE OF 208 TONS PER PILE.

STEEL H-PILE POINTS ARE REQUIRED FOR STEEL H-PILES AT END BENT NO. 1 AND END BENT NO. 2. FOR STEEL PILE POINTS, SEE SECTION 450 OF THE STANDARD SPECIFICATIONS.

PROJECT NO. BD-5111P

WILKES COUNTY

STATION: STA. 12+32.90 -L-

SHEET 4 OF 4

STATE OF NORTH CAROLINA
DEPARTMENT OF TRANSPORTATION
RALEIGH

GENERAL DRAWING
FOR BRIDGE OVER
PURLEAR CREEK
ON SR 1317 NEW HOPE ROAD
BETWEEN SR 1351 AND SR 1346

DWG. NO. 3A

NORTH CAROLINA PROFESSIONAL SEAL 10966 ENGINEER R.V. KEITH

6/1/2012

RK&K
RUMMEL, KLEPPER & KAHL, LLP
900 RIDGEFIELD DRIVE SUITE 350
RALEIGH, NORTH CAROLINA 27609-3960
NC LICENSE NUMBER: F-0112

REVISIONS						SHEET NO.
NO.	BY:	DATE:	NO.	BY:	DATE:	S-3A
1			3			TOTAL SHEETS
2			4			19

DRAWN BY : F.D. WEEDEN DATE : MAY. 2012
CHECKED BY : R.V. KEITH DATE : MAY. 2012

M:\projects\2009\09085_NCDOT_Div_OnCall\E01\B5111P\Design\Structures\typlocl_P.dgn

LOAD AND RESISTANCE FACTOR RATING (LRFD) SUMMARY FOR PRESTRESSED CONCRETE GIRDERS

LEVEL		VEHICLE	WEIGHT (W) (TONS)	CONTROLLING LOAD RATING	MINIMUM RATING FACTORS (RF)	TONS = W X RF	STRENGTH I LIMIT STATE											SERVICE III LIMIT STATE						COMMENT NUMBER
								MOMENT					SHEAR						MOMENT					
							LIVELOAD FACTORS	DISTRIBUTION FACTORS (DF)	RATING FACTOR	SPAN	GIRDER LOCATION	DISTANCE FROM LEFT END OF SPAN (ft)	DISTRIBUTION FACTORS (DF)	RATING FACTOR	SPAN	GIRDER LOCATION	DISTANCE FROM LEFT END OF SPAN (ft)	LIVELOAD FACTORS	DISTRIBUTION FACTORS (DF)	RATING FACTOR	SPAN	GIRDER LOCATION	DISTANCE FROM LEFT END OF SPAN (ft)	
DESIGN LOAD RATING		HL-93(Inv)	N/A	1	1.117	--	1.75	0.247	1.93	A	EL	41.634	0.625	**1.12**	A	EL	**8.327**	0.80	0.247	1.56	A	EL	41.634	
		HL-93(Opr)	N/A	--	1.448	--	1.35	0.247	2.5	A	EL	41.634	0.625	1.45	A	EL	8.327	N/A	--	--	--	--	--	
		HS-20(Inv)	36.000	2	1.448	52.14	1.75	0.247	2.59	A	EL	41.634	0.625	**1.45**	A	EL	**8.327**	0.80	0.247	2.09	A	EL	41.634	
		HS-20(Opr)	36.000	--	1.877	67.589	1.35	0.247	3.35	A	EL	41.634	0.625	1.88	A	EL	8.327	N/A	--	--	--	--	--	
LEGAL LOAD RATING	SV	SNSH	13.500	--	4.378	59.102	1.4	0.247	7.48	A	EL	41.634	0.625	4.38	A	EL	8.327	0.80	0.247	4.84	A	EL	41.634	
		SNGARBS2	20.000	--	3.091	61.822	1.4	0.247	5.5	A	EL	41.634	0.625	3.09	A	EL	8.327	0.80	0.247	3.56	A	EL	41.634	
		SNAGRIS2	22.000	--	2.861	62.937	1.4	0.247	5.17	A	EL	41.634	0.625	2.86	A	EL	8.327	0.80	0.247	3.35	A	EL	41.634	
		SNCOTTS3	27.250	--	2.183	59.498	1.4	0.247	3.72	A	EL	41.634	0.625	2.18	A	EL	8.327	0.80	0.247	2.41	A	EL	41.634	
		SNAGGRS4	34.925	--	1.797	62.749	1.4	0.247	3.08	A	EL	41.634	0.625	1.8	A	EL	8.327	0.80	0.247	1.99	A	EL	41.634	
		SNS5A	35.550	--	1.812	64.409	1.4	0.247	3.01	A	EL	41.634	0.625	1.81	A	EL	8.327	0.80	0.247	1.95	A	EL	41.634	
		SNS6A	39.950	--	1.647	65.797	1.4	0.247	2.75	A	EL	41.634	0.625	1.65	A	EL	8.327	0.80	0.247	1.78	A	EL	41.634	
		SNS7B	42.000	--	1.61	67.634	1.4	0.247	2.62	A	EL	41.634	0.625	1.61	A	EL	8.327	0.80	0.247	1.70	A	EL	41.634	
	TTST	TNAGRIT3	33.000	--	1.965	64.845	1.4	0.247	3.35	A	EL	41.634	0.625	1.97	A	EL	8.327	0.80	0.247	2.17	A	EL	41.634	
		TNT4A	33.075	--	1.922	63.556	1.4	0.247	3.36	A	EL	41.634	0.625	1.92	A	EL	8.327	0.80	0.247	2.18	A	EL	41.634	
		TNT6A	41.600	--	1.701	70.755	1.4	0.247	2.74	A	EL	41.634	0.625	1.7	A	EL	8.327	0.80	0.247	1.77	A	EL	41.634	
		TNT7A	42.000	--	1.67	70.125	1.4	0.247	2.75	A	EL	41.634	0.625	1.67	A	EL	8.327	0.80	0.247	1.78	A	EL	41.634	
		TNT7B	42.000	--	1.578	66.274	1.4	0.247	2.83	A	EL	41.634	0.625	1.58	A	EL	8.327	0.80	0.247	1.83	A	EL	41.634	
		TNAGRIT4	43.000	--	1.53	65.773	1.4	0.247	2.7	A	EL	41.634	0.625	1.53	A	EL	8.327	0.80	0.247	1.75	A	EL	41.634	
		TNAGT5A	45.000	--	1.511	68.008	1.4	0.247	2.55	A	EL	41.634	0.625	1.51	A	EL	8.327	0.80	0.247	1.65	A	EL	41.634	
		TNAGT5B	45.000	3	1.456	65.508	1.4	0.247	2.52	A	EL	41.634	0.625	**1.46**	A	EL	**8.327**	0.80	0.247	1.63	A	EL	41.634	

LOAD FACTORS:

DESIGN LOAD RATING FACTORS	LIMIT STATE	γ_{DC}	γ_{DW}
	STRENGTH I	1.25	1.50
	SERVICE III	1.00	1.00

NOTES:

MINIMUM RATING FACTORS ARE BASED ON THE STRENGTH I AND SERVICE III LIMIT STATES.

ALLOWABLE STRESSES FOR SERVICE III LIMIT STATE ARE AS REQUIRED FOR DESIGN.

COMMENTS:

1.
2.
3.
4.

CONTROLLING LOAD RATING

1. DESIGN LOAD RATING (HL-93)
2. DESIGN LOAD RATING (HS-20)
3. LEGAL LOAD RATING **

** SEE CHART FOR VEHICLE TYPE

GIRDER LOCATION

I - INTERIOR GIRDER
EL - EXTERIOR LEFT GIRDER
ER - EXTERIOR RIGHT GIRDER

LRFR SUMMARY

PROJECT NO. BD-5111P
WILKES COUNTY
STATION: 12+32.90 -L-

STATE OF NORTH CAROLINA
DEPARTMENT OF TRANSPORTATION
RALEIGH

STANDARD
LRFR SUMMARY FOR 85' BOX BEAM UNIT 60° SKEW & 120° SKEW
(NON-INTERSTATE TRAFFIC)

NORTH CAROLINA PROFESSIONAL SEAL 15825 ENGINEER BRYCE D. KLAPPENBACH
5-7-2012

REVISIONS						SHEET NO.
NO.	BY:	DATE:	NO.	BY:	DATE:	S-4
1			3			TOTAL SHEETS
2			4			19

ASSEMBLED BY : D. A. GLADDEN DATE : 4-25-12
CHECKED BY : B. KLAPPENBACH DATE : 5-1-12
DRAWN BY : TMG II/II
CHECKED BY : AAC II/II

07-MAY-2012 11:06
R:\Structures\FINAL PLANS\BD5111P_SD_AB.dgn
bklappenbach

STD. NO. 33LRFR1_60&120S_85L

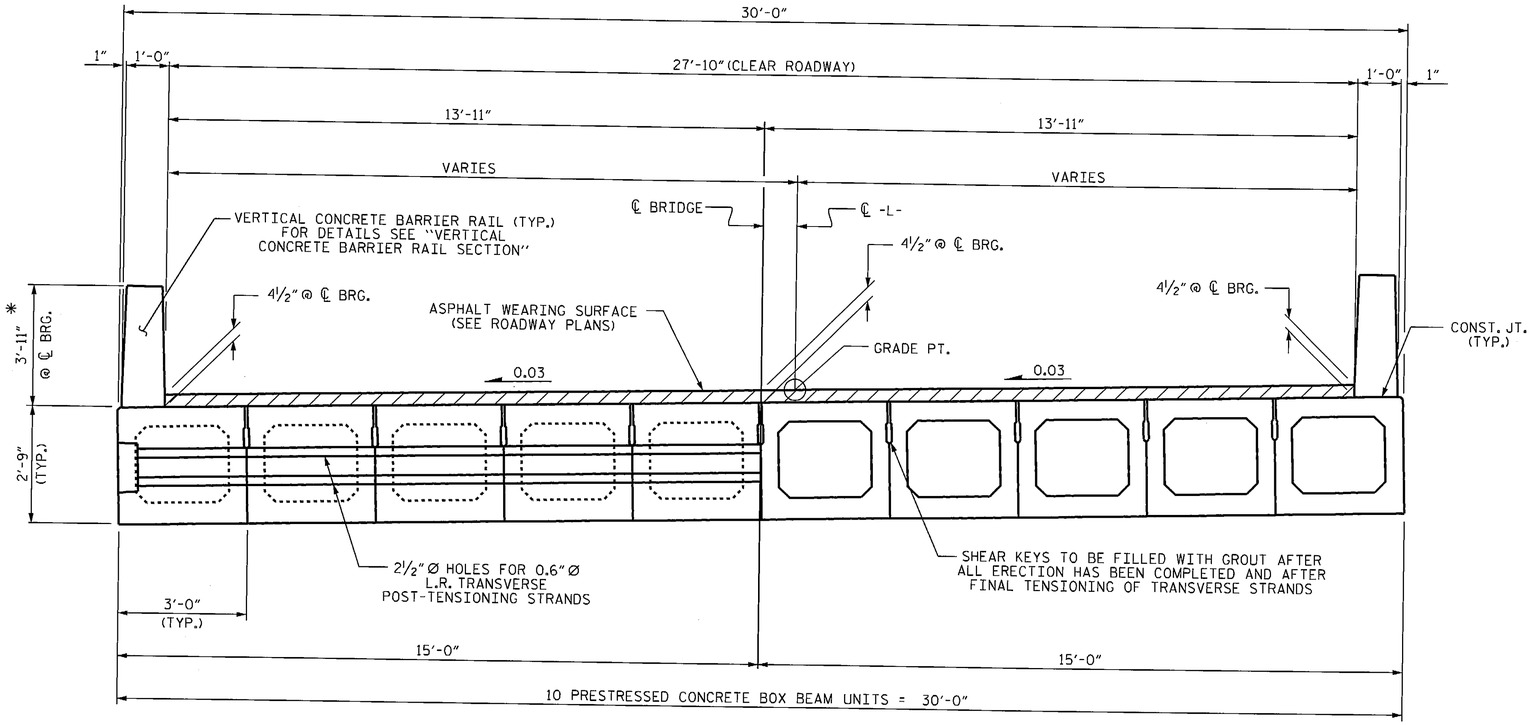

HALF SECTION
AT INTERMEDIATE DIAPHRAGMS

HALF SECTION
THROUGH VOIDS

TYPICAL SECTION

*THE MAXIMUM BARRIER RAIL HEIGHT AND ASPHALT THICKNESS IS SHOWN. THE HEIGHT OF THE BARRIER RAIL AND ASPHALT THICKNESS VARIES WHILE THE TOP OF THE BARRIER RAIL FOLLOWS THE PROFILE OF THE GUTTERLINE. FOR RAIL HEIGHT DETAILS AND ASPHALT THICKNESS, SEE THE "VERTICAL CONCRETE BARRIER RAIL SECTION" DETAIL.

FIXED END

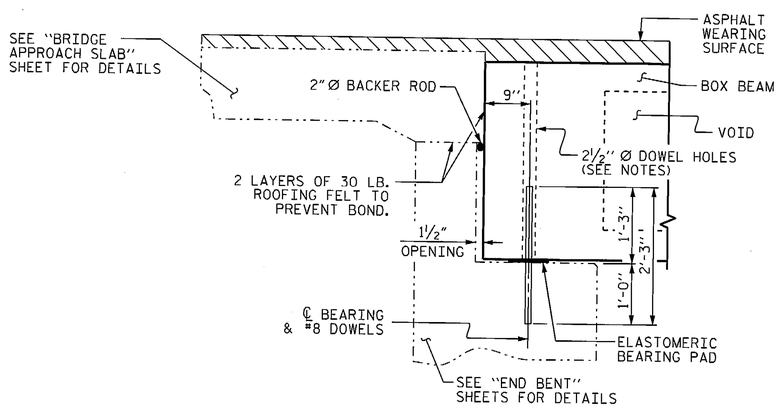

SECTION AT END BENT

NOTES

ALL PRESTRESSING STRANDS SHALL BE 7-WIRE LOW RELAXATION GRADE 270 STRANDS AND SHALL CONFORM TO AASHTO M203 EXCEPT FOR SAMPLING REQUIREMENTS WHICH SHALL BE IN ACCORDANCE WITH THE STANDARD SPECIFICATIONS.

ALL REINFORCING STEEL CAST WITH THE BOX BEAM SECTIONS SHALL BE GRADE 60 AND SHALL BE INCLUDED IN THE UNIT PRICE BID FOR PRESTRESSED CONCRETE BOX BEAMS.

RECESSES FOR TRANSVERSE STRANDS SHALL BE GROUTED AFTER THE TENSIONING OF THE STRANDS.

THE 2½" Ø DOWEL HOLES AT FIXED ENDS OF BOX BEAM SECTIONS SHALL BE FILLED WITH NON-SHRINK GROUT.

THE BACKER RODS SHALL CONFORM TO THE REQUIREMENTS OF TYPE M BOND BREAKER. SEE SECTION 1028 OF THE STANDARD SPECIFICATIONS.

THE TRANSFER OF LOAD FROM THE ANCHORAGES TO THE BOX BEAM UNIT SHALL BE DONE WHEN THE CONCRETE HAS REACHED A COMPRESSIVE STRENGTH OF NOT LESS THAN 6000 PSI.

ALL REINFORCING STEEL IN VERTICAL CONCRETE BARRIER RAILS SHALL BE EPOXY COATED.

PRESTRESSING STRANDS SHALL BE CUT FLUSH WITH THE BOX BEAM UNIT ENDS.

APPLY EPOXY PROTECTIVE COATING TO BOX BEAM UNIT ENDS.

VERTICAL GROOVED CONTRACTION JOINTS, ½" IN DEPTH, SHALL BE TOOLED IN ALL EXPOSED FACES OF THE BARRIER RAIL AND IN ACCORDANCE WITH ARTICLE 825-10(B) OF THE STANDARD SPECIFICATIONS. A VERTICAL CONTRACTION JOINT SHALL BE LOCATED AT EACH THIRD POINT BETWEEN BARRIER RAIL EXPANSION JOINTS. ONLY ONE CONTRACTION JOINT IS REQUIRED AT MIDPOINT OF BARRIER RAIL SEGMENTS LESS THAN 20 FEET IN LENGTH AND NO CONTRACTION JOINTS ARE REQUIRED FOR THOSE SEGMENTS LESS THAN 10 FEET IN LENGTH.

THE LOCATION OF THE VOID DRAINS MAY BE SHIFTED SLIGHTLY WHERE NECESSARY TO CLEAR PRESTRESSING STRANDS OR TRANSVERSE REINFORCING STEEL.

FOR GROUT FOR STRUCTURES, SEE SPECIAL PROVISIONS.

PROJECT NO. BD-5111P
WILKES COUNTY
STATION: 12+32.90 -L-

SHEET 1 OF 5

NORTH CAROLINA PROFESSIONAL SEAL 15825 ENGINEER BRIAN M. KLAPPENBACH
5-7-2012

STATE OF NORTH CAROLINA
DEPARTMENT OF TRANSPORTATION
RALEIGH

STANDARD

3'-0" X 2'-9"
PRESTRESSED CONCRETE
BOX BEAM UNIT

REVISIONS						SHEET NO.
NO.	BY:	DATE:	NO.	BY:	DATE:	S-5
1			3			TOTAL SHEETS
2			4			19

ASSEMBLED BY : D. A. GLADDEN DATE : 4-23-12
CHECKED BY : B. KLAPPENBACH DATE : 5-1-12

DRAWN BY : DGE 8/11
CHECKED BY : TMG 11/11

07-MAY-2012 11:06
R:\Structures\FINAL PLANS\BD5111P_SD_AB.dgn
bklappenbach

STD. NO. STD.33PCBB1_30

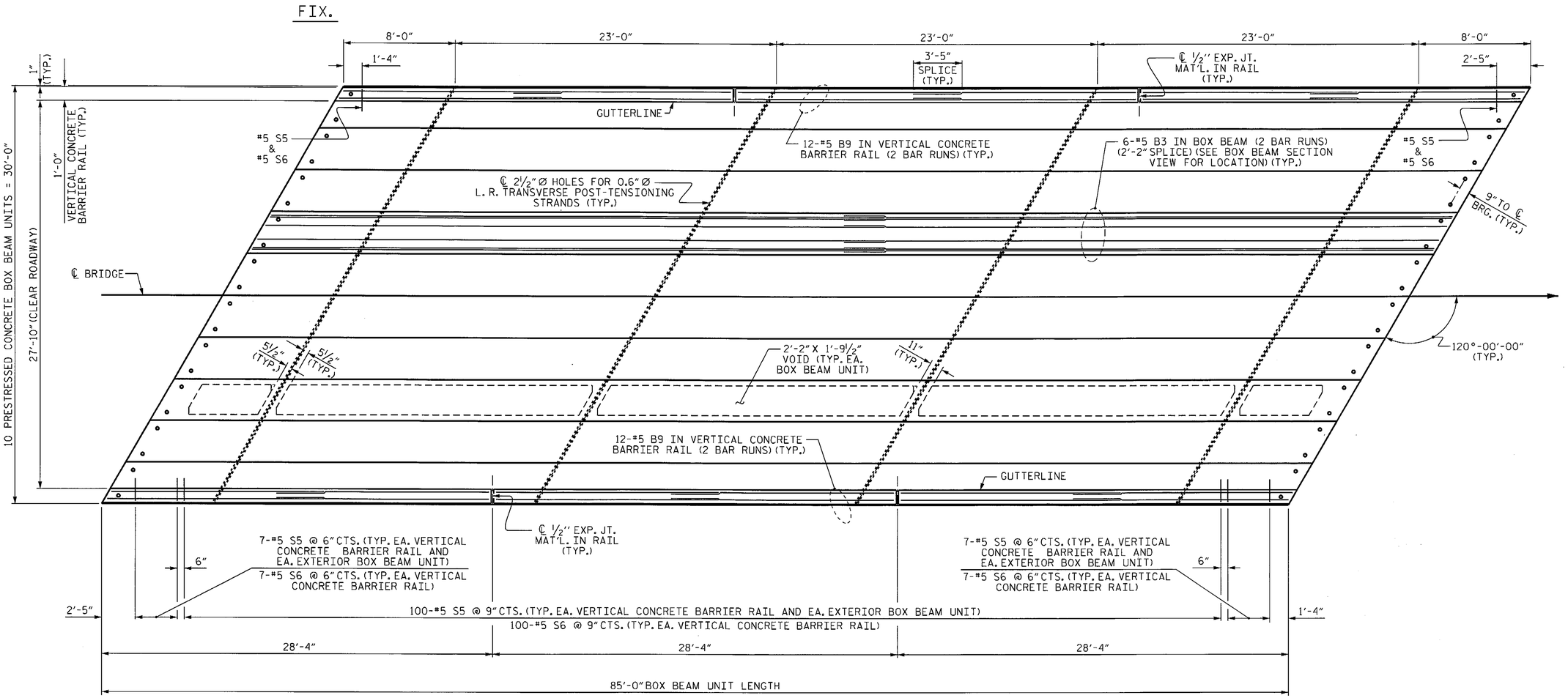

PLAN OF UNIT

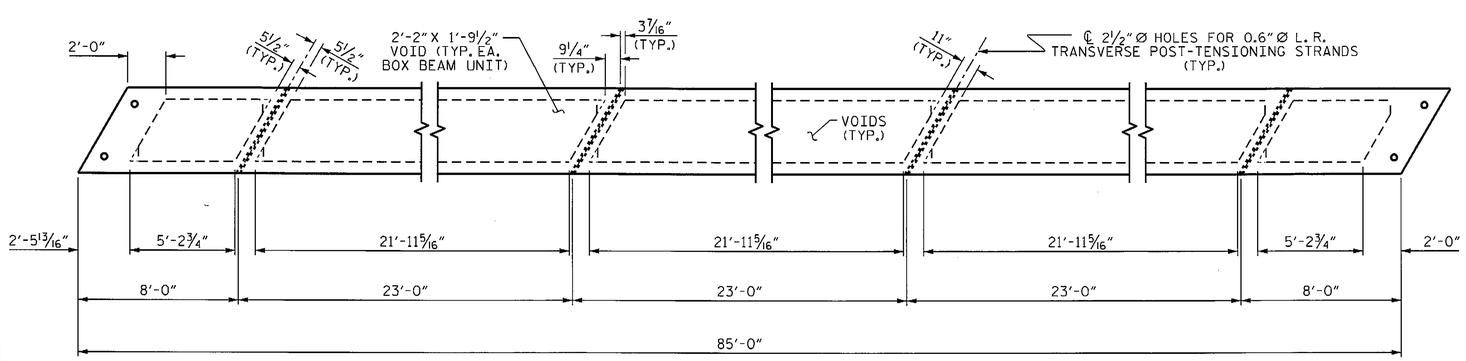

DIAPHRAGM AND VOID LAYOUT

PROJECT NO. BD-5111P

WILKES COUNTY

STATION: 12+32.90 -L-

SHEET 2 OF 5

STATE OF NORTH CAROLINA
DEPARTMENT OF TRANSPORTATION
RALEIGH

PLAN OF 85' UNIT 27'-10" CLEAR ROADWAY 120° SKEW

NORTH CAROLINA PROFESSIONAL SEAL 15825 ENGINEER BRUCE D. KLAPPENBACH
5-30-2012

REVISIONS						SHEET NO.
NO.	BY:	DATE:	NO.	BY:	DATE:	S-6
1			3			TOTAL SHEETS
2			4			19

ASSEMBLED BY : D. A. GLADDEN DATE : 4-23-12
CHECKED BY : B.D. KLAPPENBACH DATE : 4-23-12

DRAWN BY : DGE 8/11
CHECKED BY : TMG 11/11

29-MAY-2012 12:23
R:\Structures\FINAL PLANS\BD5111P_SD_AB.dgn
bklappenbach

STD.NO.33PCBB_30_120S_85L

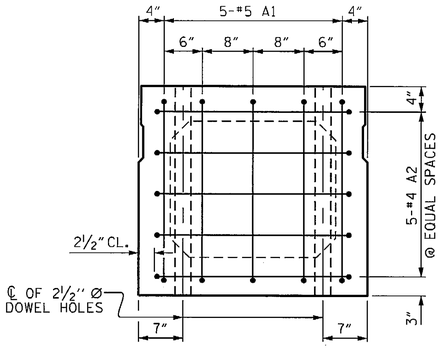

END ELEVATION

SHOWING PLACEMENT OF #5 & #4 "A" BARS AND LOCATION OF DOWEL HOLES. (INTERIOR BOX BEAM SECTION SHOWN-EXTERIOR SECTION SIMILAR EXCEPT SHEAR KEY LOCATION. STRAND LAYOUT NOT SHOWN.)

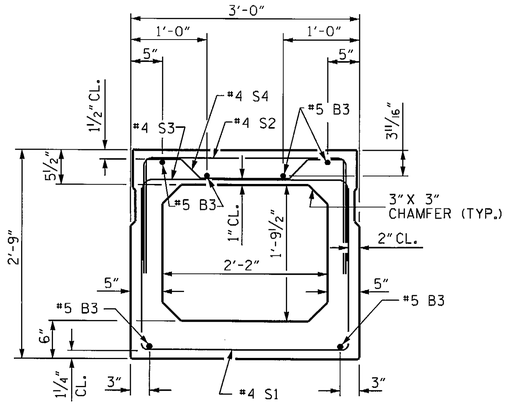

INTERIOR BOX BEAM SECTION

(STRAND LAYOUT NOT SHOWN)

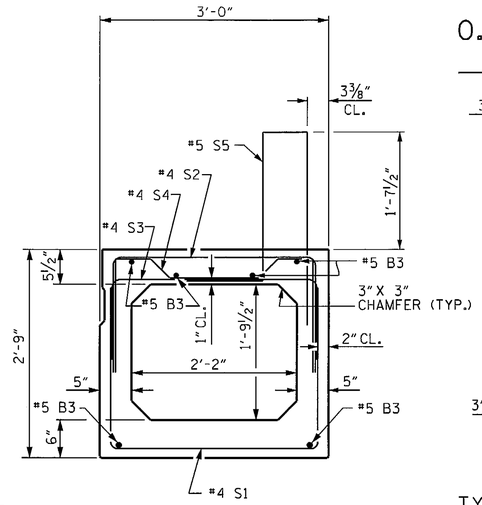

EXTERIOR BOX BEAM SECTION

(STRAND LAYOUT NOT SHOWN)

0.6" Ø LOW RELAXATION STRAND LAYOUT

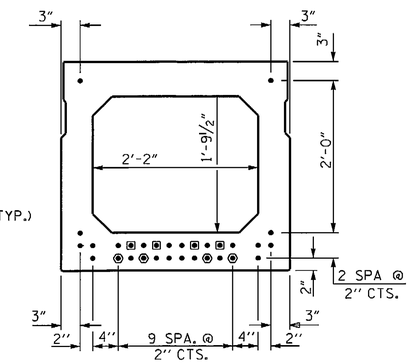

TYPICAL STRAND LOCATION

(30 STRANDS REQUIRED)

DEBONDING LEGEND

- ● FULLY BONDED STRANDS
- STRANDS DEBONDED FOR 4'-0" FROM END OF GIRDER
- STRANDS DEBONDED FOR 12'-0" FROM END OF GIRDER

BOND SHALL BE BROKEN ON STRANDS AS SHOWN FOR THE SPECIFIED LENGTH FROM EACH END OF THE BOX BEAM. SEE STANDARD SPECIFICATIONS ARTICLE 1078-7.

GRADE 270 STRANDS	
	0.6" Ø L.R.
AREA (SQUARE INCHES)	0.217
ULTIMATE STRENGTH (LBS. PER STRAND)	58,600
APPLIED PRESTRESS (LBS. PER STRAND)	43,950

BAR TYPES

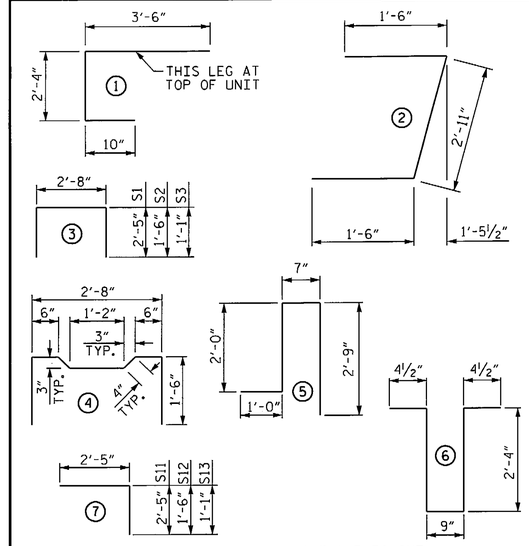

ALL BAR DIMENSIONS ARE OUT TO OUT

BILL OF MATERIAL FOR ONE BOX BEAM SECTION

BAR	NUMBER	SIZE	TYPE	EXTERIOR UNIT LENGTH	EXTERIOR UNIT WEIGHT	INTERIOR UNIT LENGTH	INTERIOR UNIT WEIGHT
A1	10	#5	1	6'-8"	70	6'-8"	70
A2	34	#4	2	5'-11"	134	5'-11"	134
B3	12	#5	STR	43'-5"	543	43'-5"	543
K1	12	#4	6	6'-2"	49	6'-2"	49
K2	8	#4	STR	2'-10"	15	2'-10"	15
S1	62	#4	3	7'-6"	311	7'-6"	311
S2	62	#4	3	5'-8"	235	5'-8"	235
S3	111	#4	3	4'-10"	358	4'-10"	358
S4	49	#4	4	5'-10"	191	5'-10"	191
S11	32	#4	7	4'-10"	93	4'-10"	93
S12	32	#4	7	3'-11"	84	3'-11"	84
S13	32	#4	7	3'-6"	75	3'-6"	75
* S5	114	#5	5	6'-4"	753	--	--
REINFORCING STEEL				2158 LBS.		2158 LBS.	
* EPOXY COATED REINF. STEEL				753 LBS.			
8000 P.S.I. CONCRETE				15.2 CU. YDS.		15.0 CU. YDS.	
0.6" Ø L.R. STRANDS				No. 30		No. 30	

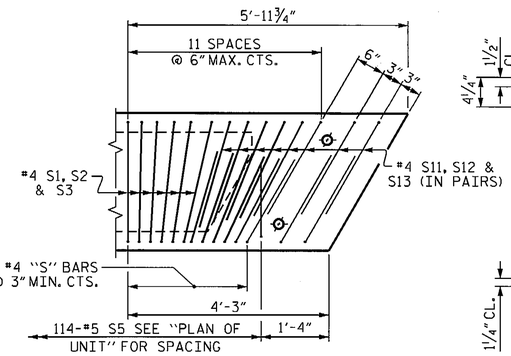

DETAIL "B"

EXTERIOR UNIT SHOWN, INTERIOR UNIT SIMILAR EXCEPT OMIT #5 S5 BARS. "B" BARS AND "A" BARS NOT SHOWN.

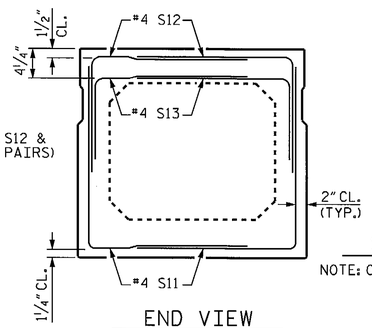

END VIEW

(SHOWING #4 "S" BARS IN END OF BEAM)

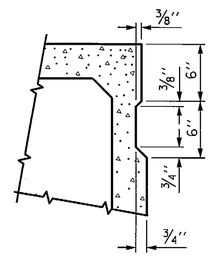

SHEAR KEY DETAIL

NOTE: OMIT SHEAR KEY ON OUTSIDE FACE OF EXTERIOR BOX BEAMS.

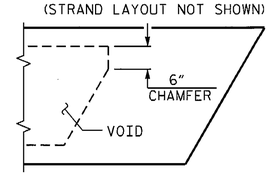

CHAMFER DETAIL

SHOWING 6" VOID CHAMFER

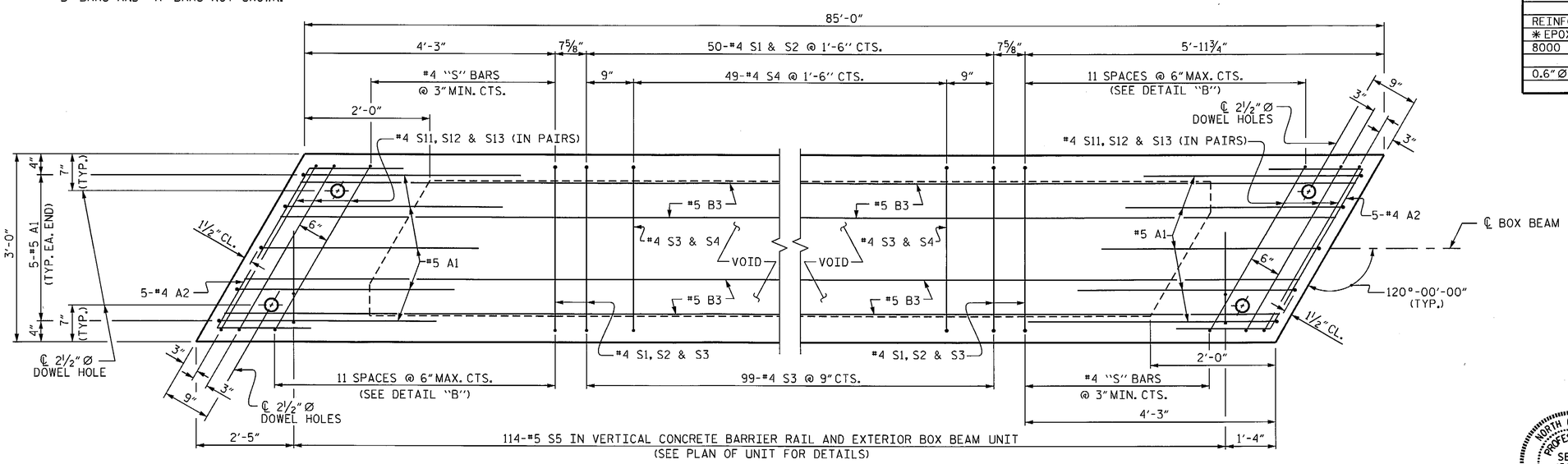

PLAN OF BOX BEAM

EXTERIOR UNIT SHOWN, INTERIOR UNIT SIMILAR EXCEPT OMIT #5 S5 BARS. FOR LOCATION OF DIAPHRAGMS, SEE PLAN OF UNIT. FOR REINFORCING STEEL IN DIAPHRAGMS, SEE DIAPHRAGM DETAILS.

PROJECT NO. BD-5111P
WILKES COUNTY
STATION: 12+32.90 -L-

SHEET 3 OF 5

STATE OF NORTH CAROLINA
DEPARTMENT OF TRANSPORTATION
RALEIGH

STANDARD

3'-0" X 2'-9"
PRESTRESSED CONCRETE
BOX BEAM UNIT

NORTH CAROLINA PROFESSIONAL SEAL 5825 ENGINEER BRIAN D. KLAPPENBACH
5-7-2012

REVISIONS						SHEET NO.
NO.	BY:	DATE:	NO.	BY:	DATE:	S-7
1			3			TOTAL SHEETS
2			4			19

ASSEMBLED BY : D. A. GLADDEN DATE : 4-23-12
CHECKED BY : B. KLAPPENBACH DATE : 5-1-12

DRAWN BY : DGE 11/11
CHECKED BY : TMG 11/11

07-MAY-2012 11:06
R:\Structures\FINAL PLANS\BD5111P_SD_AB.dgn
bklappenbach

STD. NO. 33PCBB4_120S_85L

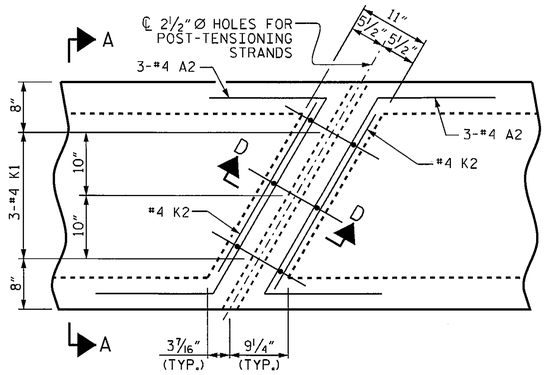

PLAN

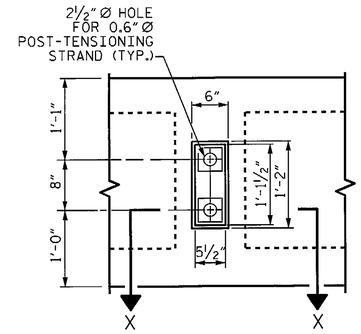

VIEW Y-Y

SHOWING ELEVATION VIEW OF GROUTED RECESS

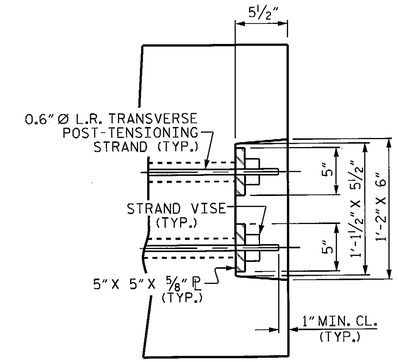

DETAIL "C"

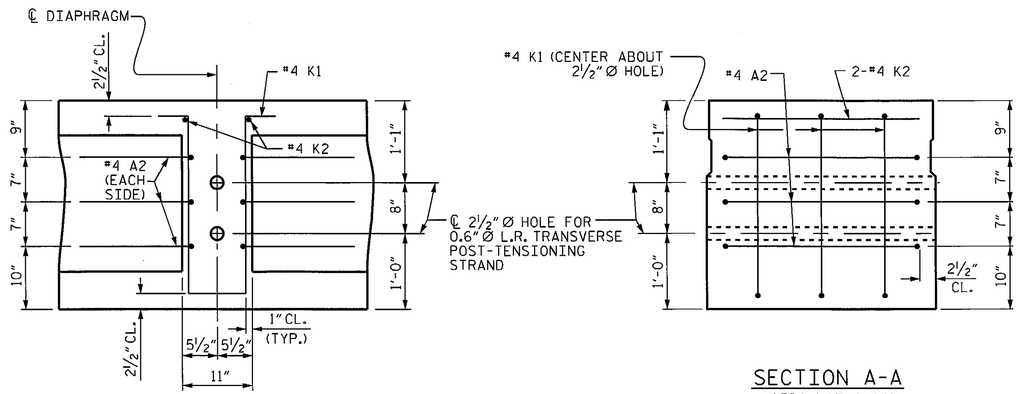

SECTION D-D

SECTION A-A

VOIDS NOT SHOWN

DOUBLE DIAPHRAGM DETAILS

#4 "S" BARS NOT SHOWN. #4 "S" BARS MAY BE SHIFTED SLIGHTLY TO CLEAR 2½" Ø HOLE.

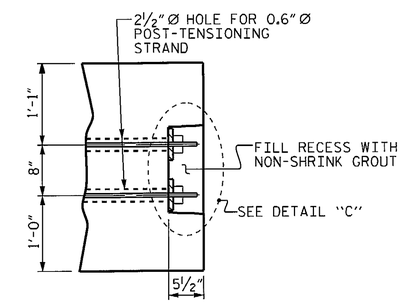

PART SECTION AT RECESS

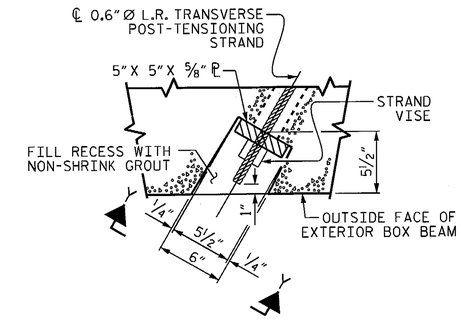

SECTION X-X

SHOWING PLAN VIEW OF GROUTED RECESS

GROUTED RECESS DETAIL AT END OF POST-TENSIONED STRANDS OF EXTERIOR BOX BEAM

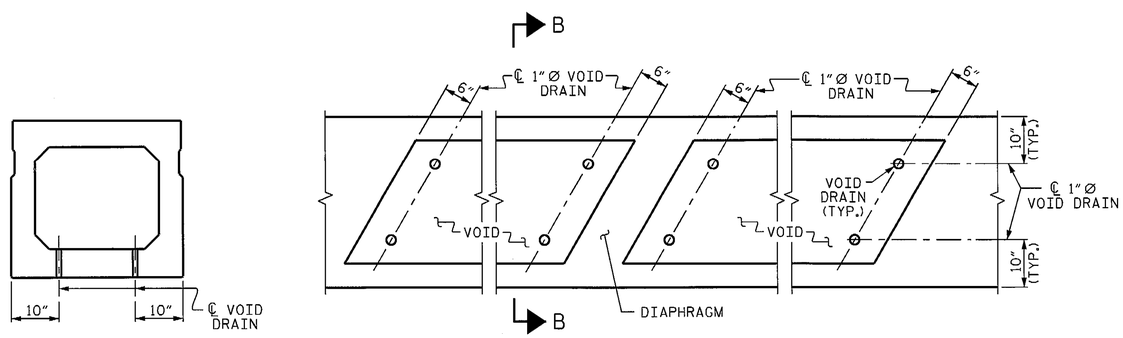

SECTION B-B

PART PLAN

VOID DRAIN DETAILS

(DIMENSIONS SHOWN ARE TYPICAL FOR EACH VOID)

DEAD LOAD DEFLECTION AND CAMBER	
	3'-0" x 2'-9"
85' BOX BEAM UNIT (NC & SE)	0.6"Ø L.R. STRAND
CAMBER (SLAB ALONE IN PLACE)	3¾" ↑
DEFLECTION DUE TO SUPERIMPOSED DEAD LOAD**	¾" ↓
FINAL CAMBER	3" ↑

** INCLUDES FUTURE WEARING SURFACE

PROJECT NO. BD-5111P

WILKES COUNTY

STATION: 12+32.90 -L-

SHEET 4 OF 5

STATE OF NORTH CAROLINA
DEPARTMENT OF TRANSPORTATION
RALEIGH

STANDARD

3'-0" X 2'-9"
PRESTRESSED CONCRETE
BOX BEAM UNIT

NORTH CAROLINA PROFESSIONAL SEAL 15825 ENGINEER BRIDGE D. KLAPPENBACH
5-7-2012

REVISIONS							
NO.	BY:	DATE:	NO.	BY:	DATE:		SHEET NO. S-8
1			3				TOTAL SHEETS 19
2			4				

ASSEMBLED BY : D. A. GLADDEN DATE : 4-23-12
CHECKED BY : B. KLAPPENBACH DATE : 5-1-12

DRAWN BY : DGE 11/11
CHECKED BY : TMG 11/11

07-MAY-2012 11:06
R:\Structures\FINAL PLANS\BD5111P_SD_AB.dgn
bklappenbach

STD.NO.33PCBB5_120S

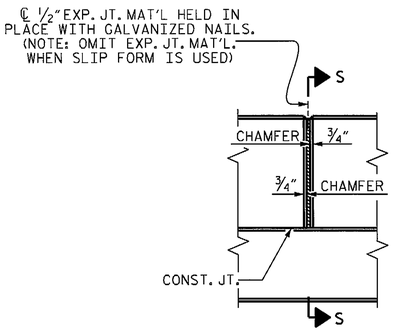

ELEVATION AT EXPANSION JOINTS

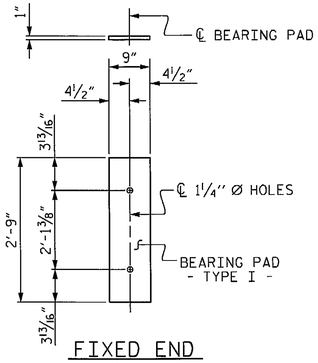

FIXED END
(TYPE II - 20 REQ'D)

ELASTOMERIC BEARING DETAILS

ELASTOMER IN ALL BEARINGS SHALL BE 60 DUROMETER HARDNESS.

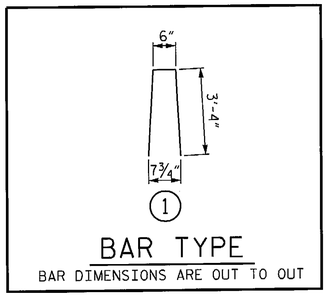

BAR TYPE
BAR DIMENSIONS ARE OUT TO OUT

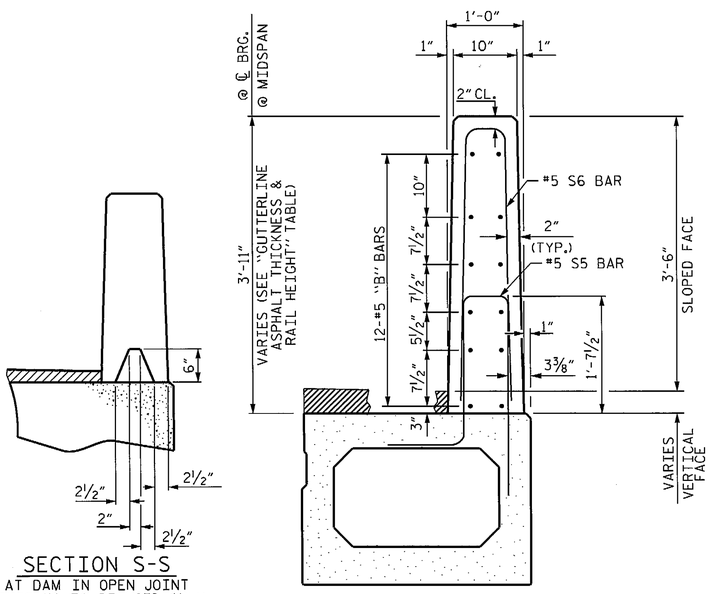

SECTION S-S
AT DAM IN OPEN JOINT
(THIS IS TO BE USED ONLY WHEN SLIP FORM IS USED)

SECTION THRU RAIL

VERTICAL CONCRETE BARRIER RAIL DETAILS

BOX BEAM UNITS REQUIRED

	NUMBER	LENGTH	TOTAL LENGTH
EXTERIOR B.B.	2	85'-0"	170'-0"
INTERIOR B.B.	8	85'-0"	680'-0"
TOTAL	10	———	850'-0"

BILL OF MATERIAL FOR VERTICAL CONCRETE BARRIER RAIL

BAR	BARS PER PAIR OF EXTERIOR UNITS	SIZE	TYPE	LENGTH	WEIGHT
	85' UNIT				
* B9	144	#5	STR	15'-11"	2391
* S6	228	#5	1	7'-2"	1704
* EPOXY COATED REINFORCING STEEL			LBS.		4095
CLASS AA CONCRETE			CU.YDS.		22.8
TOTAL VERTICAL CONCRETE BARRIER RAIL			LN. FT.		170.0

GUTTERLINE ASPHALT THICKNESS & RAIL HEIGHT

	ASPHALT OVERLAY THICKNESS @ MID-SPAN	RAIL HEIGHT @ MID-SPAN
85' UNITS	1 1/2"	3'-8"

PROJECT NO. BD-5111P
WILKES COUNTY
STATION: 12+32.90 -L-

SHEET 5 OF 5

STATE OF NORTH CAROLINA
DEPARTMENT OF TRANSPORTATION
RALEIGH

3'-0" X 2'-9"
PRESTRESSED CONCRETE
BOX BEAM UNIT

NORTH CAROLINA PROFESSIONAL SEAL 15825 ENGINEER BRUCE D. KLAPPENBACH
5-7-2012

REVISIONS						SHEET NO.
NO.	BY:	DATE:	NO.	BY:	DATE:	S-9
1			3			TOTAL SHEETS
2			4			19

ASSEMBLED BY : D. A. GLADDEN DATE : 4-23-12
CHECKED BY : B. KLAPPENBACH DATE : 5-1-12
DRAWN BY : DGE 10/11
CHECKED BY : TMG 11/11

07-MAY-2012 11:06
R:\Structures\FINAL PLANS\BD5111P_SD_AB.dgn
bklappenbach

STD. NO. 33PCBB8_60&120S

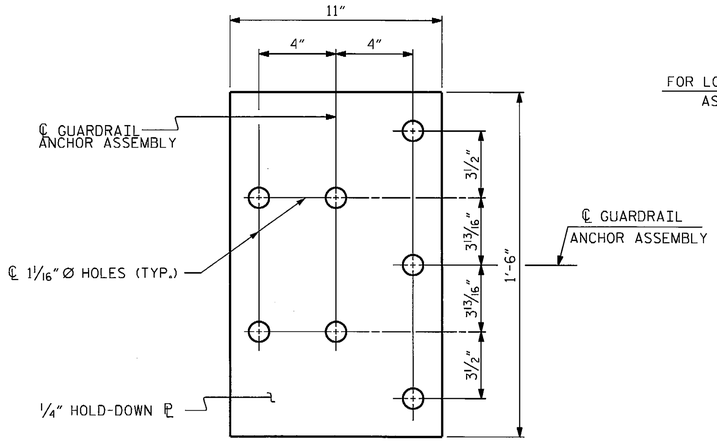

PLAN

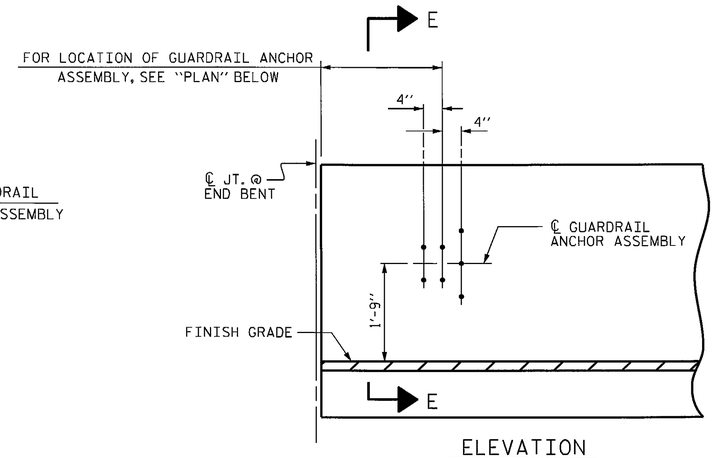

ELEVATION

NOTES

THE GUARDRAIL ANCHOR ASSEMBLY SHALL CONSIST OF A 1/4" HOLD DOWN PLATE AND 7 - 7/8" Ø BOLTS WITH NUTS AND WASHERS.

THE HOLD-DOWN PLATE SHALL CONFORM TO AASHTO M270 GRADE 36. AFTER FABRICATION, THE HOLD-DOWN PLATE SHALL BE HOT-DIP GALVANIZED IN ACCORDANCE WITH AASHTO M111.

BOLTS SHALL CONFORM TO THE REQUIREMENTS OF ASTM A307 AND NUTS SHALL CONFORM TO THE REQUIREMENTS OF AASHTO M291. BOLTS, NUTS AND WASHERS SHALL BE GALVANIZED. (AT THE CONTRACTOR'S OPTION, STAINLESS STEEL BOLTS, NUTS AND WASHERS MAY BE USED AS AN ALTERNATE FOR THE 7/8" Ø GALVANIZED BOLTS, NUTS AND WASHERS. THEY SHALL CONFORM TO OR EXCEED THE MECHANICAL REQUIREMENTS OF ASTM A307. THE USE OF THIS ALTERNATE SHALL BE APPROVED BY THE ENGINEER.)

THE GUARDRAIL ANCHOR ASSEMBLY IS REQUIRED AT ALL POINTS WHERE APPROACH GUARDRAIL IS TO BE ATTACHED TO THE END OF BARRIER RAIL. FOR POINTS OF ATTACHMENT, SEE SKETCH.

AFTER INSTALLATION, THE EXPOSED THREAD OF THE BOLT SHALL BE BURRED WITH A SHARP POINTED TOOL.

THE COST OF THE GUARDRAIL ANCHOR ASSEMBLY SHALL BE INCLUDED IN THE UNIT CONTRACT PRICE BID FOR VERTICAL CONCRETE BARRIER RAIL.

THE VERTICAL REINFORCING BARS MAY BE SHIFTED SLIGHTLY IN THE VERTICAL CONCRETE BARRIER RAIL TO CLEAR ASSEMBLY BOLTS.

THE 1 1/4" Ø HOLES SHALL BE FORMED OR DRILLED WITH A CORE BIT. IMPACT TOOLS WILL NOT BE PERMITTED. ANY CONCRETE DAMAGED BY THIS WORK SHALL BE REPAIRED TO THE SATISFACTION OF THE ENGINEER.

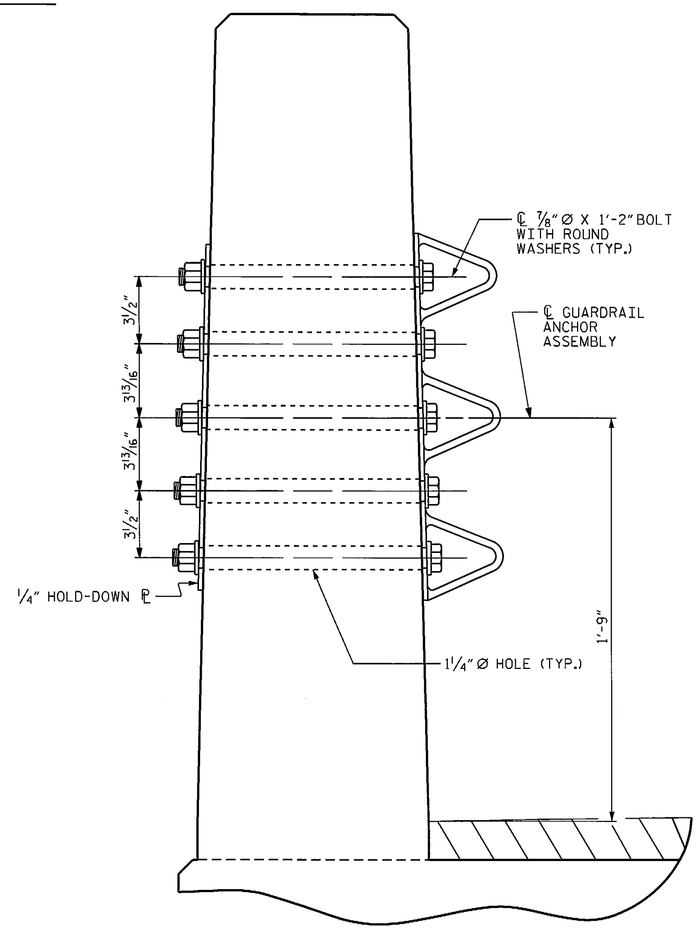

SECTION E-E

GUARDRAIL ANCHOR ASSEMBLY DETAILS

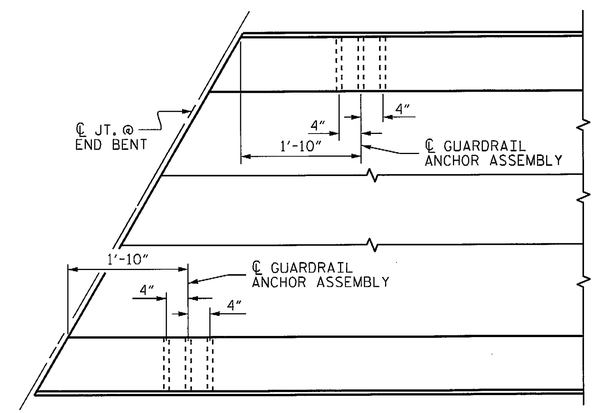

PLAN

LOCATION OF ANCHORS FOR GUARDRAIL

END BENT #1 SHOWN, END BENT #2 SIMILAR.

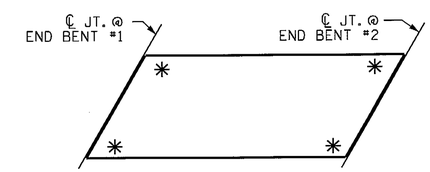

SKETCH SHOWING POINTS OF ATTACHMENT

✳ DENOTES GUARDRAIL ANCHOR ASSEMBLY

PROJECT NO. BD-5111P
WILKES COUNTY
STATION: 12+32.90 -L-

STATE OF NORTH CAROLINA
DEPARTMENT OF TRANSPORTATION
RALEIGH

STANDARD
GUARDRAIL ANCHORAGE FOR VERTICAL CONCRETE BARRIER RAIL

NORTH CAROLINA PROFESSIONAL SEAL 15825 ENGINEER BRIAN D. KLAPPENBACH
5-7-2012

REVISIONS						SHEET NO.
NO.	BY:	DATE:	NO.	BY:	DATE:	S-10
1			3			TOTAL SHEETS
2			4			19

ASSEMBLED BY : D. A. GLADDEN DATE : 4-23-12
CHECKED BY : B. KLAPPENBACH DATE : 5-1-12

DRAWN BY : MAA 5/10
CHECKED BY : GM 5/10

ADDED 5/6/10
REV. 10/1/11 MAA/GM
REV. 12/5/11 MAA/GM

07-MAY-2012 11:06
R:\Structures\FINAL PLANS\BD5111P_SD_AB.dgn
bklappenbach

(SHT 2) STD. NO. GRA3

NOTES

STIRRUPS IN CAP MAY BE SHIFTED AS NECESSARY TO CLEAR DOWELS.

THE CONCRETE IN THE SHADED AREA OF THE WING SHALL BE POURED AFTER THE VERTICAL CONCRETE BARRIER RAIL IS CAST IF SLIP FORMING IS USED.

FOR PILE SPLICE DETAILS, SEE SHEET 3 OF 3.

FOR WING DETAILS, SEE SHEET 2 OF 3.

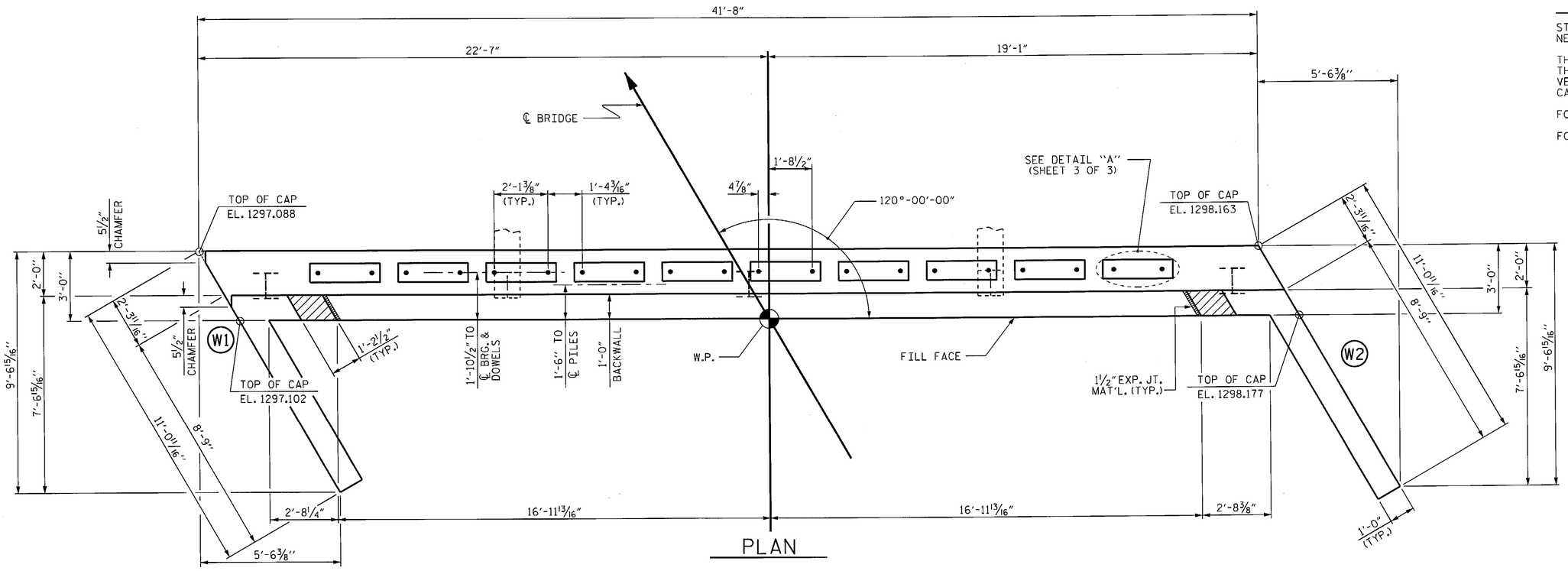

PLAN

TOP OF PILE ELEVATIONS	
1	1295.645
2	1295.892
3	1296.139
4	1296.386
5	1296.633

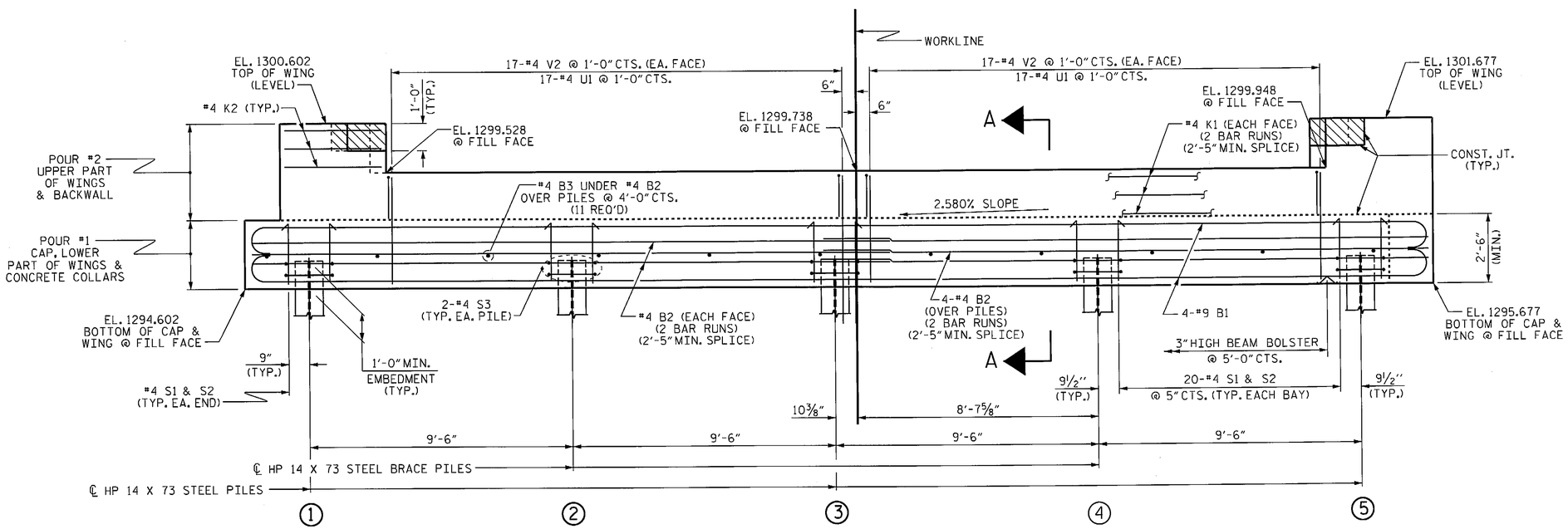

ELEVATION

WINGS NOT SHOWN FOR CLARITY.
FOR SECTION A-A, SEE SHEET 3 OF 3.
CONCRETE COLLARS FOR STEEL PILES NOT SHOWN IN PLAN AND ELEVATION VIEWS FOR CLARITY.
SEE "CORROSION PROTECTION FOR STEEL PILES DETAIL", SHEET 3 OF 3.

PROJECT NO. BD-5111P
WILKES COUNTY
STATION: 12+32.90 -L-

SHEET 1 OF 3

STATE OF NORTH CAROLINA
DEPARTMENT OF TRANSPORTATION
RALEIGH

SUBSTRUCTURE
END BENT No. 1

NORTH CAROLINA PROFESSIONAL SEAL 15825 ENGINEER BRIAN D. KLAPPENBACH 5-30-2012

REVISIONS							SHEET NO.
NO.	BY:	DATE:	NO.	BY:	DATE:		S-11
1			3				TOTAL SHEETS
2			4				19

ASSEMBLED BY : D. A. GLADDEN DATE : 4-23-12
CHECKED BY : B. KLAPPENBACH DATE : 5-1-12
DRAWN BY : WJH 12/11
CHECKED BY : AAC 12/11

29-MAY-2012 12:23
R:\Structures\FINAL PLANS\BD5111P_SD_AB.dgn
bklappenbach

STD. NO. EB_30_120S4_33BB

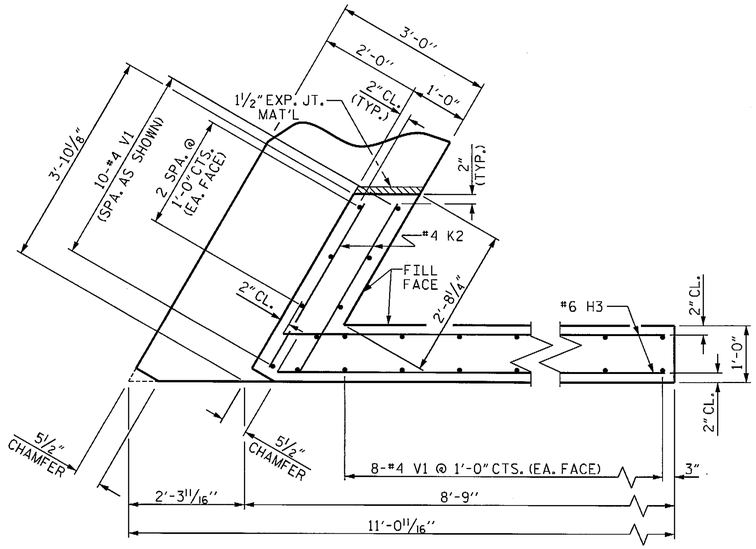

PLAN OF WING (W1)

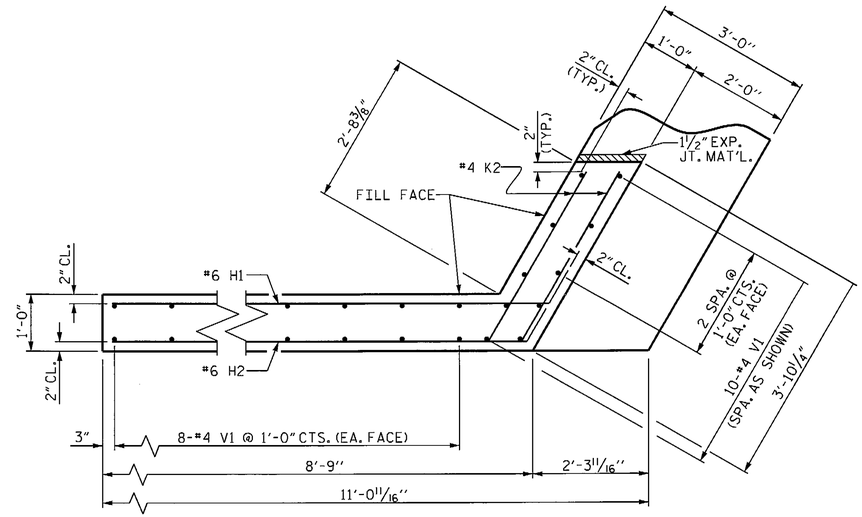

PLAN OF WING (W2)

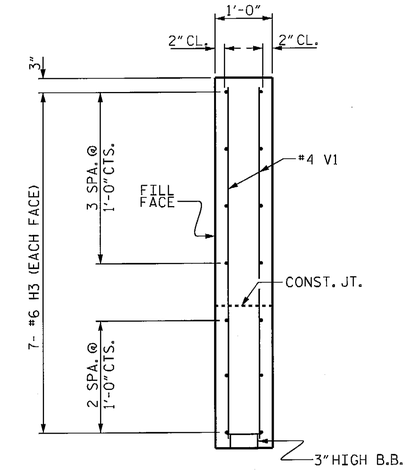

SECTION X-X

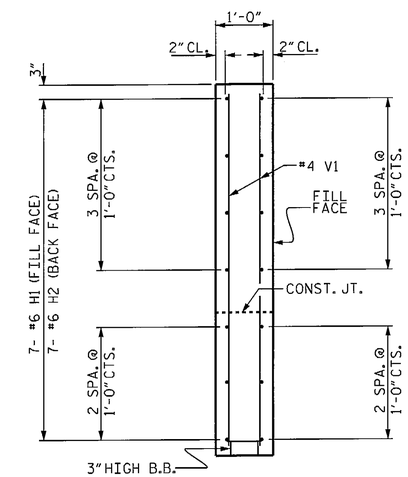

SECTION Y-Y

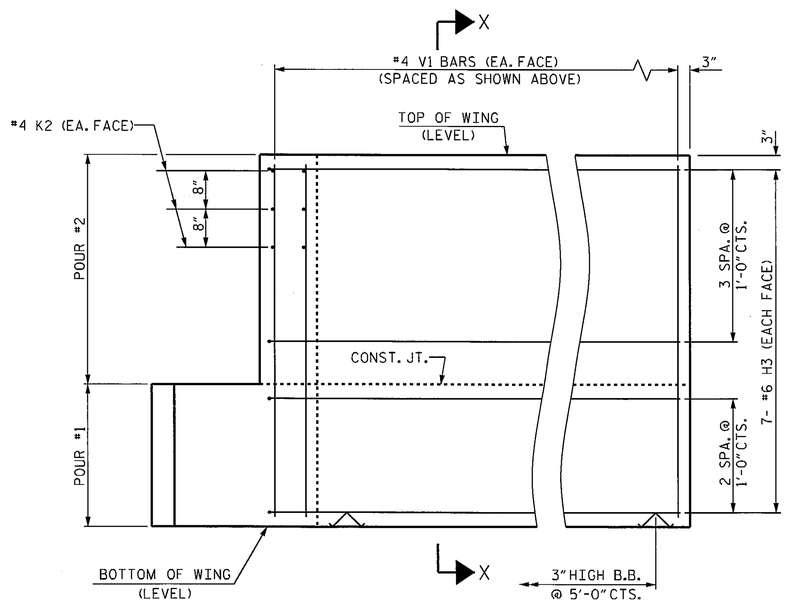

ELEVATION OF WING (W1)

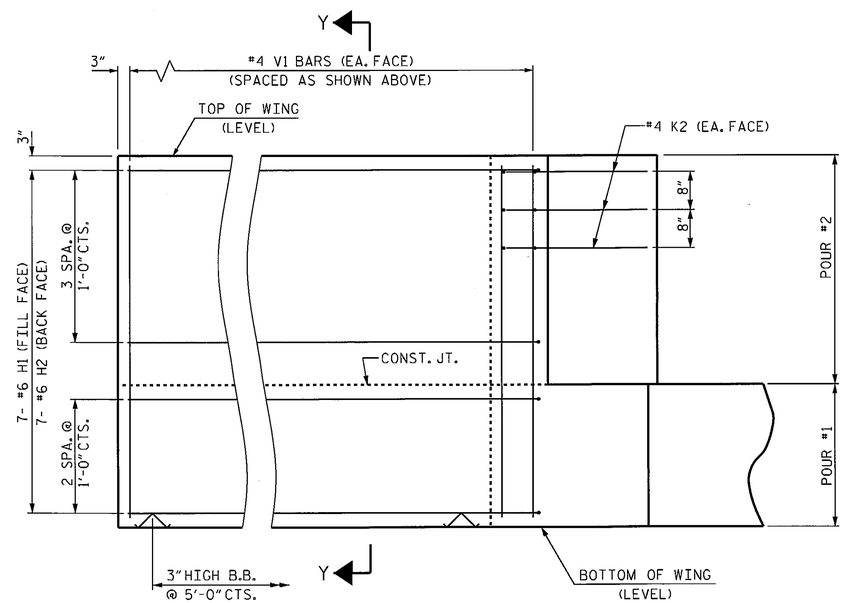

ELEVATION OF WING (W2)

END BENT #1 WING DETAILS

PROJECT NO. BD-5111P
WILKES COUNTY
STATION: 12+32.90 -L-

SHEET 2 OF 3

STATE OF NORTH CAROLINA
DEPARTMENT OF TRANSPORTATION
RALEIGH

SUBSTRUCTURE

END BENT #1
WING DETAILS

NORTH CAROLINA PROFESSIONAL SEAL 15825 ENGINEER BRIAN D. KLAPPENBACH
5-7-2012

REVISIONS							SHEET NO.
NO.	BY:	DATE:	NO.	BY:	DATE:		S-12
1			3				TOTAL SHEETS
2			4				19

ASSEMBLED BY : D. A. GLADDEN DATE : 4-23-12
CHECKED BY : B. KLAPPENBACH DATE : 5-1-12

DRAWN BY : WJH 12/11
CHECKED BY : AAC 12/11

07-MAY-2012 11:06
R:\Structures\FINAL PLANS\BD5111P_SD_AB.dgn
bklappenbach

STD. NO. EB_30_120S4_33BB

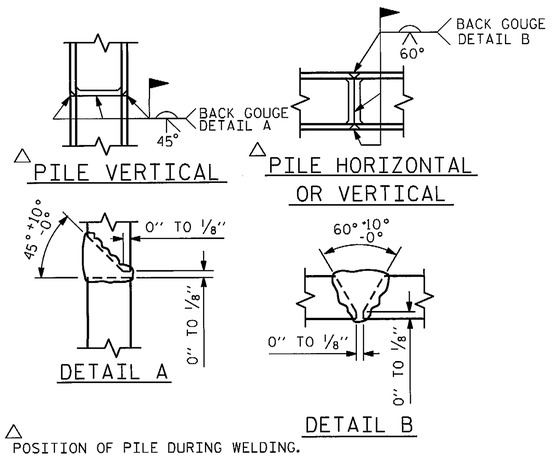

△ POSITION OF PILE DURING WELDING.

PILE SPLICE DETAILS

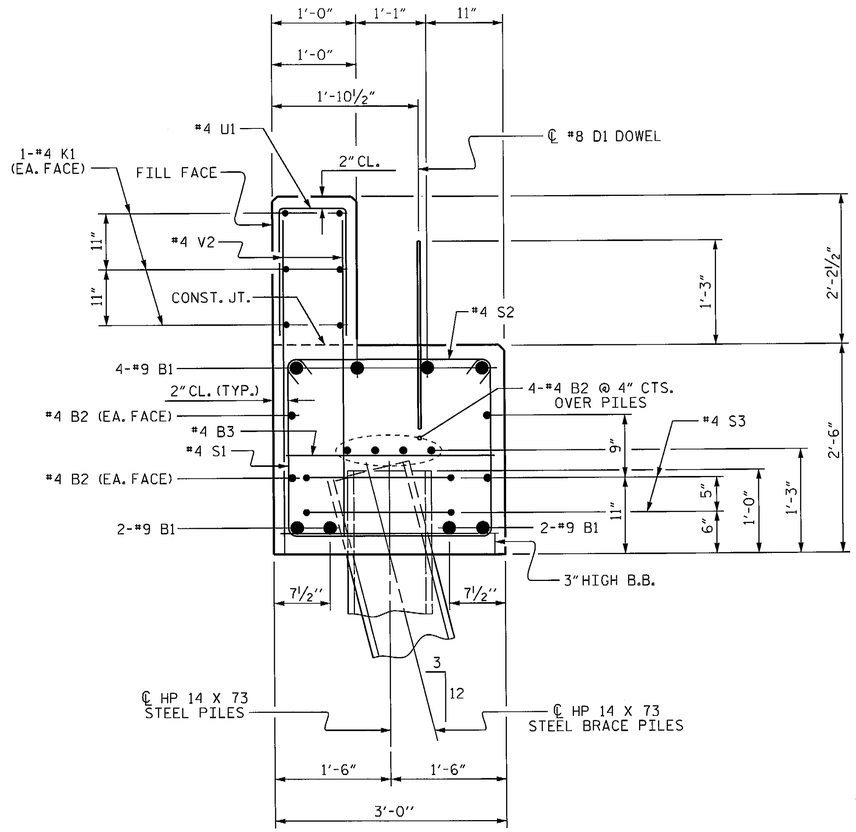

SECTION A-A

(CONCRETE COLLAR NOT SHOWN FOR CLARITY.
SEE "CORROSION PROTECTION FOR STEEL PILES DETAIL.")

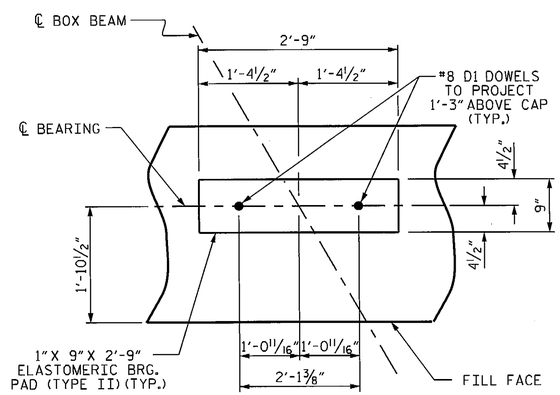

DETAIL "A"

(END BENT No. 1 SHOWN, END BENT No. 2 SIMILAR BY ROTATION)

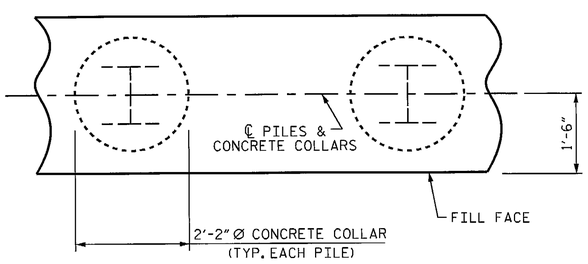

PLAN

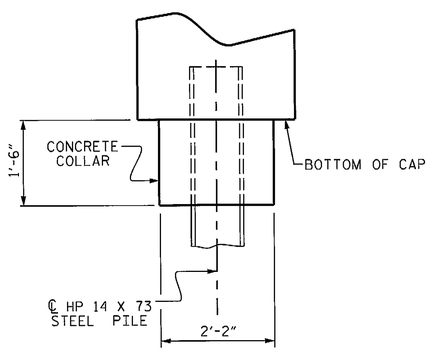

ELEVATION

CORROSION PROTECTION FOR STEEL PILES DETAIL

(END BENT No. 1 SHOWN, END BENT No. 2 SIMILAR BY ROTATION)

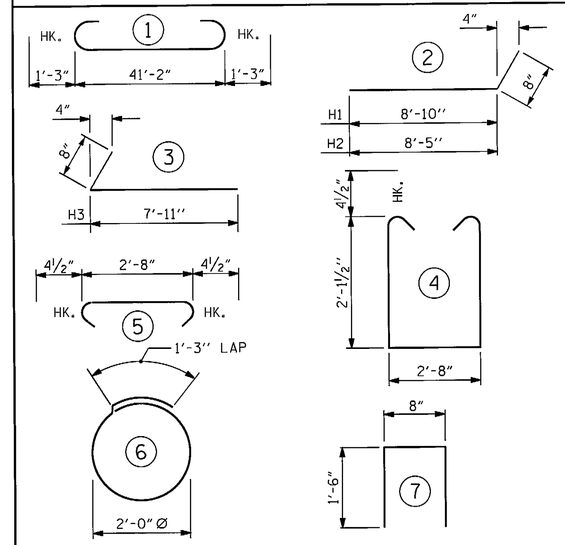

ALL BAR DIMENSIONS ARE OUT TO OUT.

BILL OF MATERIAL
END BENT #1

BAR	NO.	SIZE	TYPE	LENGTH	WEIGHT
B1	8	#9	1	43'-8"	1188
B2	16	#4	STR	21'-11"	234
B3	11	#4	STR	2'-8"	20
D1	20	#8	STR	2'-3"	120
H1	7	#6	2	9'-6"	100
H2	7	#6	2	9'-1"	96
H3	14	#6	3	8'-7"	180
K1	12	#4	STR	21'-11"	176
K2	12	#4	STR	3'-3"	26
S1	82	#4	4	7'-8"	420
S2	82	#4	5	3'-5"	187
S3	10	#4	6	7'-7"	51
U1	34	#4	7	3'-8"	83
V1	52	#4	STR	5'-8"	197
V2	68	#4	STR	3'-8"	167
REINFORCING STEEL					3245 LBS.

CLASS A CONCRETE BREAKDOWN

POUR #1	CAP, LOWER PART OF WINGS & COLLARS	14.0 C.Y.
POUR #2	BACKWALL & UPPER PART OF WINGS	4.4 C.Y.
TOTAL CLASS A CONCRETE		18.4 C.Y.

END BENT No. 1
HP 14 X 73 STEEL PILES
NO: 5 LIN. FT.= 75

STEEL PILES POINTS 5 EA.

MINIMUM OF 3- ONE CUBIC FOOT BAGS OF #78M STONE. BAGS SHALL BE OF POROUS FABRIC, SECURELY TIED.

6" (MIN.) PIPE FOR DRAINAGE

GRADE TO DRAIN

TOE OF SLOPE

BAGGED STONE AND PIPE SHALL BE PLACED IMMEDIATELY AFTER COMPLETION OF END BENT EXCAVATION. PIPE MAY BE EITHER CONCRETE, CORRUGATED STEEL, CORRUGATED ALUMINUM ALLOY, OR CORRUGATED PLASTIC. PERFORATED PIPE WILL NOT BE ALLOWED.

BAGGED STONE SHALL REMAIN IN PLACE UNTIL THE ENGINEER DIRECTS THAT IT BE REMOVED. THE CONTRACTOR SHALL REMOVE AND DISPOSE OF SILT ACCUMULATIONS AT BAGGED STONE WHEN SO DIRECTED BY THE ENGINEER. BAGS SHALL BE REMOVED AND REPLACED WHENEVER THE ENGINEER DETERMINES THAT THEY HAVE DETERIORATED AND LOST THEIR EFFECTIVENESS.

NO SEPARATE PAYMENT WILL BE MADE FOR THIS WORK AND THE ENTIRE COST OF THIS WORK SHALL BE INCLUDED IN THE UNIT CONTRACT PRICE BID FOR THE SEVERAL PAY ITEMS.

TEMPORARY DRAINAGE AT END BENT

NORTH CAROLINA PROFESSIONAL SEAL 15825 ENGINEER BRUCE D. KLAPPENBACH
5-7-2012

PROJECT NO. BD-5111P
WILKES COUNTY
STATION: 12+32.90 -L-

SHEET 3 OF 3

STATE OF NORTH CAROLINA
DEPARTMENT OF TRANSPORTATION
RALEIGH

SUBSTRUCTURE

END BENT #1
DETAILS

REVISIONS						SHEET NO.
NO.	BY:	DATE:	NO.	BY:	DATE:	S-13
1			3			TOTAL SHEETS
2			4			19

ASSEMBLED BY : D. A. GLADDEN DATE : 4-23-12
CHECKED BY : B. KLAPPENBACH DATE : 5-1-12

DRAWN BY : WJH 12/11
CHECKED BY : AAC 12/11

07-MAY-2012 11:06
R:\Structures\FINAL PLANS\BD5111P_SD_AB.dgn
bklappenbach

STD. NO. EB_30_120S4_33BB

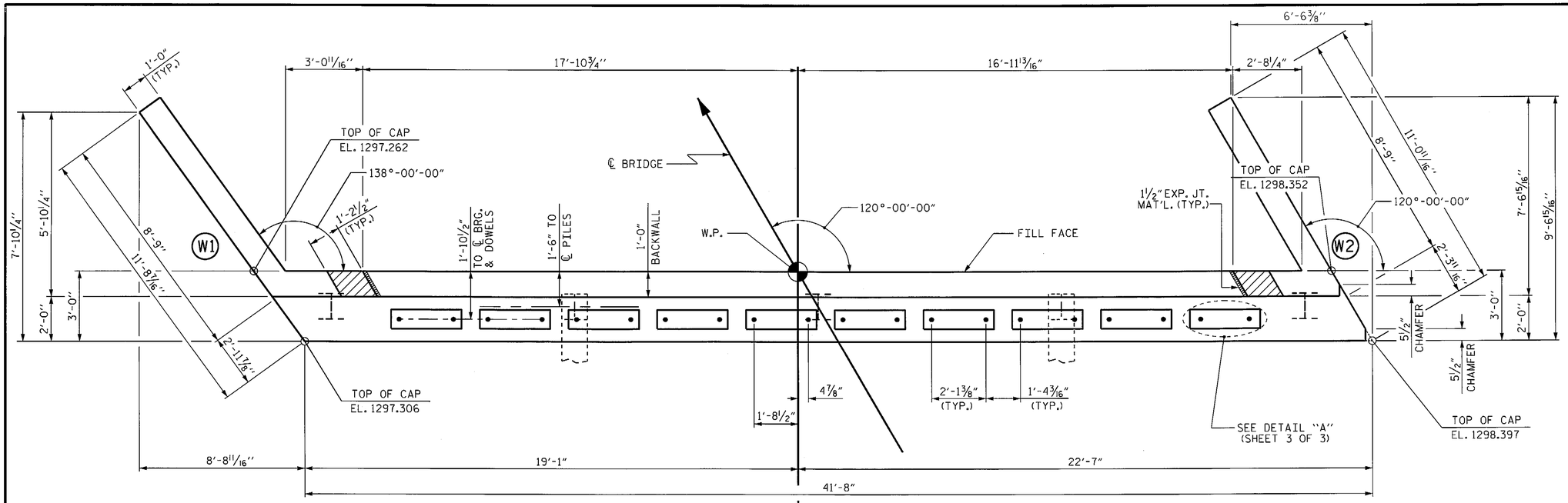

PLAN

NOTES

STIRRUPS IN CAP MAY BE SHIFTED AS NECESSARY TO CLEAR DOWELS.

THE CONCRETE IN THE SHADED AREA OF THE WING SHALL BE POURED AFTER THE VERTICAL CONCRETE BARRIER RAIL IS CAST IF SLIP FORMING IS USED.

FOR PILE SPLICE DETAILS, SEE SHEET 3 OF 3.

FOR WING DETAILS, SEE SHEET 2 OF 3.

TOP OF PILE ELEVATIONS	
1	1295.856
2	1296.103
3	1296.350
4	1296.597
5	1296.844

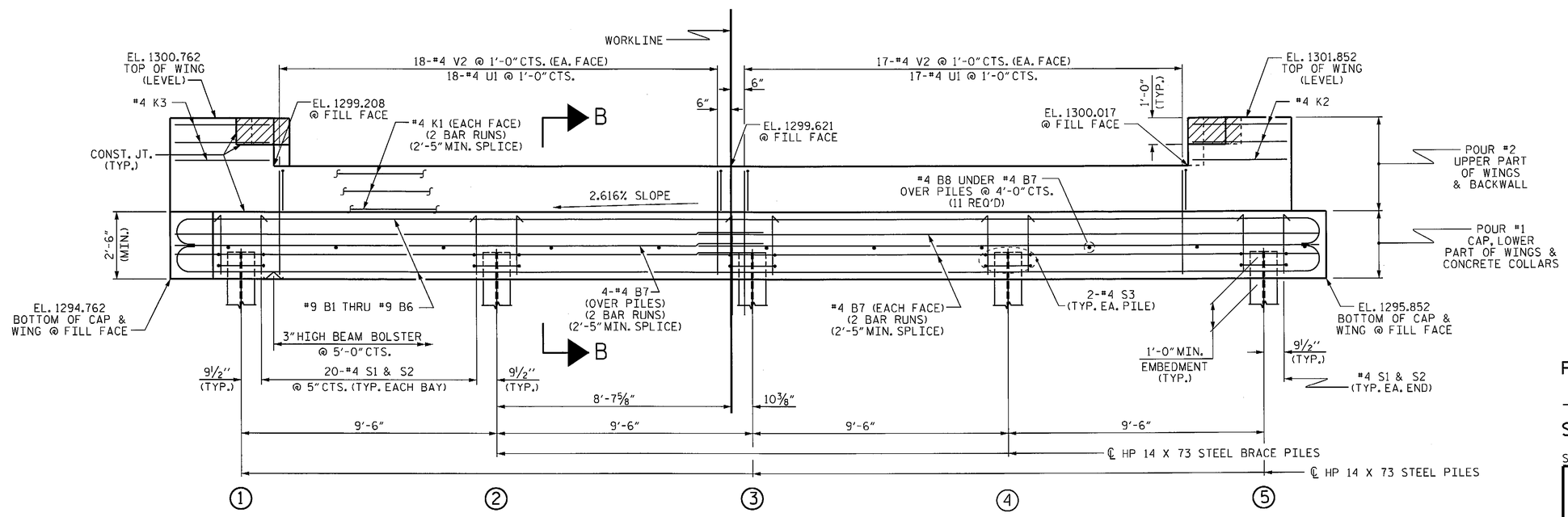

ELEVATION

WINGS NOT SHOWN FOR CLARITY.
FOR SECTION A-A, SEE SHEET 3 OF 3.
CONCRETE COLLARS FOR STEEL PILES NOT SHOWN IN PLAN AND ELEVATION VIEWS FOR CLARITY.
SEE "CORROSION PROTECTION FOR STEEL PILES DETAIL", SHEET 3 OF 3.

PROJECT NO. BD-5111P
WILKES COUNTY
STATION: 12+32.90 -L-

SHEET 1 OF 3

STATE OF NORTH CAROLINA
DEPARTMENT OF TRANSPORTATION
RALEIGH

SUBSTRUCTURE

END BENT No. 2

NORTH CAROLINA PROFESSIONAL SEAL 15822 ENGINEER BRUCE D. KLAPPENBACH
5-30-2012

REVISIONS						SHEET NO.
NO.	BY:	DATE:	NO.	BY:	DATE:	S-14
1			3			TOTAL SHEETS
2			4			19

ASSEMBLED BY : D. A. GLADDEN DATE : 4-23-12
CHECKED BY : B. KLAPPENBACH DATE : 5-1-12
DRAWN BY : WJH 12/11
CHECKED BY : AAC 12/11

29-MAY-2012 12:23
R:\Structures\FINAL PLANS\BD5111P_SD_AB.dgn
bklappenbach

STD. NO. EB_30_120S4_33BB

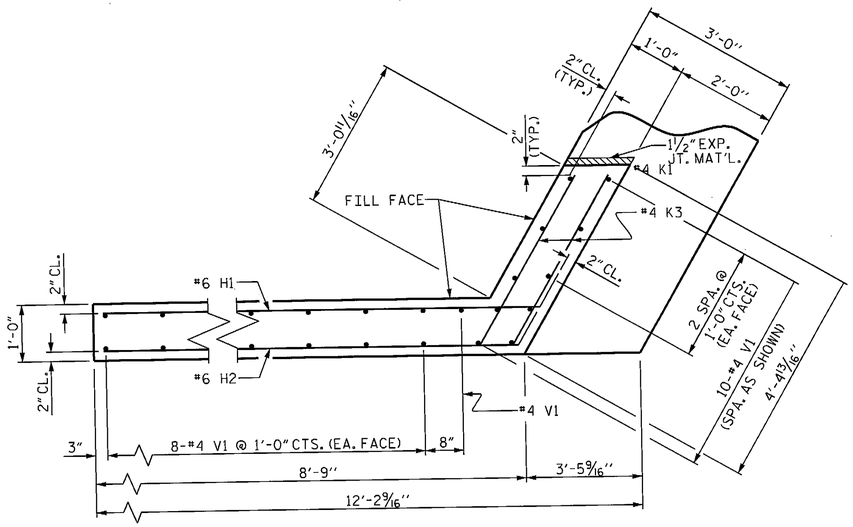

PLAN OF WING (W1)

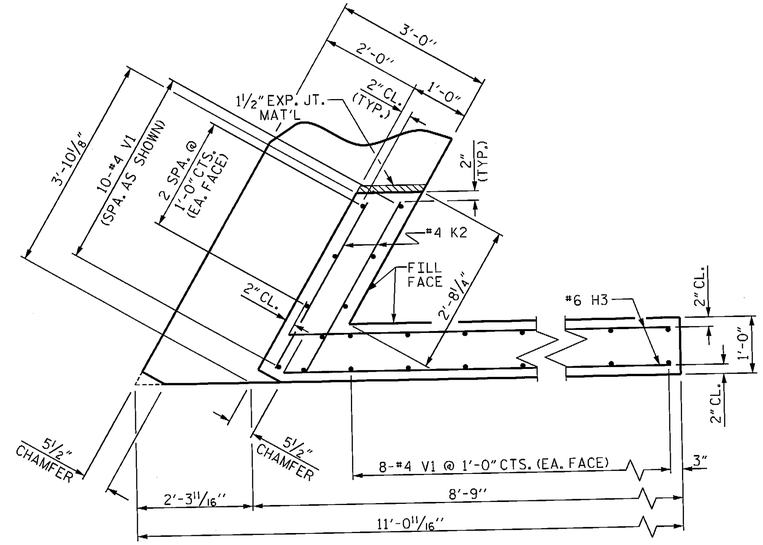

PLAN OF WING (W2)

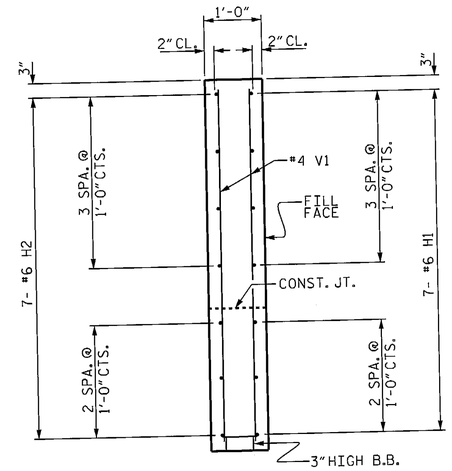

SECTION X-X

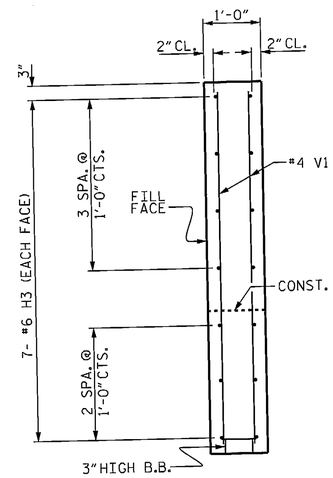

SECTION Y-Y

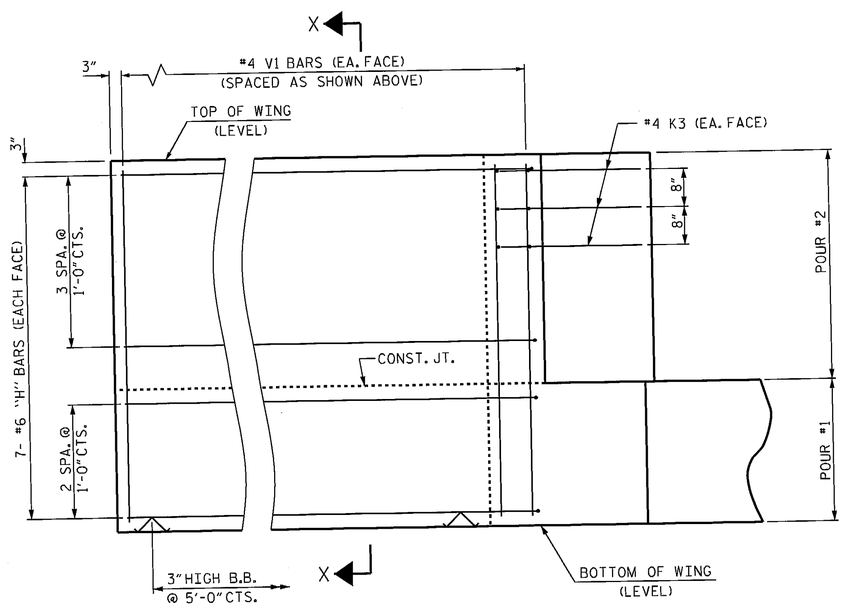

ELEVATION OF WING (W1)

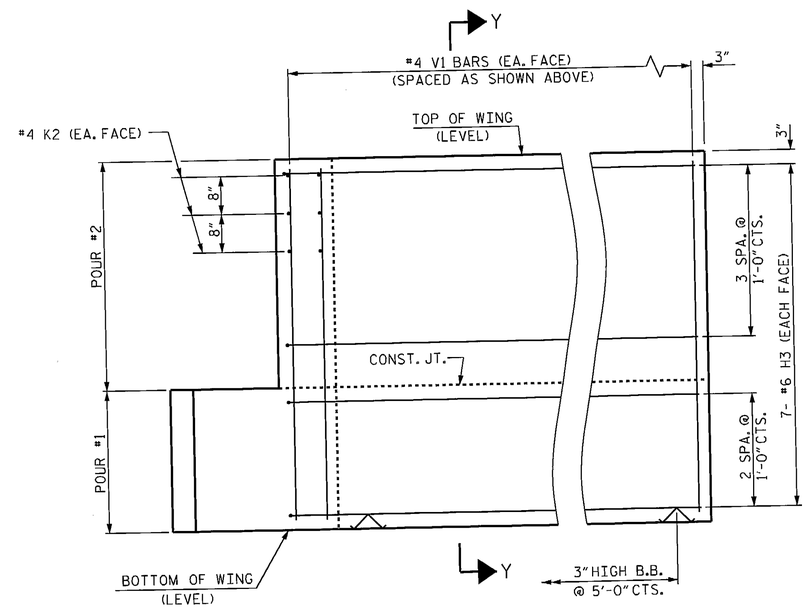

ELEVATION OF WING (W2)

END BENT #2 WING DETAILS

PROJECT NO. BD-5111P
WILKES COUNTY
STATION: 12+32.90 -L-

SHEET 2 OF 3

STATE OF NORTH CAROLINA
DEPARTMENT OF TRANSPORTATION
RALEIGH

SUBSTRUCTURE

END BENT #2
WING DETAILS

NORTH CAROLINA PROFESSIONAL SEAL 15825 ENGINEER BRIAN O. KLAPPENBACH
5-7-2012

REVISIONS								SHEET NO.
NO.	BY:	DATE:	NO.	BY:	DATE:			S-15
1			3					TOTAL SHEETS
2			4					19

ASSEMBLED BY : D. A. GLADDEN DATE : 4-23-12
CHECKED BY : B. KLAPPENBACH DATE : 5-1-12

DRAWN BY : WJH 12/11
CHECKED BY : AAC 12/11

07-MAY-2012 11:07
R:\Structures\FINAL PLANS\BD5111P_SD_AB.dgn
bklappenbach

STD. NO. EB_30_120S4_33BB

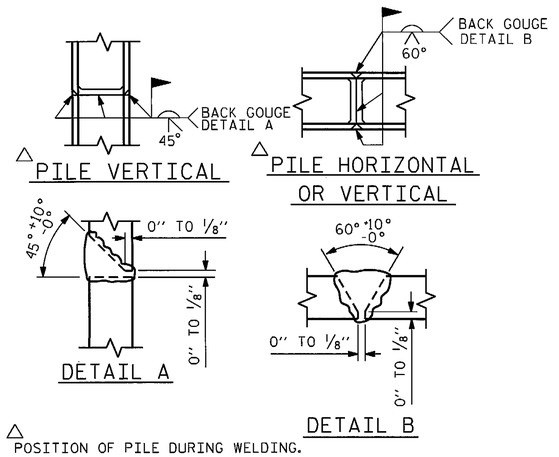

PILE SPLICE DETAILS

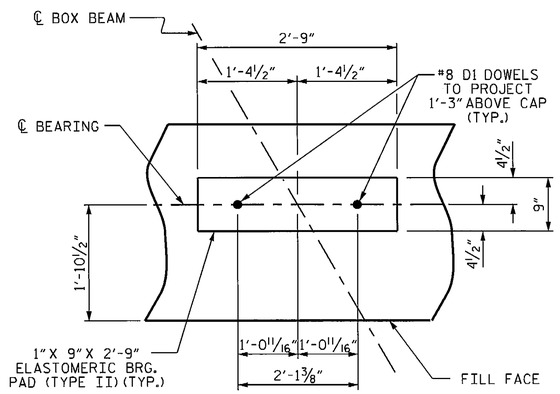

DETAIL "A"

(END BENT No. 1 SHOWN, END BENT No. 2 SIMILAR BY ROTATION)

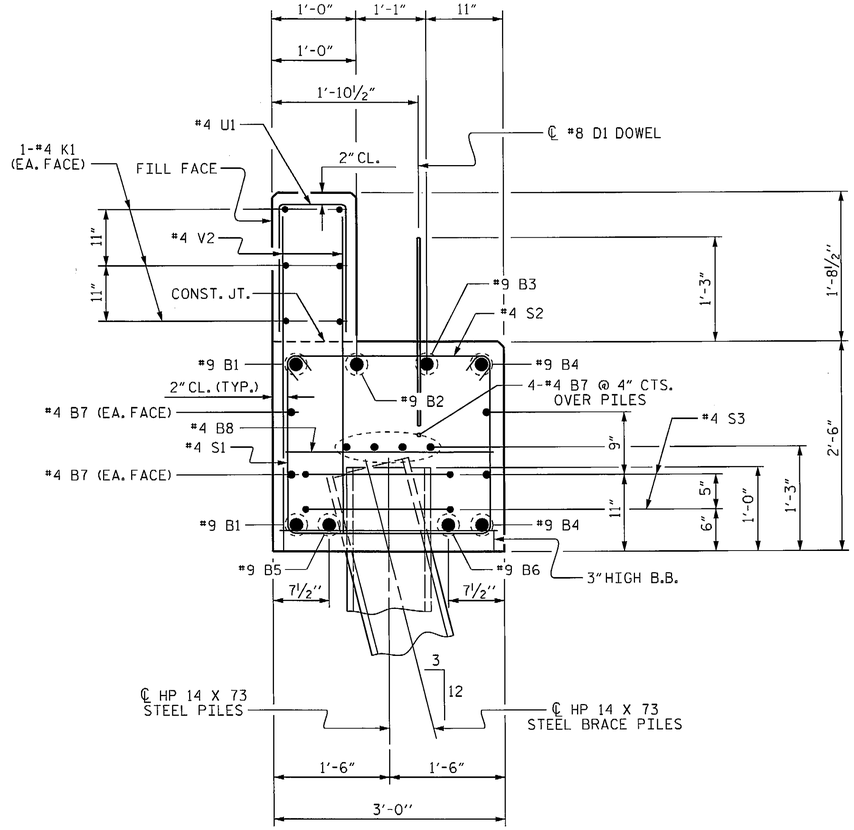

SECTION B-B

(CONCRETE COLLAR NOT SHOWN FOR CLARITY. SEE "CORROSION PROTECTION FOR STEEL PILES DETAIL.")

BAR TYPES

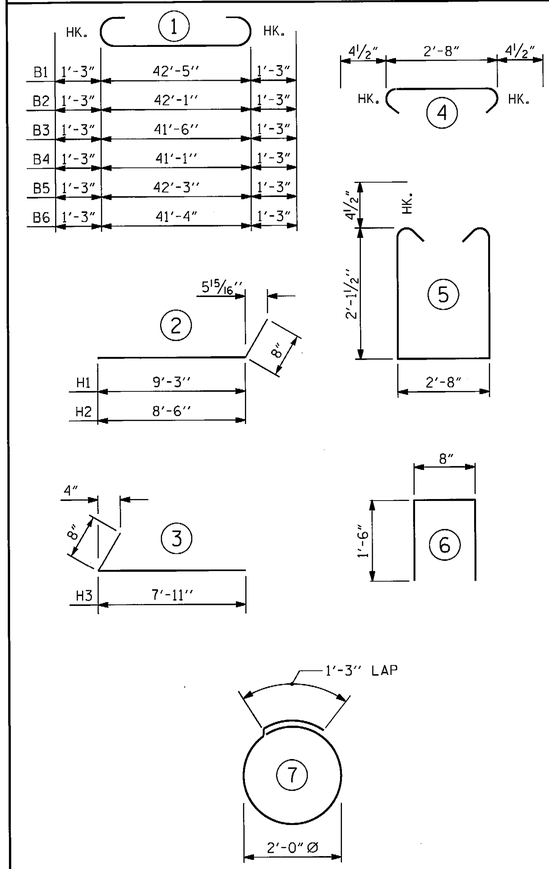

ALL BAR DIMENSIONS ARE OUT TO OUT.

BILL OF MATERIAL

END BENT #2

BAR	NO.	SIZE	TYPE	LENGTH	WEIGHT
B1	2	#9	1	44'-11"	305
B2	1	#9	1	44'-7"	152
B3	1	#9	1	44'-0"	150
B4	2	#9	1	43'-7"	296
B5	1	#9	1	44'-9"	152
B6	1	#9	1	43'-10"	149
B7	16	#4	STR	22'-7"	241
B8	11	#4	STR	2'-8"	20
D1	20	#8	STR	2'-3"	120
H1	7	#6	2	9'-11"	104
H2	7	#6	2	9'-2"	96
H3	14	#6	3	8'-7"	180
K1	12	#4	STR	22'-7"	181
K2	6	#4	STR	3'-3"	13
K3	6	#4	STR	4'-3"	17
S1	82	#4	5	7'-8"	420
S2	82	#4	4	3'-5"	187
S3	10	#4	7	7'-7"	51
U1	35	#4	6	3'-8"	86
V1	52	#4	STR	5'-8"	197
V2	70	#4	STR	3'-8"	171

REINFORCING STEEL 3288 LBS.

CLASS A CONCRETE BREAKDOWN

POUR #1	CAP, LOWER PART OF WINGS & COLLARS	14.2 C.Y.
POUR #2	BACKWALL & UPPER PART OF WINGS	4.4 C.Y.
TOTAL CLASS A CONCRETE		18.6 C.Y.

END BENT #2
HP 14 X 73 STEEL PILES
NO: 5 LIN. FT.= 75
STEEL PILES POINTS 5 EA.

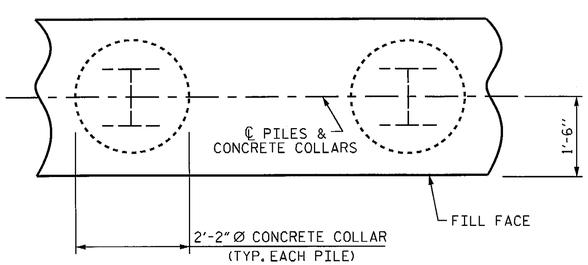

PLAN

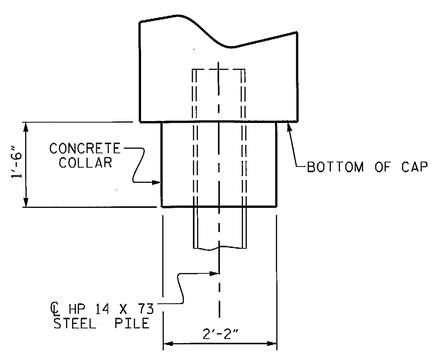

ELEVATION

CORROSION PROTECTION FOR STEEL PILES DETAIL

(END BENT No. 1 SHOWN, END BENT No. 2 SIMILAR BY ROTATION)

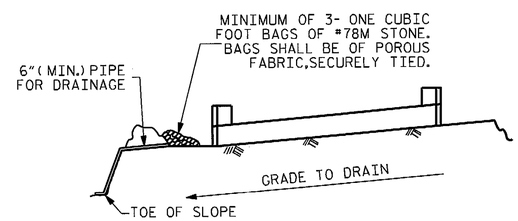

BAGGED STONE AND PIPE SHALL BE PLACED IMMEDIATELY AFTER COMPLETION OF END BENT EXCAVATION. PIPE MAY BE EITHER CONCRETE, CORRUGATED STEEL, CORRUGATED ALUMINUM ALLOY, OR CORRUGATED PLASTIC. PERFORATED PIPE WILL NOT BE ALLOWED.

BAGGED STONE SHALL REMAIN IN PLACE UNTIL THE ENGINEER DIRECTS THAT IT BE REMOVED. THE CONTRACTOR SHALL REMOVE AND DISPOSE OF SILT ACCUMULATIONS AT BAGGED STONE WHEN SO DIRECTED BY THE ENGINEER. BAGS SHALL BE REMOVED AND REPLACED WHENEVER THE ENGINEER DETERMINES THAT THEY HAVE DETERIORATED AND LOST THEIR EFFECTIVENESS.

NO SEPARATE PAYMENT WILL BE MADE FOR THIS WORK AND THE ENTIRE COST OF THIS WORK SHALL BE INCLUDED IN THE UNIT CONTRACT PRICE BID FOR THE SEVERAL PAY ITEMS.

TEMPORARY DRAINAGE AT END BENT

NORTH CAROLINA PROFESSIONAL SEAL 15825 ENGINEER BRUCE D. KLAPPENBACH
5-7-2012

PROJECT NO. BD-5111P
WILKES COUNTY
STATION: 12+32.90 -L-

SHEET 3 OF 3

STATE OF NORTH CAROLINA
DEPARTMENT OF TRANSPORTATION
RALEIGH

SUBSTRUCTURE

END BENT #2 DETAILS

REVISIONS								SHEET NO.
NO.	BY:	DATE:	NO.	BY:	DATE:			S-16
1			3					TOTAL SHEETS
2			4					19

ASSEMBLED BY : D. A. GLADDEN DATE : 4-23-12
CHECKED BY : B. KLAPPENBACH DATE : 5-1-12

DRAWN BY : WJH 12/11
CHECKED BY : AAC 12/11

07-MAY-2012 11:07
R:\Structures\FINAL PLANS\BD5111P_SD_AB.dgn
bklappenbach

STD. NO. EB_30_120S4_33BB

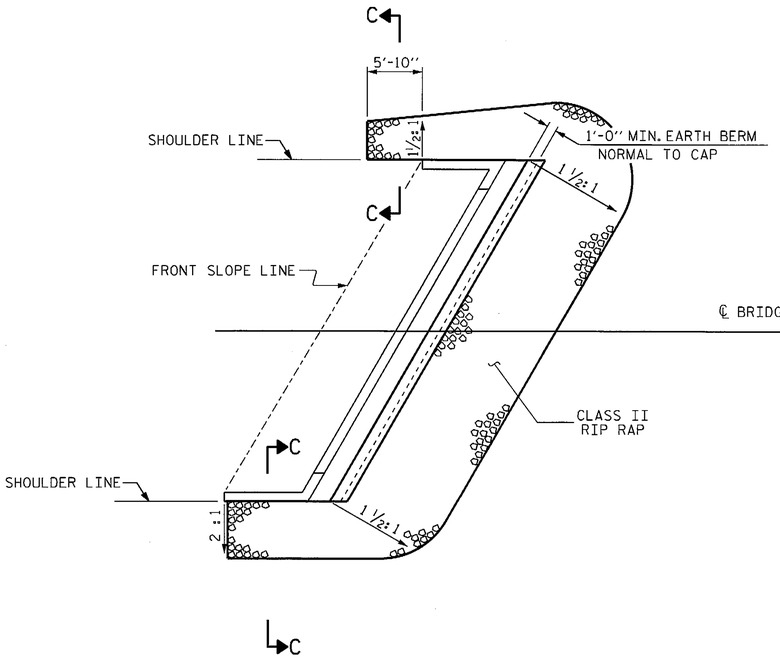

PLAN OF RIP RAP AT END BENT 1

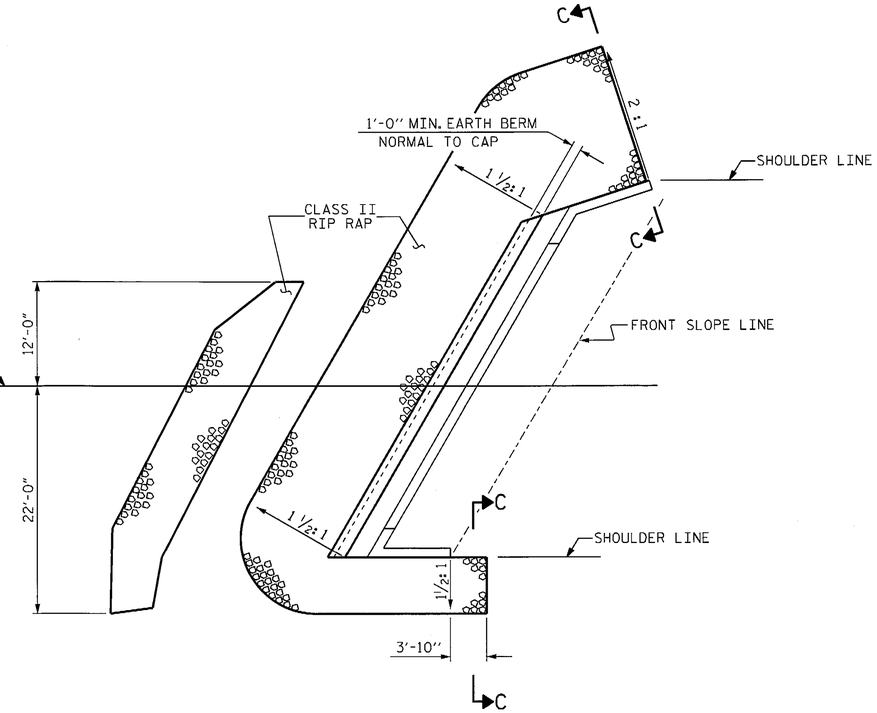

PLAN OF RIP RAP AT END BENT 2

ESTIMATED QUANTITIES		
BRIDGE @ STA. 12+32.90 -L-	RIP RAP CLASS II (2'-0" THICK)	GEOTEXTILE FOR DRAINAGE
	TONS	SQUARE YARDS
END BENT 1	140	155
END BENT 2	133	148
TOTAL	273	303

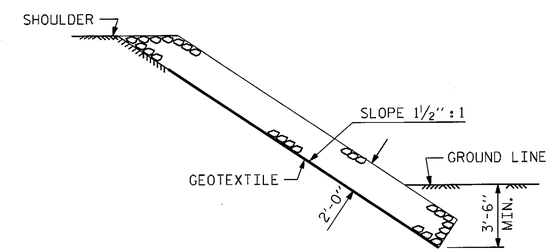

SECTION C-C

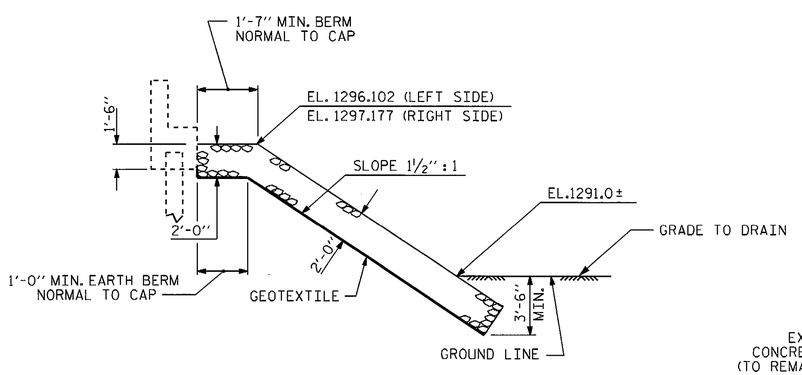

SECTION AT END BENT #1

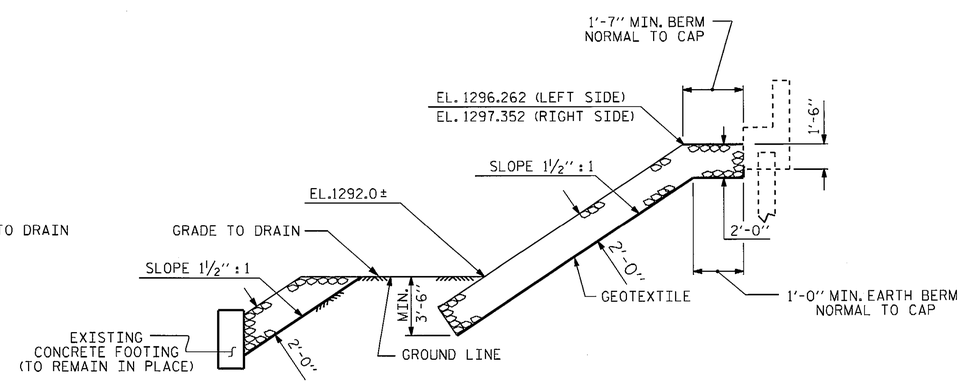

SECTION AT END BENT #2

PROJECT NO. BD-5111P
WILKES COUNTY
STATION: 12+32.90 -L-

STATE OF NORTH CAROLINA
DEPARTMENT OF TRANSPORTATION
RALEIGH

STANDARD

RIP RAP DETAILS

NORTH CAROLINA PROFESSIONAL SEAL 15825 ENGINEER BRIAN D. KLAPPENBACH
5-30-2012

REVISIONS						SHEET NO.
NO.	BY:	DATE:	NO.	BY:	DATE:	S-17
1			3			TOTAL SHEETS
2			4			19

ASSEMBLED BY : D. A. GLADDEN DATE : 4-24-12
CHECKED BY : B. KLAPPENBACH DATE : 5-1-12

DRAWN BY : REK 1/84
CHECKED BY : RDU 1/84

REV. 5/1/06R TLA/GM
REV. 10/1/11 MAA/GM
REV. 12/21/11 MAA/GM

29-MAY-2012 12:23
R:\Structures\FINAL PLANS\BD5111P_SD_AB.dgn
bklappenbach

STD. NO. RR1 (Sht 3)

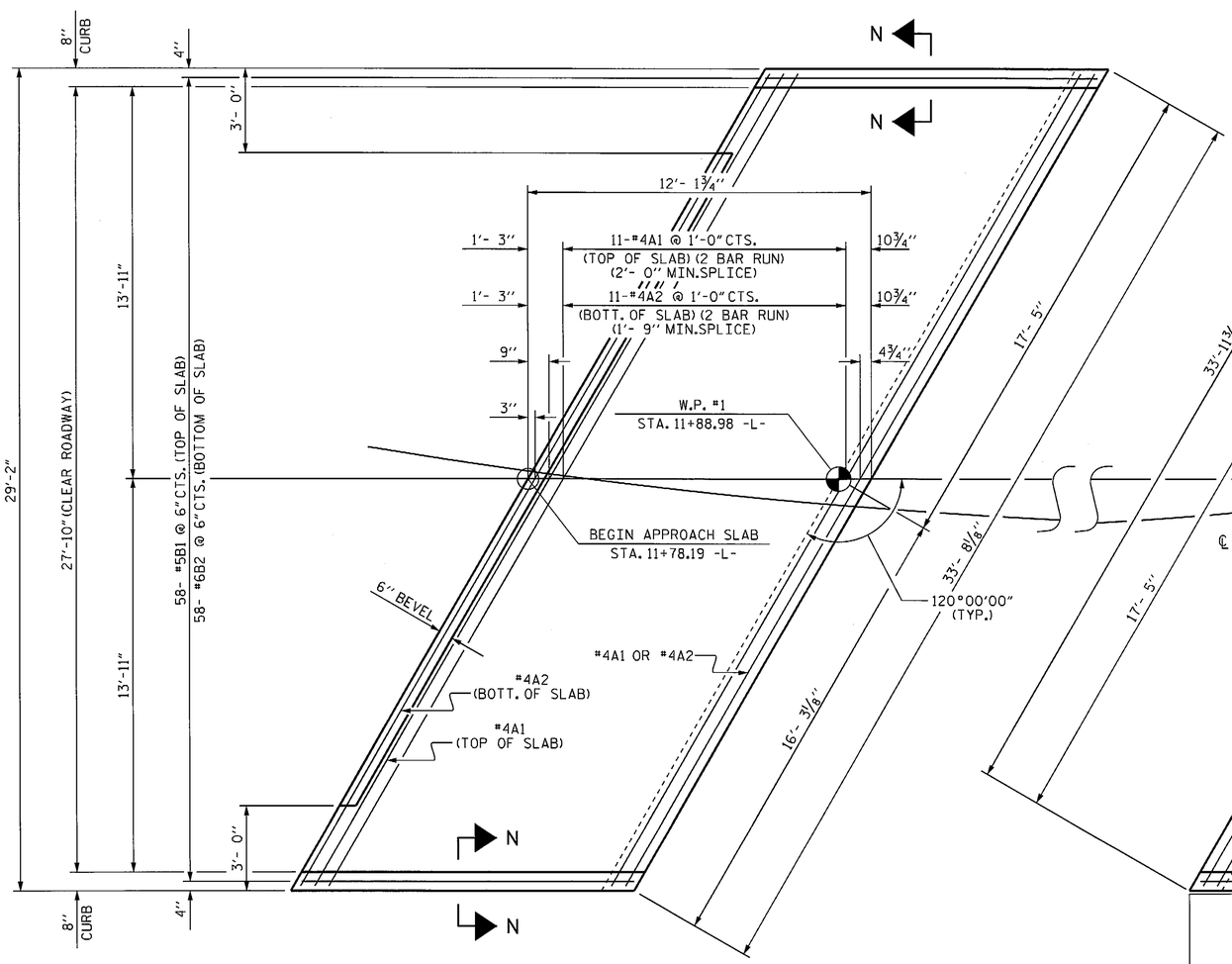

PLAN @ END BENT #1

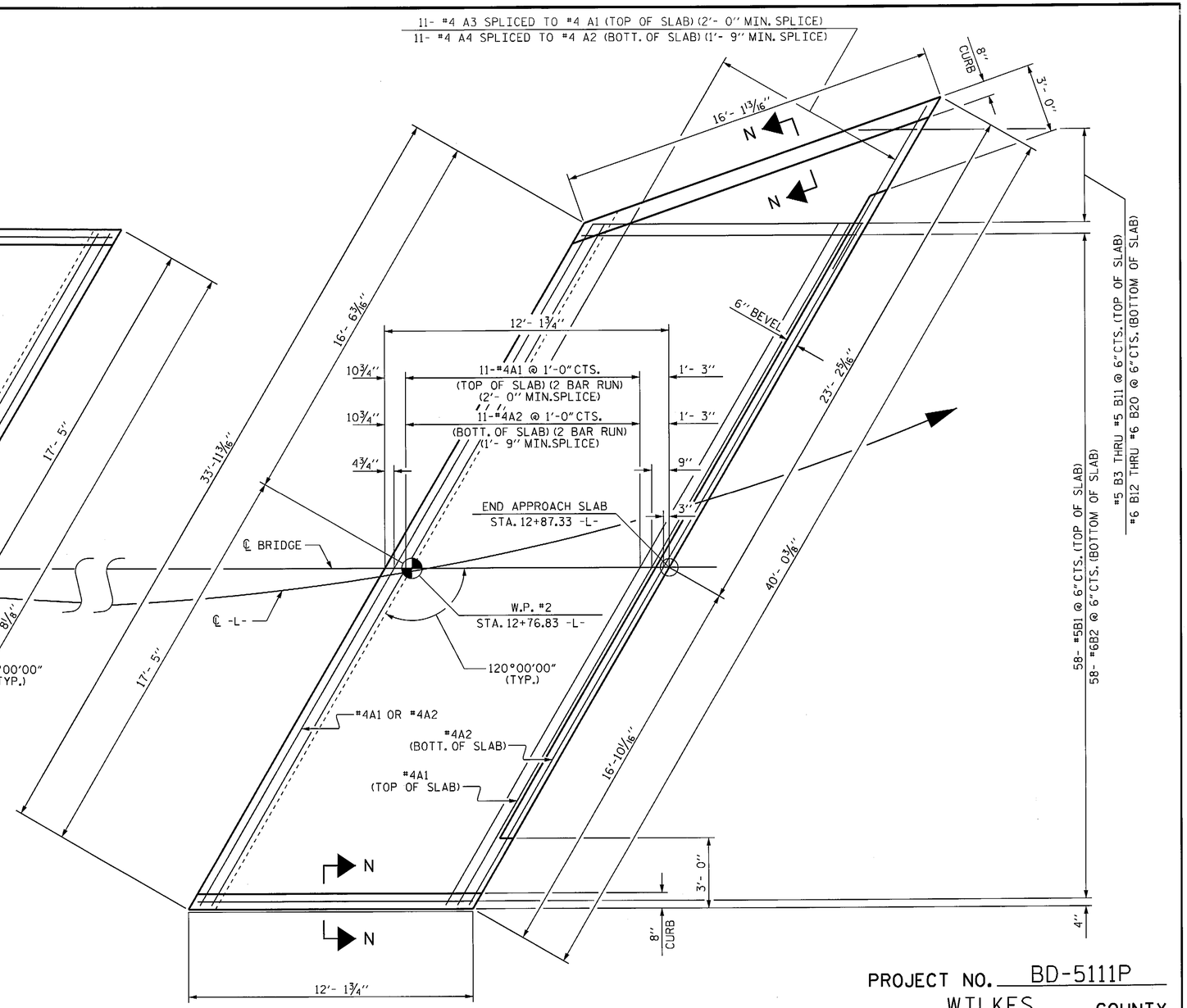

PLAN @ END BENT #2

PROJECT NO. BD-5111P

WILKES COUNTY

STATION: 12+32.90 -L-

SHEET 1 OF 2

STATE OF NORTH CAROLINA
DEPARTMENT OF TRANSPORTATION
RALEIGH

APPROACH SLAB FOR PRESTRESSED CONCRETE BOX BEAM UNIT

NORTH CAROLINA PROFESSIONAL SEAL 15825 ENGINEER BRUCE D. KLAPPENBACH
5-7-2012

REVISIONS						SHEET NO.
NO.	BY:	DATE:	NO.	BY:	DATE:	S-18
1			3			TOTAL SHEETS
2			4			19

DRAWN BY : D. A. GLADDEN DATE : 4-25-12
CHECKED BY : B. KLAPPENBACH DATE : 5-1-12

07-MAY-2012 11:07
R:\Structures\FINAL PLANS\BD5111P_SD_AB.dgn
bklappenbach

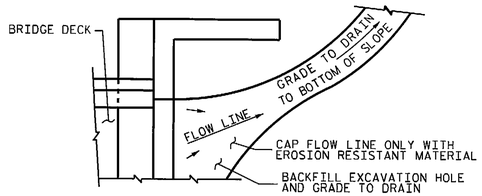

NOTE: IF THE APPROACH SLAB IS NOT CONSTRUCTED IMMEDIATELY AFTER THE BACKFILLING OF THE END BENT EXCAVATION, GRADE TO DRAIN TO THE BOTTOM OF THE SLOPE AND PROVIDE EROSION RESISTANT MATERIAL, SUCH AS FIBERGLASS ROVING OR AS DIRECTED BY THE ENGINEER TO PREVENT SOIL EROSION AND TO PROTECT THE AREA ADJACENT TO THE STRUCTURE. THE CONTRACTOR WILL BE REQUIRED TO REMOVE THESE MATERIALS PRIOR TO CONSTRUCTION OF THE APPROACH SLAB.

TEMPORARY DRAINAGE DETAIL

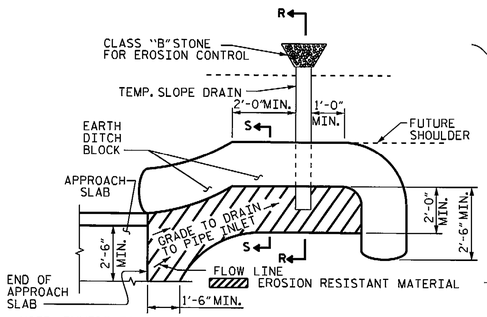

NOTE: IMMEDIATELY AFTER THE CONSTRUCTION OF THE APPROACH SLAB, THE CONTRACTOR SHALL PROVIDE TEMPORARY BERM AND SLOPE DRAIN. CONTRACTOR SHALL GRADE TO PIPE INLET AND PROVIDE EROSION RESISTANT MATERIAL AS SHOWN. THE EROSION RESISTANT MATERIAL SHALL BE EITHER 1) ASPHALT PLANT MIX, TYPE 1 OR TYPE 2, MIN. 2" DEPTH, 2) EROSION CONTROL MAT, OR 3) CONCRETE, AS DIRECTED BY THE ENGINEER. THE SLOPE DRAIN SHALL CONSIST OF A NON-PERFORATED TEMPORARY DRAINAGE PIPE, 12 INCHES IN DIAMETER.

PLAN VIEW

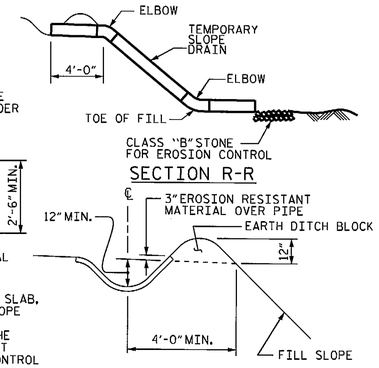

SECTION S-S

TEMPORARY BERM AND SLOPE DRAIN DETAILS

(TO BE USED WHEN SHOULDER BERM GUTTER IS REQUIRED)

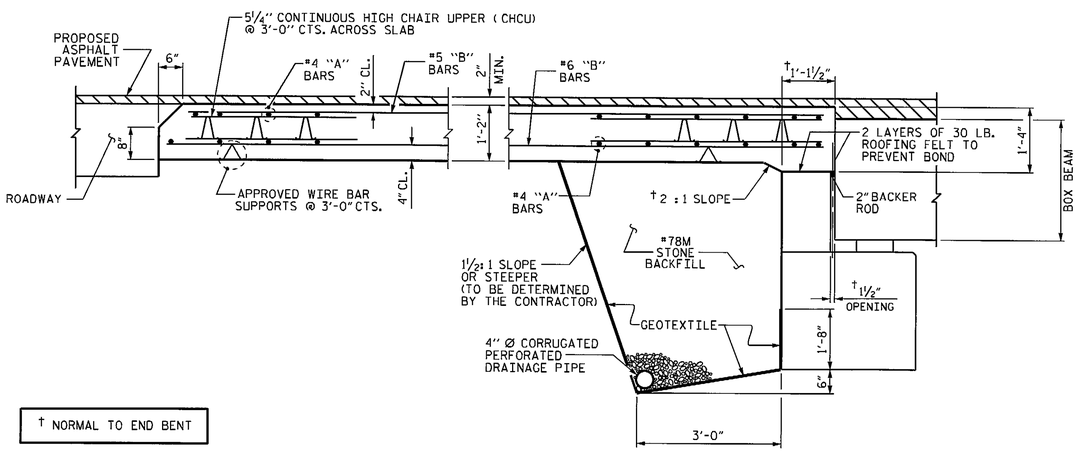

† NORMAL TO END BENT

SECTION THRU SLAB

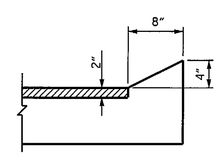

SECTION N-N

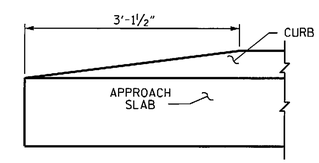

END OF CURB WITHOUT SHOULDER BERM GUTTER

CURB DETAILS

NOTES

FOR BRIDGE APPROACH FILL INCLUDING GEOTEXTILE, 4" Ø DRAINAGE PIPE, AND #78M STONE BACKFILL, SEE ROADWAY PLANS.

GEOTEXTILE SHALL BE TYPE 1 IN ACCORDANCE WITH THE STANDARD SPECIFICATIONS SECTION 1056.

#78M STONE BACKFILL (CLASS V SELECT MATERIAL) SHALL BE IN ACCORDANCE WITH STANDARD SPECIFICATIONS SECTION 1016.

#78M STONE BACKFILL IS TO BE CONTINUOUS ALONG FILL FACE OF BACKWALL FROM OUTSIDE EDGE TO OUTSIDE EDGE OF APPROACH SLAB.

FOR THE 4" Ø DRAINAGE PIPE OUTLET(S), SEE ROADWAY STANDARD DRAWINGS.

AREA BETWEEN THE WINGWALL AND APPROACH SLAB SHALL BE GRADED TO DRAIN THE WATER AWAY FROM THE FILL FACE OF THE BRIDGE AND SHALL BE PAVED. SEE ROADWAY PLANS.

APPROACH SLAB GROOVING IS NOT REQUIRED.

BILL OF MATERIAL

APPROACH SLAB AT EB #1

BAR	NO.	SIZE	TYPE	LENGTH	WEIGHT
* A1	26	#4	STR	17'-8"	307
A2	26	#4	STR	17'-7"	305
* B1	58	#5	STR	11'-1"	670
B2	58	#6	STR	11'-7"	1009
REINFORCING STEEL				LBS.	1314
* EPOXY COATED REINFORCING STEEL				LBS.	977
CLASS AA CONCRETE				C. Y.	15.6

APPROACH SLAB AT EB #2

BAR	NO.	SIZE	TYPE	LENGTH	WEIGHT
* A1	26	#4	STR	17'-11"	311
A2	26	#4	STR	17'-9"	308
* A3	22	#4	STR	8'-1"	119
A4	22	#4	STR	7'-10"	115
* B1	58	#5	STR	11'-1"	670
B2	58	#6	STR	11'-7"	1009
* B3	1	#5	STR	11'-6"	12
* B4	1	#5	STR	10'-5"	11
* B5	1	#5	STR	9'-3"	10
* B6	1	#5	STR	8'-2"	9
* B7	1	#5	STR	7'-0"	7
* B8	1	#5	STR	5'-10"	6
* B9	1	#5	STR	4'-9"	5
* B10	1	#5	STR	3'-7"	4
* B11	1	#5	STR	2'-6"	3
B12	1	#6	STR	11'-6"	17
B13	1	#6	STR	10'-5"	16
B14	1	#6	STR	9'-3"	14
B15	1	#6	STR	8'-2"	12
B16	1	#6	STR	7'-0"	11
B17	1	#6	STR	5'-10"	9
B18	1	#6	STR	4'-9"	7
B19	1	#6	STR	3'-7"	5
B20	1	#6	STR	2'-6"	4
REINFORCING STEEL				LBS.	1527
* EPOXY COATED REINFORCING STEEL				LBS.	1167
CLASS AA CONCRETE				C. Y.	17.0

SPLICE LENGTHS

BAR SIZE	EPOXY COATED	UNCOATED
#4	2'-0"	1'-9"
#5	2'-6"	2'-2"
#6	3'-10"	2'-7"

PROJECT NO. BD-5111P

WILKES COUNTY

STATION: 12+32.90 -L-

SHEET 2 OF 2

STATE OF NORTH CAROLINA
DEPARTMENT OF TRANSPORTATION
RALEIGH

STANDARD
BRIDGE APPROACH SLAB
FOR PRESTRESSED CONCRETE
BOX BEAM UNIT
(SUB-REGIONAL TIER)
120° SKEW

NORTH CAROLINA PROFESSIONAL SEAL 15825 ENGINEER BRIAN D. KLAPPENBACH
5-7-2012

REVISIONS						
NO.	BY:	DATE:	NO.	BY:	DATE:	
1			3			
2			4			

SHEET NO. S-19

TOTAL SHEETS 19

ASSEMBLED BY : D. A. GLADDEN DATE : 4-25-12
CHECKED BY : B. KLAPPENBACH DATE : 5-1-12
DRAWN BY : MAA 11/11
CHECKED BY : AAC 11/11

07-MAY-2012 11:07
R:\Structures\FINAL PLANS\BD5111P_SD_AB.dgn
bklappenbach

STD. NO. BAS_BB_30_120S

STANDARD NOTES

DESIGN DATA:

SPECIFICATIONS	A.A.S.H.T.O. (CURRENT)
LIVE LOAD	SEE PLANS
IMPACT ALLOWANCE	SEE A.A.S.H.T.O.
STRESS IN EXTREME FIBER OF	
STRUCTURAL STEEL - AASHTO M270 GRADE 36	20,000 LBS. PER SQ. IN.
- AASHTO M270 GRADE 50W	27,000 LBS. PER SQ. IN.
- AASHTO M270 GRADE 50	27,000 LBS. PER SQ. IN.
REINFORCING STEEL IN TENSION	
GRADE 60	24,000 LBS. PER SQ. IN.
CONCRETE IN COMPRESSION	1,200 LBS. PER SQ. IN.
CONCRETE IN SHEAR	SEE A.A.S.H.T.O.
STRUCTURAL TIMBER - TREATED OR	
UNTREATED - EXTREME FIBER STRESS	1,800 LBS. PER SQ. IN.
COMPRESSION PERPENDICULAR TO GRAIN OF TIMBER	375 LBS. PER SQ. IN.
EQUIVALENT FLUID PRESSURE OF EARTH	30 LBS. PER CU. FT. (MINIMUM)

MATERIAL AND WORKMANSHIP:

EXCEPT AS MAY OTHERWISE BE SPECIFIED ON PLANS OR IN THE SPECIAL PROVISIONS, ALL MATERIAL AND WORKMANSHIP SHALL BE IN ACCORDANCE WITH THE 2012 "STANDARD SPECIFICATIONS FOR ROADS AND STRUCTURES" OF THE N. C. DEPARTMENT OF TRANSPORTATION.

STEEL SHEET PILING FOR PERMANENT OR TEMPORARY APPLICATIONS SHALL BE HOT ROLLED.

CONCRETE:

UNLESS OTHERWISE REQUIRED ON PLANS, CLASS A CONCRETE SHALL BE USED FOR ALL PORTIONS OF ALL STRUCTURES WITH THE EXCEPTION THAT: CLASS AA CONCRETE SHALL BE USED IN BRIDGE SUPERSTRUCTURES, ABUTMENT BACKWALLS, AND APPROACH SLABS; AND CLASS B CONCRETE SHALL BE USED FOR SLOPE PROTECTION AND RIP RAP.

CONCRETE CHAMFERS:

UNLESS OTHERWISE NOTED ON THE PLANS, ALL EXPOSED CORNERS ON STRUCTURES SHALL BE CHAMFERED 3/4" WITH THE FOLLOWING EXCEPTIONS: TOP CORNERS OF CURBS MAY BE ROUNDED TO 1-1/2" RADIUS WHICH IS BUILT INTO CURB FORMS; CORNERS OF TRANSVERSE FLOOR EXPANSION JOINTS SHALL BE ROUNDED WITH A 1/4" FINISHING TOOL UNLESS OTHERWISE REQUIRED ON PLANS; AND CORNERS OF EXPANSION JOINTS IN THE ROADWAY FACES AND TOPS OF CURBS AND SIDEWALKS SHALL BE ROUNDED TO A 1/4" RADIUS WITH A FINISHING STONE OR TOOL UNLESS OTHERWISE REQUIRED ON PLANS.

DOWELS:

DOWELS WHEN INDICATED ON PLANS AS FOR CULVERT EXTENSIONS, SHALL BE EMBEDDED AT LEAST 12" INTO THE OLD CONCRETE AND GROUTED INTO PLACE WITH 1:2 CEMENT MORTAR.

ALLOWANCE FOR DEAD LOAD DEFLECTION, SETTLEMENT, ETC. IN CASTING SUPERSTRUCTURES:

BRIDGES SHALL BE BUILT ON THE GRADE OR VERTICAL CURVE SHOWN ON PLANS. SLABS, CURBS AND PARAPETS SHALL CONFORM TO THE GRADE OR CURVE.

ALL DIMENSIONS WHICH ARE GIVEN IN SECTION AND ARE AFFECTED BY DEAD LOAD DEFLECTIONS ARE DIMENSIONS AT CENTER LINE OF BEARING UNLESS OTHERWISE NOTED ON PLANS. IN SETTING FORMS FOR STEEL BEAM BRIDGES AND PRESTRESSED CONCRETE GIRDER BRIDGES, ADJUSTMENTS SHALL BE MADE DUE TO THE DEAD LOAD DEFLECTIONS FOR THE ELEVATIONS SHOWN. WHERE BLOCKS ARE SHOWN OVER BEAMS FOR BUILDING UP TO THE SLAB, THE VERTICAL DIMENSIONS OF THE BLOCKS SHALL BE ADJUSTED BETWEEN BEARINGS TO COMPENSATE FOR DEAD LOAD DEFLECTIONS, VERTICAL CURVE ORDINATE, AND ACTUAL BEAM CAMBER. WHERE BOTTOM OF SLAB IS IN LINE WITH BOTTOM OF TOP FLANGES, DEPTH OF SLAB BETWEEN BEARINGS SHALL BE ADJUSTED TO COMPENSATE FOR DEAD LOAD DEFLECTION, VERTICAL CURVE ORDINATE, AND ACTUAL BEAM CAMBER.

IN SETTING FALSEWORK AND FORMS FOR REINFORCED CONCRETE SPANS, AN ALLOWANCE SHALL BE MADE FOR DEAD LOAD DEFLECTIONS, SETTLEMENT OF FALSEWORK, AND PERMANENT CAMBER WHICH SHALL BE PROVIDED FOR IN ADDITION TO THE ELEVATIONS SHOWN. AFTER REMOVAL OF THE FALSEWORK, THE FINISHED STRUCTURES SHALL CONFORM TO THE PROFILE AND ELEVATIONS SHOWN ON THE PLANS AND CONSTRUCTION ELEVATIONS FURNISHED BY THE ENGINEER.

DETAILED DRAWINGS FOR FALSEWORK OR FORMS FOR BRIDGE SUPERSTRUCTURE AND ANY STRUCTURE OR PARTS OF A STRUCTURE AS NOTED ON THE PLANS SHALL BE SUBMITTED TO THE ENGINEER FOR APPROVAL BEFORE CONSTRUCTION OF THE FALSEWORK OR FORMS IS STARTED.

REINFORCING STEEL:

ALL REINFORCING STEEL SHALL BE DEFORMED. DIMENSIONS RELATIVE TO PLACEMENT OF REINFORCING ARE TO CENTERS OF BARS UNLESS OTHERWISE INDICATED IN THE PLANS. DIMENSIONS ON BAR DETAILS ARE TO CENTERS OF BARS OR ARE OUT TO OUT AS INDICATED ON PLANS.

WIRE BAR SUPPORTS SHALL BE PROVIDED FOR REINFORCING STEEL WHERE INDICATED ON THE PLANS. WHEN BAR SUPPORT PIECES ARE PLACED IN CONTINUOUS LINES, THEY SHALL BE SO PLACED THAT THE ENDS OF THE SUPPORTING WIRES SHALL BE LAPPED TO LOCK LEGS ON ADJOINING PIECES.

STRUCTURAL STEEL:

AT THE CONTRACTOR'S OPTION, HE MAY SUBSTITUTE 7/8" Ø SHEAR STUDS FOR THE 3/4" Ø STUDS SPECIFIED ON THE PLANS. THIS SUBSTITUTION SHALL BE MADE AT THE RATE OF 3 - 7/8" Ø STUDS FOR 4 - 3/4" Ø STUDS, AND STUD SPACING CHANGES SHALL BE MADE AS NECESSARY TO PROVIDE THE SAME EQUIVALENT NUMBER OF 7/8" Ø STUDS ALONG THE BEAM AS SHOWN FOR 3/4" Ø STUDS BASED ON THE RATIO OF 3 - 7/8" Ø STUDS FOR 4 - 3/4" Ø STUDS. STUDS OF THE LENGTH SPECIFIED ON THE PLANS MUST BE PROVIDED. THE MAXIMUM SPACING SHALL BE 2'-0".

EXCEPT AT THE INTERIOR SUPPORTS OF CONTINUOUS BEAMS WHERE THE COVER PLATE IS IN CONTACT WITH BEARING PLATE, THE CONTRACTOR MAY, AT HIS OPTION, SUBSTITUTE FOR THE COVER PLATES DESIGNATED ON THE PLANS COVER PLATES OF THE EQUIVALENT AREA PROVIDED THESE PLATES ARE AT LEAST 5/16" IN THICKNESS AND DO NOT EXCEED A WIDTH EQUAL TO THE FLANGE WIDTH LESS 2" OR A THICKNESS EQUAL TO 2 TIMES THE FLANGE THICKNESS. THE SIZE OF FILLET WELDS SHALL CONFORM TO THE REQUIREMENTS OF THE CURRENT ANSI/AASHTO/AWS "BRIDGE WELDING CODE". ELECTROSLAG WELDING WILL NOT BE PERMITTED.

WITH THE SOLE EXCEPTION OF EDGES AT SURFACES WHICH BEAR ON OTHER SURFACES, ALL SHARP EDGES AND ENDS OF SHAPES AND PLATES SHALL BE SLIGHTLY ROUNDED BY SUITABLE MEANS TO A RADIUS OF APPROXIMATELY 1/16 INCH OR EQUIVALENT FLAT SURFACE AT A SUITABLE ANGLE PRIOR TO PAINTING, GALVANIZING, OR METALLIZING.

HANDRAILS AND POSTS:

METAL STANDARDS AND FACES OF THE CONCRETE END POSTS FOR THE METAL RAIL SHALL BE SET NORMAL TO THE GRADE OF THE CURB, UNLESS OTHERWISE SHOWN ON PLANS. THE METAL RAIL AND TOPS OF CONCRETE POSTS USED WITH THE ALUMINUM RAIL SHALL BE BUILT PARALLEL TO THE GRADE OF THE CURB.

METAL HANDRAILS SHALL BE IN ACCORDANCE WITH THE PLANS. RAILS SHALL BE AS MANUFACTURED FOR BRIDGE RAILING. CASTINGS SHALL BE OF A UNIFORM APPEARANCE. FINS AND OTHER DEFORMATIONS RESULTING FROM CASTING OR OTHERWISE SHALL BE REMOVED IN A MANNER SO THAT A UNIFORM COLORING OF THE COMPLETED CASTING SHALL BE OBTAINED. CASTINGS WITH DISCOLORATIONS OR OF NON-UNIFORM COLORING WILL NOT BE ACCEPTED. CERTIFIED MILL REPORTS ARE REQUIRED FOR METAL RAILS AND POSTS.

SPECIAL NOTES:

GENERALLY, IN CASE OF DISCREPANCY, THIS STANDARD SHEET OF NOTES SHALL GOVERN OVER THE SPECIFICATIONS, BUT THE REMAINDER OF THE PLANS SHALL GOVERN OVER NOTES HEREON, AND SPECIAL PROVISIONS SHALL GOVERN OVER ALL. SEE SPECIFICATIONS ARTICLE 105-4.

ENGLISH

JANUARY, 1990

STD. NO. SN

8/17/99

REVISIONS

ROW REVISION - 1/21/12 - CORRECTED TCE LABEL 13+50 LT

TYPICAL SECTION

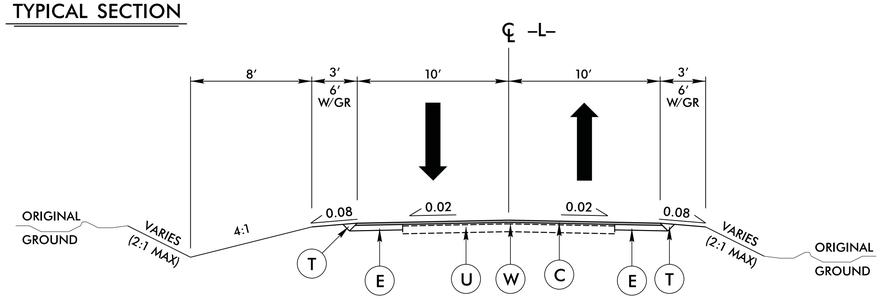

PAVEMENT SCHEDULE	
C	1½" SURFACE COURSE, TYPE SF9.5A
E	5½" BASE COURSE, TYPE B25.0B
T	EARTH MATERIAL
U	EXISTING PAVEMENT.
W	WEDGING

-L-

PI Sta 10+42.61	PI Sta 11+45.49	PI Sta 12+82.98	PI Sta 14+13.27
△ = 26° 21' 41.5" (LT)	△ = 32° 04' 31.2" (LT)	△ = 25° 13' 31.2" (LT)	△ = 29° 06' 28.0" (RT)
D = 38° 11' 49.9"	D = 23° 52' 23.7"	D = 47° 44' 47.3"	D = 32° 44' 25.6"
L = 69.01'	L = 134.36'	L = 52.83'	L = 88.90'
T = 35.13'	T = 68.99'	T = 26.85'	T = 45.43'
R = 150.00'	R = 240.00'	R = 120.00'	R = 175.00'
	SE = 0.04	SE = 0.03	
	V = 25 mph	V = 15 mph *	

NAD 83/NSRS 2007

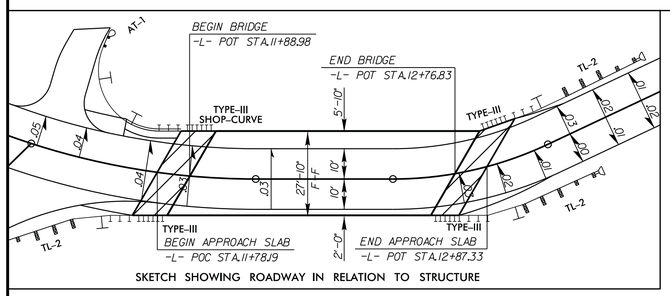

SKETCH SHOWING ROADWAY IN RELATION TO STRUCTURE

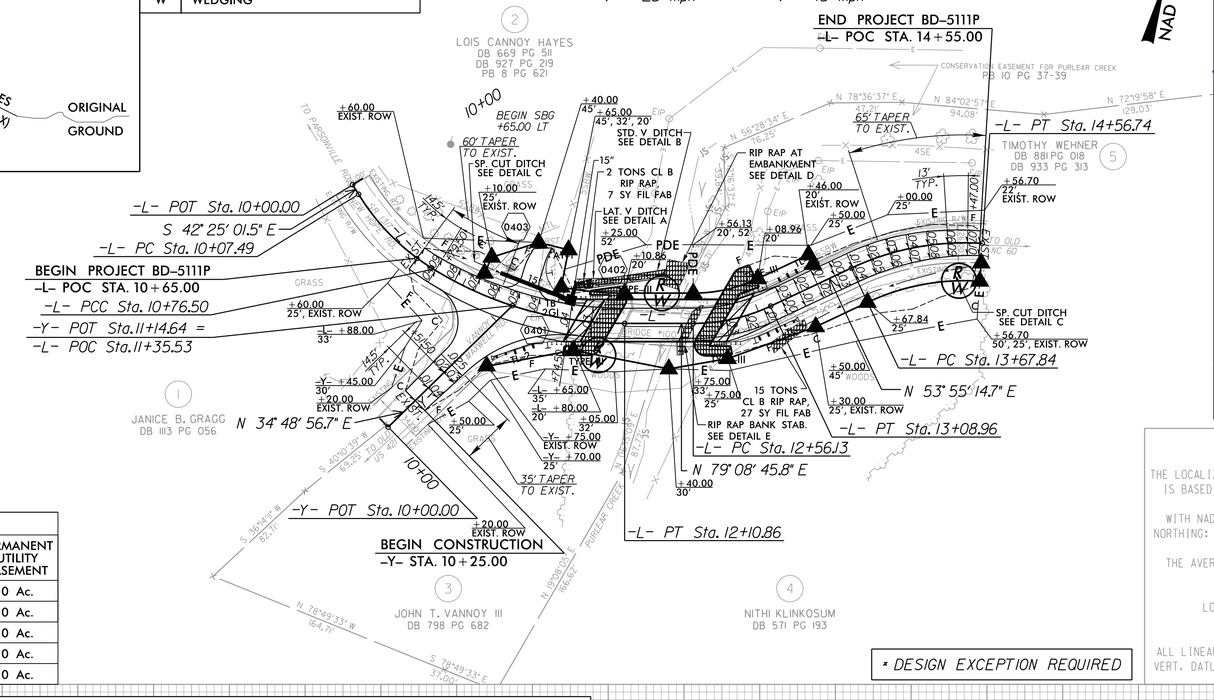

PROJECT REFERENCE NO.	SHEET NO.
BD-5111P	RDY-1
R/W SHEET NO.	

ROADWAY DESIGN ENGINEER: NORTH CAROLINA PROFESSIONAL SEAL 23982 ENGINEER STEPHEN E. ROBERTS — 6-8-12

HYDRAULICS ENGINEER: NORTH CAROLINA PROFESSIONAL SEAL 036821 ENGINEER ELENI M. RIGOS — 6/8/12

GRAPHIC SCALES

PLANS: 50 0 50 100

PROFILE (HORIZONTAL): 50 0 50 100

PROFILE (VERTICAL): 10 0 10 20

DESIGN SPEED = 35 mph

ADT = 310 (2006)

DATUM DESCRIPTION

THE LOCALIZED COORDINATE SYSTEM DEVELOPED FOR THIS PROJECT IS BASED ON THE STATE PLANE COORDINATES ESTABLISHED BY NCDOT FOR MONUMENT "B5111P-2"
WITH NAD 83/NSRS 2007 STATE PLANE GRID COORDINATES OF
NORTHING: 896,867.3196(ft) EASTING: 1,323,038.3448(ft)
ELEVATION: 1301.60(ft)
THE AVERAGE COMBINED GRID FACTOR USED ON THIS PROJECT (GROUND TO GRID) IS: 0.9999496500
THE N.C. LAMBERT GRID BEARING AND LOCALIZED HORIZONTAL GROUND DISTANCE FROM "B5111P-2" TO -L- STATION 10+00.00 IS
N 32°13'57.82" W 112.06 (ft)
ALL LINEAR DIMENSIONS ARE LOCALIZED HORIZONTAL DISTANCES
VERT. DATUM USED IS BASED ON MONUMENT B5111P-2 (NAVD 88).

* DESIGN EXCEPTION REQUIRED

RIGHT-OF-WAY AREAS

PARCEL #	PROPERTY OWNER'S NAME	TOTAL AREA	AREA TAKEN	AREA REMAINING RIGHT	AREA REMAINING LEFT	CONSTRUCTION EASEMENT	PERMANENT DRAINAGE EASEMENT	TEMPORARY DRAINAGE EASEMENT	PERMANENT UTILITY EASEMENT
1	JANICE B. GRAGG	N/A	0 Ac.	N/A	N/A	1,344 SF	0 Ac.	0 Ac.	0 Ac.
2	LOIS CANNOY HAYES	N/A	1,839 SF	N/A	N/A	816 SF	2,206 SF	0 Ac.	0 Ac.
3	JOHN T. VANNOY III	N/A	1036 SF	N/A	N/A	1,292 SF	0 Ac.	0 Ac.	0 Ac.
4	NITHI KLINKOSUM	N/A	2,557 SF	N/A	N/A	3,572 SF	0 Ac.	0 Ac.	0 Ac.
5	TIMOTHY WEHNER	N/A	715 SF	N/A	N/A	2,795 SF	0 Ac.	0 Ac.	0 Ac.

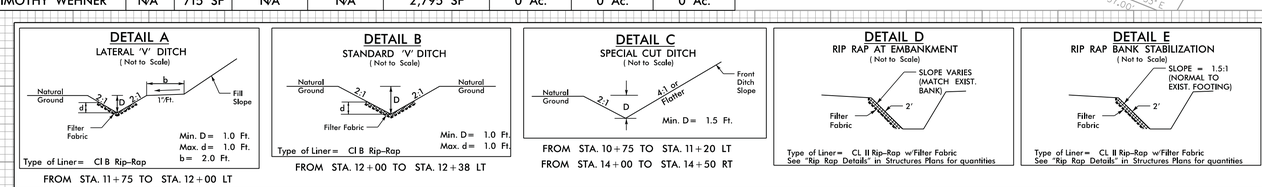

BD5111P-2 EL = 1301.60'
-L- STA.11+01.40 31.07' RT.
GPS MONUMENT

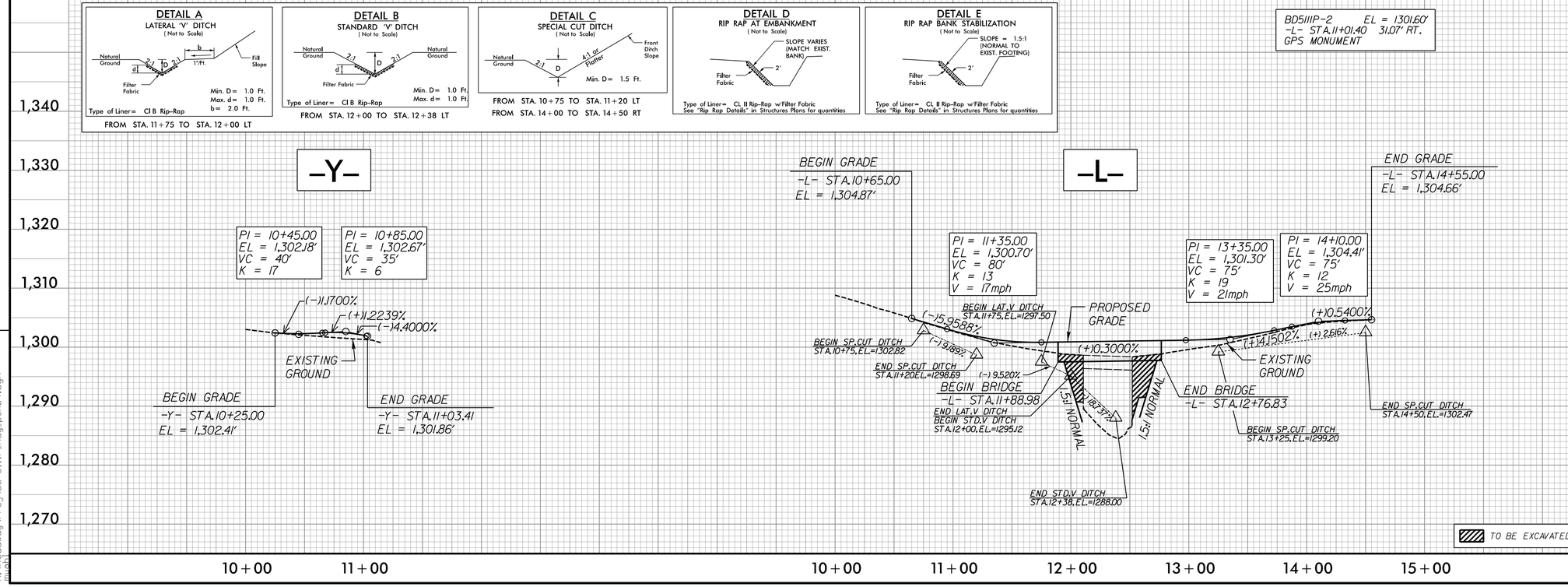

TO BE EXCAVATED

PLANS PREPARED BY :

RK&K

RUMMEL, KLEPPER & KAHL, LLP
900 RIDGEFIELD DRIVE SUITE 350
RALEIGH, NORTH CAROLINA 27609-3960
NC LICENSE NO. F-0112 • (919) 878-9560

6/8/2012
R:\Roadway\Proj\BD-5111P_Rdy_psh04.dgn
mwh

09/08/99

TIP PROJECT: BD-5111P

STATE OF NORTH CAROLINA
DIVISION OF HIGHWAYS

PLAN FOR PROPOSED
HIGHWAY EROSION CONTROL

WILKES COUNTY

BRIDGE NO. 100 ON SR 1317 OVER PURLEAR CREEK

STATE	STATE PROJECT REFERENCE NO.	SHEET NO.	TOTAL SHEETS
N.C.	BD-5111P	EC-1	

STATE PROJ. NO.	F.A. PROJ. NO.	DESCRIPTION

EROSION AND SEDIMENT CONTROL MEASURES

Std. #	Description	Symbol
1630.03	Temporary Silt Ditch	TSD
1630.05	Temporary Diversion	TD
1605.01	Temporary Silt Fence	
1606.01	Special Sediment Control Fence	
1622.01	Temporary Berms and Slope Drains	
	Silt Basin Type B	
1633.01	Temporary Rock Silt Check Type-A	
	Temporary Rock Silt Check Type-A with Matting and Polyacrylamide (PAM)	
	Temporary Rock Silt Check Type-B	
	Wattle/Coir Fiber Wattle	
	Wattle/Coir Fiber Wattle with Polyacrylamide (PAM)	
1634.01	Temporary Rock Sediment Dam Type-A	
1634.02	Temporary Rock Sediment Dam Type-B	
1635.01	Rock Pipe Inlet Sediment Trap Type-A	
1635.02	Rock Pipe Inlet Sediment Trap Type-B	
1630.04	Stilling Basin	
1630.06	Special Stilling Basin	
	Rock Inlet Sediment Trap:	
1632.01	Type A	A
1632.02	Type B	B
1632.03	Type C	C
	Skimmer Basin	
	Tiered Skimmer Basin	
	Infiltration Basin	

THIS PROJECT CONTAINS EROSION CONTROL PLANS FOR CLEARING AND GRUBBING PHASE OF CONSTRUCTION.

NAD 83/NSRS 2007

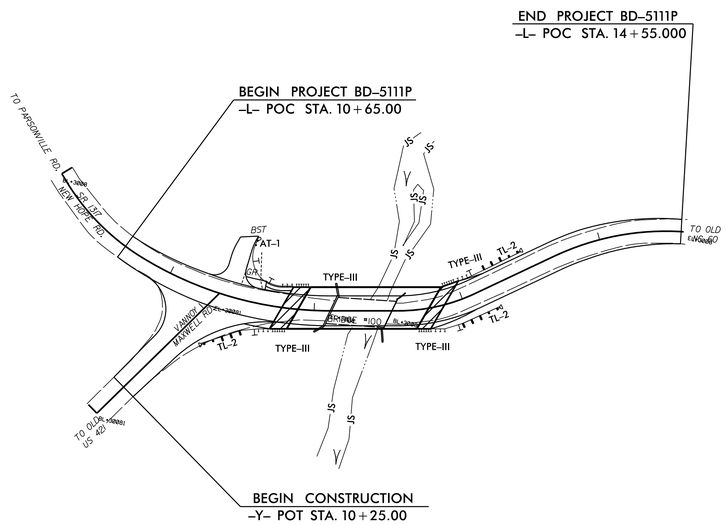

THESE EROSION AND SEDIMENT CONTROL PLANS COMPLY WITH THE REGULATIONS SET FORTH BY THE NCG-010000 GENERAL CONSTRUCTION PERMIT EFFECTIVE AUGUST 3, 2011 ISSUED BY THE NORTH CAROLINA DEPARTMENT OF ENVIRONMENT AND NATURAL RESOURCES DIVISION OF WATER QUALITY.

GRAPHIC SCALES

50 25 0 50 100
PLANS

50 25 0 50 100
PROFILE (HORIZONTAL)

10 5 0 10 20
PROFILE (VERTICAL)

Stephen E. Roberts, P.E.
ROADWAY DESIGN ENGINEER

Audrey B. Burnette, P.E.
HYDRAULICS ENGINEER

Audrey B. Burnette, P.E.
EROSION CONTROL DESIGN ENGINEER

431
LEVEL IIIA CERTIFICATION NUMBER

RK&K

RUMMEL, KLEPPER & KAHL, LLP
900 RIDGEFIELD DRIVE, SUITE 350
RALEIGH, NORTH CAROLINA 27609
NC LICENSE NO. F-0112
1-888-521-4455 OR 919-878-9560

FOR
DIVISION OF HIGHWAYS

2012 STANDARD SPECIFICATIONS

LETTING DATE:

B. Keith Skinner, P.E.
PROJECT ENGINEER

Stephen E. Roberts, P.E.
PROJECT DESIGN ENGINEER

Roadway Standard Drawings

The following roadway english standards as appear in "Roadway Standard Drawings"– Roadway Design Unit – N. C. Department of Transportation – Raleigh, N. C., dated January 2012 and the latest revison thereto are applicable to this project and by reference hereby are considered a part of these plans.

1605.01 Temporary Silt Fence
1606.01 Special Sediment Control Fence
1632.03 Rock Inlet Sediment Trap Type C
1633.01 Temporary Rock Silt Check Type A
1635.02 Rock Pipe Inlet Sediment Type B

5/10/2012
R:\Hydraulics\CADD\PSH\bd5111P_ec_title sht.dgn
eriggs

PROJECT REFERENCE NO.	SHEET NO.
BD-5111P	EC-2
R/W SHEET NO.	
ROADWAY DESIGN ENGINEER	HYDRAULICS ENGINEER

TEMPORARY ROCK SILT CHECK TYPE 'A' WITH EXCELSIOR MATTING AND POLYACRYLAMIDE (PAM)

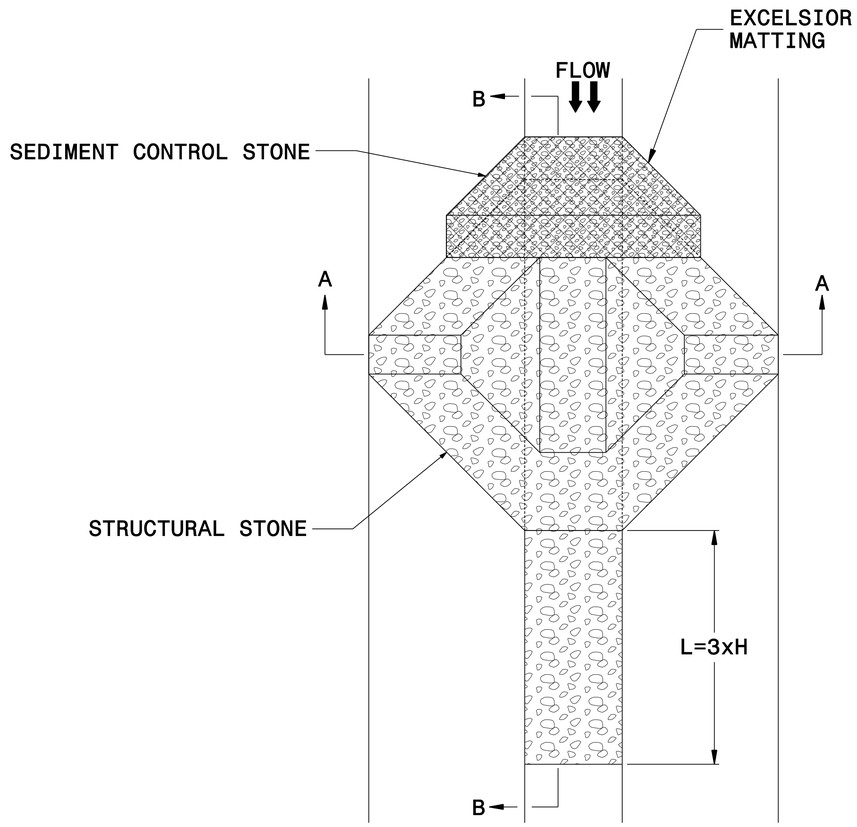

PLAN

NOTES

USE EXCELSIOR FOR MATTING MATERIAL AND ANCHOR MATTING SECTION AT TOP AND BOTTOM WITH CLASS B STONE.

PRIOR TO POLYACRYLAMIDE (PAM) APPLICATION, OBTAIN A SOIL SAMPLE FROM PROJECT LOCATION, AND FROM OFFSITE MATERIAL, AND ANALYZE FOR APPROPRIATE PAM FLOCCULANT TO BE APPLIED TO EACH ROCK SILT CHECK.

INITIALLY APPLY 3.5 OUNCES OF POLYACRYLAMIDE (PAM) TO TOP OF MATTING SECTION AND AFTER EVERY RAINFALL EVENT THAT EQUALS OR EXCEEDS 0.50 INCHES.

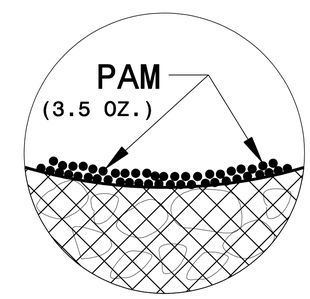

INSET A

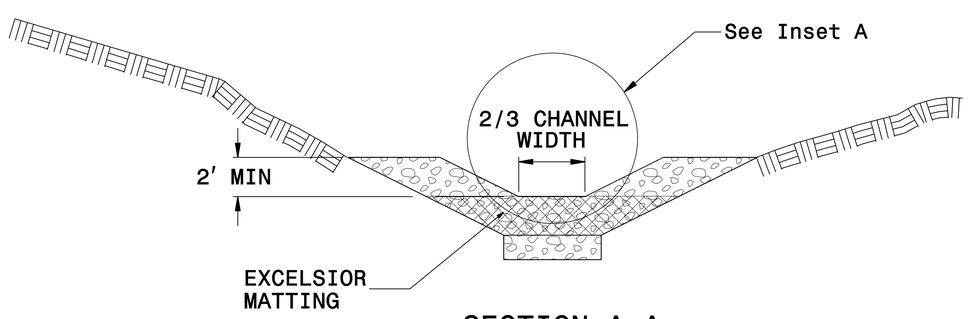

SECTION A-A

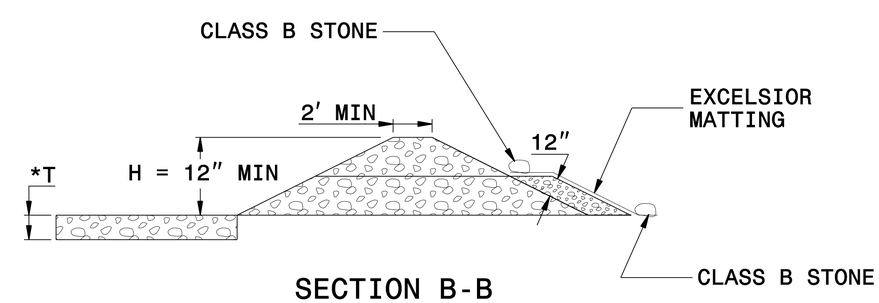

SECTION B-B

*T = 12" MIN., 18" MAX.

NOT TO SCALE

PROJECT REFERENCE NO.	SHEET NO.
BD-5111P	EC-2A
R/W SHEET NO.	
ROADWAY DESIGN ENGINEER	HYDRAULICS ENGINEER

MATTING INSTALLATION DETAIL

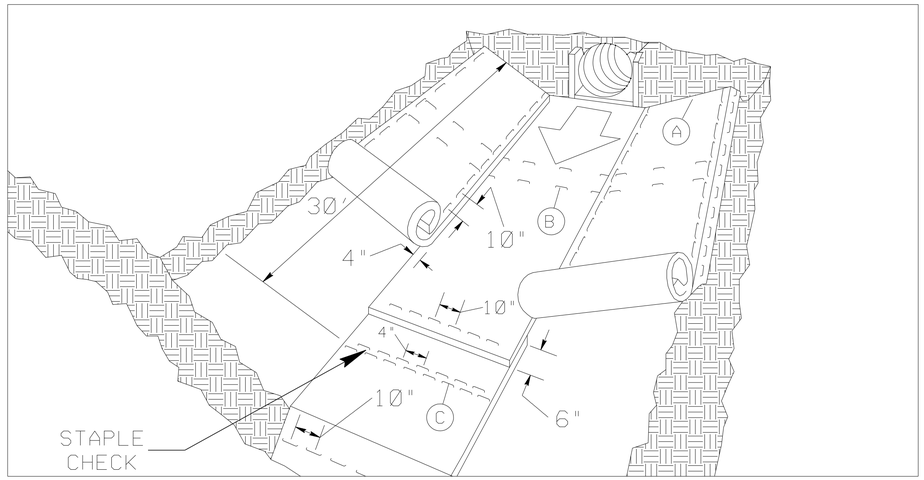

MATTING IN DITCHES

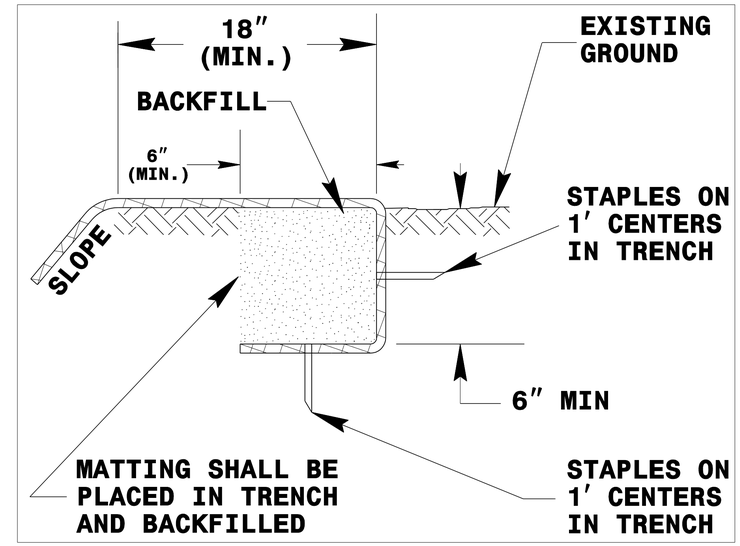

DIAGRAM (A)

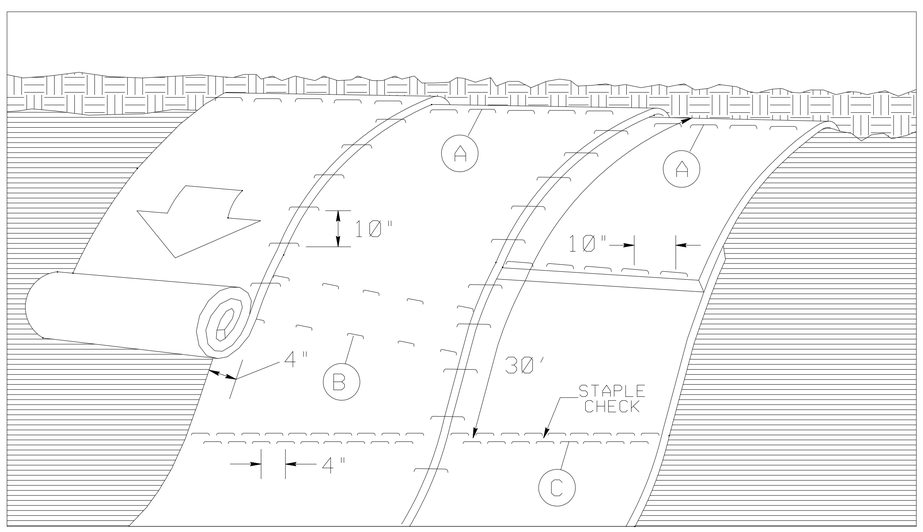

MATTING ON SLOPES

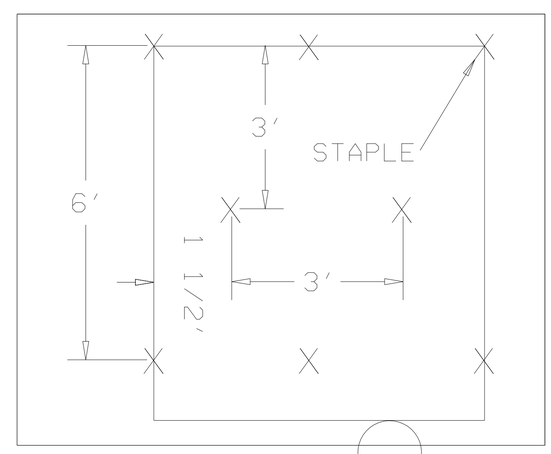

DIAGRAM (B)

STAPLE CHECK PATTERN

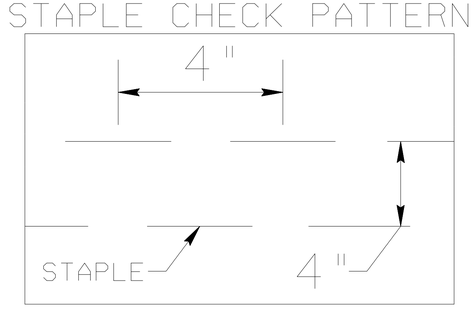

DIAGRAM (C)

NOTES:

THIS DETAIL APPLIES TO STRAW, EXCELSIOR, AND PERMANENT SOIL REINFORCEMENT MAT (PSRM) INSTALLATION.

STAPLES SHALL BE NO. 11 GAUGE STEEL WIRE FORMED INTO A "U" SHAPE WITH A MINIMUM THROAT WIDTH OF 1 INCH AND NOT LESS THAN 6 INCHES IN LENGTH.

NOT TO SCALE

PROJECT REFERENCE NO.	SHEET NO.
BD-5111P	EC-3
ROADWAY DESIGN ENGINEER	HYDRAULICS ENGINEER

DIVISION OF HIGHWAYS
STATE OF NORTH CAROLINA

SOIL STABILIZATION SUMMARY SHEET

MATTING FOR EROSION CONTROL

CONST SHEET NO.	LINE	FROM STATION	TO STATION	SIDE	ESTIMATE (SY)
4	-L-	14+00	14+50	RT	25
				SUBTOTAL	25
MISCELLANEOUS MATTING TO BE INSTALLED AS DIRECTED BY THE ENGINEER					5,870
				TOTAL	5,895
				SAY	5,895

MATTING FOR EROSION CONTROL

CONST SHEET NO.	LINE	FROM STATION	TO STATION	SIDE	ESTIMATE (SY)

PROJECT REFERENCE NO.	SHEET NO.
BD-5111P	EC-3A
ROADWAY DESIGN ENGINEER	HYDRAULICS ENGINEER

DIVISION OF HIGHWAYS
STATE OF NORTH CAROLINA

SOIL STABILIZATION TIMEFRAMES

SITE DESCRIPTION	STABILIZATION TIME	TIMEFRAME EXCEPTIONS
PERIMETER DIKES, SWALES, DITCHES AND SLOPES	7 DAYS	NONE
HIGH QUALITY WATER (HQW) ZONES	7 DAYS	NONE
SLOPES STEEPER THAN 3:1	7 DAYS	IF SLOPES ARE 10' OR LESS IN LENGTH AND ARE NOT STEEPER THAN 2:1, 14 DAYS ARE ALLOWED.
SLOPES 3:1 OR FLATTER	14 DAYS	7 DAYS FOR SLOPES GREATER THAN 50' IN LENGTH.
ALL OTHER AREAS WITH SLOPES FLATTER THAN 4:1	14 DAYS	NONE, EXCEPT FOR PERIMETERS AND HQW ZONES.

NOTE:
PLACE TEMPORARY ROCK SEDIMENT DAMS TYPE – B AND TEMPORARY ROCK SILT CHECKS TYPE – A AT DRAINAGE OUTLETS.

NOTE:
PERIMETER EROSION CONTROL MEASURES SHALL BE INSTALLED DURING CLEARING AND GRUBBING PHASE.

CLEARING AND GRUBBING
EROSION CONTROL FOR
CONSTRUCTION SHEET 4

PROJECT REFERENCE NO.	SHEET NO.
BD-5111P	EC-4
R/W SHEET NO.	
EROSION CONTROL DESIGN ENGINEER	

NAD 83/NSRS 2007

GRAPHIC SCALES

50 0 50 100

PLANS

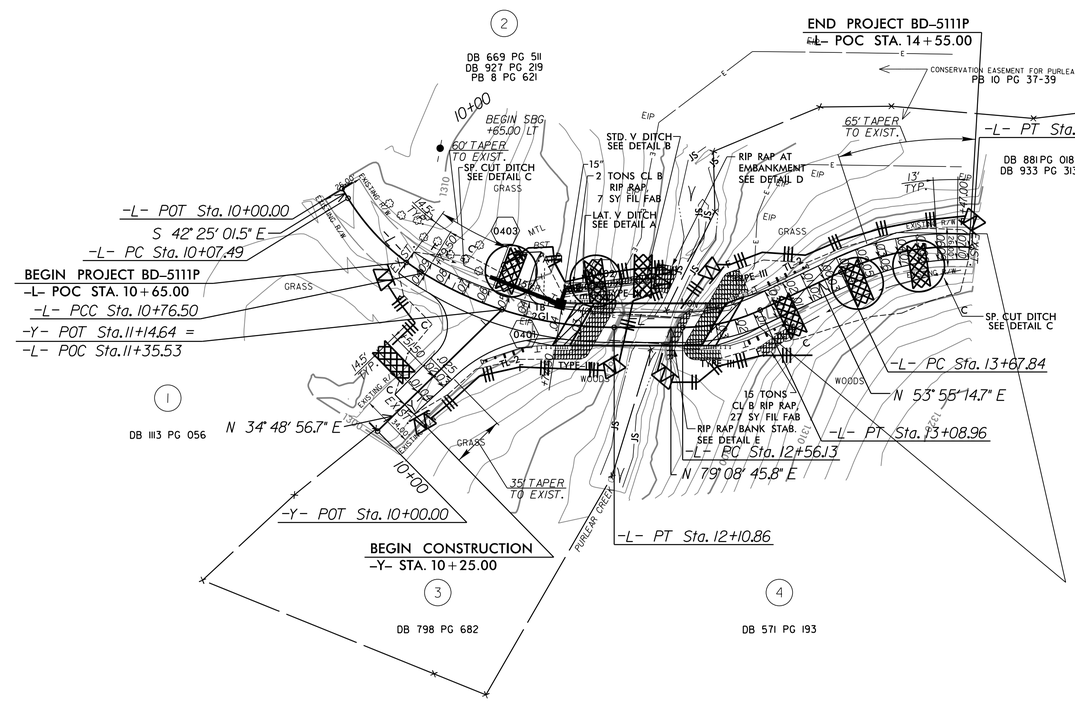

PROP. SBG 11+65.00 LT TO BEGIN BRIDGE

DETAIL A
LATERAL 'V' DITCH
(Not to Scale)

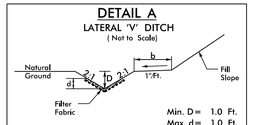

Min. D = 1.0 Ft.
Max. d = 1.0 Ft.
b = 2.0 Ft.
Type of Liner = CI B Rip-Rap

FROM STA. 11+75 TO STA. 12+00 LT

DETAIL B
STANDARD 'V' DITCH
(Not to Scale)

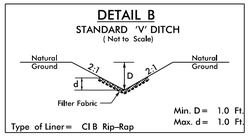

Min. D = 1.0 Ft.
Max. d = 1.0 Ft.
Type of Liner = CI B Rip-Rap

FROM STA. 12+00 TO STA. 12+38 LT

DETAIL C
SPECIAL CUT DITCH
(Not to Scale)

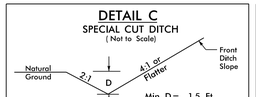

Min. D = 1.5 Ft.

FROM STA. 10+75 TO STA. 11+20 LT
FROM STA. 14+00 TO STA. 14+50 RT

DETAIL D
RIP RAP AT EMBANKMENT
(Not to Scale)

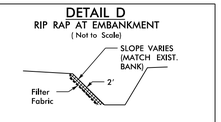

Type of Liner = CL II Rip-Rap w/Filter Fabric
See "Rip Rap Details" in Structures Plans for quantities

DETAIL E
RIP RAP BANK STABILIZATION
(Not to Scale)

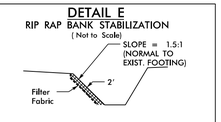

Type of Liner = CL II Rip-Rap w/Filter Fabric
See "Rip Rap Details" in Structures Plans for quantities

NOTES:

ANY DEVIATION FROM OPTIONS WILL REQUIRE PRIOR APPROVAL BY ENGINEER.

ADDITIONAL EROSION CONTROL DEVICES MAY NEED TO BE INSTALLED AS DIRECTED BY THE ENGINEER.

PLANS PREPARED BY :
RK&K
RUMMEL, KLEPPER & KAHL, LLP
900 RIDGEFIELD DRIVE SUITE 350
RALEIGH, NORTH CAROLINA 27609-3960
NC LICENSE NO. F-0112 • (919) 878-9560

5/10/202
R:\Hydraulics\CADD\PSH\bd5111P_ec_psh04_C&G.dgn

PROJECT REFERENCE NO.	SHEET NO.
BD-5111P	EC-5/SHT. 4
R/W SHEET NO.	
EROSION CONTROL DESIGN ENGINEER	

GRAPHIC SCALES

50 0 50 100

PLANS

Place Matting for Erosion Control on Slope as Work Allows.

INSTALL MATTING FOR EROSION CONTROL IN THE PROPOSED DITCH LINE FROM STA. 11+75 TO 12+43 LT AND STA. 14+00 TO 14+50 RT.

FINAL EROSION CONTROL FOR CONSTRUCTION SHEET 4

NAD 83/NSRS 2007

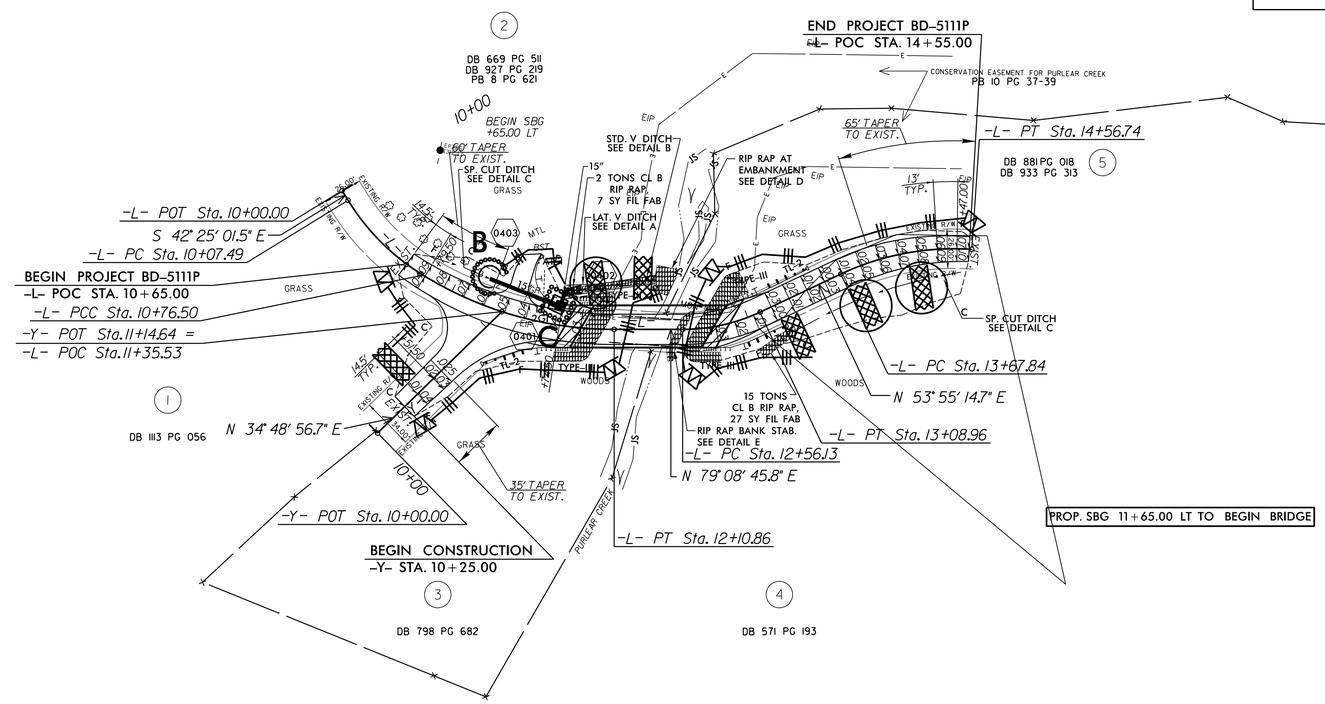

DETAIL A
LATERAL 'V' DITCH
(Not to Scale)

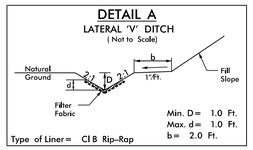

Min. D = 1.0 Ft.
Max. d = 1.0 Ft.
b = 2.0 Ft.

Type of Liner = CI B Rip-Rap

FROM STA. 11+75 TO STA. 12+00 LT

DETAIL B
STANDARD 'V' DITCH
(Not to Scale)

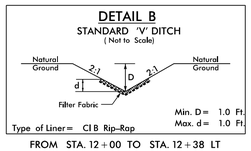

Min. D = 1.0 Ft.
Max. d = 1.0 Ft.

Type of Liner = CI B Rip-Rap

FROM STA. 12+00 TO STA. 12+38 LT

DETAIL C
SPECIAL CUT DITCH
(Not to Scale)

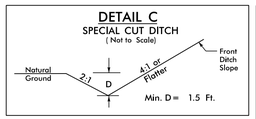

Min. D = 1.5 Ft.

FROM STA. 10+75 TO STA. 11+20 LT
FROM STA. 14+00 TO STA. 14+50 RT

DETAIL D
RIP RAP AT EMBANKMENT
(Not to Scale)

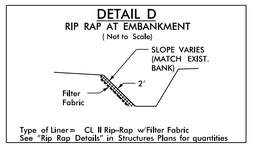

Type of Liner = CL II Rip-Rap w/Filter Fabric
See "Rip Rap Details" in Structures Plans for quantities

DETAIL E
RIP RAP BANK STABILIZATION
(Not to Scale)

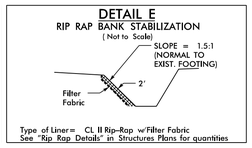

Type of Liner = CL II Rip-Rap w/Filter Fabric
See "Rip Rap Details" in Structures Plans for quantities

NOTES:

ANY DEVIATION FROM OPTIONS WILL REQUIRE PRIOR APPROVAL BY ENGINEER.

ADDITIONAL EROSION CONTROL DEVICES MAY NEED TO BE INSTALLED AS DIRECTED BY THE ENGINEER.

PLANS PREPARED BY :
RK&K
RUMMEL, KLEPPER & KAHL, LLP
900 RIDGEFIELD DRIVE SUITE 350
RALEIGH, NORTH CAROLINA 27609-3960
NC LICENSE NO. F-0112 • (919) 878-9560

5/10/2012
R:\Hydraulics\CADD\PSH\bd5111P_ec_psh05_final.dgn

STATE	STATE PROJECT REFERENCE NO.	SHEET NO.	TOTAL SHEETS
N.C.	BD–5111P	UO-1	2

STATE PROJ. NO.	F.A. PROJ. NO.	DESCRIPTION

STATE OF NORTH CAROLINA
DIVISION OF HIGHWAYS

WILKES COUNTY

LOCATION: SR 1317 (NEW HOPE RD.) OVER PURLEAR CREEK

TYPE OF WORK: UTILITIES BY OTHERS

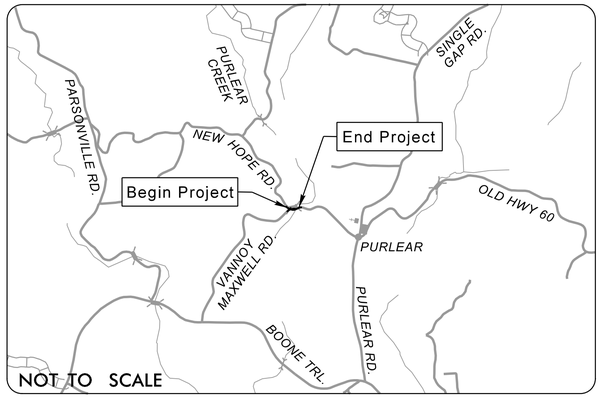

VICINITY MAP

NAD 83/NSRS 2007

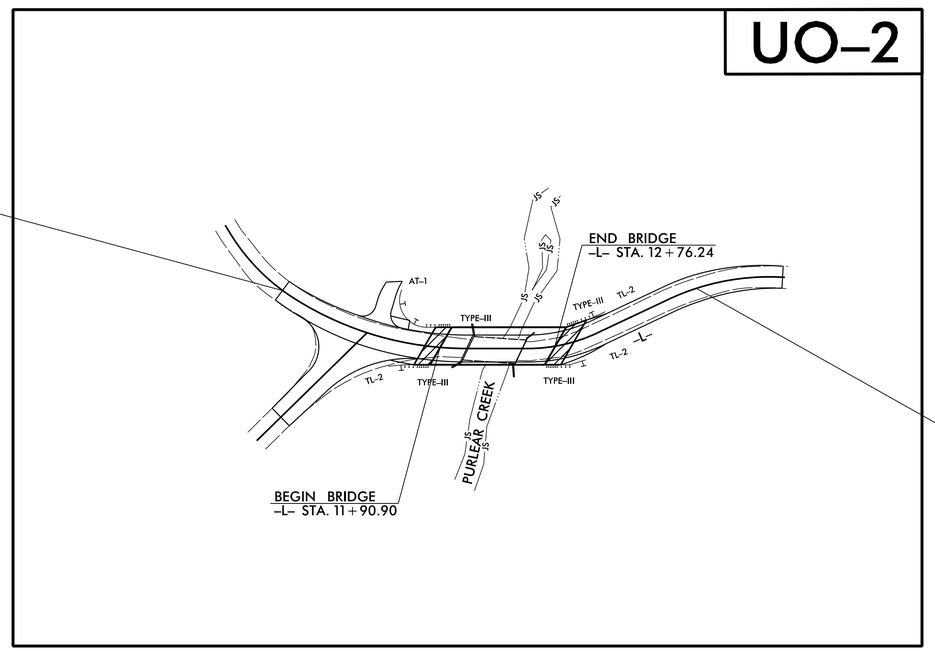

TIP PROJECT: BD–5111P

CONTRACT:

GRAPHIC SCALES

50 0 50 100
PLANS

50 0 50 100
PROFILE (HORIZONTAL)

10 0 10 20
PROFILE (VERTICAL)

DESIGN DATA

DESIGN SPEED = 35 mph
ADT = 310 (2006)

INDEX OF SHEETS

SHEET NO.	DESCRIPTION
UO–1	TITLE SHEET
UO–2	UTILITIES BY OTHERS PLAN SHEETS

UTILITY OWERS ON PROJECT

CenturyLink — (1) CENTURYLINK – TELEPHONE

Duke Energy — (2) DUKE ENERGY – POWER

(3) WEST WILKES WATER – WATER

PLANS PREPARED BY:

RK&K

RUMMEL, KLEPPER & KAHL, LLP
900 RIDGEFIELD DRIVE, SUITE 350
RALEIGH, NORTH CAROLINA 27609
NC LICENSE NO. F–0112
1–888–521–4455 OR 919–878–9560

PROJECT REFERENCE NO.	SHEET NO.
BD-5111P	U0-2
R/W SHEET NO.	
ROADWAY DESIGN ENGINEER	HYDRAULICS ENGINEER

NAD 83/NSRS 2007

GRAPHIC SCALES

50 0 50 100

PLANS

DESIGN SPEED = 35 mph
ADT = 310 (2006)

UTILITIES BY OTHERS

NOTE:

ALL PROPOSED UTILITY WORK SHOWN ON THIS SHEET WILL BE DONE BY OTHERS.

-L-

PI Sta 10+42.61	PI Sta 11+45.49	PI Sta 12+82.98	PI Sta 14+13.27
Δ = 26° 21' 41.5" (LT)	Δ = 32° 04' 31.2" (LT)	Δ = 25° 13' 31.2" (LT)	Δ = 29° 06' 28.0" (RT)
D = 38° 11' 49.9"	D = 23° 52' 23.7"	D = 47° 44' 47.3"	D = 32° 44' 25.6"
L = 69.01'	L = 134.36'	L = 52.83'	L = 88.90'
T = 35.13'	T = 68.99'	T = 26.85'	T = 45.43'
R = 150.00'	R = 240.00'	R = 120.00'	R = 175.00'
	SE = 0.04	SE = 0.03	
	V = 25 mph	V = 15 mph *	

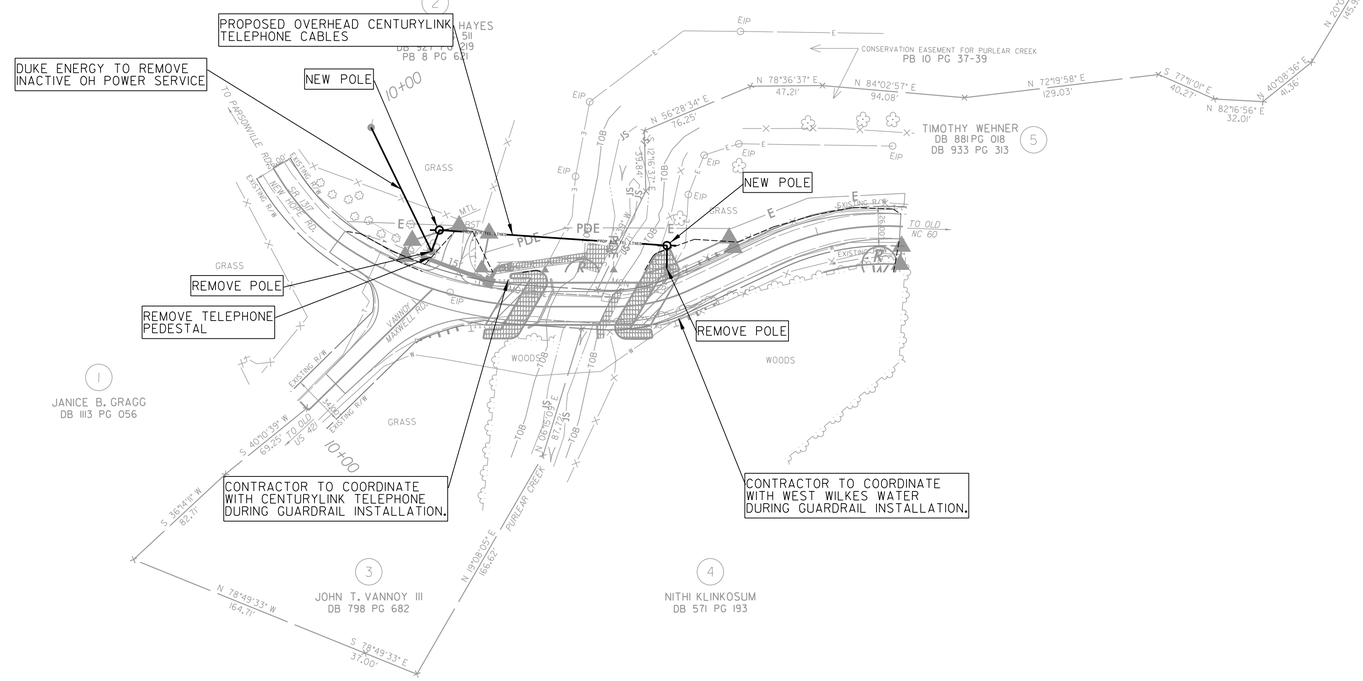

NOTES:

1. CONTRACTOR TO COORDINATE WITH CENTURYLINK TELEPHONE DURING GUARDRAIL INSTALLATION
2. DUKE ENERGY WILL REMOVE INACTIVE SERVICE LINE
3. CONTRACTOR TO COORDINATE WITH WEST WILKES WATER DURING GUARDRAIL INSTALLATION

UTILITY OWNERS ON PROJECT

CENTURYLINK – TELEPHONE
DUKE ENERGY – POWER
WEST WILKES WATER – WATER

PLANS PREPARED BY :
RK&K
RUMMEL, KLEPPER & KAHL, LLP
900 RIDGEFIELD DRIVE SUITE 350
RALEIGH, NORTH CAROLINA 27609-3960
NC LICENSE NO. F-0112 • (919) 878-9560

0 2.5 5	PROJ. REFERENCE NO.	SHEET NO.
	BD-5111P	X-1

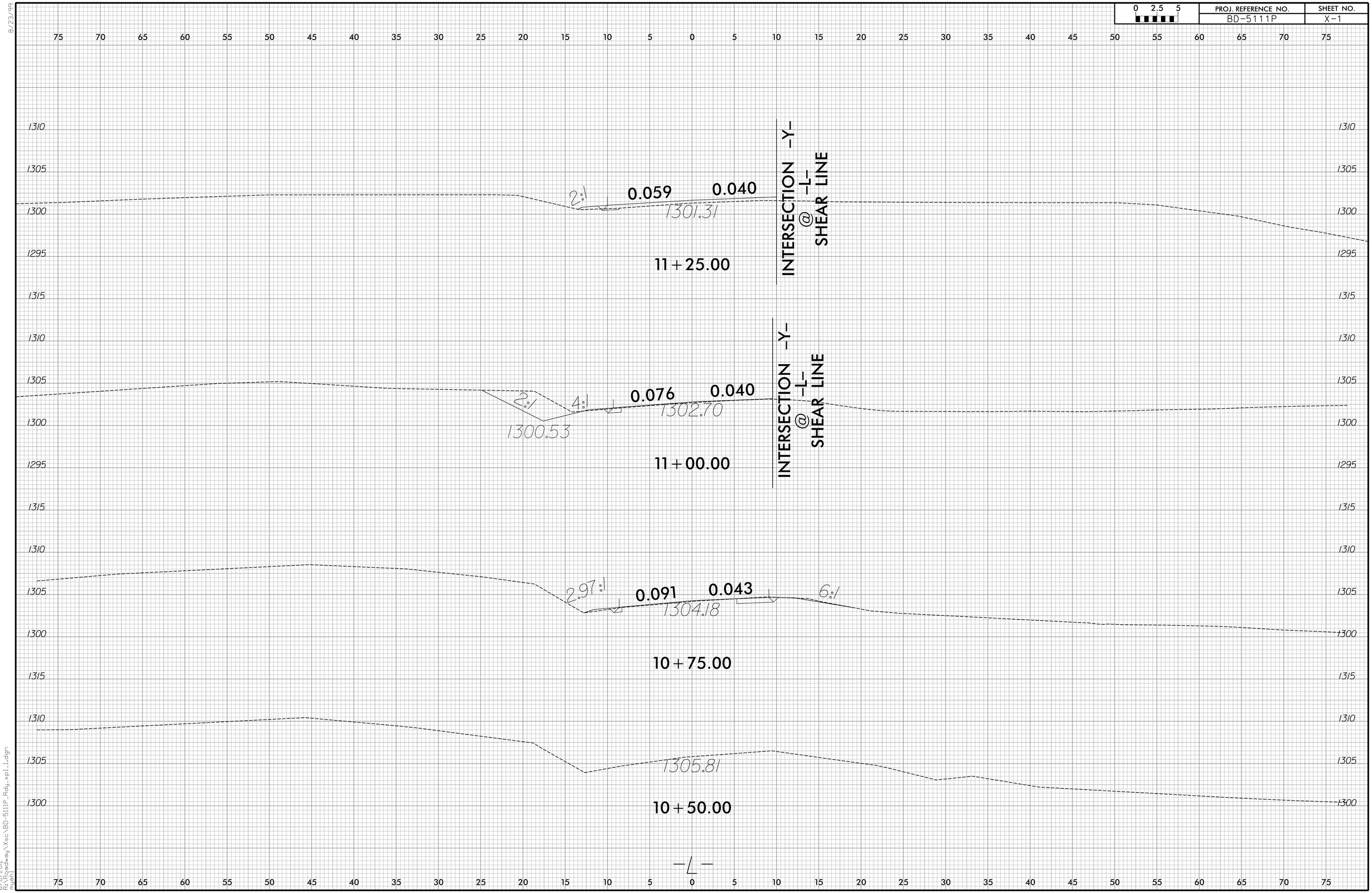

8/23/99

6/8/2012
R:\Roadway\Xsc\BD-5111P_Rdy_xpl_1.dgn
mjohn

0 2.5 5	PROJ. REFERENCE NO.	SHEET NO.
	BD-5111P	X-2

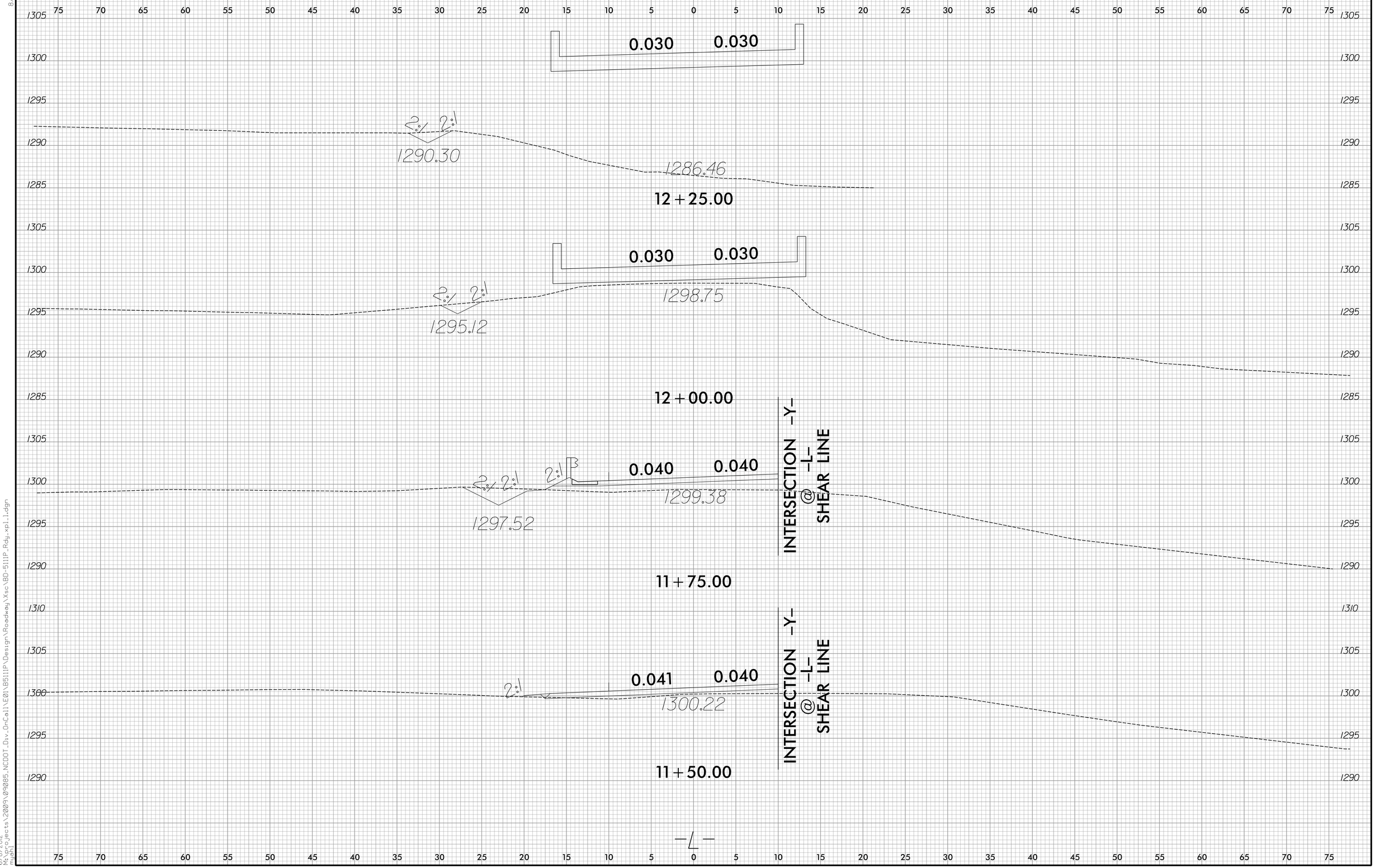

8/23/99

6/8/2012
N:\Projects\2009\09085_NCDOT_Div_OnCall\E01\B5111P\Design\Roadway\Xsc\BD-5111P_Rdy_xpl_1.dgn
mjahl

0 2.5 5	PROJ. REFERENCE NO.	SHEET NO.
	BD-5111P	X-3

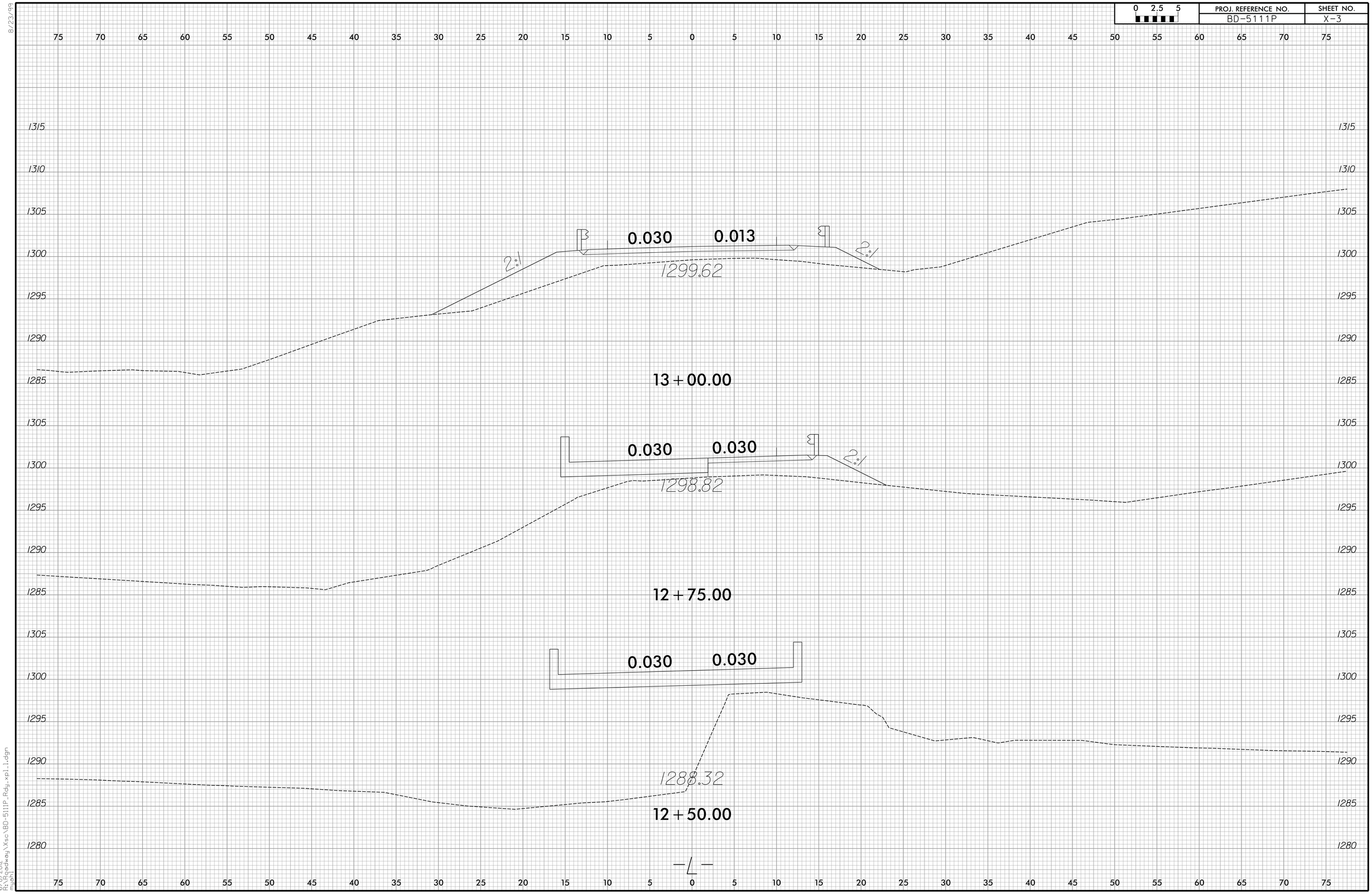

8/23/99

6/8/2012
R:\Roadway\Xsc\BD-5111P_Rdy_xs11.dgn
mughi

0 2.5 5	PROJ. REFERENCE NO.	SHEET NO.
	BD-5111P	X-4

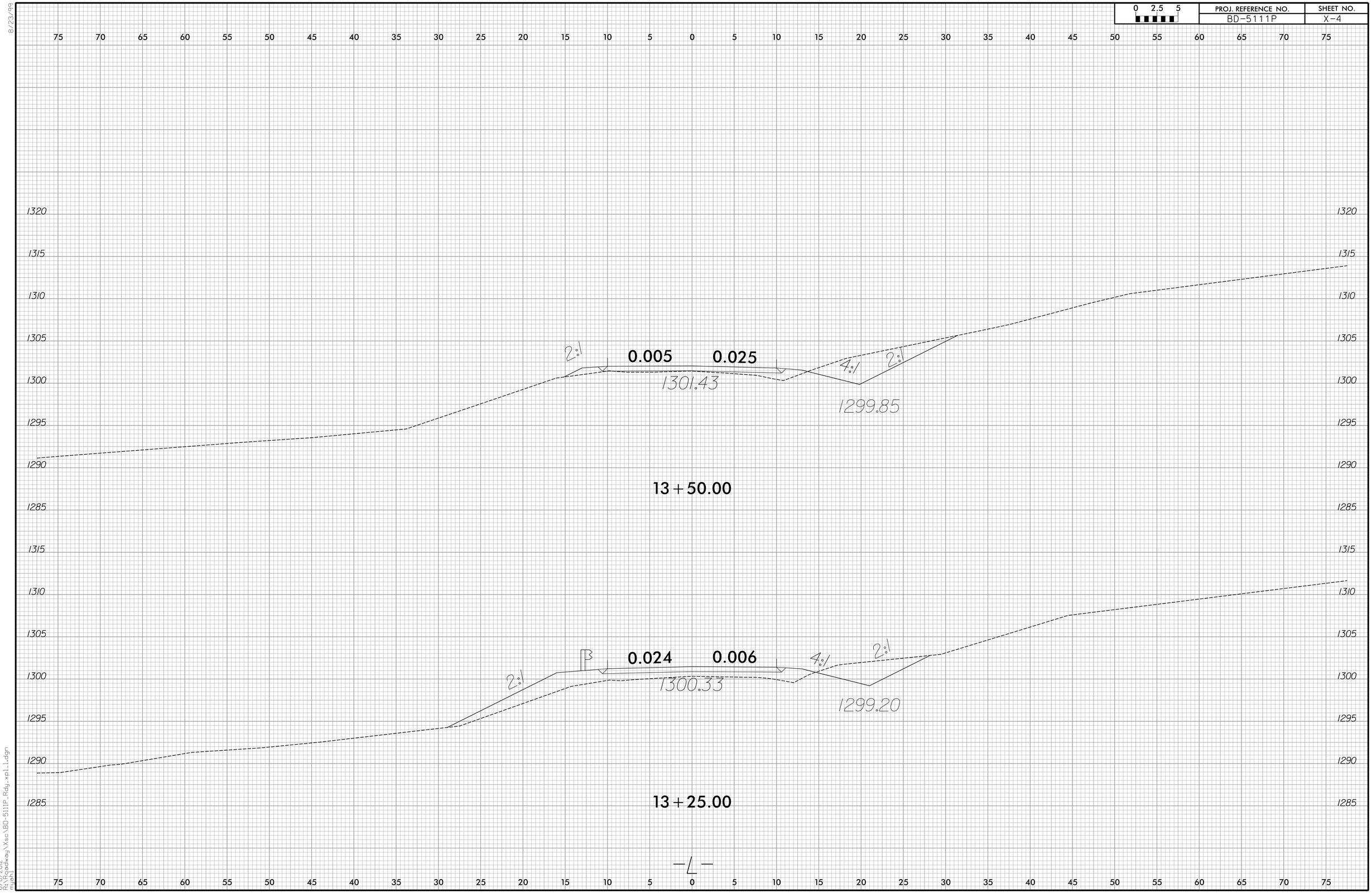

8/23/99

6/8/2012
R:\Roadway\Xsc\BD-5111P_Rdy_xpl_1.dgn
mlahl

0 2.5 5	PROJ. REFERENCE NO.	SHEET NO.
	BD-5111P	X-5

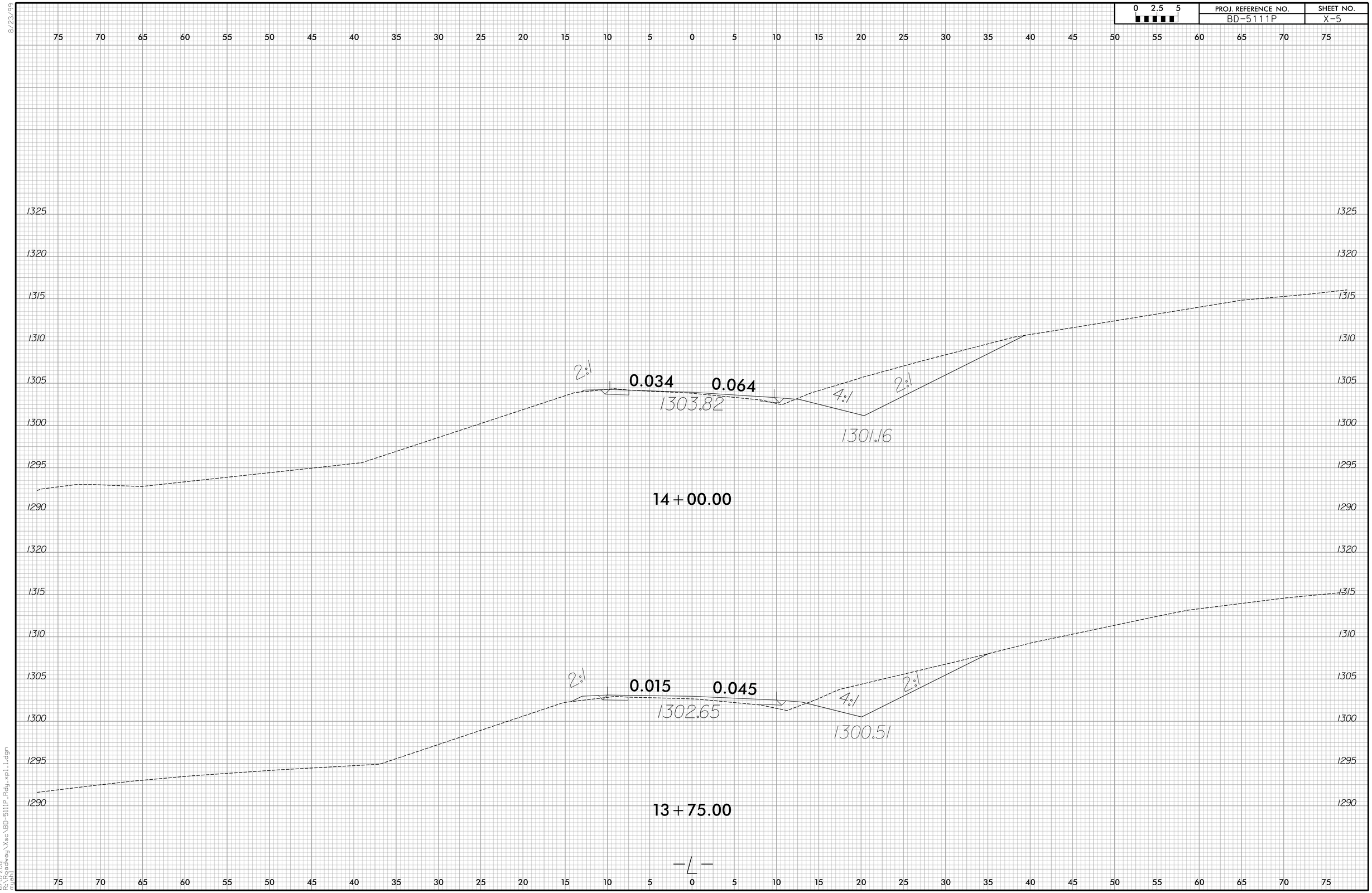

8/23/99

6/8/2012
R:\Roadway\Xsc\BD-5111P_Rdy_xpl_1.dgn
mlahl

0 2.5 5	PROJ. REFERENCE NO.	SHEET NO.
	BD-5111P	X-6

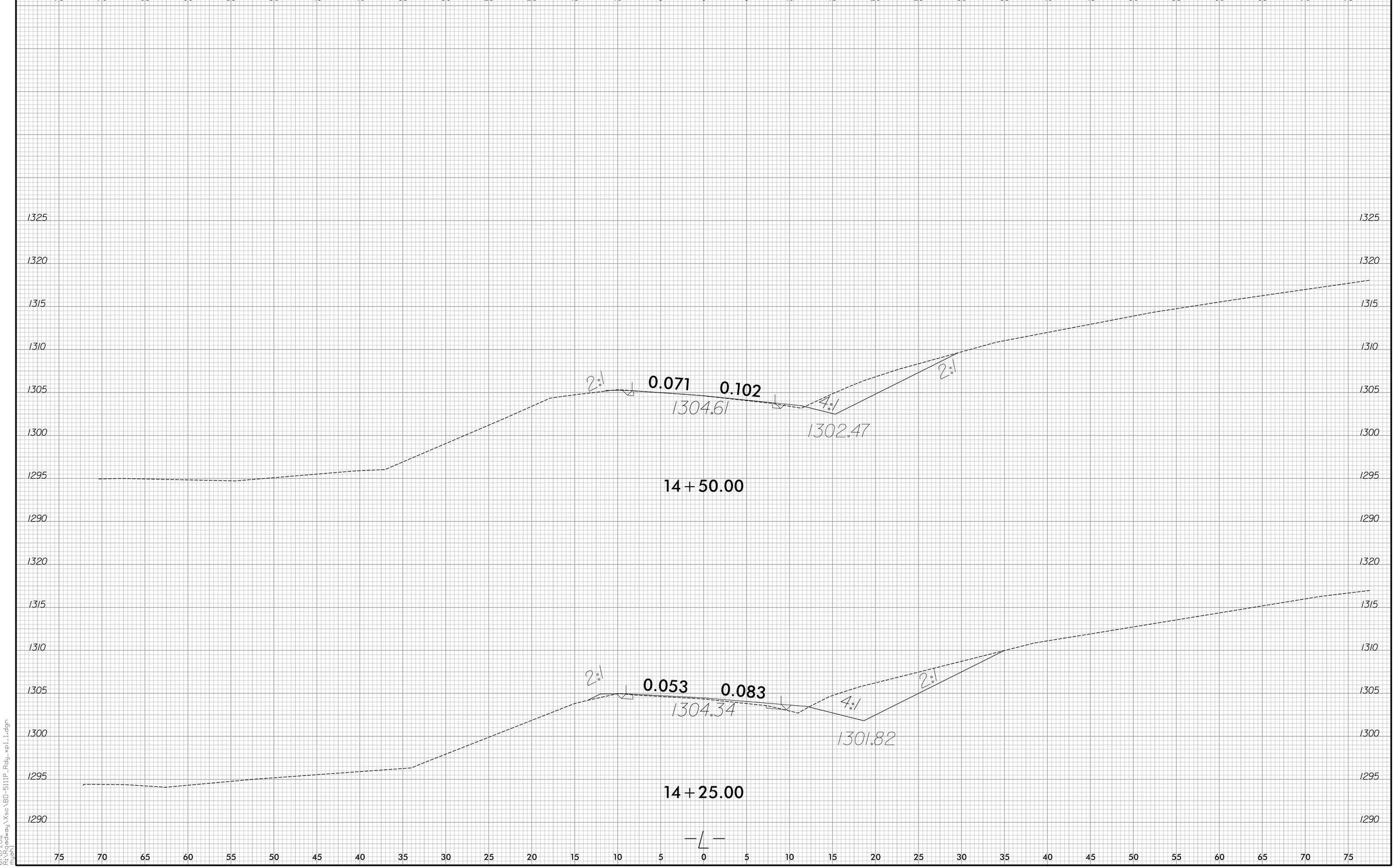

8/23/99

6/8/2012
R:\Roadway\Xsc\BD-5111P_Rdy_xpl_1.dgn
mjoh

0 2.5 5	PROJ. REFERENCE NO.	SHEET NO.
	BD-5111P	X-7

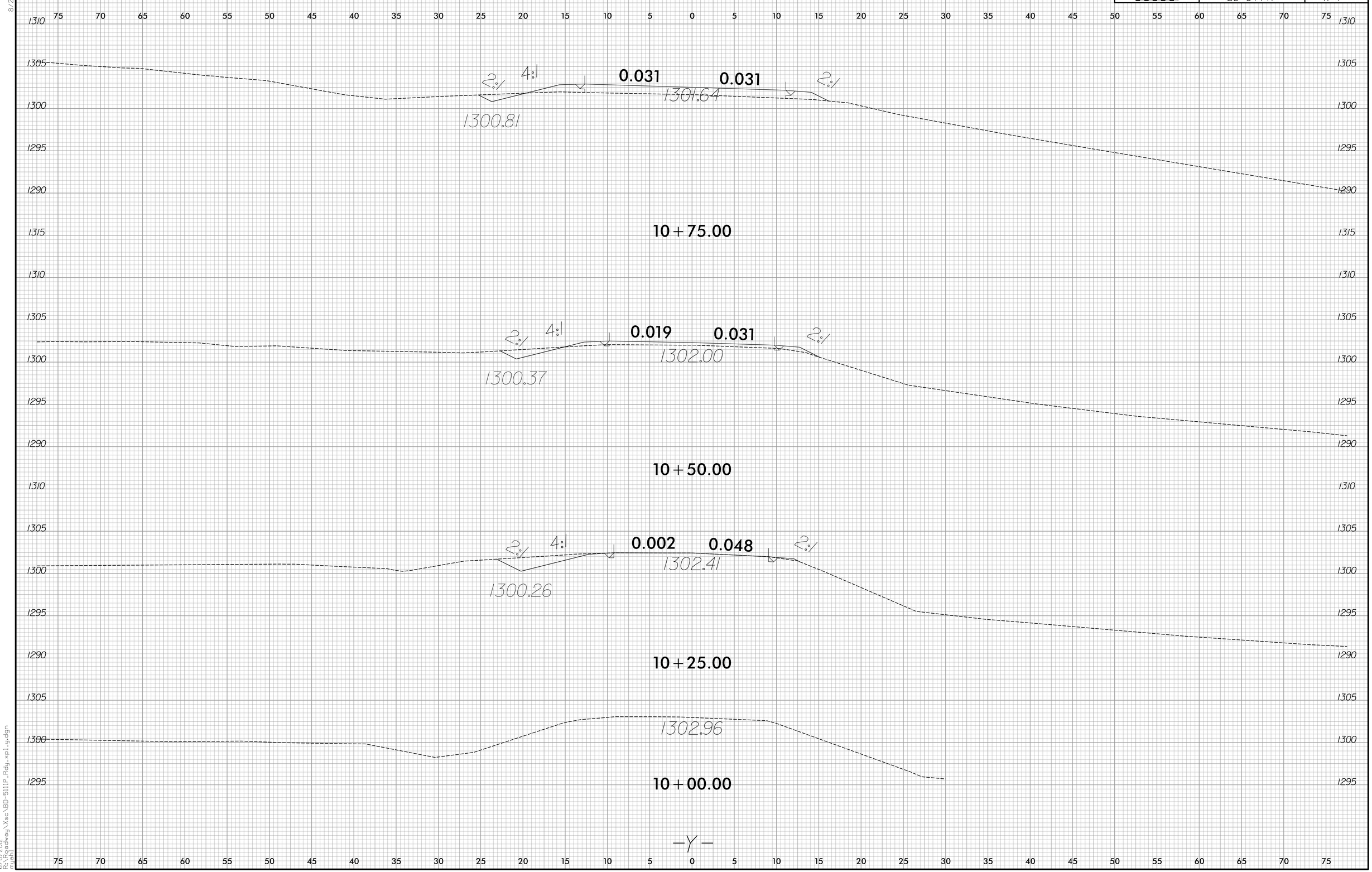

8/23/99

6/8/2012
R:\Roadway\Xsc\BD-5111P_Rdy_xpl_y.dgn
mah

PROJ. REFERENCE NO.	SHEET NO.
BD-5111P	X-8

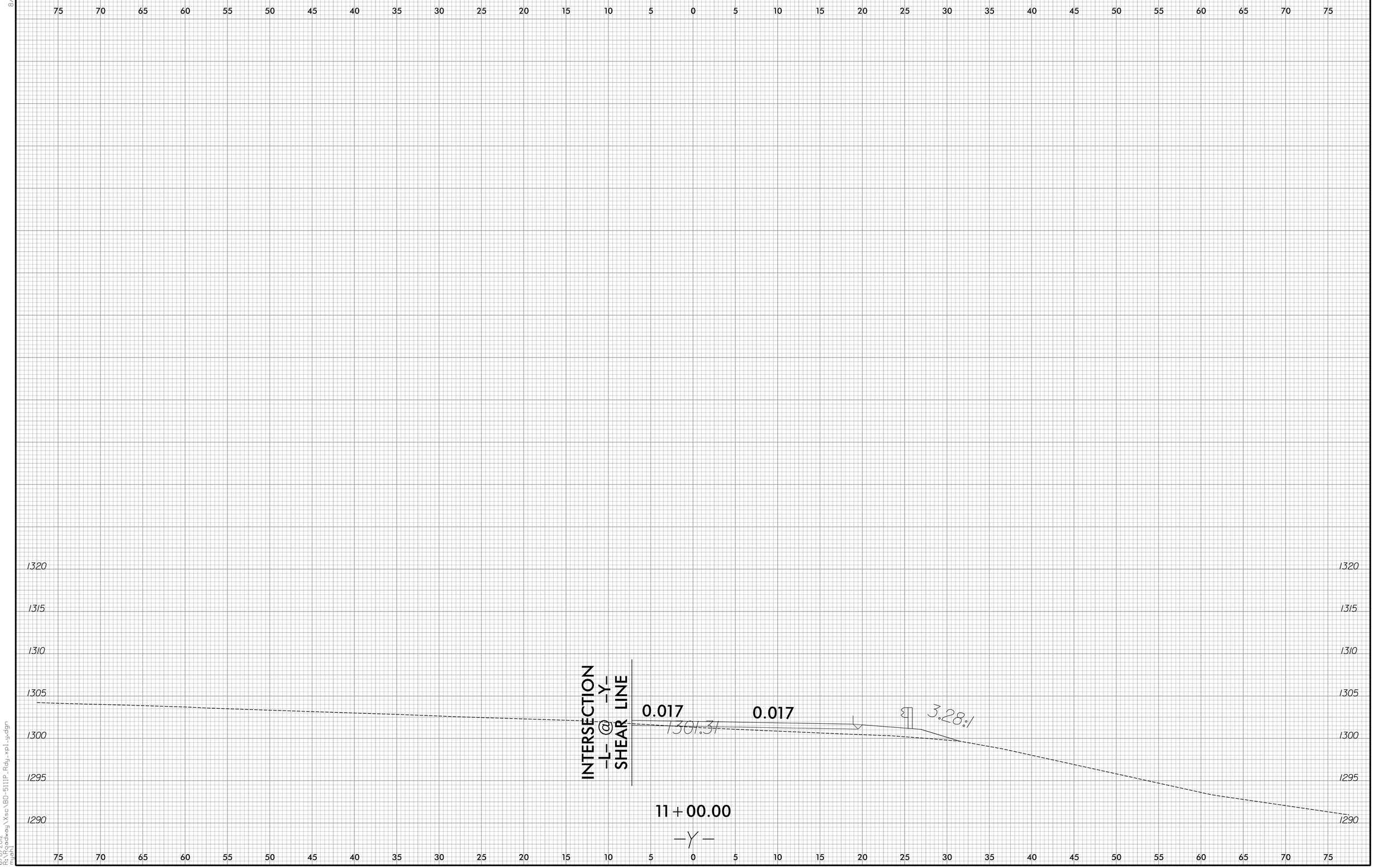

8/23/99

6/8/2012
R:\Roadway\Xsc\BD-5111P_Rdy_xpl_y.dgn
myahl