PROJECT NO.	SHEET NO.	TOTAL NO.
11CR.10141.20, 11CR.10951.20		

SUMMARY OF QUANTITIES

PROJECT NO	COUNTY	MAP NO	ROUTE	DESCRIPTION	TYP NO	FINAL SURFACE TESTING REQUIRED	LENGTH MI	WIDTH FT	3" MILLING SY	1½" MILLING SY	SURFACE COURSE, S9.5C TONS	SURFACE COURSE, SF9.5A TONS	ASPHALT BINDER FOR PLANT MIX TONS	PATCHING EXISTING PAVEMENT TONS	ADJ. OF MANHOLES EA	ADJ. OF METER OR VALVE BOX EA	INDUCTIVE LOOP LF	LEAD-IN CABLE LF
11CR.10141.20	Caldwell	1	US 221	FROM AVERY COUNTY LINE TO WATAUGA COUNTY LINE	1	NO	2.07	18	21,859			2,116	142	400				
TOTAL FOR PROJ NO. 11CR.10141.20							**2.07**		**21,859**			**2,116**	**142**	**400**				
11CR.10951.20	Watauga	2	NC 105	FROM SR 1107 TO DOGWOOD STREET	2	NO	0.79	60		28,700	2,391		141	50	2	2	1,000	100
11CR.10951.20	Watauga	3	NC 105	DOGWOOD STREET TO SR 1625	2	NO	0.7	48		20,262	1,710		101	50	6	1		
11CR.10951.20	Watauga	4	NC 105	FROM SR 1625 TO US 221	2	NO	0.63	48		21,250	1,794		106	50	2	5	1,000	100
TOTAL FOR PROJ NO. 11CR.10951.20							**2.12**			**70,212**	**5,895**		**348**	**150**	**10**	**8**	**2,000**	**200**
GRAND TOTAL							**4.19**		**21,859**	**70,212**	**5,895**	**2,116**	**490**	**550**	**10**	**8**	**2,000**	**200**

PROJECT NO.	SHEET NO.	TOTAL NO.
11CR.10141.20, 11CR.10951.20		

THERMOPLASTIC AND PAINT QUANTITIES

PROJECT NO	COUNTY	MAP NO	ROUTE	DESCRIPTION	LENGTH	WIDTH	4810000000-E 4" WHITE PAINT LF	4810000000-E 4" YELLOW PAINT LF	4820000000-E 8" YELLOW PAINT LF	4820000000-E 8" WHITE PAINT LF	4835000000-E 24" WHITE PAINT LF	4840000000-N PAINT CHARACTER EA	4840000000-N PAINT MSG SCHOOL EA	4840000000-N PAINT MSG ONLY EA	4845000000-N PAINT STR ARROW EA	4845000000-N PAINT LT ARROW EA	4845000000-N PAINT RT ARROW EA	4905000000-N SNOW PLOWABLE MARKERS EA
11CR.10141.20	Caldwell	1	US 221	FROM AVERY COUNTY LINE TO WATAUGA COUNTY LINE	2.07	18	43,720	43,720										136
TOTAL FOR PROJ NO. 11CR.10141.20					**2.07**		**43,720**	**43,720**										**136**
							87,440											
11CR.10951.20	Watauga	2	NC 105	FROM SR 1107 TO DOGWOOD STREET	0.79	60	5,000	22,000	84		225	8.00	6		40	18	18	250
11CR.10951.20	Watauga	3	NC 105	DOGWOOD STREET TO SR 1625	0.7	48	3,696	16,000	120	96	48							150
11CR.10951.20	Watauga	4	NC 105	FROM SR 1625 TO US 221	0.63	48	4,100	13,000		500	288			24	18	16	6	150
TOTAL FOR PROJ NO. 11CR.10951.20					**2.12**		**12,796**	**51,000**	**204**	**596**	**561**	**8**	**6**	**24**	**58**	**34**	**24**	**550**
							63,796		**800**			**38**			**116**			
GRAND TOTAL					**4.19**		**56,516**	**94,720**	**204**	**596**	**561**	**8**	**6**	**24**	**58**	**34**	**24**	**686**
							151,236		**800**			**38**			**116**			

PROJECT REFERENCE NO.	SHEET NO.
11CRJ0141.20	

STATE OF NORTH CAROLINA
DIVISION OF HIGHWAYS

CALDWELL COUNTY

PRIMARY ASPHALT RESURFACING

MAP #1 US 221
FROM AVERY COUNTY LINE
TO WATAUGA COUNTY LINE

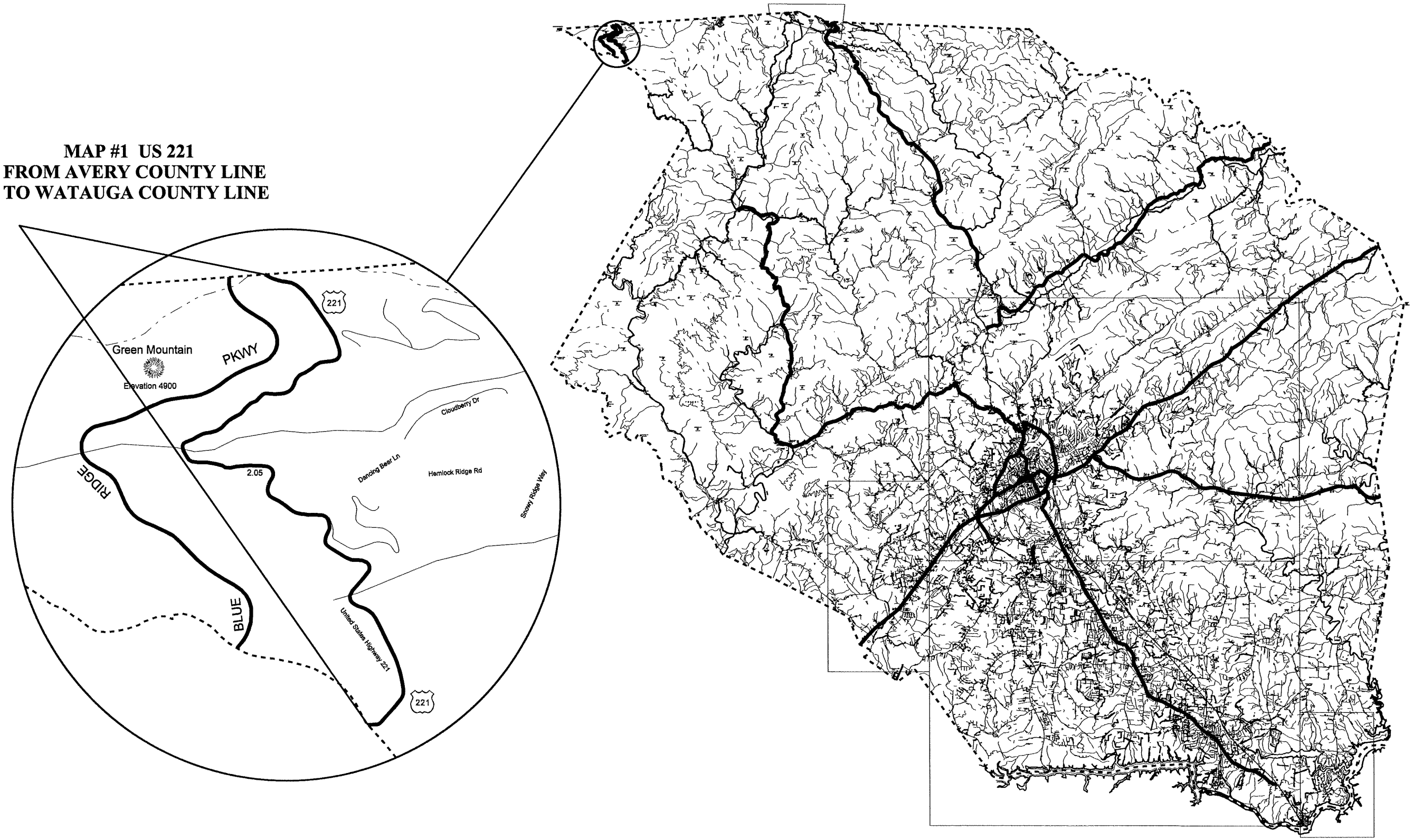

8/17/99

29-JUN-2012 07:53
C:\My Documents\Project Manager\Contracts\Division\DK00066 - Watauga Primary Resurfacing\2013 Watauga Resurfacing Maps - Primary.dgn

PROJECT REFERENCE NO.	SHEET NO.
IICRJ0951.20	

STATE OF NORTH CAROLINA
DIVISION OF HIGHWAYS

WATAUGA COUNTY

PRIMARY ASPHALT RESURFACING

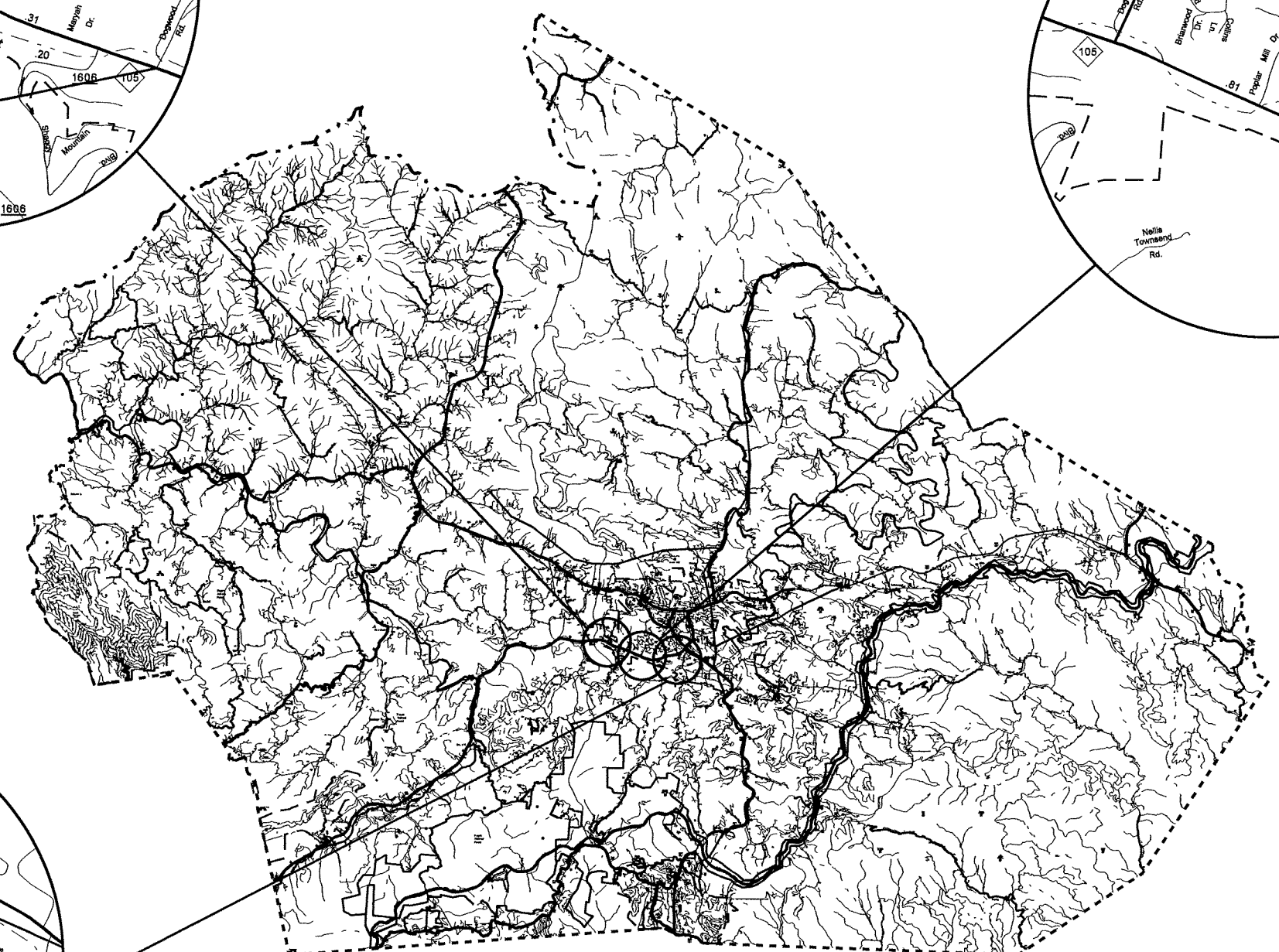

MAP #2 NC 105
FROM SR 1107
TO DOGWOOD STREET

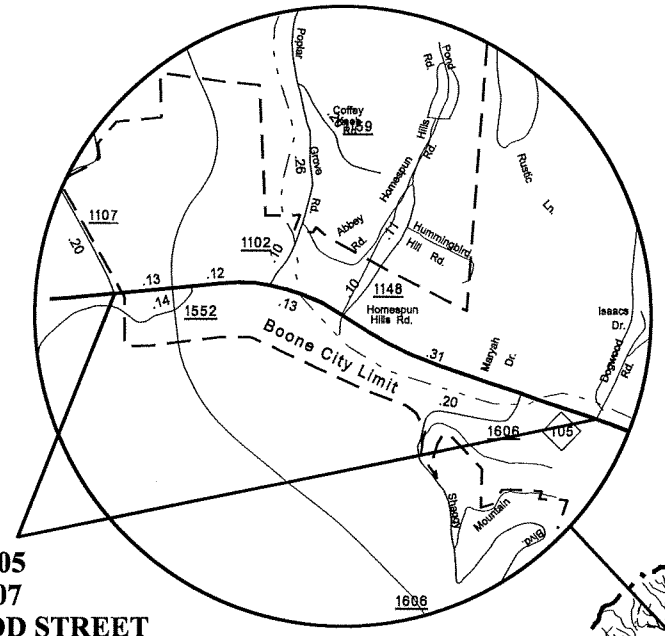

MAP #3 NC 105
FROM DOGWOOD STREET
TO SR 1625

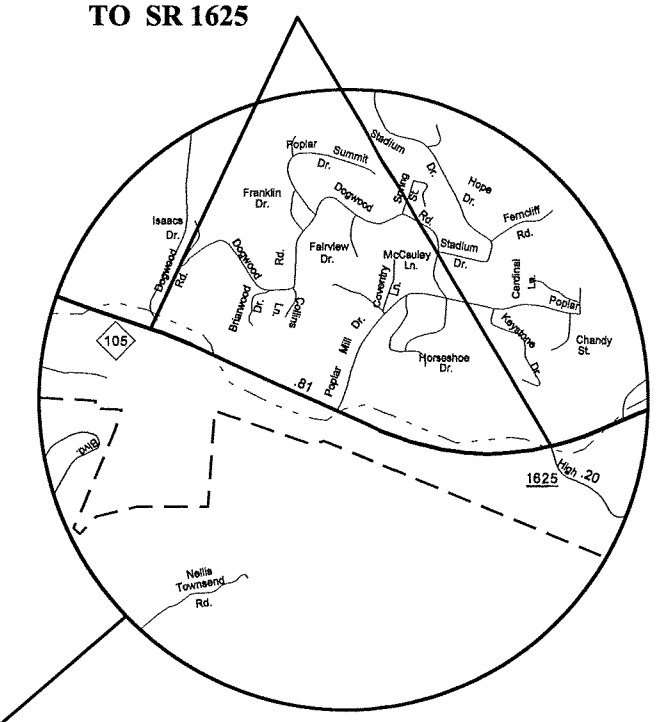

MAP #4 NC 105
FROM SR 1625 TO US 221

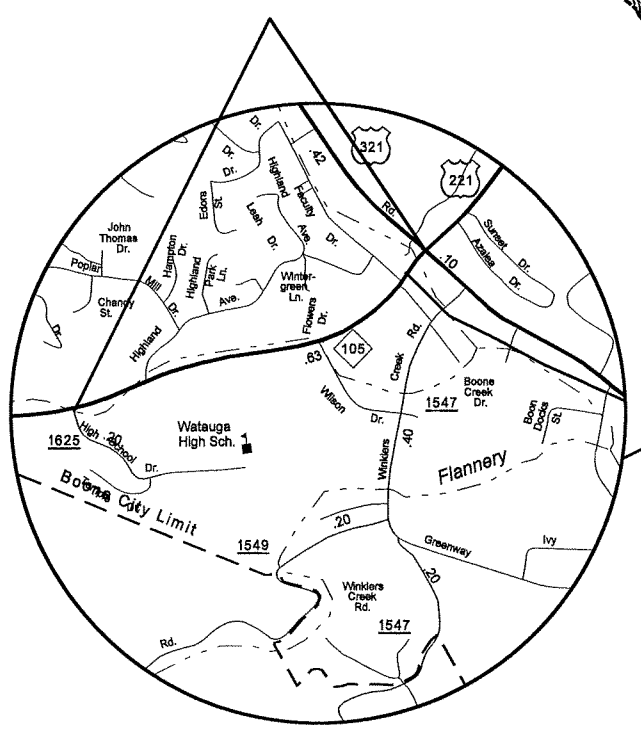

8/17/99
23-JUN-2012 07:44
C:\Mu Documents\Project Manager\Contracts\Division\DK00066 - Watauga Primary Resurfacing\2013 Watauga Resurfacing Maps - Primary.dgn

8/17/99

PROJECT REFERENCE NO.	SHEET NO.
11CRJ0951J9, 11CRJ0141J20	

* POSSIBLE SPOT PATCHING OF MILLED SURFACE AS DIRECTED BY ENGINEER
* MILL & RESURFACE ENTIRE ROADWAY

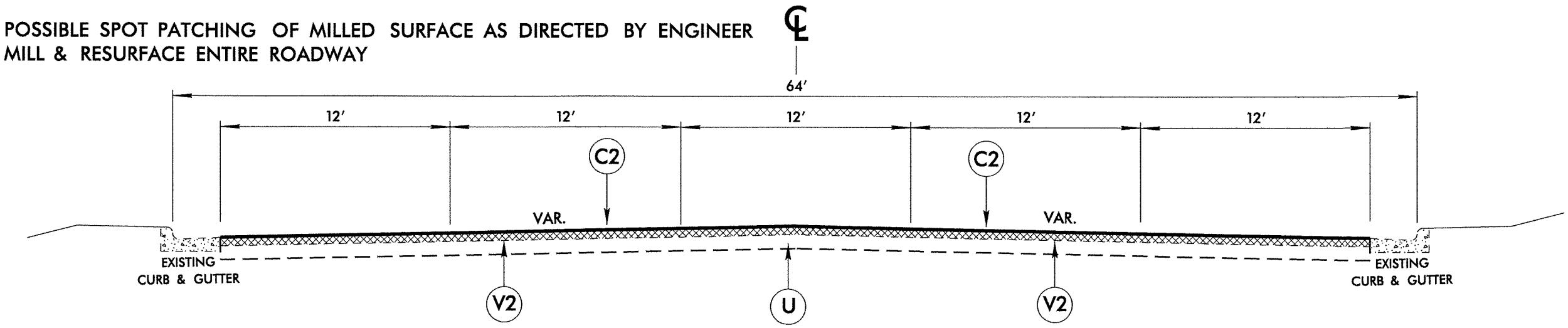

TYPICAL SECTION NO. 2

MAP 2 – NC 105 FROM SR 1107 TO DOGWOOD STREET

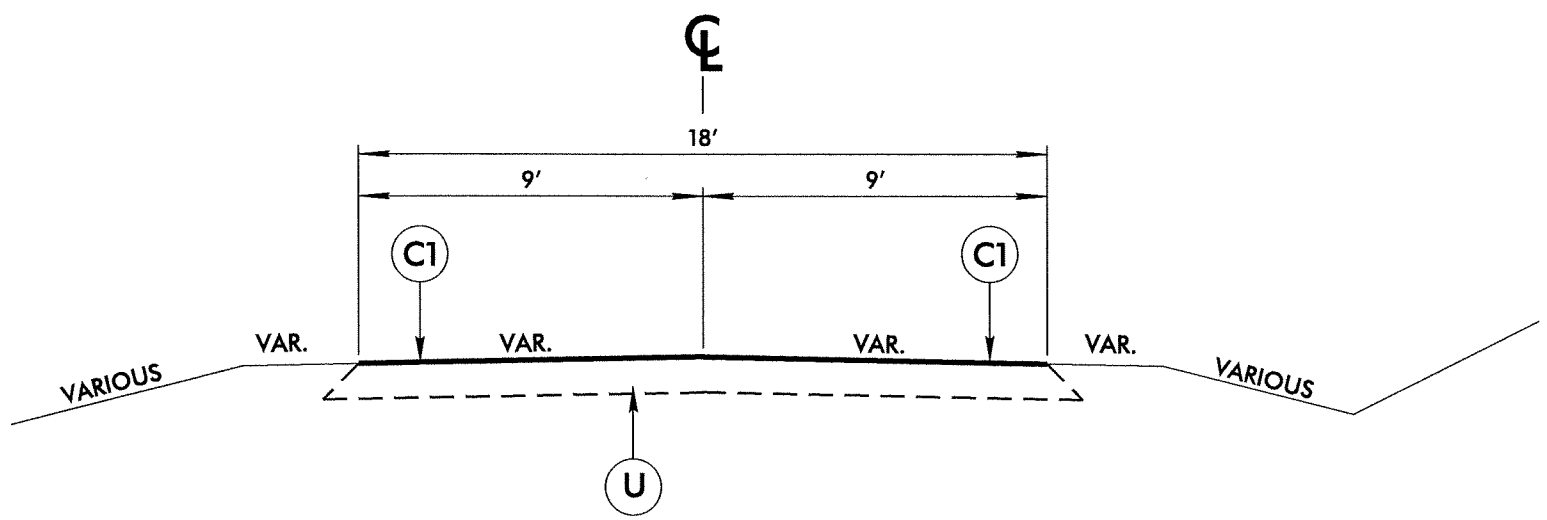

TYPICAL SECTION NO. 1

MAP 1 – US 221 FROM AVERY COUNTY LINE TO WATAUGA COUNTY LINE

PAVEMENT SCHEDULE	
C1	PROP. APPROX. 1½" ASPHALT CONCRETE SURFACE COURSE, TYPE SF9.5A, AT AN AVERAGE RATE OF 165 LBS. PER SQ. YD.
C2	PROP. APPROX. 1½" ASPHALT CONCRETE SURFACE COURSE, TYPE S9.5C, AT AN AVERAGE RATE OF 168 LBS. PER SQ. YD.
U	EXISTING PAVEMENT
V1	MILLING OF EXISTING ASPHALT PAVEMENT AT DEPTH OF 3"
V2	MILLING OF EXISTING ASPHALT PAVEMENT AT DEPTH OF 1½"

WATAUGA AND CALDWELL COUNTIES
PRIMARY AND SECONDARY RESURFACING

DIVISION 11

REVISIONS	INIT.	DATE

N.C. DEPARTMENT of TRANSPORTATION
DIVISION of HIGHWAYS
DIVISION ELEVEN

DIVISION OF HIGHWAYS · DIVISION 11 · STATE OF NORTH CAROLINA · DEPARTMENT OF TRANSPORTATION

SCALE:	N/A	DATE:	03/2012
PREPARED BY:	H.ROMINGER		
REVIEWED BY:	J. L. LAWS		
REVIEWED BY:			

8/17/99

PROJECT REFERENCE NO.	SHEET NO.
11CRJ0951.19, 11CRJ0141.20	

* POSSIBLE SPOT PATCHING OF MILLED SURFACE AS DIRECTED BY ENGINEER
* MILL & RESURFACE ENTIRE ROADWAY

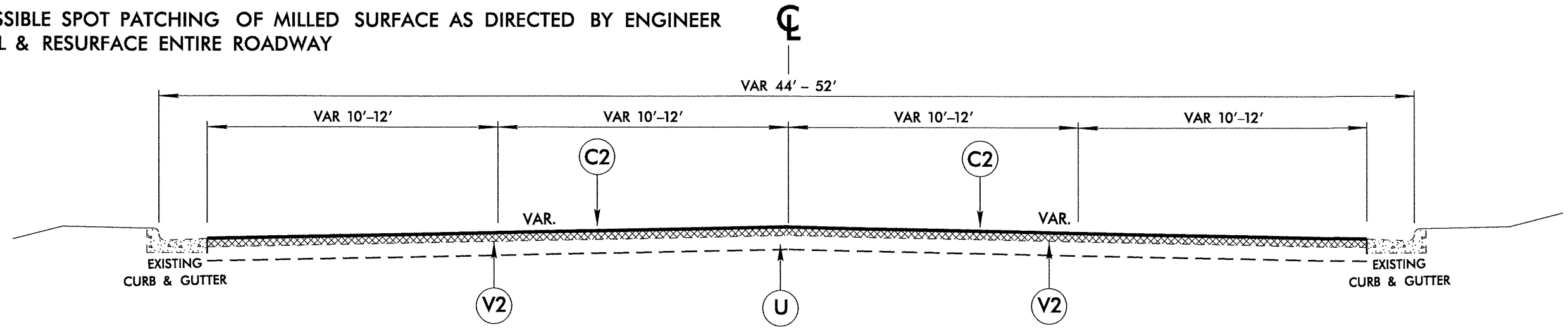

TYPICAL SECTION NO. 4

MAP 4 – NC 105 FROM SR 1625 TO US 221

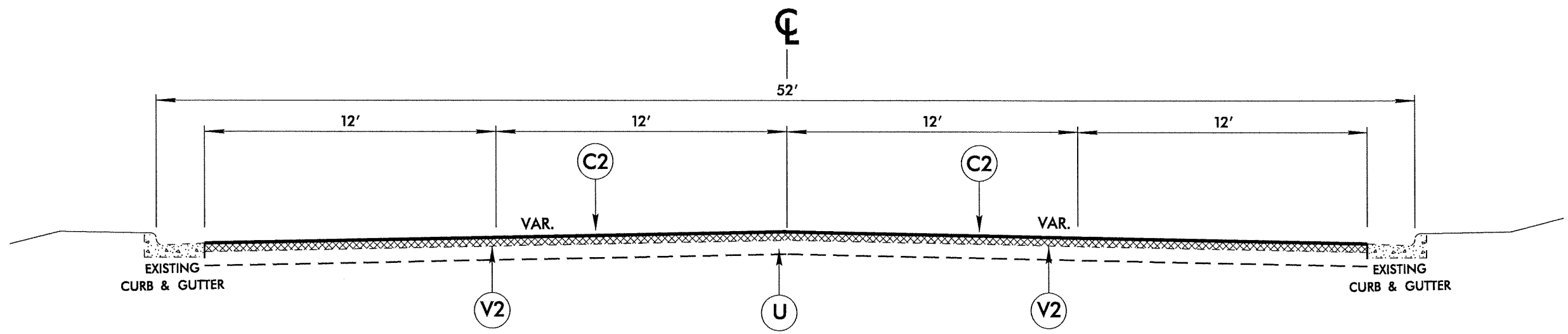

TYPICAL SECTION NO. 3

MAP 3 – NC 105 FROM DOGWOOD STREET TO SR 1625

PAVEMENT SCHEDULE	
C1	PROP. APPROX. 1½″ ASPHALT CONCRETE SURFACE COURSE, TYPE SF9.5A, AT AN AVERAGE RATE OF 165 LBS. PER SQ. YD.
C2	PROP. APPROX. 1½″ ASPHALT CONCRETE SURFACE COURSE, TYPE S9.5C, AT AN AVERAGE RATE OF 168 LBS. PER SQ. YD.
U	EXISTING PAVEMENT
V1	MILLING OF EXISTING ASPHALT PAVEMENT AT DEPTH OF 3″
V2	MILLING OF EXISTING ASPHALT PAVEMENT AT DEPTH OF 1½″

WATAUGA AND CALDWELL COUNTIES
PRIMARY AND SECONDARY RESURFACING

DIVISION II

REVISIONS	INIT.	DATE

N.C. DEPARTMENT of TRANSPORTATION
DIVISION of HIGHWAYS
DIVISION ELEVEN

DIVISION OF HIGHWAYS · DIVISION 11 · STATE OF NORTH CAROLINA · DEPARTMENT OF TRANSPORTATION

SCALE:	N/A	DATE:	03/2012
PREPARED BY:	H.ROMINGER		
REVIEWED BY:	J. L. LAWS		
REVIEWED BY:			