DocuSign Envelope ID: 50DF9C49-12F0-45B7-884F-CCDE79AB00EF

09/08/99

PROJECT: 17BP.11.R.161

CONTRACT: DK000363

See Sheet 1A For Index of Sheets

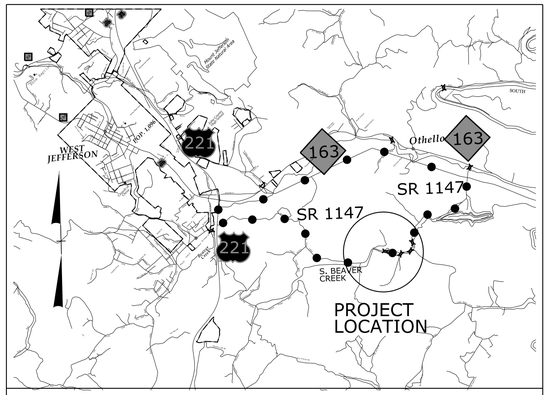

VICINITY MAP (N.T.S.)

OFF SITE DETOUR

STATE OF NORTH CAROLINA
DIVISION OF HIGHWAYS

ASHE COUNTY

STATE	STATE PROJECT REFERENCE NO.	SHEET NO.	TOTAL SHEETS
N.C.	17BP.11.R.161	1	

STATE PROJ. NO.	F. A. PROJ. NO.	DESCRIPTION
17BP.11.PE.161		PE
17BP.11.ROW.161		R/W & UTILITIES
17BP.11.R.161		CONST.

LOCATION: STRUCTURE NO. 040015 OVER SOUTH BEAVER CREEK ON SR 1147 (NETTLE KNOB ROAD)

TYPE OF WORK: GRADING, DRAINAGE, PAVING AND STRUCTURE

NAD 83/NA 2011

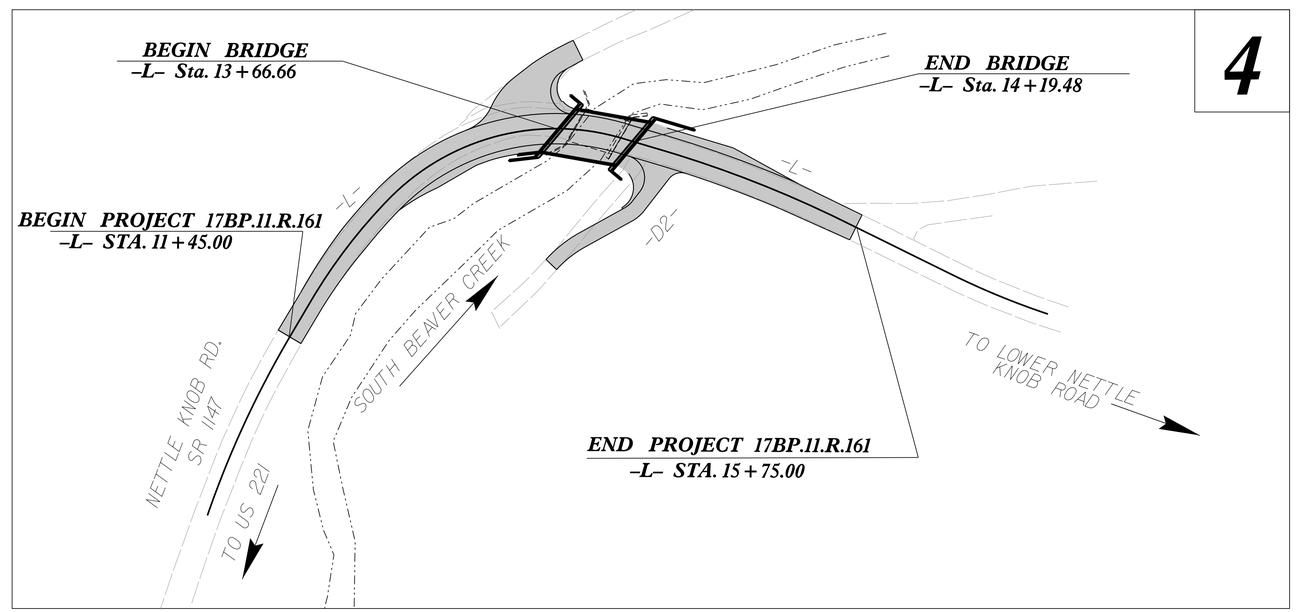

Vaughn & Melton
Consulting Engineers
Asheville, North Carolina
828-253-2796
Boone, NC 828-355-9933
Tri-Cities, TN 423-467-8401
Knoxville, TN 865-546-5800
Spartanburg, SC 864-574-4775
Charleston, SC 843-974-5650
Middlesboro, KY 606-248-6600
Atlanta, GA 770-627-3509
Raleigh, NC 919-977-9455
Charlotte, NC 704-357-0488
Copyright © 2006 Vaughn & Melton, Inc. All Rights Reserved

DESIGN EXCEPTION REQUIRED FOR DESIGN SPEED

DOCUMENT NOT CONSIDERED FINAL UNLESS ALL SIGNATURES COMPLETED

GRAPHIC SCALES

50 25 0 50 100
PLANS

50 25 0 50 100
PROFILE (HORIZONTAL)

5 2.5 0 5 10
PROFILE (VERTICAL)

DESIGN DATA

ADT 2019 = 410
ADT 2040 = 620

* T = 6%
* TTST = 3% DUAL = 3%
V = 25 MPH
FUNC CLASS =
RURAL LOCAL
SUB-REGIONAL TIER

PROJECT LENGTH

LENGTH ROADWAY PROJECT 17BP.11.R.161 = 0.071 MILES
LENGTH STRUCTURE PROJECT 17BP.11.R.161= 0.010 MILES
TOTAL LENGTH OF PROJECT 17BP.11.R.161= 0.081 MILES

Prepared In the Office of:
VAUGHN & MELTON, INC
& DIVISION 11
3509 Haworth Dr. #100, Raleigh NC, 27609
Phone (919)-977-9455

2018 STANDARD SPECIFICATIONS

RIGHT OF WAY DATE:
JANUARY 21, 2022

LETTING DATE:
SEPTEMBER 21, 2023

JOHN LANSFORD, PE
PROJECT ENGINEER

KEITH BRIDGERS
PROJECT DESIGN ENGINEER

HYDRAULICS ENGINEER
DocuSigned by:
DOCUSIGN SIGNATURE HERE
7/27/2023 | 7:53:26 AM EDT
P.E.
SIGNATURE:
NORTH CAROLINA PROFESSIONAL SEAL 047435 ENGINEER JOHN C. FORD

ROADWAY DESIGN ENGINEER
DocuSigned by:
John Lansford
DOCUSIGN SIGNATURE HERE
7/27/2023 | 4:45:05 AM EDT
P.E.
SIGNATURE:
NORTH CAROLINA PROFESSIONAL SEAL 15435 ENGINEER JOHN F. LANSFORD

STATE OF NORTH CAROLINA DEPARTMENT OF TRANSPORTATION

7/12/2023 12:59:32 PM
...\17BP.11.R.161_rdy_tsh.dgn
User:jclansford

DocuSign Envelope ID: 50DF9C49-12F0-45B7-884F-CCDE79AB00EF

PROJECT REFERENCE NO.	SHEET NO.
I7BPJI,RJ61	1A

ROADWAY DESIGN ENGINEER

7/27/2023 | 4:45:05 AM EDT

DOCUMENT NOT CONSIDERED FINAL UNLESS ALL SIGNATURES COMPLETED

INDEX OF SHEETS

SHEET NUMBER	SHEET
1	TITLE SHEET
1A	INDEX OF SHEETS, GENERAL NOTES, AND LIST OF STANDARD DRAWINGS
1B	CONVENTIONAL SYMBOLS
2A-1 THRU 2A-2	PAVEMENT SCHEDULE, TYPICAL SECTIONS AND WEDGING DETAILS
2C-1	DETAIL OF SHOP-CURVED (TYPE III) ANCHOR UNIT
2C-2	GUARDRAIL INSTALLATION
2C-3	STRUCTURE ANCHOR UNITS
3B-1	SUMMARY OF EARTHWORK, PAVEMENT REMOVAL SUMMARY AND SHOULDER BERM GUTTER SUMMARY
3B-2	SUMMARY OF GUARDRAIL AND DRAINAGE SUMMARY
4 THRU 5	PLAN AND PROFILE SHEET
RW02C-1 THRU RW02C-3	SURVEY CONTROL SHEETS
TMP-1 THRU TMP-3	TRAFFIC MANAGEMENT PLANS
PMP-1 THRU PMP-2	PAVEMENT MARKING PLANS
EC-1 THRU EC-5	EROSION CONTROL PLANS
RF-1	REFORESTATION DETAIL
UO-1 THRU UO-4	UTILITIES BY OTHERS PLANS
X-0	CROSS SECTION VOLUME SUMMARY
X-1 THRU X-23	CROSS-SECTIONS
S-1 THRU S-19	STRUCTURE PLANS

GENERAL NOTES:

2018 SPECIFICATIONS
EFFECTIVE: 01-16-18

GRADE LINE:
GRADING AND SURFACING OR RESURFACING AND WIDENING:

THE GRADE LINES SHOWN DENOTE THE FINISHED ELEVATION OF THE PROPOSED SURFACING AT GRADE POINTS SHOWN ON THE TYPICAL SECTIONS. WHERE NO GRADE LINES ARE SHOWN, THE PROFILES SHOWN DENOTE THE TOP ELEVATION OF THE EXISTING PAVEMENT ALONG THE CENTER LINE OF SURVEY ON WHICH THE PROPOSED RESURFACING WILL BE PLACED. GRADE LINES MAY BE ADJUSTED BY THE ENGINEER IN ORDER TO SECURE A PROPER TIE-IN.

CLEARING:

CLEARING ON THIS PROJECT SHALL BE PERFORMED TO THE LIMITS ESTABLISHED BY METHOD II.

SUPERELEVATION:

ALL CURVES ON THIS PROJECT SHALL BE SUPERELEVATED IN ACCORDANCE WITH STD. NO. 225.04 USING THE RATE OF SUPERELEVATION AND RUNOFF SHOWN ON THE PLANS. SUPERELEVATION IS TO BE REVOLVED ABOUT THE GRADE POINTS SHOWN ON THE TYPICAL SECTIONS.

SHOULDER CONSTRUCTION:

ASPHALT, EARTH AND CONCRETE SHOULDER CONSTRUCTION ON THE HIGH SIDE OF SUPERELEVATED CURVES SHALL BE IN ACCORDANCE WITH STD. NO. 560.01

SIDE ROADS:

THE CONTRACTOR WILL BE REQUIRED TO DO ALL NECESSARY WORK TO PROVIDE SUITABLE CONNECTIONS WITH ALL ROADS, STREETS, AND DRIVES ENTERING THIS PROJECT THIS WORK WILL BE PAID FOR AT THE CONTRACT UNIT PRICE FOR THE PARTICULAR ITEMS INVOLVED.

SUBSURFACE DRAINS:

SUBSURFACE DRAINS SHALL BE CONSTRUCTED IN ACCORDANCE WITH STD. NO. 815.02 AT LOCATIONS DIRECTED BY THE ENGINEER.

GUARDRAIL:

THE GUARDRAIL LOCATIONS SHOWN ON THE PLANS MAY BE ADJUSTED DURING CONSTRUCTION AS DIRECTED BY THE ENGINEER. THE CONTRACTOR SHOULD CONSULT WITH THE ENGINEER PRIOR TO ORDERING GUARDRAIL MATERIAL.

TEMPORARY SHORING:

SHORING REQUIRED FOR THE MAINTENANCE OF TRAFFIC WILL BE PAID FOR AS "EXTRA WORK" IN ACCORDANCE WITH SECTION 104-7.

END BENTS:

THE ENGINEER SHALL CHECK THE STRUCTURE END BENT PLANS, DETAILS, AND CROSS-SECTION PRIOR TO SETTING OF THE SLOPE STAKES FOR THE EMBANKMENT OR EXCAVATION APPROACHING A BRIDGE.

UTILITIES:

UTILITY OWNERS ON THIS PROJECT ARE SKYLINE TELEPHONE, SKYBEST TELEPHONE, BLUE RIDGE ELECTRIC MEMBERSHIP COOP.

ANY RELOCATION OF EXISTING UTILITIES WILL BE ACCOMPLISHED BY OTHERS.

RIGHT-OF-WAY MARKERS:

ALL RIGHT-OF-WAY MARKERS ON THIS PROJECT SHALL BE PLACED BY OTHERS.

2018 ROADWAY ENGLISH STANDARD DRAWINGS

The following Roadway Standards as appear in "Roadway Standard Drawings" Highway Design Branch - N. C. Department of Transportation - Raleigh, N. C., Dated January 17, 2018 are applicable to this project and by reference hereby are considered a part of these plans:

STD.NO.	TITLE
DIVISION 2 - EARTHWORK	
200.02	Method of Clearing - Method II
225.02	Guide for Grading Subgrade - Secondary and Local
225.04	Method of Obtaining Superelevation - Two Lane Pavement
DIVISION 3 - PIPE CULVERTS	
300.01	Method of Pipe Installation
310.10	Driveway Pipe Construction
DIVISION 4 - MAJOR STRUCTURES	
422.02	Bridge Approach Fills, Type II Modified Approach Fill
DIVISION 5 - SUBGRADE, BASES AND SHOULDERS	
560.01	Method of Shoulder Construction - High Side of Superelevated Curve - Method I
DIVISION 6 - ASPHALT BASES AND PAVEMENTS	
654.01	Pavement Repairs
DIVISION 8 - INCIDENTALS	
815.02	Subsurface Drain
840.00	Concrete Base Pad for Drainage Structures
840.18	Concrete Grated drop inlet Type 'B' 12" Thru 36" Pipe
840.24	Frames and Narrow Slot Sag Grates
840.25	Anchorage for Frames-Brick or Concrete or Precast
840.27	Brick Grated Drop Inlet Type 'B' 12" Thru 36" Pipe
840.29	Frames and Narrow Slot Flat Grates
840.35	Traffic Bearing Grated Drop Inlet - for Cast Iron Double Frame and Grates
840.45	Precast Drainage Structure
840.46	Traffic Bearing Precast Drainage Structure
840.66	Drainage Structure Steps
846.01	Concrete Curb, Gutter and Curb & Gutter
846.04	Drop Inlet Installation in Shoulder Berm Gutter
862.01	Guardrail Placement
862.02	Guardrail Installation
862.03	Structure Anchor Units

7/27/2023 8:46:55 AM
\\Mgr1\Proj\I7BPJI_RJ61_rdwy_sum_1a.dgn
"\\sgrdf1\drdgn

DocuSign Envelope ID: 50DF9C49-12F0-45B7-884F-CCDE79AB00EF

12/2/2016

PROJECT REFERENCE NO.	SHEET NO.
17BP.11.R.161	1B

STATE OF NORTH CAROLINA, DIVISION OF HIGHWAYS

CONVENTIONAL PLAN SHEET SYMBOLS

Note: Not to Scale

**S.U.E. = Subsurface Utility Engineering*

BOUNDARIES AND PROPERTY:

- State Line
- County Line
- Township Line
- City Line
- Reservation Line
- Property Line
- Existing Iron Pin — EIP
- Computed Property Corner
- Property Monument — ECM
- Parcel/Sequence Number — 123
- Existing Fence Line
- Proposed Woven Wire Fence
- Proposed Chain Link Fence
- Proposed Barbed Wire Fence
- Existing Wetland Boundary — WLB
- Proposed Wetland Boundary — WLB
- Existing Endangered Animal Boundary — EAB
- Existing Endangered Plant Boundary — EPB
- Existing Historic Property Boundary — HPB
- Known Contamination Area: Soil — S
- Potential Contamination Area: Soil — S
- Known Contamination Area: Water — W
- Potential Contamination Area: Water — W
- Contaminated Site: Known or Potential

BUILDINGS AND OTHER CULTURE:

- Gas Pump Vent or U/G Tank Cap
- Sign — S
- Well — W
- Small Mine
- Foundation
- Area Outline
- Cemetery
- Building
- School
- Church
- Dam

HYDROLOGY:

- Stream or Body of Water
- Hydro, Pool or Reservoir
- Jurisdictional Stream — JS
- Buffer Zone 1 — BZ 1
- Buffer Zone 2 — BZ 2
- Flow Arrow
- Disappearing Stream
- Spring
- Wetland
- Proposed Lateral, Tail, Head Ditch — FLOW
- False Sump

RAILROADS:

- Standard Gauge — CSX TRANSPORTATION
- RR Signal Milepost — MILEPOST 35
- Switch — SWITCH
- RR Abandoned
- RR Dismantled

RIGHT OF WAY & PROJECT CONTROL:

- Secondary Horiz and Vert Control Point
- Primary Horiz Control Point
- Primary Horiz and Vert Control Point
- Exist Permanent Easment Pin and Cap
- New Permanent Easement Pin and Cap
- Vertical Benchmark
- Existing Right of Way Marker
- Existing Right of Way Line
- New Right of Way Line — RW
- New Right of Way Line with Pin and Cap — RW
- New Right of Way Line with Concrete or Granite R/W Marker — RW
- New Control of Access Line with Concrete C/A Marker — CA
- Existing Control of Access — CA
- New Control of Access — CA
- Existing Easement Line — E
- New Temporary Construction Easement — E
- New Temporary Drainage Easement — TDE
- New Permanent Drainage Easement — PDE
- New Permanent Drainage / Utility Easement — DUE
- New Permanent Utility Easement — PUE
- New Temporary Utility Easement — TUE
- New Aerial Utility Easement — AUE

ROADS AND RELATED FEATURES:

- Existing Edge of Pavement
- Existing Curb
- Proposed Slope Stakes Cut — C
- Proposed Slope Stakes Fill — F
- Proposed Curb Ramp — CR
- Existing Metal Guardrail
- Proposed Guardrail
- Existing Cable Guiderail
- Proposed Cable Guiderail
- Equality Symbol
- Pavement Removal

VEGETATION:

- Single Tree
- Single Shrub
- Hedge
- Woods Line
- Orchard
- Vineyard — Vineyard

EXISTING STRUCTURES:

MAJOR:

- Bridge, Tunnel or Box Culvert — CONC
- Bridge Wing Wall, Head Wall and End Wall — CONC WW

MINOR:

- Head and End Wall — CONC HW
- Pipe Culvert
- Footbridge
- Drainage Box: Catch Basin, DI or JB — CB
- Paved Ditch Gutter
- Storm Sewer Manhole — S
- Storm Sewer — S

UTILITIES:

POWER:

- Existing Power Pole
- Proposed Power Pole
- Existing Joint Use Pole
- Proposed Joint Use Pole
- Power Manhole — P
- Power Line Tower
- Power Transformer
- U/G Power Cable Hand Hole
- H-Frame Pole
- U/G Power Line LOS B (S.U.E.*) — P
- U/G Power Line LOS C (S.U.E.*) — P
- U/G Power Line LOS D (S.U.E.*) — P

TELEPHONE:

- Existing Telephone Pole
- Proposed Telephone Pole
- Telephone Manhole — T
- Telephone Pedestal — T
- Telephone Cell Tower
- U/G Telephone Cable Hand Hole
- U/G Telephone Cable LOS B (S.U.E.*) — T
- U/G Telephone Cable LOS C (S.U.E.*) — T
- U/G Telephone Cable LOS D (S.U.E.*) — T
- U/G Telephone Conduit LOS B (S.U.E.*) — TC
- U/G Telephone Conduit LOS C (S.U.E.*) — TC
- U/G Telephone Conduit LOS D (S.U.E.*) — TC
- U/G Fiber Optics Cable LOS B (S.U.E.*) — T FO
- U/G Fiber Optics Cable LOS C (S.U.E.*) — T FO
- U/G Fiber Optics Cable LOS D (S.U.E.*) — T FO

WATER:

- Water Manhole — W
- Water Meter
- Water Valve
- Water Hydrant
- U/G Water Line LOS B (S.U.E*) — W
- U/G Water Line LOS C (S.U.E*) — W
- U/G Water Line LOS D (S.U.E*) — W
- Above Ground Water Line — A/G Water

TV:

- TV Pedestal — C
- TV Tower
- U/G TV Cable Hand Hole — HH
- U/G TV Cable LOS B (S.U.E.*) — TV
- U/G TV Cable LOS C (S.U.E.*) — TV
- U/G TV Cable LOS D (S.U.E.*) — TV
- U/G Fiber Optic Cable LOS B (S.U.E.*) — TV FO
- U/G Fiber Optic Cable LOS C (S.U.E.*) — TV FO
- U/G Fiber Optic Cable LOS D (S.U.E.*) — TV FO

GAS:

- Gas Valve
- Gas Meter
- U/G Gas Line LOS B (S.U.E.*) — G
- U/G Gas Line LOS C (S.U.E.*) — G
- U/G Gas Line LOS D (S.U.E.*) — G
- Above Ground Gas Line — A/G Gas

SANITARY SEWER:

- Sanitary Sewer Manhole
- Sanitary Sewer Cleanout
- U/G Sanitary Sewer Line — SS
- Above Ground Sanitary Sewer — A/G Sanitary Sewer
- SS Forced Main Line LOS B (S.U.E.*) — FSS
- SS Forced Main Line LOS C (S.U.E.*) — FSS
- SS Forced Main Line LOS D (S.U.E.*) — FSS

MISCELLANEOUS:

- Utility Pole
- Utility Pole with Base
- Utility Located Object
- Utility Traffic Signal Box — S
- Utility Unknown U/G Line LOS B (S.U.E.*) — ?UTL
- U/G Tank; Water, Gas, Oil
- Underground Storage Tank, Approx. Loc. — UST
- A/G Tank; Water, Gas, Oil
- Geoenvironmental Boring
- U/G Test Hole LOS A (S.U.E.*)
- Abandoned According to Utility Records — AATUR
- End of Information — E.O.I.

DocuSign Envelope ID: 50DF9C49-12F0-45B7-884F-CCDE79AB00EF

PROJECT REFERENCE NO.	SHEET NO.
17BP.11.R.161	2A-1
R/W SHEET NO.	
ROADWAY DESIGN ENGINEER	PAVEMENT ENGINEER

7/27/2023 | 4:45:05 AM EDT 7/26/2023 | 2:58:34 PM ED

DOCUMENT NOT CONSIDERED FINAL UNLESS ALL SIGNATURES COMPLETED

PAVEMENT SCHEDULE

C1	PROP. APPROX. 1 ½" ASPHALT CONCRETE SURFACE COURSE, TYPE S9.5B, AT AN AVERAGE RATE OF 165 LBS. PER SQ. YD. IN
C2	PROP. APPROX. 3" ASPHALT CONCRETE SURFACE COURSE, TYPE S9.5B, AT AN AVERAGE RATE OF 165 LBS. PER SQ. YD. IN EACH OF TWO LAYERS
C3	PROP. VAR. DEPTH ASPHALT CONCRETE SURFACE COURSE, TYPE S9.5B, AT AN AVERAGE RATE OF 110 LBS. PER SQ. YD. PER 1" DEPTH. TO BE PLACED IN LAYERS NOT TO EXCEED 2" IN DEPTH.
E1	PROP. APPROX. 4" ASPHALT CONCRETE BASE COURSE, TYPE B25.0C, AT AN AVERAGE RATE OF 456 LBS. PER SQ. YD.
E2	PROP. VAR. DEPTH ASPHALT CONCRETE BASE COURSE, TYPE B25.0C, AT AN AVERAGE RATE OF 114 LBS. PER SQ. YD. PER 1" DEPTH. TO BE PLACED IN LAYERS NOT LESS THAN 3" IN DEPTH OR GREATER THAN 5½" IN DEPTH.
J	8" AGGREGATE BASE COURSE
R	SHOULDER BERM GUTTER
T	EARTH MATERIAL
U	EXISTING PAVEMENT
V	INCIDENTAL MILLING, SEE MILLING DETAIL
W	VARIABLE DEPTH ASPHALT PAVEMENT, SEE WEDGING DETAIL

NOTE: ALL SLOPES ARE 1:1 UNLESS OTHERWISE NOTED.

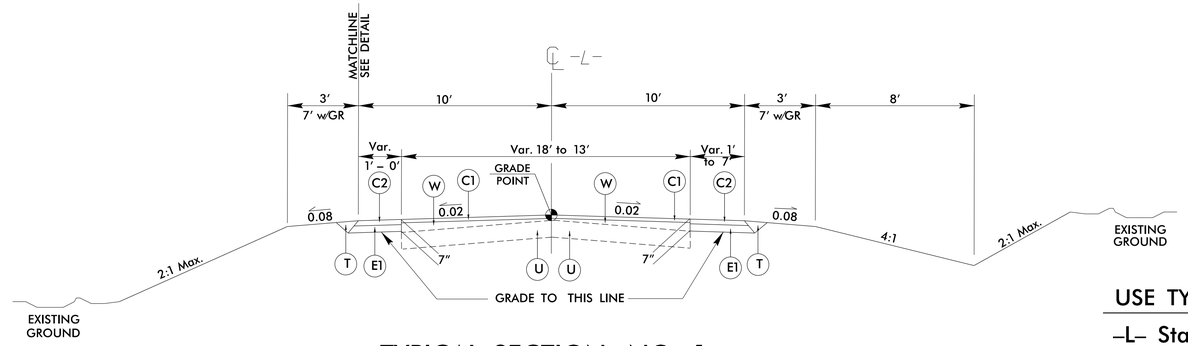

TYPICAL SECTION NO. 1

USE TYPICAL SECTION NO. 1

–L– Sta. 11+58.48 to 13+00.00

NOTE:
RESURFACE ONLY FROM –L– STA. 11+45.00 to 11+58.48

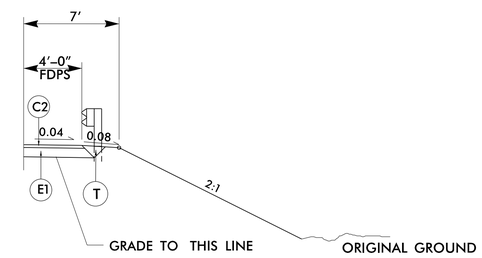

DETAIL OF PAVING TO GUARDRAIL

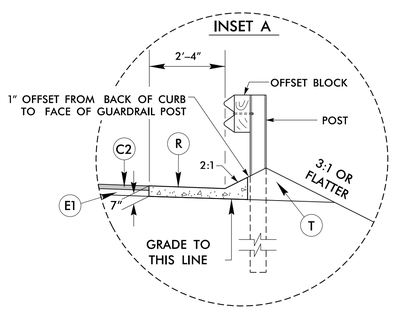

USE INSET 'A' AT SHOULDER BERM LOCATIONS

–L– STA. 13+24.40 TO 13+40.07 RT.
–L– STA. 14+19.89 TO 14+25.64 RT.
–L– STA. 14+41.62 TO 14+53.84 LT.

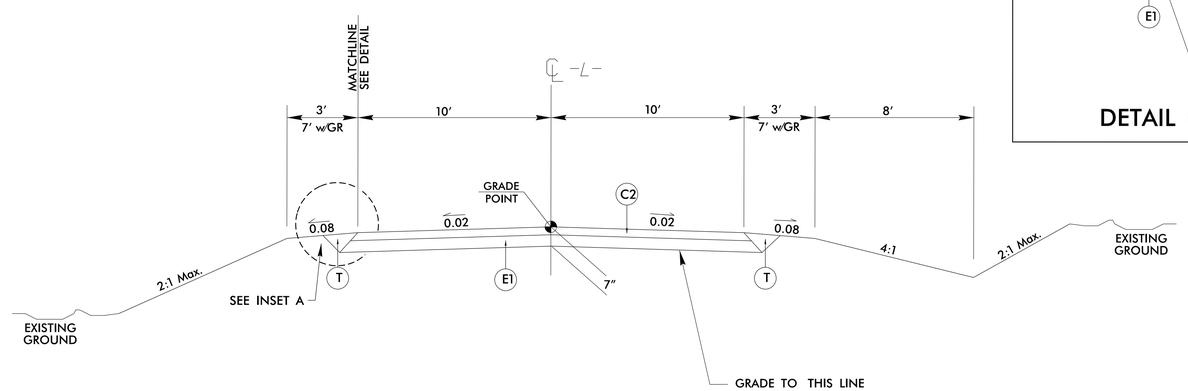

TYPICAL SECTION NO. 2

USE TYPICAL SECTION NO. 2

–L– STA. 13+00.00 to 13+66.66 (BEGIN BRIDGE)
–L– STA. 14+19.48 (END BRIDGE) to 15+75.00

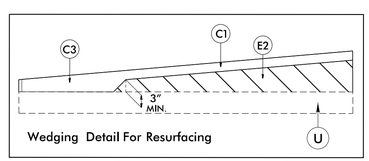

Wedging Detail For Resurfacing

MILLING DETAIL

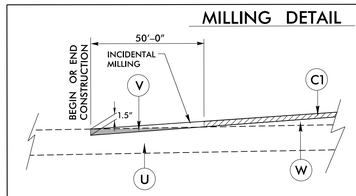

USE MILLING DETAIL AS FOLLOWS:

–L– Sta. 11+45.00 to 11+95

7/25/2023 3:09:53 AM
pw:\\pwdenv01.bentley.com:PWDATA\61_rdy_typ.dgn
User:tlgale

DocuSign Envelope ID: 50DF9C49-12F0-45B7-884F-CCDE79AB00EF

5/14/99

PROJECT REFERENCE NO.	SHEET NO.
17BP.11.R.161	2A-2
R/W SHEET NO.	
ROADWAY DESIGN ENGINEER	PAVEMENT ENGINEER
7/27/2023 | 4:45:05 AM EDT	7/26/2023 | 2:58:14 PM E

DOCUMENT NOT CONSIDERED FINAL UNLESS ALL SIGNATURES COMPLETED

PAVEMENT SCHEDULE

C1	1½" ACSC S9.5B
C2	3" ACSC S9.5B
C3	Var. Depth ACSC S9.5B
E1	4" ACBC B25.0C
E2	Var. Depth B25.0C
J	8" ABC
R	SHOULDER BERM GUTTER
T	EARTH MATERIAL
U	EXISTING PAVEMENT
V	INCIDENTAL MILLING, SEE MILLING DETAIL
W	ASPHALT WEDGING, SEE WEDGING DETAIL

NOTE: ALL SLOPES ARE 1:1 UNLESS OTHERWISE NOTED.

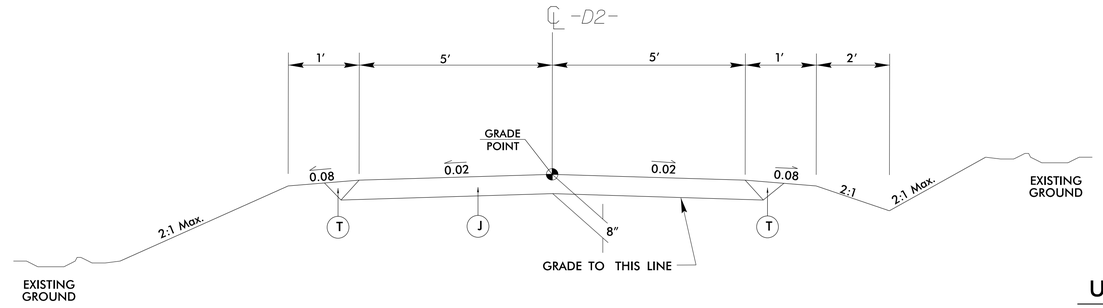

TYPICAL SECTION NO. 3

USE TYPICAL SECTION NO. 3

–D2– Sta. 10+20.00 to 10+79.33

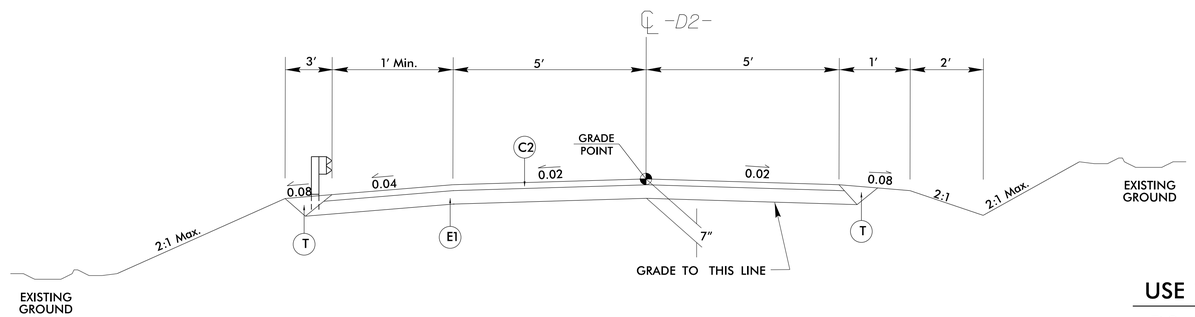

TYPICAL SECTION NO. 4

USE TYPICAL SECTION NO. 4

–D2– Sta. 10+79.33 to 11+21.55

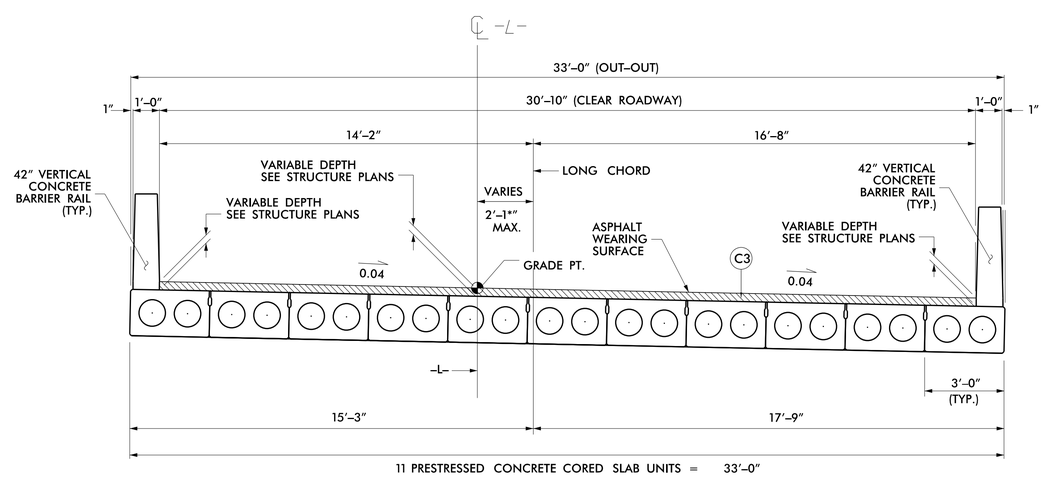

TYPICAL SECTION NO. 5

USE TYPICAL SECTION NO. 5

–L– Sta. 13+66.66 to 14+19.48

7/25/2023 7:01:03 AM
\\pw-dc\pw\ncdot\17bp11r161_rdy_typ.dgn
jsemprede

DocuSign Envelope ID: 50DF9C49-12F0-45B7-884F-CCDE79AB00EF

5/14/99

PROJECT REFERENCE NO.	SHEET NO.
17BP.11.R.161	2C-1

STATE OF
NORTH CAROLINA
DEPT. OF TRANSPORTATION
DIVISION OF HIGHWAYS
RALEIGH, N.C.

ENGLISH DETAIL DRAWING FOR

TYPE III - SHOP CURVED
STRUCTURE ANCHOR UNIT

SHEET 1 OF 1

TYPE III SC

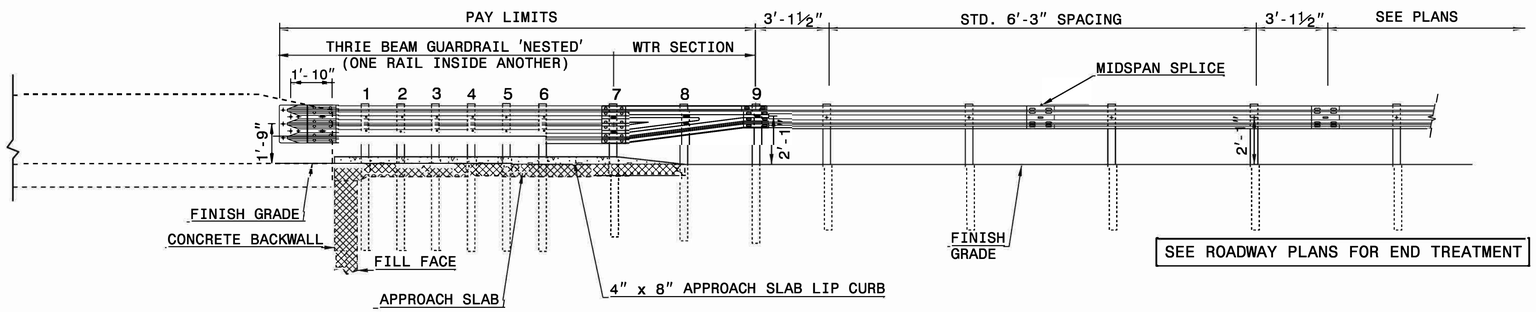

ELEVATION

NOTE:
**POST NOT REQUIRED FOR SKEW ANGLES GREATER THAN 150° OR LESS THAN 30° UNLESS OTHERWISE DIRECTED BY THE ENGINEER.
*THE DISTANCE FROM END OF BRIDGE RAIL TO CENTER LINE OF THE FIRST POST SHOULD BE 11½" IF CONCRETE BACKWALL IS NOT PRESENT.
-SHOULDER BERM GUTTER MUST BE INSTALLED TO THE LIMITS 8" x 4" LIP CURB IS SHOWN IF ANCHOR UNIT IS NOT ADJACENT TO AN APPROACH SLAB.
-MEASURE GUARDRAIL HEIGHT FROM THE TOP OF ADJACENT SURFACE (SHOULDER, BERM, OR GUTTER).
-USE NO STEEL POSTS WITHIN THE GUARDRAIL ANCHOR UNIT LIMITS.
-LAP JOINTS IN THE DIRECTION OF TRAFFIC FLOW.
-SEE STANDARD 862.03 SHEET 4 FOR POST SECTIONS 1 THRU 9.

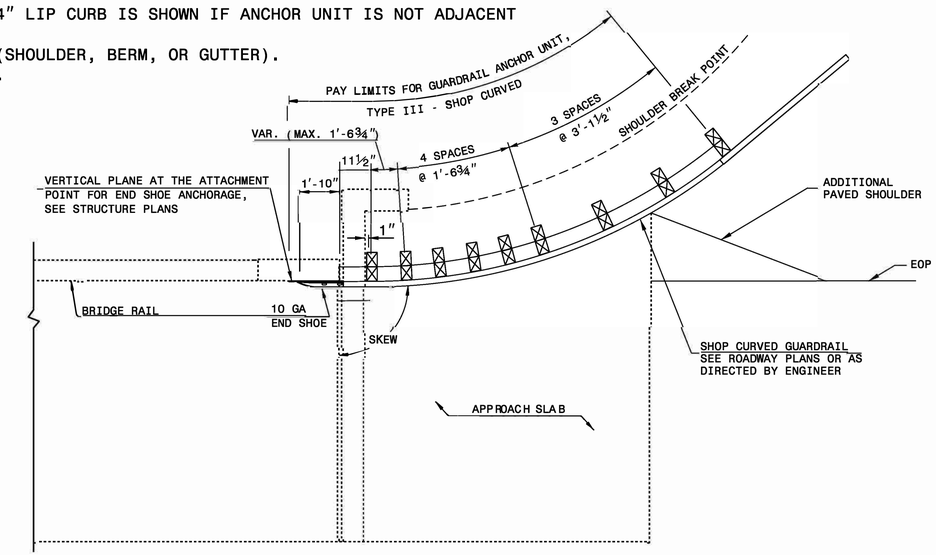

PLAN VIEW

GUARDRAIL ANCHOR UNIT, TYPE III - SHOP CURVED FOR ATTACHMENT TO RAIL ON BRIDGE

STATE OF
NORTH CAROLINA
DEPT. OF TRANSPORTATION
DIVISION OF HIGHWAYS
RALEIGH, N.C.

ENGLISH DETAIL DRAWING FOR

TYPE III - SHOP CURVED
STRUCTURE ANCHOR UNIT

SHEET 1 OF 1

TYPE III SC

DOCUMENT NOT CONSIDERED FINAL UNLESS ALL SIGNATURES COMPLETED

NORTH CAROLINA PROFESSIONAL SEAL 23144 ENGINEER NICOLE M. HAUCKER

7/26/2023 | 12:45:55 PM PDT

CONTRACT STANDARDS AND DEVELOPMENT UNIT
Office 919-707-6950 FAX 919-250-4119

SEE PLATE FOR TITLE

ORIGINAL BY: E.E.Ward DATE: 4-4-02
MODIFIED BY: T.S.Spell DATE: 2-01-18
CHECKED BY: DATE:
FILE SPEC.: \jhowerton\guardrail\31inguardrail\typeiiisc.dgn

01-FEB-2018 09:19
S:\Contracts\Contracts\Special Details\jhowerton\Guardrail\31 inch Guardrail\type iii.scdgn
jhowerton AT CSD-292595

DocuSign Envelope ID: 50DF9C49-12F0-45B7-884F-CCDE79AB00EF

PROJECT REFERENCE NO.	SHEET NO.
17BP.11.R.161	2C-2

DOCUMENT NOT CONSIDERED FINAL UNLESS ALL SIGNATURES COMPLETED

STATE OF NORTH CAROLINA
DEPT. OF TRANSPORTATION
DIVISION OF HIGHWAYS
RALEIGH, N.C.

ROADWAY DETAIL DRAWING FOR
GUARDRAIL INSTALLATION

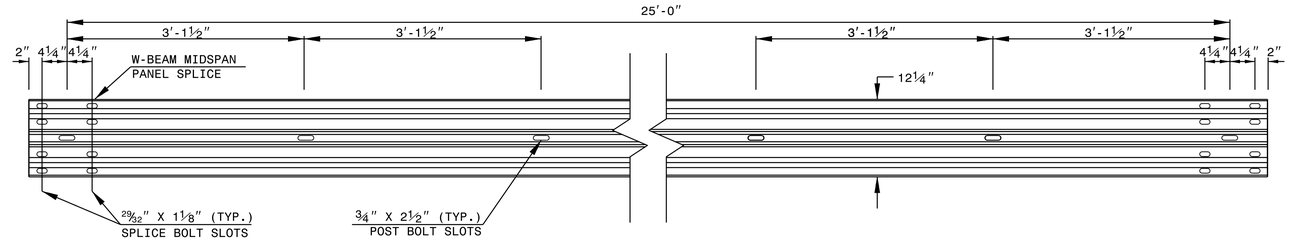

STANDARD W-BEAM GUARDRAIL

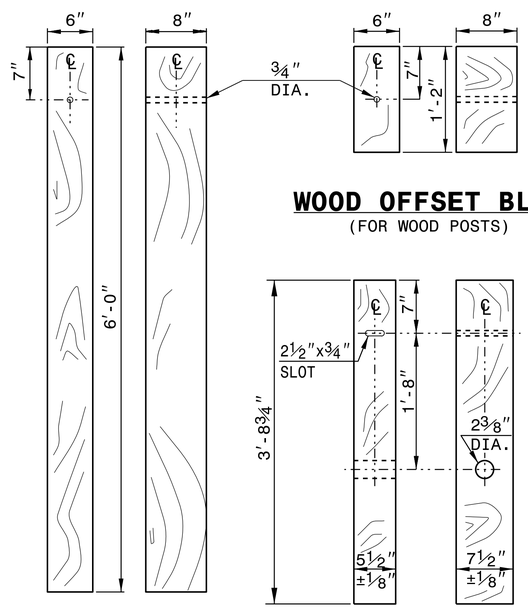

STANDARD LINE POST

WOOD OFFSET BLOCK
(FOR WOOD POSTS)

SHORT WOOD BREAKAWAY POST

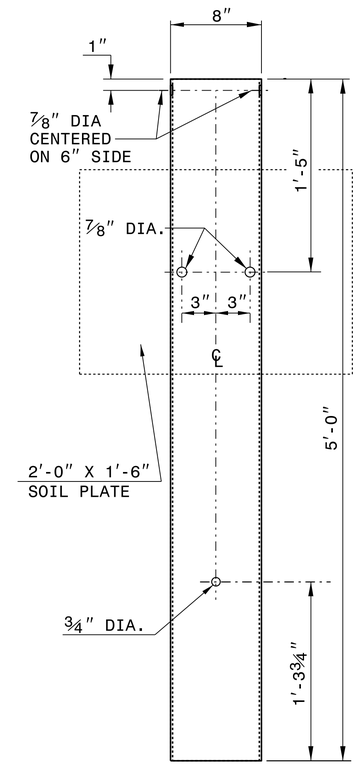

STEEL TUBE
TS 6"x8"x0.1875"

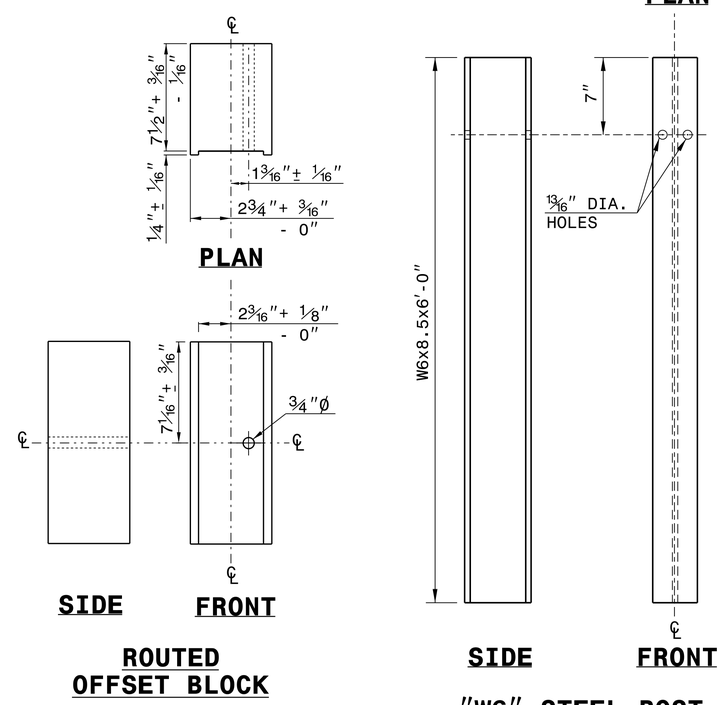

SYSTEM PARTS

STATE OF NORTH CAROLINA
DEPT. OF TRANSPORTATION
DIVISION OF HIGHWAYS
RALEIGH, N.C.

ROADWAY DETAIL DRAWING FOR
GUARDRAIL INSTALLATION

SHEET 6 OF 8
862D02

SHEET 6 OF 8
862D02

NORTH CAROLINA PROFESSIONAL SEAL ENGINEER NICOLE M. HACKLER

7/26/2023 | 12:45:55 PM PDT

CONTRACTS STANDARDS AND DEVELOPMENT UNIT
Office 919-707-6950 FAX 919-250-4119

SEE TITLE BLOCK

ORIGINAL BY: J.HOWERTON DATE: 3-7-2018
MODIFIED BY: DATE:
CHECKED BY: DATE:
FILE SPEC.:

DocuSign Envelope ID: 50F9C249-12F0-4587-894F-CCDEF9A8D6EF

STATE OF NORTH CAROLINA
DEPT. OF TRANSPORTATION
DIVISION OF HIGHWAYS
RALEIGH, N.C.

ROADWAY DETAIL DRAWING FOR
STRUCTURE ANCHOR UNITS
GUARDRAIL ANCHOR UNIT, TYPE III
FOR ATTACHMENT TO RAIL ON BRIDGE

SHEET 1 OF 7
862D03

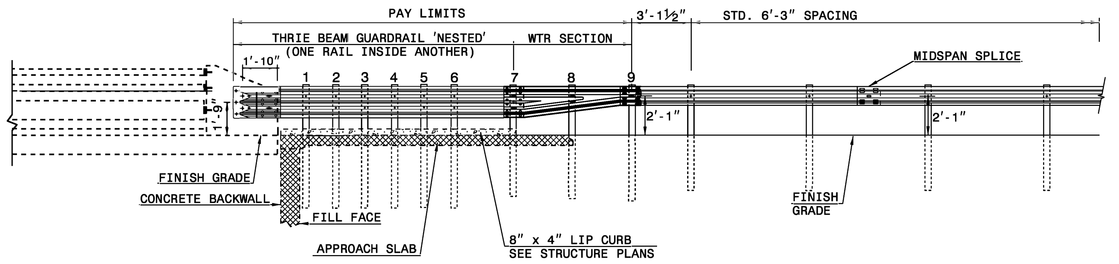

ELEVATION

NOTE:
**POST NOT REQUIRED FOR SKEW ANGLES GREATER THAN 150° OR LESS THAN 30° UNLESS OTHERWISE DIRECTED BY THE ENGINEER.
*THE DISTANCE FROM END OF BRIDGE RAIL TO CENTER LINE OF THE FIRST POST SHOULD BE 11½" IF CONCRETE BACKWALL IS NOT PRESENT.
-SHOULDER BERM GUTTER MUST BE INSTALLED TO THE LIMITS 8" x 4" LIP CURB IS SHOWN IF ANCHOR UNIT IS NOT ADJACENT TO AN APPROACH SLAB.
-MEASURE GUARDRAIL HEIGHT FROM THE TOP OF ADJACENT SURFACE (SHOULDER, BERM, OR GUTTER).
-LAP JOINTS IN THE DIRECTION OF TRAFFIC FLOW.
-SEE SHEET 3 FOR POST SECTIONS 1 THRU 9.

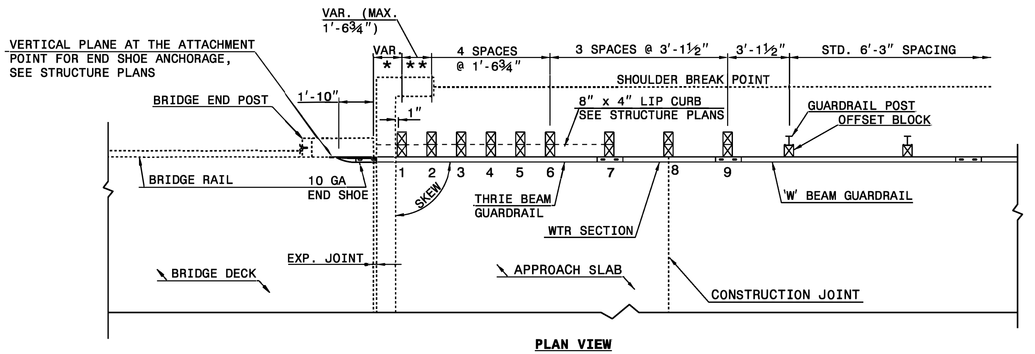

PLAN VIEW

GUARDRAIL ANCHOR UNIT, TYPE III FOR ATTACHMENT TO RAIL ON BRIDGE

STATE OF NORTH CAROLINA
DEPT. OF TRANSPORTATION
DIVISION OF HIGHWAYS
RALEIGH, N.C.

ROADWAY DETAIL DRAWING FOR
STRUCTURE ANCHOR UNITS
GUARDRAIL ANCHOR UNIT, TYPE III
FOR ATTACHMENT TO RAIL ON BRIDGE

SHEET 1 OF 7
862D03

STATE OF NORTH CAROLINA
DEPT. OF TRANSPORTATION
DIVISION OF HIGHWAYS
RALEIGH, N.C.

ROADWAY DETAIL DRAWING FOR
STRUCTURE ANCHOR UNITS
GUARDRAIL ANCHOR UNIT, TYPE III FOR ATTACHMENT TO RAIL ON BRIDGE - SUB REGIONAL TIER

SHEET 2 OF 7
862D03

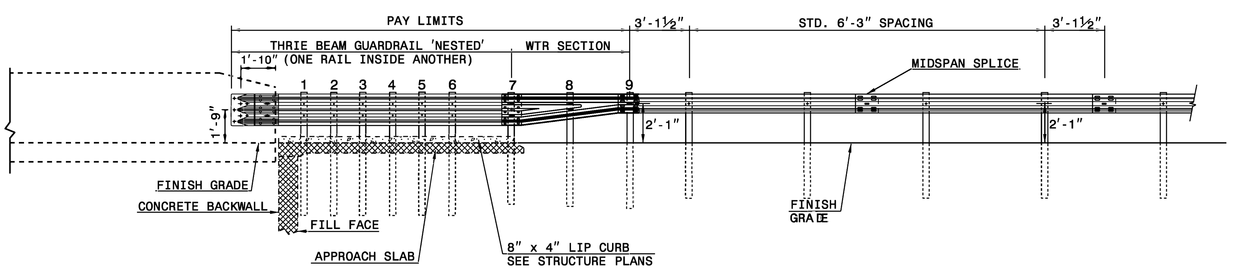

ELEVATION

NOTE:
**POST NOT REQUIRED FOR SKEW ANGLES GREATER THAN 150° OR LESS THAN 30° UNLESS OTHERWISE DIRECTED BY THE ENGINEER.
*THE DISTANCE FROM END OF BRIDGE RAIL TO CENTER LINE OF THE FIRST POST SHOULD BE 11½" IF CONCRETE BACKWALL IS NOT PRESENT.
-SHOULDER BERM GUTTER MUST BE INSTALLED TO THE LIMITS 8" x 4" LIP CURB IS SHOWN IF ANCHOR UNIT IS NOT ADJACENT TO AN APPROACH SLAB.
-MEASURE GUARDRAIL HEIGHT FROM THE TOP OF ADJACENT SURFACE (SHOULDER, BERM, OR GUTTER).
-LAP JOINTS IN THE DIRECTION OF TRAFFIC FLOW.
-SEE SHEET 3 FOR POST SECTIONS 1 THRU 9.

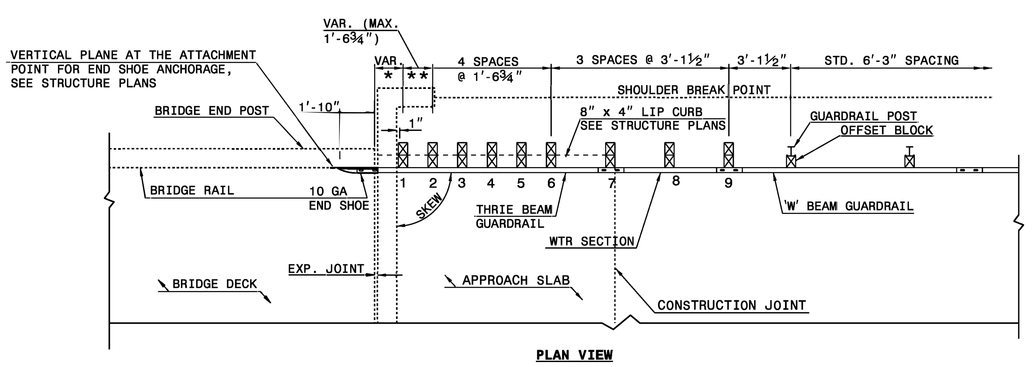

PLAN VIEW

GUARDRAIL ANCHOR UNIT, TYPE III FOR ATTACHMENT TO RAIL ON BRIDGE - SUB REGIONAL TIER

STATE OF NORTH CAROLINA
DEPT. OF TRANSPORTATION
DIVISION OF HIGHWAYS
RALEIGH, N.C.

ROADWAY DETAIL DRAWING FOR
STRUCTURE ANCHOR UNITS
GUARDRAIL ANCHOR UNIT, TYPE III FOR ATTACHMENT TO RAIL ON BRIDGE - SUB REGIONAL TIER

SHEET 2 OF 7
862D03

SEE TITLE BLOCK

ORIGINAL BY: J. HOWERTON DATE: 06-22-12
MODIFIED BY: DATE:
CHECKED BY: DATE:
FILE SPEC.:

CONTRACT STANDARDS AND DEVELOPMENT UNIT
Office 919-707-6950 FAX 919-250-4119

DOCUMENT NOT CONSIDERED FINAL UNLESS ALL SIGNATURES COMPLETED

NORTH CAROLINA PROFESSIONAL SEAL ENGINEER NICOLE HAYNES
7/26/2023 | 12:45:55 PM EDT

PROJECT REFERENCE NO.: 17BP.11.R.161
SHEET NO.: 2C-3

DocuSign Envelope ID: 50DF9C49-12F0-45B7-884F-CCDE79AB00EF

SUMMARY OF EARTHWORK

STATION	STATION	UNCL. EXCAV.	EMBANK. +%	BORROW	WASTE
–L– STA. 11+58.48	–L– STA. 13+66.66	51	413	362	0
	SUBTOTAL	51	413	362	0
–L– STA. 14+19.48	–L– STA. 15+75.00	5	208	203	0
–D2– STA. 10+20.00	–D2– STA. 11+21.57	1702	0	0	1702
	SUBTOTAL	1707	208	203	1702
TOTAL:		1758	621	565	1702
WASTE IN LIEU OF BORROW				–565	–565
PROJECT TOTAL		1758		0	1137
GRAND TOTAL		1758			
SAY:		1760			

PAVEMENT REMOVAL SUMMARY

SURVEY LINE	STATION	STATION	LOCATION LT/RT/CL	YD^2
–L–	13+00.00	13+78.00	CL	208
–L–	14+09.00	15+75.00	CL	335
			TOTAL:	543
			SAY:	550

SHOULDER BERM GUTTER SUMMARY

SURVEY LINE	STATION	STATION	LOCATION LT/RT/CL	LENGTH (FT)
–L–	13+24.40	13+40.07	RT	15.67′
–L–	14+19.89	14+25.64	RT	35.8′
–L–	14+41.62	14+53.84	LT	12.22′
			TOTAL:	63.69′
			SAY:	65′

Note: Approximate quantities only. Unclassified Excavation, Fine Grading, Clearing and Grubbing, and Removal of Existing Pavement will be paid for at the contract lump sum price for "Grading"

Earthwork quantities are calculated by the Vaughn and Melton Engineering.These earthwork quantities are based in part on subsurface data provided by the Geotechnical Engineering Unit.

CONTINGENCY ITEMS:
INCIDENTAL STONE = 25 TONS
UNDERCUT EXCAVATION = 100 CY
SELECT GRANULAR MATERIAL = 100 CY
GEOTEXTILE FOR SOIL STABILIZATION = 100 SY
CL IV SUBGRADE STABILIZATION = 25 TONS

DocuSign Envelope ID: 50DF9C49-12F0-45B7-884F-CCDE79AB00EF

COMPUTED BY: JCL DATE: 01/27/2022
CHECKED BY: KTB DATE: 11/16/2022

PROJECT REFERENCE NO.	SHEET NO.
17BP.11.R.161	3B-2

STATE OF NORTH CAROLINA
DIVISION OF HIGHWAYS

NOTE: Invert Elevations are for Bid Purposes only and shall not be used for project construction stakeout. See "Standard Specifications For Roads and Structures, Section 300-5".

SUB-REGIONAL & REGIONAL
LIST OF PIPES, ENDWALLS, ETC. (FOR PIPES 48" & UNDER)

| STATION / SIZE / THICKNESS OR GAUGE | LOCATION (LT,RT, OR CL) | STRUCTURE NO. FROM | STRUCTURE NO. TO | TOP ELEVATION | INVERT ELEVATION | INVERT ELEVATION | SLOPE CRITICAL | DRAINAGE PIPE (RCP, CSP, CAAP, HDPE, or PVC) 12" | 15" | 18" | 24" | 30" | 36" | 42" | 48" | DO NOT USE RCP | DO NOT USE CSP | DO NOT USE CAAP | DO NOT USE HDPE | C.S. PIPE 12" | 15" | 18" | 24" | 36" | 42" | 48" | R.C. PIPE (CLASS III) 15" | 18" | 24" | 30" | 36" | 42" | 48" | R.C. PIPE (CLASS IV) 12" | 15" | 18" | 24" | 30" | 36" | 42" | 48" | **" R. C. PIPE (CLASS V) | **" R. C. PIPE CULVERTS, CONTRACTOR DESIGN PIPE | **" R. C. PIPE CULVERTS, CONTRACTOR DESIGN PIPE | 15" SIDE DRAIN PIPE | 18" SIDE DRAIN PIPE | ENDWALLS STD. 838.01, STD. 838.11 OR STD. 838.80 (UNLESS NOTED OTHERWISE) CU. YDS. R.C.P. | C.S.P. | QUANTITIES FOR DRAINAGE STRUCTURES * TOTAL L.F. FOR PAY QUANTITY SHALL BE COL. "A" + (1.3 X COL. B') PER EACH (0' THRU 5.0') | LIN. *FT. A 5.0' THRU 10.0' | LIN. *FT. B 10.0' AND ABOVE | G.D.I. TYPE "A" STD. 840.17 OR 840.26 | G.D.I. TYPE "B" STD. 840.18 OR 840.27 | G.D.I. TYPE "D" STD. 840.19 OR 840.28 | T.B.D.I. STD. 840.35 | G.D.I. (N.S.) FRAME WITH GRATE STD. 840.29 | G.D.I. (N.S.) FRAME WITH TWO GRATES STD. 840.29 | G.D.I. (N.S.) FRAME WITH GRATE STD. 840.24 | G.D.I. (N.S.) FRAME WITH TWO GRATES STD. 840.24 | J.B. STD. 840.31 OR 840.32 | CORR. STEEL ELBOWS NO. & SIZE | CONC. COLLARS CL. "B" C.Y. STD 840.72 | CONC. & BRICK PIPE PLUG, C.Y. STD. 840.71 | PIPE REMOVAL LIN.FT. | REMARKS |
|---|---|---

DocuSign Envelope ID: 50DF9C49-12F0-45B7-884F-CCDE79AB00EF

PROJECT REFERENCE NO.	SHEET NO.
I7BP.I1.R.I61	4
R/W SHEET NO.	
ROADWAY DESIGN ENGINEER	HYDRAULICS ENGINEER
7/27/2023 | 4:45:05 AM EDT	7/27/2023 | 7:53:26 AM EDT

DOCUMENT NOT CONSIDERED FINAL UNLESS ALL SIGNATURES COMPLETED

REVISIONS

8/17/99

-L- CURVE DATA

PI Sta 10+65.58	PI Sta 12+00.65	PI Sta 13+35.51	PI Sta 15+02.88	PI Sta 16+79.89
△ = 11° 31' 19.2" (RT)	△ = 13° 44' 17.5" (RT)	△ = 62° 18' 44.2" (RT)	△ = 9° 38' 34.9" (RT)	△ = 7° 52' 43.2" (LT)
D = 8° 48' 53.0"	D = 16° 22' 12.8"	D = 37° 12' 18.2"	D = 7° 38' 22.0"	D = 11° 27' 33.0"
L = 130.71'	L = 83.92'	L = 167.48'	L = 126.23'	L = 68.75'
T = 65.58'	T = 42.16'	T = 93.10'	T = 63.26'	T = 34.43'
R = 650.00'	R = 350.00'	R = 154.00'	R = 750.00'	R = 500.00'
	SE = 0.03	SE = 0.04	SE = Exist.	
	RO = 69'	RO = 69'		

-D2- CURVE DATA

PI Sta 10+34.23	PI Sta 10+85.43
△ = 17° 29' 16.3" (RT)	△ = 23° 09' 03.6" (LT)
D = 76° 23' 39.7"	D = 27° 50' 13.4"
L = 22.89'	L = 8.49'
T = 11.54'	T = 4.30'
R = 75.00'	R = 21.00'
SE = NC	SE = NC

DETAIL 1
SPECIAL CUT DITCH
(Not to Scale)

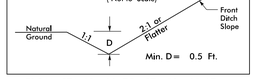

FROM STA. 12+00 TO STA. 12+65 LT

NAD 83/NA 2011

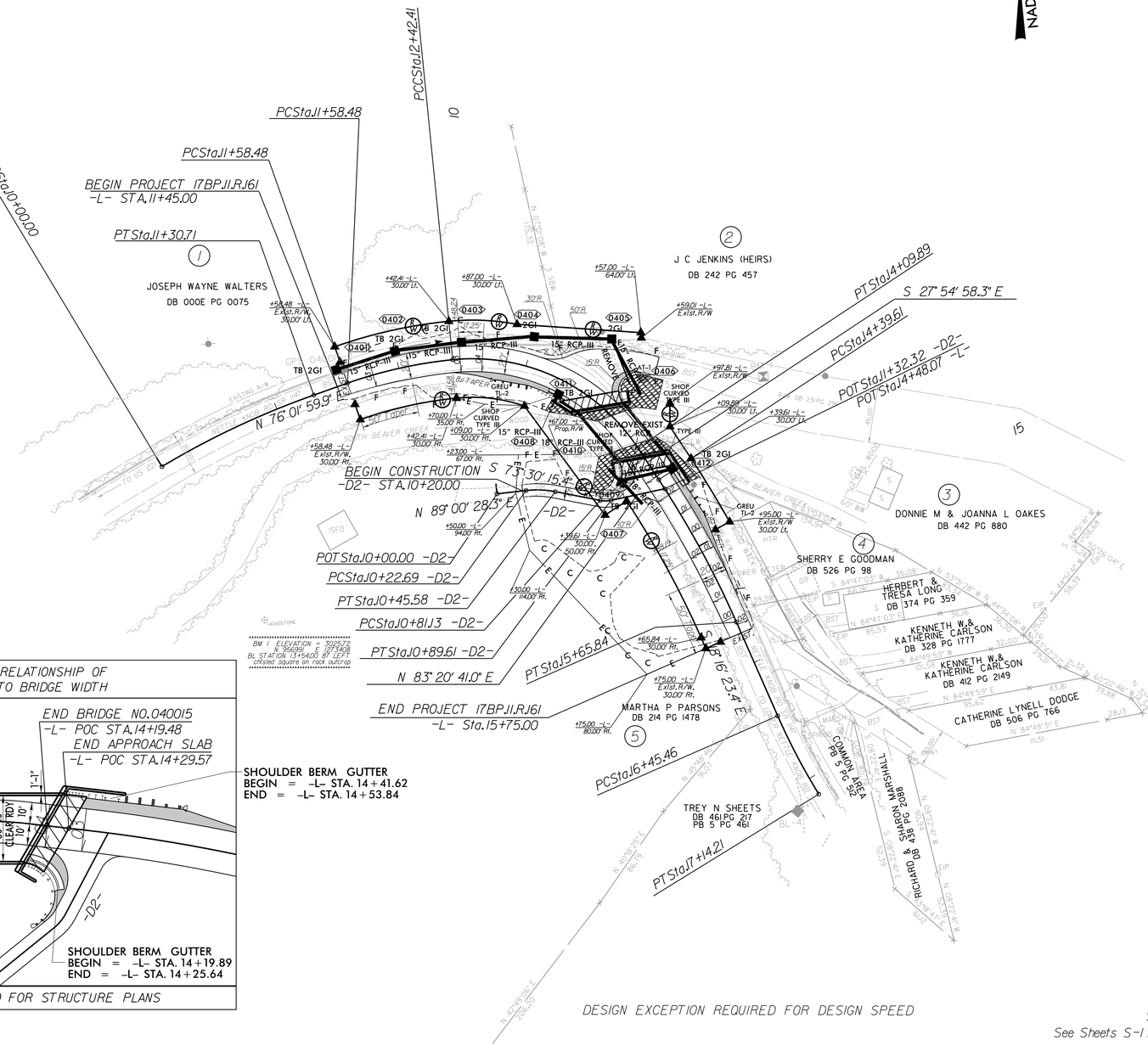

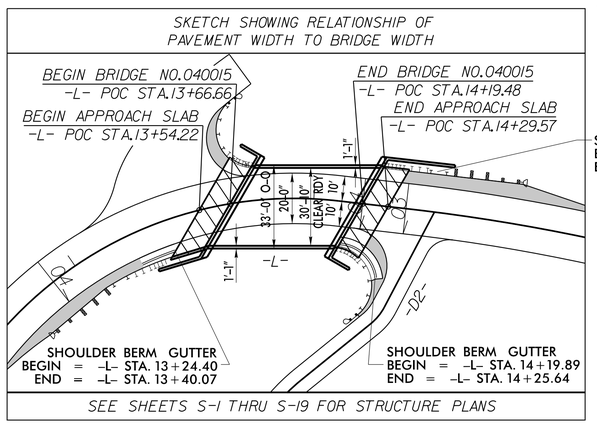

DESIGN EXCEPTION REQUIRED FOR DESIGN SPEED

See Sheet 5 for -L- Profile
See Sheet 5 for -D2- Profile
See Sheets S-1 thru S-19 for Structure Plans

7/27/2023 4:07:26 PM
I:\7BP.I1.R.I61_rdy-ssh04.dgn
I:\sect_plans\sect_plans\

DocuSign Envelope ID: 50DF9C49-12F0-45B7-884F-CCDE79AB00EF

5/14/99

PROJECT REFERENCE NO.	SHEET NO.
17BP.11.R.161	5

ROADWAY DESIGN ENGINEER

NORTH CAROLINA PROFESSIONAL SEAL 038351 ENGINEER JOHN C. LANSFORD

DocuSigned by: John C. Lansford
A4A1B1A1A1A1A1A...
7/27/2023 | 4:45:05 AM EDT

HYDRAULICS ENGINEER

NORTH CAROLINA PROFESSIONAL SEAL 030182 ENGINEER JON C. FORD

DocuSigned by: Jon C. Ford
C2021D0D0A7A43D...
7/27/2023 | 7:53:26 AM EDT

DOCUMENT NOT CONSIDERED FINAL UNLESS ALL SIGNATURES COMPLETED

-D2-

PI = 10+62.00
EL = 3,023.38'
VC = 40'
K = 3

PI = 11+10.00
EL = 3,019.26'
VC = 20'
K = 2

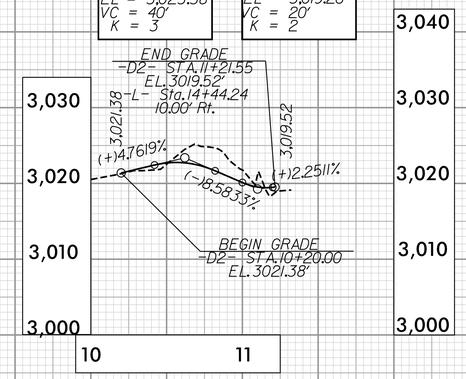

BM# 1 CHISELED SQUARE ON ROCK ABOVE OUTCROP
-L- STA.13+93.46, 89.95' LT.
(BL STA.13+54.00, 87' LT.)
EL.3025.72'
N 956991 E 1273408

-L-

PI = 11+85.00
EL = 3,025.81'
VC = 50'
K = 38
DS = 40 mph

PI = 13+20.00
EL = 3,020.07'
VC = 100'
K = 26
DS = 25 mph

PI = 14+60.00
EL = 3,019.49'
VC = 100'
K = 27
DS = 25 mph

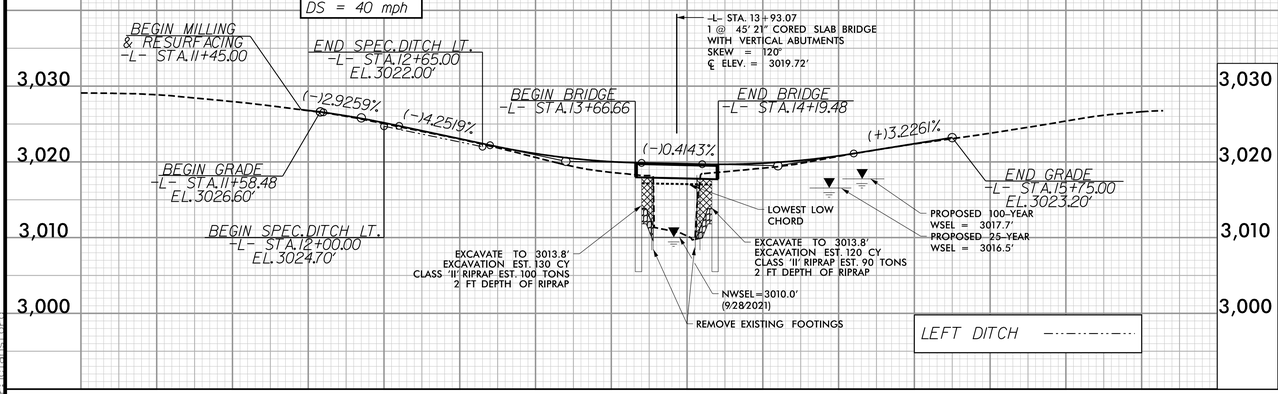

BRIDGE HYDRAULIC DATA

DESIGN DISCHARGE	=	870	CFS
DESIGN FREQUENCY	=	25	YRS
DESIGN HW ELEVATION	=	3016.5	FT
BASE DISCHARGE	=	1300	CFS
BASE FREQUENCY	=	100	YRS
BASE HW ELEVATION	=	3017.7	FT
OVERTOPPING DISCHARGE	=	2307	CFS
OVERTOPPING FREQUENCY	=	500+	YRS
OVERTOPPING ELEVATION	=	3020.4	FT
DATE OF SURVEY	=	(9/28/2021)	
W.S.ELEVATION AT DATE OF SURVEY	=	3010.0	FT

7/12/2023 4:08:25 PM
17BP.11.R.161_Hydro_Data_psh05.dgn
$$$$USER$$$$

STATE	STATE PROJECT REFERENCE NO.	SHEET NO.	TOTAL SHEETS
N.C.	17BP.11.R.161	RW01	4

STATE OF NORTH CAROLINA
DIVISION OF HIGHWAYS

SURVEY CONTROL, EXISTING CENTERLINES, RIGHT OF WAY, EASEMENTS AND PROPERTY TIES

ASHE COUNTY

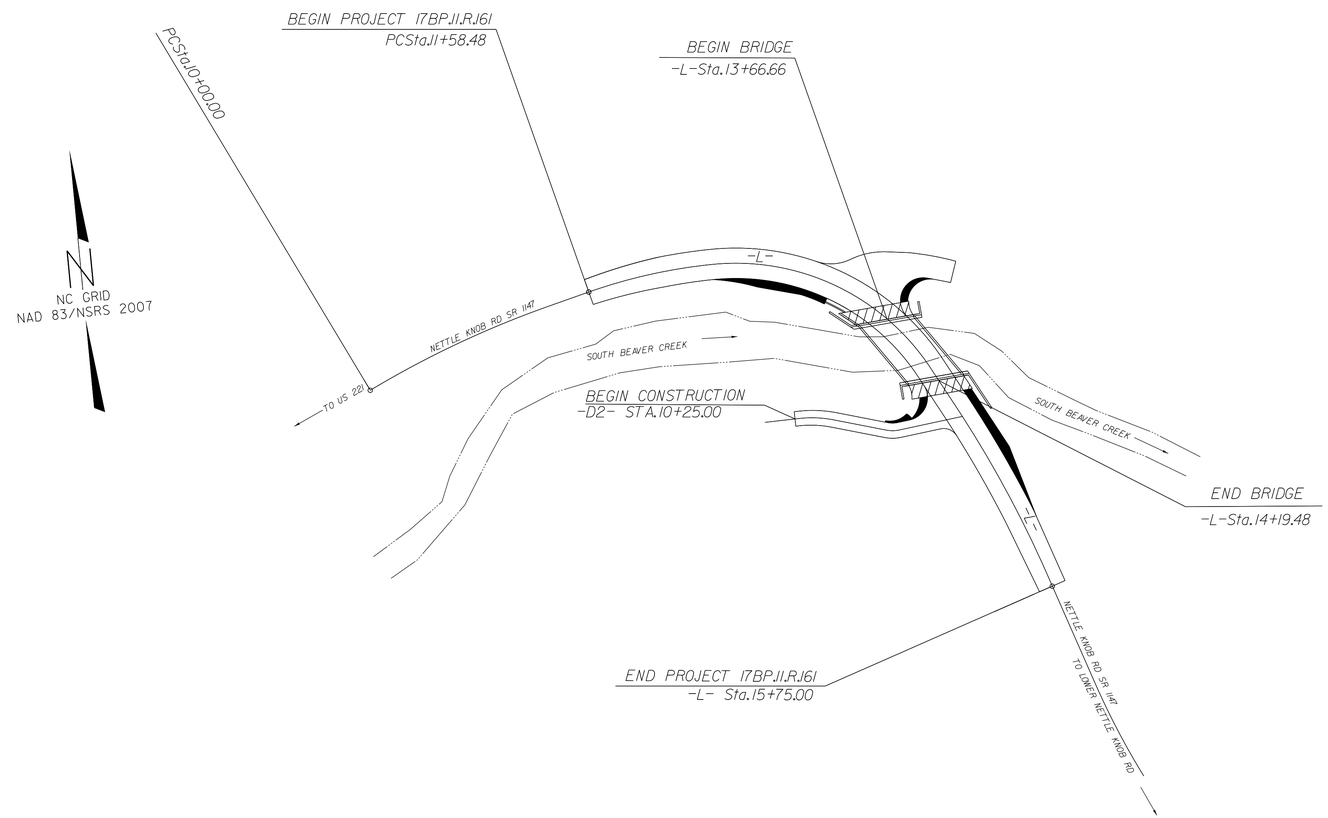

GRAPHIC SCALE

50 25 0 50 100

PLANS

DATUM DESCRIPTION

THE LOCALIZED COORDINATE SYSTEM DEVELOPED FOR THIS PROJECT IS BASED ON THE STATE PLANE COORDINATES ESTABLISHED BY NCGS FOR MONUMENT "040015-1" WITH NAD 83/NSRS 2007 STATE PLANE GRID COORDINATES OF NORTHING: 956780.5970(ft) EASTING: 1272548.5180(ft) ELEVATION: 3029.25'(ft) THE AVERAGE COMBINED GRID FACTOR USED ON THIS PROJECT (GROUND TO GRID) IS: 0.9999176590 THE N.C. LAMBERT GRID BEARING AND LOCALIZED HORIZONTAL GROUND DISTANCE FROM "040015-1" TO -L- STATION 10+00 IS N 64°23'56.40" E 430.0425'(ft) ALL LINEAR DIMENSIONS ARE LOCALIZED HORIZONTAL DISTANCES VERTICAL DATUM USED IS NAVD 88

Prepared in the Office of:

2018 STANDARD SPECIFICATIONS

RIGHT OF WAY DATE:
MAY 2022

LETTING DATE:
JUNE 10, 2022

PROFESSIONAL LAND SURVEYOR

NORTH CAROLINA PROFESSIONAL SEAL L-4301 LAND SURVEYOR R. LANDON WAGONER

DocuSigned by:
R. Landon Wagoner
5406613 7FD3042D...
05/05/2022

SIGNATURE: ***Date:***

STATE OF NORTH CAROLINA DEPARTMENT OF TRANSPORTATION

TIP PROJECT: 17BP.11.R.161

09/08/99

05-MAY-2022 07:33
Z:\OLD_D\NWILKES\Bridge jobs 2021\040015\CONTROL SHEETS\RW CONTROL SHEETS\rw01.dgn
rwalsh1 AT LS-308115

PROPOSED ALIGNMENT CONTROL SHEET

PROJECT REFERENCE NO.	SHEET NO.
17BP.11.R.161	RW02D-1

Location and Surveys

PROJECT SURVEYOR

NORTH CAROLINA PROFESSIONAL SEAL L-4301 LAND SURVEYOR R. LANDON WAGONER

DOCUMENT NOT CONSIDERED FINAL UNLESS ALL SIGNATURES COMPLETED

I, R. Landon wagoner, PLS, certify that the data compiled came from available surveys/mapping performed by others and provided to me by NCDOT and do not certify to the accuracy or quality of the individual data sources.

This 4th day of May, 2022.

DocuSigned by:
R. Landon Wagoner
94066137FD3042D...
Professional Land Surveyor L-4301

L

TYPE	STATION	NORTH	EAST
PC	10+00.00	956966.4190	1272936.3411
PT	11+30.71	957010.4669	1273059.1749
PC	11+58.48	957017.1697	1273086.1251
PCC	12+42.41	957027.5142	1273169.2045
PT	14+09.89	956945.6151	1273305.8982
PC	14+39.61	956919.3510	1273319.8138
PT	15+65.84	956803.3771	1273369.2682
PC	16+45.46	956727.7746	1273394.2320
PT	17+14.21	956664.1729	1273420.2036

D1

TYPE	STATION	NORTH	EAST
POT	10+00.00	956922.3440	1273233.8173
PC	10+35.92	956924.9301	1273269.6475
PCC	10+47.21	956919.8777	1273279.0723
PRC	10+83.66	956887.6998	1273296.1972
PT	11+14.53	956878.5163	1273322.5388
POT	11+30.29	956885.1763	1273336.8214

D2

TYPE	STATION	NORTH	EAST
POT	10+00.00	956920.4256	1273193.5994
PC	10+22.69	956920.8185	1273216.2860
PT	10+45.58	956917.7428	1273238.8804
PC	10+81.13	956907.6498	1273272.9630
PT	10+89.61	956906.9270	1273281.3597
POT	11+32.32	956911.8771	1273323.7835

NOTES:

1. PROJECT CONTROL WAS ESTABLISHED USING GNSS, THE GLOBAL NAVIGATION SATELLITE SYSTEM.

2. THE PROPOSED ALIGNMENT CONTROL DATA FOR THIS PROJECT HAS BEEN COMPILED FROM VARIOUS SOURCES. IF FURTHER INFORMATION REGARDING PROJECT CONTROL IS NEEDED, PLEASE CONTACT THE LOCATION AND SURVEYS UNIT.

REVISIONS

6/2/99

05-MAY-2022 07:34
z:\dot\DOWL\25-Bridge jobs 2021\040015\CONTROL SHEETS\RW CONTROL SHEETS\rw02d-1.dgn
zwalsh, A1 LS-308115

RIGHT OF WAY & PERMANENT EASEMENT CONTROL SHEET

PROJECT REFERENCE NO.	SHEET NO.
17BP.11.R.161	RW03E-1

Location and Surveys

PROJECT SURVEYOR

NORTH CAROLINA PROFESSIONAL SEAL L-4301 LAND SURVEYOR R. LANDON WAGONER

DOCUMENT NOT CONSIDERED FINAL UNLESS ALL SIGNATURES COMPLETED

I , R. Landon Wagoner , certify that the right of way and permanent easement monumentation for this project shown herein was completed under my direct and responsible charge from an actual survey made under my supervision; that all horizontal closures had a minimum ratio of precision of 1:10,000 (Class A). Field work was performed from May 3, 2022 to May 4, 2022, and all coordinates are based on NAD83/2011; That this survey was performed to meet the requirements of 21NCAC 56.1600 as applicable.

This 4th day of May, 2022.

DocuSigned by: R. Landon Wagoner
Professional Land Surveyor L-4301

ROW MARKER IRON PIN AND CAP-E

ALIGN	STATION	OFFSET	NORTH	EAST	
L	11+58.48	-30.00	957046.2828	1273078.8843	
L	11+58.48	30.00	956988.0566	1273093.3658	
L	11+58.48	17.50	957000.1870	1273090.3488	
L	11+58.49	-17.50	957034.1532	1273081.9048	
L	12+42.41	-30.00	957057.5140	1273169.0849	
L	12+42.41	30.00	956997.5144	1273169.3241	
L	12+87.00	-30.00	957050.0629	1273221.6547	
L	13+09.00	30.00	956986.3076	1273221.3348	
L	13+57.00	-64.00	957034.4826	1273316.8342	
L	13+59.01	-60.96	957030.3300	1273316.8495	
L	13+97.81	-40.55	956977.7889	1273334.0694	
L	14+09.89	-30.00	956959.6605	1273332.4072	*NOT SET-FELL IN WATER*
L	14+39.61	-30.00	956933.3964	1273346.3228	
L	14+39.61	30.00	956905.3056	1273293.3048	
L	14+39.61	50.00	956895.9440	1273275.6311	
L	15+59.69	-17.50	956814.8312	1273383.8882	
L	15+59.69	-30.00	956818.8477	1273395.7253	
L	15+65.84	30.00	956793.9707	1273340.7810	
L	15+75.00	30.00	956785.2718	1273343.6533	
L	15+75.00	17.50	956789.1937	1273355.5221	

ROW MARKER PERMANENT EASEMENT-E

ALIGN	STATION	OFFSET	NORTH	EAST
L	14+50.00	-30.00	956923.8155	1273351.3144
L	14+65.00	-40.00	956914.2409	1273367.2768
L	14+70.00	-40.00	956909.4986	1273369.5678
L	14+70.00	-30.00	956905.1786	1273360.5491

NOTES:

1. IF FURTHER INFORMATION REGARDING PROJECT CONTROL IS NEEDED PLEASE CONTACT THE LOCATION AND SURVEYS UNIT.
2. PROJECT CONTROL WAS ESTABLISHED USING GNSS, THE GLOBAL NAVIGATION SATELLITE SYSTEM.
3. RIGHT OF WAY MONUMENTATION ESTABLISHED TO .

REVISIONS

6/2/99

95-MAY-2022 07:35
R:\DOWNLOADS
zwolsh AT LS-308115
jobs 2021\040015\CONTROL SHEETS\RW CONTROL SHEETS\rw03e-1.dgn

PROJECT REFERENCE NO.	SHEET NO.
17BP.11.R.161	RW04

Location and Surveys

PROJECT SURVEYOR

NORTH CAROLINA PROFESSIONAL SEAL L-4301 LAND SURVEYOR R. LANDON WAGONER

DOCUMENT NOT CONSIDERED FINAL UNLESS ALL SIGNATURES COMPLETED

I , R. Landon Wagoner , certify that the right of way and permanent easement monumentation for this project shown herein was completed under my direct and responsible charge from an actual survey made under my supervision; that all horizontal closures had a minimum ratio of precision of 1:10,000 (Class A). Field work was performed from May 3, 2022 to May 4, 2022, and all coordinates are based on NAD83/2011; That this survey was performed to meet the requirements of 21NCAC 56.1600 as applicable.

This 4th day of May, 2022.

Docusigned by:
R. Landon Wagoner
DocuSign Envelope ID: 7A1B0A2C-4F8B-4A2D-A3C1-B2E5D6F7A8B9

Professional Land Surveyor L-4301

-L- CURVE DATA			
PI Sta 10+65.58	PI Sta 12+00.65	PI Sta 13+35.51	PI Sta 16+79.89
△ = 11° 31' 19.2" (RT)	△ = 13° 44' 17.5" (RT)	△ = 62° 18' 44.2" (RT)	△ = 7° 52' 43.2" (LT)
D = 8° 48' 53.0"	D = 16° 22' 12.8"	D = 37° 12' 18.2"	D = 11° 27' 33.0"
L = 130.71'	L = 83.92'	L = 167.48'	L = 68.75'
T = 65.58'	T = 42.16'	T = 93.10'	T = 34.43'
R = 650.00'	R = 350.00'	R = 154.00'	R = 500.00'
	SE = 0.03	SE = 0.04	
	RO = 69'	RO = 69'	
		PI Sta 15+02.88	
		△ = 9° 38' 34.9" (RT)	
		D = 7° 38' 22.0"	
		L = 126.23'	
		T = 63.26'	
		R = 750.00'	
		SE = Exist.	

-D2- CURVE DATA	
PI Sta 10+34.23	PI Sta 10+85.43
△ = 17° 29' 16.3" (RT)	△ = 23° 09' 03.6" (LT)
D = 76° 23' 39.7"	D = 272° 50' 13.4"
L = 22.89'	L = 8.49'
T = 11.54'	T = 4.30'
R = 75.00'	R = 21.00'
SE = NC	SE = NC

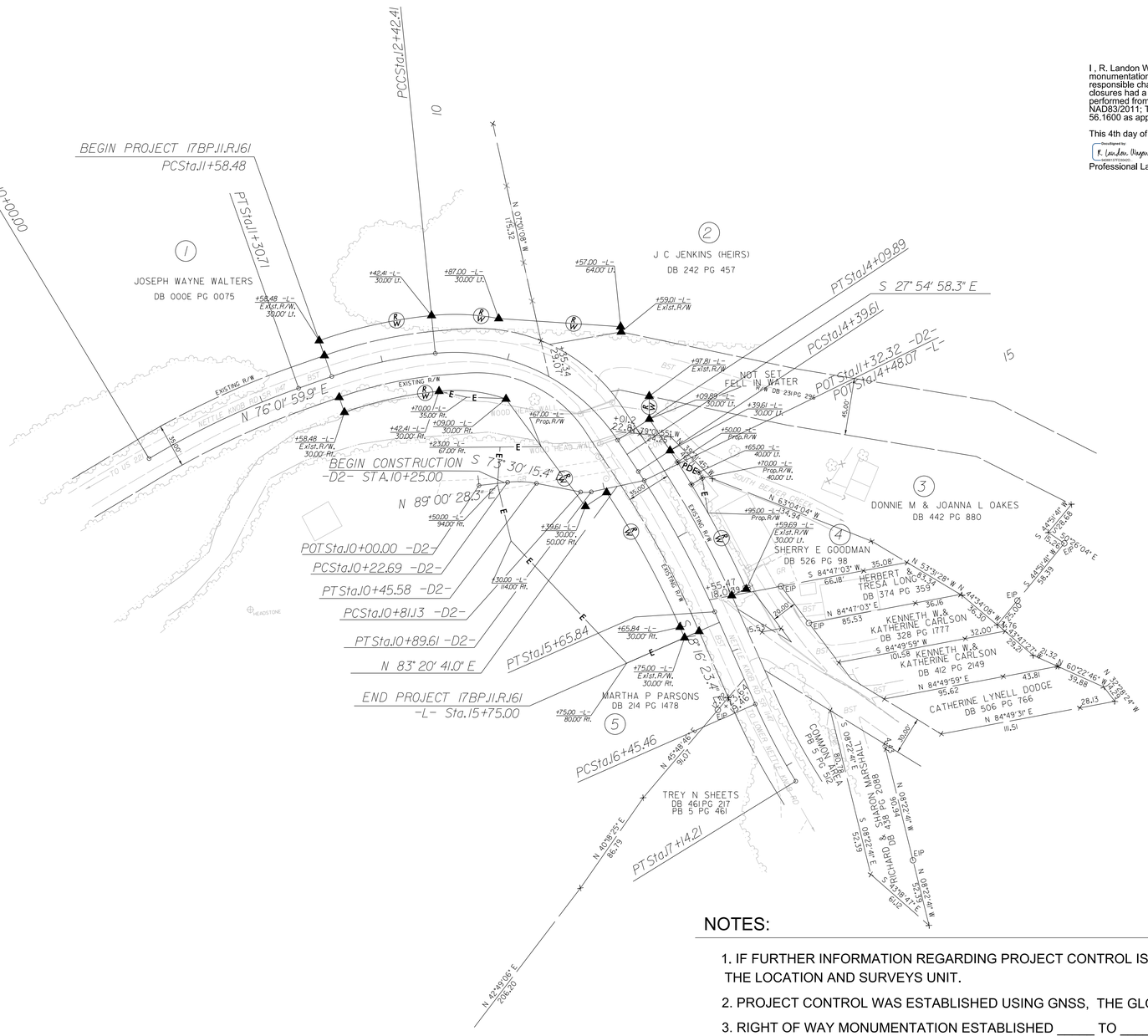

NOTES:

1. IF FURTHER INFORMATION REGARDING PROJECT CONTROL IS NEEDED PLEASE CONTACT THE LOCATION AND SURVEYS UNIT.
2. PROJECT CONTROL WAS ESTABLISHED USING GNSS, THE GLOBAL NAVIGATION SATELLITE SYSTEM.
3. RIGHT OF WAY MONUMENTATION ESTABLISHED _____ TO _____ .

REVISIONS

6/2/99

05-MAY-2022 07:31
zalsh1 on LS-308115
C:\Users\zalsh1\AppData\Local\Temp\pwdg_jobs 2021\040015\CONTROL SHEETS\RW CONTROL SHEETS\rw04.dgn

DocuSign Envelope ID: 13A295EC-3E81-4667-91A7-A2DBC8EA92BF

STATE OF NORTH CAROLINA
DIVISION OF HIGHWAYS

TRANSPORTATION MANAGEMENT PLAN

ASHE COUNTY

DIVISION 11

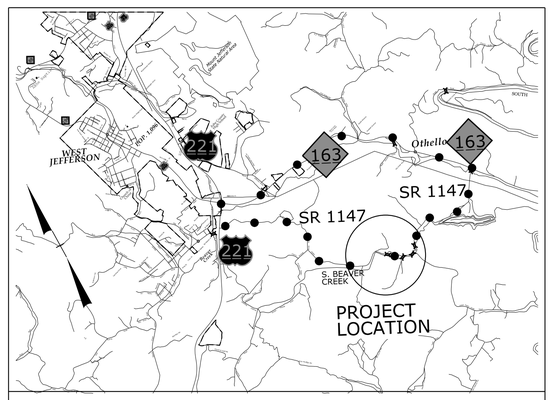

VICINITY MAP (N.T.S.)

OFF SITE DETOUR

LOCATION: STRUCTURE NO. 040015 OVER SOUTH BEAVER CREEK ON SR 1147 (NETTLE KNOB ROAD)

TYPE OF WORK: GRADING, DRAINAGE, PAVING AND STRUCTURE

WORK ZONE SAFETY & MOBILITY
"from the MOUNTAINS to the COAST"

PLANS PREPARED BY:

LLOYD DEWAYNE BROWN, P.E., P.L.S.
PROJECT ENGINEER

ALEX FITZPATRICK
PROJECT DESIGN ENGINEER

NCDOT CONTACTS:

JOSEPH E. HUMMER, Ph.D., P.E.
STATE TRAFFIC MANAGEMENT ENGINEER

DON A. PARKER, P.E.
WESTERN WZTC ENGINEER

DIVISION OF HIGHWAYS · STATE OF NORTH CAROLINA · DEPARTMENT OF TRANSPORTATION · WORK ZONE TRAFFIC CONTROL

INDEX OF SHEETS

SHEET NO.	TITLE
TMP-1	TITLE SHEET, LEGEND, AND INDEX OF SHEETS
TMP-1A	LIST OF APPLICABLE ROADWAY STANDARD DRAWINGS, GENERAL NOTES, LOCAL NOTES, AND TRANSPORTATION OPERATIONS
TMP-2	SPECIAL SIGN DESIGN
TMP-3	TEMPORARY TRAFFIC CONTROL DETAIL, PHASING NOTES, OFF-SITE DETOUR SIGNING AND ROAD CLOSURE

LEGEND

GENERAL

NORTH ARROW

TRAFFIC CONTROL DEVICES

BARRICADE (TYPE III)

TEMPORARY SIGNING

STATIONARY SIGN

DOCUMENT NOT CONSIDERED FINAL UNLESS ALL SIGNATURES COMPLETED

V&M
Vaughn & Melton
Consulting Engineers
Asheville, North Carolina
828-253-2796
Boone, NC 828-355-9933
Tri-Cities, TN 423-467-8401
Knoxville, TN 865-546-5800
Spartanburg, SC 864-574-4775
Charleston, SC 843-974-5650
Middlesboro, KY 606-248-6600
Atlanta, GA 770-627-3509
Raleigh, NC 919-977-9455
Charlotte, NC 704-357-0488

Copyright © 2006 Vaughn & Melton, Inc. All Rights Reserved

APPROVED: DocuSigned by: 59DCBF472096AE0...

DATE: 7/24/2023 | 5:12:50 PM EDT

NORTH CAROLINA PROFESSIONAL SEAL 20119 ENGINEER LLOYD D. BROWN

SHEET NO.
TMP-1

PROJECT: 17BP.11.R.161

6/19/2023 12:40:49 PM
...\040015_TMP-1.dgn
User:dfreddie

DocuSign Envelope ID: 13A295EC-3E81-4667-91A7-A2DBC8EA92BF

PROJ. REFERENCE NO.	SHEET NO.
17BP.11.R.161	TMP-1A

ROADWAY STANDARD DRAWINGS

THE FOLLOWING ROADWAY STANDARDS AS SHOWN IN "ROADWAY STANDARD DRAWINGS" - N.C. DEPARTMENT OF TRANSPORTATION - RALEIGH, N.C., DATED JANUARY 2018 ARE APPLICABLE TO THIS PROJECT AND BY REFERENCE HEREBY ARE CONSIDERED A PART OF THESE PLANS:

STD. NO.	TITLE
1101.01	WORK ZONE WARNING SIGNS
1101.03	TEMPORARY ROAD CLOSURES
1101.11	TRAFFIC CONTROL DESIGN TABLES
1110.01	STATIONARY WORK ZONE SIGNS
1130.01	
1135.01	
1145.01	BARRICADES
1205.01	
1205.02	
1205.12	
1261.01	
1261.02	
1262.01	

TRANSPORTATION OPERATIONS

CONSTRUCTION

REMOVE AND REPLACE EXISTING STRUCTURE AND APPROACHES ALONG THE EXISTING ROADWAY ALIGNMENT AS SHOWN IN THE CONSTRUCTION PLANS

TMP DESIGN PARAMETERS

TRAFFIC WILL BE DETOURED OFF-SITE DURING THE CONSTRUCTION PERIOD. THE OFF-SITE DETOUR WILL INCLUDE SR 1147, NC 194, NC 163(SEE SHEET TMP-3).

LOCAL NOTES

LOCAL NOTES:

1) EMERGENCY VEHICLE ACCESS MUST BE MAINTAINED AT ALL TIMES.

2) NOTIFY THE FIRE DEPT, E.M.S., AND ASHE COUNTY SCHOOL BOARD 30 DAYS PRIOR TO ROAD CLOSURE.

3) MAINTAIN LOCAL ACESS TO ALL DRIVEWAYS BETWEEN THE CLOSURE POINTS AT ALL TIMES DURING CONSTRUCTION.

GENERAL NOTES

CHANGES MAY BE REQUIRED WHEN PHYSICAL DIMENSIONS IN THE DETAIL DRAWINGS, STANDARD DETAILS, AND ROADWAY DETAILS ARE NOT ATTAINABLE TO MEET FIELD CONDITIONS OR RESULT IN DUPLICATE OR UNDESIRED OVERLAPPING OF DEVICES. MODIFICATION MAY INCLUDE: MOVING, SUPPLEMENTING, COVERING, OR REMOVAL OF DEVICES AS DIRECTED BY THE ENGINEER.

THE FOLLOWING GENERAL NOTES APPLY AT ALL TIMES FOR THE DURATION OF THE CONSTRUCTION PROJECT EXCEPT WHEN OTHERWISE NOTED IN THE PLAN OR DIRECTED BY THE ENGINEER.

TRAFFIC PATTERN ALTERATIONS

A) NOTIFY THE ENGINEER THIRTY (30) CALENDAR DAYS PRIOR TO ANY TRAFFIC PATTERN ALTERATION.

SIGNING

B) PROVIDE SIGNING AND DEVICES REQUIRED TO CLOSE THE ROAD ACCORDING TO THE ROADWAY STANDARD DRAWINGS AND TRAFFIC CONTROL PLANS.

PROVIDE SIGNING REQUIRED FOR THE OFF-SITE DETOUR ROUTE AS SHOWN IN THE TRAFFIC CONTROL PLANS.

C) COVER OR REMOVE ALL SIGNS AND DEVICES REQUIRED TO CLOSE THE ROAD WHEN ROAD CLOSURE IS NOT IN OPERATION.

COVER OR REMOVE ALL SIGNS AND DEVICES REQUIRED FOR THE OFF-SITE DETOUR WHEN THE DETOUR IS NOT IN OPERATION.

D) ENSURE ALL NECESSARY SIGNING IS IN PLACE PRIOR TO ALTERING ANY TRAFFIC PATTERN.

TRAFFIC CONTROL DEVICES

E) PLACE TYPE III BARRICADES WITH "ROAD CLOSED" SIGN R 11-2 ATTACHED OF SUFFICIENT LENGTH TO CLOSE ENTIRE ROADWAY.

PAVEMENT MARKINGS

F) TIE PROPOSED PAVEMENT MARKING LINES TO EXISTING PAVEMENT MARKING LINES.

G) FINAL PAVEMENT MARKING APPLICATIONS OF PAINT SHALL BE PLACED IN TWO APPLICATIONS.

APPROVED: DocuSigned by: 590CBF472096E0...

DATE: 7/24/2023 | 5:12:50 PM EDT

NORTH CAROLINA PROFESSIONAL SEAL 20119 ENGINEER LLOYD D. BROWN

DOCUMENT NOT CONSIDERED FINAL UNLESS ALL SIGNATURES COMPLETED

DIVISION OF HIGHWAYS · STATE OF NORTH CAROLINA · DEPARTMENT OF TRANSPORTATION · WORK ZONE TRAFFIC CONTROL

ROADWAY STANDARD DRAWINGS, GENERAL NOTES, LOCAL NOTES, AND TRANSPORTATION OPERATIONS

5/18/2023 2:30:23 PM
...\04005_TMP-1A.dgn
User:dfreddie

DocuSign Envelope ID: 13A295EC-3E81-4667-91A7-A2DBC8EA92BF

PROJ. REFERENCE NO.	SHEET NO.
17BP.11.R.161	TMP-2

SIGN NUMBER: SD-1
TYPE: D
QUANTITY: SEE PLANS

SIGN WIDTH: 3′-0″
HEIGHT: 2′-0″
TOTAL AREA: 6.0 Sq.Ft.

BORDER TYPE: FLUSH
RECESS: 0.47″
WIDTH: 0.63″
RADII: 1.5″

NO. Z BARS:
LENGTH:

BACKG COLOR: Orange
COPY COLOR: Black

SYMBOL	X	Y	WID	HT

MAT'L: 0.125″ (3.2 mm) ALUMINUM

DESIGN BY: CGM
PROJECT ID:

CHECKED BY: LDB
LOCATION: ASHE COUNTY

Jan 27, 2022
DIV: 11

USE NOTES:

1. Legend and border(except those that are colored black) shall be direct applied Grade C sheeting.
2. Background shall be Grade A, B, or C reflective sheeting.
3. Shields; A, B, and C type arrows shall be on 0.032″ (0.8mm) aluminum with Grade C reflective sheeting and demountable.
4. Bottom panel shall be yellow Grade C sheeting. Legend shall be direct applied black non-reflective sheeting. Arrow shall be on 0.032″ aluminum, black non-reflective sheeting an demountable. Yellow panel is:

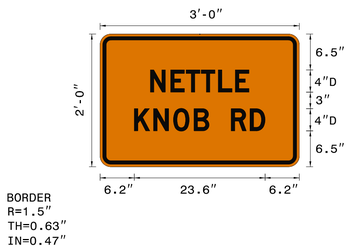

Spacing Factor is 1 unless specified otherwise

LETTER POSITIONS

Letter spacings are to start of next letter																											Series/Size Text Length
		N	E	T	T	L	E																				D 2000
	9.1	3.7	2.8	2.7	3.1	3.1	2.5	9.1																			17.8
		K	N	O	B		R	D																			D 2000
	6.2	3.5	3.6	3.7	2.7	4	3.4	2.7	6.2																		23.6

FILENAME: 040015_TMP-2

NORTH CAROLINA D.O.T. SIGN DETAIL

APPROVED: DocuSigned by: 59DCBF4720964ED...
DATE: 7/24/2023 | 5:12:50 PM EDT

NORTH CAROLINA PROFESSIONAL SEAL 20119 ENGINEER LLOYD D. BROWN

DIVISION OF HIGHWAYS STATE OF NORTH CAROLINA DEPARTMENT OF TRANSPORTATION WORK ZONE TRAFFIC CONTROL

DOCUMENT NOT CONSIDERED FINAL UNLESS ALL SIGNATURES COMPLETED

SPECIAL SIGN DESIGN

5/18/2023 2:32:02 PM
...\040015_TMP-2.dgn
User:dfredde

DocuSign Envelope ID: 13A295EC-3E81-4667-91A7-A2DBC8EA92BF

PROJ. REFERENCE NO.	SHEET NO.
17BP.11.R.161	TMP-3

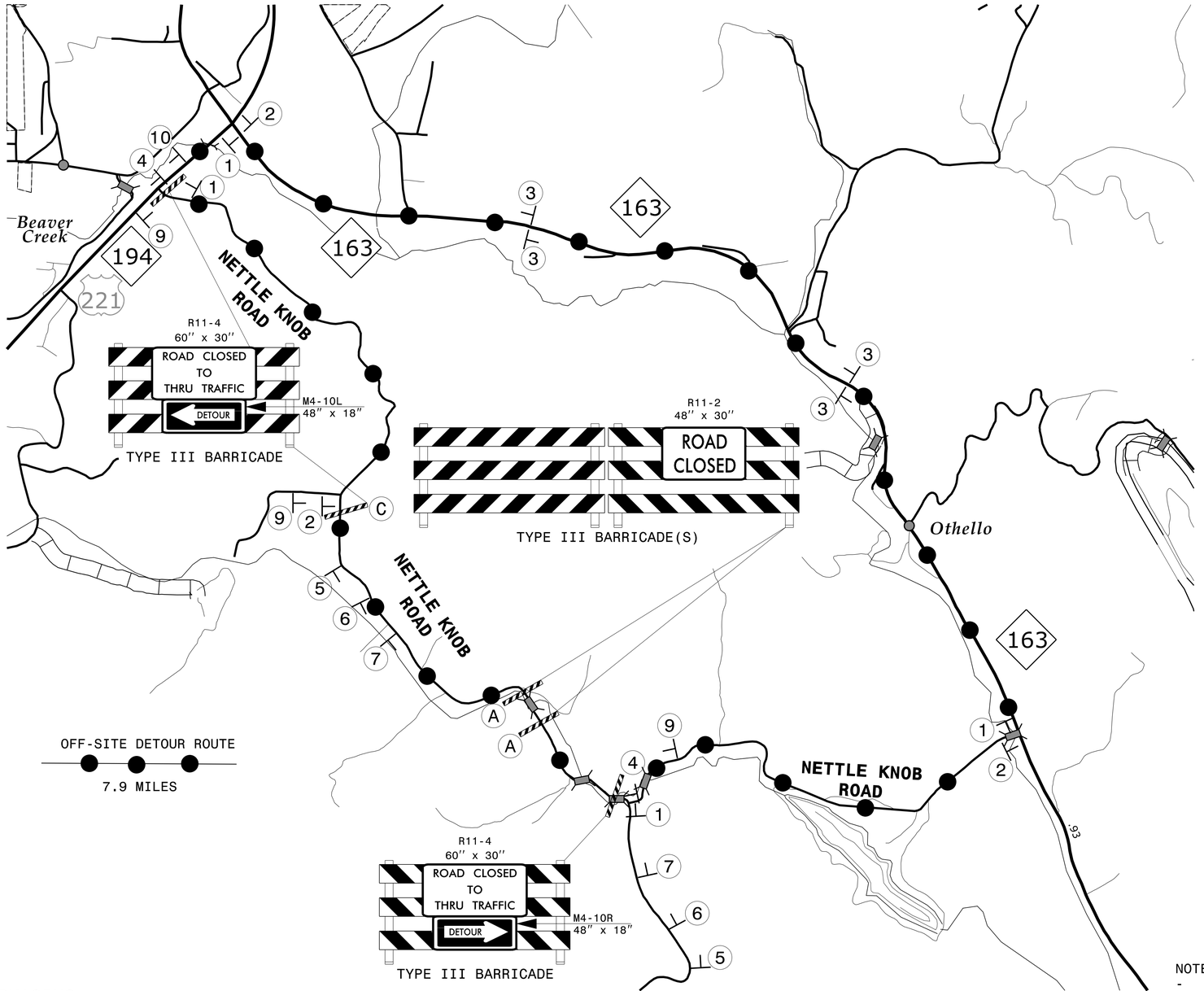

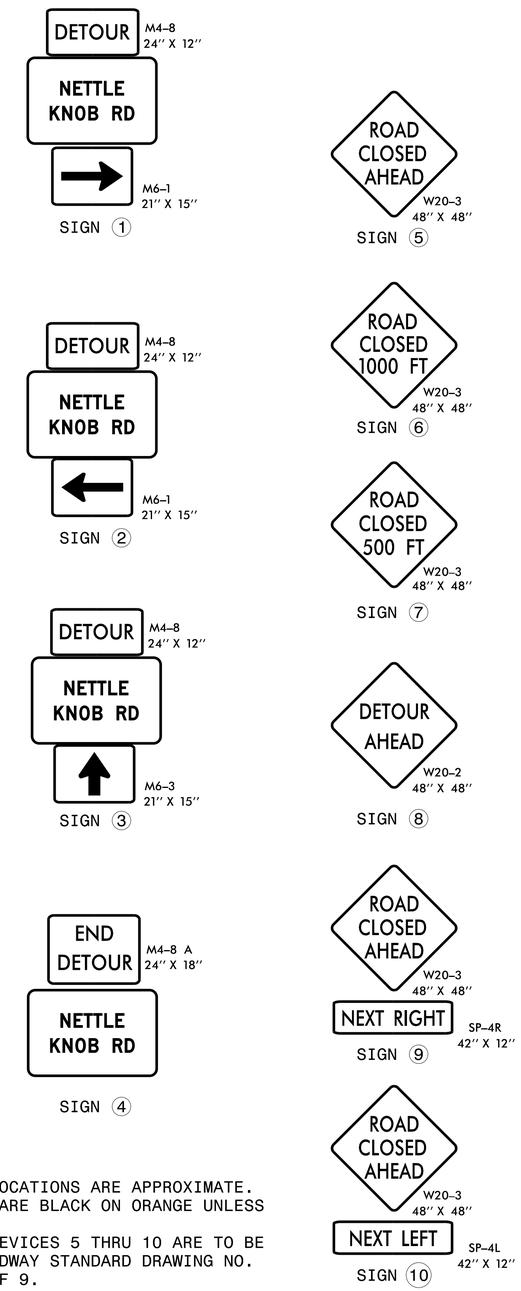

PHASING

STEP 1: -INSTALL OFF-SITE DETOUR ROUTE SIGNING TO CLOSE -L- NETTLE KNOB ROAD.

STEP 2: -USING ROADWAY STANDARD DRAWING NO. 1101.03 SHEET 1 OF 9, CLOSE -L- SR 1147, NETTLE KNOB ROAD, TO THRU TRAFFIC AND DETOUR TRAFFIC OFF-SITE.

NOTE: MAINTAIN ACCESS TO ALL RESIDENCES AND BUSINESSES DURING CONSTRUCTION.

STEP 3: -AWAY FROM TRAFFIC, REMOVE THE EXISTING STRUCTURE AND CONSTRUCT THE PROPOSED STRUCTURE AND ROADWAY UP TO AND INCLUDING THE FINAL LAYER OF SURFACE COURSE ON -L-

STEP 4: -PLACE FINAL PAVEMENT MARKINGS ON SR 1147, NETTLE KNOB ROAD (SEE PAVEMENT MARKING PLANS).

STEP 5: -OPEN SR 1147, NETTLE KNOB ROAD, TO ITS FINAL TRAFFIC PATTERN. REMOVE ALL TRAFFIC CONTROL DEVICES AND DETOUR ROUTE SIGNING.

NOTES:
- ALL DETOUR SIGN LOCATIONS ARE APPROXIMATE.
- ALL DETOUR SIGNS ARE BLACK ON ORANGE UNLESS OTHERWISE NOTED
- TRAFFIC CONTROL DEVICES 5 THRU 10 ARE TO BE INSTALLED PER ROADWAY STANDARD DRAWING NO. 1101.03 SHEET 1 OF 9.

APPROVED: DocuSigned by: 560CBF4720964E0...
DATE: 7/24/2023 | 5:12:50 PM EDT

NORTH CAROLINA PROFESSIONAL SEAL 20119 ENGINEER LLOYD D. BROWN

DOCUMENT NOT CONSIDERED FINAL UNLESS ALL SIGNATURES COMPLETED

DIVISION OF HIGHWAYS STATE OF NORTH CAROLINA DEPARTMENT OF TRANSPORTATION WORK ZONE TRAFFIC CONTROL

TEMPORARY TRAFFIC CONTROL DETAIL, PHASING NOTES, OFFSITE DETOUR SIGNING AND ROAD CLOSURE

5/18/2023 2:54:00 PM
...\040015_TMP-3.dgn
User:dfredde

DocuSign Envelope ID: 25110EBC-1A6D-470D-98B4-604C41F8C3A7

PROJECT: 17BP.11.R.161

CONTRACT:DK00363

TIP NO.	SHEET NO.
17BP.11.R.161	PMP-1

APPROVED: DocuSigned by: Lloyd D. Brown 3B9B40F1F97468...

DATE: 7/24/2023

SEAL

NORTH CAROLINA PROFESSIONAL SEAL 20119 ENGINEER LLOYD D. BROWN

DOCUMENT NOT CONSIDERED FINAL UNLESS ALL SIGNATURES COMPLETED

STATE OF NORTH CAROLINA
DEPARTMENT OF TRANSPORTATION

PAVEMENT MARKING PLAN
ASHE COUNTY

LOCATION: STRUCTURE NO. 040015 OVER SOUTH BEAVER CREEK ON SR 1147 (NETTLE KNOB ROAD)

ROADWAY STANDARD DRAWING

THE FOLLOWING ROADWAY STANDARDS AS APPEAR IN "ROADWAY STANDARD DRAWINGS" - PROJECT SERVICES UNIT - N.C. DEPARTMENT OF TRANSPORTATION - RALEIGH, N.C., DATED JANUARY 2018 ARE APPLICABLE TO THIS PROJECT AND BY REFERENCE HEREBY ARE CONSIDERED A PART OF THESE PLANS:

STD. NO.	TITLE
1205.01	PAVEMENT MARKINGS - LINE TYPES AND OFFSETS
1205.02	PAVEMENT MARKINGS - TWO-LANE AND MULTILANE ROADWAYS
1205.04	PAVEMENT MARKINGS - INTERSECTIONS
1205.12	PAVEMENT MARKINGS - BRIDGES
1261.01	GUARDRAIL AND BARRIER DELINEATORS - INSTALLATION SPACING
1261.02	GUARDRAIL AND BARRIER DELINEATORS - TYPES AND MOUNTING
1262.01	GUARDRAIL END DELINEATION

INDEX

SHEET NO.	DESCRIPTION
PMP-1	PAVEMENT MARKING PLAN TITLE AND SCHEDULE SHEET
PMP-2	PAVEMENT MARKING DETAIL AND SCHEDULE

GENERAL NOTES

THE FOLLOWING GENERAL NOTES APPLY AT ALL TIMES FOR THE DURATION OF THE CONSTRUCTION PROJECT, EXCEPT WHEN OTHERWISE NOTED IN THE PLAN, OR DIRECTED BY THE ENGINEER.

A) INSTALL PAVEMENT MARKINGS AND PAVEMENT MARKERS ON THE FINAL SURFACE AS FOLLOWS:

ROAD NAME	MARKING	MARKER
NETTLE KNOB ROAD	PAINT	NONE

B) PLACE TWO APPLICATIONS OF PAINT PAVEMENT MARKINGS ON THE FINAL WEARING SURFACE. PLACE THE SECOND APPLICATION OF PAINT UPON SUFFICIENT DRYING TIME OF THE FIRST.

C) TIE PROPOSED PAVEMENT MARKING LINES TO EXISTING PAVEMENT MARKING LINES.

D) REMOVE/REPLACE ANY CONFLICTING/DAMAGED PAVEMENT MARKINGS AND MARKERS.

V&M Vaughn & Melton Consulting Engineers
Asheville, North Carolina 828-253-2796
Boone, NC 828-355-9933
Tri-Cities, TN 423-467-8401
Knoxville, TN 865-546-5800
Spartanburg, SC 864-574-4775
Charleston, SC 843-974-5650
Middlesboro, KY 606-248-6600
Atlanta, GA 770-627-3590
Raleigh, NC 919-977-9455
Charlotte, NC 704-357-0488

Copyright © 2006 Vaughn & Melton, Inc. All Rights Reserved

LLOYD D. BROWN, P.E. — TRANSPORTAION ENGINEER

ALEX FITZPATRICK — TRANSPORTATION DESIGN ENGINEER

5/18/2023 1:23:42 PM
...\17BP.11.R.161_PMP-1.dgn
User:dfredde

DocuSign Envelope ID: 25110EBC-1A6D-470D-98B4-604C41F8C3A7

TIP NO.	SHEET NO.
17BP.11.R.161	PMP-2

APPROVED: Lloyd D. Brown (DocuSigned by: 33B54DF17F57468...)

DATE: 7/24/2023

SEAL

NORTH CAROLINA PROFESSIONAL SEAL 20119 ENGINEER LLOYD D. BROWN

DOCUMENT NOT CONSIDERED FINAL UNLESS ALL SIGNATURES COMPLETED

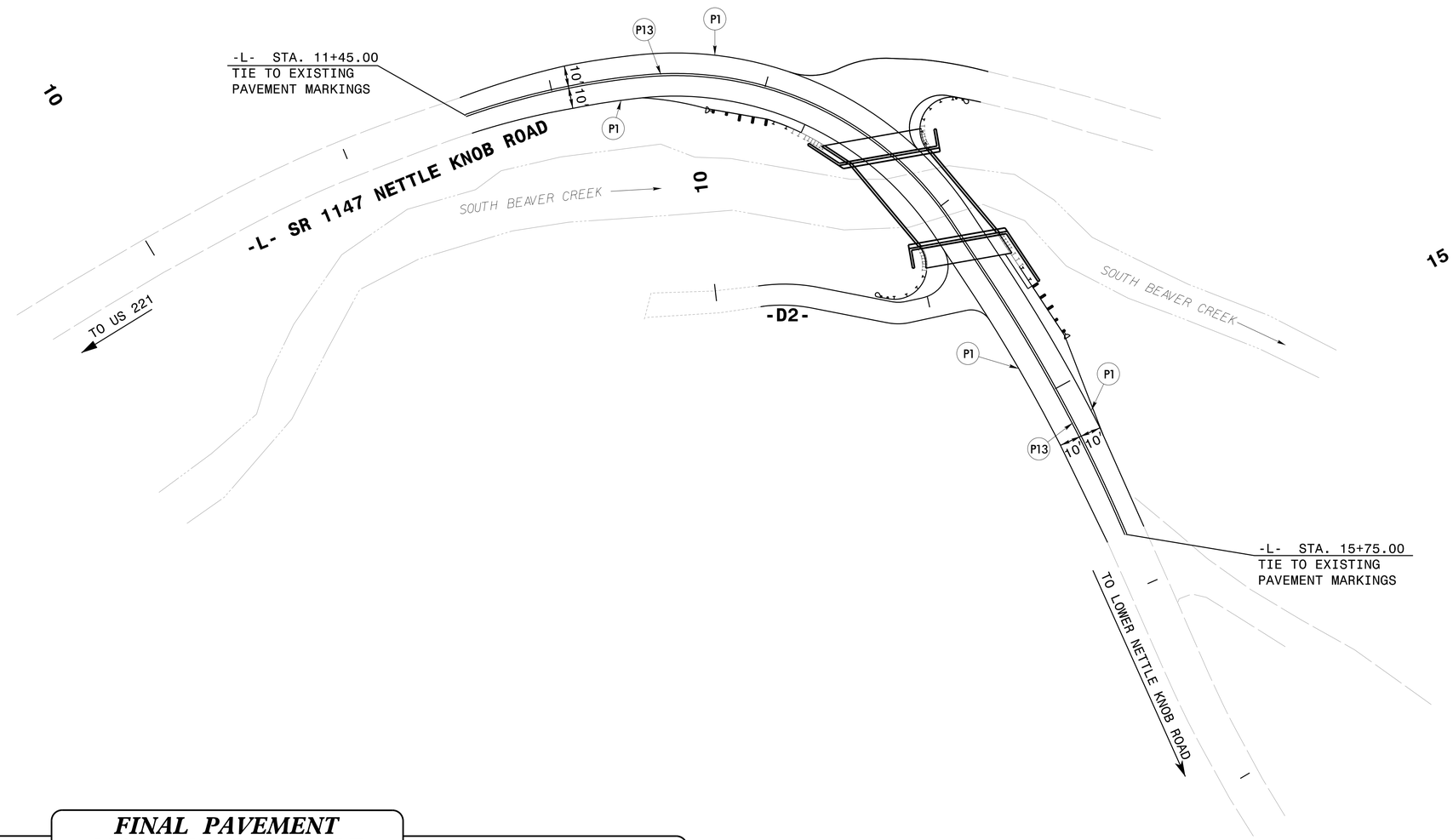

FINAL PAVEMENT MARKING SCHEDULE

SYMBOL	DESCRIPTION	QUANTITY BREAKDOWN	PAY ITEM	TOTAL QUANTITY
P1	WHITE EDGELINE (4") - PAINT	860 FT	4810000000-E	1,720 FT
P13	YELLOW DOUBLE CENTER (4") - PAINT	860 FT	4810000000-E	1,720 FT

SCALE 1"=30'

PAVEMENT MARKING DETAIL AND SCHEDULE

7/24/2023
V:\NC\Structures\032\40-05 Ashe I5\Signing and Delineation\17BP.11.R.161_PMP-2.dgn
User:dfredde

DocuSign Envelope ID: 850BF6B8-2B35-42A8-9570-889EA6006D81 7/26/2023 | 3:23:37 PM EDT

17BP.11.R.161

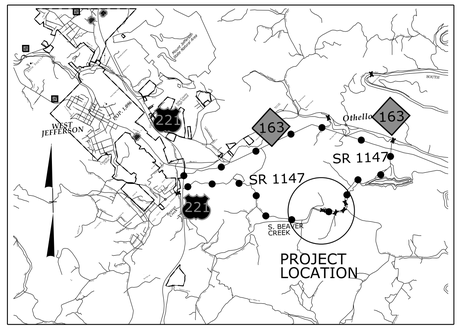

VICINITY MAP
NOT TO SCALE

STATE OF NORTH CAROLINA
DIVISION OF HIGHWAYS

PLAN FOR PROPOSED
HIGHWAY EROSION CONTROL

ASHE COUNTY

LOCATION: STRUCTURE NO. 040015 OVER SOUTH BEAVER CREEK
ON SR 1147 (NETTLE KNOB ROAD)
TYPE OF WORK: GRADING, DRAINAGE, PAVING AND STRUCTURE

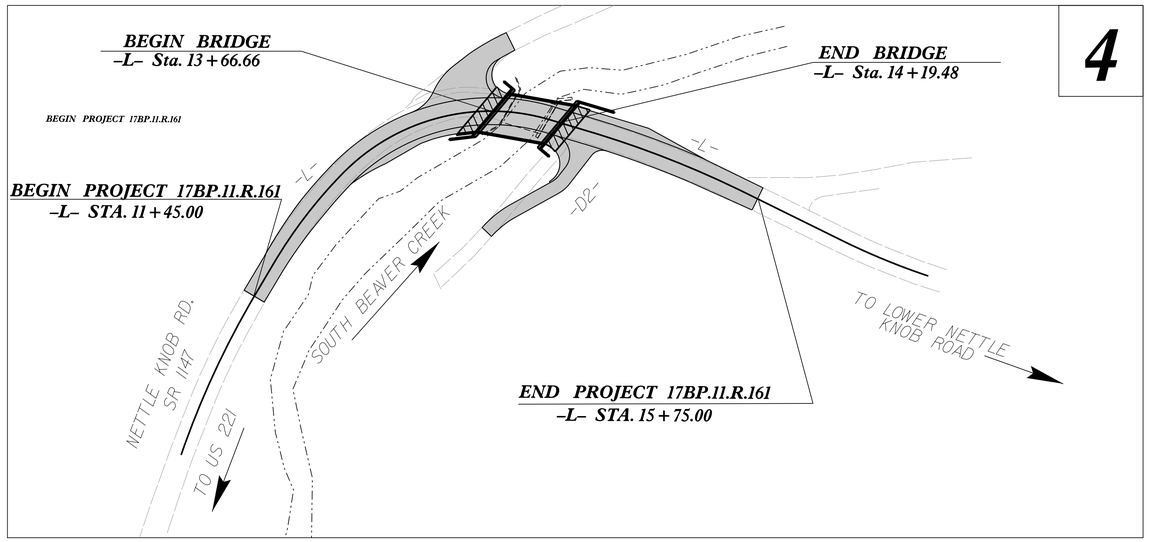

STATE	STATE PROJECT REFERENCE NO.	SHEET NO.	TOTAL SHEETS
N.C.	17BP.11.R.161	EC-1	

STATE PROJ. NO.	F.A. PROJ. NO.	DESCRIPTION
17BP.11.PE.161	N/A	P.E.
17BP.11.ROW.161	N/A	R/W & UTILITIES
17BP.11.R.161	N/A	CONST.

EROSION AND SEDIMENT CONTROL MEASURES

Std. #	Description	Symbol
1630.03	Temporary Silt Ditch	TSD
1630.05	Temporary Diversion	TD
1605.01	Temporary Silt Fence	
1606.01	Special Sediment Control Fence	
1622.01	Temporary Berms and Slope Drains	
1630.02	Silt Basin Type B	
1633.01	Temporary Rock Silt Check Type-A	
	Temporary Rock Silt Check Type-A with Matting and Polyacrylamide (PAM)	
1633.02	Temporary Rock Silt Check Type-B	
	Wattle / Coir Fiber Wattle	EW CFW
	Wattle / Coir Fiber Wattle with Polyacrylamide (PAM)	
1634.01	Temporary Rock Sediment Dam Type-A	
1634.02	Temporary Rock Sediment Dam Type-B	
1635.01	Rock Pipe Inlet Sediment Trap Type-A	
1635.02	Rock Pipe Inlet Sediment Trap Type-B	
1630.04	Stilling Basin	
1630.06	Special Stilling Basin	
	Rock Inlet Sediment Trap:	
1632.01	Type A	A
1632.02	Type B	B
1632.03	Type C	C
	Skimmer Basin	
	Tiered Skimmer Basin	
	Infiltration Basin	

THIS PROJECT CONTAINS EROSION CONTROL PLANS FOR CLEARING AND GRUBBING PHASE OF CONSTRUCTION.

HIGH QUALITY WATER(S) EXIST ON THIS PROJECT

High Quality Water Zone(s) Exist
From Sta. BEGIN
to Sta. END
Refer To E. C. Special Provisions for Special Considerations.

ENVIRONMENTALLY SENSITIVE AREA(S) EXIST ON THIS PROJECT

Refer To E. C. Special Provisions for Special Considerations.

THIS PROJECT HAS BEEN DESIGNED TO SENSITIVE WATERSHED STANDARDS.

GRAPHIC SCALE

30 15 0 30 60
PLANS

THESE EROSION AND SEDIMENT CONTROL PLANS COMPLY WITH THE APPLICABLE REGULATIONS SET FORTH BY THE NCG-010000 GENERAL CONSTRUCTION PERMIT EFFECTIVE APRIL 1, 2019 AND ISSUED BY THE NORTH CAROLINA DEPARTMENT OF ENVIRONMENTAL QUALITY DIVISION OF WATER RESOURCES.

V&M
Vaughn & Melton
Consulting Engineers
Asheville, North Carolina
828-253-2796
Raleigh, NC 919-977-9455
Charlotte, NC 704-357-0488
Boone, NC 828-355-9933
Tri-Cities, TN 423-467-8401
Knoxville, TN 865-546-5800
Spartanburg, SC 864-574-4775
Charleston, SC 843-974-5650
Middlesboro, KY 606-248-6600
Atlanta, GA 770-627-3590
Copyright © 2006 Vaughn & Melton, Inc. All Rights Reserved

Prepared in the Office of:

Vaughn & Melton
Consulting Engineers
1318-F Patton Avenue
Asheville, NC 28806

Designed by:

Christian Gonzalez-Martell ***3939***
NAME *LEVEL III CERTIFICATION NO.*

Roadway Standard Drawings

The following roadway english standards as appear in "Roadway Standard Drawings"– Roadway Design Unit – N. C. Department of Transportation – Raleigh, N. C., dated January 2018 and the latest revison thereto are applicable to this project and by reference hereby are considered a part of these plans.

1604.01	Railroad Erosion Control Detail	1632.01	Rock Inlet Sediment Trap Type A
1605.01	Temporary Silt Fence	1632.02	Rock Inlet Sediment Trap Type B
1606.01	Special Sediment Control Fence	1632.03	Rock Inlet Sediment Trap Type C
1607.01	Gravel Construction Entrance	1633.01	Temporary Rock Silt Check Type A
1622.01	Temporary Berms and Slope Drains	1633.02	Temporary Rock Silt Check Type B
1630.01	Riser Basin	1634.01	Temporary Rock Sediment Dam Type A
1630.02	Silt Basin Type B	1634.02	Temporary Rock Sediment Dam Type B
1630.03	Temporary Silt Ditch	1635.01	Rock Pipe Inlet Sediment Trap Type A
1630.04	Stilling Basin	1635.02	Rock Pipe Inlet Sediment Trap Type B
1630.05	Temporary Diversion	1640.01	Coir Fiber Baffle
1630.06	Special Stilling Basin	1645.01	Temporary Stream Crossing
1631.01	Matting Installation		

6/28/2022 10:54:24 AM
...\17BP.11.R.161_Erv_EC-1.dgn
User:cdrisdale

DocuSign Envelope ID: 850BF6B8-2B35-42A8-9570-889EA6006D81

PROJECT REFERENCE NO.	SHEET NO.
17BP.11.R.61	EC-2

TEMPORARY ROCK SILT CHECK TYPE 'A' WITH EXCELSIOR MATTING AND POLYACRYLAMIDE (PAM)

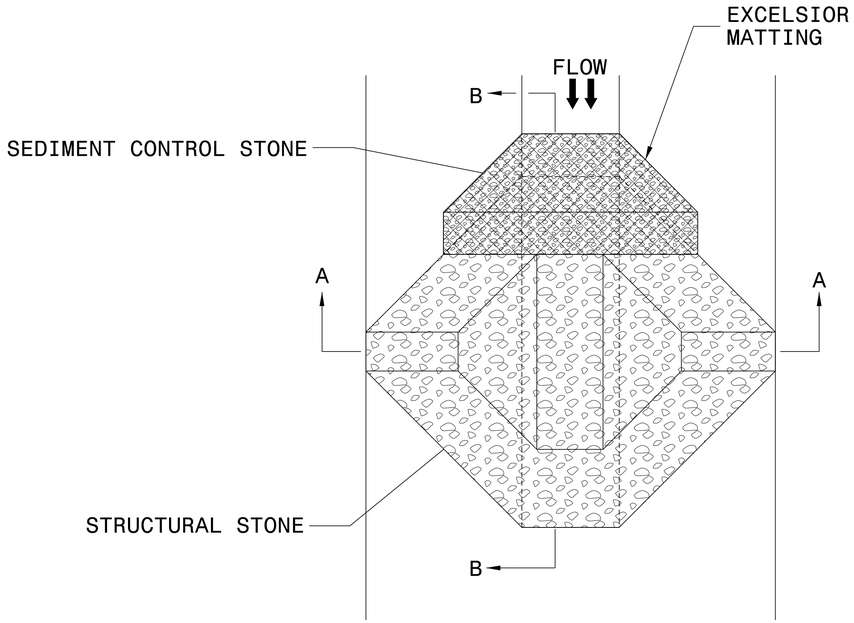

PLAN

NOTES:

INSTALL TEMPORARY ROCK SILT CHECK TYPE A IN ACCORDANCE WITH ROADWAY STANDARD DRAWING NO. 1633.01.

USE EXCELSIOR FOR MATTING MATERIAL AND ANCHOR MATTING SECTION AT TOP AND BOTTOM WITH CLASS B STONE.

PRIOR TO POLYACRYLAMIDE (PAM) APPLICATION, OBTAIN A SOIL SAMPLE FROM PROJECT LOCATION, AND FROM OFFSITE MATERIAL, AND ANALYZE FOR APPROPRIATE PAM FLOCCULANT TO BE APPLIED TO EACH ROCK SILT CHECK.

INITIALLY APPLY 4 OUNCES OF POLYACRYLAMIDE (PAM) TO TOP OF MATTING SECTION AND AFTER EVERY RAINFALL EVENT THAT EQUALS OR EXCEEDS 0.50 INCHES.

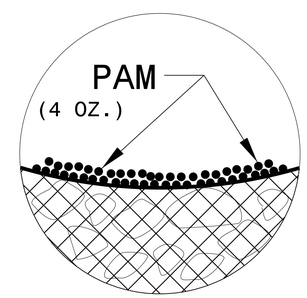

INSET A

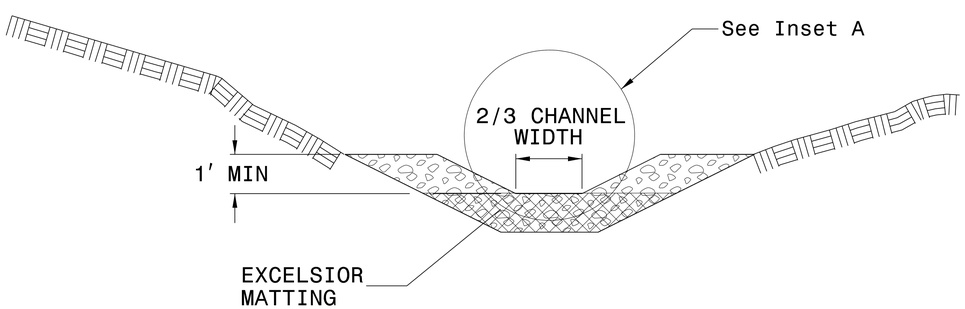

SECTION A-A

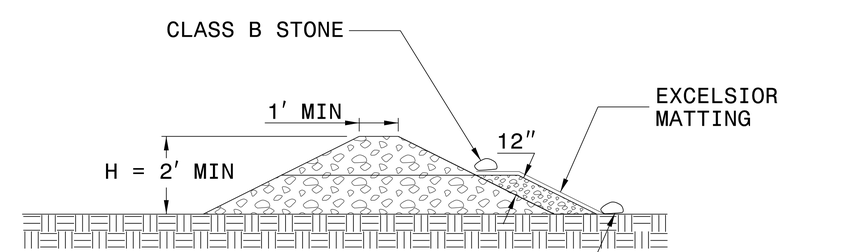

SECTION B-B

NOT TO SCALE

DocuSign Envelope ID: 850BF6B8-2B35-42A8-9570-889EA6006D81

PROJECT REFERENCE NO.	SHEET NO.
17BP.11.R.161	EC-3

DIVISION OF HIGHWAYS
STATE OF NORTH CAROLINA

SOIL STABILIZATION TIMEFRAMES

SITE DESCRIPTION	STABILIZATION TIME	TIMEFRAME EXCEPTIONS
PERIMETER DIKES, SWALES, DITCHES AND SLOPES	7 DAYS	NONE
HIGH QUALITY WATER (HQW) ZONES	7 DAYS	NONE
SLOPES STEEPER THAN 3:1	7 DAYS	IF SLOPES ARE 10' OR LESS IN LENGTH AND ARE NOT STEEPER THAN 2:1, 14 DAYS ARE ALLOWED.
SLOPES 3:1 OR FLATTER	14 DAYS	7 DAYS FOR SLOPES GREATER THAN 50' IN LENGTH.
ALL OTHER AREAS WITH SLOPES FLATTER THAN 4:1	14 DAYS	NONE, EXCEPT FOR PERIMETERS AND HQW ZONES.

DocuSign Envelope ID: 850BF6B8-2B35-42A8-9570-889EA6006D81

8/17/99

PROJECT REFERENCE NO.	SHEET NO.
17BP.11.R.161	EC-04/CONST.04

Vaughn & Melton
Consulting Engineers
Asheville, North Carolina
828 253-2796

CLEARING AND GRUBBING
EROSION CONTROL FOR
CONSTRUCTION SHEET 04

NOTE:
PLACE TEMPORARY ROCK SEDIMENT DAMS TYPE – B AND TEMPORARY ROCK SILT CHECKS TYPE – A AT DRAINAGE OUTLETS.

NOTE:
PERIMETER EROSION CONTROL MEASURES SHALL BE INSTALLED DURING CLEARING AND GRUBBING PHASE.

NOTE:
UTILIZE TEMPORARY SEDIMENT BASIN OR SPECIAL STILLING BASIN(S) AS STILLING BASIN WHERE APPLICABLE.

ENVIRONMENTALLY SENSITIVE AREA
SEE PROJECT SPECIAL PROVISIONS

-L- CURVE DATA

PI Sta 10+65.58	PI Sta 12+00.65	PI Sta 13+35.51	PI Sta 15+02.88	PI Sta 16+79.89
Δ = 11° 31' 19.2" (RT)	Δ = 13° 44' 17.5" (RT)	Δ = 62° 18' 44.2" (RT)	Δ = 9° 38' 34.9" (RT)	Δ = 7° 52' 43.2" (LT)
D = 8° 48' 53.0"	D = 16° 22' 12.8"	D = 37° 12' 18.2"	D = 7° 38' 22.0"	D = 11° 27' 33.0"
L = 130.71'	L = 83.92'	L = 167.48'	L = 126.23'	L = 68.75'
T = 65.58'	T = 42.16'	T = 93.10'	T = 63.26'	T = 34.43'
R = 650.00'	R = 350.00'	R = 154.00'	R = 750.00'	R = 500.00'
	SE = 0.03	SE = 0.04	SE = Exist.	
	RO = 69'	RO = 69'		

-D2- CURVE DATA

PI Sta 10+34.23	PI Sta 10+85.43
Δ = 17° 29' 16.3" (RT)	Δ = 23° 09' 03.6" (LT)
D = 76° 23' 39.7"	D = 27° 50' 13.4"
L = 22.89'	L = 8.49'
T = 11.54'	T = 4.30'
R = 75.00'	R = 21.00'
SE = NC	SE = NC

DETAIL 1
SPECIAL CUT DITCH
(Not to Scale)

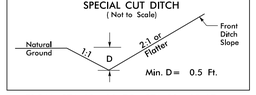

FROM STA. 12+00 TO STA. 12+65 LT

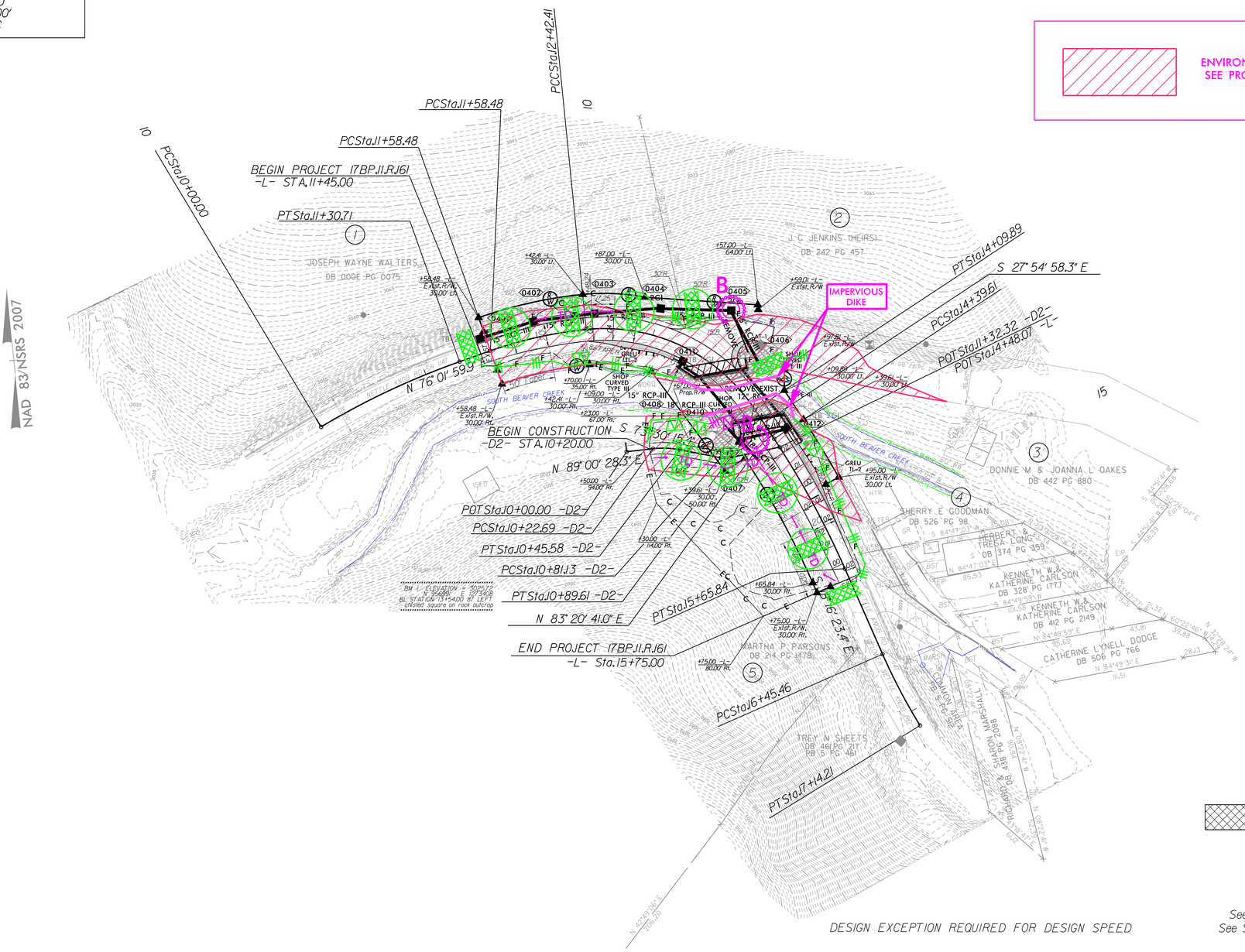

PAVEMENT REMOVAL
APPROACH SLAB
FULL DEPTH PAVED SHOULDER

DESIGN EXCEPTION REQUIRED FOR DESIGN SPEED

See Sheet 5 for -L- Profile
See Sheet 5 for -D2- Profile

DocuSign Envelope ID: 850BF6B8-2B35-42A8-9570-889EA6006D81

8/17/99

PROJECT REFERENCE NO.	SHEET NO.
17BP.11.R.161	EC-05/CONST.04

Vaughn & Melton
Consulting Engineers
Asheville, North Carolina
828 253-2796

FINAL GRADE
EROSION CONTROL FOR
CONSTRUCTION SHEET 04

Place Matting for Erosion Control on Slopes as Work Allows.

NOTE:
UTILIZE TEMPORARY SEDIMENT BASIN OR SPECIAL STILLING BASIN(S) AS STILLING BASIN WHERE APPLICABLE.

-L- CURVE DATA

PI Sta 10+65.58	PI Sta 12+00.65	PI Sta 13+35.51	PI Sta 15+02.88	PI Sta 16+79.89
△ = 11° 31' 19.2" (RT)	△ = 13° 44' 17.5" (RT)	△ = 62° 18' 44.2" (RT)	△ = 9° 38' 34.9" (RT)	△ = 7° 52' 43.2" (LT)
D = 8° 48' 53.0"	D = 16° 22' 12.8"	D = 37° 12' 18.2"	D = 7° 38' 22.0"	D = 11° 27' 33.0"
L = 130.71'	L = 83.92'	L = 167.48'	L = 126.23'	L = 68.75'
T = 65.58'	T = 42.16'	T = 93.10'	T = 63.26'	T = 34.43'
R = 650.00'	R = 350.00'	R = 154.00'	R = 750.00'	R = 500.00'
	SE = 0.03	SE = 0.04	SE = Exist.	
	RO = 69'	RO = 69'		

-D2- CURVE DATA

PI Sta 10+34.23	PI Sta 10+85.43
△ = 17° 29' 16.3" (RT)	△ = 23° 09' 03.6" (LT)
D = 76° 23' 39.7"	D = 27° 2' 50' 13.4"
L = 22.89'	L = 8.49'
T = 11.54'	T = 4.30'
R = 75.00'	R = 21.00'
SE = NC	SE = NC

DETAIL 1
SPECIAL CUT DITCH
(Not to Scale)

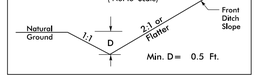

FROM STA. 12+00 TO STA. 12+65 LT

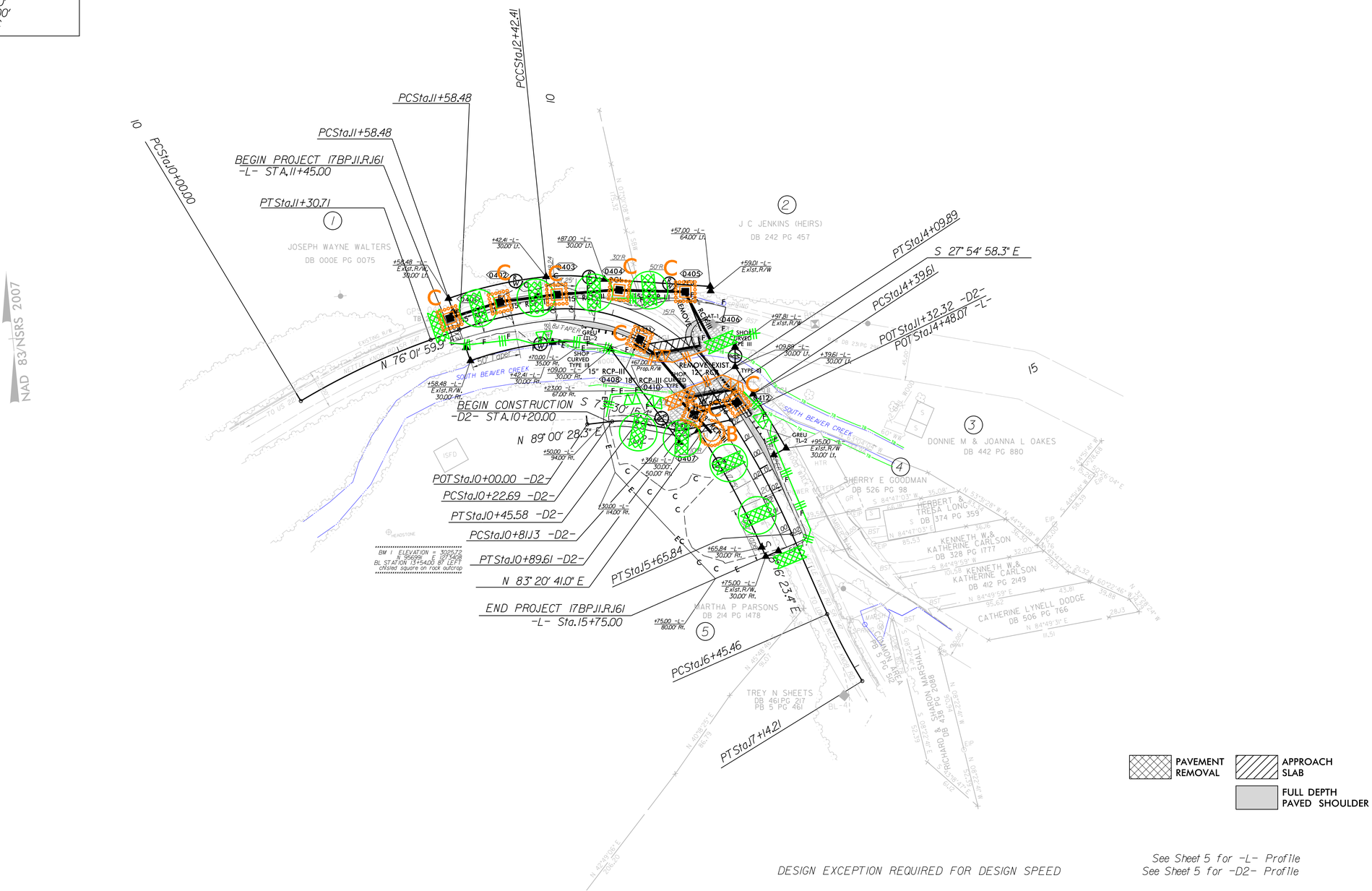

PAVEMENT REMOVAL
APPROACH SLAB
FULL DEPTH PAVED SHOULDER

DESIGN EXCEPTION REQUIRED FOR DESIGN SPEED

See Sheet 5 for -L- Profile
See Sheet 5 for -D2- Profile

DocuSign Envelope ID: 850BF6B8-2B35-42A8-9570-889EA6006D81

STATE	STATE PROJECT REFERENCE NO.	SHEET NO.	TOTAL SHEETS
N.C.	17BP.11.R.161	RF-1	
STATE PROJ. NO.	F. A. PROJ. NO.	DESCRIPTION	

PLANTING DETAILS

SEEDLING / LINER BAREROOT PLANTING DETAIL

HEALING IN

1. Locate a healing-in site in a shady, well protected area.
2. Excavate a flat bottom trench 12 inches deep and provide drainage.

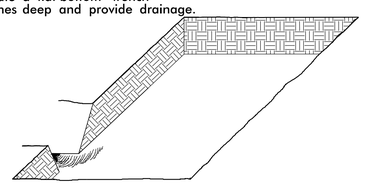

3. Backfill the trench with 2 inches well rotted sawdust. Place a 2 inch layer of well rotted sawdust at a sloping angle at one end of the trench.

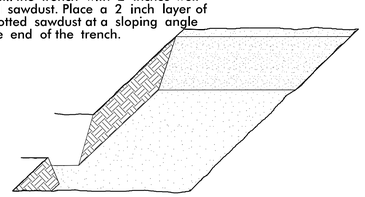

4. Place a single layer of plants against the sloping end so that the root collar is at ground level.

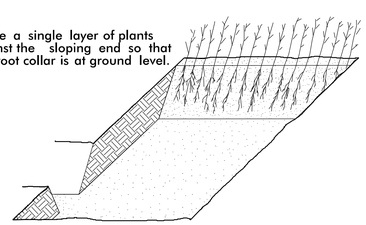

5. Place a 2 inch layer of well rotted sawdust over the roots maintaining a sloping angle.

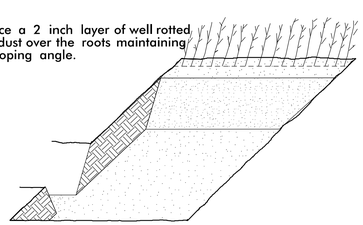

6. Repeat layers of plants and sawdust as necessary and water thoroughly.

DIBBLE PLANTING METHOD
USING THE KBC PLANTING BAR

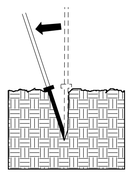

1. Insert planting bar as shown and pull handle toward planter.

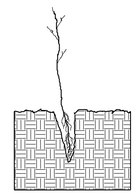

2. Remove planting bar and place seedling at correct depth.

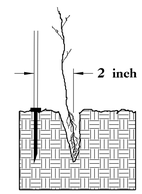

3. Insert planting bar 2 inches toward planter from seedling.

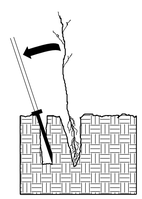

4. Pull handle of bar toward planter, firming soil at bottom.

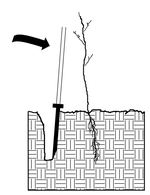

5. Push handle forward firming soil at top.

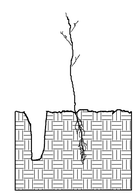

6. Leave compaction hole open. Water thoroughly.

PLANTING NOTES:

PLANTING BAG
During planting, seedlings shall be kept in a moist canvas bag or similar container to prevent the root systems from drying.

KBC PLANTING BAR
Planting bar shall have a blade with a triangular cross section, and shall be 12 inches long, 4 inches wide and 1 inch thick at center.

ROOT PRUNING
All seedlings shall be root pruned, if necessary, so that no roots extend more than 10 inches below the root collar.

REFORESTATION

☐ TREE REFORESTATION SHALL BE PLANTED 6 FT. TO 10 FT. ON CENTER, RANDOM SPACING, AVERAGING 8 FT. ON CENTER, APPROXIMATELY 680 PLANTS PER ACRE.

REFORESTATION

MIXTURE, TYPE, SIZE, AND FURNISH SHALL CONFORM TO THE FOLLOWING:

33%	LIRIODENDRON TULIPIFERA	TULIP POPLAR	12 in – 18 in BR
33%	PLATANUS OCCIDENTALIS	AMERICAN SYCAMORE	12 in – 18 in BR
33%	BETULA NIGRA	RIVER BIRCH	12 in – 18 in BR

REFORESTATION DETAIL SHEET

N.C.D.O.T. - ROADSIDE ENVIRONMENTAL UNIT

DocuSign Envelope ID: 850BF6B8-2B35-42A8-9570-889EA6006D81

PROJECT REFERENCE NO.	SHEET NO.
17BP.11.R.161	RF-2
ROADWAY DESIGN ENGINEER	HYDRAULICS ENGINEER

PLANTING DETAILS

LIVE STAKES PLANTING DETAIL

LIVE STAKE

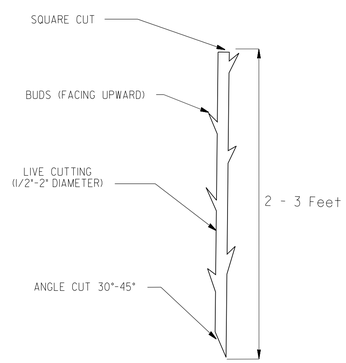

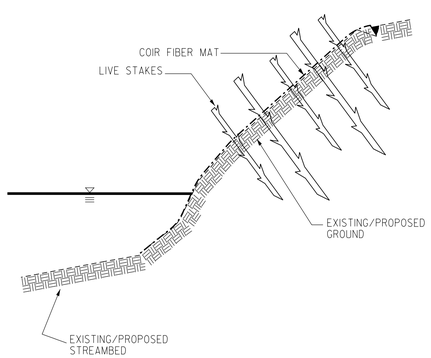

BANK STABILIZATION WITH LIVE STAKES

NOTE:
LIVE STAKES SHALL BE SPACED APPROXIMATELY 4 FEET ON CENTER
LIVE STAKES SHALL BE DRIVEN UNTIL APPROXIMATELY 3/4 OF LIVE STAKE IS WITHIN GROUND

BAREROOT PLANTING DETAIL
DIBBLE PLANTING METHOD
USING THE KBC PLANTING BAR

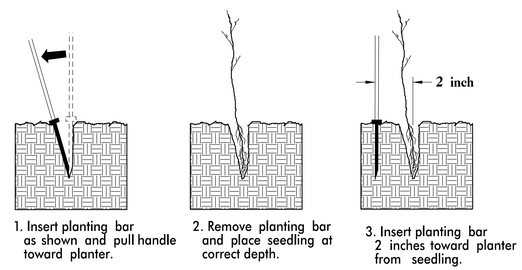

1. Insert planting bar as shown and pull handle toward planter.
2. Remove planting bar and place seedling at correct depth.
3. Insert planting bar 2 inches toward planter from seedling.

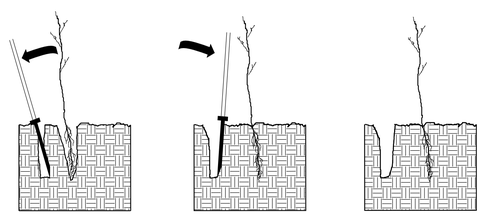

4. Pull handle of bar toward planter, firming soil at bottom.
5. Push handle forward firming soil at top.
6. Leave compaction hole open. Water thoroughly.

PLANTING NOTES:

PLANTING BAG
During planting, seedlings shall be kept in a moist canvas bag or similar container to prevent the root systems from drying.

KBC PLANTING BAR
Planting bar shall have a blade with a triangular cross section, and shall be 12 inches long, 4 inches wide and 1 inch thick at center.

ROOT PRUNING
All seedlings shall be root pruned, if necessary, so that no roots extend more than 10 inches below the root collar.

- ☐ TYPE 1 STREAMBANK REFORESTATION SHALL BE PLANTED 3 FT. TO 5 FT. ON CENTER, RANDOM SPACING, AVERAGING 4 FT. ON CENTER, APPROXIMATELY 2724 PLANTS PER ACRE.
- ☐ TYPE 2 STREAMBANK REFORESTATION SHALL BE PLANTED 6 FT. TO 10 FT. ON CENTER, RANDOM SPACING, AVERAGING 8 FT. ON CENTER, APPROXIMATELY 680 PLANTS PER ACRE.
- ☐ NOTE: TYPE 1 AND TYPE 2 STREAMBANK REFORESTATION SHALL BE PAID FOR AS "STREAMBANK REFORESTATION"

STREAMBANK REFORESTATION TYPICAL

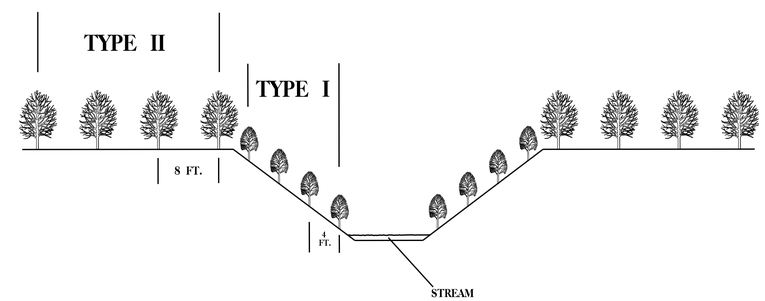

STREAMBANK REFORESTATION

MIXTURE, TYPE, SIZE, AND FURNISH SHALL CONFORM TO THE FOLLOWING:

TYPE 1			
50%	SALIX NIGRA	BLACK WILLOW	2 ft – 3 ft LIVE STAKES
50%	CORNUS AMOMUM	SILKY DOGWOOD	2 ft – 3 ft LIVE STAKES
TYPE 2			
25%	LIRIODENDRON TULIPIFERA	TULIP POPLAR	12 in – 18 in BR
25%	PLATANUS OCCIDENTALIS	SYCAMORE	12 in – 18 in BR
25%	PRUNUS SEROTINA	BLACK CHERRY	12 in – 18 in BR
25%	BETULA NIGRA	RIVER BIRCH	12 in – 18 in BR

☐ SEE PLAN SHEETS FOR AREAS TO BE PLANTED

STREAMBANK REFORESTATION DETAIL SHEET 1 OF 2

N.C.D.O.T. - ROADSIDE ENVIRONMENTAL UNIT

DocuSign Envelope ID: 850BF6B8-2B35-42A8-9570-889EA6006D81

PROJECT REFERENCE NO.	SHEET NO.
17BP.11.R.161	RF-3
ROADWAY DESIGN ENGINEER	HYDRAULICS ENGINEER

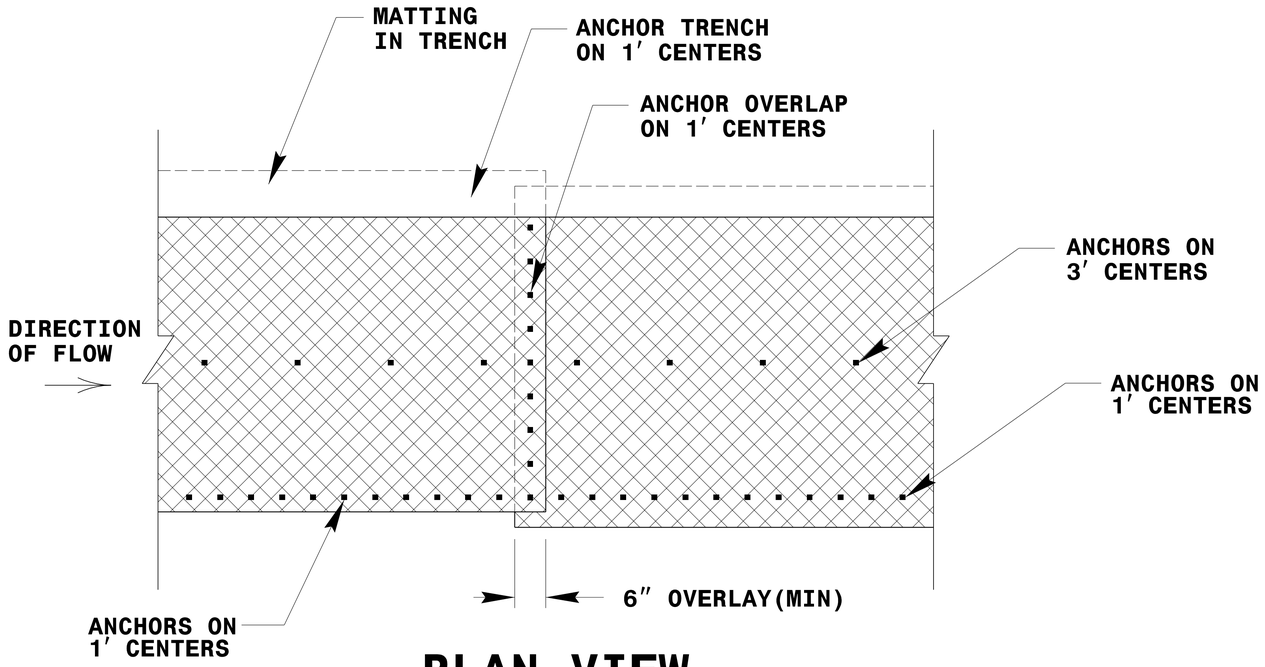

PLAN VIEW

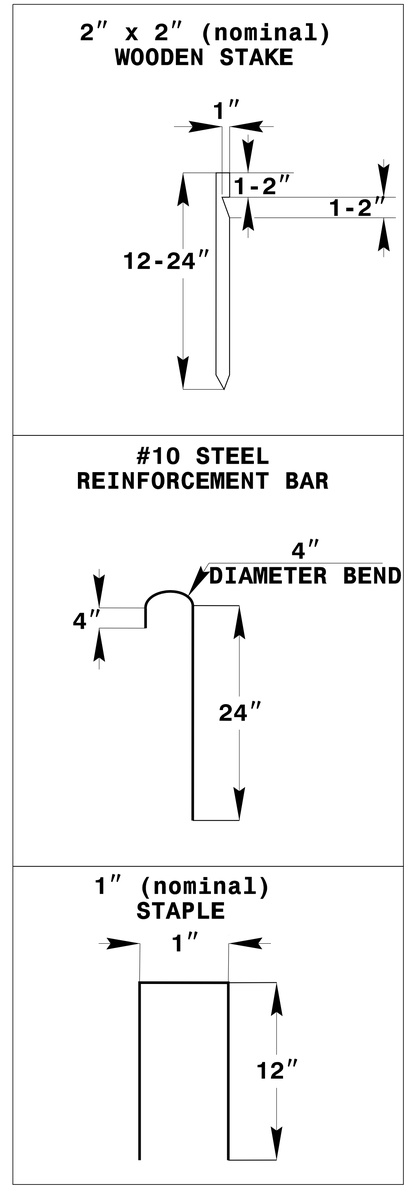

ANCHOR OPTIONS

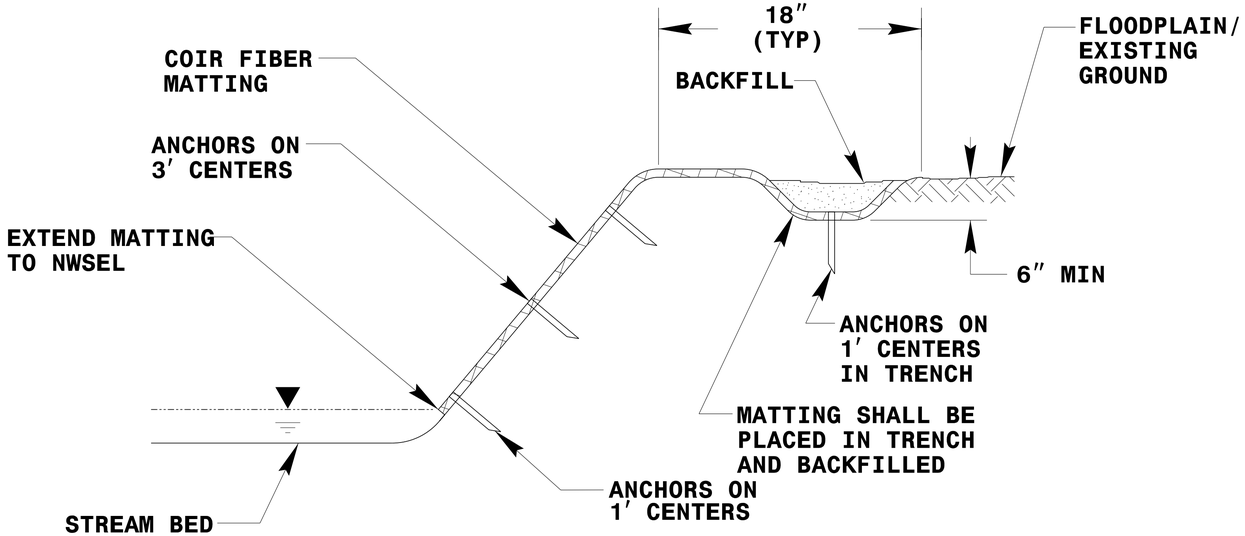

TYPICAL CROSS SECTION

COIR FIBER MATTING DETAIL

NOT TO SCALE

STREAMBANK REFORESTATION

DETAIL SHEET 2 OF 2

N.C.D.O.T.- ROADSIDE ENVIRONMENTAL UNIT

DocuSign Envelope ID: FB6B85F0-0313-4537-BB49-4193325740C8
7/26/2023 | 3:28:56 PM EDT

11/02/2021

PROJECT: 17BP.11.R.161

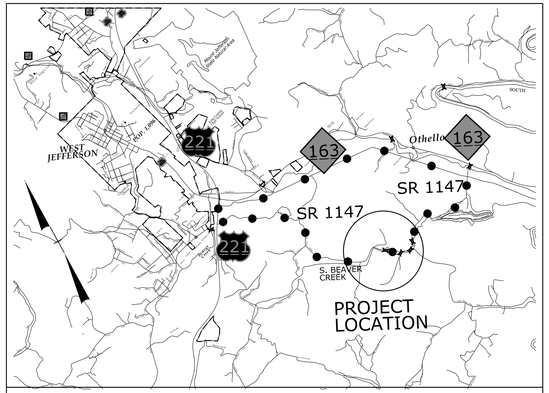

VICINITY MAP (N.T.S.)

OFF SITE DETOUR

STATE OF NORTH CAROLINA
DIVISION OF HIGHWAYS

UTILITIES BY OTHERS PLANS
ASHE COUNTY

T.I.P. NO.	SHEET NO.
17BP.11.R.161	UO–1

NOTE:
ALL UTILITY WORK SHOWN ON THIS SHEET WILL BE DONE BY OTHERS. NO PAYMENT WILL BE MADE TO THE CONTRACTOR FOR UTILITY WORK SHOWN ON THIS SHEET.

LOCATION: STRUCTURE NO. 040015 OVER SOUTH BEAVER CREEK ON SR 1147 (NETTLE KNOB ROAD)

TYPE OF WORK: RELOCATION OF POWER AND TELEPHONE UTILITIES

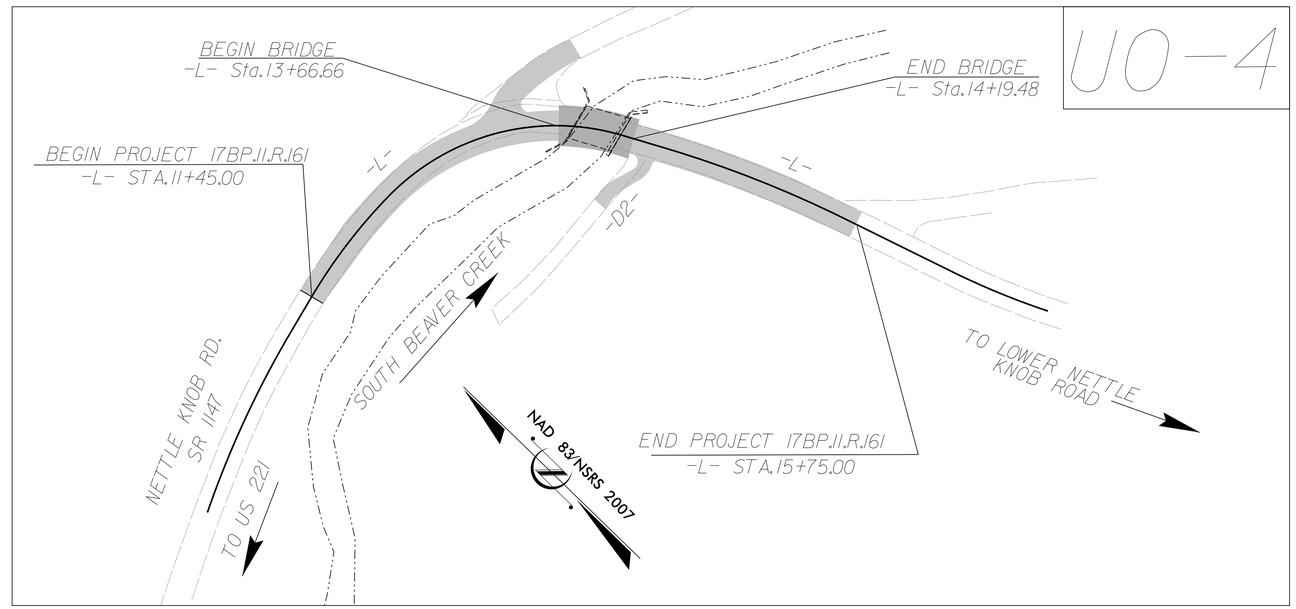

GRAPHIC SCALES

50 25 0 50 100

INDEX OF SHEETS

SHEET NO.:	DESCRIPTION:
UO–1	TITLE SHEET
UO–2	UBO SYMBOLOGY SHEET
UO–3	OMITTED
UO–4	UBO PLAN SHEETS

UTILITY OWNERS WITH CONFLICTS

(A) POWER – BREMCO
(B) TELEPHONE – SKYLINE /SKYBEST

PREPARED IN THE OFFICE OF:

V&M
Vaughn & Melton
Consulting Engineers
Asheville, North Carolina
828-253-2796
Raleigh, NC 919-877-9955
Charlotte, NC 704-357-0488
Boone, NC 828-355-9933
Tri-Cities, TN 423-467-8401
Knoxville, TN 865-546-5800
Spartanburg, SC 864-574-4775
Charleston, SC 843-974-5650
Middlesboro, KY 606-248-6600
Atlanta, GA 770-627-3509
Copyright © 2006 Vaughn & Melton, Inc. All Rights Reserved

Nick Asaro, PLS	UTILITY PROJECT MANAGER
Joe Montgomery	PROJECT UTILITY COORDINATOR
Hardy Willis, PE	PROJECT STRUCTURES MANAGER

STATE OF NORTH CAROLINA DEPARTMENT OF TRANSPORTATION

DIVISION OF HIGHWAYS
DIVISION 11

DIV ADDRESS
801 STATESVILLE RD
NORTH WILKESBORO, NC 28659

Susan O. Huffman	DIVISION UTILITY COORDINATOR
Joe Laws	DIVISION PROJECT MANAGER
Ivan Dishman, PE	DIVISION CONSTRUCTION ENG.

7/21/2023 8:19:12 AM
...\17BP.11.R.161_Utl_Uo-1.dgn
User:dfredde

DocuSign Envelope ID: FB6B85F0-0313-4537-BB49-4193325740C8

11/02/2021

ASHE COUNTY

PROJECT REFERENCE NO.	SHEET NO.
17BP.11.R.161	U0-2

STATE OF NORTH CAROLINA
DIVISION OF HIGHWAYS

UTILITIES PLAN SHEET SYMBOLS

PROPOSED WATER SYMBOLS

- Water Line (Sized as Shown) — 12" WL
- 11¼ Degree Bend
- 22½ Degree Bend
- 45 Degree Bend
- 90 Degree Bend
- Plug
- Tee
- Cross
- Reducer
- Gate Valve — GV
- Butterfly Valve — BV
- Tapping Valve — TGV
- Line Stop — LS
- Line Stop with Bypass — LS/BP
- Blow Off — BO
- Fire Hydrant — PFH
- Relocate Fire Hydrant — RFH
- Remove Fire Hydrant — REM FH
- Water Meter — PWM
- Relocate Water Meter — RWM
- Remove Water Meter — REM WM
- Water Pump Station — PSTW
- RPZ Backflow Preventer — PRPZ
- DCV Backflow Preventer — PDCV
- Relocate RPZ Backflow Preventer — RRPZ
- Relocate DCV Backflow Preventer — RDCV

PROPOSED SEWER SYMBOLS

- Gravity Sewer Line (Sized as Shown) — 12" SS
- Force Main Sewer Line (Sized as Shown) — 12" FSS
- Manhole (Sized per Note)
- Sewer Pump Station — PSTSS

PROPOSED MISCELLANOUS UTILITIES SYMBOLS

- Power Pole
- Telephone Pole
- Joint Use Pole
- Telephone Pedestal — TEL PED
- Utility Line by Others (Type as Shown) — PROP O/H POW LINES
- Trenchless Installation — 12" TL INSTALL
- Encasement by Open Cut — 24" ENCAS BY OC
- Encasement — 24" ENCASEMENT
- Thrust Block
- Air Release Valve — AR
- Utility Vault — UV
- Concrete Pier — CP
- Steel Pier — SP
- Plan Note — NOTE
- Pay Item Note — PAY ITEM

EXISTING UTILITIES SYMBOLS

- Power Pole
- Telephone Pole
- Joint Use Pole
- Utility Pole
- Utility Pole with Base
- H-Frame Pole
- Power Transmission Line Tower
- Water Manhole
- Power Manhole
- Telephone Manhole
- Sanitary Sewer Manhole
- Hand Hole for Cable
- Power Transformer
- Telephone Pedestal
- CATV Pedestal
- Gas Valve
- Gas Meter
- Located Miscellaneous Utility Object
- Abandoned According to Utility Records — AATUR
- End of Information — E.O.I.
- *Underground Power Line — P
- *Underground Telephone Cable — T
- *Underground Telephone Conduit — TC
- *Underground Fiber Optics Telephone Cable — T FO
- *Underground TV Cable — TV
- *Underground Fiber Optics TV Cable — TV FO
- *Underground Gas Pipeline — G
- Aboveground Gas Pipeline — A/G Gas
- *Underground Water Line — W
- Aboveground Water Line — A/G Water
- *Underground Gravity Sanitary Sewer Line — SS
- Aboveground Gravity Sanitary Sewer Line — A/G Sanitary Sewer
- *Underground SS Forced Main Line — FSS
- Underground Unknown Utility Line — ?UTL
- SUE Test Hole
- Water Meter
- Water Valve
- Fire Hydrant
- Sanitary Sewer Cleanout

*For Existing Utilities

- Utility Line Drawn from Record (Type as Shown) — W
- Designated Utility Line (Type as Shown) — W

REV: 2/1/2012

DocuSign Envelope ID: FB6B85F0-0313-4537-BB49-4193325740C8

PROJECT REFERENCE NO.	SHEET NO.
17BP.11.R.161	U0-4
THIS SHEET CORRESPONDS TO RDY-4	

UTILITIES BY OTHERS

ALL PROPOSED UTILITY WORK SHOWN ON THIS SHEET WILL BE DONE BY OTHERS. NO PAYMENT WILL BE MADE TO THE CONTRACTOR FOR PROPOSED UTILITY WORK SHOWN ON THIS SHEET.

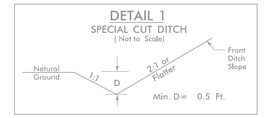

FROM STA. 12+00 TO STA. 12+65 LT

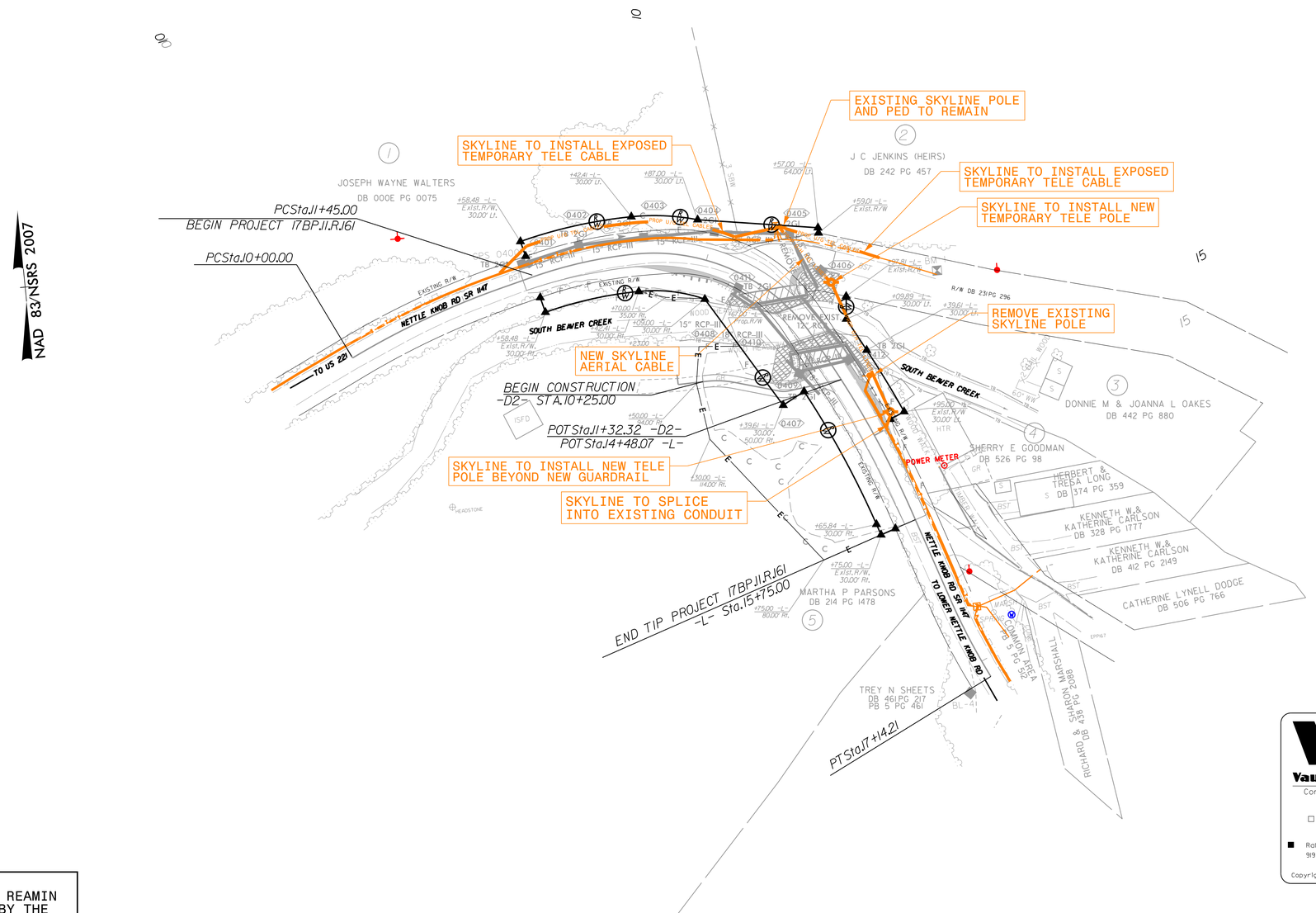

NOTE:
EXISTING POWER LINES WILL REAMIN IN PLACE AND BE SHIELDED BY THE UILITY OWNER DURING CONSTRUCTION.

V&M
Vaughn & Melton
Consulting Engineers
Asheville, North Carolina
828-253-2796
Raleigh, NC 919-977-9455
Charlotte, NC 704-357-0488
Boone, NC 828-355-9933
Tri-Cities, TN 423-467-8401
Knoxville, TN 865-546-5800
Spartanburg, SC 864-574-4775
Charleston, SC 843-974-5650
Middlesboro, KY 606-248-6600
Atlanta, GA 770-627-3509
Copyright © 2006 Vaughn & Melton, Inc. All Rights Reserved

11/02/2021
7/21/2023 8:20:06 AM
17BP.11.R.161_u1_u0-4.dgn
lewisfrance

DocuSign Envelope ID: F17CE518-6DEE-444E-9809-E7D8A0D3A | 7/26/2023 3:17:19 PM EDT

PROJ. REFERENCE NO.	SHEET NO.
17BP.11.R.161	X – 1

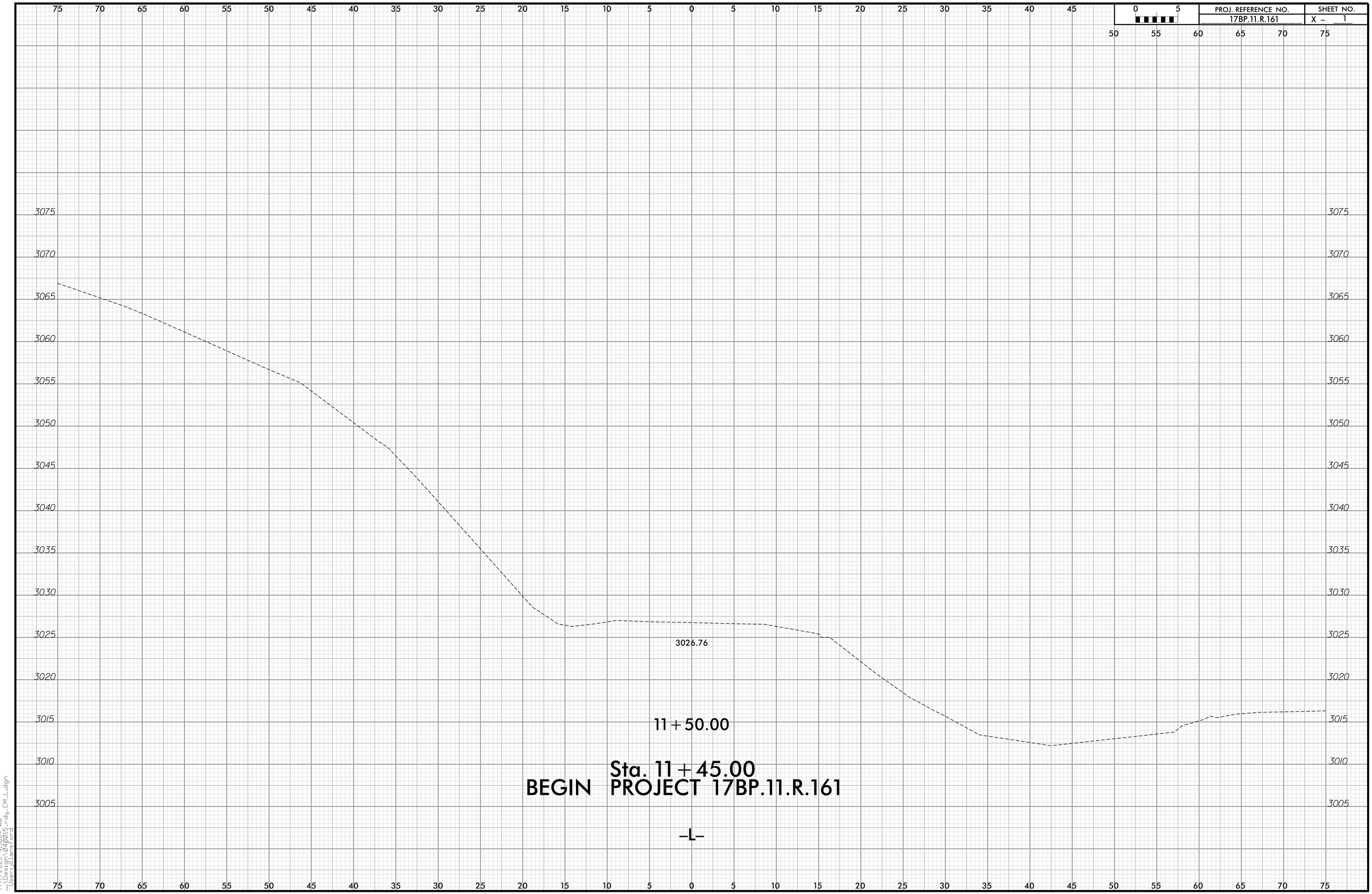

7/17/2023 4:58:14 AM
...\Design\040015_rdy_CM_L.dgn
User:clanstford

DocuSign Envelope ID: F17CE518-6DEE-444E-9809-E0CB8A25DC3A

PROJ. REFERENCE NO.	SHEET NO.
17BP.11.R.161	X – 2

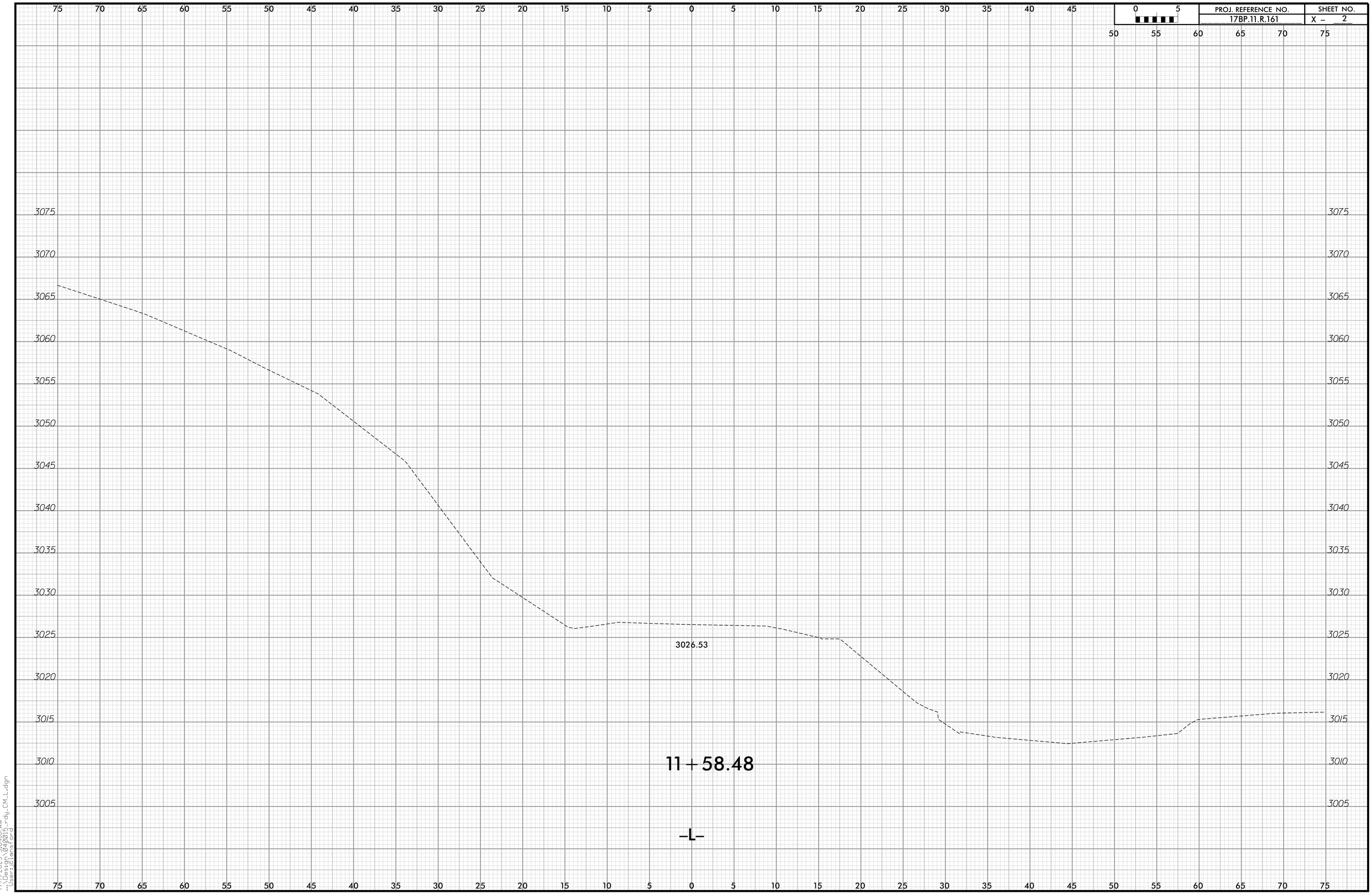

7/17/2023 5:04:01 AM
...\Design\040015_rdy_CM_L.dgn
User:clansford

DocuSign Envelope ID: F17CE518-6DEE-444E-9809-E0CB8A25DC3A

PROJ. REFERENCE NO.	SHEET NO.
17BP.11.R.161	X – 3

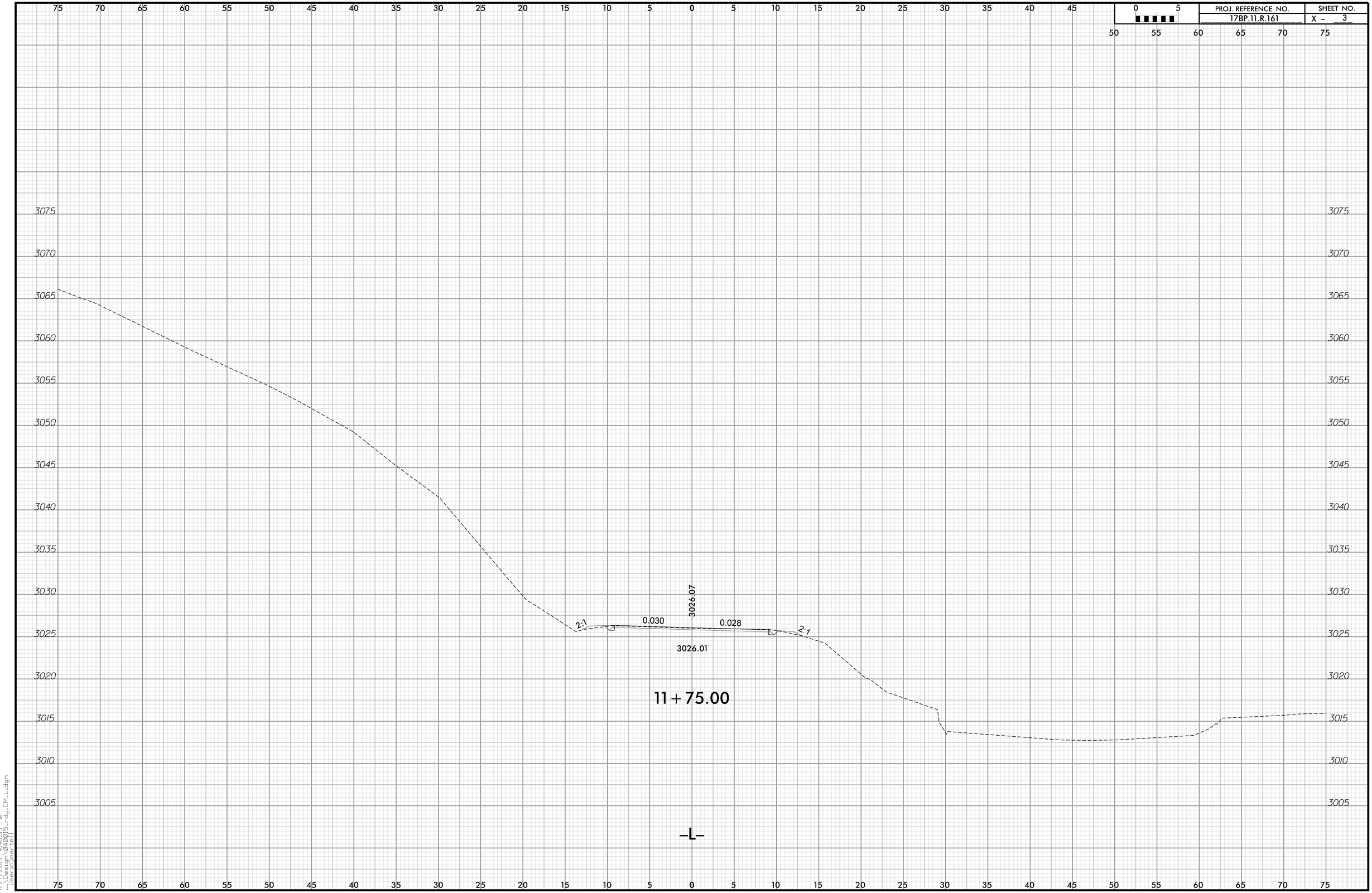

1/27/2022 4:48:33 PM
"C:\Users\mart0401\Desktop\Rdy_CM_L.dgn"
"Usersjmartell"

DocuSign Envelope ID: F17CE518-6DEE-444E-9809-E0CB8A25DC3A

PROJ. REFERENCE NO.	SHEET NO.
17BP.11.R.161	X – 4

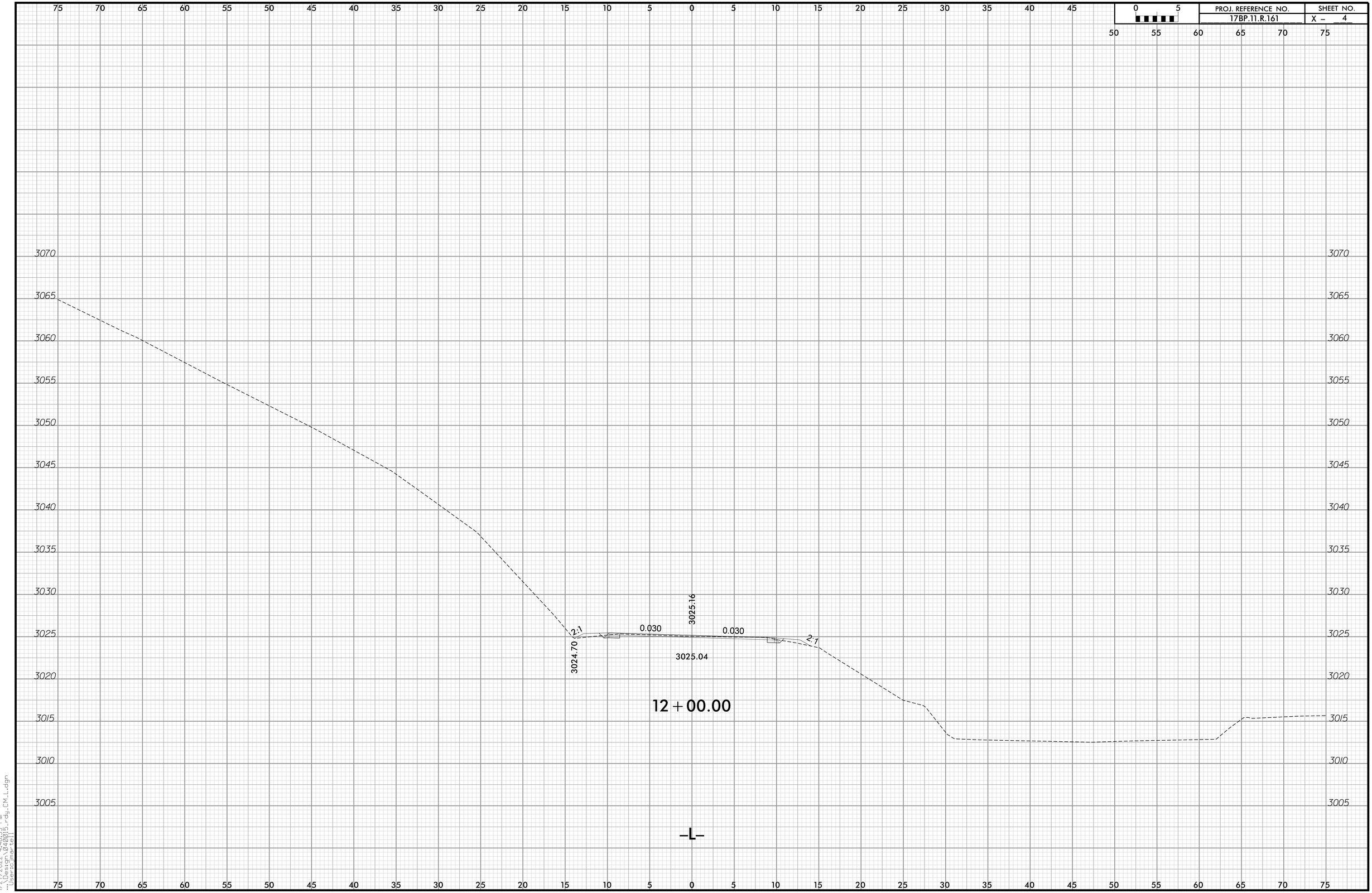

1/27/2022 4:48:33 PM
"C:\Users\mart0401\Desktop\Rdy_CM_L.dgn"
"Usercjmartell"

DocuSign Envelope ID: F17CE518-6DEE-444E-9809-E0CB8A25DC3A

PROJ. REFERENCE NO.	SHEET NO.
17BP.11.R.161	X – 5

1/27/2022 4:48:33 PM
"C:\Users\jmartell\Desktop\Ordy_CM_L.dgn"
"Users:jmartell"

DocuSign Envelope ID: F17CE518-6DEE-444E-9809-E0CB8A25DC3A

PROJ. REFERENCE NO.	SHEET NO.
17BP.11.R.161	X – 6

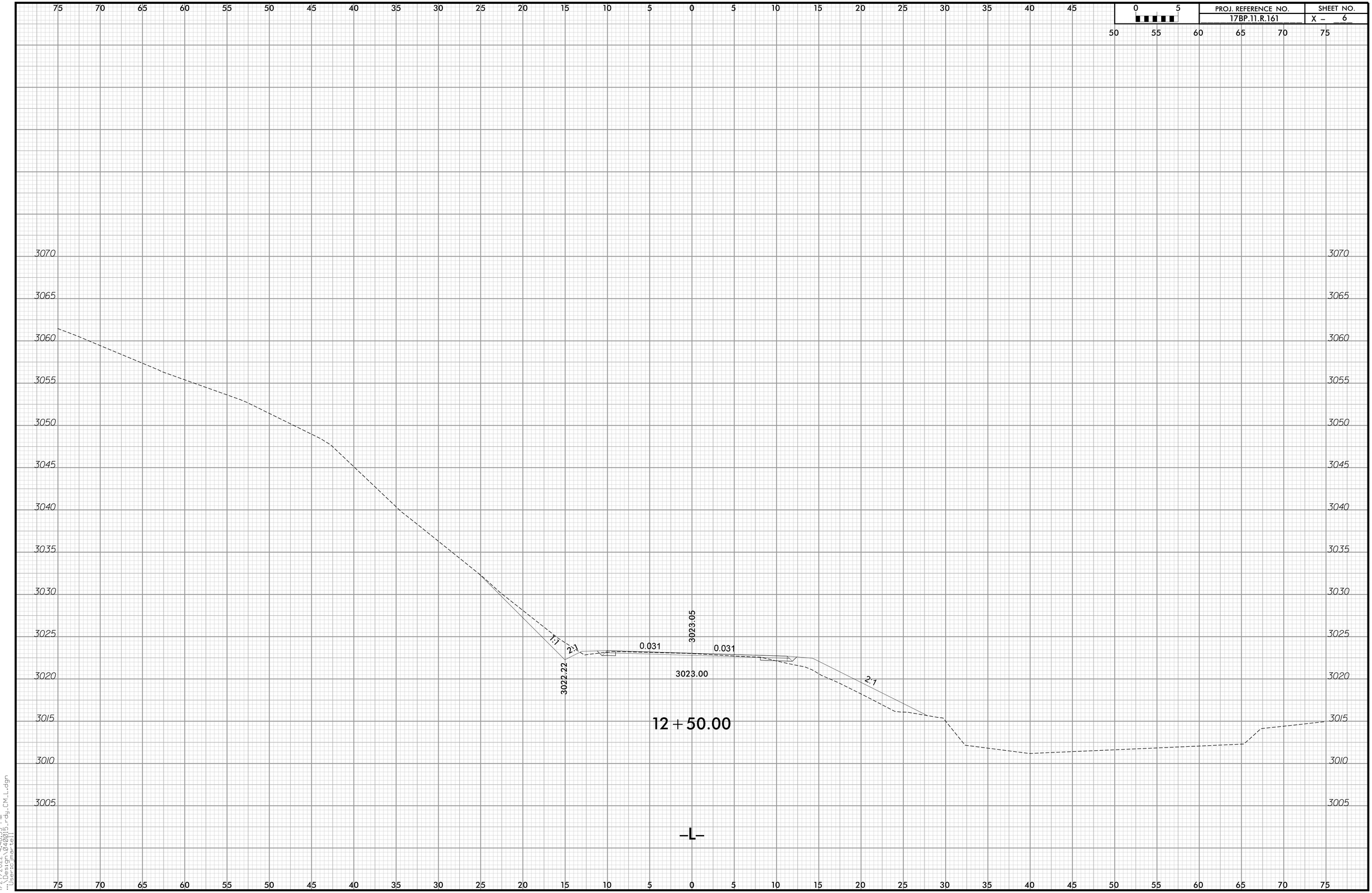

1/27/2022 4:48:33 PM
"Design 04001.5-rdy_CM_L.dgn"
"Users:jmartell"

DocuSign Envelope ID: F17CE518-6DEE-444E-9809-E0CB8A25DC3A

PROJ. REFERENCE NO.	SHEET NO.
17BP.11.R.161	X – 7

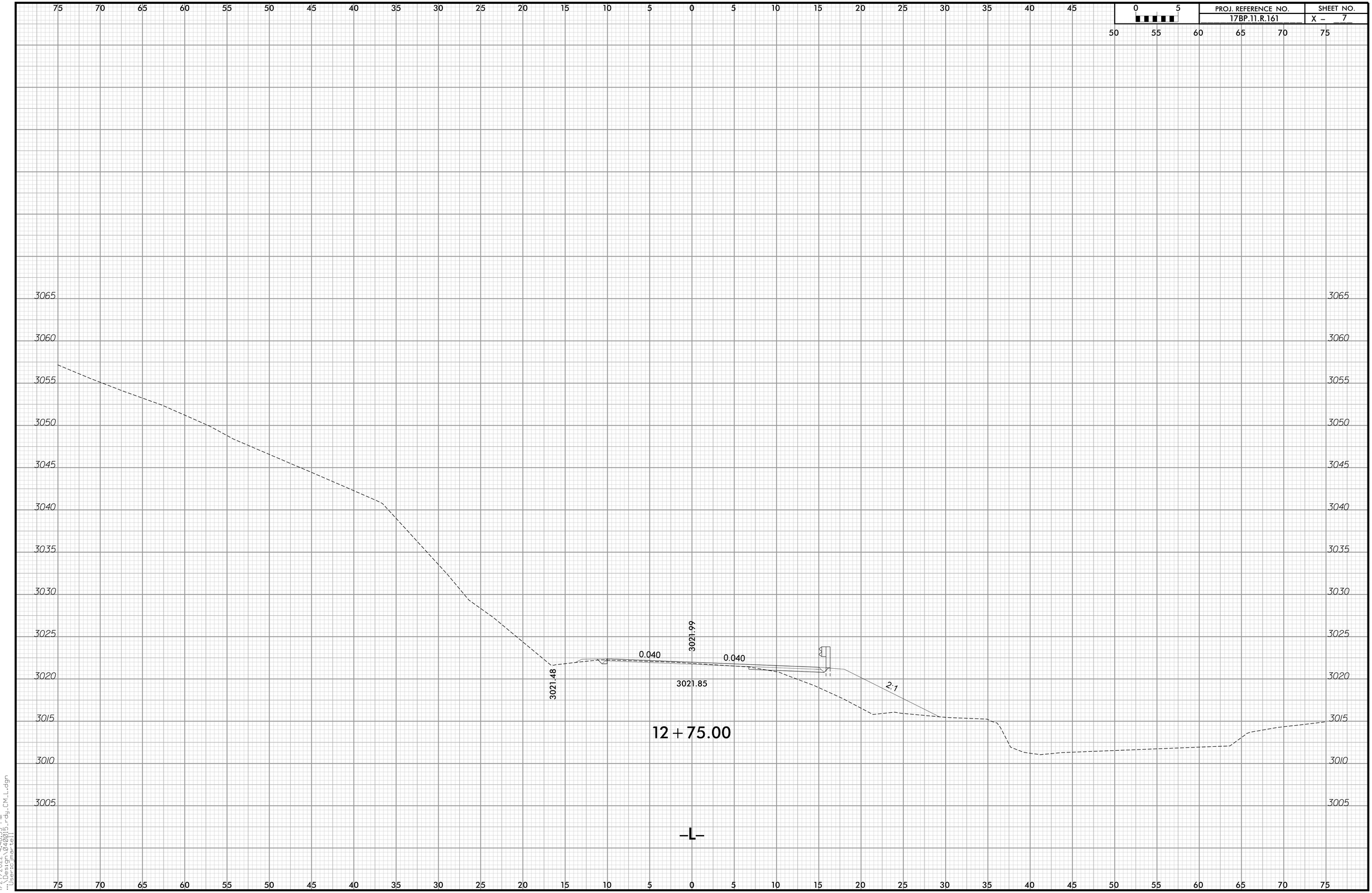

1/27/2022 4:48:33 PM
"Design 04001.5-rdy_CM_L.dgn"
"Users:jmartell"

DocuSign Envelope ID: F17CE518-6DEE-444E-9809-E0CB8A25DC3A

PROJ. REFERENCE NO.	SHEET NO.
17BP.11.R.161	X – 8

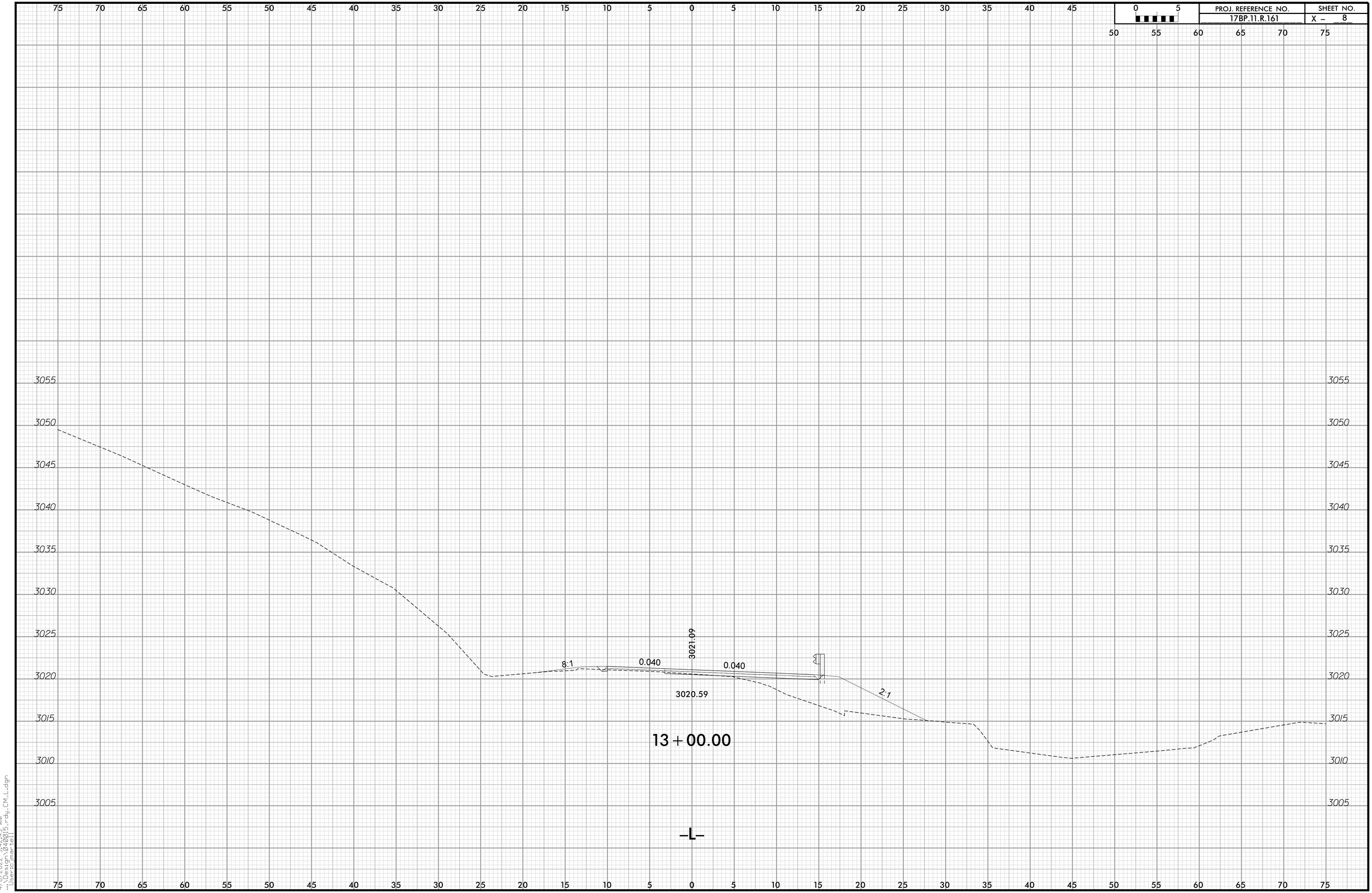

4/8/2022 9:42:43 AM
"C:\Users\jmartell\AppData\Local\Temp\AcPublish_5484\ady_CM_L.dgn"

DocuSign Envelope ID: F17CE518-6DEE-444E-9809-E0CB8A25DC3A

PROJ. REFERENCE NO.	SHEET NO.
17BP.11.R.161	X – 9

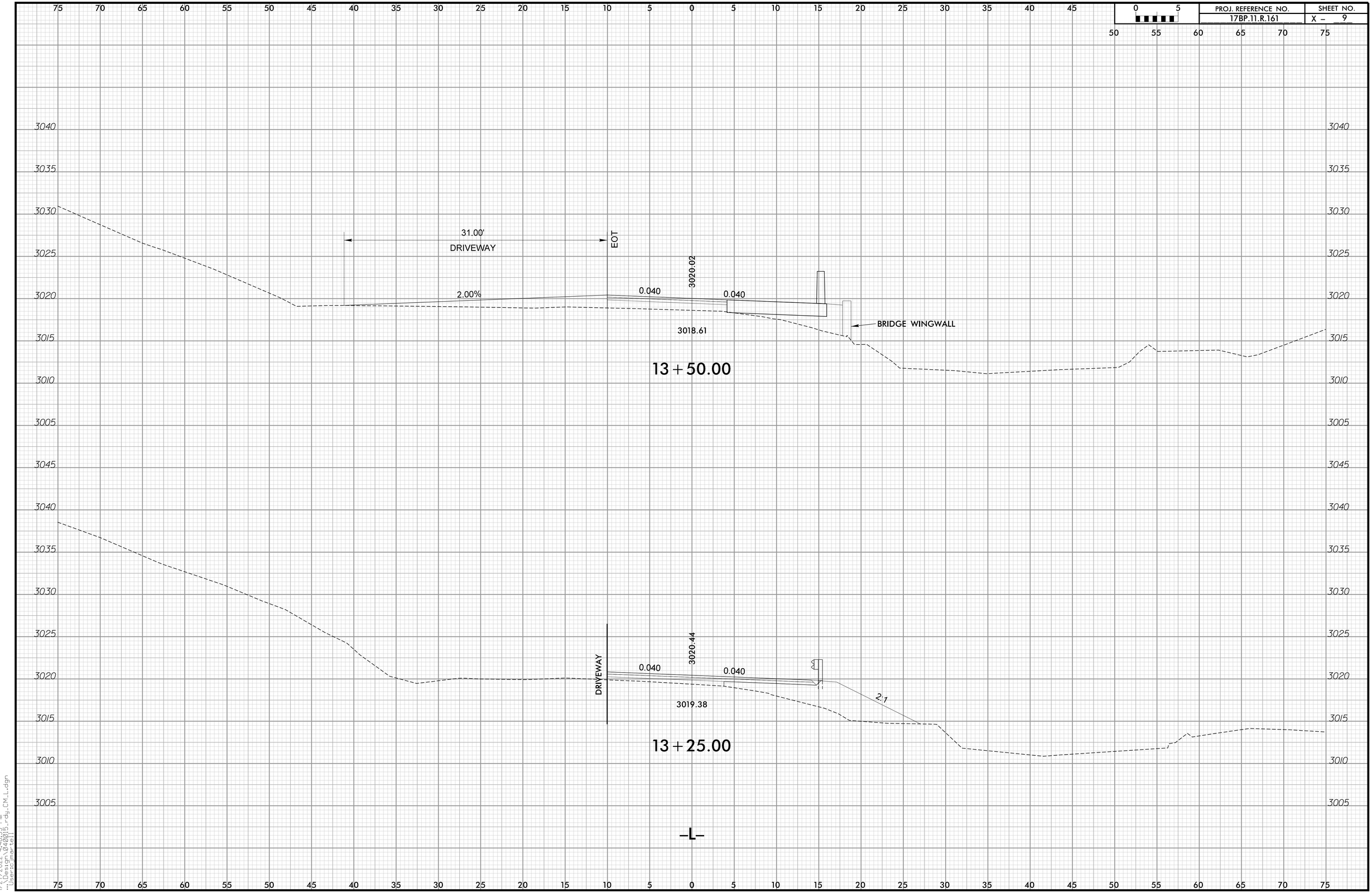

1/27/2022 4:48:33 PM
"Design 04001.5-rdy_CM_L.dgn"
"Usercjmartell"

DocuSign Envelope ID: F17CE518-6DEE-444E-9809-E0CB8A25DC3A

PROJ. REFERENCE NO.	SHEET NO.
17BP.11.R.161	X – 10

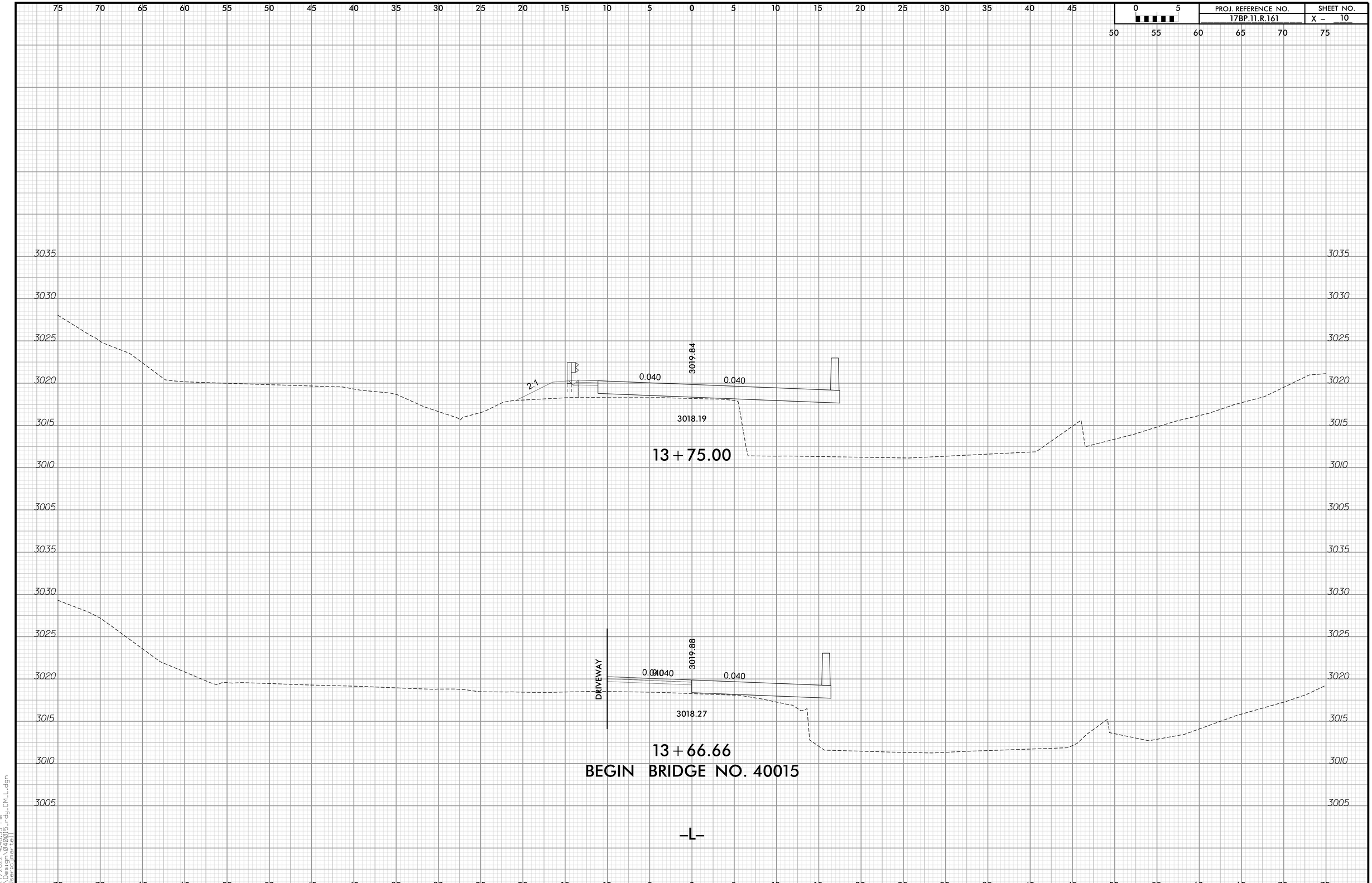

1/27/2022 4:48:33 PM
"Design 04001.5-rdy_CM_L.dgn"
"Users:jmartell"

DocuSign Envelope ID: F17CE518-6DEE-444E-9809-E0CB8A25DC3A

PROJ. REFERENCE NO.	SHEET NO.
17BP.11.R.161	X – 11

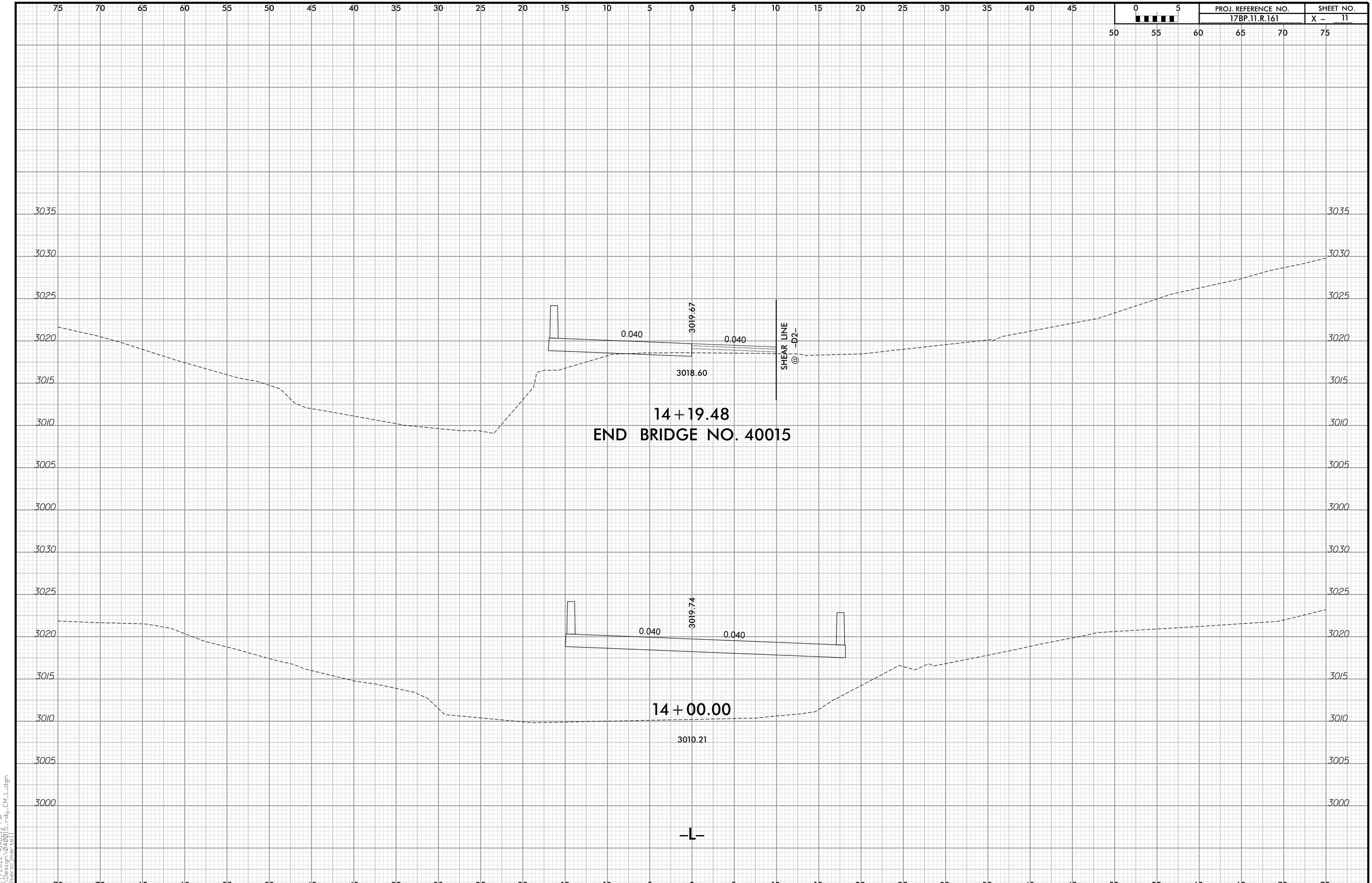

1/27/2022 4:48:33 PM
"Design 04001.5-rdy_CM_L.dgn"
"Users:jmartell"

DocuSign Envelope ID: F17CE518-6DEE-444E-9809-E0CB8A25DC3A

PROJ. REFERENCE NO.	SHEET NO.
17BP.11.R.161	X – 12

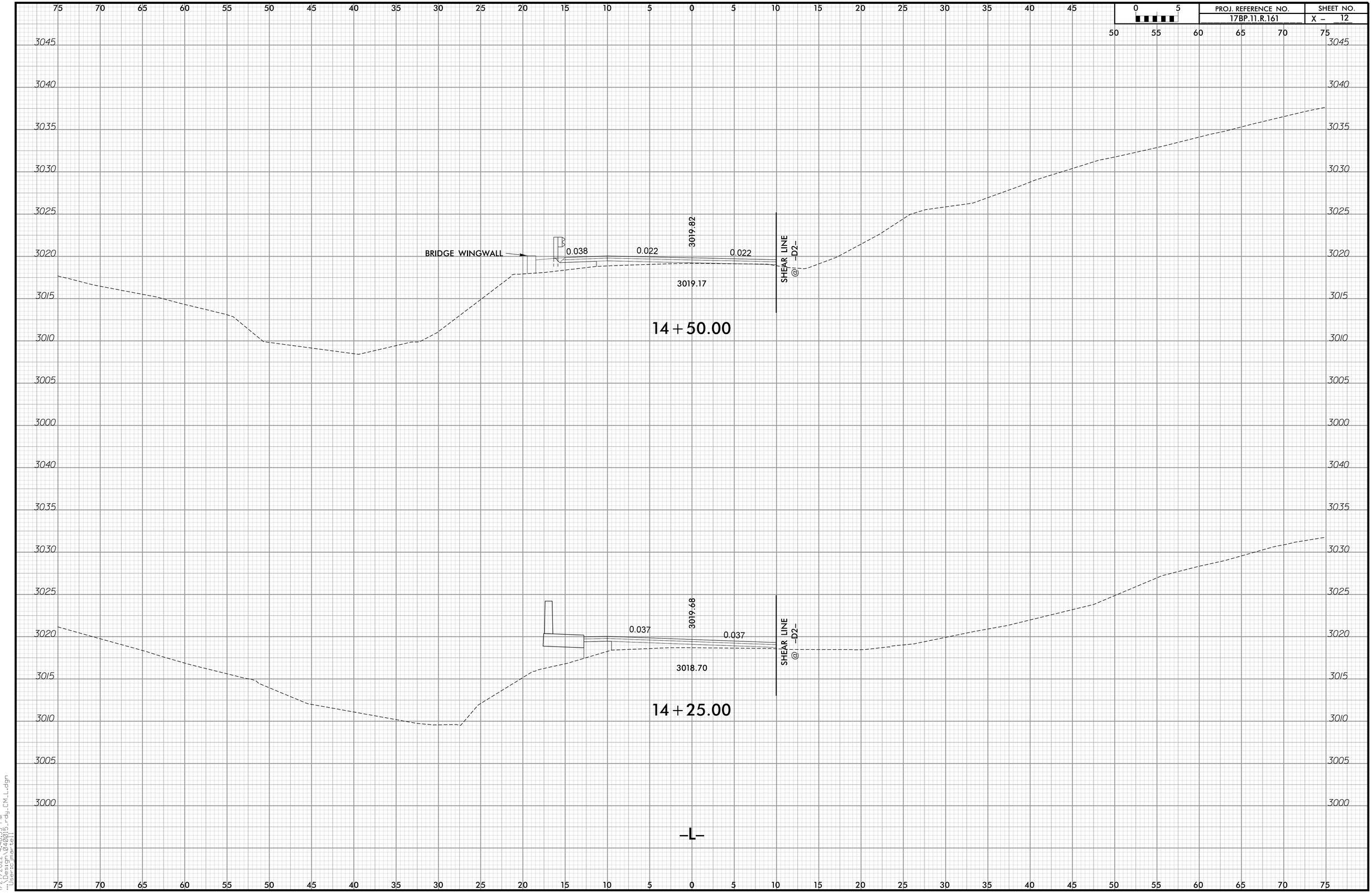

1/27/2022 4:48:33 PM
"L_Legend_04001.dgn
"Users:jmartell
Rdy_CM_L.dgn

DocuSign Envelope ID: F17CE518-6DEE-444E-9809-E0CB8A25DC3A

PROJ. REFERENCE NO.	SHEET NO.
17BP.11.R.161	X – 13

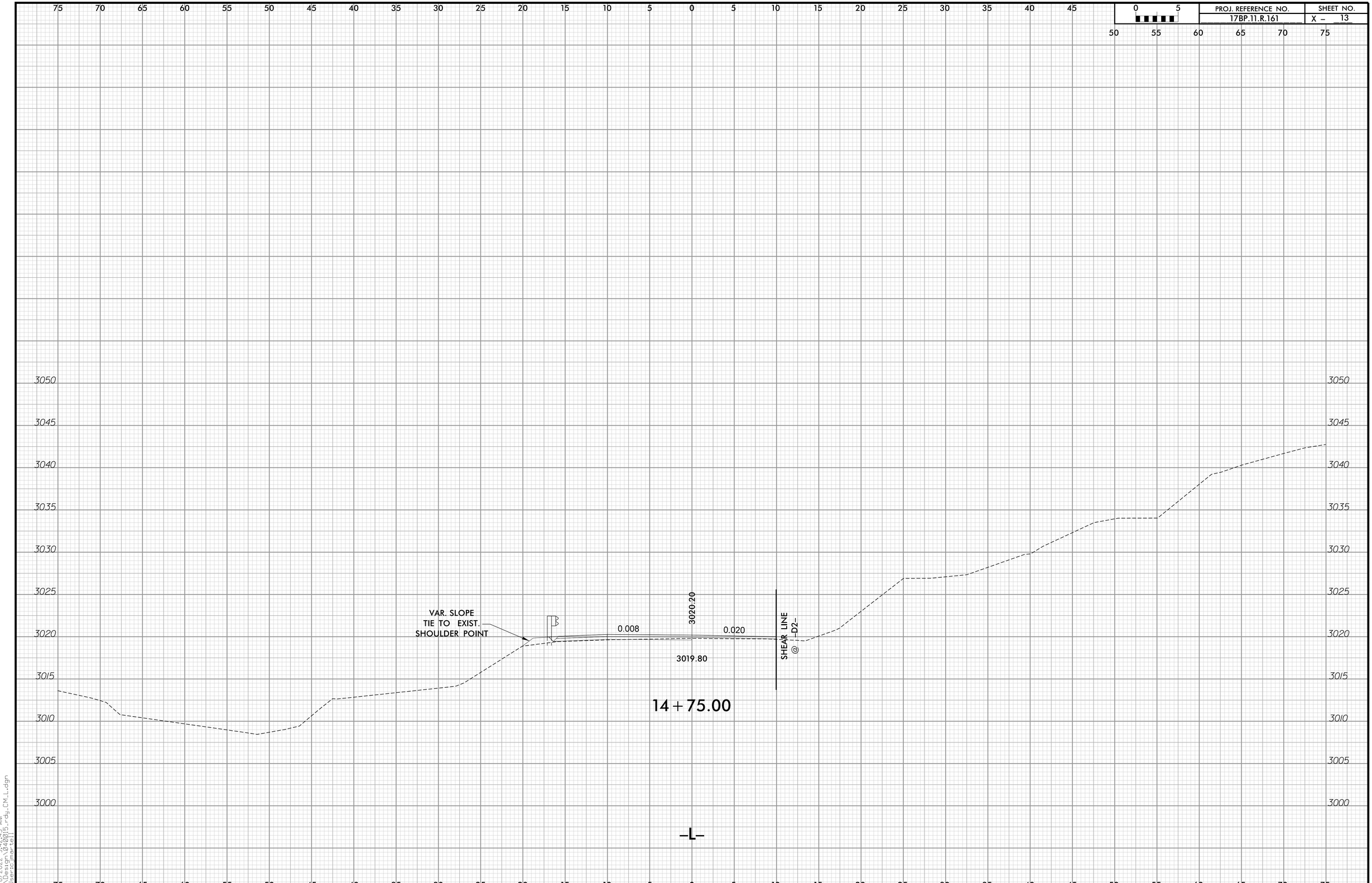

4/8/2022 9:42:43 AM
"Microsoft Word 2010 - Ready_CM_L.dgn"
"Users:jmartell"

DocuSign Envelope ID: F17CE518-6DEE-444E-9809-E0CB8A25DC3A

PROJ. REFERENCE NO.	SHEET NO.
17BP.11.R.161	X – 14

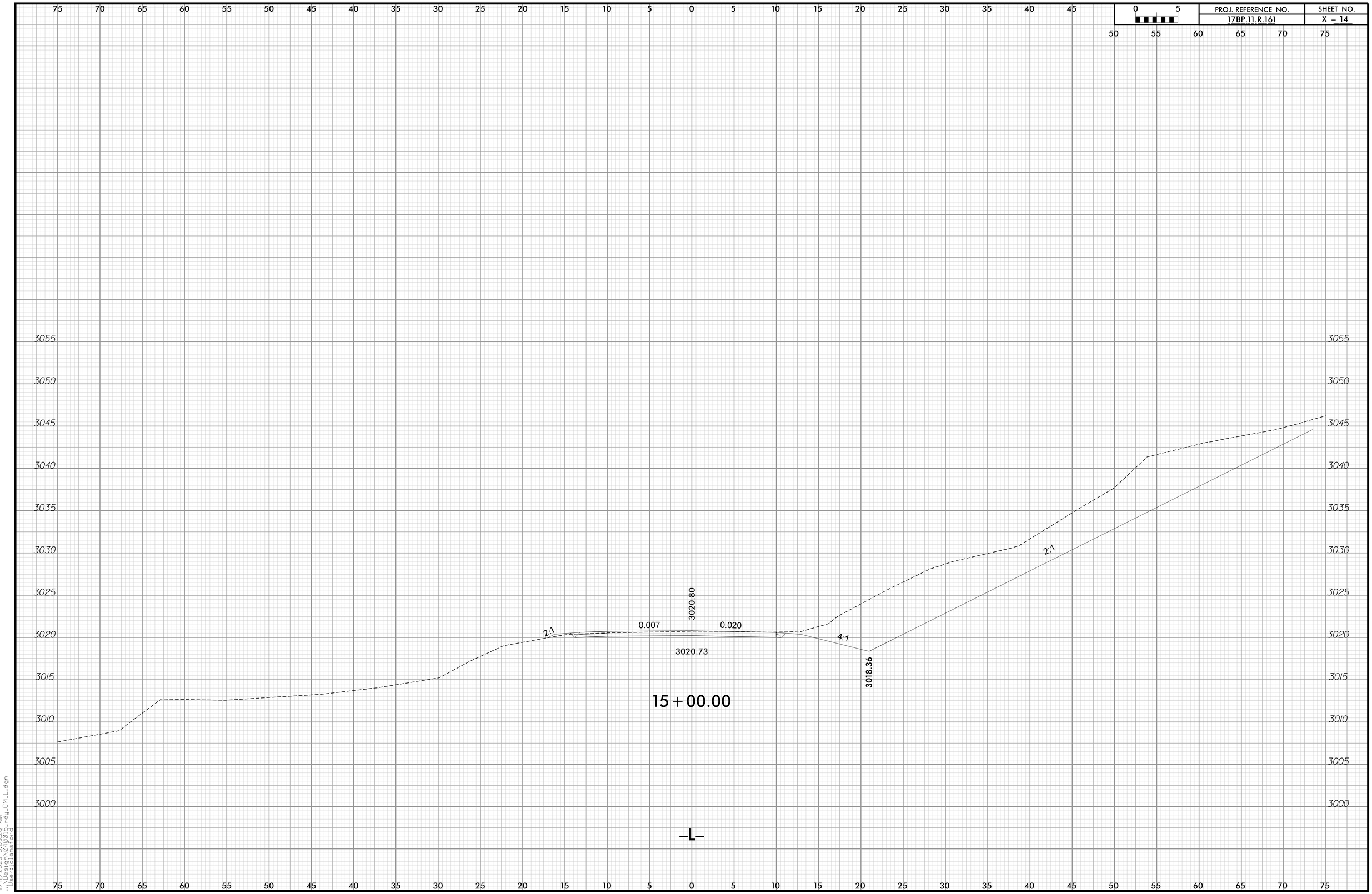

7/17/2023 5:09:28 AM
...\Design\040015_rdy_CM_L.dgn
User:clansford

DocuSign Envelope ID: F17CE518-6DEE-444E-9809-E0CB8A25DC3A

PROJ. REFERENCE NO.	SHEET NO.
17BP.11.R.161	X – 15

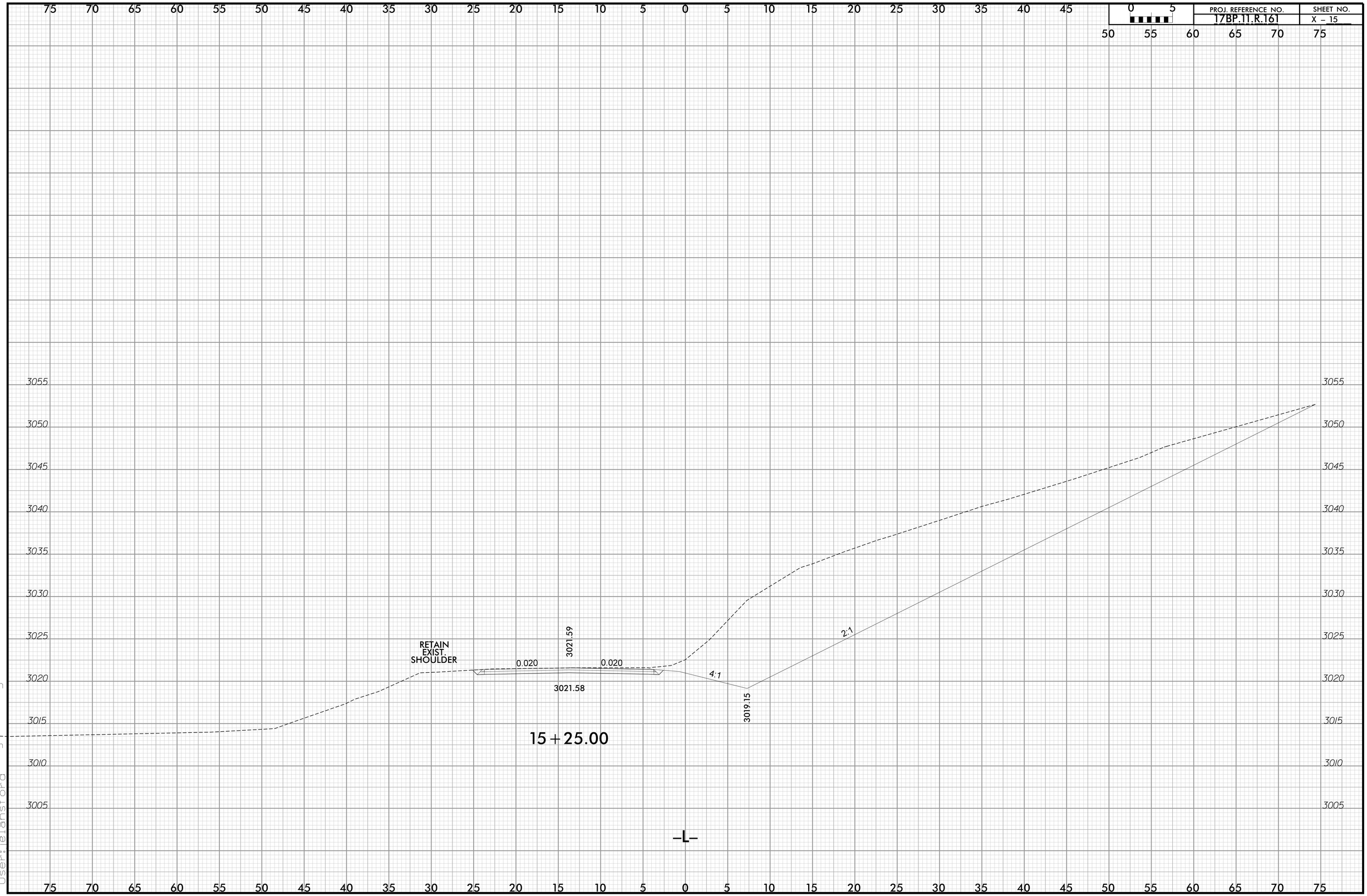

7/17/2023 5:32:10 AM
User:ellanstord Design\04015_Fdy_CM_L.dgn

DocuSign Envelope ID: F17CE518-6DEE-444E-9809-E0CB8A25DC3A

PROJ. REFERENCE NO.	SHEET NO.
17BP.11.R.161	X – 16

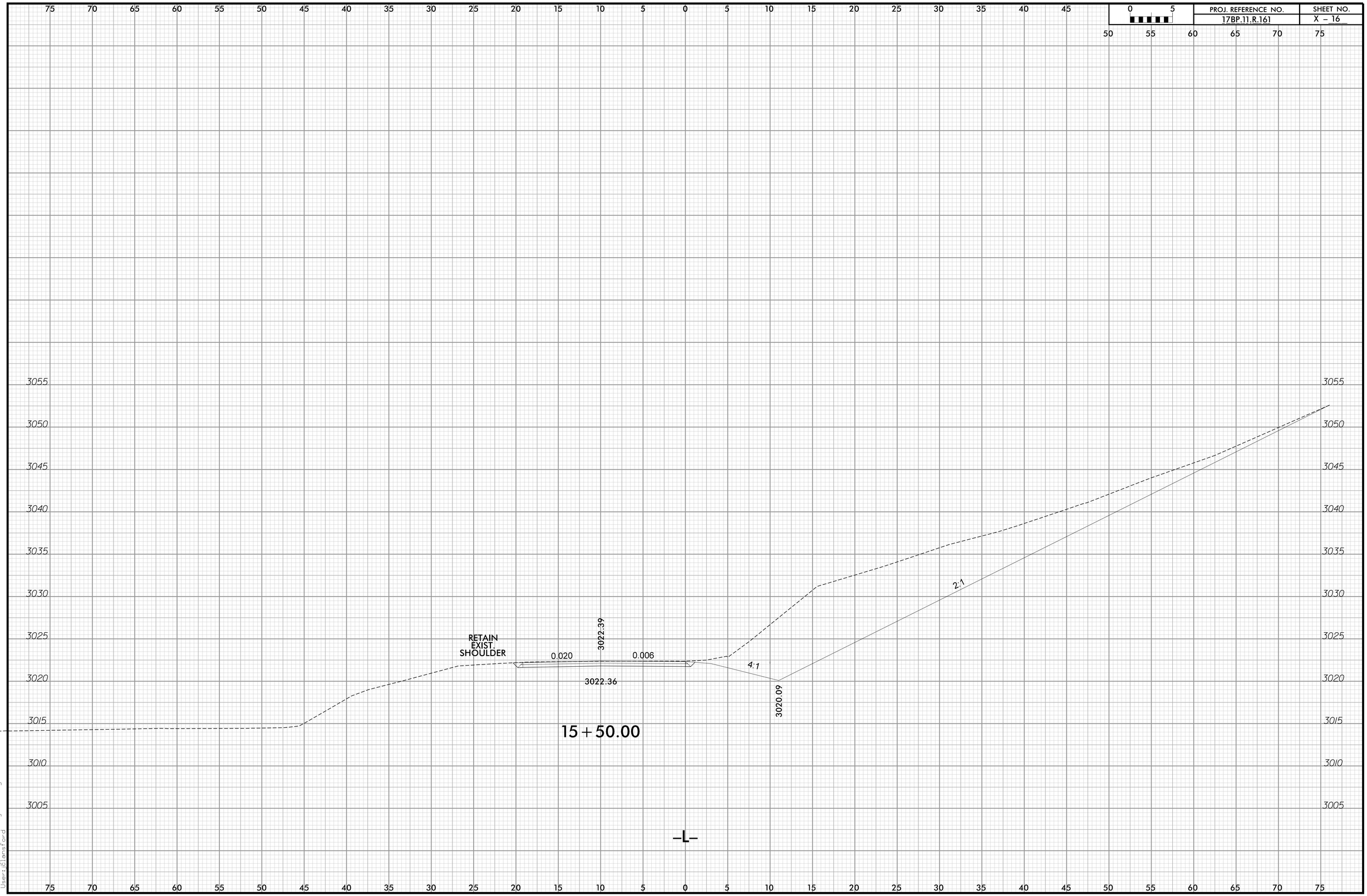

7/17/2023 5:37:39 AM
...\Design\040015_rdy_CM_L.dgn
User:clanglford

DocuSign Envelope ID: F17CE518-6DEE-444E-9809-E0CB8A25DC3A

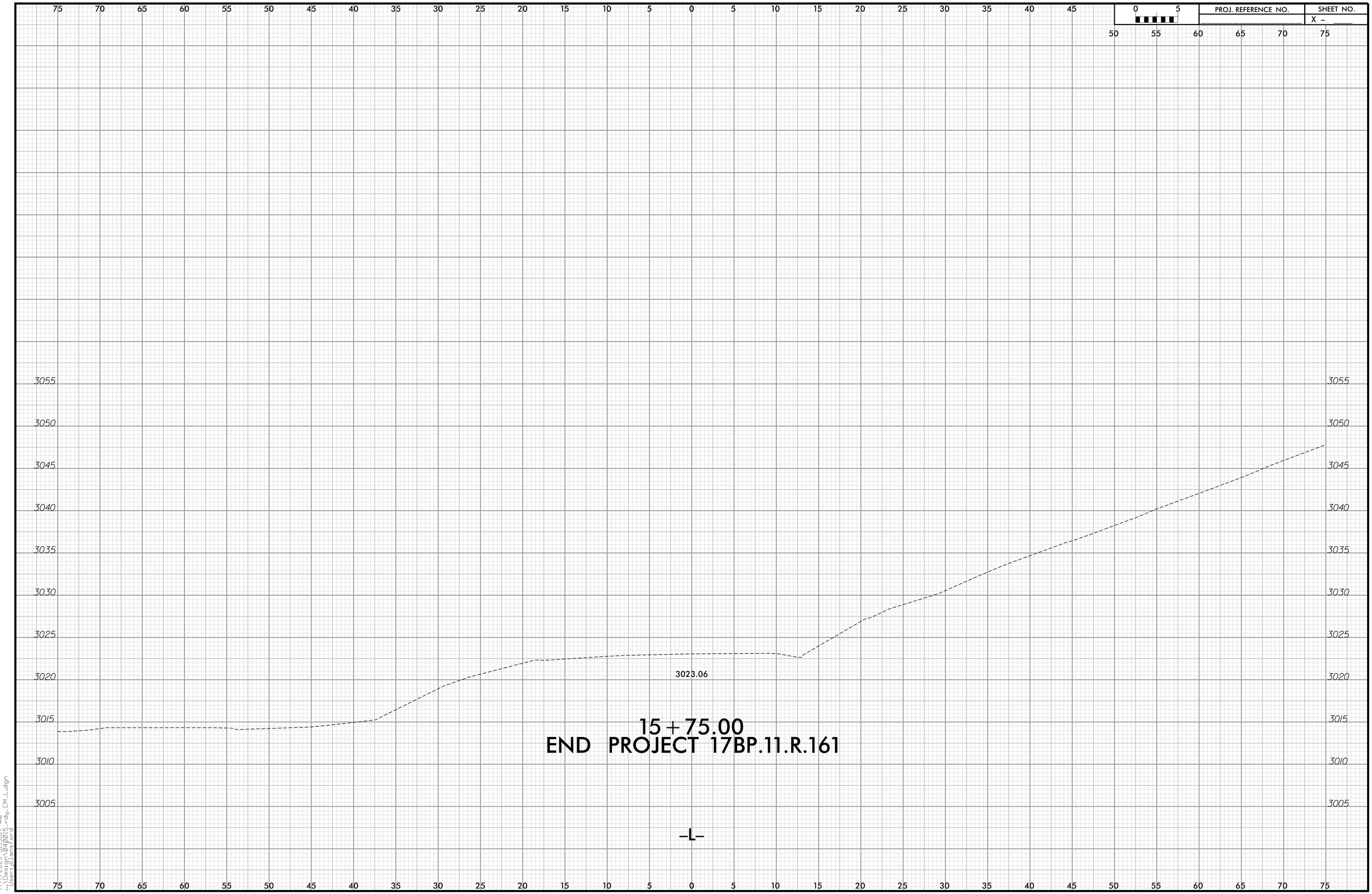

7/17/2023 5:39:07 AM
...\Design\040015_rdy_CM_L.dgn
User:clansford

DocuSign Envelope ID: F17CE518-6DEE-444E-9809-E0CB8A25DC3A

PROJ. REFERENCE NO.	SHEET NO.
17BP.11.R.161	X – 18

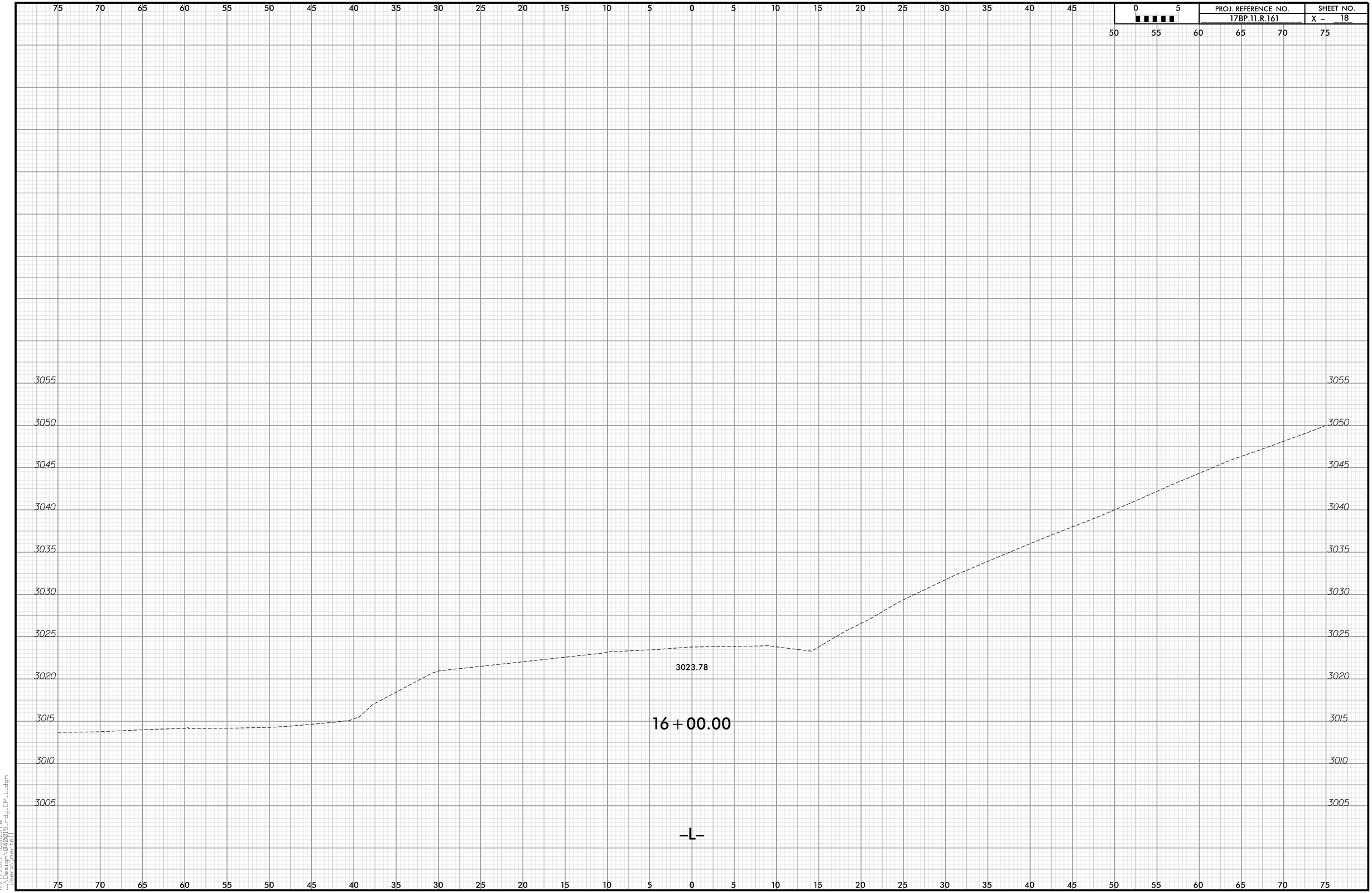

1/27/2022 5:08:51 PM
"L:\Design\01005\Study\CM_L.dgn"
"User:jmartell"

DocuSign Envelope ID: F17CE518-6DEE-444E-9809-E0CB8A25DC3A

PROJ. REFERENCE NO.	SHEET NO.
17BP.11.R.161	X – 19

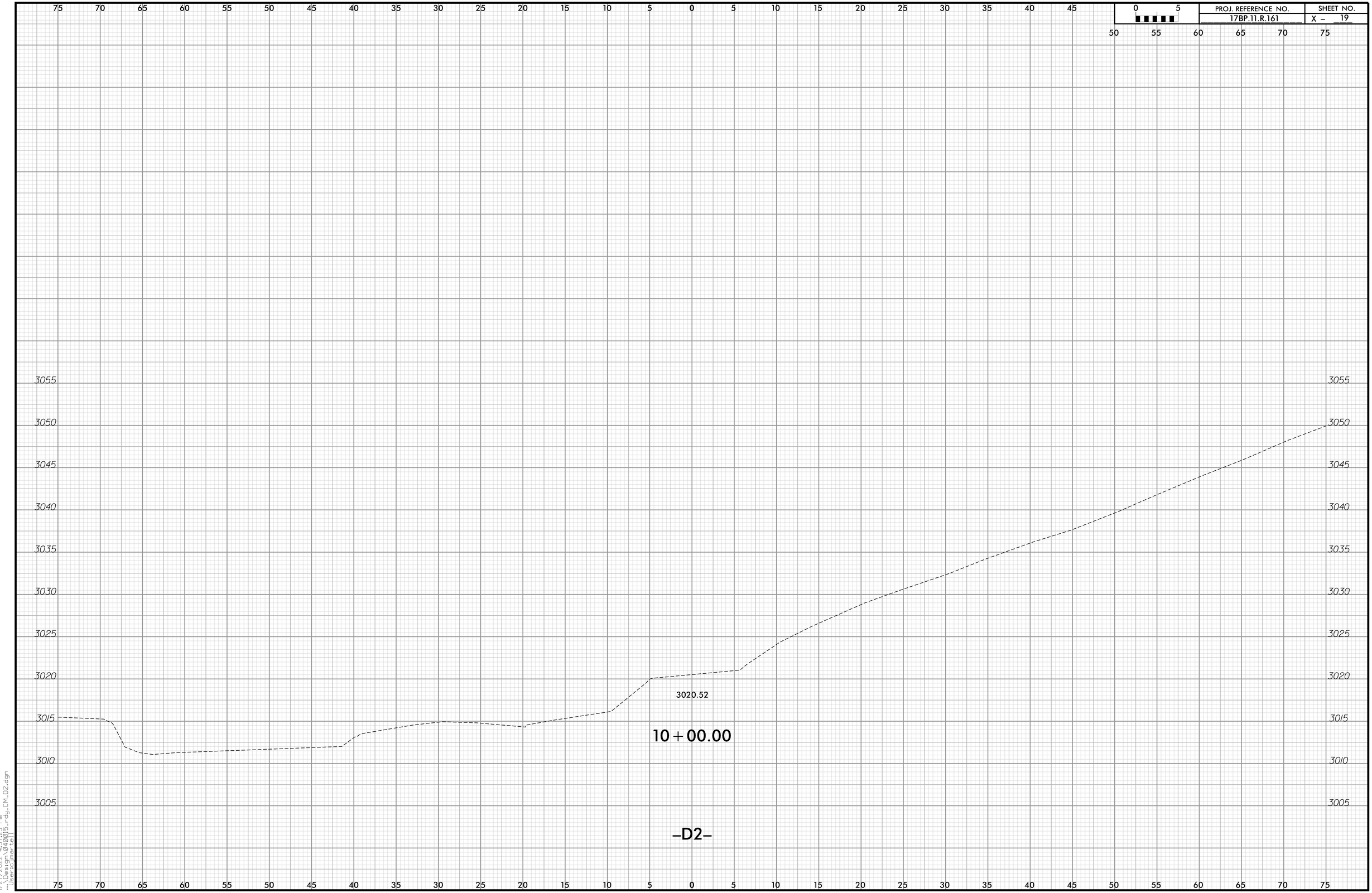

1/27/2022 4:37:23 PM
"C:\Users\martell\Desktop\D2-rdy_CM_D2.dgn"
"User:jmartell"

DocuSign Envelope ID: F17CE518-6DEE-444E-9809-E0CB8A25DC3A

PROJ. REFERENCE NO.	SHEET NO.
17BP.11.R.161	X – 20

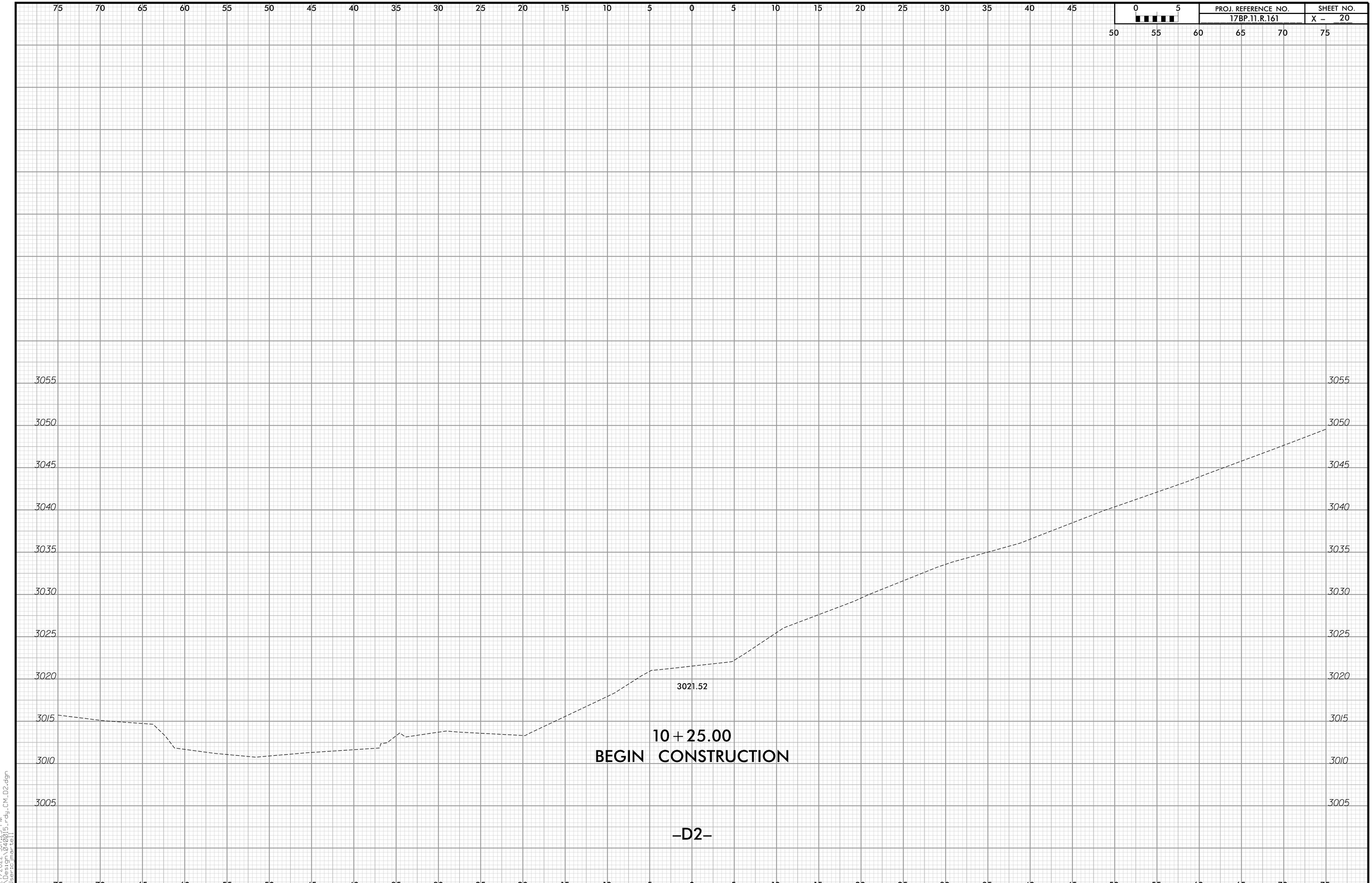

1/27/2022 5:17:23 PM
"C:\Users\mart0401\Desktop\Day_CM_D2.dgn"
"Usersjmartell"

DocuSign Envelope ID: F17CE518-6DEE-444E-9809-E0CB8A25DC3A

PROJ. REFERENCE NO.	SHEET NO.
17BP.11.R.161	X – 21

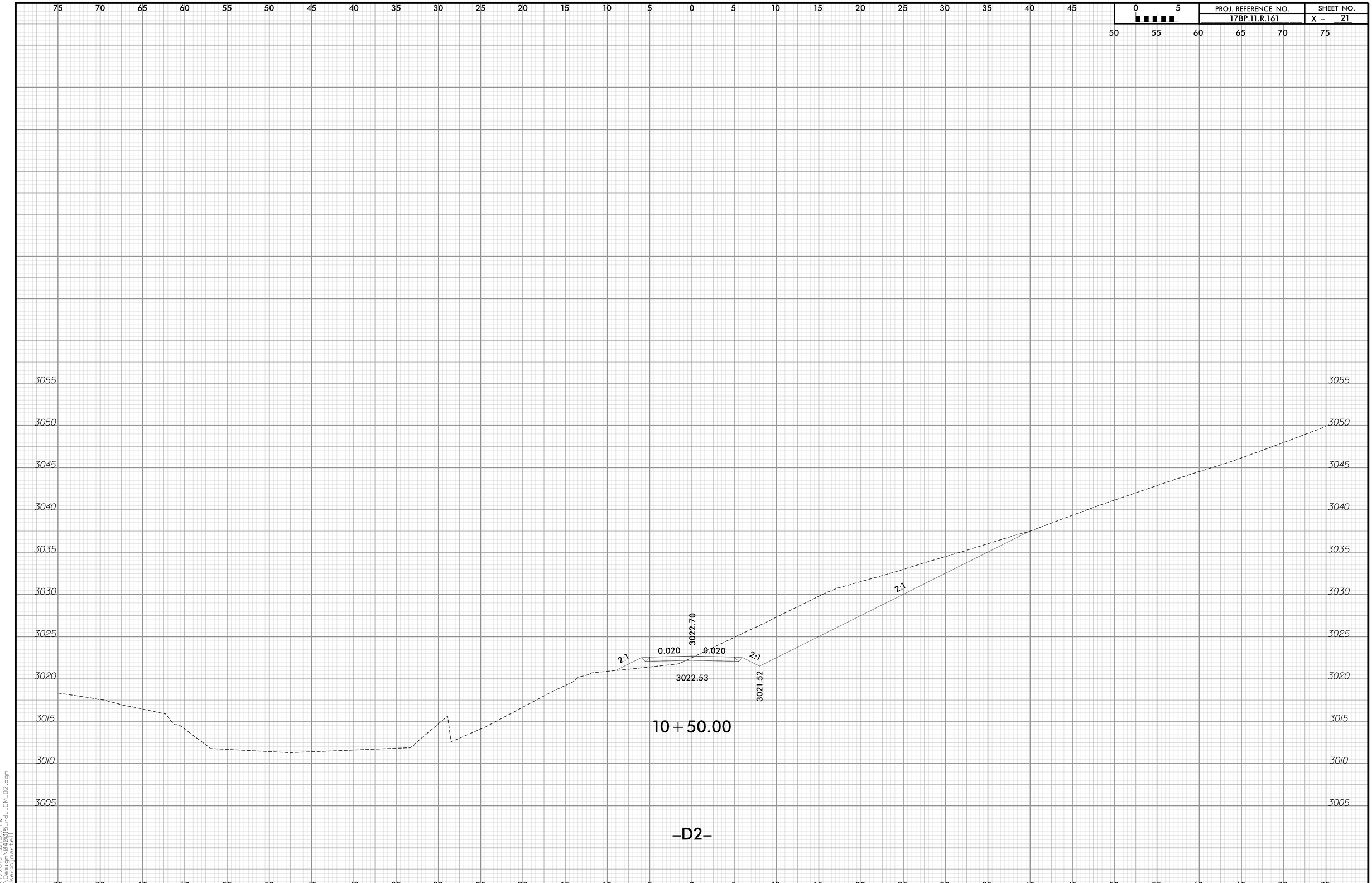

1/27/2022 5:17:23 PM
"L:\Design\04001-Jody_CM_D2.dgn
"User:jmartel"

DocuSign Envelope ID: F17CE518-6DEE-444E-9809-E0CB8A25DC3A

PROJ. REFERENCE NO.	SHEET NO.
17BP.11.R.161	X – 22

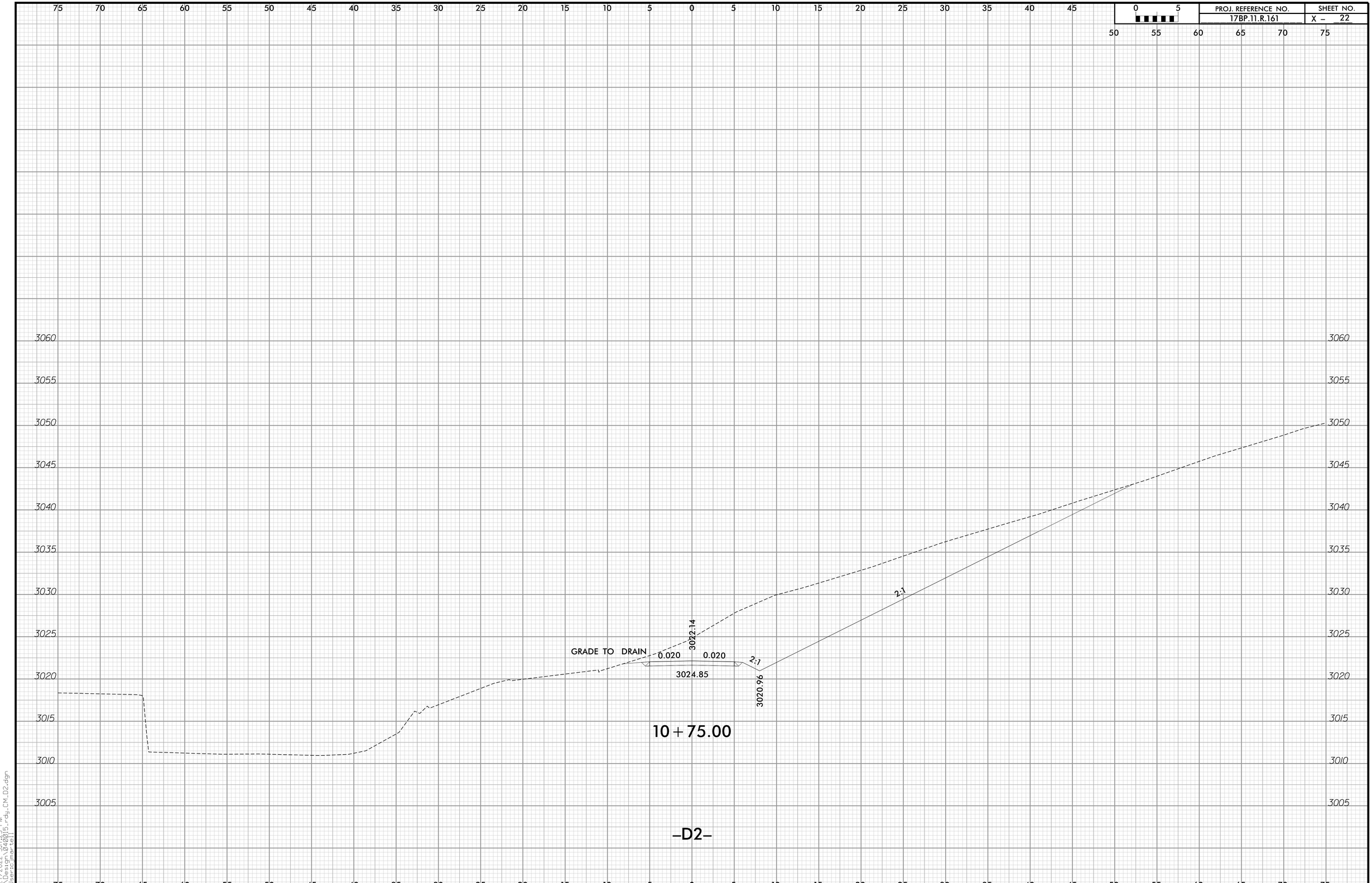

1/27/2022 5:17:23 PM
"C:\Users\jmartel\AppData\Local\Temp\acpublish_34105\Ex-day_CM_D2.dgn"
User:jmartel

DocuSign Envelope ID: F17CE518-6DEE-444E-9809-E0CB8A25DC3A

PROJ. REFERENCE NO.	SHEET NO.
17BP.11.R.161	X – 23

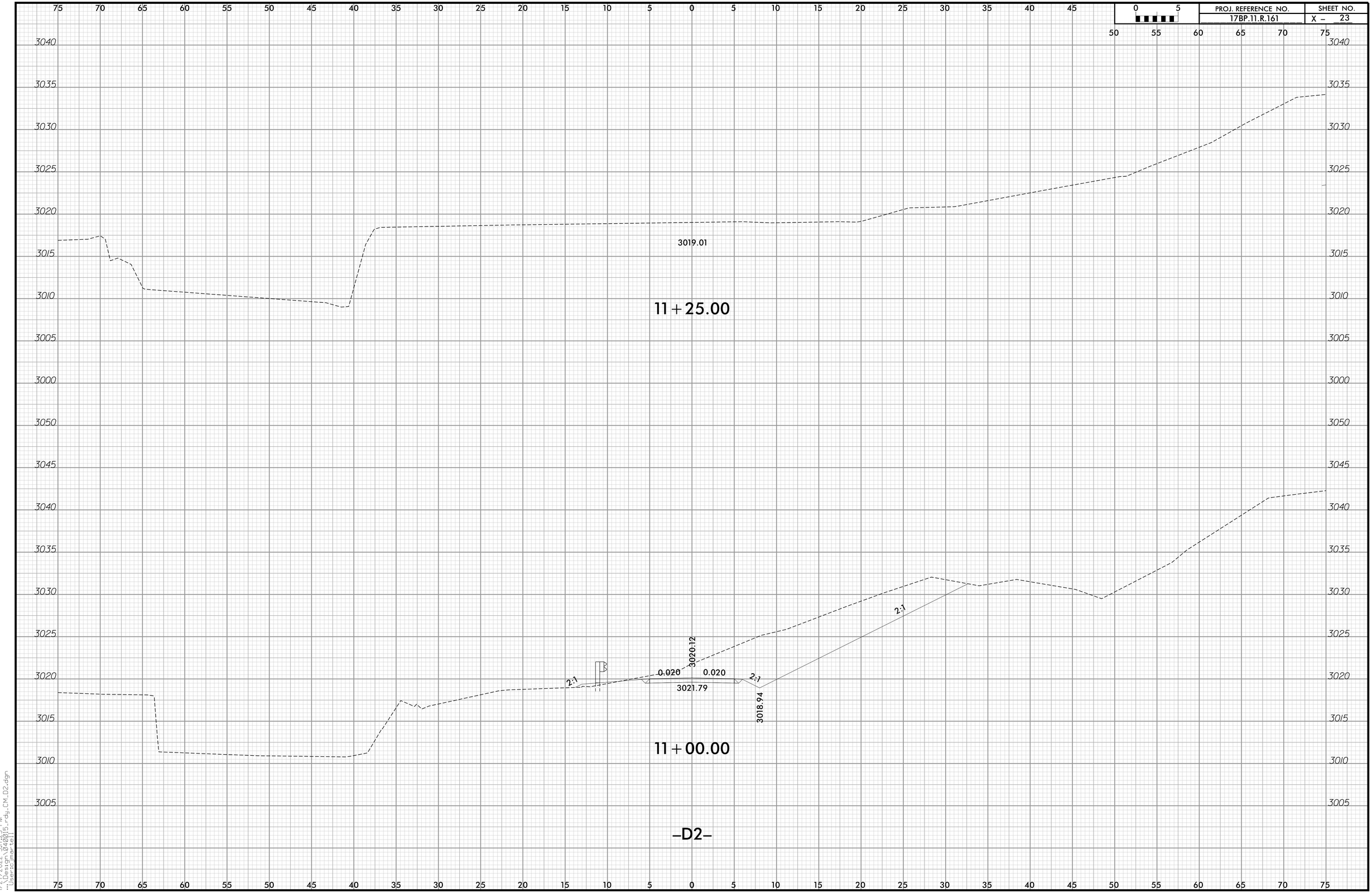

1/27/2022 5:17:23 PM
"C:\Users\martell\AppData\Local\Temp\04005-Tray_CM_D2.dgn
"Usersjmartell"

DocuSign Envelope ID: 5A92D8F0-93EF-497A-A8FA-DDBB4B34A564

TIP PROJECT: 17BP.11.R.161

CONTRACT: C203998

STATE	STATE PROJECT REFERENCE NO.	SHEET NO.	TOTAL SHEETS
N.C.	17BP.11.R.161		

STATE PROJ. NO.	F. A. PROJ. NO.	DESCRIPTION
17BP.11.PE.161		PE
17BP.11.ROW.161		R/W & UTILITIES
17BP.11.R.161		CONST.

STATE OF NORTH CAROLINA
DIVISION OF HIGHWAYS

ASHE COUNTY

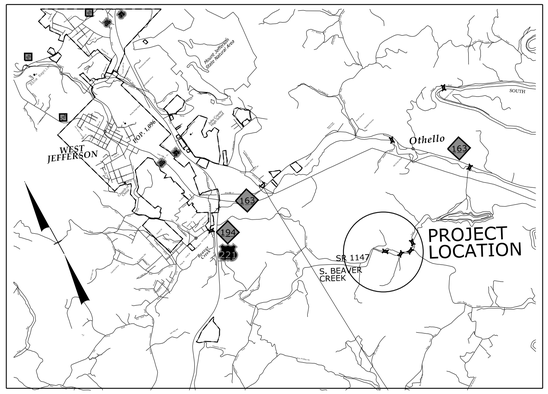

VICINITY MAP

LOCATION: STRUCTURE NO. 040015 OVER SOUTH BEAVER CREEK ON SR 1147 (NETTLE KNOB ROAD)

TYPE OF WORK: GRADING, DRAINAGE, PAVING AND STRUCTURE

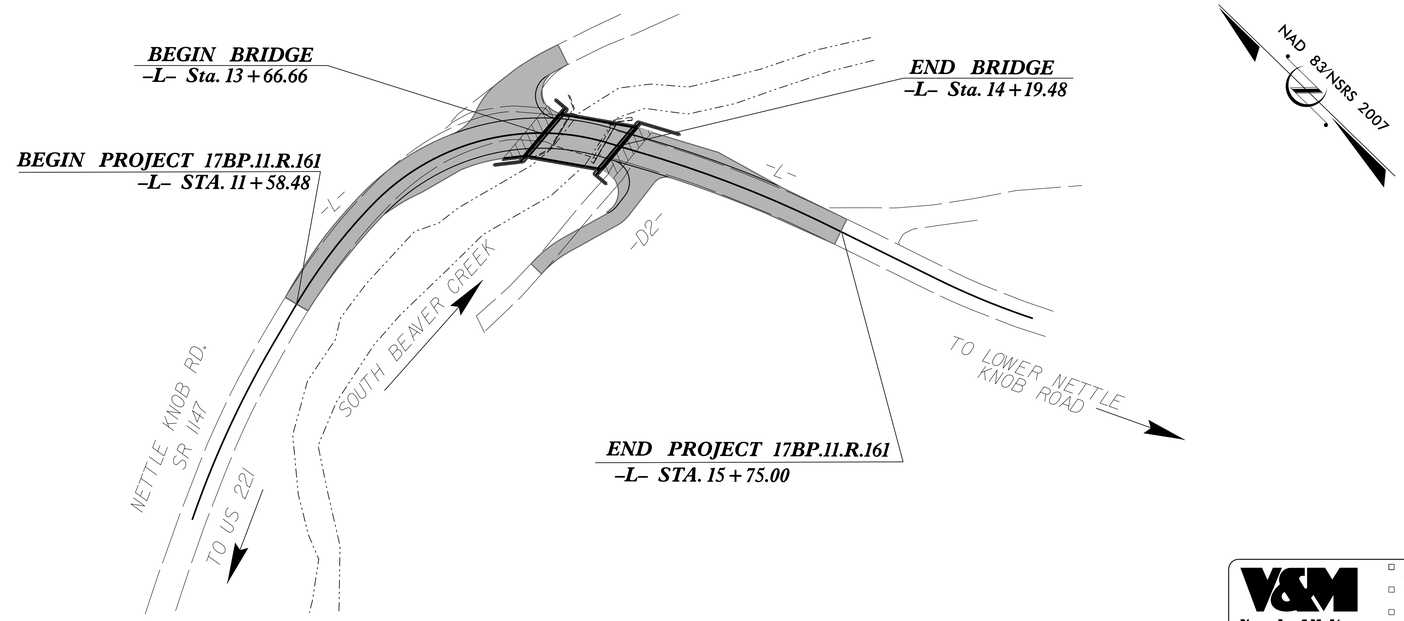

STRUCTURE

Vaughn & Melton
Consulting Engineers
Asheville, North Carolina
828-253-2796
Boone, NC 828-355-9933
Tri-Cities, TN 423-467-8401
Knoxville, TN 865-546-5800
Spartanburg, SC 864-574-4775
Charleston, SC 843-974-5650
Middlesboro, KY 606-248-6600
Atlanta, GA 770-627-3590
Raleigh, NC 919-977-9455
Charlotte, NC 704-357-0488

Copyright © 2006 Vaughn & Melton, Inc. All Rights Reserved

DESIGN DATA

ADT 2019 = 410
ADT 2040 = 620

* T = 6%
* TTST = 3% DUAL = 3%
V = 25 MPH
FUNC CLASS =
RURAL LOCAL
SUB-REGIONAL TIER

PROJECT LENGTH

LENGTH ROADWAY PROJECT 17BP.11.R.161 = 0.069 Mi.
LENGTH STRUCTURE PROJECT 17BP.11.R.161 = 0.010 Mi.
TOTAL LENGTH OF PROJECT 17BP.11.R.161 = 0.079 Mi.

Prepared in the Office of:
VAUGHN & MELTON
3509 Haworth Drive
Raleigh, NC 27609
For the North Carolina Division of Highways

2018 STANDARD SPECIFICATIONS

LETTING DATE:
JANUARY 19, 2023

RYAN TYLER SHIPMAN, PE
PROJECT ENGINEER

GARRETT W. POWELL
PROJECT DESIGN ENGINEER

NORTH CAROLINA PROFESSIONAL SEAL 046056 ENGINEER RYAN TYLER SHIPMAN
DocuSigned by: Ryan T. Shipman
13D872AE0B6433...
12/20/2022

DOCUMENT NOT CONSIDERED FINAL UNLESS ALL SIGNATURES COMPLETED

STATE OF NORTH CAROLINA DEPARTMENT OF TRANSPORTATION

wdcrutcher
DGN: VANC\Structures\03240-05 Ashe (5)\Structures\Bridge 015\Plans\40_000_17BP11R161_SMU_TSH1_000.dgn
TIME: 05:41 AM on Monday, December 12, 2022

DocuSign Envelope ID: 5A92D8F0-93EF-497A-A8FA-DDBB4B34A564

(-)4.2519% (-)0.4143%

PI = 13+20.00
EL = 3020.07'
VC = 100'

GRADE DATA -L-

(-)0.4143% (+)3.2261%

PI = 14+60.00
EL = 3019.49'
VC = 100'

GRADE DATA -L-

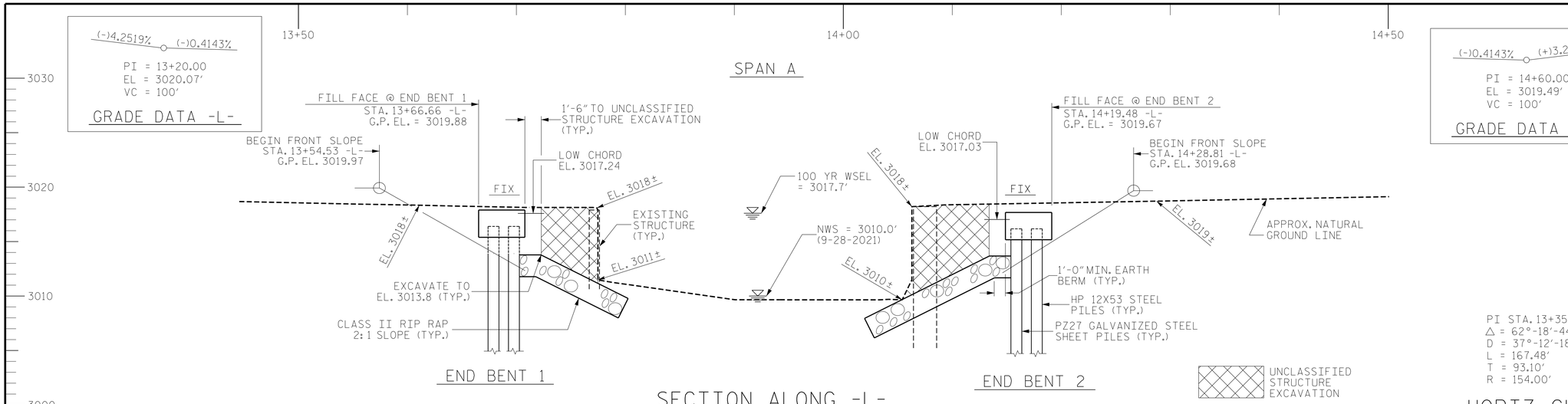

SECTION ALONG -L-

PI STA. 13+35.51	PI STA. 15+02.88
Δ = 62°-18'-44.2" (RT)	Δ = 9°-38'-34.9" (RT)
D = 37°-12'-18.2"	D = 7°-38'-22.0"
L = 167.48'	L = 126.23'
T = 93.10'	T = 63.26'
R = 154.00'	R = 750.00'

HORIZ. CURVE DATA -L-

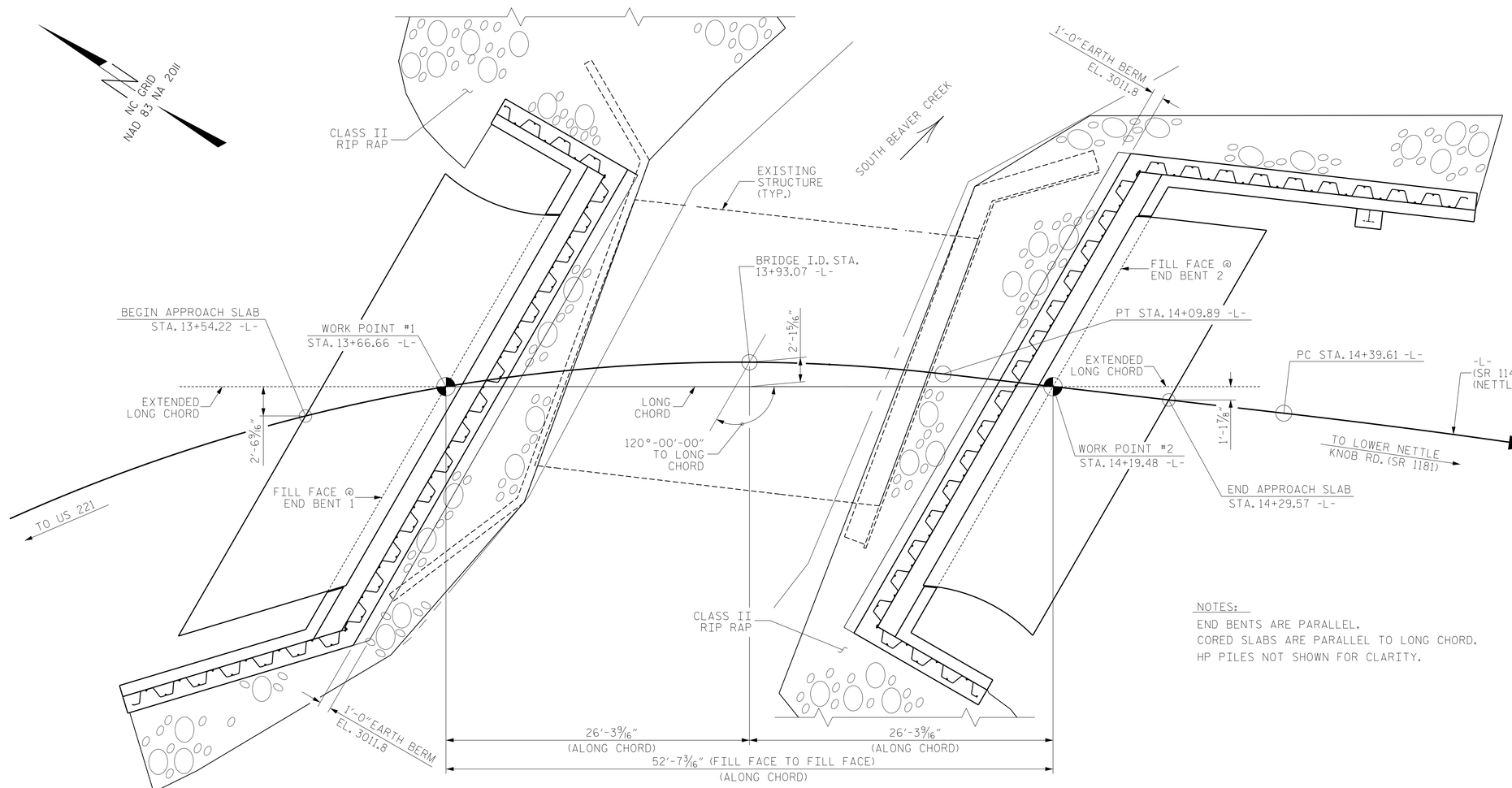

PLAN

NOTES:
END BENTS ARE PARALLEL.
CORED SLABS ARE PARALLEL TO LONG CHORD.
HP PILES NOT SHOWN FOR CLARITY.

DocuSigned by: Ryan T. Shipman
046056
13D872AE06E443A...
12/20/2022

DOCUMENT NOT CONSIDERED FINAL UNLESS ALL SIGNATURES COMPLETED

V&M
Vaughn & Melton
Consulting Engineers
Asheville, North Carolina
828-253-2796
Raleigh, NC 919-977-9455
Charlotte, NC 704-357-0488
Boone, NC 828-355-9933
Tri-Cities, TN 423-467-8401
Knoxville, TN 865-546-5800
Spartanburg, SC 864-574-4775
Charleston, SC 843-974-5650
Middlesboro, KY 606-248-6600
Atlanta, GA 770-627-3590
Copyright © 2006 Vaughn & Melton, Inc. All Rights Reserved

PROJECT NO. 17BP.11.R.161
ASHE COUNTY
STATION: 13+93.07 -L-

SHEET 1 OF 2 REPLACES BRIDGE NO. 040015

STATE OF NORTH CAROLINA
DEPARTMENT OF TRANSPORTATION
RALEIGH

GENERAL DRAWING
BRIDGE ON SR 1147
(NETTLE KNOB RD.) OVER
SOUTH BEAVER CREEK BETWEEN
US 221 AND LOWER NETTLE
KNOB RD.

DWN. BY: WDC	DATE: 04-2022	REVISIONS					SHEET NO.
CHKD. BY: GWP	DATE: 04/2022	NO.	BY:	DATE:	NO.	BY:	DATE:	S-1
DES. EGR. OF RECORD: RTS	DATE: 04/2022	1			3			TOTAL SHEETS
		2			4			19

wdcrutcher
DGN: V:\MC\Structures\03240-05 Ashe (5)\Structures\Bridge 05\Plans\40_001_17BP.11.R.161_SM01_S001_001.dgn
TIME: 12:34 PM on Tuesday, December 20, 2022

DocuSign Envelope ID: 21D3784B-174E-4F79-8DA6-E600B1B43D8E

BM 1: CHISLED SQUARE ON ROCK OUTCROP, 112' LEFT OF -L- STA. 14+17.51 -L-, N 956991, E 1273408 ELEV. 3025.72

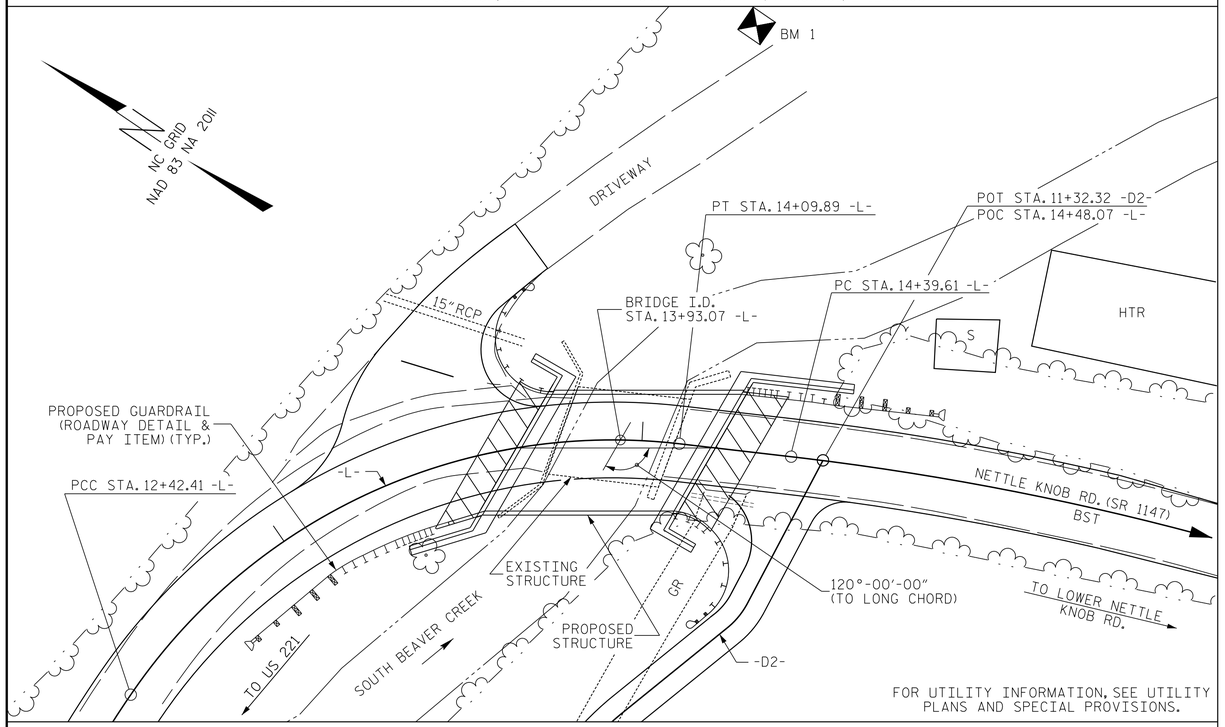

FOR UTILITY INFORMATION, SEE UTILITY PLANS AND SPECIAL PROVISIONS.

LOCATION SKETCH

GENERAL NOTES

ASSUMED LIVE LOAD = HL-93 OR ALTERNATE LOADING.

THIS BRIDGE HAS BEEN DESIGNED IN ACCORDANCE WITH THE REQUIREMENTS OF THE AASHTO LRFD BRIDGE DESIGN SPECIFICATIONS.

THIS BRIDGE IS LOCATED IN SEISMIC ZONE 1.

FOR OTHER DESIGN DATA AND GENERAL NOTES, SEE SHEET SN.

FOR EROSION CONTROL MEASURES, SEE EROSION CONTROL PLANS.

THIS STRUCTURE HAS BEEN DESIGNED IN ACCORDANCE WITH "HEC 18-EVALUATING SCOUR AT BRIDGES".

FOR SUBMITTAL OF WORKING DRAWINGS, SEE SPECIAL PROVISIONS.

FOR FALSEWORK AND FORMWORK, SEE SPECIAL PROVISIONS.

FOR CRANE SAFETY, SEE SPECIAL PROVISIONS.

FOR GROUT FOR STRUCTURES, SEE SPECIAL PROVISIONS.

THE SUBSTRUCTURE OF THE EXISTING BRIDGE INDICATED ON THE PLANS IS FROM THE BEST INFORMATION AVAILABLE. SINCE THIS INFORMATION IS SHOWN FOR THE CONVENIENCE OF THE CONTRACTOR, THE CONTRACTOR SHALL HAVE NO CLAIM WHATSOEVER AGAINST THE DEPARTMENT OF TRANSPORTATION FOR ANY DELAYS OR ADDITIONAL COST INCURRED BASED ON DIFFERENCES BETWEEN THE EXISTING BRIDGE SUBSTRUCTURE SHOWN ON THE PLANS AND THE ACTUAL CONDITIONS AT THE PROJECT SITE.

THE EXISTING STRUCTURE CONSISTING OF 1 SPAN @ 30'-6" OF STEEL PLANK FLOOR ON I-BEAMS WITH A CLEAR ROADWAY WIDTH OF 24'-2" ON END BENTS OF TIMBER CAPS, TIMBER POSTS, AND CONCRETE SILLS LOCATED AT THE PROPOSED SITE SHALL BE REMOVED. THE EXISTING BRIDGE IS PRESENTLY POSTED FOR LOAD LIMIT. SHOULD THE STRUCTURAL INTEGRITY OF THE BRIDGE DETERIORATE DURING CONSTRUCTION OF THE ROPOSED BRIDGE, THE LOAD LIMIT MAY BE REDUCED AS FOUND NECESSARY DURING THE LIFE OF THE PROJECT.

REMOVAL OF THE EXISTING BRIDGE SHALL BE PERFORMED SO AS NOT TO ALLOW DEBRIS TO FALL INTO THE WATER. THE CONTRACTOR SHALL REMOVE THE BRIDGE AND SUBMIT PLANS FOR DEMOLITION IN ACCORDANCE WITH ARTICLE 402-2 OF THE STANDARD SPECIFICATIONS.

INASMUCH AS THE PAINT SYSTEM ON THE EXISTING STRUCTURAL STEELCONTAINS LEAD, THE CONTRACTOR'S ATTENTION IS DIRECTED TO ARTICLE 107-1 OF THE STANDARD SPECIFICATIONS. ANY COSTS RESULTING FROM COMPLIANCE WITH APPLICABLE STATE OR FEDERAL REGULATIONS PERTAINING TO HANDLING OF MATERIALS CONTAINING LEAD BASED PAINT SHALL BE INCLUDED IN THE BID PRICE FOR "REMOVAL OF EXISTING STRUCTURE AT STATION 13+93.07 -L-."

THE MATERIAL SHOWN IN THE CROSS-HATCHED AREA ON SHEET S-1 SHALL BE EXCAVATED FOR A DISTANCE OF 25 FT. EACH SIDE OF CENTERLINE ROADWAY AS DIRECTED BY THE ENGINEER. THIS WORK WILL BE PAID FOR AT THE CONTRACT LUMP SUM PRICE FOR UNCLASSIFIED STRUCTURE EXCAVATION. SEE SECTION 412 OF THE THE STANDARD SPECIFICATIONS.

ASPHALT WEARING SURFACE IS INCLUDED IN ROADWAY QUANTITY ON ROADWAY PLANS.

FOR ASBESTOS ASSESSMENT FOR BRIDGE DEMOLITION AND RENOVATION ACTIVITIES, SEE SPECIAL PROVISIONS.

FOR STEEL SHEET PILES, SEE SPECIAL PROVISIONS. THE CONTRACTOR SHALL USE GALVANIZED PZ27 STEEL SHEET PILES, OR EQUIVALENT.

TOTAL BILL OF MATERIAL

	REMOVAL OF EXISTING STRUCTURE	ASBESTOS ASSESSMENT	PILE EXCAVATION IN SOIL	PILE EXCAVATION NOT IN SOIL	UNCLASSIFIED STRUCTURE EXCAVATION	CLASS A CONCRETE	BRIDGE APPROACH SLABS	REINFORCING STEEL	HP 12 X 53 STEEL PILES		VERTICAL CONCRETE BARRIER RAIL	RIP RAP CLASS II (2'-0" THICK)	GEOTEXTILE FOR DRAINAGE	ELASTOMERIC BEARINGS	3'-0" x 1'-9" PRESTRESSED CONCRETE CORED SLABS		18" STEEL SHEET PILES	
	LUMP SUM	LUMP SUM	LIN. FT.	LIN. FT.	LUMP SUM	CU. YARDS	LUMP SUM	LBS.	NO.	LIN. FT.	LIN. FT.	TONS	SQ. YARDS	LUMP SUM	NO.	LIN. FT.	NO.	SQ. FT.
SUPERSTRUCTURE							LUMP SUM				100.00			LUMP SUM	11	550.0		
END BENT 1			48.3	35.1	LUMP SUM	28.3		4531	7	120		100	111				30	626
END BENT 2			40.1	39.1	LUMP SUM	31.6		4375	8	100		90	100				56	570
TOTAL	LUMP SUM	LUMP SUM	88.4	74.2	LUMP SUM	59.9	LUMP SUM	8906	15	220	100.00	190	211	LUMP SUM	11	550.0	86	1,196

HYDRAULIC DATA

DESIGN DISCHARGE	= 870	CFS
DESIGN FREQUENCY	= 25	YRS
DESIGN HW ELEVATION	= 3016.5	FT
BASE DISCHARGE	= 1300	CFS
BASE FREQUENCY	= 100	YRS
BASE HW ELEVATION	= 3017.7	FT

OVERTOPPING FLOOD DATA

OVERTOPPING DISCHARGE	= 2307	CFS
OVERTOPPING FREQUENCY	= 500	YRS+
OVERTOPPING ELEVATION	= 3020.4	FT
DRAINAGE AREA	= 2.96	SQ. MI.

NORTH CAROLINA PROFESSIONAL SEAL 046056 ENGINEER RYAN TYLER SHIPMAN
DocuSigned by: 8/9/2023
CERTIFICATE NO. 046056

DOCUMENT NOT CONSIDERED FINAL UNLESS ALL SIGNATURES COMPLETED

V&M Vaughn & Melton Consulting Engineers
Asheville, North Carolina 828-253-2796
Raleigh, NC 919-977-9455
Charlotte, NC 704-357-0488
Boone, NC 828-355-9933
Tri-Cities, TN 423-467-8401
Knoxville, TN 865-546-5800
Spartanburg, SC 864-574-4775
Charleston, SC 843-974-5650
Middlesboro, KY 606-248-6600
Atlanta, GA 770-627-3590
Copyright © 2006 Vaughn & Melton, Inc. All Rights Reserved

DWN. BY: WDC DATE: 04-2022
CHKD. BY: GWP DATE: 04/2022
DES. EGR. OF RECORD: RTS DATE: 04/2022

REVISIONS						
NO.	BY:	DATE:	NO.	BY:	DATE:	
1			3			
2			4			

SHEET NO. S-2
TOTAL SHEETS 19

PROJECT NO. 17BP.11.R.161
ASHE COUNTY
STATION: 13+93.07 -L-
SHEET 2 OF 2

STATE OF NORTH CAROLINA
DEPARTMENT OF TRANSPORTATION
RALEIGH

GENERAL DRAWING
BRIDGE ON SR 1147
(NETTLE KNOB RD.) OVER
SOUTH BEAVER CREEK BETWEEN
US 221 AND LOWER NETTLE
KNOB RD.

1st zon
LGN: V:\MC\Structures\03240-05 Ashe (5)\Structures\Bridge 05\Plans\40_003_17BP11R61_SM1_G002_002.dgn
TIME: 8/9/2023 9:42:39 AM

LEGEND

H VERTICAL PILE

SHEET PILE

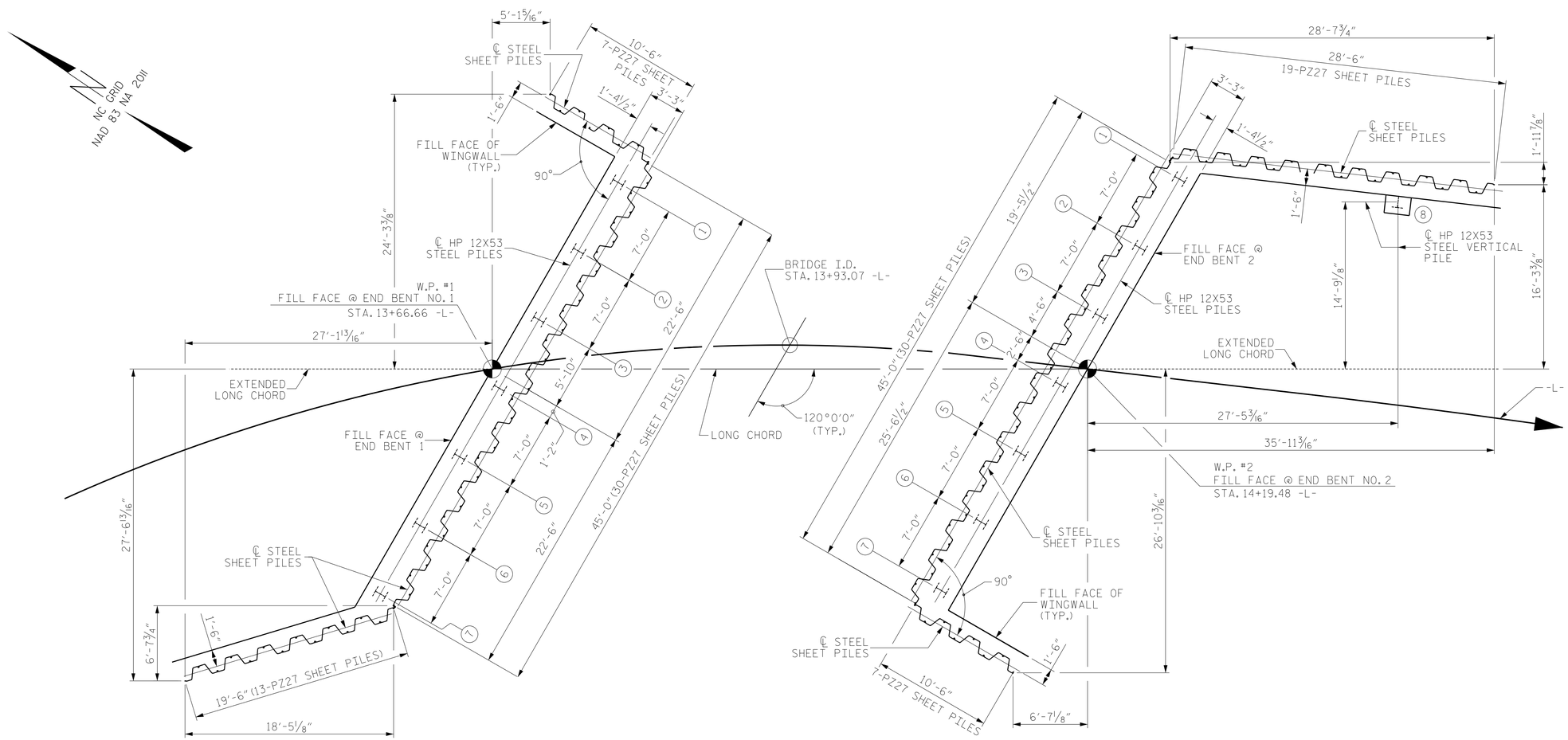

END BENT NO. 1

END BENT NO. 2

FOUNDATION LAYOUT

FOUNDATION NOTES

FOR PILES, SEE PILES PROVISION AND SECTION 450 OF THE STANDARD SPECIFICATIONS.

FILL THE BOTTOM 3 FT OF HOLES FOR PILE EXCAVATION AT END BENT NO. 1, END BENT NO. 2, AND THE WING WALL PILE WITH CONCRETE AND THE REST OF HOLES WITH CLASS II OR III SELECT MATERIAL THAT MEETS SECTION 1016 OF THE STANDARD SPECIFICATIONS.

DRILLED-IN PILES ARE REQUIRED FOR END BENT NO. 1. EXCAVATE HOLES TO A TIP ELEVATION NO HIGHER THAN 3,005 FT (LT) AND 3,001 FT (RT) WITH THE REQUIRED TIP RESISTANCE AND A PENETRATION OF AT LEAST 5 FT INTO WEATHERED ROCK / ROCK. FOR PILE EXCAVATION, SEE SECTION 450 OF THE STANDARD SPECIFICATIONS.

DRILLED-IN PILES ARE REQUIRED FOR END BENT NO. 2. EXCAVATE HOLES TO A TIP ELEVATION NO HIGHER THAN 3,002 FT (LT) AND 3,008 FT (RT) WITH THE REQUIRED TIP RESISTANCE AND A PENETRATION OF AT LEAST 5 FT INTO WEATHERED ROCK / ROCK. FOR PILE EXCAVATION, SEE SECTION 450 OF THE STANDARD SPECIFICATIONS.

A DRILLED-IN PILE IS REQUIRED FOR THE WING WALL AT END BENT NO. 2. EXCAVATE HOLE TO A TIP ELEVATION NO HIGHER THAN 3,002 FT AND A PENETRATION OF AT LEAST 5 FT INTO WEATHERED ROCK / ROCK. FOR PILE EXCAVATION, SEE SECTION 450 OF THE STANDARD SPECIFICATIONS.

PZ 27 SHEETING IS TO BE DRIVEN IN FRONT (STREAM SIDE) OF THE HP 12X53 PILES AT END BENT NO. 1 TO BE USED FOR A VERTICAL FACE.

SHEET PILES SHALL BE DRIVEN TO REFUSAL. REFUSAL IS ESTIMATED TO BE AT ELEVATION 3,010 FT (LT) AND 3,006 FT (RT) FOR END BENT NO. 1.

PZ 27 SHEETING IS TO BE DRIVEN IN FRONT (STREAM SIDE) OF THE HP 12X53 PILES AT END BENT NO. 2 TO BE USED FOR A VERTICAL FACE.

SHEET PILES SHALL BE DRIVEN TO REFUSAL. REFUSAL IS ESTIMATED TO BE AT ELEVATION 3,007 FT (LT) AND 3,013 FT (RT) FOR END BENT NO. 2.

DocuSigned by: Ryan T. Shipman
046056
13D87A7C05E46B...
NORTH CAROLINA PROFESSIONAL ENGINEER SEAL 046056 RYAN TYLER SHIPMAN
11/21/2022

DOCUMENT NOT CONSIDERED FINAL UNLESS ALL SIGNATURES COMPLETED

V&M
Vaughn & Melton
Consulting Engineers
Asheville, North Carolina
828-253-2796
Raleigh, NC 919-977-9455
Charlotte, NC 704-357-0488
Boone, NC 828-355-9933
Tri-Cities, TN 423-467-8401
Knoxville, TN 865-546-5800
Spartanburg, SC 864-574-4775
Charleston, SC 843-974-5650
Middlesboro, KY 606-248-6600
Atlanta, GA 770-627-3590

Copyright © 2006 Vaughn & Melton, Inc. All Rights Reserved

PROJECT NO. 17BP.11.R.161

ASHE COUNTY

STATION: 13+93.07 -L-

STATE OF NORTH CAROLINA
DEPARTMENT OF TRANSPORTATION
RALEIGH

FOUNDATION LAYOUT

		REVISIONS						SHEET NO.
DWN. BY: WDC	DATE: 04-2022	NO.	BY:	DATE:	NO.	BY:	DATE:	S-3
CHKD. BY: GWP	DATE: 04/2022	1			3			TOTAL SHEETS
DES. EGR. OF RECORD: RTS	DATE: 04/2022	2			4			19

wdcrutcher
DGN: V:\NC\Structures\03240-05 Ashe 15\Structures\Bridge 01\Plans\40_005_17BP.11.R.161_SMU_FL01_003.dgn
TIME: 11:24 AM on Friday, November 18, 2022

SUMMARY OF PILE INFORMATION/INSTALLATION

(Blank entries indicate item is not applicable to structure)

End Bent/ Bent No, Pile(s) #-# (e.g., "Bent 1, Piles 1-5")	Factored Resistance per Pile TONS	Pile Cut-Off (Top of Pile) Elevation FT	Estimated Pile Lenth per Pile FT	Scour Critical Elevation FT	Driven Piles			Predrilling for Piles*			Drilled-In Piles		
					Min Pile Tip (Tip No Higher Than) Elev FT	Required Driving Resistance (RDR)** per Pile TONS	Total Pile Redrives Quantity EACH	Predrilling Length per Pile Lin FT	Predrilling Elevation (Elev Not To Predrill Below) FT	Maximum Predrilling Dia INCHES	Pile Excavation (Bottom of Hole) Elev FT	Pile Exc Not In Soil per Pile Lin FT	Pile Exc In Soil per Pile Lin FT
End Bent No. 1, Piles 1-4	70	See Substructure Plans	15								3005.0	4.8	5.4
End Bent No. 1, Piles 5-7	70		20								3001.0	5.3	8.9
End Bent No. 2, Piles 1-3	70		15								3002.0	4.8	8.2
End Bent No. 2, Piles 4-7	70		10								3008.0	4.7	2.3
End Bent No. 2, Wing Pile	N/A		15								3002.0	5.9	6.3

***Predrilling for Piles is required for end bents/bents with a predrilling length and at the Contractor's option for end bents/bents with predrilling information but no predrilling length.**

$$^{**}RDR = \frac{Factored\ Resistance + Factored\ Downdrag\ Load + Factored\ Dead\ Load}{Dynamic\ Resistance\ Factor} + Nominal\ Downdrag\ Resistance + \frac{Nominal\ Scour\ Resistance}{Scour\ Resistance\ Factor}$$

PILE DESIGN INFORMATION

(Blank entries indicate item is not applicable to structure)

End Bent/ Bent No, Pile(s) #-# (e.g., "Bent 1, Piles 1-5")	Factored Axial Load per Pile TONS	Factored Downdrag Load per Pile TONS	Factored Dead Load* per Pile TONS	Dynamic Resistance Factor	Nominal Downdrag Resistance per Pile TONS	Nominal Scour Resistance per Pile TONS	Scour Resistance Factor (Default = 1.00)
End Bent No. 1, Pile 1-7	70						
End Bent No. 2, Piles 1-7	70						

***Factored Dead Load is factored weight of pile above the ground line.**

NOTES:

1. The Pile Foundation Tables are based on the bridge substructure design and foundation recommendations sealed by a North Carolina Professional Engineer (Michael J. Walko, #026917) on 4-27-2022.
2. Total Pile Driving Equipment Setup quantity (not shown in Pile Foundation Tables) equals the number of driven piles, i.e., the number of piles with a Required Driving Resistance.
3. The Engineer will determine the need for PDA Testing and Pipe Pile Plates when PDAs or plates may be required.

DocuSigned by:
Ryan STAL Shipman
046056
13D872AE0E543A...
TYLER SHIPMAN
NORTH CAROLINA PROFESSIONAL SEAL
11/21/2022

DOCUMENT NOT CONSIDERED FINAL UNLESS ALL SIGNATURES COMPLETED

V&M
Vaughn & Melton
Consulting Engineers
Asheville, North Carolina
828-253-2796
Raleigh, NC 919-977-9455
Charlotte, NC 704-357-0488
Boone, NC 828-355-9933
Tri-Cities, TN 423-467-8401
Knoxville, TN 865-546-5800
Spartanburg, SC 864-574-4775
Charleston, SC 843-974-5650
Middlesboro, KY 606-248-6600
Atlanta, GA 770-627-3590

Copyright © 2006 Vaughn & Melton, Inc. All Rights Reserved

PROJECT NO. 17BP.11.R.161

ASHE COUNTY

STATION: 13+93.07 -L-

STATE OF NORTH CAROLINA
DEPARTMENT OF TRANSPORTATION
RALEIGH

PILE FOUNDATION TABLES

DWN. BY: WDC	DATE: 04-2022	REVISIONS							SHEET NO.
CHKD. BY: GWP	DATE: 04/2022	NO.	BY:	DATE:	NO.	BY:	DATE:		S-4
DES. EGR. OF RECORD: RTS	DATE: 04/2022	1			3				TOTAL SHEETS
		2			4				19

wdcruder
DGN: VMC-Structures\03240-05 Ashe (5)\Structures\Bridge 015\Plans\40_007_17BP11R161_SMU_FTG_004.dgn
TIME: 11:53 AM on Friday, November 18, 2022

LOAD AND RESISTANCE FACTOR RATING (LRFD) SUMMARY FOR PRESTRESSED CONCRETE GIRDERS

LEVEL		VEHICLE	WEIGHT (W) (TONS)	CONTROLLING LOAD RATING	MINIMUM RATING FACTORS (RF)	TONS = W X RF	STRENGTH I LIMIT STATE											SERVICE III LIMIT STATE						COMMENT NUMBER
							LIVELOAD FACTORS	MOMENT					SHEAR					LIVELOAD FACTORS	MOMENT					
								DISTRIBUTION FACTORS (DF)	RATING FACTOR	SPAN	GIRDER LOCATION	DISTANCE FROM LEFT END OF SPAN (ft)	DISTRIBUTION FACTORS (DF)	RATING FACTOR	SPAN	GIRDER LOCATION	DISTANCE FROM LEFT END OF SPAN (ft)		DISTRIBUTION FACTORS (DF)	RATING FACTOR	SPAN	GIRDER LOCATION	DISTANCE FROM LEFT END OF SPAN (ft)	
DESIGN LOAD RATING		HL-93(Inv)	N/A	1	1.35	--	1.75	0.25	1.74	50'	EL	24.423	0.656	1.35	50'	EL	9.769	0.80	0.25	1.59	50'	EL	24.423	
		HL-93(Opr)	N/A	--	1.75	--	1.35	0.25	2.25	50'	EL	24.423	0.656	1.75	50'	EL	9.769	N/A	--	--	--	--	--	
		HS-20(Inv)	36.000	2	1.586	57.108	1.75	0.25	2.15	50'	EL	24.423	0.656	1.59	50'	EL	9.769	0.80	0.25	1.97	50'	EL	24.423	
		HS-20(Opr)	36.000	--	2.056	74.028	1.35	0.25	2.79	50'	EL	24.423	0.656	2.06	50'	EL	9.769	N/A	--	--	--	--	--	
LEGAL LOAD RATING	SV	SNSH	13.500	--	4.009	54.117	1.4	0.25	5.47	50'	EL	24.423	0.656	4.31	50'	EL	9.769	0.80	0.25	4.01	50'	EL	24.423	
		SNGARBS2	20.000	--	3.168	63.352	1.4	0.25	4.32	50'	EL	24.423	0.656	3.19	50'	EL	9.769	0.80	0.25	3.17	50'	EL	24.423	
		SNAGRIS2	22.000	--	3.009	66.192	1.4	0.25	4.18	50'	EL	19.538	0.656	3.01	50'	EL	9.769	0.80	0.25	3.07	50'	EL	24.423	
		SNCOTTS3	27.250	--	2	54.493	1.4	0.25	2.73	50'	EL	24.423	0.656	2.16	50'	EL	9.769	0.80	0.25	2.00	50'	EL	24.423	
		SNAGGRS4	34.925	--	1.739	60.742	1.4	0.25	2.37	50'	EL	24.423	0.656	1.88	50'	EL	9.769	0.80	0.25	1.74	50'	EL	24.423	
		SNS5A	35.550	--	1.696	60.292	1.4	0.25	2.31	50'	EL	24.423	0.656	1.96	50'	EL	9.769	0.80	0.25	1.70	50'	EL	24.423	
		SNS6A	39.950	--	1.586	63.364	1.4	0.25	2.16	50'	EL	24.423	0.656	1.82	50'	EL	9.769	0.80	0.25	1.59	50'	EL	24.423	
		SNS7B	42.000	--	1.512	63.487	1.4	0.25	2.06	50'	EL	24.423	0.656	1.85	50'	EL	9.769	0.80	0.25	1.51	50'	EL	24.423	
	TTST	TNAGRIT3	33.000	--	1.943	64.127	1.4	0.25	2.65	50'	EL	24.423	0.656	2.14	50'	EL	9.769	0.80	0.25	1.94	50'	EL	24.423	
		TNT4A	33.075	--	1.96	64.837	1.4	0.25	2.67	50'	EL	24.423	0.656	2.04	50'	EL	9.769	0.80	0.25	1.96	50'	EL	24.423	
		TNT6A	41.600	--	1.633	67.938	1.4	0.25	2.23	50'	EL	24.423	0.656	2	50'	EL	9.769	0.80	0.25	1.63	50'	EL	24.423	
		TNT7A	42.000	--	1.658	69.634	1.4	0.25	2.26	50'	EL	24.423	0.656	1.86	50'	EL	9.769	0.80	0.25	1.66	50'	EL	24.423	
		TNT7B	42.000	--	1.728	72.595	1.4	0.25	2.36	50'	EL	24.423	0.656	1.76	50'	EL	9.769	0.80	0.25	1.73	50'	EL	24.423	
		TNAGRIT4	43.000	--	1.64	70.537	1.4	0.25	2.24	50'	EL	24.423	0.656	1.69	50'	EL	9.769	0.80	0.25	1.64	50'	EL	24.423	
		TNAGT5A	45.000	--	1.532	68.95	1.4	0.25	2.09	50'	EL	24.423	0.656	1.75	50'	EL	9.769	0.80	0.25	1.53	50'	EL	24.423	
		TNAGT5B	45.000	3	1.501	67.548	1.4	0.25	2.05	50'	EL	24.423	0.656	1.6	50'	EL	9.769	0.80	0.25	1.50	50'	EL	24.423	

LOAD FACTORS:

DESIGN LOAD RATING FACTORS	LIMIT STATE	γ_{DC}	γ_{DW}
	STRENGTH I	1.25	1.50
	SERVICE III	1.00	1.00

NOTES:

MINIMUM RATING FACTORS ARE BASED ON THE STRENGTH I AND SERVICE III LIMIT STATES.

ALLOWABLE STRESSES FOR SERVICE III LIMIT STATE ARE AS REQUIRED FOR DESIGN.

COMMENTS:

1.
2.
3.
4.

(#) CONTROLLING LOAD RATING

(1) DESIGN LOAD RATING (HL-93)

(2) DESIGN LOAD RATING (HS-20)

(3) LEGAL LOAD RATING **

** SEE CHART FOR VEHICLE TYPE

GIRDER LOCATION

I - INTERIOR GIRDER
EL - EXTERIOR LEFT GIRDER
ER - EXTERIOR RIGHT GIRDER

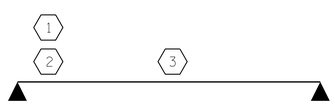

LRFR SUMMARY

FOR SPAN 'A'

Docusigned by: Ryan Shipman
046056
13D872AC06E484...
11/21/2022

DOCUMENT NOT CONSIDERED FINAL UNLESS ALL SIGNATURES COMPLETED

V&M
Vaughn & Melton
Consulting Engineers
Asheville, North Carolina
828-253-2796
Raleigh, NC 919-977-9455
Charlotte, NC 704-357-0488
Boone, NC 828-355-9933
Tri-Cities, TN 423-467-8401
Knoxville, TN 865-546-5800
Spartanburg, SC 864-574-4775
Charleston, SC 843-974-5650
Middlesboro, KY 606-248-6600
Atlanta, GA 770-627-3590

Copyright © 2006 Vaughn & Melton, Inc. All Rights Reserved

PROJECT NO. 17BP.11.R.161

ASHE COUNTY

STATION: 13+93.07 -L-

STATE OF NORTH CAROLINA
DEPARTMENT OF TRANSPORTATION
RALEIGH

STANDARD

LRFR SUMMARY FOR 50' CORED SLAB UNIT 120° SKEW

(NON-INTERSTATE TRAFFIC)

REVISIONS						SHEET NO.
NO.	BY:	DATE:	NO.	BY:	DATE:	S-5
1			3			TOTAL SHEETS
2			4			19

DWN. BY: WDC DATE: 04-2022
CHKD. BY: GWP DATE: 04/2022
DES. EGR. OF RECORD: RTS DATE: 04/2022

DRAWN BY : CVC 6/10
CHECKED BY : DNS 6/10

wdcrutcher
ZON: V:\WD\Structures\032140-05 Ashe I5\Structures\Bridge 015\Plans\k01_009_17BP11R61_SMU_LR01_005.dgn
TIME: 11:55 AM on Friday, November 18, 2022

STD. NO. 21LRFR1_60&120S_50L

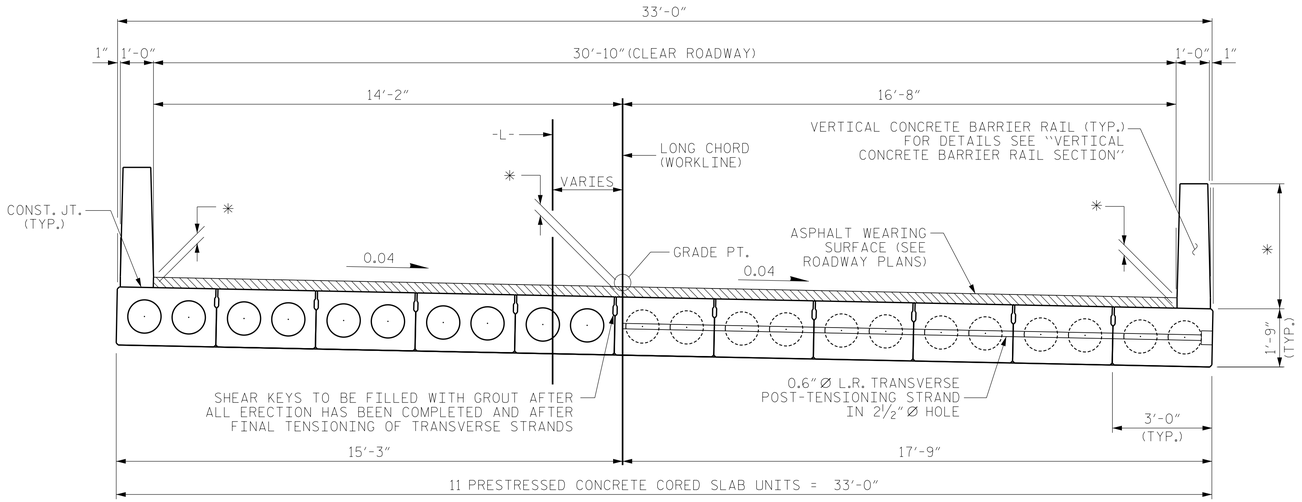

HALF SECTION
THROUGH VOIDS

HALF SECTION
AT INTERMEDIATE DIAPHRAGMS

TYPICAL SECTION

* - THE HEIGHT OF THE BARRIER RAIL AND ASPHALT THICKNESS VARIES WHILE THE TOP OF THE BARRIER RAIL FOLLOWS THE PROFILE OF THE GUTTERLINE. FOR RAIL HEIGHT DETAILS AND ASPHALT THICKNESS SEE THE "GUTTERLINE ASPHALT THICKNESS AND RAIL HEIGHT" TABLE.

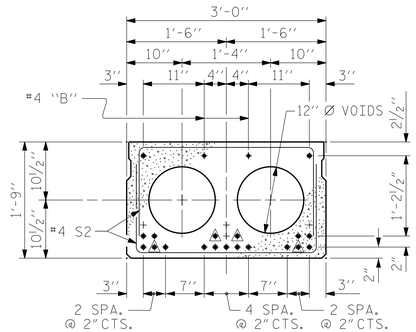

INTERIOR SLAB SECTION
(50' UNIT)
(19 STRANDS REQUIRED)

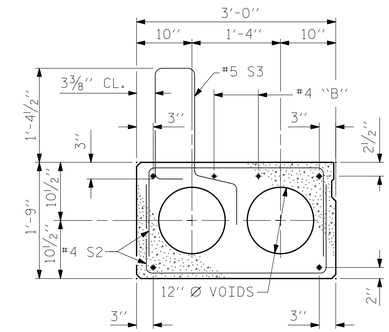

EXT. SLAB SECTION
(FOR PRESTRESSED STRAND LAYOUT, SEE INTERIOR SLAB SECTION.)

0.6" Ø LOW RELAXATION STRAND LAYOUT

BOND SHALL BE BROKEN ON THESE STRANDS FOR A DISTANCE OF 6'-0" FROM END OF CORED SLAB UNIT. SEE STANDARD SPECIFICATIONS, ARTICLE 1078-7.

DEBONDING LEGEND

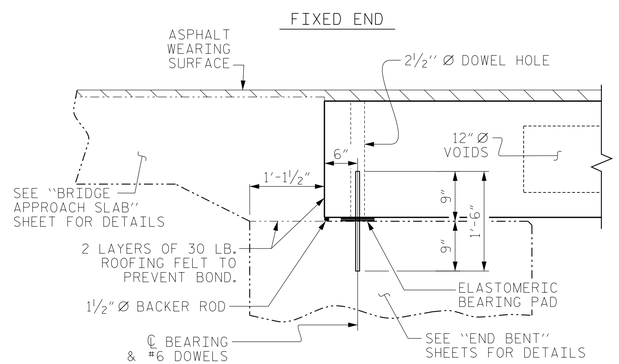

SECTION AT END BENT

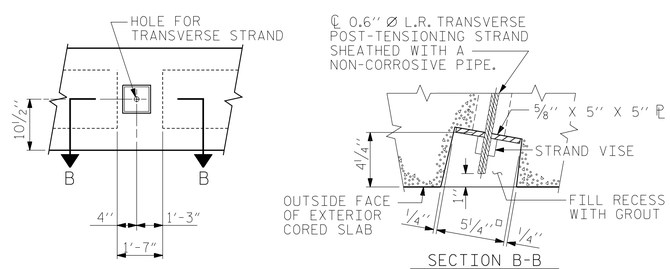

GROUTED RECESS AT END OF POST-TENSIONED STRAND OF CORED SLABS

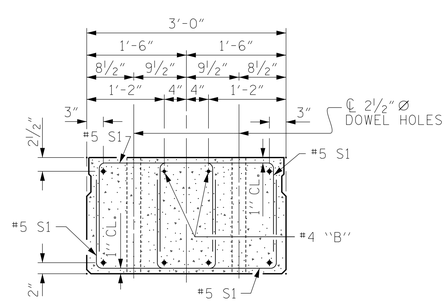

END ELEVATION

SHOWING PLACEMENT OF DOUBLE STIRRUPS AND LOCATION OF DOWEL HOLES. (STRAND LAYOUT NOT SHOWN.) INTERIOR SLAB UNIT SHOWN-EXTERIOR SLAB UNIT SIMILAR EXCEPT SHEAR KEY LOCATION.

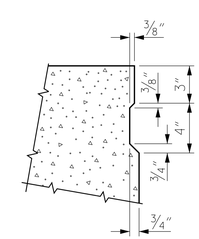

SHEAR KEY DETAIL

NOTE: OMIT SHEAR KEY ON OUTSIDE FACE OF EXTERIOR CORED SLABS.

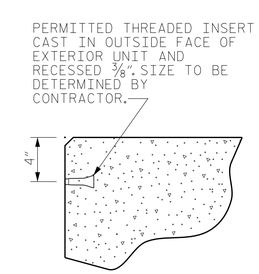

THREADED INSERT DETAIL

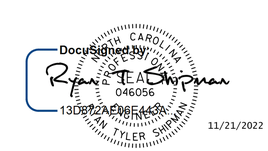

DOCUMENT NOT CONSIDERED FINAL UNLESS ALL SIGNATURES COMPLETED

V&M
Vaughn & Melton
Consulting Engineers
Asheville, North Carolina
828-253-2796
Raleigh, NC 919-977-9455
Charlotte, NC 704-357-0488
Boone, NC 828-355-9933
Tri-Cities, TN 423-467-8401
Knoxville, TN 865-546-5800
Spartanburg, SC 864-574-4775
Charleston, SC 843-974-5650
Middlesboro, KY 606-248-6600
Atlanta, GA 770-627-3590

Copyright © 2006 Vaughn & Melton, Inc. All Rights Reserved

PROJECT NO. 17BP.11.R.161
ASHE COUNTY
STATION: 13+93.07 -L-

STATE OF NORTH CAROLINA
DEPARTMENT OF TRANSPORTATION
RALEIGH

STANDARD
3'-0" X 1'-9"
PRESTRESSED CONCRETE CORED SLAB UNIT
120° SKEW

REVISIONS								
NO.	BY:	DATE:	NO.	BY:	DATE:			
1			3					
2			4					

SHEET NO. S-6
TOTAL SHEETS 19

DWN. BY: WDC DATE: 04-2022
CHKD. BY: GWP DATE: 04/2022
DES. EGR. OF RECORD: RTS DATE: 04/2022

DRAWN BY : DGE 5/09
CHECKED BY : BCH 6/09
REV. 9/14 MAA/TMG

STD. NO. 21" PCS2_33_120S

w:\structure\
DGN: V:\NC\Structure\023240-05 Ashe 15\Structures\Bridge 015\Plans\401_001_ITBP\IRR6_SMU_TS01_006.dgn
TIME: 11:35 AM on Friday, November 18, 2022

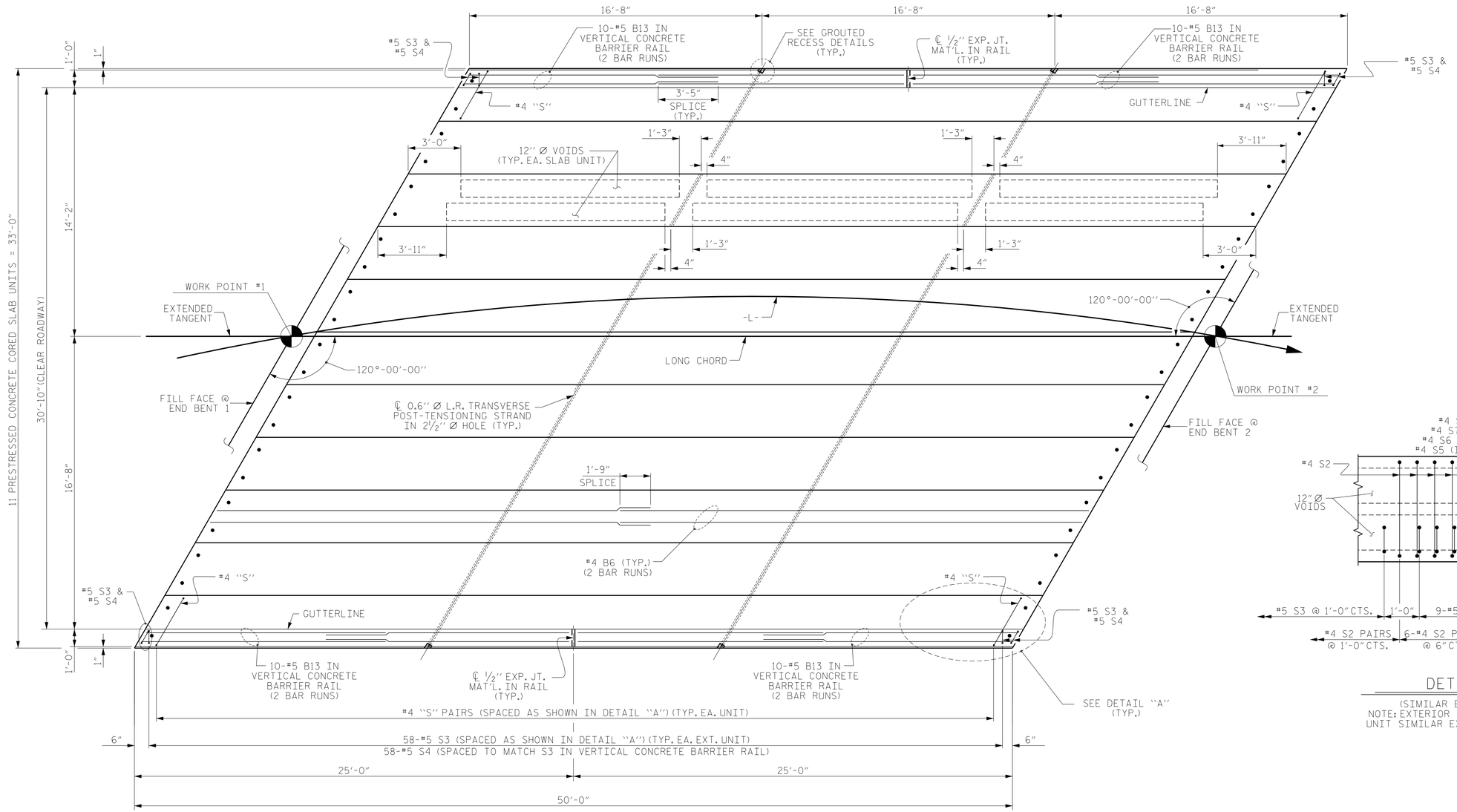

PLAN OF UNIT

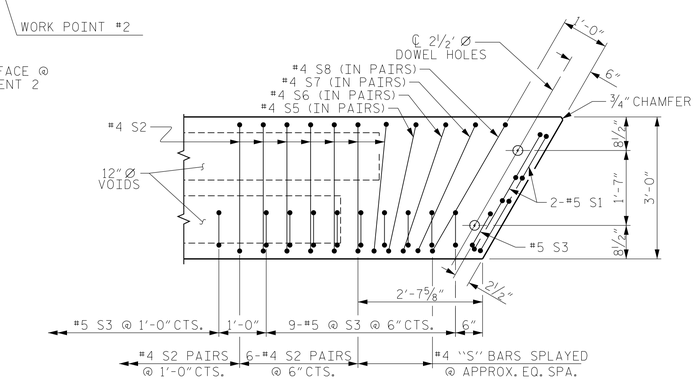

DETAIL "A"

(SIMILAR EACH END OF UNIT)
NOTE: EXTERIOR UNIT SHOWN - INTERIOR UNIT SIMILAR EXCEPT OMIT #5 S3 BARS.

PROJECT NO. 17BP.11.R.161

ASHE COUNTY

STATION: 13+93.07 -L-

STATE OF NORTH CAROLINA
DEPARTMENT OF TRANSPORTATION
RALEIGH

PLAN OF 50' UNIT
30'-10" CLEAR ROADWAY
120° SKEW

DocuSigned by: Ryan T. Shipman
046056
13D872AE06E443A...
11/21/2022

V&M
Vaughn & Melton
Consulting Engineers
Asheville, North Carolina
828-253-2796
Boone, NC 828-355-9933
Tri-Cities, TN 423-467-8401
Knoxville, TN 865-546-5800
Spartanburg, SC 864-574-4775
Charleston, SC 843-974-5650
Middlesboro, KY 606-248-6600
Atlanta, GA 770-627-3590
Raleigh, NC 919-977-9455
Charlotte, NC 704-357-0488

Copyright © 2006 Vaughn & Melton, Inc. All Rights Reserved

DOCUMENT NOT CONSIDERED FINAL UNLESS ALL SIGNATURES COMPLETED

DWN. BY: WDC DATE: 04-2022
CHKD. BY: GWP DATE: 04/2022
DES. EGR. OF RECORD: RTS DATE: 04/2022

REVISIONS								
NO.	BY:	DATE:	NO.	BY:	DATE:			
1			3					
2			4					

SHEET NO. S-7
TOTAL SHEETS 19

DRAWN BY :	DGE	3/09	REV. 12/5/11	MAA/AAC
CHECKED BY :	BCH	3/09	REV. 8/14	MAA/TMG

wdcruzner
DGN: V:\NC\Structures\03240-05 Ashe 15\Structures\Bridge 015\Plans\40_L03_17BP.R.161_SMU_PS01_001.dgn
TIME: 11:55 AM on Friday, November 18, 2022

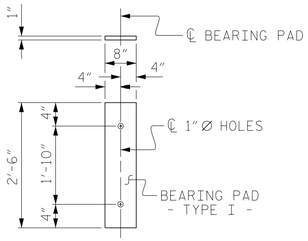

FIXED END
(TYPE I - 22 REQ'D)

ELASTOMERIC BEARING DETAILS

ELASTOMER IN ALL BEARINGS SHALL BE 50 DUROMETER HARDNESS.

BILL OF MATERIAL FOR ONE 50' CORED SLAB UNIT

				EXTERIOR UNIT		INTERIOR UNIT	
BAR	NUMBER	SIZE	TYPE	LENGTH	WEIGHT	LENGTH	WEIGHT
B6	4	#4	STR	25'-9"	69	25'-9"	69
S1	8	#5	3	4'-6"	38	4'-6"	38
S2	102	#4	3	5'-4"	363	5'-4"	363
* S3	60	#5	1	5'-7"	349		
S5	4	#4	3	5'-5"	14	5'-5"	14
S6	4	#4	3	5'-6"	15	5'-6"	15
S7	4	#4	3	5'-7"	15	5'-7"	15
S8	4	#4	3	5'-9"	15	5'-9"	15
REINFORCING STEEL			LBS.		529		529
* EPOXY COATED REINFORCING STEEL			LBS.		349		
6500 P.S.I. CONCRETE			CU. YDS.		7.3		7.3
0.6" Ø L.R. STRANDS			No.		19		19

BAR TYPES

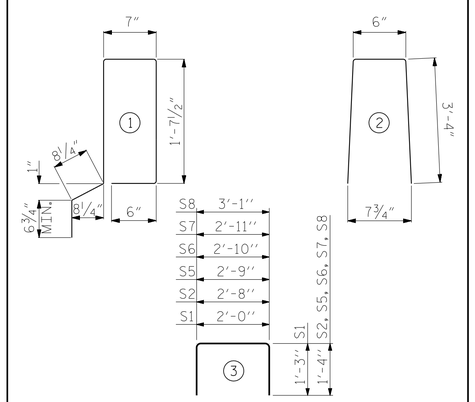

ALL BAR DIMENSIONS ARE OUT TO OUT

NOTES

ALL PRESTRESSING STRANDS SHALL BE 7-WIRE LOW RELAXATION GRADE 270 STRANDS AND SHALL CONFORM TO AASHTO M203 EXCEPT FOR SAMPLING REQUIREMENTS WHICH SHALL BE IN ACCORDANCE WITH THE STANDARD SPECIFICATIONS.

ALL REINFORCING STEEL CAST WITH THE CORED SLAB SECTIONS SHALL BE GRADE 60 AND SHALL BE INCLUDED IN THE UNIT PRICE BID FOR PRESTRESSED CONCRETE CORED SLABS.

RECESSES FOR TRANSVERSE STRANDS SHALL BE GROUTED AFTER THE TENSIONING OF THE STRANDS.

THE 2½" Ø DOWEL HOLES AT FIXED ENDS OF SLAB SECTIONS SHALL BE FILLED WITH NON-SHRINK GROUT.

THE BACKER RODS SHALL CONFORM TO THE REQUIREMENTS OF TYPE M BOND BREAKER. SEE SECTION 1028 OF THE STANDARD SPECIFICATIONS.

WHEN CORED SLABS ARE CAST, AN INTERNAL HOLD-DOWN SYSTEM SHALL BE EMPLOYED TO PREVENT VOIDS FROM RISING OR MOVING SIDEWAYS. AT LEAST SIX WEEKS PRIOR TO CASTING CORED SLABS, THE CONTRACTOR SHALL SUBMIT TO THE ENGINEER FOR REVIEW AND COMMENT, DETAILED DRAWINGS OF THE PROPOSED HOLD-DOWN SYSTEM. IN ADDITION TO STRUCTURAL DETAILS, LOCATION AND SPACING OF THE HOLD-DOWNS SHALL BE INDICATED.

ALL REINFORCING STEEL IN THE VERTICAL CONCRETE BARRIER RAIL SHALL BE EPOXY COATED.

PRESTRESSING STRANDS SHALL BE CUT FLUSH WITH THE CORED SLAB UNIT ENDS.

APPLY EPOXY PROTECTIVE COATING TO CORED SLAB UNIT ENDS.

GROOVED CONTRACTION JOINTS, ½" IN DEPTH, SHALL BE TOOLED IN ALL EXPOSED FACES OF THE BARRIER RAIL AND IN ACCORDANCE WITH ARTICLE 825-10(B) OF THE STANDARD SPECIFICATIONS. A CONTRACTION JOINT SHALL BE LOCATED AT EACH THIRD POINT BETWEEN BARRIER RAIL EXPANSION JOINTS. ONLY ONE CONTRACTION JOINT IS REQUIRED AT MIDPOINT OF BARRIER RAIL SEGMENTS LESS THAN 20 FEET IN LENGTH AND NO CONTRACTION JOINTS ARE REQUIRED FOR THOSE SEGMENTS LESS THAN 10 FEET IN LENGTH.

FLAME CUTTING OF THE TRANSVERSE POST-TENSIONING STRAND IS NOT ALLOWED.

THE TRANSFER OF LOAD FROM THE ANCHORAGES TO THE CORED SLAB UNIT SHALL BE DONE WHEN THE CONCRETE HAS REACHED A COMPRESSIVE STRENGTH OF NOT LESS THAN THE REQUIRED STRENGTH SHOWN IN THE "CONCRETE RELEASE STRENGTH" TABLE.

FOR GROUT FOR STRUCTURES, SEE SPECIAL PROVISIONS.

THE PERMITTED THREADED INSERTS ARE DETAILED AS AN OPTION FOR THE CONTRACTOR TO ATTACH FALSEWORK AND FORMWORK DURING CONSTRUCTION.

THE PERMITTED THREADED INSERTS IN THE EXTERIOR UNITS SHALL BE SIZED BY THE CONTRACTOR, SPACED AT 4'-0" CENTERS AND GALVANIZED IN ACCORDANCE WITH SECTION 1076 OF THE STANDARD SPECIFICATIONS. STAINLESS STEEL THREADED INSERTS MAY BE USED AS AN ALTERNATE.

THE PERMITTED THREADED INSERTS SHALL BE GROUTED BY THE CONTRACTOR IMMEDIATELY FOLLOWING REMOVAL OF THE FALSEWORK.

THE COST OF THE PERMITTED THREADED INSERTS SHALL BE INCLUDED IN THE PRICE BID FOR THE PRECAST UNITS.

POST-TENSIONING SHALL BE DONE IN ACCORDANCE WITH THE STANDARD SPECIFICATIONS.

CORED SLABS REQUIRED

	NUMBER	LENGTH	TOTAL LENGTH
50' UNIT			
EXTERIOR C.S.	2	50'-0"	100'-0"
INTERIOR C.S.	9	50'-0"	450'-0"
TOTAL	11		550'-0"

DEAD LOAD DEFLECTION AND CAMBER

	3'-0" x 1'-9"
50' CORED SLAB UNIT	0.6" Ø L.R. STRAND
CAMBER (SLAB ALONE IN PLACE)	1½" ↑
DEFLECTION DUE TO SUPERIMPOSED DEAD LOAD **	⅜" ↓
FINAL CAMBER	1⅛" ↑

** INCLUDES FUTURE WEARING SURFACE

CONCRETE RELEASE STRENGTH

UNIT	PSI
50' UNITS	4900

GUTTERLINE ASPHALT THICKNESS & RAIL HEIGHT

50' UNITS		ASPHALT OVERLAY THICKNESS	RAIL HEIGHT
LEFT GUTTERLINE	@ ℄ BRG. EB1	2¾"	3'-8¾"
	@ MIDSPAN	4"	3'-10"
	@ ℄ BRG. EB2	4⅜"	3'-10⅜"
RIGHT GUTTERLINE	@ ℄ BRG. EB1	4⅜"	3'-10⅜"
	@ MIDSPAN	2"	3'-8"
	@ ℄ BRG. EB2	2¾"	3'-8¾"

GRADE 270 STRANDS

	0.6" Ø L.R.
AREA (SQUARE INCHES)	0.217
ULTIMATE STRENGTH (LBS. PER STRAND)	58,600
APPLIED PRESTRESS (LBS. PER STRAND)	43,950

BILL OF MATERIAL FOR VERTICAL CONCRETE BARRIER RAIL

BAR	BARS PER PAIR OF EXTERIOR UNITS 50' UNIT	TOTAL NO.	SIZE	TYPE	LENGTH	WEIGHT
* B13	80	80	#5	STR	14'-3"	1189
* S4	120	120	#5	2	7'-2"	897
* EPOXY COATED REINFORCING STEEL				LBS.		2086
CLASS AA CONCRETE				CU.YDS.		12.8
TOTAL VERTICAL CONCRETE BARRIER RAIL				LN. FT.		100.00

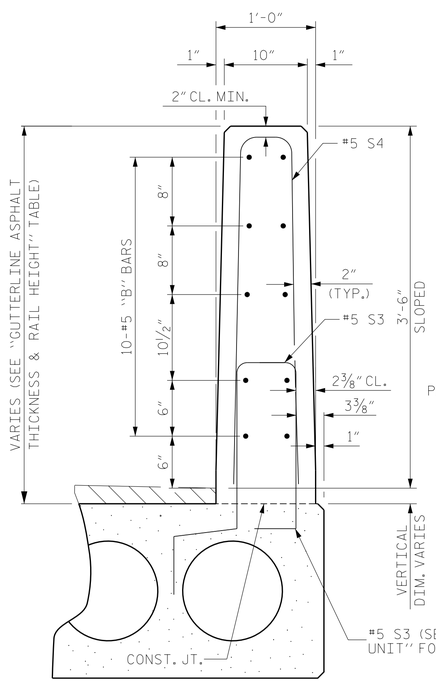

VERTICAL CONCRETE BARRIER RAIL SECTION

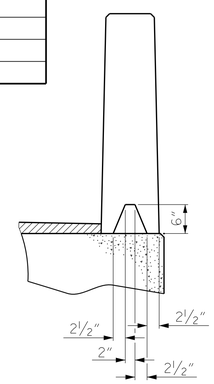

SECTION S-S
AT DAM IN OPEN JOINT
(THIS IS TO BE USED ONLY WHEN SLIP FORM IS USED)

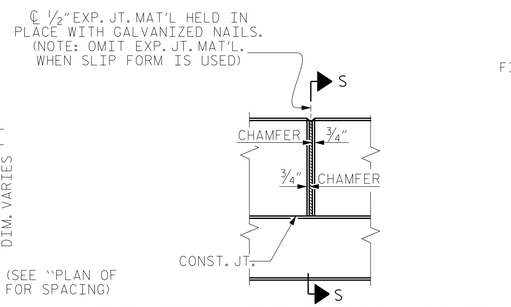

ELEVATION AT EXPANSION JOINTS

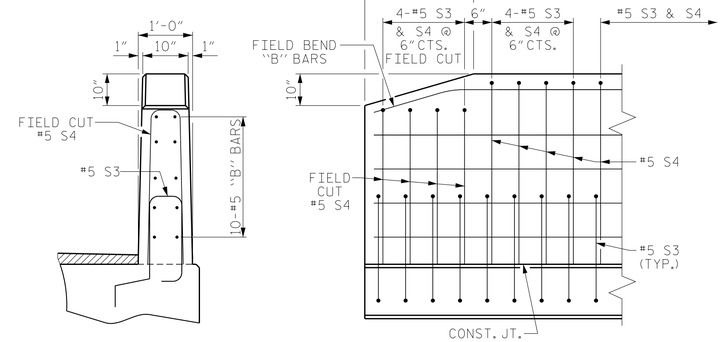

END VIEW

SIDE VIEW

END OF RAIL DETAILS

TYPICAL AT LEFT SIDE OF END BENT 1, AND LEFT AND RIGHT SIDE OF END BENT 2. FOR END OF RAIL DETAILS AT RIGHT SIDE OF END BENT 1, SEE BRIDGE APPROACH SLAB SHEETS.

DocuSigned by: Ryan Shipman
STEAL
046056
13D872A5D6E483...
11/21/2022

DOCUMENT NOT CONSIDERED FINAL UNLESS ALL SIGNATURES COMPLETED

PROJECT NO. 17BP.11.R.161
ASHE COUNTY
STATION: 13+93.07 -L-

V&M
Vaughn & Melton
Consulting Engineers
Asheville, North Carolina
828-253-2796
Raleigh, NC 919-977-9455
Charlotte, NC 704-357-0488
Boone, NC 828-355-9933
Tri-Cities, TN 423-467-8401
Knoxville, TN 865-546-5800
Spartanburg, SC 864-574-4775
Charleston, SC 843-974-5650
Middlesboro, KY 606-248-6600
Atlanta, GA 770-627-3590

Copyright © 2006 Vaughn & Melton, Inc. All Rights Reserved

STATE OF NORTH CAROLINA
DEPARTMENT OF TRANSPORTATION
RALEIGH

STANDARD
3'-0" X 1'-9"
PRESTRESSED CONCRETE
CORED SLAB UNIT
120° SKEW

REVISIONS						SHEET NO.
NO.	BY:	DATE:	NO.	BY:	DATE:	S-8
1			3			TOTAL SHEETS
2			4			19

DWN. BY: WDC DATE: 04-2022
CHKD. BY: GWP DATE: 04/2022
DES. EGR. OF RECORD: RTS DATE: 04/2022

DRAWN BY : DGE 5/09
CHECKED BY : BCH 6/09
REV. 5/18 MAA/THC

STD. NO. 21"PCS3_33_120S

wdcrutcher
DGN: V:\NCStructures\032140-05 Ashe (5)\Structures\Bridge 005\Plans\x01_015_17BP.11.R.161_SMU_CS01_008.dgn
TIME: 11:35 AM on Friday, November 18, 2022

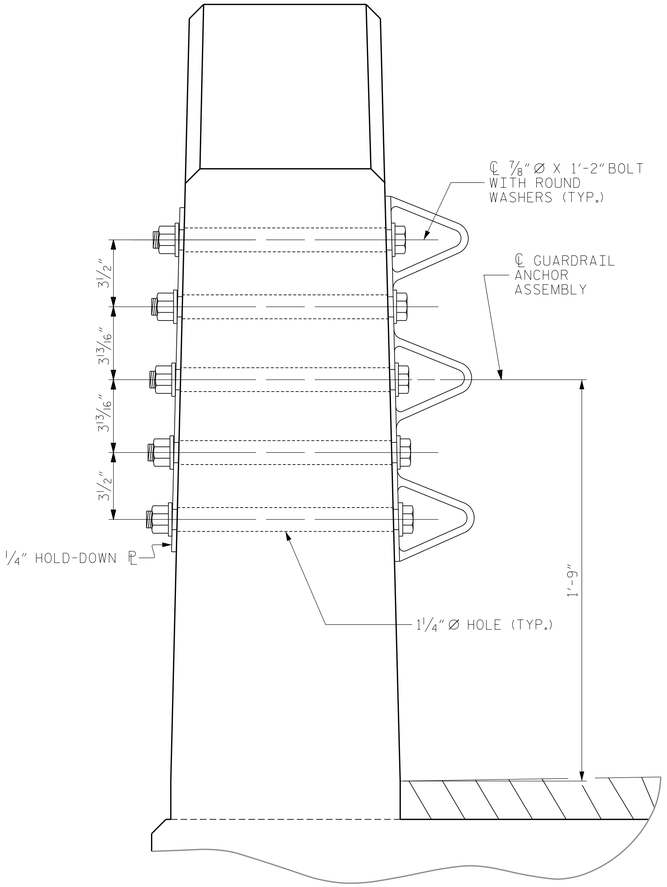

SECTION E-E

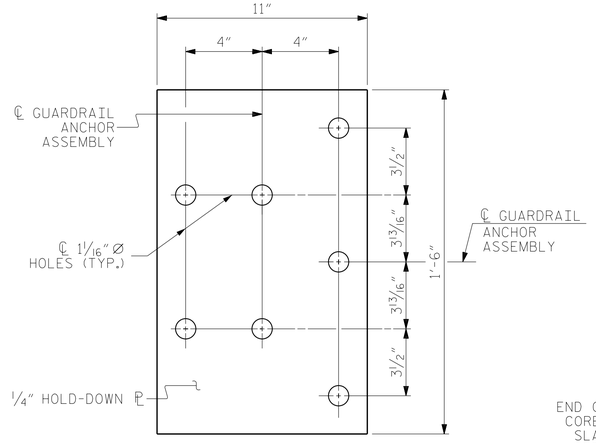

PLAN

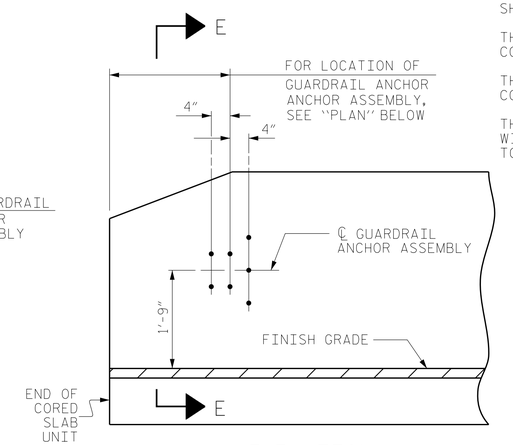

ELEVATION

GUARDRAIL ANCHOR ASSEMBLY DETAILS

NOTES

THE GUARDRAIL ANCHOR ASSEMBLY SHALL CONSIST OF A 1/4" HOLD DOWN PLATE AND 7 - 7/8" Ø BOLTS WITH NUTS AND WASHERS.

THE HOLD-DOWN PLATE SHALL CONFORM TO AASHTO M270 GRADE 36. AFTER FABRICATION, THE HOLD-DOWN PLATE SHALL BE HOT-DIP GALVANIZED IN ACCORDANCE WITH AASHTO M111.

BOLTS SHALL CONFORM TO THE REQUIREMENTS OF ASTM A307 AND NUTS SHALL CONFORM TO THE REQUIREMENTS OF AASHTO M291. BOLTS, NUTS AND WASHERS SHALL BE GALVANIZED. (AT THE CONTRACTOR'S OPTION, STAINLESS STEEL BOLTS, NUTS AND WASHERS MAY BE USED AS AN ALTERNATE FOR THE 7/8" Ø GALVANIZED BOLTS, NUTS AND WASHERS. THEY SHALL CONFORM TO OR EXCEED THE MECHANICAL REQUIREMENTS OF ASTM A307. THE USE OF THIS ALTERNATE SHALL BE APPROVED BY THE ENGINEER.)

THE GUARDRAIL ANCHOR ASSEMBLY IS REQUIRED AT ALL POINTS WHERE APPROACH GUARDRAIL IS TO BE ATTACHED TO THE END OF BARRIER RAIL. FOR POINTS OF ATTACHMENT, SEE SKETCH.

AFTER INSTALLATION, THE EXPOSED THREAD OF THE BOLT SHALL BE BURRED WITH A SHARP POINTED TOOL.

THE COST OF THE GUARDRAIL ANCHOR ASSEMBLY SHALL BE INCLUDED IN THE UNIT CONTRACT PRICE BID FOR VERTICAL CONCRETE BARRIER RAIL.

THE VERTICAL REINFORCING BARS MAY BE SHIFTED SLIGHTLY IN THE VERTICAL CONCRETE BARRIER RAIL TO CLEAR ASSEMBLY BOLTS.

THE 1 1/4" Ø HOLES SHALL BE FORMED OR DRILLED WITH A CORE BIT. IMPACT TOOLS WILL NOT BE PERMITTED. ANY CONCRETE DAMAGED BY THIS WORK SHALL BE REPAIRED TO THE SATISFACTION OF THE ENGINEER.

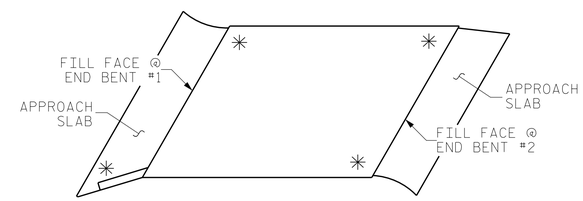

SKETCH SHOWING POINTS OF ATTACHMENT

✳ DENOTES GUARDRAIL ANCHOR ASSEMBLY

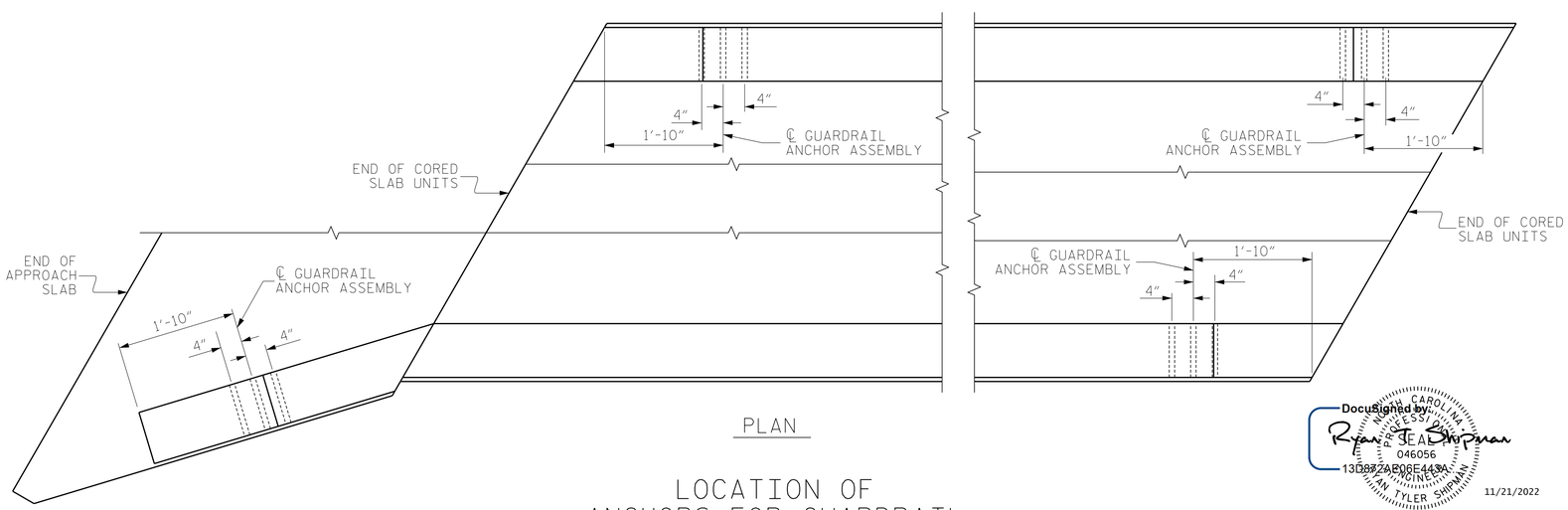

PLAN

LOCATION OF ANCHORS FOR GUARDRAIL

PROJECT NO. 17BP.11.R.161

ASHE COUNTY

STATION: 13+93.07 -L-

Docusigned by: Ryan Tyler Shipman
SEAL 046056
13D8F2AE06E443A...
NORTH CAROLINA PROFESSIONAL ENGINEER RYAN TYLER SHIPMAN
11/21/2022

Vaughn & Melton
Consulting Engineers
Asheville, North Carolina
828-253-2796
Raleigh, NC 919-977-9455
Charlotte, NC 704-357-0488
Boone, NC 828-355-9933
Tri-Cities, TN 423-467-8401
Knoxville, TN 865-546-5800
Spartanburg, SC 864-574-4775
Charleston, SC 843-974-5650
Middlesboro, KY 606-248-6600
Atlanta, GA 770-627-3590
Copyright © 2006 Vaughn & Melton, Inc. All Rights Reserved

STATE OF NORTH CAROLINA
DEPARTMENT OF TRANSPORTATION
RALEIGH

STANDARD
GUARDRAIL ANCHORAGE DETAILS FOR VERTICAL CONCRETE BARRIER RAIL

REVISIONS								SHEET NO.
NO.	BY:	DATE:	NO.	BY:	DATE:			S-9
1			3					TOTAL SHEETS
2			4					19

DOCUMENT NOT CONSIDERED FINAL UNLESS ALL SIGNATURES COMPLETED

DWN. BY: WDC DATE: 04-2022
CHKD. BY: GWP DATE: 04/2022
DES. EGR. OF RECORD: RTS DATE: 04/2022

DRAWN BY : MAA	5/10	REV. 1/15	MAA/TMG
CHECKED BY : GM	5/10	REV. 12/17	MAA/THC
		REV. 5/18	MAA/THC

(SHT 1a) STD. NO. GRA3

wdcruter
DGN: V:\MC\Structures\03240-05 Ashe (5)\Structures\Bridge 05\Plans\40_01_17BP.11.R.161_SM_S40_001.dgn
TIME: 4:53 AM on Friday, November 18, 2022

NOTES

STIRRUPS IN CAP MAY BE SHIFTED AS NECESSARY TO CLEAR DOWELS.

THE CONCRETE IN THE SHADED AREA OF THE WING SHALL BE POURED AFTER THE VERTICAL CONCRETE BARRIER RAIL IS CAST IF SLIP FORMING IS USED.

FOR PILE SPLICE DETAILS, SEE SHEET 3 OF 3.

FOR WING DETAILS, SEE SHEET 2 OF 3.

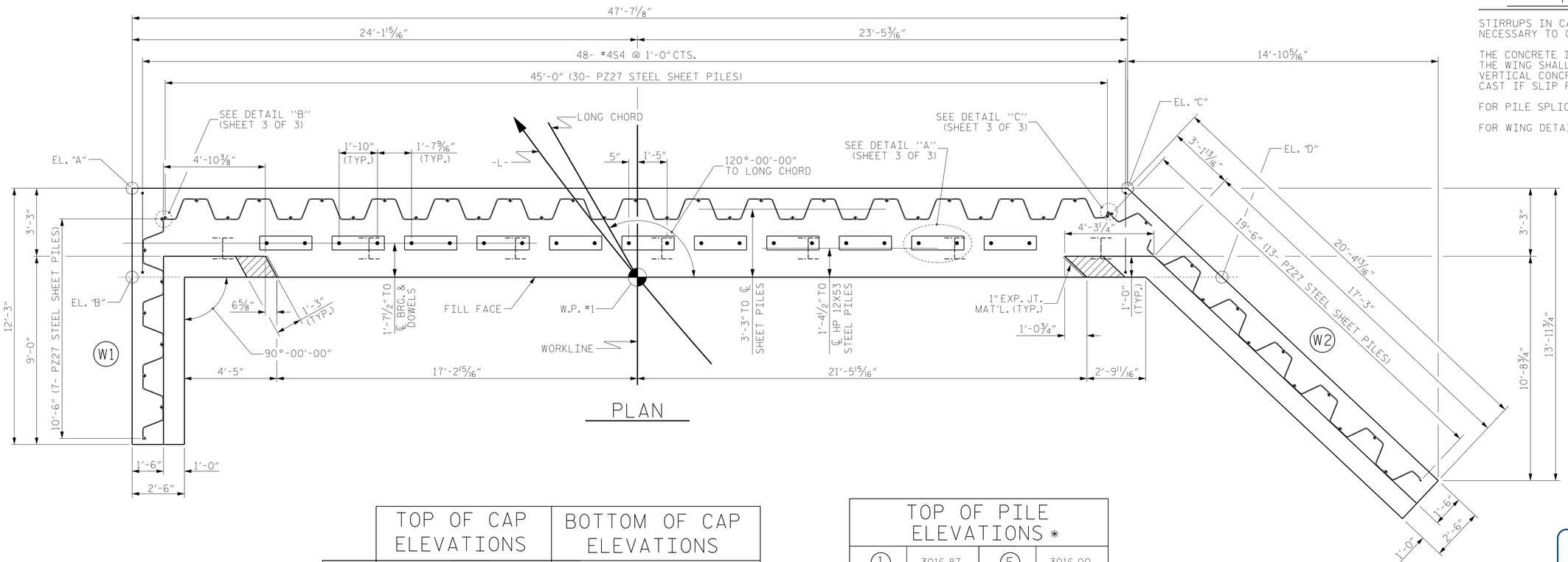

PLAN

	TOP OF CAP ELEVATIONS	BOTTOM OF CAP ELEVATIONS
A	3018.49	3015.99
B	3018.49	3015.99
C	3017.01	3014.51
D	3016.87	3014.37

TOP OF PILE ELEVATIONS *			
1	3016.87	5	3016.00
2	3016.65	6	3015.78
3	3016.44	7	3015.56
4	3016.22		

* 1'-0" MIN. EMBEDMENT IS MEASURED FROM LEFT SIDE OF PILE

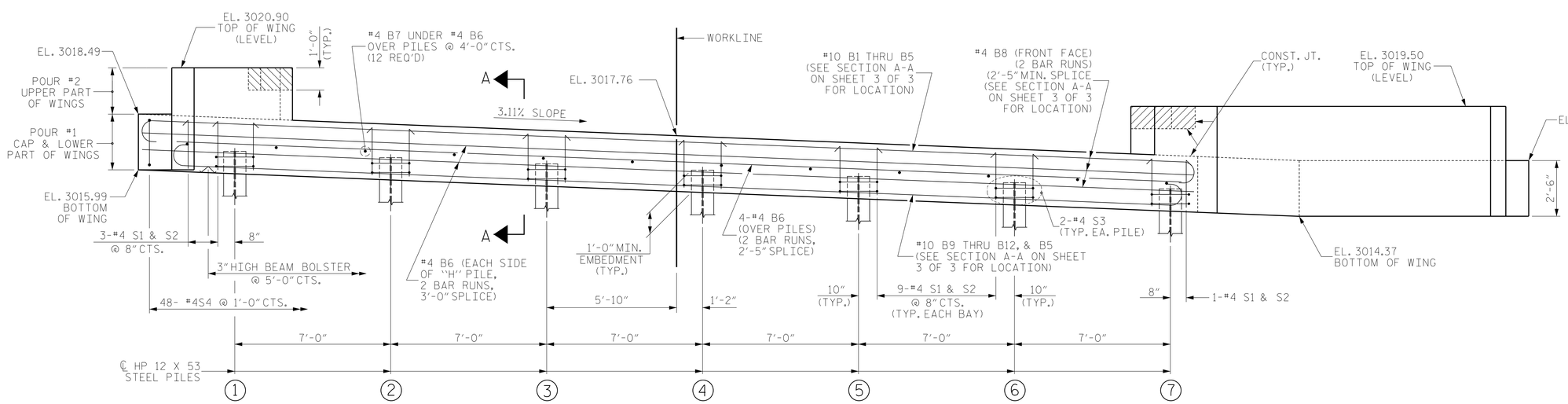

ELEVATION

WINGS NOT SHOWN FOR CLARITY.
SHEET PILES NOT SHOWN FOR CLARITY.
FOR SECTION A-A, SEE SHEET 3 OF 3.

DocuSigned by: Ryan T. Shipman
046056
13D8A2AE98E443A...
NORTH CAROLINA PROFESSIONAL SEAL ENGINEER RYAN TYLER SHIPMAN
11/21/2022

DOCUMENT NOT CONSIDERED FINAL UNLESS ALL SIGNATURES COMPLETED

V&M
Vaughn & Melton
Consulting Engineers
Asheville, North Carolina 828-253-2796
Raleigh, NC 919-977-9455
Charlotte, NC 704-357-0488
Boone, NC 828-355-9933
Tri-Cities, TN 423-467-840
Knoxville, TN 865-546-5800
Spartanburg, SC 864-574-4775
Charleston, SC 843-974-5650
Middlesboro, KY 606-248-6600
Atlanta, GA 770-627-3590

Copyright © 2006 Vaughn & Melton, Inc. All Rights Reserved

PROJECT NO. 17BP.11.R.161

ASHE COUNTY

STATION: 13+93.07 -L-

SHEET 1 OF 3

STATE OF NORTH CAROLINA
DEPARTMENT OF TRANSPORTATION
RALEIGH

SUBSTRUCTURE

END BENT No. 1

DWN. BY: WDC DATE: 04-2022
CHKD. BY: GWP DATE: 04/2022
DES. EGR. OF RECORD: RTS DATE: 04/2022

REVISIONS							SHEET NO.
NO.	BY:	DATE:	NO.	BY:	DATE:		S-10
1			3				TOTAL SHEETS
2			4				19

wdcrutcher
DGN: V:\NC\Structures\032140-05 Ashe (5)\Structures\Bridge 015\Plans\01_09_17BP\R161_SM01_EB1_001.dgn
TIME: 11:55 AM on Friday, November 18, 2022

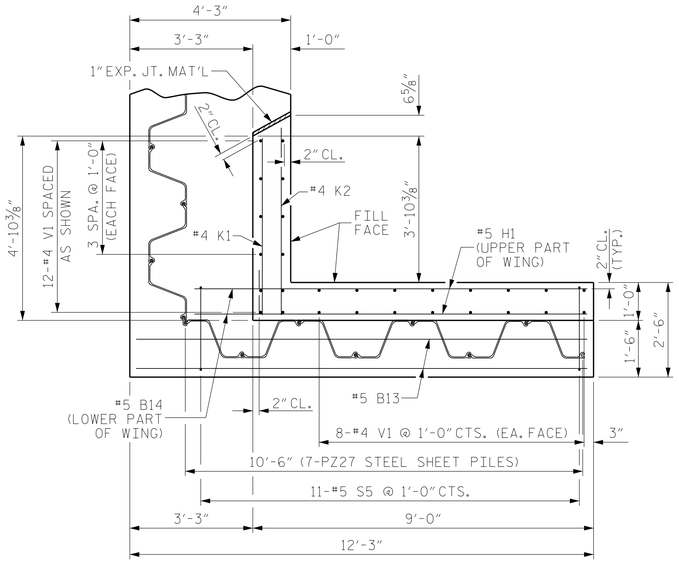

PLAN OF WING (W1)

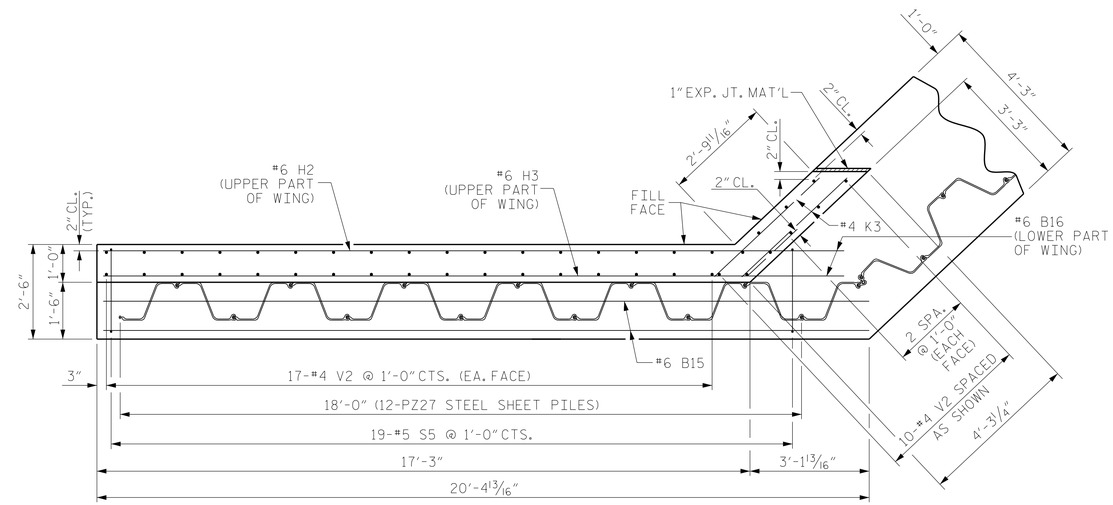

PLAN OF WING (W2)

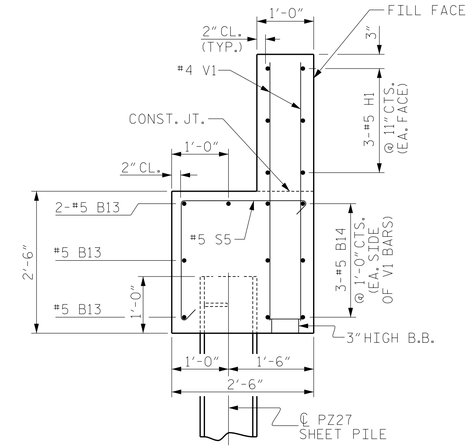

SECTION X-X

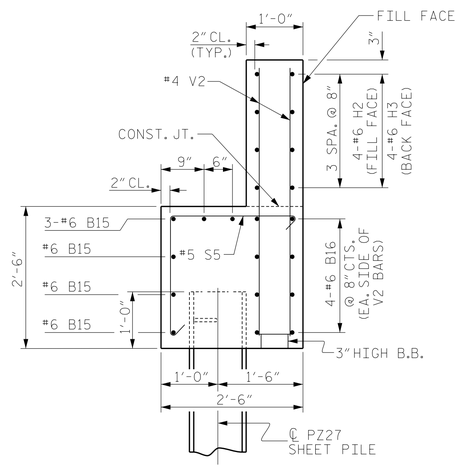

SECTION Y-Y

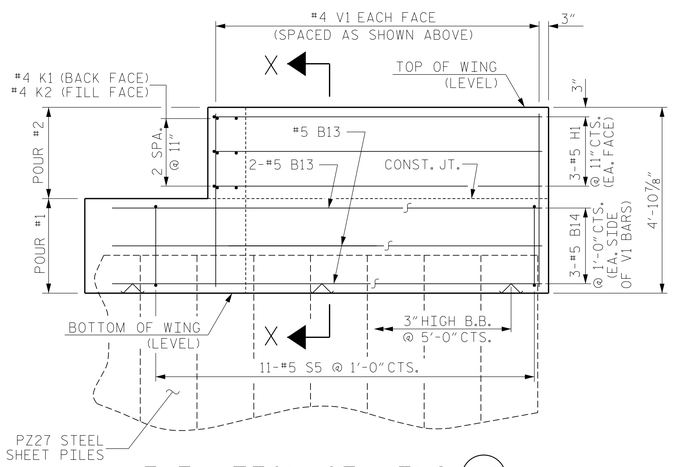

ELEVATION OF WING (W1)

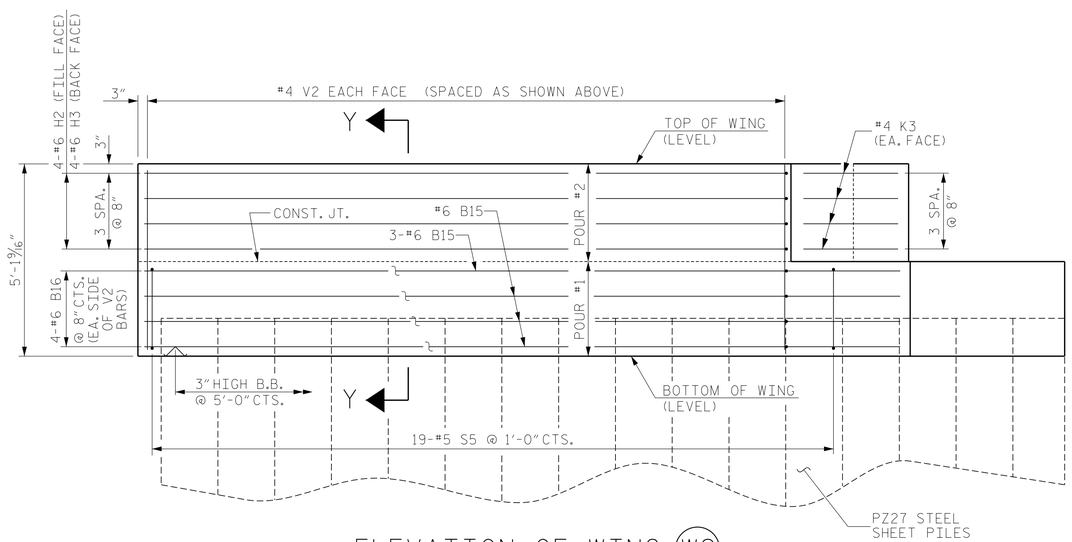

ELEVATION OF WING (W2)

PROJECT NO. 17BP.11.R.161

ASHE COUNTY

STATION: 13+93.07 -L-

SHEET 2 OF 3

STATE OF NORTH CAROLINA
DEPARTMENT OF TRANSPORTATION
RALEIGH

SUBSTRUCTURE

END BENT No. 1
WING DETAILS

Vaughn & Melton
Consulting Engineers
Asheville, North Carolina
828-253-2796
Raleigh, NC 919-977-9455
Charlotte, NC 704-357-0488
Boone, NC 828-355-9933
Tri-Cities, TN 423-467-8401
Knoxville, TN 865-546-5800
Spartanburg, SC 864-574-4775
Charleston, SC 843-974-5650
Middlesboro, KY 606-248-6600
Atlanta, GA 770-627-3590
Copyright © 2006 Vaughn & Melton, Inc. All Rights Reserved

NORTH CAROLINA PROFESSIONAL SEAL 046056 ENGINEER RYAN TYLER SHIPMAN
DocuSigned by: Ryan T. Shipman
13D8B72AED8E443...
11/21/2022

DOCUMENT NOT CONSIDERED FINAL UNLESS ALL SIGNATURES COMPLETED

DWN. BY: WDC DATE: 04-2022
CHKD. BY: GWP DATE: 04/2022
DES. EGR. OF RECORD: RTS DATE: 04/2022

REVISIONS								SHEET NO.
NO.	BY:	DATE:	NO.	BY:	DATE:			S-11
1			3					TOTAL SHEETS
2			4					19

wdcrutcher
DGN: V:\WC\Structures\03240-05 Ashe (5)\Structures\Bridge 015\Plans\40_002_17BP11R161_SMU_EB02_001.dgn
TIME: 11:39 AM on Friday, November 18, 2022

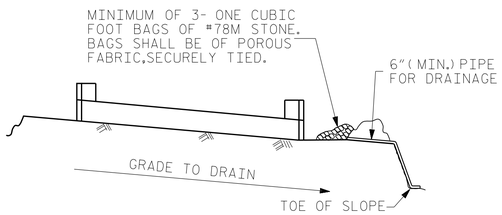

BAGGED STONE AND PIPE SHALL BE PLACED IMMEDIATELY AFTER COMPLETION OF END BENT EXCAVATION. PIPE MAY BE EITHER CONCRETE, CORRUGATED STEEL, CORRUGATED ALUMINUM ALLOY, OR CORRUGATED PLASTIC. PERFORATED PIPE WILL NOT BE ALLOWED.

BAGGED STONE SHALL REMAIN IN PLACE UNTIL THE ENGINEER DIRECTS THAT IT BE REMOVED. THE CONTRACTOR SHALL REMOVE AND DISPOSE OF SILT ACCUMULATIONS AT BAGGED STONE WHEN SO DIRECTED BY THE ENGINEER. BAGS SHALL BE REMOVED AND REPLACED WHENEVER THE ENGINEER DETERMINES THAT THEY HAVE DETERIORATED AND LOST THEIR EFFECTIVENESS.

NO SEPARATE PAYMENT WILL BE MADE FOR THIS WORK AND THE ENTIRE COST OF THIS WORK SHALL BE INCLUDED IN THE UNIT CONTRACT PRICE BID FOR THE SEVERAL PAY ITEMS.

TEMPORARY DRAINAGE AT END BENT

BAR TYPES

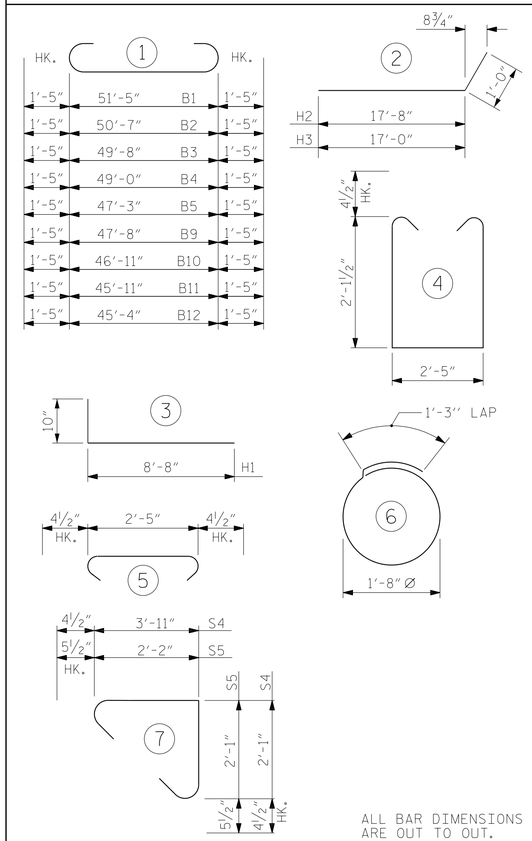

ALL BAR DIMENSIONS ARE OUT TO OUT.

BILL OF MATERIAL

END BENT No. 1

BAR	NO.	SIZE	TYPE	LENGTH	WEIGHT
B1	1	#10	1	54'-3"	233
B2	1	#10	1	53'-5"	230
B3	1	#10	1	52'-6"	226
B4	1	#10	1	51'-10"	223
B5	2	#10	1	50'-1"	431
B6	16	#4	STR	24'-0"	257
B7	12	#4	STR	2'-5"	19
B8	6	#4	STR	24'-11"	100
B9	1	#10	1	50'-6"	217
B10	1	#10	1	49'-9"	214
B11	1	#10	1	48'-9"	210
B12	1	#10	1	48'-2"	207
B13	4	#5	STR.	11'-11"	50
B14	6	#5	STR.	10'-4"	65
B15	6	#6	STR.	20'-2"	182
B16	8	#6	STR.	19'-6"	234
D1	22	#6	STR	1'-6"	50
H1	6	#5	3	9'-6"	59
H2	4	#6	2	18'-8"	112
H3	4	#6	2	18'-0"	108
K1	3	#4	STR	4'-8"	9
K2	3	#4	STR	4'-11"	10
K3	8	#4	STR	3'-9"	20
S1	58	#4	4	7'-5"	287
S2	58	#4	5	3'-2"	123
S3	14	#4	6	6'-6"	61
S4	48	#4	7	6'-9"	216
S5	30	#5	7	5'-2"	162
V1	28	#4	STR	4'-6"	84
V2	44	#4	STR	4'-6"	132

REINFORCING STEEL 4,531 LBS

CLASS A CONCRETE

POUR #1 CAP & LOWER PART OF WINGS 25.1 C.Y.

POUR #2 BACKWALL & UPPER PART OF WINGS 3.2 C.Y.

TOTAL CLASS A CONCRETE 28.3 C.Y.

HP 12 X 53 STEEL PILES
NO: 7 LIN. FT.= 120

PZ27 STEEL SHEET PILES
NO: PZ27 = 50
NO: PZ COLT = 1
NO: PZ90 = 2
TOTAL = 53 SQ. FT.= 626

PILE EXCAVATION IN SOIL LIN. FT. 48.3

PILE EXCAVATION NOT IN SOIL LIN. FT. 35.1

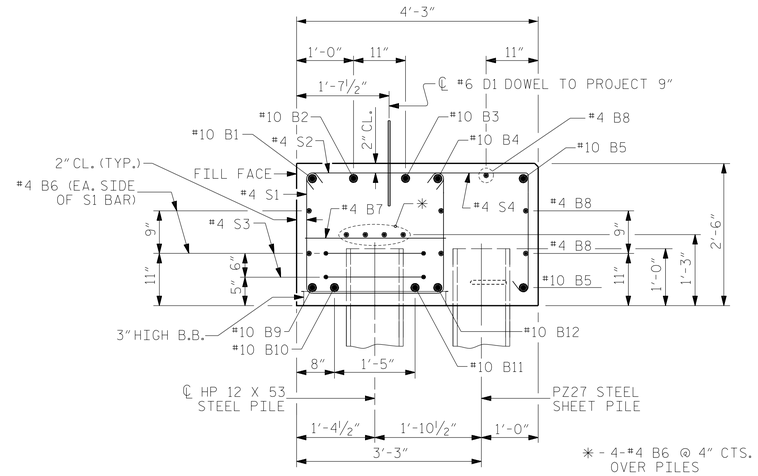

SECTION A-A

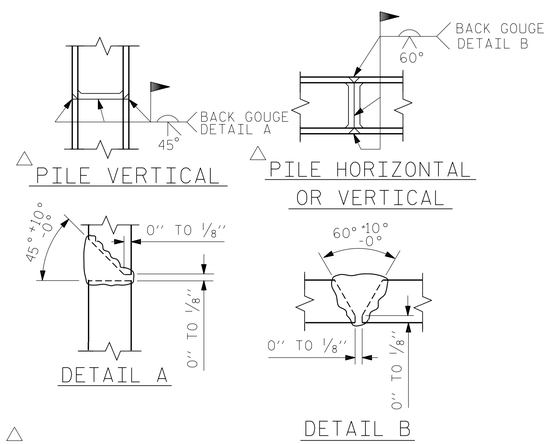

PILE SPLICE DETAILS

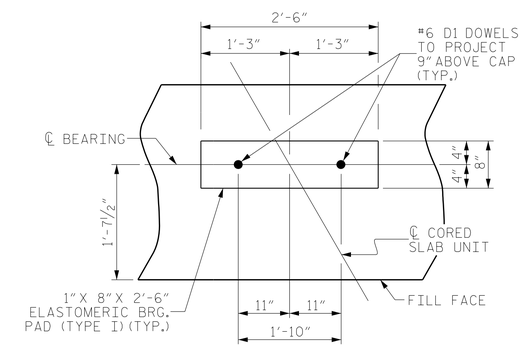

DETAIL "A"

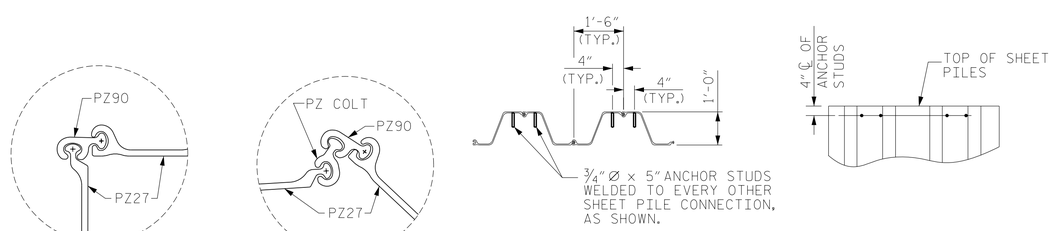

DETAIL "B" DETAIL "C" PLAN ELEVATION

ANCHOR STUD DETAIL

SHEET PILE CONNECTION DETAILS

DocuSigned by: Ryan Tyler Shipman
13D872AE06E4334...
STATE OF NORTH CAROLINA PROFESSIONAL SEAL 046056 ENGINEER RYAN TYLER SHIPMAN
11/21/2022

DOCUMENT NOT CONSIDERED FINAL UNLESS ALL SIGNATURES COMPLETED

PROJECT NO. 17BP.11.R.161

ASHE COUNTY

STATION: 13+93.07 -L-

SHEET 3 OF 3

V&M Vaughn & Melton Consulting Engineers
Asheville, North Carolina 828-253-2796
Boone, NC 828-355-9933
Tri-Cities, TN 423-467-8401
Knoxville, TN 865-546-5800
Spartanburg, SC 864-574-4775
Charleston, SC 843-974-5650
Middlesboro, KY 606-248-6600
Atlanta, GA 770-627-3590
Raleigh, NC 919-977-9455
Charlotte, NC 704-357-0488

Copyright © 2006 Vaughn & Melton, Inc. All Rights Reserved

STATE OF NORTH CAROLINA
DEPARTMENT OF TRANSPORTATION
RALEIGH

SUBSTRUCTURE

END BENT No. 1 DETAILS

DWN. BY: WDC DATE: 04-2022
CHKD. BY: GWP DATE: 04/2022
DES. EGR. OF RECORD: RTS DATE: 04/2022

REVISIONS							
NO.	BY:	DATE:	NO.	BY:	DATE:		
1			3				
2			4				

SHEET NO. S-12
TOTAL SHEETS 19

wdcrutcher
DGN: V:\NC\Structures\032140-05 Ashe 19\Structures\Bridge 016\Plans\401_023_17BP.11.R.161_SMU_EB3_002.dgn
TIME: 11:35 AM on Friday, November 18, 2022

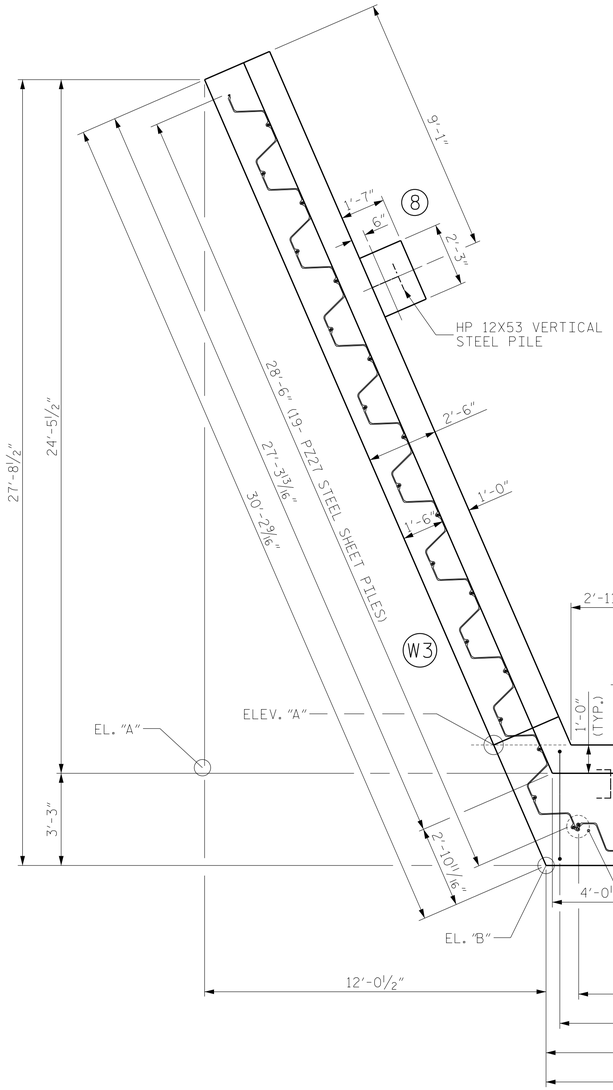

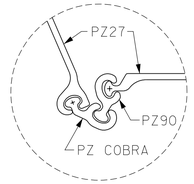

DETAIL "B"

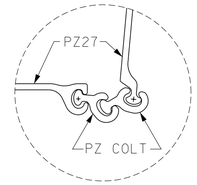

DETAIL "C"

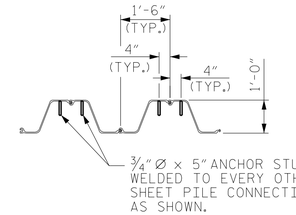

PLAN

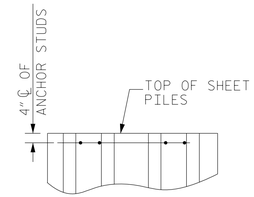

ELEVATION

ANCHOR STUD DETAIL

NOTES

STIRRUPS IN CAP MAY BE SHIFTED AS NECESSARY TO CLEAR DOWELS.

THE CONCRETE IN THE SHADED AREA OF THE WING SHALL BE POURED AFTER THE VERTICAL CONCRETE BARRIER RAIL IS CAST IF SLIP FORMING IS USED.

FOR PILE SPLICE DETAILS, SEE SHEET 4 OF 4.

FOR TEMPORARY DRAINAGE AT END BENT DETAILS, SEE SHEET 4 OF 4.

FOR W3 WING DETAILS, SEE SHEET 3 OF 4.

FOR W4 WING DETAILS, SEE SHEET 4 OF 4.

SHEET PILE CONNECTION DETAILS

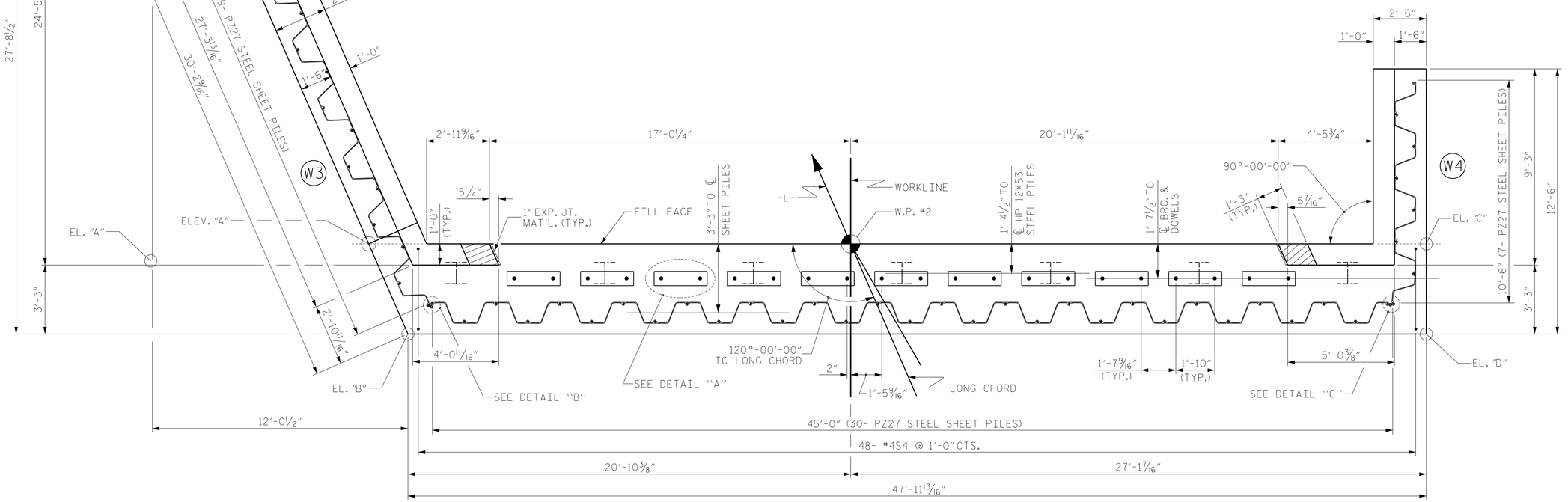

PLAN

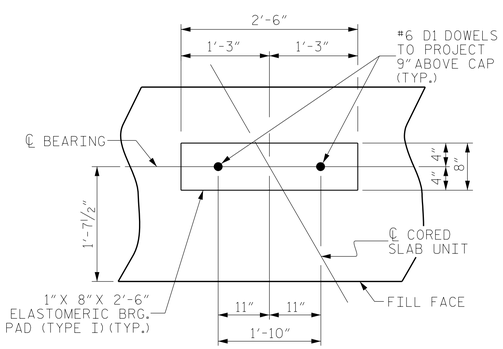

DETAIL "A"

	TOP OF CAP ELEVATIONS	BOTTOM OF CAP ELEVATIONS
A	3018.25	3015.75
B	3018.19	3015.69
C	3016.70	3014.20
D	3016.70	3014.20

PROJECT NO. 17BP.11.R.161

ASHE COUNTY

STATION: 13+93.07 -L-

SHEET 1 OF 4

STATE OF NORTH CAROLINA
DEPARTMENT OF TRANSPORTATION
RALEIGH

SUBSTRUCTURE

END BENT No. 2
PLAN VIEW

DocuSigned by: Ryan T. Shipman
NORTH CAROLINA PROFESSIONAL ENGINEER SEAL 046056 RYAN TYLER SHIPMAN
13D872AF06F443...
11/21/2022

Vaughn & Melton
Consulting Engineers
Asheville, North Carolina
828-253-2796
Boone, NC 828-355-9933
Tri-Cities, TN 423-467-8401
Knoxville, TN 865-546-5800
Spartanburg, SC 864-574-4775
Charleston, SC 843-974-5650
Middlesboro, KY 606-248-6600
Atlanta, GA 770-627-3590
Raleigh, NC 919-977-9455
Charlotte, NC 704-357-0488

Copyright © 2006 Vaughn & Melton, Inc. All Rights Reserved

DOCUMENT NOT CONSIDERED FINAL UNLESS ALL SIGNATURES COMPLETED

DWN. BY: WDC DATE: 04-2022
CHKD. BY: GWP DATE: 04/2022
DES. EGR. OF RECORD: RTS DATE: 04/2022

REVISIONS						
NO.	BY:	DATE:	NO.	BY:	DATE:	
1			3			
2			4			

SHEET NO. S-13
TOTAL SHEETS 19

wdcrutcher
DGN: V:\NCS\Structures\03240-05 Ashe (5)\Structures\Bridge 05\Plans\40L025_17BP11R61_SMU_EB2L013.dgn
TIME: 11:55 AM on Friday, November 18, 2022

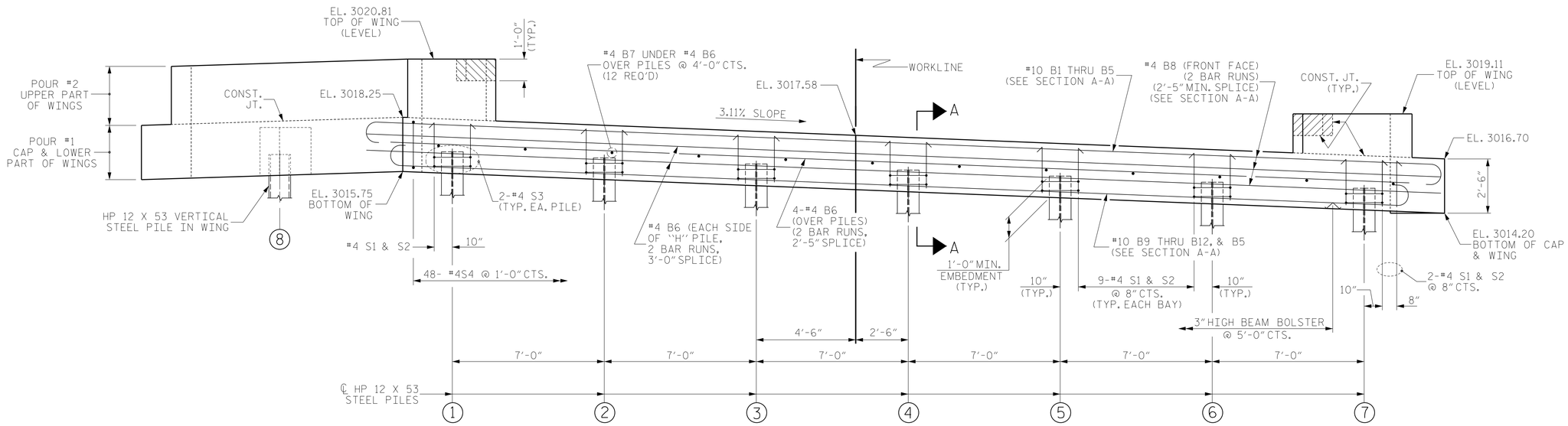

ELEVATION

WINGS NOT SHOWN FOR CLARITY.
SHEET PILES NOT SHOWN FOR CLARITY.

TOP OF PILE ELEVATIONS *			
1	3016.63	5	3015.76
2	3016.42	6	3015.54
3	3016.20	7	3015.33
4	3015.98	8	3015.59

* 1'-0" MIN. EMBEDMENT IS MEASURED FROM LEFT SIDE OF PILE

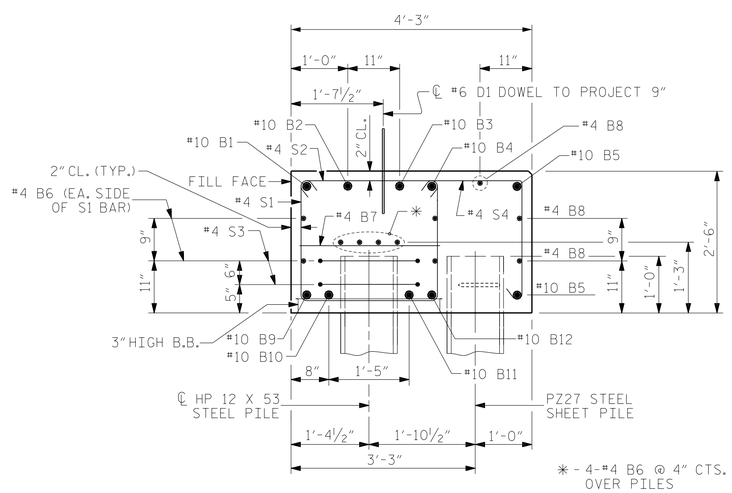

* - 4-#4 B6 @ 4" CTS. OVER PILES

SECTION A-A

PROJECT NO. 17BP.11.R.161

ASHE COUNTY

STATION: 13+93.07 -L-

SHEET 2 OF 4

STATE OF NORTH CAROLINA
DEPARTMENT OF TRANSPORTATION
RALEIGH

SUBSTRUCTURE

END BENT No. 2
ELEVATION VIEW

DocuSigned by:
Ryan Shipman
046056
13D872A5D5E443A...
NORTH CAROLINA PROFESSIONAL SEAL 046056 RYAN TYLER SHIPMAN
11/21/2022

V&M
Vaughn & Melton
Consulting Engineers
Asheville, North Carolina
828-253-2796
Raleigh, NC 919-977-9455
Charlotte, NC 704-357-0488
Boone, NC 828-355-9933
Tri-Cities, TN 423-467-8401
Knoxville, TN 865-546-5800
Spartanburg, SC 864-574-4775
Charleston, SC 843-974-5650
Middlesboro, KY 606-248-6600
Atlanta, GA 770-627-3590

Copyright © 2006 Vaughn & Melton, Inc. All Rights Reserved

DOCUMENT NOT CONSIDERED FINAL UNLESS ALL SIGNATURES COMPLETED

DWN. BY: WDC DATE: 04-2022
CHKD. BY: GWP DATE: 04/2022
DES. EGR. OF RECORD: RTS DATE: 04/2022

REVISIONS								
NO.	BY:	DATE:	NO.	BY:	DATE:			
1			3					
2			4					

SHEET NO. S-14
TOTAL SHEETS 19

wdcrutcher
DGN: V:\MC\Structures\03040-05 Ashe (5)\Structures\Bridge 05\Plans\40_007_17BP11R61_SMU_EB2_04.dgn
TIME: 11:53 AM on Friday, November 18, 2022

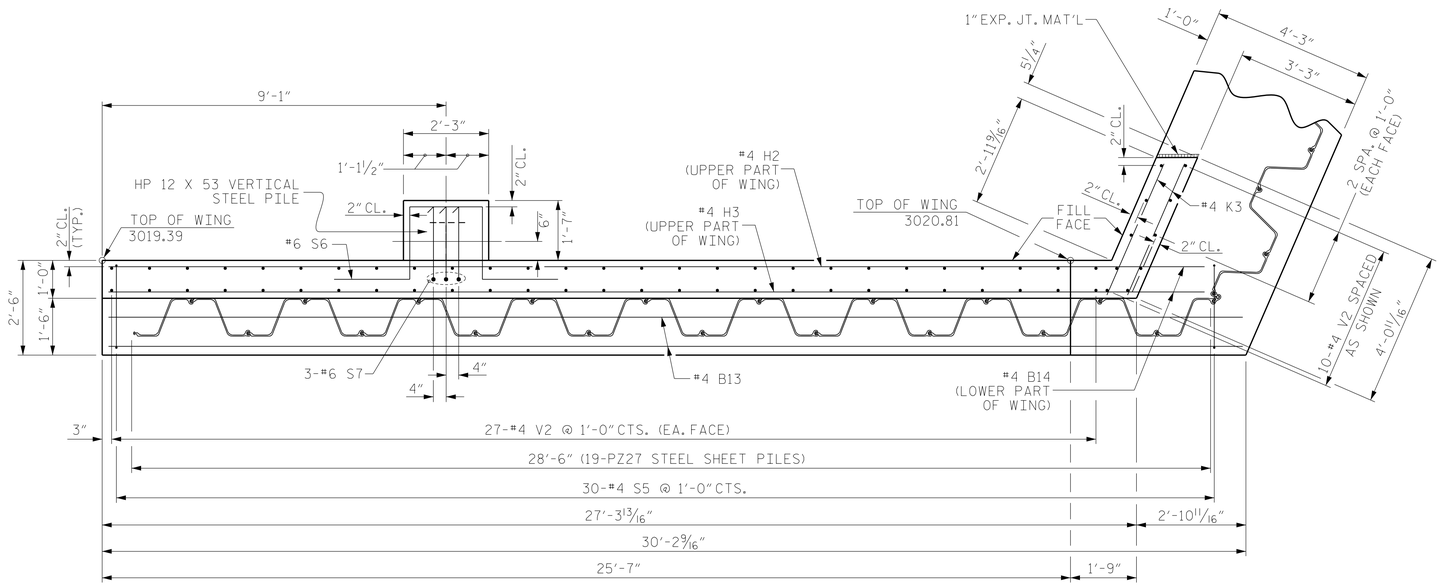

PLAN OF WING (W3)

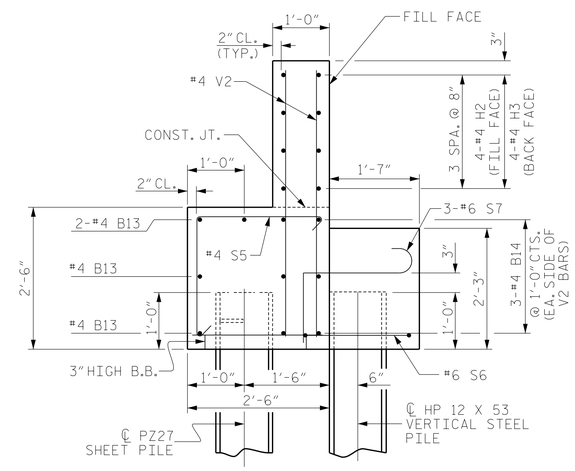

SECTION Y-Y

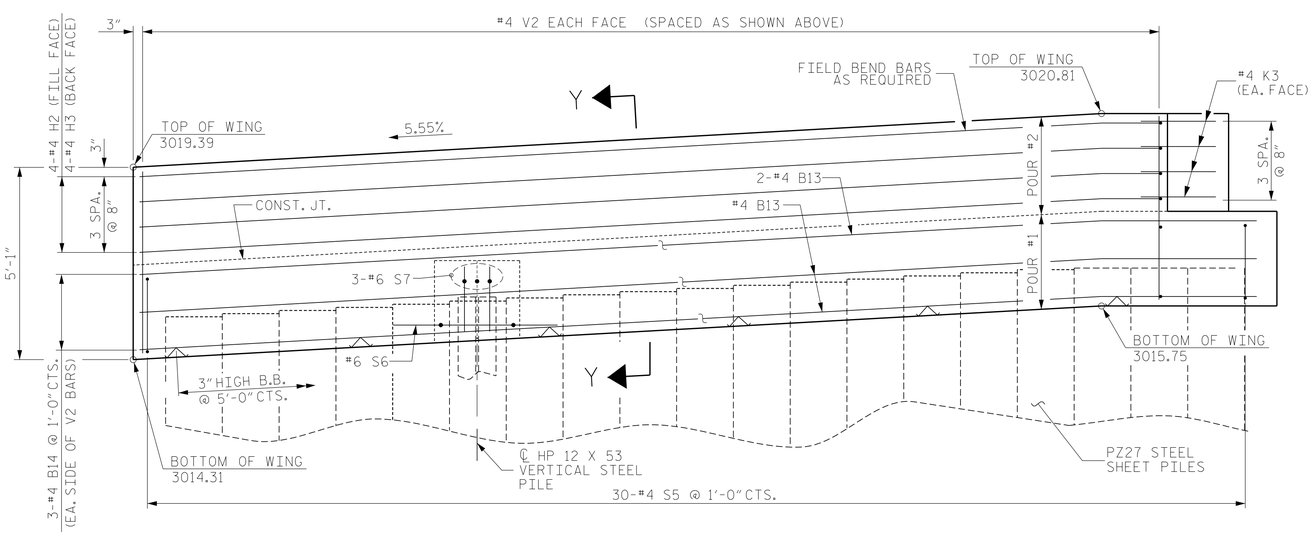

ELEVATION OF WING (W3)

NORTH CAROLINA PROFESSIONAL SEAL 046056 ENGINEER RYAN TYLER SHIPMAN

DocuSigned by: Ryan Shipman 13D872AF05E440A...

11/21/2022

DOCUMENT NOT CONSIDERED FINAL UNLESS ALL SIGNATURES COMPLETED

V&M Vaughn & Melton Consulting Engineers
Asheville, North Carolina 828-253-2796
Raleigh, NC 919-977-9455 · Charlotte, NC 704-357-0488
Boone, NC 828-355-9933
Tri-Cities, TN 423-467-840
Knoxville, TN 865-546-5800
Spartanburg, SC 864-574-4775
Charleston, SC 843-974-5650
Middlesboro, KY 606-248-6600
Atlanta, GA 770-627-3590

Copyright © 2006 Vaughn & Melton, Inc. All Rights Reserved

PROJECT NO. 17BP.11.R.161

ASHE COUNTY

STATION: 13+93.07 -L-

SHEET 3 OF 4

STATE OF NORTH CAROLINA
DEPARTMENT OF TRANSPORTATION
RALEIGH

SUBSTRUCTURE

END BENT No. 2 WING W3 DETAILS

DWN. BY: WDC	DATE: 04-2022	REVISIONS							SHEET NO.
CHKD. BY: GWP	DATE: 04/2022	NO.	BY:	DATE:	NO.	BY:	DATE:		S-15
DES. EGR. OF RECORD: RTS	DATE: 04/2022	1			3				TOTAL SHEETS
		2			4				19

wdcrutcher
DGN: V:\NC\Structures\032140-05_Ashe_I5\Structures\Bridge 005\Plans\x01_029_17BP11R161_SM1_EB23_015.dgn
TIME: 11:35 AM on Friday, November 18, 2022

DocuSign Envelope ID: 5A92D8F0-93EF-497A-A8FA-DDBB4B34A564

BAR TYPES

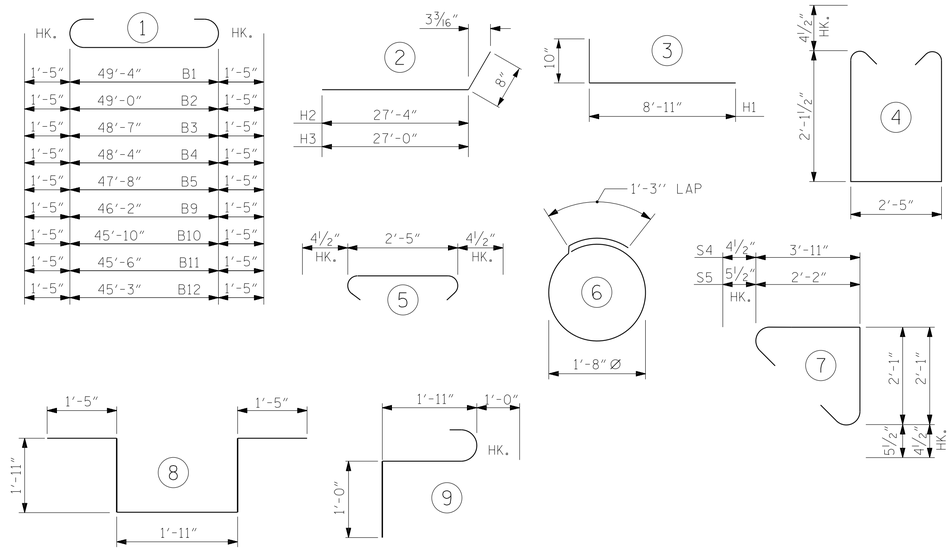

ALL BAR DIMENSIONS ARE OUT TO OUT.

BILL OF MATERIAL

END BENT No. 2

BAR	NO.	SIZE	TYPE	LENGTH	WEIGHT
B1	1	#10	1	52'-2"	224
B2	1	#10	1	51'-10"	223
B3	1	#10	1	51'-5"	221
B4	1	#10	1	51'-2"	220
B5	2	#10	STR.	50'-6"	435
B6	16	#4	STR	23'-11"	256
B7	12	#4	STR	2'-6"	20
B8	6	#4	STR	25'-1"	101
B9	1	#10	1	49'-0"	211
B10	1	#10	1	48'-8"	209
B11	1	#10	1	48'-4"	208
B12	1	#10	1	48'-1"	207
B13	4	#4	STR.	29'-10"	80
B14	6	#4	STR.	28'-11"	116
B15	4	#5	STR.	12'-2"	51
B16	6	#5	STR.	10'-8"	67
D1	22	#6	STR	1'-6"	50
H1	6	#5	3	9'-9"	61
H2	4	#4	2	28'-0"	75
H3	4	#4	2	27'-8"	74
K1	3	#4	STR	4'-9"	10
K2	3	#4	STR	5'-0"	10
K3	8	#4	STR	3'-9"	20
S1	57	#4	4	7'-5"	282
S2	57	#4	5	3'-2"	121
S3	14	#4	6	6'-6"	61
S4	48	#4	7	6'-9"	216
S5	42	#5	7	5'-2"	226
S6	1	#6	8	8'-7"	13
S7	3	#6	9	3'-11"	18
V1	30	#4	STR	4'-5"	89
V2	64	#4	STR	4'-8"	200

REINFORCING STEEL 4,375

CLASS A CONCRETE

POUR #1 CAP & LOWER PART OF WINGS 27.5 C.Y.

POUR #2 BACKWALL & UPPER PART OF WINGS 4.1 C.Y.

TOTAL CLASS A CONCRETE 31.6 C.Y.

HP 12 X 53 STEEL PILES
NO: 8 LIN. FT.= 100

PZ27 STEEL SHEET PILES
NO: PZ27 = 56
NO: PZ COLT = 2
NO: PZ COBRA = 1
NO: PZ90 = 1
TOTAL = 60 SQ. FT.= 570

PILE EXCAVATION IN SOIL LIN. FT. 40.1

PILE EXCAVATION NOT IN SOIL LIN. FT. 39.1

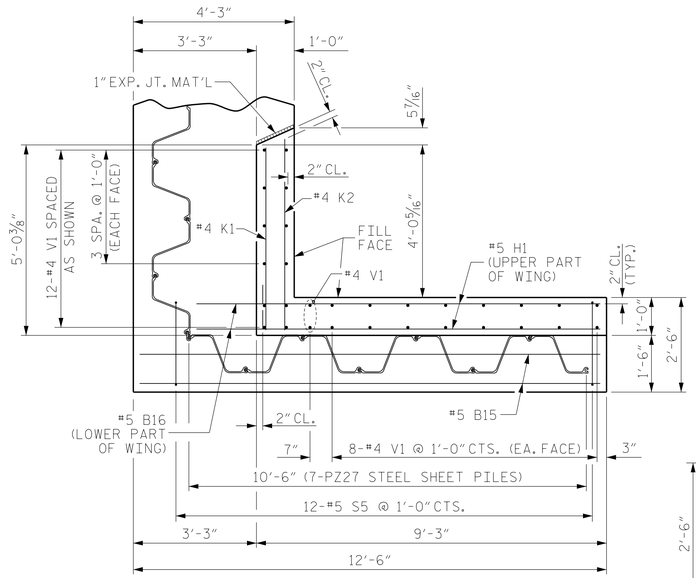

PLAN OF WING (W4)

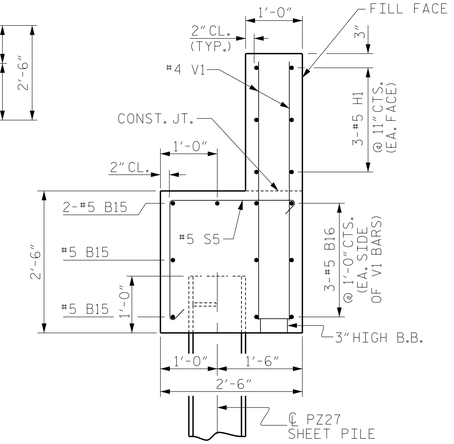

SECTION X-X

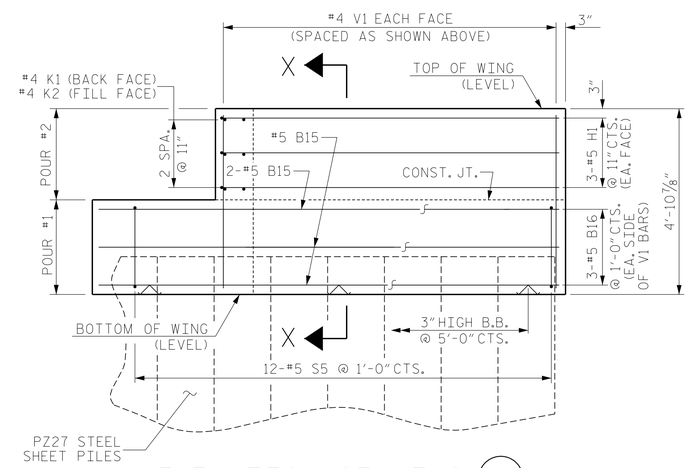

ELEVATION OF WING (W4)

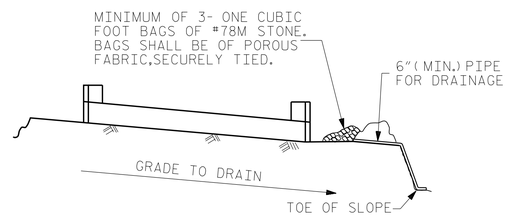

BAGGED STONE AND PIPE SHALL BE PLACED IMMEDIATELY AFTER COMPLETION OF END BENT EXCAVATION. PIPE MAY BE EITHER CONCRETE, CORRUGATED STEEL, CORRUGATED ALUMINUM ALLOY, OR CORRUGATED PLASTIC. PERFORATED PIPE WILL NOT BE ALLOWED.

BAGGED STONE SHALL REMAIN IN PLACE UNTIL THE ENGINEER DIRECTS THAT IT BE REMOVED. THE CONTRACTOR SHALL REMOVE AND DISPOSE OF SILT ACCUMULATIONS AT BAGGED STONE WHEN SO DIRECTED BY THE ENGINEER. BAGS SHALL BE REMOVED AND REPLACED WHENEVER THE ENGINEER DETERMINES THAT THEY HAVE DETERIORATED AND LOST THEIR EFFECTIVENESS.

NO SEPARATE PAYMENT WILL BE MADE FOR THIS WORK AND THE ENTIRE COST OF THIS WORK SHALL BE INCLUDED IN THE UNIT CONTRACT PRICE BID FOR THE SEVERAL PAY ITEMS.

TEMPORARY DRAINAGE AT END BENT

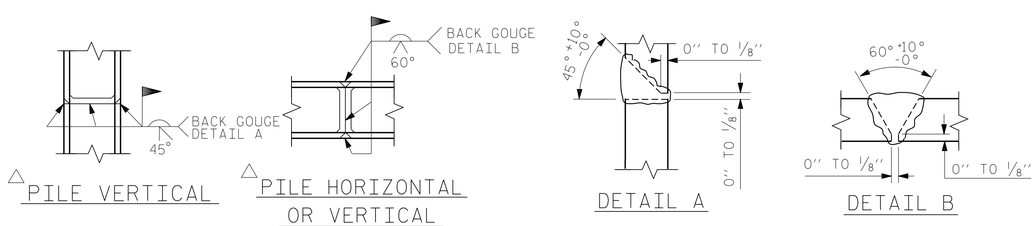

△ PILE VERTICAL

△ PILE HORIZONTAL OR VERTICAL

DETAIL A

DETAIL B

PILE SPLICE DETAILS

△ POSITION OF PILE DURING WELDING.

PROJECT NO. 17BP.11.R.161

ASHE COUNTY

STATION: 13+93.07 -L-

SHEET 4 OF 4

STATE OF NORTH CAROLINA
DEPARTMENT OF TRANSPORTATION
RALEIGH

SUBSTRUCTURE

END BENT No. 2
WING W4 DETAILS
& BILL OF MATERIAL

DocuSigned by: Ryan Chapman
SEAL 046056 NORTH CAROLINA PROFESSIONAL ENGINEER RYAN TYLER SHIPMAN
13D872A606E449A...
12/20/2022

V&M Vaughn & Melton Consulting Engineers
Asheville, North Carolina
828-253-2796
Raleigh, NC 919-977-9455
Charlotte, NC 704-357-0488
Boone, NC 828-355-9933
Tri-Cities, TN 423-467-8401
Knoxville, TN 865-546-5800
Spartanburg, SC 864-574-4775
Charleston, SC 843-974-5650
Middlesboro, KY 606-248-6600
Atlanta, GA 770-627-3590
Copyright © 2006 Vaughn & Melton, Inc. All Rights Reserved

DOCUMENT NOT CONSIDERED FINAL UNLESS ALL SIGNATURES COMPLETED

DWN. BY: WDC DATE: 04-2022
CHKD. BY: GWP DATE: 04/2022
DES. EGR. OF RECORD: RTS DATE: 04/2022

REVISIONS							
NO.	BY:	DATE:	NO.	BY:	DATE:		
1			3				
2			4				

SHEET NO. S-16
TOTAL SHEETS 19

wdcrutcher
DGN: V:\NCS\Structure\032\40-05 Ashe (I)\Structures\Bridge 016\Plans\40_03_17BP.R.161_SMU_EB2_016.dgn
TIME: 05:49 AM on Monday, December 12, 2022

DocuSign Envelope ID: 5A92D8F0-93EF-497A-A8FA-DDBB4B34A564

ESTIMATED QUANTITIES		
BRIDGE @ STA. 13+93.07 -L-	RIP RAP CLASS II (2'-0" THICK)	GEOTEXTILE FOR DRAINAGE
	TONS	SQUARE YARDS
END BENT 1	100	111
END BENT 2	90	100

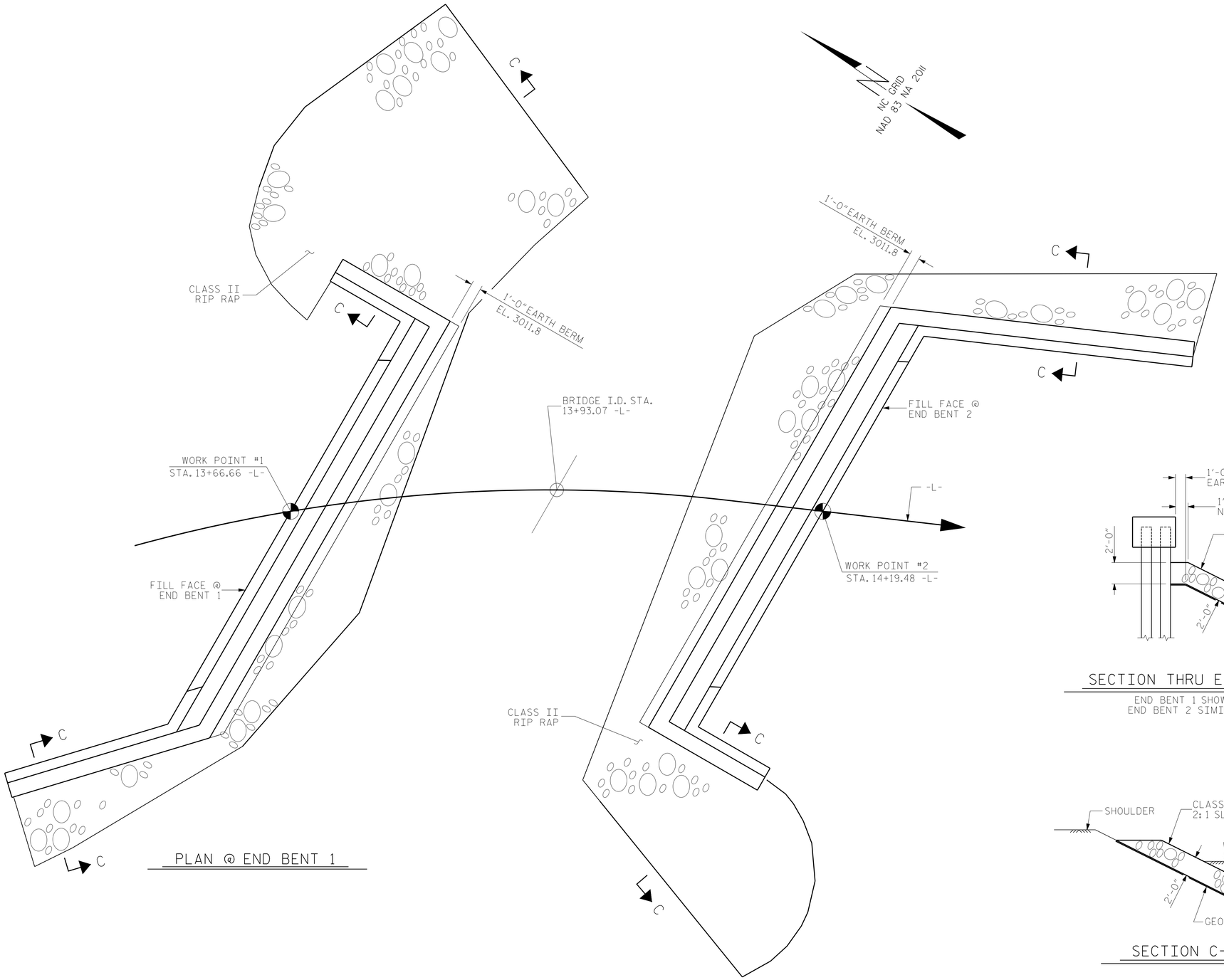

PLAN @ END BENT 1

PLAN @ END BENT 2

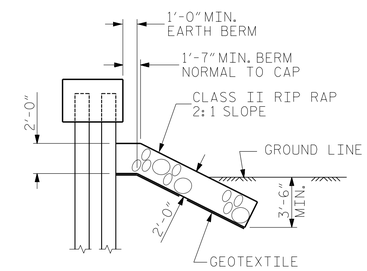

SECTION THRU END BENT

END BENT 1 SHOWN, END BENT 2 SIMILAR

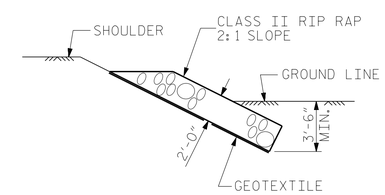

SECTION C-C

DocuSigned by:
Ryan T. Shipman
046056
13D872A5C6E483A...
12/20/2022

NORTH CAROLINA PROFESSIONAL ENGINEER SEAL 046056 RYAN TYLER SHIPMAN

DOCUMENT NOT CONSIDERED FINAL UNLESS ALL SIGNATURES COMPLETED

Vaughn & Melton
Consulting Engineers
Asheville, North Carolina 828-253-2796
Raleigh, NC 919-977-9455
Charlotte, NC 704-357-0488
Boone, NC 828-355-9933
Tri-Cities, TN 423-467-8401
Knoxville, TN 865-546-5800
Spartanburg, SC 864-574-4775
Charleston, SC 843-974-5650
Middlesboro, KY 606-248-6600
Atlanta, GA 770-627-3590
Copyright © 2006 Vaughn & Melton, Inc. All Rights Reserved

PROJECT NO. 17BP.11.R.161

ASHE COUNTY

STATION: 13+93.07 -L-

STATE OF NORTH CAROLINA
DEPARTMENT OF TRANSPORTATION
RALEIGH

STANDARD

RIP RAP DETAILS

DRAWN BY : REK 1/84	REV. 10/1/11	MAA/GM	
CHECKED BY : RDU 1/84	REV. 12/21/11	MAA/GM	
	REV. 12/17	MAA/THC	

DWN. BY: WDC	DATE: 04-2022	REVISIONS					SHEET NO.
CHKD. BY: GWP	DATE: 04/2022	NO.	BY:	DATE:	NO.	BY:	DATE:	S-17
DES. EGR. OF RECORD: RTS	DATE: 04/2022	1			3			TOTAL SHEETS
		2			4			19

STD. NO. RR1

wdcruder
DGN: V:\MC\Structures\03240-05 Ashe (5)\Structures\Bridge 015\Plans\40_033_17BP11R161_SMU_RR01_01T.dgn
TIME: 05:44 AM on Monday, December 12, 2022

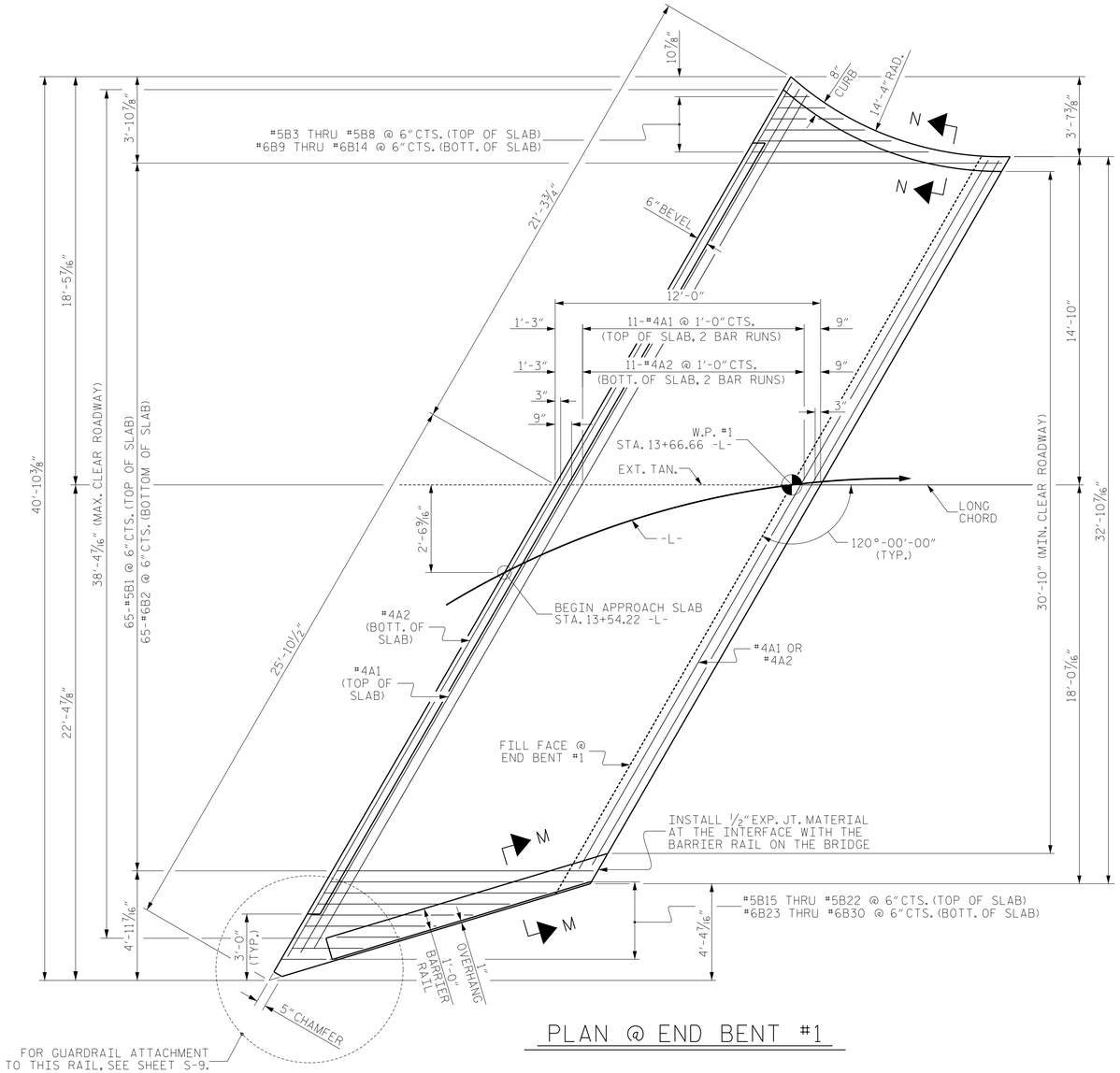

PLAN @ END BENT #1

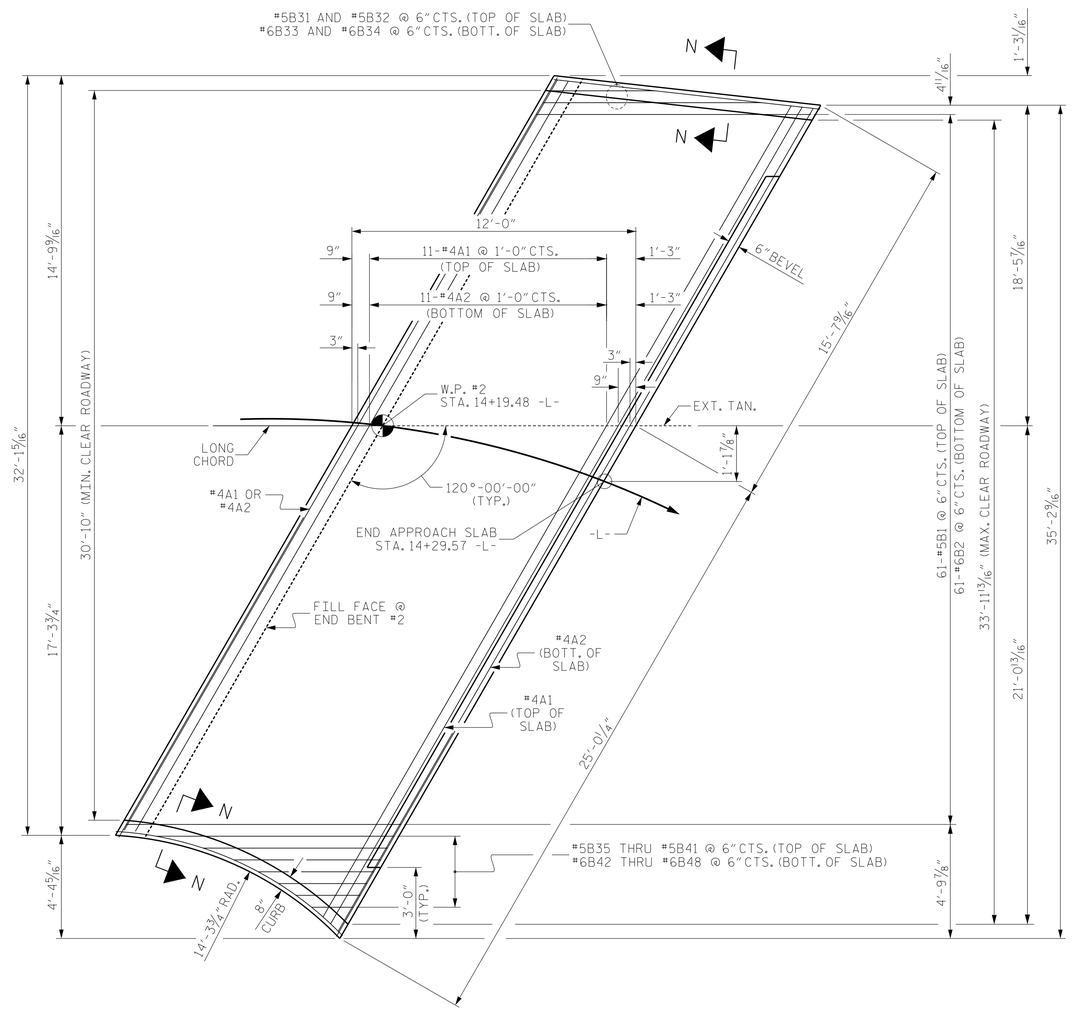

PLAN @ END BENT #2

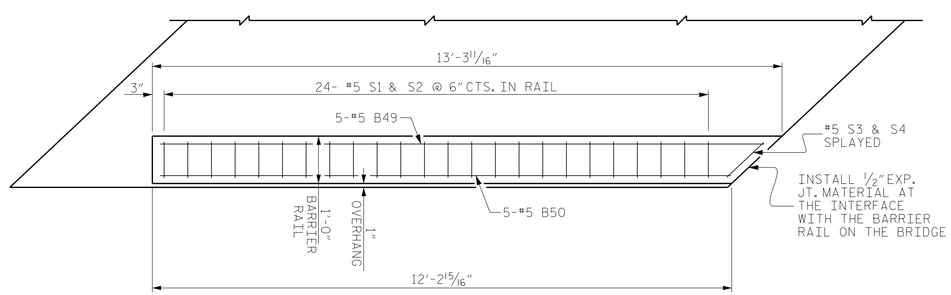

PLAN OF BARRIER RAIL

PROJECT NO. 17BP.11.R.161

ASHE COUNTY

STATION: 13+93.07 -L-

SHEET 1 OF 2

STATE OF NORTH CAROLINA
DEPARTMENT OF TRANSPORTATION
RALEIGH

BRIDGE APPROACH SLAB
FOR PRESTRESSED CONCRETE
CORED SLAB UNIT
(SUB-REGIONAL TIER)

Docusigned by:
Ryan T. Shipman
SEAL
046056
13D872AE06E443A...
RYAN TYLER SHIPMAN
11/21/2022

Vaughn & Melton
Consulting Engineers
Asheville, North Carolina
828-253-2796
Raleigh, NC 919-977-9455
Charlotte, NC 704-357-0488
Boone, NC 828-355-9933
Tri-Cities, TN 423-467-8401
Knoxville, TN 865-546-5800
Spartanburg, SC 864-574-4775
Charleston, SC 843-974-5650
Middlesboro, KY 606-248-6600
Atlanta, GA 770-627-3590

Copyright © 2006 Vaughn & Melton, Inc. All Rights Reserved

DOCUMENT NOT CONSIDERED FINAL UNLESS ALL SIGNATURES COMPLETED

DWN. BY: WDC
CHKD. BY: GWP
DES. EGR. OF RECORD: RTS

DATE: 04-2022
DATE: 04/2022
DATE: 04/2022

REVISIONS						
NO.	BY:	DATE:	NO.	BY:	DATE:	
1			3			
2			4			

SHEET NO. S-18

TOTAL SHEETS 19

wdtrutcher
ZON: V:\WD\Structures\032140-05 Ashe (5)\Structures\Bridge 015\Plans\01_035_17BP11R161_SM01_AS01_018.dgn
TIME: 11:55 AM on Friday, November 18, 2022

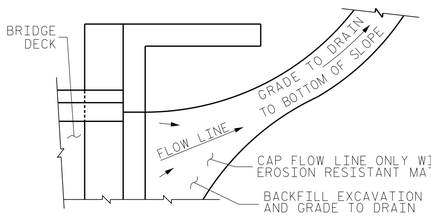

NOTE: IF THE APPROACH SLAB IS NOT CONSTRUCTED IMMEDIATELY AFTER THE BACKFILLING OF THE END BENT EXCAVATION, GRADE TO DRAIN TO THE BOTTOM OF THE SLOPE AND PROVIDE EROSION RESISTANT MATERIAL, SUCH AS FIBERGLASS ROVING OR AS DIRECTED BY THE ENGINEER TO PREVENT SOIL EROSION AND TO PROTECT THE AREA ADJACENT TO THE STRUCTURE. THE CONTRACTOR WILL BE REQUIRED TO REMOVE THESE MATERIALS PRIOR TO CONSTRUCTION OF THE APPROACH SLAB.

TEMPORARY DRAINAGE DETAIL

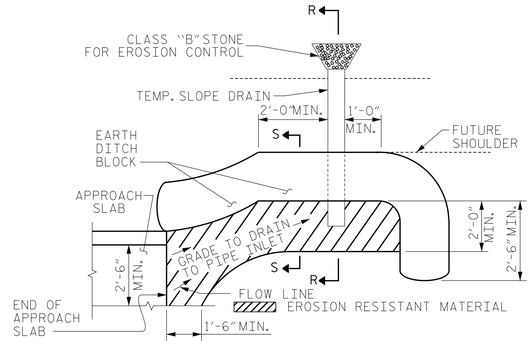

NOTE: IMMEDIATELY AFTER THE CONSTRUCTION OF THE APPROACH SLAB, THE CONTRACTOR SHALL PROVIDE TEMPORARY BERM AND SLOPE DRAIN. CONTRACTOR SHALL GRADE TO PIPE INLET AND PROVIDE EROSION RESISTANT MATERIAL AS SHOWN. THE EROSION RESISTANT MATERIAL SHALL BE EITHER 1) ASPHALT PLANT MIX, TYPE 1 OR TYPE 2, MIN. 2" DEPTH, 2) EROSION CONTROL MAT, OR 3) CONCRETE, AS DIRECTED BY THE ENGINEER. THE SLOPE DRAIN SHALL CONSIST OF A NON-PERFORATED TEMPORARY DRAINAGE PIPE, 12 INCHES IN DIAMETER.

PLAN VIEW

TEMPORARY BERM AND SLOPE DRAIN DETAILS

(TO BE USED WHEN SHOULDER BERM GUTTER IS REQUIRED)

NOTES

FOR BRIDGE APPROACH FILL INCLUDING GEOTEXTILE, 4" Ø DRAINAGE PIPE, AND SELECT MATERIAL BACKFILL, SEE ROADWAY PLANS.

GEOTEXTILE SHALL BE TYPE 1 IN ACCORDANCE WITH THE STANDARD SPECIFICATIONS SECTION 1056.

SELECT MATERIAL BACKFILL (CLASS V OR CLASS VI) SHALL BE IN ACCORDANCE WITH STANDARD SPECIFICATIONS SECTION 1016.

SELECT MATERIAL BACKFILL IS TO BE CONTINUOUS ALONG FILL FACE OF BACKWALL FROM OUTSIDE EDGE TO OUTSIDE EDGE OF APPROACH SLAB.

FOR THE 4" Ø DRAINAGE PIPE OUTLET(S), SEE ROADWAY STANDARD DRAWINGS.

AREA BETWEEN THE WINGWALL AND APPROACH SLAB SHALL BE GRADED TO DRAIN THE WATER AWAY FROM THE FILL FACE OF THE BRIDGE AND SHALL BE PAVED. SEE ROADWAY PLANS.

APPROACH SLAB GROOVING IS NOT REQUIRED.

THE COST OF THE VERTICAL CONCRETE BARRIER RAIL ON APPROACH SLAB SHALL BE INCLUDED IN THE LUMP SUM CONTRACT PRICE BID FOR "BRIDGE APPROACH SLABS".

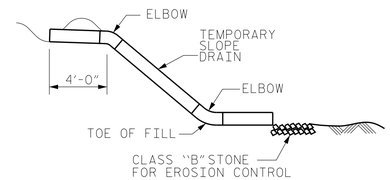

SECTION R-R

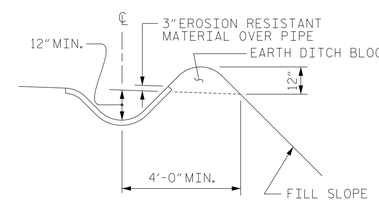

SECTION S-S

BILL OF MATERIAL					
APPROACH SLAB AT EB #1					
BAR	NO.	SIZE	TYPE	LENGTH	WEIGHT
✳ A1	26	#4	STR	23'-10"	414
A2	26	#4	STR	23'-8"	411
✳ B1	65	#5	STR	11'-2"	757
B2	65	#6	STR	11'-8"	1139
✳ B3	1	#5	STR	7'-5"	8
✳ B4	1	#5	STR	6'-0"	6
✳ B5	1	#5	STR	4'-6"	5
✳ B6	1	#5	STR	3'-3"	3
✳ B7	1	#5	STR	2'-2"	2
✳ B8	1	#5	STR	1'-2"	1
B9	1	#6	STR	8'-0"	12
B10	1	#6	STR	6'-0"	9
B11	1	#6	STR	4'-6"	7
B12	1	#6	STR	3'-3"	5
B13	1	#6	STR	2'-2"	3
B14	1	#6	STR	1'-2"	2
✳ B15	1	#5	STR	11'-0"	11
✳ B16	1	#5	STR	9'-8"	10
✳ B17	1	#5	STR	8'-3"	9
✳ B18	1	#5	STR	6'-11"	7
✳ B19	1	#5	STR	5'-11"	6
✳ B20	1	#5	STR	4'-7"	5
✳ B21	1	#5	STR	3'-2"	3
✳ B22	1	#5	STR	2'-0"	2
B23	1	#6	STR	11'-5"	17
B24	1	#6	STR	10'-1"	15
B25	1	#6	STR	8'-8"	13
B26	1	#6	STR	7'-4"	11
B27	1	#6	STR	5'-11"	9
B28	1	#6	STR	4'-7"	7
B29	1	#6	STR	3'-2"	5
B30	1	#6	STR	2'-0"	3
✳ B49	1	#5	STR	12'-8"	13
✳ B50	1	#5	STR	12'-0"	13
✳ S1	24	#5	1	7'-3"	181
✳ S2	24	#5	2	7'-2"	179
✳ S3	1	#5	1	7'-7"	8
✳ S4	1	#5	2	7'-6"	8
REINFORCING STEEL				LBS.	1,668
✳ EPOXY COATED REINFORCING STEEL				LBS.	1,651
CLASS AA CONCRETE				C. Y.	21.0

BILL OF MATERIAL					
APPROACH SLAB AT EB #2					
BAR	NO.	SIZE	TYPE	LENGTH	WEIGHT
✳ A1	26	#4	STR	21'-0"	365
A2	26	#4	STR	20'-10"	362
✳ B1	61	#5	STR	11'-2"	710
B2	61	#6	STR	11'-8"	1069
✳ B31	1	#5	STR	9'-3"	10
✳ B32	1	#5	STR	4'-5"	5
B33	1	#6	STR	9'-3"	14
B34	1	#6	STR	4'-5"	7
✳ B35	1	#5	STR	9'-8"	10
✳ B36	1	#5	STR	7'-4"	8
✳ B37	1	#5	STR	5'-9"	6
✳ B38	1	#5	STR	4'-10"	5
✳ B39	1	#5	STR	3'-8"	4
✳ B40	1	#5	STR	2'-8"	3
✳ B41	1	#5	STR	1'-9"	2
B42	1	#6	STR	10'-0"	15
B43	1	#6	STR	7'-9"	12
B44	1	#6	STR	6'-2"	9
B45	1	#6	STR	4'-10"	7
B46	1	#6	STR	3'-8"	6
B47	1	#6	STR	2'-8"	4
B48	1	#6	STR	1'-9"	3
REINFORCING STEEL				LBS.	1,508
✳ EPOXY COATED REINFORCING STEEL				LBS.	1,127
CLASS AA CONCRETE				C. Y.	18.3

BAR TYPES

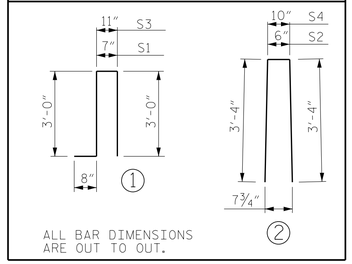

ALL BAR DIMENSIONS ARE OUT TO OUT.

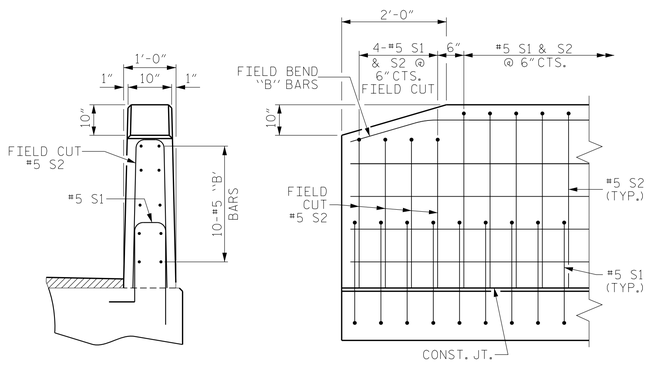

END VIEW

SIDE VIEW

END OF RAIL DETAILS

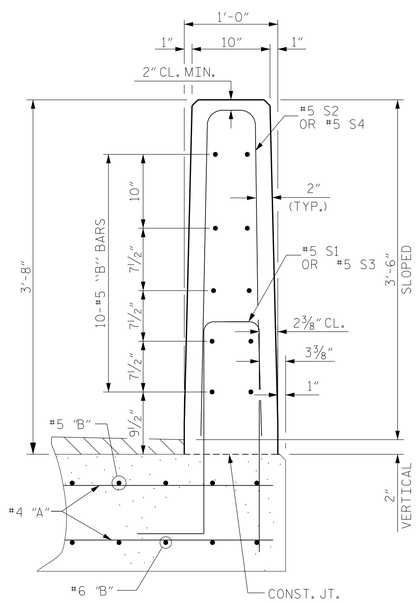

SECTION M-M

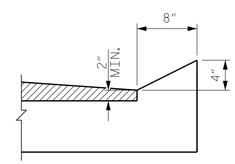

SECTION N-N

CURB & RAIL DETAILS

SPLICE LENGTHS			
BAR SIZE	APPROACH SLABS		BARRIER RAIL
	EPOXY COATED	UNCOATED	
#4	1'-11"	1'-7"	2'-6"
#5	2'-5"	2'-0"	3'-1"
#6	3'-7"	2'-5"	3'-8"

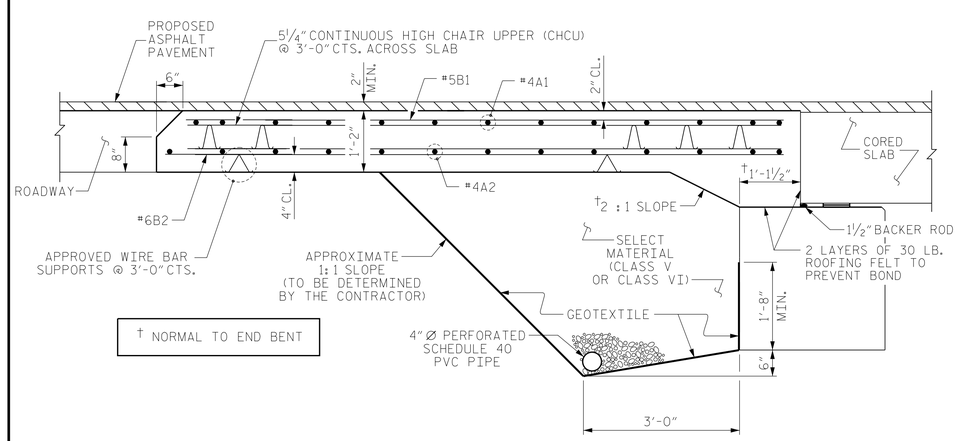

† NORMAL TO END BENT

SECTION THRU SLAB

(TYPE II - MODIFIED APPROACH FILL)

DocuSigned by: Ryan T. Shipman
046056
13D872AE06E443A...
11/21/2022

DOCUMENT NOT CONSIDERED FINAL UNLESS ALL SIGNATURES COMPLETED

V&M
Vaughn & Melton
Consulting Engineers
Asheville, North Carolina
828-253-2796
Raleigh, NC 919-977-9455
Charlotte, NC 704-357-0488
Boone, NC 828-355-9933
Tri-Cities, TN 423-467-8401
Knoxville, TN 865-546-5800
Spartanburg, SC 864-574-4775
Charleston, SC 843-974-5650
Middlesboro, KY 606-248-6600
Atlanta, GA 770-627-3590

Copyright © 2006 Vaughn & Melton, Inc. All Rights Reserved

PROJECT NO. 17BP.11.R.161

ASHE COUNTY

STATION: 13+93.07 -L-

SHEET 2 OF 2

STATE OF NORTH CAROLINA
DEPARTMENT OF TRANSPORTATION
RALEIGH

STANDARD
BRIDGE APPROACH SLAB
FOR PRESTRESSED CONCRETE
CORED SLAB UNIT
(SUB-REGIONAL TIER)
120° SKEW

REVISIONS					
NO.	BY:	DATE:	NO.	BY:	DATE:
1			3		
2			4		

SHEET NO. S-19

TOTAL SHEETS 19

DWN. BY: WDC DATE: 04-2022
CHKD. BY: GWP DATE: 04/2022
DES. EGR. OF RECORD: RTS DATE: 04/2022

STD. NO. BAS_33_120S

w:\ructner
DGN: V:\NCS\Structures\023140-05 Ashe\05\Structures\Bridge 005\Plans\40_037_17BP.11.R.161_SMU_AS02_093.dgn
TIME: 11:55 AM on Friday, November 18, 2022

STANDARD NOTES

DESIGN DATA:

SPECIFICATIONS	A.A.S.H.T.O. (CURRENT)
LIVE LOAD	SEE PLANS
IMPACT ALLOWANCE	SEE A.A.S.H.T.O.
STRESS IN EXTREME FIBER OF STRUCTURAL STEEL - AASHTO M270 GRADE 36	20,000 LBS. PER SQ. IN.
- AASHTO M270 GRADE 50W	27,000 LBS. PER SQ. IN.
- AASHTO M270 GRADE 50	27,000 LBS. PER SQ. IN.
REINFORCING STEEL IN TENSION - GRADE 60	24,000 LBS. PER SQ. IN.
CONCRETE IN COMPRESSION	1,200 LBS. PER SQ. IN.
CONCRETE IN SHEAR	SEE A.A.S.H.T.O.
STRUCTURAL TIMBER - TREATED OR UNTREATED EXTREME FIBER STRESS	1,800 LBS. PER SQ. IN.
COMPRESSION PERPENDICULAR TO GRAIN OF TIMBER	375 LBS. PER SQ. IN.
EQUIVALENT FLUID PRESSURE OF EARTH	30 LBS. PER CU. FT. (MINIMUM)

MATERIAL AND WORKMANSHIP:

EXCEPT AS MAY OTHERWISE BE SPECIFIED ON PLANS OR IN THE SPECIAL PROVISIONS, ALL MATERIAL AND WORKMANSHIP SHALL BE IN ACCORDANCE WITH THE 2018 "STANDARD SPECIFICATIONS FOR ROADS AND STRUCTURES" OF THE N. C. DEPARTMENT OF TRANSPORTATION.

STEEL SHEET PILING FOR PERMANENT OR TEMPORARY APPLICATIONS SHALL BE HOT ROLLED.

CONCRETE:

UNLESS OTHERWISE REQUIRED ON PLANS, CLASS A CONCRETE SHALL BE USED FOR ALL PORTIONS OF ALL STRUCTURES WITH THE EXCEPTION THAT: CLASS AA CONCRETE SHALL BE USED IN BRIDGE SUPERSTRUCTURES, ABUTMENT BACKWALLS, AND APPROACH SLABS; AND CLASS B CONCRETE SHALL BE USED FOR SLOPE PROTECTION AND RIP RAP.

CONCRETE CHAMFERS:

UNLESS OTHERWISE NOTED ON THE PLANS, ALL EXPOSED CORNERS ON STRUCTURES SHALL BE CHAMFERED ¾" WITH THE FOLLOWING EXCEPTIONS: TOP CORNERS OF CURBS MAY BE ROUNDED TO 1½" RADIUS WHICH IS BUILT INTO CURB FORMS; CORNERS OF TRANSVERSE FLOOR EXPANSION JOINTS SHALL BE ROUNDED WITH A ¼" FINISHING TOOL UNLESS OTHERWISE REQUIRED ON PLANS; AND CORNERS OF EXPANSION JOINTS IN THE ROADWAY FACES AND TOPS OF CURBS AND SIDEWALKS SHALL BE ROUNDED TO A ¼" RADIUS WITH A FINISHING STONE OR TOOL UNLESS OTHERWISE REQUIRED ON PLANS.

DOWELS:

DOWELS WHEN INDICATED ON PLANS AS FOR CULVERT EXTENSIONS, SHALL BE EMBEDDED AT LEAST 12" INTO THE OLD CONCRETE AND GROUTED INTO PLACE WITH 1:2 CEMENT MORTAR.

ALLOWANCE FOR DEAD LOAD DEFLECTION, SETTLEMENT, ETC. IN CASTING SUPERSTRUCTURES:

BRIDGES SHALL BE BUILT ON THE GRADE OR VERTICAL CURVE SHOWN ON PLANS. SLABS, CURBS AND PARAPETS SHALL CONFORM TO THE GRADE OR CURVE.

ALL DIMENSIONS WHICH ARE GIVEN IN SECTION AND ARE AFFECTED BY DEAD LOAD DEFLECTIONS ARE DIMENSIONS AT CENTER LINE OF BEARING UNLESS OTHERWISE NOTED ON PLANS. IN SETTING FORMS FOR STEEL BEAM BRIDGES AND PRESTRESSED CONCRETE GIRDER BRIDGES, ADJUSTMENTS SHALL BE MADE DUE TO THE DEAD LOAD DEFLECTIONS FOR THE ELEVATIONS SHOWN. WHERE BLOCKS ARE SHOWN OVER BEAMS FOR BUILDING UP TO THE SLAB, THE VERTICAL DIMENSIONS OF THE BLOCKS SHALL BE ADJUSTED BETWEEN BEARINGS TO COMPENSATE FOR DEAD LOAD DEFLECTIONS, VERTICAL CURVE ORDINATE, AND ACTUAL BEAM CAMBER. WHERE BOTTOM OF SLAB IS IN LINE WITH BOTTOM OF TOP FLANGES, DEPTH OF SLAB BETWEEN BEARINGS SHALL BE ADJUSTED TO COMPENSATE FOR DEAD LOAD DEFLECTION, VERTICAL CURVE ORDINATE, AND ACTUAL BEAM CAMBER.

IN SETTING FALSEWORK AND FORMS FOR REINFORCED CONCRETE SPANS, AN ALLOWANCE SHALL BE MADE FOR DEAD LOAD DEFLECTIONS, SETTLEMENT OF FALSEWORK, AND PERMANENT CAMBER WHICH SHALL BE PROVIDED FOR IN ADDITION TO THE ELEVATIONS SHOWN. AFTER REMOVAL OF THE FALSEWORK, THE FINISHED STRUCTURES SHALL CONFORM TO THE PROFILE AND ELEVATIONS SHOWN ON THE PLANS AND CONSTRUCTION ELEVATIONS FURNISHED BY THE ENGINEER.

DETAILED DRAWINGS FOR FALSEWORK OR FORMS FOR BRIDGE SUPERSTRUCTURE AND ANY STRUCTURE OR PARTS OF A STRUCTURE AS NOTED ON THE PLANS SHALL BE SUBMITTED TO THE ENGINEER FOR APPROVAL BEFORE CONSTRUCTION OF THE FALSEWORK OR FORMS IS STARTED.

REINFORCING STEEL:

ALL REINFORCING STEEL SHALL BE DEFORMED. DIMENSIONS RELATIVE TO PLACEMENT OF REINFORCING ARE TO CENTERS OF BARS UNLESS OTHERWISE INDICATED IN THE PLANS. DIMENSIONS ON BAR DETAILS ARE TO CENTERS OF BARS OR ARE OUT TO OUT AS INDICATED ON PLANS.

WIRE BAR SUPPORTS SHALL BE PROVIDED FOR REINFORCING STEEL WHERE INDICATED ON THE PLANS. WHEN BAR SUPPORT PIECES ARE PLACED IN CONTINUOUS LINES, THEY SHALL BE SO PLACED THAT THE ENDS OF THE SUPPORTING WIRES SHALL BE LAPPED TO LOCK LEGS ON ADJOINING PIECES.

STRUCTURAL STEEL:

AT THE CONTRACTOR'S OPTION, HE MAY SUBSTITUTE ⅞" Ø SHEAR STUDS FOR THE ¾" Ø STUDS SPECIFIED ON THE PLANS. THIS SUBSTITUTION SHALL BE MADE AT THE RATE OF 3 - ⅞" Ø STUDS FOR 4 - ¾" Ø STUDS, AND STUD SPACING CHANGES SHALL BE MADE AS NECESSARY TO PROVIDE THE SAME EQUIVALENT NUMBER OF ⅞" Ø STUDS ALONG THE BEAM AS SHOWN FOR ¾" Ø STUDS BASED ON THE RATIO OF 3 - ⅞" Ø STUDS FOR 4 - ¾" Ø STUDS. STUDS OF THE LENGTH SPECIFIED ON THE PLANS MUST BE PROVIDED. THE MAXIMUM SPACING SHALL BE 2'-0".

EXCEPT AT THE INTERIOR SUPPORTS OF CONTINUOUS BEAMS WHERE THE COVER PLATE IS IN CONTACT WITH BEARING PLATE, THE CONTRACTOR MAY, AT HIS OPTION, SUBSTITUTE FOR THE COVER PLATES DESIGNATED ON THE PLANS COVER PLATES OF THE EQUIVALENT AREA PROVIDED THESE PLATES ARE AT LEAST 5/16" IN THICKNESS AND DO NOT EXCEED A WIDTH EQUAL TO THE FLANGE WIDTH LESS 2" OR A THICKNESS EQUAL TO 2 TIMES THE FLANGE THICKNESS. THE SIZE OF FILLET WELDS SHALL CONFORM TO THE REQUIREMENTS OF THE CURRENT ANSI/AASHTO/AWS "BRIDGE WELDING CODE". ELECTROSLAG WELDING WILL NOT BE PERMITTED.

WITH THE SOLE EXCEPTION OF EDGES AT SURFACES WHICH BEAR ON OTHER SURFACES, ALL SHARP EDGES AND ENDS OF SHAPES AND PLATES SHALL BE SLIGHTLY ROUNDED BY SUITABLE MEANS TO A RADIUS OF APPROXIMATELY 1/16 INCH OR EQUIVALENT FLAT SURFACE AT A SUITABLE ANGLE PRIOR TO PAINTING, GALVANIZING, OR METALLIZING.

HANDRAILS AND POSTS:

METAL STANDARDS AND FACES OF THE CONCRETE END POSTS FOR THE METAL RAIL SHALL BE SET NORMAL TO THE GRADE OF THE CURB, UNLESS OTHERWISE SHOWN ON PLANS. THE METAL RAIL AND TOPS OF CONCRETE POSTS USED WITH THE ALUMINUM RAIL SHALL BE BUILT PARALLEL TO THE GRADE OF THE CURB.

METAL HANDRAILS SHALL BE IN ACCORDANCE WITH THE PLANS. RAILS SHALL BE AS MANUFACTURED FOR BRIDGE RAILING. CASTINGS SHALL BE OF A UNIFORM APPEARANCE. FINS AND OTHER DEFORMATIONS RESULTING FROM CASTING OR OTHERWISE SHALL BE REMOVED IN A MANNER SO THAT A UNIFORM COLORING OF THE COMPLETED CASTING SHALL BE OBTAINED. CASTINGS WITH DISCOLORATIONS OR OF NON-UNIFORM COLORING WILL NOT BE ACCEPTED. CERTIFIED MILL REPORTS ARE REQUIRED FOR METAL RAILS AND POSTS.

SPECIAL NOTES:

GENERALLY, IN CASE OF DISCREPANCY, THIS STANDARD SHEET OF NOTES SHALL GOVERN OVER THE SPECIFICATIONS, BUT THE REMAINDER OF THE PLANS SHALL GOVERN OVER NOTES HEREON, AND SPECIAL PROVISIONS SHALL GOVERN OVER ALL. SEE SPECIFICATIONS ARTICLE 105-4.

ENGLISH

JANUARY, 1990

STD. NO. SN