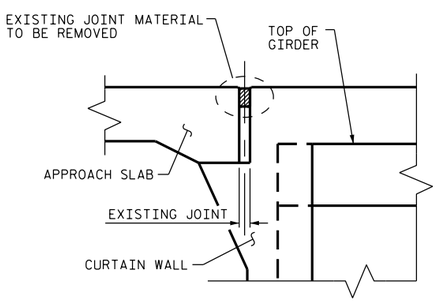

EXISTING JOINT

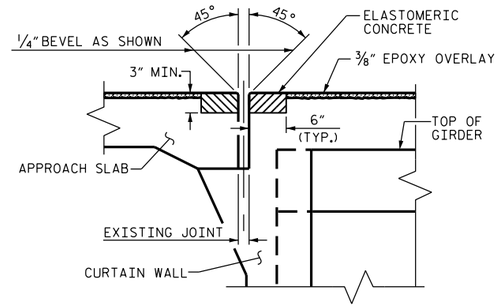

PROPOSED ELASTOMERIC CONCRETE HEADERS

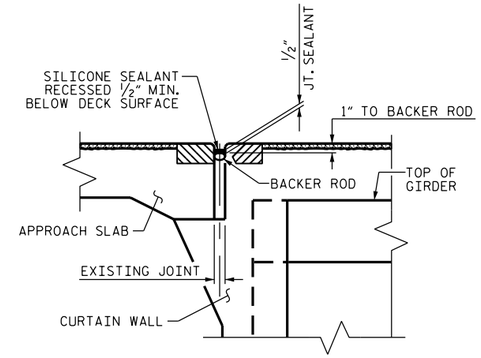

PROPOSED SILICONE JOINT SEAL

SECTION A-A

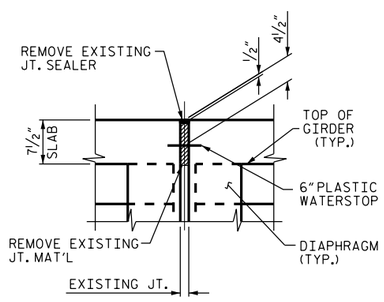

EXISTING JOINT

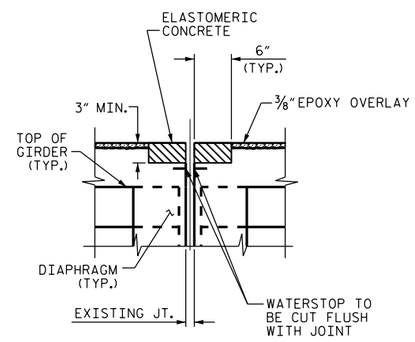

PROPOSED JOINT PRE-SAWED

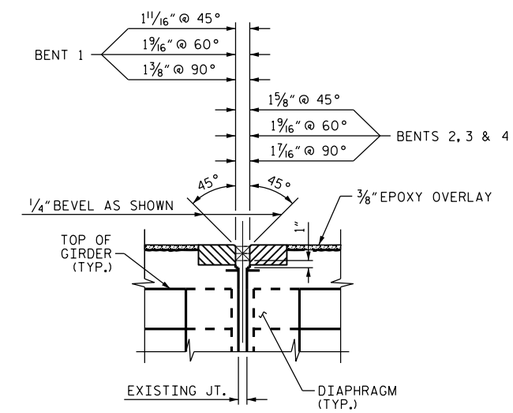

PROPOSED FOAM JOINT SEAL

SECTION B-B

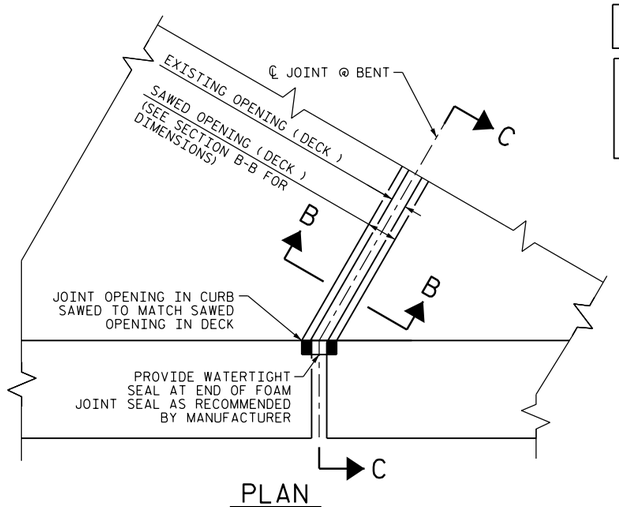

PLAN

DEMOLISH BRIDGE JOINT AREA TO THE NECESSARY DEPTH, SUCH THAT ELASTOMERIC CONCRETE SHALL BE FOUNDED ON CONCRETE OR REPAIR CONCRETE SUBSTRATE.

IF THE EMBEDDED PORTION OF THE EXISTING PLASTIC WATERSTOP IS EXPOSED DURING REMOVAL OF UNSOUND CONCRETE, OR IF UNSOUND CONCRETE IS REMOVED WITHIN 2" OF THE WATERSTOP, THE ENTIRE CONCRETE DEPTH TO THE WATERSTOP SHALL BE REMOVED. IF SUCH EXCAVATION EXTENDS MORE THAN 2" BELOW THE BOTTOM OF THE PLANNED ELASTOMERIC CONCRETE HEADER, AS SHOWN, APPROVED REPAIR CONCRETE SHALL BE PLACED IN THE EXCAVATED AREA TO THE ELEVATION AT THE BOTTOM OF THE ELASTOMERIC CONCRETE.

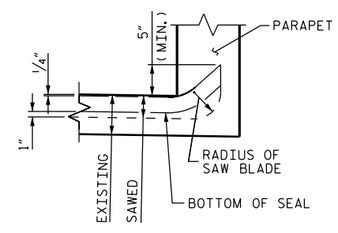

SECTION C-C

NOTES

FOR FOAM JOINT SEAL, SEE SPECIAL PROVISIONS.

THE INSTALLED FOAM JOINT SEALS SHALL BE WATERTIGHT.

NOMINAL UNCOMPRESSED SEAL WIDTH OF FOAM JOINT SEAL SHALL BE 2" AT ALL BENTS.

THE CONTRACTOR WILL NOT BE PERMITTED TO FORM THE JOINTS FOR THE JOINT SEALS IN LIEU OF SAWING THE JOINTS.

FOR JOINTS AT END BENTS, THE CONTRACTOR SHALL USE A LOW MODULUS SILICONE SEALANT WHICH CONFORMS TO THE STANDARD SPECIFICATIONS.

FOR SILICONE JOINT SEALS, SEE SPECIAL PROVISIONS.

ELASTOMERIC CONCRETE FOR ONE BRIDGE		
END BENT 1	9.8	(CU. FT.)
BENT 1	12.3	(CU. FT.)
BENT 2	12.3	(CU. FT.)
BENT 3	12.3	(CU. FT.)
BENT 4	12.3	(CU. FT.)
END BENT 2	9.8	(CU. FT.)
* TOTAL	68.8	(CU. FT.)

* BASED ON THE MINIMUM BLOCKOUT SHOWN.

PROJECT NO. I-5802
SURRY COUNTY
BRIDGE NO. 121 & 123

DocuSigned by:
John A. Yannaccone
7BC3EDCTH CARO
NORTH CAROLINA PROFESSIONAL SEAL 32492 ENGINEER JOHN A. YANNACCONE
7/13/2016

STATE OF NORTH CAROLINA
DEPARTMENT OF TRANSPORTATION
RALEIGH

JOINT DETAILS

REVISIONS						SHEET NO.
NO.	BY:	DATE:	NO.	BY:	DATE:	S-5
1			3			TOTAL SHEETS
2			4			5

DOCUMENT NOT CONSIDERED FINAL UNLESS ALL SIGNATURES COMPLETED

DRAWN BY : S. WANcePE DATE : 05/16
CHECKED BY : J. YANNACCONE DATE : 05/16

13-JUL-2016 13:46
R:\Structures\FinalDrawings\I5802_SD_121_and_123_JD.dgn
jayannaccone