PROJECT: 17BP.11.H.6

CONTRACT:

STATE OF NORTH CAROLINA
DIVISION OF HIGHWAYS

SURRY COUNTY

STATE	STATE PROJECT REFERENCE NO.	SHEET NO.	TOTAL SHEETS
N.C.	17BP.11.H.6		

STATE PROJ. NO.	F. A. PROJ. NO.	DESCRIPTION
17BP.11.H.6		P.E.
17BP.11.H.6		CONST.

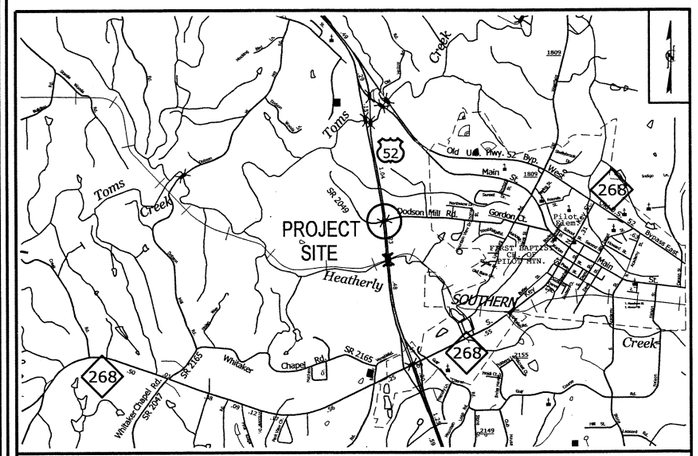

VICINITY MAP

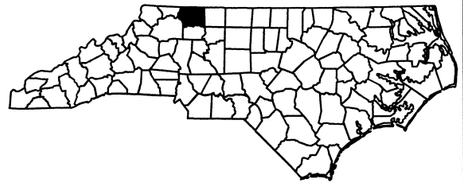

LOCATION: BRIDGE No. 119 ON SR 2049 (DODSON MILLS ROAD) OVER US 52 NEAR MT. PILOT

TYPE OF WORK: GRADING, PAVING, SUPERSTRUCTURE REPLACEMENT, & SUBSTRUCTURE REPAIRS

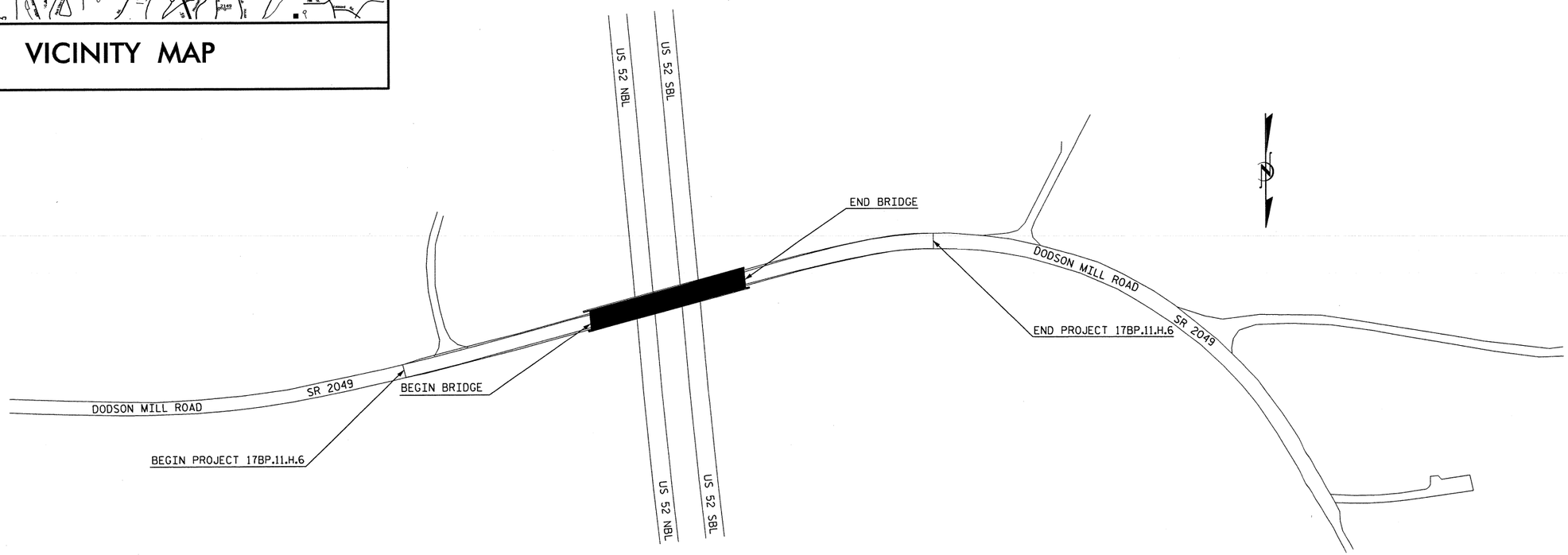

STATE OF NORTH CAROLINA DEPARTMENT OF TRANSPORTATION

DESIGN DATA

ADT 1996 = 500

FUNC CLASS = RURAL
SUB REGIONAL TIER

PROJECT LENGTH

LENGTH ROADWAY PROJECT 17BP.11.H.6	=	0.095 MILES
LENGTH STRUCTURE PROJECT 17BP.11.H.6	=	0.040 MILES
TOTAL LENGTH PROJECT 17BP.11.H.6	=	0.135 MILES

Prepared in the Office of:
DIVISION OF HIGHWAYS
1000 Birch Ridge Dr., Raleigh NC, 27610

2012 STANDARD SPECIFICATIONS

LETTING DATE:
JUNE 6, 2013

QUANG NGUYEN, P.E.
PROJECT ENGINEER

B. D. KLAPPENBACH, PE
PROJECT DESIGN ENGINEER

STRUCTURE MANAGEMENT UNIT
1000 BIRCH RIDGE DR.
RALEIGH, N.C. 27610

NORTH CAROLINA PROFESSIONAL SEAL 15425 ENGINEER BRUCE D. KLAPPENBACH

4-17-2013

P.E.
STRUCTURE MANAGEMENT DESIGN ENGINEER

DIVISION OF HIGHWAYS
STATE OF NORTH CAROLINA

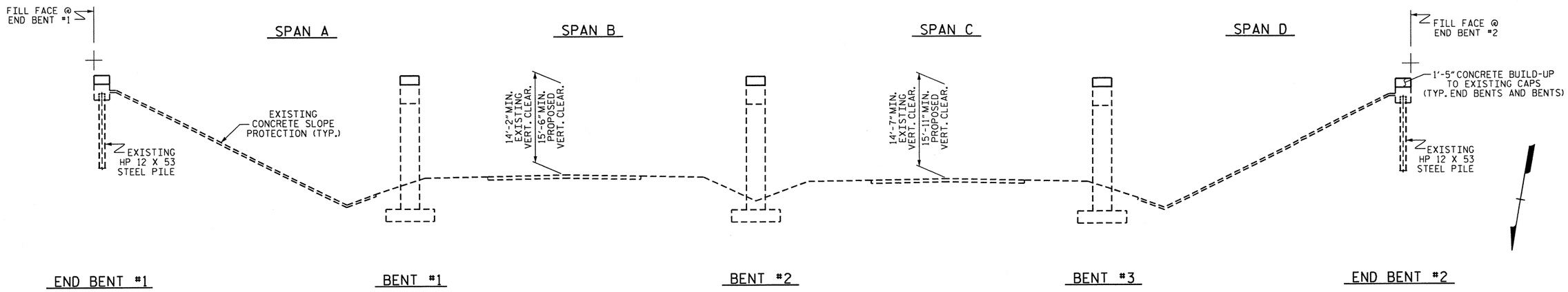

SECTION ALONG ℄ BRIDGE

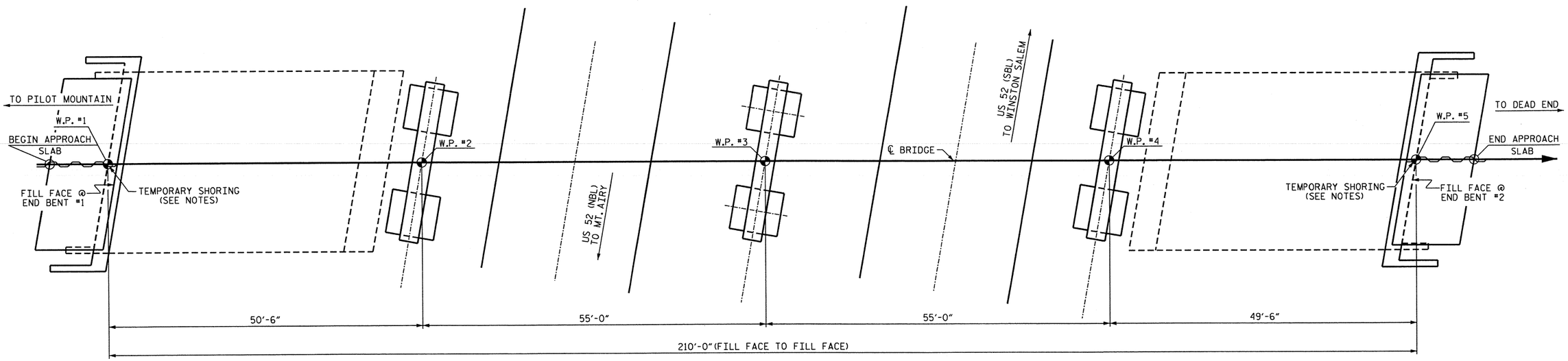

PLAN

PROJECT NO. 17BP.11.H.6

SURRY COUNTY

STATION: BRIDGE 119

SHEET 1 OF 2 MODIFICATION OF BRIDGE #119

STATE OF NORTH CAROLINA
DEPARTMENT OF TRANSPORTATION
RALEIGH

GENERAL DRAWING FOR BRIDGE OVER US 52 ON SR 2049 (DODSON MILL RD.)

NORTH CAROLINA PROFESSIONAL SEAL 15825 ENGINEER BRUCE D. KLAPPENBACH
4-17-2013

REVISIONS						SHEET NO.
NO.	BY:	DATE:	NO.	BY:	DATE:	S-1
1			3			TOTAL SHEETS
2			4			44

DRAWN BY : H. T. BARBOUR DATE : 3-28-13
CHECKED BY : B. D. KLAPPENBACH DATE : 3-13
DESIGN ENGINEER OF RECORD: - DATE : -

11-APR-2013 10:06
R:\Structures\tbarbour\Microstation\17BP11H6_SD_GD.dgn
bklappenbach

NOTES

ASSUMED LIVE LOAD = HL-93 OR ALTERNATE LOADING.

THE SUPERSTRUCTURE HAS BEEN DESIGNED IN ACCORDANCE WITH THE AASHTO LRFD BRIDGE DESIGN SPECIFICATIONS.

FOR OTHER DESIGN DATA AND GENERAL NOTES, SEE SHEET SN.

FOR SUBMITTAL OF WORKING DRAWINGS, SEE SPECIAL PROVISIONS.

FOR FALSEWORK AND FORMWORK, SEE SPECIAL PROVISIONS.

FOR CRANE SAFETY, SEE SPECIAL PROVISIONS.

FOR GROUT FOR STRUCTURES, SEE SPECIAL PROVISIONS.

FOR MAINTENANCE AND PROTECTION OF TRAFFIC BENEATH PROPOSED STRUCTURE, SEE SPECIAL PROVISIONS.

FOR TEMPORARY OVERHANG SUPPORT SYSTEM, SEE SPECIAL PROVISIONS.

REMOVABLE FORMS MAY BE USED IN LIEU OF METAL STAY-IN-PLACE FORMS IN ACCORDANCE WITH ARTICLE 420-3 OF THE STANDARD SPECIFICATIONS.

ALL STRUCTURAL STEEL SHALL BE AASHTO M270 GRADE 50W AND PAINTED IN ACCORDANCE WITH SYSTEM 4 OF ARTICLE 442-8 OF THE STANDARD SPECIFICATIONS UNLESS OTHERWISE NOTED ON THE PLANS.

THE CLASS AA CONCRETE IN THE BRIDGE DECK SHALL CONTAIN FLY ASH OR GROUND GRANULATED BLAST FURNACE SLAG AT THE SUBSTITUTION RATE SPECIFIED IN ARTICLE 1024-1 AND IN ACCORDANCE WITH ARTICLES 1024-5 AND 1024-6 OF THE STANDARD SPECIFICATIONS. NO PAYMENT WILL BE MADE FOR THIS SUBSTITUTION AS IT IS CONSIDERED INCIDENTAL TO THE COST OF THE REINFORCED CONCRETE DECK SLAB.

FOR LIMITS OF TEMPORARY SHORING FOR MAINTENANCE OF TRAFFIC, SEE TRAFFIC CONTROL PLANS. FOR PAY ITEM FOR TEMPORARY SHORING FOR MAINTENANCE OF TRAFFIC, SEE ROADWAY PLANS.

NO KNOWN UTILITY CONFLICTS.

FOR PLACING LOADS ON STRUCTURE MEMBERS, SEE SPECIAL PROVISIONS.

ALL DIMENSIONS SHOWN ON THE PLANS ARE FROM THE BEST INFORMATION AVAILABLE. PRIOR TO BEGINNING BRIDGE CONSTRUCTION, THE CONTRACTOR SHALL VERIFY ALL DIMENSIONS, INCLUDING VERTICAL CLEARANCE, IN THE FIELD PRIOR TO CONSTRUCTION AND FABRICATION. THE CONTRACTOR SHALL NOTIFY ANY VARIATIONS TO THE ENGINEER. ANY PLAN REVISIONS NECESSARY WILL BE PROVIDED BY THE CONTRACTOR.

AN OVERHANG SUPPORT SYSTEM IS REQUIRED IN SPANS A AND D DURING STAGE I CONSTRUCTION. FOR TEMPORARY OVERHANG SUPPORT SYSTEM, SEE SPECIAL PROVISIONS.

AFTER SERVING AS A TEMPORARY STRUCTURE, THE EXISTING SUPERSTRUCTURE CONSISTING OF 4 SPANS, 1 @ 50'-6", 2 @ 55'-0", 1 @ 49'-6" (OVERALL LENGTH IS 210'-0") AND A CLEAR ROADWAY WIDTH OF 24 FT. ON 4 LINES OF 36" PRESTRESSED CONCRETE GIRDERS IN SPANS A AND D, AND 5 LINES OF 36" PRESTRESSED CONCRETE GIRDERS IN SPANS B AND C, SHALL BE REMOVED IN STAGES AS SHOWN ON THE CONSTRUCTION SEQUENCE SHEET. THE EXISTING END BENTS SHALL BE PARTIALLY REMOVED AS SHOWN ON THE PLANS. THE EXISTING BRIDGE IS PRESENTLY NOT POSTED FOR LOAD LIMIT. SHOULD THE STRUCTURAL INTEGRITY OF THE BRIDGE DETERIORATE DURING CONSTRUCTION OF THE PROPOSED BRIDGE, A LOAD LIMIT MAY BE POSTED AS FOUND NECESSARY DURING THE LIFE OF THE PROJECT. SEE SPECIAL PROVISIONS FOR REMOVAL OF EXISTING STRUCTURE AT BRIDGE 119.

THE SUBSTRUCTURE OF THE EXISTING BRIDGE INDICATED ON THE PLANS IS FROM THE BEST INFORMATION AVAILABLE. SINCE THIS INFORMATION IS SHOWN FOR THE CONVENIENCE OF THE CONTRACTOR, THE CONTRACTOR SHALL HAVE NO CLAIM WHATSOEVER AGAINST THE DEPARTMENT OF TRANSPORTATION FOR ANY DELAYS OR ADDITIONAL COST INCURRED BASED ON DIFFERENCES BETWEEN THE EXISTING BRIDGE SUBSTRUCTURE SHOWN ON THE PLANS AND THE ACTUAL CONDITIONS AT THE PROJECT SITE.

THE USE OF NEEDLE BEAMS WILL BE ALLOWED TO SUPPORT THE BRIDGE DECK.

ANY DAMAGE TO THE EXISTING CONCRETE SLOPE PROTECTION DURING THE PARTIAL REMOVAL OF THE END BENT CAP AND WINGS OR DURING THE CONSTRUCTION OF THE PROPOSED CAP AND WINGS SHALL BE REPAIRED TO THE SATISFACTION OF THE ENGINEER. NO PAYMENT WILL BE MADE FOR THIS REPAIR AS IT IS CONSIDERED INCIDENTAL TO VARIOUS PAY ITEMS.

TOTAL BILL OF MATERIAL

	REMOVAL OF EXISTING STRUCTURE	REINFORCED CONCRETE DECK SLAB	GROOVING BRIDGE FLOORS	CLASS A CONCRETE	BRIDGE APPROACH SLABS	REINFORCING STEEL	STRUCTURAL STEEL	VERTICAL CONCRETE BARRIER RAIL	ELASTOMERIC BEARINGS	CONCRETE REPAIRS	EPOXY RESIN INJECTION	FOAM JOINT SEALS	TEMPORARY OVERHANG SUPPORT SYSTEM
	LUMP SUM	SQ. FT.	SQ.FT.	CU. YDS.	LUMP SUM	LBS.	APPROX. LBS.	LIN. FT.	LUMP SUM	CU. FT.	LIN. FT.	LUMP SUM	LUMP SUM
SUPERSTRUCTURE	LUMP SUM	5933	5242		LUMP SUM		159,000	420	LUMP SUM			LUMP SUM	LUMP SUM
END BENT NO. 1				8.2		1306							
BENT NO. 1				4.0		732				1.7			
BENT NO. 2				4.0		732				5.0			
BENT NO. 3				4.0		732				2.8			
END BENT NO. 2				8.2		1309					17		
TOTAL	LUMP SUM	5933	5242	28.4	LUMP SUM	4811	159,000	420	LUMP SUM	9.5	17	LUMP SUM	LUMP SUM

PROJECT NO. 17BP.11.H.6

SURRY COUNTY

STATION: BRIDGE 119

SHEET 2 OF 2

STATE OF NORTH CAROLINA
DEPARTMENT OF TRANSPORTATION
RALEIGH

GENERAL DRAWING FOR BRIDGE OVER US 52 ON SR 2049 (DODSON MILL RD.)

NORTH CAROLINA PROFESSIONAL SEAL 15825 ENGINEER BRUCE D. KLAPPENBACH

4-17-2013

REVISIONS						SHEET NO.
NO.	BY:	DATE:	NO.	BY:	DATE:	S-2
1			3			TOTAL SHEETS
2			4			44

DRAWN BY : H. T. BARBOUR DATE : 3-28-13
CHECKED BY : B. D. KLAPPENBACH DATE : 3-13
DESIGN ENGINEER OF RECORD: - DATE : -

17-APR-2013 17:01
R:\Structures\tbarbour\Microstation\17BP11H6_SD_GD.dgn
bklappenbach

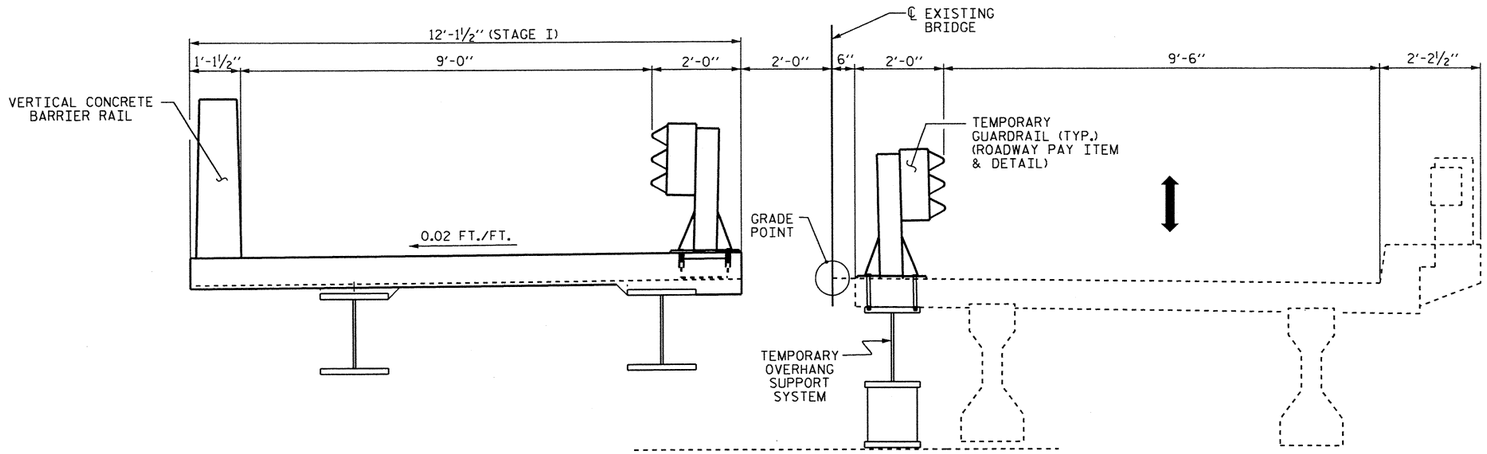

STAGE I CONSTRUCTION

(SPANS A & D)

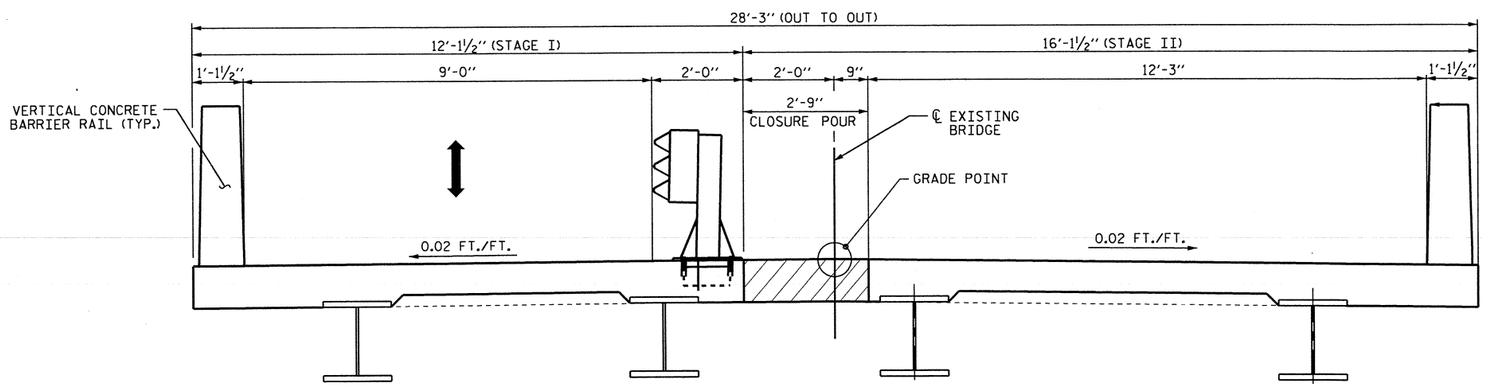

STAGE II CONSTRUCTION

(SPANS A & D)

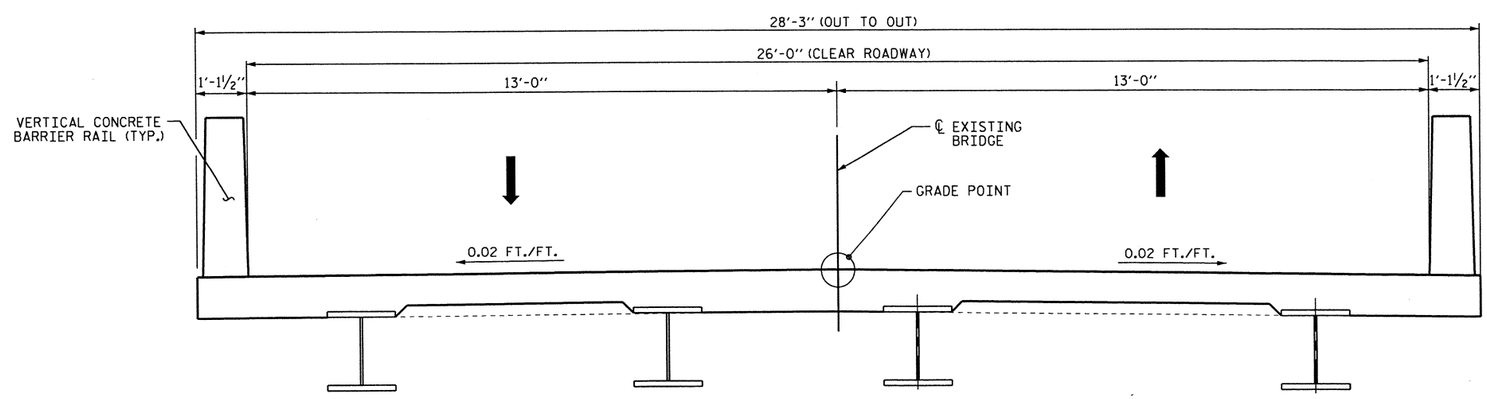

FINAL TYPICAL

(SPANS A & D)

NOTES

FOR TEMPORARY GUARDRAIL DETAILS AND PAY ITEM, SEE ROADWAY PLANS.

AN OVERHANG SUPPORT SYSTEM IS REQUIRED IN SPAN A AND D DURING STAGE I CONSTRUCTION. FOR TEMPORARY OVERHANG SUPPORT SYSTEM, SEE SPECIAL PROVISIONS.

PROJECT NO. 17BP.11.H.6

SURRY COUNTY

STATION: BRIDGE 119

SHEET 1 OF 2

STATE OF NORTH CAROLINA
DEPARTMENT OF TRANSPORTATION
RALEIGH

SUPERSTRUCTURE
STAGING SEQUENCE
SPANS A & D

NORTH CAROLINA PROFESSIONAL SEAL 15425 ENGINEER BRUCE D. KLAPPENBACH
4-17-2013

REVISIONS						SHEET NO.
NO.	BY:	DATE:	NO.	BY:	DATE:	S-3
1			3			TOTAL SHEETS
2			4			44

DRAWN BY : V.X. NGUYEN DATE : 4-8-13
CHECKED BY : B.D. KLAPPENBACH DATE : 4-10-13
DESIGN ENGINEER OF RECORD: DATE :

11-APR-2013 10:07
R:\Structures\vnguyen\850119_SD_PC.dgn
bklappenbach

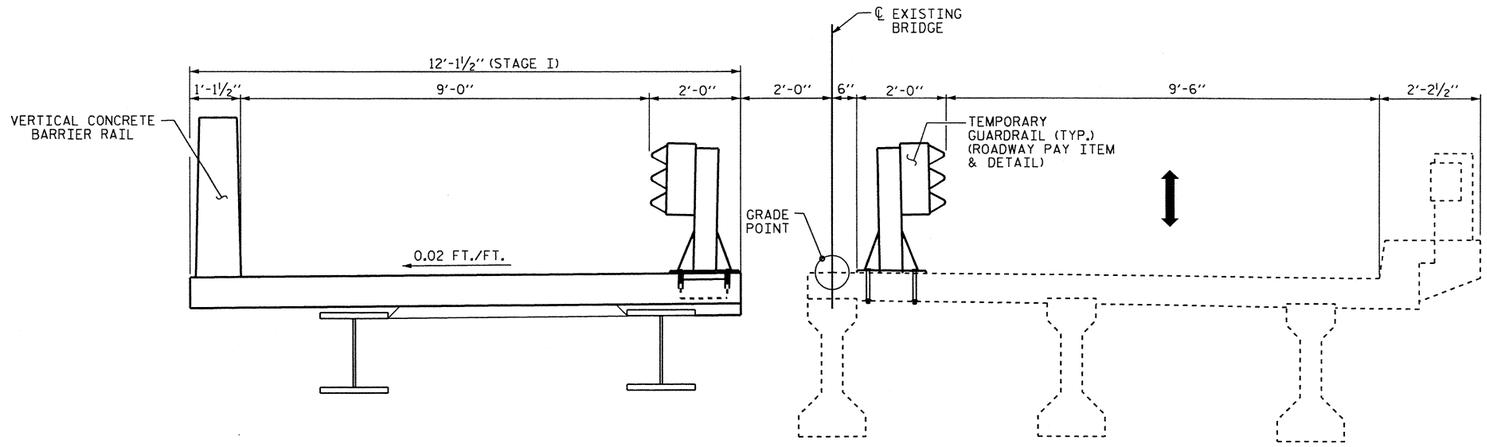

STAGE I CONSTRUCTION

(SPANS B & C)

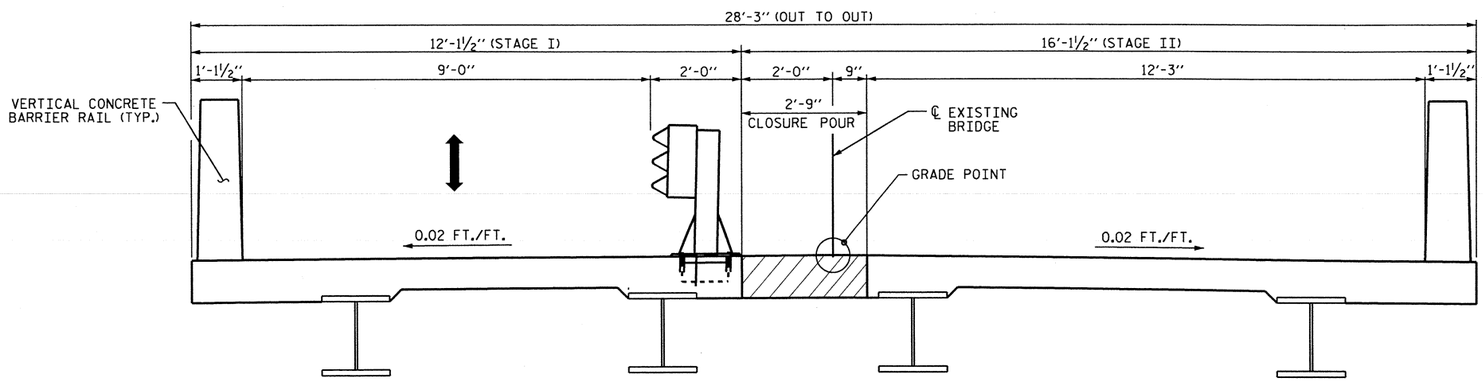

STAGE II CONSTRUCTION

(SPANS B & C)

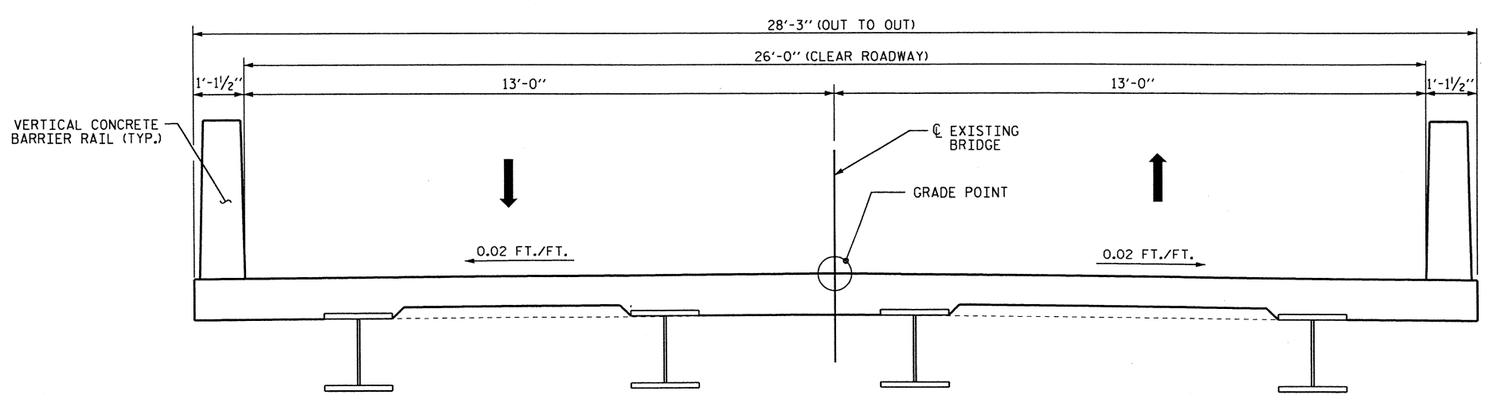

FINAL TYPICAL

(SPANS B & C)

NOTES

FOR TEMPORARY GUARDRAIL DETAILS AND PAY ITEM, SEE ROADWAY PLANS.

PROJECT NO. 17BP.11.H.6

SURRY COUNTY

STATION: BRIDGE 119

SHEET 2 OF 2

STATE OF NORTH CAROLINA
DEPARTMENT OF TRANSPORTATION
RALEIGH

SUPERSTRUCTURE
STAGING SEQUENCE
SPANS B & C

NORTH CAROLINA PROFESSIONAL SEAL 15826 BRIDGE ENGINEER BRADLEY D. KLAPPENBACH
4-17-2013

REVISIONS						SHEET NO.
NO.	BY:	DATE:	NO.	BY:	DATE:	S-4
1			3			TOTAL SHEETS
2			4			44

DRAWN BY : V.X. NGUYEN DATE : 4-8-13
CHECKED BY : B.D. KLAPPENBACH DATE : 4-10-13
DESIGN ENGINEER OF RECORD: DATE :

11-APR-2013 10:07
R:\Structures\vnguyen\850119_SD_PC.dgn
bklappenbach

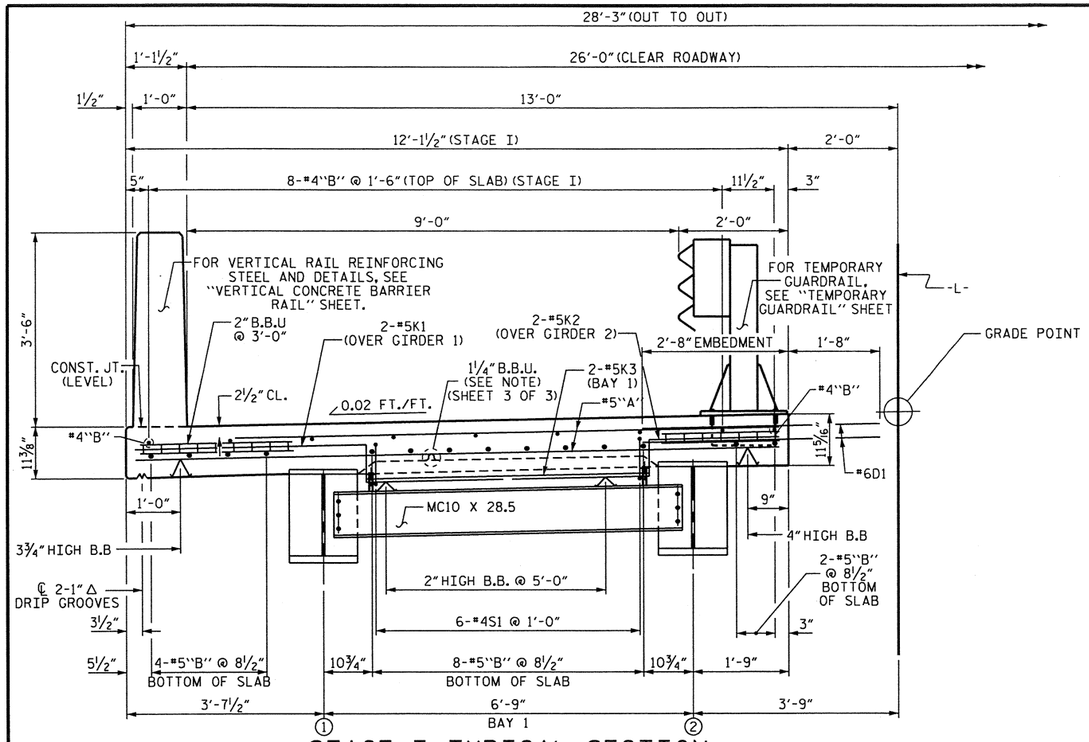

STAGE I TYPICAL SECTION

SHOWING BENT DIAPHRAGM

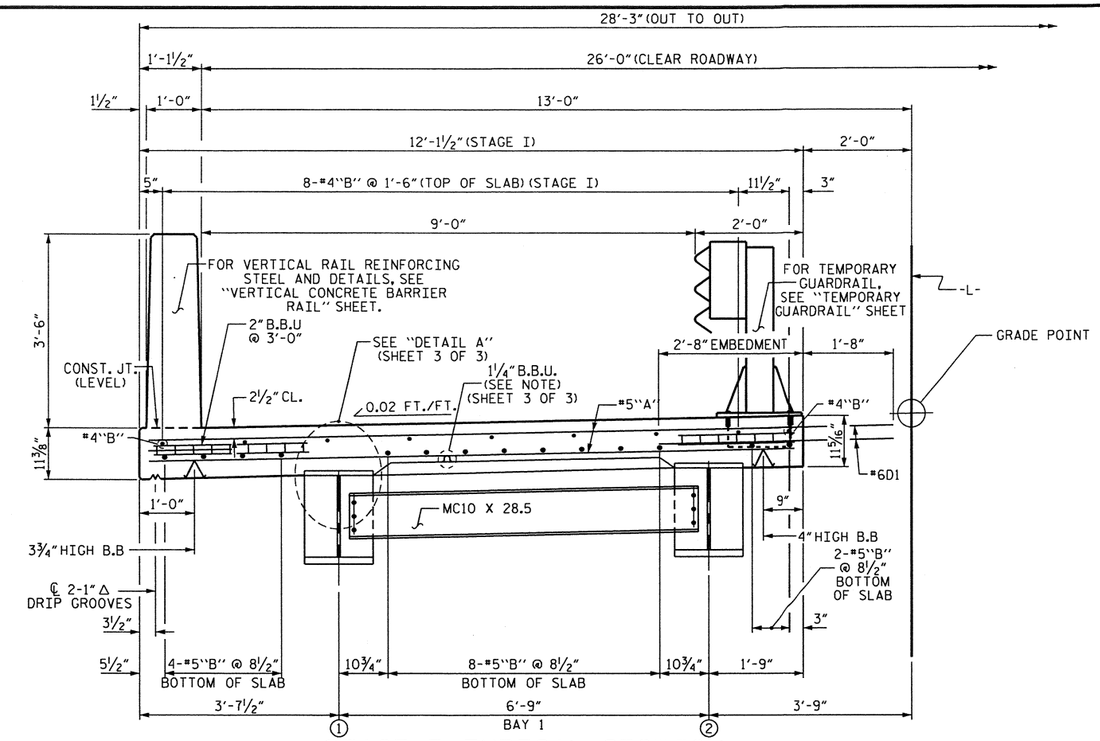

STAGE I TYPICAL SECTION

SHOWING INTERMEDIATE DIAPHRAGM

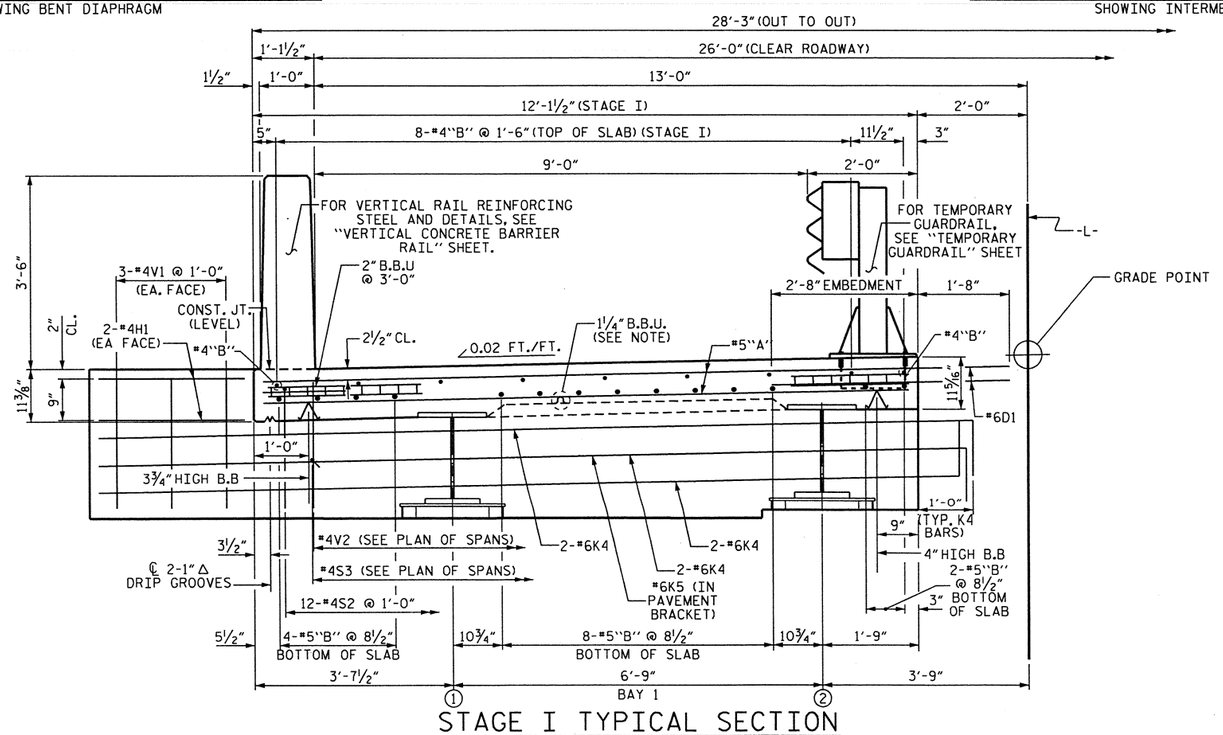

STAGE I TYPICAL SECTION

SHOWING CURTAIN WALL @ END BENTS

PROJECT NO. 17BP.11.H.6

SURRY COUNTY

STATION: BRIDGE 119

SHEET 1 OF 3

STATE OF NORTH CAROLINA
DEPARTMENT OF TRANSPORTATION
RALEIGH

SUPERSTRUCTURE STAGE I TYPICAL SECTION

NORTH CAROLINA PROFESSIONAL SEAL 15825 ENGINEER BRUCE D. KLAPPERICH 4-15-2013

REVISIONS						SHEET NO.
NO.	BY:	DATE:	NO.	BY:	DATE:	S-5
1			3			TOTAL SHEETS
2			4			44

DRAWN BY :	H. T. BARBOUR	DATE :	2-14-13
CHECKED BY :	D. HODGE	DATE :	3-13
DESIGN ENGINEER OF RECORD:	-	DATE :	-

18-APR-2013 09:34
O:\Structures\tbarbour\Microstation\17BP.11.H.4_SD_TS.dgn
tbarbour

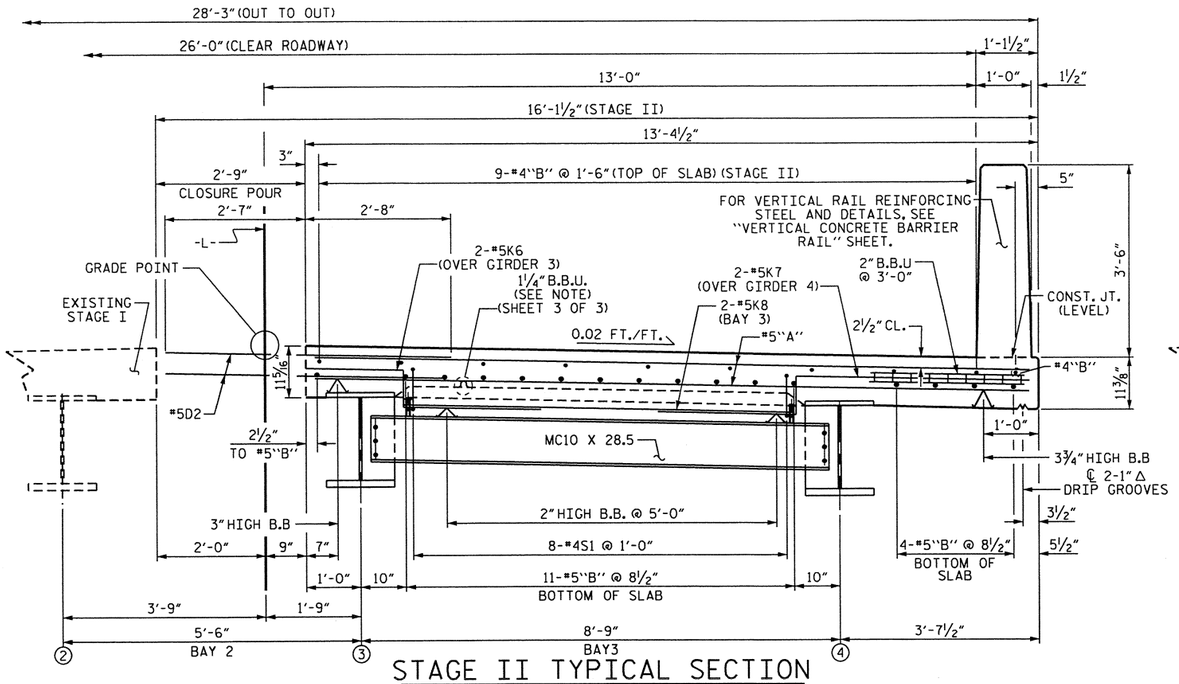

STAGE II TYPICAL SECTION

SHOWING BENT DIAPHRAGM

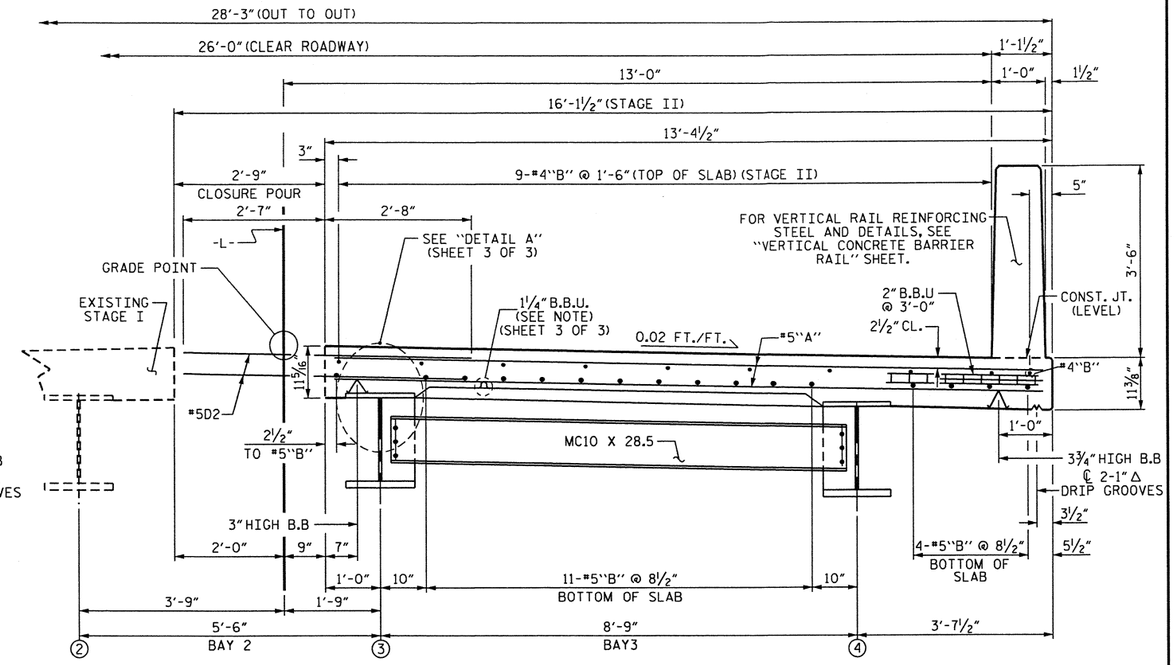

STAGE II TYPICAL SECTION

SHOWING INTERMEDIATE DIAPHRAGM

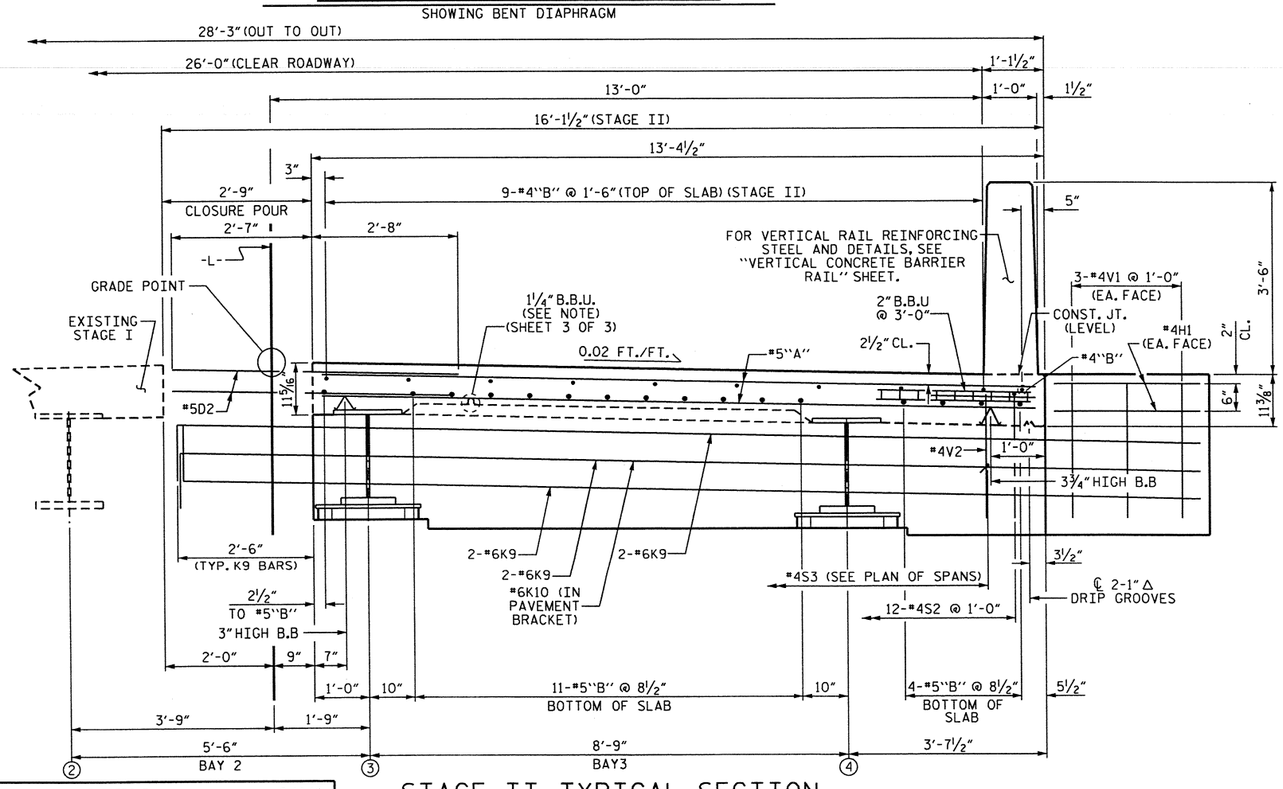

STAGE II TYPICAL SECTION

SHOWING CURTAIN WALL @ END BENTS

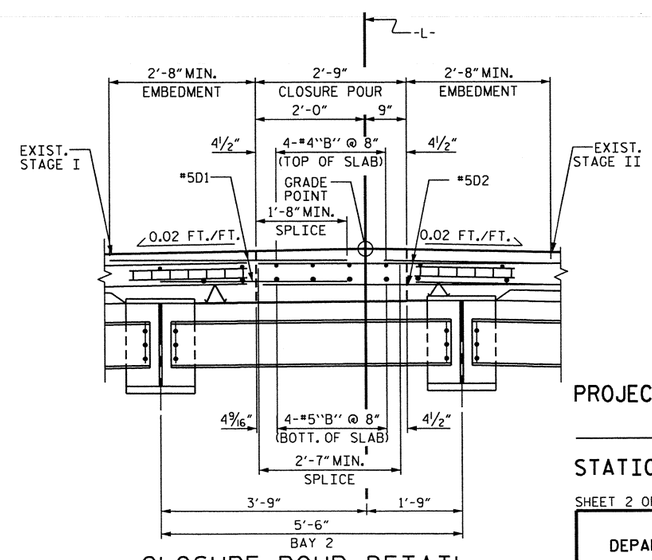

CLOSURE POUR DETAIL

(SHOWING INTERMEDIATE DIAPHRAGM)

PROJECT NO. 17BP.11.H.6

SURRY COUNTY

STATION: BRIDGE 119

SHEET 2 OF 3

STATE OF NORTH CAROLINA
DEPARTMENT OF TRANSPORTATION
RALEIGH

SUPERSTRUCTURE STAGE II TYPICAL SECTION

NORTH CAROLINA PROFESSIONAL SEAL 15825 ENGINEER BRIAN D. KLAPPENBACH

4-17-2013

REVISIONS						SHEET NO.
NO.	BY:	DATE:	NO.	BY:	DATE:	S-6
1			3			TOTAL SHEETS
2			4			44

DRAWN BY : H. T. BARBOUR DATE : 2-14-13
CHECKED BY : D. HODGE DATE : 3-13
DESIGN ENGINEER OF RECORD: - DATE : -

12-APR-2013 15:39
Q:\Structure8\tbarbour\Microstation\17BP.11.H.4_SD_TS.dgn
tbarbour

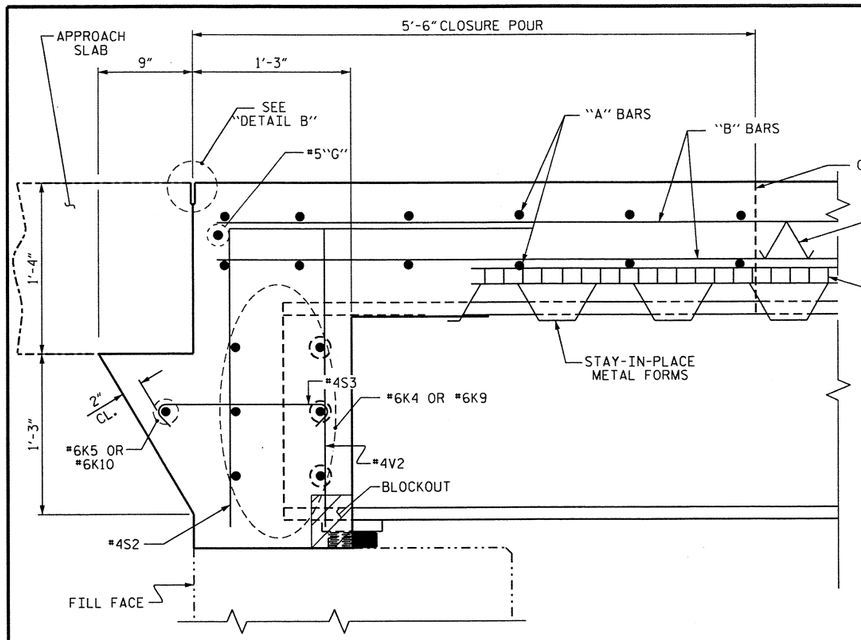

SECTION AT END BENT

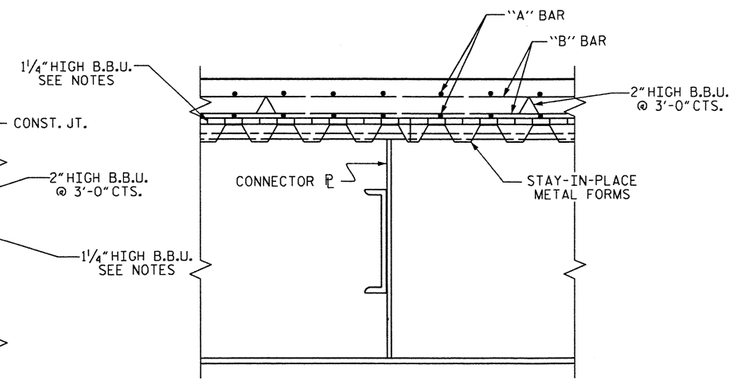

SECTION AT INTERMEDIATE DIAPHRAGM

NOTES

PROVIDE 1¼" HIGH BEAM BOLSTERS UPPER AT 4'-0" CTS. ATOP THE METAL STAY-IN-PLACE FORMS TO SUPPORT THE BOTTOM MAT OF 'A' BARS. WHEN USING REMOVABLE FORMS, PROVIDE CONTINUOUS HIGH CHAIRS FOR METAL DECK (C.H.C.M.) @ 4'-0" CTS. WITH A HEIGHT TO SUPPORT THE BOTTOM MAT OF 'A' BARS A CLEAR DISTANCE OF 2½" ABOVE THE TOP OF THE REMOVABLE FORM.

BARRIER RAIL IN EACH SPAN SHALL NOT BE CAST UNTIL ALL SLAB CONCRETE IN EACH SPAN'S STAGE HAS BEEN CAST AND HAS REACHED A MINIMUM COMPRESSIVE STRENGTH OF 3,000 PSI.

DOWELS SHALL BE PLACED IN THE SAME HORIZONTAL PLANE AS THE TOP AND BOTTOM SLAB REINFORCING STEEL.

#5 "G" BARS MAY BE SHIFTED SLIGHTLY, AS NECESSARY, TO CLEAR REINFORCING STEEL AND STIRRUPS.

THE CONTRACTOR MAY, WHEN NECESSARY, PROPOSE A SCHEME FOR AVOIDING INTERFERENCE BETWEEN METAL STAY-IN-PLACE FORM SUPPORTS OR FORMS AND BEAM/GIRDER STIFFENERS OR CONNECTOR PLATES. THE PROPOSAL SHALL BE INDICATED, AS APPROPRIATE, ON EITHER THE STEEL WORKING DRAWINGS OR THE METAL STAY-IN-PLACE FORM WORKING DRAWINGS.

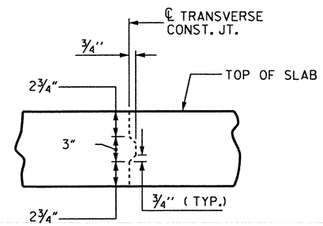

TRANSVERSE CONSTRUCTION JOINT DETAIL

NOTE: REINFORCING STEEL IN SLAB NOT SHOWN. LONGITUDINAL REINFORCING STEEL SHALL BE CONTINUOUS THRU JOINT

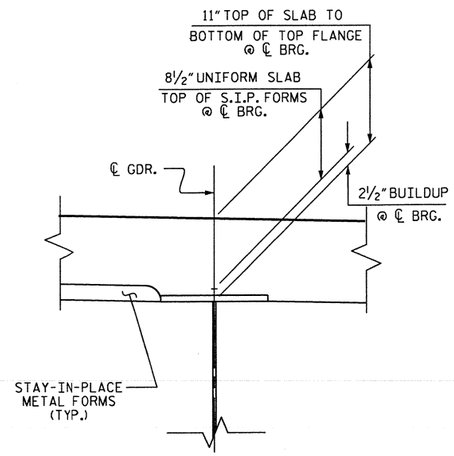

DETAIL A

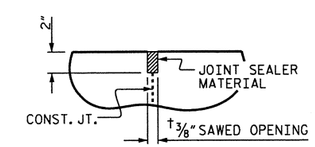

DETAIL B

(⊥ NORMAL TO END BENT)

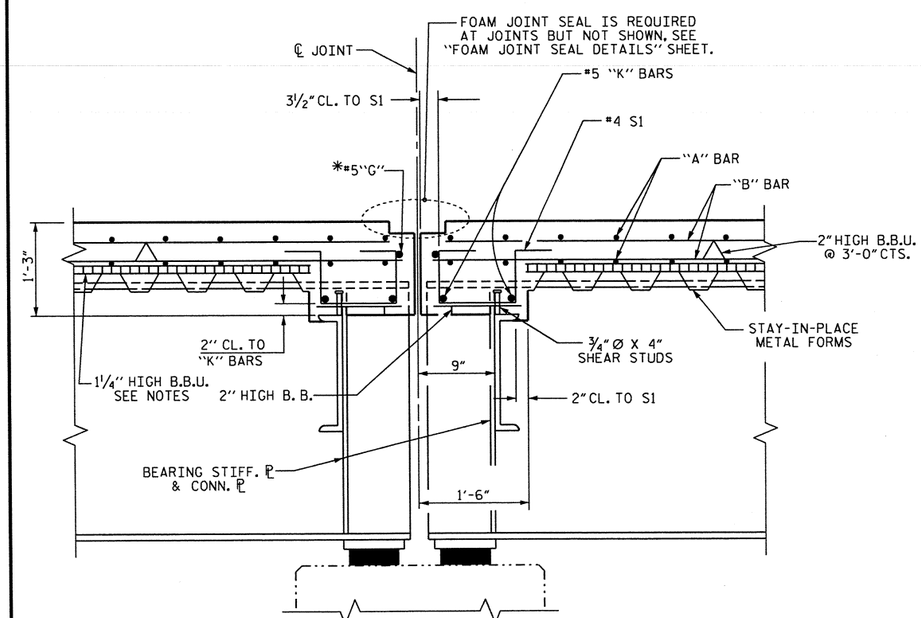

SECTION AT BENT @ BAY 1 & 3 ONLY

*#5 "G" BAR MAY BE SHIFTED SLIGHTLY, AS NECESSARY, TO CLEAR DIAPHRAGM AND REINFORCING STEEL.

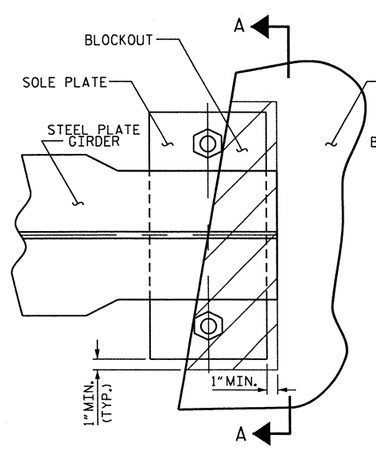

PLAN

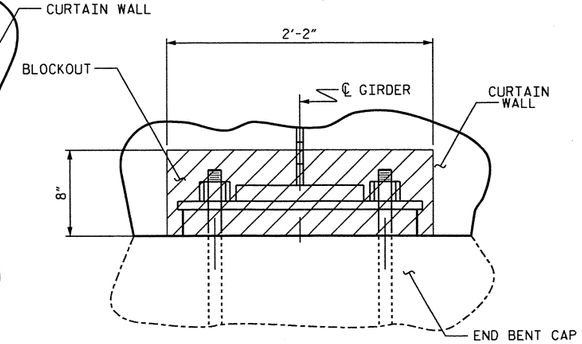

SECTION A-A

END BENT CURTAIN WALL BLOCK-OUT DETAIL

PROJECT NO. 17BP.11.H.6

SURRY COUNTY

STATION: BRIDGE 119

SHEET 3 OF 3

STATE OF NORTH CAROLINA
DEPARTMENT OF TRANSPORTATION
RALEIGH

SUPERSTRUCTURE TYPICAL SECTION DETAILS

NORTH CAROLINA PROFESSIONAL SEAL 15625 ENGINEER BRUCE D. KLAPPENBACH
4-18-2013

REVISIONS						SHEET NO.
NO.	BY:	DATE:	NO.	BY:	DATE:	S-7
1			3			TOTAL SHEETS
2			4			44

DRAWN BY :	H. T. BARBOUR	DATE :	2-18-13
CHECKED BY :	D. HODGE	DATE :	3-13
DESIGN ENGINEER OF RECORD:	-	DATE :	-

18-APR-2013 09:34
Q:\Structures\tbarbour\Microstation\17BP.11.H.4_SD_TS.dgn
tbarbour

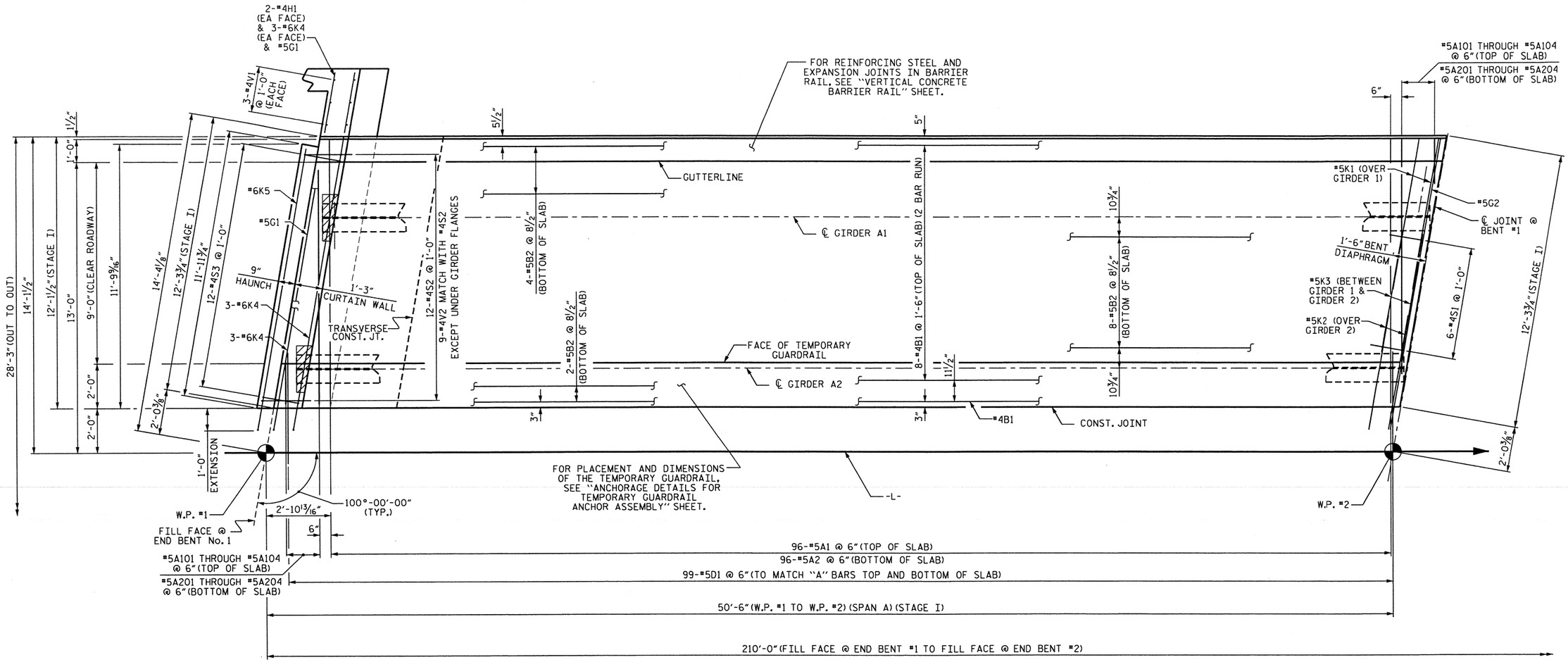

SPAN A STAGE I

PROJECT NO. 17BP.11.H.6

SURRY COUNTY

STATION: BRIDGE 119

SHEET 1 OF 8

STATE OF NORTH CAROLINA
DEPARTMENT OF TRANSPORTATION
RALEIGH

SUPERSTRUCTURE PLAN OF SPAN A STAGE I

NORTH CAROLINA PROFESSIONAL SEAL 15825 BRIDGE ENGINEER D. KLAPPENBACH

4-17-2013

REVISIONS						SHEET NO.
NO.	BY:	DATE:	NO.	BY:	DATE:	S-8
1			3			TOTAL SHEETS
2			4			44

DRAWN BY : H. T. BARBOUR DATE : 2-26-13
CHECKED BY : D. HODGE DATE : 4-13
DESIGN ENGINEER OF RECORD: - DATE : -

16-APR-2013 17:01
O:\Structures\tbarbour\Microstation\17BP.11.H.4_SD_TS.dgn
tbarbour

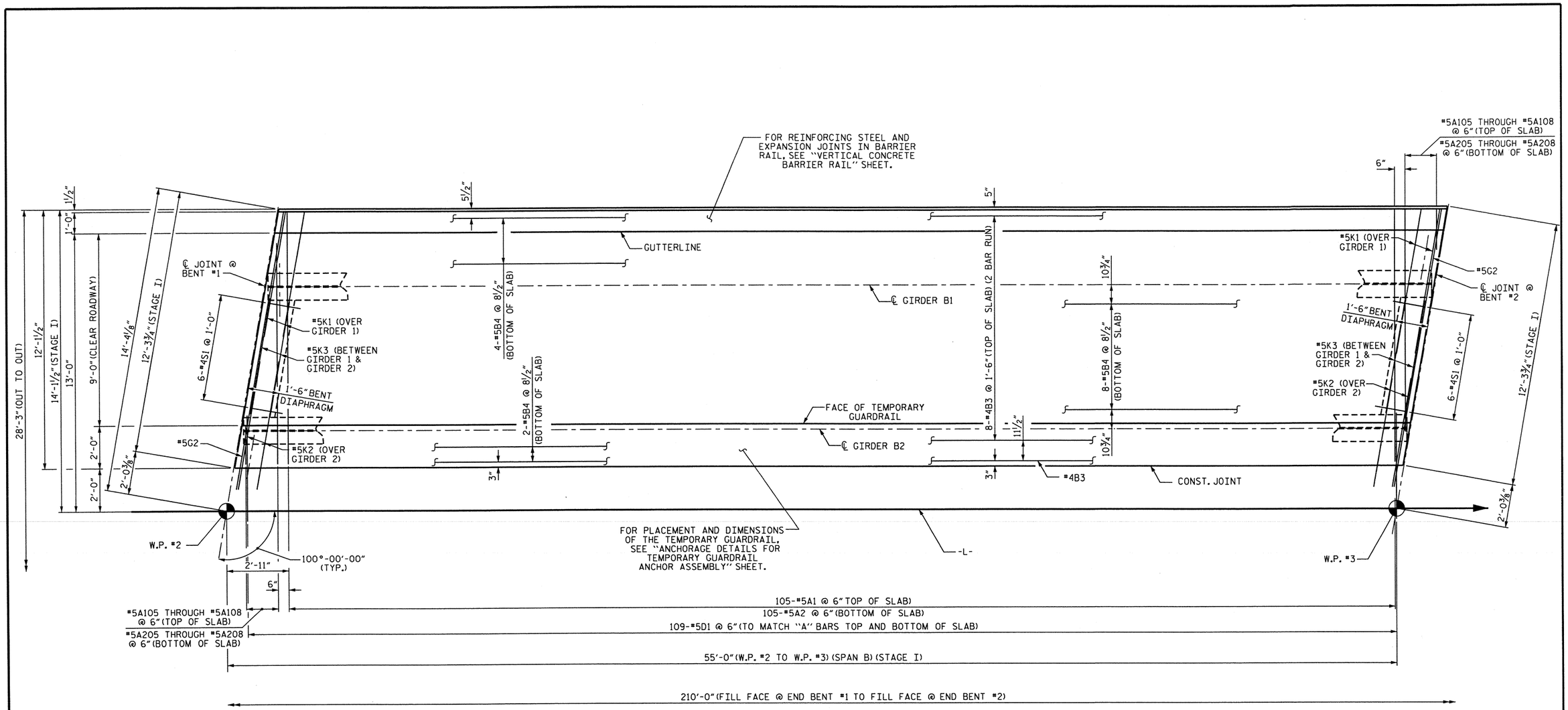

SPAN B STAGE I

PROJECT NO. 17BP.11.H.6

SURRY COUNTY

STATION: BRIDGE 119

SHEET 2 OF 8

STATE OF NORTH CAROLINA
DEPARTMENT OF TRANSPORTATION
RALEIGH

SUPERSTRUCTURE PLAN OF SPAN B STAGE I

NORTH CAROLINA PROFESSIONAL SEAL 15825 ENGINEER BRUCE D. KLAPPENBACH

4-17-2013

REVISIONS							SHEET NO.
NO.	BY:	DATE:	NO.	BY:	DATE:		S-9
1			3				TOTAL SHEETS
2			4				44

DRAWN BY :	H. T. BARBOUR	DATE :	2-26-13
CHECKED BY :	D. HODGE	DATE :	4-13
DESIGN ENGINEER OF RECORD:	-	DATE :	-

12-APR-2013 15:38
O:\Structures\tbarbour\Microstation\17BP.11.H.4_SD_TS.dgn
tbarbour

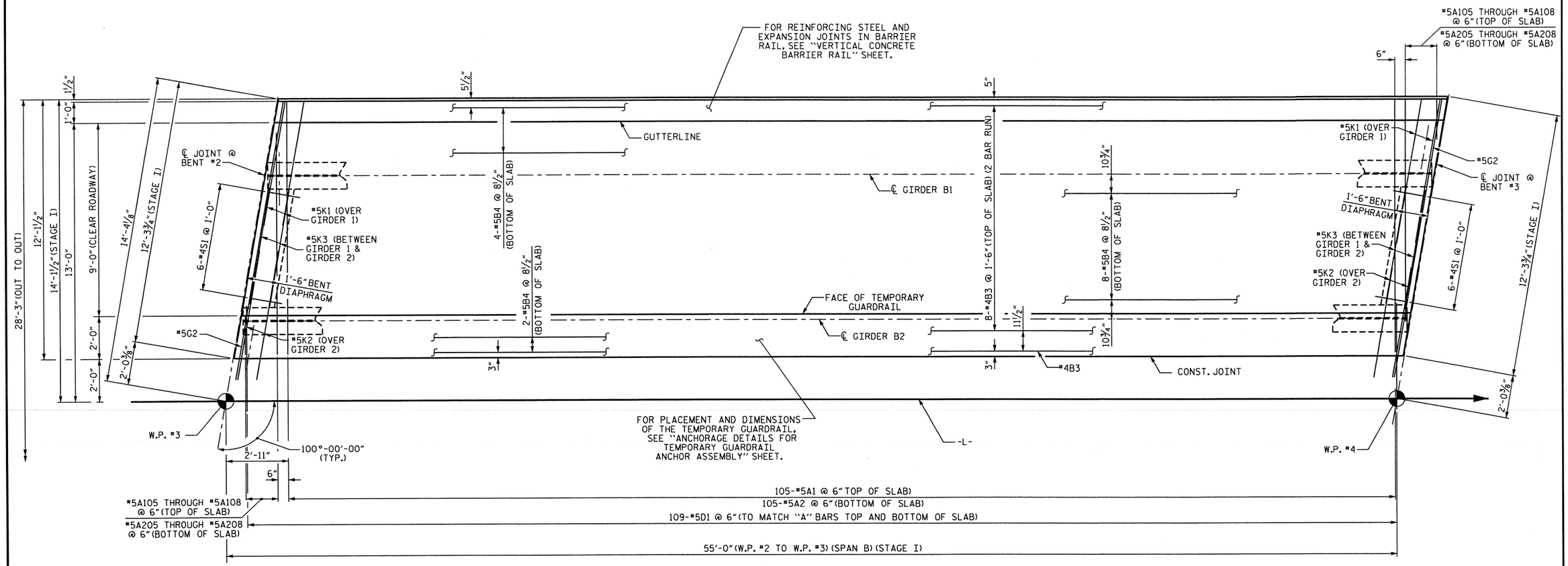

SPAN C STAGE I

PROJECT NO. 17BP.11.H.6

SURRY COUNTY

STATION: BRIDGE 119

SHEET 3 OF 8

STATE OF NORTH CAROLINA
DEPARTMENT OF TRANSPORTATION
RALEIGH

SUPERSTRUCTURE PLAN OF SPAN C STAGE I

NORTH CAROLINA PROFESSIONAL SEAL 15825 ENGINEER BRUCE D. KLAPPENBACH
4-17-2013

REVISIONS						SHEET NO.
NO.	BY:	DATE:	NO.	BY:	DATE:	S-10
1			3			TOTAL SHEETS
2			4			44

DRAWN BY : H. T. BARBOUR DATE : 2-26-13
CHECKED BY : D. HODGE DATE : 4-13
DESIGN ENGINEER OF RECORD: - DATE : -

12-APR-2013 15:38
G:\Structures\tbarbour\Microstation\17BP.11.H.4_SD_TS.dgn
tbarbour

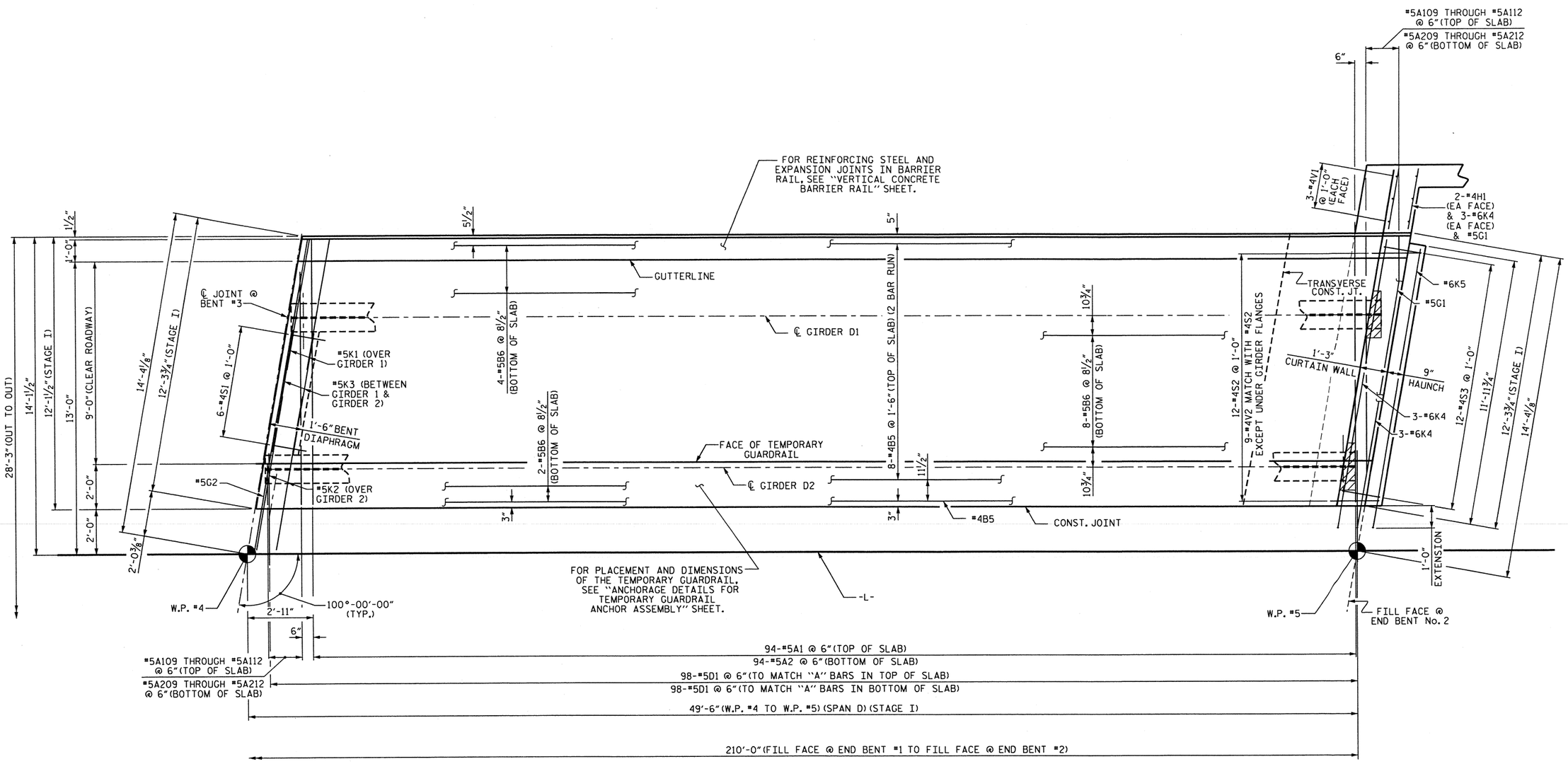

SPAN D STAGE I

PROJECT NO. 17BP.11.H.6

SURRY COUNTY

STATION: BRIDGE 119

SHEET 4 OF 8

STATE OF NORTH CAROLINA
DEPARTMENT OF TRANSPORTATION
RALEIGH

SUPERSTRUCTURE PLAN OF SPAN D STAGE I

NORTH CAROLINA PROFESSIONAL SEAL 15825 ENGINEER BRUCE D. KLAPPENBACH
4-17-2013

REVISIONS						SHEET NO.
NO.	BY:	DATE:	NO.	BY:	DATE:	S-11
1			3			TOTAL SHEETS
2			4			44

DRAWN BY : H. T. BARBOUR DATE : 2-26-13
CHECKED BY : D. HODGE DATE : 3-13
DESIGN ENGINEER OF RECORD: - DATE : -

16-APR-2013 17:03
O:\Structures\tbarbour\Microstation\17BP.11.H.4_SD_TS.dgn
tbarbour

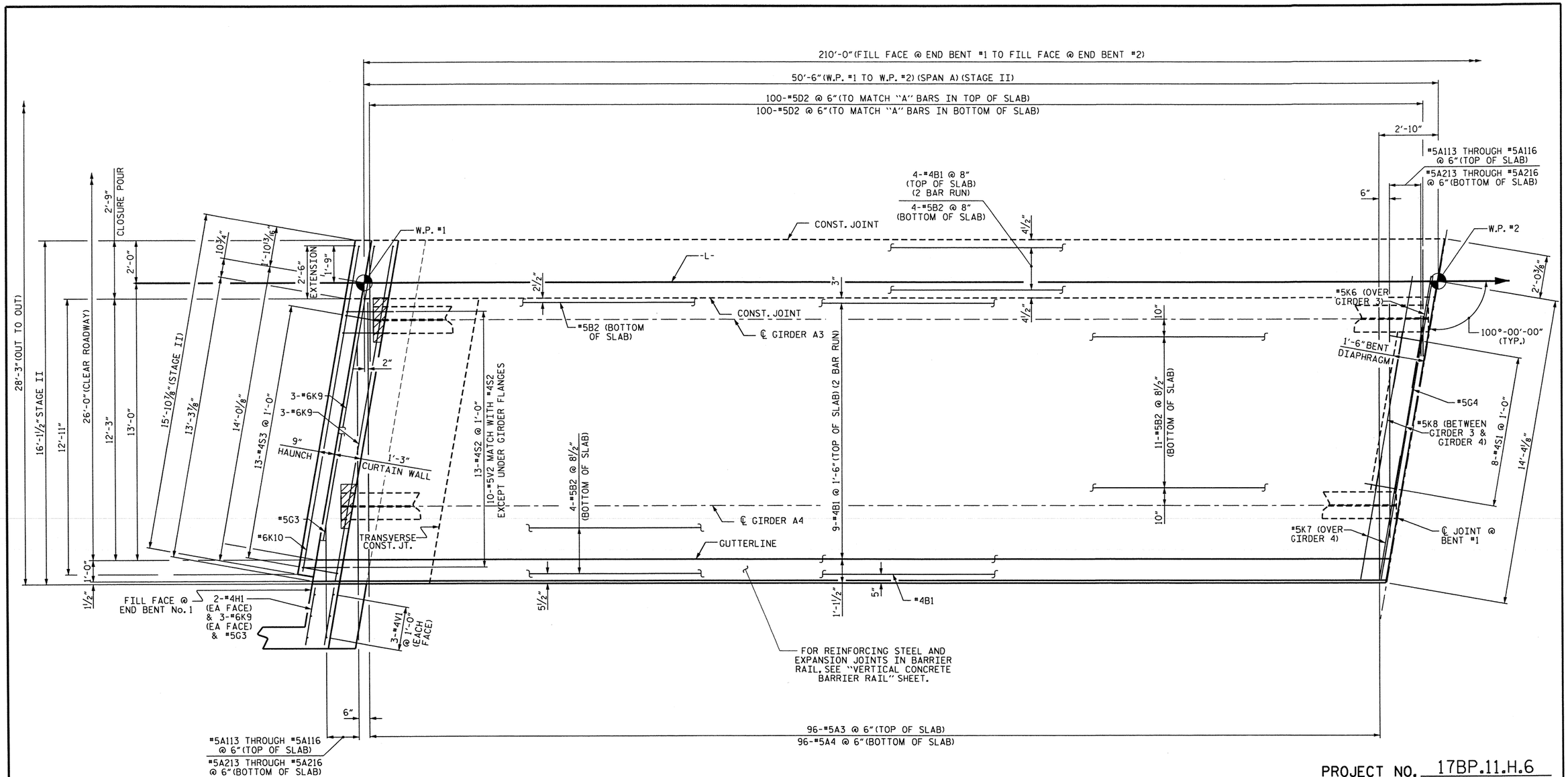

SPAN A STAGE II

PROJECT NO. 17BP.11.H.6

SURRY COUNTY

STATION: BRIDGE 119

SHEET 5 OF 8

STATE OF NORTH CAROLINA
DEPARTMENT OF TRANSPORTATION
RALEIGH

SUPERSTRUCTURE PLAN OF SPAN A STAGE II

NORTH CAROLINA PROFESSIONAL SEAL 15825 ENGINEER BRUCE D. KLAPPENBACH

4/17/2013

REVISIONS								SHEET NO.
NO.	BY:	DATE:	NO.	BY:	DATE:			S-12
1			3					TOTAL SHEETS
2			4					44

DRAWN BY :	H. T. BARBOUR	DATE :	2-26-13
CHECKED BY :	D. HODGE	DATE :	3-13
DESIGN ENGINEER OF RECORD:	-	DATE :	-

16-APR-2013 17:06
O:\Structures\tbarbour\Microstation\17BP.11.H.4_SD_TS.dgn
tbarbour

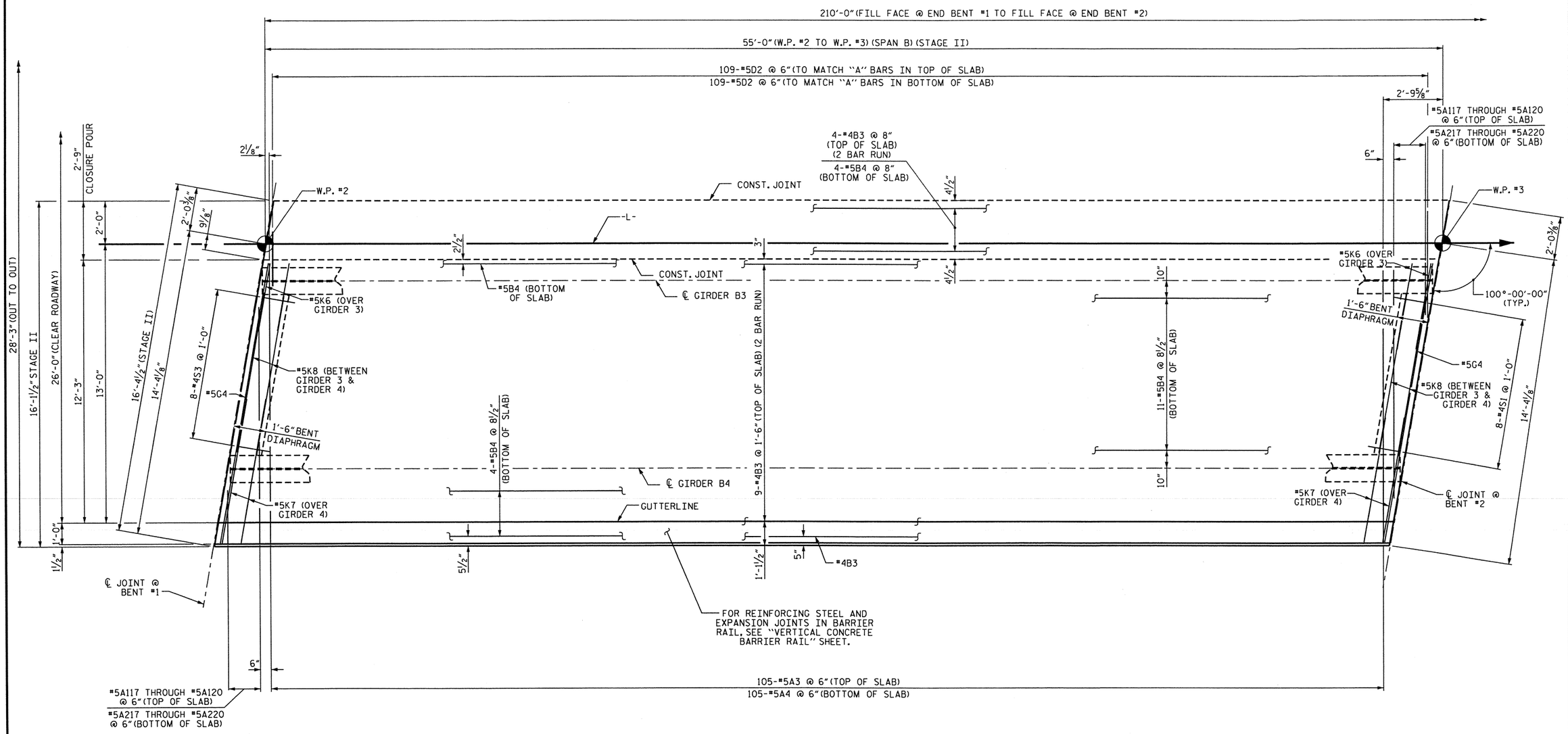

SPAN B STAGE II

PROJECT NO. 17BP.11.H.6

SURRY COUNTY

STATION: BRIDGE 119

SHEET 6 OF 8

STATE OF NORTH CAROLINA
DEPARTMENT OF TRANSPORTATION
RALEIGH

SUPERSTRUCTURE PLAN OF SPAN B STAGE II

NORTH CAROLINA PROFESSIONAL SEAL 15825 ENGINEER BRUCE D. KLAPPENBACH

4-17-2013

REVISIONS						SHEET NO.
NO.	BY:	DATE:	NO.	BY:	DATE:	S-13
1			3			TOTAL SHEETS
2			4			44

DRAWN BY : H. T. BARBOUR DATE : 2-26-13
CHECKED BY : D. HODGE DATE : 2-13
DESIGN ENGINEER OF RECORD: - DATE : -

16-APR-2013 17:07
O:\Structures\tbarbour\Microstation\17BP.11.H.4_SD_TS.dgn
tbarbour

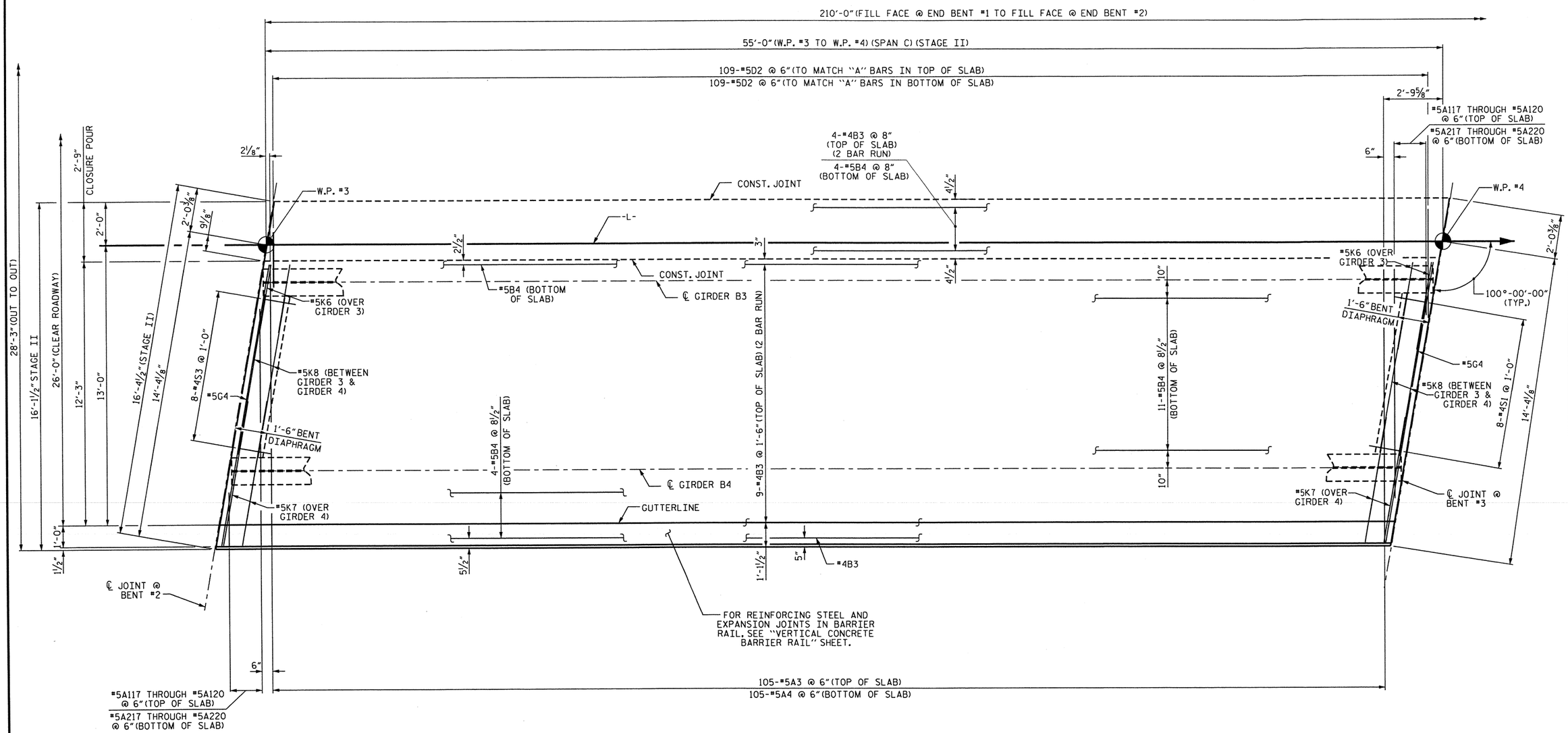

SPAN C STAGE II

PROJECT NO. 17BP.11.H.6

SURRY COUNTY

STATION: BRIDGE 119

SHEET 7 OF 8

STATE OF NORTH CAROLINA
DEPARTMENT OF TRANSPORTATION
RALEIGH

SUPERSTRUCTURE PLAN OF SPAN C STAGE II

NORTH CAROLINA PROFESSIONAL SEAL 15825 ENGINEER D. KL APPERSON
BRIDGE
4-17-2013

REVISIONS						SHEET NO.
NO.	BY:	DATE:	NO.	BY:	DATE:	S-14
1			3			TOTAL SHEETS
2			4			44

DRAWN BY : H. T. BARBOUR DATE : 2-26-13
CHECKED BY : D. HODGE DATE : 4-13
DESIGN ENGINEER OF RECORD: - DATE : -

12-APR-2013 15:37
O:\Structures\tbarbour\Microstation\17BP.11.H.4_SD_TS.dgn
tbarbour

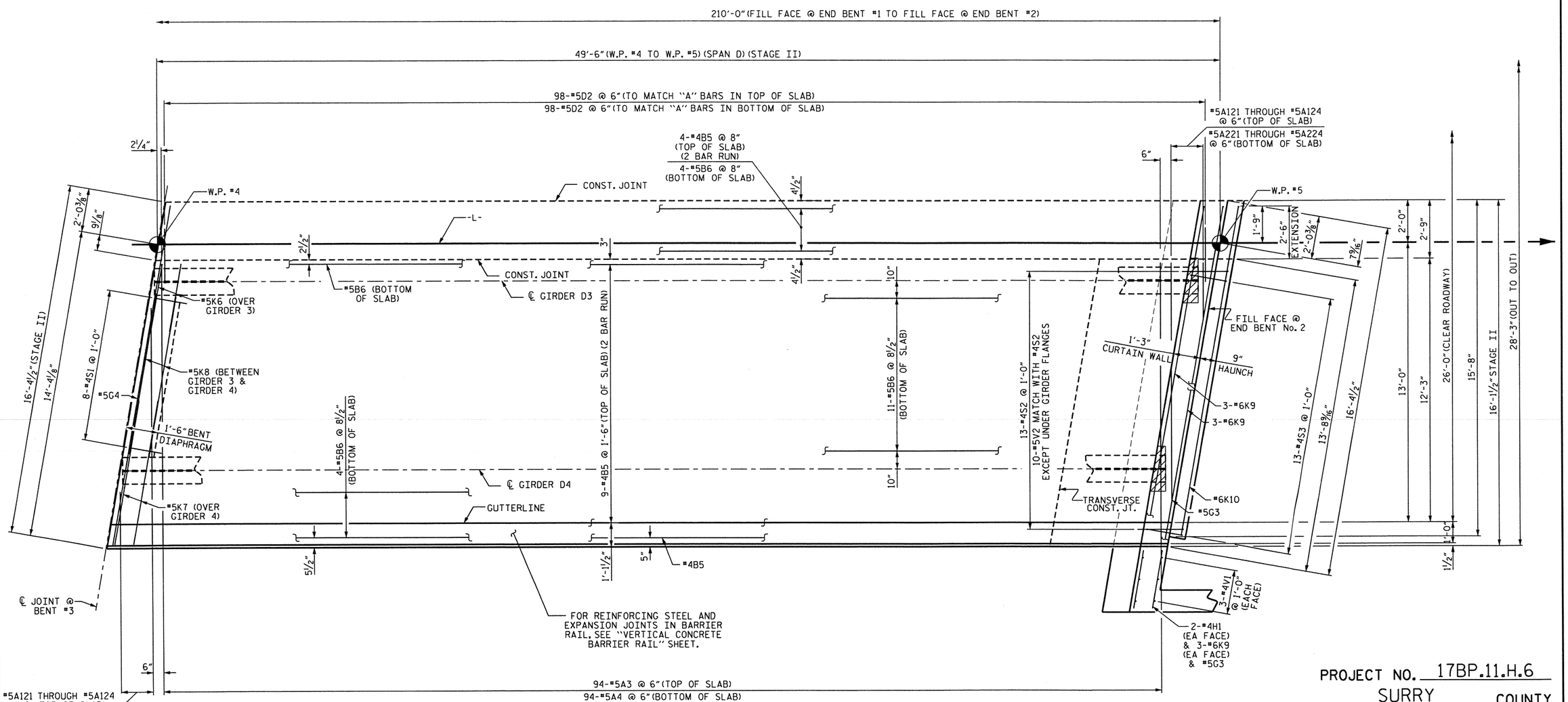

SPAN D STAGE II

PROJECT NO. 17BP.11.H.6

SURRY COUNTY

STATION: BRIDGE 119

SHEET 8 OF 8

STATE OF NORTH CAROLINA
DEPARTMENT OF TRANSPORTATION
RALEIGH

SUPERSTRUCTURE PLAN OF SPAN D STAGE II

NORTH CAROLINA PROFESSIONAL SEAL 15825 ENGINEER DANIEL D. KLAPPENBACH
4-17-2013

REVISIONS						SHEET NO.
NO.	BY:	DATE:	NO.	BY:	DATE:	S-15
1			3			TOTAL SHEETS
2			4			44

DRAWN BY : H. T. BARBOUR DATE : 2-26-13
CHECKED BY : D. HODGE DATE : 3-13
DESIGN ENGINEER OF RECORD: - DATE : -

17-APR-2013 09:01
O:\Structures\tbarbour\Microstation\17BP.11.H.4_SD_TS.dgn
tbarbour

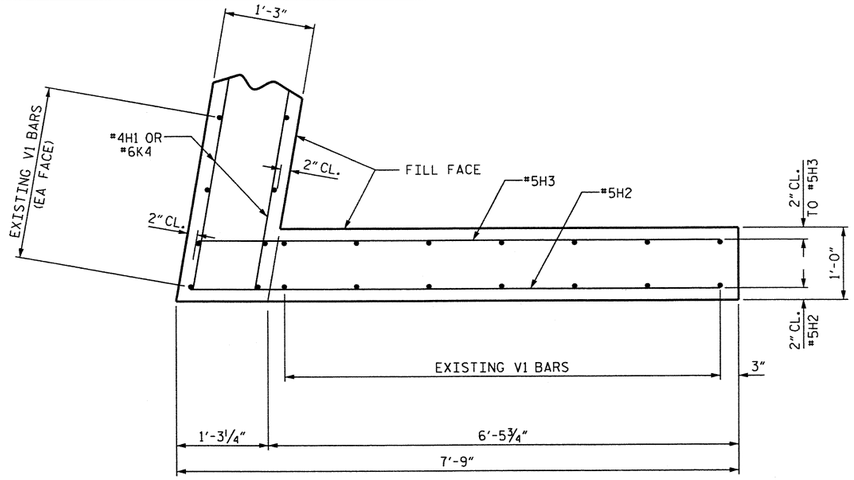

PLAN OF LEFT WING (W1)

(STAGE I)

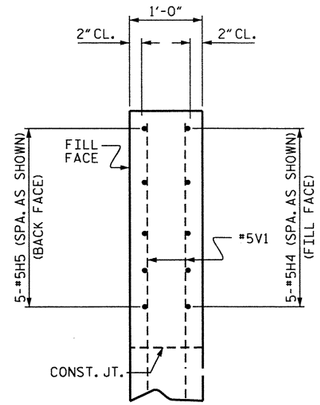

SECTION Y-Y

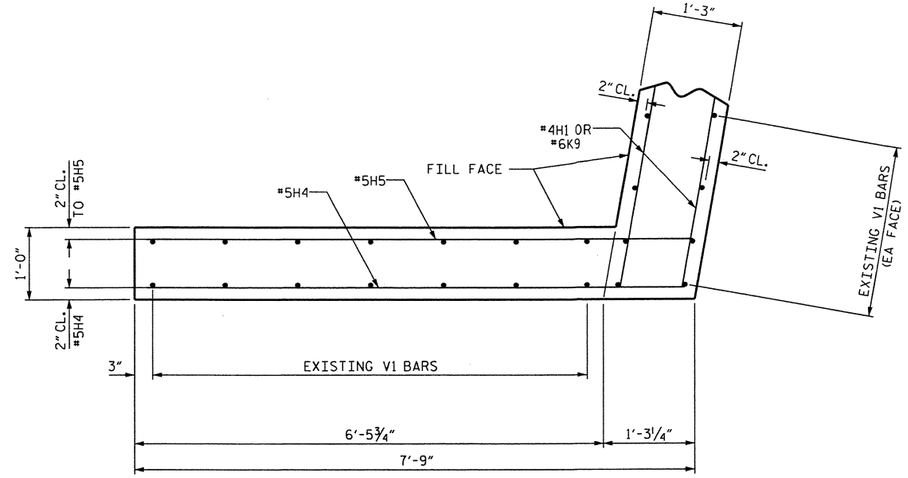

PLAN OF RIGHT WING (W2)

(STAGE II)

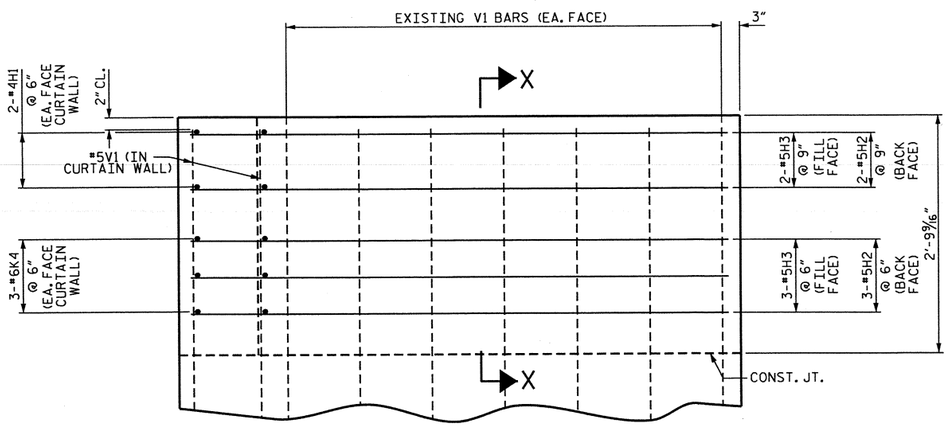

ELEVATION OF LEFT WING (W1)

(STAGE I)

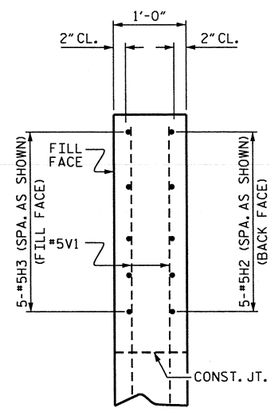

SECTION X-X

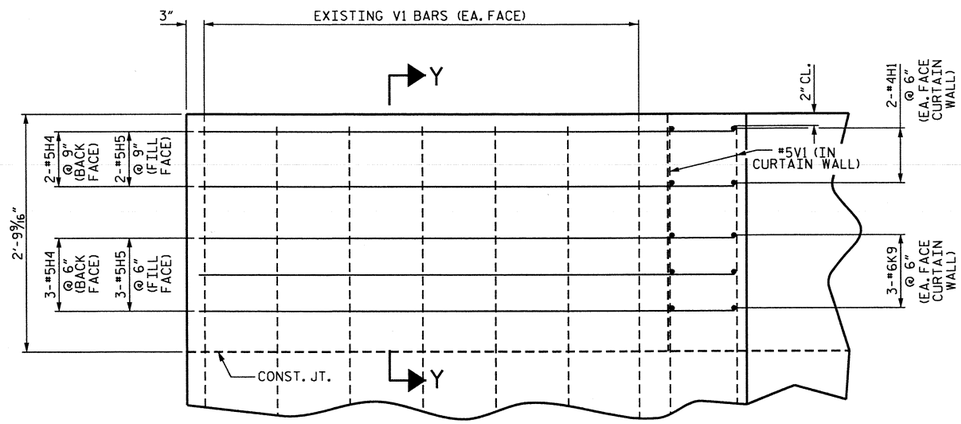

ELEVATION OF RIGHT WING (W2)

(STAGE II)

PROJECT NO. 17BP.11.H.6

SURRY COUNTY

STATION: BRIDGE 119

SHEET 1 OF 2

STATE OF NORTH CAROLINA
DEPARTMENT OF TRANSPORTATION
RALEIGH

SUPERSTRUCTURE
TOP OF WINGS
END BENT #1

NORTH CAROLINA PROFESSIONAL SEAL 15825 PROFESSIONAL ENGINEER D. KLAPPENBACH
4-17-2013

REVISIONS						SHEET NO.
NO.	BY:	DATE:	NO.	BY:	DATE:	S-16
1			3			TOTAL SHEETS
2			4			44

DRAWN BY : H. T. BARBOUR DATE : 3-6-13
CHECKED BY : D. HODGE DATE : 4-13
DESIGN ENGINEER OF RECORD: - DATE : -

12-APR-2013 15:37
O:\Structures\tbarbour\Microstation\17BP.11.H.4_SD_TS.dgn
tbarbour

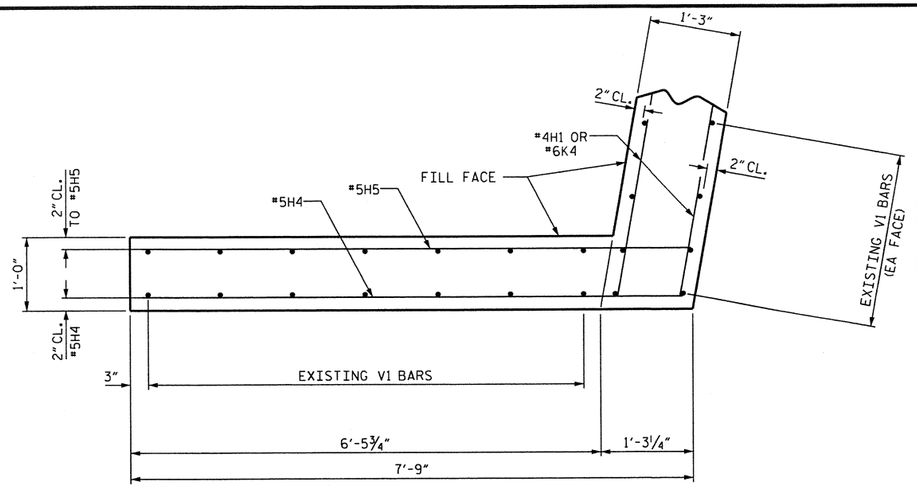

PLAN OF LEFT WING (W1)

(STAGE I)

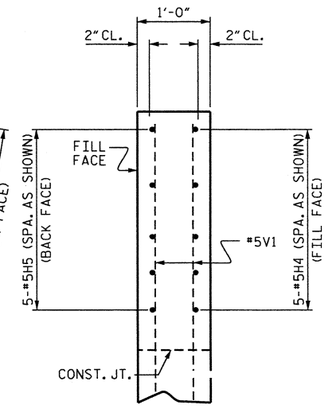

SECTION Y-Y

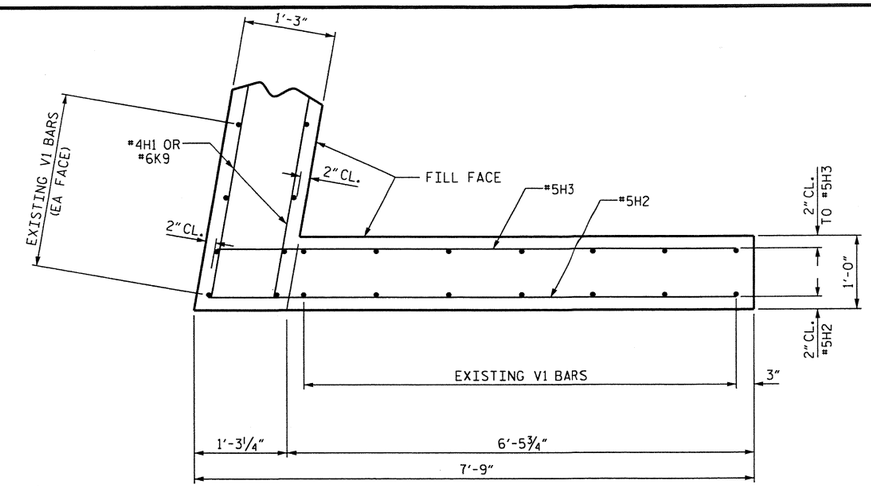

PLAN OF RIGHT WING (W2)

(STAGE II)

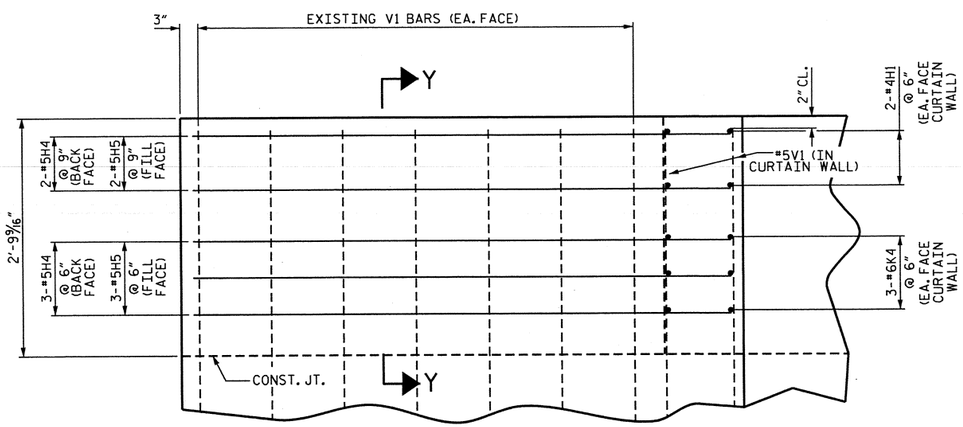

ELEVATION OF LEFT WING (W1)

(STAGE I)

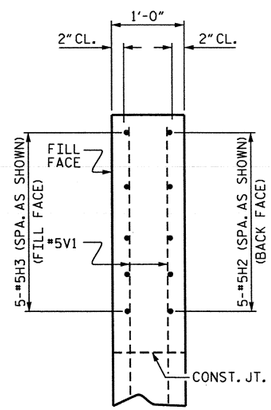

SECTION X-X

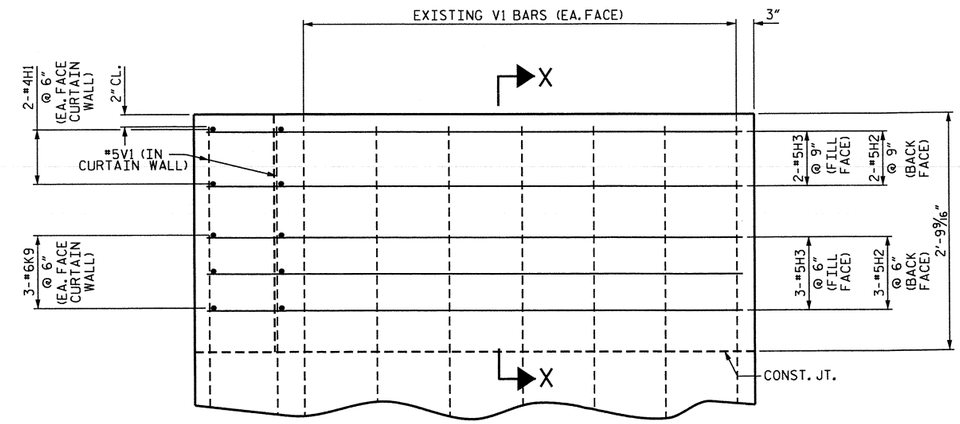

ELEVATION OF RIGHT WING (W2)

(STAGE II)

PROJECT NO. 17BP.11.H.6

SURRY COUNTY

STATION: BRIDGE 119

SHEET 2 OF 2

STATE OF NORTH CAROLINA
DEPARTMENT OF TRANSPORTATION
RALEIGH

SUPERSTRUCTURE
TOP OF WINGS
END BENT #2

NORTH CAROLINA PROFESSIONAL SEAL 15825 ENGINEER BRIAN D. KLAPPENBACH

4-17-2013

REVISIONS						SHEET NO.
NO.	BY:	DATE:	NO.	BY:	DATE:	S-17
1			3			TOTAL SHEETS
2			4			44

DRAWN BY : H. T. BARBOUR DATE : 3-6-13
CHECKED BY : D. HODGE DATE : 4-13
DESIGN ENGINEER OF RECORD: - DATE : -

12-APR-2013 15:36
O:\Structures\tbarbour\Microstation\17BP.11.H.4_SD_TS.dgn
tbarbour

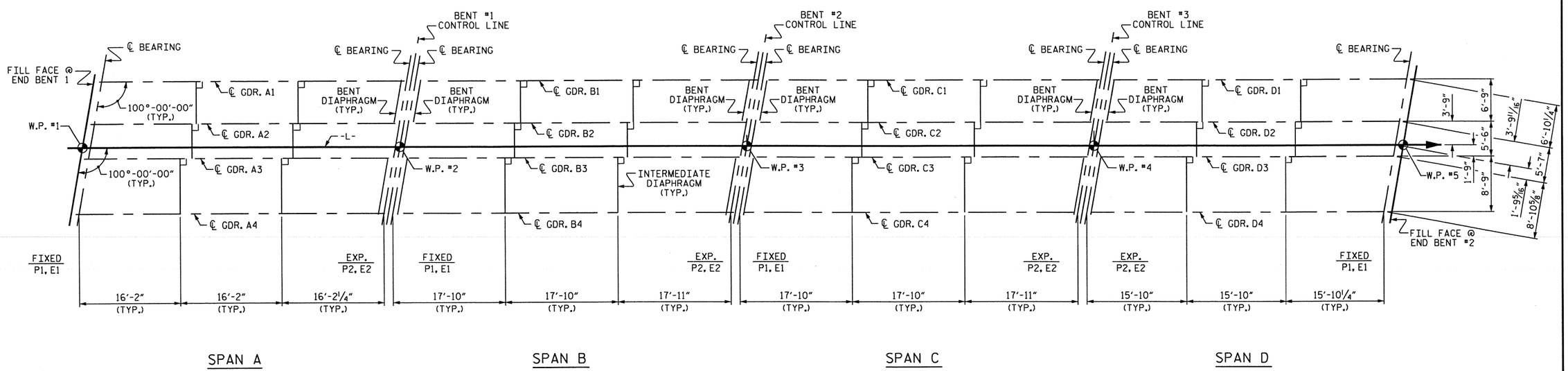

FRAMING PLAN

PROJECT NO. 17BP.11.H.6
SURRY COUNTY
STATION: BRIDGE 119

STATE OF NORTH CAROLINA
DEPARTMENT OF TRANSPORTATION
RALEIGH

SUPERSTRUCTURE FRAMING PLAN

NORTH CAROLINA PROFESSIONAL SEAL 15825 ENGINEER BRUCE D. KLAPPENBACH
4-17-2013

REVISIONS						SHEET NO.
NO.	BY:	DATE:	NO.	BY:	DATE:	S-18
1			3			TOTAL SHEETS
2			4			44

DRAWN BY : H. T. BARBOUR DATE : 03-07-13
CHECKED BY : D. HODGE DATE : 04-13
DESIGN ENGINEER OF RECORD: - DATE : -

16-APR-2013 17:11
O:\Structures\tbarbour\Microstation\17BP.11.H.4_SD_TS.dgn
tbarbour

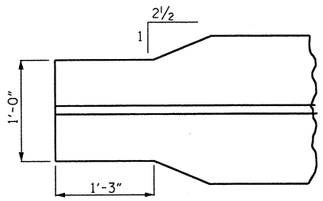

BOTTOM FLANGE DETAIL

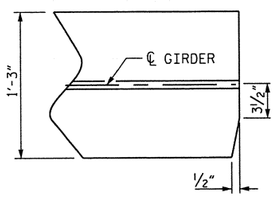

TOP FLANGE COPING DETAIL
(FAR SIDE ONLY)

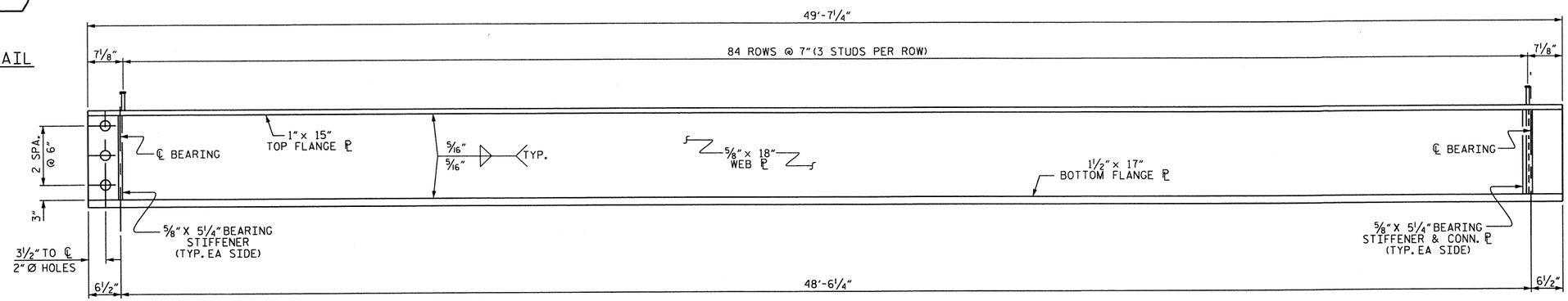

GIRDER ELEVATION
(INTERMEDIATE DIAPHRAGM NOT SHOWN)

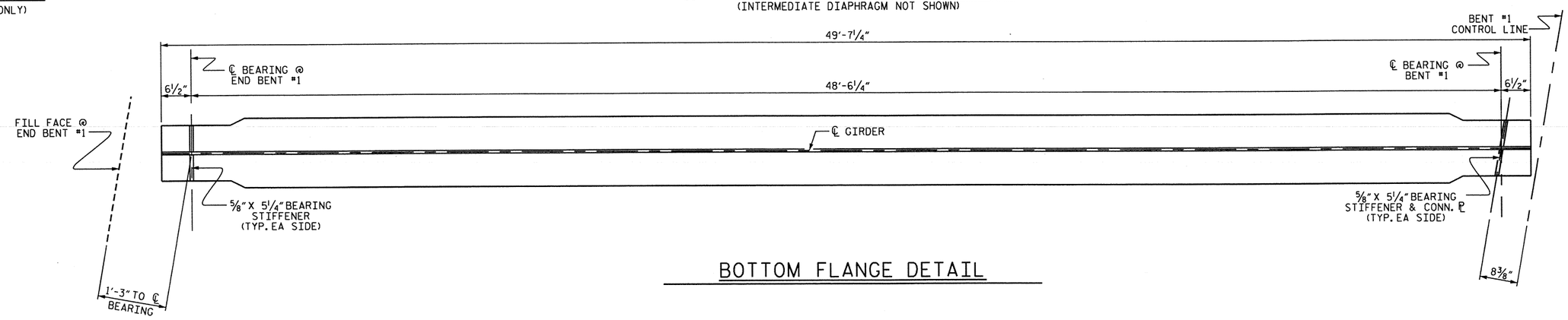

BOTTOM FLANGE DETAIL

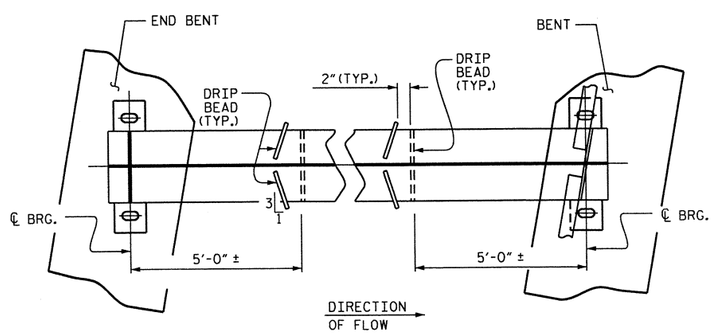

PART PLAN - BOTTOM FLANGE

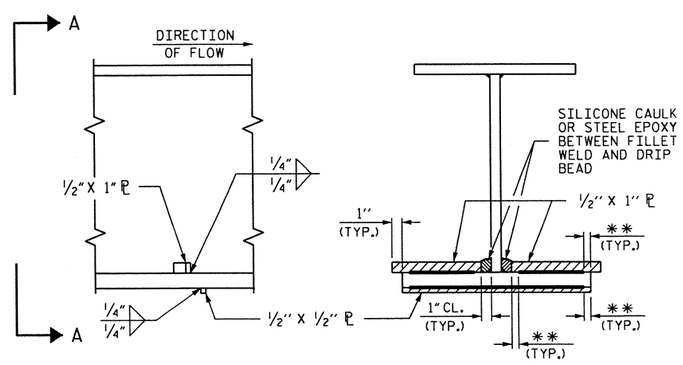

SECTION

VIEW A-A
**¼" ± ⅛"

DRIP BEAD DETAILS

PROJECT NO. 17BP.11.H.6
SURRY COUNTY
STATION: BRIDGE 119

SHEET 1 OF 4

STATE OF NORTH CAROLINA
DEPARTMENT OF TRANSPORTATION
RALEIGH

SUPERSTRUCTURE
STRUCTURAL STEEL
DETAILS
(SPAN A)

NORTH CAROLINA PROFESSIONAL SEAL 15825 ENGINEER BRUCE D. KLAPPENBACH
4-17-2013

REVISIONS						SHEET NO.
NO.	BY:	DATE:	NO.	BY:	DATE:	S-19
1			3			TOTAL SHEETS
2			4			44

DRAWN BY :	H. T. BARBOUR	DATE :	3-11-13
CHECKED BY :	D. HODGE	DATE :	4-13
DESIGN ENGINEER OF RECORD:	-	DATE :	-

12-APR-2013 15:36
O:\Structures\tbarbour\Microstation\17BP.11.H.4_SD_TS.dgn
tbarbour

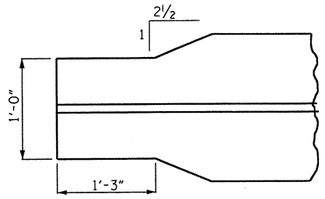

BOTTOM FLANGE DETAIL

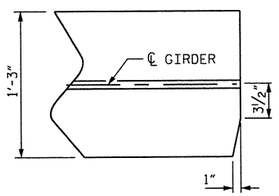

TOP FLANGE COPING DETAIL

(NEAR & FAR SIDE)
(FAR SIDE SHOWN, NEAR SIDE OPPOSITE ROTATION)

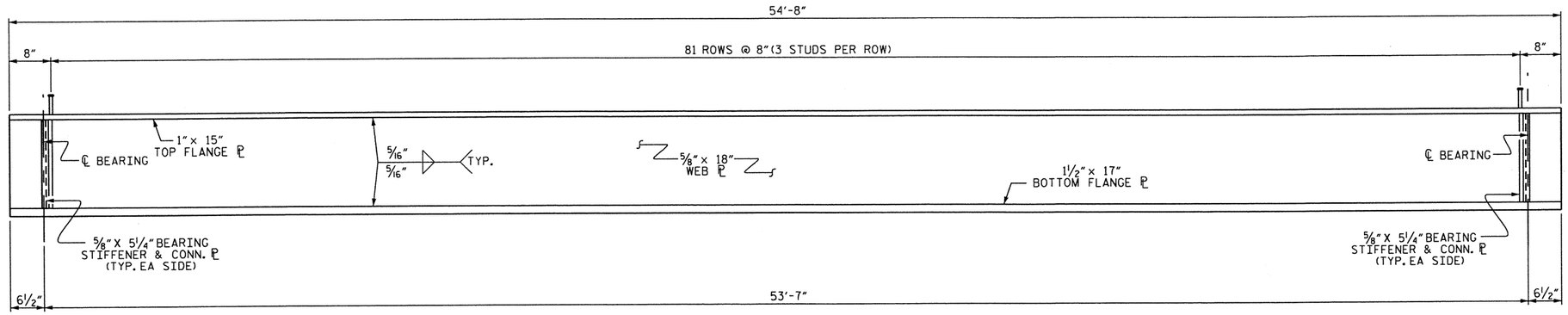

GIRDER ELEVATION

(INTERMEDIATE DIAPHRAGM NOT SHOWN)

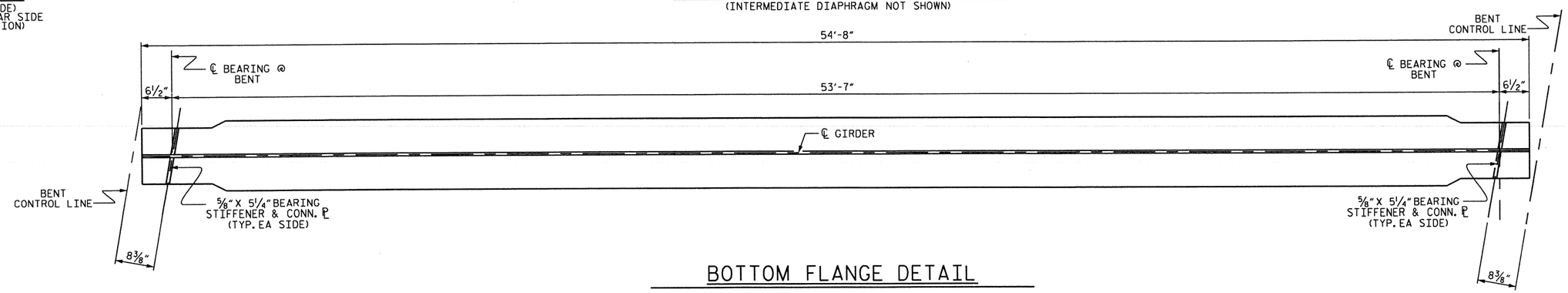

BOTTOM FLANGE DETAIL

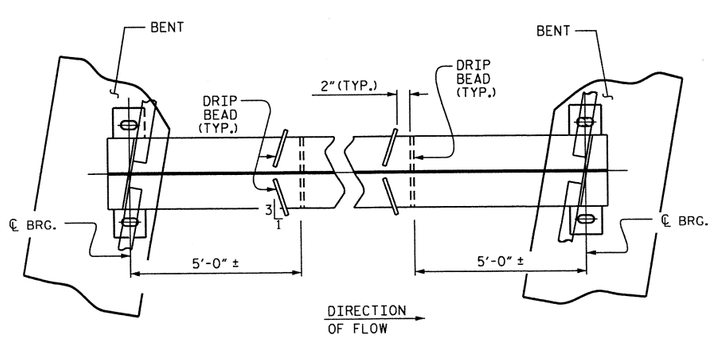

PART PLAN - BOTTOM FLANGE

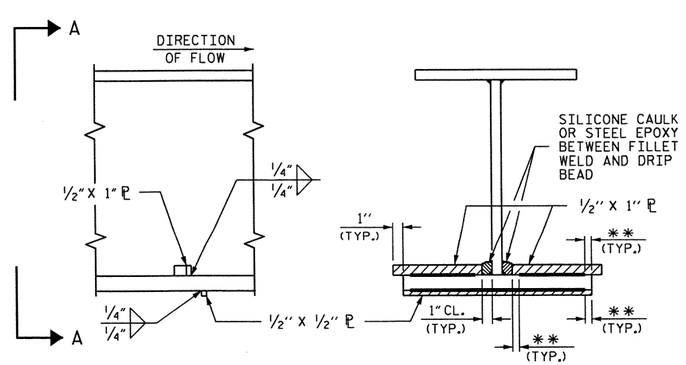

SECTION

VIEW A-A

**¼" ± ⅛"

DRIP BEAD DETAILS

PROJECT NO. 17BP.11.H.6

SURRY COUNTY

STATION: BRIDGE 119

SHEET 2 OF 4

STATE OF NORTH CAROLINA
DEPARTMENT OF TRANSPORTATION
RALEIGH

SUPERSTRUCTURE
STRUCTURAL STEEL
DETAILS
(SPANS B & C)

NORTH CAROLINA PROFESSIONAL SEAL 15625 ENGINEER BRIAN D. KLAPPERICH
4/17/2013

REVISIONS							SHEET NO.
NO.	BY:	DATE:	NO.	BY:	DATE:		S-20
1			3				TOTAL SHEETS
2			4				44

DRAWN BY :	H. T. BARBOUR	DATE :	3-11-13
CHECKED BY :	D. HODGE	DATE :	4-13
DESIGN ENGINEER OF RECORD:	-	DATE :	-

12-APR-2013 15:36
Q:\Structures\Tbarbour\Microstation\17BP.11.H.4_SD_TS.dgn
tbarbour

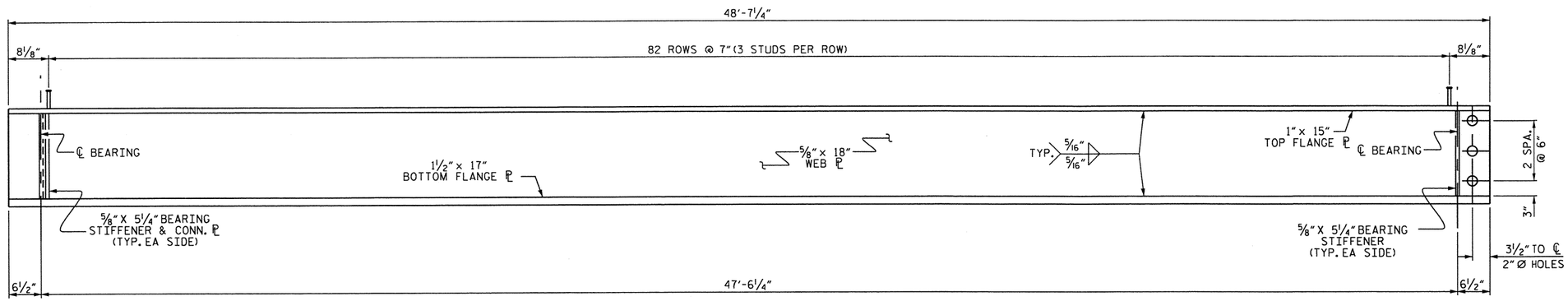

GIRDER ELEVATION

(INTERMEDIATE DIAPHRAGM NOT SHOWN)

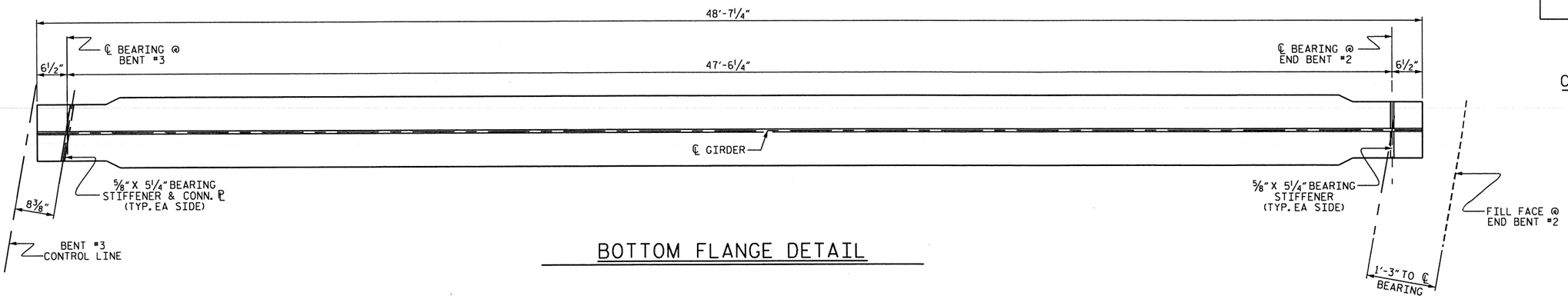

BOTTOM FLANGE DETAIL

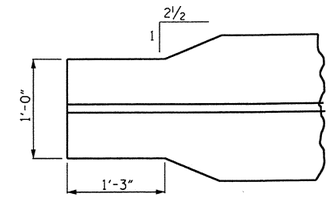

BOTTOM FLANGE DETAIL

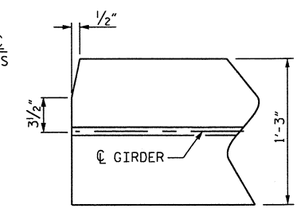

TOP FLANGE COPING DETAIL

(NEAR SIDE ONLY)

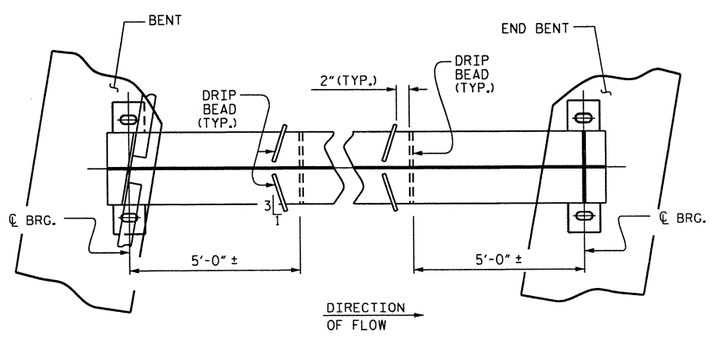

PART PLAN - BOTTOM FLANGE

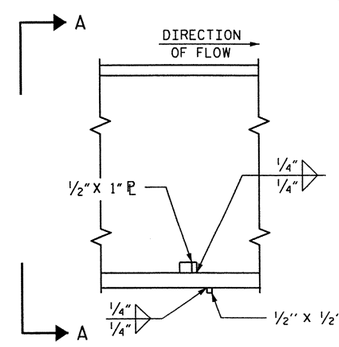

SECTION

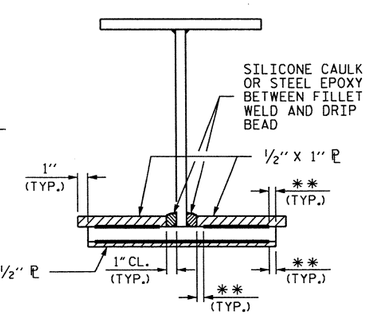

VIEW A-A

** ¼" ± ⅛"

DRIP BEAD DETAILS

PROJECT NO. 17BP.11.H.6

SURRY COUNTY

STATION: BRIDGE 119

SHEET 3 OF 4

STATE OF NORTH CAROLINA
DEPARTMENT OF TRANSPORTATION
RALEIGH

SUPERSTRUCTURE STRUCTURAL STEEL DETAILS (SPAN D)

NORTH CAROLINA PROFESSIONAL SEAL 15825 ENGINEER BRUCE D. KLAPPENBACH
4-17-2013

REVISIONS						SHEET NO.
NO.	BY:	DATE:	NO.	BY:	DATE:	S-21
1			3			TOTAL SHEETS
2			4			44

DRAWN BY :	H. T. BARBOUR	DATE :	3-11-13
CHECKED BY :	D. HODGE	DATE :	4-13
DESIGN ENGINEER OF RECORD:	-	DATE :	-

12-APR-2013 15:36
O:\Structures\tbarbour\Microstation\17BP.11.H.4_SD_TS.dgn
tbarbour

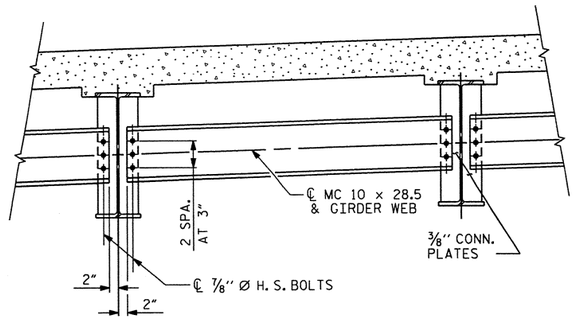

TYPICAL INTERMEDIATE
DIAPHRAGM @ BAYS 1 & 3

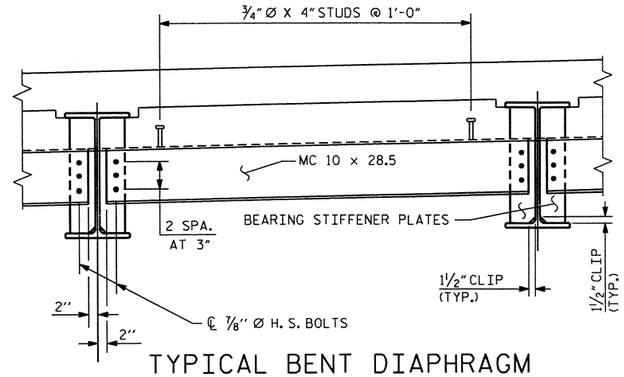

TYPICAL BENT DIAPHRAGM
@ BAYS 1 & 3

NOTES

ALL STRUCTURAL STEEL SHALL BE AASHTO M270 GRADE 50W AND PAINTED IN ACCORDANCE WITH SYSTEM 4 OF ARTICLE 442-8 OF THE STANDARD SPECIFICATIONS UNLESS OTHERWISE NOTED ON THE PLANS.

ALL DIMENSIONS SHOWN ARE HORIZONTAL OR VERTICAL, UNLESS OTHERWISE NOTED.

ALL FIELD CONNECTIONS TO BE 7/8" DIA. HIGH STRENGTH BOLTS UNLESS OTHERWISE NOTED.

A CHARPY V-NOTCH TEST IS REQUIRED FOR WEB PLATES AND BOTTOM FLANGE PLATES, FOR ALL GIRDERS AND IN ACCORDANCE WITH ARTICLE 1072-7 OF THE STANDARD SPECIFICATIONS.

END OF GIRDERS SHALL BE PLUMB.

NEEDLE BEAM TYPE SUPPORTS WILL BE ALLOWED FOR THE OVERHANG FALSEWORK.

FABRICATORS SHALL DETAIL DIAPHRAGM MEMBERS AND CONNECTIONS FOR FULL DEAD LOAD FIT UP. GIRDERS SHALL BE PLUMB AFTER THE FULL AMOUNT OF DEAD LOAD IS APPLIED.

BEARING STIFFENERS SHALL BE PLUMB.

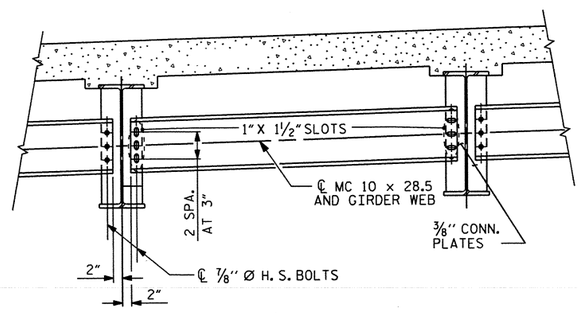

TYPICAL INTERMEDIATE
DIAPHRAGM @ BAY 2

NUTS ON BOLTS FOR CONNECTING DIAPHRAGM TO CONNECTOR PLATE SHALL BE LEFT LOOSE FOR PURPOSE OF ADJUSTMENT UNTIL BOTH SIDES OF SLAB HAVE BEEN POURED.

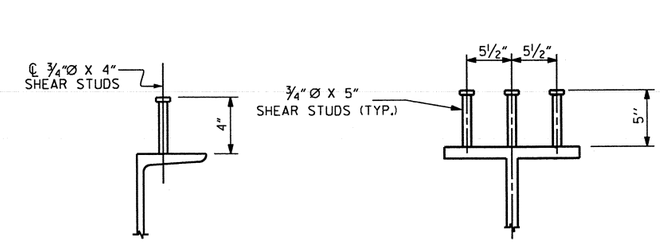

DIAPHRAGM

GIRDER

SHEAR STUD DETAILS

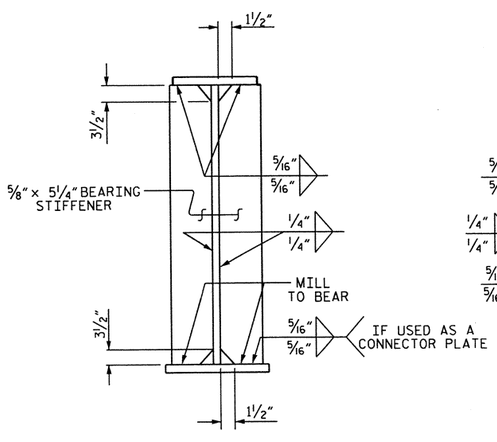

BEARING STIFFENER &
CONNECTOR PLATE

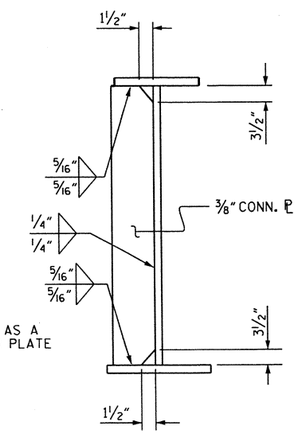

CONNECTOR PLATE

(AT INTERMEDIATE DIAPHRAGM)

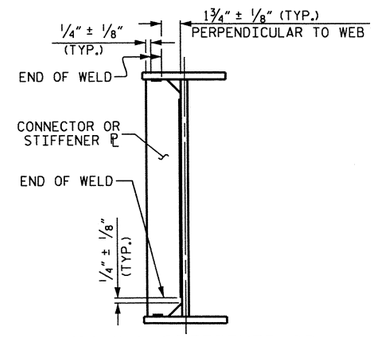

TYPICAL STIFFENER OR
CONNECTOR PLATE CONNECTIONS

WELD TERMINATION DETAILS

PROJECT NO. 17BP.11.H.6

SURRY COUNTY

STATION: BRIDGE 119

SHEET 4 OF 4

STATE OF NORTH CAROLINA
DEPARTMENT OF TRANSPORTATION
RALEIGH

SUPERSTRUCTURE
STRUCTURAL STEEL
DETAILS

NORTH CAROLINA PROFESSIONAL SEAL 15825 ENGINEER BRUCE D. KLAPPENBACH
4-19-2013

REVISIONS						SHEET NO.
NO.	BY:	DATE:	NO.	BY:	DATE:	S-22
1			3			TOTAL SHEETS
2			4			44

DRAWN BY : H. T. BARBOUR DATE : 3-11-13
CHECKED BY : D. HODGE DATE : 4-13
DESIGN ENGINEER OF RECORD: - DATE : -

18-APR-2013 09:35
Q:\Structures\tbarbour\Microstation\17BP.11.H.4_SD_TS.dgn
tbarbour

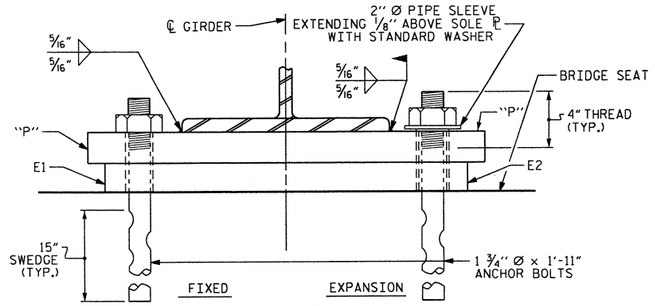

END VIEW

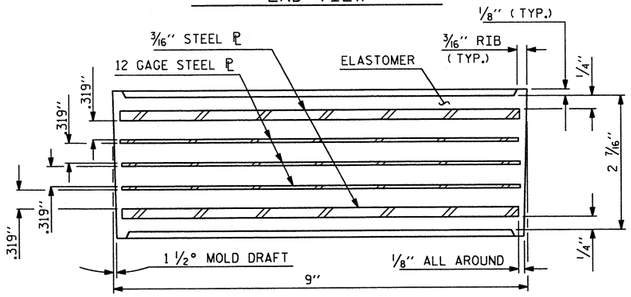

TYPICAL SECTION OF ELASTOMERIC BEARINGS

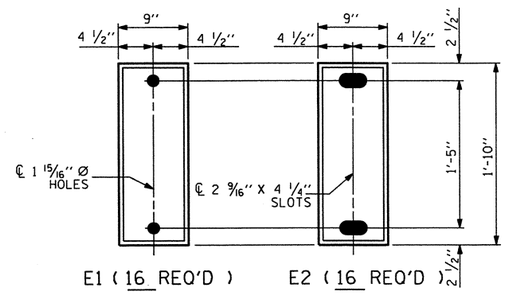

PLAN VIEW OF ELASTOMERIC BEARING

TYPE II

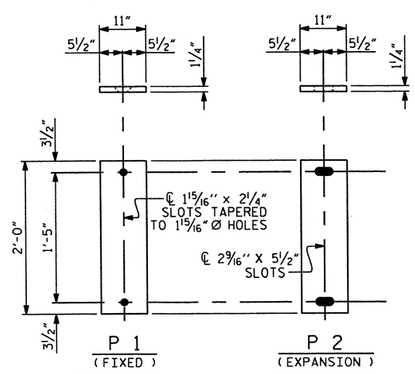

SOLE PLATE DETAILS ("P")

NOTES

AT ALL FIXED POINTS OF SUPPORT, NUTS FOR ANCHOR BOLTS ARE TO BE TIGHTENED FINGER TIGHT AND THEN BACKED OFF 1/2 TURN. THE THREAD OF THE NUT AND BOLT SHALL THEN BE BURRED WITH A SHARP POINTED TOOL.

THE 2" Ø PIPE SLEEVE SHALL BE CUT FROM SCHEDULE 40 PVC PLASTIC PIPE. THE PVC PLASTIC PIPE SHALL MEET THE REQUIREMENTS OF ASTM D1785.

THE PAYMENT FOR THE PIPE SLEEVES SHALL BE INCLUDED IN THE SEVERAL PAY ITEMS.

FOR AASHTO M270 GRADE 50W STRUCTURAL STEEL, SOLE PLATE SHALL BE AASHTO M270 GRADE 50W AND SHALL NOT BE GALVANIZED. ANCHOR BOLTS, NUTS AND WASHERS SHALL BE GALVANIZED IN ACCORDANCE WITH THE STANDARD SPECIFICATIONS.

ANCHOR BOLTS SHALL MEET THE REQUIREMENTS OF ASTM A449. NUTS SHALL MEET THE REQUIREMENTS OF AASHTO M291-DH OR AASHTO M292-2H. WASHERS SHALL MEET THE REQUIREMENTS OF AASHTO M293. SHOP DRAWINGS ARE NOT REQUIRED FOR ANCHOR BOLTS, NUTS AND WASHERS. SHOP INSPECTION IS REQUIRED.

WHEN FIELD WELDING THE SOLE PLATE TO THE GIRDER FLANGE, USE TEMPERATURE INDICATING WAX PENS, OR OTHER SUITABLE MEANS, TO ENSURE THAT THE TEMPERATURE OF THE SOLE PLATE DOES NOT EXCEED 300°F. TEMPERATURES ABOVE THIS MAY DAMAGE THE ELASTOMER.

ALL SURFACES OF BEARING PLATES SHALL BE SMOOTH AND STRAIGHT.

THE ELASTOMER IN THE STEEL REINFORCED BEARINGS SHALL HAVE A SHEAR MODULUS OF 0.160 KSI, IN ACCORDANCE WITH AASHTO M251.

FOR STEEL REINFORCED ELASTOMERIC BEARINGS, SEE SPECIAL PROVISIONS.

THE CONTRACTOR'S ATTENTION IS CALLED TO THE FOLLOWING PROCEDURE, WHICH MAY BE REQUIRED BY THE ENGINEER, TO RESET ELASTOMERIC BEARINGS DUE TO GIRDER TRANSLATION AND END ROTATION:

1. ONCE THE DECK HAS CURED, THE GIRDERS SHALL BE JACKED AND THE ELASTOMERIC BEARING SLOTS CENTERED AS NEARLY AS PRACTICAL ABOUT THE BEARING STIFFENER. THIS OPERATION SHALL BE PERFORMED AT APPROXIMATELY 60° F.

THE CONTRACTOR MAY PROPOSE ALTERNATE METHODS, PROVIDED DETAILS ARE SUBMITTED TO THE ENGINEER FOR REVIEW AND APPROVAL.

MAXIMUM ALLOWABLE SERVICE LOADS	
D.L.+L.L. (NO IMPACT)	
TYPE II	180 k

PROJECT NO. 17BP.11.H.6

SURRY COUNTY

STATION: BRIDGE 119

STATE OF NORTH CAROLINA
DEPARTMENT OF TRANSPORTATION
RALEIGH

ELASTOMERIC BEARING DETAILS
(STEEL SUPERSTRUCTURE)

NORTH CAROLINA PROFESSIONAL SEAL 15825 ENGINEER BRIDGE D. KLAPPENBACH
4-17-2012

REVISIONS						SHEET NO.
NO.	BY:	DATE:	NO.	BY:	DATE:	S-23
1			3			TOTAL SHEETS
2			4			44

STD. NO. EB1 (SHT 2a)

ASSEMBLED BY : H. T. BARBOUR		DATE : 3-6-13	
CHECKED BY : D. HODGE		DATE : 4-13	
DRAWN BY : JMB 11/87	REV. 5/1/06	TLA/GM	
CHECKED BY : ARB 11/87	REV. 10/1/11	MAA/GM	
	REV. 10/24/12	AAC/MAA	

12-APR-2013 15:35
O:\Structures\tbarbour\Microstation\17BP.11.H.4_SD_TS.dgn
tbarbour

DEAD LOAD DEFLECTION TABLE FOR GIRDERS

	SPAN A																																
	GIRDER 1											GIRDERS 2 & 3											GIRDER 4										
TENTH POINTS	0	.10	.20	.30	.40	.50	.60	.70	.80	.90	0	0	.10	.20	.30	.40	.50	.60	.70	.80	.90	0	0	.10	.20	.30	.40	.50	.60	.70	.80	.90	0
DEFLECTION DUE TO WEIGHT OF GIRDER ↓	0.000	0.005	0.010	0.014	0.016	0.017	0.016	0.014	0.010	0.005	0.000	0.000	0.005	0.010	0.014	0.016	0.017	0.016	0.014	0.010	0.005	0.000	0.000	0.005	0.010	0.014	0.016	0.017	0.016	0.014	0.010	0.005	0.000
DEFLECTION DUE TO WEIGHT OF SLAB * ↓	0.000	0.027	0.050	0.069	0.081	0.085	0.081	0.069	0.050	0.027	0.000	0.000	0.027	0.051	0.070	0.082	0.086	0.082	0.070	0.051	0.027	0.000	0.000	0.030	0.057	0.079	0.092	0.097	0.092	0.079	0.057	0.030	0.000
DEFLECTION DUE TO WEIGHT OF RAIL ↓	0.000	0.004	0.008	0.012	0.013	0.014	0.013	0.012	0.008	0.004	0.000	0.000	0.001	0.003	0.004	0.004	0.004	0.004	0.004	0.003	0.001	0.000	0.000	0.004	0.007	0.010	0.012	0.013	0.012	0.010	0.007	0.004	0.000
TOTAL DEAD LOAD DEFLECTION ↓	0.000	0.036	0.069	0.094	0.110	0.116	0.110	0.094	0.069	0.036	0.000	0.000	0.034	0.064	0.088	0.103	0.108	0.103	0.088	0.064	0.034	0.000	0.000	0.040	0.075	0.103	0.120	0.126	0.120	0.103	0.075	0.040	0.000
VERTICAL CURVE ORDINATE	0.000	0.000	0.000	0.000	0.000	0.000	0.000	0.000	0.000	0.000	0.000	0.000	0.000	0.000	0.000	0.000	0.000	0.000	0.000	0.000	0.000	0.000	0.000	0.000	0.000	0.000	0.000	0.000	0.000	0.000	0.000	0.000	0.000
ORDINATE DUE TO SUPERELEVATION	0.000	0.000	0.000	0.000	0.000	0.000	0.000	0.000	0.000	0.000	0.000	0.000	0.000	0.000	0.000	0.000	0.000	0.000	0.000	0.000	0.000	0.000	0.000	0.000	0.000	0.000	0.000	0.000	0.000	0.000	0.000	0.000	0.000
REQUIRED CAMBER	0	7/16"	13/16"	1 1/8"	1 5/16"	1 3/8"	1 5/16"	1 1/8"	13/16"	7/16"	0	0	3/8"	3/4"	1 1/16"	1 1/4"	1 5/16"	1 1/4"	1 1/16"	3/4"	3/8"	0	0	1/2"	7/8"	1 1/4"	1 7/16"	1 1/2"	1 7/16"	1 1/4"	7/8"	1/2"	0

* INCLUDES SLAB, BUILDUPS & STAY-IN-PLACE FORMS.
ALL VALUES ARE SHOWN IN FEET (DECIMAL FORM), EXCEPT " FINAL CAMBER ", WHICH IS GIVEN IN INCHES (FRACTION FORM).
EFFECT OF CAMBER DISSIPATION IS NEGLIGIBLE.

DEAD LOAD DEFLECTION TABLE FOR GIRDERS

	SPANS B & C																																
	GIRDER 1											GIRDERS 2 & 3											GIRDER 4										
TENTH POINTS	0	.10	.20	.30	.40	.50	.60	.70	.80	.90	0	0	.10	.20	.30	.40	.50	.60	.70	.80	.90	0	0	.10	.20	.30	.40	.50	.60	.70	.80	.90	0
DEFLECTION DUE TO WEIGHT OF GIRDER ↓	0.000	0.008	0.015	0.021	0.024	0.026	0.024	0.021	0.015	0.008	0.000	0.000	0.008	0.015	0.021	0.024	0.026	0.024	0.021	0.015	0.008	0.000	0.000	0.008	0.015	0.021	0.024	0.026	0.024	0.021	0.015	0.008	0.000
DEFLECTION DUE TO WEIGHT OF SLAB * ↓	0.000	0.040	0.075	0.103	0.120	0.126	0.120	0.103	0.075	0.040	0.000	0.000	0.040	0.076	0.104	0.122	0.128	0.122	0.104	0.076	0.040	0.000	0.000	0.045	0.085	0.117	0.137	0.144	0.137	0.117	0.085	0.045	0.000
DEFLECTION DUE TO WEIGHT OF RAIL ↓	0.000	0.007	0.012	0.017	0.020	0.021	0.020	0.017	0.012	0.007	0.000	0.000	0.002	0.004	0.005	0.006	0.007	0.006	0.005	0.004	0.002	0.000	0.000	0.006	0.011	0.015	0.018	0.019	0.018	0.015	0.011	0.006	0.000
TOTAL DEAD LOAD DEFLECTION ↓	0.000	0.054	0.102	0.140	0.164	0.172	0.164	0.140	0.102	0.054	0.000	0.000	0.050	0.095	0.130	0.153	0.160	0.153	0.130	0.095	0.050	0.000	0.000	0.590	0.112	0.153	0.179	0.188	0.179	0.153	0.112	0.590	0.000
VERTICAL CURVE ORDINATE	0.000	0.000	0.000	0.000	0.000	0.000	0.000	0.000	0.000	0.000	0.000	0.000	0.000	0.000	0.000	0.000	0.000	0.000	0.000	0.000	0.000	0.000	0.000	0.000	0.000	0.000	0.000	0.000	0.000	0.000	0.000	0.000	0.000
ORDINATE DUE TO SUPERELEVATION	0.000	0.000	0.000	0.000	0.000	0.000	0.000	0.000	0.000	0.000	0.000	0.000	0.000	0.000	0.000	0.000	0.000	0.000	0.000	0.000	0.000	0.000	0.000	0.000	0.000	0.000	0.000	0.000	0.000	0.000	0.000	0.000	0.000
REQUIRED CAMBER	0	5/8"	1 1/4"	1 11/16"	2"	2 1/16"	2"	1 11/16"	1 1/4"	5/8"	0	0	5/8"	1 1/8"	1 9/16"	1 13/16"	1 15/16"	1 13/16"	1 9/16"	1 1/8"	5/8"	0	00	11/16"	1 5/16"	1 13/16"	2 1/8"	2 1/4"	2 1/8"	1 13/16"	1 5/16"	11/16"	00

* INCLUDES SLAB, BUILDUPS & STAY-IN-PLACE FORMS.
ALL VALUES ARE SHOWN IN FEET (DECIMAL FORM), EXCEPT " FINAL CAMBER ", WHICH IS GIVEN IN INCHES (FRACTION FORM).
EFFECT OF CAMBER DISSIPATION IS NEGLIGIBLE.

PROJECT NO. 17BP.11.H.6
SURRY COUNTY
STATION: BRIDGE 119

SHEET 1 OF 2

NORTH CAROLINA PROFESSIONAL SEAL 15828 ENGINEER BRUCE D. KLAPPENBACH
4-17-2013

STATE OF NORTH CAROLINA
DEPARTMENT OF TRANSPORTATION
RALEIGH

DEAD LOAD DEFLECTION

REVISIONS						SHEET NO.
NO.	BY:	DATE:	NO.	BY:	DATE:	S-24
1			3			TOTAL SHEETS
2			4			44

DRAWN BY : R.P. PATEL DATE : 4-8-13
CHECKED BY : H.T. BARBOUR DATE : 4-9-13

16-APR-2013 17:17
O:\Structures\FinalPlans\Structures\17BP.11.H.6_SD_DL.DGN
tbarbour

DEAD LOAD DEFLECTION TABLE FOR GIRDERS

SPAN D

	GIRDER 1										
TENTH POINTS	0	.10	.20	.30	.40	.50	.60	.70	.80	.90	0
DEFLECTION DUE TO WEIGHT OF GIRDER ↓	0.000	0.005	0.009	0.013	0.015	0.016	0.015	0.013	0.009	0.005	0.000
DEFLECTION DUE TO WEIGHT OF SLAB * ↓	0.000	0.025	0.046	0.063	0.074	0.078	0.074	0.063	0.046	0.025	0.000
DEFLECTION DUE TO WEIGHT OF RAIL ↓	0.000	0.004	0.008	0.011	0.012	0.013	0.012	0.011	0.008	0.004	0.000
TOTAL DEAD LOAD DEFLECTION ↓	0.000	0.034	0.063	0.087	0.102	0.107	0.102	0.087	0.063	0.034	0.000
VERTICAL CURVE ORDINATE	0.000	0.000	0.000	0.000	0.000	0.000	0.000	0.000	0.000	0.000	0.000
ORDINATE DUE TO SUPERELEVATION	0.000	0.000	0.000	0.000	0.000	0.000	0.000	0.000	0.000	0.000	0.000
REQUIRED CAMBER	0	3/16"	3/4"	1 1/16"	1 1/4"	1 1/4"	1 1/4"	1 1/16"	3/4"	3/16"	0

	GIRDERS 2 & 3										
TENTH POINTS	0	.10	.20	.30	.40	.50	.60	.70	.80	.90	0
DEFLECTION DUE TO WEIGHT OF GIRDER ↓	0.000	0.005	0.009	0.013	0.015	0.016	0.015	0.013	0.009	0.005	0.000
DEFLECTION DUE TO WEIGHT OF SLAB * ↓	0.000	0.025	0.047	0.064	0.076	0.079	0.076	0.064	0.047	0.025	0.000
DEFLECTION DUE TO WEIGHT OF RAIL ↓	0.000	0.001	0.002	0.003	0.004	0.004	0.004	0.003	0.002	0.001	0.000
TOTAL DEAD LOAD DEFLECTION ↓	0.000	0.031	0.059	0.081	0.094	0.099	0.094	0.081	0.059	0.031	0.000
VERTICAL CURVE ORDINATE	0.000	0.000	0.000	0.000	0.000	0.000	0.000	0.000	0.000	0.000	0.000
ORDINATE DUE TO SUPERELEVATION	0.000	0.000	0.000	0.000	0.000	0.000	0.000	0.000	0.000	0.000	0.000
REQUIRED CAMBER	0	3/8"	11/16"	15/16"	1 1/8"	1 3/16"	1 1/8"	15/16"	11/16"	3/8"	0

	GIRDER 4										
TENTH POINTS	0	.10	.20	.30	.40	.50	.60	.70	.80	.90	0
DEFLECTION DUE TO WEIGHT OF GIRDER ↓	0.000	0.005	0.009	0.013	0.015	0.016	0.015	0.013	0.009	0.005	0.000
DEFLECTION DUE TO WEIGHT OF SLAB * ↓	0.000	0.028	0.053	0.072	0.085	0.089	0.085	0.072	0.053	0.028	0.000
DEFLECTION DUE TO WEIGHT OF RAIL ↓	0.000	0.004	0.007	0.009	0.011	0.012	0.011	0.009	0.007	0.004	0.000
TOTAL DEAD LOAD DEFLECTION ↓	0.000	0.036	0.069	0.094	0.111	0.116	0.111	0.094	0.069	0.036	0.000
VERTICAL CURVE ORDINATE	0.000	0.000	0.000	0.000	0.000	0.000	0.000	0.000	0.000	0.000	0.000
ORDINATE DUE TO SUPERELEVATION	0.000	0.000	0.000	0.000	0.000	0.000	0.000	0.000	0.000	0.000	0.000
REQUIRED CAMBER	0	7/16"	13/16"	1 1/8"	1 5/16"	1 3/8"	1 5/16"	1 1/8"	13/16"	7/16"	0

* INCLUDES SLAB, BUILDUPS & STAY-IN-PLACE FORMS.
ALL VALUES ARE SHOWN IN FEET (DECIMAL FORM), EXCEPT "FINAL CAMBER", WHICH IS GIVEN IN INCHES (FRACTION FORM).
EFFECT OF CAMBER DISSIPATION IS NEGLIGIBLE.

PROJECT NO. 17BP.11.H.6
SURRY COUNTY
STATION: BRIDGE 119

SHEET 2 OF 2

NORTH CAROLINA PROFESSIONAL SEAL 15822 ENGINEER BRUCE D. KLAPPENBACH
4-17-2013

STATE OF NORTH CAROLINA
DEPARTMENT OF TRANSPORTATION
RALEIGH

DEAD LOAD DEFLECTION

REVISIONS						SHEET NO.
NO.	BY:	DATE:	NO.	BY:	DATE:	S-25
1			3			TOTAL SHEETS
2			4			44

DRAWN BY : R. P. PATEL DATE : 4-8-13
CHECKED BY : H. T. BARBOUR DATE : 4-9-13

11-APR-2013 10:12
R:\Structures\Final Plans\17BP.11.H.6_SD_DL.DGN
bklappenbach

NOTES

THE BARRIER RAIL IN EACH SPAN SHALL NOT BE CAST UNTIL ALL SLAB CONCRETE IN EACH SPAN'S STAGE HAS BEEN CAST AND HAS REACHED A MINIMUM COMPRESSIVE STRENGTH OF 3,000 PSI.

WHEN FOAM JOINT SEAL IS REQUIRED, THE JOINT IN THE DECK SHALL BE SAWED PRIOR TO THE CASTING OF VERTICAL CONCRETE BARRIER RAIL.

ALL REINFORCING STEEL IN BARRIER RAILS SHALL BE EPOXY COATED.

THE #5 S3 BARS SHALL BE INSTALLED, USING AN ADHESIVE ANCHORING SYSTEM, AFTER SAWING THE JOINT. THE YIELD LOAD FOR THE #5 S3 BARS IS 18.6 KIPS. FIELD TESTING FOR THE ADHESIVE BONDING SYSTEM IS NOT REQUIRED.

GROOVED CONTRACTION JOINTS, ½" IN DEPTH, SHALL BE TOOLED IN ALL EXPOSED FACES OF THE BARRIER RAIL AND IN ACCORDANCE WITH ARTICLE 825-10(B) OF THE STANDARD SPECIFICATIONS. THE CONTRACTION JOINT SHALL BE LOCATED AT EACH THIRD POINT BETWEEN BARRIER RAIL EXPANSION JOINTS. ONLY ONE CONTRACTION JOINT IS REQUIRED AT MIDPOINT OF BARRIER RAIL SEGMENTS LESS THAN 20 FEET IN LENGTH AND NO CONTRACTION JOINTS ARE REQUIRED FOR THOSE SEGMENTS LESS THAN 10 FEET IN LENGTH.

BAR TYPES

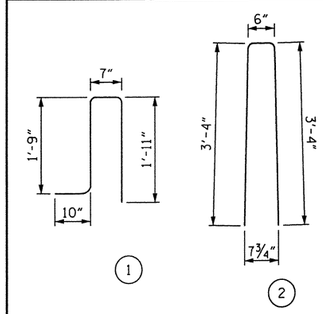

ALL BAR DIMENSIONS ARE OUT TO OUT

STAGE I BILL OF MATERIAL

FOR VERTICAL CONCRETE BARRIER RAIL ONLY

BAR	NO.	SIZE	TYPE	LENGTH	WEIGHT
* B1	80	#5	STR	14'-3"	1189
* B2	80	#5	STR	15'-4"	1279
* S1	209	#5	1	5'-1"	1108
* S2	209	#5	2	7'-2"	1562
* S3	72	#5	STR	3'-10"	288

* EPOXY COATED REINFORCING STEEL	5426 LBS.
CLASS AA CONCRETE	25.0 CU. YDS.
VERTICAL CONCRETE BARRIER RAIL	210 LIN. FT.

STAGE II BILL OF MATERIAL

FOR VERTICAL CONCRETE BARRIER RAIL ONLY

BAR	NO.	SIZE	TYPE	LENGTH	WEIGHT
* B1	80	#5	STR	14'-3"	1189
* B2	80	#5	STR	15'-4"	1279
* S1	209	#5	1	5'-1"	1108
* S2	209	#5	2	7'-2"	1562
* S3	72	#5	STR	3'-10"	288

* EPOXY COATED REINFORCING STEEL	5426 LBS.
CLASS AA CONCRETE	25.0 CU. YDS.
VERTICAL CONCRETE BARRIER RAIL	210 LIN. FT.

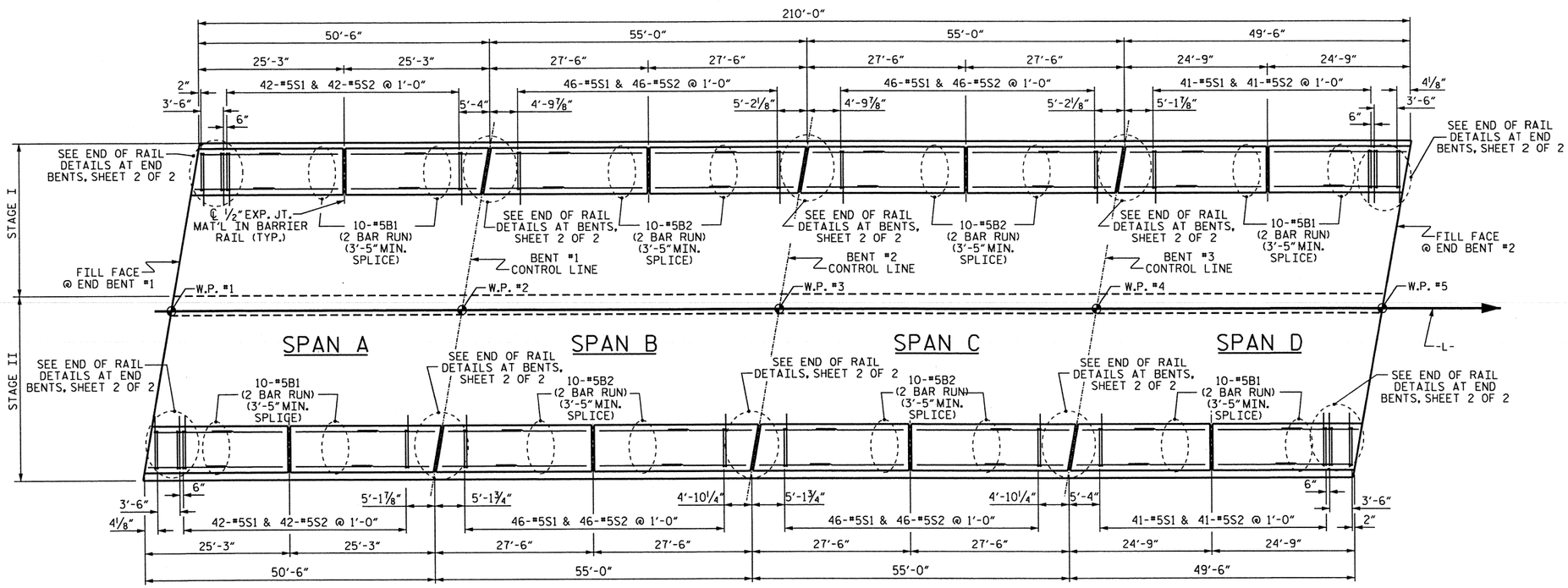

PLAN

TOTAL STAGE I & STAGE II BILL OF MATERIAL

* EPOXY COATED REINFORCING STEEL	10852 LBS.
CLASS AA CONCRETE	50.0 CU. YDS.
VERTICAL CONCRETE BARRIER RAIL	420 LIN. FT.

PROJECT NO. 17BP.11.H.6

SURRY COUNTY

STATION: BRIDGE 119

SHEET 1 OF 2

STATE OF NORTH CAROLINA
DEPARTMENT OF TRANSPORTATION
RALEIGH

VERTICAL CONCRETE BARRIER RAIL

NORTH CAROLINA PROFESSIONAL SEAL 15825 ENGINEER BRYCE D. KLAPPENBACH
4-17-2013

REVISIONS						SHEET NO.
NO.	BY:	DATE:	NO.	BY:	DATE:	S-26
1			3			TOTAL SHEETS
2			4			44

DRAWN BY :	H. T. BARBOUR	DATE :	2-27-13
CHECKED BY :	D. HODGE	DATE :	4-13
DESIGN ENGINEER OF RECORD:	-	DATE :	-

17-APR-2013 11:21
O:\Structures\tbarbour\Microstation\17BP.11.H.4_SD_TS.dgn
tbarbour

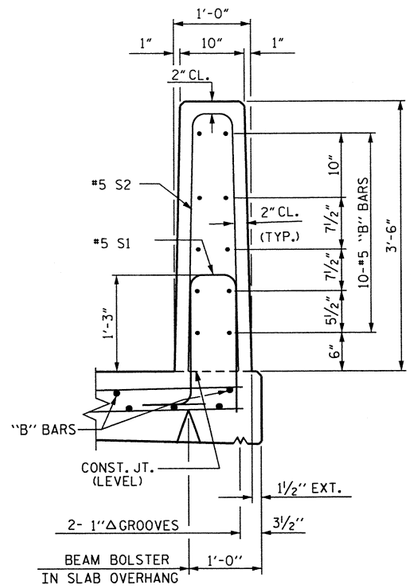

SECTION THRU RAIL

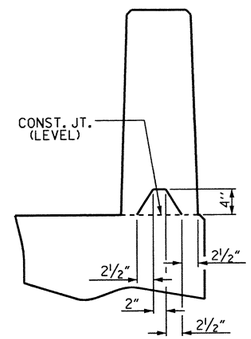

SECTION S-S

AT DAM IN OPEN JOINT
(THIS IS TO BE USED ONLY
WHEN SLIP FORM IS USED)

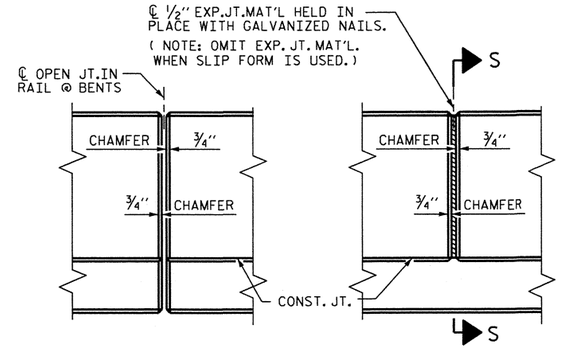

ELEVATION AT EXPANSION JOINTS

BARRIER RAIL DETAILS

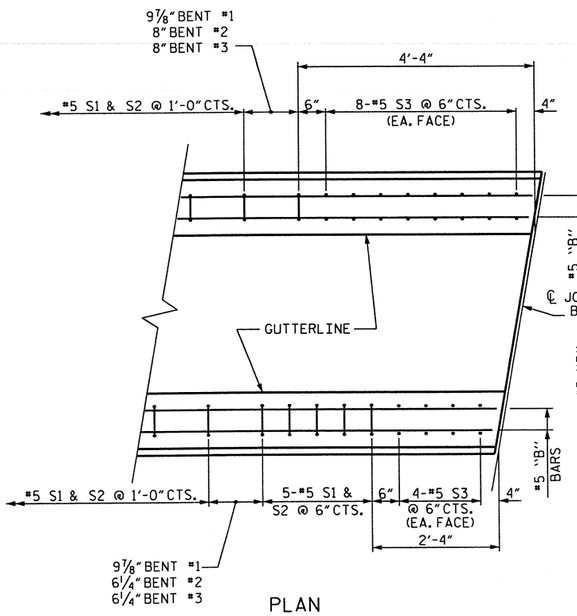

PLAN

(LEFT OF JOINT)

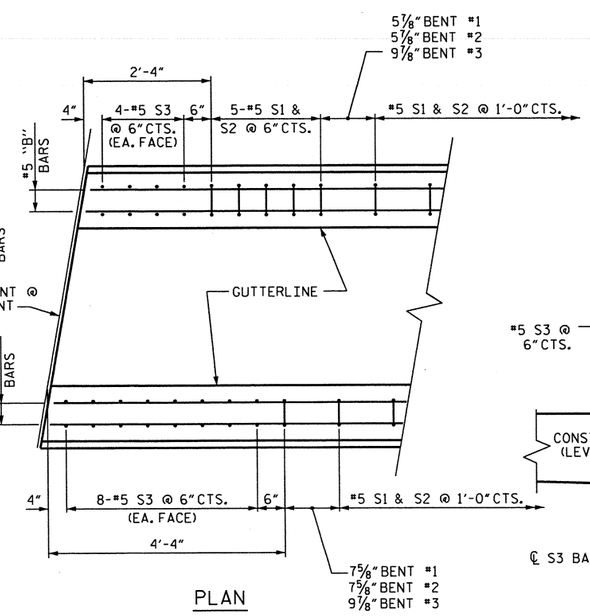

PLAN

(RIGHT OF JOINT)

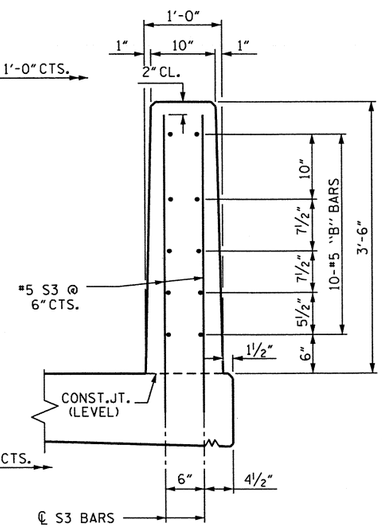

END VIEW

(@ BENTS)

END OF RAIL DETAILS @ BENTS

FOR ADHESIVE ANCHORING AT SAWED JOINTS

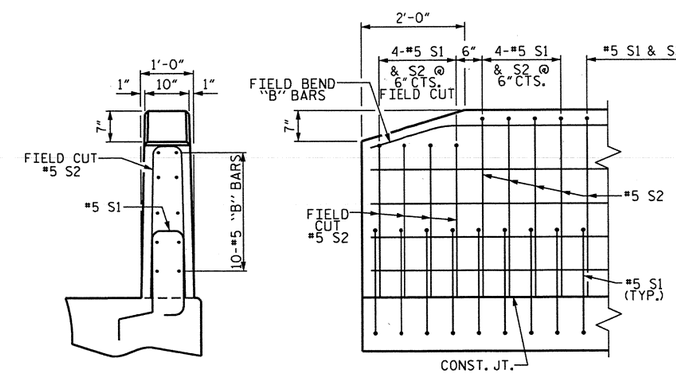

END VIEW

SIDE VIEW

END OF RAIL DETAILS @ END BENTS

PROJECT NO. 17BP.11.H.6

SURRY COUNTY

STATION: BRIDGE 119

SHEET 2 OF 2

STATE OF NORTH CAROLINA
DEPARTMENT OF TRANSPORTATION
RALEIGH

VERTICAL CONCRETE
BARRIER RAIL
DETAILS

NORTH CAROLINA PROFESSIONAL SEAL 15825 ENGINEER BRUCE D. KLAPPENBACH
4-17-2013

REVISIONS						SHEET NO.
NO.	BY:	DATE:	NO.	BY:	DATE:	S-27
1			3			TOTAL SHEETS
2			4			44

DRAWN BY : H. T. BARBOUR DATE : 2-27-13
CHECKED BY : D. HODGE DATE : 4-13
DESIGN ENGINEER OF RECORD: - DATE : -

12-APR-2013 15:35
O:\Structures\tbarbour\Microstation\17BP.11.H.4_SD_TS.dgn
tbarbour

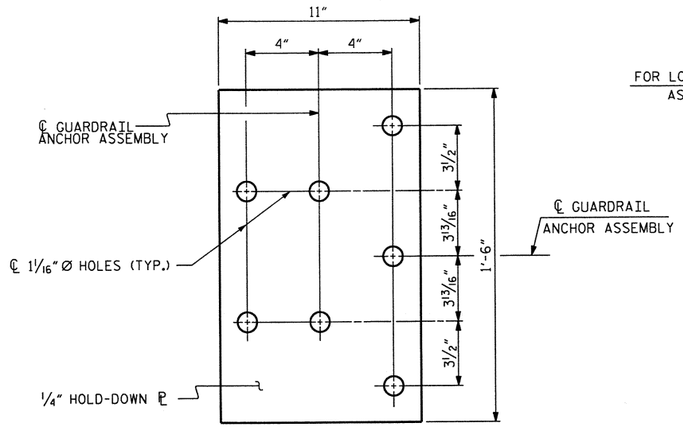

PLAN

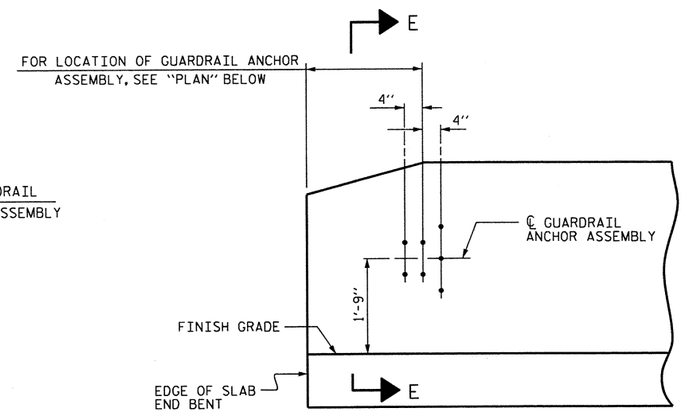

ELEVATION

NOTES

THE GUARDRAIL ANCHOR ASSEMBLY SHALL CONSIST OF A 1/4" HOLD DOWN PLATE AND 7 - 7/8" Ø BOLTS WITH NUTS AND WASHERS.

THE HOLD-DOWN PLATE SHALL CONFORM TO AASHTO M270 GRADE 36. AFTER FABRICATION, THE HOLD-DOWN PLATE SHALL BE HOT-DIP GALVANIZED IN ACCORDANCE WITH AASHTO M111.

BOLTS SHALL CONFORM TO THE REQUIREMENTS OF ASTM A307 AND NUTS SHALL CONFORM TO THE REQUIREMENTS OF AASHTO M291. BOLTS, NUTS AND WASHERS SHALL BE GALVANIZED. (AT THE CONTRACTOR'S OPTION, STAINLESS STEEL BOLTS, NUTS AND WASHERS MAY BE USED AS AN ALTERNATE FOR THE 7/8" Ø GALVANIZED BOLTS, NUTS AND WASHERS. THEY SHALL CONFORM TO OR EXCEED THE MECHANICAL REQUIREMENTS OF ASTM A307. THE USE OF THIS ALTERNATE SHALL BE APPROVED BY THE ENGINEER.)

THE GUARDRAIL ANCHOR ASSEMBLY IS REQUIRED AT ALL POINTS WHERE APPROACH GUARDRAIL IS TO BE ATTACHED TO THE END OF BARRIER RAIL. FOR POINTS OF ATTACHMENT, SEE SKETCH.

AFTER INSTALLATION, THE EXPOSED THREAD OF THE BOLT SHALL BE BURRED WITH A SHARP POINTED TOOL.

THE COST OF THE GUARDRAIL ANCHOR ASSEMBLY SHALL BE INCLUDED IN THE UNIT CONTRACT PRICE BID FOR VERTICAL CONCRETE BARRIER RAIL.

THE VERTICAL REINFORCING BARS MAY BE SHIFTED SLIGHTLY IN THE VERTICAL CONCRETE BARRIER RAIL TO CLEAR ASSEMBLY BOLTS.

THE 1 1/4" Ø HOLES SHALL BE FORMED OR DRILLED WITH A CORE BIT. IMPACT TOOLS WILL NOT BE PERMITTED. ANY CONCRETE DAMAGED BY THIS WORK SHALL BE REPAIRED TO THE SATISFACTION OF THE ENGINEER.

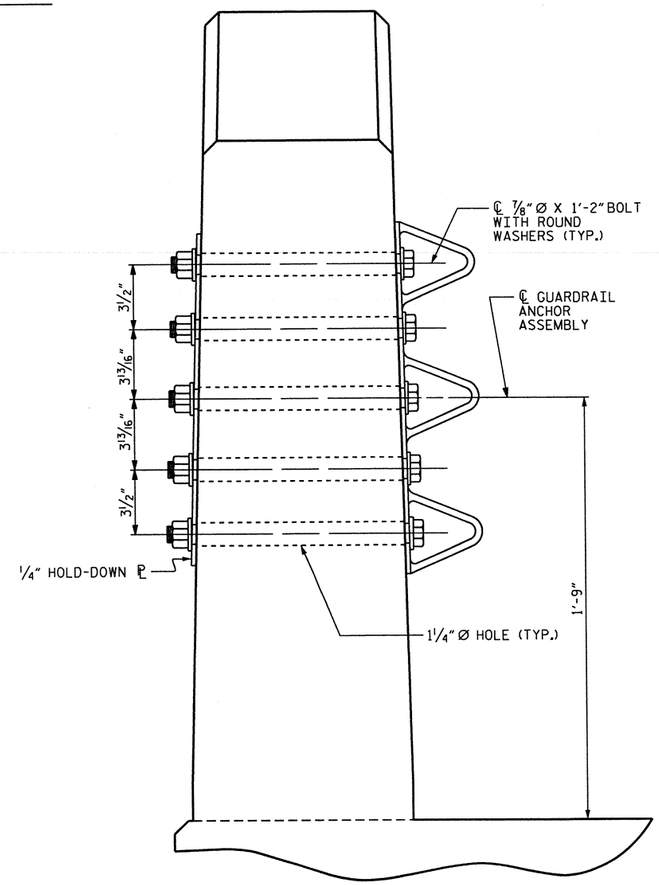

SECTION E-E

GUARDRAIL ANCHOR ASSEMBLY DETAILS

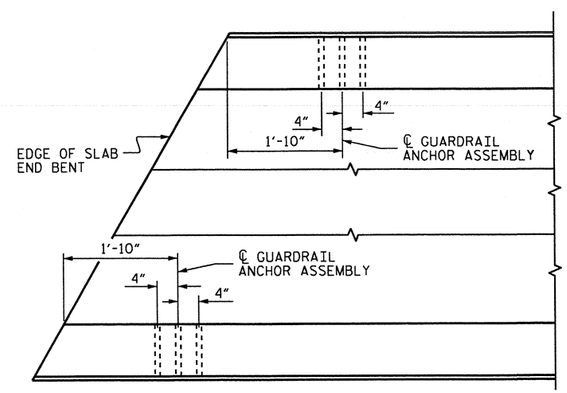

PLAN

LOCATION OF ANCHORS FOR GUARDRAIL

END BENT #1 SHOWN, END BENT #2 SIMILAR.

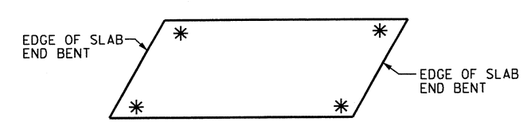

SKETCH SHOWING POINTS OF ATTACHMENT

✳ DENOTES GUARDRAIL ANCHOR ASSEMBLY

PROJECT NO. 17BP.11.H.6

SURRY COUNTY

STATION: BRIDGE 119

STATE OF NORTH CAROLINA
DEPARTMENT OF TRANSPORTATION
RALEIGH

GUARDRAIL ANCHORAGE FOR VERTICAL CONCRETE BARRIER RAIL

NORTH CAROLINA PROFESSIONAL SEAL 15825 ENGINEER BRUCE D. KLAPPENBACH 4-17-2013

REVISIONS							SHEET NO.
NO.	BY:	DATE:	NO.	BY:	DATE:		S-28
1			3				TOTAL SHEETS
2			4				44

ASSEMBLED BY : H. T. BARBOUR		DATE : 3-7-13	
CHECKED BY : D. HODGE		DATE : 4-13	
DRAWN BY : MAA 5/10	ADDED 5/6/10		
CHECKED BY : GM 5/10	REV. 10/1/11	MAA/GM	
	REV. 12/5/11	MAA/GM	

12-APR-2013 15:35
O:\Structures\tbarbour\Microstation\17BP.11.H.4_SD_TS.dgn
tbarbour

(SHT 2) STD. NO. GRA3

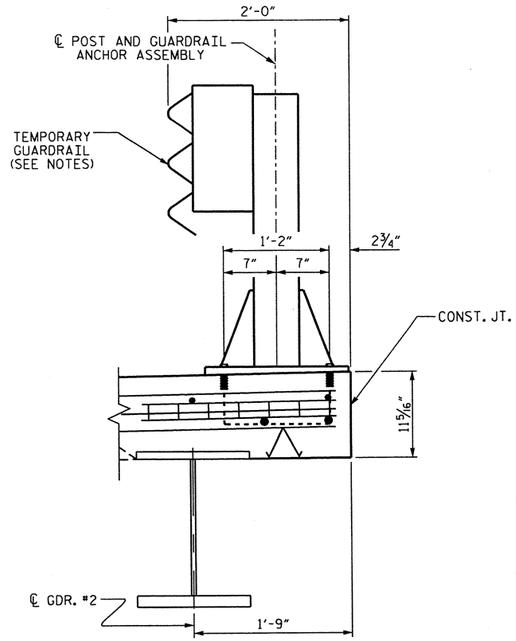

SECTION OF ANCHOR ASSEMBLY LOCATION

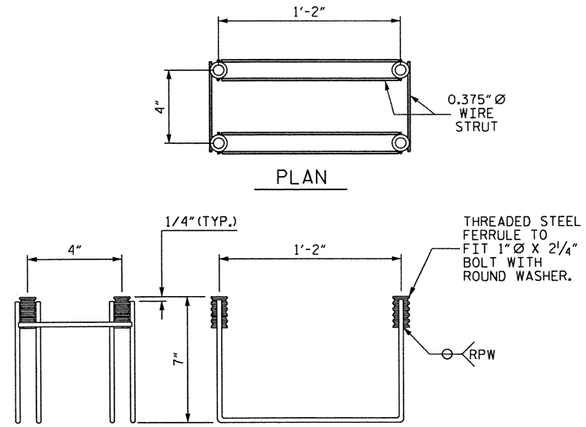

MINIMUM LENGTH OF THREADS IN INSERT (FERRULE): 2½"

TEMPORARY GUARDRAIL ANCHOR ASSEMBLY

(42 ASSEMBLIES REQUIRED IN THE BRIDGE DECK)
(6 ASSEMBLIES REQUIRED IN THE APPROACH SLABS)

NOTES

THE TEMPORARY GUARDRAIL ANCHOR ASSEMBLY SHALL CONSIST OF THE FOLLOWING COMPONENTS:

A. FERRULES SHALL BE MADE FROM STEEL MEETING THE REQUIREMENTS OF AASHTO M169, GRADE 12L14 AND SHALL HAVE A MINIMUM LENGTH OF THREADS OF 2½".

B. 4 - 1" Ø X 2¼" BOLTS WITH WASHERS. BOLTS SHALL CONFORM TO THE REQUIREMENTS OF ASTM A307. BOLTS AND WASHERS SHALL BE GALVANIZED. (AT THE CONTRACTOR'S OPTION, STAINLESS STEEL BOLTS AND WASHERS MAY BE USED AS AN ALTERNATE FOR THE 1" Ø X 2¼" GALVANIZED BOLTS AND WASHERS. THEY SHALL CONFORM TO OR EXCEED THE MECHANICAL REQUIREMENTS OF ASTM A307. THE USE OF THIS ALTERNATE SHALL BE APPROVED BY THE ENGINEER.

C. WIRE STRUTS SHOWN IN THE TEMPORARY GUARDRAIL ANCHOR ASSEMBLY DETAIL ARE THE MINIMUM ALLOWABLE SIZE AND SHALL HAVE A MINIMUM TENSILE STRENGTH OF 100,000 PSI.

TEMPORARY GUARDRAIL ANCHOR ASSEMBLY WITH BOLTS SHALL BE ASSEMBLED IN THE SHOP. BOLT THREADS MAY BE RECUT AS NECESSARY TO INSURE FIT.

THE COST OF THE TEMPORARY GUARDRAIL ANCHOR ASSEMBLY, TEMPORARY GUARDRAIL, POST, AND POST BASE PLATES, COMPLETE IN PLACE, SHALL BE INCLUDED IN ROADWAY PAY ITEMS.

FERRULES TO BE PLUGGED DURING POURING OF THE BRIDGE DECK OR POURING OF APPROACH SLAB AS RECOMMENDED BY THE MANUFACTURER.

AT THE CONTRACTOR'S OPTION, FERRULES WITH OPEN OR CLOSED ENDS MAY BE USED.

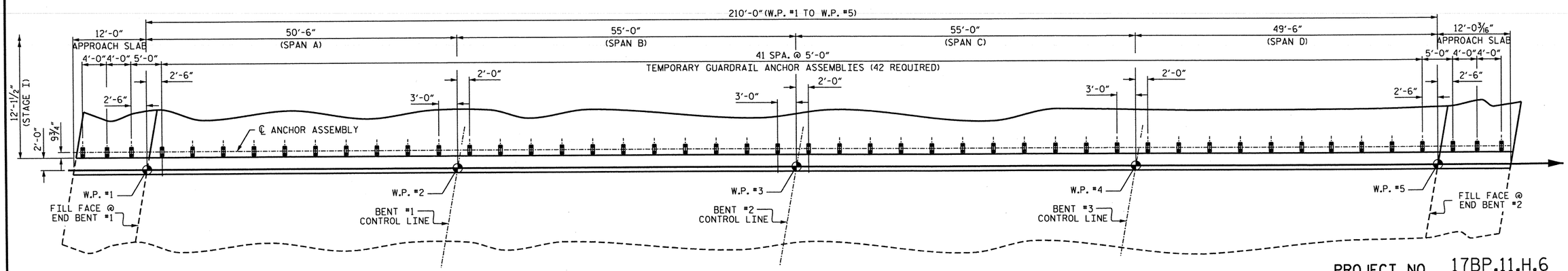

RAIL POST SPACING FOR TEMPORARY GUARDRAIL - STAGE I

PROJECT NO. 17BP.11.H.6
SURRY COUNTY
STATION: BRIDGE 119

STATE OF NORTH CAROLINA
DEPARTMENT OF TRANSPORTATION
RALEIGH

ANCHORAGE DETAILS FOR TEMPORARY GUARDRAIL ANCHOR ASSEMBLY

NORTH CAROLINA PROFESSIONAL SEAL 15825 ENGINEER BRUCE D. KLAPPENBACH
4-17-2013

REVISIONS						SHEET NO.
NO.	BY:	DATE:	NO.	BY:	DATE:	S-29
1			3			TOTAL SHEETS
2			4			44

DRAWN BY :	H. T. BARBOUR	DATE :	2-26-13
CHECKED BY :	D. HODGE	DATE :	2-13
DESIGN ENGINEER OF RECORD:	-	DATE :	-

16-APR-2013 17:29
Q:\Structures\Tbarbour\Microstation\17BP.11.H.4_SD_TS.dgn
tbarbour

NOTES

THE NOMINAL UNCOMPRESSED SEAL WIDTH OF THE FOAM JOINT SEAL SHALL BE 2" AT BENT Nos.1 THROUGH 3. FOR FOAM JOINT SEALS, SEE SPECIAL PROVISIONS.

FOR FOAM JOINT SEALS, SEE SPECIAL PROVISIONS.

FOR ELASTOMERIC CONCRETE, SEE SPECIAL PROVISIONS.

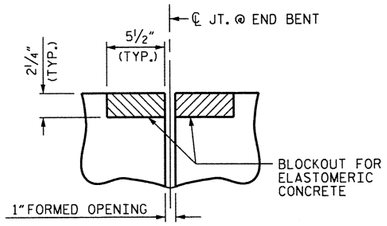

SECTION C-C
FOAM JOINT SEAL
(PRE-SAWED ELASTOMERIC CONCRETE DIMENSIONS)

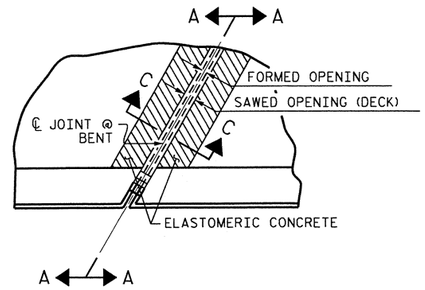

PLAN

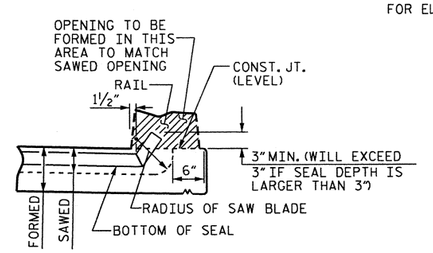

SECTION A-A

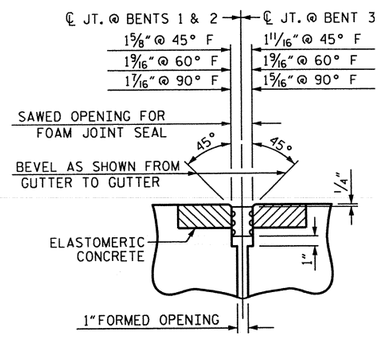

SECTION C-C
FOAM JOINT SEAL
(EXPANSION)

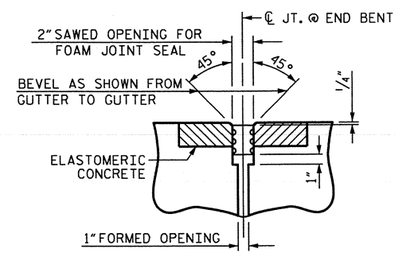

SECTION C-C
FOAM JOINT SEAL
(FIXED)

ELASTOMERIC CONCRETE			
STAGE I ELASTOMERIC CONCRETE * (CU. FT.)		STAGE II ELASTOMERIC CONCRETE * (CU. FT.)	
BENT NO. 1	1.9	BENT NO. 1	2.6
BENT NO. 2	1.9	BENT NO. 2	2.6
BENT NO. 3	1.9	BENT NO. 3	2.6
TOTAL	5.7	TOTAL	7.8
TOTAL STAGE I & STAGE II			13.5

* BASED ON THE MINIMUM BLOCKOUT SHOWN.

PROJECT NO. 17BP.11.H.6
SURRY COUNTY
STATION: BRIDGE 119

STATE OF NORTH CAROLINA
DEPARTMENT OF TRANSPORTATION
RALEIGH

FOAM JOINT
SEAL DETAILS

NORTH CAROLINA PROFESSIONAL SEAL 15825 ENGINEER BRYAN D. KLAPPENBACH
4-17-2013

REVISIONS						SHEET NO.
NO.	BY:	DATE:	NO.	BY:	DATE:	S-30
1			3			TOTAL SHEETS
2			4			44

ASSEMBLED BY : H. T. BARBOUR		DATE : 3-11-13	
CHECKED BY : D. HODGE		DATE : 4-13	
DRAWN BY : FCJ	11/88	REV. 10/1/11	MAA/GM
CHECKED BY : ARB	11/88	REV. 7/12	MAA/GM
		REV. 10/12	MAA/GM

STD. NO. BAS4 (SHT 1b)

16-APR-2013 17:42
Q:\Structures\tbarbour\Microstation\17BP.11.H.4_SD_TS.dgn
tbarbour

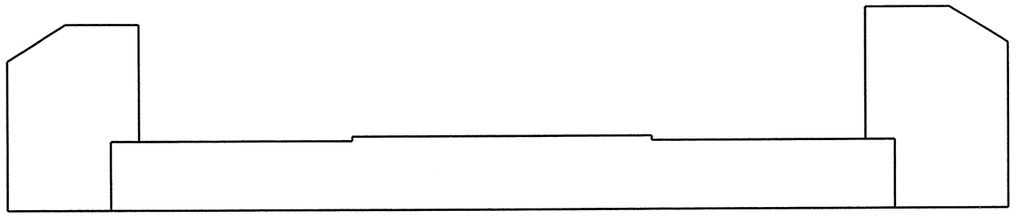

END BENT 1
(LOOKING EAST)

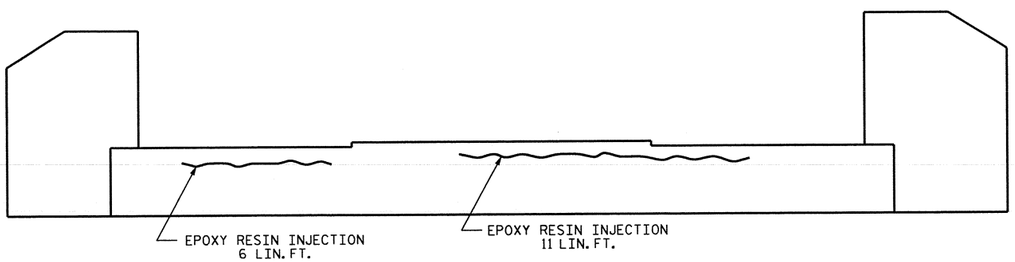

END BENT 2
(LOOKING WEST)

REPAIR QUANTITY TABLE
END BENT #1

REPAIRS END BENT	QUANTITIES					
	ESTIMATE			ACTUAL		
CONCRETE REPAIRS	AREA SF	DEPTH FT	VOLUME CF	AREA SF	DEPTH FT	VOLUME CF
CAP (VERTICAL FACE)	0.0	0.0	0.0			
CAP (HORIZONTAL, CORNER)	0.0	0.0	0.0			
COLUMN	0.0	0.0	0.0			
EPOXY RESIN INJECTION			LIN. FT			LIN. FT
CAP			0			
COLUMN			0			

REPAIR QUANTITY TABLE
END BENT #2

REPAIRS END BENT	QUANTITIES					
	ESTIMATE			ACTUAL		
CONCRETE REPAIRS	AREA SF	DEPTH FT	VOLUME CF	AREA SF	DEPTH FT	VOLUME CF
CAP (VERTICAL FACE)	0.0	0.0	0.0			
CAP (HORIZONTAL, CORNER)	0.0	0.0	0.0			
COLUMN	0.0	0.0	0.0			
EPOXY RESIN INJECTION			LIN. FT			LIN. FT
CAP			17			
COLUMN			0			

VALUES IN CHART REPRESENT ESTIMATED REPAIR TOTALS AFTER REMOVAL OF UNSOUND CONCRETE, MIN. OF 1" BEHIND REBAR AND MIN. 1" CL TO SAWCUT. SEE REPAIR DETAILS.

NOTES:

NO DAMAGE OBSERVED ON THE END BENT 1, HOWEVER IF DAMAGE IS FOUND BY THE ENGINEER SEE NOTE ON THIS SHEET CONCERNING ADDITIONAL REPAIRS.

REPAIR LOCATIONS AND ESTIMATE OF QUANTITIES ARE GIVEN WITH THE BEST INFORMATION AVAILABLE. IF ADDITIONAL REPAIRS NOT SHOWN ON THE DRAWINGS ARE DEEMED NECESSARY BY THE INSPECTOR OR ENGINEER THE CONTRACTOR SHALL NOTE ON THE DRAWINGS THE APPROXIMATE LOCATION AND DESCRIPTION OF THE REPAIRS AND ADJUST THE ACTUAL QUANTITIES ENTERED INTO THE REPAIR QUANTITY TABLE.

CONTRACTOR SHALL SAW CUT TO A NOMINAL DEPTH OF ½" BUT REINFORCING STEEL SHALL NOT BE DAMAGED.

CONTRACTOR SHALL REMOVE SURFACE CONCRETE TO VERIFY THAT SAWCUT DEPTH WILL NOT DAMAGE EXISTING REINFORCING STEEL.

CONCRETE REPAIRS MAY BE REPLACED WITH SHOTCRETE REPAIRS WITH THE APPROVAL OF THE ENGINEER.

FOR SHOTCRETE REPAIRS, SEE SPECIAL PROVISIONS.

FOR CONCRETE REPAIRS, SEE SPECIAL PROVISIONS.

FOR EPOXY RESIN INJECTION, SEE SPECIAL PROVISIONS.

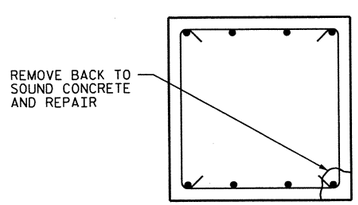

SECTION

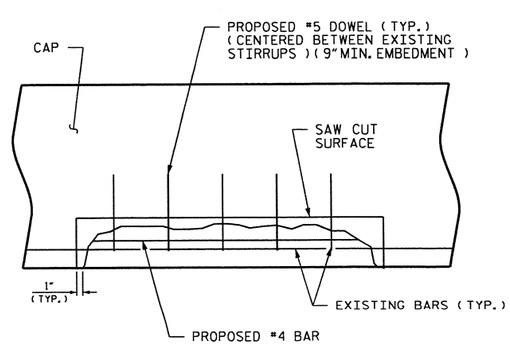

ELEVATION

CORNER REPAIR

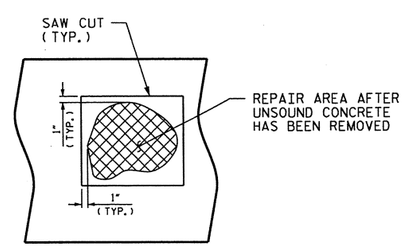

FACE REPAIR

TYPICAL SUBSTRUCTURE REPAIR DETAIL

PROJECT NO. 17BP.11.H.6
SURRY COUNTY
STATION: BRIDGE 119

SHEET 1 OF 4

STATE OF NORTH CAROLINA
DEPARTMENT OF TRANSPORTATION
RALEIGH

SUBSTRUCTURE REPAIRS
END BENT 1 & 2

NORTH CAROLINA PROFESSIONAL SEAL 19829 ENGINEER BRUCE D. KLAPPENBACH
4-17-2013

REVISIONS						SHEET NO.
NO.	BY:	DATE:	NO.	BY:	DATE:	S-32
1			3			TOTAL SHEETS
2			4			44

DRAWN BY : H. T. BARBOUR DATE : 3-26-13
CHECKED BY : B. D. KLAPPENBACH DATE : 4-13
DESIGN ENGINEER OF RECORD: - DATE : -

11-APR-2013 10:08
R:\Structures\tbarbour\Microstation\17BH.11.H.6_SD_SUBREPAIRBRIDGE119.dgn
bklappenbach

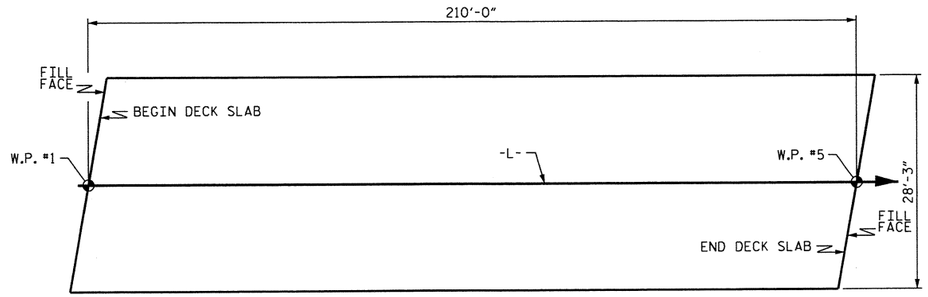

LAYOUT FOR COMPUTING AREA REINFORCED CONCRETE DECK SLAB
(SQ. FT. = 5933)

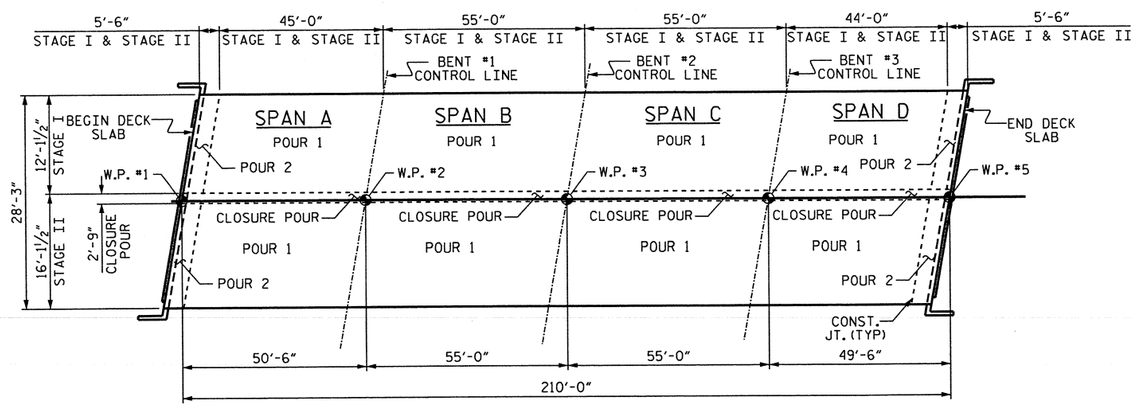

POURING SEQUENCE

POUR 2 INCLUDES CURTAIN WALL, UPPER PART OF THE END BENT WINGS, AND 5'-6" SECTION OF THE BRIDGE DECK.

STAGE I REINFORCING BAR SCHEDULE

BAR	NO.	SIZE	TYPE	LENGTH	WEIGHT
* A1	400	#5	STR	11'-9"	4902
A2	400	#5	STR	11'-9"	4902
* A101	2	#5	STR	10'-5"	22
* A102	2	#5	STR	7'-7"	16
* A103	2	#5	STR	4'-9"	10
* A104	2	#5	STR	1'-11"	4
* A105	4	#5	STR	10'-4"	43
* A106	4	#5	STR	7'-6"	31
* A107	4	#5	STR	4'-8"	19
* A108	4	#5	STR	1'-10"	8
* A109	2	#5	STR	10'-5"	22
* A110	2	#5	STR	7'-7"	16
* A111	2	#5	STR	4'-9"	10
* A112	2	#5	STR	1'-11"	4
A201	2	#5	STR	10'-5"	22
A202	2	#5	STR	7'-7"	16
A203	2	#5	STR	4'-9"	10
A204	2	#5	STR	1'-11"	4
A205	4	#5	STR	10'-4"	43
A206	4	#5	STR	7'-6"	31
A207	4	#5	STR	4'-8"	19
A208	4	#5	STR	1'-10"	8
A209	2	#5	STR	10'-5"	22
A210	2	#5	STR	7'-7"	16
A211	2	#5	STR	4'-9"	10
A212	2	#5	STR	1'-11"	4
* B1	18	#4	STR	26'-1"	314
B2	14	#5	STR	50'-1"	731
* B3	36	#4	STR	28'-4"	681
B4	28	#5	STR	54'-7"	1594
* B5	18	#4	STR	25'-7"	308
B6	14	#5	STR	49'-1"	717
* D1	830	#5	STR	4'-4"	3751
* G1	2	#5	STR	16'-3"	34
* G2	6	#5	STR	13'-2"	82
H1	8	#4	STR	2'-8"	14
H2	5	#5	STR	7'-3"	38
H3	5	#5	STR	7'-2"	37
H4	5	#5	STR	7'-5"	39
H5	5	#5	STR	7'-6"	39
* K1	12	#5	1	7'-6"	94
* K2	12	#5	1	6'-10"	86
* K3	12	#5	STR	5'-7"	70
K4	12	#6	5	17'-3"	311
K5	2	#6	STR	12'-7"	38
* S1	36	#4	3	3'-5"	82
* S2	24	#4	2	3'-8"	59
S3	24	#4	4	2'-1"	33
V2	18	#4	STR	1'-10"	22

REINFORCING STEEL = 8720 LBS
* EPOXY COATED REINF. STEEL = 10668 LBS

STAGE II REINFORCING BAR SCHEDULE

BAR	NO.	SIZE	TYPE	LENGTH	WEIGHT
* A3	400	#5	STR	13'-0"	5424
A4	400	#5	STR	13'-0"	5424
* A113	2	#5	STR	11'-1"	23
* A114	2	#5	STR	8'-3"	17
* A115	2	#5	STR	5'-5"	11
* A116	2	#5	STR	2'-7"	5
* A117	4	#5	STR	10'-11"	46
* A118	4	#5	STR	8'-1"	34
* A119	4	#5	STR	5'-3"	22
* A120	4	#5	STR	2'-5"	10
* A121	2	#5	STR	11'-1"	23
* A122	2	#5	STR	8'-3"	17
* A123	2	#5	STR	5'-5"	11
* A124	2	#5	STR	2'-7"	5
A213	2	#5	STR	11'-1"	23
A214	2	#5	STR	8'-3"	17
A215	2	#5	STR	5'-5"	11
A216	2	#5	STR	2'-7"	5
A217	4	#5	STR	10'-11"	46
A218	4	#5	STR	8'-1"	34
A219	4	#5	STR	5'-3"	22
A220	4	#5	STR	2'-5"	10
A221	2	#5	STR	11'-1"	23
A222	2	#5	STR	8'-3"	17
A223	2	#5	STR	5'-5"	11
A224	2	#5	STR	2'-7"	5
* B1	28	#4	STR	26'-1"	488
B2	20	#5	STR	50'-1"	1045
* B3	56	#4	STR	28'-4"	1060
B4	40	#5	STR	54'-7"	2277
* B5	28	#4	STR	25'-7"	479
B6	20	#5	STR	49'-1"	1024
* D2	832	#5	STR	5'-3"	4556
* G3	2	#5	STR	17'-6"	37
* G4	6	#5	STR	14'-5"	90
H1	8	#4	STR	2'-8"	14
H2	5	#5	STR	7'-3"	38
H3	5	#5	STR	7'-2"	37
H4	5	#5	STR	7'-5"	39
H5	5	#5	STR	7'-6"	39
* K6	12	#5	1	6'-1"	76
* K7	12	#5	1	7'-6"	94
* K8	12	#5	STR	7'-6"	94
K9	12	#6	5	18'-6"	333
K10	2	#6	STR	14'-0"	42
* S1	48	#4	3	3'-5"	110
* S2	26	#4	2	3'-8"	64
S3	26	#4	4	2'-1"	36
V2	20	#4	STR	1'-10"	24

REINFORCING STEEL = 10596 LBS
* EPOXY COATED REINF. STEEL = 12796 LBS

BAR TYPES

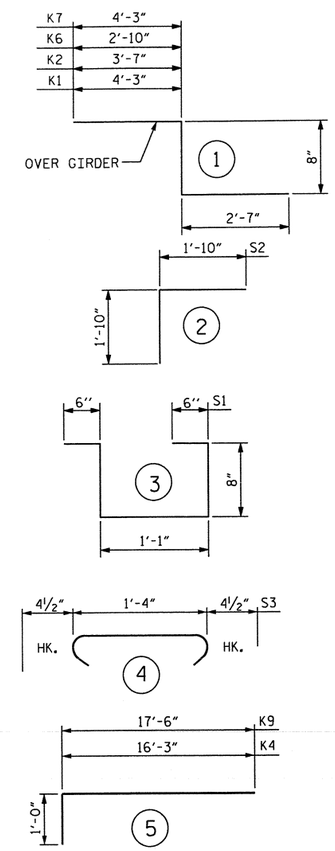

ALL BAR DIMENSIONS ARE OUT TO OUT

GROOVING BRIDGE FLOORS		
BRIDGE DECK	4729	SQ.FT.
APPROACH SLAB	513	SQ.FT.
TOTAL	5242	SQ.FT.

SUPERSTRUCTURE BILL OF MATERIAL

STAGE I

		CLASS AA CONCRETE (CU.YDS.)	REINFORCING STEEL (LBS.)	* EPOXY COATED REINFORCING STEEL (LBS.)
SPAN A	POUR 1	17.2		
	POUR 2	3.2		
SPAN B	POUR 1	21.0		
SPAN C	POUR 1	21.0		
SPAN D	POUR 1	16.8		
	POUR 2	3.2		
TOTALS **		82.4	8720	10668

STAGE II

		CLASS AA CONCRETE (CU.YDS.)	REINFORCING STEEL (LBS.)	* EPOXY COATED REINFORCING STEEL (LBS.)
SPAN A	POUR 1	18.8		
	POUR 2	3.5		
	CLOSURE POUR	5.1		
SPAN B	POUR 1	22.9		
	CLOSURE POUR	5.3		
SPAN C	POUR 1	22.9		
	CLOSURE POUR	5.3		
SPAN D	POUR 1	18.4		
	POUR 2	3.5		
	CLOSURE POUR	5.0		
TOTALS **		110.7	10596	12796

***QUANTITIES FOR BARRIER RAIL ARE NOT INCLUDED

SUPERSTRUCTURE REINFORCING STEEL LENGTHS ARE BASED ON THE FOLLOWING MINIMUM SPLICE LENGTHS

BAR SIZE	SUPERSTRUCTURE EXCEPT APPROACH SLABS, PARAPET, AND BARRIER RAIL		APPROACH SLABS		PARAPET AND BARRIER RAIL
	EPOXY COATED	UNCOATED	EPOXY COATED	UNCOATED	
#4	2'-0"	1'-9"	2'-0"	1'-9"	2'-9"
#5	2'-6"	2'-2"	2'-6"	2'-2"	3'-5"
#6	3'-0"	2'-7"	3'-10"	2'-7"	4'-4"
#7	5'-3"	3'-6"			
#8	6'-10"	4'-7"			

PROJECT NO. 17BP.11.H.6
SURRY COUNTY
STATION: BRIDGE 119

STATE OF NORTH CAROLINA
DEPARTMENT OF TRANSPORTATION
RALEIGH

SUPERSTRUCTURE BILL OF MATERIAL

REVISIONS						SHEET NO.
NO.	BY:	DATE:	NO.	BY:	DATE:	S-31
1			3			TOTAL SHEETS
2			4			44

STR #1

ASSEMBLED BY :	H. T. BARBOUR	DATE :	03-01-13
CHECKED BY :	D. HODGE	DATE :	04-13
DRAWN BY : JMB 5/87	REV. 6/1/94	EEM/GRP	
CHECKED BY : SJD 9/87	REV. 8/16/99	RWW/LES	

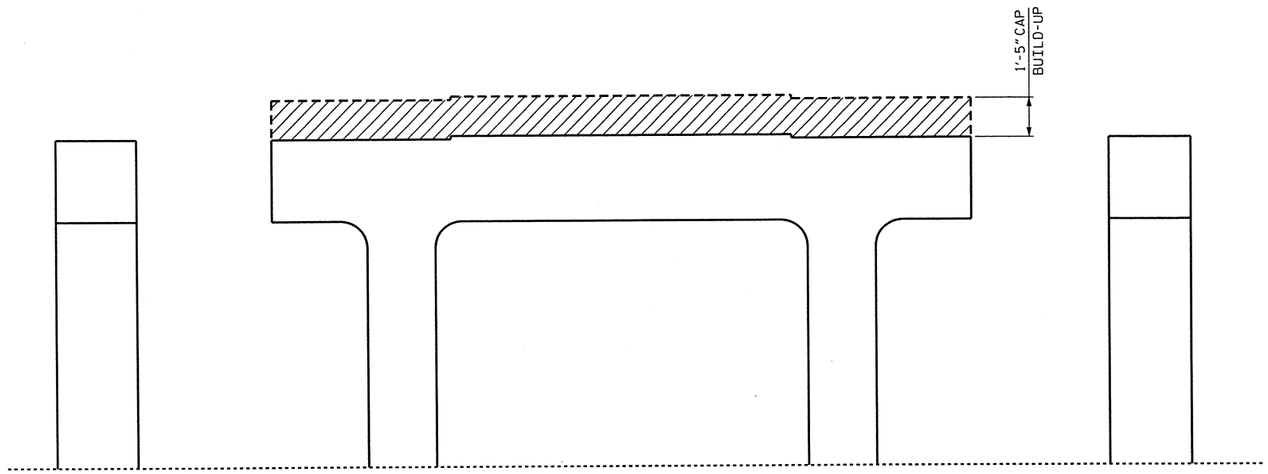

SOUTH END

BENT #1 ELEVATION

(SPAN A SIDE)

NORTH END

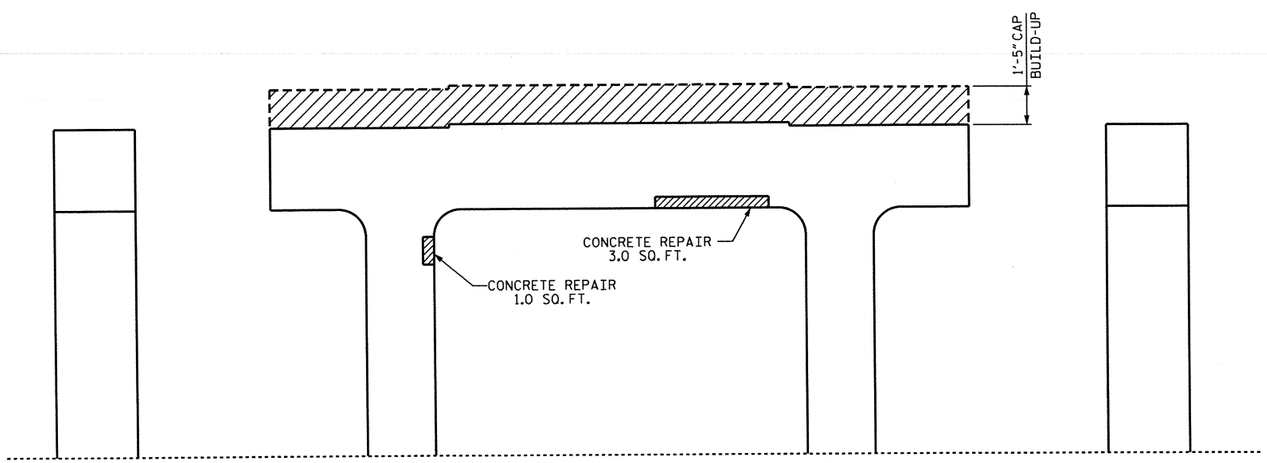

NORTH END

BENT #1 ELEVATION

(SPAN B SIDE)

SOUTH END

REPAIR QUANTITY TABLE

REPAIRS BENT 1	QUANTITIES					
	ESTIMATE			ACTUAL		
CONCRETE REPAIRS	AREA SF	DEPTH FT	VOLUME CF	AREA SF	DEPTH FT	VOLUME CF
CAP (VERTICAL FACE)	0.0	0.0	0.0			
CAP (HORIZONTAL, CORNER)	3.0	0.417	1.3			
COLUMN	1.0	0.417	0.4			
EPOXY RESIN INJECTION			LIN. FT			LIN. FT
CAP			0			
COLUMN			0			

VALUES IN CHART REPRESENT ESTIMATED REPAIR TOTALS AFTER REMOVAL OF UNSOUND CONCRETE, MIN. OF 1" BEHIND REBAR AND MIN. 1" CL TO SAWCUT. SEE REPAIR DETAILS. (SHEET 1 OF 4)

NOTES:

REPAIR LOCATIONS AND ESTIMATE OF QUANTITIES ARE GIVEN WITH THE BEST INFORMATION AVAILABLE. IF ADDITIONAL REPAIRS NOT SHOWN ON THE DRAWINGS ARE DEEMED NECESSARY BY THE INSPECTOR OR ENGINEER THE CONTRACTOR SHALL NOTE ON THE DRAWINGS THE APPROXIMATE LOCATION AND DESCRIPTION OF THE REPAIRS AND ADJUST THE ACTUAL QUANTITIES ENTERED INTO THE REPAIR QUANTITY TABLE.

CONTRACTOR SHALL SAW CUT TO A NOMINAL DEPTH OF ½" BUT REINFORCING STEEL SHALL NOT BE DAMAGED.

CONTRACTOR SHALL REMOVE SURFACE CONCRETE TO VERIFY THAT SAWCUT DEPTH WILL NOT DAMAGE EXISTING REINFORCING STEEL.

CONCRETE REPAIRS MAY BE REPLACED WITH SHOTCRETE REPAIRS WITH THE APPROVAL OF THE ENGINEER.

FOR SHOTCRETE REPAIRS, SEE SPECIAL PROVISIONS.

FOR CONCRETE REPAIRS, SEE SPECIAL PROVISIONS.

FOR EPOXY RESIN INJECTION, SEE SPECIAL PROVISIONS.

PROJECT NO. 17BP.11.H.6

SURRY COUNTY

STATION: BRIDGE 119

SHEET 2 OF 4

NORTH CAROLINA PROFESSIONAL SEAL 15825 ENGINEER BRYCE D. KLAPPENBACH

4-17-2013

STATE OF NORTH CAROLINA
DEPARTMENT OF TRANSPORTATION
RALEIGH

SUBSTRUCTURE REPAIRS
BENT 1

REVISIONS						SHEET NO.
NO.	BY:	DATE:	NO.	BY:	DATE:	S-33
1			3			TOTAL SHEETS
2			4			44

DRAWN BY : H. T. BARBOUR DATE : 3-26-13
CHECKED BY : B. D. KLAPPENBACH DATE : 4-13
DESIGN ENGINEER OF RECORD: - DATE : -

11-APR-2013 10:08
R:\Structures\tbarbour\Microstation\17BH.11.H.6_SD_SUBREPAIRBRIDGE119.dgn
bklappenbach

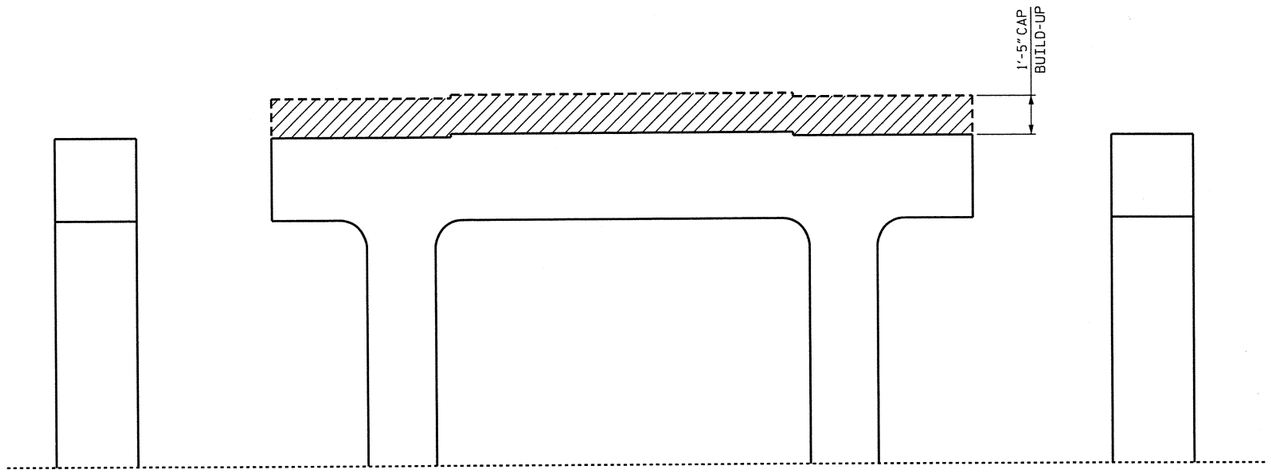

SOUTH END

BENT #2 ELEVATION

(SPAN B SIDE)

NORTH END

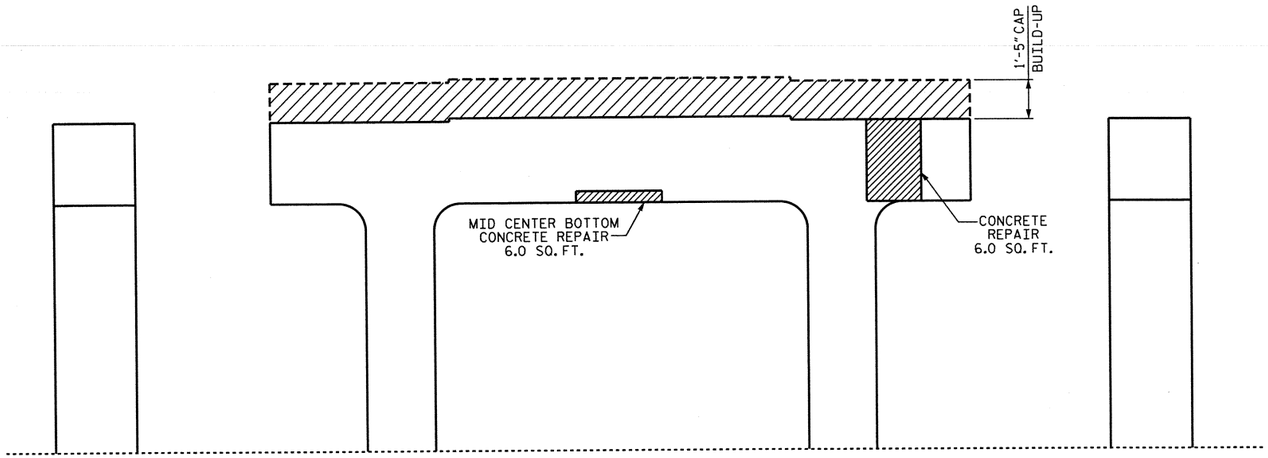

NORTH END

BENT #2 ELEVATION

(SPAN C SIDE)

SOUTH END

REPAIR QUANTITY TABLE

REPAIRS BENT 2	QUANTITIES					
	ESTIMATE			ACTUAL		
CONCRETE REPAIRS	AREA SF	DEPTH FT	VOLUME CF	AREA SF	DEPTH FT	VOLUME CF
CAP (VERTICAL FACE)	6.0	0.417	2.5			
CAP (HORIZONTAL, CORNER)	6.0	0.417	2.5			
COLUMN	0.0	0.0	0.0			
EPOXY RESIN INJECTION			LIN. FT			LIN. FT
CAP			0			
COLUMN			0			

VALUES IN CHART REPRESENT ESTIMATED REPAIR TOTALS AFTER REMOVAL OF UNSOUND CONCRETE, MIN. OF 1" BEHIND REBAR AND MIN. 1" CL TO SAWCUT. SEE REPAIR DETAILS. (SHEET 1 OF 4)

NOTES:

REPAIR LOCATIONS AND ESTIMATE OF QUANTITIES ARE GIVEN WITH THE BEST INFORMATION AVAILABLE. IF ADDITIONAL REPAIRS NOT SHOWN ON THE DRAWINGS ARE DEEMED NECESSARY BY THE INSPECTOR OR ENGINEER THE CONTRACTOR SHALL NOTE ON THE DRAWINGS THE APPROXIMATE LOCATION AND DESCRIPTION OF THE REPAIRS AND ADJUST THE ACTUAL QUANTITIES ENTERED INTO THE REPAIR QUANTITY TABLE.

CONTRACTOR SHALL SAW CUT TO A NOMINAL DEPTH OF ½" BUT REINFORCING STEEL SHALL NOT BE DAMAGED.

CONTRACTOR SHALL REMOVE SURFACE CONCRETE TO VERIFY THAT SAWCUT DEPTH WILL NOT DAMAGE EXISTING REINFORCING STEEL.

CONCRETE REPAIRS MAY BE REPLACED WITH SHOTCRETE REPAIRS WITH THE APPROVAL OF THE ENGINEER.

FOR SHOTCRETE REPAIRS, SEE SPECIAL PROVISIONS.

FOR CONCRETE REPAIRS, SEE SPECIAL PROVISIONS.

FOR EPOXY RESIN INJECTION, SEE SPECIAL PROVISIONS.

PROJECT NO. 17BP.11.H.6

SURRY COUNTY

STATION: BRIDGE 119

SHEET 3 OF 4

NORTH CAROLINA PROFESSIONAL SEAL 15825 ENGINEER BRUCE D. KLAPPENBACH

4-17-2013

STATE OF NORTH CAROLINA
DEPARTMENT OF TRANSPORTATION
RALEIGH

SUBSTRUCTURE REPAIRS
BENT 2

REVISIONS						SHEET NO.
NO.	BY:	DATE:	NO.	BY:	DATE:	S-34
1			3			TOTAL SHEETS
2			4			44

DRAWN BY : H. T. BARBOUR DATE : 3-26-13
CHECKED BY : B. D. KLAPPENBACH DATE : 4-13
DESIGN ENGINEER OF RECORD: - DATE : -

11-APR-2013 10:08
R:\Structures\tbarbour\Microstation\17BH.11.H.6_SD_SUBREPAIRBRIDGE119.dgn
bklappenbach

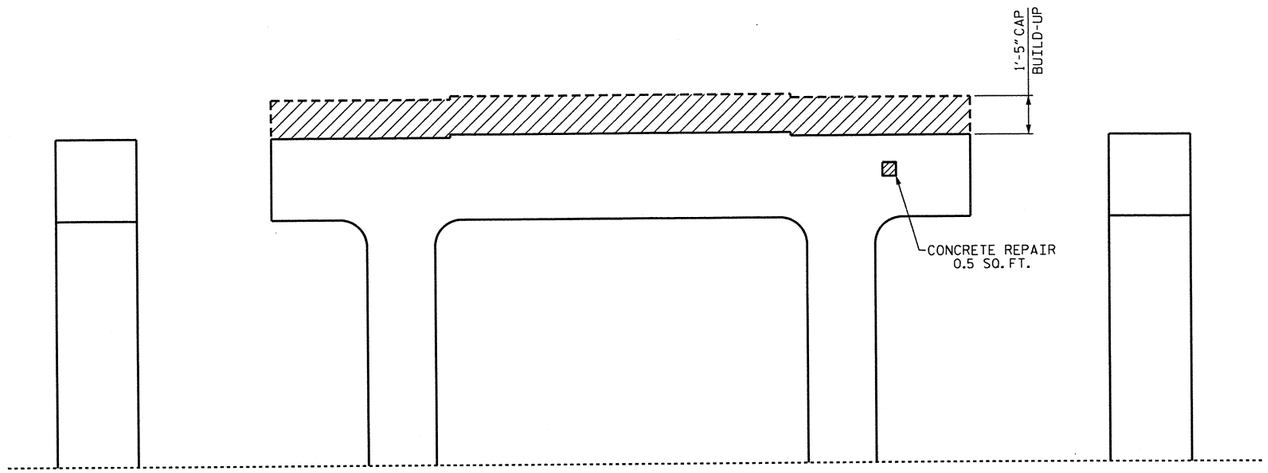

SOUTH END

BENT #3 ELEVATION

(SPAN C SIDE)

NORTH END

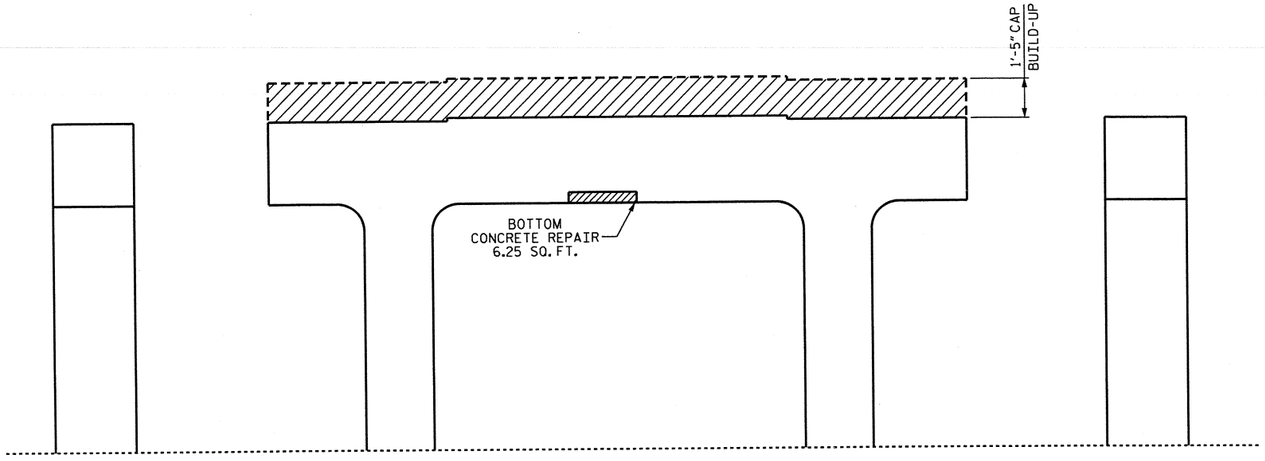

NORTH END

BENT #3 ELEVATION

(SPAN D SIDE)

SOUTH END

REPAIR QUANTITY TABLE

REPAIRS BENT 3	QUANTITIES					
	ESTIMATE			ACTUAL		
CONCRETE REPAIRS	AREA SF	DEPTH FT	VOLUME CF	AREA SF	DEPTH FT	VOLUME CF
CAP (VERTICAL FACE)	0.5	0.417	0.2			
CAP (HORIZONTAL, CORNER)	6.25	0.417	2.6			
COLUMN	0.0	0.0	0.0			
EPOXY RESIN INJECTION			LIN. FT			LIN. FT
CAP			0			
COLUMN			0			

VALUES IN CHART REPRESENT ESTIMATED REPAIR TOTALS AFTER REMOVAL OF UNSOUND CONCRETE, MIN. OF 1" BEHIND REBAR AND MIN. 1" CL TO SAWCUT. SEE REPAIR DETAILS. (SHEET 1 OF 4)

NOTES:

REPAIR LOCATIONS AND ESTIMATE OF QUANTITIES ARE GIVEN WITH THE BEST INFORMATION AVAILABLE. IF ADDITIONAL REPAIRS NOT SHOWN ON THE DRAWINGS ARE DEEMED NECESSARY BY THE INSPECTOR OR ENGINEER THE CONTRACTOR SHALL NOTE ON THE DRAWINGS THE APPROXIMATE LOCATION AND DESCRIPTION OF THE REPAIRS AND ADJUST THE ACTUAL QUANTITIES ENTERED INTO THE REPAIR QUANTITY TABLE.

CONTRACTOR SHALL SAW CUT TO A NOMINAL DEPTH OF ½" BUT REINFORCING STEEL SHALL NOT BE DAMAGED.

CONTRACTOR SHALL REMOVE SURFACE CONCRETE TO VERIFY THAT SAWCUT DEPTH WILL NOT DAMAGE EXISTING REINFORCING STEEL.

CONCRETE REPAIRS MAY BE REPLACED WITH SHOTCRETE REPAIRS WITH THE APPROVAL OF THE ENGINEER.

FOR SHOTCRETE REPAIRS, SEE SPECIAL PROVISIONS.

FOR CONCRETE REPAIRS, SEE SPECIAL PROVISIONS.

FOR EPOXY RESIN INJECTION, SEE SPECIAL PROVISIONS.

PROJECT NO. 17BP.11.H.6

SURRY COUNTY

STATION: BRIDGE 119

SHEET 4 OF 4

STATE OF NORTH CAROLINA
DEPARTMENT OF TRANSPORTATION
RALEIGH

SUBSTRUCTURE REPAIRS
BENT 3

NORTH CAROLINA PROFESSIONAL SEAL 15825 ENGINEER BRADLEY D. KLAPPENBACH
4-17-2013

REVISIONS						SHEET NO.
NO.	BY:	DATE:	NO.	BY:	DATE:	S-35
1			3			TOTAL SHEETS
2			4			44

DRAWN BY : H. T. BARBOUR DATE : 3-26-13
CHECKED BY : B. D. KLAPPENBACH DATE : 4-13
DESIGN ENGINEER OF RECORD: - DATE : -

11-APR-2013 10:08
R:\Structures\tbarbour\Microstation\17BH.11.H.6_SD_SUBREPAIRBRIDGE119.dgn
bklappenbach

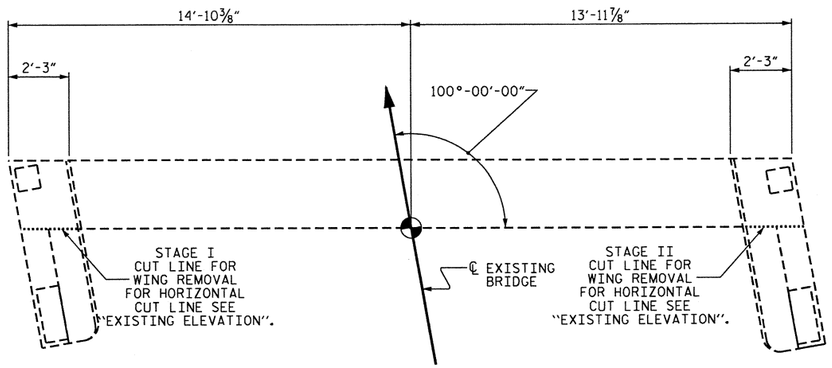

EXISTING PLAN

REMOVE (TOP OF WINGS/RAILS TO TOP OF CAP)

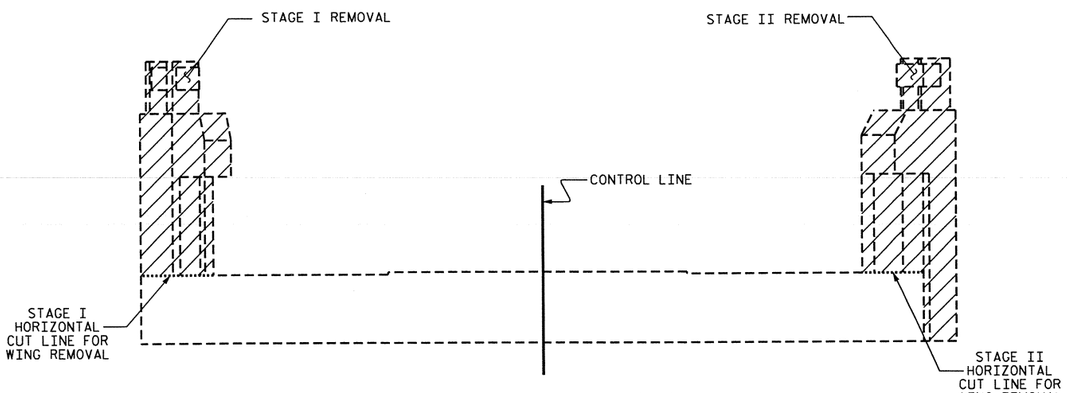

EXISTING ELEVATION

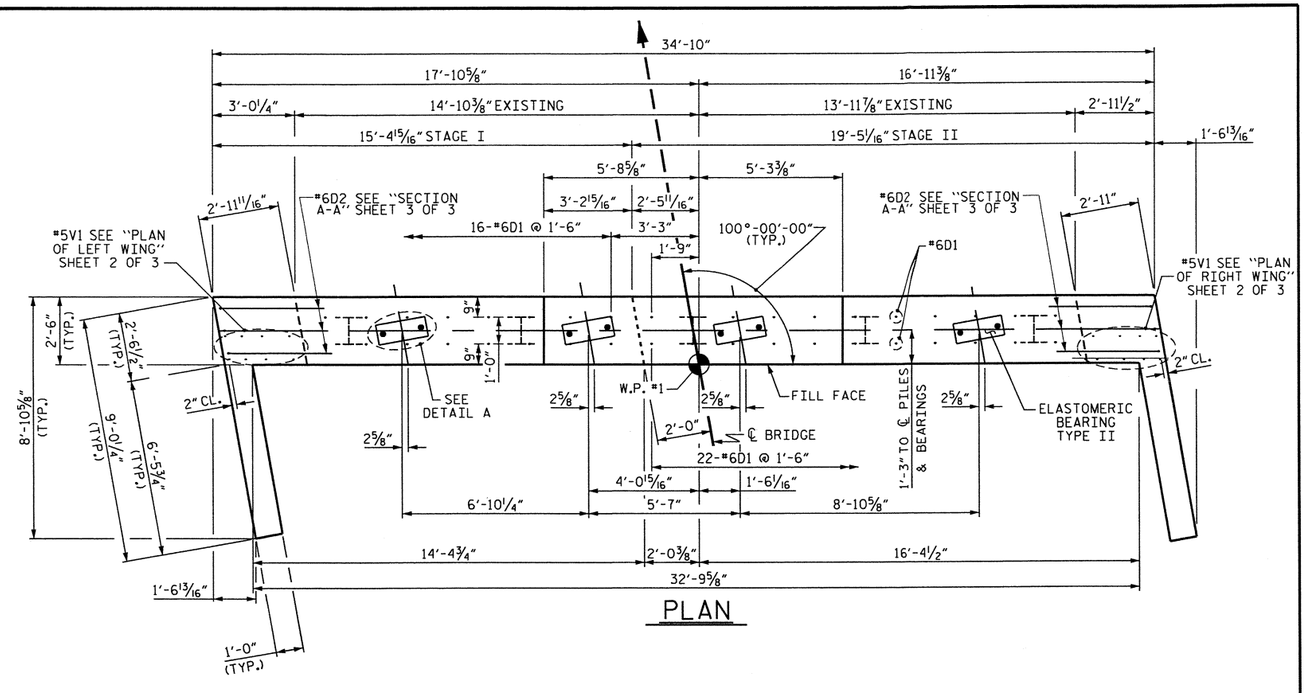

PLAN

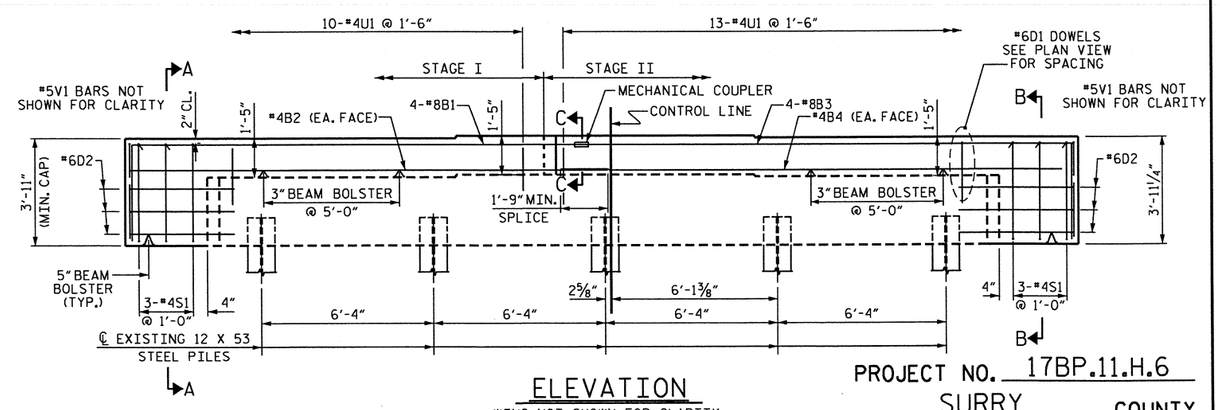

ELEVATION

WING NOT SHOWN FOR CLARITY

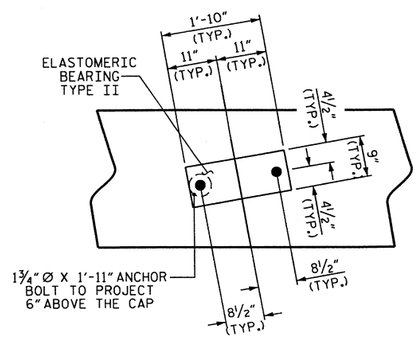

DETAIL A

(TYP. EA. GIRDER)

NOTES

STIRRUPS AND "U" BARS IN CAP MAY BE SHIFTED AS NECESSARY TO CLEAR ANCHOR BOLTS.

THE TOP SURFACE AREAS OF THE END BENT CAPS SHALL BE CURED IN ACCORDANCE WITH THE STANDARD SPECIFICATIONS EXCEPT THE MEMBRANE CURING COMPOUND METHOD SHALL NOT BE USED.

FOR BOND OF NEW CONCRETE TO OLD, THE OLD CONCRETE SHALL BE THOROUGHLY ROUGHENED TO EXPOSE AGGREGATE, CLEANED OF LOOSE MATERIAL, AND WETTED FOR A MINIMUM OF 2 HOURS PRIOR TO PLACING NEW CONCRETE. PAYMENT FOR THIS WORK SHALL BE INCLUDED IN THE CONTRACT PRICE FOR CLASS A CONCRETE.

ADHESIVELY ANCHOR THE #6D1 AND #6D2 BARS A MINIMUM OF 7" INTO EXISTING CONCRETE AND FOLLOW THE MANUFACTURERS SPECIFICATIONS. TESTING IS NOT REQUIRED

NORTH CAROLINA PROFESSIONAL SEAL 15825 ENGINEER BRUCE D. KLAPPENBACH 4-17-2013

PROJECT NO. 17BP.11.H.6

SURRY COUNTY

STATION: BRIDGE 119

SHEET 1 OF 3

STATE OF NORTH CAROLINA
DEPARTMENT OF TRANSPORTATION
RALEIGH

SUBSTRUCTURE END BENT #1

REVISIONS						SHEET NO.
NO.	BY:	DATE:	NO.	BY:	DATE:	S-36
1			3			TOTAL SHEETS
2			4			44

DRAWN BY :	H. T. BARBOUR	DATE :	3-21-13
CHECKED BY :	W. J. HARRIS	DATE :	4-13
DESIGN ENGINEER OF RECORD:	-	DATE :	-

16-APR-2013 18:05
O:\Structures\tbarbour\Microstation\17BP.11.H.6_SD_E*.dgn
tbarbour

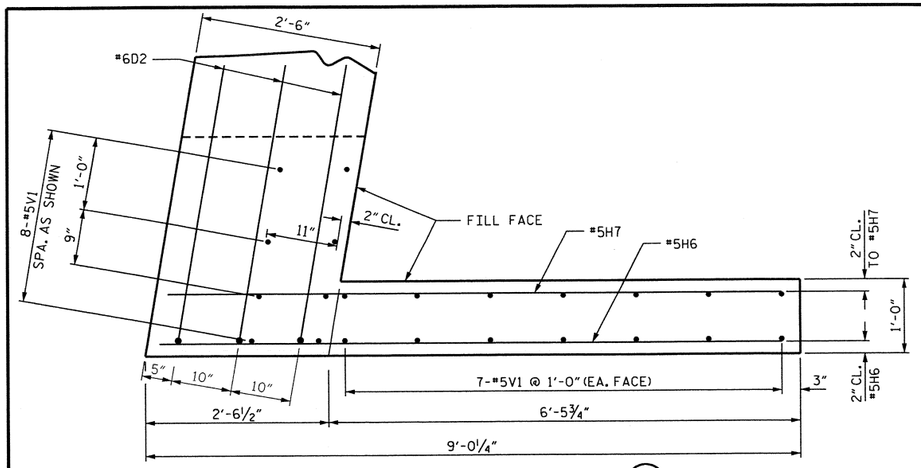

PLAN OF LEFT WING (W1)

(STAGE I)

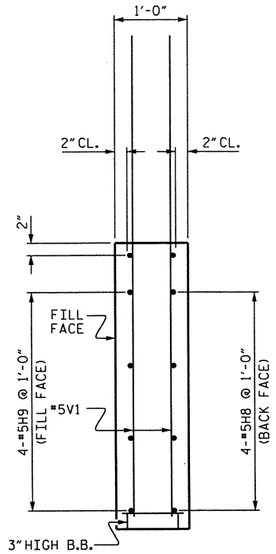

SECTION Y-Y

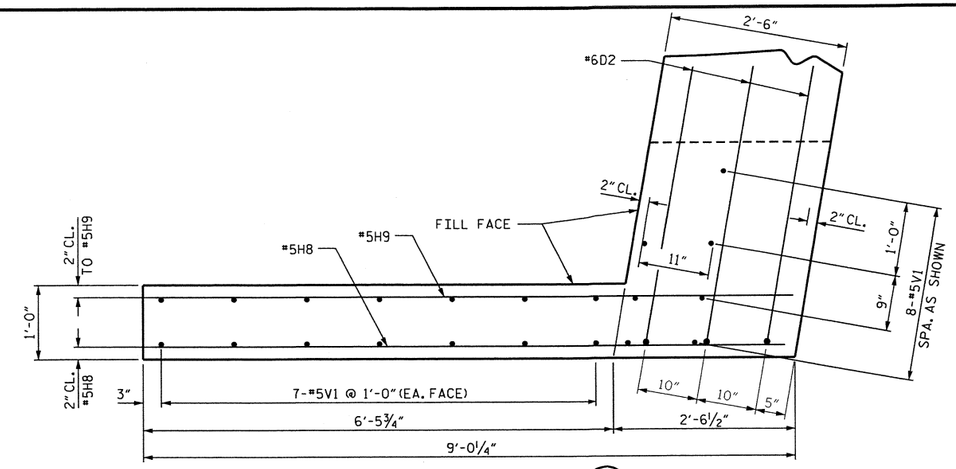

PLAN OF RIGHT WING (W2)

(STAGE II)

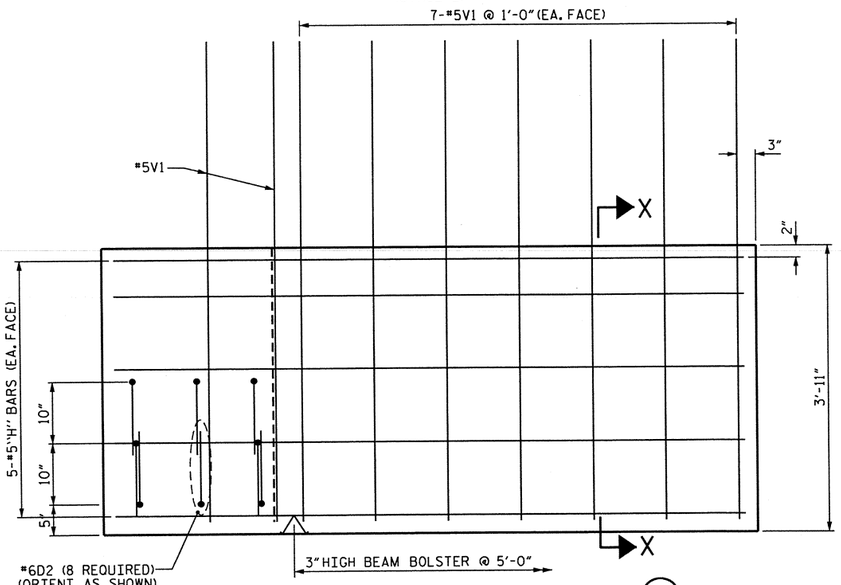

ELEVATION OF LEFT WING (W1)

(STAGE I)

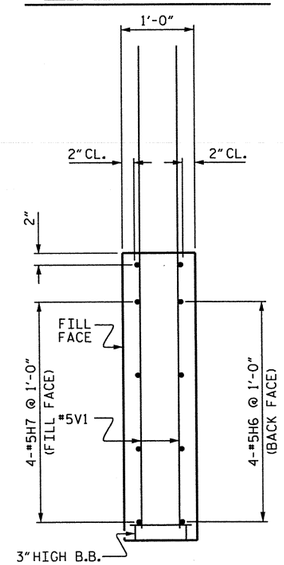

SECTION X-X

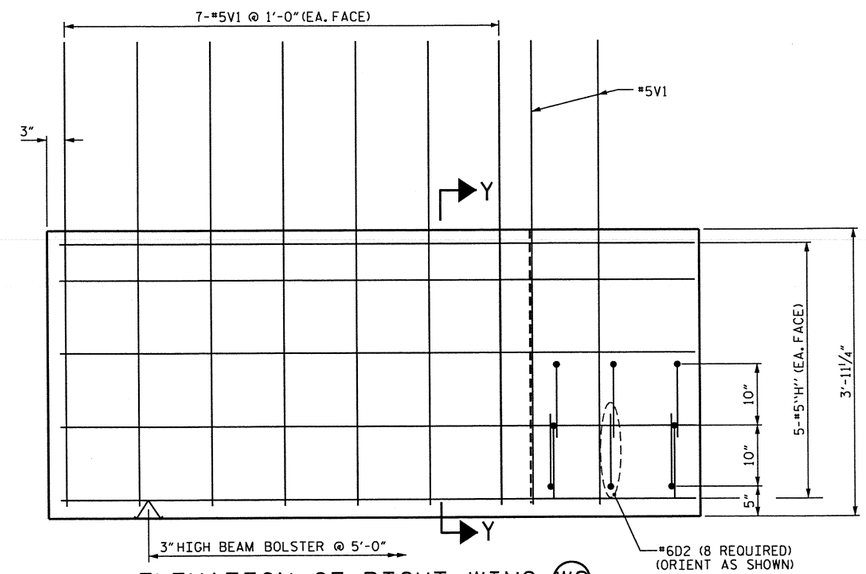

ELEVATION OF RIGHT WING (W2)

(STAGE II)

PROJECT NO. 17BP.11.H.6

SURRY COUNTY

STATION: BRIDGE 119

SHEET 2 OF 3

STATE OF NORTH CAROLINA
DEPARTMENT OF TRANSPORTATION
RALEIGH

SUBSTRUCTURE BOTTOM OF WINGS END BENT #1

NORTH CAROLINA PROFESSIONAL SEAL 15825 ENGINEER BRUCE D. KLAPPENBACH
4-17-2013

REVISIONS						SHEET NO.
NO.	BY:	DATE:	NO.	BY:	DATE:	S-37
1			3			TOTAL SHEETS
2			4			44

DRAWN BY : H. T. BARBOUR DATE : 3-21-13
CHECKED BY : W. J. HARRIS DATE : 4-13
DESIGN ENGINEER OF RECORD: - DATE : -

12-APR-2013 15:41
Q:\Structures\tbarbour\Microstation\17BP.11.H.6_SD_E*.dgn
tbarbour

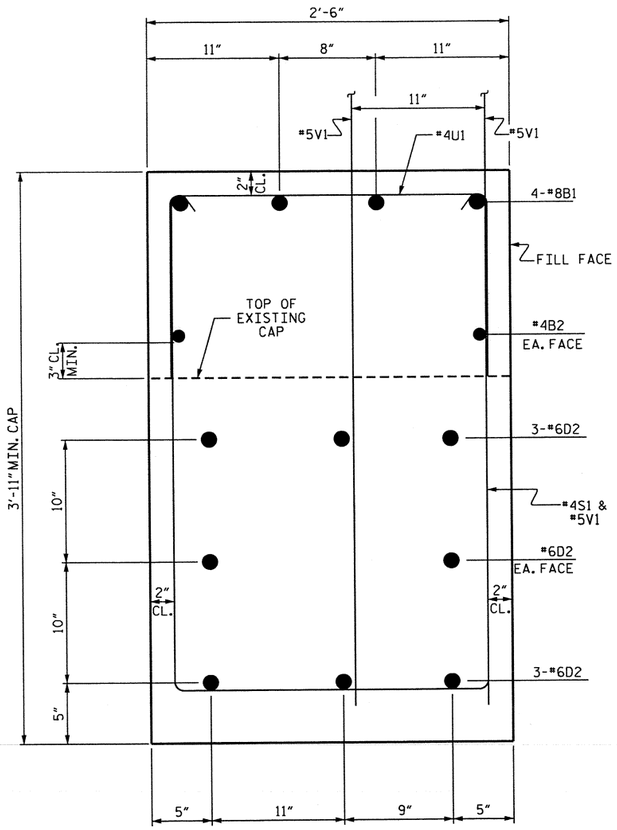

SECTION A-A

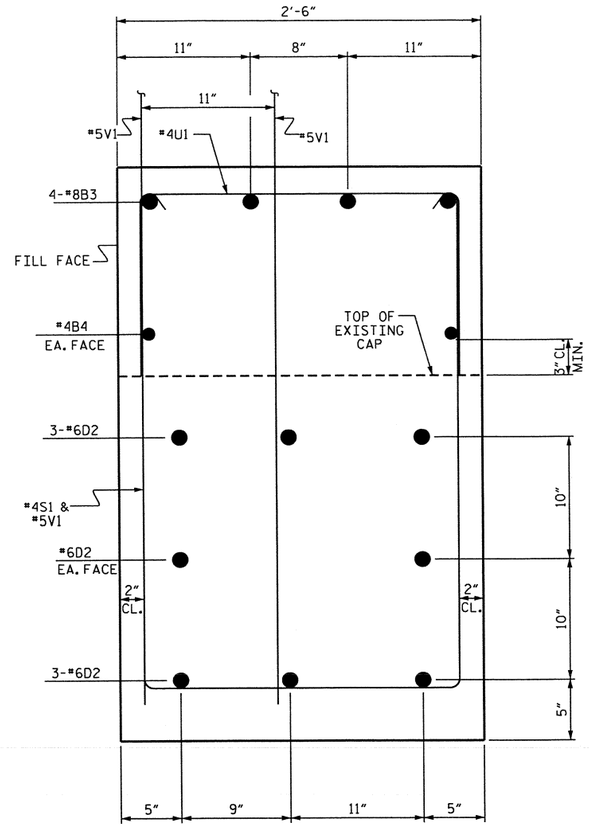

SECTION B-B

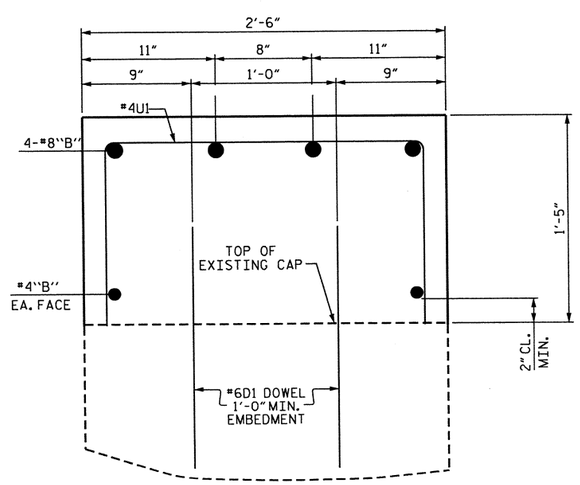

SECTION C-C

BAR TYPES

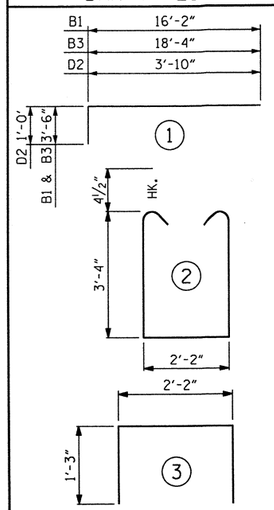

ALL BAR DIMENSIONS ARE OUT TO OUT.

BILL OF MATERIAL

STAGE I

BAR	NO.	SIZE	TYPE	LENGTH	WEIGHT
B1	4	#8	1	19'-8"	210
B2	2	#4	STR	17'-1"	23
D1	16	#6	STR	1'-8"	40
D2	8	#6	1	4'-10"	58
H7	5	#5	STR	8'-6"	44
H8	5	#5	STR	8'-5"	44
S1	3	#4	2	9'-7"	19
U1	10	#4	3	4'-8"	31
V1	22	#5	STR	6'-10"	157

REINFORCING STEEL (FOR ONE END BENT) 626 LBS.

CLASS A CONCRETE BREAKDOWN (STAGE I)

POUR #1
STAGE I CAP ADDITION, LOWER PART OF STAGE I WING 3.9 C.Y.

TOTAL CLASS A CONCRETE STAGE I 3.9 C.Y.

STAGE II

BAR	NO.	SIZE	TYPE	LENGTH	WEIGHT
B3	4	#8	1	21'-10"	233
B4	2	#4	STR	19'-3"	26
D1	22	#6	STR	1'-8"	55
D2	8	#6	1	4'-10"	58
H8	5	#5	STR	8'-8"	45
H9	5	#5	STR	8'-9"	46
S1	3	#4	2	9'-7"	19
U1	13	#4	3	4'-8"	41
V1	22	#5	STR	6'-10"	157

REINFORCING STEEL (FOR ONE END BENT) 680 LBS.

CLASS A CONCRETE BREAKDOWN (STAGE II)

POUR #1
STAGE II CAP ADDITION, LOWER PART OF STAGE II WING 4.3 C.Y.

TOTAL CLASS A CONCRETE STAGE II 4.3 C.Y.

END BENT #1 TOTAL BILL

	REINFORCING STEEL	CONCRETE
STAGE I	626 LBS.	3.9 CU. YDS.
STAGE II	680 LBS.	4.3 CU. YDS
TOTAL	1306 LBS.	8.2 CU. YDS

PROJECT NO. 17BP.11.H.6
SURRY COUNTY
STATION: BRIDGE 119

SHEET 3 OF 3

STATE OF NORTH CAROLINA
DEPARTMENT OF TRANSPORTATION
RALEIGH

SUBSTRUCTURE
END BENT #1

NORTH CAROLINA PROFESSIONAL SEAL 15625 ENGINEER BRUCE D. KLAPPENBACH 4-17-2012

REVISIONS						SHEET NO.
NO.	BY:	DATE:	NO.	BY:	DATE:	S-38
1			3			TOTAL SHEETS
2			4			44

DRAWN BY : H. T. BARBOUR DATE : 3-21-13
CHECKED BY : W. J. HARRIS DATE : 4-13
DESIGN ENGINEER OF RECORD: - DATE : -

12-APR-2013 15:41
O:\Structures\tbarbour\Microstation\17BP.11.H.6_SD_E*.dgn
tbarbour

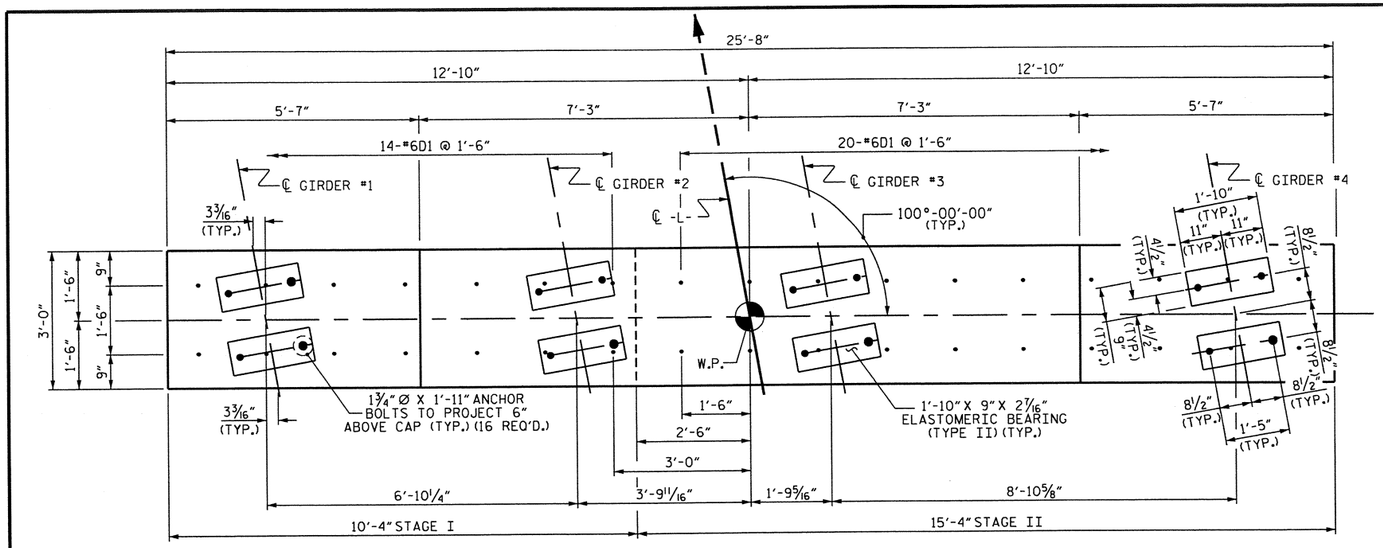

PLAN

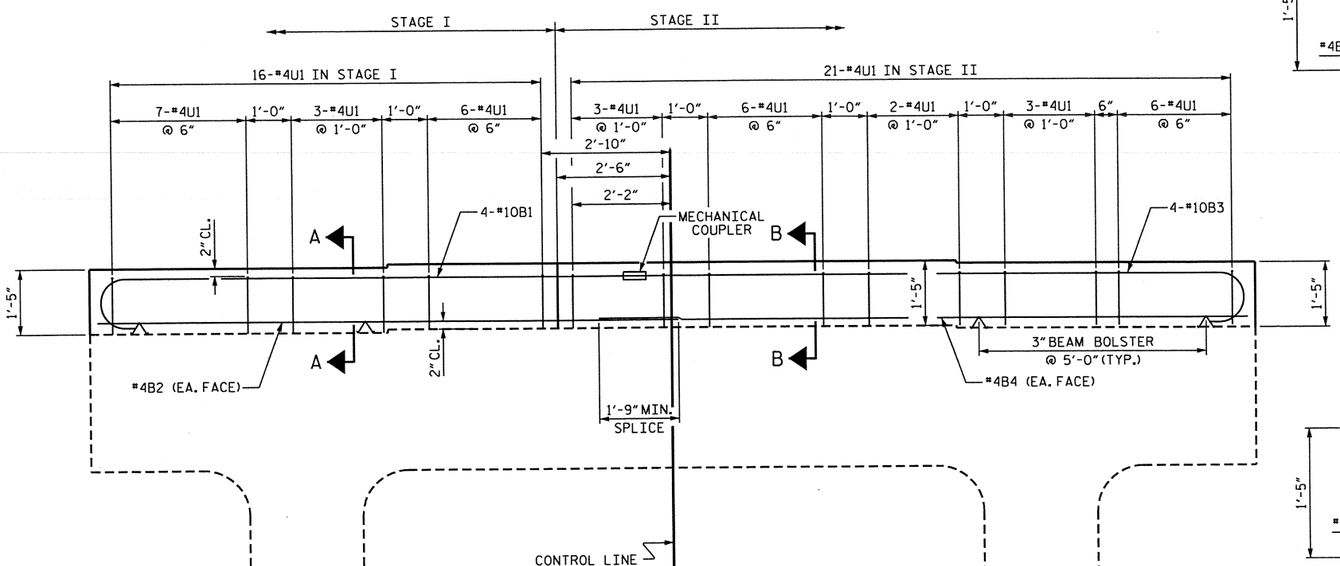

ELEVATION

TOTAL BILL OF MATERIAL (FOR ONE BENT) (3 REQUIRED)		
	REINFORCING STEEL	CONCRETE
STAGE I	323 LBS.	1.7 CU. YDS.
STAGE II	409 LBS.	2.3 CU. YDS
TOTAL	732 LBS.	4.0 CU. YDS

NOTES

"U" BARS IN CAP MAY BE SHIFTED AS NECESSARY TO CLEAR ANCHOR BOLTS.

FOR BOND OF NEW CONCRETE TO OLD, THE OLD CONCRETE SHALL BE THOROUGHLY ROUGHENED TO EXPOSE AGGREGATE, CLEANED OF LOOSE MATERIAL, AND WETTED FOR A MINIMUM OF 2 HOURS PRIOR TO PLACING NEW CONCRETE. PAYMENT FOR THIS WORK SHALL BE INCLUDED IN THE CONTRACT PRICE FOR CLASS A CONCRETE.

ADHESIVELY ANCHOR THE #6D1 BARS A MINIMUM OF 7" INTO EXISTING CONCRETE AND FOLLOW THE MANUFACTURES SPECIFICATIONS. TESTING IS NOT REQUIRED.

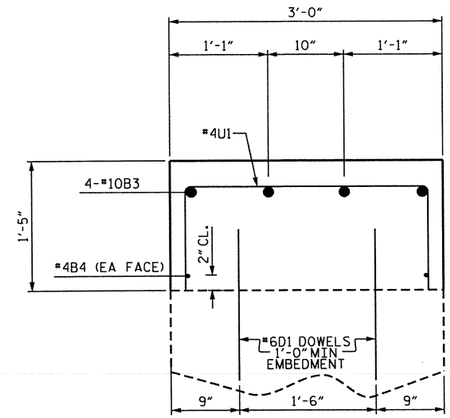

SECTION B-B

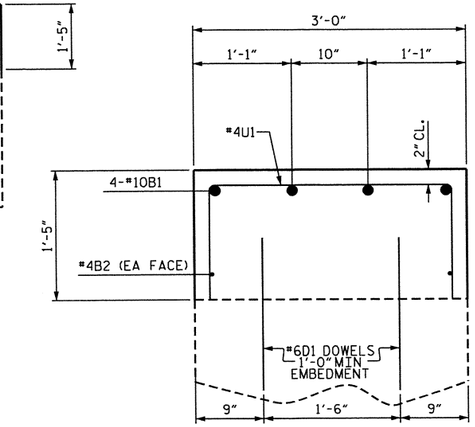

SECTION A-A

BILL OF MATERIAL

STAGE I

BAR	NO.	SIZE	TYPE	LENGTH	WEIGHT
B1	4	#10	1	12'-7"	217
B2	2	#4	STR	12'-1"	16
D1	14	#6	STR	1'-8"	35
U1	16	#4	2	5'-2"	55
REINFORCING STEEL (STAGE I)					323 LBS.

CLASS A CONCRETE BREAKDOWN (STAGE I)

STAGE I CAP ADDITION 1.7 C.Y.

TOTAL CLASS A CONCRETE STAGE I 1.7 C.Y.

STAGE II

BAR	NO.	SIZE	TYPE	LENGTH	WEIGHT
B3	4	#10	1	15'-6"	267
B4	2	#4	STR	15'-1"	20
D1	20	#6	STR	1'-8"	50
U1	21	#4	2	5'-2"	72
REINFORCING STEEL (STAGE II)					409 LBS.

CLASS A CONCRETE BREAKDOWN (STAGE II)

STAGE II CAP ADDITION, 2.3 C.Y.

TOTAL CLASS A CONCRETE STAGE II 2.3 C.Y.

BAR TYPES

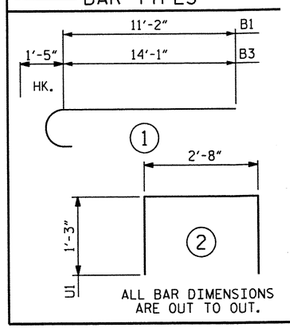

PROJECT NO. 17BP.11.H.6

SURRY COUNTY

STATION: BRIDGE 119

STATE OF NORTH CAROLINA
DEPARTMENT OF TRANSPORTATION
RALEIGH

SUBSTRUCTURE BENT #1 THROUGH BENT #3

NORTH CAROLINA PROFESSIONAL SEAL 15825 ENGINEER BRUCE D. KLAPPENBACH
4-17-2013

REVISIONS						SHEET NO.
NO.	BY:	DATE:	NO.	BY:	DATE:	S-39
1			3			TOTAL SHEETS
2			4			44

DRAWN BY : H. T. BARBOUR DATE : 3-25-13
CHECKED BY : W. J. HARRIS DATE : 4-13
DESIGN ENGINEER OF RECORD: - DATE : -

12-APR-2013 15:40
O:\Structures\tbarbour\Microstation\17BP.11.H.6_SD_B*.dgn
tbarbour

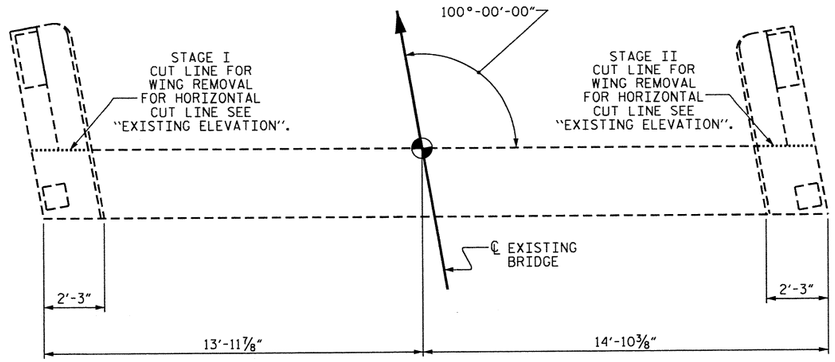

EXISTING PLAN

REMOVE (TOP OF WINGS/RAILS TO TOP OF CAP)

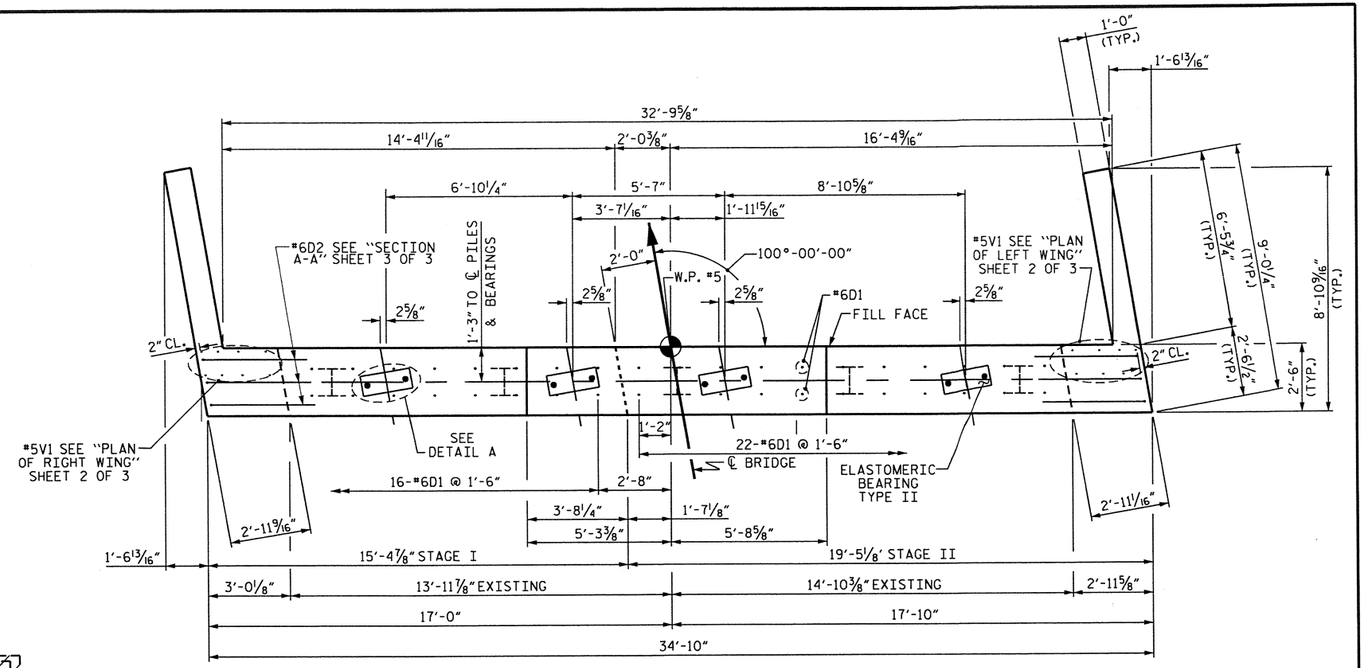

PLAN

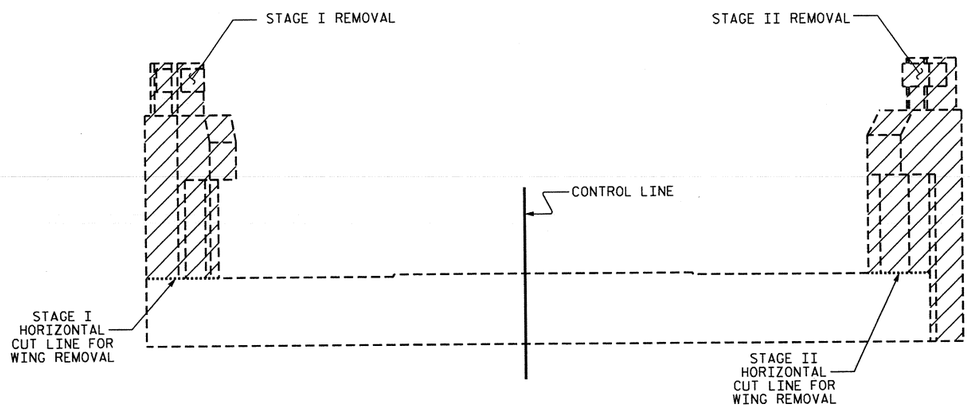

EXISTING ELEVATION

(SHOWN DOWN STATION)

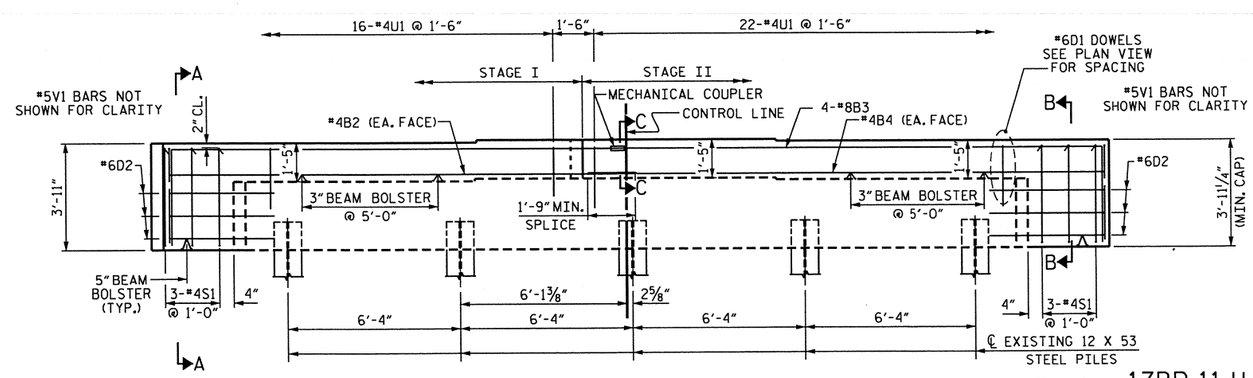

ELEVATION

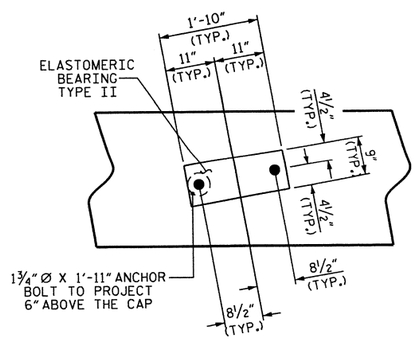

DETAIL A

(TYP. EA. GIRDER)

NOTES

STIRRUPS AND "U" BARS IN CAP MAY BE SHIFTED AS NECESSARY TO CLEAR ANCHOR BOLTS.

THE TOP SURFACE AREAS OF THE END BENT CAPS SHALL BE CURED IN ACCORDANCE WITH THE STANDARD SPECIFICATIONS EXCEPT THE MEMBRANE CURING COMPOUND METHOD SHALL NOT BE USED.

FOR BOND OF NEW CONCRETE TO OLD, THE OLD CONCRETE SHALL BE THOROUGHLY ROUGHENED TO EXPOSE AGGREGATE, CLEANED OF LOOSE MATERIAL, AND WETTED FOR A MINIMUM OF 2 HOURS PRIOR TO PLACING NEW CONCRETE. PAYMENT FOR THIS WORK SHALL BE INCLUDED IN THE CONTRACT PRICE FOR CLASS A CONCRETE.

ADHESIVELY ANCHOR THE #6D1 AND #6D2 BARS A MINIMUM OF 7" INTO EXISTING CONCRETE AND FOLLOW THE MANUFACTURES SPECIFICATIONS. TESTING IS NOT REQUIRED

NORTH CAROLINA PROFESSIONAL SEAL 15825 ENGINEER BRUCE D. KLAPPENBACH
4-17-2013

PROJECT NO. 17BP.11.H.6

SURRY COUNTY

STATION: BRIDGE 119

SHEET 1 OF 3

STATE OF NORTH CAROLINA
DEPARTMENT OF TRANSPORTATION
RALEIGH

SUBSTRUCTURE
END BENT #2

REVISIONS						SHEET NO.
NO.	BY:	DATE:	NO.	BY:	DATE:	S-40
1			3			TOTAL SHEETS
2			4			44

DRAWN BY :	H. T. BARBOUR	DATE :	3-21-13
CHECKED BY :	W. J. HARRIS	DATE :	4-13
DESIGN ENGINEER OF RECORD:	-	DATE :	-

12-APR-2013 15:40
O:\Structures\tbarbour\Microstation\17BP.11.H.6_SD_E*.dgn
tbarbour

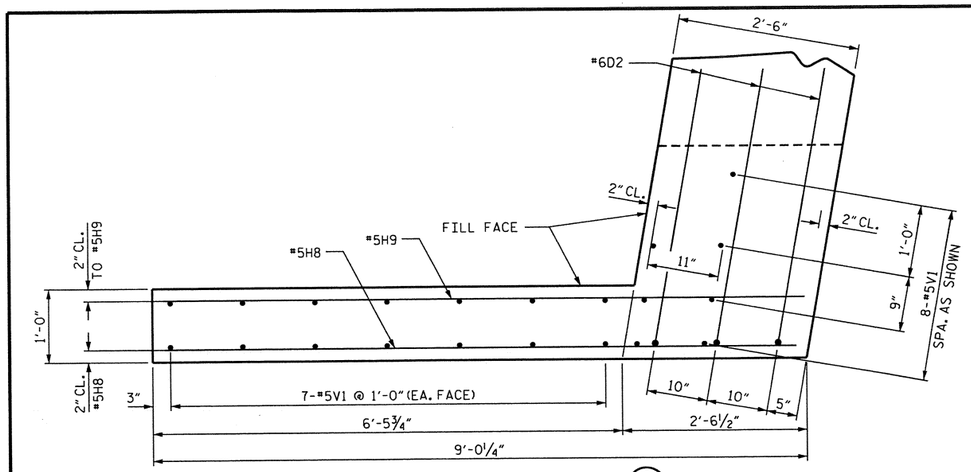

PLAN OF LEFT WING (W1)

(STAGE I)

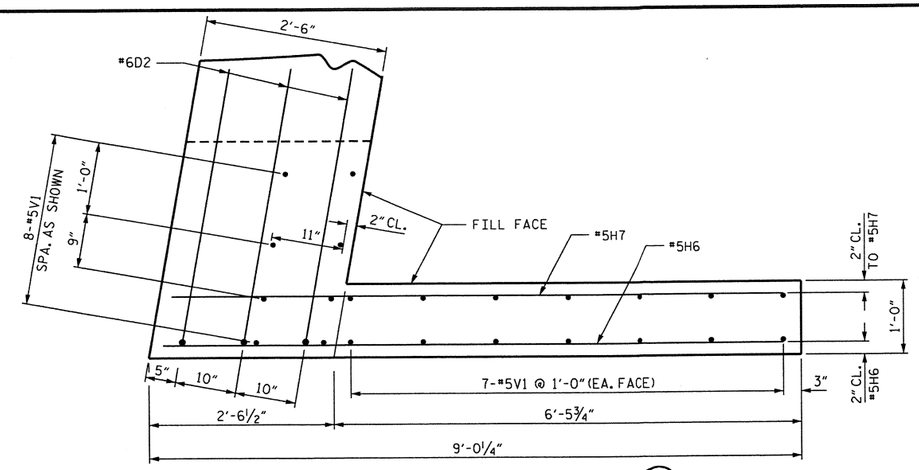

PLAN OF RIGHT WING (W2)

(STAGE II)

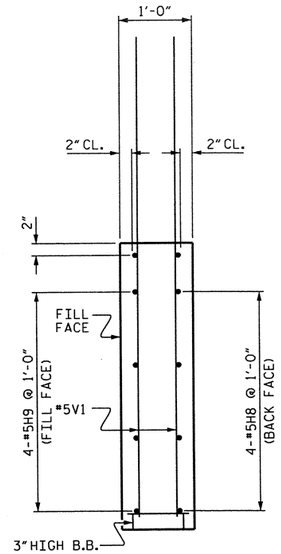

SECTION Y-Y

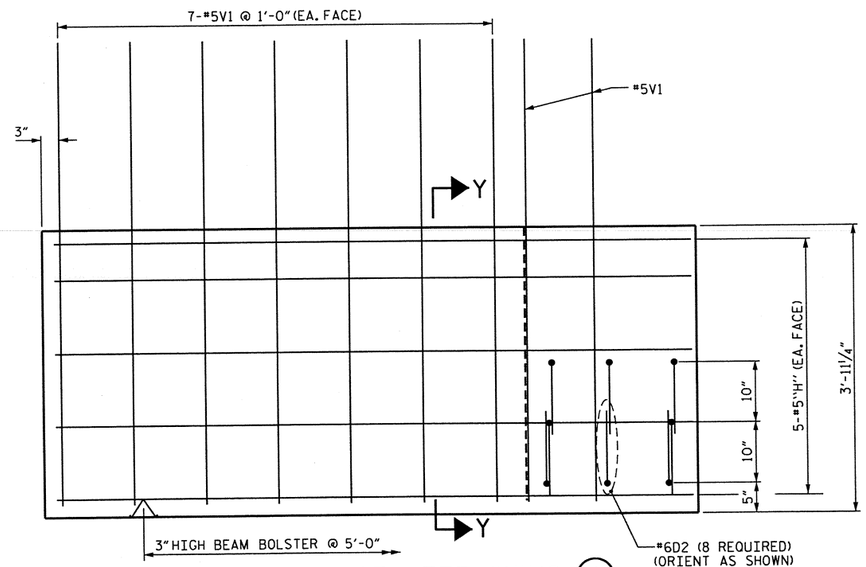

ELEVATION OF LEFT WING (W1)

(STAGE I)

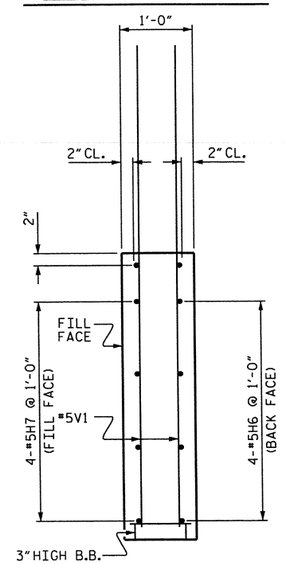

SECTION X-X

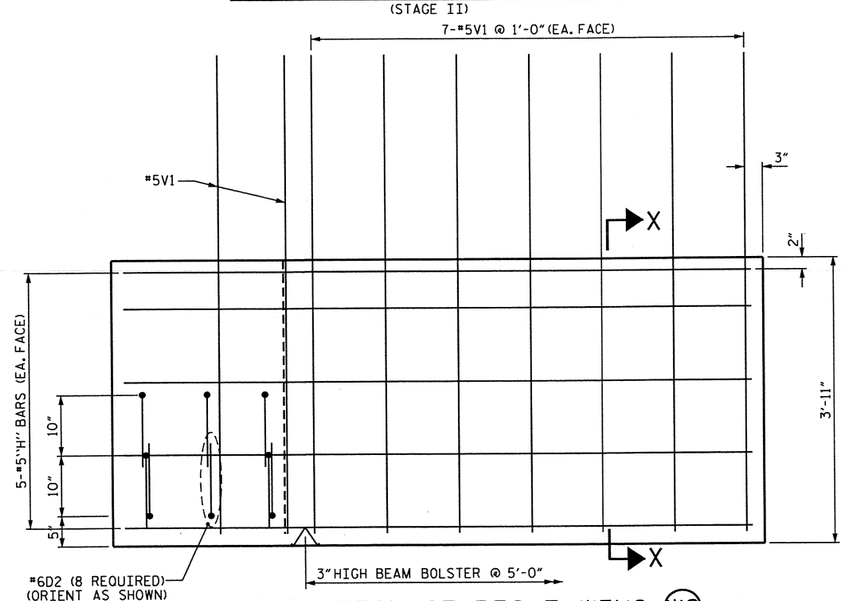

ELEVATION OF RIGHT WING (W2)

(STAGE II)

PROJECT NO. 17BP.11.H.6

SURRY COUNTY

STATION: BRIDGE 119

SHEET 2 OF 3

STATE OF NORTH CAROLINA
DEPARTMENT OF TRANSPORTATION
RALEIGH

SUBSTRUCTURE
BOTTOM OF WINGS
END BENT #2

NORTH CAROLINA PROFESSIONAL SEAL 15825 ENGINEER BRUCE D. KLAPPENBACH
4-17-2013

REVISIONS						SHEET NO.
NO.	BY:	DATE:	NO.	BY:	DATE:	S-41
1			3			TOTAL SHEETS
2			4			44

DRAWN BY : H. T. BARBOUR DATE : 3-21-13
CHECKED BY : W. J. HARRIS DATE : 4-13
DESIGN ENGINEER OF RECORD: - DATE : -

12-APR-2013 15:40
Q:\Structures\tbarbour\Microstation\17BP.11.H.6_SD_E*.dgn
tbarbour

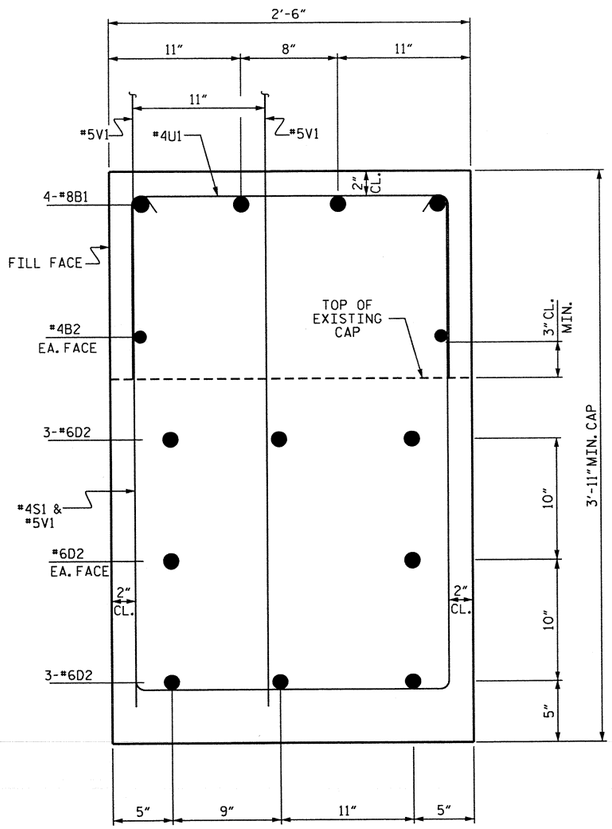

SECTION A-A

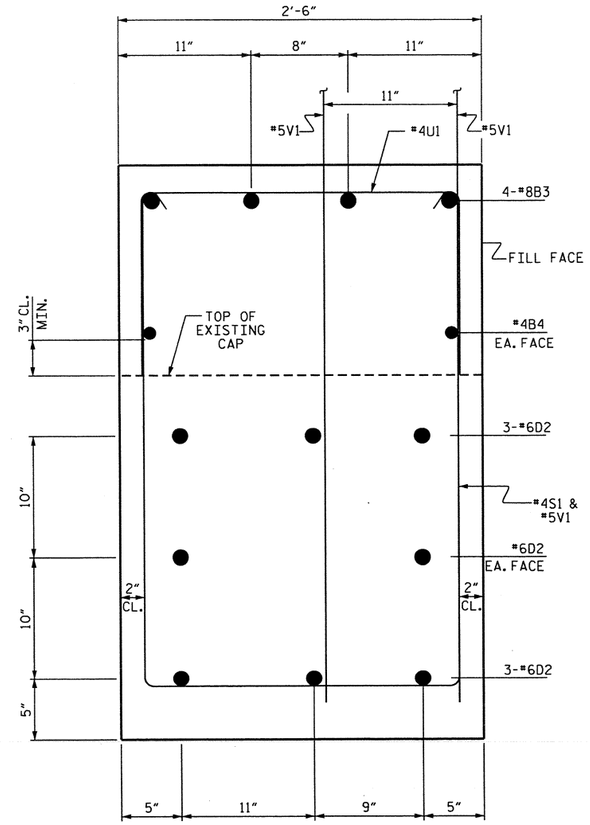

SECTION B-B

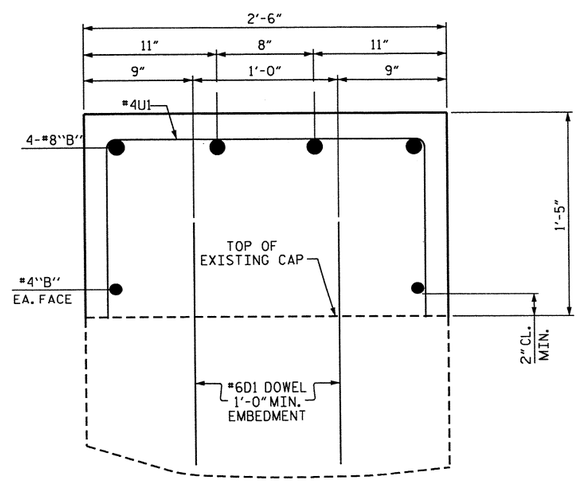

SECTION C-C

BAR TYPES

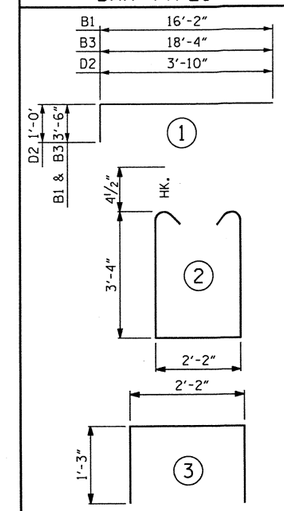

ALL BAR DIMENSIONS ARE OUT TO OUT.

BILL OF MATERIAL

STAGE I

BAR	NO.	SIZE	TYPE	LENGTH	WEIGHT
B1	4	#8	1	19'-8"	210
B2	2	#4	STR	17'-1"	23
D1	16	#6	STR	1'-8"	40
D2	8	#6	1	4'-10"	58
H8	5	#5	STR	8'-6"	44
H9	5	#5	STR	8'-5"	44
S1	3	#4	2	9'-7"	19
U1	11	#4	3	4'-8"	34
V1	22	#5	STR	6'-10"	157
REINFORCING STEEL (FOR ONE END BENT)					629 LBS.

CLASS A CONCRETE BREAKDOWN (STAGE I)

POUR #1
STAGE I CAP ADDITION, LOWER PART OF STAGE I WING — 3.9 C.Y.

TOTAL CLASS A CONCRETE STAGE I — 3.9 C.Y.

STAGE II

BAR	NO.	SIZE	TYPE	LENGTH	WEIGHT
B3	4	#8	1	21'-10"	233
B4	2	#4	STR	19'-3"	26
D1	22	#6	STR	1'-8"	55
D2	8	#6	1	4'-10"	58
H6	5	#5	STR	8'-8"	45
H7	5	#5	STR	8'-9"	46
S1	3	#4	2	9'-7"	19
U1	13	#4	3	4'-8"	41
V1	22	#5	STR	6'-10"	157
REINFORCING STEEL (FOR ONE END BENT)					680 LBS.

CLASS A CONCRETE BREAKDOWN (STAGE II)

POUR #1
STAGE II CAP ADDITION, LOWER PART OF STAGE II WING — 4.3 C.Y.

TOTAL CLASS A CONCRETE STAGE II — 4.3 C.Y.

END BENT #2 TOTAL BILL

	REINFORCING STEEL	CONCRETE
STAGE I	629 LBS.	3.9 CU. YDS.
STAGE II	680 LBS.	4.3 CU. YDS
TOTAL	1309 LBS.	8.2 CU. YDS

PROJECT NO. 17BP.11.H.6
SURRY COUNTY
STATION: BRIDGE 119

SHEET 3 OF 3

STATE OF NORTH CAROLINA
DEPARTMENT OF TRANSPORTATION
RALEIGH

SUBSTRUCTURE END BENT #2

NORTH CAROLINA PROFESSIONAL SEAL 15825 ENGINEER BRUCE D. KLAPPENBACH
4-17-2013

REVISIONS						SHEET NO.
NO.	BY:	DATE:	NO.	BY:	DATE:	S-42
1			3			TOTAL SHEETS
2			4			44

DRAWN BY : H. T. BARBOUR DATE : 3-21-13
CHECKED BY : W. J. HARRIS DATE : 4-13
DESIGN ENGINEER OF RECORD: - DATE : -

12-APR-2013 15:40
Q:\Structures\tbarbour\Microstation\17BP.11.H.6_SD_E*.dgn
tbarbour

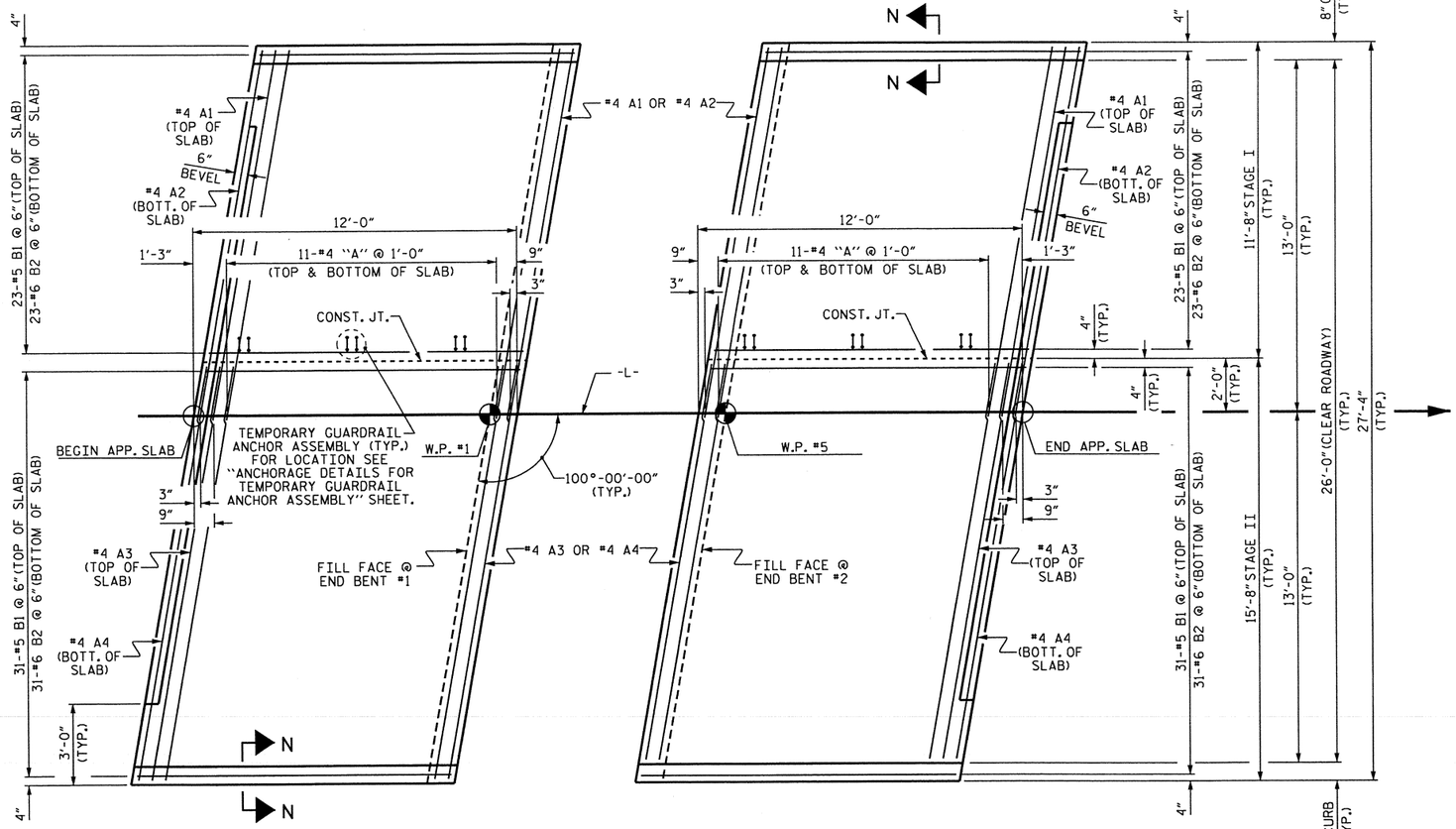

PLAN @ END BENT #1

PLAN @ END BENT #2

BILL OF MATERIAL

APPROACH SLAB AT E.BT. 1 STAGE I

BAR	NO.	SIZE	TYPE	LENGTH	WEIGHT
* A1	13	#4	STR	13'-10"	120
A2	13	#4	STR	13'-7"	118
* B1	23	#5	STR	11'-1"	266
B2	23	#6	STR	11'-7"	400
REINFORCING STEEL				LBS.	518
* EPOXY COATED REINFORCING STEEL				LBS.	386
CLASS AA CONCRETE				C. Y.	6.2

APPROACH SLAB AT E.BT. 2 STAGE I

BAR	NO.	SIZE	TYPE	LENGTH	WEIGHT
* A1	13	#4	STR	13'-10"	120
A2	13	#4	STR	13'-7"	118
* B1	23	#5	STR	11'-1"	266
B2	23	#6	STR	11'-7"	400
REINFORCING STEEL				LBS.	518
* EPOXY COATED REINFORCING STEEL				LBS.	386
CLASS AA CONCRETE				C. Y.	6.2

APPROACH SLAB AT E.BT. 1 STAGE II

BAR	NO.	SIZE	TYPE	LENGTH	WEIGHT
* A3	13	#4	STR	15'-6"	135
A4	13	#4	STR	15'-6"	135
* B1	31	#5	STR	11'-1"	358
B2	31	#6	STR	11'-7"	539
REINFORCING STEEL				LBS.	674
* EPOXY COATED REINFORCING STEEL				LBS.	493
CLASS AA CONCRETE				C. Y.	8.3

APPROACH SLAB AT E.BT. 2 STAGE II

BAR	NO.	SIZE	TYPE	LENGTH	WEIGHT
* A3	13	#4	STR	15'-6"	135
A4	13	#4	STR	15'-6"	135
* B1	31	#5	STR	11'-1"	358
B2	31	#6	STR	11'-7"	539
REINFORCING STEEL				LBS.	674
* EPOXY COATED REINFORCING STEEL				LBS.	493
CLASS AA CONCRETE				C. Y.	8.3

* THESE BARS ARE EPOXY COATED

NOTES

FOR BRIDGE APPROACH FILL INCLUDING GEOTEXTILE, 4" Ø DRAINAGE PIPE, AND #78M STONE BACKFILL, SEE ROADWAY PLANS.

GEOTEXTILE SHALL BE TYPE 1 IN ACCORDANCE WITH THE STANDARD SPECIFICATIONS SECTION 1056.

#78M STONE BACKFILL (CLASS V SELECT MATERIAL) SHALL BE IN ACCORDANCE WITH STANDARD SPECIFICATIONS SECTION 1016.

#78M STONE BACKFILL IS TO BE CONTINUOUS ALONG FILL FACE OF BACKWALL FROM OUTSIDE EDGE TO OUTSIDE EDGE OF APPROACH SLAB.

FOR THE 4" Ø DRAINAGE PIPE OUTLET(S), SEE ROADWAY STANDARD DRAWINGS.

AREA BETWEEN THE WINGWALL AND APPROACH SLAB SHALL BE GRADED TO DRAIN THE WATER AWAY FROM THE FILL FACE OF THE BRIDGE AND SHALL BE PAVED. SEE ROADWAY PLANS.

APPROACH SLAB GROOVING IS NOT REQUIRED.

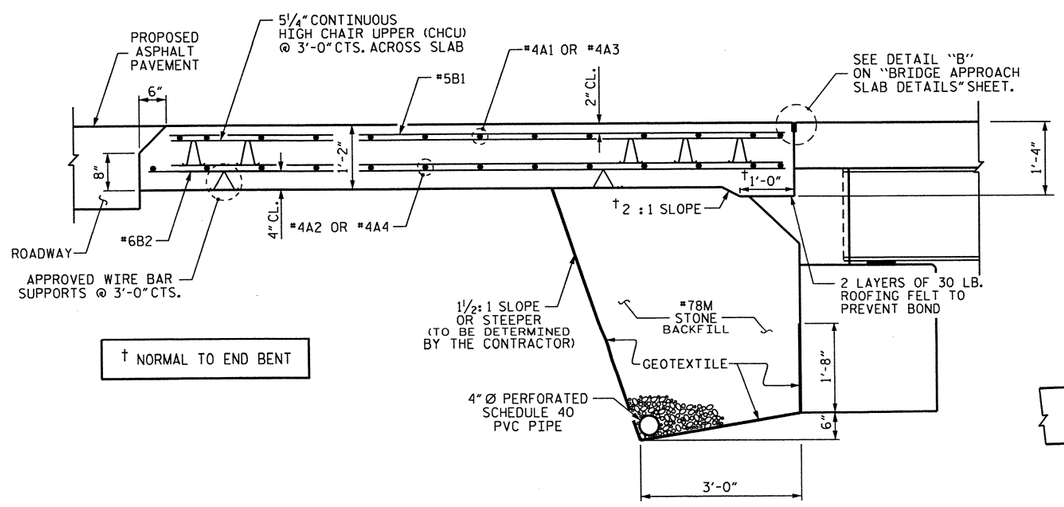

† NORMAL TO END BENT

SECTION THRU SLAB

SPLICE LENGTHS		
BAR SIZE	EPOXY COATED	UNCOATED
#4	2'-0"	1'-9"
#5	2'-6"	2'-2"
#6	3'-10"	2'-7"

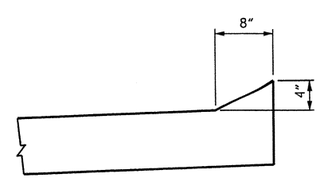

SECTION N-N

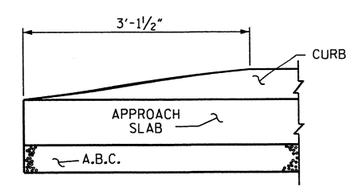

END OF CURB WITHOUT SHOULDER BERM GUTTER

CURB DETAILS

NORTH CAROLINA PROFESSIONAL SEAL 15825 ENGINEER B. D. KLAPPENBACH
4-17-2013

PROJECT NO. 17BP.11.H.6

SURRY COUNTY

STATION: BRIDGE 119

SHEET 1 OF 2

STATE OF NORTH CAROLINA
DEPARTMENT OF TRANSPORTATION
RALEIGH

BRIDGE APPROACH SLAB

REVISIONS							SHEET NO.
NO.	BY:	DATE:	NO.	BY:	DATE:		S-43
1			3				TOTAL SHEETS
2			4				44

DRAWN BY :	H. T. BARBOUR	DATE :	11-19-12
CHECKED BY :	S. B. WILLIAMS	DATE :	4-13
DESIGN ENGINEER OF RECORD:	-	DATE :	-

11-APR-2013 10:06
R:\Structures\tbarbour\Microstation\17BP11H6_SD_AS.dgn
bklappenbach

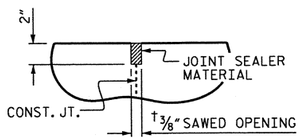

DETAIL B

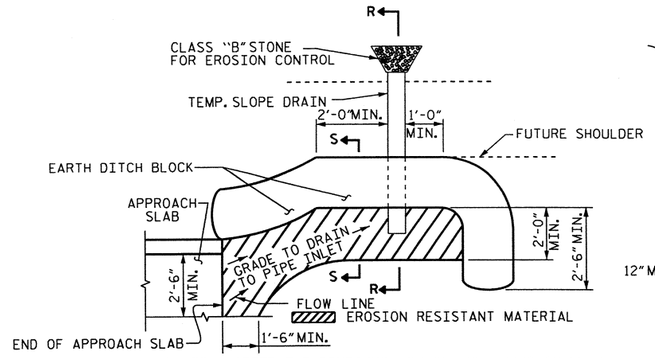

NOTE: IMMEDIATELY AFTER THE CONSTRUCTION OF THE APPROACH SLAB, THE CONTRACTOR SHALL PROVIDE TEMPORARY BERM AND SLOPE DRAIN. CONTRACTOR SHALL GRADE TO PIPE INLET AND PROVIDE EROSION RESISTANT MATERIAL AS SHOWN. THE EROSION RESISTANT MATERIAL SHALL BE EITHER 1) ASPHALT PLANT MIX, TYPE 1 OR TYPE 2, MIN. 2" DEPTH, 2) EROSION CONTROL MAT, OR 3) CONCRETE, AS DIRECTED BY THE ENGINEER. THE SLOPE DRAIN SHALL CONSIST OF A NON-PERFORATED TEMPORARY DRAINAGE PIPE, 12 INCHES IN DIAMETER.

PLAN VIEW

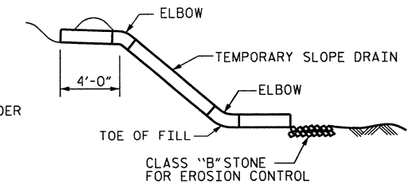

SECTION R-R

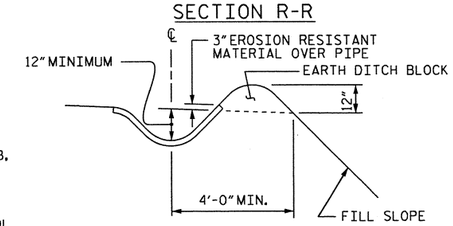

SECTION S-S

TEMPORARY BERM AND SLOPE DRAIN DETAILS

(TO BE USED WHEN SHOULDER BERM GUTTER IS REQUIRED)

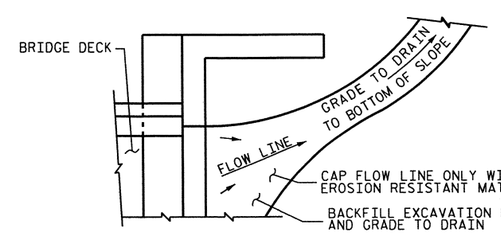

NOTE: IF THE APPROACH SLAB IS NOT CONSTRUCTED IMMEDIATELY AFTER THE BACKFILLING OF THE END BENT EXCAVATION, GRADE TO DRAIN TO THE BOTTOM OF THE SLOPE AND PROVIDE EROSION RESISTANT MATERIAL, SUCH AS FIBERGLASS ROVING OR AS DIRECTED BY THE ENGINEER TO PREVENT SOIL EROSION AND TO PROTECT THE AREA ADJACENT TO THE STRUCTURE. THE CONTRACTOR WILL BE REQUIRED TO REMOVE THESE MATERIALS PRIOR TO CONSTRUCTION OF THE APPROACH SLAB.

TEMPORARY DRAINAGE DETAIL

PROJECT NO. 17BP.11.H.6

SURRY COUNTY

STATION: BRIDGE 119

SHEET 2 OF 2

STATE OF NORTH CAROLINA
DEPARTMENT OF TRANSPORTATION
RALEIGH

STANDARD

BRIDGE APPROACH SLAB DETAILS

NORTH CAROLINA PROFESSIONAL SEAL 15825 ENGINEER BRUCE D. KLAPPENBACH
4-17-2013

REVISIONS						SHEET NO.
NO.	BY:	DATE:	NO.	BY:	DATE:	S-44
1			3			TOTAL SHEETS
2			4			44

ASSEMBLED BY :	H. T. BARBOUR	DATE :	11-19-12
CHECKED BY :	S. B. WILLIAMS	DATE :	4-13
DRAWN BY : FCJ	11/88	REV. 10/1/11	MAA/GM
CHECKED BY : ARB	11/88	REV. 7/12	MAA/GM
		REV. 10/12	MAA/GM

17-APR-2013 11:47
R:\Structures\tbarbour\Microstation\17BP11H6_SD_AS.dgn
bklappenbach

STD. NO. BAS4 (SHT 1b)

STANDARD NOTES

DESIGN DATA:

SPECIFICATIONS	A.A.S.H.T.O. (CURRENT)
LIVE LOAD	SEE PLANS
IMPACT ALLOWANCE	SEE A.A.S.H.T.O.
STRESS IN EXTREME FIBER OF	
STRUCTURAL STEEL - AASHTO M270 GRADE 36	20,000 LBS. PER SQ. IN.
- AASHTO M270 GRADE 50W	27,000 LBS. PER SQ. IN.
- AASHTO M270 GRADE 50	27,000 LBS. PER SQ. IN.
REINFORCING STEEL IN TENSION	
GRADE 60	24,000 LBS. PER SQ. IN.
CONCRETE IN COMPRESSION	1,200 LBS. PER SQ. IN.
CONCRETE IN SHEAR	SEE A.A.S.H.T.O.
STRUCTURAL TIMBER - TREATED OR	
UNTREATED - EXTREME FIBER STRESS	1,800 LBS. PER SQ. IN.
COMPRESSION PERPENDICULAR TO GRAIN OF TIMBER	375 LBS. PER SQ. IN.
EQUIVALENT FLUID PRESSURE OF EARTH	30 LBS. PER CU. FT. (MINIMUM)

MATERIAL AND WORKMANSHIP:

EXCEPT AS MAY OTHERWISE BE SPECIFIED ON PLANS OR IN THE SPECIAL PROVISIONS, ALL MATERIAL AND WORKMANSHIP SHALL BE IN ACCORDANCE WITH THE 2012 "STANDARD SPECIFICATIONS FOR ROADS AND STRUCTURES" OF THE N. C. DEPARTMENT OF TRANSPORTATION.

STEEL SHEET PILING FOR PERMANENT OR TEMPORARY APPLICATIONS SHALL BE HOT ROLLED.

CONCRETE:

UNLESS OTHERWISE REQUIRED ON PLANS, CLASS A CONCRETE SHALL BE USED FOR ALL PORTIONS OF ALL STRUCTURES WITH THE EXCEPTION THAT: CLASS AA CONCRETE SHALL BE USED IN BRIDGE SUPERSTRUCTURES, ABUTMENT BACKWALLS, AND APPROACH SLABS; AND CLASS B CONCRETE SHALL BE USED FOR SLOPE PROTECTION AND RIP RAP.

CONCRETE CHAMFERS:

UNLESS OTHERWISE NOTED ON THE PLANS, ALL EXPOSED CORNERS ON STRUCTURES SHALL BE CHAMFERED 3/4" WITH THE FOLLOWING EXCEPTIONS: TOP CORNERS OF CURBS MAY BE ROUNDED TO 1-1/2" RADIUS WHICH IS BUILT INTO CURB FORMS; CORNERS OF TRANSVERSE FLOOR EXPANSION JOINTS SHALL BE ROUNDED WITH A 1/4" FINISHING TOOL UNLESS OTHERWISE REQUIRED ON PLANS; AND CORNERS OF EXPANSION JOINTS IN THE ROADWAY FACES AND TOPS OF CURBS AND SIDEWALKS SHALL BE ROUNDED TO A 1/4" RADIUS WITH A FINISHING STONE OR TOOL UNLESS OTHERWISE REQUIRED ON PLANS.

DOWELS:

DOWELS WHEN INDICATED ON PLANS AS FOR CULVERT EXTENSIONS, SHALL BE EMBEDDED AT LEAST 12" INTO THE OLD CONCRETE AND GROUTED INTO PLACE WITH 1:2 CEMENT MORTAR.

ALLOWANCE FOR DEAD LOAD DEFLECTION, SETTLEMENT, ETC. IN CASTING SUPERSTRUCTURES:

BRIDGES SHALL BE BUILT ON THE GRADE OR VERTICAL CURVE SHOWN ON PLANS. SLABS, CURBS AND PARAPETS SHALL CONFORM TO THE GRADE OR CURVE.

ALL DIMENSIONS WHICH ARE GIVEN IN SECTION AND ARE AFFECTED BY DEAD LOAD DEFLECTIONS ARE DIMENSIONS AT CENTER LINE OF BEARING UNLESS OTHERWISE NOTED ON PLANS. IN SETTING FORMS FOR STEEL BEAM BRIDGES AND PRESTRESSED CONCRETE GIRDER BRIDGES, ADJUSTMENTS SHALL BE MADE DUE TO THE DEAD LOAD DEFLECTIONS FOR THE ELEVATIONS SHOWN. WHERE BLOCKS ARE SHOWN OVER BEAMS FOR BUILDING UP TO THE SLAB, THE VERTICAL DIMENSIONS OF THE BLOCKS SHALL BE ADJUSTED BETWEEN BEARINGS TO COMPENSATE FOR DEAD LOAD DEFLECTIONS, VERTICAL CURVE ORDINATE, AND ACTUAL BEAM CAMBER. WHERE BOTTOM OF SLAB IS IN LINE WITH BOTTOM OF TOP FLANGES, DEPTH OF SLAB BETWEEN BEARINGS SHALL BE ADJUSTED TO COMPENSATE FOR DEAD LOAD DEFLECTION, VERTICAL CURVE ORDINATE, AND ACTUAL BEAM CAMBER.

IN SETTING FALSEWORK AND FORMS FOR REINFORCED CONCRETE SPANS, AN ALLOWANCE SHALL BE MADE FOR DEAD LOAD DEFLECTIONS, SETTLEMENT OF FALSEWORK, AND PERMANENT CAMBER WHICH SHALL BE PROVIDED FOR IN ADDITION TO THE ELEVATIONS SHOWN. AFTER REMOVAL OF THE FALSEWORK, THE FINISHED STRUCTURES SHALL CONFORM TO THE PROFILE AND ELEVATIONS SHOWN ON THE PLANS AND CONSTRUCTION ELEVATIONS FURNISHED BY THE ENGINEER.

DETAILED DRAWINGS FOR FALSEWORK OR FORMS FOR BRIDGE SUPERSTRUCTURE AND ANY STRUCTURE OR PARTS OF A STRUCTURE AS NOTED ON THE PLANS SHALL BE SUBMITTED TO THE ENGINEER FOR APPROVAL BEFORE CONSTRUCTION OF THE FALSEWORK OR FORMS IS STARTED.

REINFORCING STEEL:

ALL REINFORCING STEEL SHALL BE DEFORMED. DIMENSIONS RELATIVE TO PLACEMENT OF REINFORCING ARE TO CENTERS OF BARS UNLESS OTHERWISE INDICATED IN THE PLANS. DIMENSIONS ON BAR DETAILS ARE TO CENTERS OF BARS OR ARE OUT TO OUT AS INDICATED ON PLANS.

WIRE BAR SUPPORTS SHALL BE PROVIDED FOR REINFORCING STEEL WHERE INDICATED ON THE PLANS. WHEN BAR SUPPORT PIECES ARE PLACED IN CONTINUOUS LINES, THEY SHALL BE SO PLACED THAT THE ENDS OF THE SUPPORTING WIRES SHALL BE LAPPED TO LOCK LEGS ON ADJOINING PIECES.

STRUCTURAL STEEL:

AT THE CONTRACTOR'S OPTION, HE MAY SUBSTITUTE 7/8" Ø SHEAR STUDS FOR THE 3/4" Ø STUDS SPECIFIED ON THE PLANS. THIS SUBSTITUTION SHALL BE MADE AT THE RATE OF 3 - 7/8" Ø STUDS FOR 4 - 3/4" Ø STUDS, AND STUD SPACING CHANGES SHALL BE MADE AS NECESSARY TO PROVIDE THE SAME EQUIVALENT NUMBER OF 7/8" Ø STUDS ALONG THE BEAM AS SHOWN FOR 3/4" Ø STUDS BASED ON THE RATIO OF 3 - 7/8" Ø STUDS FOR 4 - 3/4" Ø STUDS. STUDS OF THE LENGTH SPECIFIED ON THE PLANS MUST BE PROVIDED. THE MAXIMUM SPACING SHALL BE 2'-0".

EXCEPT AT THE INTERIOR SUPPORTS OF CONTINUOUS BEAMS WHERE THE COVER PLATE IS IN CONTACT WITH BEARING PLATE, THE CONTRACTOR MAY, AT HIS OPTION, SUBSTITUTE FOR THE COVER PLATES DESIGNATED ON THE PLANS COVER PLATES OF THE EQUIVALENT AREA PROVIDED THESE PLATES ARE AT LEAST 5/16" IN THICKNESS AND DO NOT EXCEED A WIDTH EQUAL TO THE FLANGE WIDTH LESS 2" OR A THICKNESS EQUAL TO 2 TIMES THE FLANGE THICKNESS. THE SIZE OF FILLET WELDS SHALL CONFORM TO THE REQUIREMENTS OF THE CURRENT ANSI/AASHTO/AWS "BRIDGE WELDING CODE". ELECTROSLAG WELDING WILL NOT BE PERMITTED.

WITH THE SOLE EXCEPTION OF EDGES AT SURFACES WHICH BEAR ON OTHER SURFACES, ALL SHARP EDGES AND ENDS OF SHAPES AND PLATES SHALL BE SLIGHTLY ROUNDED BY SUITABLE MEANS TO A RADIUS OF APPROXIMATELY 1/16 INCH OR EQUIVALENT FLAT SURFACE AT A SUITABLE ANGLE PRIOR TO PAINTING, GALVANIZING, OR METALLIZING.

HANDRAILS AND POSTS:

METAL STANDARDS AND FACES OF THE CONCRETE END POSTS FOR THE METAL RAIL SHALL BE SET NORMAL TO THE GRADE OF THE CURB, UNLESS OTHERWISE SHOWN ON PLANS. THE METAL RAIL AND TOPS OF CONCRETE POSTS USED WITH THE ALUMINUM RAIL SHALL BE BUILT PARALLEL TO THE GRADE OF THE CURB.

METAL HANDRAILS SHALL BE IN ACCORDANCE WITH THE PLANS. RAILS SHALL BE AS MANUFACTURED FOR BRIDGE RAILING. CASTINGS SHALL BE OF A UNIFORM APPEARANCE. FINS AND OTHER DEFORMATIONS RESULTING FROM CASTING OR OTHERWISE SHALL BE REMOVED IN A MANNER SO THAT A UNIFORM COLORING OF THE COMPLETED CASTING SHALL BE OBTAINED. CASTINGS WITH DISCOLORATIONS OR OF NON-UNIFORM COLORING WILL NOT BE ACCEPTED. CERTIFIED MILL REPORTS ARE REQUIRED FOR METAL RAILS AND POSTS.

SPECIAL NOTES:

GENERALLY, IN CASE OF DISCREPANCY, THIS STANDARD SHEET OF NOTES SHALL GOVERN OVER THE SPECIFICATIONS, BUT THE REMAINDER OF THE PLANS SHALL GOVERN OVER NOTES HEREON, AND SPECIAL PROVISIONS SHALL GOVERN OVER ALL. SEE SPECIFICATIONS ARTICLE 105-4.

ENGLISH

JANUARY, 1990

09/08/99

PROJECT NO.: 17BP.11.H.6

CONTRACT:

STATE	STATE PROJECT REFERENCE NO.	SHEET NO.	TOTAL SHEETS
N.C.	17BP.11.H.6	1	

STATE PROJ. NO.	F.A. PROJ. NO.	DESCRIPTION
17BP.11.H.6		PE
17BP.11.H.6		CONST.

STATE OF NORTH CAROLINA
DIVISION OF HIGHWAYS

SURRY COUNTY

LOCATION: BRIDGE No. 119 ON SR 2049 (DODSON MILLS ROAD) OVER US 52 NEAR MT. PILOT

TYPE OF WORK: GRADING, PAVING, SUPERSTRUCTURE REPLACEMENT, & SUBSTRUCTURE REPAIRS

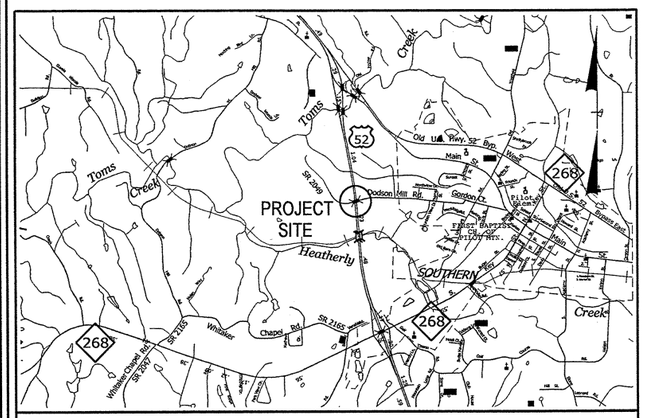

VICINITY MAP

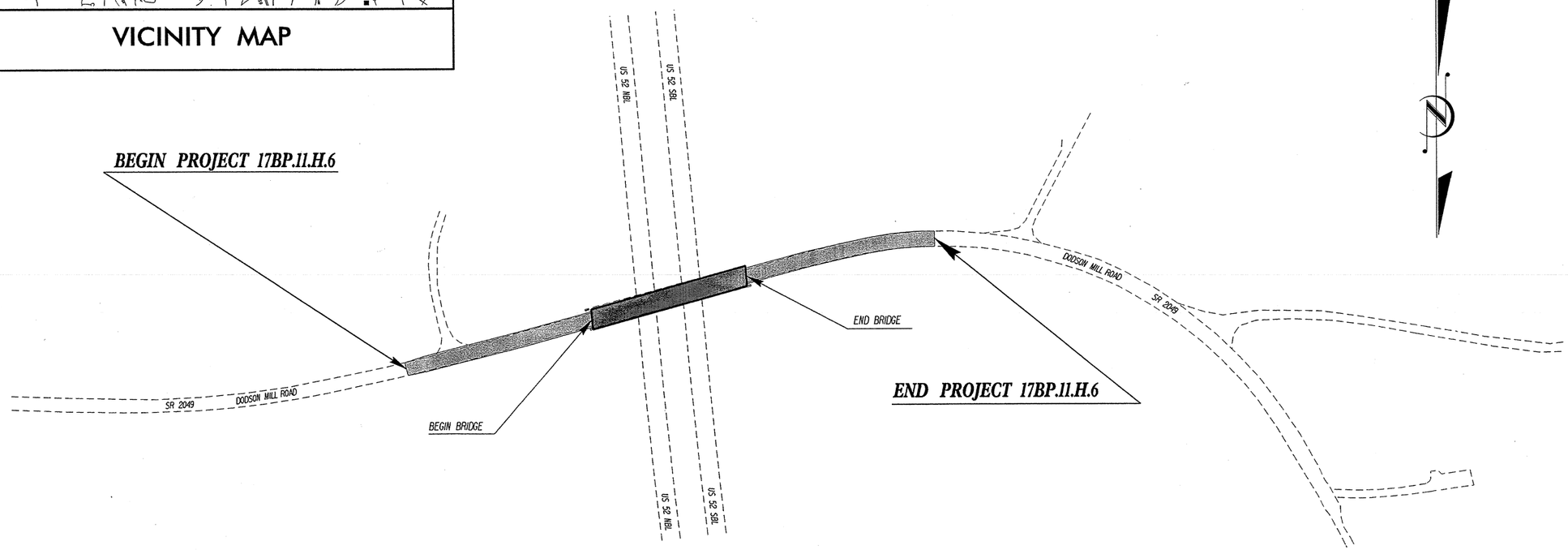

GRAPHIC SCALES	DESIGN DATA	PROJECT LENGTH	
NOT TO SCALE	ADT 1996 = 500	LENGTH ROADWAY PROJECT 17BP.11.H.6	= 0.095 MILES
		LENGTH STRUCTURE PROJECT 17BP.11.H.6	= 0.040 MILES
	FUNC CLASS = RURAL SUB REGIONAL TIER	TOTAL LENGTH PROJECT 17BP.11.H.6	= 0.135 MILES

Prepared In the Office of:
DIVISION OF HIGHWAYS
1000 Birch Ridge Dr., Raleigh NC, 27610

2012 STANDARD SPECIFICATIONS

JASON MOORE, PE
PROJECT ENGINEER

NYA K. BOAYUE, PE
PROJECT DESIGN ENGINEER

HYDRAULICS ENGINEER

SIGNATURE: P.E.

ROADWAY DESIGN ENGINEER

NORTH CAROLINA PROFESSIONAL SEAL 20111 ENGINEER NYA K. BOAYUE
4/12/2013

SIGNATURE: P.E.

STATE OF NORTH CAROLINA DEPARTMENT OF TRANSPORTATION

12-APR-2013 16:25
R:\Roadway\Proj\850119_Rdy_tsh.dgn
$$$USERNAME$$$$

RD266370 4/12/2013 850119_Rdy_tsh nkboayue RD-Oce860-34

PROJECT REFERENCE NO.	SHEET NO.
17BP.11.H.6	2
ROADWAY DESIGN ENGINEER	PAVEMENT DESIGN ENGINEER

PAVEMENT SCHEDULE

FINAL PAVEMENT DESIGN

C1	PROP. APPROX. 2½" ASPHALT CONCRETE SURFACE COURSE, TYPE SF9.5A, AT AN AVERAGE RATE OF 137.5 LBS. PER SQ. YD. IN EACH OF TWO LAYERS.
C2	PROP. VAR. DEPTH ASPHALT CONCRETE SURFACE COURSE, TYPE SF9.5A, AT AN AVERAGE RATE OF 110 LBS. PER SQ. YD. PER 1" DEPTH. TO BE PLACED IN LAYERS NOT TO EXCEED 1½" IN DEPTH.
E1	PROP. APPROX. 5½" ASPHALT CONCRETE BASE COURSE, TYPE B25.0B, AT AN AVERAGE RATE OF 627 LBS. PER SQ. YD.
E2	PROP. VAR. DEPTH ASPHALT CONCRETE BASE COURSE, TYPE B25.0B, AT AN AVERAGE RATE OF 114 LBS. PER SQ. YD. PER 1" DEPTH. TO BE PLACED IN LAYERS NOT LESS THAN 3" IN DEPTH OR GREATER THAN 5½" IN DEPTH.
T	EARTH MATERIAL.
U	EXISTING PAVEMENT.

NOTE: PAVEMENT EDGE SLOPES ARE 1:1 UNLESS SHOWN OTHERWISE.

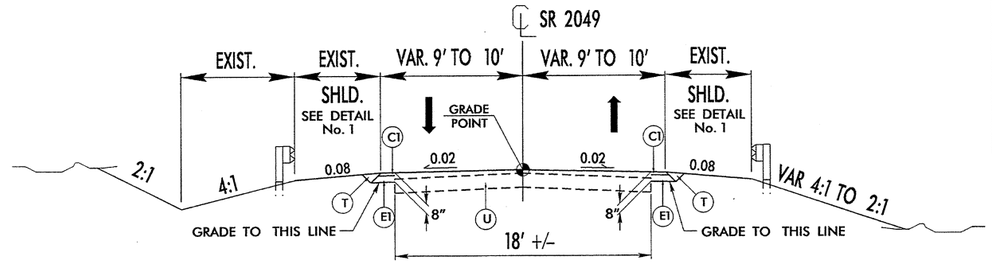

TYPICAL SECTION NO. 1

USE OF TYPICAL SECTIONS
USE TYPICAL SECTION No. 2 WITHIN 50 FT. OF BRIDGE APPROACHES; OTHERWISE, USE TYPICAL SECTION No. 1

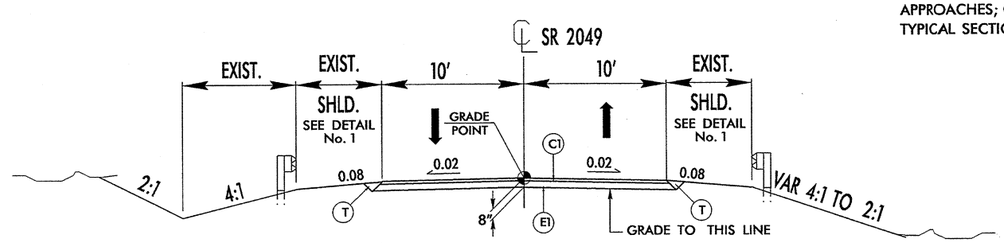

TYPICAL SECTION NO. 2

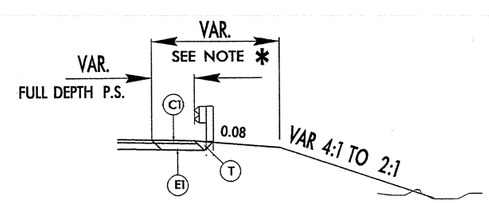

DETAIL No. 1

* NOTE: FULL DEPTH PAVED SHOULDER TO FACE OF GUARDRAIL AS NEEDED TO CARRY TEMPORARY TRAFFIC PATTERN AS SHOWN IN TRANPORTATION MANAGEMENT PLAN (TMP) AND AS DIRECTED BY THE ENGINEER.

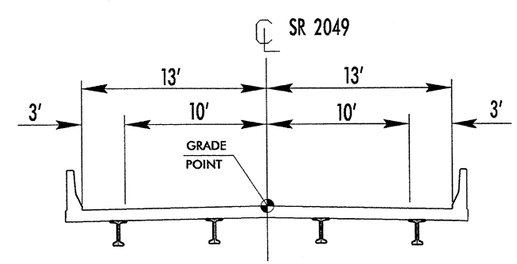

6/2/99
H:\RR-2013_16.05
R:\Roadway\Proj\850119_Rdy_TYP.dgn
$$$$USERNAME$$$$
D266216 4/11/2013 850119_Rdy_TYP trmeadows RD-Oce860-34

PROJECT REFERENCE NO.	SHEET NO.
17BP.11.H.6	2-A

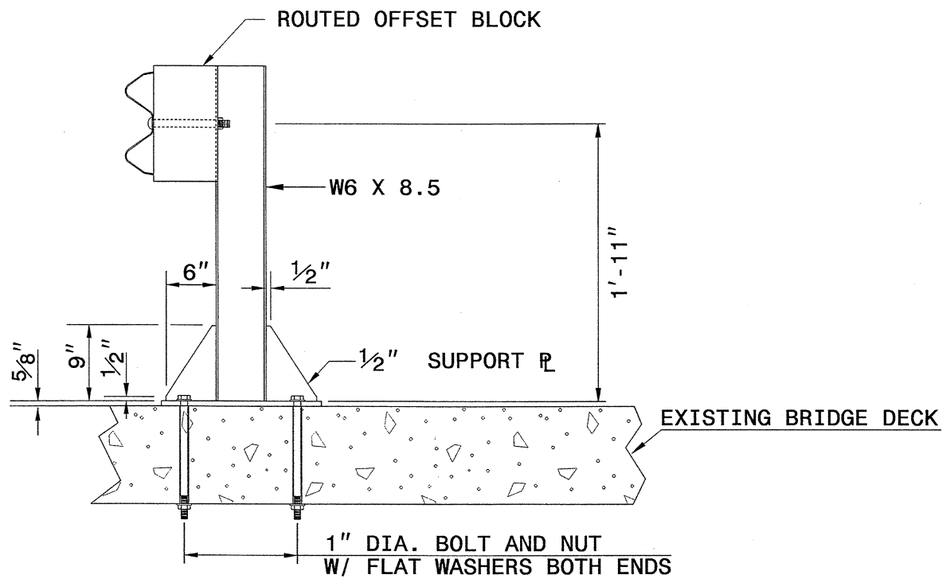

ELEVATION VIEW

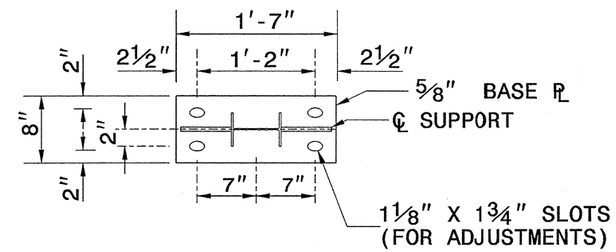

PLAN VIEW

NOTES FOR:
GUARDRAIL POST ANCHORED TO STRUCTURE:
- -USE FULL LENGTH ¼" BUTT WELDS AT ALL LOCATIONS OF CONTACT BETWEEN THE BASE PLATE, SUPPORT PLATES AND STEEL POST.
- -USE POST AND POST BASE PLATES CONFORMING TO THE REQUIREMENTS OF A.S.T.M. A-36 AND GALVANIZED AFTER FABRICATION TO CONFORM TO A.S.T.M. A-123.
- -USE BOLTS CONFORMING TO ASTM A307 FOR GRADE A.

ANCHORAGE FOR GUARDRAIL POST ON EXISTING STRUCTURE

CONTRACTS STANDARDS AND DEVELOPMENT UNIT
Office 919-707-6950 FAX 919-250-4119

ANCHORAGE FOR GUARDRAIL POST ON EXISTING STRUCTURE

ORIGINAL BY: K. KEMPF DATE: 2-20-13
MODIFIED BY: DATE:
CHECKED BY: DATE: 3/28/13
FILE SPEC.: DETAILS/KKEMPF/ENGLISH/862D0307.DGN

)261656 3/28/2013 862D0307 jhowerton CSD-Oce860-34bond

PROJECT REFERENCE NO.	SHEET
17BP.11.H.6	2-B

GEOTECHNICAL ENGINEER

NORTH CAROLINA PROFESSIONAL SEAL 022246 ENGINEER SCOTT A. HIDDEN

Scott A. Hidden 8/10/12

SIGNATURE DATE

ENGINEER

SIGNATURE DATE

GROUNDWATER CONDITION (SEE NOTE 6)	H SHORING HEIGHT (FT)	SLOPE OR SURCHARGE CASE WITH NO TRAFFIC IMPACT					SURCHARGE CASE WITH TRAFFIC IMPACT				
		SHEET PILES		H-PILES WITH TIMBER LAGGING			SHEET PILES		H-PILES WITH TIMBER LAGGING		
		MINIMUM REQUIRED EMBEDMENT (FT)	MINIMUM REQUIRED SECTION MODULUS (IN^3/FT)	MINIMUM REQUIRED EMBEDMENT* (FT) (SEE NOTE 10)			MINIMUM REQUIRED EMBEDMENT (FT)	MINIMUM REQUIRED SECTION MODULUS (IN^3/FT)	MINIMUM REQUIRED EMBEDMENT* (FT) (SEE NOTE 10)		
				HP 10x42	HP 12x53	HP 14x73			HP 10x42	HP 12x53	HP 14x73
GROUNDWATER ELEVATION BEWTEEN BOTTOM OF SHORING AND PILE TIP	< 6	11.5	4.5	11.5	11.5	11.5	16.0	12.0	13.0	13.0	13.0
	7	13.0	7.0	13.0	13.0	13.0	17.0	14.5	14.5	14.5	14.5
	8	15.0	10.0	--	15.0	15.0	18.0	17.0	--	15.5	15.5
	9	17.0	14.0	--	17.0	17.0	19.0	20.0	--	17.0	17.0
	10	18.5	19.5	--	--	18.5	20.0	23.5	--	--	18.5
	11	20.5	26.0	--	--	--	21.0	28.0	--	--	20.0
	12	22.5	33.0	--	--	--	22.0	33.0	--	--	21.5
GROUNDWATER ELEVATION BELOW PILE TIP	< 6	7.5	3.0	8.0	8.0	8.0	11.0	10.0	9.5	9.5	9.5
	7	8.5	4.5	9.5	9.5	9.5	12.0	12.0	10.5	10.5	10.5
	8	10.0	6.5	10.5	10.5	10.5	12.5	14.0	11.5	11.5	11.5
	9	11.0	9.5	--	12.0	12.0	13.5	16.5	--	12.5	12.5
	10	12.5	13.0	--	--	13.5	14.0	19.5	--	13.5	13.5
	11	13.5	17.0	--	--	14.5	15.0	22.5	--	--	14.5
	12	15.0	21.5	--	--	16.0	16.0	25.5	--	--	15.5

MINIMUM REQUIRED EMBEDMENT AND SECTION MODULUS

***DO NOT USE H-PILES WITH TIMBER LAGGING FOR GROUNDWATER CONDITION, SHORING HEIGHT AND H-PILE SIZE SHOWN IF MINIMUM REQUIRED EMBEDMENT IS "--".**

NOTES:

1. AT THE CONTRACTOR'S OPTION, USE STANDARD TEMPORARY SHORING AS NOTED IN THE PLANS.
2. FOR STANDARD TEMPORARY SHORING, SEE STANDARD SHORING PROVISION.
3. STANDARD TEMPORARY SHORING IS BASED ON THE FOLLOWING IN-SITU ASSUMED SOIL PARAMETERS:
   UNIT WEIGHT, γ = 120 LB/CF
   FRICTION ANGLE, ϕ = 30 DEGREES
   COHESION, c = 0 LB/SF
4. DO NOT USE STANDARD TEMPORARY SHORING IF ASSUMED SOIL PARAMETERS ARE NOT APPLICABLE.
5. DO NOT USE STANDARD TEMPORARY SHORING WHEN VERY LOOSE OR SOFT SOIL OR MUCK IS WITHIN THE EMBEDMENT DEPTH.
6. USE GROUNDWATER ELEVATION NOTED IN THE PLANS. IF NO GROUNDWATER ELEVATION IS SHOWN IN THE PLANS, USE "GROUNDWATER ELEVATION BETWEEN BOTTOM OF SHORING AND PILE TIP" FOR GROUNDWATER CONDITION. DO NOT USE STANDARD TEMPORARY SHORING IF GROUNDWATER IS ABOVE BOTTOM OF SHORING.
7. AT THE CONTRACTOR'S OPTION OR IF AVAILABLE CLEAR DISTANCE IS LESS THAN THE MINIMUM REQUIRED FOR CONCRETE BARRIER, SET BARRIER NEXT TO AND UP AGAINST TRAFFIC SIDE OF PILES AND USE "SURCHARGE CASE WITH TRAFFIC IMPACT".
8. AT THE CONTRACTOR'S OPTION OR IF AVAILABLE CLEAR DISTANCE IS LESS THAN 4' FOR TEMPORARY GUARDRAIL, ATTACH GUARDRAIL TO TRAFFIC SIDE OF PILES AS SHOWN IN THE PLANS AND USE "SURCHARGE CASE WITH TRAFFIC IMPACT".
9. MINIMUM REQUIRED EXTENSION IS 6" FOR "SLOPE OR SURCHARGE CASE WITH NO TRAFFIC IMPACT" AND 32" FOR "SURCHARGE CASE WITH TRAFFIC IMPACT".
10. MINIMUM REQUIRED EMBEDMENT FOR H-PILES WITH TIMBER LAGGING IS BASED ON DRIVEN H-PILES AT MAXIMUM 6' SPACING. AT THE CONTRACTOR'S OPTION, EMBEDMENT DEPTHS MAY BE REDUCED BY 25% FOR DRILLED-IN H-PILES.
11. SUBMIT A "STANDARD TEMPORARY SHORING SELECTION FORM" AT LEAST 7 DAYS BEFORE STARTING TEMPORARY SHORING CONSTRUCTION. UP TO 3 SHORING LOCATIONS MAY BE INCLUDED ON EACH FORM.
12. CONTACT THE ENGINEER IF PILES DO NOT ATTAIN THE MINIMUM REQUIRED EMBEDMENT.

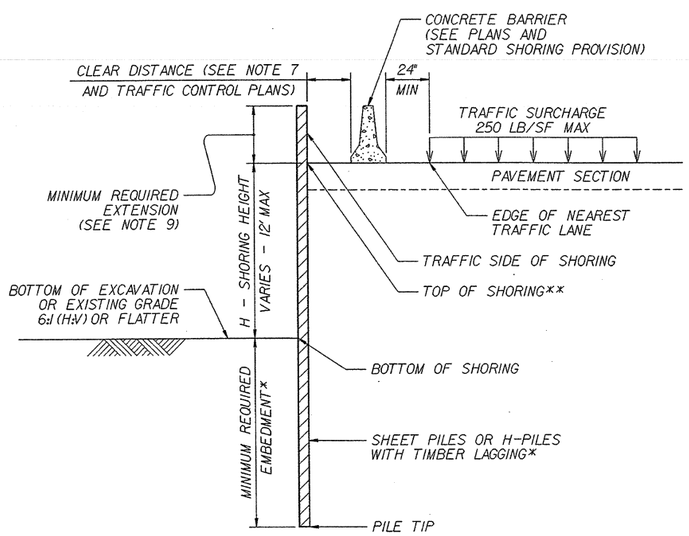

CONCRETE BARRIER

****TOP OF SHORING = EDGE OF PAVEMENT**

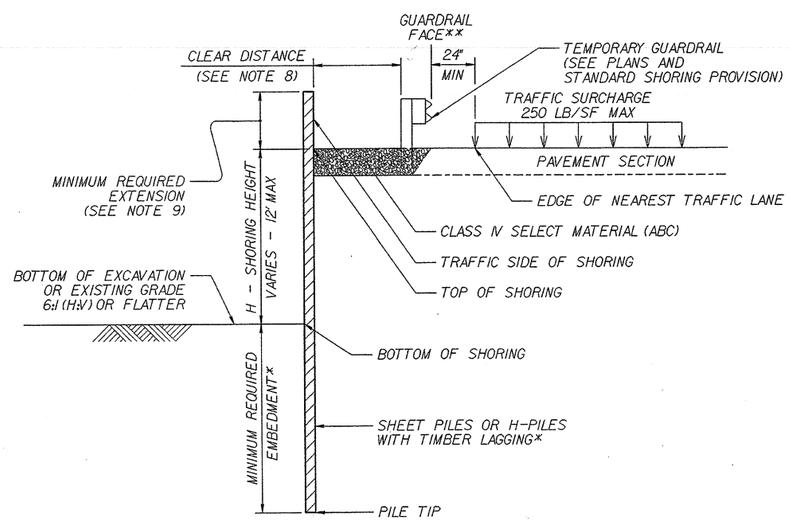

TEMPORARY GUARDRAIL

****GUARDRAIL FACE = EDGE OF PAVEMENT**

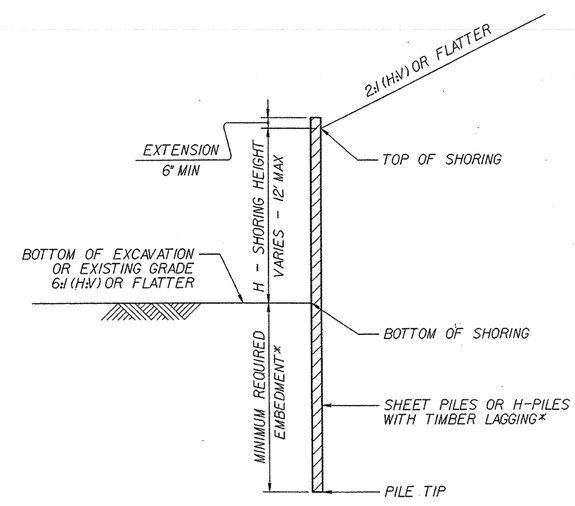

STANDARD TEMPORARY SHORING

(SLOPE CASE)

***SEE TABLE ABOVE.**

STANDARD TEMPORARY SHORING

(SURCHARGE CASE)

***SEE TABLE ABOVE.**

STATE OF NORTH CAROLINA DEPARTMENT OF TRANSPORTATION

GEOTECHNICAL ENGINEERING UNIT

STATE OF NORTH CAROLINA DEPARTMENT OF TRANSPORTATION RALEIGH

STANDARD DRAWING NO. 1801.01

STANDARD TEMPORARY SHORING

DATE: 11-20-12

PROJECT REFERENCE NO.	SHEET
17BP.11.H.6	2-C

GEOTECHNICAL ENGINEER

NORTH CAROLINA PROFESSIONAL SEAL 022246 ENGINEER SCOTT A. HIDDEN

Scott A. Hidden 8/10/12

SIGNATURE DATE

ENGINEER

SIGNATURE DATE

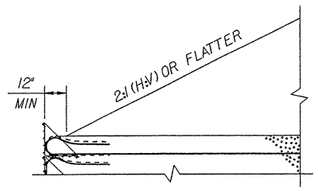

SLOPE CASE

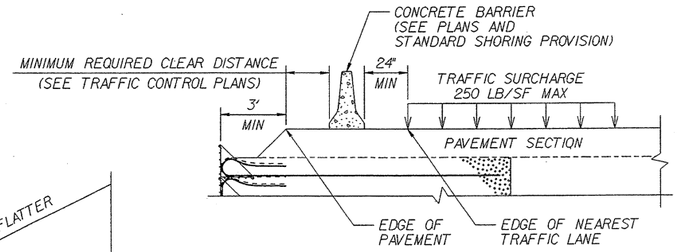

SURCHARGE CASE

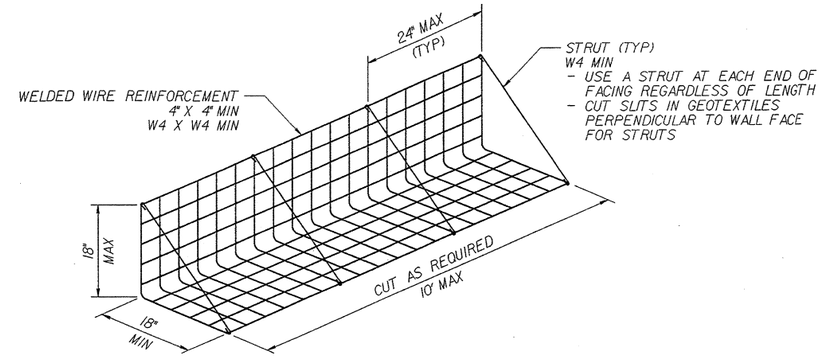

FACING DETAIL

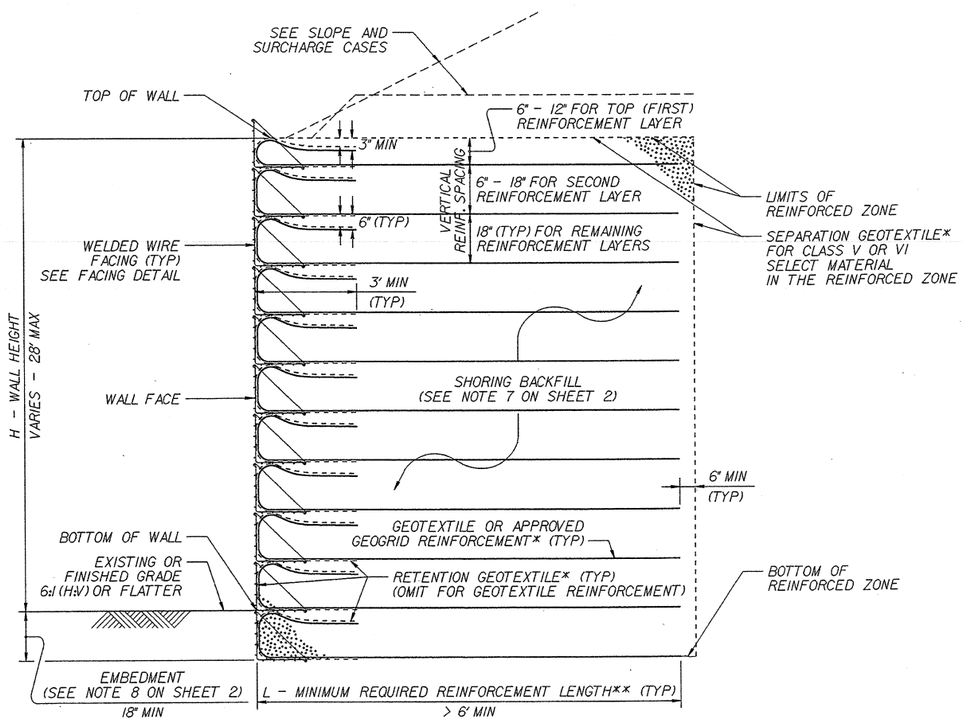

STANDARD TEMPORARY WALL

(FOR STANDARD TEMPORARY WALLS ON STRUCTURES, SEE TEMPORARY WALL ON STRUCTURE DETAIL ON SHEET 2.)
*SEE GEOSYNTHETIC PLACEMENT DETAILS ON SHEET 2.
**SEE REINFORCEMENT TABLES ON SHEET 3.

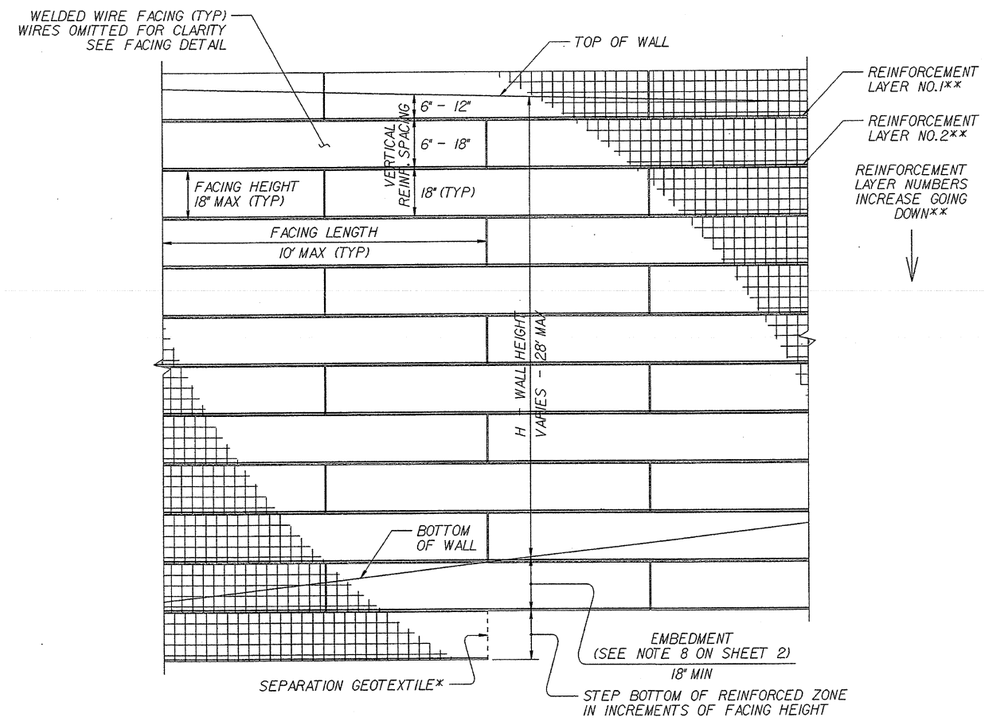

STANDARD TEMPORARY WALL – PARTIAL ELEVATION

*SEE GEOSYNTHETIC PLACEMENT DETAILS ON SHEET 2.
**SEE REINFORCEMENT TABLES ON SHEET 3.

STATE OF NORTH CAROLINA DEPARTMENT OF TRANSPORTATION

GEOTECHNICAL ENGINEERING UNIT

STATE OF NORTH CAROLINA DEPARTMENT OF TRANSPORTATION RALEIGH

STANDARD DRAWING NO. 1801.02

STANDARD TEMPORARY WALL
Sheet 1 of 3

DATE: 11-20-12

PROJECT REFERENCE NO.	SHEET
17BP.11.H.6	2-D

GEOTECHNICAL ENGINEER

NORTH CAROLINA PROFESSIONAL SEAL 022246 ENGINEER SCOTT A. HIDDEN

Scott A. Hidden 3/10/12
SIGNATURE DATE

ENGINEER

SIGNATURE DATE

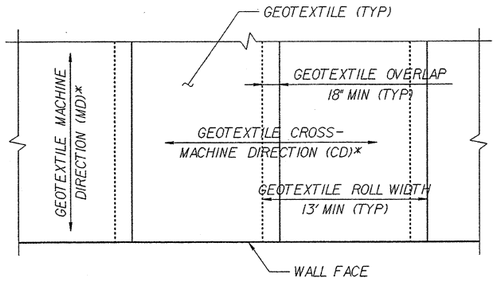

GEOTEXTILE PLACEMENT

(100% COVERAGE MIN FOR GEOTEXTILE REINFORCEMENT)

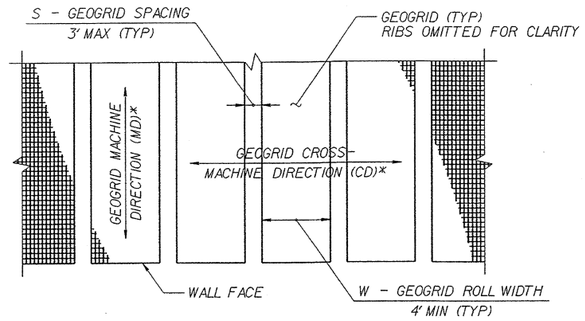

GEOGRID PLACEMENT

(80% COVERAGE MIN FOR GEOGRID REINFORCEMENT – $\frac{W}{W+S} \times 100 \geq 80\%$, SEE NOTE 11)

GEOSYNTHETIC PLACEMENT DETAILS

(PLAN VIEW)
*SEE NOTE 12.

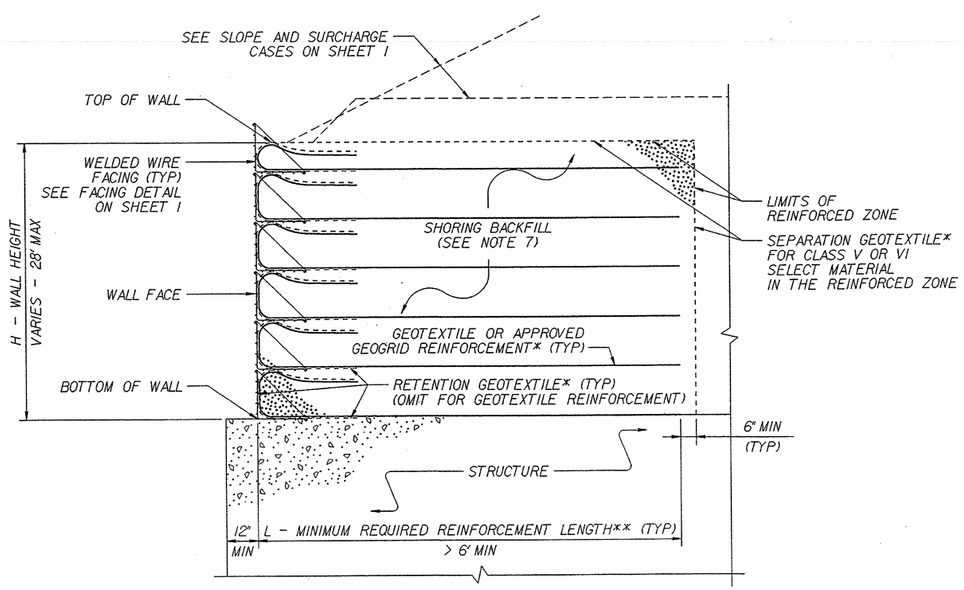

TEMPORARY WALL ON STRUCTURE DETAIL

*SEE GEOSYNTHETIC PLACEMENT DETAILS.
**SEE REINFORCEMENT TABLES ON SHEET 3.

NOTES:

1. AT THE CONTRACTOR'S OPTION, USE STANDARD TEMPORARY WALLS AS NOTED IN THE PLANS.
2. FOR STANDARD TEMPORARY WALLS, SEE STANDARD SHORING PROVISION.
3. STANDARD TEMPORARY WALLS ARE BASED ON THE FOLLOWING IN-SITU ASSUMED SOIL PARAMETERS:
   UNIT WEIGHT, γ = 120 LB/CF
   FRICTION ANGLE, ϕ = 30 DEGREES
   COHESION, c = 0 LB/SF
4. DO NOT USE STANDARD TEMPORARY WALLS IF ASSUMED SOIL PARAMETERS ARE NOT APPLICABLE.
5. DO NOT USE STANDARD TEMPORARY WALLS WHEN VERY LOOSE OR SOFT SOIL OR MUCK IS BELOW TEMPORARY WALLS.
6. USE GROUNDWATER ELEVATION NOTED IN THE PLANS. IF NO GROUNDWATER ELEVATION IS SHOWN IN THE PLANS, ASSUME GROUNDWATER DEPTH IS LESS THAN 7' BELOW BOTTOM OF REINFORCED ZONE. DO NOT USE STANDARD TEMPORARY WALLS IF GROUNDWATER IS ABOVE BOTTOM OF REINFORCED ZONE.
7. DO NOT USE A-2-4 SOIL FOR STANDARD TEMPORARY WALLS AROUND CULVERTS OR IN THE REINFORCED ZONE OF STANDARD TEMPORARY WALLS FOR SLOPE CASES. DO NOT USE CLASS VI SELECT MATERIAL IN THE REINFORCED ZONE OF STANDARD TEMPORARY WALLS WITH GEOTEXTILE REINFORCEMENT.
8. EMBEDMENT IS NOT REQUIRED FOR STANDARD TEMPORARY WALLS ON STRUCTURES OR ROCK AS DETERMINED BY THE ENGINEER.
9. DO NOT USE MORE THAN 4 DIFFERENT REINFORCEMENT STRENGTHS FOR EACH STANDARD TEMPORARY WALL.
10. GEOGRIDS ARE APPROVED FOR SHORT-TERM DESIGN STRENGTHS FOR A 3-YEAR DESIGN LIFE IN THE MACHINE DIRECTION (MD) AND CROSS-MACHINE DIRECTION (CD) BASED ON MATERIAL TYPE. FOR DETAILS OF APPROVED GEOGRIDS AND SHORT-TERM DESIGN STRENGTHS, SEE www.ncdot.org/doh/operations/materials/soils/gep.html
    DEFINE MATERIAL TYPE FROM THE WEBSITE ABOVE FOR SHORING BACKFILL AS FOLLOWS:

MATERIAL TYPE	SHORING BACKFILL
BORROW	A-2-4 SOIL
FINE AGGREGATE	CLASS II, TYPE I OR CLASS III SELECT MATERIAL
COARSE AGGREGATE	CLASS V OR VI SELECT MATERIAL

11. FOR GEOGRID REINFORCEMENT WITH LESS THAN 100% COVERAGE, STAGGER REINFORCEMENT SO GEOGRIDS ARE CENTERED OVER GAPS IN THE REINFORCEMENT LAYER BELOW.
12. AT THE CONTRACTOR'S OPTION, REINFORCEMENT MAY BE INSTALLED WITH THE MD PARALLEL TO THE WALL FACE IF BOTH THE FOLLOWING CONDITIONS OCCUR:
    - W (REINFORCEMENT ROLL WIDTH) $\geq$ L (MINIMUM REQUIRED REINFORCEMENT LENGTH) + 4.5' AND
    - REINFORCEMENT STRENGTH IN CD $\geq$ MINIMUM REQUIRED REINFORCEMENT STRENGTH IN MD.
13. SUBMIT A "STANDARD TEMPORARY WALL SELECTION FORM" AT LEAST 7 DAYS BEFORE STARTING TEMPORARY WALL CONSTRUCTION.
14. DO NOT PLACE SHORING BACKFILL OR REINFORCEMENT UNTIL EXCAVATION DIMENSIONS AND FOUNDATION MATERIAL ARE APPROVED.
15. FOR STANDARD TEMPORARY WALLS WITH PILE FOUNDATIONS IN THE REINFORCED ZONE, DRIVE PILES THROUGH REINFORCEMENT AFTER CONSTRUCTING TEMPORARY WALLS.
16. DO NOT SPLICE OR OVERLAP REINFORCEMENT SO SEAMS ARE PARALLEL TO THE WALL FACE.
17. CONTACT THE ENGINEER WHEN EXISTING OR FUTURE OBSTRUCTIONS SUCH AS FOUNDATIONS, PAVEMENTS, PIPES, INLETS OR UTILITIES WILL INTERFERE WITH REINFORCEMENT.
18. FOR STANDARD TEMPORARY WALLS WITH INTERIOR ANGLES LESS THAN 90 DEGREES, WRAP GEOSYNTHETICS AT ACUTE CORNERS AS DIRECTED BY THE ENGINEER.
19. FOR STANDARD TEMPORARY WALLS WITH TOP OF WALL WITHIN 5' OF FINISHED GRADE, REMOVE TOP FACING AND INCORPORATE TOP REINFORCEMENT LAYER INTO FILL WHEN PLACING FILL IN FRONT OF WALL.

STATE OF NORTH CAROLINA DEPARTMENT OF TRANSPORTATION

GEOTECHNICAL ENGINEERING UNIT

STATE OF NORTH CAROLINA DEPARTMENT OF TRANSPORTATION RALEIGH

STANDARD DRAWING NO. 1801.02

STANDARD TEMPORARY WALL
Sheet 2 of 3

DATE: 11-20-12

PROJECT REFERENCE NO.	SHEET
17BP.11.H.6	2-E

GEOTECHNICAL ENGINEER

NORTH CAROLINA PROFESSIONAL SEAL 022246 ENGINEER SCOTT A. HIDDEN

Scott A. Hidden 8/10/12
SIGNATURE DATE

ENGINEER

SIGNATURE DATE

SLOPE OR SURCHARGE CASE	GROUNDWATER DEPTH BELOW BOTTOM OF REINFORCED ZONE (SEE NOTE 6 ON SHEET 2) (FT)	SHORING BACKFILL TYPE IN THE REINFORCED ZONE (SEE NOTE 7 ON SHEET 2)	H - WALL HEIGHT (FT)																								
			< 4	5	6	7	8	9	10	11	12	13	14	15	16	17	18	19	20	21	22	23	24	25	26	27	28
SLOPE CASE	> 0	CLASS II, TYPE I, CLASS III, CLASS V OR CLASS VI SELECT MATERIAL	6	6	7	8	9	11	12	13	13	14	15	16	17	18	19	20	21	22	23	24	24	25	26	27	27
SURCHARGE CASE	> 0 TO 7 FOR H < 20′ > 0 TO 10 FOR H ≥ 20′	ALL SHORING BACKFILL TYPES	6	7	7	8	8	9	9	10	11	11	12	12	13	14	14	15	16	17	17	18	19	19	20	21	22
	> 7 FOR H < 20′ > 10 FOR H ≥ 20′	A-2-4 SOIL	6	6	7	8	8	9	9	10	11	11	12	12	13	14	14	15	16	16	17	18	18	19	20	20	21
		CLASS II, TYPE I OR CLASS III SELECT MATERIAL	6	6	7	7	8	8	9	10	10	11	11	12	12	13	14	15	15	16	16	17	17	18	18	19	20
		CLASS V OR CLASS VI SELECT MATERIAL	6	6	7	7	7	8	8	9	9	10	10	11	12	13	13	14	14	15	15	16	17	17	18	19	19

L – MINIMUM REQUIRED REINFORCEMENT LENGTH (FT)

(FOR ALL REINFORCEMENT TYPES)

WALL HEIGHT (H) + EMBEDMENT (FT)	NUMBER OF REINFORCEMENT LAYERS*
2.5 - 4	3
4 - 5.5	4
5.5 - 7	5
7 - 8.5	6
8.5 - 10	7
10 - 11.5	8
11.5 - 13	9
13 - 14.5	10
14.5 - 16	11
16 - 17.5	12
17.5 - 19	13
19 - 20.5	14
20.5 - 22	15
22 - 23.5	16
23.5 - 25	17
25 - 26.5	18
26.5 - 28	19
28 - 29.5	20

*BASED ON VERTICAL REINFORCEMENT SPACING SHOWN ON SHEET 1.

REINFORCEMENT LAYER NUMBER*	SHORING BACKFILL TYPE IN THE REINFORCED ZONE (SEE NOTE 7 ON SHEET 2)				
	SLOPE CASE		SURCHARGE CASE		
	CLASS II, TYPE I OR CLASS III SELECT MATERIAL	CLASS V SELECT MATERIAL	A-2-4 SOIL	CLASS II, TYPE I OR CLASS III SELECT MATERIAL	CLASS V SELECT MATERIAL
1	2400	2400	2400	2400	2400
2	2400	2400	2400	2400	2400
3	2400	2400	2400	2400	2400
4	2400	2400	2500	2400	2400
5	2500	2400	3000	2400	2400
6	3000	2400	3500	2800	2400
7	3500	2700	4000	3200	2600
8	4000	3100	4500	3600	2900
9	4500	3500	5000	4000	3200
10	5000	3900	5500	4400	3500
11	5500	4300	6000	4800	3800
12	6000	4700	6500	5200	4100
13	6500	5100	7000	5600	4400
14	7000	5400	7500	6000	4700
15	7500	5800	8000	6400	5000
16	8000	6200	8500	6800	5300
17	8500	6600	9000	7200	5600
18	9000	7000	9500	7600	5900
19	9500	7400	10000	8000	6200
20	10000	7800	10500	8400	6500

GEOTEXTILE REINFORCEMENT
ULTIMATE TENSILE STRENGTH (LB/FT)

REINFORCEMENT LAYER NUMBER*	SHORING BACKFILL TYPE IN THE REINFORCED ZONE (SEE NOTE 7 ON SHEET 2)				
	SLOPE CASE		SURCHARGE CASE		
	CLASS II, TYPE I OR CLASS III SELECT MATERIAL	CLASS V OR CLASS VI SELECT MATERIAL	A-2-4 SOIL	CLASS II, TYPE I OR CLASS III SELECT MATERIAL	CLASS V OR CLASS VI SELECT MATERIAL
1	240	200	340	290	240
2	380	310	520	430	350
3	530	420	700	570	460
4	690	550	870	720	570
5	860	690	1050	860	680
6	1030	830	1220	1000	790
7	1200	970	1400	1150	900
8	1370	1110	1580	1290	1010
9	1550	1240	1750	1430	1120
10	1720	1380	1930	1580	1230
11	1890	1520	2100	1720	1340
12	2060	1660	2280	1860	1450
13	2240	1800	2450	2010	1560
14	2410	1940	2630	2150	1670
15	2580	2080	2800	2290	1780
16	2750	2220	2980	2440	1890
17	2930	2360	3160	2580	2000
18	3100	2500	3330	2720	2110
19	3270	2640	3510	2860	2220
20	3440	2780	3690	3000	2330

GEOGRID REINFORCEMENT
SHORT-TERM DESIGN STRENGTH (LB/FT)
(SEE NOTE 10 ON SHEET 2.)

MINIMUM REQUIRED REINFORCEMENT STRENGTH IN MD
(SEE NOTE 9 ON SHEET 2.)
*SEE PARTIAL ELEVATION ON SHEET 1
FOR REINFORCEMENT LAYER NUMBERING.

STATE OF NORTH CAROLINA DEPARTMENT OF TRANSPORTATION

GEOTECHNICAL ENGINEERING UNIT

STATE OF NORTH CAROLINA
DEPARTMENT OF TRANSPORTATION
RALEIGH

STANDARD DRAWING NO. 1801.02

STANDARD
TEMPORARY WALL
Sheet 3 of 3

DATE: 11-20-12

PROJECT REFERENCE NO.	SHEET NO.
17BP.11.H.6	2-F
ROADWAY DESIGN ENGINEER	HYDRAULICS ENGINEER

NORTH CAROLINA PROFESSIONAL SEAL 20111 ENGINEER MARK K. BOAYUE 4/12/2013

GENERAL NOTES:

2012 SPECIFICATIONS
EFFECTIVE: 01-17-12
REVISED: 10/30/12

GRADING AND SURFACING OR RESURFACING AND WIDENING:

THE GRADE LINES SHOWN DENOTE THE FINISHED ELEVATION OF THE PROPOSED SURFACING AT GRADE POINTS SHOWN ON THE TYPICAL SECTIONS. WHERE NO GRADE LINES ARE SHOWN, THE PROFILES SHOWN DENOTE THE TOP ELEVATION OF THE EXISTING PAVEMENT ALONG THE CENTER LINE OF SURVEY ON WHICH THE PROPOSED RESURFACING WILL BE PLACED. GRADE LINES MAY BE ADJUSTED BY THE ENGINEER IN ORDER TO SECURE A PROPER TIE-IN.

SUPERELEVATION:

ALL CURVES ON THIS PROJECT SHALL BE SUPERELEVATED IN ACCORDANCE WITH STD. NO. 225.04. SUPERELEVATION IS TO BE REVOLVED ABOUT THE GRADE POINTS SHOWN ON THE TYPICAL SECTIONS.

SHOULDER CONSTRUCTION:

ASPHALT, EARTH, AND CONCRETE SHOULDER CONSTRUCTION ON THE HIGH SIDE OF SUPERELEVATED CURVES SHALL BE IN ACCORDANCE WITH STD. NO. 560.01.

SIDE ROADS:

THE CONTRACTOR WILL BE REQUIRED TO DO ALL NECESSARY WORK TO PROVIDE SUITABLE CONNECTIONS WITH ALL ROADS, STREETS, AND DRIVES ENTERING THIS PROJECT. THIS WORK WILL BE PAID FOR AT THE CONTRACT UNIT PRICE FOR THE PARTICULAR ITEMS INVOLVED.

GUARDRAIL:

THE GUARDRAIL LOCATIONS SHOWN ON THE PLANS MAY BE ADJUSTED DURING CONSTRUCTION AS DIRECTED BY THE ENGINEER. THE CONTRACTOR SHOULD CONSULT WITH THE ENGINEER PRIOR TO ORDERING GUARDRAIL MATERIAL.

TEMPORARY SHORING:

SHORING REQUIRED FOR THE MAINTENANCE OF TRAFFIC NOT SHOWN ON THE PLANS WILL BE PAID FOR AT THE CONTRACT PRICE FOR "TEMPORARY SHORING".

SUBSURFACE PLANS:

NO SUBSURFACE PLANS ARE AVAILABLE ON THIS PROJECT. THE CONTRACTOR SHOULD MAKE HIS OWN INVESTIGATION AS TO THE SUBSURFACE CONDITIONS.

END BENTS:

THE ENGINEER SHALL CHECK THE STRUCTURE END BENT PLANS AND DETAILS PRIOR TO SETTING OF THE SLOPE STAKES FOR THE EMBANKMENT OR EXCAVATION APPROACHING A BRIDGE.

* NOTE: UNLESS OTHERWISE SPECIFIED IN THE PLANS GUARDRAIL SHALL BE CONSTRUCTED TO THE LIMITS OF EXISTING GUARDRAIL OR AS DIRECTED BY THE ENGINEER.

** NOTE: SEE TRANSPORTATION MANAGEMENT PLANS

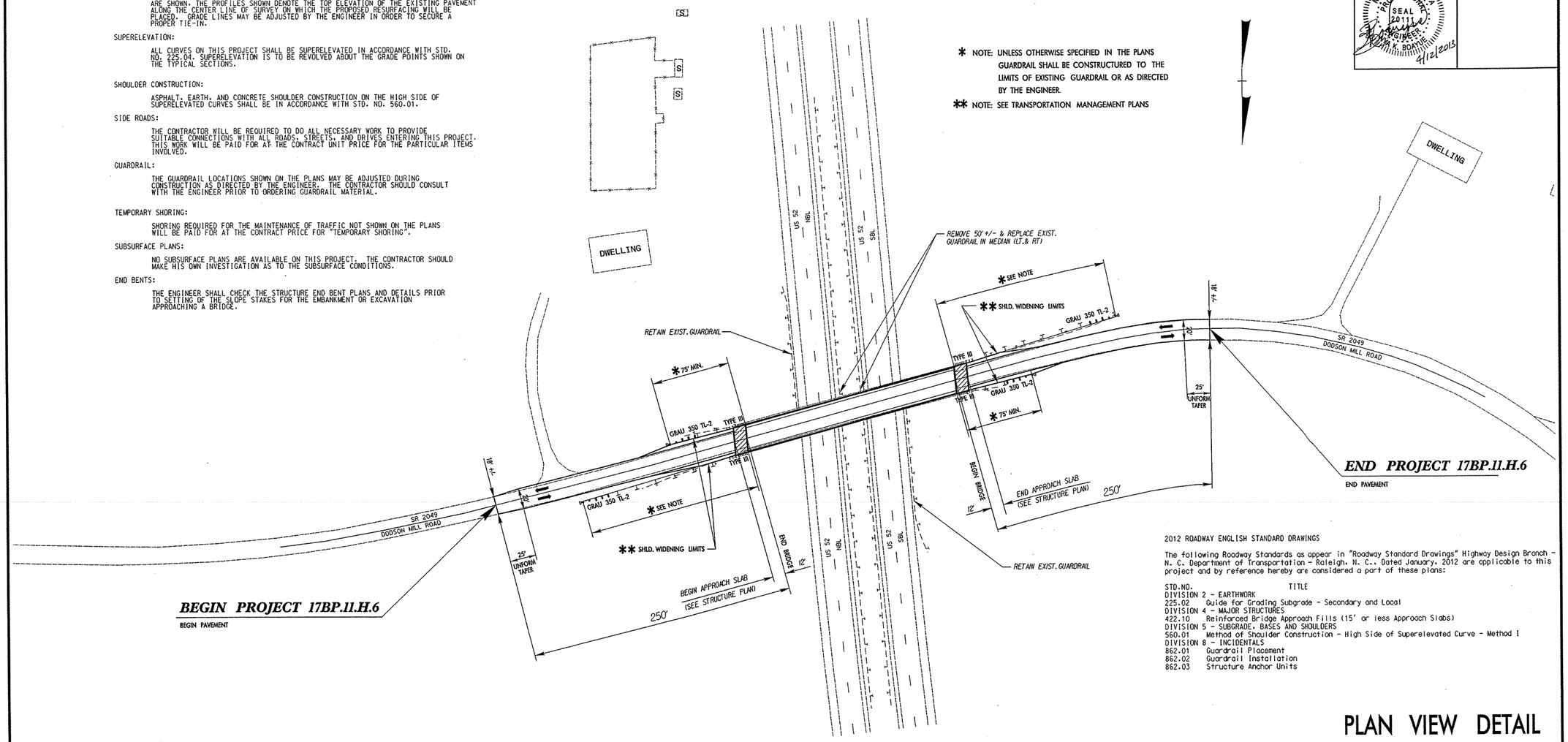

2012 ROADWAY ENGLISH STANDARD DRAWINGS

The following Roadway Standards as appear in "Roadway Standard Drawings" Highway Design Branch - N. C. Department of Transportation - Raleigh, N. C., Dated January, 2012 are applicable to this project and by reference hereby are considered a part of these plans:

STD.NO.	TITLE
DIVISION 2 - EARTHWORK	
225.02	Guide for Grading Subgrade - Secondary and Local
DIVISION 4 - MAJOR STRUCTURES	
422.10	Reinforced Bridge Approach Fills (15' or less Approach Slabs)
DIVISION 5 - SUBGRADE, BASES AND SHOULDERS	
560.01	Method of Shoulder Construction - High Side of Superelevated Curve - Method 1
DIVISION 8 - INCIDENTALS	
862.01	Guardrail Placement
862.02	Guardrail Installation
862.03	Structure Anchor Units

PLAN VIEW DETAIL

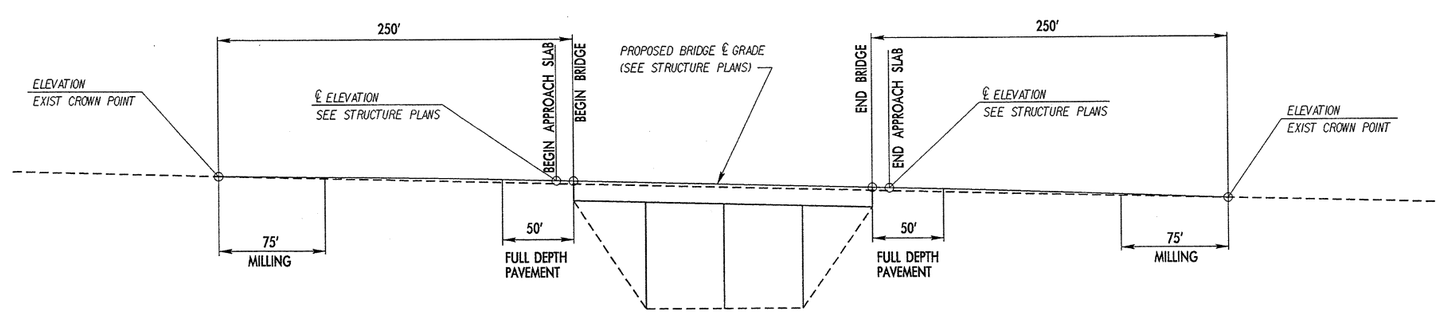

THE PRPOSED ROADWAY ℄ GRADE AT APPROACHES SHALL BE TO THE LIMITS SHOWN. THE GRADE SHALL BE ESTABILSHED BY A LINE CONNECTING THE CENTER LINE POINT OF THE APPROACH SLAB AND THE ROADWAY CROWN POINT, 250' FROM THE APPROACH SLAB AT EACH APPROACH OR AS DIRECTED BY THE ENGINEER.

PROFILE VIEW DETAIL

5/14/99

12-APR-2013 16:25
R:\Roadway\Proj\850119_Rdy_PSH.dgn
$$$$USERNAME$$$$

STATE OF NORTH CAROLINA
DIVISION OF HIGHWAYS

TRANSPORTATION MANAGEMENT PLAN

SURRY COUNTY

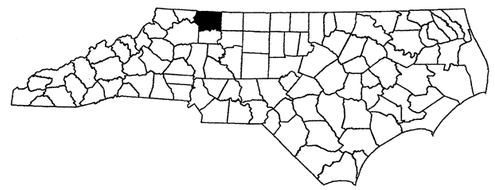

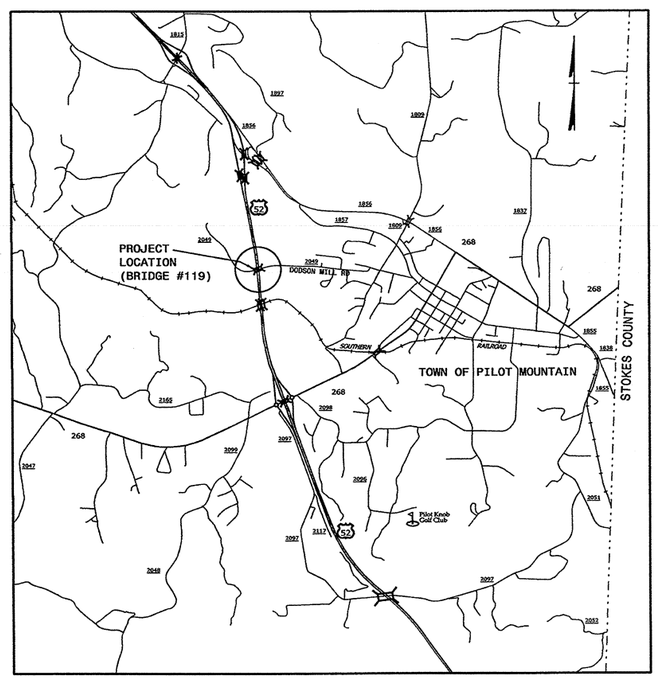

VICINITY MAP

INDEX OF SHEETS

SHEET NO.	TITLE
TMP-1	TITLE SHEET, VICINITY MAP AND INDEX OF SHEETS
TMP-1A	ROADWAY STANDARD DRAWINGS, LEGEND & PAVEMENT MARKING SCHEDULE
TMP-1B	GENERAL NOTES
TMP-2	PHASING
TMP-3	PHASE I DETAILS
TMP-4	PHASE II DETAILS AND TEMPORARY SHORING
TMP-5	PHASE III DETAILS
TMP-6	US-52 DETOUR PLAN (IF BRIDGE #155 IS OPEN)
TMP-6A	US-52 ALTERNATE DETOUR PLAN (IF BRIDGE #155 IS CLOSED)
TMP-7	EB US-52 TEMPORARY ROAD CLOSURE

SHEET NO.
TMP-1

17BP.11.H.6

TIP PROJECT:

WORK ZONE SAFETY & MOBILITY
"from the MOUNTAINS to the COAST"

N.C.D.O.T. WORK ZONE TRAFFIC CONTROL
1561 MAIL SERVICE CENTER (MSC) RALEIGH, NC 27699-1561
750 N. GREENFIELD PARKWAY, GARNER, NC 27529 (DELIVERY)
PHONE: (919) 773-2800 FAX: (919) 771-2745

J. S. BOURNE, P.E. STATE TRAFFIC MANAGEMENT ENGINEER
G. L. GETTIER, P.E. TRAFFIC CONTROL PROJECT ENGINEER
J. W. GILSTRAP TRAFFIC CONTROL PROJECT DESIGN ENGINEER
KEN BROADWELL TRAFFIC CONTROL DESIGN ENGINEER

DIVISION OF HIGHWAYS
STATE OF NORTH CAROLINA
DEPARTMENT OF TRANSPORTATION
WORK ZONE TRAFFIC CONTROL

APPROVED:
DATE:
SEAL

NORTH CAROLINA PROFESSIONAL SEAL 8973 ENGINEER G. L. GETTIER

02-APR-2013 06:56
\\DOT\DFS\ROOT\GROUPS-WZTCCC\TMU\WZTC\DesignGroup3\Squad3B\SpecialProjects\17BP.11.H.6 (Bridge 119)\TMP-1.dgn
kdrocowell at EZ86004

PROJ. REFERENCE NO.	SHEET NO.
17BP.11.H.6	TMP-1A

ROADWAY STANDARD DRAWINGS

THE FOLLOWING ROADWAY STANDARDS AS SHOWN IN "ROADWAY STANDARD DRAWINGS" - PROJECT SERVICES UNIT - N.C. DEPARTMENT OF TRANSPORTATION - RALEIGH, N.C., DATED JANUARY 2012 ARE APPLICABLE TO THIS PROJECT AND BY REFERENCE HEREBY ARE CONSIDERED A PART OF THESE PLANS:

STD. NO.	TITLE
1101.01	WORK ZONE WARNING SIGNS
1101.02	TEMPORARY LANE CLOSURES
1101.03	TEMPORARY ROAD CLOSURES
1101.04	TEMPORARY SHOULDER CLOSURES
1101.05	WORK ZONE VEHICLE ACCESSES
1101.11	TRAFFIC CONTROL DESIGN TABLES
1110.01	STATIONARY WORK ZONE SIGNS
1110.02	PORTABLE WORK ZONE SIGNS
1115.01	FLASHING ARROW BOARDS
1130.01	DRUMS
1135.01	CONES
1145.01	BARRICADES
1150.01	FLAGGING DEVICES
1165.01	WORK VEHICLE LIGHTING SYSTEMS AND TMA DELINEATION
1180.01	SKINNY - DRUM
1205.01	PAVEMENT MARKINGS - LINE TYPES AND OFFSETS
1205.02	PAVEMENT MARKINGS - TWO LANE AND MULTILANE ROADWAYS
1205.12	PAVEMENT MARKINGS - BRIDGES
1250.01	RAISED PAVEMENT MARKERS - INSTALLATION SPACING
1251.01	RAISED PAVEMENT MARKERS - (PERMANENT AND TEMPORARY)
1261.01	GUARDRAIL AND BARRIER DELINEATORS - INSTALLATION SPACING
1261.02	GUARDRAIL AND BARRIER DELINEATORS - TYPES AND MOUNTING
1262.01	GUARDRAIL END DELINEATION

LEGEND

GENERAL

- DIRECTION OF TRAFFIC FLOW
- EXIST. PVMT.
- NORTH ARROW
- PROPOSED PVMT.
- WORK AREA
- REMOVAL

SIGNALS

- T E M P TEMPORARY/PORTABLE

PAVEMENT MARKINGS

- EXISTING LINES
- TEMPORARY LINES

TRAFFIC CONTROL DEVICES

- BARRICADE (TYPE III)
- CONE
- DRUM
- SKINNY DRUM
- TEMPORARY CRASH CUSHION
- FLASHING ARROW BOARD
- FLAGGER
- LAW ENFORCEMENT
- TRUCK MOUNTED ATTENUATOR (TMA)
- CHANGEABLE MESSAGE SIGN

TEMPORARY SIGNING

- PORTABLE SIGN
- STATIONARY SIGN
- STATIONARY OR PORTABLE SIGN

PAVEMENT MARKERS

- CRYSTAL/CRYSTAL
- CRYSTAL/RED
- YELLOW/YELLOW

TEMPORARY/FINAL PAVEMENT MARKINGS

4" PAINT

(PA) WHITE EDGELINE

(PI) DOUBLE YELLOW CENTERLINE

TEMPORARY PAVEMENT MARKERS

(MM) CRYSTAL CRYSTAL TEMPORARY RAISED

APPROVED:_____ DATE:_____

SEAL

NORTH CAROLINA PROFESSIONAL SEAL 8973 ENGINEER G. C. GETTIER 4/02/13

DIVISION OF HIGHWAYS STATE OF NORTH CAROLINA DEPARTMENT OF TRANSPORTATION WORK ZONE TRAFFIC CONTROL

ROADWAY STANDARD DRAWINGS, LEGEND & PAVEMENT MARKING SCHEDULE

02-APR-2013 06:57
\\DOT\DFSROOT01\GROUPS-WZTCCC\TMU\WZTC\DesignGroup3\Squad3B\SpecialProjects\17BP.11.H.6 (Bridge 119)\TMP-1.dgn
kbroadwell AT TE266004

PROJ. REFERENCE NO.	SHEET NO.
17BP.11.H.6	TMP-1B

GENERAL NOTES

CHANGES MAY BE REQUIRED WHEN PHYSICAL DIMENSIONS IN THE DETAIL DRAWINGS, STANDARD DETAILS, AND ROADWAY DETAILS ARE NOT ATTAINABLE TO MEET FIELD CONDITIONS OR RESULT IN DUPLICATE OR UNDESIRED OVERLAPPING OF DEVICES. MODIFICATION MAY INCLUDE: MOVING, SUPPLEMENTING, COVERING, OR REMOVAL OF DEVICES AS DIRECTED BY THE ENGINEER.

THE FOLLOWING GENERAL NOTES APPLY AT ALL TIMES FOR THE DURATION OF THE CONSTRUCTION PROJECT EXCEPT WHEN OTHERWISE NOTED IN THE PLAN OR DIRECTED BY THE ENGINEER.

TIME RESTRICTIONS

A) DO NOT CLOSE OR NARROW TRAVEL LANES DURING HOLIDAYS AND SPECIAL EVENTS AS FOLLOWS:

ROAD NAME

US-52

HOLIDAY

1. FOR ANY UNEXPECTED OCCURRENCE THAT CREATES UNUSUALLY HIGH TRAFFIC VOLUMES, AS DIRECTED BY THE ENGINEER.
2. FOR NEW YEAR'S, BETWEEN THE HOURS OF 6:00 A.M. DECEMBER 31st TO 9:00 P.M. JANUARY 2ND. IF NEW YEAR'S DAY IS ON A FRIDAY, SATURDAY, SUNDAY, OR MONDAY THEN UNTIL 9:00 P.M. THE FOLLOWING TUESDAY.
3. FOR EASTER, BETWEEN THE HOURS OF 6:00 A.M. THURSDAY AND 9:00 P.M. MONDAY.
4. FOR MEMORIAL DAY, BETWEEN THE HOURS OF 6:00 A.M. FRIDAY TO 9:00 P.M. TUESDAY.
5. FOR INDEPENDENCE DAY, BETWEEN THE HOURS OF 6:00 A.M. THE DAY BEFORE INDEPENDENCE DAY AND 9:00 P.M. THE DAY AFTER INDEPENDENCE DAY.

   IF INDEPENDENCE DAY IS ON A FRIDAY, SATURDAY, SUNDAY OR MONDAY THEN BETWEEN THE HOURS OF 6:00 A.M. THE THURSDAY BEFORE INDEPENDENCE DAY AND 9:00 P.M. THE TUESDAY AFTER INDEPENDENCE DAY.
6. FOR LABOR DAY, BETWEEN THE HOURS OF 6:00 A.M. FRIDAY AND 9:00 P.M. TUESDAY.
7. FOR THANKSGIVING DAY, BETWEEN THE HOURS OF 6:00 A.M. TUESDAY TO 9:00 P.M. MONDAY.
8. FOR CHRISTMAS, BETWEEN THE HOURS OF 6:00 A.M. THE FRIDAY BEFORE THE WEEK OF CHRISTMAS DAY AND 9:00 P.M. THE FOLLOWING TUESDAY AFTER THE WEEK OF CHRISTMAS.

B) DO NOT CLOSE ROADS AS FOLLOWS:

ROAD NAME	DAY AND TIME RESTRICTIONS
US-52	MONDAY THRU SUNDAY 6:00 A.M. TO 11:00 P.M.

C) DO NOT STOP TRAFFIC AS FOLLOWS:

ROAD NAME	DAY AND TIME RESTRICTIONS
US-52	ANYTIME

LANE AND SHOULDER CLOSURE REQUIREMENTS

D) REMOVE LANE CLOSURE DEVICES FROM THE LANE WHEN WORK IS NOT BEING PERFORMED BEHIND THE LANE CLOSURE OR WHEN A LANE CLOSURE IS NO LONGER NEEDED OR AS DIRECTED BY THE ENGINEER.

E) WHEN PERSONNEL AND/OR EQUIPMENT ARE WORKING WITHIN 15 FT OF AN OPEN TRAVEL LANE, CLOSE THE NEAREST OPEN SHOULDER USING ROADWAY STANDARD DRAWING NO. 1101.04 UNLESS THE WORK AREA IS PROTECTED BY BARRIER OR GUARDRAIL OR A LANE CLOSURE IS INSTALLED.

F) WHEN PERSONNEL AND/OR EQUIPMENT ARE WORKING ON THE SHOULDER ADJACENT TO AN UNDIVIDED FACILITY AND WITHIN 5 FT OF AN OPEN TRAVEL LANE, CLOSE THE NEAREST OPEN TRAVEL LANE USING ROADWAY STANDARD DRAWING NO. 1101.02 UNLESS THE WORK AREA IS PROTECTED BY BARRIER OR GUARDRAIL.

   WHEN PERSONNEL AND/OR EQUIPMENT ARE WORKING ON THE SHOULDER ADJACENT TO A DIVIDED FACILITY AND WITHIN 10 FT OF AN OPEN TRAVEL LANE, CLOSE THE NEAREST OPEN TRAVEL LANE USING ROADWAY STANDARD DRAWING NO. 1101.02 UNLESS THE WORK AREA IS PROTECTED BY BARRIER OR GUARDRAIL.

G) WHEN PERSONNEL AND/OR EQUIPMENT ARE WORKING WITHIN A LANE OF TRAVEL OF AN UNDIVIDED OR DIVIDED FACILITY, CLOSE THE LANE ACCORDING TO THE TRAFFIC CONTROL PLANS, ROADWAY STANDARD DRAWINGS, OR AS DIRECTED BY THE ENGINEER. CONDUCT THE WORK SO THAT ALL PERSONNEL AND/OR EQUIPMENT REMAIN WITHIN THE CLOSED TRAVEL LANE.

H) DO NOT WORK SIMULTANEOUSLY WITHIN 15 FT ON BOTH SIDES OF AN OPEN TRAVELWAY, RAMP, OR LOOP WITHIN THE SAME LOCATION UNLESS PROTECTED WITH GUARDRAIL OR BARRIER.

I) PROVIDE TRAFFIC CONTROL FOR APPROPRIATE LANE CLOSURES FOR SURVEYING DONE BY THE DEPARTMENT.

PAVEMENT EDGE DROP OFF REQUIREMENTS

J) BACKFILL AT A 6:1 SLOPE UP TO THE EDGE AND ELEVATION OF EXISTING PAVEMENT IN AREAS ADJACENT TO AN OPENED TRAVEL LANE THAT HAS AN EDGE OF PAVEMENT DROP-OFF AS FOLLOWS:

   BACKFILL DROP-OFFS THAT EXCEED 2 INCHES ON ROADWAYS WITH POSTED SPEED LIMITS OF 45 MPH OR GREATER.

   BACKFILL DROP-OFFS THAT EXCEED 3 INCHES ON ROADWAYS WITH POSTED SPEED LIMITS LESS THAN 45 MPH.

   BACKFILL WITH SUITABLE COMPACTED MATERIAL, AS APPROVED BY THE ENGINEER, AT NO EXPENSE TO THE DEPARTMENT.

K) DO NOT EXCEED A DIFFERENCE OF 2 INCHES IN ELEVATION BETWEEN OPEN LANES OF TRAFFIC FOR NOMINAL LIFTS OF 1.5 INCHES. INSTALL ADVANCE WARNING "UNEVEN LANES" SIGNS (W8-11) (200 FT) IN ADVANCE OF THE UNEVEN AREA.

TRAFFIC PATTERN ALTERATIONS

L) NOTIFY THE ENGINEER TWENTY ONE (21) CALENDAR DAYS PRIOR TO ANY TRAFFIC PATTERN ALTERATION.

SIGNING

M) INSTALL ADVANCE WORK ZONE WARNING SIGNS WHEN WORK IS WITHIN 40 FT FROM THE EDGE OF TRAVEL LANE AND NO MORE THAN THREE (3) DAYS PRIOR TO THE BEGINNING OF CONSTRUCTION.

N) PROVIDE SIGNING AND DEVICES REQUIRED TO CLOSE THE ROAD ACCORDING TO THE ROADWAY STANDARD DRAWINGS AND TRAFFIC CONTROL PLANS.

   PROVIDE SIGNING REQUIRED FOR THE OFF-SITE DETOUR ROUTE AS SHOWN IN THE TRAFFIC CONTROL PLANS.

O) COVER OR REMOVE ALL SIGNS AND DEVICES REQUIRED TO CLOSE THE ROAD WHEN ROAD CLOSURE IS NOT IN OPERATION.

   COVER OR REMOVE ALL SIGNS REQUIRED FOR THE OFF-SITE DETOUR WHEN THE DETOUR IS NOT IN OPERATION.

P) ENSURE ALL NECESSARY SIGNING IS IN PLACE PRIOR TO ALTERING ANY TRAFFIC PATTERN.

TRAFFIC CONTROL DEVICES

Q) WHEN LANE CLOSURES ARE NOT IN EFFECT SPACE CHANNELIZING DEVICES IN WORK AREAS NO GREATER IN FEET THAN TWICE THE POSTED SPEED LIMIT (MPH) EXCEPT, 10 FT ON-CENTER IN RADII, AND 3 FT OFF THE EDGE OF AN OPEN TRAVELWAY. REFER TO STANDARD SPECIFICATIONS FOR ROADS AND STRUCTURES SECTIONS 1130 (DRUMS), 1135 (CONES) AND 1180 (SKINNY DRUMS) FOR ADDITIONAL REQUIREMENTS.

R) PLACE TYPE III BARRICADES, WITH "ROAD CLOSED" SIGN R11-2 ATTACHED, OF SUFFICIENT LENGTH TO CLOSE ENTIRE ROADWAY.

S) PLACE ADDITIONAL SETS OF THREE CHANNELIZING DEVICES PERPENDICULAR TO THE EDGE OF TRAVELWAY ON 500 FT CENTERS WHEN UNOPENED LANES ARE CLOSED TO TRAFFIC.

PAVEMENT MARKINGS AND MARKERS

T) INSTALL TEMPORARY PAVEMENT MARKINGS AND TEMPORARY PAVEMENT MARKERS ON INTERIM LAYERS OF PAVEMENT AS FOLLOWS:

ROAD NAME	MARKING	MARKER
SR 2049 (DODSON MILL ROAD) (ROADWAY)	PAINT	TEMPORARY RAISED
SR 2049 (DODSON MILL ROAD) (BRIDGE)	NONE	TEMPORARY RAISED

U) PLACE ONE APPLICATION OF PAINT FOR TEMPORARY TRAFFIC PATTERNS. PLACE A SECOND APPLICATION OF PAINT SIX (6) MONTHS AFTER THE INITIAL APPLICATION AND EVERY SIX MONTHS AS DIRECTED BY THE ENGINEER.

V) INSTALL FINAL PAVEMENT MARKINGS AND FINAL PAVEMENT MARKERS AS FOLLOWS:

ROAD NAME	MARKING	MARKER
SR 2049 (DODSON MILL ROAD)	PAINT	NONE

W) TIE PROPOSED PAVEMENT MARKING LINES TO EXISTING PAVEMENT MARKING LINES.

APPROVED:_____ DATE:_____

SEAL

NORTH CAROLINA PROFESSIONAL SEAL 8973 ENGINEER G. L. GETTIER

DIVISION OF HIGHWAYS STATE OF NORTH CAROLINA DEPARTMENT OF TRANSPORTATION WORK ZONE TRAFFIC CONTROL

GENERAL NOTES

02-APR-2013 06:57
\\DOT\DFS\ROOT\DI\GROUPS-WZTCCC\TMU\WZTC\DesignGroup3\Squad3B\SpecialProjects\17BP.11.H.6 (Bridge 119)\TMP-1.dgn
kbrodwell AT TE266004

PROJ. REFERENCE NO.	SHEET NO.
17BP.11.H.6	TMP-2

PHASING

NOTE: BEFORE BEGINNING CONSTRUCTION PLACE ADVANCE WORK ZONE WARNING SIGNS ALONG US-52 AND SR 2049 AS SHOWN ON SHEET TMP-3 AND ROADWAY STANDARD DRAWING NO. 1101.01, SHEETS 1 AND 3 OF 3.

PHASE I

STEP 1: - THE CONTRACTOR SHALL, USING FLAGGING OPERATIONS PER ROADWAY STANDARD DRAWING 1101.02, SHEET 1 OF 15:

-- INSTALL TEMPORARY PAVEMENT ON SR 2049 AS SHOWN ON SHEET TMP-3 AND THE CONSTRUCTION PLANS.

PHASE II

STEP 1: - THE CONTRACTOR SHALL, USING FLAGGING OPERATIONS PER ROADWAY STANDARD DRAWING 1101.02, SHEET 1 OF 15:

-- INSTALL TEMPORARY/PORTABLE SIGNALS AND WARNING SIGNS ON SR 2049 (SEE SPECIAL PROVISION AND SHEET TMP-4).

-- INSTALL TEMPORARY PAVEMENT MARKINGS (PAINT), TEMPORARY RAISED PAVEMENT MARKERS AND TEMPORARY GUARDRAIL TO CLOSE THE SR 2049 EB LANE AND SHIFT TRAFFIC TO THE WB LANE (SEE CONSTRUCTION PLANS AND SHEET TMP-4).

NOTE: ACTIVATE/DEACTIVATE SIGNALS AS CONDITIONS REQUIRE.

STEP 2: - THE CONTRACTOR SHALL, AWAY FROM TRAFFIC USING THE TEMPORARY/PORTABLE SIGNALS, USING LANE CLOSURES PER ROADWAY STANDARD DRAWING NUMBER 1101.02 SHEET 4 OF 15, USING ROAD CLOSURES PER ROADWAY STANDARD DRAWING 1101.03 SHEET 7 OF 9, USING SHOULDER CLOSURES PER ROADWAY STANDARD DRAWING NUMBER 1101.04 SHEET 1 OF 1 AND USING THE DETOUR FOR US-52 (SEE SHEET TMP-6 OR TMP-6A AND SHEET TMP-7):

-- USING TEMPORARY SHORING DEMO/CONSTRUCT THE SOUTH SIDE OF BRIDGE #119, THE ROADWAY APPROACHES AND INSTALL THE TEMPORARY GUARDRAIL AND ANY ASSOCIATED ROADWAY ITEMS AS SHOWN ON SHEET TMP-4 AND THE CONSTRUCTION PLANS.

PHASE III

STEP 1: - THE CONTRACTOR SHALL INSTALL TEMPORARY PAVEMENT MARKINGS (PAINT), TEMPORARY RAISED PAVEMENT MARKERS AS SHOWN ON SHEET TMP-5, CLOSE THE SR 2049 WB LANE AND SHIFT TRAFFIC TO THE EB LANE.

STEP 2: - THE CONTRACTOR SHALL, AWAY FROM TRAFFIC AS MUCH AS POSSIBLE AND USING THE TEMPORARY/PORTABLE SIGNALS, USING LANE CLOSURES PER ROADWAY STANDARD DRAWING NUMBER 1101.02 SHEET 4 OF 15, USING ROAD CLOSURES PER ROADWAY STANDARD DRAWING 1101.03 SHEET 7 OF 9, USING SHOULDER CLOSURES PER ROADWAY STANDARD DRAWING NUMBER 1101.04 SHEET 1 OF 1 AND USING THE DETOUR FOR US-52 (SEE SHEET TMP-6 OR TMP-6A AND SHEET TMP-7):

-- DEMO/CONSTRUCT THE NORTH SIDE OF BRIDGE #119, THE ROADWAY APPROACHES AND ANY ASSOCIATED ROADWAY ITEMS AS SHOWN ON SHEET TMP-5 AND THE CONSTRUCTION PLANS.

PHASE IV

STEP 1: - THE CONTRACTOR SHALL, USING LANE CLOSURES PER ROADWAY STANDARD DRAWING NUMBER 1101.02, SHEET 1 OF 15:

-- REMOVE TEMPORARY GUARDRAIL, INSTALL/CONSTRUCT ANY REMAINING ROADWAY ITEMS, INSTALL FINAL PAVEMENT MARKINGS (PAINT) ON THE ROADWAY AND THE BRIDGE DECK AND OPEN TO THE FINAL TRAFFIC PATTERN.

STEP 2: -- REMOVE REMAINDER OF TRAFFIC CONTROL DEVICES.

APPROVED:_____ DATE:_____

SEAL

NORTH CAROLINA PROFESSIONAL SEAL 8973 ENGINEER G. L. GETTIER

F-APR-14

DIVISION OF HIGHWAYS STATE OF NORTH CAROLINA DEPARTMENT OF TRANSPORTATION WORK ZONE TRAFFIC CONTROL

PHASING

02-APR-2013 06:58
\\DOT\DFSROOT01\GROUPS-WZTCCC\TMU\WZTC\DesignGroup3\Squad3B\SpecialProjects\17BP.11.H.6 (Bridge 119)\TMP-1.dgn
kbroadwell AT TE266004

PROJ. REFERENCE NO.	SHEET NO.
17BP.11.H.6	TMP-3

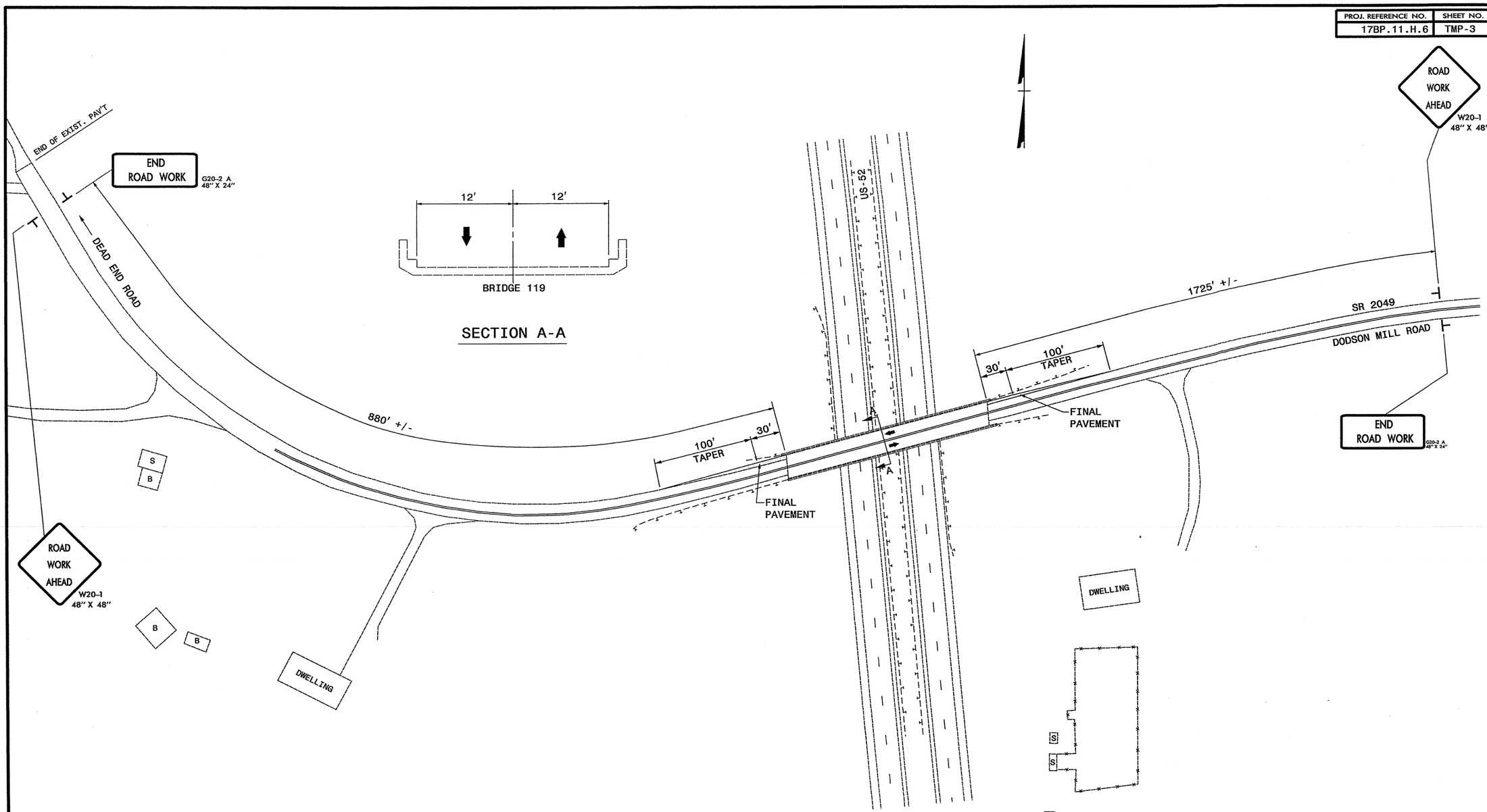

NOTES
1. SEE CONSTRUCTION PLANS FOR DETAILS REGARDING FINAL PAVEMENT.

APPROVED:_____ DATE:_____

SEAL

NORTH CAROLINA PROFESSIONAL SEAL 8973 ENGINEER G. L. GETTIER

DIVISION OF HIGHWAYS STATE OF NORTH CAROLINA DEPARTMENT OF TRANSPORTATION WORK ZONE TRAFFIC CONTROL

PHASE I DETAILS

02-APR-2013 07:02
\\DOT\DFSROOT01\GROUPS-WZTCCC\TMU\WZTC\DesignGroup3\Squad3B\SpecialProjects\17BP.11.H.6 (Bridge 119)\Phase I.dgn
kbroadwell AT TE266004

PROJ. REFERENCE NO.	SHEET NO.
17BP.11.H.6	TMP-4

Shoring Location No. 1

FOR TEMPORARY SHORING AND POSITIVE PROTECTION FOR TEMPORARY SHORING, SEE PLANS AND TEMPORARY SHORING PROVISION.

BEFORE BEGINNING TEMPORARY SHORING DESIGN OR CONSTRUCTION, SURVEY EXISTING GROUND ELEVATIONS IN THE VICINITY OF SHORING LOCATIONS TO DETERMINE ACTUAL SHORING HEIGHTS.

DESIGN TEMPORARY SHORING FROM THE CENTER LINE OF BRIDGE BENT CAP WEST END OF BRIDGE, TO CENTER LINE OF THE WESTERN EDGE OF THE BRIDGE APPROACH, FOR THE FOLLOWING ASSUMED SOIL PARAMETERS AND GROUNDWATER ELEVATION:

UNIT WEIGHT (γ) = 120 LB/CF
FRICTION ANGLE (ϕ) = 30 DEGREES
COHESION (c) = 0 LB/SF

NO SUBSURFACE INFORMATION IS AVAILABLE IN THE VICINITY OF TEMPORARY SHORING FROM THE CENTER LINE OF BRIDGE BENT CAP WEST END OF BRIDGE, TO CENTER LINE OF THE WESTERN EDGE OF THE BRIDGE APPROACH. THE INFORMATION PROVIDED FOR TEMPORARY SHORING DESIGN WAS ASSUMED AND MAY NOT BE APPLICABLE TO THE ACTUAL SITE CONDITIONS ENCOUNTERED DURING CONSTRUCTION.

DRIVEN PILING FOR TEMPORARY SHORING FROM THE CENTER LINE OF BRIDGE BENT CAP WEST END OF BRIDGE, TO CENTER LINE OF THE WESTERN EDGE OF THE BRIDGE APPROACH MAY NOT PENETRATE BELOW ELEVATION 1042 FT DUE TO OBSTRUCTIONS, VERY DENSE OR HARD SOIL, BOULDERS OR WEATHERED OR HARD ROCK.

AT THE CONTRACTOR'S OPTION, USE STANDARD TEMPORARY SHORING FOR TEMPORARY SHORING FROM THE CENTER LINE OF BRIDGE BENT CAP WEST END OF BRIDGE, TO CENTER LINE OF THE WESTERN EDGE OF THE BRIDGE APPROACH. SEE STANDARD DRAWING NO. 1801.01 FOR STANDARD TEMPORARY SHORING AND 1801.02 FOR STANDARD TEMPORARY WALLS.

Shoring Location No. 2

FOR TEMPORARY SHORING AND POSITIVE PROTECTION FOR TEMPORARY SHORING, SEE PLANS AND TEMPORARY SHORING PROVISION.

BEFORE BEGINNING TEMPORARY SHORING DESIGN OR CONSTRUCTION, SURVEY EXISTING GROUND ELEVATIONS IN THE VICINITY OF SHORING LOCATIONS TO DETERMINE ACTUAL SHORING HEIGHTS.

DESIGN TEMPORARY SHORING FROM THE CENTER LINE OF BRIDGE BENT CAP ESAT END OF BRIDGE, TO CENTER LINE OF THE EASTERN EDGE OF THE BRIDGE APPROACH, FOR THE FOLLOWING ASSUMED SOIL PARAMETERS:

UNIT WEIGHT (γ) = 120 LB/CF
FRICTION ANGLE (ϕ) = 30 DEGREES
COHESION (c) = 0 LB/SF

NO SUBSURFACE INFORMATION IS AVAILABLE IN THE VICINITY OF TEMPORARY SHORING FROM THE CENTER LINE OF BRIDGE BENT CAP EAST END OF BRIDGE, TO CENTER LINE OF THE EASTERN EDGE OF THE BRIDGE APPROACH. THE INFORMATION PROVIDED FOR TEMPORARY SHORING DESIGN WAS ASSUMED AND MAY NOT BE APPLICABLE TO THE ACTUAL SITE CONDITIONS ENCOUNTERED DURING CONSTRUCTION.

DRIVEN PILING FOR TEMPORARY SHORING FROM THE CENTER LINE OF BRIDGE BENT CAP EAST END OF BRIDGE, TO CENTER LINE OF THE EASTERN EDGE OF THE BRIDGE APPROACH MAY NOT PENETRATE BELOW ELEVATION 1042 FT DUE TO OBSTRUCTIONS, VERY DENSE OR HARD SOIL, BOULDERS OR WEATHERED OR HARD ROCK.

AT THE CONTRACTOR'S OPTION, USE STANDARD TEMPORARY SHORING FOR TEMPORARY SHORING FROM THE CENTER LINE OF BRIDGE BENT CAP EAST END OF BRIDGE, TO CENTER LINE OF THE EASTERN EDGE OF THE BRIDGE APPROACH. SEE STANDARD DRAWING NO. 1801.01 FOR STANDARD TEMPORARY SHORING AND 1801.02 FOR STANDARD TEMPORARY WALLS.

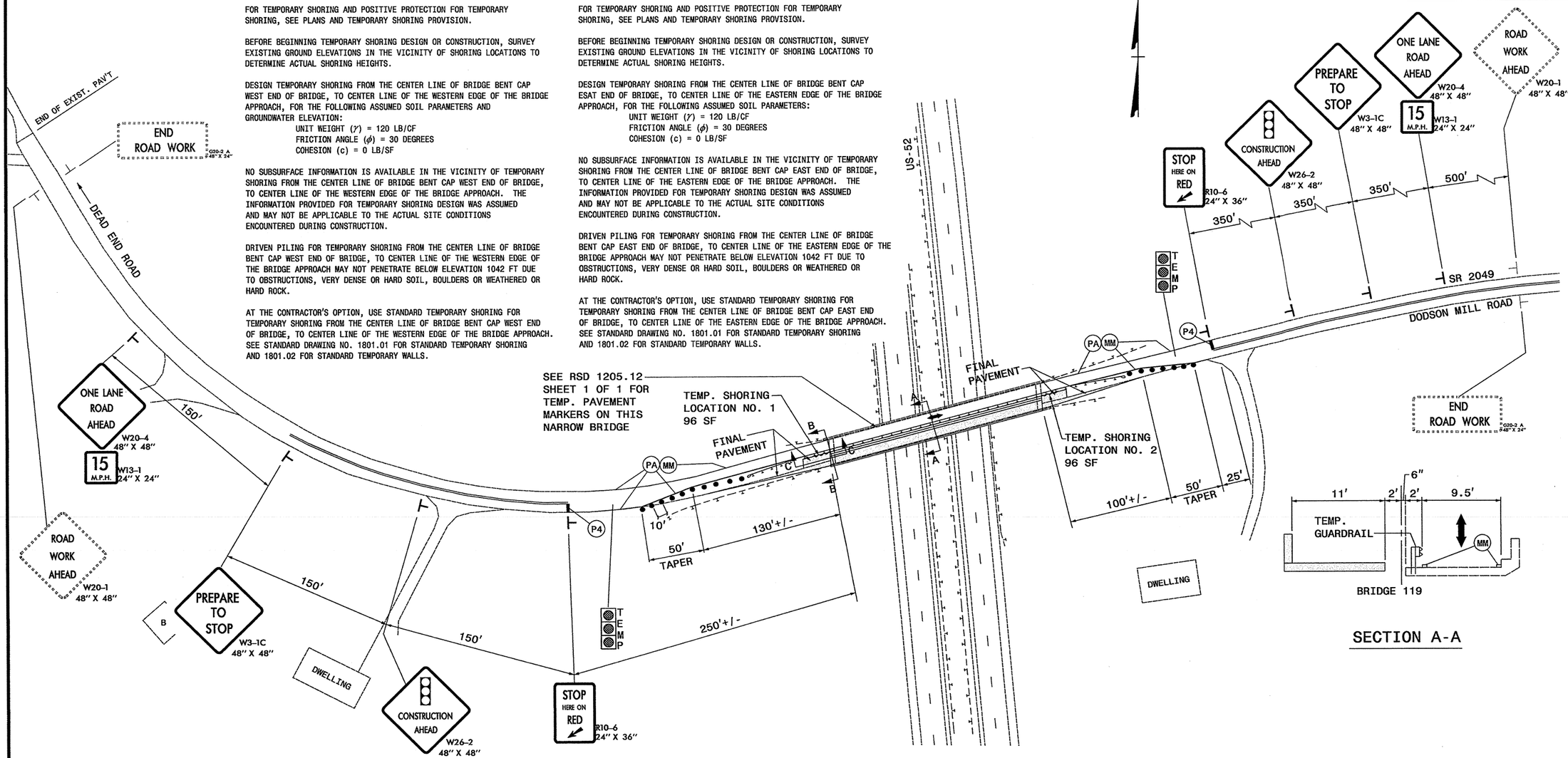

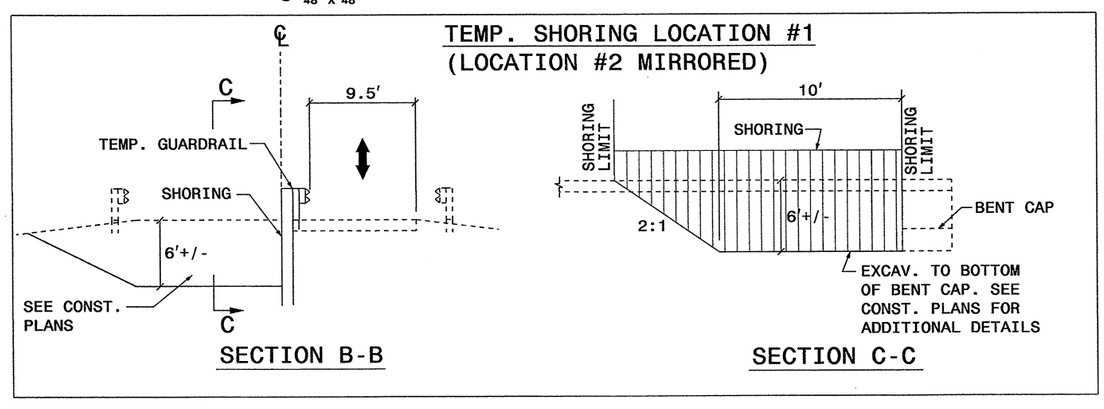

THE TEMPORARY SHORING NOTES SHOWN ON THIS SHEET WERE PROVIDED THROUGH A SEALED DOCUMENT FROM THE GEOTECHNICAL ENGINEERING UNIT. THE DOCUMENT WAS SUBMITTED TO THE WZTC SECTION ON 03/27/13 AND SEALED BY A PROFESSIONAL ENGINEER, SHANE C. CLARK, LICENSE # 029869.

NOTES

1. SEE CONSTRUCTION PLANS FOR DETAILS REGARDING FINAL PAVEMENT AND THE TEMPORARY AND FINAL GUARDRAIL.
2. SEE SHEET TMP-1A FOR TEMPORARY PAVEMENT MARKING/MARKER SCHEDULE.

APPROVED:_____ DATE:_____

SEAL

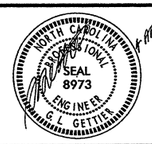

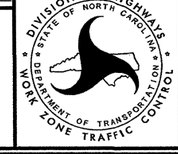

PHASE II DETAILS & TEMPORARY SHORING

02-APR-2013 07:03
\\DOT\DFSROOT01\GROUPS-WZTCCC\TMU\WZTC\DesignGroup3\Squad3B\SpecialProjects\17BP.11.H.6 (Bridge 119)\Phase 2.dgn
kbroadwell AT TE266004

PROJ. REFERENCE NO.	SHEET NO.
17BP.11.H.6	TMP-5

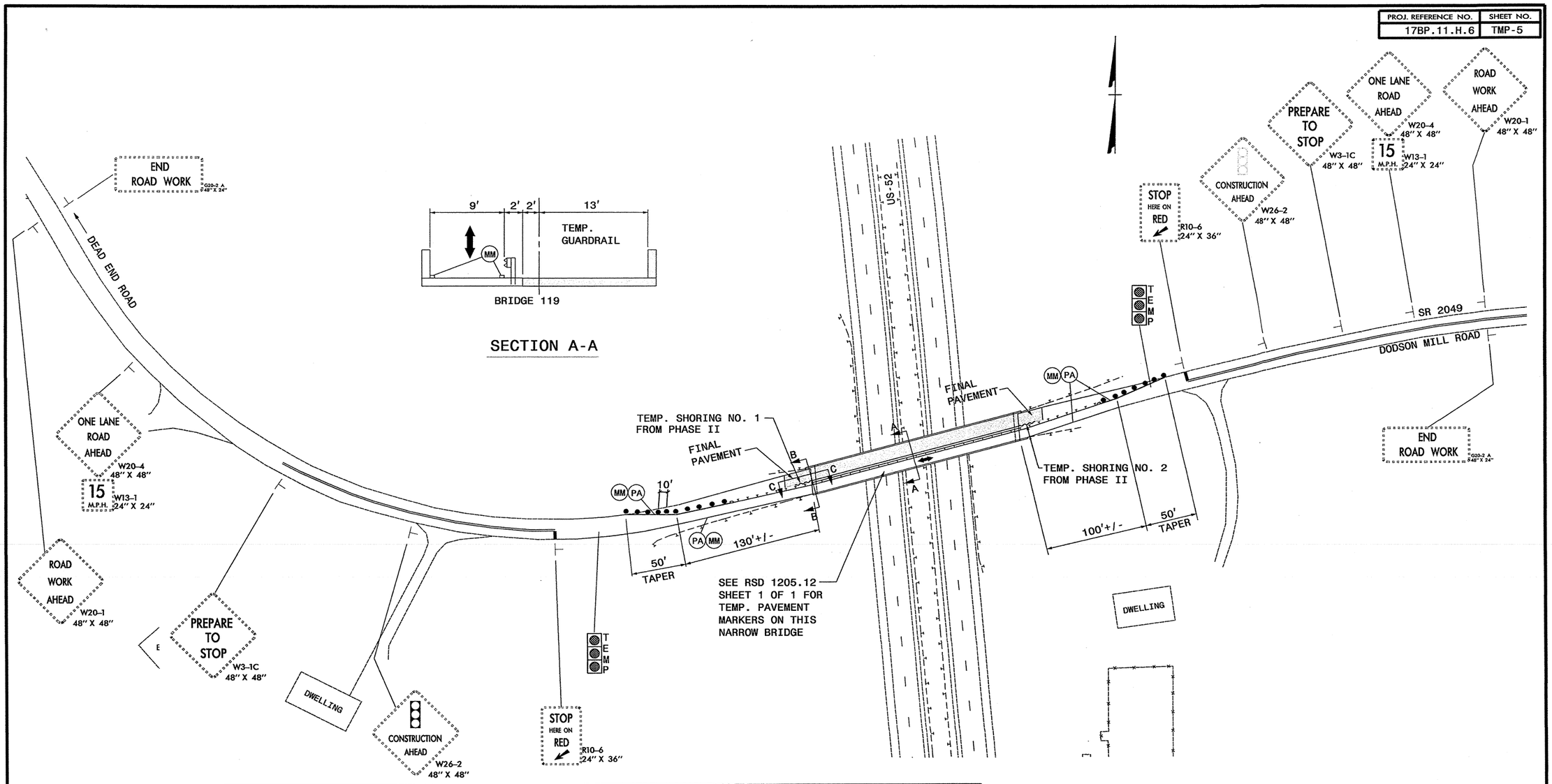

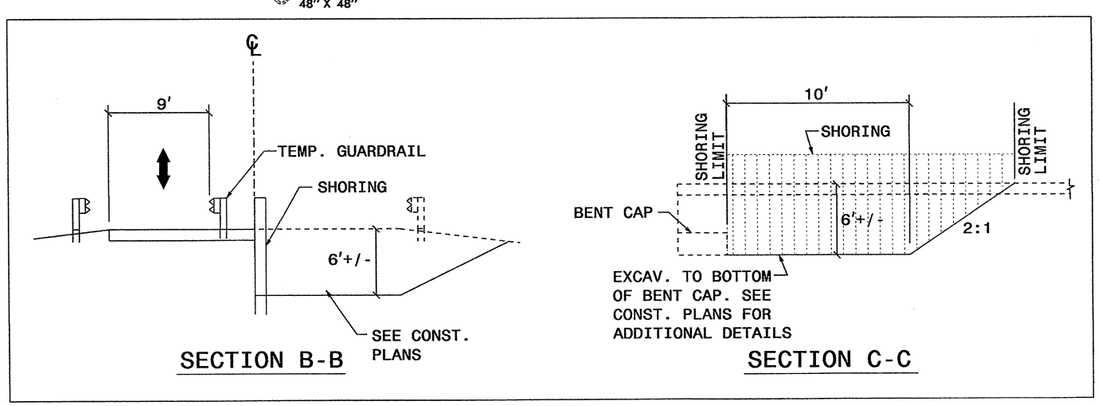

NOTES

1. SEE CONSTRUCTION PLANS FOR DETAILS REGARDING FINAL PAVEMENT AND THE TEMPORARY AND FINAL GUARDRAIL.
2. SEE SHEET TMP-1A FOR TEMPORARY PAVEMENT MARKING/MARKER SCHEDULE.
3. SEE SHEET TMP-4 FOR TEMPORARY SHORING NOTES.

APPROVED:_____ DATE:_____

SEAL

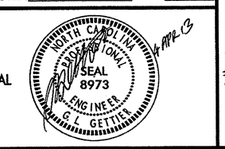

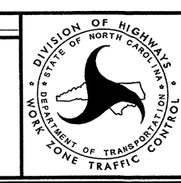

PHASE III DETAILS

02-APR-2013 07:03
\\DOT\DPS\GROUPS-WZTCC\TMU\WZTC\DesignGroup3\Squad3B\SpecialProjects\17BP.11.H.6 (Bridge 119)\Phase 3.dgn
kbroadwell AT TE266004

PROJ. REFERENCE NO.	SHEET NO.
17BP.11.H.6	TMP-6

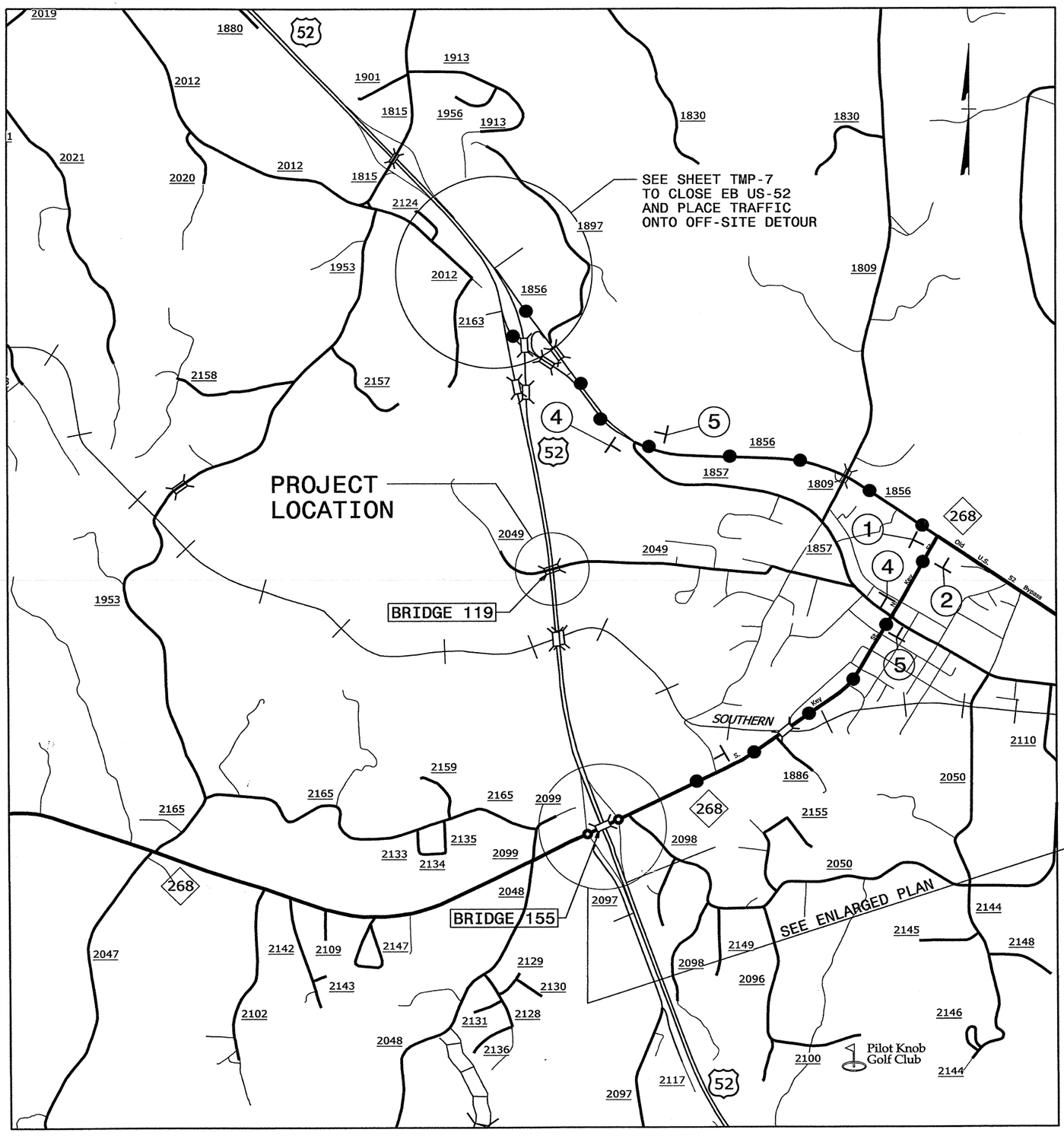

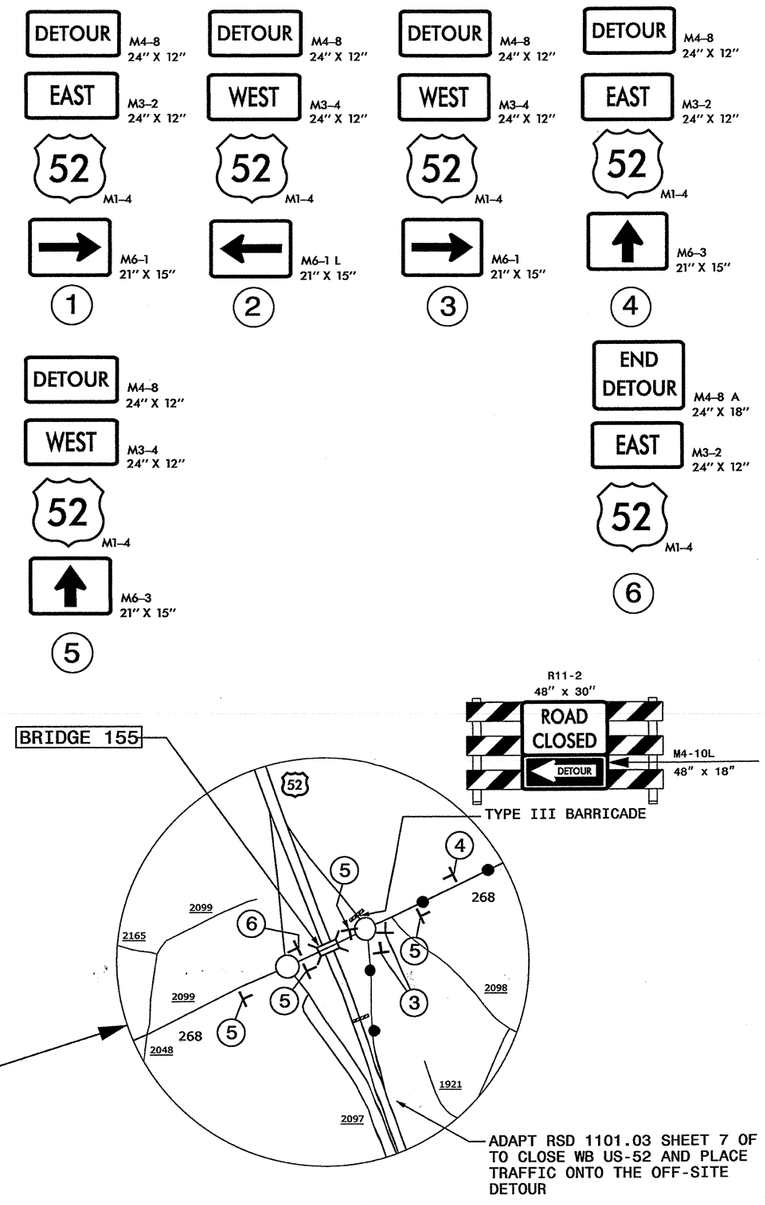

APPROVED:_____ DATE:_____

SEAL

NORTH CAROLINA PROFESSIONAL SEAL 8973 ENGINEER G. L. GETTIS

DIVISION OF HIGHWAYS · STATE OF NORTH CAROLINA · DEPARTMENT OF TRANSPORTATION · WORK ZONE TRAFFIC CONTROL

US-52 DETOUR PLAN
(IF BRIDGE #155 IS OPEN)

02-APR-2013 06:59
\\DOT\DFSROOT01\GROUPS-WZTCCC\TMU\WZTC\DesignGroup3\Squad3B\SpecialProjects\17BP.11.H.6 (Bridge 119)\Bridge 119 detour 1.dgn
kbroadwell AT TE266004

PROJ. REFERENCE NO.	SHEET NO.
17BP.11.H.6	TMP-6A

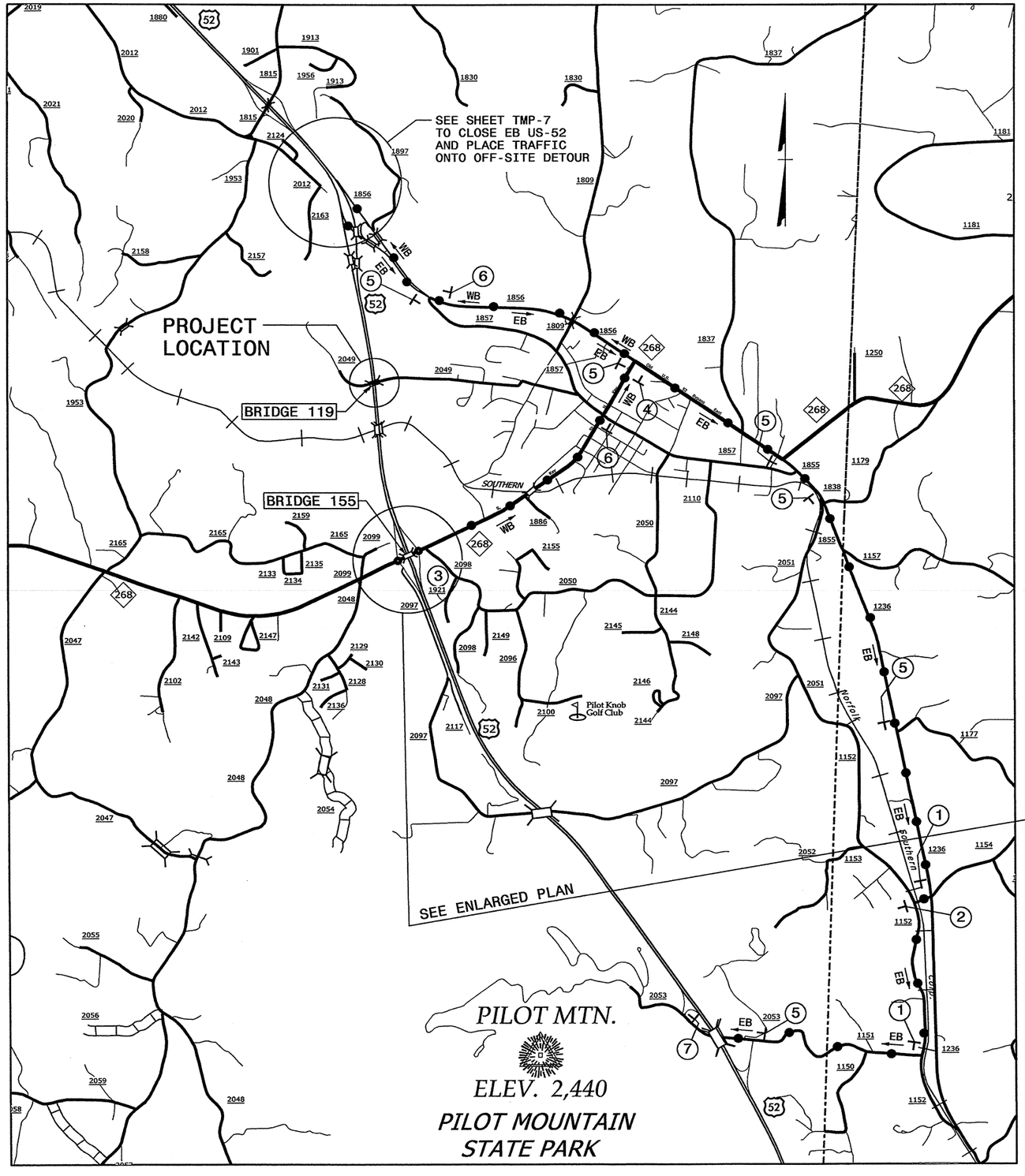

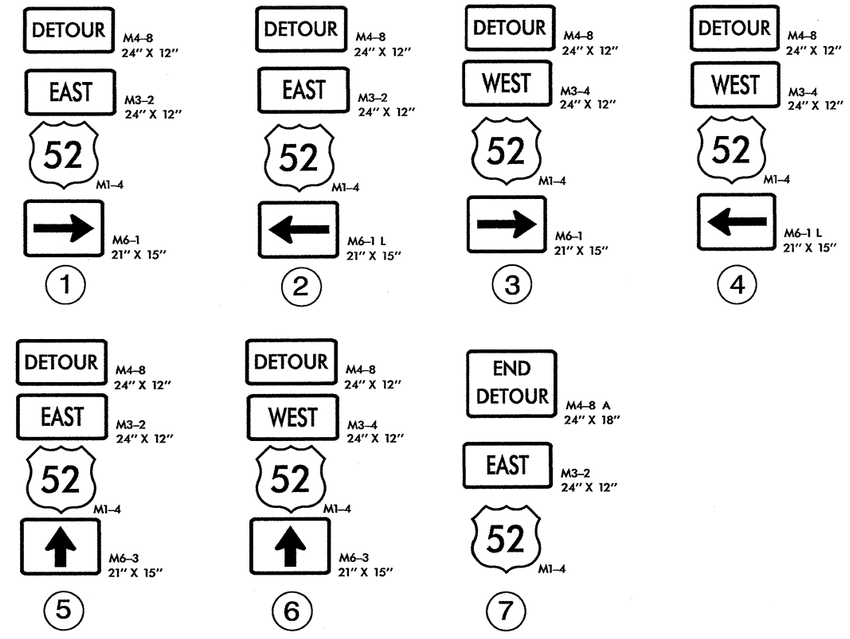

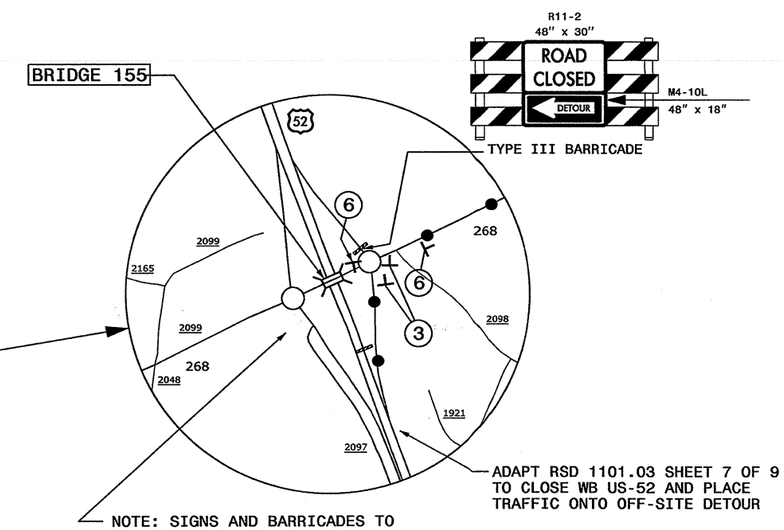

NOTE: SIGNS AND BARRICADES TO CLOSE BRIDGE 155 IS COVERED BY SEPARATE PROJECT NO. 17BP.11.R.56

LEGEND

DETOUR

APPROVED: _____ DATE: _____

SEAL

NORTH CAROLINA PROFESSIONAL SEAL 8973 ENGINEER G. L. GETTIER

DIVISION OF HIGHWAYS STATE OF NORTH CAROLINA DEPARTMENT OF TRANSPORTATION WORK ZONE TRAFFIC CONTROL

US-52 ALTERNATE DETOUR PLAN
(IF BRIDGE #155 IS CLOSED)

02-APR-2015 07:01
\\DOT\DPS\01\TOOLGROUPS-WZTCCC\TMU\WZTC\DesignGroup3\Squad3B\SpecialProjects\17BP.11.H.6 (Bridge 119)\Bridge 119 detour2.dgn
kdrocowell AT TE266004

PROJ. REFERENCE NO.	SHEET NO.
17BP.11.H.6	TMP-7

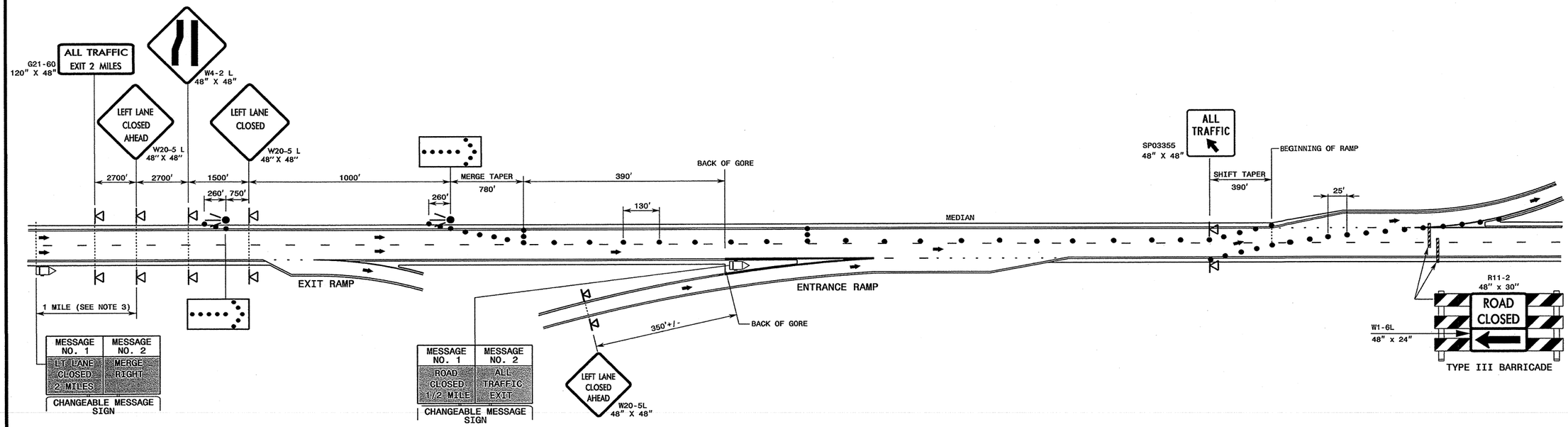

GENERAL NOTES

1- INSTALL LANE CLOSURES WITH THE TRAFFIC FLOW, BEGINNING WITH DEVICES ON THE UPSTREAM SIDE OF TRAFFIC. REMOVE LANE CLOSURES AGAINST THE TRAFFIC FLOW, BEGINNING WITH DEVICES ON THE DOWNSTREAM SIDE OF TRAFFIC.

2- DISPLAY CHANGEABLE MESSAGE SIGN (CMS) MESSAGES AS SHOWN OR AS DEEMED NECESSARY BY THE ENGINEER.

3- PLACE CHANGEABLE MESSAGE SIGN (CMS) ON THE OUTSIDE OF THE TRAVELWAY AS DIRECTED BY THE ENGINEER. PLACE CMS APPROXIMATELY 1 MILE IN ADVANCE OF THE W20-5 SIGNS. IF TRAFFIC BACKS UP TO WHERE THE CMS IS INITIALLY PLACED, RELOCATE CMS ½ MILE IN ADVANCE OF ANTICIPATED BACKUP. CONTINUE TO MONITOR TRAFFIC, MOVE CMS APPROXIMATELY ½ MILE IN ADVANCE OF ANTICIPATED BACKUP.

LEGEND

- CHANGEABLE MESSAGE SIGN (CMS)
- FLASHING ARROW BOARD (TYPE C)
- DRUM
- PORTABLE SIGN
- DIRECTION OF TRAFFIC FLOW

APPROVED:_____ DATE:_____

SEAL

NORTH CAROLINA PROFESSIONAL SEAL 8973 ENGINEER G. L. GETTIER

4-APR-13

DIVISION OF HIGHWAYS STATE OF NORTH CAROLINA DEPARTMENT OF TRANSPORTATION WORK ZONE TRAFFIC CONTROL

EB US-52
TEMPORARY ROAD CLOSURE

03-APR-2013 11:31
\\DOT\OPSROOT\GROUPS-WZTCC\TMU\WZTC\DesignGroup3\Squad3B\SpecialProjects\17BP.11.H.6 (Bridge 119)\TMP-7.dgn
kbroadwell AT TE266004