DocuSign Envelope ID: 0908AB87-C088-4523-BEAB-A55EC9F5191D

PROJECT WBS: BP11.R003.3

CONTRACT: DK00384

See Sheet 1A For Index of Sheets
See Sheet 1B For Standard Symbology Sheet

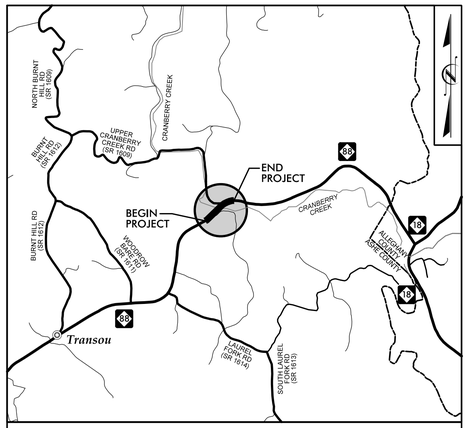

VICINITY MAP N.T.S.

FINAL PLANS

STATE OF NORTH CAROLINA
DIVISION OF HIGHWAYS

ASHE COUNTY

LOCATION: BRIDGE #063 OVER CRANBERRY CREEK ON NC HWY 88
TYPE OF WORK: GRADING, PAVING, DRAINAGE, & STRUCTURE

STATE	STATE PROJECT REFERENCE NO.	SHEET NO.	TOTAL SHEETS
N.C.	BP11.R003.3	1	

STATE PROJ. NO.	F. A. PROJ. NO.	DESCRIPTION
BP11.R003.1		P.E.
BP11.R003.2		ROW & UTILITY
BP11.R003.3		CONSTRUCTION



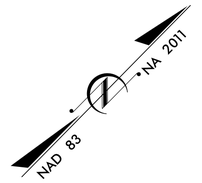

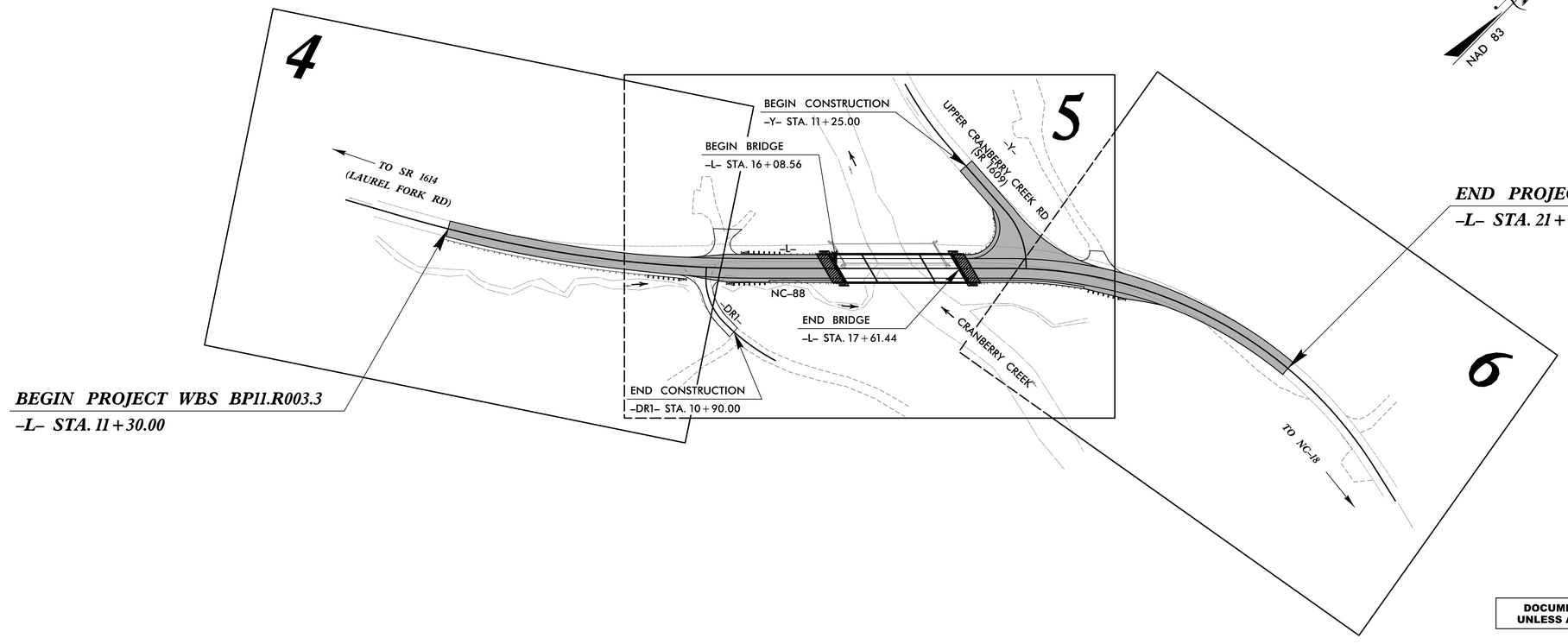

DOCUMENT NOT CONSIDERED FINAL UNLESS ALL SIGNATURES COMPLETED

GRAPHIC SCALES

PLANS: 20 10 0 20 40
PROFILE (HORIZONTAL): 20 10 0 20 40
PROFILE (VERTICAL): 4 2 0 4 8

DESIGN DATA

ADT 2017 = 910
ADT 2040 = 1800
DHV = N/A
D = N/A
T = 7%
V = 55 MPH

FUNC. CLASSIFICATION: SUB REGIONAL TIER

PROJECT LENGTH

LENGTH OF ROADWAY PROJECT WBS BP11.R003.3 = 0.172 MILES
LENGTH OF STRUCTURE PROJECT WBS BP11.R003.3 = 0.029 MILES
TOTAL LENGTH OF PROJECT WBS BP11.R003.3 = 0.201 MILES

NCDOT CONTACT: ROB N. WEISZ, PE
Division Bridge Manager

PLANS PREPARED FOR THE NCDOT BY:

STV Engineers, Inc.
900 West Trade St., Suite 715
Charlotte, NC 28202
NC License Number F-0991

2018 STANDARD SPECIFICATIONS

RIGHT OF WAY DATE: JULY 25, 2022

LETTING DATE: NOVEMBER 16, 2023

NIKKI T. HONEYCUTT, PE
PROJECT ENGINEER

ASHLEY N. BOUCHARD, PE
PROJECT DESIGNER

HYDRAULICS ENGINEER

NORTH CAROLINA PROFESSIONAL SEAL 029388 ENGINEER EDWARD J. VANCE P.E. 9/5/2023

DocuSigned by: Edward J. Vance
SIGNATURE:

ROADWAY DESIGN ENGINEER

NORTH CAROLINA PROFESSIONAL SEAL 039234 ENGINEER NIKKI T. HONEYCUTT P.E. 9/5/2023

DocuSigned by:
SIGNATURE:

STATE OF NORTH CAROLINA · DEPARTMENT OF TRANSPORTATION

9/5/2023
R:\Roadway\Proj\SHT\R003_rdy_psh01_tsh.dgn
SaucieSL

DocuSign Envelope ID: 0908AB87-C088-4523-BEAB-A55EC9F5191D

STV Engineers, Inc.
900 West Trade St., Suite 715
Charlotte, NC 28202
NC License Number F-0991

PROJECT REFERENCE NO.	SHEET NO.
BPII.R003.3	1A
R/W SHEET NO.	

ROADWAY DESIGN ENGINEER

NORTH CAROLINA PROFESSIONAL ENGINEER SEAL 039234 9/5/2023 ENGINEER MARK T. HONEYCUTT

SEAL E4DF44A6

DOCUMENT NOT CONSIDERED FINAL UNLESS ALL SIGNATURES COMPLETED

INDEX OF SHEETS

SHEET NUMBER	SHEET
1	TITLE SHEET
1-A	INDEX OF SHEETS, GENERAL NOTES, AND LIST OF STANDARD DRAWINGS
1-B	CONVENTIONAL SYMBOLS
RW01 THRU RW06	RIGHT-OF-WAY CONTROL SHEETS
2A-1 THRU 2A-2	TYPICAL SECTIONS SHEETS
2B-1 THRU 2B-2	STAGED CONSTRUCTION PLAN AND PROFILE SHEETS
2C-1 THRU 2C-2	ROADWAY DETAIL SHEETS
2G-1 THRU 2G-4	SHORING DETAIL SHEETS
3B-1 THRU 3B-2	ROADWAY SUMMARIES SHEETS
3P-1	PARCEL INDEX SHEET
4 THRU 8	PLAN AND PROFILE SHEETS
TMP-1 THRU TMP-12	TRAFFIC MANAGEMENT PLANS
PMP-1 THRU PMP-5	PAVEMENT MARKING AND SINGING PLANS
EC-1 THRU EC-9	EROSION CONTROL PLANS
RF-1 THRU RF-2	REFORESTATION DETAIL
UO-1 THRU UO-4	UTILITIES BY OTHERS PLANS
X-1 THRU X-35	CROSS-SECTIONS
S-1 THRU S-28	STRUCTURE PLANS
SN	STRUCTURE NOTES

GENERAL NOTES

GENERAL NOTES: 2018 SPECIFICATIONS
EFFECTIVE: 01-01-2018

GRADE LINE:
GRADING AND SURFACING:

THE GRADE LINES SHOWN DENOTE THE FINISHED ELEVATION OF THE PROPOSED SURFACING AT GRADE POINTS SHOWN ON THE TYPICAL SECTIONS. GRADE LINES MAY BE ADJUSTED AT THEIR BEGINNING AND ENDING AND AT STRUCTURES AS DIRECTED BY THE ENGINEER IN ORDER TO SECURE A PROPER TIE-IN.

CLEARING:

CLEARING ON THIS PROJECT SHALL BE PERFORMED TO THE LIMITS ESTABLISHED BY METHOD II.

SUPERELEVATION:

ALL CURVES ON THIS PROJECT SHALL BE SUPERELEVATED IN ACCORDANCE WITH STD. NO. 225.04 USING THE RATE OF SUPERELEVATION AND RUNOFF SHOWN ON THE PLANS. SUPERELEVATION IS TO BE REVOLVED ABOUT THE GRADE POINTS SHOWN ON THE TYPICAL SECTIONS.

SHOULDER CONSTRUCTION:

ASPHALT, EARTH, AND CONCRETE SHOULDER CONSTRUCTION ON THE HIGH SIDE OF SUPERELEVATED CURVES SHALL BE IN ACCORDANCE WITH STD. NO. 560.01.

GUARDRAIL:

THE GUARDRAIL LOCATIONS SHOWN ON THE PLANS MAY BE ADJUSTED DURING CONSTRUCTION AS DIRECTED BY THE ENGINEER. THE CONTRACTOR SHOULD CONSULT WITH THE ENGINEER PRIOR TO ORDERING GUARDRAIL MATERIAL.

END BENTS:

THE ENGINEER SHALL CHECK THE STRUCTURE END BENT PLANS, DETAILS, AND CROSS-SECTION PRIOR TO SETTING OF THE SLOPE STAKES FOR THE EMBANKMENT OR EXCAVATION APPROACHING A BRIDGE.

RIGHT-OF-WAY MARKERS:

ALL RIGHT-OF-WAY MARKERS ON THIS PROJECT SHALL BE PLACED BY THE DIVISION.

NATIVE MATERIAL:

THE NATIVE MATERIAL PLACED BETWEEN SILLS IN THE CULVERT AND DITCHES SHALL PROVIDE A CONTINUOUS FLOW BETWEEN SILLS AND ALONG THE DITCH. THE MATERIAL SHALL BE NATIVE MATERIAL EXCAVATED FROM THE STREAM BED OR FLOOD PLAIN DURING CONSTRUCTION AND IS SUBJECT TO APPROVAL BY THE ENGINEER. IF ENOUGH NATIVE MATERIAL IS NOT AVAILABLE TO BACKFILL THE BARRELS OR DITCH, CLASS B RIP RAP MAY BE USED TO SUPPLEMENT THE NATIVE MATERIAL. THE COST TO STOCKPILE, SUPPLY, AND PLACEMENT OF THE NATIVE MATERIAL SHALL BE INCLUDED IN THE COST OF GRADING.

STANDARD DRAWINGS

2018 ROADWAY ENGLISH STANDARD DRAWINGS EFF. January, 2018

The following Roadway Standards as appear in "Roadway Standard Drawings" Highway Design Branch - N. C. Department of Transportation - Raleigh, N. C., Dated January, 2018 are applicable to this project and by reference hereby are considered a part of these plans:

STD.NO.	TITLE
DIVISION 2 - EARTHWORK	
200.02	Method of Clearing - Method II
225.02	Guide for Grading Subgrade - Secondary and Local
225.04	Method of Obtaining Superelevation - Two Lane Pavement
DIVISION 4 - MAJOR STRUCTURES	
422.02	Bridge Approach Fills - Type II - Modified Approach Fill
DIVISION 5 - SUBGRADE, BASES AND SHOULDERS	
560.01	Method of Shoulder Construction - High Side of Superelevated Curve - Method I
DIVISION 8 - INCIDENTALS	
840.02	Concrete Catch Basin
840.03	Frame, Grates, and Hood
840.29	Frame and Narrow Slot Flat Grates
840.35	Traffic Bearing Grated Drop Inlet
846.01	Concrete Curb, Gutter and Curb & Gutter
848.02	Driveway Turnout
862.01	Guardrail Placement
862.02	Guardrail Installation
876.02	Guide for Rip Rap at Pipe Outlets
DIVISION 11 - WORK ZONE TRAFFIC CONTROL	
1101.03	Temporary Road Closures
1110.01	Stationary Work Zone Signs - Mounting Height & Lateral Clearance
1145.01	Barricades - Type III

9/5/2023
R:\Roadway\Proj\SHT\R003_rdy_psh01A.dgn
SaucieSL

DocuSign Envelope ID: 0908AB87-C088-4523-BEAB-A55EC9F5191D

9/10/2021

PROJECT REFERENCE NO.	SHEET NO.
BPII.R003.3	1-B

STATE OF NORTH CAROLINA, DIVISION OF HIGHWAYS

CONVENTIONAL PLAN SHEET SYMBOLS

Note: Not to Scale

BOUNDARIES AND PROPERTY:

- State Line
- County Line
- Township Line
- City Line
- Reservation Line
- Property Line
- Existing Iron Pin (EIP) — EIP
- Computed Property Corner
- Existing Concrete Monument (ECM) — ECM
- Parcel/Sequence Number — 123
- Existing Fence Line
- Proposed Woven Wire Fence
- Proposed Chain Link Fence
- Proposed Barbed Wire Fence
- Existing Wetland Boundary — WLB
- Proposed Wetland Boundary — WLB
- Existing Endangered Animal Boundary — EAB
- Existing Endangered Plant Boundary — EPB
- Existing Historic Property Boundary — HPB
- Known Contamination Area: Soil — S
- Potential Contamination Area: Soil — S
- Known Contamination Area: Water — W
- Potential Contamination Area: Water — W
- Contaminated Site: Known or Potential

BUILDINGS AND OTHER CULTURE:

- Gas Pump Vent or U/G Tank Cap
- Sign — S
- Well — W
- Small Mine
- Foundation
- Area Outline
- Cemetery
- Building
- School
- Church
- Dam

HYDROLOGY:

- Stream or Body of Water
- Hydro, Pool or Reservoir
- Jurisdictional Stream — JS
- Buffer Zone 1 — BZ 1
- Buffer Zone 2 — BZ 2
- Flow Arrow
- Disappearing Stream
- Spring
- Wetland
- Proposed Lateral, Tail, Head Ditch — FLOW
- False Sump

RAILROADS:

- Standard Gauge — CSX TRANSPORTATION
- RR Signal Milepost — MILEPOST 35
- Switch — SWITCH
- RR Abandoned
- RR Dismantled

RIGHT OF WAY & PROJECT CONTROL:

- Primary Horiz Control Point
- Primary Horiz and Vert Control Point
- Secondary Horiz and Vert Control Point
- Vertical Benchmark
- Existing Right of Way Monument
- Proposed Right of Way Monument (Rebar and Cap)
- Proposed Right of Way Monument (Concrete)
- Existing Permanent Easement Monument
- Proposed Permanent Easement Monument (Rebar and Cap)
- Existing C/A Monument
- Proposed C/A Monument (Rebar and Cap)
- Proposed C/A Monument (Concrete)
- Existing Right of Way Line
- Proposed Right of Way Line — RW
- Existing Control of Access Line — CA
- Proposed Control of Access Line — CA
- Proposed ROW and CA Line — RW CA
- Existing Easement Line — E
- Proposed Temporary Construction Easement — E
- Proposed Temporary Drainage Easement — TDE
- Proposed Permanent Drainage Easement — PDE
- Proposed Permanent Drainage/Utility Easement — DUE
- Proposed Permanent Utility Easement — PUE
- Proposed Temporary Utility Easement — TUE
- Proposed Aerial Utility Easement — AUE

ROADS AND RELATED FEATURES:

- Existing Edge of Pavement
- Existing Curb
- Proposed Slope Stakes Cut — C
- Proposed Slope Stakes Fill — F
- Proposed Curb Ramp — CR
- Existing Metal Guardrail
- Proposed Guardrail
- Existing Cable Guiderail
- Proposed Cable Guiderail
- Equality Symbol
- Pavement Removal

VEGETATION:

- Single Tree
- Single Shrub
- Hedge
- Woods Line
- Orchard
- Vineyard — Vineyard

EXISTING STRUCTURES:

MAJOR:

- Bridge, Tunnel or Box Culvert — CONC
- Bridge Wing Wall, Head Wall and End Wall — CONC WW

MINOR:

- Head and End Wall — CONC HW
- Pipe Culvert
- Footbridge
- Drainage Box: Catch Basin, DI or JB — CB
- Paved Ditch Gutter
- Storm Sewer Manhole — S
- Storm Sewer — S

UTILITIES:

** SUE – Subsurface Utility Engineering*
LOS – Level of Service – A,B,C or D (Accuracy)

POWER:

- Existing Power Pole
- Proposed Power Pole
- Existing Joint Use Pole
- Proposed Joint Use Pole
- Power Manhole — P
- Power Line Tower
- Power Transformer
- U/G Power Cable Hand Hole — HH
- H–Frame Pole
- U/G Power Line Test Hole (SUE – LOS A)*
- U/G Power Line (SUE – LOS B)* — P
- U/G Power Line (SUE – LOS C)* — P
- U/G Power Line (SUE – LOS D)* — P

TELEPHONE:

- Existing Telephone Pole
- Proposed Telephone Pole
- Telephone Manhole — T
- Telephone Pedestal — T
- Telephone Cell Tower
- U/G Telephone Cable Hand Hole — HH
- U/G Telephone Test Hole (SUE – LOS A)*
- U/G Telephone Cable (SUE – LOS B)* — T
- U/G Telephone Cable (SUE – LOS C)* — T
- U/G Telephone Cable (SUE – LOS D)* — T
- U/G Telephone Conduit (SUE – LOS B)* — TC
- U/G Telephone Conduit (SUE – LOS C)* — TC
- U/G Telephone Conduit (SUE – LOS D)* — TC
- U/G Fiber Optics Cable (SUE – LOS B)* — T FO
- U/G Fiber Optics Cable (SUE – LOS C)* — T FO
- U/G Fiber Optics Cable (SUE – LOS D)* — T FO

WATER:

- Water Manhole — W
- Water Meter
- Water Valve
- Water Hydrant
- U/G Water Line Test Hole (SUE – LOS A)*
- U/G Water Line (SUE – LOS B)* — W
- U/G Water Line (SUE – LOS C)* — W
- U/G Water Line (SUE – LOS D)* — W
- Above Ground Water Line — A/G Water

TV:

- TV Pedestal — C
- TV Tower
- U/G TV Cable Hand Hole — HH
- U/G TV Test Hole (SUE – LOS A)*
- U/G TV Cable (SUE – LOS B)* — TV
- U/G TV Cable (SUE – LOS C)* — TV
- U/G TV Cable (SUE – LOS D)* — TV
- U/G Fiber Optic Cable (SUE – LOS B)* — TV FO
- U/G Fiber Optic Cable (SUE – LOS C)* — TV FO
- U/G Fiber Optic Cable (SUE – LOS D)* — TV FO

GAS:

- Gas Valve
- Gas Meter
- U/G Gas Line Test Hole (SUE – LOS A)*
- U/G Gas Line (SUE – LOS B)* — G
- U/G Gas Line (SUE – LOS C)* — G
- U/G Gas Line (SUE – LOS D)* — G
- Above Ground Gas Line — A/G Gas

SANITARY SEWER:

- Sanitary Sewer Manhole
- Sanitary Sewer Cleanout
- U/G Sanitary Sewer Line — SS
- Above Ground Sanitary Sewer — A/G Sanitary Sewer
- SS Force Main Line Test Hole (SUE – LOS A)*
- SS Force Main Line (SUE – LOS B)* — FSS
- SS Force Main Line (SUE – LOS C)* — FSS
- SS Force Main Line (SUE – LOS D)* — FSS

MISCELLANEOUS:

- Utility Pole
- Utility Pole with Base
- Utility Located Object
- Utility Traffic Signal Box — S
- Utility Unknown U/G Line (SUE – LOS B)* — ?UTL
- U/G Tank; Water, Gas, Oil
- Underground Storage Tank, Approx. Loc. — UST
- A/G Tank; Water, Gas, Oil
- Geoenvironmental Boring
- Abandoned According to Utility Records — AATUR
- End of Information — E.O.I.

9/5/2023
R:\Roadway\Proj\SHT\R003_rdy_psh01B.dgn
SaucieSL

DocuSign Envelope ID: 0908AB87-C088-4523-BEAB-A55EC9F5191D

PRELIMINARY PAVEMENT SCHEDULE	
C1	PROP. APPROX. 3.0″ ASPHALT CONCRETE SURFACE COURSE, TYPE S9.5C, AT AN AVERAGE RATE OF 168 LBS. PER SQ. YD. IN EACH OF TWO LAYERS.
C2	PROP. VAR. DEPTH ASPHALT CONCRETE SURFACE COURSE, TYPE S9.5C, AT AN AVERAGE RATE OF 112 LBS. PER SQ. YD. PER 1″ DEPTH. TO BE PLACED IN LAYERS NOT LESS THAN 1.5″ IN DEPTH OR GREATER THAN 2.0″ IN DEPTH.
D1	PROP. APPROX. 4.0″ ASPHALT CONCRETE INTERMEDIATE COURSE, TYPE I19.0C, AT AN AVERAGE RATE OF 456 LBS. PER SQ. YD.
D2	PROP. VAR. DEPTH ASPHALT CONCRETE INTERMEDIATE COURSE, TYPE I19.0C, AT AN AVERAGE RATE OF 114 LBS. PER SQ. YD, PER 1″ DEPTH. TO BE PLACED IN LAYERS NOT LESS THAN 2.5″ IN DEPTH OR GREATER THAN 4″ IN DEPTH.
E1	PROP. APPROX. 4.0″ ASPHALT CONCRETE BASE COURSE, TYPE B25.0C, AT AN AVERAGE RATE OF 456 LBS. PER SQ. YD.
E2	PROP. VAR. DEPTH ASPHALT CONCRETE BASE COURSE, TYPE B25.0C, AT AN AVERAGE RATE OF 114 LBS. PER SQ. YD. PER 1″ DEPTH. TO BE PLACED IN LAYERS NOT LESS THAN 3.0″ IN DEPTH OR GREATER THAN 5.5″ IN DEPTH.
J1	8″ AGGREGATE BASE COURSE
R	SHOULDER BERM GUTTER
T	EARTH MATERIAL
U	EXISTING PAVEMENT
W	PAVEMENT WEDGING

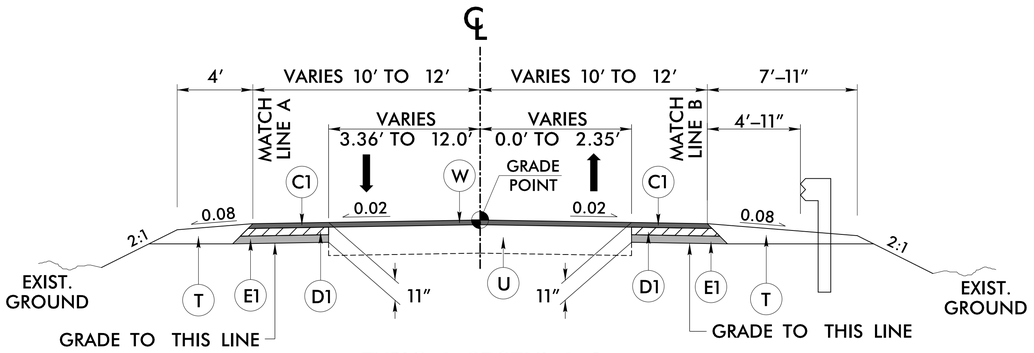

TYPICAL SECTION 1

–L– STA. 11+30.00 TO 16+08.56 (BEGIN BRIDGE) * 7′–11″ WITH GUARDRAIL
–L– STA. 17+61.44 (END BRIDGE) TO 19+70.00

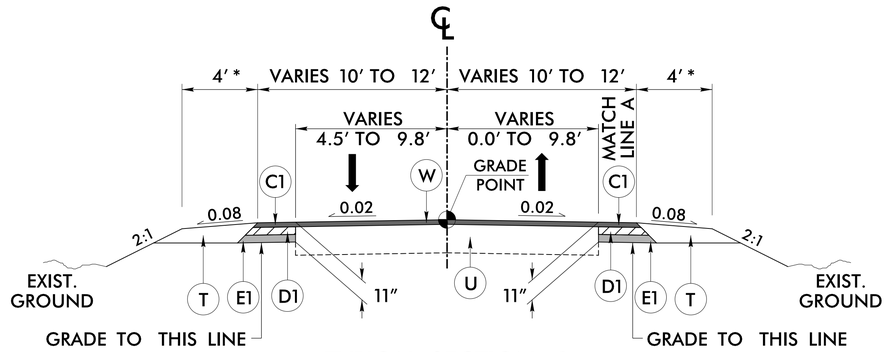

TYPICAL SECTION 2

–L– STA. 19+70.00 TO 21+90.00 * 7′ WITH GUARDRAIL

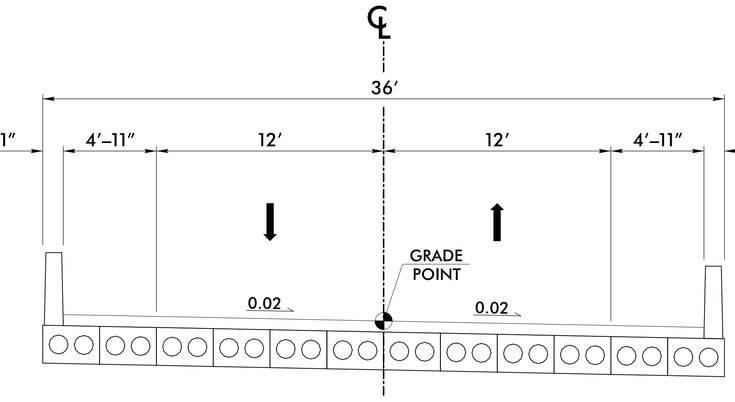

TYPICAL SECTION 3

–L– STA. 16+08.56 (BEGIN BRIDGE) TO 17+61.44 (END BRIDGE)

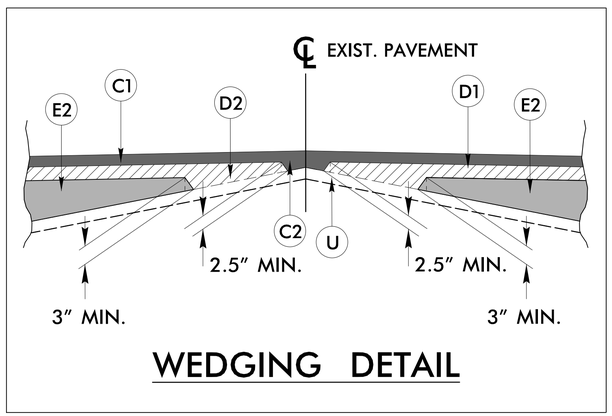

WEDGING DETAIL

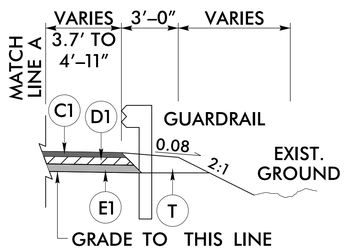

DETAIL A
–L– STA. 14+75.05 TO 15+27.00 (RT)
–L– STA. 14+92.30 TO 15+98.79 (LT)
–L– STA. 17+51.68 (LT) TO –Y– STA. 11+96.07 (RT)
–L– STA. 19+15.00 TO 19+70.00 (RT)

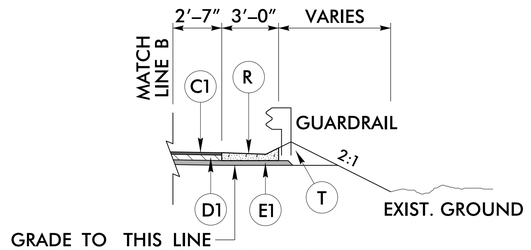

DETAIL B
–L– STA. 15+27.00 TO 16+03.28 (RT)
–L– STA. 17+83.56 TO 19+15.00 (RT)

STV Engineers, Inc.
900 West Trade St., Suite 715
Charlotte, NC 28202
NC License Number F-0991

PROJECT REFERENCE NO.	SHEET NO.
BPII.R003.3	2A-1
R/W SHEET NO.	

ROADWAY DESIGN ENGINEER

NORTH CAROLINA PROFESSIONAL ENGINEER SEAL 039234 9/5/2023 ENGINEER MICHAEL T. HONEYCUTT

PAVEMENT DESIGN ENGINEER

PAVEMENT DESIGN PROVIDED BY NCDOT

DOCUMENT NOT CONSIDERED FINAL UNLESS ALL SIGNATURES COMPLETED

9/5/2023
R:\Roadway\Proj\SHT\R003_rdy_psh02A-1.dgn
SaucierSL

DocuSign Envelope ID: 0908AB87-C088-4523-BEAB-A55EC9F5191D

PRELIMINARY PAVEMENT SCHEDULE	
C1	PROP. APPROX. 3.0″ ASPHALT CONCRETE SURFACE COURSE, TYPE S9.5C, AT AN AVERAGE RATE OF 168 LBS. PER SQ. YD. IN EACH OF TWO LAYERS.
C2	PROP. VAR. DEPTH ASPHALT CONCRETE SURFACE COURSE, TYPE S9.5C, AT AN AVERAGE RATE OF 112 LBS. PER SQ. YD. PER 1″ DEPTH. TO BE PLACED IN LAYERS NOT LESS THAN 1.5″ IN DEPTH OR GREATER THAN 2.0″ IN DEPTH.
D1	PROP. APPROX. 4.0″ ASPHALT CONCRETE INTERMEDIATE COURSE, TYPE I19.0C, AT AN AVERAGE RATE OF 456 LBS. PER SQ. YD.
D2	PROP. VAR. DEPTH ASPHALT CONCRETE INTERMEDIATE COURSE, TYPE I19.0C, AT AN AVERAGE RATE OF 114 LBS. PER SQ. YD, PER 1″ DEPTH. TO BE PLACED IN LAYERS NOT LESS THAN 2.5″ IN DEPTH OR GREATER THAN 4″ IN DEPTH.
E1	PROP. APPROX. 4.0″ ASPHALT CONCRETE BASE COURSE, TYPE B25.0C, AT AN AVERAGE RATE OF 456 LBS. PER SQ. YD.
E2	PROP. VAR. DEPTH ASPHALT CONCRETE BASE COURSE, TYPE B25.0C, AT AN AVERAGE RATE OF 114 LBS. PER SQ. YD. PER 1″ DEPTH. TO BE PLACED IN LAYERS NOT LESS THAN 3.0″ IN DEPTH OR GREATER THAN 5.5″ IN DEPTH.
J1	8″ AGGREGATE BASE COURSE
R	SHOULDER BERM GUTTER
T	EARTH MATERIAL
U	EXISTING PAVEMENT
W	PAVEMENT WEDGING (SEE DETAIL SHEET 2A-1)

STV Engineers, Inc.
900 West Trade St., Suite 715
Charlotte, NC 28202
NC License Number F-0991

PROJECT REFERENCE NO.	SHEET NO.
BPII.R003.3	2A-2
R/W SHEET NO.	

ROADWAY DESIGN ENGINEER

NORTH CAROLINA PROFESSIONAL ENGINEER SEAL 039234 9/5/2023 MICAH T. HONEYCUTT

PAVEMENT DESIGN ENGINEER

PAVEMENT DESIGN PROVIDED BY NCDOT

DOCUMENT NOT CONSIDERED FINAL UNLESS ALL SIGNATURES COMPLETED

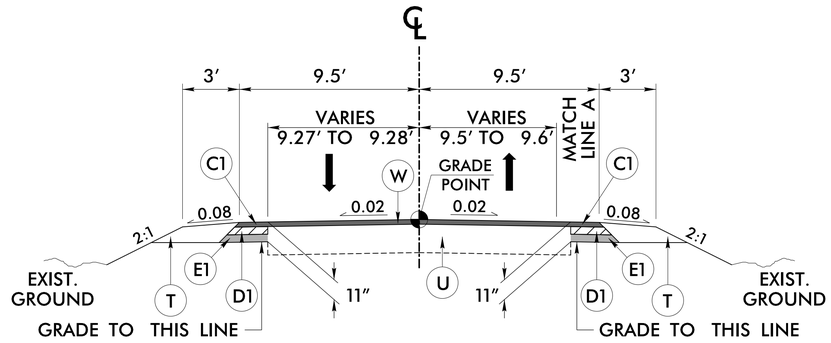

TYPICAL SECTION 4

–Y– STA. 11+25.00 TO 12+63.05

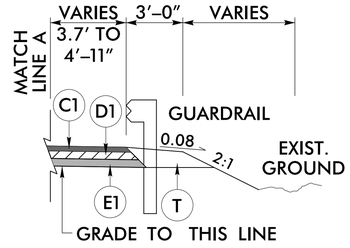

DETAIL A

–L– STA. 17+51.68 (LT) TO –Y– STA. 11+96.07 (RT)

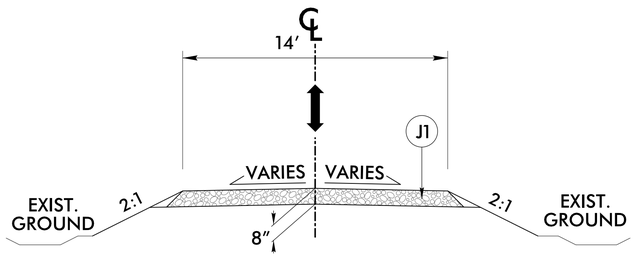

TYPICAL SECTION 5

–DR1– STA. 10+13.87 TO 10+90.00

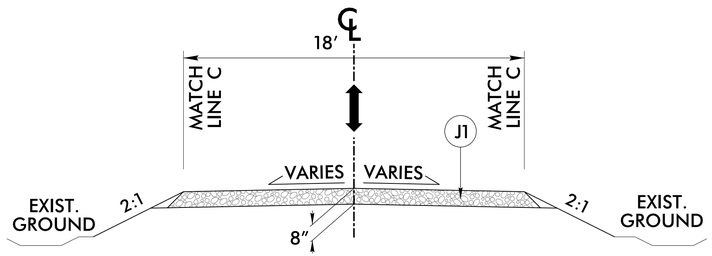

TYPICAL SECTION 6

–TDR1– STA. 10+09.67 TO 11+19.45

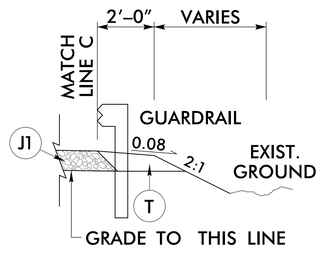

DETAIL C

–TDR1– STA. 10+13.11 TO 10+32.42

–TDR1– STA. 10+14.70 TO 11+12.98

9/5/2023
R:\Roadway\Proj\SHT\R003_rdy_psh02A-2.dgn
SaucieSL

DocuSign Envelope ID: 0908AB87-C088-4523-BEAB-A55EC9F5191D

STV Engineers, Inc.
900 West Trade St., Suite 715
Charlotte, NC 28202
NC License Number F-0991

PROJECT REFERENCE NO.	SHEET NO.
BP11.R003.3	2B-1
R/W SHEET NO.	
ROADWAY DESIGN ENGINEER	HYDRAULICS ENGINEER

NORTH CAROLINA PROFESSIONAL ENGINEER SEAL 039234 9/5/2023 NIKKI T. HONEYCUTT

NORTH CAROLINA PROFESSIONAL ENGINEER SEAL 029388 9/5/2023 EDWARD J. VANCE

DOCUMENT NOT CONSIDERED FINAL UNLESS ALL SIGNATURES COMPLETED

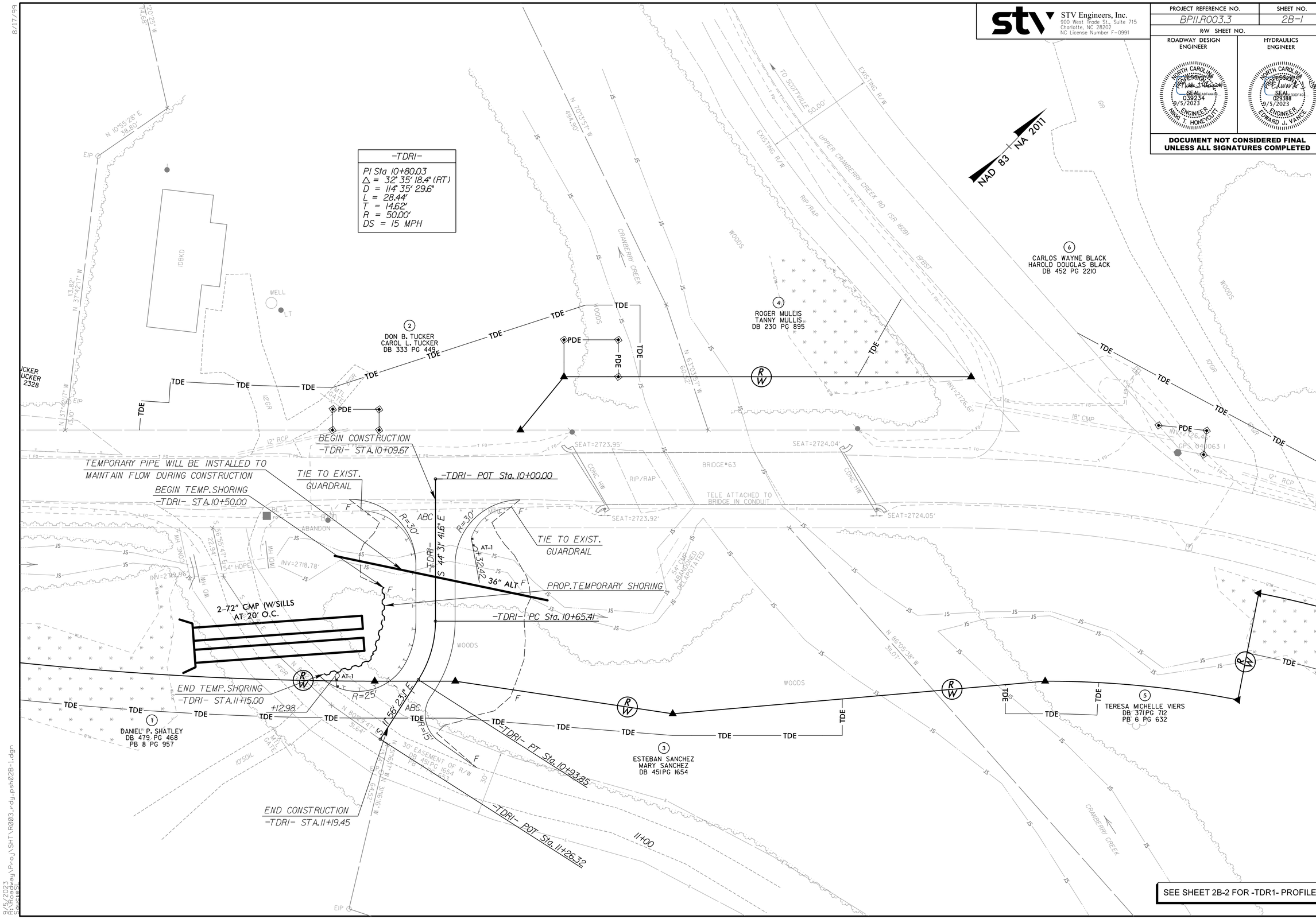

SEE SHEET 2B-2 FOR -TDR1- PROFILE

8/17/99

9/5/2023
R:\Roadway\Proj\SHT\R003_rdy_psh02B-1.dgn

DocuSign Envelope ID: 0908AB87-C088-4523-BEAB-A55EC9F5191D

8/17/99

-TDR1-

STV Engineers, Inc.
900 West Trade St., Suite 715
Charlotte, NC 28202
NC License Number F-0991

PROJECT REFERENCE NO.	SHEET NO.
BPII.R003.3	2B-2
R/W SHEET NO.	

ROADWAY DESIGN ENGINEER

NORTH CAROLINA PROFESSIONAL ENGINEER SEAL 039234 9/5/2023 ENGINEER MICHAEL T. HONEYCUTT

HYDRAULICS ENGINEER

NORTH CAROLINA PROFESSIONAL ENGINEER SEAL 029388 9/5/2023 ENGINEER EDWARD J. VANCE

DOCUMENT NOT CONSIDERED FINAL UNLESS ALL SIGNATURES COMPLETED

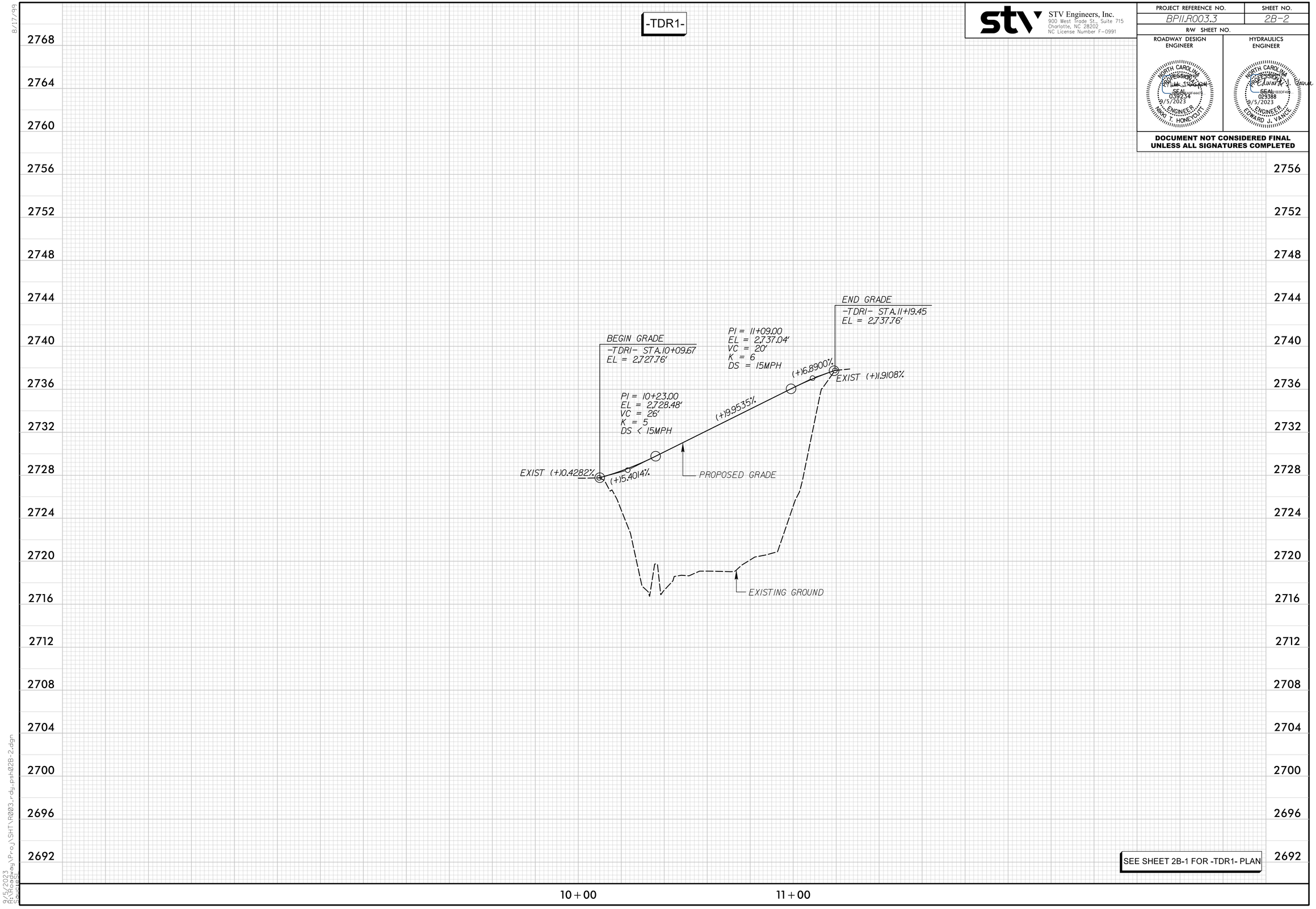

SEE SHEET 2B-1 FOR -TDR1- PLAN

9/5/2023
C:\Projects\Proj\SHT\R003_rdy_psh02B-2.dgn
Standard

DocuSign Envelope ID: 0908AB87-C088-4523-BEAB-A55EC9F5191D

PROJECT REFERENCE NO.	SHEET NO.
BP11.R003.3	2C-1

DOCUMENT NOT CONSIDERED FINAL UNLESS ALL SIGNATURES COMPLETED

STATE OF NORTH CAROLINA
DEPT. OF TRANSPORTATION
DIVISION OF HIGHWAYS
RALEIGH, N.C.

ROADWAY DETAIL DRAWING FOR
GUARDRAIL INSTALLATION

SHEET 6 OF 8
862D02

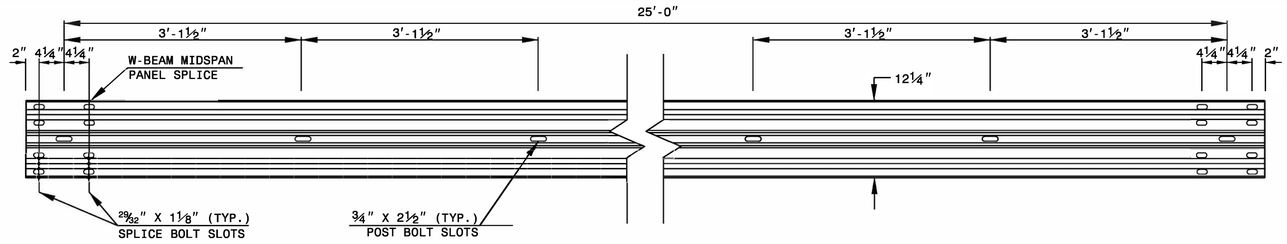

STANDARD W-BEAM GUARDRAIL

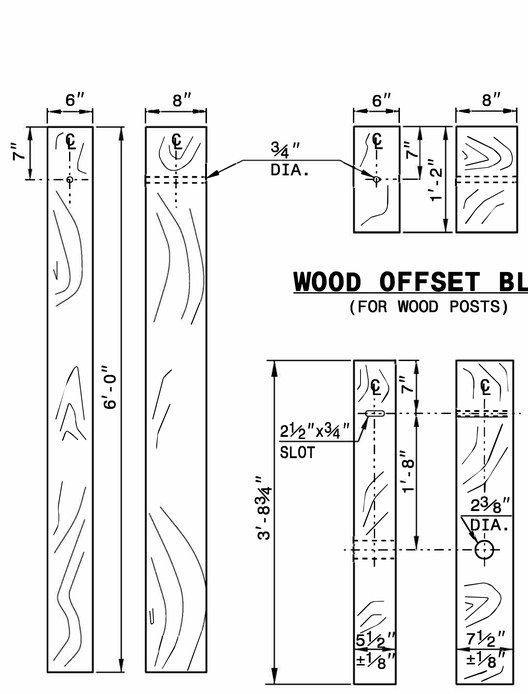

STANDARD LINE POST

SHORT WOOD BREAKAWAY POST

WOOD OFFSET BLOCK
(FOR WOOD POSTS)

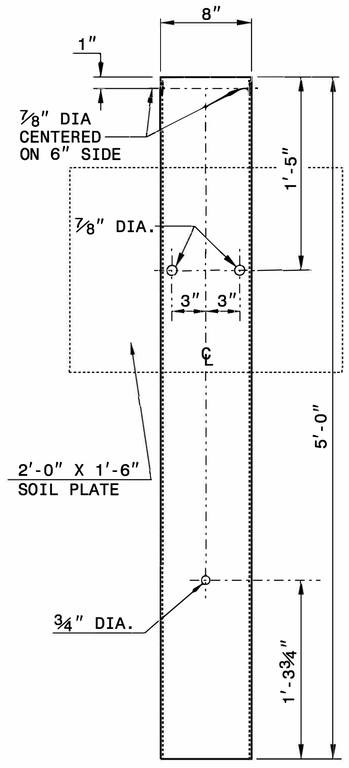

STEEL TUBE
TS 6"x8"x0.1875"

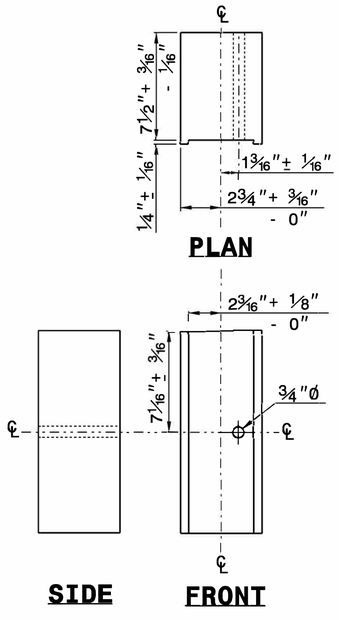

ROUTED OFFSET BLOCK

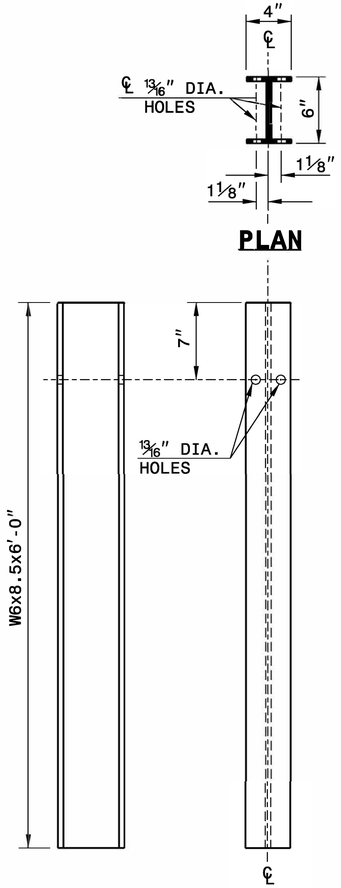

"W6" STEEL POST

SYSTEM PARTS

STATE OF NORTH CAROLINA
DEPT. OF TRANSPORTATION
DIVISION OF HIGHWAYS
RALEIGH, N.C.

ROADWAY DETAIL DRAWING FOR
GUARDRAIL INSTALLATION

SHEET 6 OF 8
862D02



CONTRACTS STANDARDS AND DEVELOPMENT UNIT
Office 919-707-6950 FAX 919-250-4119

SEE TITLE BLOCK

ORIGINAL BY: J.HOWERTON DATE: 3-7-2018
MODIFIED BY: DATE:
CHECKED BY: DATE:
FILE SPEC.:

DocuSign Envelope ID: 0908AB87-C088-4523-BEAB-A55EC9F5191D

PROJECT REFERENCE NO.	SHEET NO.
BP11.R003.3	2C-2

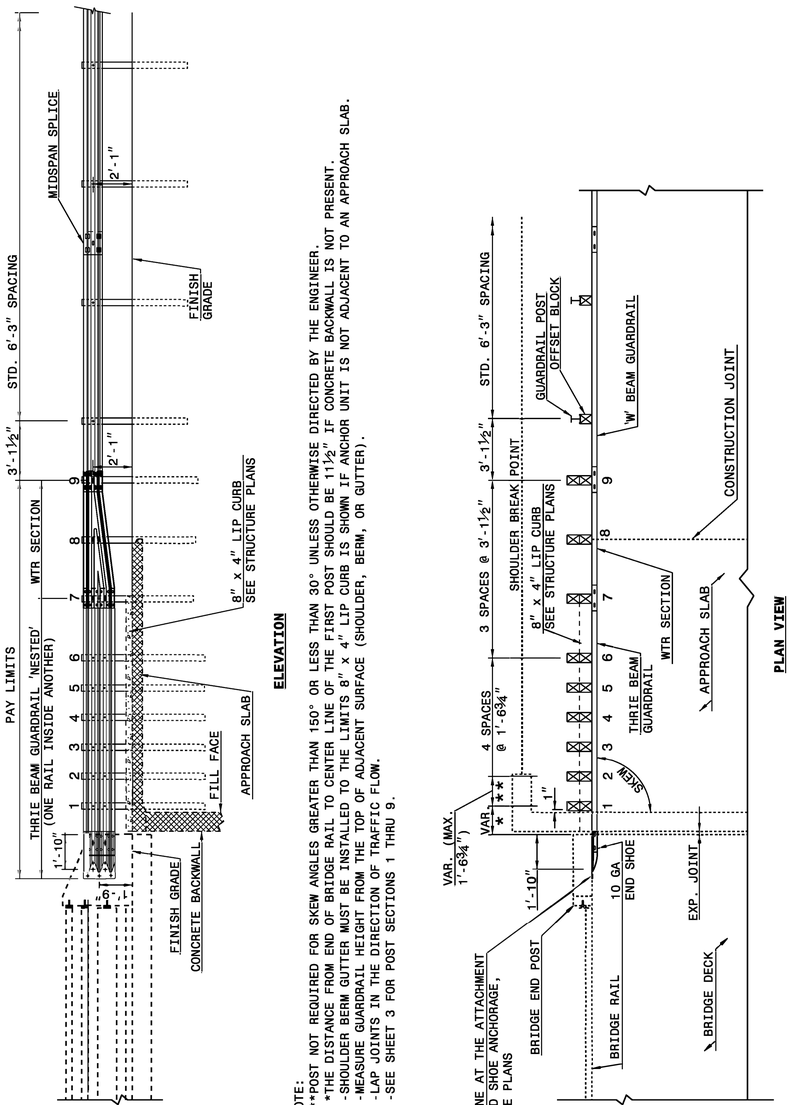

ELEVATION

NOTE:
**POST NOT REQUIRED FOR SKEW ANGLES GREATER THAN 150° OR LESS THAN 30° UNLESS OTHERWISE DIRECTED BY THE ENGINEER.
*THE DISTANCE FROM END OF BRIDGE RAIL TO CENTER LINE OF THE FIRST POST SHOULD BE 11½" IF CONCRETE BACKWALL IS NOT PRESENT.
-SHOULDER BERM GUTTER MUST BE INSTALLED TO THE LIMITS 8" x 4" LIP CURB IS SHOWN IF ANCHOR UNIT IS NOT ADJACENT TO AN APPROACH SLAB.
-MEASURE GUARDRAIL HEIGHT FROM THE TOP OF ADJACENT SURFACE (SHOULDER, BERM, OR GUTTER).
-LAP JOINTS IN THE DIRECTION OF TRAFFIC FLOW.
-SEE SHEET 3 FOR POST SECTIONS 1 THRU 9.

PLAN VIEW

GUARDRAIL ANCHOR UNIT, TYPE III
FOR ATTACHMENT TO RAIL ON BRIDGE

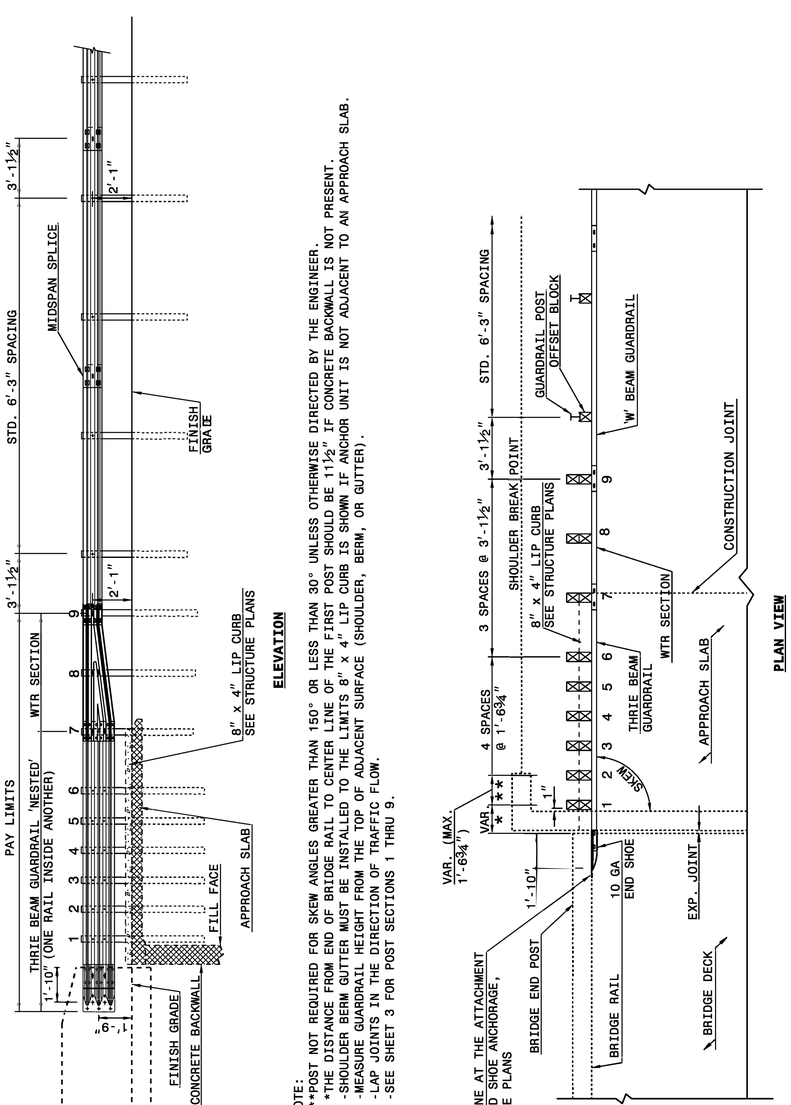

ELEVATION

NOTE:
**POST NOT REQUIRED FOR SKEW ANGLES GREATER THAN 150° OR LESS THAN 30° UNLESS OTHERWISE DIRECTED BY THE ENGINEER.
*THE DISTANCE FROM END OF BRIDGE RAIL TO CENTER LINE OF THE FIRST POST SHOULD BE 11½" IF CONCRETE BACKWALL IS NOT PRESENT.
-SHOULDER BERM GUTTER MUST BE INSTALLED TO THE LIMITS 8" x 4" LIP CURB IS SHOWN IF ANCHOR UNIT IS NOT ADJACENT TO AN APPROACH SLAB.
-MEASURE GUARDRAIL HEIGHT FROM THE TOP OF ADJACENT SURFACE (SHOULDER, BERM, OR GUTTER).
-LAP JOINTS IN THE DIRECTION OF TRAFFIC FLOW.
-SEE SHEET 3 FOR POST SECTIONS 1 THRU 9.

PLAN VIEW

GUARDRAIL ANCHOR UNIT, TYPE III FOR ATTACHMENT TO
RAIL ON BRIDGE - SUB REGIONAL TIER

14-DEC-2017 10:36
S:\Contracts\Contracts\Special Details\jhowerton\Standard Drawings\2018 Standard Drawings\Details in Lieu of Standards\Division 8\0862d0301.dgn
jhowerton AT CSD-2925595

NORTH CAROLINA
PROFESSIONAL ENGINEER
SEAL
33144
JAMES M. HOWERTON, III
8/17/2023

DOCUMENT NOT CONSIDERED FINAL UNLESS ALL SIGNATURES COMPLETED

CONTRACT STANDARDS AND DEVELOPMENT UNIT
Office 919-707-6950 FAX 919-250-4119

SEE TITLE BLOCK

ORIGINAL BY: J HOWERTON DATE: 06-22-12
MODIFIED BY: _____ DATE: _____
CHECKED BY: _____ DATE: _____
FILE SPEC.: _____

DocuSign Envelope ID: 0908AB87-C088-4523-BEAB-A55EC9F5191D

PROJECT REFERENCE NO.	SHEET NO.
BP11.R003.3	2G-1

GEOTECHNICAL ENGINEER

NORTH CAROLINA PROFESSIONAL SEAL 045542 ENGINEER KELLY DE MONTBRUN

DocuSigned by: Kelly de Montbrun 8/11/2023
SIGNATURE DATE

ENGINEER

SIGNATURE DATE

DOCUMENT NOT CONSIDERED FINAL UNLESS ALL SIGNATURES COMPLETED

GROUNDWATER CONDITION (SEE NOTE 6)	H SHORING HEIGHT (FT)	SLOPE OR SURCHARGE CASE WITH NO TRAFFIC IMPACT					SURCHARGE CASE WITH TRAFFIC IMPACT				
		SHEET PILES		H-PILES WITH TIMBER LAGGING			SHEET PILES		H-PILES WITH TIMBER LAGGING		
		MINIMUM REQUIRED EMBEDMENT (FT)	MINIMUM REQUIRED SECTION MODULUS (IN^3/FT)	MINIMUM REQUIRED EMBEDMENT* (FT) (SEE NOTE 10)			MINIMUM REQUIRED EMBEDMENT (FT)	MINIMUM REQUIRED SECTION MODULUS (IN^3/FT)	MINIMUM REQUIRED EMBEDMENT* (FT) (SEE NOTE 10)		
				HP 10x42	HP 12x53	HP 14x73			HP 10x42	HP 12x53	HP 14x73
GROUNDWATER ELEVATION BEWTEEN BOTTOM OF SHORING AND PILE TIP	< 6	11.5	4.5	11.5	11.5	11.5	16.0	12.0	13.0	13.0	13.0
	7	13.0	7.0	13.0	13.0	13.0	17.0	14.5	14.5	14.5	14.5
	8	15.0	10.0	--	15.0	15.0	18.0	17.0	--	15.5	15.5
	9	17.0	14.0	--	17.0	17.0	19.0	20.0	--	17.0	17.0
	10	18.5	19.5	--	--	18.5	20.0	23.5	--	--	18.5
	11	20.5	26.0	--	--	--	21.0	28.0	--	--	20.0
	12	22.5	33.0	--	--	--	22.0	33.0	--	--	21.5
GROUNDWATER ELEVATION BELOW PILE TIP	< 6	7.5	3.0	8.0	8.0	8.0	11.0	10.0	9.5	9.5	9.5
	7	8.5	4.5	9.5	9.5	9.5	12.0	12.0	10.5	10.5	10.5
	8	10.0	6.5	10.5	10.5	10.5	12.5	14.0	11.5	11.5	11.5
	9	11.0	9.5	--	12.0	12.0	13.5	16.5	--	12.5	12.5
	10	12.5	13.0	--	--	13.5	14.0	19.5	--	13.5	13.5
	11	13.5	17.0	--	--	14.5	15.0	22.5	--	--	14.5
	12	15.0	21.5	--	--	16.0	16.0	25.5	--	--	15.5

MINIMUM REQUIRED EMBEDMENT AND SECTION MODULUS

*DO NOT USE H-PILES WITH TIMBER LAGGING FOR GROUNDWATER CONDITION, SHORING HEIGHT AND H-PILE SIZE SHOWN IF MINIMUM REQUIRED EMBEDMENT IS "--".

NOTES:

1. AT THE CONTRACTOR'S OPTION, USE STANDARD TEMPORARY SHORING AS NOTED IN THE PLANS.
2. FOR STANDARD TEMPORARY SHORING, SEE STANDARD SHORING PROVISION.
3. STANDARD TEMPORARY SHORING IS BASED ON THE FOLLOWING IN-SITU ASSUMED SOIL PARAMETERS:
   UNIT WEIGHT, γ = 120 PCF
   FRICTION ANGLE, ϕ = 30 DEGREES
   COHESION, c = 0 PSF
4. DO NOT USE STANDARD TEMPORARY SHORING IF ASSUMED SOIL PARAMETERS ARE NOT APPLICABLE.
5. DO NOT USE STANDARD TEMPORARY SHORING WHEN VERY LOOSE OR SOFT SOIL OR MUCK IS WITHIN THE EMBEDMENT DEPTH.
6. USE GROUNDWATER ELEVATION NOTED IN THE PLANS. IF NO GROUNDWATER ELEVATION IS SHOWN IN THE PLANS, USE "GROUNDWATER ELEVATION BETWEEN BOTTOM OF SHORING AND PILE TIP" FOR GROUNDWATER CONDITION. DO NOT USE STANDARD TEMPORARY SHORING IF GROUNDWATER IS ABOVE BOTTOM OF SHORING.
7. AT THE CONTRACTOR'S OPTION OR IF AVAILABLE CLEAR DISTANCE IS LESS THAN THE MINIMUM REQUIRED FOR CONCRETE BARRIER, SET BARRIER NEXT TO AND UP AGAINST TRAFFIC SIDE OF PILES AND USE "SURCHARGE CASE WITH TRAFFIC IMPACT".
8. AT THE CONTRACTOR'S OPTION OR IF AVAILABLE CLEAR DISTANCE IS LESS THAN 4' FOR TEMPORARY GUARDRAIL, ATTACH GUARDRAIL TO TRAFFIC SIDE OF PILES AS SHOWN IN THE PLANS AND USE "SURCHARGE CASE WITH TRAFFIC IMPACT".
9. MINIMUM REQUIRED EXTENSION IS 6" FOR "SLOPE OR SURCHARGE CASE WITH NO TRAFFIC IMPACT" AND 32" FOR "SURCHARGE CASE WITH TRAFFIC IMPACT".
10. MINIMUM REQUIRED EMBEDMENT FOR H-PILES WITH TIMBER LAGGING IS BASED ON DRIVEN H-PILES AT MAXIMUM 6' SPACING. AT THE CONTRACTOR'S OPTION, EMBEDMENT DEPTHS MAY BE REDUCED BY 25% FOR DRILLED-IN H-PILES.
11. SUBMIT A "STANDARD TEMPORARY SHORING SELECTION FORM" AT LEAST 7 DAYS BEFORE STARTING TEMPORARY SHORING CONSTRUCTION. UP TO 3 SHORING LOCATIONS MAY BE INCLUDED ON EACH FORM. STANDARD SHORING SELECTION FORMS ARE AVAILABLE FROM: connect.ncdot.gov/resources/Geological/Pages/Geotech_Forms_Details.aspx
12. CONTACT THE ENGINEER IF PILES DO NOT ATTAIN THE MINIMUM REQUIRED EMBEDMENT.

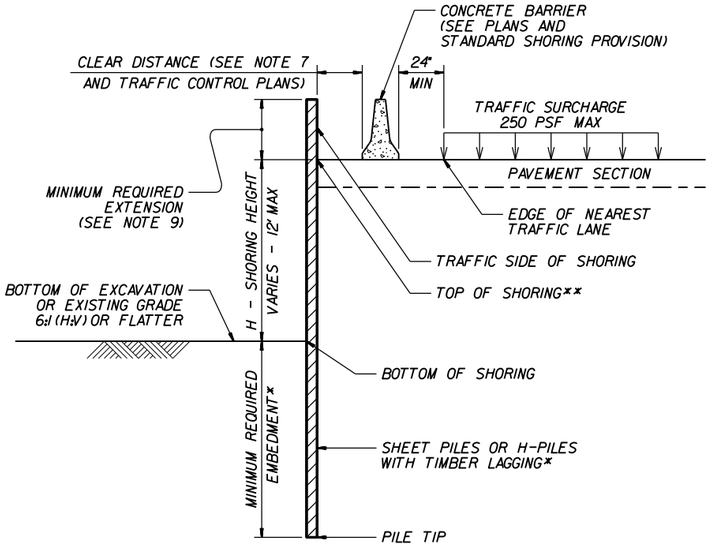

CONCRETE BARRIER

**TOP OF SHORING = EDGE OF PAVEMENT

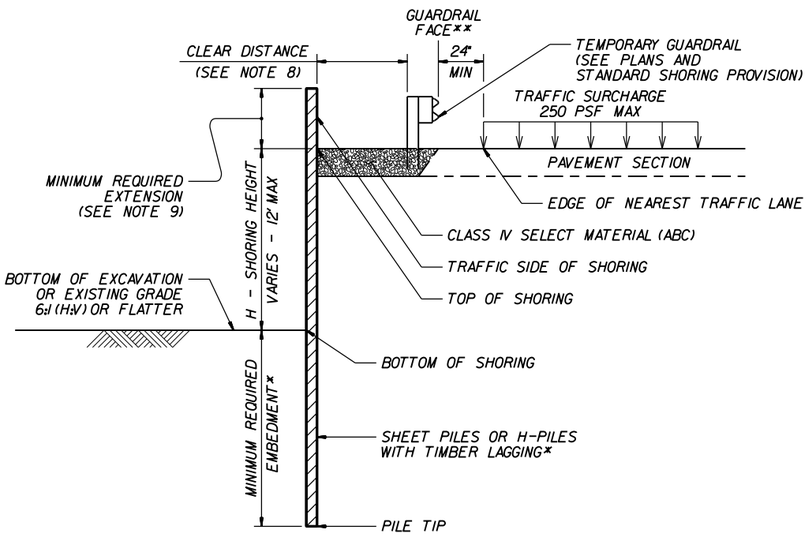

TEMPORARY GUARDRAIL

**GUARDRAIL FACE = EDGE OF PAVEMENT

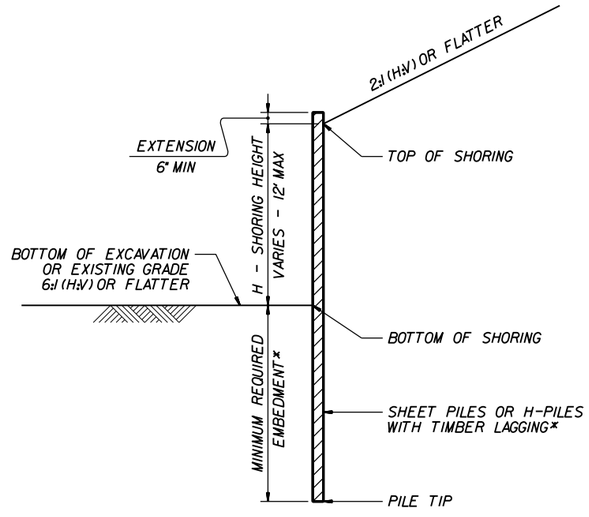

STANDARD TEMPORARY SHORING

(SLOPE CASE)
*SEE TABLE ABOVE.

STANDARD TEMPORARY SHORING

(SURCHARGE CASE)
*SEE TABLE ABOVE.

NORTH CAROLINA DEPARTMENT OF TRANSPORTATION
DIVISION OF HIGHWAYS

GEOTECHNICAL ENGINEERING UNIT

STANDARD DETAIL NO. 1801.01

STANDARD TEMPORARY SHORING

DATE: 11-19-13

DocuSign Envelope ID: 0908AB87-C088-4523-BEAB-A55EC9F5191D

PROJECT REFERENCE NO.	SHEET NO.
BP11.R003.3	2G-2

GEOTECHNICAL ENGINEER

NORTH CAROLINA PROFESSIONAL SEAL 045542 ENGINEER KELLY DE MONTBRUN

DocuSigned by: Kelly de Montbrun 8/11/2023

SIGNATURE DATE

7BDD9975E22C480

ENGINEER

SIGNATURE DATE

DOCUMENT NOT CONSIDERED FINAL UNLESS ALL SIGNATURES COMPLETED

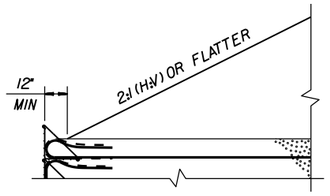

SLOPE CASE

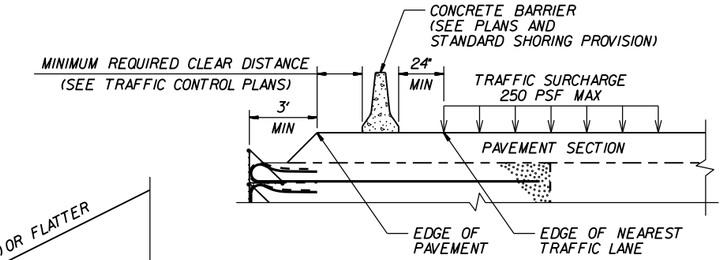

SURCHARGE CASE

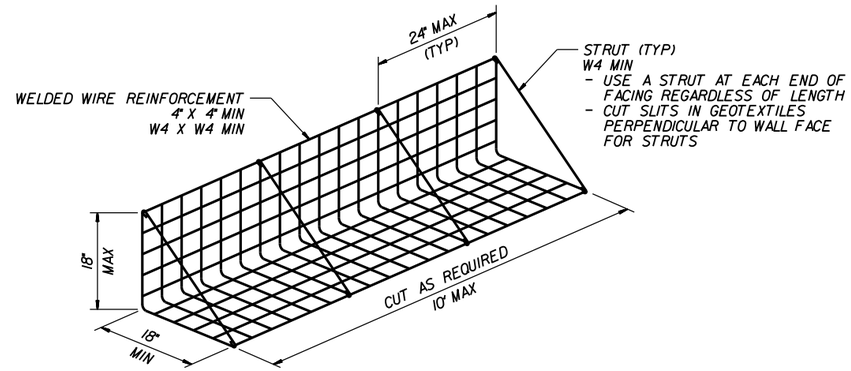

FACING DETAIL

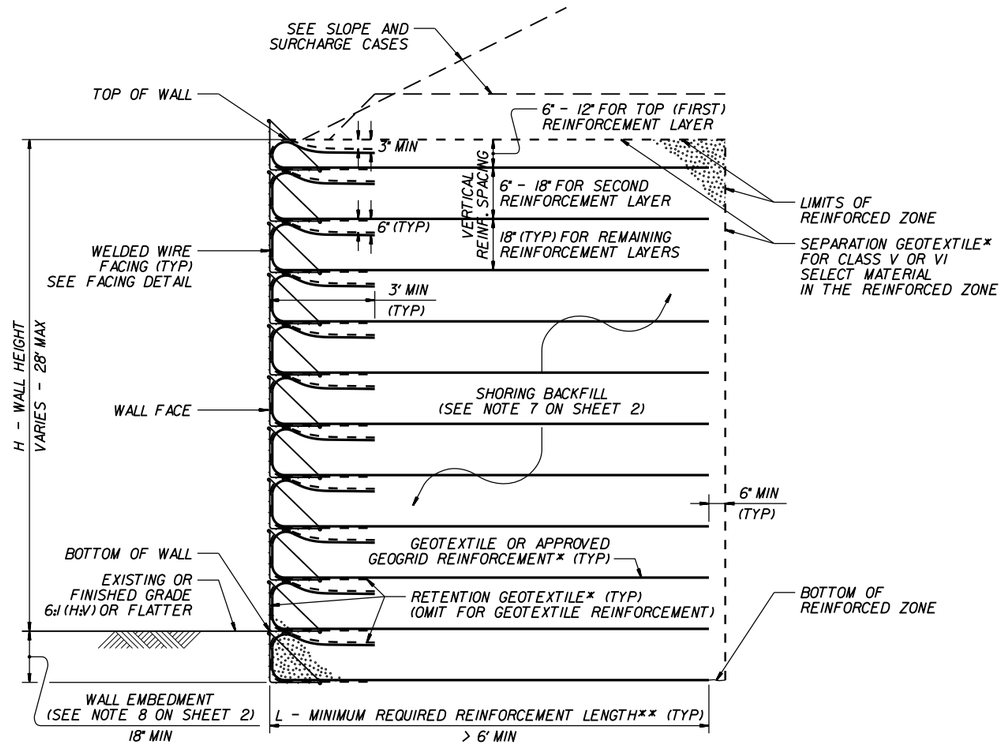

STANDARD TEMPORARY WALL

(FOR STANDARD TEMPORARY WALLS ON STRUCTURES, SEE TEMPORARY WALL ON STRUCTURE DETAIL ON SHEET 2.)

*SEE GEOSYNTHETIC PLACEMENT DETAILS ON SHEET 2.

**SEE REINFORCEMENT TABLES ON SHEET 3.

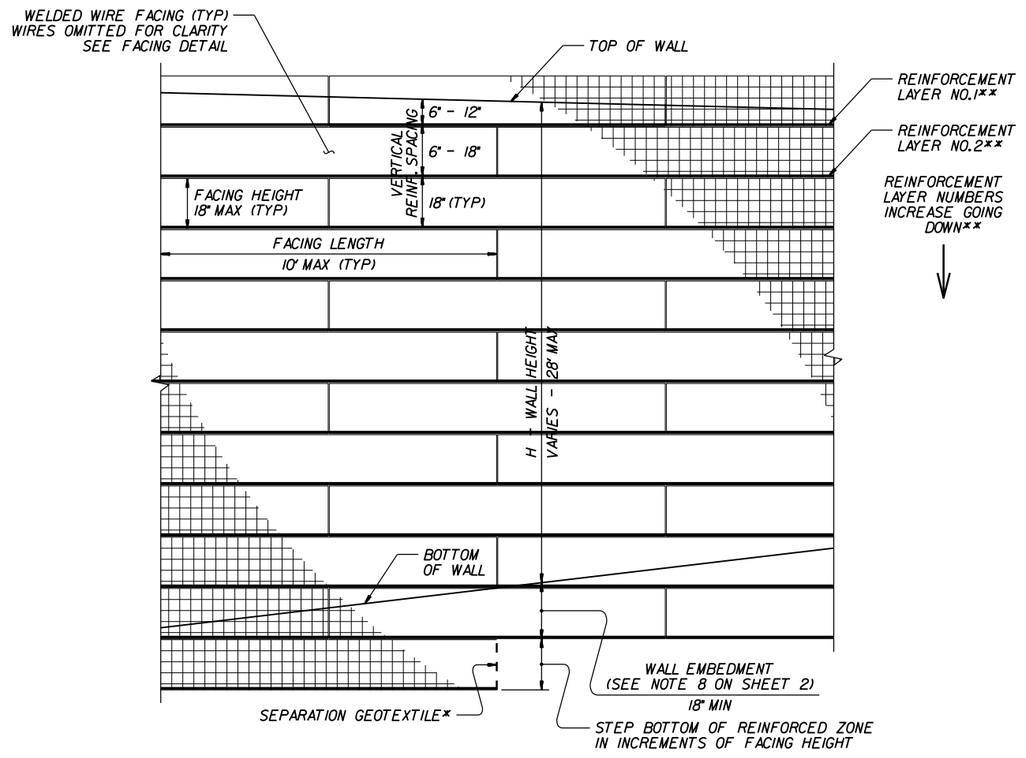

STANDARD TEMPORARY WALL – PARTIAL ELEVATION

*SEE GEOSYNTHETIC PLACEMENT DETAILS ON SHEET 2.

**SEE REINFORCEMENT TABLES ON SHEET 3.

NORTH CAROLINA DEPARTMENT OF TRANSPORTATION DIVISION OF HIGHWAYS

GEOTECHNICAL ENGINEERING UNIT

STANDARD DETAIL NO. 1801.02

STANDARD TEMPORARY WALL SHEET 1 OF 3

DATE: 11-19-13

DocuSign Envelope ID: 0908AB87-C088-4523-BEAB-A55EC9F5191D

PROJECT REFERENCE NO.	SHEET NO.
BP11.R003.3	2G-3

GEOTECHNICAL ENGINEER

NORTH CAROLINA PROFESSIONAL SEAL 045542 ENGINEER KELLY DE MONTBRUN

DocuSigned by: Kelly de Montbrun 8/11/2023

SIGNATURE DATE

ENGINEER

SIGNATURE DATE

DOCUMENT NOT CONSIDERED FINAL UNLESS ALL SIGNATURES COMPLETED

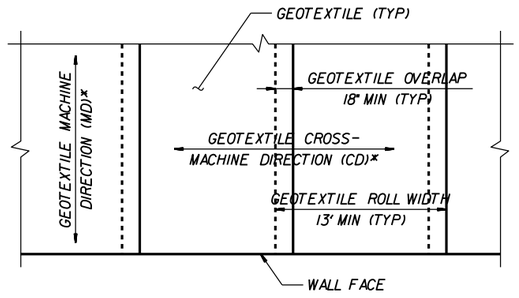

GEOTEXTILE PLACEMENT

(100% COVERAGE MIN FOR GEOTEXTILE REINFORCEMENT)

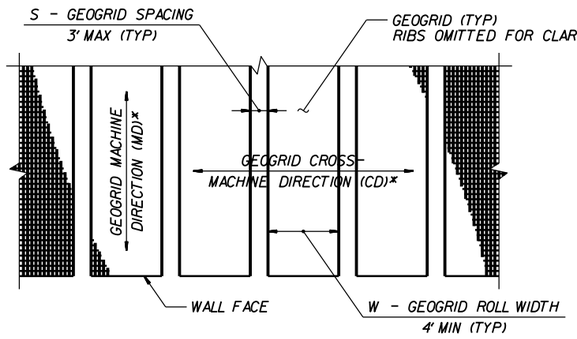

GEOGRID PLACEMENT

(80% COVERAGE MIN FOR GEOGRID REINFORCEMENT – $\frac{W}{W+S}$ x 100 $\geq$ 80%, SEE NOTE 11)

GEOSYNTHETIC PLACEMENT DETAILS

(PLAN VIEW)
*SEE NOTE 12.

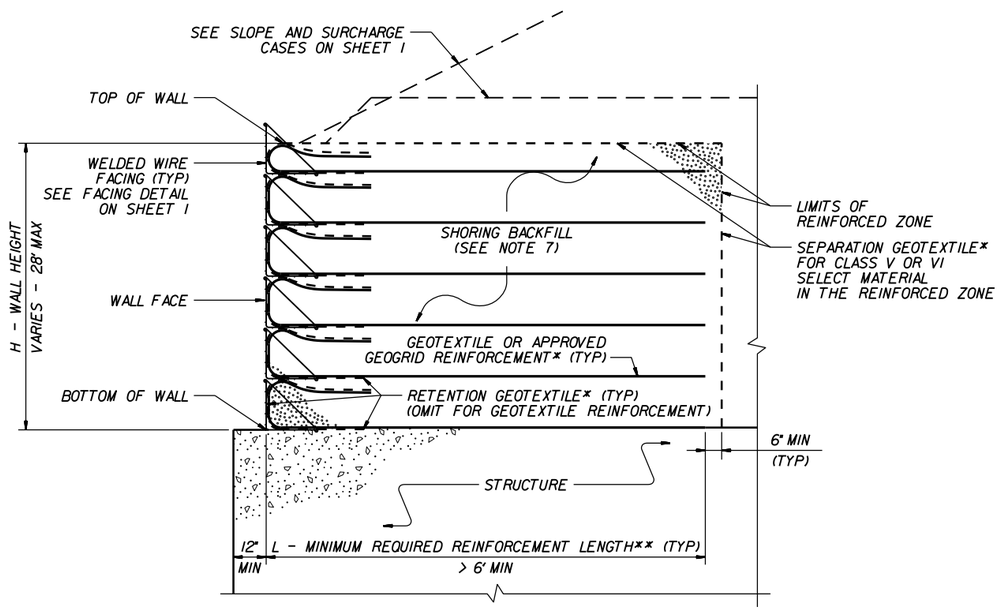

TEMPORARY WALL ON STRUCTURE DETAIL

*SEE GEOSYNTHETIC PLACEMENT DETAILS.
**SEE REINFORCEMENT TABLES ON SHEET 3.

NOTES:

1. AT THE CONTRACTOR'S OPTION, USE STANDARD TEMPORARY WALLS AS NOTED IN THE PLANS.
2. FOR STANDARD TEMPORARY WALLS, SEE STANDARD SHORING PROVISION.
3. STANDARD TEMPORARY WALLS ARE BASED ON THE FOLLOWING IN-SITU ASSUMED SOIL PARAMETERS:
   UNIT WEIGHT, γ = 120 PCF
   FRICTION ANGLE, ϕ = 30 DEGREES
   COHESION, c = 0 PSF
4. DO NOT USE STANDARD TEMPORARY WALLS IF ASSUMED SOIL PARAMETERS ARE NOT APPLICABLE.
5. DO NOT USE STANDARD TEMPORARY WALLS WHEN VERY LOOSE OR SOFT SOIL OR MUCK IS BELOW TEMPORARY WALLS.
6. USE GROUNDWATER ELEVATION NOTED IN THE PLANS. IF NO GROUNDWATER ELEVATION IS SHOWN IN THE PLANS, ASSUME GROUNDWATER DEPTH IS LESS THAN 7' BELOW BOTTOM OF REINFORCED ZONE. DO NOT USE STANDARD TEMPORARY WALLS IF GROUNDWATER OR FLOOD ELEVATION IS ABOVE BOTTOM OF REINFORCED ZONE.
7. DO NOT USE A-2-4 SOIL FOR STANDARD TEMPORARY WALLS AROUND CULVERTS OR IN THE REINFORCED ZONE OF STANDARD TEMPORARY WALLS FOR SLOPE CASES. DO NOT USE CLASS VI SELECT MATERIAL IN THE REINFORCED ZONE OF STANDARD TEMPORARY WALLS WITH GEOTEXTILE REINFORCEMENT.
8. WALL EMBEDMENT IS NOT REQUIRED FOR STANDARD TEMPORARY WALLS ON STRUCTURES OR ROCK AS DETERMINED BY THE ENGINEER.
9. DO NOT USE MORE THAN 4 DIFFERENT REINFORCEMENT STRENGTHS FOR EACH STANDARD TEMPORARY WALL.
10. GEOGRIDS FOR GEOGRID REINFORCEMENT ARE APPROVED FOR SHORT TERM DESIGN STRENGTHS (3-YEAR DESIGN LIFE) IN THE MD AND CD BASED ON MATERIAL TYPE. THE LIST OF APPROVED GEOGRIDS WITH DESIGN STRENGTHS IS AVAILABLE FROM: connect.ncdot.gov/resources/Geological/Pages/Products.aspx
    DEFINE MATERIAL TYPE FROM THE WEBSITE ABOVE FOR SHORING BACKFILL AS FOLLOWS:

MATERIAL TYPE	SHORING BACKFILL
BORROW	A-2-4 SOIL
FINE AGGREGATE	CLASS II, TYPE I OR CLASS III SELECT MATERIAL
COARSE AGGREGATE	CLASS V OR VI SELECT MATERIAL

11. FOR GEOGRID REINFORCEMENT WITH LESS THAN 100% COVERAGE, STAGGER REINFORCEMENT SO GEOGRIDS ARE CENTERED OVER GAPS IN THE REINFORCEMENT LAYER BELOW.
12. AT THE CONTRACTOR'S OPTION, REINFORCEMENT MAY BE INSTALLED WITH THE MD PARALLEL TO THE WALL FACE IF BOTH OF THE FOLLOWING CONDITIONS OCCUR:
    - W (REINFORCEMENT ROLL WIDTH) $\geq$ (MINIMUM REQUIRED REINFORCEMENT LENGTH) + 4.5' AND
    - REINFORCEMENT STRENGTH IN CD $\geq$ MINIMUM REQUIRED REINFORCEMENT STRENGTH IN MD.
13. SUBMIT A "STANDARD TEMPORARY WALL SELECTION FORM" AT LEAST 7 DAYS BEFORE STARTING TEMPORARY WALL CONSTRUCTION. STANDARD SHORING SELECTION FORMS ARE AVAILABLE FROM: connect.ncdot.gov/resources/Geological/Pages/Geotech_Forms_Details.aspx
14. DO NOT PLACE SHORING BACKFILL OR REINFORCEMENT UNTIL EXCAVATION DIMENSIONS AND FOUNDATION MATERIAL ARE APPROVED.
15. FOR STANDARD TEMPORARY WALLS WITH PILE FOUNDATIONS IN THE REINFORCED ZONE, DRIVE PILES THROUGH REINFORCEMENT AFTER CONSTRUCTING TEMPORARY WALLS.
16. DO NOT SPLICE OR OVERLAP REINFORCEMENT SO SEAMS ARE PARALLEL TO THE WALL FACE.
17. CONTACT THE ENGINEER WHEN EXISTING OR FUTURE OBSTRUCTIONS SUCH AS FOUNDATIONS, PAVEMENTS, PIPES, INLETS OR UTILITIES WILL INTERFERE WITH REINFORCEMENT.
18. FOR STANDARD TEMPORARY WALLS WITH INTERIOR ANGLES LESS THAN 90 DEGREES, WRAP GEOSYNTHETICS AT ACUTE CORNERS AS DIRECTED BY THE ENGINEER.
19. FOR STANDARD TEMPORARY WALLS WITH TOP OF WALL WITHIN 5' OF FINISHED GRADE, REMOVE TOP FACING AND INCORPORATE TOP REINFORCEMENT LAYER INTO FILL WHEN PLACING FILL IN FRONT OF WALL.

NORTH CAROLINA DEPARTMENT OF TRANSPORTATION DIVISION OF HIGHWAYS

GEOTECHNICAL ENGINEERING UNIT

STANDARD DETAIL NO. 1801.02

STANDARD TEMPORARY WALL SHEET 2 OF 3

DATE: 10-19-21

DocuSign Envelope ID: 0908AB87-C088-4523-BEAB-A55EC9F5191D

PROJECT REFERENCE NO.	SHEET NO.
BP11.R003.3	2G-4

GEOTECHNICAL ENGINEER

NORTH CAROLINA PROFESSIONAL SEAL 045542 ENGINEER KELLY DE MONTBRUN

DocuSigned by: Kelly de Montbrun 7B0D0A0B4B2F4A1...

SIGNATURE 8/11/2023 DATE

ENGINEER

SIGNATURE DATE

DOCUMENT NOT CONSIDERED FINAL UNLESS ALL SIGNATURES COMPLETED

SLOPE OR SURCHARGE CASE	GROUNDWATER DEPTH BELOW BOTTOM OF REINFORCED ZONE (SEE NOTE 6 ON SHEET 2) (FT)	SHORING BACKFILL TYPE IN THE REINFORCED ZONE (SEE NOTE 7 ON SHEET 2)	H – WALL HEIGHT (FT)																								
			< 4	5	6	7	8	9	10	11	12	13	14	15	16	17	18	19	20	21	22	23	24	25	26	27	28
SLOPE CASE	> 0	CLASS II,TYPE I, CLASS III,CLASS V OR CLASS VI SELECT MATERIAL	6	6	7	8	9	11	12	13	13	14	15	16	17	18	19	20	21	22	23	24	24	25	26	27	27
SURCHARGE CASE	> 0 TO 7 FOR H < 20' > 0 TO 10 FOR H ≥ 20'	ALL SHORING BACKFILL TYPES	6	7	7	8	8	9	9	10	11	11	12	12	13	14	14	15	16	17	17	18	19	19	20	21	22
	> 7 FOR H < 20' > 10 FOR H ≥ 20'	A-2-4 SOIL	6	6	7	8	8	9	9	10	11	11	12	12	13	14	14	15	16	16	17	18	18	19	20	20	21
		CLASS II,TYPE I OR CLASS III SELECT MATERIAL	6	6	7	7	8	8	9	10	10	11	11	12	12	13	14	15	15	16	16	17	17	18	18	19	20
		CLASS V OR CLASS VI SELECT MATERIAL	6	6	7	7	7	8	8	9	9	10	10	11	12	13	13	14	14	15	15	16	17	17	18	19	19

L – MINIMUM REQUIRED REINFORCEMENT LENGTH (FT)

(FOR ALL REINFORCEMENT TYPES)

REINFORCEMENT LAYER NUMBER*	SHORING BACKFILL TYPE IN THE REINFORCED ZONE (SEE NOTE 7 ON SHEET 2)				
	SLOPE CASE		SURCHARGE CASE		
	CLASS II,TYPE I OR CLASS III SELECT MATERIAL	CLASS V SELECT MATERIAL	A-2-4 SOIL	CLASS II,TYPE I OR CLASS III SELECT MATERIAL	CLASS V SELECT MATERIAL
1	2400	2400	2400	2400	2400
2	2400	2400	2400	2400	2400
3	2400	2400	2400	2400	2400
4	2400	2400	2500	2400	2400
5	2500	2400	3000	2400	2400
6	3000	2400	3500	2800	2400
7	3500	2700	4000	3200	2600
8	4000	3100	4500	3600	2900
9	4500	3500	5000	4000	3200
10	5000	3900	5500	4400	3500
11	5500	4300	6000	4800	3800
12	6000	4700	6500	5200	4100
13	6500	5100	7000	5600	4400
14	7000	5400	7500	6000	4700
15	7500	5800	8000	6400	5000
16	8000	6200	8500	6800	5300
17	8500	6600	9000	7200	5600
18	9000	7000	9500	7600	5900
19	9500	7400	10000	8000	6200
20	10000	7800	10500	8400	6500

GEOTEXTILE REINFORCEMENT
ULTIMATE TENSILE STRENGTH (LB/FT)

REINFORCEMENT LAYER NUMBER*	SHORING BACKFILL TYPE IN THE REINFORCED ZONE (SEE NOTE 7 ON SHEET 2)				
	SLOPE CASE		SURCHARGE CASE		
	CLASS II,TYPE I OR CLASS III SELECT MATERIAL	CLASS V OR CLASS VI SELECT MATERIAL	A-2-4 SOIL	CLASS II,TYPE I OR CLASS III SELECT MATERIAL	CLASS V OR CLASS VI SELECT MATERIAL
1	240	200	340	290	240
2	380	310	520	430	350
3	530	420	700	570	460
4	690	550	870	720	570
5	860	690	1050	860	680
6	1030	830	1220	1000	790
7	1200	970	1400	1150	900
8	1370	1110	1580	1290	1010
9	1550	1240	1750	1430	1120
10	1720	1380	1930	1580	1230
11	1890	1520	2100	1720	1340
12	2060	1660	2280	1860	1450
13	2240	1800	2450	2010	1560
14	2410	1940	2630	2150	1670
15	2580	2080	2800	2290	1780
16	2750	2220	2980	2440	1890
17	2930	2360	3160	2580	2000
18	3100	2500	3330	2720	2110
19	3270	2640	3510	2860	2220
20	3440	2780	3690	3000	2330

GEOGRID REINFORCEMENT
SHORT–TERM DESIGN STRENGTH (LB/FT)

(SEE NOTE 10 ON SHEET 2.)

WALL HEIGHT (H) + WALL EMBEDMENT (FT)	NUMBER OF REINFORCEMENT LAYERS*
2.5 – 4	3
4 – 5.5	4
5.5 – 7	5
7 – 8.5	6
8.5 – 10	7
10 – 11.5	8
11.5 – 13	9
13 – 14.5	10
14.5 – 16	11
16 – 17.5	12
17.5 – 19	13
19 – 20.5	14
20.5 – 22	15
23.5 – 25	16
25 – 26.5	17
26.5 – 28	18
28 – 29.5	19
	20

*BASED ON VERTICAL REINFORCEMENT SPACING SHOWN ON SHEET 1.

MINIMUM REQUIRED REINFORCEMENT STRENGTH IN MD

(SEE NOTE 9 ON SHEET 2.)
*SEE PARTIAL ELEVATION ON SHEET 1 FOR REINFORCEMENT LAYER NUMBERING.

NORTH CAROLINA DEPARTMENT OF TRANSPORTATION
DIVISION OF HIGHWAYS

GEOTECHNICAL ENGINEERING UNIT

STANDARD DETAIL NO. 1801.02

STANDARD TEMPORARY WALL
SHEET 3 OF 3

DATE: 11-19-13

DocuSign Envelope ID: 0908AB87-C088-4523-BEAB-A55EC9F5191D

DIVISION OF HIGHWAYS
STATE OF NORTH CAROLINA

STV Engineers, Inc.
900 West Trade St., Suite 715
Charlotte, NC 28202
NC License Number F-0991

PROJECT REFERENCE NO.	SHEET NO.
BPII.R003.3	3B-1
R/W SHEET NO.	

ROADWAY DESIGN ENGINEER

NORTH CAROLINA PROFESSIONAL ENGINEER SEAL 039234 9/5/2023 ENGINEER MICAH T. HONEYCUTT

HYDRAULICS ENGINEER

NORTH CAROLINA PROFESSIONAL ENGINEER SEAL 029388 9/5/2023 ENGINEER EDWARD J. VANCE

DOCUMENT NOT CONSIDERED FINAL UNLESS ALL SIGNATURES COMPLETED

EARTHWORK SUMMARY (IN CUBIC YARDS)

CHAIN	FROM STATION	TO STATION	SIDE	UNCL. EXCAVATION	UNDERCUT	EMBT + %	BORROW	WASTE
–L–	11+30.00	16+08.56 (BR)	LT & RT	696		2423	1727	
–L–	17+61.44 (BR)	21+90.00	LT & RT	115		1784	1669	
–Y–	11+25.00	12+63.05	LT & RT	50				50
–DR1–	10+13.87	10+90.00	LT & RT	9		54	45	
–TDR1–	10+09.67	11+17.03	LT & RT			1555	1555	
TOTAL				870		5816	4996	50
LOSS DUE TO CLEARING AND GRUBBING								
WASTE IN LIEU OF BORROW							–50	–50
PROJECT TOTAL				870		5816	4946	
ESTIMATE 5% FOR TOPSOIL ON BORROW PITS							247	
GRAND TOTAL				870			5193	
SAY				870			5200	

EST DDE 992 CY

NOTE: Approximate quantities only. Unclassified Excavation, Borrow Excavation, Fine Grading, Clearing and Grubbing, and Removal of Existing Pavement will be paid for at the contract lump sum price for "Grading."

GUARDRAIL SUMMARY

SURVEY LINE	BEG. STA.	END STA.	LOCATION	LENGTH			WARRANT POINT		"N" DIST. FROM E.O.L.	TOTAL SHOUL. WIDTH	FLARE LENGTH		W*		ANCHORS								IMPACT ATTENUATOR TYPE 350		SINGLE FACED GUARDRAIL	REMOVE EXISTING GUARDRAIL	REMOVE AND STOCKPILE EXISTING GUARDRAIL	REMARKS
				STRAIGHT	SHOP CURVED	DOUBLE FACED	APPROACH END	TRAILING END			APPROACH END	TRAILING END	APPROACH END	TRAILING END	XI MOD	B–77	GREU TL–3	M–350	TYPE III	CAT–1	VI MOD	BIC	AT–1	EA	G NG				
–L–	11+30.00	14+26.55	RT	299.25				14+26.55	3.7 – 4.0	6.7 – 7.0		50		1			1									311.04		
–L–	14+75.05	16+18.32 (BR)	RT	143.74			14+75.05		4.9 – 6.4	7.9 – 9.4	50		1				1		1							170.66		
–L–	14+92.30	15+98.79 (BR)	LT	106.24				14+92.30	4.9 – 6.3	7.9 – 9.3	50		1				1		1									
–L–	17+51.68 (BR)	17+96.07	LT	26.13	57.81		17+51.68	17+96.07	4.9 – 49.2	7.9		6.25		1					1				1					
–L–	17+71.21 (BR)	19+70.00	RT	194.02				19+70.00	4.9 – 5.9	7.9 – 8.9		50		1			1		1									
TOTAL:				769.38	57.81												4 EA		4 EA				1 EA			481.70		
TOTAL ANCHOR LENGTH:				281.25																								
TOTAL GUARDRAIL LENGTH:				488.13	57.81																							
SAY:				500 LF	62.50 LF		5 ADDITIONAL GUARDRAIL POST																			490 LF		

* W MEASURED FROM "N" AT THE BEGINNING OF THE ANCHOR TO "N" AT THE END OF THE ANCHOR.
"N" = DISTANCE FROM EDGE OF LANE TO FACE OF GUARDRAIL.
TOTAL SHOULDER WIDTH = DISTANCE FROM EDGE OF TRAVEL LANE TO SHOULDER BREAK POINT.
FLARE LENGTH = DISTANCE FROM LAST SECTION OF PARALLEL GUARDRAIL TO END OF GUARDRAIL.
W = TOTAL WIDTH OF FLARE FROM BEGINNING OF TAPER TO END OF GUARDRAIL.
G = GATING IMPACT ATTENUATOR TYPE 350
NG = NON–GATING IMPACT ATTENUATOR TYPE 350

TEMPORARY GUARDRAIL SUMMARY

SURVEY LINE	BEG. STA.	END STA.	LOCATION	LENGTH			WARRANT POINT		"N" DIST. FROM E.O.L.	TOTAL SHOUL. WIDTH	FLARE LENGTH		W*		ANCHORS								IMPACT ATTENUATOR TYPE 350		SINGLE FACED GUARDRAIL	REMOVE EXISTING GUARDRAIL	REMOVE AND STOCKPILE EXISTING GUARDRAIL	REMARKS
				STRAIGHT	SHOP CURVED	DOUBLE FACED	APPROACH END	TRAILING END			APPROACH END	TRAILING END	APPROACH END	TRAILING END	XI MOD	B–77	GREU TL–3	M–350	TYPE III	CAT–1	VI MOD	BIC	AT–1	EA	G NG				
–L–	14+64.15	18+26.60	LT	362.5			15+89.00	17+75.00	2.0 – 3.0		50	50	1	1			2											
–TDR1–	10+13.11	10+32.42	LT	6.25	25.00			10+13.11	3.3 – 7.3	6.3 – 10.3		6.25		4									1					
–TDR1–	10+14.70	11+12.98	RT	32.24	96.28		10+14.70		0.0 – 4.8	3.0 – 7.8	6.25			4									1					
TOTAL:				400.99	121.28												2 EA						2 EA					
TOTAL ANCHOR LENGTH:				112.50																								
TOTAL GUARDRAIL LENGTH:				288.49	121.28																							
SAY:				300 LF	125 LF																							

9/5/2023
R:\Roadway\Proj\SHT\R003_rdy_psh03B-1.dgn
SaudleSL

DocuSign Envelope ID: 0908AB87-C088-4523-BEAB-A55EC9F5191D

DIVISION OF HIGHWAYS
STATE OF NORTH CAROLINA

STV Engineers, Inc.
900 West Trade St., Suite 715
Charlotte, NC 28202
NC License Number F-0991

PROJECT REFERENCE NO.	SHEET NO.
BPII.R003.3	3B-2
R/W SHEET NO.	

ROADWAY DESIGN ENGINEER

NORTH CAROLINA PROFESSIONAL ENGINEER SEAL 039234 10/17/2023 ENGINEER MICAH T. HONEYCUTT

HYDRAULICS ENGINEER

NORTH CAROLINA PROFESSIONAL ENGINEER SEAL 029381 10/17/2023 ENGINEER EDWARD J. VANCE

DOCUMENT NOT CONSIDERED FINAL UNLESS ALL SIGNATURES COMPLETED

LIST OF PIPES, ENDWALLS, ETC.

STATION	LOCATION (LT,RT, OR CL)	STRUCTURE NO. FROM	STRUCTURE NO. TO	TOP ELEVATION	INVERT ELEVATION	INVERT ELEVATION	SLOPE CRITICAL	ALTERNATE DRAINAGE PIPE (UNLESS NOTED OTHERWISE) SIZE 12"	15"	18"	24"	30"	36"	42"	48"	C. S. PIPE SIZE 42"	48"	54"	60"	66"	72"	78"	84"	CLASS III R.C. PIPE OR ALUMINIZED C.S. PIPE, TYPE IR OR HDPE PIPE, TYPE S OR D SIZE 12"	15"	18"	24"	30"	36"	42"	48"	ENDWALLS CY	REINFORCED ENDWALLS CY	MASONRY DRAINAGE STRUCTURES CY	ENDWALLS STD. 838.01, STD. 838.11 OR STD. 838.80 (UNLESS NOTED OTHERWISE) CU. YDS. R.C.P.	C.S.P.	QUANTITIES FOR DRAINAGE STRUCTURES * TOTAL L.F. FOR PAY QUANTITY SHALL BE COL. "A" + (1.3 X COL. "B") LIN. FT. PER EACH (0' THRU 5.0')	A 5.0' THRU 10.0'	B 10.0' AND ABOVE	C.B. STD. 840.01 OR STD. 840.02	FRAME, GRATES AND HOOD STANDARD 840.03 TYPE OF GRATE F	G	D.I. STD. 840.15 OR STD. 840.14	D.I. FRAME AND GRATE STD. 840.16	G.D.I. TYPE "A" STD. 840.17 OR 840.26	G.D.I. TYPE "B" STD. 840.18 OR 840.27	G.D.I. TYPE "D" STD. 840.19 OR 840.28	T.B.2 GI. STD. 840.35	G.D.I. FRAME WITH GRATE STD. 840.20	G.D.I. FRAME WITH TWO GRATES STD. 840.20	G.D.I. (N.S.) FRAME WITH TWO GRATES STD. 840.29	G.D.I. (N.S.) FRAME WITH TWO GRATES STD. 840.24	J.B. STD. 840.31 OR 840.32	15" C.S. ELBOW	CONC. COLLARS CL. "B" C.Y. STD. 840.72	FLOWABLE FILL	PIPE REMOVAL LIN.FT.	REMARKS
–L– STA. 17+97	RT	0501	0509	2727.1	2724.4	2724.1																		56											1																	

DocuSign Envelope ID: 0908AB87-C088-4523-BEAB-A55EC9F5191D

6/2/99

PROJECT REFERENCE NO.	SHEET NO.
BP11.R003.3	3P-1

STV Engineers, Inc.
900 West Trade St., Suite 715
Charlotte, NC 28202
NC License Number F-0991

STATE OF NORTH CAROLINA
DIVISION OF HIGHWAYS

PARCEL INDEX SHEET

PARCEL NO.	SHEET NO.	PROPERTY OWNER NAME	AREA TAKEN			
			ROW (SF)	PDE (SF)	TCE (SF)	TDE (SF)
1	4 & 5	DANIEL P. SHATLEY	11656		1867	3746
2	4 & 5	DON B. TUCKER AND CAROL L. TUCKER	1768	629		5923
3	5	ESTEBAN SANCHEZ AND MARY SANCHEZ	21708			3407
4	5	ROGER MULLIS AND TANNY MULLIS	3336			946
5	5 & 6	TERESA MICHELLE VIERS	13040			5382
6	5 & 6	CARLOS WAYNE BLACK AND HAROLD DOUGLAS BLACK		176		1884

9/5/2023
R:\Roadway\Proj\SHT\R003_rdy_psh03P-1.dgn
SaucieSL

DocuSign Envelope ID: 0908AB87-C088-4523-BEAB-A55EC9F5191D

8/17/99

DETAIL 4–1
CHANNEL CHANGE
(Not to Scale)

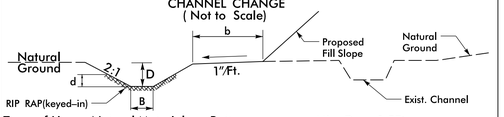

Type of Liner = Natural Material on Bottom, CL–I Rip Rap will be keyed into the stream bed and top dressed with native bed material as approved by the field engineer.

Min. D = 1.5Ft.
Max. d = 1.5Ft.
B = 8Ft.
b = 5Ft.

FROM –L– STA. 12+86 TO –L– STA. 16+95 RT

–L–	
PI Sta 11+29.55	PI Sta 13+54.09
△ = 4° 10' 37.1" (LT)	△ = 12° 10' 52.9" (LT)
D = 3° 14' 13.4"	D = 3° 49' 11.0"
L = 129.04'	L = 318.91'
T = 64.55'	T = 160.06'
R = 1,770.00'	R = 1,500.00'
DS = 60 MPH	DS = 60 MPH

PAVEMENT REMOVAL

NAD 83 NA 2011

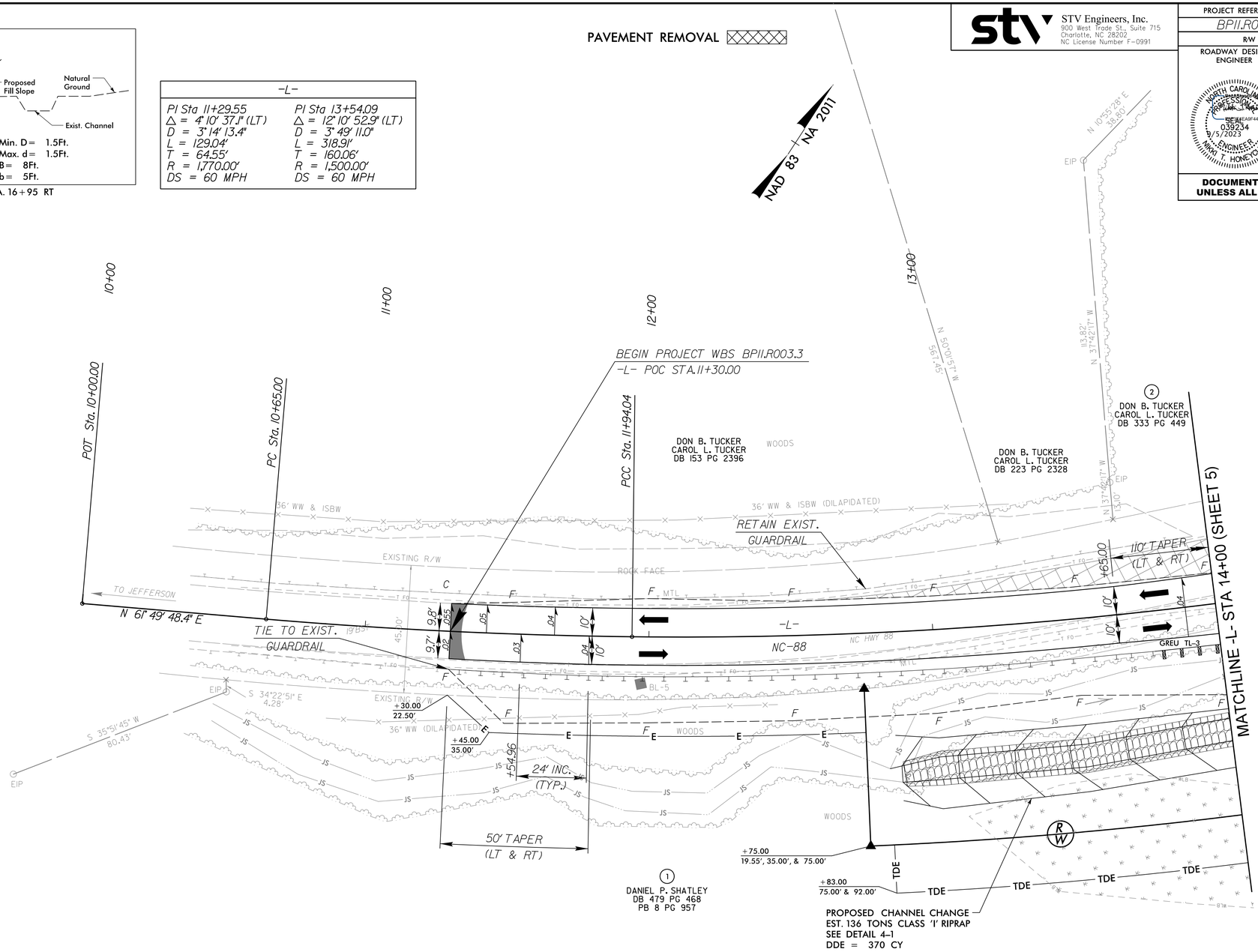

SEE SHEET 7 FOR –L– PROFILE

STV Engineers, Inc.
900 West Trade St., Suite 715
Charlotte, NC 28202
NC License Number F–0991

PROJECT REFERENCE NO.	SHEET NO.
BP11.R003.3	4
R/W SHEET NO.	

ROADWAY DESIGN ENGINEER
NORTH CAROLINA PROFESSIONAL ENGINEER SEAL 039234 MICHAEL T. HONEYCUTT
SEAL 039234 9/5/2023 ENGINEER MICHAEL T. HONEYCUTT

HYDRAULICS ENGINEER
NORTH CAROLINA PROFESSIONAL ENGINEER SEAL 029388 EDWARD J. VANCE
SEAL 029388 9/5/2023 ENGINEER EDWARD J. VANCE

DOCUMENT NOT CONSIDERED FINAL UNLESS ALL SIGNATURES COMPLETED

9/5/2023
C:\Projects\Roadway\Proj\SHT\R003_rdy_psh04.dgn
Standard

DocuSign Envelope ID: 0908AB87-C088-4523-BEAB-A55EC9F5191D

8/17/99

DETAIL 4–1
CHANNEL CHANGE
(Not to Scale)

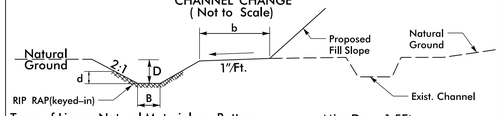

Type of Liner = Natural Material on Bottom, CL–I Rip Rap will be keyed into the stream bed and top dressed with native bed material as approved by the field engineer.

Min. D = 1.5Ft.
Max. d = 1.5Ft.
B = 8Ft.
b = 5Ft.

FROM –L– STA. 12+86 TO –L– STA. 16+95 RT

DETAIL 5–1
CHANNEL CHANGE
(Not to Scale)

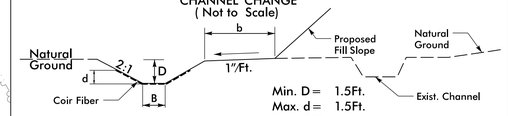

Min. D = 1.5Ft.
Max. d = 1.5Ft.
B = 2Ft.
b = 3Ft.

Type of Liner = Coir Fiber Matting (Sides Only)

FROM –L– STA. 17+78 TO –L– STA. 19+00 RT

DETAIL 5–4
RIP RAP AT EMBANKMENT
(Not to Scale)

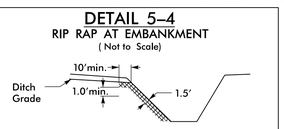

Type of Liner = 15 TONS,CL–I Rip–Rap

AT –L– STA. 17+00 RT
AT –L– STA. 17+78 RT

–L–	
PI Sta 13+54.09	PI Sta 19+64.64
△ = 12° 10' 52.9" (LT)	△ = 29° 59' 51.0" (RT)
D = 3° 49' 11.0"	D = 10° 42' 34.2"
L = 318.91'	L = 280.10'
T = 160.06'	T = 143.34'
R = 1,500.00'	R = 535.00'
DS = 60 MPH	DS = 35 MPH

–DRI–	
PI Sta 10+43.21	PI Sta 11+12.17
△ = 46° 29' 24.2" (LT)	△ = 18° 19' 08.3" (LT)
D = 76° 23' 39.7"	D = 22° 55' 05.9"
L = 60.86'	L = 79.93'
T = 32.21'	T = 40.31'
R = 75.00'	R = 250.00'

–Y–	
PI Sta 10+46.90	PI Sta 12+38.91
△ = 12° 35' 35.8" (LT)	△ = 43° 41' 25.4" (RT)
D = 13° 28' 52.9"	D = 57° 17' 44.8"
L = 93.41'	L = 76.25'
T = 46.90'	T = 40.09'
R = 425.00'	R = 100.00'
DS = 35 MPH	DS = 25 MPH

PROJECT REFERENCE NO.	SHEET NO.
BPII.R003.3	5
R/W SHEET NO.	

ROADWAY DESIGN ENGINEER
NORTH CAROLINA PROFESSIONAL ENGINEER SEAL 039234 MICHAEL T. HONEYCUTT 9/5/2023 ENGINEER

HYDRAULICS ENGINEER
NORTH CAROLINA PROFESSIONAL ENGINEER SEAL 029388 EDWARD J. VANCE 9/5/2023 ENGINEER

DOCUMENT NOT CONSIDERED FINAL UNLESS ALL SIGNATURES COMPLETED

STV Engineers, Inc.
900 West Trade St., Suite 715
Charlotte, NC 28202
NC License Number F–0991

PAVEMENT REMOVAL

NAD 83 NA 2011

PC Sta. 10+00.00
PT Sta. 10+93.41
S 85° 51' 11.8" E 93.36'
PC Sta. 11+98.82
PT Sta. 11+51.79
PCC Sta. 10+71.86
PC Sta. 10+11.00
PT Sta. 15+12.94
PC Sta. 18+21.30

BEGIN CONSTRUCTION
–Y– STA. 11+25.00

END CONSTRUCTION
–DRI– STA. 10+90.00

–L– STA. 14+50.00
–DRI– STA. 10+00.00

BEGIN BRIDGE
–L– STA. 16+08.56

END BRIDGE
–L– STA. 17+61.44

BEGIN SBG
+27.00, 14.58' RT

BEGIN APPROACH SLAB
–L– STA. 15+94.86

END APPROACH SLAB
–L– STA. 17+75.14

N 45° 28' 18.4" E NC–88

N 85° 35' 39" W 311.07'

N 63° 03' 37" W 602.12'

N 26° 42' 07" E 262.03'

N 64° 52' 53" E 314.16'

S 64° 52' 53" W 314.16'

S 26° 42' 07" W 262.03'

N 85° 35' 39" E 311.07'

N 63° 03' 37" E 602.12'

MATCHLINE –L– STA 14+00 (SHEET 4)

MATCHLINE –L– STA 19+00 (SHEET 6)

TO SCOTTSVILLE (SR 1609)

UPPER CRANBERRY CREEK RD (SR 1609)

CRANBERRY CREEK

EXISTING R/W

RIP RAP

WOODS

GR

IDE

WELL

BRIDGE #63

TELE ATTACHED TO BRIDGE IN CONDUIT

–L–

–Y–

–DRI–

(1) DANIEL P. SHATLEY
DB 479 PG 468
PB 8 PG 957

(2) DON B. TUCKER
CAROL L. TUCKER
DB 333 PG 449

(3) ESTEBAN SANCHEZ
MARY SANCHEZ
DB 451PG 1654

(4) ROGER MULLIS
TANNY MULLIS
DB 230 PG 895

(5) TERESA MICHELLE VIERS
DB 371PG 712
PB 6 PG 632

(6) CARLOS WAYNE BLACK
HAROLD DOUGLAS BLACK
DB 452 PG 2210

ABUTMENT EXCAVATION
TO ELEV. 2717.0'
3 TON CLASS 'B' RIP RAP
11 SY GEOTEXTILE

ABUTMENT EXCAVATION
TO ELEV. 2716.5'
20 TONS CLASS 'B' RIP RAP
30 SY GEOTEXTILE

STANDARD 'V' DITCH
SEE DETAIL 5–5

SPECIAL CUT 'V' DITCH
SEE DETAIL 5–2

2–72" CMP (W/SILLS AT 20' O.C.)
SEE DETAILS 5–3 AND 5–6

CONC. ENDWALL

RIP RAP AT EMBANKMENT
EST. 20 TONS CL–I RIP RAP
SEE DETAIL 5–4

PROPOSED CHANNEL CHANGE
EST. 178 TONS CLASS 'I' RIPRAP
SEE DETAIL 4–1
DDE = 560 CY

PROPOSED CHANNEL CHANGE
EST. 150 SY COIR FIBER MATTING
SEE DETAIL 5–1
DDE = 62 CY

REMOVE 18" RCP–III
REMOVE 24" CMP
REMOVE 60"

4'–11" FDPS
TYPE–III
15" W/ ELBOWS
24' INC. (TYP.)
3' INC. (TYP.)
25' TAPER (LT & RT)
110' TAPER (LT & RT)
ABC
ABC –DRI–
FLOWABLE FILL
GREU TL–3
2GI
OEP
0500
0501
0502
0503
0504
0505
0507
0508
0509

SEE SHEET 7 FOR –L– PROFILE
SEE SHEET 8 FOR –Y– PROFILE
SEE SHEET 8 FOR –DR1– PROFILE

DETAIL 5–2
SPECIAL CUT DITCH
(Not to Scale)

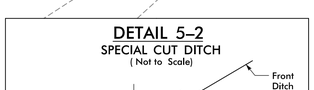

Min. D = 1.5Ft.

FROM –L– STA. 14+15 TO –L– STA. 14+50 LT
FROM –Y– STA. 12+50 TO –Y– STA. 12+63 LT

DETAIL 5–5
STANDARD 'V' DITCH
(Not to Scale)

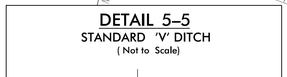

Min. D = 1.5Ft.

FROM –L– STA. 14+15 (31' LT) TO –L– STA. 14+50 (33' LT)
–L– STA. 14+33 RT
–L– STA. 15+08 RT

DETAIL 5–3
PIPE OUTLET CHANNEL STABILIZATION
(Not to Scale)

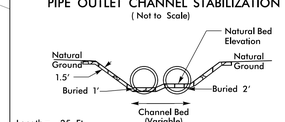

Length = 25 Ft.
Type of Liner = Native Material Supp. W/CL–I Rip rap – Keyed–In

DETAIL 5–6
SILLS IN PIPE CULVERT
(Not to Scale)

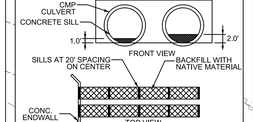

NOTE: DESIGNED BY OTHERS

–L– 14+70 RT

BRIDGE SKETCH
DETAIL SHOWING BRIDGE RELATIONSHIP FOR –L– OVER CRANBERRY CREEK

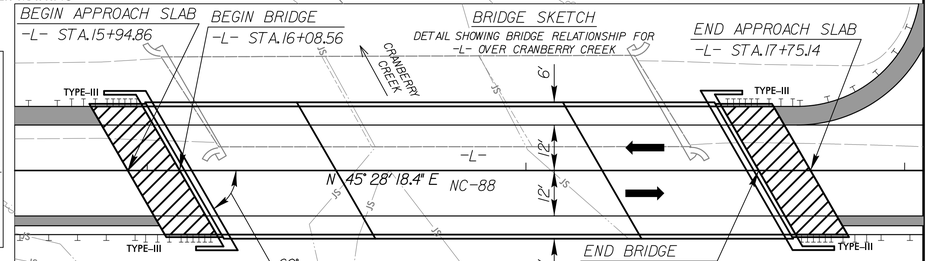

8/5/2023
S:\Highway\Proj\SHT\R003_rdg_psh05.dgn
SheetUser

DocuSign Envelope ID: 0908AB87-C088-4523-BEAB-A55EC9F5191D

8/17/99

-L-	
PI Sta 19+64.64	PI Sta 22+29.90
Δ = 29° 59' 51.0" (RT)	Δ = 28° 01' 13.8" (RT)
D = 10° 42' 34.2"	D = 11° 07' 31.4"
L = 280.10'	L = 251.86'
T = 143.34'	T = 128.50'
R = 535.00'	R = 515.00'
DS = 35 MPH	DS = 35 MPH

NAD 83 + NA 2011

PAVEMENT REMOVAL

STV Engineers, Inc.
900 West Trade St., Suite 715
Charlotte, NC 28202
NC License Number F-0991

PROJECT REFERENCE NO.	SHEET NO.
BPII.R003.3	6
R/W SHEET NO.	

ROADWAY DESIGN ENGINEER

NORTH CAROLINA PROFESSIONAL ENGINEER SEAL 039234 9/5/2023 ENGINEER MICHAEL T. HONEYCUTT

HYDRAULICS ENGINEER

NORTH CAROLINA PROFESSIONAL ENGINEER SEAL 029388 9/5/2023 ENGINEER EDWARD J. VANCE

DOCUMENT NOT CONSIDERED FINAL UNLESS ALL SIGNATURES COMPLETED

20+00

21+00

22+00

23+00

24+00

PCC Sta. 21+01.40

END PROJECT WBS BPII.R003.3
-L- POC STA. 21+90.00

PT Sta. 23+53.26

POT Sta. 24+00.00

MATCHLINE -L- STA 19+00 (SHEET 5)

6 CARLOS WAYNE BLACK
HAROLD DOUGLAS BLACK
DB 452 PG 2210

5 TERESA MICHELLE VIERS
DB 371 PG 712
PB 6 PG 632

24' INC. (TYP.)

+76.48

50' TAPER (LT & RT)

+90.00
27.34'

TDE

0506

REMOVE

R=40'

-L-

NC-88

HWY 88

EXISTING R/W

WOODS

INV=2725.29'

CONC SPRING BOX (OPEN)

CONC HW

RETAIN

9.7'

9.8'

18" RCP

19" BST

12" RCP

BL-3

12GR

END NOT FOUND

RADIO/TV ANTENNA

ISFD

A-G OIL TANK

S

GR

GREU TL-3

8:1

+20.00
18.27' & 25.00'

+70.00 110' TAPER (LT & RT)

+55.00

+55.00
22.61' & 28.00'

+01.40
28.00'

+50.00
53.00'

J8" HDPE

INV=2716.27'

INV=2716.38'

4'-11" FDPS

END SBG
+15.00, 14.58'

+25.00
25.00', 53.00', & 75.00'

S 23°19'56" E
205.18'

N 15°04'43" W
115.03'

N 34°14'19" E
26.13'

N 25°47'48" E
230.54'

S 25°13'39" W
245.93'

S 26°57'03" W
18.40'

S 76°30'36.8" E

TO LAUREL SPRINGS

S 26°57'03" W
15.82'

S 23°04'31" W
117.34'

S 85°40'39" W
51.25'

7.30'

S 77°28'11" W
57.46'

S 68°48'21" W
59.98'

S 47°32'48" W
30.03'

S 42°41'49" W
14.73'

SEE SHEET 8 FOR -L- PROFILE

9/5/2023
C:\Roadway\Proj\SHT\R003_rdy_pshi06.dgn
cmcdaniel

DocuSign Envelope ID: 0908AB87-C088-4523-BEAB-A55EC9F5191D

8/17/99

STV Engineers, Inc.
900 West Trade St., Suite 715
Charlotte, NC 28202
NC License Number F-0991

PROJECT REFERENCE NO.	SHEET NO.
BP11.R003.3	7
R/W SHEET NO.	
ROADWAY DESIGN ENGINEER	HYDRAULICS ENGINEER

NORTH CAROLINA PROFESSIONAL ENGINEER SEAL 039234 9/5/2023 NIKKI T. HONEYCUTT

NORTH CAROLINA PROFESSIONAL ENGINEER SEAL 029388 9/5/2023 EDWARD J. VANCE

DOCUMENT NOT CONSIDERED FINAL UNLESS ALL SIGNATURES COMPLETED

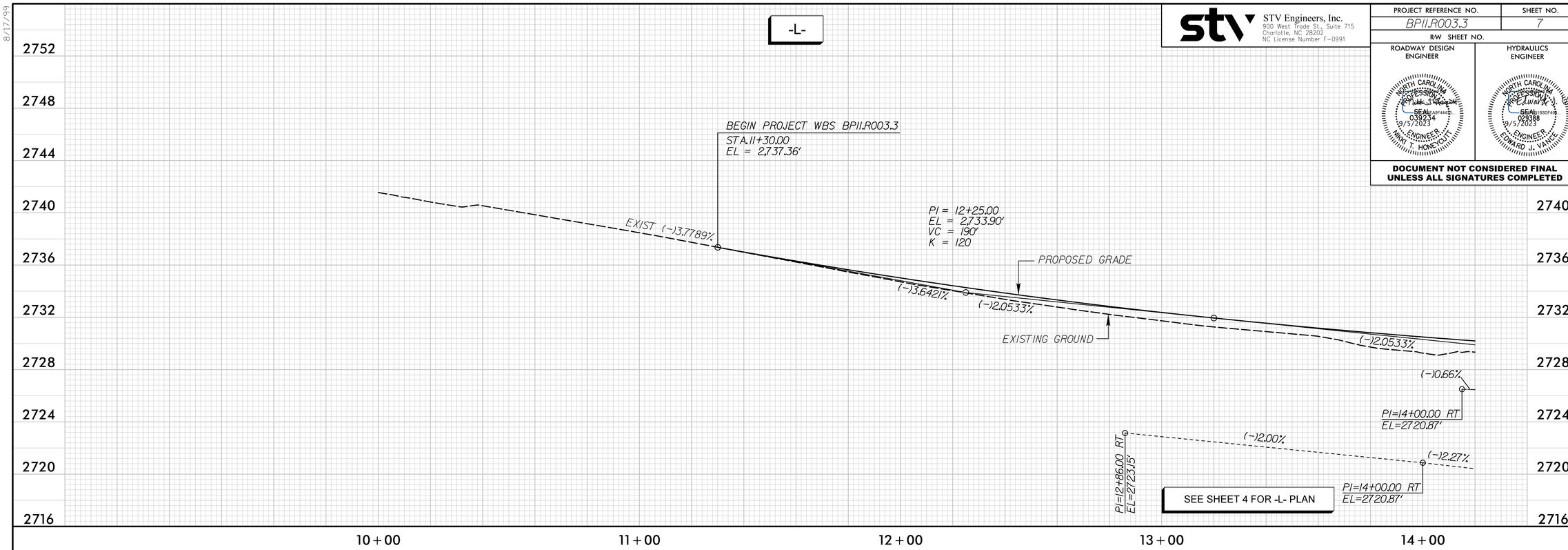

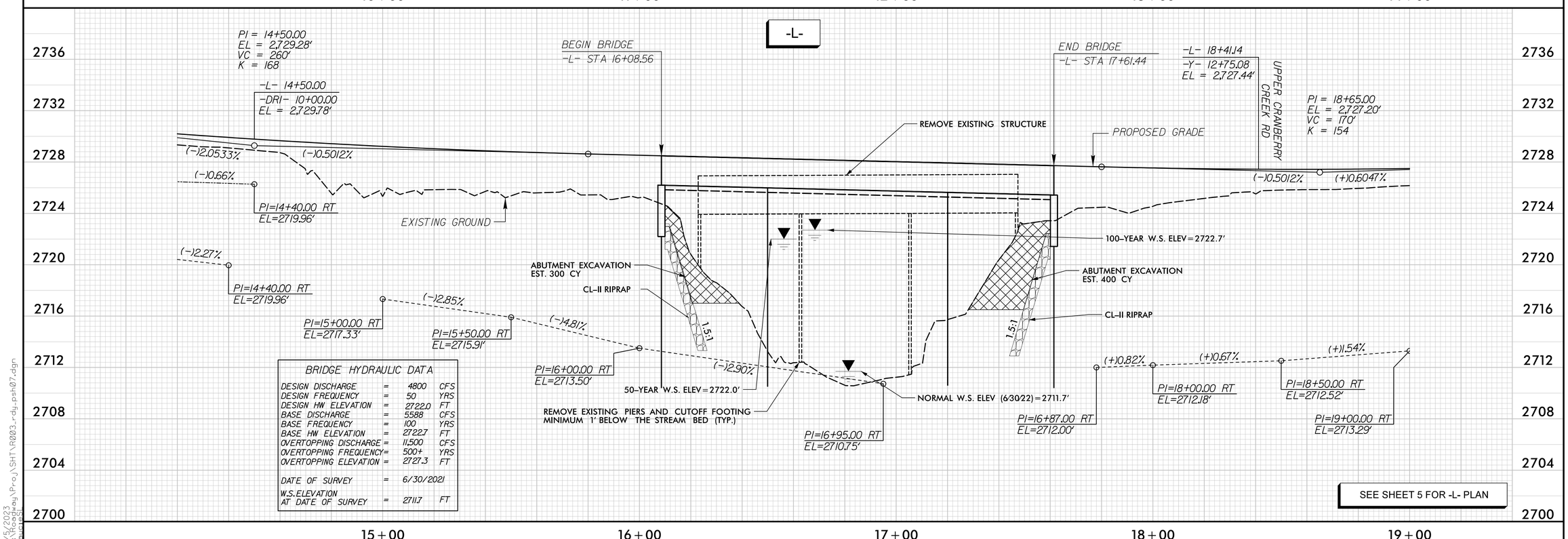

BRIDGE HYDRAULIC DATA			
DESIGN DISCHARGE	=	4800	CFS
DESIGN FREQUENCY	=	50	YRS
DESIGN HW ELEVATION	=	2722.0	FT
BASE DISCHARGE	=	5588	CFS
BASE FREQUENCY	=	100	YRS
BASE HW ELEVATION	=	2722.7	FT
OVERTOPPING DISCHARGE	=	11,500	CFS
OVERTOPPING FREQUENCY	=	500+	YRS
OVERTOPPING ELEVATION	=	2727.3	FT
DATE OF SURVEY	=	6/30/2021	
W.S. ELEVATION AT DATE OF SURVEY	=	2711.7	FT

9/5/2023
R:\Roadway\Proj\SHT\R003_rdy_psh07.dgn
SaucyeSL

DocuSign Envelope ID: 0908AB87-C088-4523-BEAB-A55EC9F5191D

8/17/99

STV Engineers, Inc.
900 West Trade St., Suite 715
Charlotte, NC 28202
NC License Number F-0991

PROJECT REFERENCE NO.	SHEET NO.
BPII.R003.3	8
R/W SHEET NO.	

ROADWAY DESIGN ENGINEER

NORTH CAROLINA PROFESSIONAL ENGINEER SEAL 039234 9/5/2023 ENGINEER MICHAEL T. HONEYCUTT

HYDRAULICS ENGINEER

NORTH CAROLINA PROFESSIONAL ENGINEER SEAL 029388 9/5/2023 ENGINEER EDWARD J. VANCE

DOCUMENT NOT CONSIDERED FINAL UNLESS ALL SIGNATURES COMPLETED

-L-

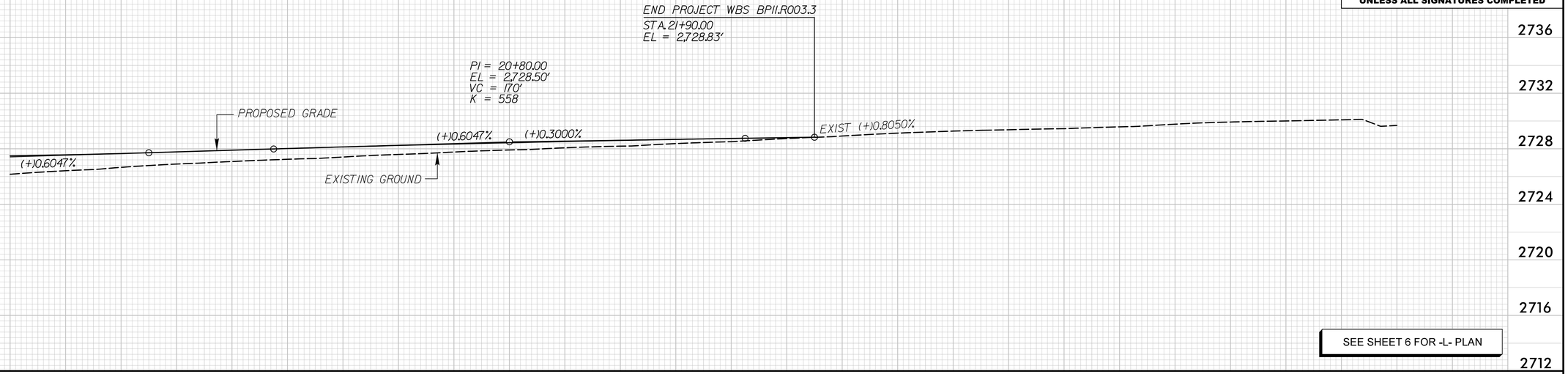

SEE SHEET 6 FOR -L- PLAN

-Y-

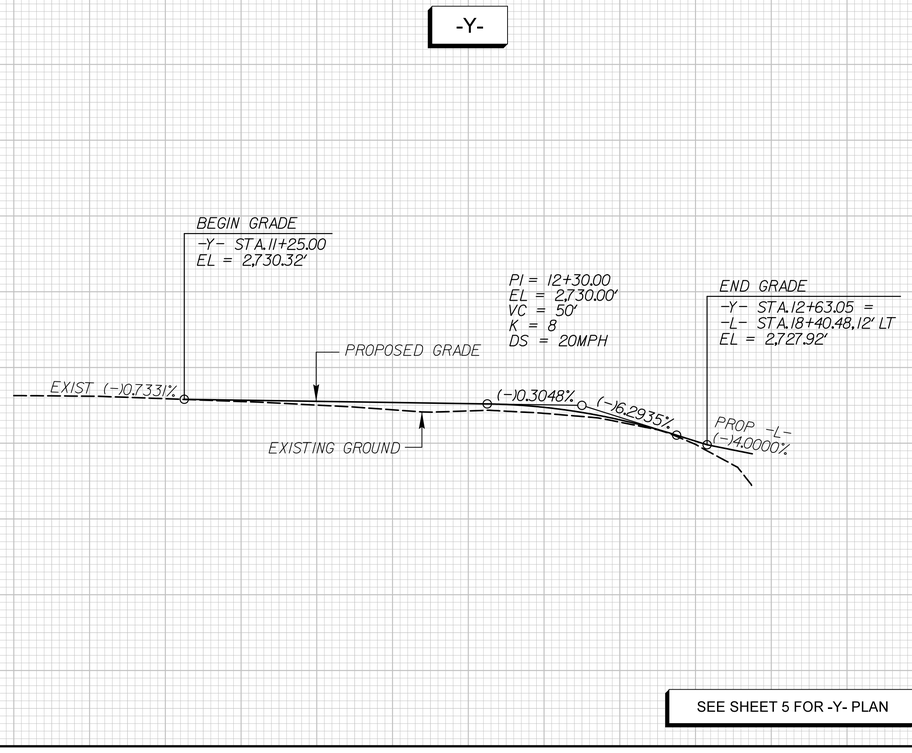

SEE SHEET 5 FOR -Y- PLAN

-DR1-

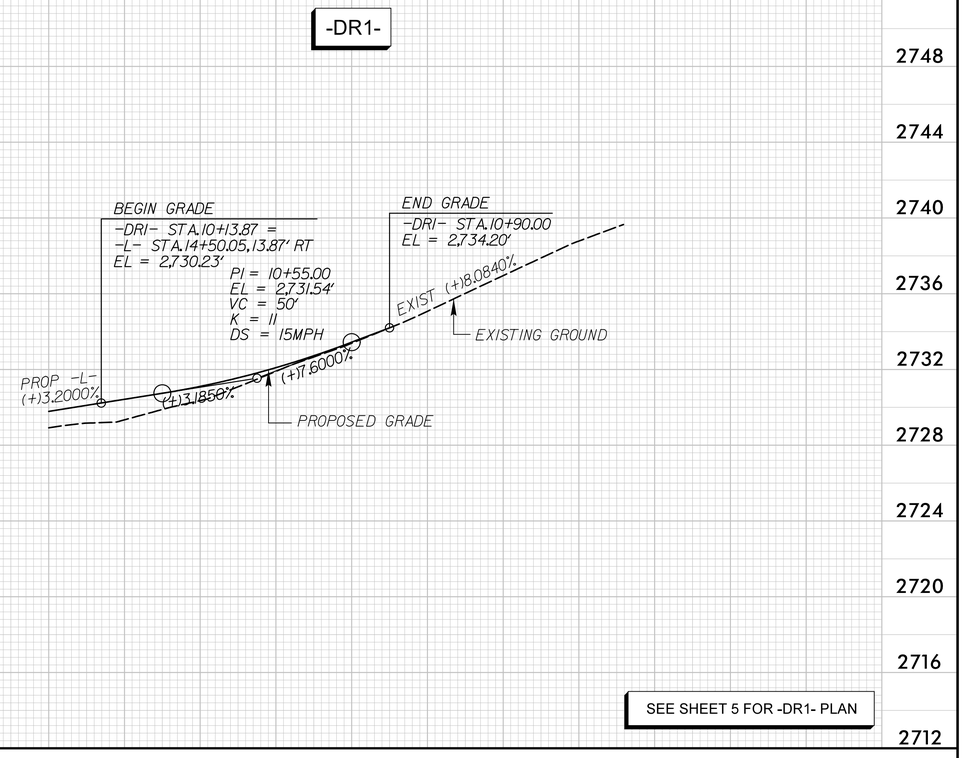

SEE SHEET 5 FOR -DR1- PLAN

9/5/2023
C:\Projects\Proj\SHT\R003_rdy_psh08.dgn
Standard

DocuSign Envelope ID: 0908AB87-C088-4523-BEAB-A55EC9F5191D

09/08/99

TIP PROJECT: BP11.R003

STATE	STATE PROJECT REFERENCE NO.	SHEET NO.	TOTAL SHEETS
N.C.	BP11.R003	RW01	06

STATE OF NORTH CAROLINA
DIVISION OF HIGHWAYS

SURVEY CONTROL, EXISTING CENTERLINES, RIGHT OF WAY, EASEMENTS AND PROPERTY TIES

ASHE COUNTY

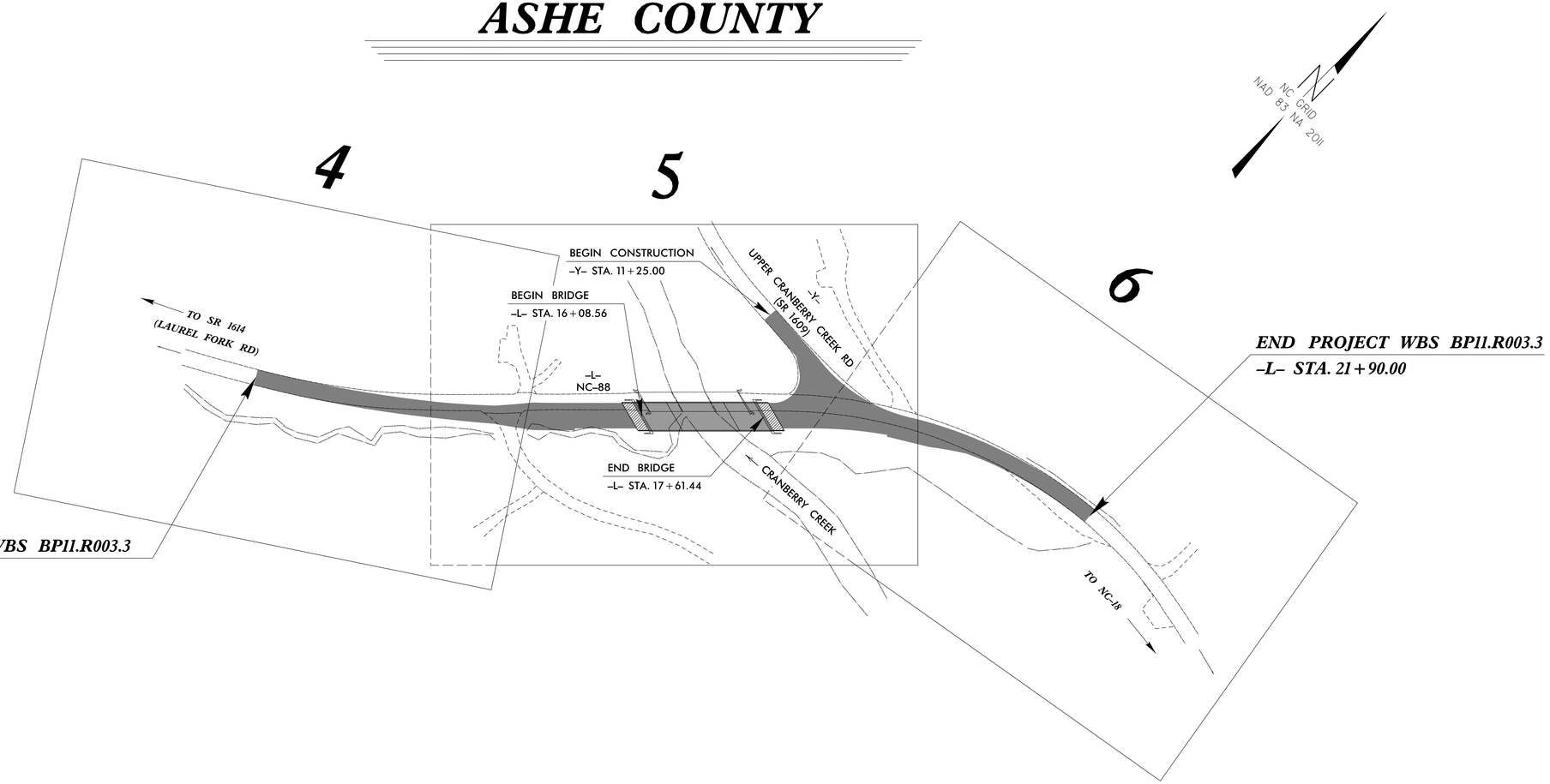

GRAPHIC SCALE

50 25 0 50 100

PLANS

DATUM DESCRIPTION

THE LOCALIZED COORDINATE SYSTEM DEVELOPED FOR THIS PROJECT IS BASED ON THE STATE PLANE COORDINATES ESTABLISHED BY NCDOT FOR MONUMENT "GPS 040063-1" WITH NAD 83/NSRS 2011 STATE PLANE GRID COORDINATES OF NORTHING: 977858.2575(ft) EASTING: 1328212.3370(ft) ELEVATION: 2728.403(ft) THE AVERAGE COMBINED GRID FACTOR USED ON THIS PROJECT (GROUND TO GRID) IS: 0.99995340 THE N.C. LAMBERT GRID BEARING AND LOCALIZED HORIZONTAL GROUND DISTANCE FROM "GPS 040063-1" TO -L- STATION 10+00.00 IS S 48°59'49.3" W 874.90(ft) ALL LINEAR DIMENSIONS ARE LOCALIZED HORIZONTAL DISTANCES VERTICAL DATUM USED IS NAVD 88

Prepared in the Office of:

ALLIED ASSOCIATES, P.A.
4720 KESTER MILL ROAD
WINSTON SALEM, NC 27103
WWW.ALLIEDAPA.COM C–2198
(336)765–2377

2018 STANDARD SPECIFICATIONS

RIGHT OF WAY DATE:	*LETTING DATE:*
07–25–2022	*06–01–2023*

PROFESSIONAL LAND SURVEYOR

NORTH CAROLINA PROFESSIONAL SEAL L-3834 LAND SURVEYOR CLINTON B. OSBORNE

DocuSigned by: Clinton B. Osborne DA6F6B085F6449B...

4/17/2023

SIGNATURE: *Date:*

STATE OF NORTH CAROLINA • DEPARTMENT OF TRANSPORTATION •

17-APR-2023 15:24
Y:\Projects\PA2302(2\dgn\r003_ls_rw01.dgn
Owner AT OWNER-PC

DocuSign Envelope ID: 0908AB87-C088-4523-BEAB-A55EC9F5191D

6/2/99

PROPOSED ALIGNMENT CONTROL SHEET

PROJECT REFERENCE NO.	SHEET NO.
BP11.R003	RW02D-1

Location and Surveys

ALLIED ASSOCIATES, P.A.
4720 KESTER MILL ROAD
WINSTON SALEM, NC 27103
WWW.ALLIEDAPA.COM C-2198
(336)765-2377

PROJECT SURVEYOR

NORTH CAROLINA PROFESSIONAL SEAL L-3834 LAND SURVEYOR CLINTON B. OSBORNE

DOCUMENT NOT CONSIDERED FINAL UNLESS ALL SIGNATURES COMPLETED

I, Clinton B. Osborne, PLS, certify that the data compiled came from available surveys/mapping performed by others and provided to me by NCDOT and do not certify to the accuracy or quality of the individual data sources.

This 17th day of April, 2023.

DocuSigned by:
Clinton B. Osborne
04EF6B085F6449B...

Professional Land Surveyor L-3834

L

TYPE	STATION	NORTH	EAST
POT	10+00.00	977284.2396	1327552.0742
PC	10+65.00	977314.9253	1327609.3750
PCC	11+94.04	977379.9325	1327720.8072
PT	15+12.94	977577.8115	1327970.1327
PC	18+21.30	977794.0496	1328189.9616
PCC	21+01.40	977930.5324	1328430.9049
PT	23+53.26	977932.7975	1328680.2529
POT	24+00.00	977921.8950	1328725.7007

Y

TYPE	STATION	NORTH	EAST
PC	10+00.00	977864.8296	1327940.6501
PT	10+93.41	977847.9314	1328032.3304
PC	11+98.82	977840.3091	1328137.4649
PT	12+75.08	977807.6949	1328204.3578

NOTES:

1. PROJECT CONTROL WAS ESTABLISHED USING GNSS, THE GLOBAL NAVIGATION SATELLITE SYSTEM.

2. THE PROPOSED ALIGNMENT CONTROL DATA FOR THIS PROJECT HAS BEEN COMPILED FROM VARIOUS SOURCES. IF FURTHER INFORMATION REGARDING PROJECT CONTROL IS NEEDED, PLEASE CONTACT THE LOCATION AND SURVEYS UNIT.

17-APR-2023 15:49
V:\Projects\BP230212\Control Sheets\040063_ls_rw02d-1.dgn
Owner: AI OWNER-PC

DocuSign Envelope ID: 0908AB87-C088-4523-BEAB-A55EC9F5191D

6/2/99

RIGHT OF WAY CONTROL SHEET

PROJECT REFERENCE NO.	SHEET NO.
BP11.R003	RW03E-1

Location and Surveys

ALLIED ASSOCIATES, P.A.
4720 KESTER MILL ROAD
WINSTON SALEM, NC 27103
WWW.ALLIEDAPA.COM C-2198
(336)765-2377

PROJECT SURVEYOR

NORTH CAROLINA PROFESSIONAL LAND SURVEYOR SEAL L-3834 CLINTON B. OSBORNE

DOCUMENT NOT CONSIDERED FINAL UNLESS ALL SIGNATURES COMPLETED

I , Clinton B. Osborne, certify that the right of way and permanent easement monumentation for this project shown herein was completed under my direct and responsible charge from an actual survey made under my supervision; that all horizontal closures had a minimum ratio of precision of 1:10,000 (Class A). Field work was performed from 3/22/2023 to 3/30/2023, and all coordinates are based on NAD83/2011; That this survey was performed to meet the requirements of 21NCAC 56.1600 as applicable.

This 17th day of April, 2023.

DocuSigned by:
Clinton B. Osborne
0A6F6B085F6449B...

Professional Land Surveyor L-3834

ROW MARKER IRON PIN AND CAP-E

ALIGN	STATION	OFFSET	NORTH	EAST
L	12+75.00	75.00	977363.9712	1327831.4933
L	12+75.00	19.55	977409.1507	1327799.3390
L	15+12.94	75.00	977524.3436	1328022.7272
L	15+50.00	75.00	977550.3296	1328049.1448
L	15+80.00	-40.50	977653.7080	1327989.5364
L	16+00.00	-65.00	977685.1994	1327986.6136
L	16+50.00	90.00	977609.7621	1328130.9542
L	17+87.24	-65.00	977816.5026	1328120.0972
L	18+21.30	75.00	977740.5817	1328242.5561
L	19+25.00	75.00	977796.5759	1328311.7641
L	19+25.00	25.00	977838.3075	1328284.2236
L	20+00.00	25.00	977873.3830	1328346.4564
L	20+00.00	18.27	977879.4622	1328343.5711

ROW MARKER PERMANENT EASEMENT-E

ALIGN	STATION	OFFSET	NORTH	EAST
L	14+93.00	-50.00	977600.0289	1327921.2361
L	14+93.00	-40.37	977593.0752	1327927.8967
L	15+15.00	-50.00	977614.8987	1327936.5356
L	15+15.00	-40.50	977608.1261	1327943.1976
L	16+00.00	-82.00	977697.3188	1327974.6922
L	16+25.00	-82.00	977714.8503	1327992.5148
L	16+25.00	-65.00	977702.7309	1328004.4363
L	18+69.49	-45.00	977861.0404	1328197.2475
L	18+90.00	-45.00	977874.8112	1328214.7038
L	18+90.00	-33.86	977865.9377	1328221.4321

NOTES:

1. IF FURTHER INFORMATION REGARDING PROJECT CONTROL IS NEEDED PLEASE CONTACT THE LOCATION AND SURVEYS UNIT.
2. PROJECT CONTROL WAS ESTABLISHED USING GNSS, THE GLOBAL NAVIGATION SATELLITE SYSTEM.
3. RIGHT OF WAY MONUMENTATION ESTABLISHED 3/22/2023 TO 3/30/2023.

17-APR-2023 15:52
V:\Projects\P230212\Control Sheets\040063_ls_rw02e-1.dgn
Owner: AI OWNER-PC

DocuSign Envelope ID: 0908AB87-C088-4523-BEAB-A55EC9F5191D

PROJECT REFERENCE NO.	SHEET NO.
BP11.R003	RW04

Location and Surveys

ALLIED ASSOCIATES, P.A.
4720 KESTER MILL ROAD
WINSTON SALEM, NC 27103
WWW.ALLIEDAPA.COM C-2198
(336)765-2377

PROJECT SURVEYOR

NORTH CAROLINA PROFESSIONAL SEAL L-3834 LAND SURVEYOR CLINTON B. OSBORNE

DOCUMENT NOT CONSIDERED FINAL UNLESS ALL SIGNATURES COMPLETED

-L-	
PI Sta 11+29.55	PI Sta 13+54.09
△ = 4° 10' 37.1" (LT)	△ = 12° 10' 52.9" (LT)
D = 3° 14' 13.4"	D = 3° 49' 11.0"
L = 129.04'	L = 318.91'
T = 64.55'	T = 160.06'
R = 1,770.00'	R = 1,500.00'
DS = 60 MPH	DS = 60 MPH

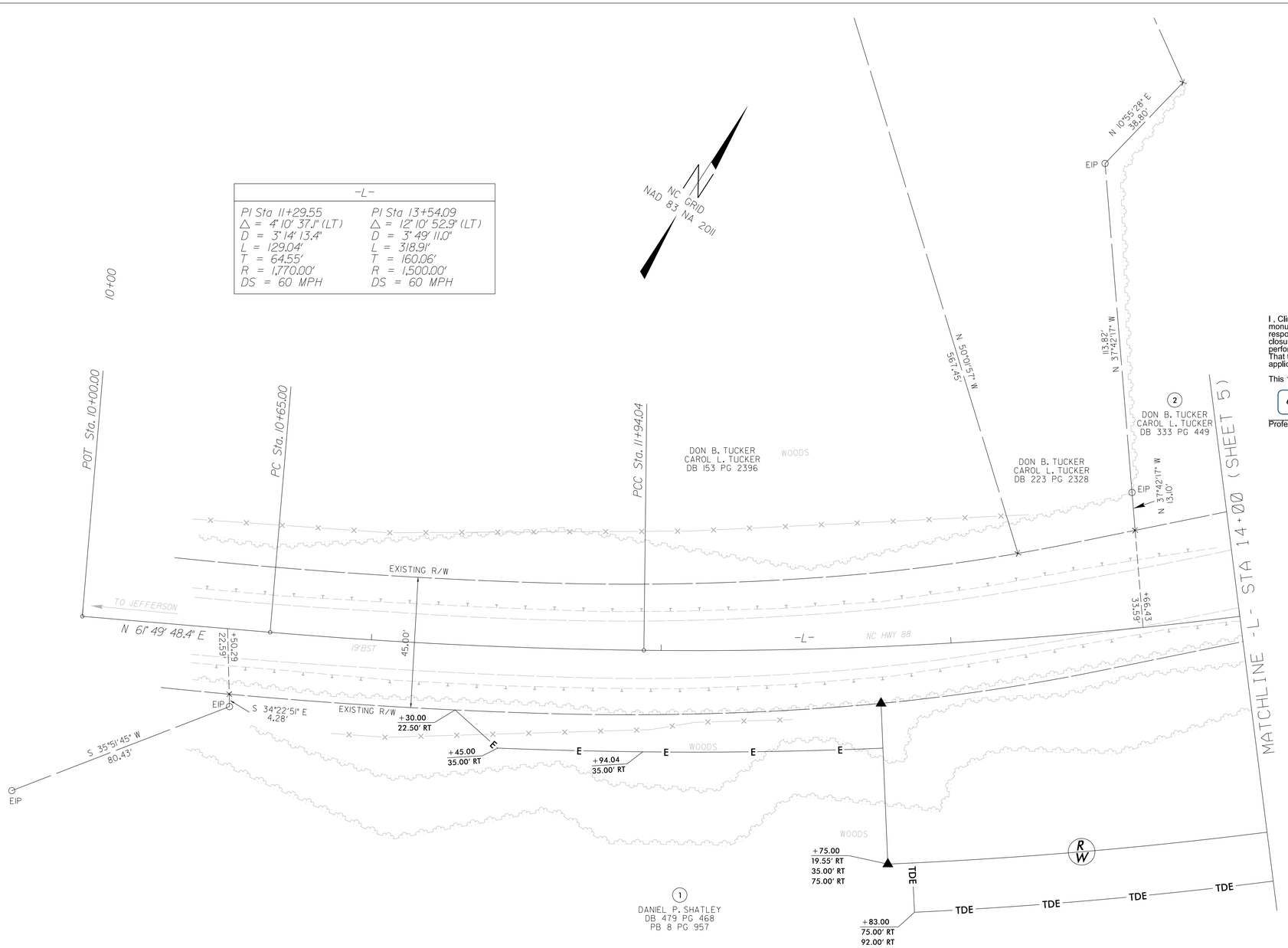

I , Clinton B. Osborne, certify that the right of way and permanent easement monumentation for this project shown herein was completed under my direct and responsible charge from an actual survey made under my supervision; that all horizontal closures had a minimum ratio of precision of 1:10,000 (Class A). Field work was performed from 3/22/2023 to 3/30/2023and all coordinates are based on NAD83/2011; That this survey was performed to meet the requirements of 21NCAC 56.1600 as applicable.

This 17th day of April, 2023.

DocuSigned by:
Clinton B. Osborne
0A6F6B085F6449B...

Professional Land Surveyor L-3834

NOTES:

1. IF FURTHER INFORMATION REGARDING PROJECT CONTROL IS NEEDED PLEASE CONTACT THE LOCATION AND SURVEYS UNIT.
2. PROJECT CONTROL WAS ESTABLISHED USING GNSS, THE GLOBAL NAVIGATION SATELLITE SYSTEM.
3. RIGHT OF WAY MONUMENTATION ESTABLISHED 3/22/2023 TO 3/30/2023.

6/2/99
17-APR-2023 16:55
Y:\Projects\PA230212\dgn\bp11r003_ls_rw04.dgn
Owner AT OWNER-PC

DocuSign Envelope ID: 0908AB87-C088-4523-BEAB-A55EC9F5191D

PROJECT REFERENCE NO.	SHEET NO.
BP11.R003	RW05

Location and Surveys

ALLIED ASSOCIATES, P.A.
4720 KESTER MILL ROAD
WINSTON SALEM, NC 27103
WWW.ALLIEDAPA.COM C-2198
(336)765-2377

PROJECT SURVEYOR

NORTH CAROLINA PROFESSIONAL SEAL L-3834 LAND SURVEYOR CLINTON B. OSBORNE

DOCUMENT NOT CONSIDERED FINAL UNLESS ALL SIGNATURES COMPLETED

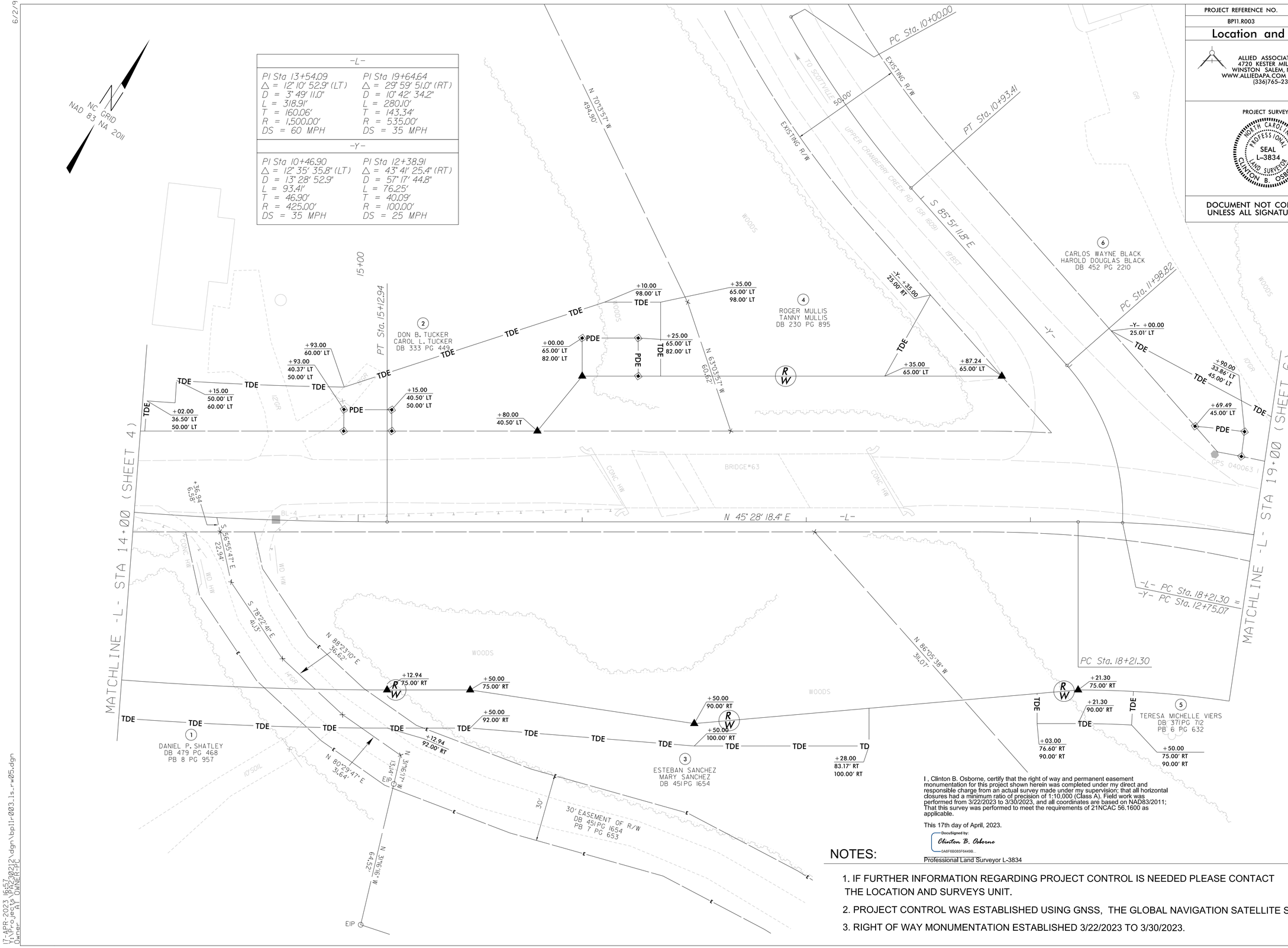

-L-	
PI Sta 13+54.09	PI Sta 19+64.64
△ = 12° 10' 52.9" (LT)	△ = 29° 59' 51.0" (RT)
D = 3° 49' 11.0"	D = 10° 42' 34.2"
L = 318.91'	L = 280.10'
T = 160.06'	T = 143.34'
R = 1,500.00'	R = 535.00'
DS = 60 MPH	DS = 35 MPH

-Y-	
PI Sta 10+46.90	PI Sta 12+38.91
△ = 12° 35' 35.8" (LT)	△ = 43° 41' 25.4" (RT)
D = 13° 28' 52.9"	D = 57° 17' 44.8"
L = 93.41'	L = 76.25'
T = 46.90'	T = 40.09'
R = 425.00'	R = 100.00'
DS = 35 MPH	DS = 25 MPH

I, Clinton B. Osborne, certify that the right of way and permanent easement monumentation for this project shown herein was completed under my direct and responsible charge from an actual survey made under my supervision; that all horizontal closures had a minimum ratio of precision of 1:10,000 (Class A). Field work was performed from 3/22/2023 to 3/30/2023, and all coordinates are based on NAD83/2011; That this survey was performed to meet the requirements of 21NCAC 56.1600 as applicable.

This 17th day of April, 2023.

DocuSigned by:
Clinton B. Osborne
0A6F6B085F6449B...
Professional Land Surveyor L-3834

NOTES:

1. IF FURTHER INFORMATION REGARDING PROJECT CONTROL IS NEEDED PLEASE CONTACT THE LOCATION AND SURVEYS UNIT.
2. PROJECT CONTROL WAS ESTABLISHED USING GNSS, THE GLOBAL NAVIGATION SATELLITE SYSTEM.
3. RIGHT OF WAY MONUMENTATION ESTABLISHED 3/22/2023 TO 3/30/2023.

17-APR-2023 16:57
Y:\Projects\PA230212\dgn\bp11r003_ls_rw05.dgn
Owner AT OWNER-PC
6/2/99

DocuSign Envelope ID: 0908AB87-C088-4523-BEAB-A55EC9F5191D

PROJECT REFERENCE NO.	SHEET NO.
BP11.R003	RW06

Location and Surveys

ALLIED ASSOCIATES, P.A.
4720 KESTER MILL ROAD
WINSTON SALEM, NC 27103
WWW.ALLIEDAPA.COM C-2198
(336)765-2377

PROJECT SURVEYOR

NORTH CAROLINA PROFESSIONAL SEAL L-3834 LAND SURVEYOR CLINTON B. OSBORNE

DOCUMENT NOT CONSIDERED FINAL UNLESS ALL SIGNATURES COMPLETED

I , Clinton B. Osborne, certify that the right of way and permanent easement monumentation for this project shown herein was completed under my direct and responsible charge from an actual survey made under my supervision; that all horizontal closures had a minimum ratio of precision of 1:10,000 (Class A). Field work was performed from 3/22/2023 to 3/30/2023, and all coordinates are based on NAD83/2011; That this survey was performed to meet the requirements of 21NCAC 56.1600 as applicable.

This 17th day of April, 2023.

DocuSigned by:
Clinton B. Osborne
0A6F6B085F6449B...

Professional Land Surveyor L-3834

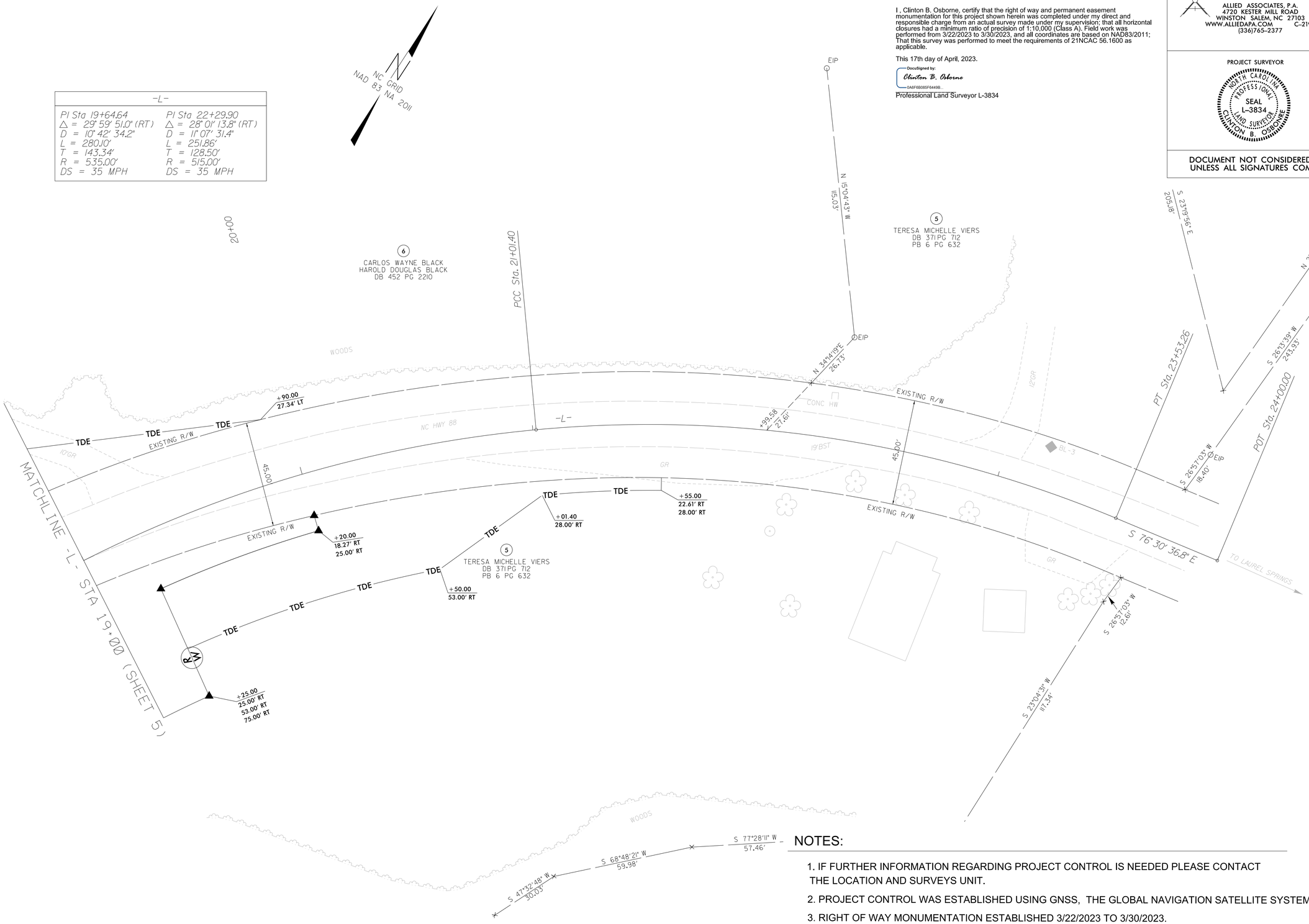

NOTES:

1. IF FURTHER INFORMATION REGARDING PROJECT CONTROL IS NEEDED PLEASE CONTACT THE LOCATION AND SURVEYS UNIT.
2. PROJECT CONTROL WAS ESTABLISHED USING GNSS, THE GLOBAL NAVIGATION SATELLITE SYSTEM.
3. RIGHT OF WAY MONUMENTATION ESTABLISHED 3/22/2023 TO 3/30/2023.

6/2/99
17-APR-2023 16:28
Y:\Projects\PA230212\dgn\r003_ls_rw06.dgn
Owner AT OWNER-PC

DocuSign Envelope ID: 0908AB87-C088-4523-BEAB-A55EC9F5191D

STATE OF NORTH CAROLINA
DIVISION OF HIGHWAYS

TRANSPORTATION MANAGEMENT PLAN

ASHE COUNTY

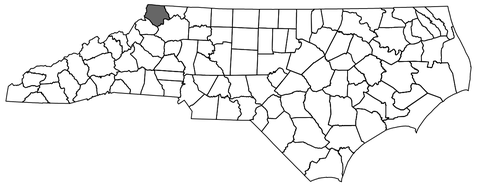

LOCATION: BRIDGE #063 OVER CRANBERRY CREEK ON NC HWY 88

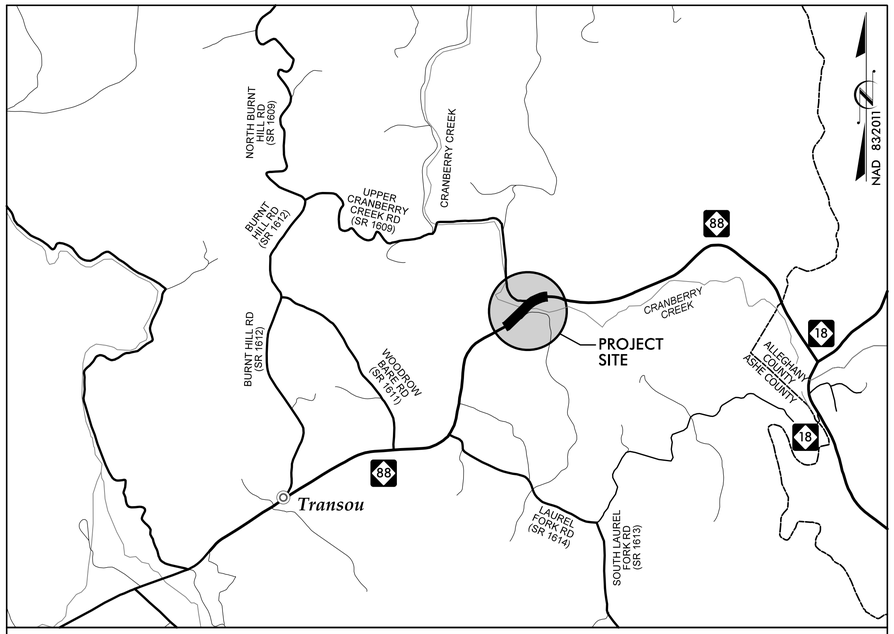

VICINITY MAP N.T.S.

INDEX OF SHEETS

SHEET NO.	TITLE
TMP-1	TITLE SHEET, AND INDEX OF SHEETS
TMP-1A	LIST OF APPLICABLE ROADWAY STANDARD DRAWINGS AND LEGEND
TMP-1B	GENERAL NOTES AND MANAGEMENT STRATEGIES
TMP-2	TEMPORARY TRAFFIC CONTROL PHASING NOTES
TMP-2A	SHORING DETAILS
TMP-4 THRU TMP-6	TEMPORARY TRAFFIC CONTROL PHASE I DETAIL
TMP-7 THRU TMP-9	TEMPORARY TRAFFIC CONTROL PHASE II DETAIL
TMP-10 THRU TMP-12	TEMPORARY TRAFFIC CONTROL PHASE III DETAIL

SHEET NO.
TMP-1

PROJECT WBS: BP11.R003.3



WORK ZONE SAFETY & MOBILITY
"from the MOUNTAINS to the COAST"

ROB N. WEISZ, PE
DIVISION BRIDGE PROJECT MANAGER

PLANS PREPARED BY:

STV Engineers, Inc.
900 West Trade St., Suite 715
Charlotte, NC 28202
NC License Number F-0991

NIKKI HONEYCUTT, PE
PROJECT ENGINEER

ASHLEY BOUCHARD, PE
PROJECT DESIGN ENGINEER

DIVISION OF HIGHWAYS · STATE OF NORTH CAROLINA · DEPARTMENT OF TRANSPORTATION · WORK ZONE TRAFFIC CONTROL

STV Engineers, Inc.
900 West Trade St., Suite 715
Charlotte, NC 28202
NC License Number F-0991

APPROVED: Docusigned by: Ashley Bouchard 3B0C1C0DEB1429...
DATE 9/6/2023

SEAL

NORTH CAROLINA PROFESSIONAL SEAL 050759 ENGINEER ASHLEY N. BOUCHARD

9/5/2023
R:\Traffic\TrafficControl\TCP\TMP SHEETS\R003_TCP_SHT_1.dgn
SaudiSL

DocuSign Envelope ID: 0908AB87-C088-4523-BEAB-A55EC9F5191D

ROADWAY STANDARD DRAWINGS

THE FOLLOWING ROADWAY STANDARDS AS SHOWN IN "ROADWAY STANDARD DRAWINGS" - PROJECT SERVICES UNIT - N.C. DEPARTMENT OF TRANSPORTATION - RALEIGH, N.C., DATED JANAUARY 2018 ARE APPLICABLE TO THIS PROJECT AND BY REFERENCE HEREBY ARE CONSIDERED A PART OF THESE PLANS:

STD. NO.	TITLE
1101.01	WORK ZONE ADVANCED WARNING SIGNS
1101.02	TEMPORARY LANE CLOSURES
1101.03	TEMPORARY ROAD CLOSURES
1101.05	WORK ZONE VEHICLE ACCESSES
1101.04	TEMPORARY SHOULDER CLOSURES
1101.11	TRAFFIC CONTROL DESIGN TABLES
1110.01	STATIONARY WORK ZONE SIGNS
1110.02	PORTABLE WORK ZONE SIGNS
1130.01	DRUMS
1135.01	CONES
1145.01	BARRICADES - TYPE III
1150.01	FLAGGERS
1165.01	TRUCK MOUNTED ATTENUATOR
1180.01	SKINNY - DRUMS
1205.01	PAVEMENT MARKINGS - LINE TYPES AND OFFSETS
1205.02	PAVEMENT MARKINGS - TWO LANE AND MULTILANE ROADWAYS
1205.04	PAVEMENT MARKINGS - INTERSECTIONS
1205.05	PAVEMENT MARKINGS - TURN LANES
1205.13	PAVEMENT MARKINGS - LANE REDUCTIONS
1262.01	GUARDRAIL END DELINEATION

STV Engineers, Inc.
900 West Trade St., Suite 715
Charlotte, NC 28202
NC License Number F-0991

PROJ. REFERENCE NO.	SHEET NO.
BP11.R003.3	TMP-1A

LEGEND

GENERAL

- DIRECTION OF TRAFFIC FLOW
- DIRECTION OF PEDESTRIAN TRAFFIC FLOW
- EXIST. PVMT.
- NORTH ARROW
- PROPOSED PVMT.
- TEMP. SHORING (LOCATION PURPOSES ONLY)
- WORK AREA
- REMOVAL
- TEMPORARY PAVEMENT

TRAFFIC CONTROL DEVICES

- BARRICADE (TYPE III)
- CONE
- DRUM SKINNY DRUM TUBULAR MARKER
- TEMPORARY CRASH CUSHION
- FLASHING ARROW BOARD
- FLAGGER
- LAW ENFORCEMENT
- TRUCK MOUNTED ATTENUATOR (TMA)
- CHANGEABLE MESSAGE SIGN

TEMPORARY SIGNING

- PORTABLE SIGN
- STATIONARY SIGN
- STATIONARY OR PORTABLE SIGN

SIGNALS

- EXISTING
- PROPOSED
- TEMP TEMPORARY
- PORTABLE TRAFFIC SIGNAL

PAVEMENT MARKINGS

- EXISTING LINES
- TEMPORARY LINES

PAVEMENT MARKERS

- CRYSTAL/CRYSTAL
- CRYSTAL/RED
- YELLOW/YELLOW

PAVEMENT MARKING SYMBOLS

- PAVEMENT MARKING SYMBOLS
- EXISTING MARKING SYMBOLS

DRAINAGE

- PROPOSED PIPE CONSTRUCTION
- PREVIOUSLY CONSTRUCTED PIPE

TEMPORARY PAVEMENT MARKING SCHEDULE

PAINT SYMBOLS

PA	WHITE SOLID EDGE LINE (4")
P2	WHITE STOP BAR (24")

DOCUMENT NOT CONSIDERED FINAL UNLESS ALL SIGNATURES COMPLETED

APPROVED: DocuSigned by: Ashley Bouchard DATE: 9/6/2023

SEAL

NORTH CAROLINA PROFESSIONAL SEAL 050759 ENGINEER ASHLEY N. BOUCHARD

DIVISION OF HIGHWAYS · STATE OF NORTH CAROLINA · DEPARTMENT OF TRANSPORTATION · WORK ZONE TRAFFIC CONTROL

ROADWAY STANDARD DRAWINGS & LEGEND

9/5/2023
R:\Traffic\TrafficControl\TCP\TMP SHEETS\R003_TCP_SHT_1A.dgn
SaucieSL

DocuSign Envelope ID: 0908AB87-C088-4523-BEAB-A55EC9F5191D

GENERAL NOTES

CHANGES MAY BE REQUIRED WHEN PHYSICAL DIMENSIONS IN THE ROADWAY PLANS AND STANDARD DETAILS ARE NOT ATTAINABLE TO MEET FIELD CONDITIONS OR RESULT IN DUPLICATE OR UNDESIRED OVERLAPPING OF DEVICES. MODIFICATION MAY INCLUDE: MOVING, SUPPLEMENTING, COVERING, OR REMOVAL OF DEVICES AS DIRECTED BY THE ENGINEER.

THE FOLLOWING GENERAL NOTES APPLY AT ALL TIMES FOR THE DURATION OF THE CONSTRUCTION PROJECT EXCEPT WHEN OTHERWISE NOTED IN THE PLAN OR DIRECTED BY THE ENGINEER.

TIME RESTRICTIONS

A) DO NOT CLOSE OR NARROW TRAVEL LANES AS FOLLOWS:

ROAD NAMES	DAY AND TIME RESTRICTIONS
NC HWY. 88 (-L-)	TO BE PROVIDED BY DIVISION.

HOLIDAYS & EVENTS

1. FOR UNEXPECTED OCCURRENCE THAT CREATES UNUSUALLY HIGH TRAFFIC VOLUMES, AS DIRECTED BY THE ENGINEER.
2. FOR NEW YEAR'S DAY, BETWEEN THE HOURS OF 6:00 AM DECEMBER 31ST AND 9:00 AM JANUARY 2ND. IF NEW YEAR'S DAY IS ON A FRIDAY, SATURDAY, SUNDAY OR MONDAY, THEN UNTIL 9:00 AM THE FOLLOWING TUESDAY.
3. FOR EASTER, BETWEEN THE HOURS OF 6:00 AM THURSDAY AND 9:00 AM MONDAY.
4. FOR MEMORIAL DAY, BETWEEN THE HOURS OF 6:00 AM FRIDAY AND 9:00 AM TUESDAY.
5. FOR INDEPENDENCE DAY, BETWEEN THE HOURS OF 6:00 AM THE DAY BEFORE INDEPENDENCE DAY AND 7:00 PM THE DAY AFTER INDEPENDENCE DAY.

   IF INDEPENDENCE DAY IS ON A FRIDAY, SATURDAY, SUNDAY OR MONDAY, THEN BETWEEN THE HOURS OF 6:00 AM THE THURSDAY BEFORE INDEPENDENCE DAY AND 7:00 PM THE TUESDAY AFTER INDEPENDENCE DAY.
6. FOR LABOR DAY, BETWEEN THE HOURS OF 6:00 AM FRIDAY AND 9:00 AM TUESDAY.
7. FOR THANKSGIVING DAY, BETWEEN THE HOURS OF 7:00 PM TUESDAY AND 9:00 AM MONDAY.
8. FOR CHRISTMAS, BETWEEN THE HOURS OF 7:00 PM THE FRIDAY BEFORE THE WEEK OF CHRISTMAS DAY AND 9:00 AM THE FOLLOWING TUESDAY AFTER THE WEEK OF CHRISTMAS DAY.

LANE AND SHOULDER CLOSURE REQUIREMENTS

B) REMOVE LANE CLOSURE DEVICES FROM THE LANE WHEN WORK IS NOT BEING PERFORMED BEHIND THE LANE CLOSURE OR WHEN A LANE CLOSURE IS NO LONGER NEEDED OR AS DIRECTED BY THE ENGINEER.

C) WHEN PERSONNEL AND/OR EQUIPMENT ARE WORKING WITHIN 15 FT OF AN OPEN TRAVEL LANE, CLOSE THE NEAREST OPEN SHOULDER USING ROADWAY STANDARD DRAWING NO. 1101.04 UNLESS THE WORK AREA IS PROTECTED BY BARRIER OR GUARDRAIL OR A LANE CLOSURE IS INSTALLED.

D) WHEN PERSONNEL AND/OR EQUIPMENT ARE WORKING ON THE SHOULDER ADJACENT TO AN UNDIVIDED FACILITY AND WITHIN 5 FT OF AN OPEN TRAVEL LANE, CLOSE THE NEAREST OPEN TRAVEL LANE USING ROADWAY STANDARD DRAWING NO. 1101.02 UNLESS THE WORK AREA IS PROTECTED BY BARRIER OR GUARDRAIL.

E) WHEN PERSONNEL AND/OR EQUIPMENT ARE WORKING ON THE SHOULDER ADJACENT TO A DIVIDED FACILITY AND WITHIN 10 FT OF AN OPEN TRAVEL LANE, CLOSE THE NEAREST OPEN TRAVEL LANE USING ROADWAY STANDARD DRAWING NO. 1101.02 UNLESS THE WORK AREA IS PROTECTED BY BARRIER OR GUARDRAIL.

F) WHEN PERSONNEL AND/OR EQUIPMENT ARE WORKING WITHIN A LANE OF TRAVEL OF AN UNDIVIDED FACILITY, CLOSE THE LANE ACCORDING TO THE TRAFFIC CONTROL PLANS, ROADWAY STANDARD DRAWINGS, OR AS DIRECTED, BY THE ENGINEER. CONDUCT THE WORK SO THAT ALL PERSONNEL AND/OR EQUIPMENT REMAIN WITHIN THE CLOSED TRAVEL LANE.

G) DO NOT WORK SIMULTANEOUSLY WITHIN 15 FT ON BOTH SIDES OF AN OPEN TRAVELWAY, RAMP, OR LOOP WITHIN SAME LOCATION UNLESS PROTECTED WITH GUARDRAIL OR BARRIER.

PAVEMENT EDGE DROP OFF REQUIREMENTS

H) BACKFILL AT A 6:1 SLOPE UP TO THE EDGE AND ELEVATION OF EXISTING PAVEMENT IN AREAS ADJACENT TO AN OPEN TRAVEL LANE THAT HAS AN EDGE OF PAVEMENT DROP-OFF AS FOLLOWS:

   BACKFILL DROP-OFFS THAT EXCEED 2 INCHES ON ROADWAYS WITH POSTED SPEED LIMITS OF 45 MPH OR GREATER.

   BACKFILL DROP-OFFS THAT EXCEED 3 INCHES ON ROADWAYS WITH POSTED SPEED LIMITS LESS THAN 45 MPH.

   BACKFILL WITH SUITABLE COMPACTED MATERIAL, AS APPROVED BY THE ENGINEER, AT NO EXPENSE TO THE DEPARTMENT.

I) DO NOT EXCEED A DIFFERENCE OF 2 INCHES IN ELEVATION BETWEEN OPEN LANES OF TRAFFIC FOR NOMINAL LIFTS OF 1.5 INCHES. INSTALL ADVANCE WARNING "UNEVEN LANES" SIGNS (W8-11) 200 FT IN ADVANCE AND A MINIMUM OF EVERY HALF MILE THROUGHOUT THE UNEVEN AREA.

TRAFFIC PATTERN ALTERATIONS

J) NOTIFY THE ENGINEER THIRTY (30) CALENDAR DAYS PRIOR TO ANY TRAFFIC PATTERN ALTERATION.

SIGNING

K) INSTALL ADVANCE WORK ZONE WARNING SIGNS WHEN WORK IS WITHIN 40 FT FROM THE EDGE OF TRAVEL LANE AND NO MORE THAN THREE (3) DAYS PRIOR TO THE BEGINNING OF CONSTRUCTION.

L) PROVIDE SIGNING AND DEVICES REQUIRED TO CLOSE THE ROAD ACCORDING TO THE ROADWAY STANDARD DRAWINGS AND TRAFFIC CONTROL PLANS. PROVIDE SIGNING REQUIRED FOR THE OFF-SITE DETOUR ROUTE AS SHOWN IN THE TRAFFIC CONTROL PLANS.

M) COVER OR REMOVE ALL SIGNS REQUIRED FOR THE OFF-SITE DETOUR WHEN THE DETOUR IS NOT IT OPERATION.

N) ENSURE ALL NECESSARY SIGNING IS IN PLACE PRIOR TO ALTERING ANY TRAFFIC PATTERN.

O) INSTALL BLACK ON ORANGE "DIP" SIGNS (W8-2) AND/OR "BUMP" SIGNS (W8-1) 350 FT IN ADVANCE OF THE UNEVEN AREA, OR AS DIRECTED BY THE ENGINEER.

TRAFFIC CONTROL DEVICES

P) WHEN LANE CLOSURES ARE NOT IN EFFECT SPACE CHANNELIZING DEVICES IN WORK AREAS NO GREATER IN FEET THAN TWICE THE POSTED SPEED LIMIT (MPH) EXCEPT, 10 FT ON-CENTER IN RADII, AND 3 FT FROM THE EDGE OF AN OPEN TRAVELWAY. REFER TO STANDARD SPECIFICATIONS FOR ROADS AND STRUCTURES SECTIONS 1130 (DRUMS), 1135 (CONES), AND 1180 (SKINNY DRUMS) FOR ADDITIONAL REQUIREMENTS.

Q) PLACE TYPE III BARRICADES, WITH "ROAD CLOSED" SIGN R11-2 ATTACHED, OF SUFFICIENT LENGTH TO CLOSE ENTIRE ROADWAY.

R) PLACE ADDITIONAL SETS OF THREE CHANNELIZING DEVICES, DRUMS, PERPENDICULAR TO THE EDGE OF TRAVELWAY ON 500 FT CENTERS WHEN UNOPENED LANES ARE CLOSED TO TRAFFIC.

STV Engineers, Inc.
900 West Trade St., Suite 715
Charlotte, NC 28202
NC License Number F-0991

PROJ. REFERENCE NO.	SHEET NO.
BP11.R003.3	TMP-1B

PAVEMENT MARKINGS AND MARKERS

S) INSTALL TEMPORARY PAVEMENT MARKINGS ON INTERIM LAYERS OF PAVEMENT AS FOLLOWS:

ROAD NAME	MARKING	MARKER
NC HWY. 88 (-L-)	PAINT	NO
UPPER CRANBERRY CREEK RD (-Y-)	PAINT	NO

T) PLACE ONE APPLICATION OF PAINT FOR TEMPORARY TRAFFIC PATTERNS. PLACE A SECOND APPLICATION OF PAINT SIX (6) MONTHS AFTER THE INITIAL APPLICATION AND EVERY SIX MONTHS AS DIRECTED BY THE ENGINEER.

U) TIE PROPOSED PAVEMENT MARKING LINES TO EXISTING PAVEMENT MARKING LINES.

V) REMOVE/REPLACE ANY CONFLICTING/DAMAGED PAVEMENT MARKING AND MARKERS BY THE END OF EACH DAY'S OPERATION.

MANAGEMENT STRATEGIES

THE FOLLOWING LISTED WORK ZONE STRATEGIES ARE RECOMMENDED FOR INCLUSION WITHIN THIS TRANSPORTATION MANAGEMENT PLAN (TMP).

RECOMMENDED STRATEGIES:

TRAFFIC MANAGEMENT STRATEGIES:
- LANE SHIFTS OR CLOSURES
- ONE-LANE, TWO WAY OPERATION (FLAGGING)
- ONE-LANE, TWO WAY OPERATION (SIGNALIZED)

DOCUMENT NOT CONSIDERED FINAL UNLESS ALL SIGNATURES COMPLETED

APPROVED: DocuSigned by: Ashley Bouchard DATE: 9/6/2023

SEAL

NORTH CAROLINA PROFESSIONAL SEAL 050759 ENGINEER ASHLEY N. BOUCHARD

DIVISION OF HIGHWAYS · STATE OF NORTH CAROLINA · DEPARTMENT OF TRANSPORTATION · WORK ZONE TRAFFIC CONTROL

GENERAL NOTES & MANAGEMENT STRATEGIES

9/5/2023
R:\Traffic\TrafficControl\TCP\TMP SHEETS\R003_TCP_SHT_1B.dgn
sgucisl

DocuSign Envelope ID: 0908AB87-C088-4523-BEAB-A55EC9F5191D

PROJ. REFERENCE NO.	SHEET NO.
BP11.R003.3	TMP-2

STV Engineers, Inc.
900 West Trade St., Suite 715
Charlotte, NC 28202
NC License Number F-0991

BRIDGE #040063

PROJECT PHASING

NOTE:
CONTRACTOR SHALL MAINTAIN ACESS TO DRIVEWAYS FOR ALL PHASES WITHIN THE PROJECT LIMITS AND COORDINATE AS NECESSARY WITH PROPERTY OWNERS.

PHASE I

STEP 1: INSTALL ADVANCED WORK ZONE WARNING SIGNS IN ACCORDANCE TO NCDOT RSD. 1101.01 SHEET 3 OF 3.

STEP 2: INSTALL TEMPORARY SHORING NO. 1 AS SHOWN ON SHEET TMP-5. CONSTRUCT -TDR1- FROM STATION 10+09 +/- TO STATION 11+19 +/-.

STEP 3: PLACE TRAFFIC ON -TDR1-, CLOSE ACCESS TO EXISTING DRIVEWAY LEADING TO PARCEL 3, AND CONSTRUCT 2-72″ CMP PIPE CULVERT, AS SHOWN ON TMP-5.

PHASE II

STEP 1: USING NCDOT RSD 1101.02 SHEET 14 OF 14, INSTALL PORTABLE TRAFFIC SIGNALS, SIGNING, TEMPORARY PAVEMENT MARKINGS, DRUMS, AND TEMPORARY SHORING NO. 2 AND 3, AS SHOWN ON TMP-7 THRU TMP-9. ONCE SIGNS AND DEVICES ARE IN PLACE, ACTIVATE PORTABLE TRAFFIC SIGNALS AND PLACE TRAFFIC INTO A ONE-LANE, TWO-WAY OPERATION TO CONSTRUCT RIGHT SIDE OF BRIDGE AND RIGHT SIDE OF -L- (NC 88) FROM STATION 11+30 +/- TO STATION 21+90 +/-, UP TO BUT NOT INCLUDING FINAL LAYER OF SURFACE COURSE.

STEP 2: COMPLETE INSTALLATION OF THE CHANNEL CHANGE, AND REMOVE TEMPORARY SHORING NO. 1 AND TDR1. PLACE TRAFFIC ON -DR1-.

PHASE III

STEP 1: REMOVE TEMPORARY SHORING NO. 2 AND 3.

STEP 2: USING NCDOT RSD. 1101.02 SHEET 14 OF 14, INSTALL SIGNING, TEMPORARY PAVEMENT MARKINGS, TEMPORARY GUARDRAIL AND DRUMS AS SHOWN ON TMP-10 THRU TMP-12. ONCE SIGNS, GUARDRAIL, AND DEVICES ARE IN PLACE, ACTIVATE PORTABLE TRAFFIC SIGNALS AND SHIFT ONE-LANE, TWO-WAY TRAFFIC ONTO THE NEWLY CONSTRUCTED RIGHT SIDE OF -L-.

STEP 3: AWAY FROM TRAFFIC REMOVE EXISTING BRIDGE, CONSTRUCT LEFT SIDE OF BRIDGE, AND LEFT SIDE OF -L- (NC 88) FROM STA. 11+30 TO 21+90 +/-, UP TO BUT NOT INCLUDING FINAL LAYER OF SURFACE COURSE AS SHOWN ON SHEET TMP-10 THRU TMP-12.

PHASE IV

STEP 1: REMOVE TEMPORARY GUARDRAIL, TEMPORARY TRAFFIC SIGNALS, AND CONFLICTING TEMPORARY PAVEMENT MARKINGS. INSTALL TEMPORARY PAVEMENT MARKINGS (REFER TO FINAL PAVEMENT MARKING PLANS) AND OPEN ROADWAY TO TWO WAY TRAFFIC.

STEP 2: INSTALL FINAL LAYER OF SURFACE COURSE AND FINAL PAVEMENT MARKINGS (REFER TO FINAL PAVEMENT MARKING PLANS) ON -L-.

STEP 3: ONCE ALL CONSTRUCTION IS COMPLETE, REMOVE ALL SIGNS AND DEVICES AND PLACE TRAFFIC IN ITS FINAL PATTERN.

APPROVED: DocuSigned by: Ashley Bouchard 895D17D00EB1429...
DATE: 9/6/2023
SEAL

NORTH CAROLINA PROFESSIONAL SEAL 050759 ENGINEER ASHLEY N. BOUCHARD

DOCUMENT NOT CONSIDERED FINAL UNLESS ALL SIGNATURES COMPLETED

DIVISION OF HIGHWAYS · STATE OF NORTH CAROLINA · DEPARTMENT OF TRANSPORTATION · WORK ZONE TRAFFIC CONTROL

TEMPORARY TRAFFIC CONTROL PHASING

9/5/2023
R:\Traffic\TrafficControl\TCP\TMP SHEETS\R003_TCP_SHT_2.dgn
SauceSL

DocuSign Envelope ID: 0908AB87-C088-4523-BEAB-A55EC9F5191D

PROJ. REFERENCE NO.	SHEET NO.
BP11.R003.3	TMP-2A

STV Engineers, Inc.
900 West Trade St., Suite 715
Charlotte, NC 28202
NC License Number F-0991

BRIDGE #040063

SHORING LOCATION No.	BEGIN STATION & OFFSET	END STATION & OFFSET	ESTIMATED AVERAGE HEIGHT	ESTIMATED MAXIMUM HEIGHT	SHORING LOCATION TYPE
No. 1	-TDR1- STA 10+50± 24.0′ RT	-TDR1- STA 11+15± 37.7′ RT	9.2 FT	12.0 FT	STRUCTURE
No. 2	-L- STA 15+89± 4.9′ LT	-L- STA 16+42± 4.9′ LT	6.0 FT	8.0 FT	STRUCTURE
No. 3	-L- STA 17+29± 4.9′ LT	-L- STA 17+75± 4.9′ LT	5.5 FT	7.0 FT	STRUCTURE

SHORING LOCATION NO. 1 (-TDR1- STA. 10+50 TO 11+15)

FOR TEMPORARY SHORING AND POSITIVE PROTECTION FOR TEMPORARY SHORING, SEE PLANS AND TEMPORARY SHORING PROVISION.

BEFORE BEGINNING TEMPORARY SHORING DESIGN OR CONSTRUCTION, SURVEY EXISTING GROUND ELEVATIONS IN THE VICINITY OF SHORING LOCATIONS TO DETERMINE ACTUAL SHORING HEIGHTS.

WHERE THE STANDARD TEMPORARY SHORING DETAILS DO NOT APPLY, DESIGN TEMPORARY SHORING LOCATION NO. 1 FOR THE FOLLOWING ASSUMED SOIL PARAMETERS AND GROUNDWATER ELEVATION:

UNIT WEIGHT (γ)= 110 PCF
FRICTION ANGLE (ϕ)= 26 DEGREES
COHESION (c) = 0 PSF
GROUNDWATER ELEVATION = VARIES, ASSUMED ELEVATION EQUIVALENT TO BOTTOM OF SHORING ELEVATION

NO SUBSURFACE INFORMATION IS AVAIALBLE IN THE VICINITY OF TEMPORARY SHORING LOCATION NO. 1. THE INFORMATION PROVIDED FOR TEMPORARY SHORING DESIGN WAS ASSUMED AND MAY NOT BE APPLICABLE TO THE ACTUAL SITE CONDITIONS ENCOUNTERED DURING CONSTRUCTION.

DRIVEN PILING FOR TEMPORARY SHORING LOCATION NO. 1 MAY NOT PENETRATE TO THE MINIMUM TIP ELEVATION DUE TO OBSTRUCTIONS, VERY DENSE OR HARD SOIL, BOULDERS OR WEAHTERED OR HARD ROCK.

SHORING LOCATION NO. 2 (-L- STA. 15+89 TO 16+42)

FOR TEMPORARY SHORING AND POSITIVE PROTECTION FOR TEMPORARY SHORING, SEE PLANS AND TEMPORARY SHORING PROVISION.

BEFORE BEGINNING TEMPORARY SHORING DESIGN OR CONSTRUCTION, SURVEY EXISTING GROUND ELEVATIONS IN THE VICINITY OF SHORING LOCATIONS TO DETERMINE ACTUAL SHORING HEIGHTS.

WHERE THE STANDARD TEMPORARY SHORING DETAILS DO NOT APPLY, DESIGN TEMPORARY SHORING LOCATION NO. 2 FOR THE FOLLOWING ASSUMED SOIL PARAMETERS AND GROUNDWATER ELEVATION:

UNIT WEIGHT (γ)= 120 PCF
FRICTION ANGLE (ϕ)= 30 DEGREES
COHESION (c) = 0 PSF
GROUNDWATER ELEVATION = VARIES, ASSUMED ELEVATION EQUIVALENT TO BOTTOM OF SHORING ELEVATION

LIMITED SUBSURFACE INFORMATION IS AVAIALBLE IN THE VICINITY OF TEMPORARY SHORING LOCATION NO. 2. THE INFORMATION PROVIDED FOR TEMPORARY SHORING DESIGN WAS ASSUMED AND MAY NOT BE APPLICABLE TO THE ACTUAL SITE CONDITIONS ENCOUNTERED DURING CONSTRUCTION.

AT THE CONTRACTOR*S OPTION, USE STANDARD SHORING FOR TEMPORARY SHORING LOCATION NO. 2. SEE STANDARD DETAIL NO. 1801.01 FOR STANDARD TEMPORARY SHORING AND 1801.02 FOR STANDARD TEMPORARY WALLS.

IT MAY BE PREFERRED TO USE A TEMPORARY SOIL NAIL WALL FOR TEMPORARY SHORING LOCATION NO. 2. FOR TEMPORARY SOIL NAIL WALLS, SEE TEMPORARY SOIL NAIL WALLS PROVISION.
WHEN BACKFILL FOR BRIDGE APPROACH FILL OVERLAPS WITH THE REINFORCED ZONE OF TEMPORARY WALLS, USE SHORING BACKFILL OR BACKFILL MATERIAL REQUIRED FOR BRIDGE APPROACH FILLS, WHICHEVER IS BETTER, IN THE REINFORCED ZONE OF TEMPORARY WALLS.

SHORING LOCATION NO. 3 (-L- STA. 17+29 TO 17+75)

FOR TEMPORARY SHORING AND POSITIVE PROTECTION FOR TEMPORARY SHORING, SEE PLANS AND TEMPORARY SHORING PROVISION.

BEFORE BEGINNING TEMPORARY SHORING DESIGN OR CONSTRUCTION, SURVEY EXISTING GROUND ELEVATIONS IN THE VICINITY OF SHORING LOCATIONS TO DETERMINE ACTUAL SHORING HEIGHTS.

WHERE THE STANDARD TEMPORARY SHORING DETAILS DO NOT APPLY, DESIGN TEMPORARY SHORING LOCATION NO. 2 FOR THE FOLLOWING ASSUMED SOIL PARAMETERS AND GROUNDWATER ELEVATION:

UNIT WEIGHT (γ)= 120 PCF
FRICTION ANGLE (ϕ)= 30 DEGREES
COHESION (c) = 0 PSF
GROUNDWATER ELEVATION = VARIES, ASSUMED ELEVATION EQUIVALENT TO BOTTOM OF SHORING ELEVATION

LIMITED SUBSURFACE INFORMATION IS AVAIALBLE IN THE VICINITY OF TEMPORARY SHORING LOCATION NO. 2. THE INFORMATION PROVIDED FOR TEMPORARY SHORING DESIGN WAS ASSUMED AND MAY NOT BE APPLICABLE TO THE ACTUAL SITE CONDITIONS ENCOUNTERED DURING CONSTRUCTION.

AT THE CONTRACTOR*S OPTION, USE STANDARD SHORING FOR TEMPORARY SHORING LOCATION NO. 2. SEE STANDARD DETAIL NO. 1801.01 FOR STANDARD TEMPORARY SHORING AND 1801.02 FOR STANDARD TEMPORARY WALLS.

IT MAY BE PREFERRED TO USE A TEMPORARY SOIL NAIL WALL FOR TEMPORARY SHORING LOCATION NO. 2. FOR TEMPORARY SOIL NAIL WALLS, SEE TEMPORARY SOIL NAIL WALLS PROVISION.
WHEN BACKFILL FOR BRIDGE APPROACH FILL OVERLAPS WITH THE REINFORCED ZONE OF TEMPORARY WALLS, USE SHORING BACKFILL OR BACKFILL MATERIAL REQUIRED FOR BRIDGE APPROACH FILLS, WHICHEVER IS BETTER, IN THE REINFORCED ZONE OF TEMPORARY WALLS.

APPROVED: DocuSigned by: Ashley Bouchard 895D17D00E81429...
DATE: 9/6/2023
SEAL

NORTH CAROLINA PROFESSIONAL SEAL 050759 ENGINEER ASHLEY N. BOUCHARD

DOCUMENT NOT CONSIDERED FINAL UNLESS ALL SIGNATURES COMPLETED

DIVISION OF HIGHWAYS · STATE OF NORTH CAROLINA · DEPARTMENT OF TRANSPORTATION · WORK ZONE TRAFFIC CONTROL

TEMPORARY SHORING NOTES

9/5/2023
R:\Traffic\TrafficControl\TCP\TMP SHEETS\R003_TCP_SHT_2A.dgn
SaucteSL

DocuSign Envelope ID: 0908AB87-C088-4523-BEAB-A55EC9F5191D



A

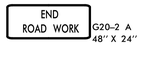

B

PROJ. REFERENCE NO.	SHEET NO.
BP11.R003.3	TMP-4

STV Engineers, Inc.
900 West Trade St., Suite 715
Charlotte, NC 28202
NC License Number F-0991

BRIDGE #040063

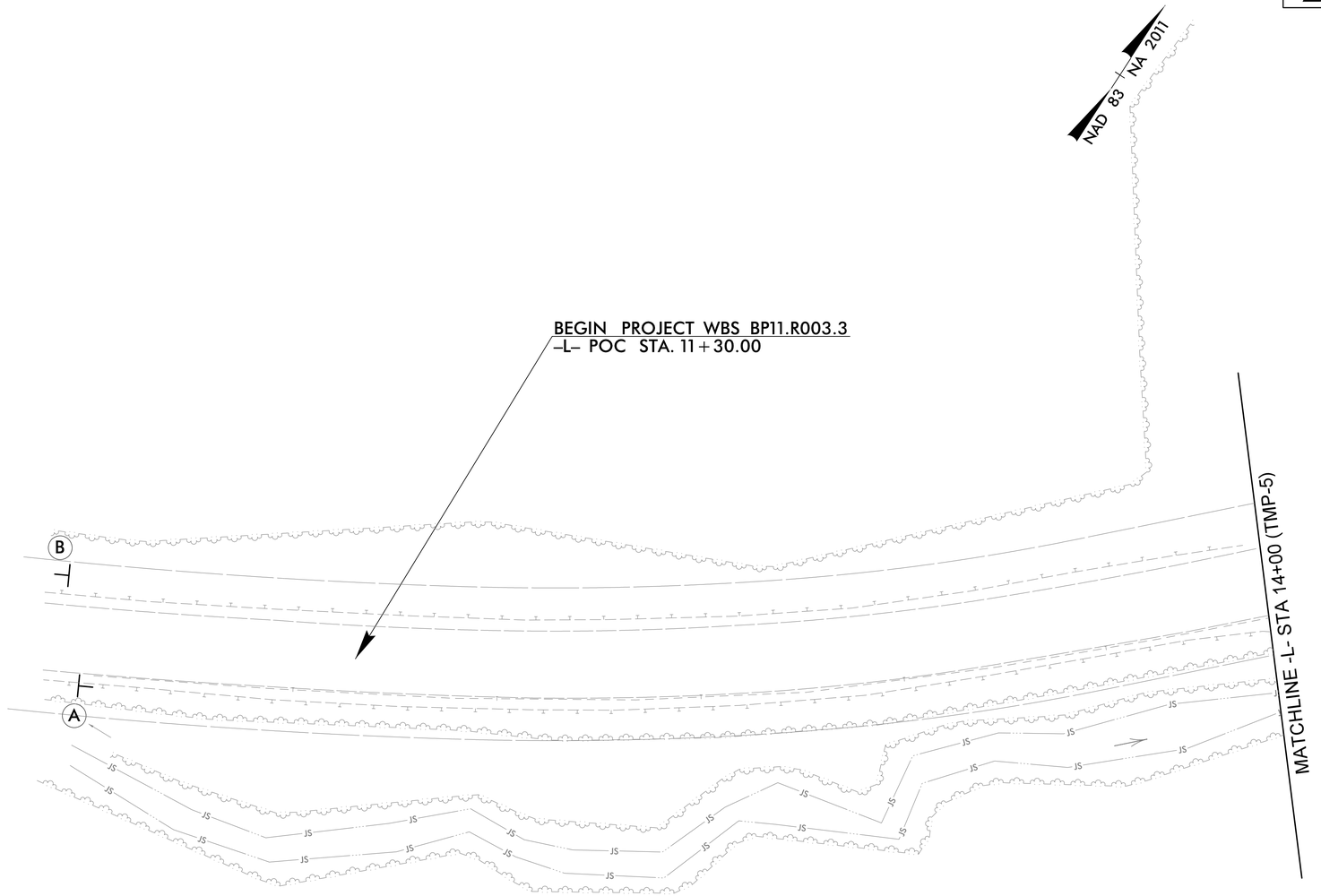

SCALE 1" = 20'

APPROVED: DocuSigned by: Ashley Bouchard 855D17D00EB1429...

DATE: 9/6/2023

SEAL

NORTH CAROLINA PROFESSIONAL SEAL 050759 ENGINEER ASHLEY N. BOUCHARD

DOCUMENT NOT CONSIDERED FINAL UNLESS ALL SIGNATURES COMPLETED

DIVISION OF HIGHWAYS · STATE OF NORTH CAROLINA · DEPARTMENT OF TRANSPORTATION · WORK ZONE TRAFFIC CONTROL

PHASE I DETAILS

9/5/2023
R:\Traffic\TrafficControl\TCP\TMP SHEETS\R003_TCP_SHT_4.dgn
saugiel

DocuSign Envelope ID: 0908AB87-C088-4523-BEAB-A55EC9F5191D

PROJ. REFERENCE NO.	SHEET NO.
BP11.R003.3	TMP-5

STV Engineers, Inc.
900 West Trade St., Suite 715
Charlotte, NC 28202
NC License Number F-0991

BRIDGE #040063

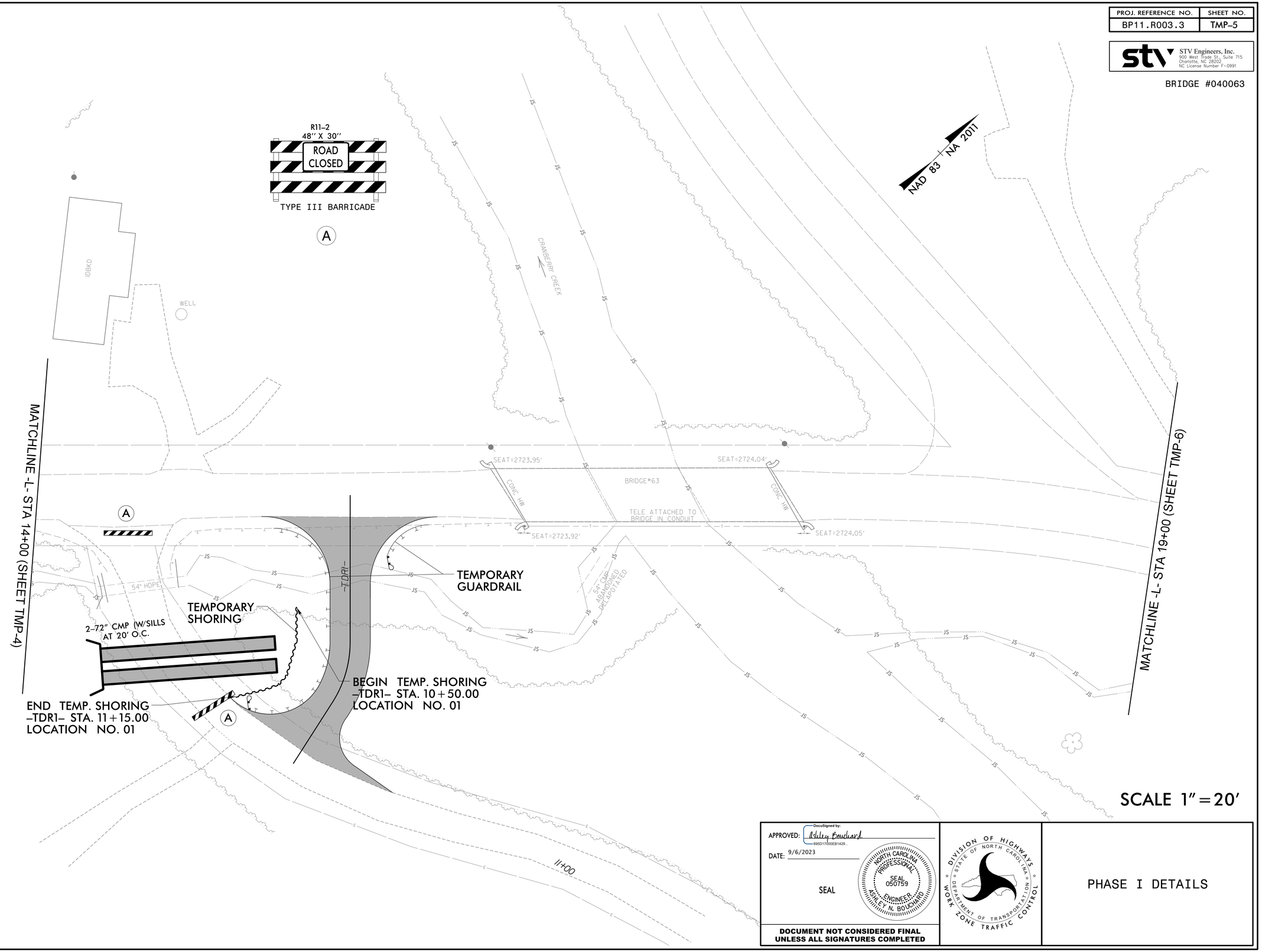

SCALE 1" = 20'

APPROVED: DocuSigned by: Ashley Bouchard 895D17D00EB1429...

DATE: 9/6/2023

SEAL

NORTH CAROLINA PROFESSIONAL SEAL 050759 ENGINEER ASHLEY N. BOUCHARD

DOCUMENT NOT CONSIDERED FINAL UNLESS ALL SIGNATURES COMPLETED

DIVISION OF HIGHWAYS STATE OF NORTH CAROLINA DEPARTMENT OF TRANSPORTATION WORK ZONE TRAFFIC CONTROL

PHASE I DETAILS

9/5/2023
R:\Traffic\TrafficControl\TCP\TMP SHEETS\R003_TCP_SHT_5.dgn
SaucieSL

DocuSign Envelope ID: 0908AB87-C088-4523-BEAB-A55EC9F5191D

PROJ. REFERENCE NO.	SHEET NO.
BP11.R003.3	TMP-6

STV Engineers, Inc.
900 West Trade St., Suite 715
Charlotte, NC 28202
NC License Number F-0991

BRIDGE #040063



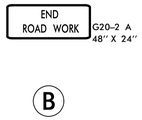

NAD 83 / NA 2017

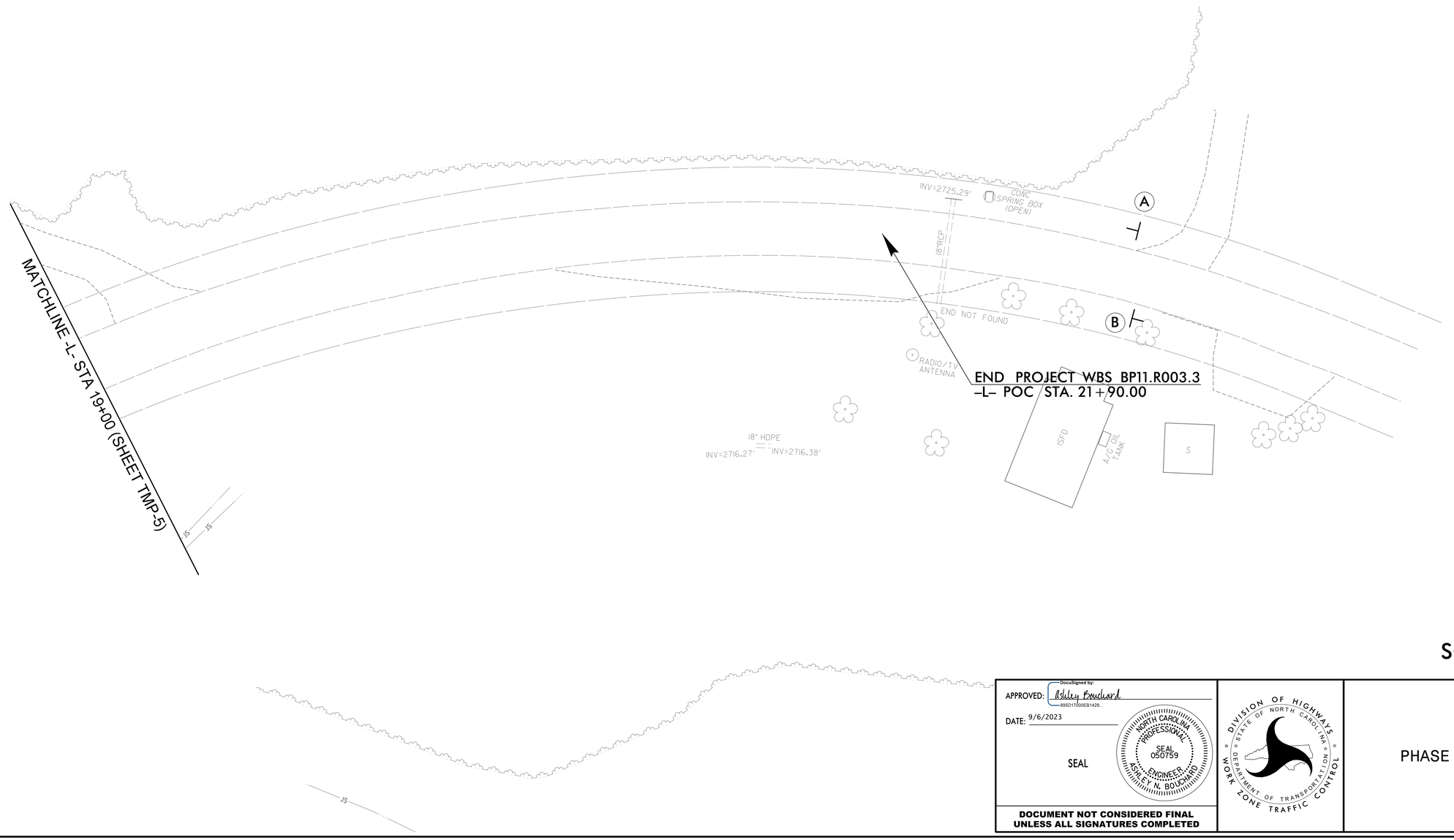

SCALE 1" = 20'

APPROVED: DocuSigned by: Ashley Bouchard 895D17000EB1429...

DATE: 9/6/2023

SEAL

NORTH CAROLINA PROFESSIONAL SEAL 050759 ENGINEER ASHLEY N. BOUCHARD

DOCUMENT NOT CONSIDERED FINAL UNLESS ALL SIGNATURES COMPLETED

DIVISION OF HIGHWAYS * STATE OF NORTH CAROLINA * DEPARTMENT OF TRANSPORTATION * WORK ZONE TRAFFIC CONTROL

PHASE I DETAILS

9/5/2023
R:\Traffic\TrafficControl\TCP\TMP SHEETS\R003_TCP_SHT_6.dgn
SauciSL

DocuSign Envelope ID: 0908AB87-C088-4523-BEAB-A55EC9F5191D

PROJ. REFERENCE NO.	SHEET NO.
BP11.R003.3	TMP-7

STV Engineers, Inc.
900 West Trade St., Suite 715
Charlotte, NC 28202
NC License Number F-0991

BRIDGE #040063



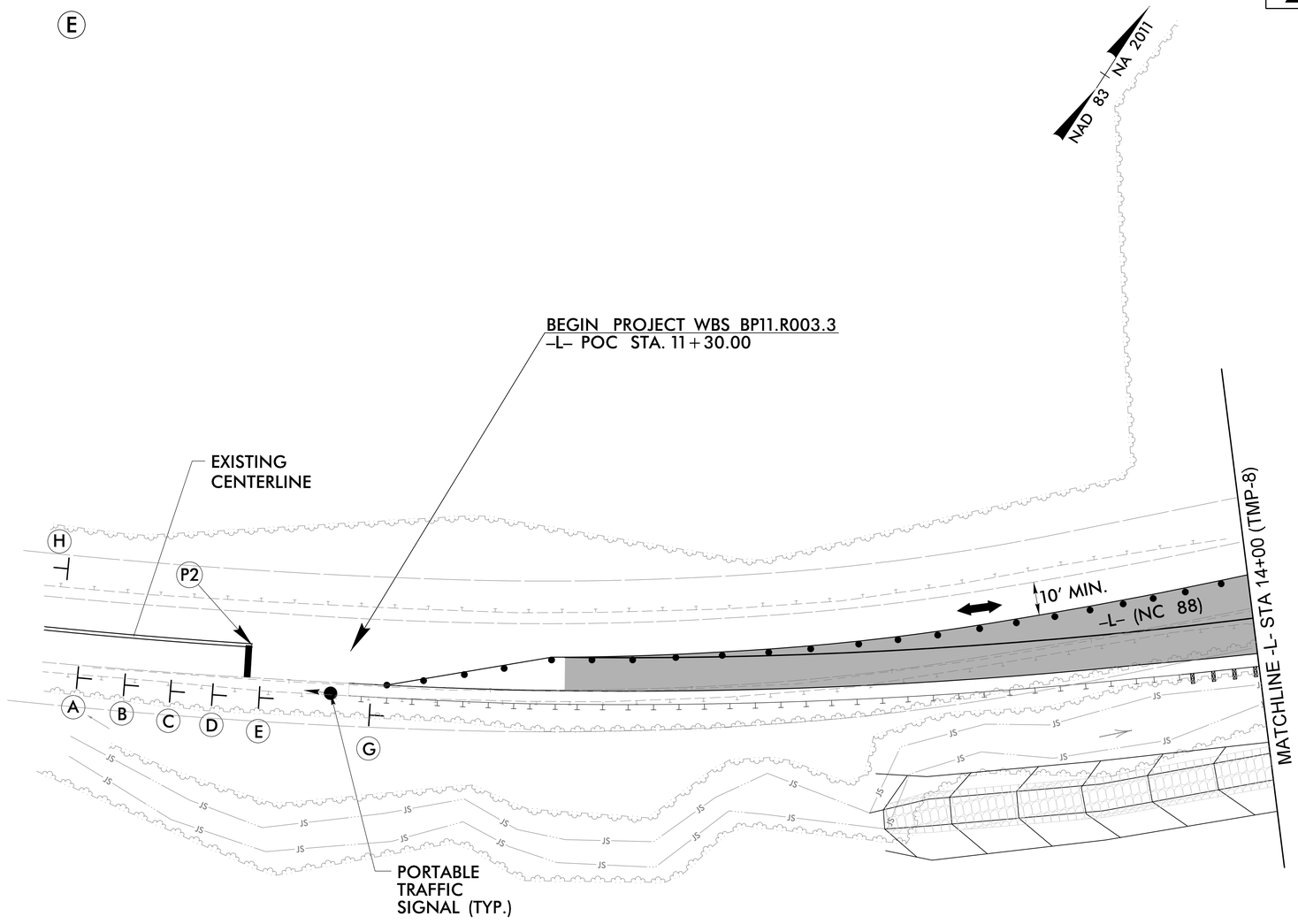

(SEE NCDOT RSD. 1101.02 SHEET 14 OF 14 FOR SIGNS A,B,C, & D, SPACING AND SIGNAL LOCATION)

SCALE 1" = 20'

APPROVED: DocuSigned by: Ashley Bouchard 895D17D00EB1429...

DATE: 9/6/2023

SEAL

NORTH CAROLINA PROFESSIONAL SEAL 050759 ENGINEER ASHLEY N. BOUCHARD

DOCUMENT NOT CONSIDERED FINAL UNLESS ALL SIGNATURES COMPLETED

DIVISION OF HIGHWAYS STATE OF NORTH CAROLINA DEPARTMENT OF TRANSPORTATION WORK ZONE TRAFFIC CONTROL

PHASE II DETAILS

9/5/2023
R:\Traffic\TrafficControl\TCP\TMP SHEETS\R003_TCP_SHT_7.dgn
SaucieSL

DocuSign Envelope ID: 0908AB87-C088-4523-BEAB-A55EC9F5191D

PROJ. REFERENCE NO.	SHEET NO.
BP11.R003.3	TMP-8

STV Engineers, Inc.
900 West Trade St., Suite 715
Charlotte, NC 28202
NC License Number F-0991

BRIDGE #040063

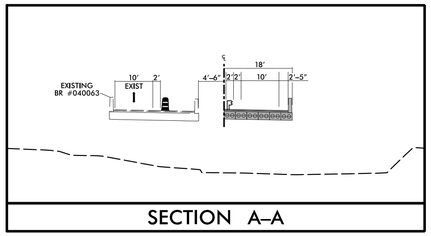

APPROVED: DocuSigned by: Ashley Bouchard 8950171000EB1429...

DATE: 10/17/2023

SEAL

NORTH CAROLINA PROFESSIONAL SEAL 050759 ENGINEER ASHLEY N. BOUCHARD

DOCUMENT NOT CONSIDERED FINAL UNLESS ALL SIGNATURES COMPLETED

DIVISION OF HIGHWAYS · STATE OF NORTH CAROLINA · DEPARTMENT OF TRANSPORTATION · WORK ZONE TRAFFIC CONTROL

PHASE II DETAILS

10/17/2023
R:\Traffic\TrafficControl\TCP\TMP SHEETS\R003_TCP_SHT_8.dgn
BouchdA

DocuSign Envelope ID: 0908AB87-C088-4523-BEAB-A55EC9F5191D

PROJ. REFERENCE NO.	SHEET NO.
BP11.R003.3	TMP-9

STV Engineers, Inc.
900 West Trade St., Suite 715
Charlotte, NC 28202
NC License Number F-0991

BRIDGE #040063



A



B



C

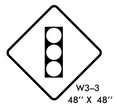

D



E



F



H

(SEE NCDOT RSD. 1101.02 SHEET 14 OF 14 FOR SIGNS A,B,C, & D, SPACING AND SIGNAL LOCATION)

NAD 83 / NA 2011

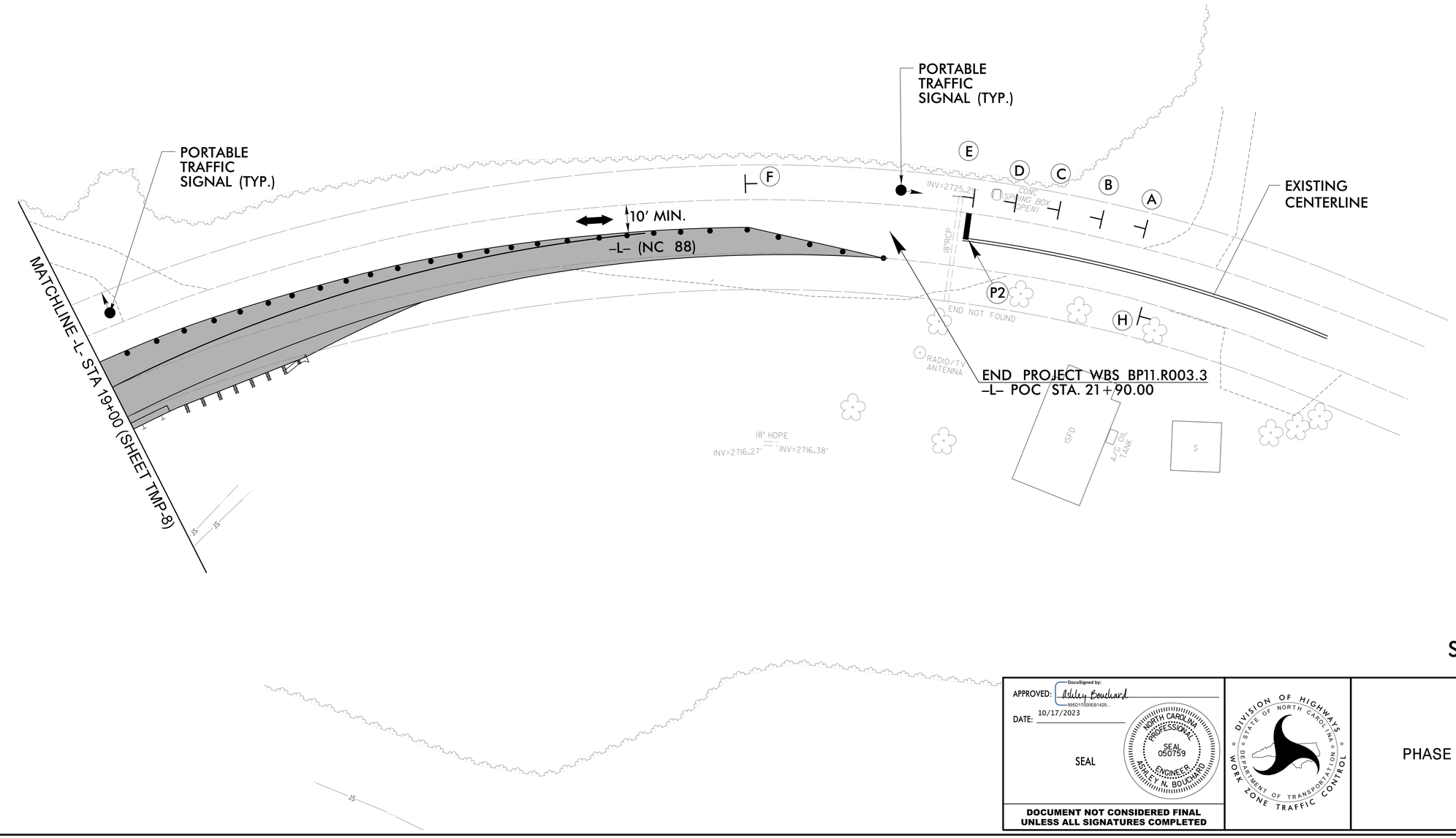

SCALE 1" = 20'

APPROVED: DocuSigned by: Ashley Bouchard 8950170D0EB1429...

DATE: 10/17/2023

SEAL

NORTH CAROLINA PROFESSIONAL SEAL 050759 ENGINEER ASHLEY N. BOUCHARD

DOCUMENT NOT CONSIDERED FINAL UNLESS ALL SIGNATURES COMPLETED

DIVISION OF HIGHWAYS · STATE OF NORTH CAROLINA · DEPARTMENT OF TRANSPORTATION · WORK ZONE TRAFFIC CONTROL

PHASE II DETAILS

10/17/2023
R:\Traffic\TrafficControl\TCP\TMP SHEETS\R003_TCP_SHT_9.dgn
BouchA

DocuSign Envelope ID: 0908AB87-C088-4523-BEAB-A55EC9F5191D

PROJ. REFERENCE NO.	SHEET NO.
BP11.R003.3	TMP-10

STV Engineers, Inc.
900 West Trade St., Suite 715
Charlotte, NC 28202
NC License Number F-0991

BRIDGE #040063



A



B



C

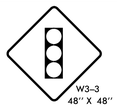

D

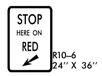

E



F



H

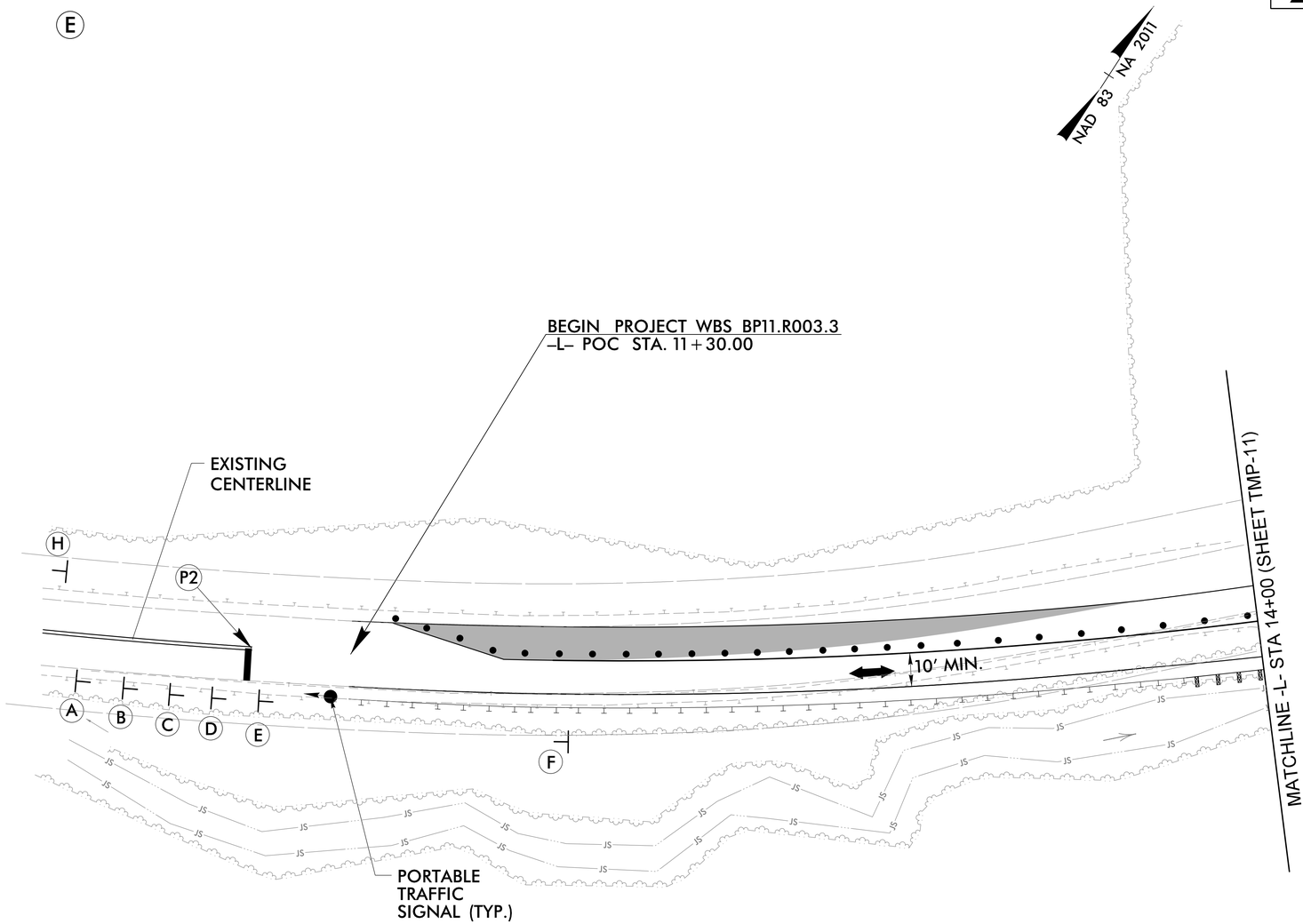

SCALE 1" = 20'

APPROVED: DocuSigned by: Ashley Bouchard 895D17C000EB1429...

DATE: 9/6/2023

SEAL

NORTH CAROLINA PROFESSIONAL SEAL 050759 ENGINEER ASHLEY N. BOUCHARD

DOCUMENT NOT CONSIDERED FINAL UNLESS ALL SIGNATURES COMPLETED

DIVISION OF HIGHWAYS · STATE OF NORTH CAROLINA · DEPARTMENT OF TRANSPORTATION · WORK ZONE TRAFFIC CONTROL

PHASE III DETAILS

9/5/2023
R:\Traffic\TrafficControl\TCP\TMP SHEETS\R003_TCP_SHT_10.dgn
SaucieSL

DocuSign Envelope ID: 0908AB87-C088-4523-BEAB-A55EC9F5191D

PROJ. REFERENCE NO.	SHEET NO.
BP11.R003.3	TMP-11

STV Engineers, Inc.
900 West Trade St., Suite 715
Charlotte, NC 28202
NC License Number F-0991

BRIDGE #040063

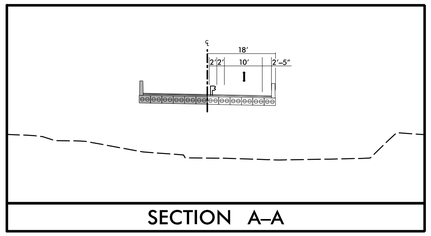

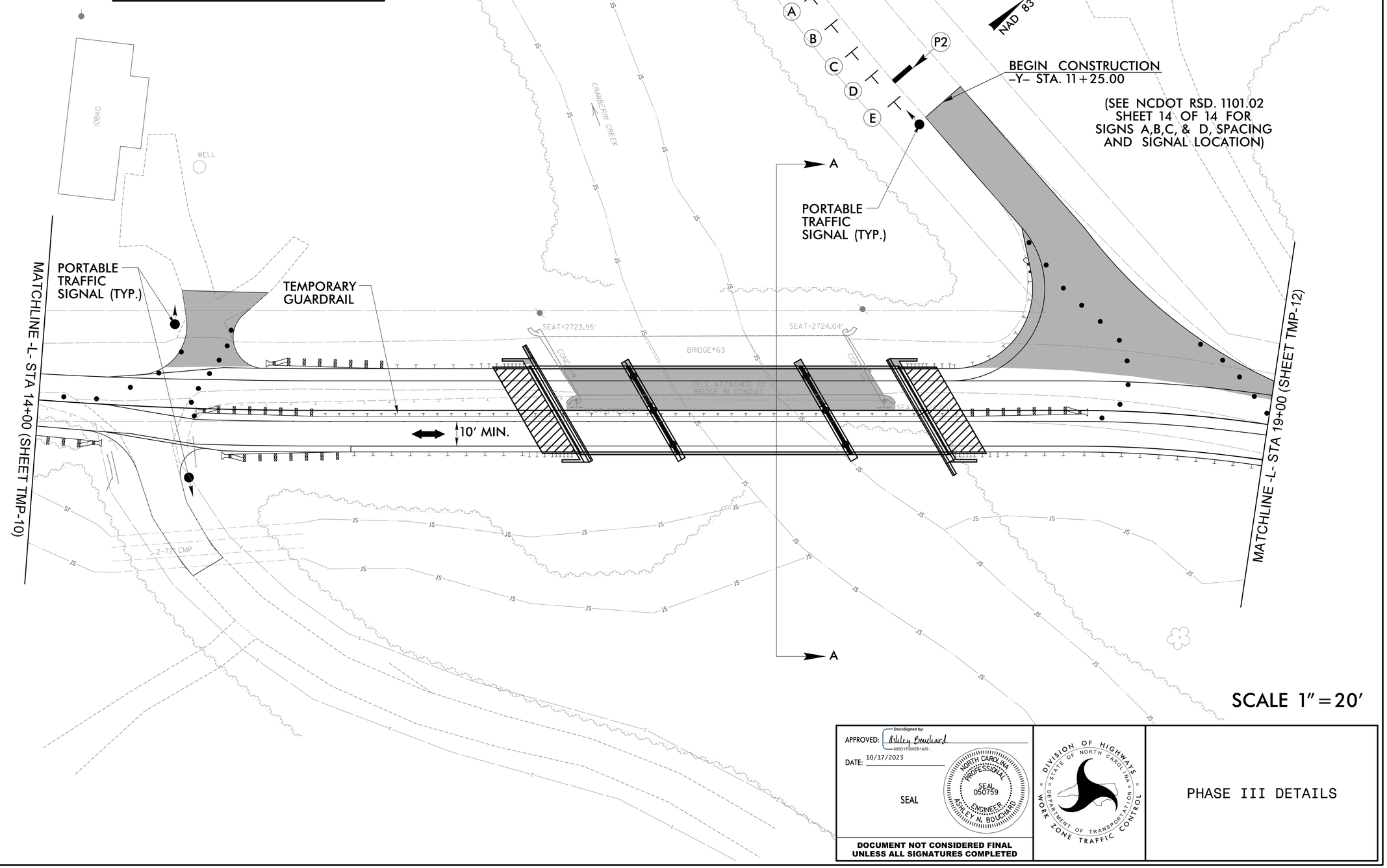

SCALE 1" = 20'

APPROVED: DocuSigned by: Ashley Bouchard 895D17C00EB1429...

DATE: 10/17/2023

SEAL

NORTH CAROLINA PROFESSIONAL SEAL 050759 ENGINEER ASHLEY N. BOUCHARD

DOCUMENT NOT CONSIDERED FINAL UNLESS ALL SIGNATURES COMPLETED

DIVISION OF HIGHWAYS · STATE OF NORTH CAROLINA · DEPARTMENT OF TRANSPORTATION · WORK ZONE TRAFFIC CONTROL

PHASE III DETAILS

10/17/2023
R:\Traffic\TrafficControl\TCP\TMP SHEETS\R003_TCP_SHT_11.dgn
BouchdA

DocuSign Envelope ID: 0908AB87-C088-4523-BEAB-A55EC9F5191D

PROJ. REFERENCE NO.	SHEET NO.
BP11.R003.3	TMP-12

STV Engineers, Inc.
909 West Trade St., Suite 715
Charlotte, NC 28202
NC License Number F-0991

BRIDGE #040063



A

B



C

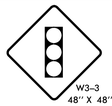

D



E



G

H

(SEE NCDOT RSD. 1101.02 SHEET 14 OF 14 FOR SIGNS A,B,C, & D, SPACING AND SIGNAL LOCATION)

NAD 83 / NA 2011

SCALE 1" = 20'

APPROVED: DocuSigned by: Ashley Bouchard (B95D17D00EB1429...)

DATE: 10/17/2023

SEAL

NORTH CAROLINA PROFESSIONAL SEAL 050759 ENGINEER ASHLEY N. BOUCHARD

DOCUMENT NOT CONSIDERED FINAL UNLESS ALL SIGNATURES COMPLETED

DIVISION OF HIGHWAYS * STATE OF NORTH CAROLINA * DEPARTMENT OF TRANSPORTATION * WORK ZONE TRAFFIC CONTROL

PHASE III DETAILS

10/17/2023
R:\Traffic\TrafficControl\TCP\TMP SHEETS\R003_TCP_SHT_12.dgn
BouchdA

DocuSign Envelope ID: 0908AB87-C088-4523-BEAB-A55EC9F5191D

8/17/99

STV Engineers, Inc.
900 West Trade St., Suite 715
Charlotte, NC 28202
NC License Number F-0991

PROJECT REFERENCE NO.	SHEET NO.
BPII.R003.3	PMP-1
R/W SHEET NO.	

DOCUMENT NOT CONSIDERED FINAL UNLESS ALL SIGNATURES COMPLETED

ROADWAY DESIGN ENGINEER

NORTH CAROLINA PROFESSIONAL ENGINEER SEAL 039234 9/5/2023 ENGINEER NIKKI T. HONEYCUTT

STATE OF NORTH CAROLINA
DEPARTMENT OF TRANSPORTATION

PAVEMENT MARKING AND SIGNING PLAN

ASHE COUNTY

LOCATION: BRIDGE #063 OVER CRANBERRY CREEK ON NC HWY 88

INDEX

SHEET NO.	DESCRIPTION
PMP-1	PAVEMENT MARKING PLAN TITLE SHEET
PMP-2	PAVEMENT MARKING SCHEDULE
PMP-3 THRU PMP-5	PAVEMENT MARKING AND SIGNING PLAN

ROADWAY STANDARD DRAWINGS

THE FOLLOWING ROADWAY STANDARDS AS SHOWN IN "ROADWAY STANDARD DRAWINGS" - PROJECT SERVICES UNIT - N.C. DEPARTMENT OF TRANSPORTATION - RALEIGH, N.C., DATED JANUARY 2018 ARE APPLICABLE TO THIS PROJECT AND BY REFERENCE HEREBY ARE CONSIDERED A PART OF THESE PLANS:

STD. NO.	TITLE
903.10	GROUND MOUNTED SIGN SUPPORTS
904.10	ORIENTATION OF GROUND MOUNTED SIGNS
904.50	MOUNTING OF TYPE 'D', 'E', AND 'F' SIGNS ON 'U' CHANNEL POSTS
1205.01	PAVEMENT MARKINGS - LINE TYPES AND OFFSETS
1205.02	PAVEMENT MARKINGS - TWO-LANE AND MULTILANE ROADWAYS
1205.04	PAVEMENT MARKINGS - INTERSECTIONS
1205.12	PAVEMENT MARKINGS - BRIDGES
1261.01	GUARDRAIL AND BARRIER DELINEATORS - INSTALLATION SPACING
1261.02	GUARDRAIL AND BARRIER DELINEATORS - TYPES AND MOUNTING
1262.01	GUARDRAIL END DELINEATION

PAVEMENT MARKING GENERAL NOTES

THE FOLLOWING GENERAL NOTES APPLY AT ALL TIMES FOR THE DURATION OF THE CONSTRUCTION PROJECT, EXCEPT WHEN OTHERWISE NOTED IN THE PLAN, OR DIRECTED BY THE ENGINEER.

A) INSTALL PAVEMENT MARKINGS ON THE FINAL SURFACE.

ROAD NAME	MARKING	MARKERS
NC-88	POLYUREA	NONE

B) TIE PROPOSED PAVEMENT MARKING LINES TO EXISTING PAVEMENT MARKING LINES.
C) REMOVE/REPLACE ANY CONFLICTING/DAMAGED PAVEMENT MARKINGS AND MARKERS.
D) PASSING ZONES WILL BE DETERMINED IN THE FIELD AND MUST BE APPROVED BY THE ENGINEER.
E) REPLACE ANY PAVEMENT MARKINGS BEYOND THE PROJECT LIMITS DAMAGED BY THE CONTRACTORS' OPERATIONS DURING CONSTRUCTION.

SIGNING GENERAL NOTES

A) SIGNS FURNISHED BY THE CONTRACT.

B) SIGNING PLANS DO NOT INCLUDE TEMPORARY CONSTRUCTION SIGNING. SEE TRAFFIC MANAGEMENT PLANS.

C) WHEN NOT STATIONED OR DIMENSIONED ON PLANS, ALL SIGNS SHALL BE FIELD LOCATED BY THE ENGINEER.

D) WHEN EXISTING SIGNS ARE REMOVED AND INSTALLED ON NEW SUPPORTS, THE RE-ERECTION SHALL IMMEDIATELY FOLLOW THE REMOVAL.

PLAN PREPARED BY:
STV Engineers, Inc.

NIKKI T. HONEYCUTT, PE TRAFFIC ENGINEER
STEPHEN L. SAUCIER TRANSPORTATION DESIGNER

STV Engineers, Inc.
900 West Trade St., Suite 715
Charlotte, NC 28202
NC License Number F-0991

8/5/2023
K:\Traffic\TrafficControl\TCP\PMP SHEETS\R003_PMP_PMP-1.dgn
SAUCIES

DocuSign Envelope ID: 0908AB87-C088-4523-BEAB-A55EC9F5191D

STV Engineers, Inc.
900 West Trade St., Suite 715
Charlotte, NC 28202
NC License Number F-0991

PROJECT REFERENCE NO.	SHEET NO.
BPII.R003.3	PMP-2
R/W SHEET NO.	

DOCUMENT NOT CONSIDERED FINAL UNLESS ALL SIGNATURES COMPLETED

ROADWAY DESIGN ENGINEER
NORTH CAROLINA PROFESSIONAL ENGINEER SEAL 039234 9/5/2023 NIKKI T. HONEYCUTT

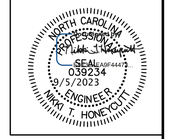

FINAL PAVEMENT MARKING SCHEDULE

PAVEMENT MARKINGS

POLYUREA (20 MIL)

SYMBOL	DESCRIPTION
V1	4" WHITE EDGELINE
V5	4" 2FT - 8FT WHITE MINISKIP
V13	4" YELLOW DOUBLE CENTER

COLD APPLIED PLASTIC

SYMBOL	DESCRIPTION
C61	24" WHITE STOP BAR

8/17/99
9/5/2023
R:\Traffic\TrafficControl\TCP\PMP SHEETS\R003_PMP_PMP-2.dgn
SaucieS

DocuSign Envelope ID: 0908AB87-C088-4523-BEAB-A55EC9F5191D

8/17/99

PAVEMENT MARKING AND SIGNING PLAN

STV Engineers, Inc.
900 West Trade St., Suite 715
Charlotte, NC 28202
NC License Number F-0991

PROJECT REFERENCE NO.	SHEET NO.
BPII.R003.3	PMP-3
R/W SHEET NO.	

DOCUMENT NOT CONSIDERED FINAL UNLESS ALL SIGNATURES COMPLETED

ROADWAY DESIGN ENGINEER

NORTH CAROLINA PROFESSIONAL ENGINEER SEAL 039234 9/5/2023 NIKKI T. HONEYCUTT

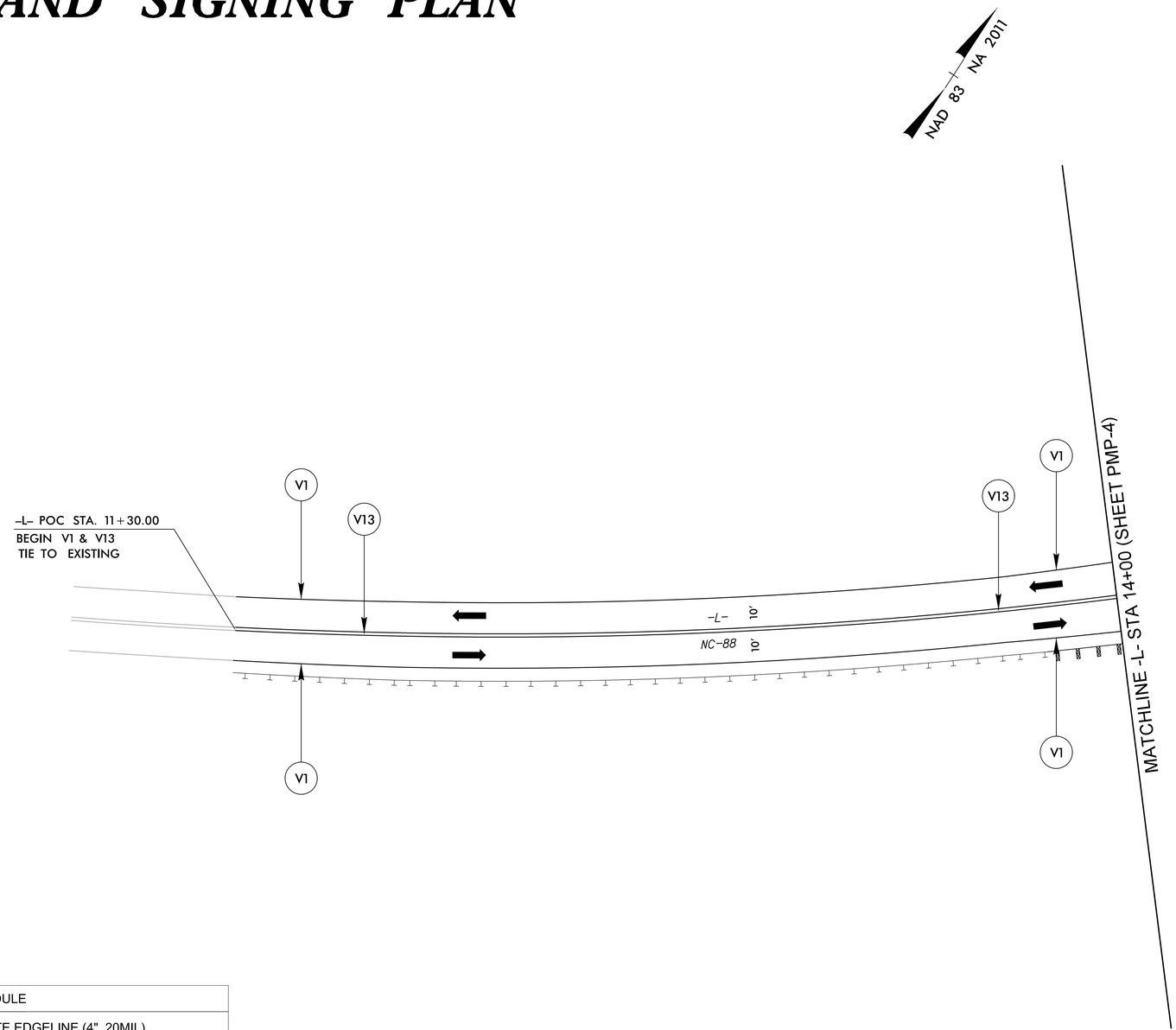

PAVEMENT MARKING SCHEDULE	
V1 - POLYUREA	WHITE EDGELINE (4", 20MIL)
V13 - POLYUREA	YELLOW DOUBLE CENTER (4", 20MIL)

9/5/2023
R:\Traffic\TrafficControl\TCP\PMP SHEETS\R003_PMP_PMP-3.dgn
SaucieS

DocuSign Envelope ID: 0908AB87-C088-4523-BEAB-A55EC9F5191D

8/17/99

PAVEMENT MARKING AND SIGNING PLAN

STV Engineers, Inc.
900 West Trade St., Suite 715
Charlotte, NC 28202
NC License Number F-0991

PROJECT REFERENCE NO.	SHEET NO.
BPII.R003.3	PMP-4
R/W SHEET NO.	

DOCUMENT NOT CONSIDERED FINAL UNLESS ALL SIGNATURES COMPLETED

ROADWAY DESIGN ENGINEER

NORTH CAROLINA PROFESSIONAL ENGINEER SEAL 039234 9/5/2023 ENGINEER MIKKI T. HONEYCUTT

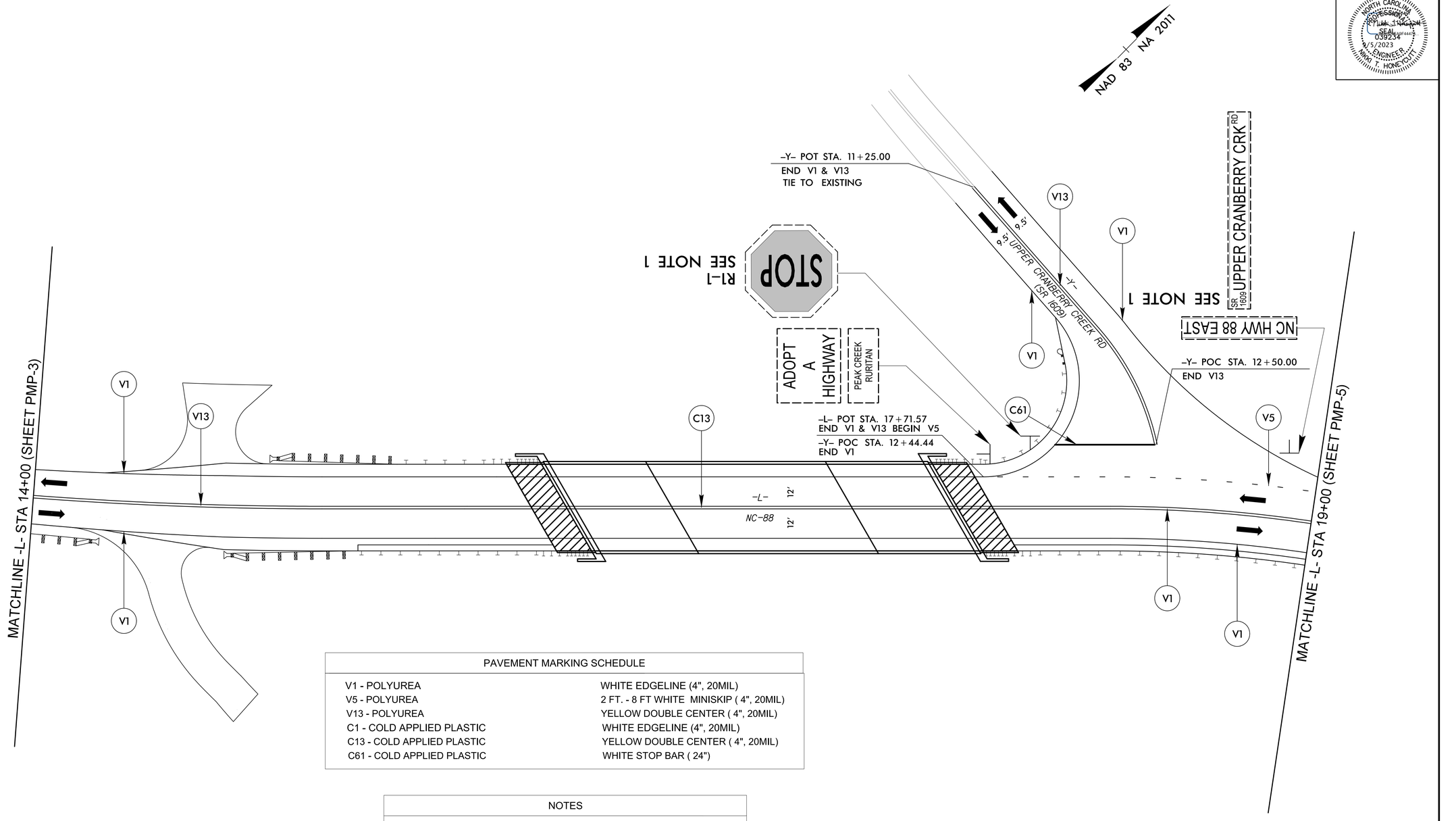

PAVEMENT MARKING SCHEDULE	
V1 - POLYUREA	WHITE EDGELINE (4", 20MIL)
V5 - POLYUREA	2 FT. - 8 FT WHITE MINISKIP (4", 20MIL)
V13 - POLYUREA	YELLOW DOUBLE CENTER (4", 20MIL)
C1 - COLD APPLIED PLASTIC	WHITE EDGELINE (4", 20MIL)
C13 - COLD APPLIED PLASTIC	YELLOW DOUBLE CENTER (4", 20MIL)
C61 - COLD APPLIED PLASTIC	WHITE STOP BAR (24")

NOTES
1) RELOCATE EXIST. SIGN SYSTEM AND ERECT NEW U-CHANNEL.

8/5/2023
R:\Traffic\TrafficControl\TCP\PMP SHEETS\R003_PMP_PMP-4.dgn
Signed

DocuSign Envelope ID: 0908AB87-C088-4523-BEAB-A55EC9F5191D

8/17/99

PAVEMENT MARKING AND SIGNING PLAN

STV Engineers, Inc.
900 West Trade St., Suite 715
Charlotte, NC 28202
NC License Number F-0991

PROJECT REFERENCE NO.	SHEET NO.
BPII.R003.3	PMP-5
R/W SHEET NO.	

DOCUMENT NOT CONSIDERED FINAL UNLESS ALL SIGNATURES COMPLETED

ROADWAY DESIGN ENGINEER

NORTH CAROLINA PROFESSIONAL ENGINEER SEAL 039234 9/5/2023 NIKKI T. HONEYCUTT

NAD 83 NA 2011

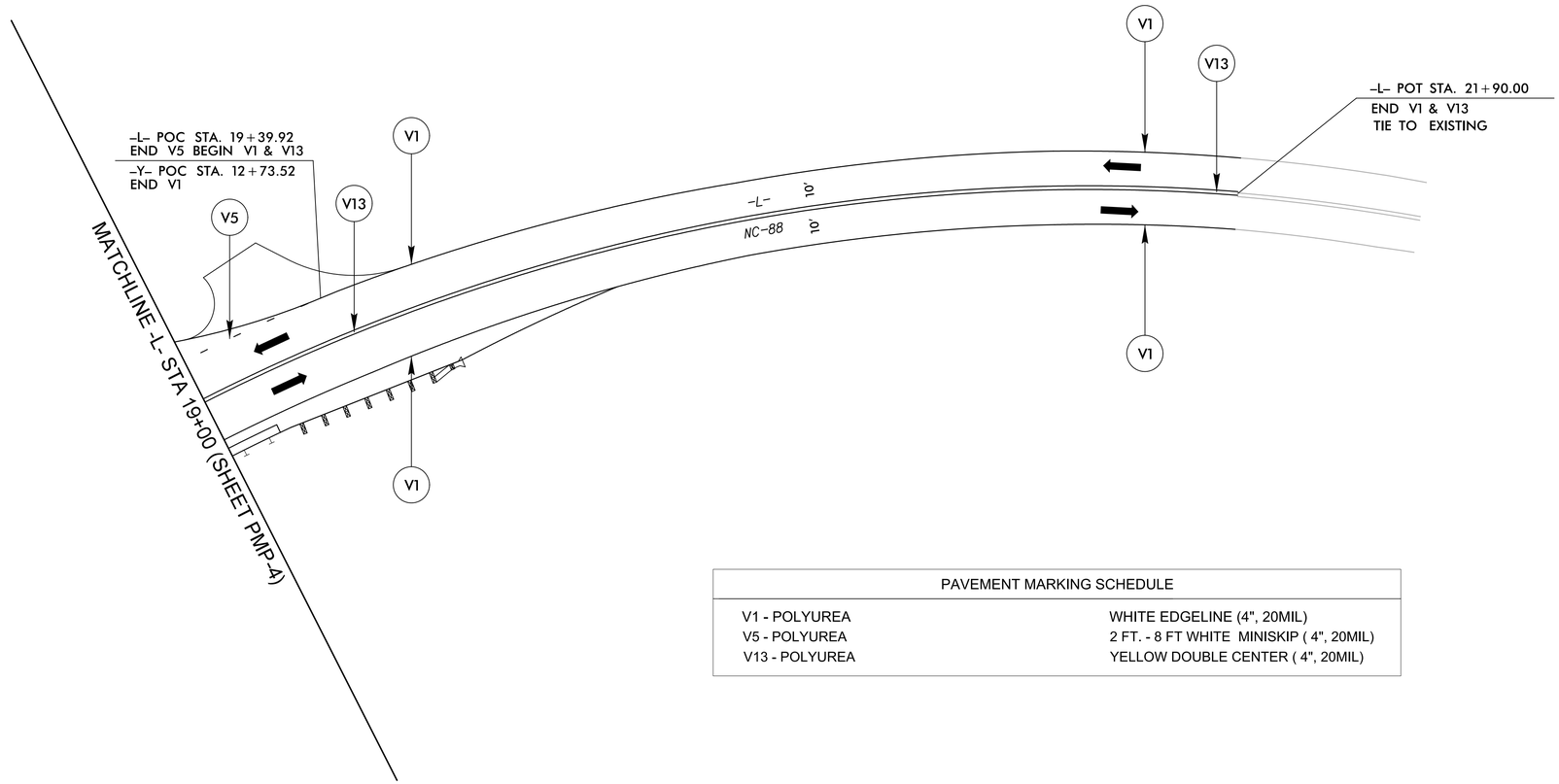

PAVEMENT MARKING SCHEDULE	
V1 - POLYUREA	WHITE EDGELINE (4", 20MIL)
V5 - POLYUREA	2 FT. - 8 FT WHITE MINISKIP (4", 20MIL)
V13 - POLYUREA	YELLOW DOUBLE CENTER (4", 20MIL)

9/5/2023
R:\Traffic\TrafficControl\TCP\PMP SHEETS\R003_PMP_PMP-5.dgn
SaucieSI

DocuSign Envelope ID: 0908AB87-C088-4523-BEAB-A55EC9F5191D

WBS: BP11.R003.3

PROJECT

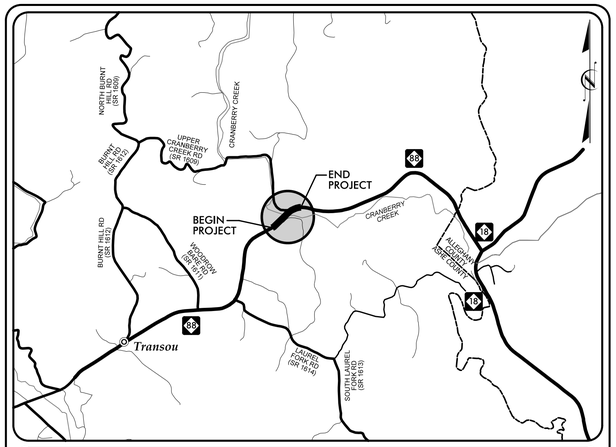

VICINITY MAP
NOT TO SCALE

NORTH CAROLINA

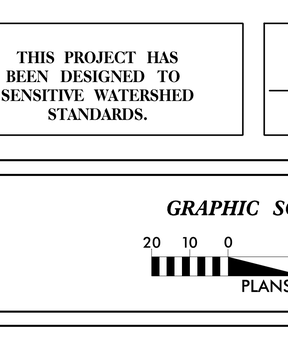

STATE OF NORTH CAROLINA
DIVISION OF HIGHWAYS

PLAN FOR PROPOSED
HIGHWAY EROSION CONTROL

ASHE COUNTY

LOCATION: BRIDGE #063 OVER CRANBERRY CREEK ON NC HWY 88

TYPE OF WORK: GRADING, PAVING, DRAINAGE, & STRUCTURE

STATE	STATE PROJECT REFERENCE NO.	SHEET NO.	TOTAL SHEETS
N.C.	BP11.R003.3	EC-1	16

STATE PROJ. NO.	F. A. PROJ. NO.	DESCRIPTION
BP11.R003.1		P.E.
BP11.R003.2		R/W & UTILITY

EROSION AND SEDIMENT CONTROL MEASURES

Std. #	Description	Symbol
1630.03	Temporary Silt Ditch	TSD
1630.05	Temporary Diversion	TD
1605.01	Temporary Silt Fence	
1606.01	Special Sediment Control Fence	
1622.01	Temporary Berms and Slope Drains	
1630.02	Silt Basin Type B	
1633.01	Temporary Rock Silt Check Type-A	
	Temporary Rock Silt Check Type-A with Matting and Polyacrylamide (PAM)	
1633.02	Temporary Rock Silt Check Type-B	
	Wattle / Coir Fiber Wattle	EW CFW
	Wattle / Coir Fiber Wattle with Polyacrylamide (PAM)	
1634.01	Temporary Rock Sediment Dam Type-A	
1634.02	Temporary Rock Sediment Dam Type-B	
1635.01	Rock Pipe Inlet Sediment Trap Type-A	
1635.02	Rock Pipe Inlet Sediment Trap Type-B	
1630.04	Stilling Basin	
1630.06	Special Stilling Basin	
	Rock Inlet Sediment Trap:	
1632.01	Type A	A
1632.02	Type B	B
1632.03	Type C	C
	Skimmer Basin	
	Tiered Skimmer Basin	
	Infiltration Basin	

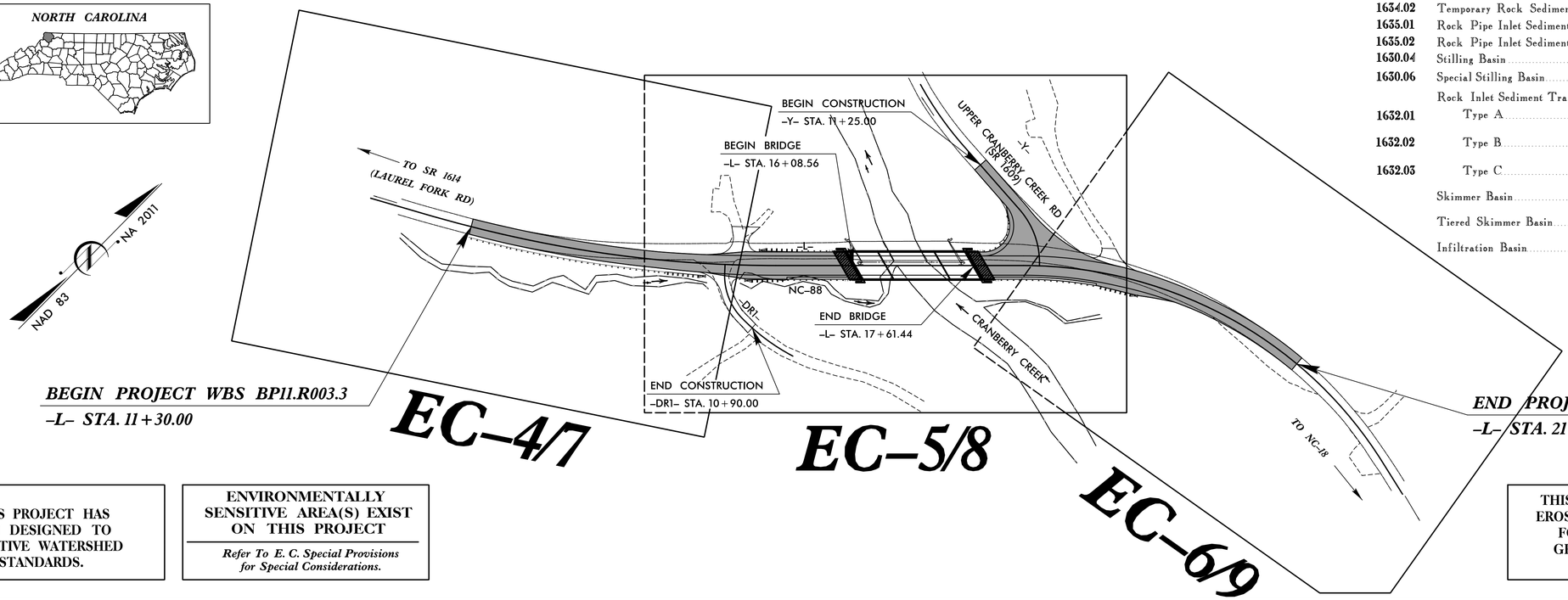

BEGIN PROJECT WBS BP11.R003.3
–L– STA. 11+30.00

END PROJECT WBS BP11.R003.3
–L– STA. 21+90.00

EC–4/7

EC–5/8

EC–6/9

THIS PROJECT HAS BEEN DESIGNED TO SENSITIVE WATERSHED STANDARDS.

ENVIRONMENTALLY SENSITIVE AREA(S) EXIST ON THIS PROJECT

Refer To E. C. Special Provisions for Special Considerations.

THIS PROJECT CONTAINS EROSION CONTROL PLANS FOR CLEARING AND GRUBBING PHASE OF CONSTRUCTION.

GRAPHIC SCALE

20 10 0 20 40
PLANS

THESE EROSION AND SEDIMENT CONTROL PLANS COMPLY WITH THE APPLICABLE REGULATIONS SET FORTH BY THE NCG–010000 GENERAL CONSTRUCTION PERMIT EFFECTIVE APRIL 1, 2019 AND ISSUED BY THE NORTH CAROLINA DEPARTMENT OF ENVIRONMENTAL QUALITY DIVISION OF WATER RESOURCES.

stv
STV Engineers, Inc.
900 West Trade St., Suite 715
Charlotte, NC 28202
NC License Number F–0991

Prepared In the Office of:

STV ENGINEERS, INC.
900 WEST TRADE STREET, SUITE 715
CHARLOTTE, NC 28202

Designed by:

EDWARD VANCE, PE ***3974***
NAME *LEVEL III CERTIFICATION NO.*

Roadway Standard Drawings

The following roadway english standards as appear in "Roadway Standard Drawings"– Roadway Design Unit – N. C. Department of Transportation – Raleigh, N. C., dated January 2018 and the latest revison thereto are applicable to this project and by reference hereby are considered a part of these plans.

1604.01	Railroad Erosion Control Detail	1632.01	Rock Inlet Sediment Trap Type A
1605.01	Temporary Silt Fence	1632.02	Rock Inlet Sediment Trap Type B
1606.01	Special Sediment Control Fence	1632.03	Rock Inlet Sediment Trap Type C
1607.01	Gravel Construction Entrance	1633.01	Temporary Rock Silt Check Type A
1622.01	Temporary Berms and Slope Drains	1633.02	Temporary Rock Silt Check Type B
1630.01	Riser Basin	1634.01	Temporary Rock Sediment Dam Type A
1630.02	Silt Basin Type B	1634.02	Temporary Rock Sediment Dam Type B
1630.03	Temporary Silt Ditch	1635.01	Rock Pipe Inlet Sediment Trap Type A
1630.04	Stilling Basin	1635.02	Rock Pipe Inlet Sediment Trap Type B
1630.05	Temporary Diversion	1640.01	Coir Fiber Baffle
1630.06	Special Stilling Basin	1645.01	Temporary Stream Crossing
1631.01	Matting Installation		

8/8/2023
C:\Users\evance\Environmental\Design\EC Sheets\R003_EC_psh01_tsh.dgn
SmartMat

DocuSign Envelope ID: 0908AB87-C088-4523-BEAB-A55EC9F5191D

8/17/99

PROJECT REFERENCE NO.	SHEET NO.
BPII.R003.3	EC-2

STV Engineers, Inc.
900 West Trade St., Suite 715
Charlotte, NC 28202
NC License Number F-0991

PUMP–AROUND OPERATION

NOTES:
1) All excavation shall be performed in only dry or isolated areas of the work zone.
2) Impervious dikes are to be used to isolate work from stream flow when necessary.
3) Maintenance of stream flow operations shall be incidental to the work. This includes polyethylene sheeting, diversion pipes, pumps and hoses.
4) Pumps and hoses shall be of sufficient size to dewater the work area.

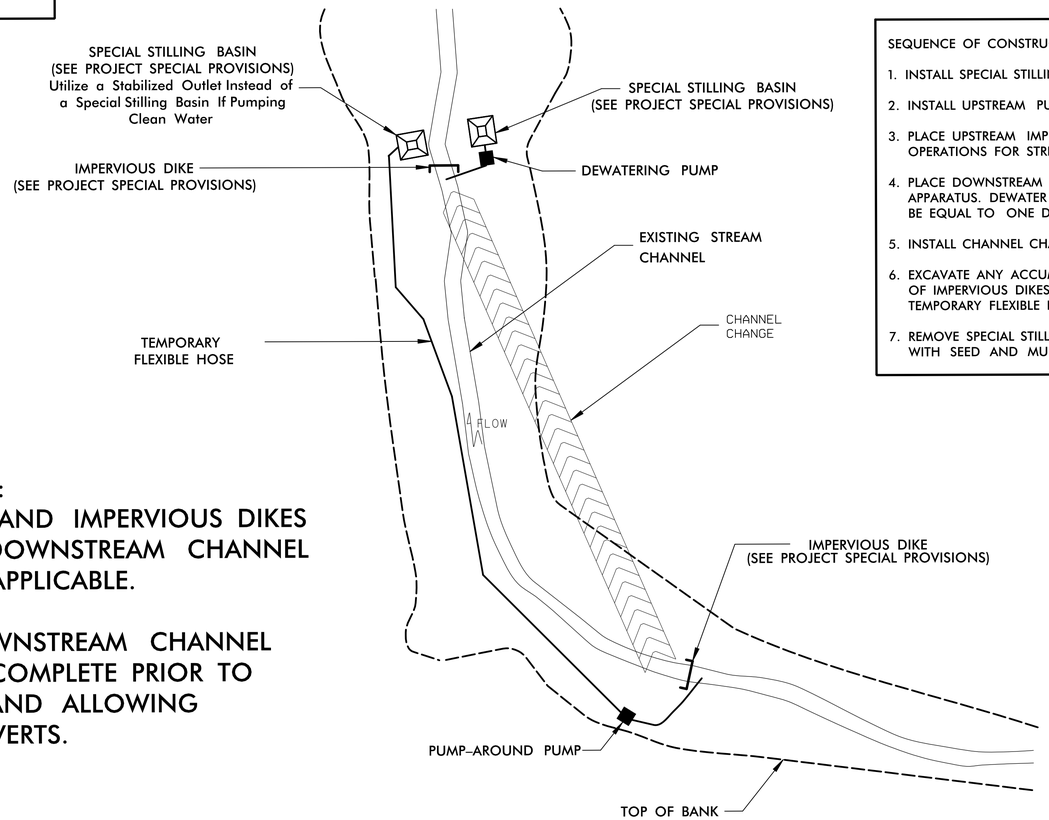

SEQUENCE OF CONSTRUCTION FOR TYPICAL WORK AREA

1. INSTALL SPECIAL STILLING BASIN(S).
2. INSTALL UPSTREAM PUMP AND TEMPORARY FLEXIBLE HOSE.
3. PLACE UPSTREAM IMPERVIOUS DIKE AND BEGIN PUMPING OPERATIONS FOR STREAM DIVERSION.
4. PLACE DOWNSTREAM IMPERVIOUS DIKE AND PUMPING APPARATUS. DEWATER ENTRAPPED AREA. AREA TO BE DEWATERED SHALL BE EQUAL TO ONE DAY'S WORK.
5. INSTALL CHANNEL CHANGE(S) IN ACCORDANCE WITH THE PLANS.
6. EXCAVATE ANY ACCUMULATED SILT AND DEWATER BEFORE REMOVAL OF IMPERVIOUS DIKES. REMOVE IMPERVIOUS DIKES, PUMPS, AND TEMPORARY FLEXIBLE HOSE. (DOWNSTREAM IMPERVIOUS DIKES FIRST).
7. REMOVE SPECIAL STILLING BASIN(S) AND BACKFILL. STABILIZE DISTURBED AREA WITH SEED AND MULCH.

**ADDITIONAL PROJECT–SPECIFIC NOTES:

1) USE PUMP–AROUND OPERATION AND IMPERVIOUS DIKES TO COMPLETE UPSTREAM AND DOWNSTREAM CHANNEL IMPROVEMENTS/PROTECTIONS AS APPLICABLE.

2) ENSURE ALL UPSTREAM AND DOWNSTREAM CHANNEL IMPROVEMENT/PROTECTIONS ARE COMPLETE PRIOR TO REMOVAL OF IMPERVIOUS DIKES AND ALLOWING STREAM FLOW INTO NEW CULVERTS.

8/18/2023
R:\Environmental\Design\EC Sheets\R003_EC_psh02.dgn
smith

DocuSign Envelope ID: 0908AB87-C088-4523-BEAB-A55EC9F5191D

PROJECT REFERENCE NO.	SHEET NO.
BPII.R003.3	EC-2A

STV Engineers, Inc.
900 West Trade St., Suite 715
Charlotte, NC 28202
NC License Number F-0991

TEMPORARY ROCK SILT CHECK TYPE 'A' WITH EXCELSIOR MATTING AND POLYACRYLAMIDE (PAM)

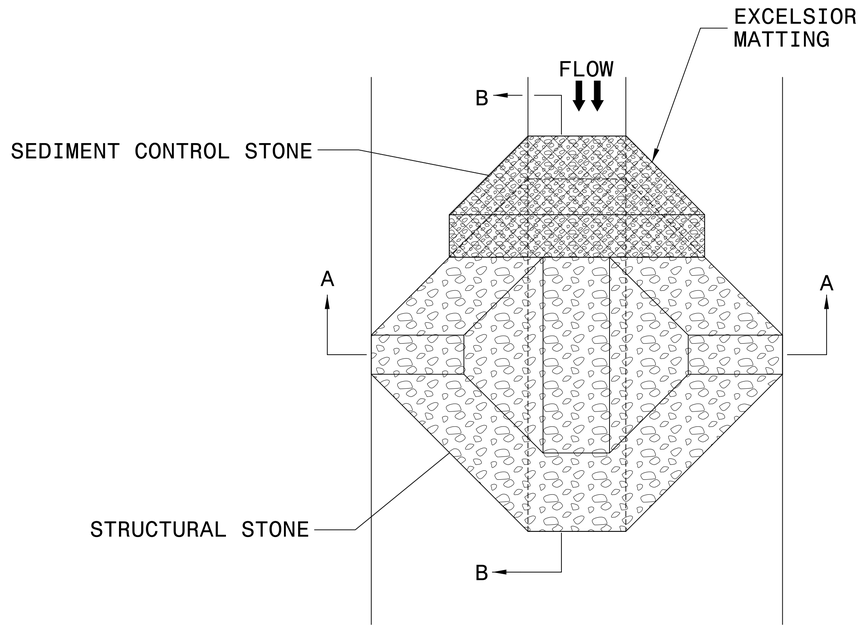

PLAN

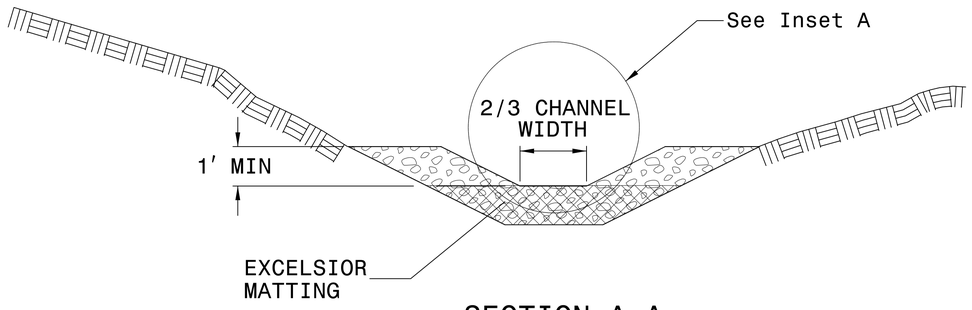

SECTION A-A

NOTES:

INSTALL TEMPORARY ROCK SILT CHECK TYPE A IN ACCORDANCE WITH ROADWAY STANDARD DRAWING NO. 1633.01.

USE EXCELSIOR FOR MATTING MATERIAL AND ANCHOR MATTING SECTION AT TOP AND BOTTOM WITH CLASS B STONE.

PRIOR TO POLYACRYLAMIDE (PAM) APPLICATION, OBTAIN A SOIL SAMPLE FROM PROJECT LOCATION, AND FROM OFFSITE MATERIAL, AND ANALYZE FOR APPROPRIATE PAM FLOCCULANT TO BE APPLIED TO EACH ROCK SILT CHECK.

INITIALLY APPLY 4 OUNCES OF POLYACRYLAMIDE (PAM) TO TOP OF MATTING SECTION AND AFTER EVERY RAINFALL EVENT THAT EQUALS OR EXCEEDS 0.50 INCHES.

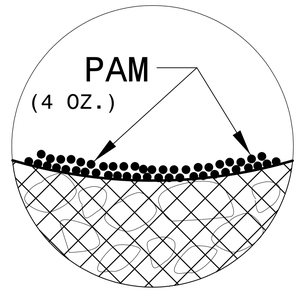

INSET A

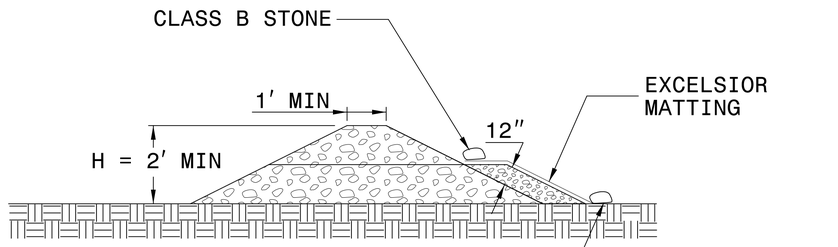

SECTION B-B

NOT TO SCALE

8/17/99
8/18/2023
I:\Projects\4021458\4021458.0001\50_Deliverables & Submittals\BPII.R003.1-Ashe_Bridge.040063\Environmental\Design\EC Sheets\R003_EC_psh02A.dgn
smithf

DocuSign Envelope ID: 0908AB87-C088-4523-BEAB-A55EC9F5191D

PROJECT REFERENCE NO.	SHEET NO.
BPII.R003.3	EC-2B

STV Engineers, Inc.
900 West Trade St., Suite 715
Charlotte, NC 28202
NC License Number F-0991

WATTLE BARRIER DETAIL

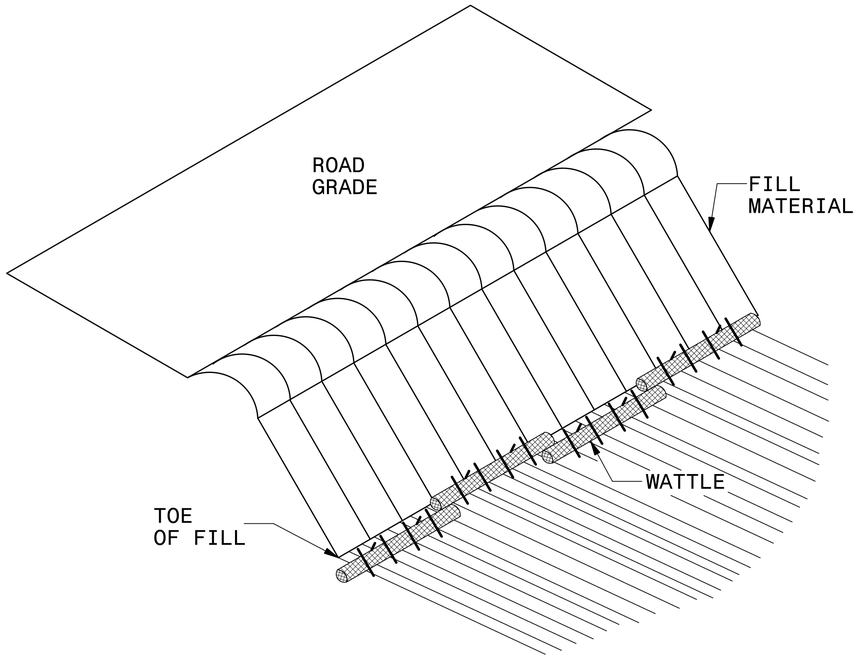

ISOMETRIC VIEW

NOTES:

USE MINIMUM 18 IN. NOMINAL DIAMETER EXCELSIOR WATTLE AND LENGTH OF 10 FT.

EXCAVATE A 2 TO 3 INCH TRENCH FOR WATTLE TO BE PLACED.

DO NOT PLACE WATTLES ON TOE OF SLOPE.

USE 2 FT. WOODEN STAKES WITH A 2 IN. BY 2 IN. NOMINAL CROSS SECTION.

INSTALL A MINIMUM OF 2 UPSLOPE STAKES AND 4 DOWNSLOPE STAKES AT AN ANGLE TO WEDGE WATTLE TO GROUND.

PROVIDE STAPLES MADE OF 0.125 IN. DIAMETER STEEL WIRE FORMED INTO A U SHAPE NOT LESS THAN 12″ IN LENGTH.

INSTALL STAPLES APPROXIMATELY EVERY 1 LINEAR FOOT ON BOTH SIDES OF WATTLE AND AT EACH END TO SECURE IT TO THE SOIL.

FOR BREAKS ALONG LARGE SLOPES, USE MAXIMUM SPACING OF 25 FT.

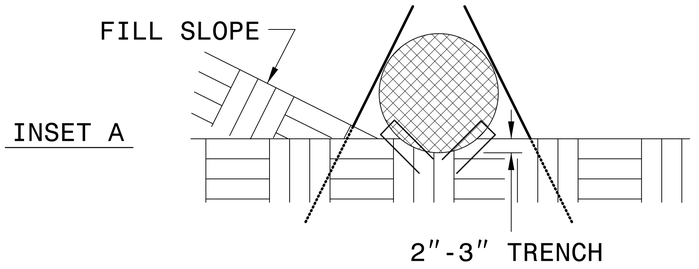

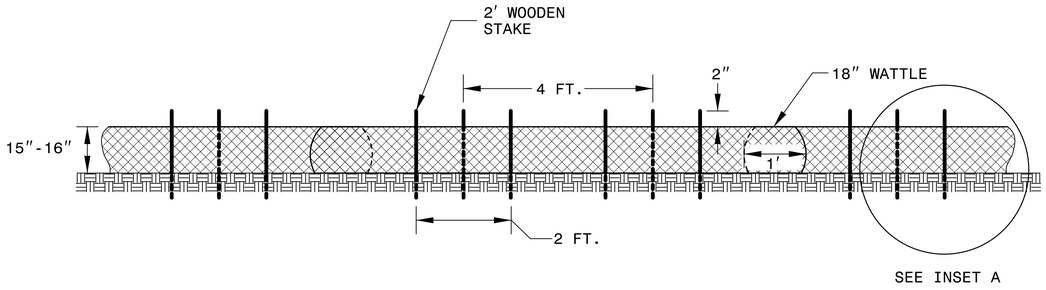

FRONT VIEW

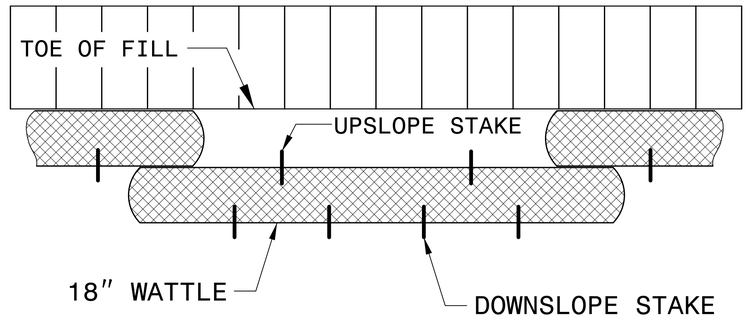

TOP VIEW

DocuSign Envelope ID: 0908AB87-C088-4523-BEAB-A55EC9F5191D

PROJECT REFERENCE NO.	SHEET NO.
BP11.R003.3	EC-2C

STV Engineers, Inc.
900 West Trade St., Suite 715
Charlotte, NC 28202
NC License Number F-0991

SKIMMER BASIN WITH BAFFLES DETAIL

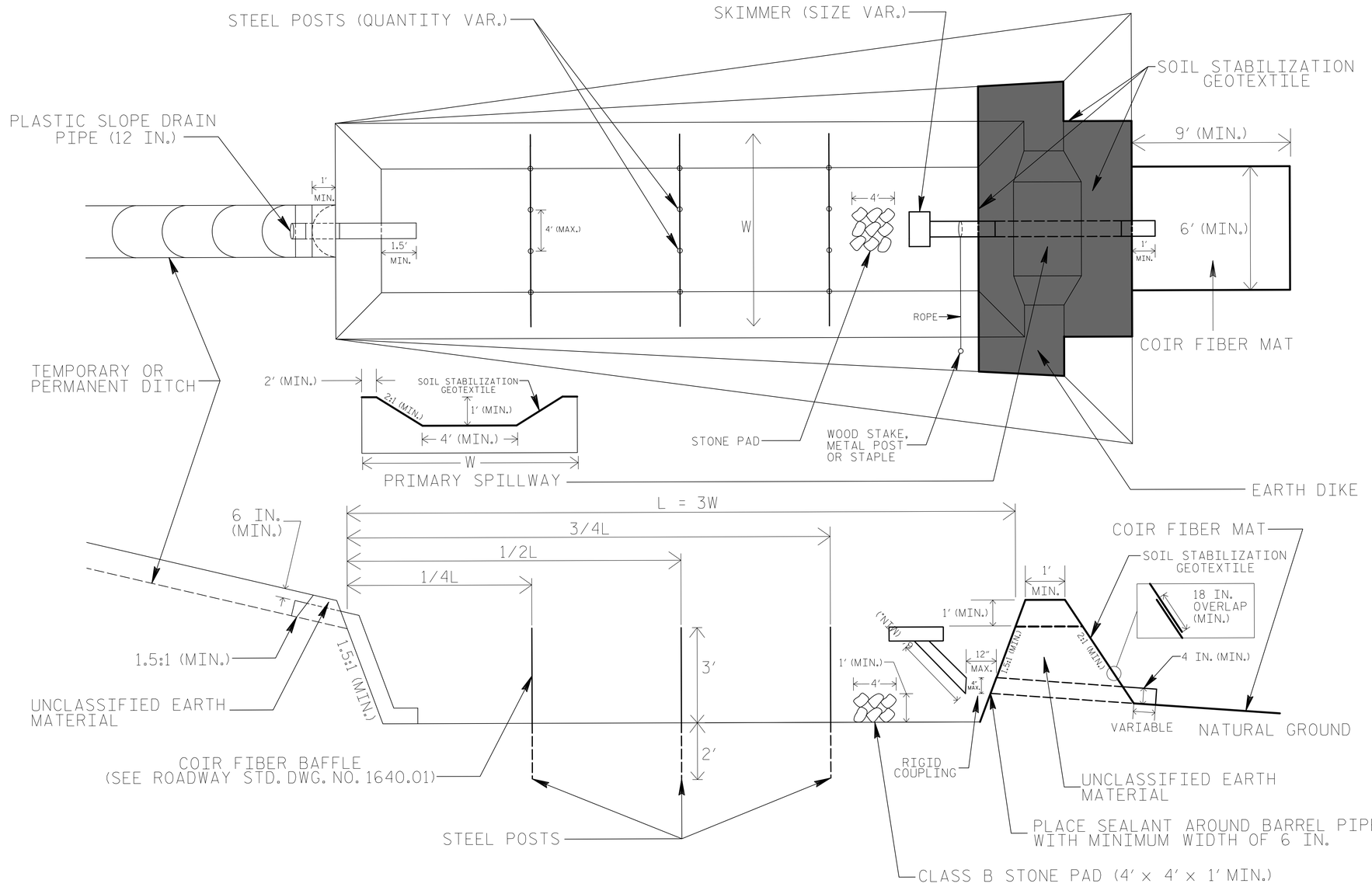

2" x 2" (nominal) WOODEN STAKE

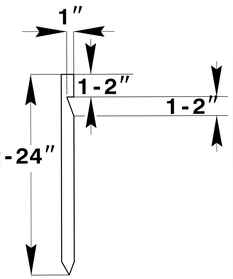

#10 STEEL REINFORCEMENT BAR

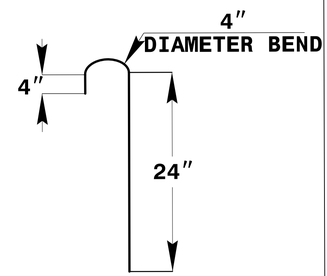

1" (nominal) STAPLE

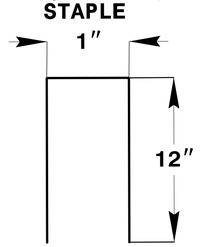

COIR FIBER MAT ANCHOR OPTIONS

NOTES

1. SEED AND PLACE MATTING FOR EROSION CONTROL ON INTERIOR AND EXTERIOR SIDESLOPES.
2. LIMIT EARTH DIKE HEIGHT TO 5 FT.
3. FOR BASIN DEPTH OF 3 FT., THE MINIMUM BASIN WIDTH SHALL BE 9 FT.
4. DETERMINE PRIMARY SPILLWAY WEIR LENGTH (FT.) USING Q/0.8, WHERE Q IS FLOW RATE (CFS) INTO BASIN.
5. PLASTIC SLOPE DRAIN PIPE AT INLET OF BASIN MAY BE REPLACED BY FILTRATION GEOTEXTILE OR TARP AS DIRECTED.
6. SOIL STABILIZATION GEOTEXTILE FOR PRIMARY SPILLWAY SHALL BE ONE CONTINUOUS PIECE OF MATERIAL OR OVERLAPPED 18 IN. (MIN.).

NOT TO SCALE

DocuSign Envelope ID: 0908AB87-C088-4523-BEAB-A55EC9F5191D

PROJECT REFERENCE NO.	SHEET NO.
BPII.R003.3	EC-3

STV Engineers, Inc.
900 West Trade St., Suite 715
Charlotte, NC 28202
NC License Number F-0991

DIVISION OF HIGHWAYS
STATE OF NORTH CAROLINA

SOIL STABILIZATION SUMMARY SHEET

MATTING FOR EROSION CONTROL – DITCHES
(EXCELSIOR MATTING ONLY)

CONST SHEET NO.	LINE	FROM STATION	TO STATION	SIDE	ESTIMATE (SY)
5	L	14+15	14+50	LT	45
5	L	11+30	13+50	LT	180
5	L	19+50	21+50	LT	165
5	Y	12+50	12+63	LT	15
			SUBTOTAL		405

MATTING FOR EROSION CONTROL – SLOPES
(STRAW OR EXCELSIOR MATTING)

4	L	11+30	14+00	RT	600
5	L	14+00	16+00	RT	450
5	L	17+90	19+00	RT	240
5	TDR1	10+20	11+00	LT&RT	600
5	Y	11+50	12+00	RT	100
6	L	19+00	21+00	RT	350
			SUBTOTAL		2340
			DITCH SUBTOTAL		405
MISCELLANEOUS MATTING TO BE INSTALLED AS DIRECTED BY THE ENGINEER					7600
				TOTAL	10345
				SAY	12000

COIR FIBER MATTING

CONST SHEET NO.	LINE	FROM STATION	TO STATION	SIDE	ESTIMATE (SY)
			CHANNEL CHANGES		680
	OVERBANK AREAS UNDER BRIDGE FOLLOWING ABUTMENT EXCAVATION				390
				TOTAL	1170
				SAY	1765

DocuSign Envelope ID: 0908AB87-C088-4523-BEAB-A55EC9F5191D

PROJECT REFERENCE NO.	SHEET NO.
BPII.R003.3	EC-3A

STV Engineers, Inc.
900 West Trade St., Suite 715
Charlotte, NC 28202
NC License Number F-0991

DIVISION OF HIGHWAYS
STATE OF NORTH CAROLINA

SOIL STABILIZATION TIMEFRAMES

SITE DESCRIPTION	STABILIZATION TIME	TIMEFRAME EXCEPTIONS
PERIMETER DIKES, SWALES, DITCHES AND SLOPES	7 DAYS	NONE
HIGH QUALITY WATER (HQW) ZONES	7 DAYS	NONE
SLOPES STEEPER THAN 3:1	7 DAYS	IF SLOPES ARE 10' OR LESS IN LENGTH AND ARE NOT STEEPER THAN 2:1, 14 DAYS ARE ALLOWED.
SLOPES 3:1 OR FLATTER	14 DAYS	7 DAYS FOR SLOPES GREATER THAN 50' IN LENGTH.
ALL OTHER AREAS WITH SLOPES FLATTER THAN 4:1	14 DAYS	NONE, EXCEPT FOR PERIMETERS AND HQW ZONES.

DocuSign Envelope ID: 0908AB87-C088-4523-BEAB-A55EC9F5191D

PROJECT REFERENCE NO.	SHEET NO.
BP11.R003.3	EC-4\CONST 4

STV Engineers, Inc.
900 West Trade St., Suite 715
Charlotte, NC 28202
NC License Number F-0991

CLEARING AND GRUBBING
EROSION CONTROL FOR
CONSTRUCTION SHEET 4

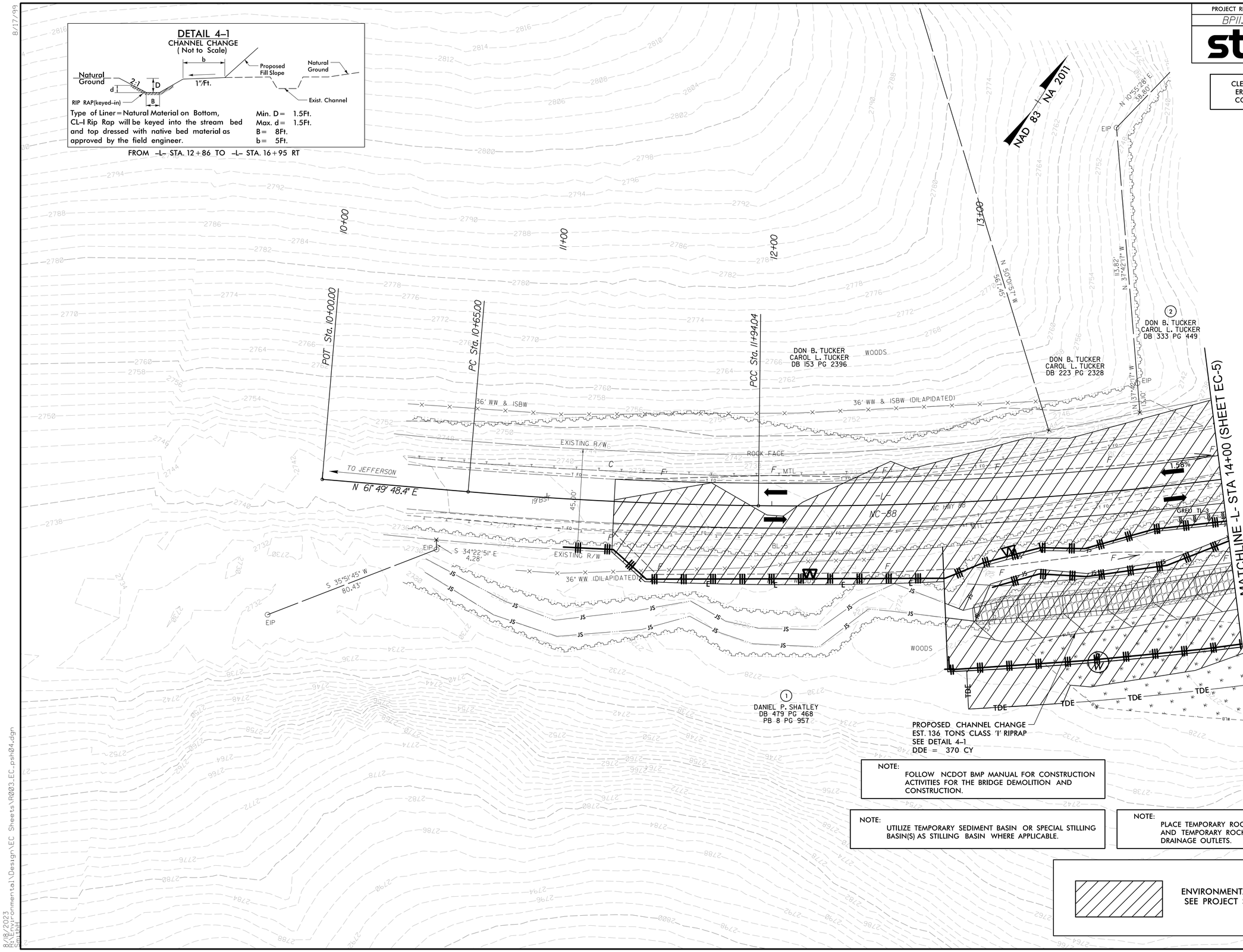

NOTE:
FOLLOW NCDOT BMP MANUAL FOR CONSTRUCTION ACTIVITIES FOR THE BRIDGE DEMOLITION AND CONSTRUCTION.

NOTE:
UTILIZE TEMPORARY SEDIMENT BASIN OR SPECIAL STILLING BASIN(S) AS STILLING BASIN WHERE APPLICABLE.

NOTE:
PLACE TEMPORARY ROCK SEDIMENT DAMS TYPE - B AND TEMPORARY ROCK SILT CHECKS TYPE - A AT DRAINAGE OUTLETS.

ENVIRONMENTALLY SENSITIVE AREA
SEE PROJECT SPECIAL PROVISIONS

8/17/99

8/18/2023
R:\Environmental\Design\EC Sheets\R003_EC_psh04.dgn
SmithH

DocuSign Envelope ID: 0908AB87-C088-4523-BEAB-A55EC9F5191D

8/17/99

PROJECT REFERENCE NO.	SHEET NO.
BPII.R003.3	EC-5\CONST 5

STV Engineers, Inc.
900 West Trade St., Suite 715
Charlotte, NC 28202
NC License Number F-0991

CLEARING AND GRUBBING
EROSION CONTROL FOR
CONSTRUCTION SHEET 5

NOTE:
UTILIZE TEMPORARY SEDIMENT BASIN OR SPECIAL STILLING BASIN(S) AS STILLING BASIN WHERE APPLICABLE.

NOTE:
PLACE TEMPORARY ROCK SEDIMENT DAMS TYPE – B AND TEMPORARY ROCK SILT CHECKS TYPE – A AT DRAINAGE OUTLETS.

NOTE:
FOLLOW NCDOT BMP MANUAL FOR CONSTRUCTION ACTIVITIES FOR THE BRIDGE DEMOLITION AND CONSTRUCTION.

DETAIL 4–1
CHANNEL CHANGE
(Not to Scale)

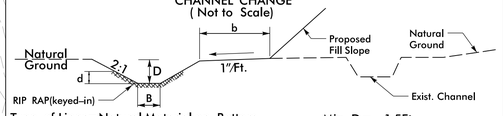

Type of Liner = Natural Material on Bottom, CL–I Rip Rap will be keyed into the stream bed and top dressed with native bed material as approved by the field engineer.

Min. D = 1.5Ft.
Max. d = 1.5Ft.
B = 8Ft.
b = 5Ft.

FROM –L– STA. 12+86 TO –L– STA. 16+95 RT

DETAIL 5–1
CHANNEL CHANGE
(Not to Scale)

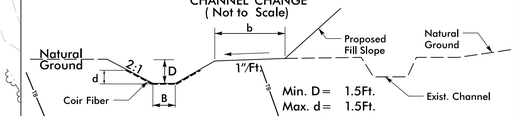

Min. D = 1.5Ft.
Max. d = 1.5Ft.
B = 2Ft.
b = 3Ft.

Type of Liner = Coir Fiber Matting (Sides Only)

FROM –L– STA. 17+78 TO –L– STA. 19+00 RT

CLEAN WATER DIVERSION
(Not to Scale)

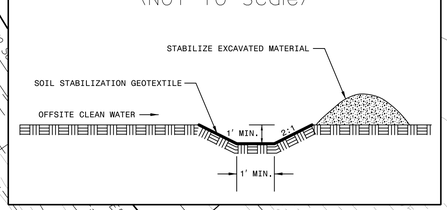

DETAIL 5–4
RIP RAP AT EMBANKMENT
(Not to Scale)

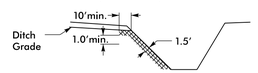

Type of Liner = 15 TONS,CL–I Rip–Rap

AT –L– STA. 17+00 RT
AT –L– STA. 17+78 RT

36 x 18 x 3
1.5 inch Skimmer
with 0.375 inch
Orifice Diameter
8 ft. weir
ID 5.1

SAG POINT
–L– STA: 18+57.05
ELEV: 2727.43'
(–)0.2012% (+)0.6047

MATCHLINE -L- STA 14+00 (SHEET EC-4)

MATCHLINE -L- STA 19+00 (SHEET EC-6)

NAD 83 NA 2011

STANDARD 'V' DITCH
SEE DETAIL 5–5

TEMPORARY 15" ALTERNATIVE PIPE

3 TON CLASS 'B' RIP RAP
11 SY GEOTEXTILE

10–yr Hw/D = 0.69

30" REMOVE

12" RCP

2–72" CMP W/SILLS AT 20' O.C.
SEE DETAILS 5–3 AND 5–6

CONC. ENDWALL

25–yr Hw/D = 1.2

INSTALL DUAL 72" CSP
IMMEDIATELY FOLLOWING THE
CLEARING & GRUBBING PHASE

PROPOSED CHANNEL CHANGE
EST. 178 TONS CLASS 'I' RIPRAP
SEE DETAIL 4–1
DDE = 560 CY

FLOATING TURBIDITY CURTAIN

20 TONS CLASS 'B' RIP RAP
30 SY GEOTEXTILE

RIP RAP AT EMBANKMENT
EST. 20 TONS CL–I RIP RAP
SEE DETAIL 5–4

PROPOSED CHANNEL CHANGE
EST. 150 SY COIR FIBER MATTING
SEE DETAIL 5–1
DDE = 62 CY

INSTALL CHANNEL CHANGE
IMMEDIATELY FOLLOWING THE
CLEARING & GRUBBING PHASE

25–yr Hw/D = 1.11

18" CMP REMOVE
18" RCP–III

SPECIAL CUT 'V' DITCH
SEE DETAIL 5–2

15" RCP–III

15" W/ELBOWS

PC Sta. 10+11.00

PT Sta. 11+51.79

PC Sta. 18+21.30

0.28%

1.58%

DON B. TUCKER
CAROL L. TUCKER
DB 333 PG 449

ROGER MULLIS
TANNY MULLIS
DB 230 PG 895

CARLOS WAYNE BLACK
HAROLD DOUGLAS BLACK
DB 452 PG

ESTEBAN SANCHEZ
MARY SANCHEZ
DB 451 PG 1654

TERESA MICHELLE VIERS
DB 371 PG 712
PB 6 PG 632

DANIEL
DB
PB

CRANBERRY CREEK

UPPER CRANBERRY CREEK RD (SR 1609)

CRANBERRY CREEK RD (SR 1609)

EXISTING R/W

BRIDGE #63

TELE ATTACHED TO BRIDGE IN CONDUIT

N 45° 28' 18.4" E NC–88

S 85°51'11.5" E

N 80°29'47" E 31.64'

N 86°05'38" W 30.07'

30' EASEMENT OF R/W DB 451 PG 1654 PB 6 PG 653

DETAIL 5–2
SPECIAL CUT DITCH
(Not to Scale)

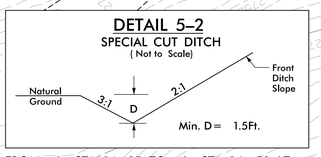

Min. D = 1.5Ft.

FROM –L– STA. 14+15 TO –L– STA. 14+50 LT
FROM –Y– STA. 12+50 TO –Y– STA. 12+63 LT

DETAIL 5–5
STANDARD 'V' DITCH
(Not to Scale)

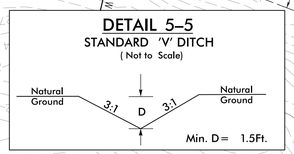

Min. D = 1.5Ft.

FROM –L– STA. 14+15 (31' LT) TO –L– STA. 14+50 (33' LT)

DETAIL 5–3
PIPE OUTLET CHANNEL STABILIZATION
(Not to Scale)

Length = 25 Ft.
Type of Liner = Native Material Supp. W/CL–I Rip rap – Keyed–In

–L– STA. 14+33 RT
–L– STA. 15+08 RT

DETAIL 5–6
SILLS IN PIPE CULVERT
(Not to Scale)

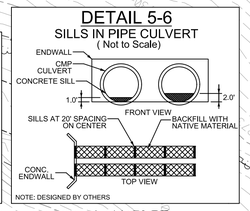

–L– 14+70 RT

ENVIRONMENTALLY SENSITIVE AREA
SEE PROJECT SPECIAL PROVISIONS

8/21/2023
R:\Environmental\Design\EC Sheets\R003_EC_psh05.dgn
mdice

DocuSign Envelope ID: 0908AB87-C088-4523-BEAB-A55EC9F5191D

PROJECT REFERENCE NO.	SHEET NO.
BPII.R003.3	EC-5A/CONST.5

STV Engineers, Inc.
900 West Trade St., Suite 715
Charlotte, NC 28202
NC License Number F-0991

CULVERT CONSTRUCTION SEQUENCE STA. 14+50 –L–

PHASE I

1. UTILIZE PUMP AROUND OPERATION AND SPECIAL STILLING BASIN(S) DURING CULVERT CONSTRUCTION AS NEEDED.
2. CONSTRUCT TEMPORARY DRIVEWAY AND INSTALL 36 INCH TEMPORARY PIPE.
3. INSTALL TEMPORARY SILT FENCE AND MATTING FOR EROSION CONTROL ON ENTIRE SLOPES.
4. EXCAVATE TO FACILITATE CULVERT CONSTRUCTION. INSTALL SHORING AS REQUIRED.
5. CONSTRUCT PROPOSED DUAL 72″ CULVERTS AND CONCRETE ENDWALL AT INLET IN DRY CONDITIONS WHILE MAINTAINING STREAM FLOW IN EXISTING CHANNEL.
6. ALLOW TRAFFIC TO ACCESS ORIGINAL DRIVE ALIGNMENT AND OVER NEWLY CONSTRUCTED DUAL 72″ CULVERTS.

PHASE II

7. REMOVE TEMPORARY DRIVEWAY TO THE GREATEST EXTENT WHILE KEEPING TEMPORARY 36 INCH PIPE TO HANDLE EXISTING STREAM FLOW.
8. CONSTRUCT IMPERVIOUS DIKES 1, 2 AND 3. MAINTAIN FLOW IN EXISTING CHANNEL.
9. UTILIZE SPECIAL STILLING BASIN(S) DURING CHANNEL CHANGE CONSTRUCTION AS NEEDED.
10. CONSTRUCT THE PROPOSED 8′ WIDE CHANNEL CHANGE AND PROPOSED RIP RAP LINER PER DETAIL 4–1.
11. ONCE NEW CHANNEL CHANGE IS COMPLETE AND STABILIZED WITH VEGETATION, REMOVE IMPERVIOUS DIKES TO DIVERT FLOW INTO NEW LOCATION.
12. REMOVE TEMPORARY 36″ PIPE, FILL IN OLD CHANNEL AND FLOWABLE FILL EXISTING 54″ PIPE.
13. PROCEED TO BRIDGE / ROADWAY CONSTRUCTION.

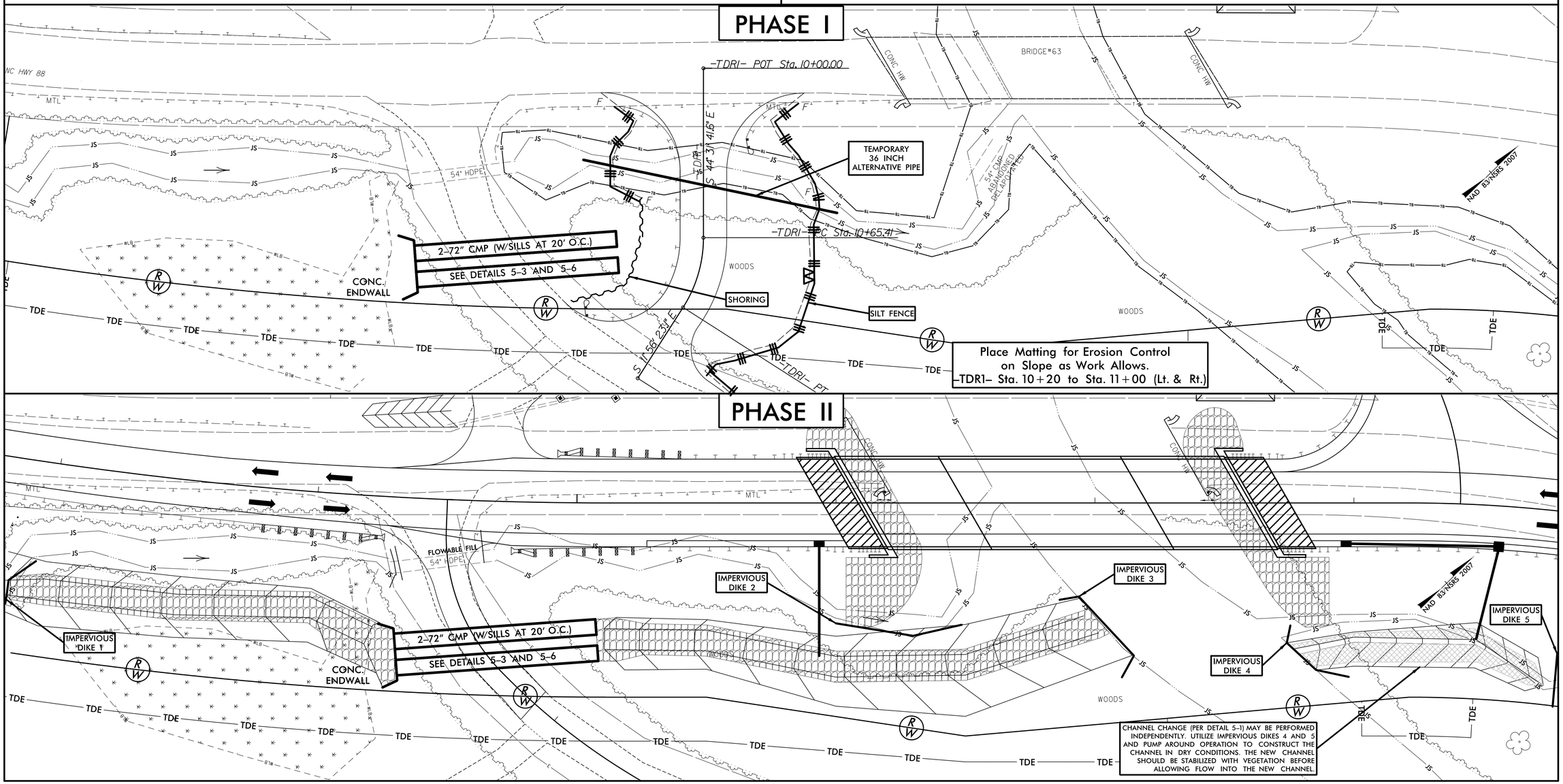

DocuSign Envelope ID: 0908AB87-C088-4523-BEAB-A55EC9F5191D

PROJECT REFERENCE NO.	SHEET NO.
BP11.R003.3	EC-6\CONST 6

STV Engineers, Inc.
900 West Trade St., Suite 715
Charlotte, NC 28202
NC License Number F-0991

NOTE:
UTILIZE TEMPORARY SEDIMENT BASIN OR SPECIAL STILLING BASIN(S) AS STILLING BASIN WHERE APPLICABLE.

NOTE:
FOLLOW NCDOT BMP MANUAL FOR CONSTRUCTION ACTIVITIES FOR THE BRIDGE DEMOLITION AND CONSTRUCTION.

CLEARING AND GRUBBING EROSION CONTROL FOR CONSTRUCTION SHEET 5

NOTE:
PLACE TEMPORARY ROCK SEDIMENT DAMS TYPE – B AND TEMPORARY ROCK SILT CHECKS TYPE – A AT DRAINAGE OUTLETS.

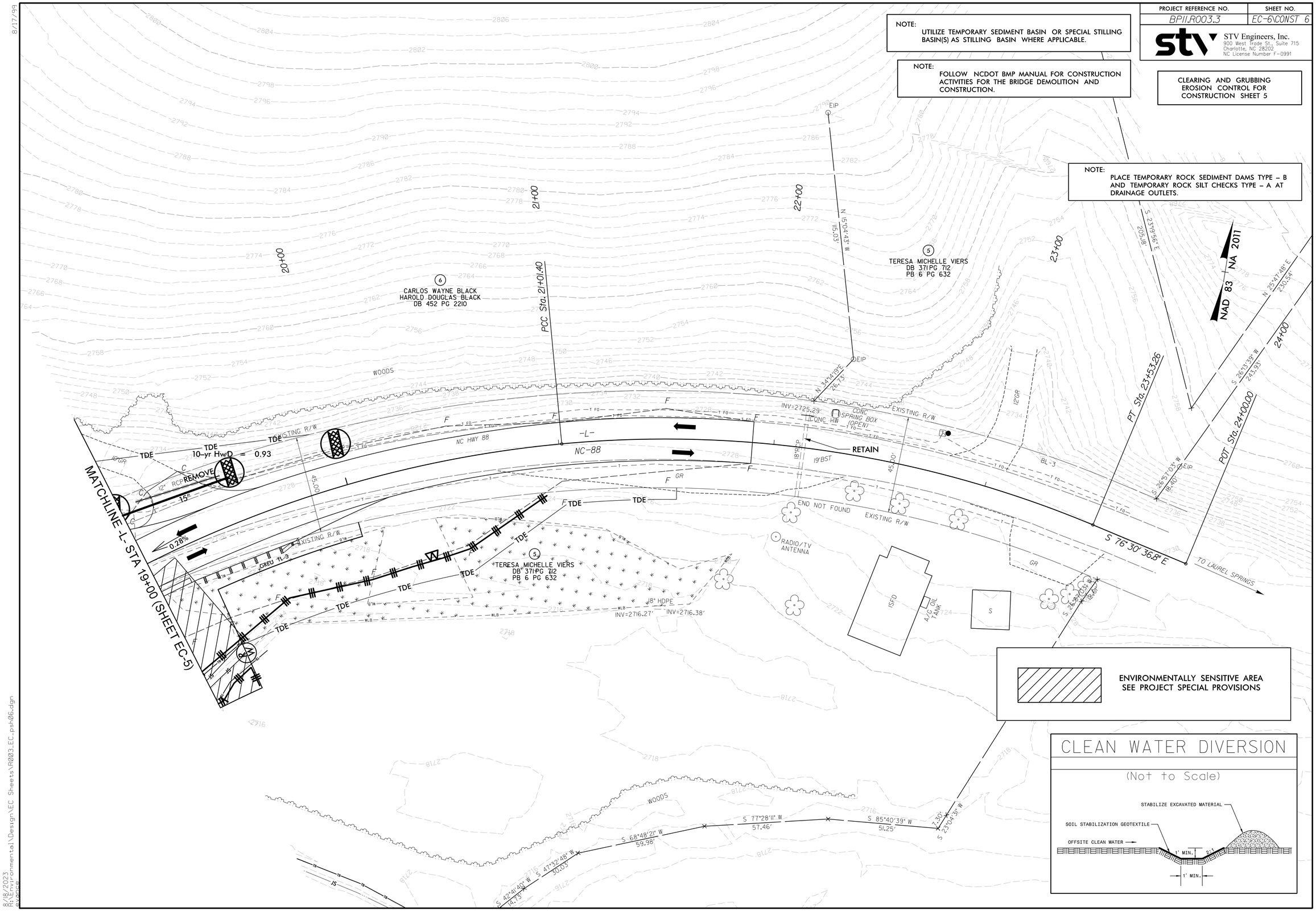

8/17/99

8/18/2023
R:\Environmental\Design\EC Sheets\R003_EC_psh06.dgn

DocuSign Envelope ID: 0908AB87-C088-4523-BEAB-A55EC9F5191D

8/17/99

PROJECT REFERENCE NO.	SHEET NO.
BPII.R003.3	EC-7\CONST 4

STV Engineers, Inc.
900 West Trade St., Suite 715
Charlotte, NC 28202
NC License Number F-0991

FINAL PHASE
EROSION CONTROL FOR
CONSTRUCTION SHEET 4

DETAIL 4–1
CHANNEL CHANGE
(Not to Scale)

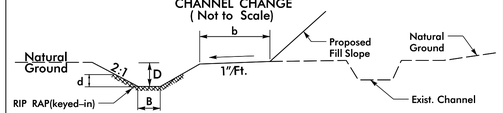

Type of Liner = Natural Material on Bottom,
CL–I Rip Rap will be keyed into the stream bed and top dressed with native bed material as approved by the field engineer.

Min. D = 1.5Ft.
Max. d = 1.5Ft.
B = 8Ft.
b = 5Ft.

FROM –L– STA. 12+86 TO –L– STA. 16+95 RT

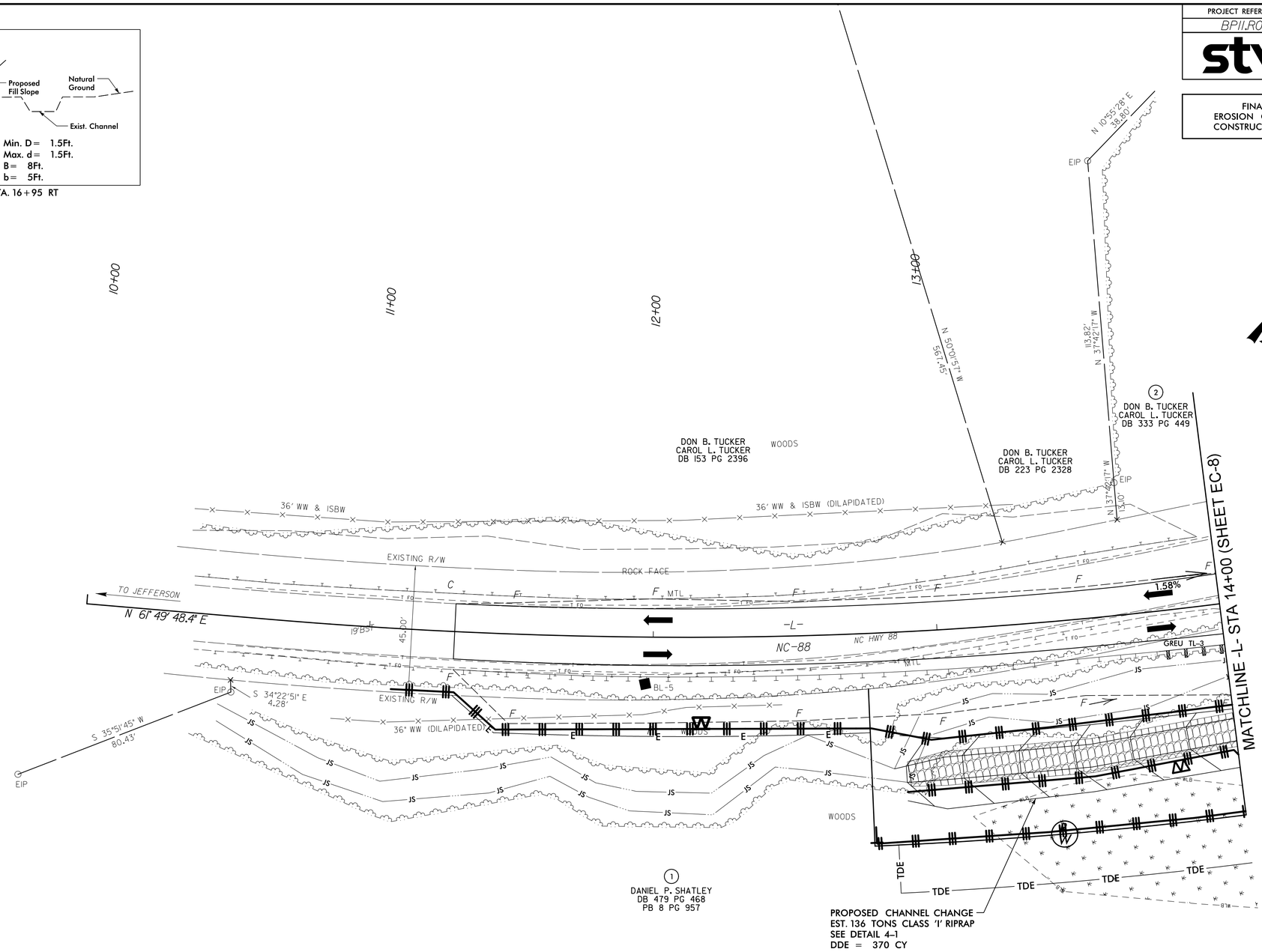

Place Matting for Erosion Control on Slope as Work Allows.
–L– Sta. 11+30 to Sta. 14+00 (RT)

NOTE:
FOLLOW NCDOT BMP MANUAL FOR CONSTRUCTION ACTIVITIES FOR THE BRIDGE DEMOLITION AND CONSTRUCTION.

NOTE:
SEE REFORESTATION SHEETS FOR CHANNEL CHANGE
FROM –L– STA. 14+00 TO 16+95 RIGHT AND
FROM –L– STA. 17+78 TO 19+00 RIGHT.
ZONE 1 LIVE STAKING TO BE DONE ON NEW STREAM BANKS ABOVE RIP RAP.
ZONE 2 PLANTINGS TO BE DONE ON ALL CLEARED AREAS WITHIN THE RIGHT OF WAY AND EASEMENTS.

8/18/2023
K:\Environmental\Design\EC Sheets\R003_EC_psh07.dgn
smithH

DocuSign Envelope ID: 0908AB87-C088-4523-BEAB-A55EC9F5191D

8/17/99

PROJECT REFERENCE NO.	SHEET NO.
BPII.R003.3	EC-8\CONST 5

STV Engineers, Inc.
900 West Trade St., Suite 715
Charlotte, NC 28202
NC License Number F-0991

FINAL PHASE
EROSION CONTROL FOR
CONSTRUCTION SHEET 5

NOTE:
FOLLOW NCDOT BMP MANUAL FOR CONSTRUCTION ACTIVITIES FOR THE BRIDGE DEMOLITION AND CONSTRUCTION.

Place Matting for Erosion Control on Slope as Work Allows.
–L– Sta. 14+00 to Sta. 16+00 (RT)
–L– Sta. 17+90 to Sta. 19+00 (RT)
–Y– Sta. 11+50 to Sta. 12+00 (RT)

DETAIL 4–1
CHANNEL CHANGE
(Not to Scale)

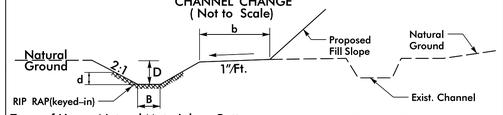

Type of Liner = Natural Material on Bottom, CL–I Rip Rap will be keyed into the stream bed and top dressed with native bed material as approved by the field engineer.

Min. D = 1.5Ft.
Max. d = 1.5Ft.
B = 8Ft.
b = 5Ft.

FROM –L– STA. 12+86 TO –L– STA. 16+95 RT

DETAIL 5–1
CHANNEL CHANGE
(Not to Scale)

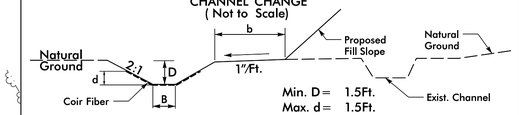

Min. D = 1.5Ft.
Max. d = 1.5Ft.
B = 2Ft.
b = 3Ft.

Type of Liner = Coir Fiber Matting (Sides Only)

FROM –L– STA. 17+78 TO –L– STA. 19+00 RT

36 x 18 x 3
1.5 inch Skimmer
with 0.375 inch
Orifice Diameter
8 ft. weir
ID 5.1

SAG POINT
–L– STA: 18+57.05
ELEV: 2727.43'
(–)0.3012% (+)0.6047

MATCHLINE -L- STA 14+00 (SHEET EC-7)

MATCHLINE -L- STA 19+00 (SHEET EC-9)

NAD 83 NA 2011

STANDARD 'V' DITCH
SEE DETAIL 5–5

10–yr HwD = 0.80

25–yr HwD = 1.11

25–yr HwD = 1.2

ABUTMENT EXCAVATION
TO ELEV. 2712.8'

3 TON CLASS 'B' RIP RAP
11 SY GEOTEXTILE

20 TONS CLASS 'B' RIP RAP
30 SY GEOTEXTILE

ABUTMENT EXCAVATION
TO ELEV. 2716.2'

FLOATING
TURBIDITY
CURTAIN

30" REMOVE 12" RCP–III

18" CMP REMOVE 18" RCP–III

SPECIAL CUT 'V' DITCH
SEE DETAIL 5–2

2–72" CMP W/SILLS AT 20' O.C.)
SEE DETAILS 5–3 AND 5–6

RIP RAP AT EMBANKMENT
EST. 20 TONS CL–I RIP RAP
SEE DETAIL 5–4

PROPOSED CHANNEL CHANGE
EST. 178 TONS CLASS 'I' RIPRAP
SEE DETAIL 4–1
DDE = 560 CY

PROPOSED CHANNEL CHANGE
EST. 150 SY COIR FIBER MATTING
SEE DETAIL 5–1
DDE = 62 CY

NOTE:
SEE REFORESTATION SHEETS FOR CHANNEL CHANGE
FROM –L– STA. 14+00 TO 16+95 RIGHT AND
FROM –L– STA. 17+78 TO 19+00 RIGHT.
ZONE 1 LIVE STAKING TO BE DONE ON NEW STREAM BANKS ABOVE RIP RAP.
ZONE 2 PLANTINGS TO BE DONE ON ALL CLEARED AREAS WITHIN THE RIGHT OF WAY AND EASEMENTS.

(2) DON B. TUCKER, CAROL L. TUCKER, DB 333 PG 449

(4) ROGER MULLIS, TANNY MULLIS, DB 230 PG 895

(6) CARLOS WAYNE BLACK, HAROLD DOUGLAS BLACK, DB 452 PG 2210

(5) TERESA MICHELLE VIERS, DB 371 PG 712, PB 6 PG 632

(3) ESTEBAN SANCHEZ, MARY SANCHEZ, DB 451 PG 1654

(1) DANIEL P. SHATLEY, DB 479 PG 468, PB 8 PG 957

S 85°51'11.5" E 1195.07'

N 45° 28' 18.4" E NC–88

N 80°29'47" E 31.64'

N 86°05'38" W 30.07'

S 42°07'52" E 292.41'

BRIDGE #63

CRANBERRY CREEK

UPPER CRANBERRY CREEK RD (SR 1609)

TO SCOTTVILLE

EXISTING R/W

RIP/RAP

WOODS

IDBKD

WELL

ABANDON

TELE ATTACHED TO BRIDGE IN CONDUIT

FLOWABLE FILL

CONC. FLOWALL

TYPE–III

GREU TL–3

0500 0501 0502 0503 0504 0505 0508 0509

8/21/2023
R:\Environmental\Design\EC Sheets\R003_EC_psh08.dgn
BRIDGE

DocuSign Envelope ID: 0908AB87-C088-4523-BEAB-A55EC9F5191D

PROJECT REFERENCE NO.	SHEET NO.
BP11.R003.3	EC-9\CONST 6

STV Engineers, Inc.
900 West Trade St., Suite 715
Charlotte, NC 28202
NC License Number F-0991

FINAL PHASE
EROSION CONTROL FOR
CONSTRUCTION SHEET 6

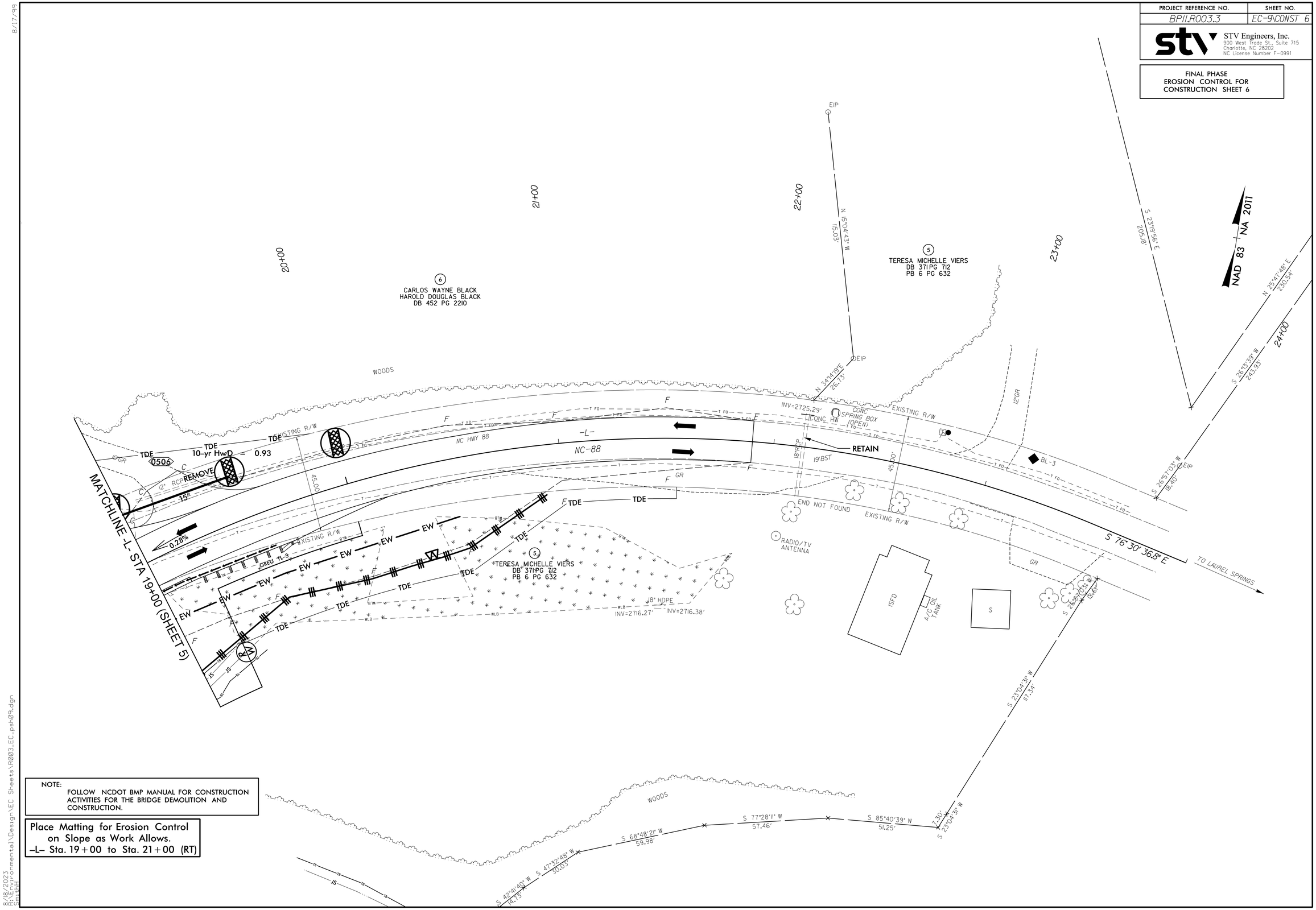

NOTE:
FOLLOW NCDOT BMP MANUAL FOR CONSTRUCTION ACTIVITIES FOR THE BRIDGE DEMOLITION AND CONSTRUCTION.

Place Matting for Erosion Control on Slope as Work Allows.
-L- Sta. 19+00 to Sta. 21+00 (RT)

8/17/99

8/18/2023
R:\Environmental\Design\EC Sheets\R003_EC_psh09.dgn
SmithH

DocuSign Envelope ID: 0908AB87-C088-4523-BEAB-A55EC9F5191D

PLANTING DETAILS

LIVE STAKES PLANTING DETAIL

LIVE STAKE

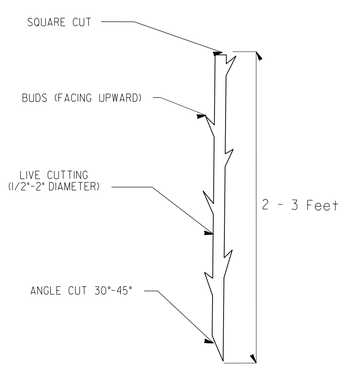

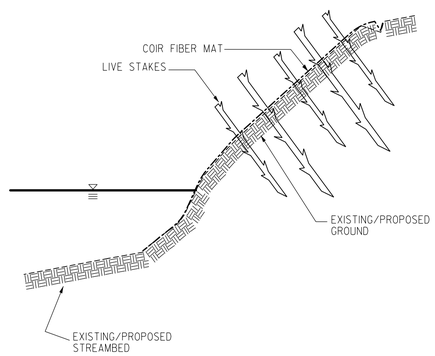

BANK STABILIZATION WITH LIVE STAKES

NOTE:
LIVE STAKES SHALL BE SPACED APPROXIMATELY 4 FEET ON CENTER
LIVE STAKES SHALL BE DRIVEN UNTIL APPROXIMATELY 3/4 OF LIVE STAKE IS WITHIN GROUND

BAREROOT PLANTING DETAIL
DIBBLE PLANTING METHOD
USING THE KBC PLANTING BAR

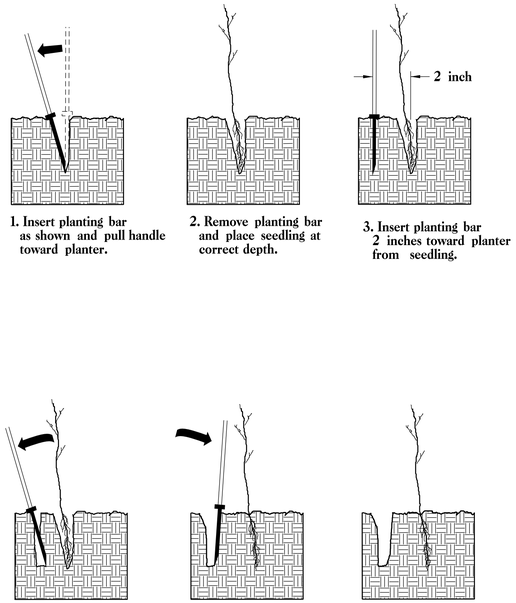

1. Insert planting bar as shown and pull handle toward planter.
2. Remove planting bar and place seedling at correct depth.
3. Insert planting bar 2 inches toward planter from seedling.
4. Pull handle of bar toward planter, firming soil at bottom.
5. Push handle forward firming soil at top.
6. Leave compaction hole open. Water thoroughly.

PLANTING NOTES:

PLANTING BAG
During planting, seedlings shall be kept in a moist canvas bag or similar container to prevent the root systems from drying.



KBC PLANTING BAR
Planting bar shall have a blade with a triangular cross section, and shall be 12 inches long, 4 inches wide and 1 inch thick at center.



ROOT PRUNING
All seedlings shall be root pruned, if necessary, so that no roots extend more than 10 inches below the root collar.

PROJECT REFERENCE NO.	SHEET NO.
BP11.R003.3	RF-1
R/W SHEET NO.	
ROADWAY DESIGN ENGINEER	HYDRAULICS ENGINEER

☐ TYPE 1 STREAMBANK REFORESTATION SHALL BE PLANTED 3 FT. TO 5 FT. ON CENTER, RANDOM SPACING, AVERAGING 4 FT. ON CENTER, APPROXIMATELY 2724 PLANTS PER ACRE.

☐ TYPE 2 STREAMBANK REFORESTATION SHALL BE PLANTED 6 FT. TO 10 FT. ON CENTER, RANDOM SPACING, AVERAGING 8 FT. ON CENTER, APPROXIMATELY 680 PLANTS PER ACRE.

☐ NOTE: TYPE 1 AND TYPE 2 STREAMBANK REFORESTATION SHALL BE PAID FOR AS "STREAMBANK REFORESTATION"

STREAMBANK REFORESTATION TYPICAL

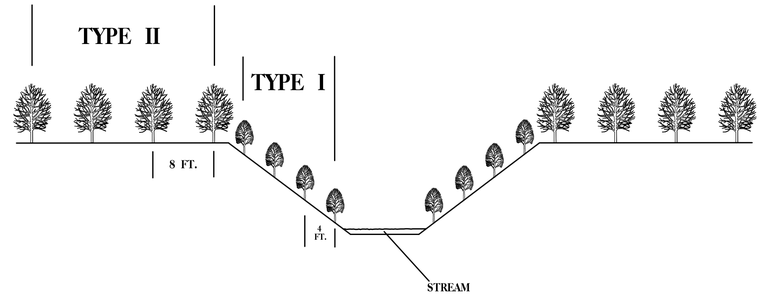

STREAMBANK REFORESTATION

MIXTURE, TYPE, SIZE, AND FURNISH SHALL CONFORM TO THE FOLLOWING:

TYPE 1			
50 %	SALIX NIGRA	BLACK WILLOW	2 ft – 3 ft LIVE STAKES
50 %	CORNUS AMOMUM	SILKY DOGWOOD	2 ft – 3 ft LIVE STAKES
TYPE 2			
25 %	LIRIODENDRON TULIPIFERA	TULIP POPLAR	12 in – 18 in BR
25 %	PLATANUS OCCIDENTALIS	SYCAMORE	12 in – 18 in BR
25 %	PRUNUS SEROTINA	BLACK CHERRY	12 in – 18 in BR
25 %	BETULA NIGRA	RIVER BIRCH	12 in – 18 in BR

☐ SEE PLAN SHEETS FOR AREAS TO BE PLANTED

STREAMBANK REFORESTATION DETAIL SHEET 1 OF 2

N.C.D.O.T. - ROADSIDE ENVIRONMENTAL UNIT

DocuSign Envelope ID: 0908AB87-C088-4523-BEAB-A55EC9F5191D

PROJECT REFERENCE NO.	SHEET NO.
BPII.R003.3	RF-2
R/W SHEET NO.	
ROADWAY DESIGN ENGINEER	HYDRAULICS ENGINEER

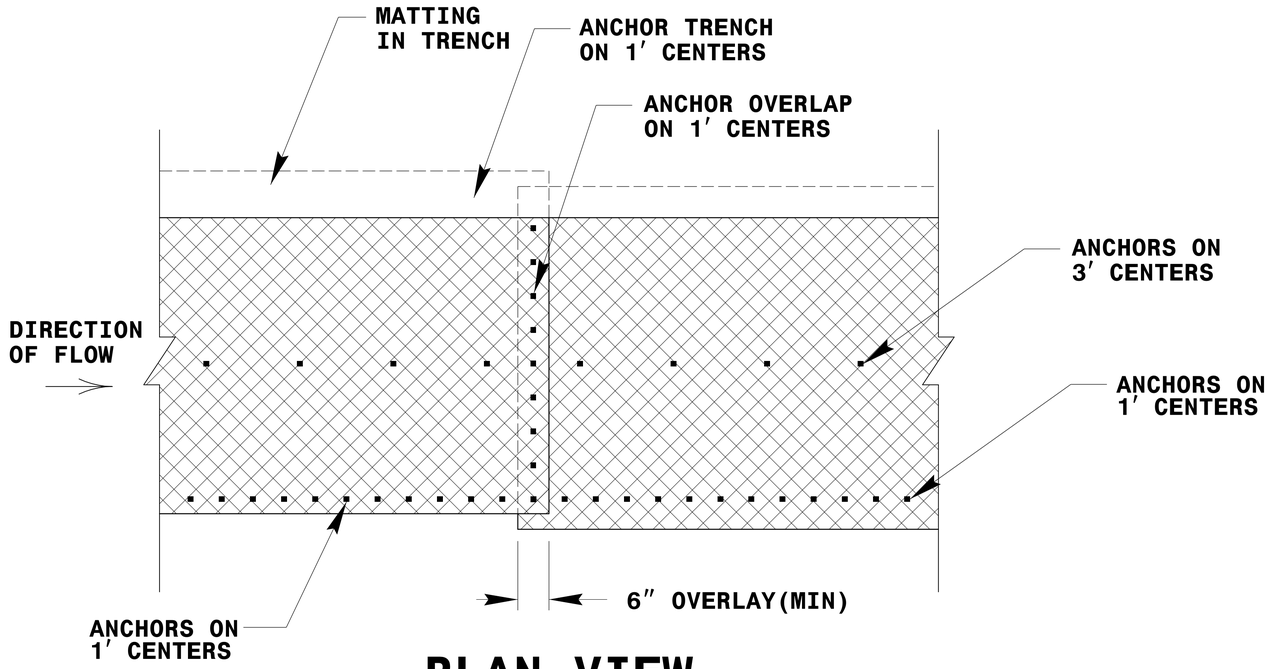

PLAN VIEW

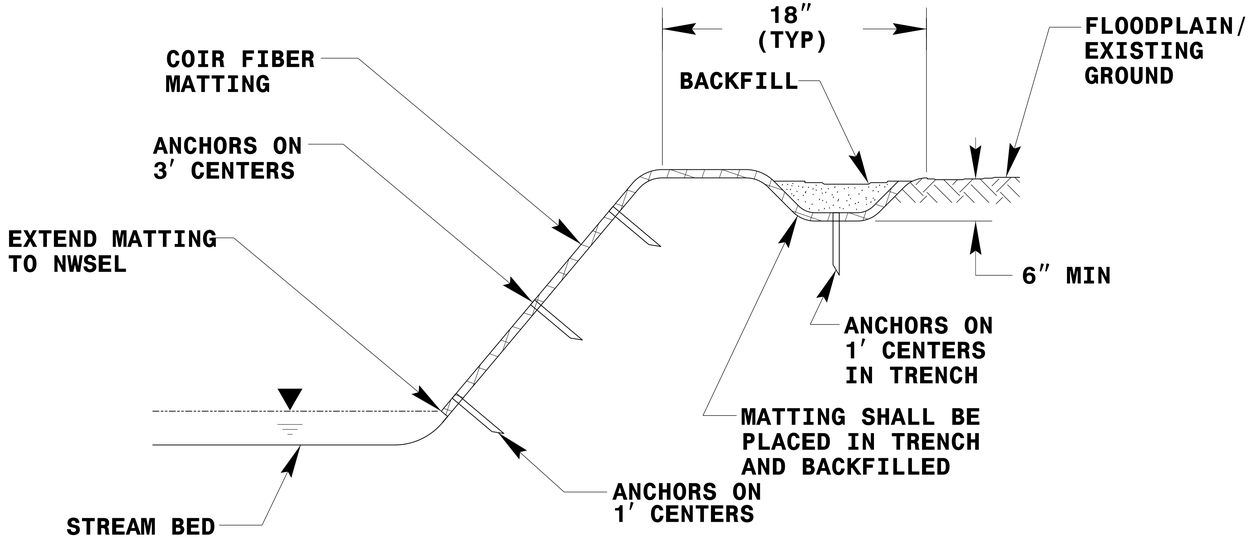

TYPICAL CROSS SECTION

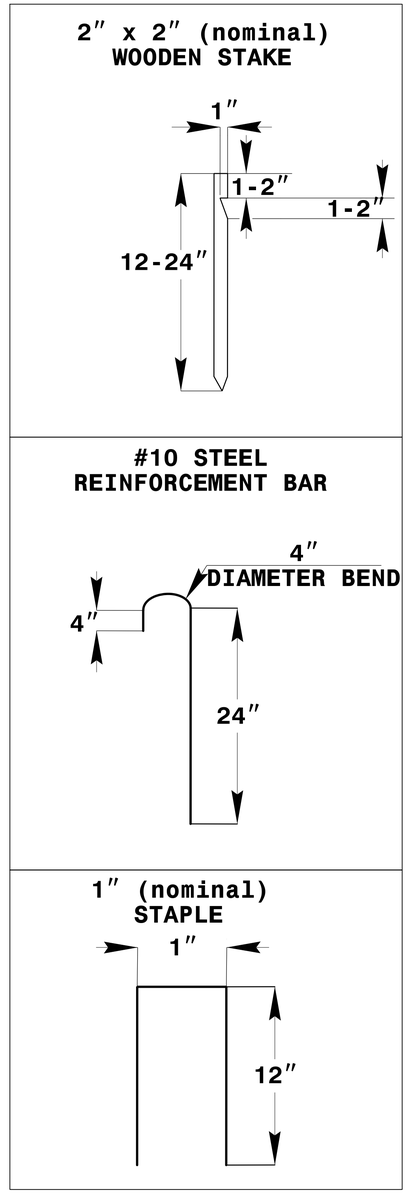

ANCHOR OPTIONS

COIR FIBER MATTING DETAIL

NOT TO SCALE

STREAMBANK REFORESTATION
DETAIL SHEET 2 OF 2
N.C.D.O.T.- ROADSIDE ENVIRONMENTAL UNIT

DocuSign Envelope ID: 0908AB87-C088-4523-BEAB-A55EC9F5191D

09/08/09

PROJECT WBS: BP11.R003.2

CONTRACT: DJ00352

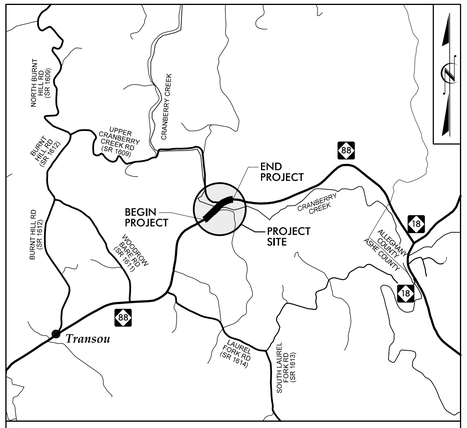

STATE OF NORTH CAROLINA
DIVISION OF HIGHWAYS

UTILITIES BY OTHERS PLANS
ASHE COUNTY

STATE PROJECT REFERENCE NO.	SHEET NO.
BP11.R003.2	UO–1

NOTE:
ALL UTILITY WORK SHOWN ON THIS SHEET IS DONE BY OTHERS.
NO PAYMENT WILL BE MADE TO THE CONTRACTOR FOR UTILITY WORK SHOWN ON THIS SHEET.



LOCATION:
BRIDGE #063 OVER CRANBERRY CREEK ON NC HWY 88

TYPE OF WORK:
COMMUNICATIONS

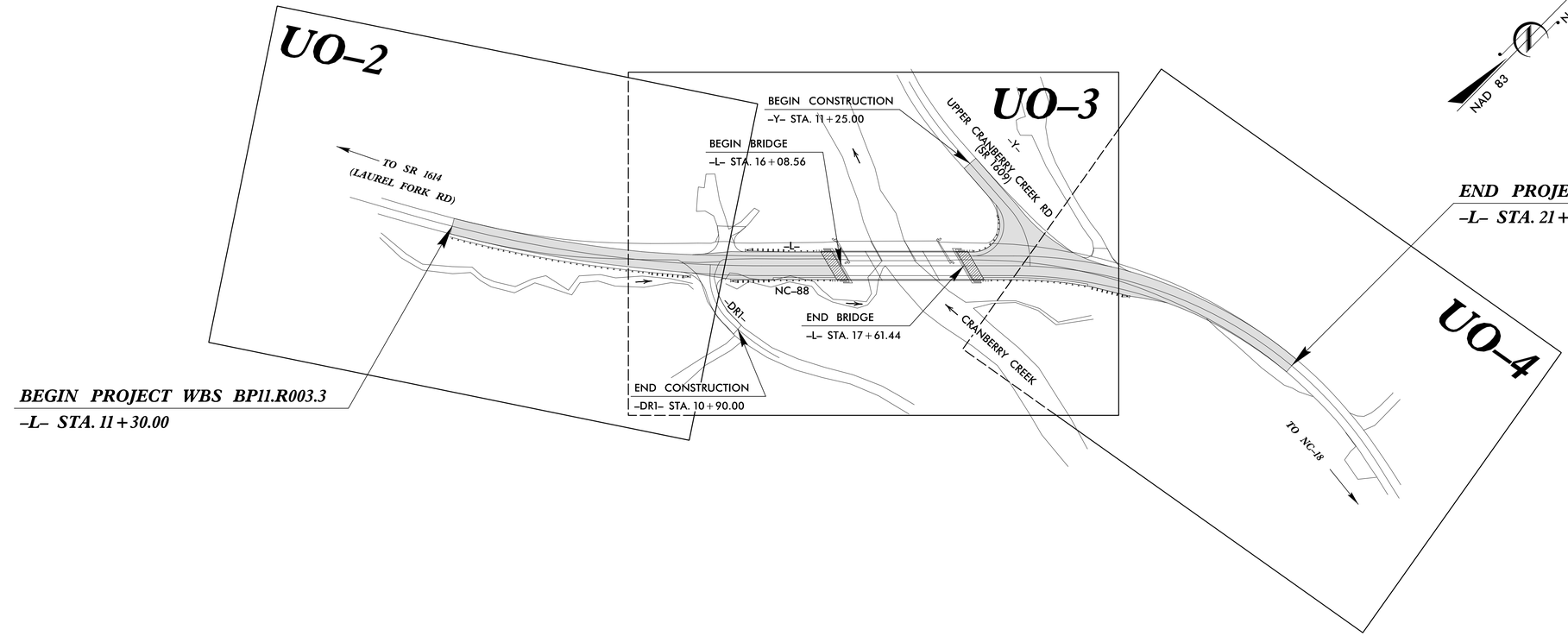

GRAPHIC SCALES

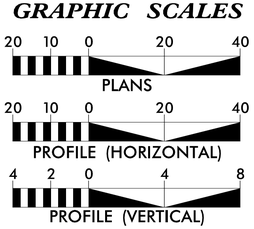

INDEX OF SHEETS

SHEET NO.:	*DESCRIPTION:*
UO–1	*TITLE SHEET*
UO–02 THRU UO–04	*UBO PLAN SHEETS*

UTILITY OWNERS WITH CONFLICTS

(A) COMMUNICATIONS – SKYLINE | SKYBEST

PLANS PREPARED FOR THE NCDOT BY:

STV Engineers, Inc.
900 West Trade St., Suite 715
Charlotte, NC 28202
NC License Number F–0991

Oriana Roumillat	*UTILITY PROJECT MANAGER*
Justin Hill	*PROJECT UTILITY COORDINATOR*
Justin Hill	*PROJECT UTILITY CAD TECH*

DIVISION OF HIGHWAYS
DIVISION 11
801 STATESVILLE RD
NORTH WILKES BORO, 28659
PHONE (336) 903–9101
FAX (336) 667–4549

Brandon S. Greer	*UTILITIES ENGINEER*
Susan O. Huffman	*UTILITIES COORDINATOR*
Rob Weisz, PE	*BRIDGE PROGRAM MANAGER*

$$$$SYSTIME$$$$
$$$$USERNAME$$$$
$$$$DGN$$$$

DocuSign Envelope ID: 0908AB87-C088-4523-BEAB-A55EC9F5191D

8/17/99

STV Engineers, Inc.
900 West Trade St, Suite 715
Charlotte, NC 28202
NC License Number F-0991

PROJECT REFERENCE NO.	SHEET NO.
BP11.R003	U0-2
THIS SHEET CORRESPONDS TO RDY-4	

UTILITIES BY OTHERS

NOTE:
ALL UTILITY WORK SHOWN ON THIS SHEET WILL BE DONE BY OTHERS. NO PAYMENT WILL BE MADE TO THE CONTRACTOR FOR UTILITY WORK SHOWN ON THIS SHEET.

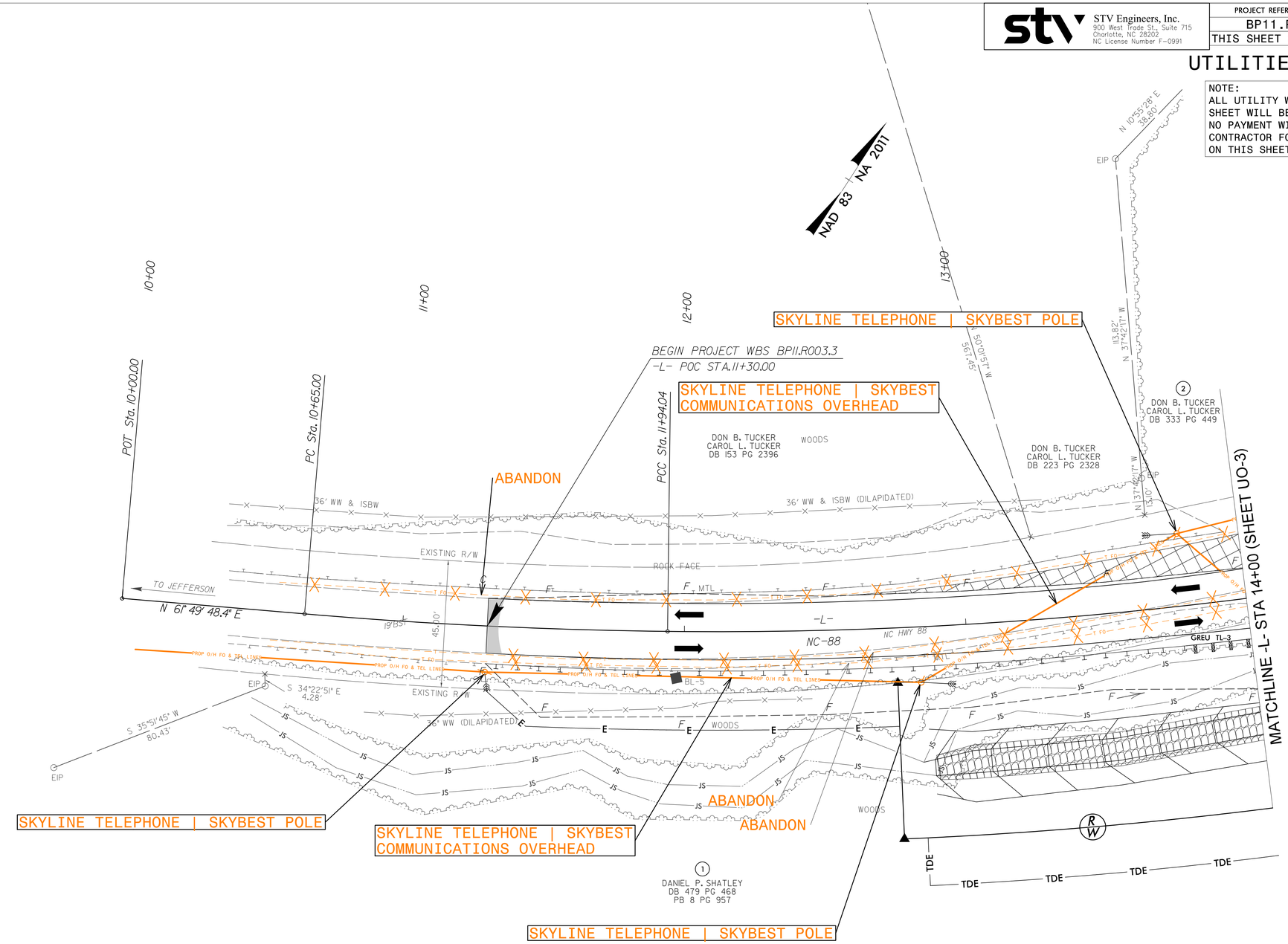

$$$$USERNAME$$$$
$$$$SYSTIME$$$$
$$$$DGN$$$$

DocuSign Envelope ID: 0908AB87-C088-4523-BEAB-A55EC9F5191D

8/17/99

STV Engineers, Inc.
900 West Trade St, Suite 715
Charlotte, NC 28202
NC License Number F-0991

PROJECT REFERENCE NO.	SHEET NO.
BP11.R003	U0-3
THIS SHEET CORRESPONDS TO RDY-5	

UTILITIES BY OTHERS

NOTE:
ALL UTILITY WORK SHOWN ON THIS SHEET WILL BE DONE BY OTHERS. NO PAYMENT WILL BE MADE TO THE CONTRACTOR FOR UTILITY WORK SHOWN ON THIS SHEET.

NAD 83 NA 2011

SKYLINE TELEPHONE | SKYBEST COMMUNICATIONS OVERHEAD

SKYLINE TELEPHONE | SKYBEST COMMUNICATIONS OVERHEAD

SKYLINE TELEPHONE | SKYBEST POLE WITH PUSH BRACE

SKYLINE TELEPHONE | SKYBEST COMMUNICATIONS UNDERGROUND

SKYLINE TELEPHONE | SKYBEST POLE

SKYLINE TELEPHONE | SKYBEST COMMUNICATIONS UNDERGROUND

BEGIN CONSTRUCTION
-Y- STA 11+25.00

PC Sta. 10+00.00

PT Sta. 10+93.41

S 85° 51' 11.8" E

PC Sta. 11+98.82

PT Sta. 15+12.94

PC Sta. 10+71.86

PT Sta. 11+51.79

PC Sta. 18+21.30

N 45° 28' 18.4" E NC-88

N 70° 35' 17" W 494.90'

N 80° 29' 47" E 316.64'

N 86° 05' 38" W 311.07'

N 80° 29' 47" E 316.64'

N 70° 35' 17" W 494.90'

N 80° 29' 47" E 316.64'

N 86° 05' 38" W 311.07'

MATCHLINE -L- STA 14+00 (SHEET UO-2)

MATCHLINE -L- STA 19+00 (SHEET UO-4)

UPPER CRANBERRY CREEK RD (SR 1609)

CRANBERRY CREEK

RIP-RAP

WOODS

WELL

IDBKD

ABANDON

REM

REMOVE

BRIDGE #63

TYPE-III

TELE ATTACHED TO BRIDGE IN CONDUIT

GREU TL-3

BL-4

PROP O/H FO & TEL LINES

PROP U/G FO & TEL LINES

5.41' CMP ABANDON PLAN PIPE

18" CMP

-DRI- 10" DIP

-DRI- 15" RCP

-DRI- 24" RCP

-DRI- 36" RCP

-DRI- 48" RCP

54" DPE

10'SOIL

MTL GATE

30' EASEMENT OF R/W DB 1591 PG 1654 PB 7 PG 653

SKYLINE TELEPHONE TO INSTALL UNDERGROUND AT A MINIMUM DEPTH OF 8 FEET FROM EXISTING GRADE TO AVOID CONFLICT WITH PROPOSED DRAINAGE

SKYLINE TELEPHONE | SKYBEST POLE

SKYLINE TELEPHONE | SKYBEST COMMUNICATIONS OVERHEAD

SKYLINE TELEPHONE | SKYBEST COMMUNICATIONS UNDERGROUND

1 DANIEL P. SHATLEY
DB 479 PG 468
PB 8 PG 957

2 DON B. TUCKER
CAROL L. TUCKER
DB 333 PG 449

3 ESTEBAN SANCHEZ
MARY SANCHEZ
DB 451 PG 1654

4 ROGER MULLIS
TANNY MULLIS
DB 230 PG 895

5 TERESA MICHELLE VIERS
DB 371 PG 712
PB 0 PG 632

6 CARLOS WAYNE BLACK
HAROLD DOUGLAS BLACK
DB 452 PG 2210

$$$$SYSTIME$$$$
$$$$USERNAME$$$$

DocuSign Envelope ID: 0908AB87-C088-4523-BEAB-A55EC9F5191D

8/17/99

STV Engineers, Inc.
900 West Trade St., Suite 715
Charlotte, NC 28202
NC License Number F-0991

PROJECT REFERENCE NO.	SHEET NO.
BP11.R003	U0-4

THIS SHEET CORRESPONDS TO RDY-6

UTILITIES BY OTHERS

NOTE:
ALL UTILITY WORK SHOWN ON THIS SHEET WILL BE DONE BY OTHERS. NO PAYMENT WILL BE MADE TO THE CONTRACTOR FOR UTILITY WORK SHOWN ON THIS SHEET.

NAD 83 NA 2011

20+00

21+00

22+00

23+00

24+00

PCC Sta. 21+01.40

END PROJECT WBS BP11.R003.3
-L- POC STA.21+90.00

PT Sta. 23+53.26

POT Sta. 24+00.00

MATCHLINE -L- STA 19+00 (SHEET UO-3)

NC-88

NC HWY 88

-L-

ABANDON

ABANDON

ABANDON

SKYLINE TELEPHONE | SKYBEST COMMUNICATIONS UNDERGOUND

SKYLINE TELEPHONE | SKYBEST COMMUNICATIONS UNDERGOUND

(6) CARLOS WAYNE BLACK
HAROLD DOUGLAS BLACK
DB 452 PG 2210

(5) TERESA MICHELLE VIERS
DB 371PG 712
PB 6 PG 632

(5) TERESA MICHELLE VIERS
DB 371PG 712
PB 6 PG 632

WOODS

EXISTING R/W

TDE

PROP U/G TEL & FO CABLES

CABLE TV

CATV

CREU TL-3

12" RCP

18" HDPE
INV=2716.27'
INV=2716.38'

INV=2725.29'
CONC SPRING BOX (OPEN)
TICONC HW

18"BST

19"BST

END NOT FOUND

RADIO/TV ANTENNA

ISFD

4.6'GRL
7.4'AW

BL-3

TO LAUREL SPRINGS

N 15°04'43" W
115.03'

S 23°19'56" E
205.18'

N 25°47'48" E
230.54'

S 26°13'38" W
243.93'

S 26°57'03" W
18.40'

S 76°30'36.8" E

S 23°04'39" W
117.34'

S 85°40'39" W
51.25'

S 77°28'11" W
57.46'

S 68°48'21" W
59.98'

S 47°32'48" W
30.03'

S 42°41'40" W
14.73'

N 34°14'19" E
26.13'

45.00'

7.30'

12.6'

$$$$USERNAME$$$$
$$$$SYSTIME$$$$

DocuSign Envelope ID: 0908AB87-C088-4523-BEAB-A55EC9F5191D



6/23/16
9/5/2023
R:\Roadway\Corridor Modeling\L\R003_rdy_xpl_L.dgn
SaucieSL

DocuSign Envelope ID: 0908AB87-C088-4523-BEAB-A55EC9F5191D

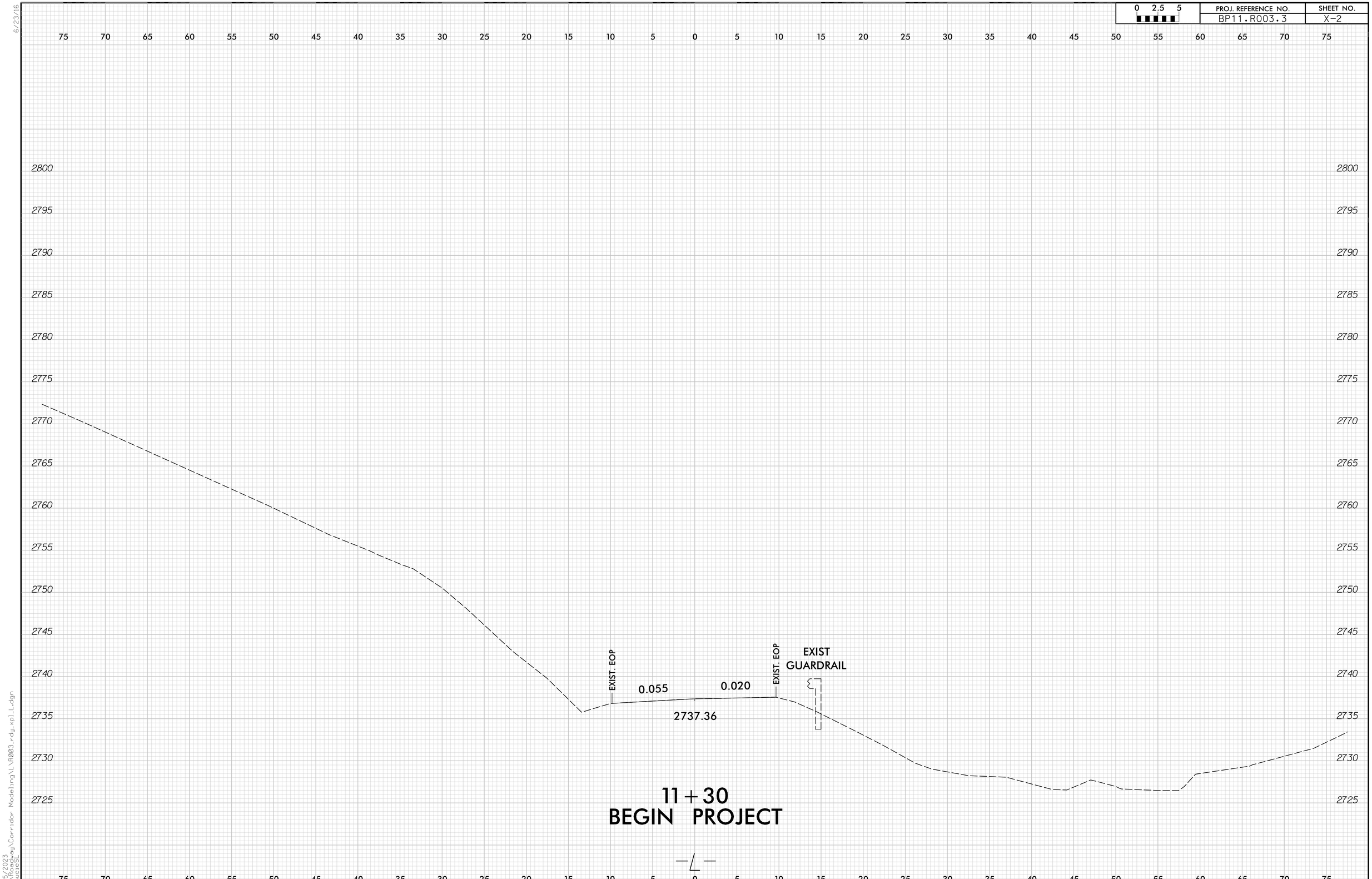

6/23/16
9/5/2023
R:\Roadway\Corridor Modeling\L\R003_rdy_xpl_L.dgn
SaucieSL

DocuSign Envelope ID: 0908AB87-C088-4523-BEAB-A55EC9F5191D

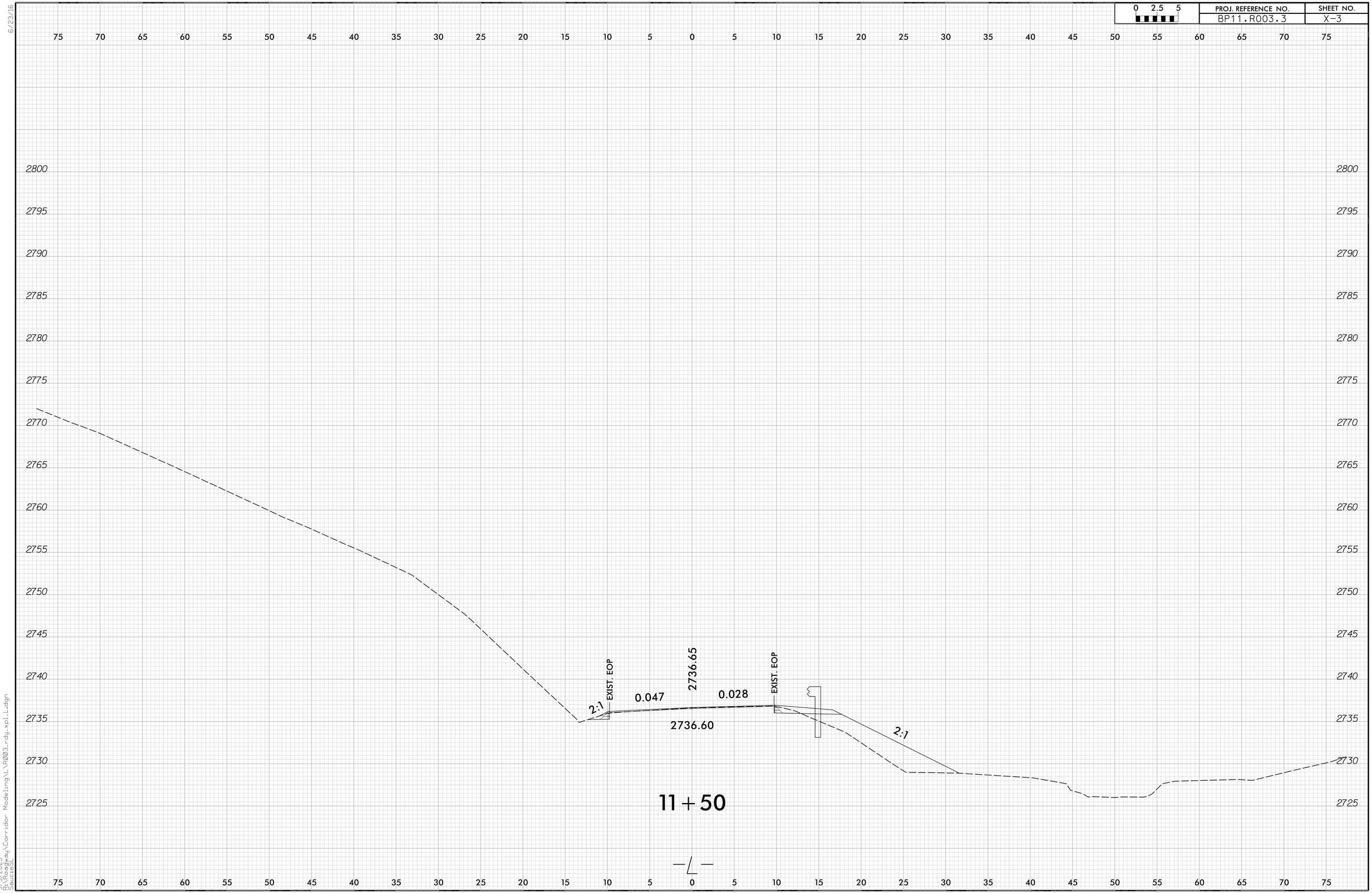

6/23/16
9/5/2023
R:\Roadway\Corridor Modeling\L\R003_rdy_xpl_L.dgn
SaucieSL

DocuSign Envelope ID: 0908AB87-C088-4523-BEAB-A55EC9F5191D



6/23/16
9/5/2023
R:\Roadway\Corridor Modeling\L\R003_rdy_xpl_L.dgn
SaucieSL

DocuSign Envelope ID: 0908AB87-C088-4523-BEAB-A55EC9F5191D

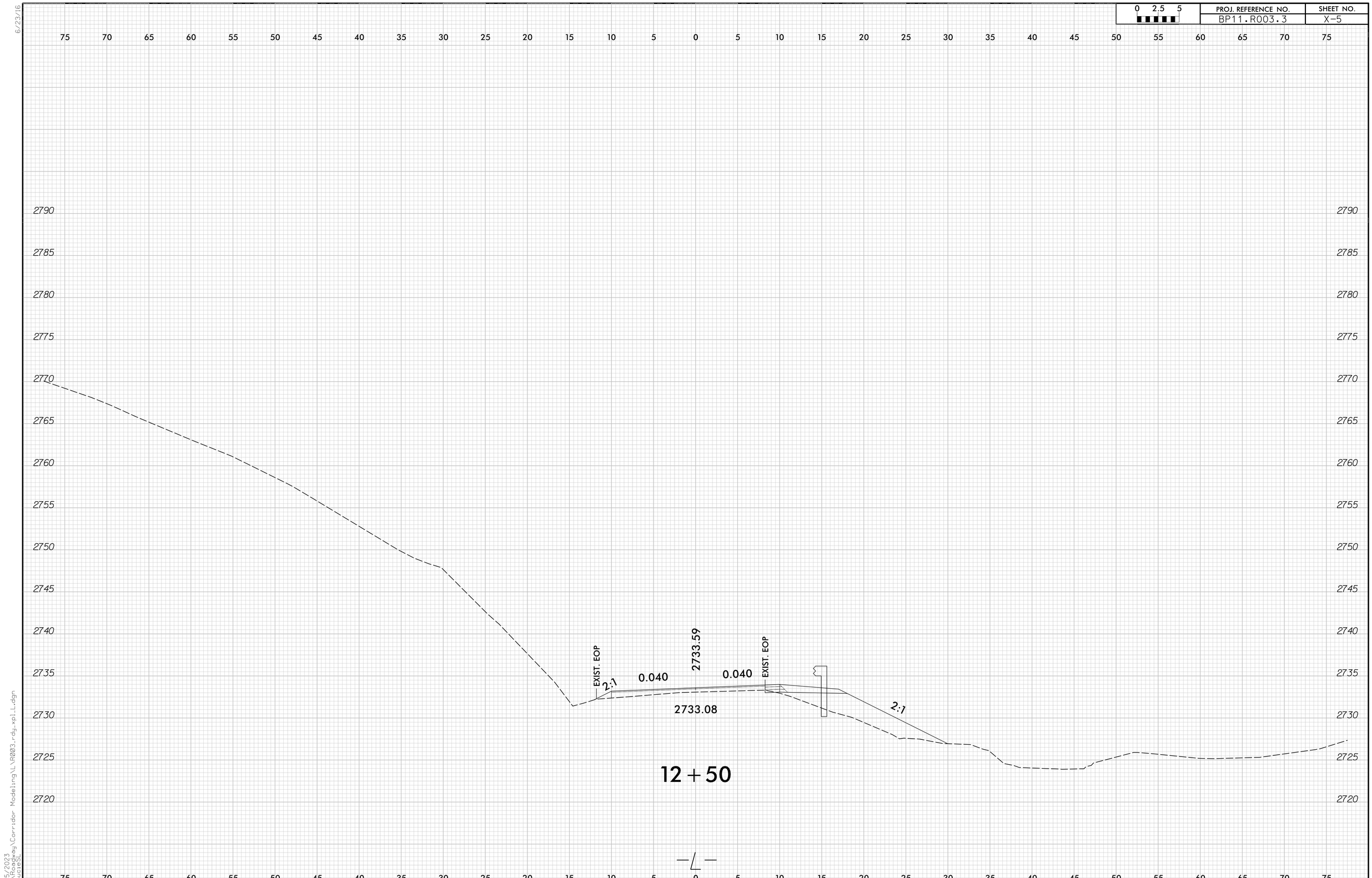

6/23/16
9/5/2023
R:\Roadway\Corridor Modeling\L\R003_rdy_xpl_L.dgn
SaucieSL

DocuSign Envelope ID: 0908AB87-C088-4523-BEAB-A55EC9F5191D



6/23/16
9/5/2023
R:\Roadway\Corridor Modeling\L\R003_rdy_xpl_L.dgn
SaucieSL

DocuSign Envelope ID: 0908AB87-C088-4523-BEAB-A55EC9F5191D

6/23/16

0 2.5 5	PROJ. REFERENCE NO.	SHEET NO.
	BP11.R003.3	X-7

75 70 65 60 55 50 45 40 35 30 25 20 15 10 5 0 5 10 15 20 25 30 35 40 45 50 55 60 65 70 75

2760 2755 2750 2745 2740 2735 2730 2725

–DR1–

EXIST. EOP

3:1 3:1

2725.75

2:1

0.032

EXIST. EOP

2729.78

0.032

2728.92

14+50

2750 2745 2740 2735 2730 2725 2720 2715

EXIST. EOP

0.040

EXIST. EOP

2730.50

0.040

2729.26

2:1

2:1

2:1

2720.87

14+00

9/5/2023
R:\Roadway\Corridor Modeling\LR003_rdy_xpLL.dgn
Savage

DocuSign Envelope ID: 0908AB87-C088-4523-BEAB-A55EC9F5191D

PROJ. REFERENCE NO.	SHEET NO.
BP11.R003.3	X-8

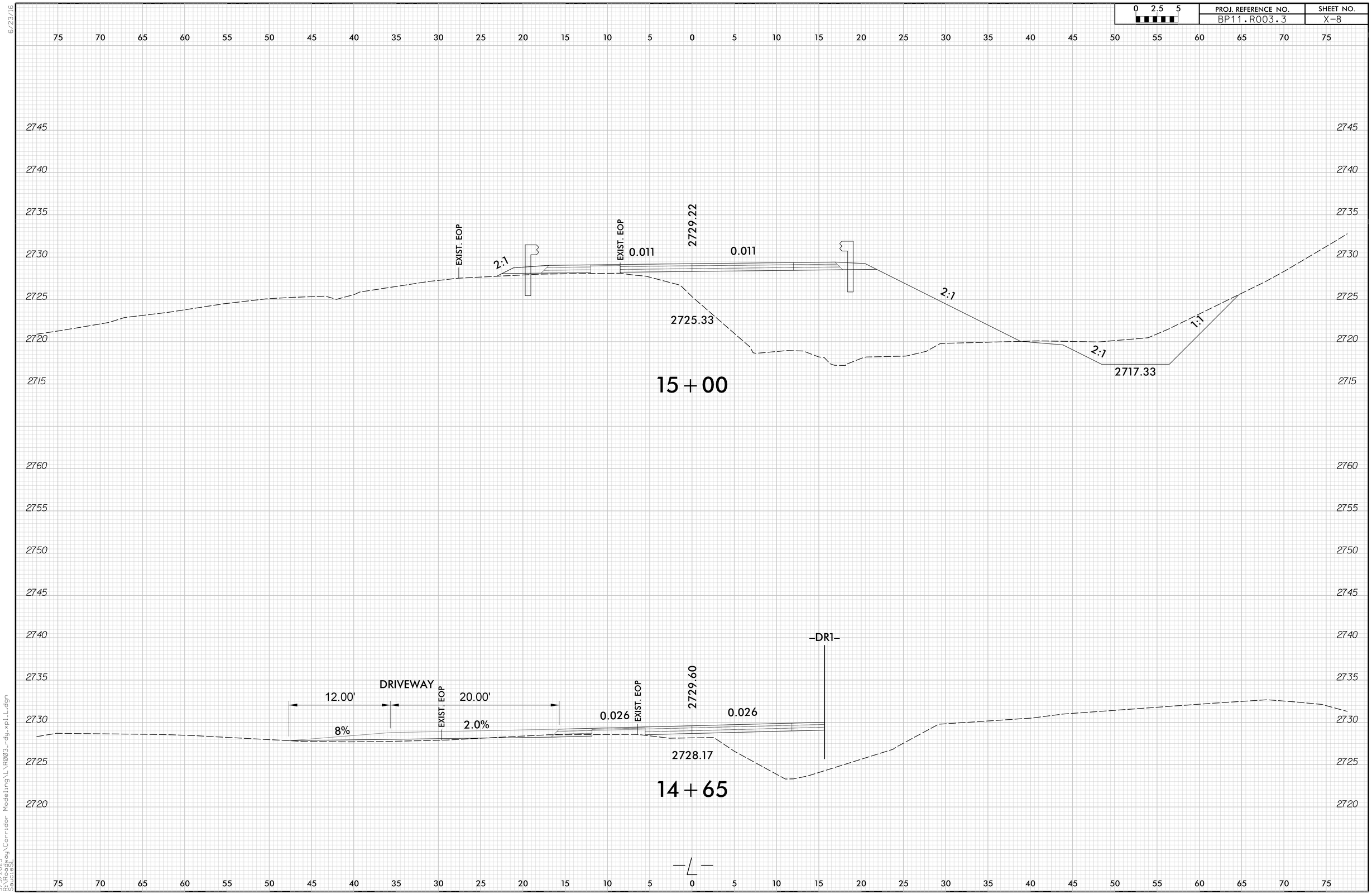

9/5/2023
R:\Roadway\Corridor Modeling\L\R003_rdy_xpl_L.dgn
SaucieSL

DocuSign Envelope ID: 0908AB87-C088-4523-BEAB-A55EC9F5191D

6/23/16

0 2.5 5	PROJ. REFERENCE NO.	SHEET NO.
	BP11.R003.3	X-9

70 65 60 55 50 45 40 35 30 25 20 15 10 5 0 5 10 15 20 25 30 35 40 45 50 55 60 65 70 75 80

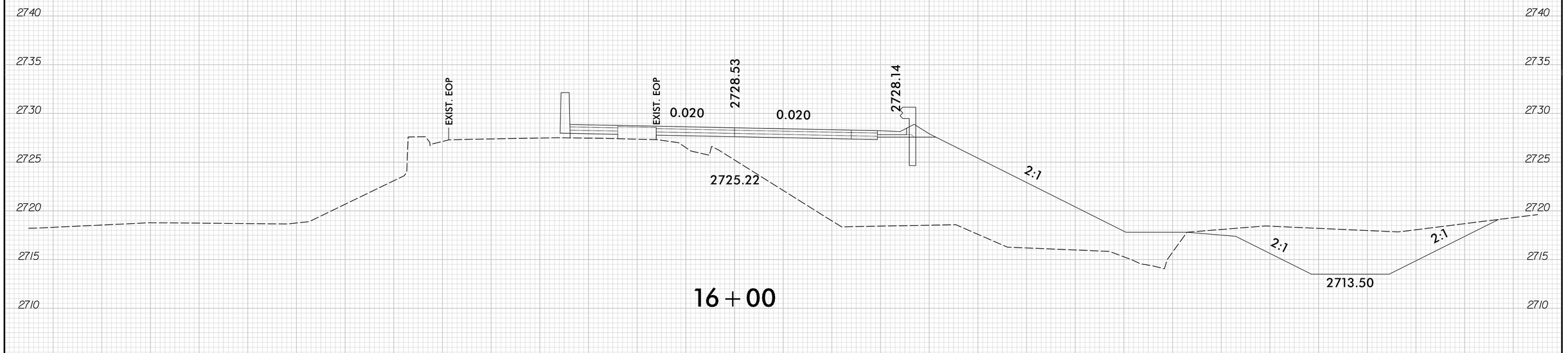

16+00

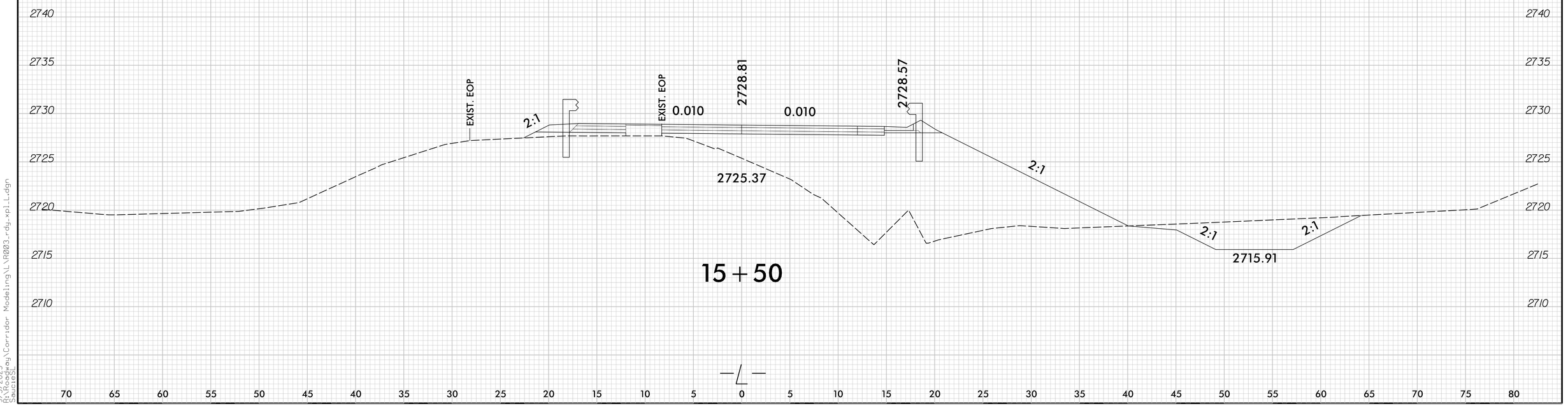

15+50

70 65 60 55 50 45 40 35 30 25 20 15 10 5 0 5 10 15 20 25 30 35 40 45 50 55 60 65 70 75 80

9/5/2023
R:\Roadway\Corridor Modeling\LR003_rdy_xpLL.dgn
Savage

DocuSign Envelope ID: 0908AB87-C088-4523-BEAB-A55EC9F5191D

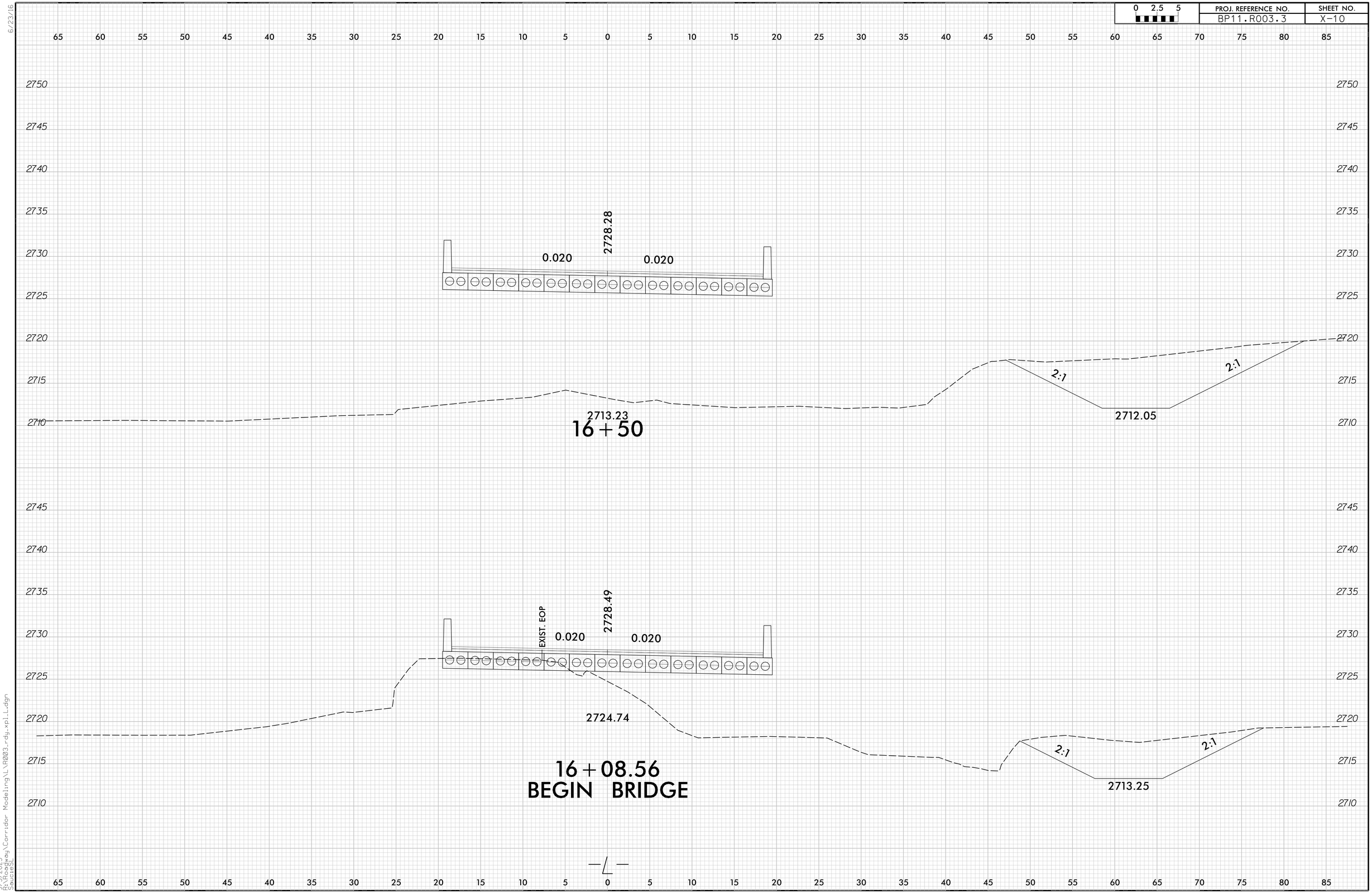

6/23/16
9/5/2023
R:\Roadway\Corridor Modeling\L\R003_rdy_xpl_L.dgn
SaucieSL

DocuSign Envelope ID: 0908AB87-C088-4523-BEAB-A55EC9F5191D

PROJ. REFERENCE NO.	SHEET NO.
BP11.R003.3	X-11

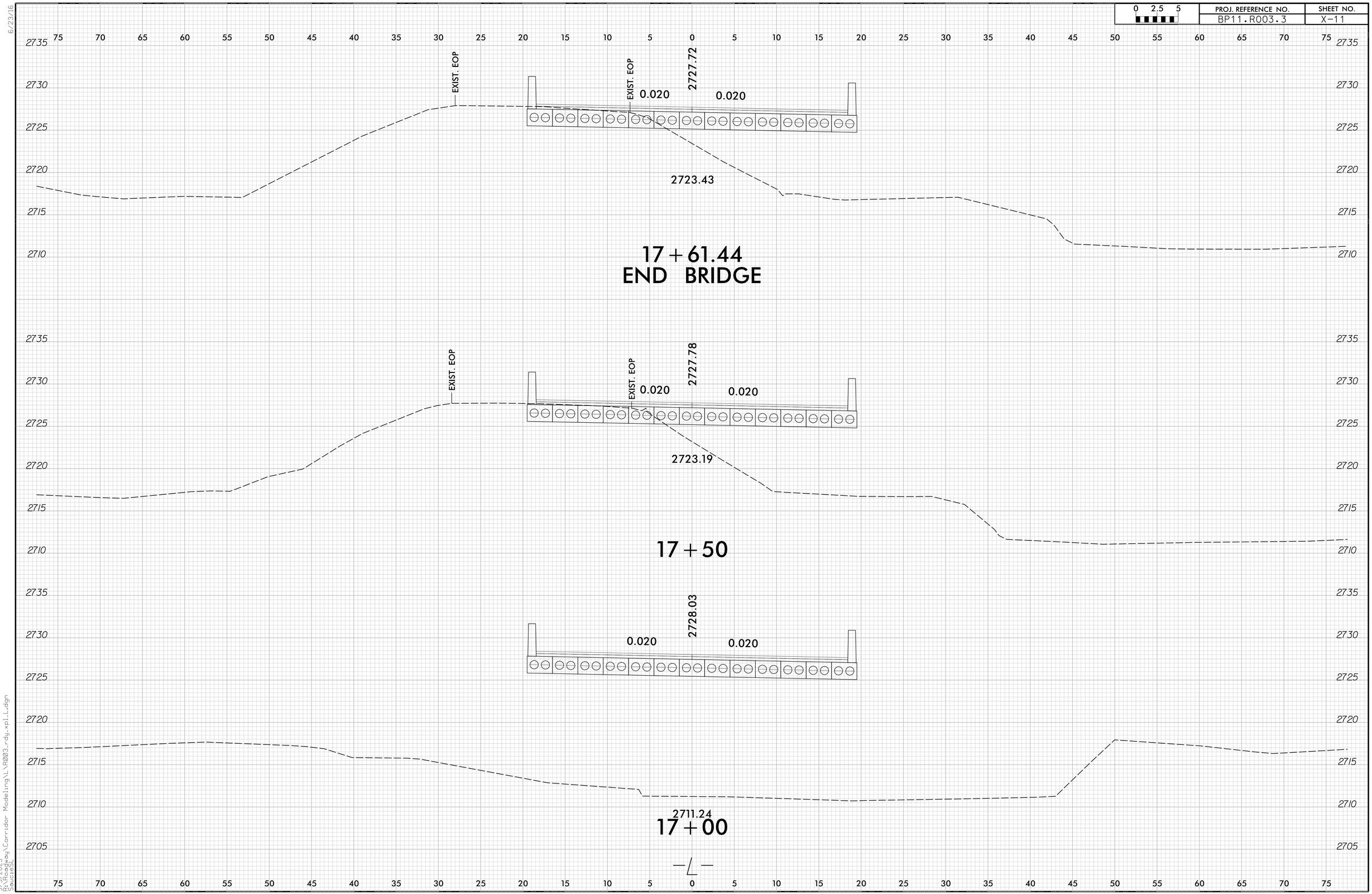

9/5/2023
R:\Roadway\Corridor Modeling\L\R003_rdy_xpl_L.dgn
SaucieSL

DocuSign Envelope ID: 0908AB87-C088-4523-BEAB-A55EC9F5191D

PROJ. REFERENCE NO.	SHEET NO.
BP11.R003.3	X-12

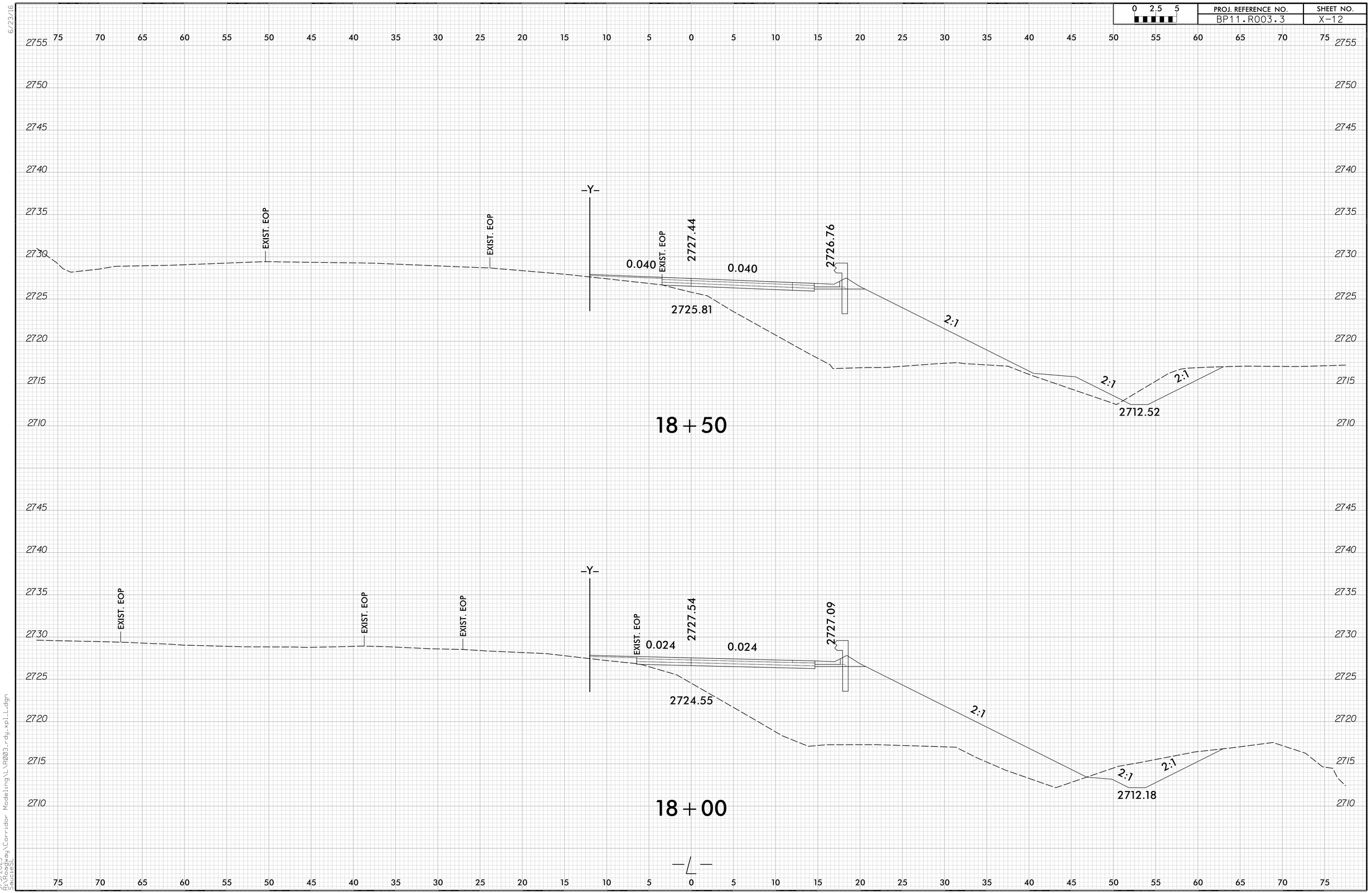

9/5/2023
R:\Roadway\Corridor Modeling\L\R003_rdy_xpl_L.dgn
SaucieSL

DocuSign Envelope ID: 0908AB87-C088-4523-BEAB-A55EC9F5191D

6/23/16

0 2.5 5	PROJ. REFERENCE NO.	SHEET NO.
	BP11.R003.3	X-13

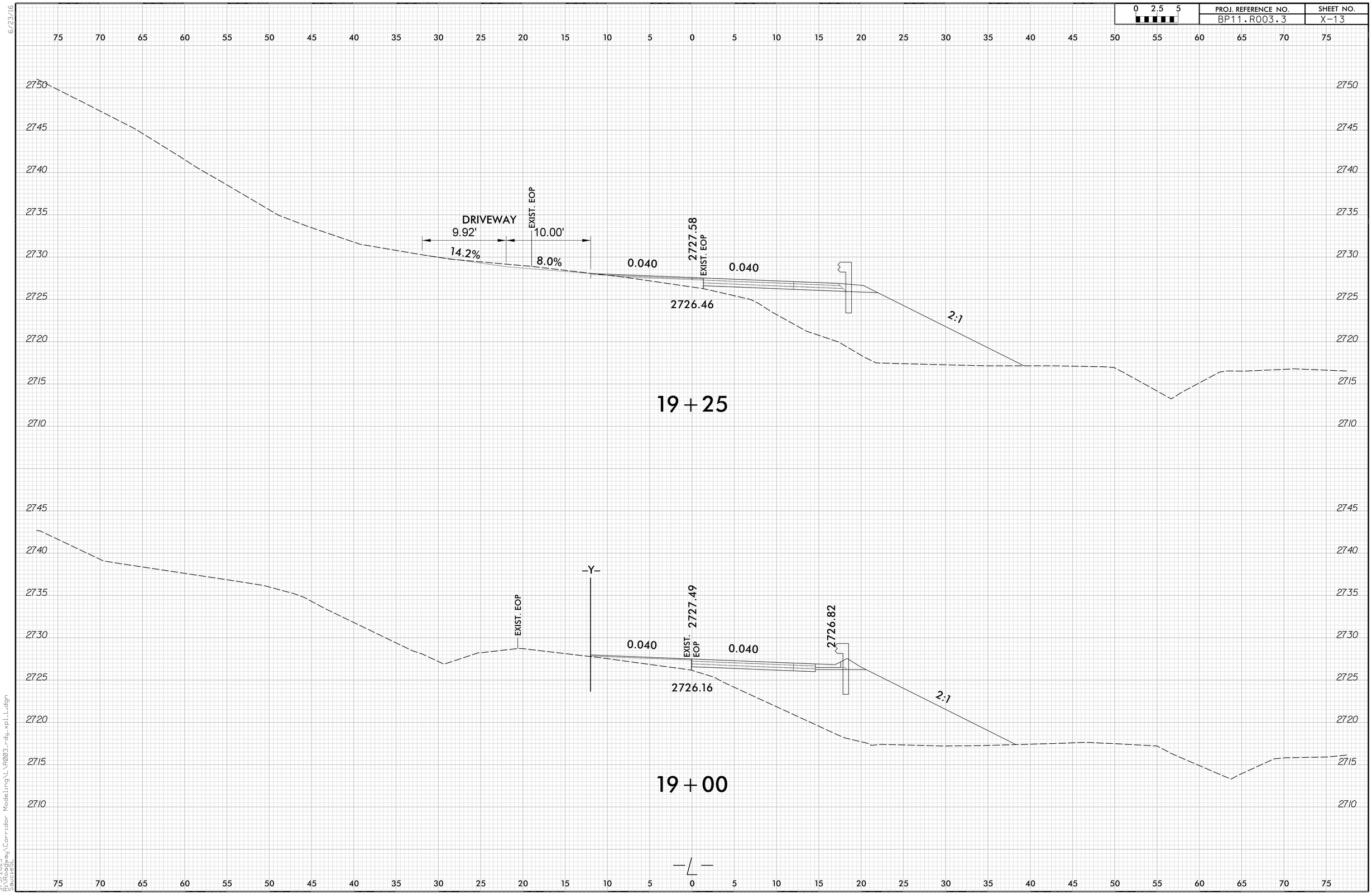

9/5/2023
R:\Roadway\Corridor Modeling\LR003_rdy_xpLL.dgn
Savage

DocuSign Envelope ID: 0908AB87-C088-4523-BEAB-A55EC9F5191D

6/23/16

0 2.5 5	PROJ. REFERENCE NO.	SHEET NO.
	BP11.R003.3	X-14

75 70 65 60 55 50 45 40 35 30 25 20 15 10 5 0 5 10 15 20 25 30 35 40 45 50 55 60 65 70 75

2780
2775
2770
2765
2760
2755
2750
2745
2740
2735
2730
2725
2720
2715
2710

EXIST. EOP
2:1
2:1
2726.69
0.040
2727.71
EXIST. EOP
0.040
2726.79
2:1

19 + 50

75 70 65 60 55 50 45 40 35 30 25 20 15 10 5 0 5 10 15 20 25 30 35 40 45 50 55 60 65 70 75

9/5/2023
C:\Projects\Highway\Corridor Modeling\L\R003_rdy_xpl_L.dgn
Standard

DocuSign Envelope ID: 0908AB87-C088-4523-BEAB-A55EC9F5191D

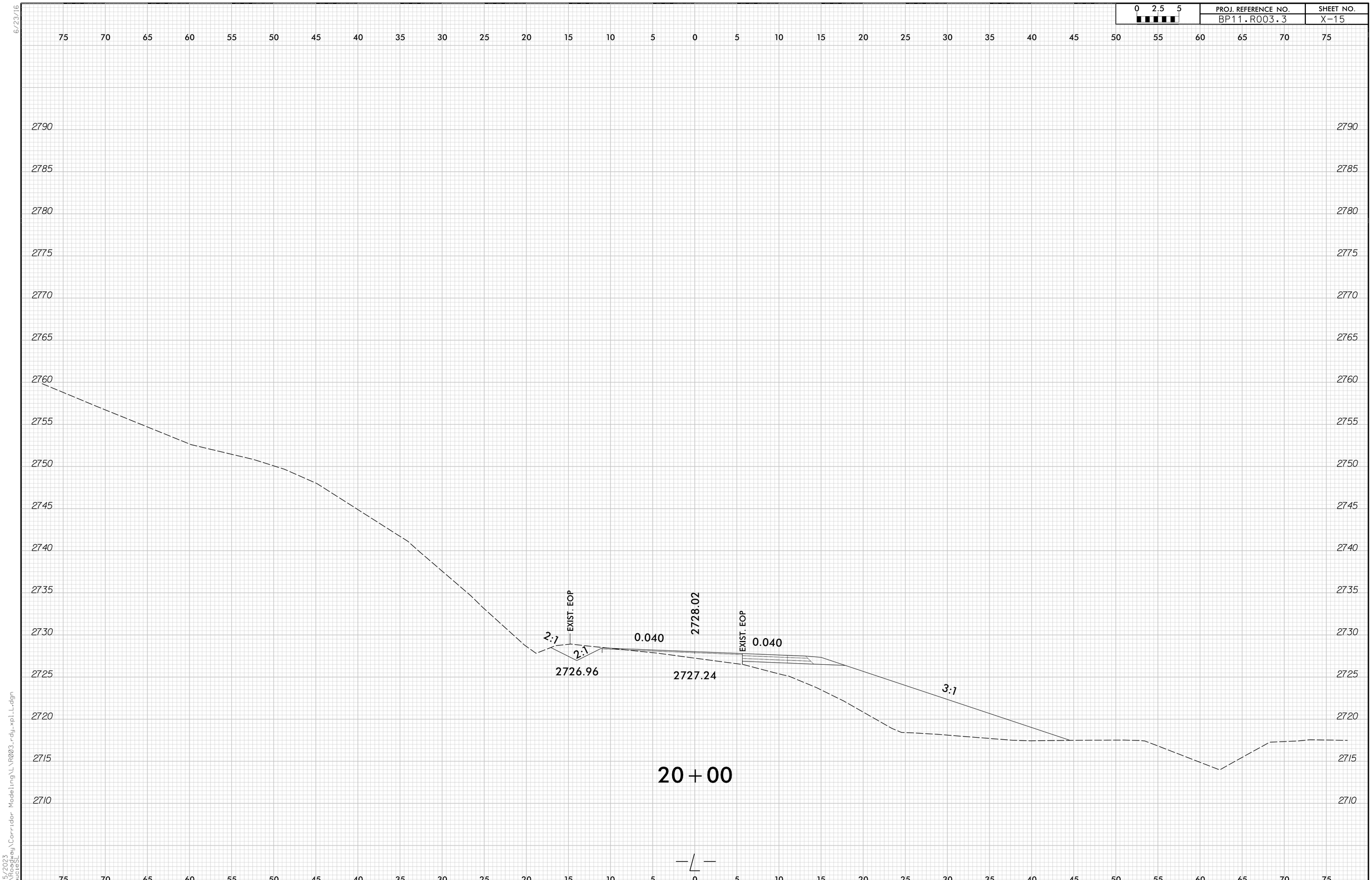

6/23/16

9/5/2023
R:\Roadway\Corridor Modeling\L\R003_rdy_xpl_L.dgn
SaucieSL

DocuSign Envelope ID: 0908AB87-C088-4523-BEAB-A55EC9F5191D

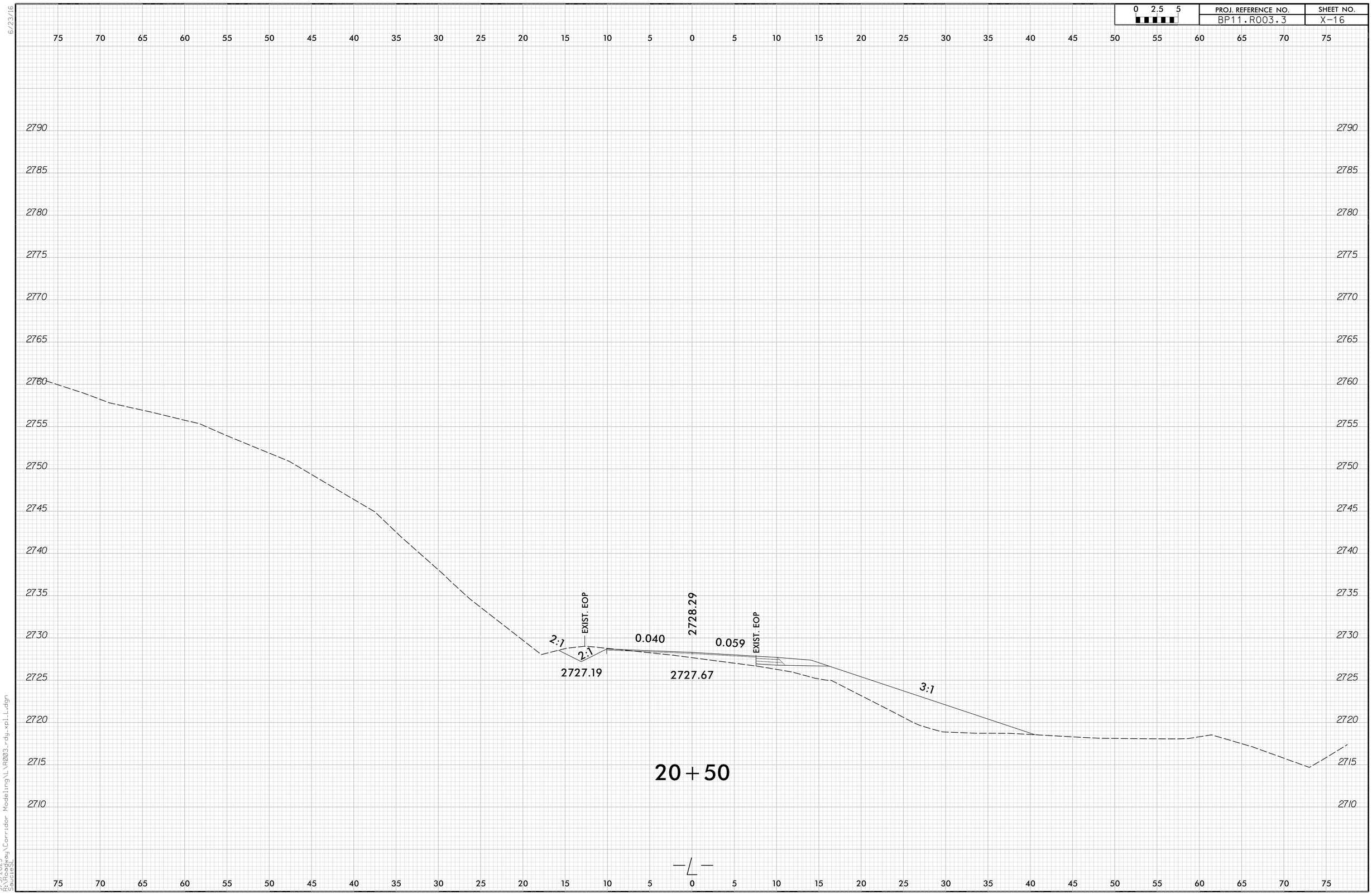

6/23/16
9/5/2023
R:\Roadway\Corridor Modeling\L\R003_rdy_xpl_L.dgn
SaucieSL

DocuSign Envelope ID: 0908AB87-C088-4523-BEAB-A55EC9F5191D

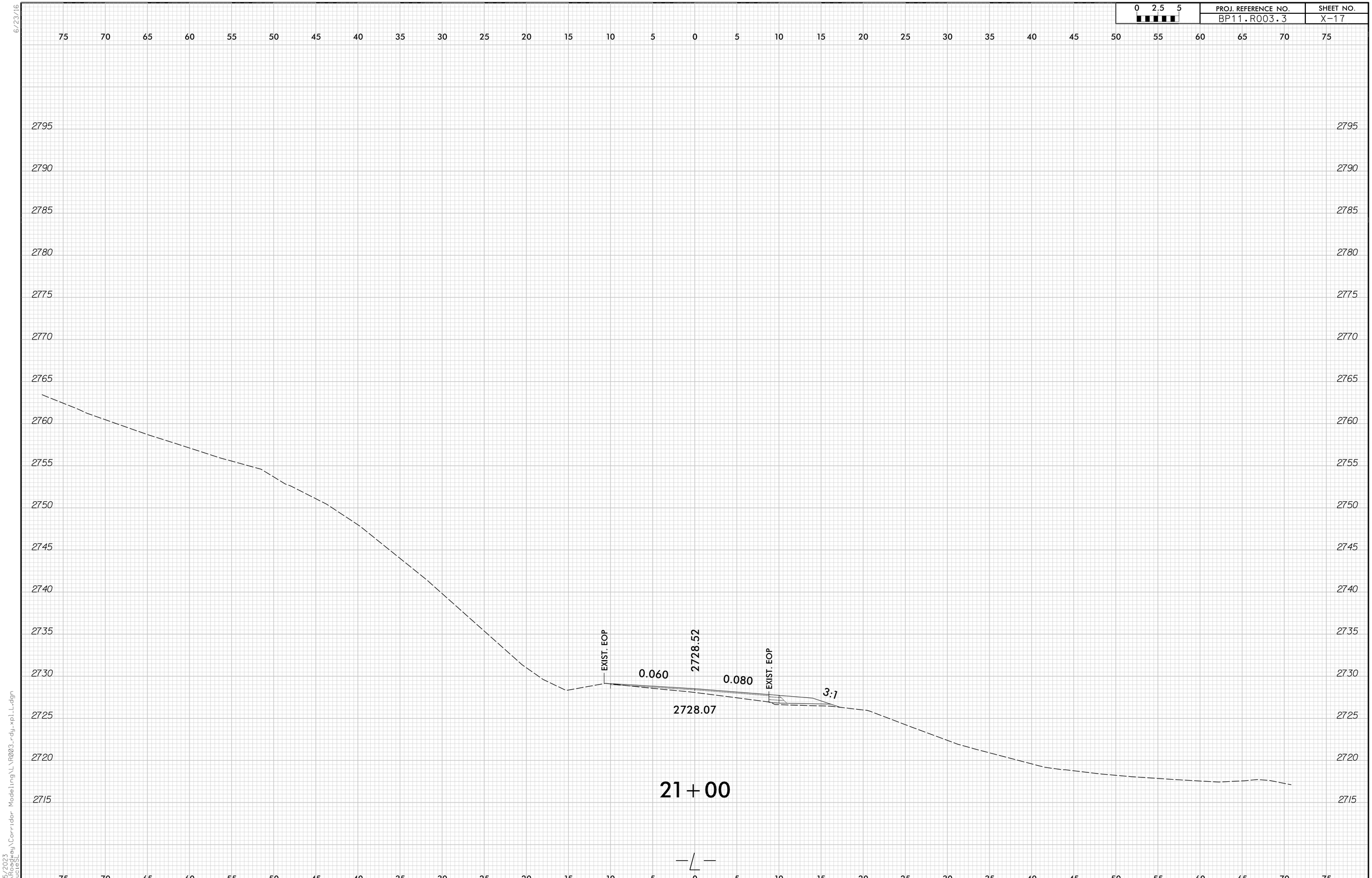

6/23/16
9/5/2023
R:\Roadway\Corridor Modeling\L\R003_rdy_xpl_L.dgn
SaucieSL

DocuSign Envelope ID: 0908AB87-C088-4523-BEAB-A55EC9F5191D

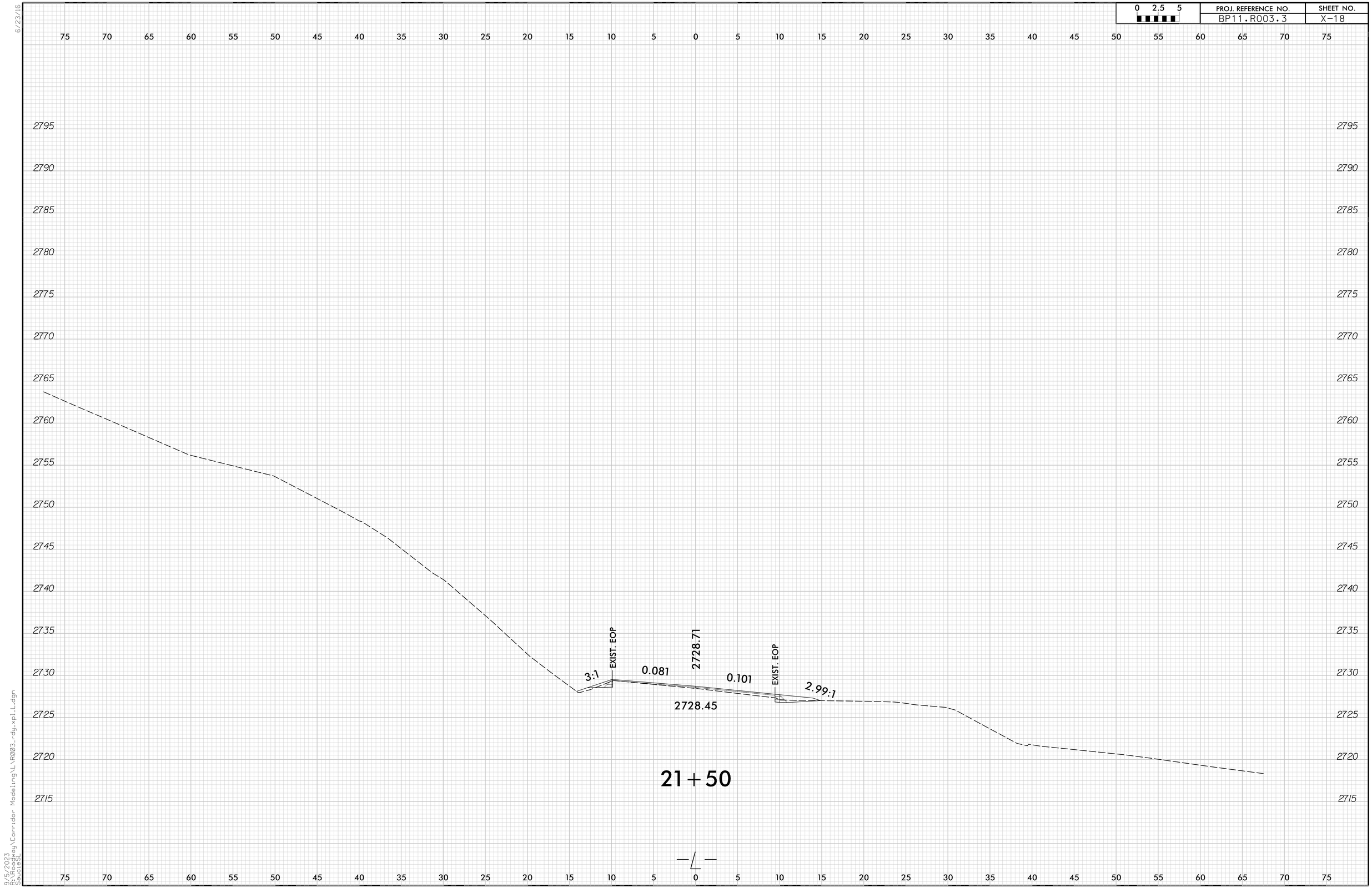

6/23/16
9/5/2023
R:\Roadway\Corridor Modeling\L\R003_rdy_xpl_L.dgn
SaucieSL

DocuSign Envelope ID: 0908AB87-C088-4523-BEAB-A55EC9F5191D

6/23/16

0 2.5 5

PROJ. REFERENCE NO.	SHEET NO.
BP11.R003.3	X-19

75 70 65 60 55 50 45 40 35 30 25 20 15 10 5 0 5 10 15 20 25 30 35 40 45 50 55 60 65 70 75

2790
2785
2780
2775
2770
2765
2760
2755
2750
2745
2740
2735
2730
2725
2720
2715

EXIST. EOP

0.093

2728.83

0.117

EXIST. EOP

2728.82

21+90
END PROJECT

9/5/2023
R:\Roadway\Corridor Modeling\LR003_rdy_xpLL.dgn
Savage

DocuSign Envelope ID: 0908AB87-C088-4523-BEAB-A55EC9F5191D

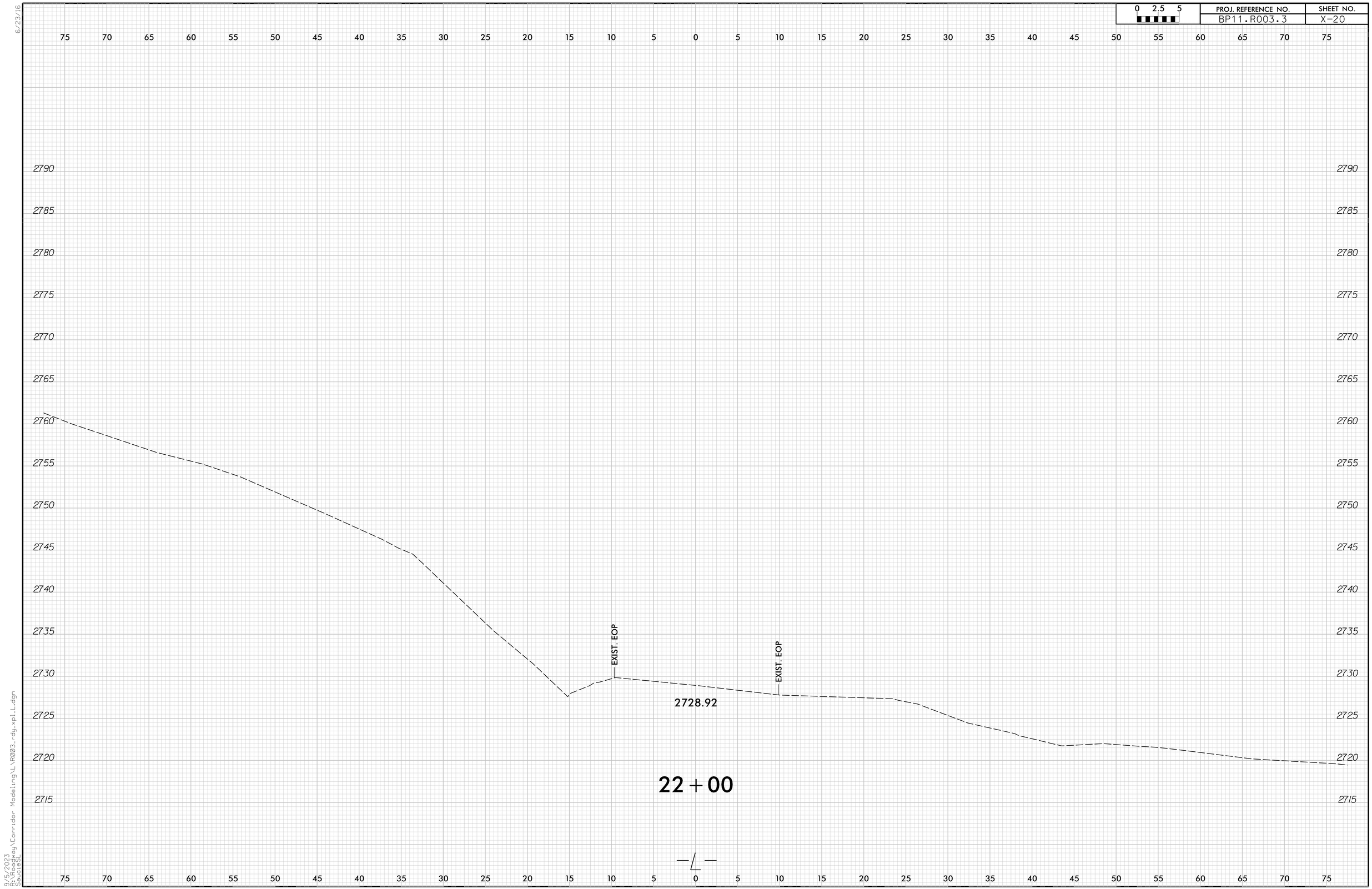

6/23/16
9/5/2023
R:\Roadway\Corridor Modeling\L\R003_rdy_xpl_L.dgn
SaucieSL

DocuSign Envelope ID: 0908AB87-C088-4523-BEAB-A55EC9F5191D

6/23/16

0 2.5 5	PROJ. REFERENCE NO.	SHEET NO.
	BP11.R003.3	X-21

75 70 65 60 55 50 45 40 35 30 25 20 15 10 5 0 5 10 15 20 25 30 35 40 45 50 55 60 65 70 75

2780
2775
2770
2765
2760
2755
2750
2745
2740
2735
2730
2725
2720
2715

EXIST. EOP

EXIST. EOP

2729.33

22+50

75 70 65 60 55 50 45 40 35 30 25 20 15 10 5 0 5 10 15 20 25 30 35 40 45 50 55 60 65 70 75

9/5/2023
P:\Roadway\Corridor Modeling\L\R003_rdy_xpl_L.dgn
Stantec

DocuSign Envelope ID: 0908AB87-C088-4523-BEAB-A55EC9F5191D

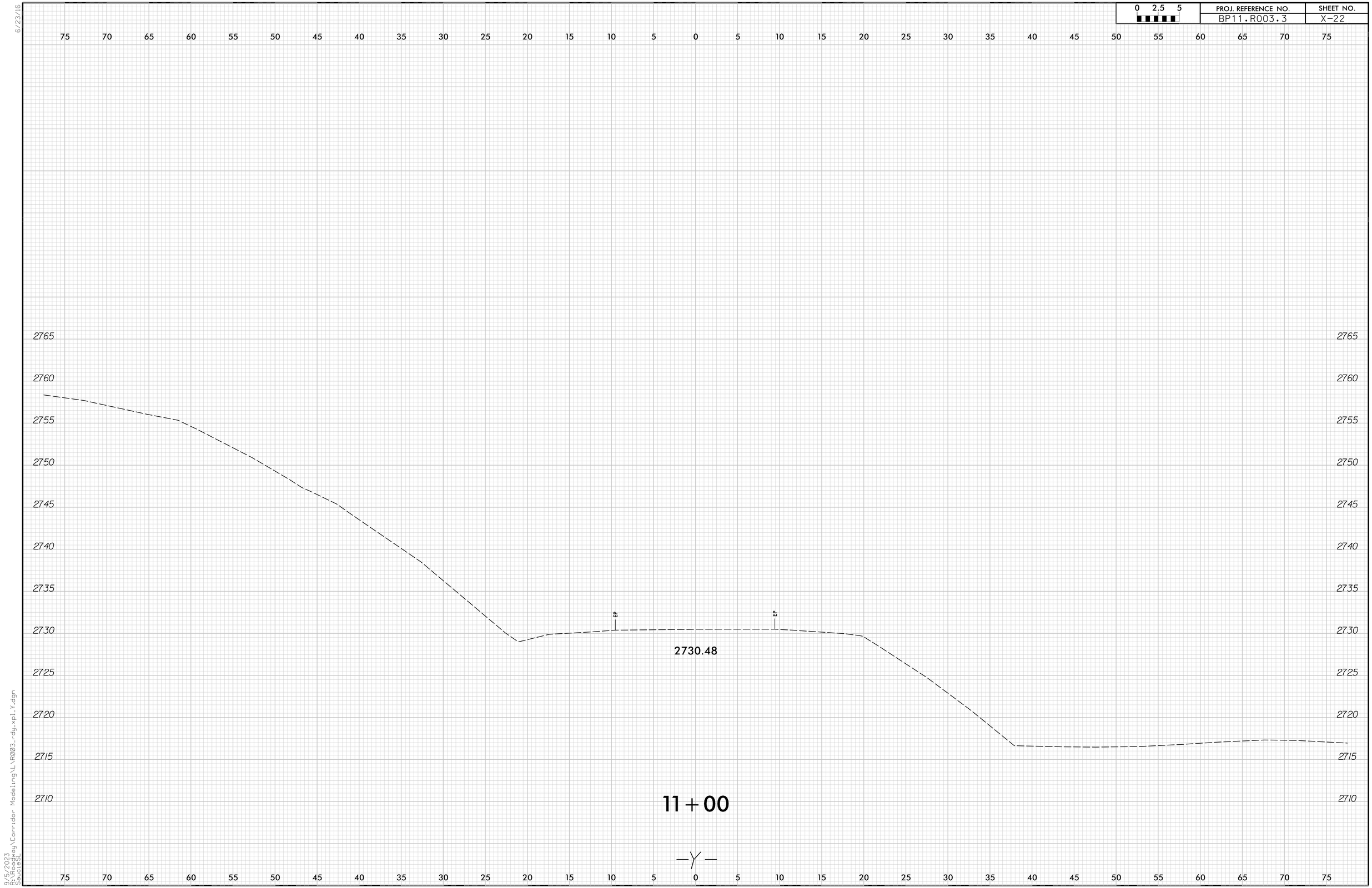

6/23/16
9/5/2023
R:\Roadway\Corridor Modeling\L\R003_rdy_xpl_Y.dgn
SaucieSL

DocuSign Envelope ID: 0908AB87-C088-4523-BEAB-A55EC9F5191D

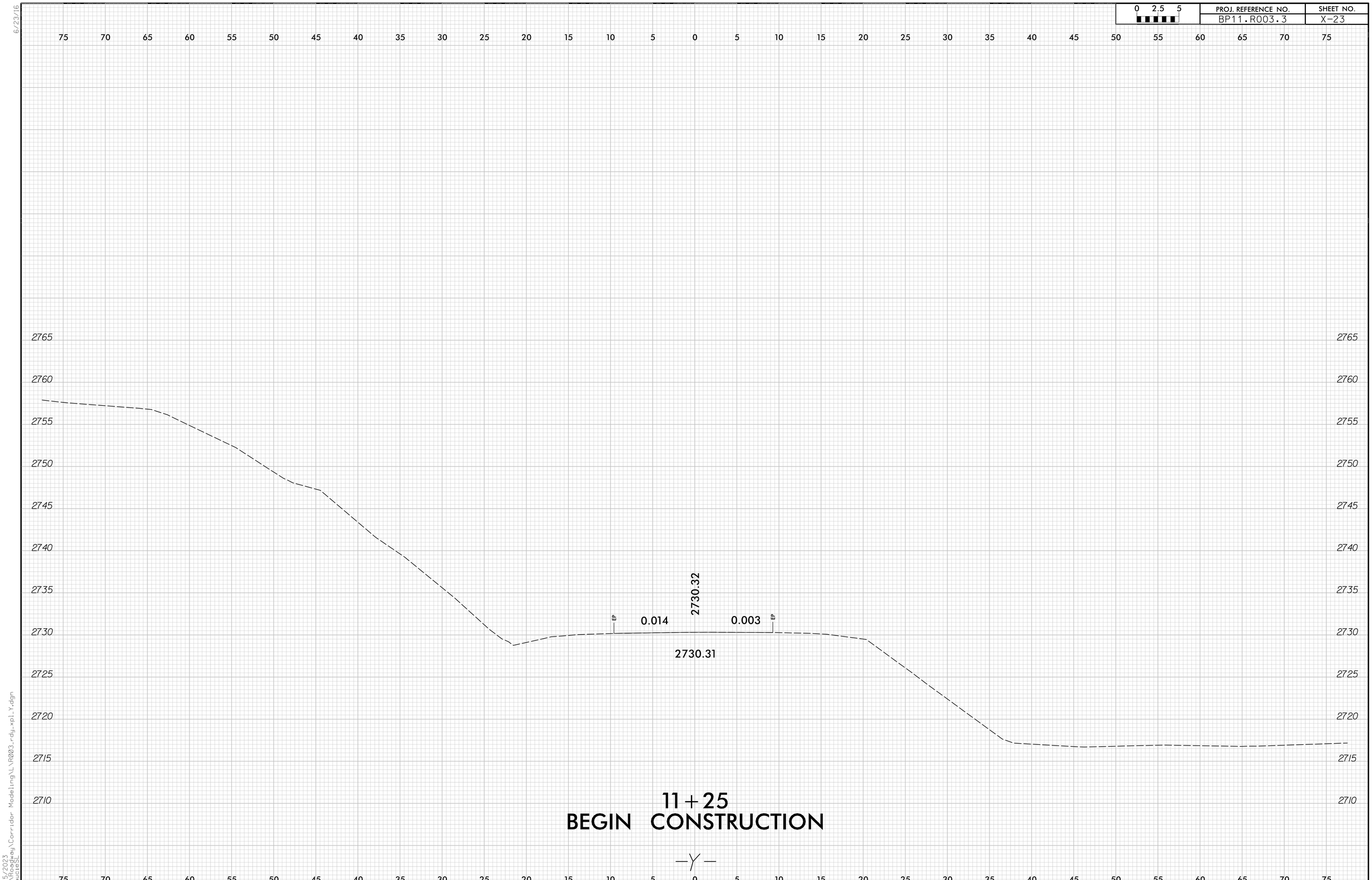

6/23/16
9/5/2023
R:\Roadway\Corridor Modeling\L\R003_rdy_xpl_Y.dgn
SaucieSL

DocuSign Envelope ID: 0908AB87-C088-4523-BEAB-A55EC9F5191D

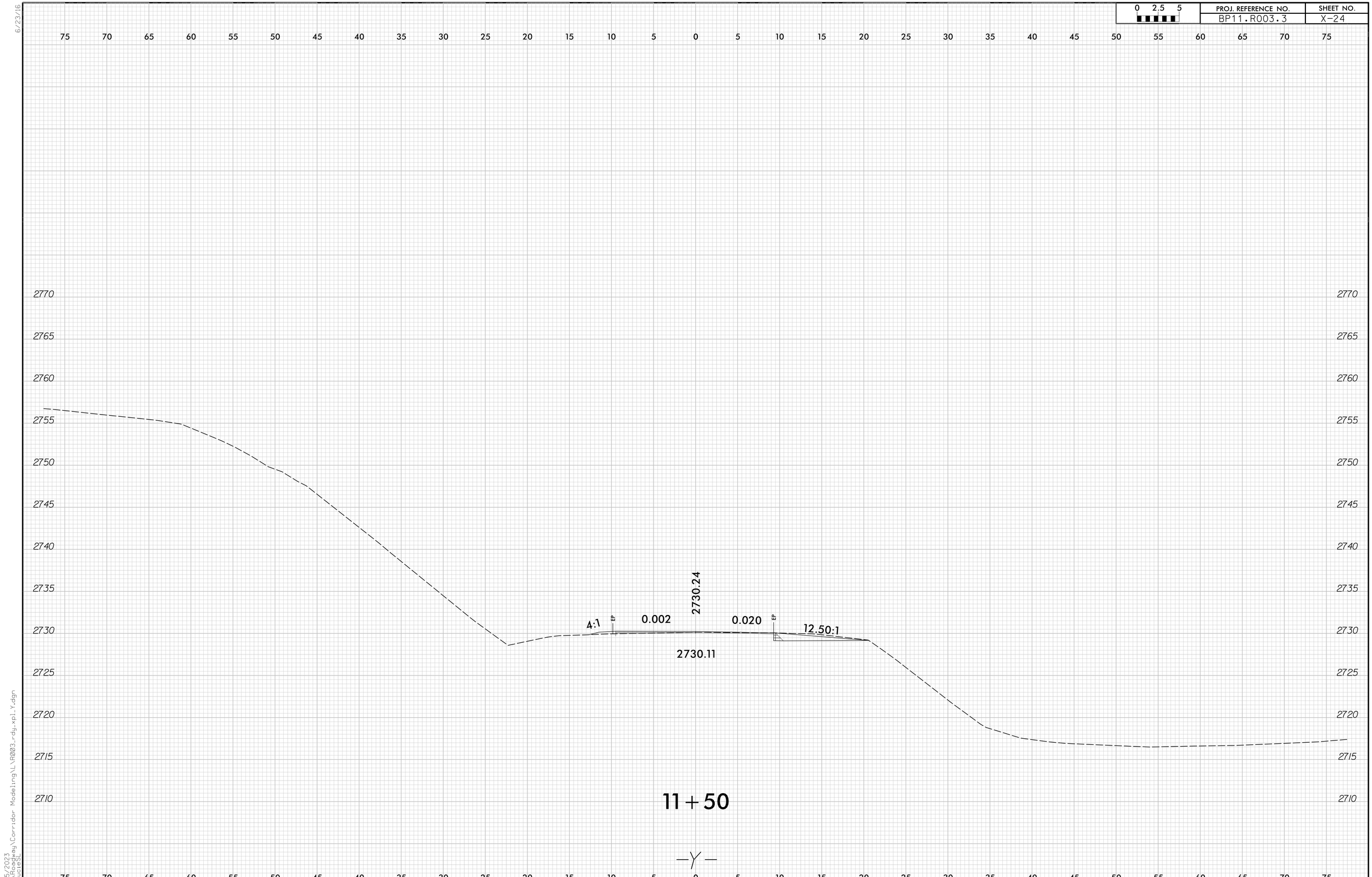

6/23/16
9/5/2023
R:\Roadway\Corridor Modeling\L\R003_rdy_xpl_Y.dgn
SaucieSL

DocuSign Envelope ID: 0908AB87-C088-4523-BEAB-A55EC9F5191D

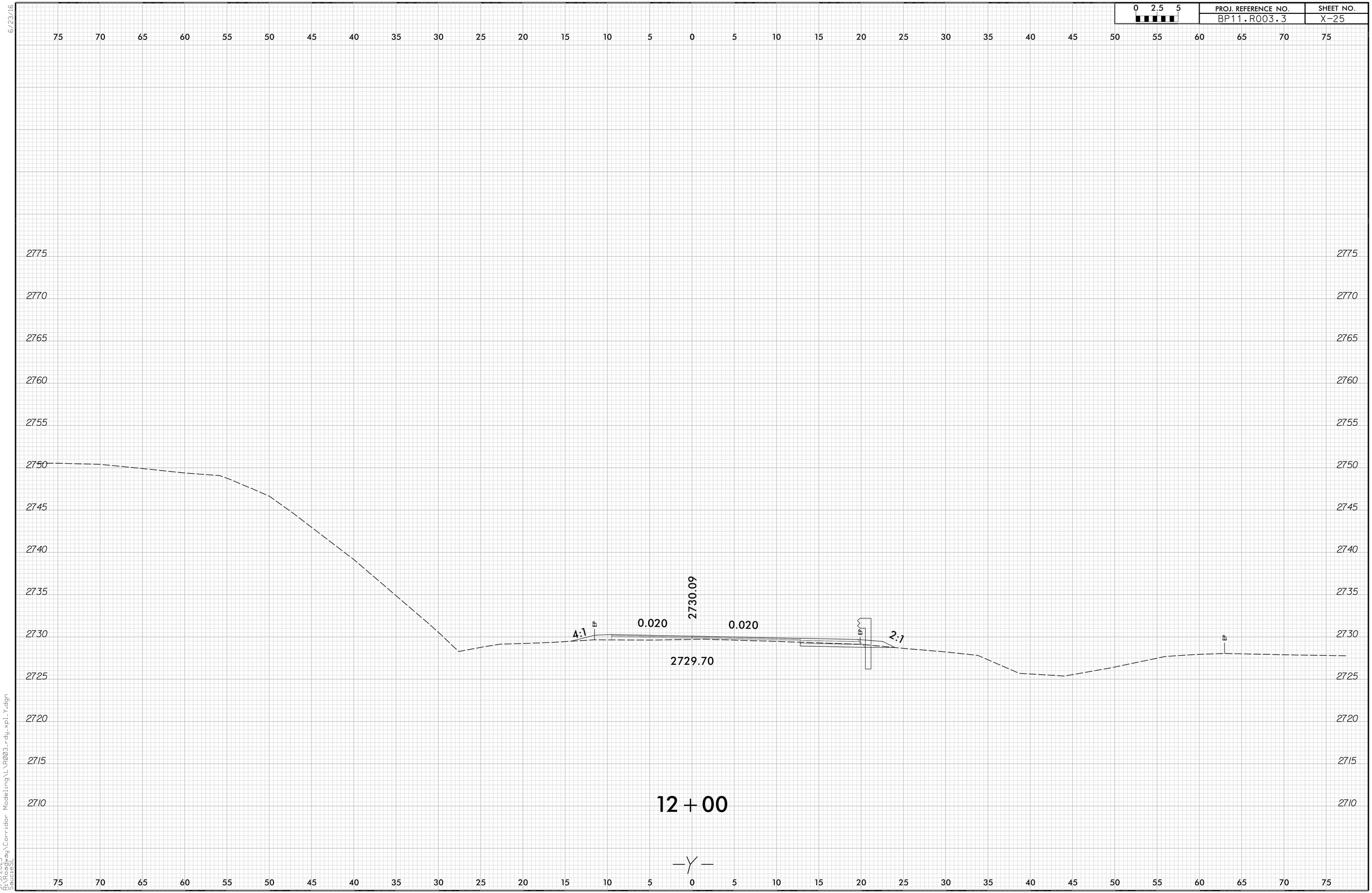

6/23/16
9/5/2023
R:\Roadway\Corridor Modeling\L\R003_rdy_xpl_Y.dgn
SaucieSL

DocuSign Envelope ID: 0908AB87-C088-4523-BEAB-A55EC9F5191D

PROJ. REFERENCE NO.	SHEET NO.
BP11.R003.3	X-26

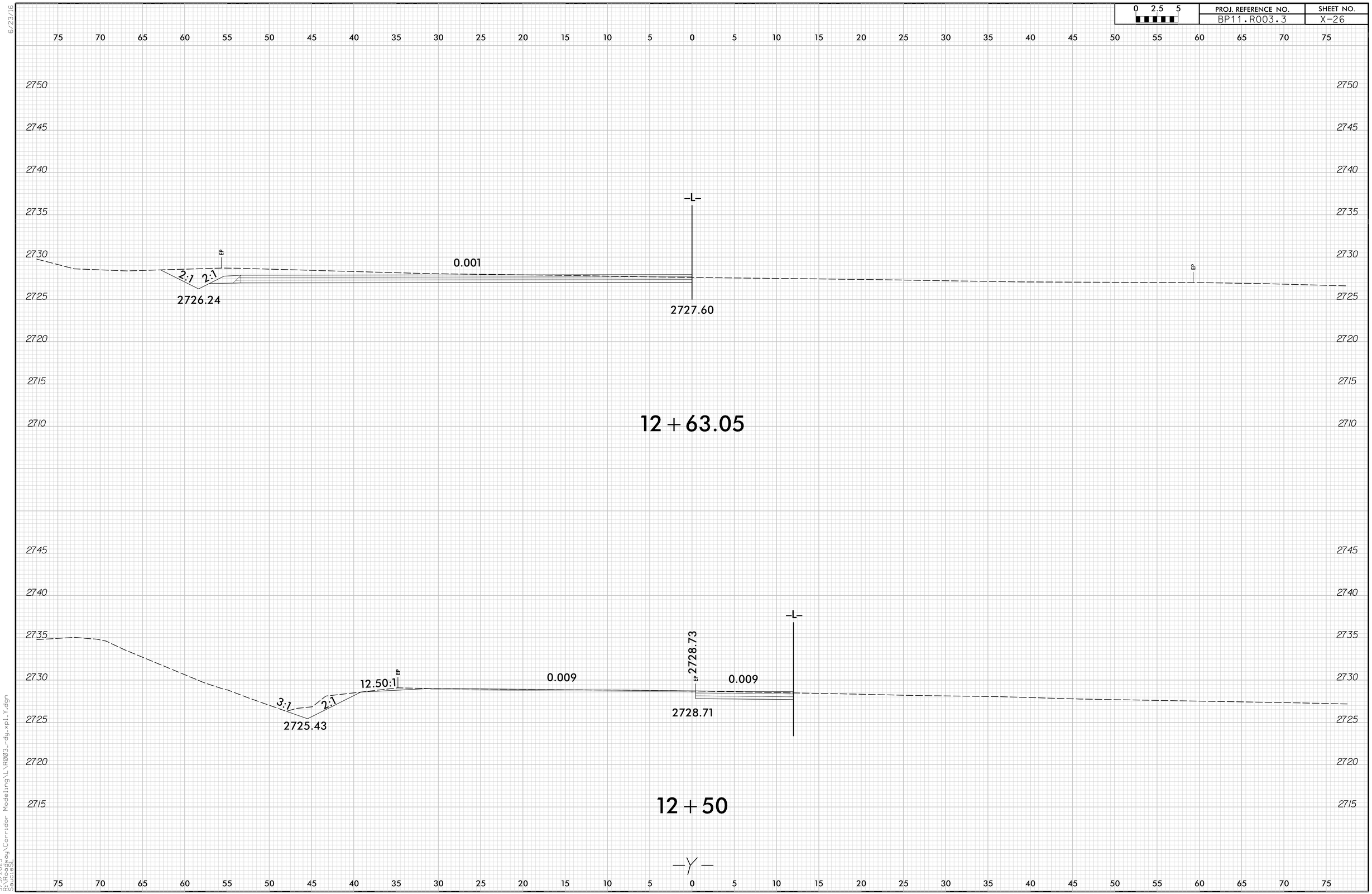

9/5/2023
R:\Roadway\Corridor Modeling\L\R003_rdy_xpl_Y.dgn
SaucieSL

DocuSign Envelope ID: 0908AB87-C088-4523-BEAB-A55EC9F5191D

0 2.5 5	PROJ. REFERENCE NO.	SHEET NO.
	BP11.R003.3	X-27

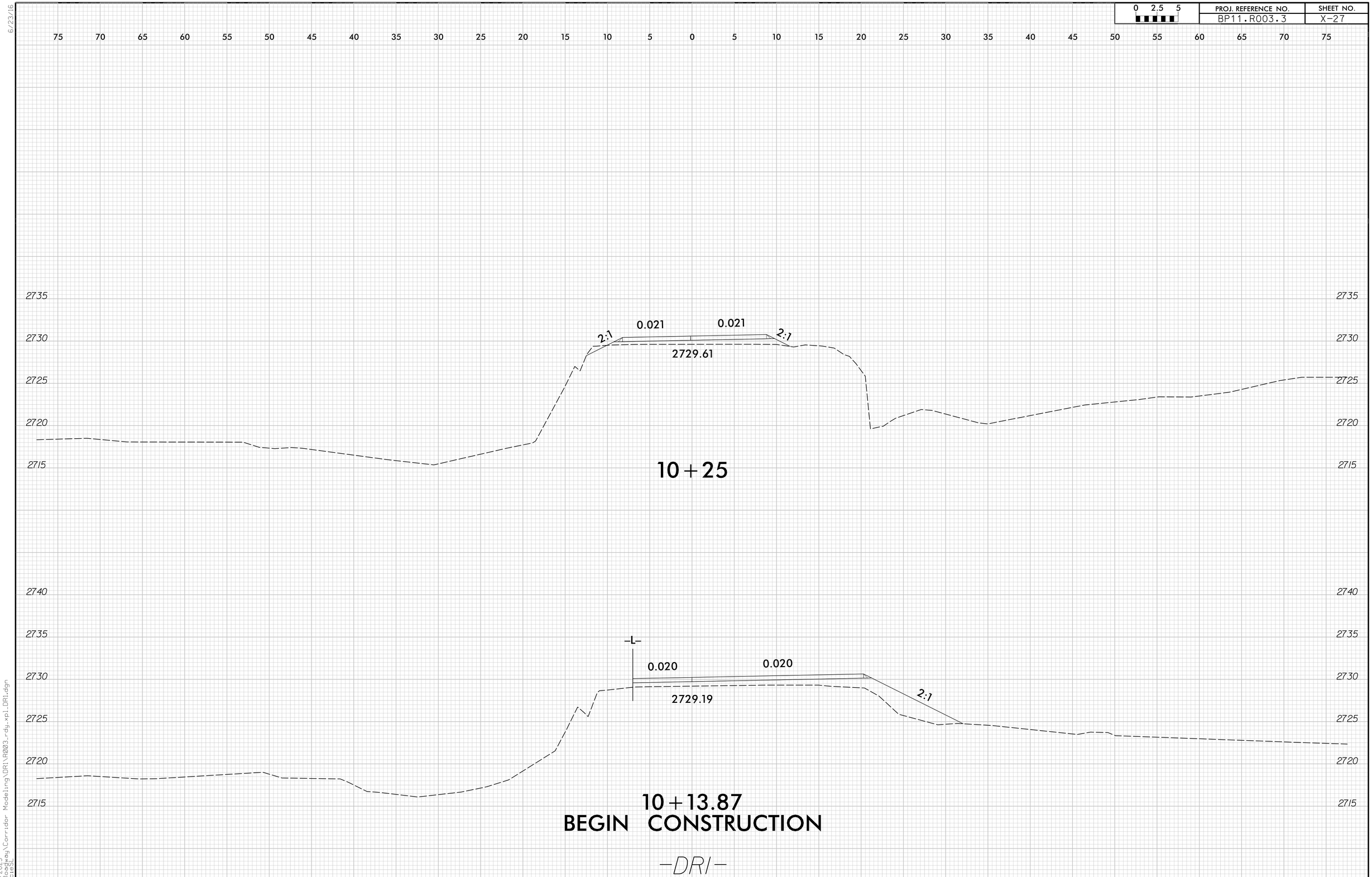

DocuSign Envelope ID: 0908AB87-C088-4523-BEAB-A55EC9F5191D

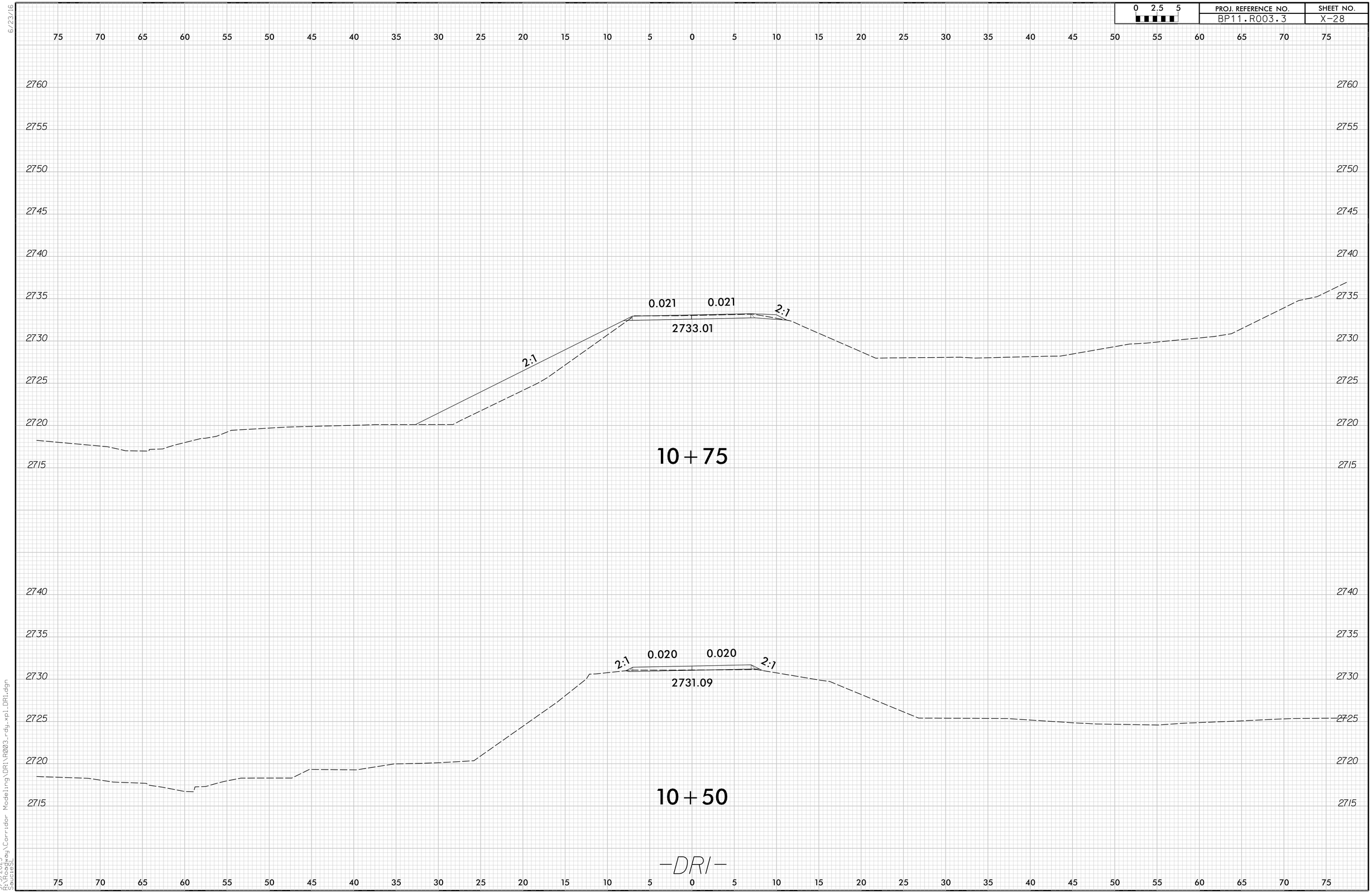

6/23/16
9/5/2023
R:\Roadway\Corridor Modeling\DR1\R003_rdy_xpl_DR1.dgn
SaucieSL

DocuSign Envelope ID: 0908AB87-C088-4523-BEAB-A55EC9F5191D

6/23/16

0 2.5 5

PROJ. REFERENCE NO.	SHEET NO.
BP11.R003.3	X-29

75 70 65 60 55 50 45 40 35 30 25 20 15 10 5 0 5 10 15 20 25 30 35 40 45 50 55 60 65 70 75

2765
2760
2755
2750
2745
2740
2735
2730
2725
2720
2715

0.020 0.020

2734.20

10+90
END CONSTRUCTION

-DRI-

75 70 65 60 55 50 45 40 35 30 25 20 15 10 5 0 5 10 15 20 25 30 35 40 45 50 55 60 65 70 75

9/5/2023
R:\Roadway\Corridor Modeling\DRI\R003_rdy_xpl_DRI.dgn
Savage

DocuSign Envelope ID: 0908AB87-C088-4523-BEAB-A55EC9F5191D

6/23/16

0 2.5 5	PROJ. REFERENCE NO.	SHEET NO.
	BP11.R003.3	X-30

75 70 65 60 55 50 45 40 35 30 25 20 15 10 5 0 5 10 15 20 25 30 35 40 45 50 55 60 65 70 75

2775
2770
2765
2760
2755
2750
2745
2740
2735
2730
2725
2720
2715

2735.07

11+00

-DRI-

9/5/2023
K:\Roadway\Corridor Modeling\DR1\R003_rdy_xpl_DR1.dgn
Silvia

DocuSign Envelope ID: 0908AB87-C088-4523-BEAB-A55EC9F5191D

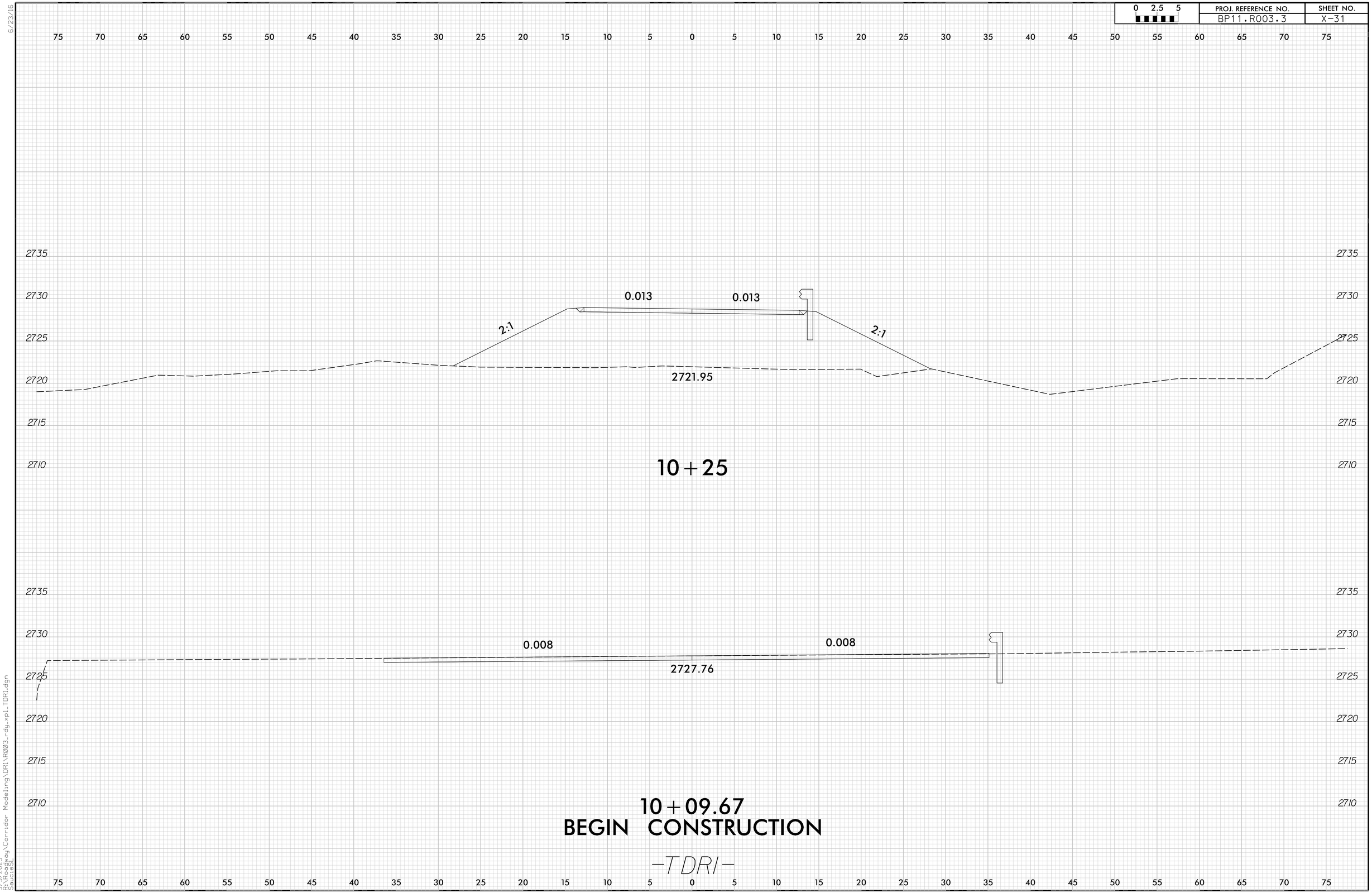

6/23/16
9/5/2023
R:\Roadway\Corridor Modeling\DR1\R003_rdy_xpl_TDR1.dgn
SaucieSL

DocuSign Envelope ID: 0908AB87-C088-4523-BEAB-A55EC9F5191D

6/23/16

0 2.5 5	PROJ. REFERENCE NO.	SHEET NO.
	BP11.R003.3	X-32

75 70 65 60 55 50 45 40 35 30 25 20 15 10 5 0 5 10 15 20 25 30 35 40 45 50 55 60 65 70 75

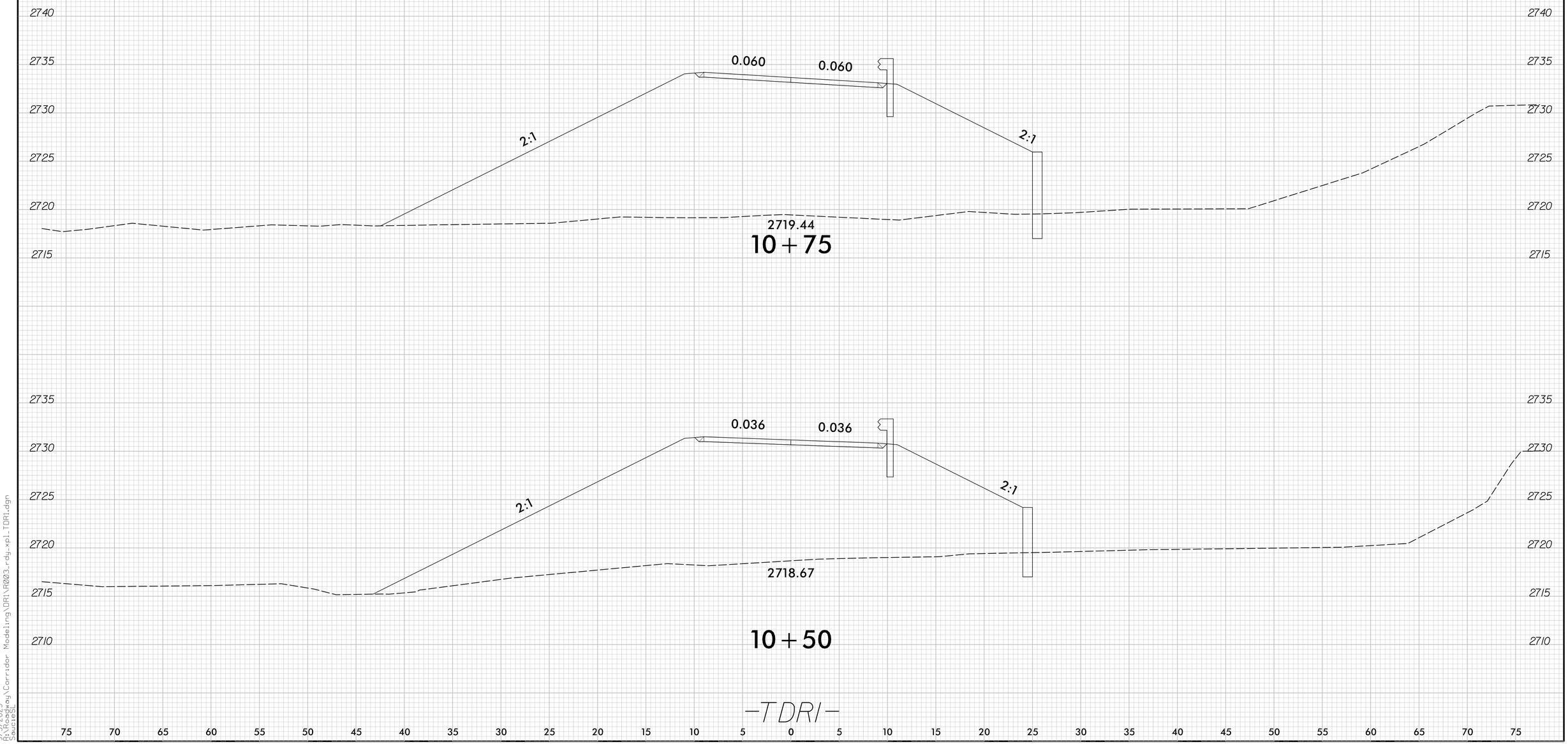

-TDRI-

75 70 65 60 55 50 45 40 35 30 25 20 15 10 5 0 5 10 15 20 25 30 35 40 45 50 55 60 65 70 75

9/5/2023
H:\Highway\Corridor Modeling\DR1\R003_rdy_xpl_TDR1.dgn
Savage

DocuSign Envelope ID: 0908AB87-C088-4523-BEAB-A55EC9F5191D

6/23/16

0 2.5 5

PROJ. REFERENCE NO.	SHEET NO.
BP11.R003.3	X-33

75 70 65 60 55 50 45 40 35 30 25 20 15 10 5 0 5 10 15 20 25 30 35 40 45 50 55 60 65 70 75

2750
2745
2740
2735
2730
2725
2720
2715

0.084
0.084
2:1
2:1
2725.13

11+00

-TDRI-

75 70 65 60 55 50 45 40 35 30 25 20 15 10 5 0 5 10 15 20 25 30 35 40 45 50 55 60 65 70 75

9/5/2023
R:\SR\Parkway\Corridor Modeling\DR1\R003_rdy_xpl_TDR1.dgn
Sauceda

DocuSign Envelope ID: 0908AB87-C088-4523-BEAB-A55EC9F5191D

6/23/16

0 2.5 5

PROJ. REFERENCE NO.	SHEET NO.
BP11.R003.3	X-34

75 70 65 60 55 50 45 40 35 30 25 20 15 10 5 0 5 10 15 20 25 30 35 40 45 50 55 60 65 70 75

2770
2765
2760
2755
2750
2745
2740
2735
2730
2725
2720

0.094

0.094

2737.76

11+19.45
END CONSTRUCTION

-TDRI-

9/5/2023
R:\Roadway\Corridor Modeling\DR1\R003_rdy_xpl_TDR1.dgn
Savage

DocuSign Envelope ID: 0908AB87-C088-4523-BEAB-A55EC9F5191D

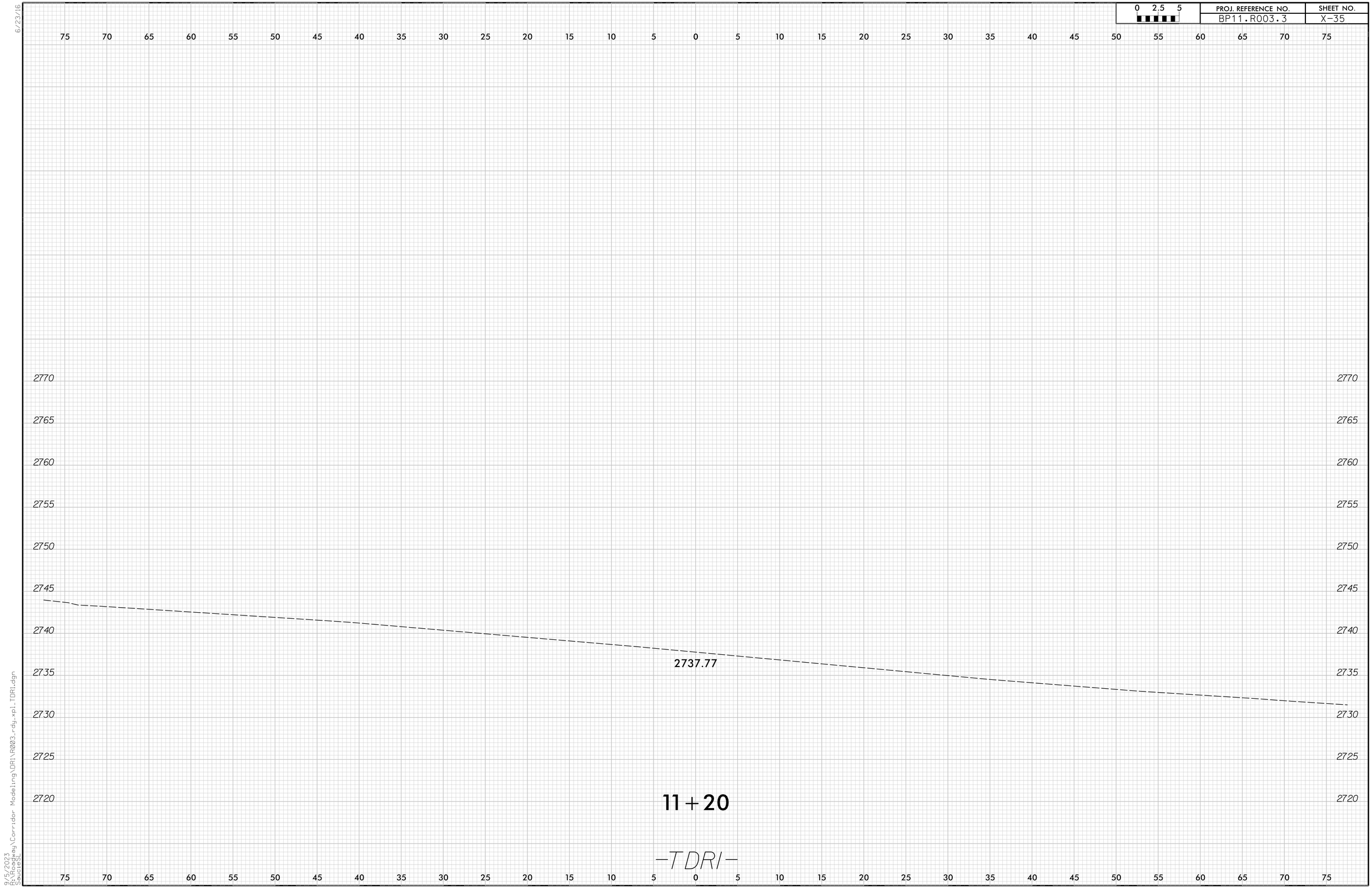

6/23/16
9/5/2023
R:\Roadway\Corridor Modeling\DR1\R003_rdy_xpl_TDR1.dgn
SaucieSL

DocuSign Envelope ID: 0908AB87-C088-4523-BEAB-A55EC9F5191D

PROJECT WBS: BP11.R003.3

CONTRACT:

STATE OF NORTH CAROLINA
DIVISION OF HIGHWAYS

ASHE COUNTY

STATE	STATE PROJECT REFERENCE NO.	SHEET NO.	TOTAL SHEETS
N.C.	BP11.R003.3	1	

STATE PROJ. NO.	F. A. PROJ. NO.	DESCRIPTION
BP11.R003.1		P.E.
BP11.R003.2		ROW & UTILITY
BP11.R003.3		CONSTR.

LOCATION: BRIDGE #063 OVER CRANBERRY CREEK ON NC HWY 88
TYPE OF WORK: GRADING, PAVING, DRAINAGE, & STRUCTURE

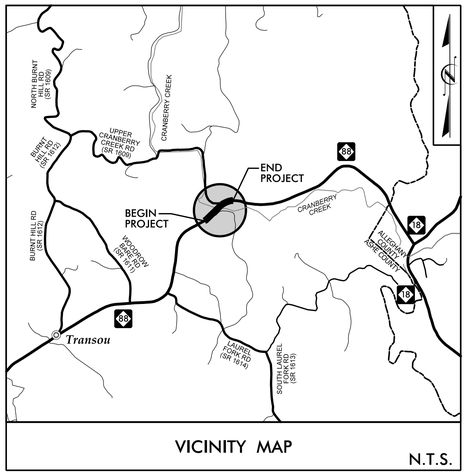



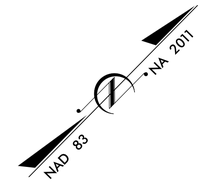

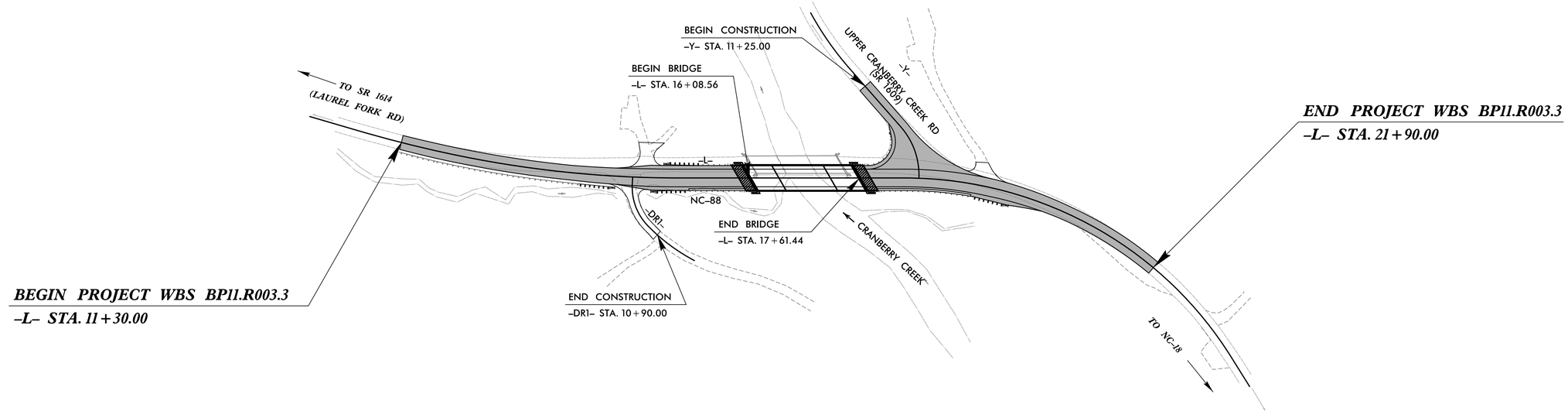

STRUCTURE

DOCUMENT NOT CONSIDERED FINAL UNLESS ALL SIGNATURES COMPLETED

DESIGN DATA

ADT 2017 = 910
ADT 2040 = 1800
DHV = N/A
D = N/A
T = 7%
V = 55 MPH

FUNC. CLASSIFICATION: SUB REGIONAL TIER

PROJECT LENGTH

LENGTH OF ROADWAY PROJECT WBS BP11.R003.3 = 0.172 MILES
LENGTH OF STRUCTURE PROJECT WBS BP11.R003.3 = 0.029 MILES
TOTAL LENGTH OF PROJECT WBS BP11.R003.3 = 0.201 MILES

NCDOT CONTACT: JOE LAWS, PE
Division Bridge Manager

PLANS PREPARED FOR THE NCDOT BY:

STV Engineers, Inc.
900 West Trade St., Suite 715
Charlotte, NC 28202
NC License Number F–0991

2018 STANDARD SPECIFICATIONS

RIGHT OF WAY DATE: JULY 25, 2022

LETTING DATE: NOVEMBER 16, 2023

JASON T. GRISCOM, PE
PROJECT ENGINEER

JOSEPH A. DICHAK, PE
PROJECT DESIGNER

STRUCTURES ENGINEER

NORTH CAROLINA PROFESSIONAL SEAL 029429 ENGINEER JASON T. GRISCOM

8/18/2023

DocuSigned by:
Jason Griscom
E4ACDE421F2448A

P.E.

SIGNATURE:

DEPARTMENT OF TRANSPORTATION · STATE OF NORTH CAROLINA

DocuSign Envelope ID: 0908AB87-C088-4523-BEAB-A55EC9F5191D

16+00 16+50 17+00 17+50 18+00 18+50

VERTICAL CURVE DATA -L-

(-)2.0533% (-)0.5012%

PI = 14+50.00
EL = 2729.28
VC = 260'

VERTICAL CURVE DATA -L-

(-)0.5012% (+)0.6047%

PI = 18+65.00
EL = 2727.20
VC = 170'

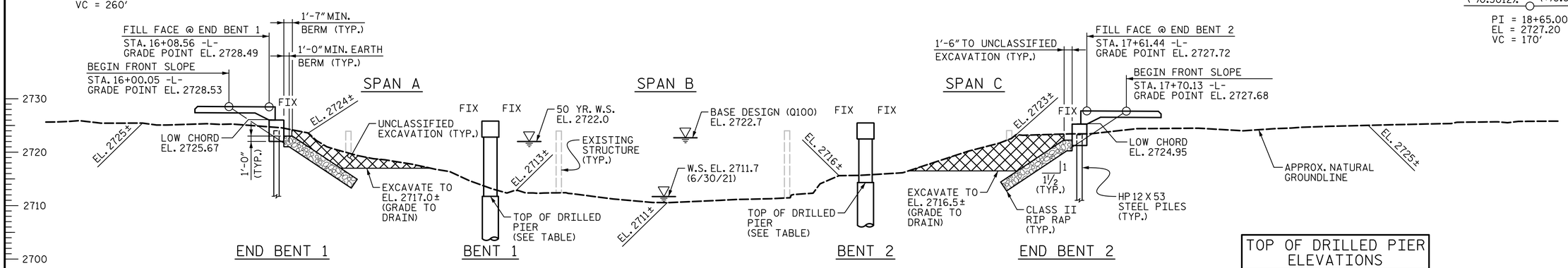

SECTION ALONG -L-

BENTS ON SECTION AT RIGHT ANGLES TO BENTS

TOP OF DRILLED PIER ELEVATIONS		
NO.	BENT 1	BENT 2
1	2712.14	2714.54
2	2711.82	2714.22
3	2711.50	2713.90

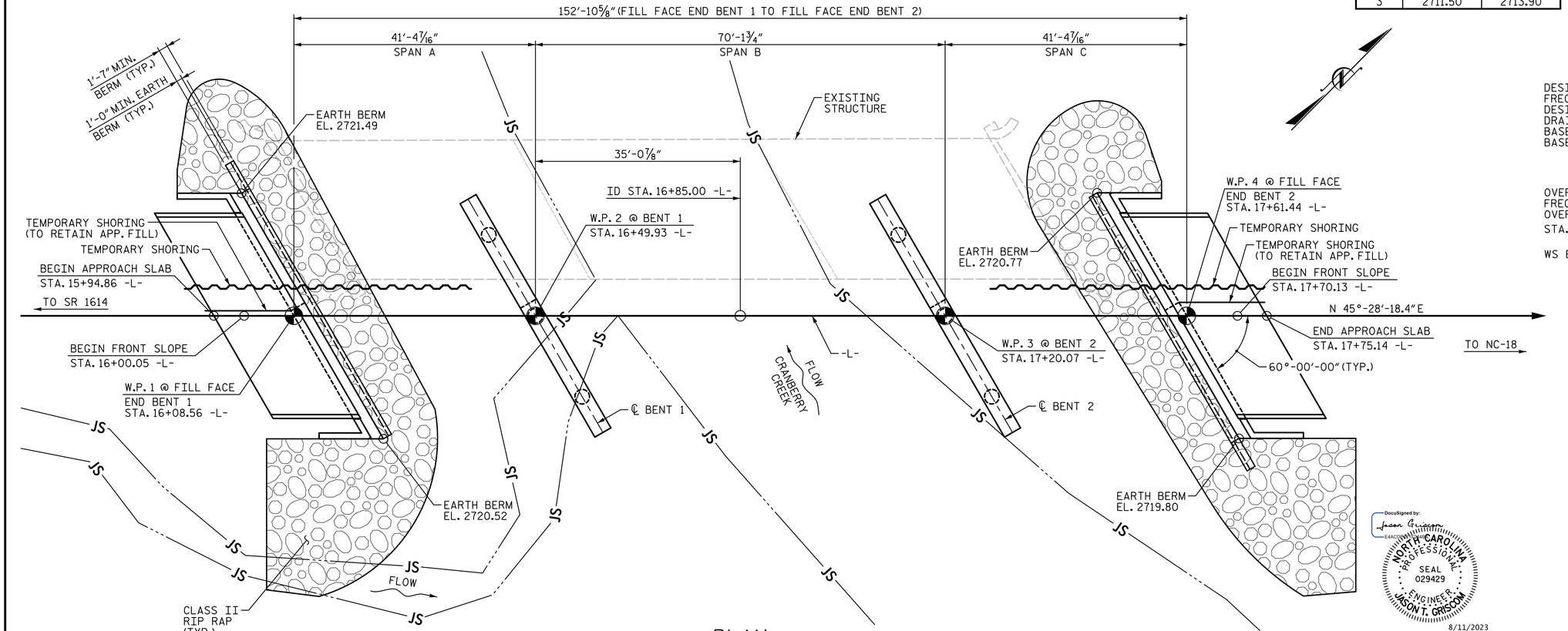

PLAN

(STEEL PILES NOT SHOWN FOR CLARITY)

HYDRAULIC DATA

DESIGN DISCHARGE: 4,800 CFS
FREQUENCY OF DESIGN FLOOD: 50 YRS.
DESIGN HIGH WATER ELEVATION: 2722.0
DRAINAGE AREA: 24.6 SQ. MI.
BASE DISCHARGE (Q100): 5588 CFS
BASE HIGH WATER ELEVATION: 2722.7

OVERTOPPING DATA

OVERTOPPING DISCHARGE: 11,500 CFS
FREQUENCY OF OVERTOPPING: 500 + YRS.
OVERTOPPING FLOOD ELEVATION: 2727.3

STA. 18+57.05 -L- PROPOSED ROADWAY APPROACH

WS EL. TAKEN @ RIVER STATION 42649

DocuSigned by: Jason G. Griscom E4A1B0B1B1B1B1B1...
NORTH CAROLINA PROFESSIONAL SEAL 029429 ENGINEER JASON T. GRISCOM
8/11/2023

STV Engineers, Inc.
900 West Trade St., Suite 715
Charlotte, NC 28202
NC License Number F-0991

DOCUMENT NOT CONSIDERED FINAL UNLESS ALL SIGNATURES COMPLETED

PROJECT NO. BP11.R003.1
ASHE COUNTY
STATION: 16+85.00 -L-

SHEET 1 OF 3 REPLACES BRIDGE NO. 040063

STATE OF NORTH CAROLINA
DEPARTMENT OF TRANSPORTATION
RALEIGH

GENERAL DRAWING

FOR BRIDGE ON NC-88
OVER CRANBERRY CREEK
BETWEEN SR 1614 AND SR 1609

REVISIONS						SHEET NO.
NO.	BY:	DATE:	NO.	BY:	DATE:	S-1
1			3			TOTAL SHEETS
2			4			29

DRAWN BY :	SGH	DATE : 9-22
CHECKED BY :	JAD	DATE : 9-22
DESIGN ENGINEER OF RECORD :	J. GRISCOM	DATE : 8-23

HenselSG 8/11/2023 3:03:32 PM R:\Structures\Ustation\Finals\40L_001_BP11_R003_L_SMU_GDL_001_40063.dgn

DocuSign Envelope ID: 0908AB87-C088-4523-BEAB-A55EC9F5191D

SUMMARY OF PILE INFORMATION/INSTALLATION

(Blank entries indicate item is not applicable to structure)

End Bent/ Bent No, Pile(s) #-# (e.g., "Bent 1, Piles 1-5")	Factored Resistance per Pile TONS	Pile Cut-Off (Top of Pile) Elevation FT	Estimated Pile Lenth per Pile FT	Scour Critical Elevation FT	Driven Piles			Predrilling for Piles*			Drilled-In Piles		
					Min Pile Tip (Tip No Higher Than) Elev FT	Required Driving Resistance (RDR)** per Pile TONS	Total Pile Redrives Quantity EACH	Predrilling Length per Pile Lin FT	Predrilling Elevation (Elev Not To Predrill Below) FT	Maximum Predrilling Dia INCHES	Pile Excavation (Bottom of Hole) Elev FT	Pile Exc Not In Soil per Pile Lin FT	Pile Exc In Soil per Pile Lin FT
End Bent No. 1, Piles 1-4	65	See Substructure Plans	45			110							
End Bent No. 1, Piles 5-7	65		40			110							
End Bent No. 2, Piles 1-7	65		20			110							

*Predrilling for Piles is required for end bents/bents with a predrilling length and at the Contractor's option for end bents/bents with predrilling information but no predrilling length.

$$^{**}RDR = \frac{Factored\ Resistance + Factored\ Downdrag\ Load + Factored\ Dead\ Load}{Dynamic\ Resistance\ Factor} + Nominal\ Downdrag\ Resistance + \frac{Nominal\ Scour\ Resistance}{Scour\ Resistance\ Factor}$$

PILE DESIGN INFORMATION

(Blank entries indicate item is not applicable to structure)

End Bent/ Bent No, Pile(s) #-# (e.g., "Bent 1, Piles 1-5")	Factored Axial Load per Pile TONS	Factored Downdrag Load per Pile TONS	Factored Dead Load* per Pile TONS	Dynamic Resistance Factor	Nominal Downdrag Resistance per Pile TONS	Nominal Scour Resistance per Pile TONS	Scour Resistance Factor (Default = 1.00)
End Bent No. 1	65			0.60			
End Bent No. 2	65			0.60			

SUMMARY OF PILE ACCESSORIES

(Blank entries indicate item is not applicable to structure)

End Bent/ Bent No, Pile(s) #-# (e.g., "Bent 1, Piles 1-5")	Pipe Pile Plates Required? YES or MAYBE	Steel Pile Points			Steel Pile Tips Required? YES
		Pipe Pile Cutting Shoes Required? YES	Pipe Pile Conical Points Required? YES	H-Pile Points Required? YES	
End Bent No. 2				YES	
TOTAL QTY:				7	

SUMMARY OF DRILLED PIER INFORMATION/INSTALLATION

(Blank entries indicate item is not applicable to structure)

End Bent/ Bent No, Pier(s) #-# (e.g., "Bent 1, Piers 1-3")	Factored Resistance per Pier TONS	Minimum Pier Tip (Tip No Higher Than) Elevation FT	Required Tip Resistance per Pier TSF	Scour Critical Elevation FT	Minimum Drilled Pier Penetration Into Rock per Pier Lin FT	Drilled Pier Length per Pier Lin FT	Drilled Pier Length Not In Soil per Pier Lin FT	Drilled Pier Length In Soil per Pier Lin FT	Permanent Steel Casing Required? YES or MAYBE	Permanent Steel Casing Tip Elevation (Elev Not To Extend Casing Below) FT	Permanent Steel Casing Length* per Pier Lin FT
Bent No. 1, Pier 1	420	2656.0	5	2695	9.5		19.0	37.0	MAYBE	2694.0	18.0
Bent No. 1, Piers 2-3	420	2656.0	5	2698	9.5		23.0	33.0	MAYBE	2700.0	12.0
Bent No. 2, Piers 1	415	2689.0	5	2697	9.0		9.0	17.0	MAYBE	2698.0	17.0
Bent No. 2, Piers 2-3	415	2689.0	5	2697	9.0		10.0	16.0	MAYBE	2698.0	17.0

*Permanent Steel Casing Length equals the difference between the ground line or top of drilled pier elevation, whichever is higher, and the permanent casing tip elevation.

SUMMARY OF DRILLED PIER TESTING

(Blank entries indicate item is not applicable to structure)

End Bent/ Bent No, Pier(s) #-# (e.g., "Bent 1, Piers 1-3")	Standard Penetration Test (SPT) Required? YES or MAYBE	Crosshole Sonic Logging (CSL) Required?* YES or MAYBE	Total CSL Tube Length (For All Tubes) per Pier Lin FT	Shaft Inspection Device (SID) Required? YES or MAYBE	Pile Integrity Test (PIT) Required? MAYBE
Bent No. 1, Piers 1-3		MAYBE	230	MAYBE	
Bent No. 2, Piers 1-3		MAYBE	110	MAYBE	
TOTAL QTY:		1	1020	1	

*CSL Tubes are required if CSL Testing is or may be required. The number of CSL Tubes per drilled pier is equal to one tube per foot of design pier diameter with at least 4 tubes per pier. The length of each CSL Tube is equal to the drilled pier length plus 1.5 ft.

Foundation Notes:

1. FOR PILES, SEE PILES PROVISION AND SECTION 450 OF THE STANDARD SPECIFICATIONS.
2. FOR DRILLED PIERS, SEE SECTION 411 OF THE STANDARD SPECIFICATIONS.
3. INSTALL PERMANENT STEEL CASINGS AT BENT NO. 1 (LT) BY VIBRATING, SCREWING OR DRIVING PERMANENT CASINGS BEFORE EXCAVATING OR DISTURBING ANY MATERIAL BELOW ELEVATION 2,694 FT.
4. INSTALL PERMANENT STEEL CASINGS AT BENT NO. 1 (RT) BY VIBRATING, SCREWING OR DRIVING PERMANENT CASINGS BEFORE EXCAVATING OR DISTURBING ANY MATERIAL BELOW ELEVATION 2,700 FT.
5. INSTALL PERMANENT STEEL CASINGS AT BENT NO. 2 BY VIBRATING, SCREWING OR DRIVING PERMANENT CASINGS BEFORE EXCAVATING OR DISTURBING ANY MATERIAL BELOW ELEVATION 2,698 FT.
6. IT HAS BEEN ESTIMATED THAT A HAMMER WITH AN EQUIVALENT RATED ENERGY IN THE RANGE OF 20 - 40 KIP-FT PER BLOW WILL BE REQUIRED TO DRIVE PILES AT END BENT NO. 1 AND END BENT NO. 2. THIS ESTIMATED ENERGY RANGE DOES NOT RELEASE THE CONTRACTOR FROM PROVIDING DRIVING EQUIPMENT IN ACCORDANCE WITH SUBARTICLE 450-3(D)(2) OF THE STANDARD SPECIFICATIONS.

NOTES:

1. The Pile and Drilled Pier Foundation Tables are based on the bridge substructure design and foundation recommendations sealed by a North Carolina Professional Engineer Kelly N. de Montbrun (NC# 045542) on 09/09/2022.
2. Total Pile Driving Equipment Setup quantity (not shown in Pile Foundation Tables) equals the number of driven piles, i.e., the number of piles with a Required Driving Resistance.
3. The Engineer will determine the need for PDA Testing, Pipe Pile Plates, Permanent Steel Casing, SPTs, CSL Testing, SID Inspections and PITs when these items may be required.

PROJECT NO. BP11.R003.1

Ashe COUNTY

STATION: 16+85.00 -L-

NORTH CAROLINA PROFESSIONAL SEAL 029429 ENGINEER JASON T. GRISCOM

DocuSigned by: Jason Griscom 6-23

SIGNATURE DATE

STATE OF NORTH CAROLINA
DEPARTMENT OF TRANSPORTATION
RALEIGH

PILE AND DRILLED PIER FOUNDATION TABLES

DOCUMENT NOT CONSIDERED FINAL UNLESS ALL SIGNATURES COMPLETED

REVISIONS

NO.	BY:	DATE:	NO.	BY:	DATE:
1			3		
2			4		

SHEET NO. S-2

TOTAL SHEETS 29

DocuSign Envelope ID: 0908AB87-C088-4523-BEAB-A55EC9F5191D

BENCHMARK BM-1: RR SPIKE SET IN 15" CHERRY TREE, STA. 24+96.11 -L-, 28.3' RT., ELEV. 2722.76, N 977872 , E 1328813

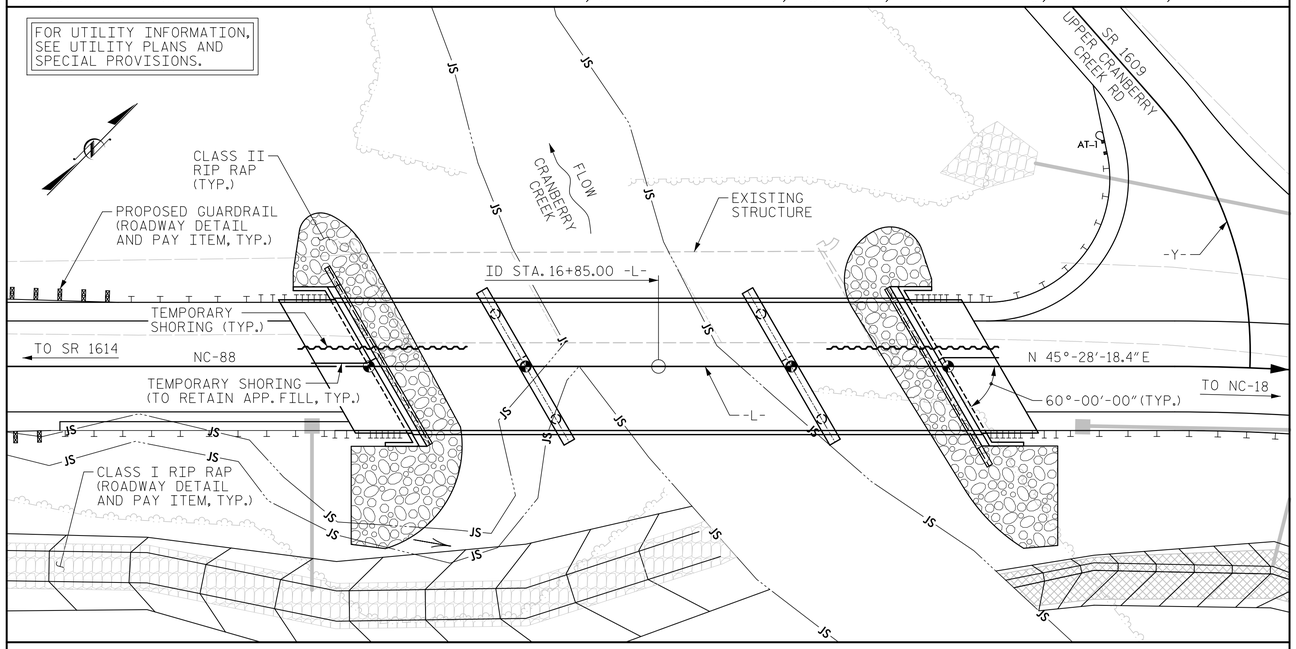

LOCATION SKETCH

GENERAL NOTES

ASSUMED LIVE LOAD = HL-93 OR ALTERNATE LOADING.

THIS BRIDGE HAS BEEN DESIGNED IN ACCORDANCE WITH THE REQUIREMENTS OF THE AASHTO LRFD BRIDGE DESIGN SPECIFICATIONS.

THIS BRIDGE IS LOCATED IN SEISMIC ZONE 1.

FOR OTHER DESIGN DATA AND GENERAL NOTES, SEE "STANDARD NOTES" SHEET.

FOR EROSION CONTROL MEASURES, SEE EROSION CONTROL PLANS.

THE EXISTING STRUCTURE CONSISTING OF (1) 41'-1", (1) 42'-6" AND (1) 41'-1" SPANS WITH REINFORCED CONCRETE DECK GIRDERS WITH A CLEAR ROADWAY WIDTH OF 23'-10" SUPPORTED BY REINFORCED CONCRETE CAPS, REINFORCED CONCRETE ABUTMENTS AND REINFORCED CONCRETE COLUMNS LOCATED AT THE PROPOSED STRUCTURE SHALL BE REMOVED. THE EXISTING BRIDGE IS PRESENTLY POSTED FOR LOAD LIMIT. SHOULD THE STRUCTURAL INTEGRITY OF THE BRIDGE DETERIORATE DURING CONSTRUCTION OF THE PROPOSED BRIDGE, A LOAD LIMIT MAY BE POSTED AND MAY BE REDUCED AS FOUND NECESSARY DURING THE LIFE OF THE PROJECT.

REMOVAL OF THE EXISTING BRIDGE SHALL BE PERFORMED SO AS NOT TO ALLOW DEBRIS TO FALL INTO THE WATER. THE CONTRACTOR SHALL SUBMIT DEMOLITION PLANS FOR REVIEW AND REMOVE THE BRIDGE IN ACCORDANCE WITH ARTICLE 402-2 OF THE STANDARD SPECIFICATIONS.

THE MATERIAL SHOWN IN THE CROSS-HATCHED AREA (ON SHEET 1 OF 3) SHALL BE EXCAVATED FOR A DISTANCE FROM THE CENTERLINE OF ROADWAY OF 80'± (LEFT) AND 16'± (RIGHT) AT END BENT 1 TO EL. 2717.0± AND 52'± (LEFT) AND 35'± (RIGHT) AT END BENT 2 TO EL. 2716.5±, AS DIRECTED BY THE ENGINEER. THIS WORK WILL BE PAID FOR AT THE CONTRACT LUMP SUM PRICE FOR UNCLASSIFIED STRUCTURE EXCAVATION. SEE SECTION 412 OF THE STANDARD SPECIFICATIONS.

THE SUBSTRUCTURE OF THE EXISTING BRIDGE INDICATED ON THE PLANS IS FROM THE BEST INFORMATION AVAILABLE. SINCE THIS INFORMATION IS SHOWN FOR THE CONVENIENCE OF THE CONTRACTOR, THE CONTRACTOR SHALL HAVE NO CLAIM WHATSOEVER AGAINST THE DEPARTMENT OF TRANSPORTATION FOR ANY DELAYS OR ADDITIONAL COST INCURRED BASED ON DIFFERENCES BETWEEN THE EXISTING BRIDGE SUBSTRUCTURE SHOWN ON THE PLANS AND THE ACTUAL CONDITIONS AT THE PROJECT SITE.

THIS STRUCTURE HAS BEEN DESIGNED IN ACCORDANCE WITH "HEC 18 - EVALUATING SCOUR AT BRIDGES".

FOR SUBMITTAL OF WORKING DRAWINGS, SEE SPECIAL PROVISIONS.

FOR FALSEWORK AND FORMWORK, SEE SPECIAL PROVISIONS.

FOR CRANE SAFETY, SEE SPECIAL PROVISIONS.

FOR GROUT FOR STRUCTURES, SEE SPECIAL PROVISIONS.

TEMPORARY SHORING WILL BE BE REQUIRED IN THE AREAS INDICATED IN THE PLAN VIEW. FOR TEMPORARY SHORING, SEE SPECIAL PROVISIONS. PAY ITEM INCLUDED IN STRUCTURE PLANS.

FOR ASBESTOS ASSESSMENT FOR BRIDGE DEMOLITION AND RENOVATION ACTIVITIES, SEE SPECIAL PROVISIONS.

BILL OF MATERIAL

		TEMPORARY SHORING	REMOVAL OF EXISTING STRUCTURE AT STA. 16+85.00 -L-	ASBESTOS ASSESSMENT	3'-0" DIA. DRILLED PIERS IN SOIL	3'-0" DIA. DRILLED PIERS NOT IN SOIL	PERMANENT STEEL CASING FOR 3'-0" DIA. DRILLED PIER	CSL TESTING	UNCLASSIFIED STRUCTURE EXCAVATION	CONCRETE WEARING SURFACE	GROOVING BRIDGE FLOORS	CLASS A CONCRETE	BRIDGE APPROACH SLABS
		SQ. FT.	LUMP SUM	LUMP SUM	LIN. FT.	LIN. FT.	LIN. FT.	EA.	LUMP SUM	SF	SF	CU. YD.	LUMP SUM
SUPERSTRUCTURE	STAGE 1									2,167	2,296		
	STAGE 2									2,919	3,193		
END BENT 1	STAGE 1	280.0										13.7	
	STAGE 2											12.1	
BENT 1	STAGE 1				66.0	46.0	24.0					13.0	
	STAGE 2				37.0	19.0	18.0					9.3	
BENT 2	STAGE 1				32.0	20.0	34.0					12.0	
	STAGE 2				17.0	9.0	17.0					8.8	
END BENT 2	STAGE 1	300.0										13.7	
	STAGE 2											12.0	
TOTAL		580.0	LUMP SUM	LUMP SUM	152.0	94.0	93.0	1	LUMP SUM	5,086	5,489	94.6	LUMP SUM

BILL OF MATERIAL (CONTINUED)

		REINFORCING STEEL	SPIRAL COLUMN REINFORCING STEEL	PILE DRIVING EQUIPMENT SETUP FOR HP12X53 STEEL PILES	HP 12X53 STEEL PILES		STEEL PILE POINTS	VERTICAL CONCRETE BARRIER RAIL	RIP RAP CLASS II (2'-0" THICK)	GEOTEXTILE FOR DRAINAGE	ELASTOMERIC BEARINGS	3'-0" X 2'-0" PRESTRESSED CONCRETE CORED SLABS	
					NO.	LIN. FT.						NO.	LIN. FT.
		LBS.	LBS.	EA.			EA.	LIN. FT.	TONS	SQ. YDS.	LUMP SUM		
SUPERSTRUCTURE	STAGE 1							150.44				18	900.0
	STAGE 2							150.44				18	900.0
END BENT 1	STAGE 1	1,675		4	4	165.0			145	160			
	STAGE 2	1,403		3	3	135.0			90	100			
BENT 1	STAGE 1	11,233	2,274										
	STAGE 2	6,217	1,145										
BENT 2	STAGE 1	7,142	1,156										
	STAGE 2	4,172	586										
END BENT 2	STAGE 1	1,688		4	4	80.0	4		130	140			
	STAGE 2	1,390		3	3	60.0	3		100	110			
TOTAL		34,920	5,161	14	14	440.0	7	300.88	465	510	LUMP SUM	36	1800.0

DocuSigned by: Jason Griscom E4ACDE427F2F4B1...

NORTH CAROLINA PROFESSIONAL SEAL 029429 ENGINEER JASON T. GRISCOM

8/18/2023

STV Engineers, Inc.
900 West Trade St., Suite 715
Charlotte, NC 28202
NC License Number F-0991

DOCUMENT NOT CONSIDERED FINAL UNLESS ALL SIGNATURES COMPLETED

PROJECT NO. BP11.R003.1

ASHE COUNTY

STATION: 16+85.00 -L-

SHEET 3 OF 3

STATE OF NORTH CAROLINA
DEPARTMENT OF TRANSPORTATION
RALEIGH

GENERAL DRAWING

FOR BRIDGE ON NC-88
OVER CRANBERRY CREEK
BETWEEN SR 1614 AND SR 1609

REVISIONS						SHEET NO.
NO.	BY:	DATE:	NO.	BY:	DATE:	S-3
1			3			TOTAL SHEETS
2			4			29

DRAWN BY : SGH DATE : 9-22
CHECKED BY : JAD DATE : 9-22
DESIGN ENGINEER OF RECORD : J. GRISCOM DATE : 8-23

HensleSG 8/17/2023 11:20:05 AM R:\Structures\ustation\Finals\40l_005_BP11_R003_L_SMU_GD3_003_40063.dgn

DocuSign Envelope ID: 0908AB87-C088-4523-BEAB-A55EC9F5191D

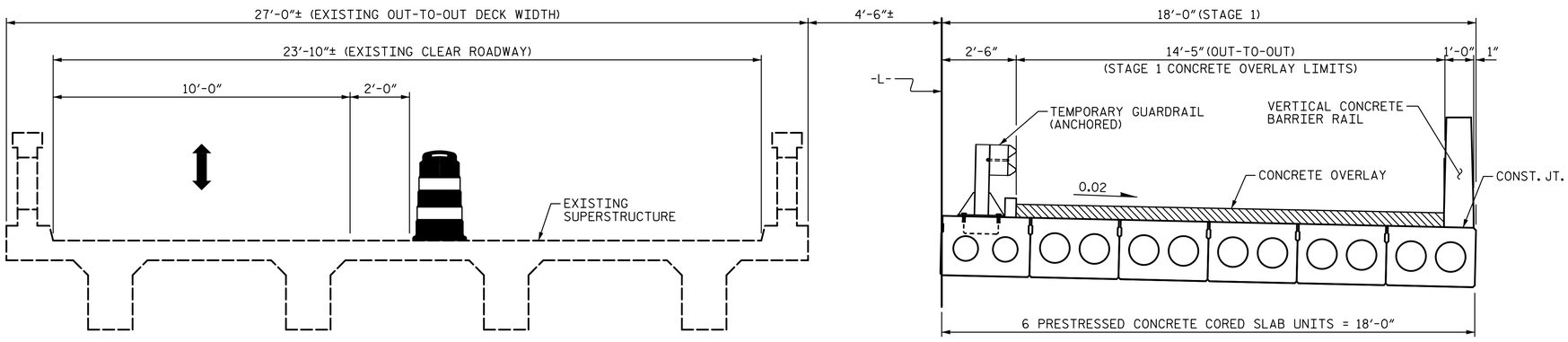

PHASE 1

1. VERIFY EXISTING BRIDGE DIMENSIONS. CONTACT ENGINEER IF FIELD MEASUREMENTS VARY FROM PLAN DIMENSIONS.
2. REMOVE PORTION OF EXISTING END BENT WING WALLS.
3. CONSTRUCT RIGHT PORTION OF PROPOSED BRIDGE. ANCHOR TEMPORARY GUARDRAIL TO PROPOSED BRIDGE.
4. PAVE FULL DEPTH CONCRETE OVERLAY TO LIMITS SHOWN.

PROJECT NO. BP11.R003.1

ASHE COUNTY

STATION: 16+85.00 -L-

SHEET 1 OF 2

DocuSigned by: Jason Griscom
EAACDE2FF2F4D8...

NORTH CAROLINA PROFESSIONAL SEAL 029429 ENGINEER JASON T. GRISCOM

6/21/2023

STV Engineers, Inc.
900 West Trade St., Suite 715
Charlotte, NC 28202
NC License Number F-0991

DOCUMENT NOT CONSIDERED FINAL UNLESS ALL SIGNATURES COMPLETED

STATE OF NORTH CAROLINA
DEPARTMENT OF TRANSPORTATION
RALEIGH

BRIDGE CONSTRUCTION SEQUENCE

REVISIONS						SHEET NO.
NO.	BY:	DATE:	NO.	BY:	DATE:	S-4
1			3			TOTAL SHEETS
2			4			29

DRAWN BY : SGH DATE : 9-22
CHECKED BY : JAD DATE : 9-22
DESIGN ENGINEER OF RECORD : J. GRISCOM DATE : 6-23

HensleSG 6/20/2023 2:15:51 PM R:\Structures\ustation\Sealed Bridge Plans\40I_007_BPII.R003.I_SMU_BCSI_004_40063.dgn

DocuSign Envelope ID: 0908AB87-C088-4523-BEAB-A55EC9F5191D

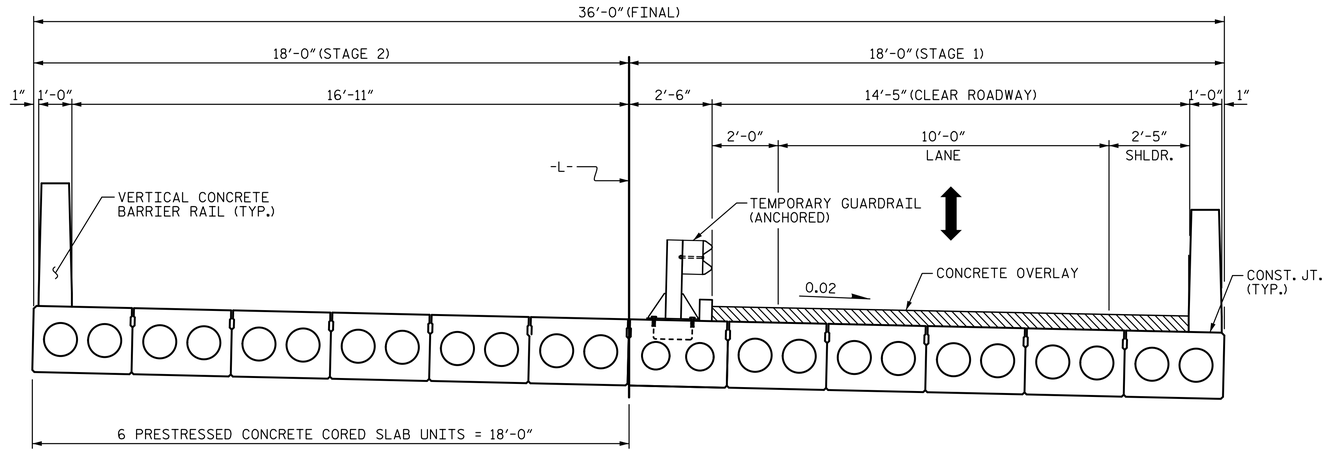

PHASE 2

1. SHIFT TRAFFIC TO PHASE 1 PORTION OF PROPOSED BRIDGE.
2. REMOVE EXISTING BRIDGE.
3. CONSTRUCT LEFT PORTION OF PROPOSED BRIDGE.

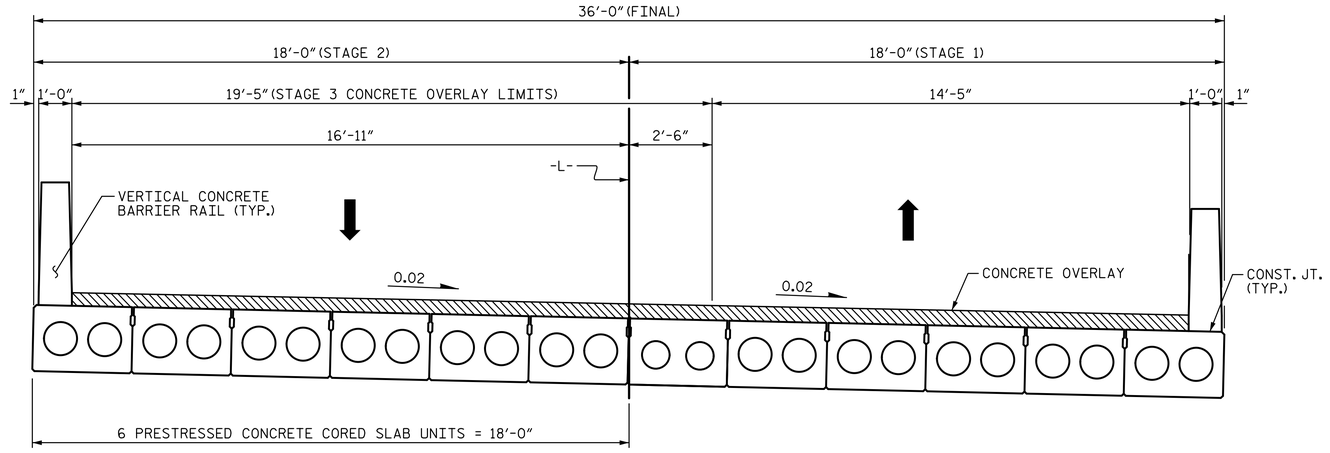

PHASE 3

1. REMOVE TEMPORARY GUARDRAIL.
2. PAVE FULL DEPTH CONCRETE OVERLAY TO THE LIMITS SHOWN.

DocuSigned by:
Jason Griscom
EAC1E1E1E1E1E1E1...

NORTH CAROLINA PROFESSIONAL SEAL 029429 ENGINEER JASON T. GRISCOM

6/21/2023

STV Engineers, Inc.
900 West Trade St., Suite 715
Charlotte, NC 28202
NC License Number F-0991

DOCUMENT NOT CONSIDERED FINAL UNLESS ALL SIGNATURES COMPLETED

PROJECT NO. BP11.R003.1

ASHE COUNTY

STATION: 16+85.00 -L-

SHEET 2 OF 2

STATE OF NORTH CAROLINA
DEPARTMENT OF TRANSPORTATION
RALEIGH

BRIDGE CONSTRUCTION SEQUENCE

REVISIONS						SHEET NO.
NO.	BY:	DATE:	NO.	BY:	DATE:	S-5
1			3			TOTAL SHEETS
2			4			29

DRAWN BY :	SGH	DATE :	9-22
CHECKED BY :	JAD	DATE :	9-22
DESIGN ENGINEER OF RECORD :	J. GRISCOM	DATE :	6-23

HenselSG 6/20/2023 2:16:15 PM R:\Structures\ustation\Sealed Bridge Plans\40I_009_BP11_R003_I_SMU_BCS2_005_40063.dgn

DocuSign Envelope ID: 0908AB87-C088-4523-BEAB-A55EC9F5191D

LOAD AND RESISTANCE FACTOR RATING (LRFD) SUMMARY FOR PRESTRESSED CONCRETE GIRDERS

LEVEL		VEHICLE	WEIGHT (W) (TONS)	CONTROLLING LOAD RATING	MINIMUM RATING FACTORS (RF)	TONS = W X RF	STRENGTH I LIMIT STATE										SERVICE III LIMIT STATE						COMMENT NUMBER
								MOMENT					SHEAR						MOMENT					
							LIVELOAD FACTORS	DISTRIBUTION FACTORS (DF)	RATING FACTOR	SPAN	GIRDER LOCATION	DISTANCE FROM LEFT END OF SPAN (ft)	DISTRIBUTION FACTORS (DF)	RATING FACTOR	SPAN	GIRDER LOCATION	DISTANCE FROM LEFT END OF SPAN (ft)	LIVELOAD FACTORS	DISTRIBUTION FACTORS (DF)	RATING FACTOR	SPAN	GIRDER LOCATION	DISTANCE FROM LEFT END OF SPAN (ft)	
DESIGN LOAD RATING		HL-93(Inv)	N/A	1	1.80	--	1.75	0.26	1.80	40′	EL	19.50	0.64	1.97	40′	EL	7.50	0.80	0.26	2.27	40′	EL	19.50	
		HL-93(Opr)	N/A	--	2.33	--	1.35	0.26	2.33	40′	EL	19.50	0.64	2.60	40′	EL	7.50	N/A	--	--	--	--	--	
		HS-20(Inv)	36.000	2	2.26	81.36	1.75	0.26	2.26	40′	EL	19.50	0.64	2.28	40′	EL	7.50	0.80	0.26	2.84	40′	EL	19.50	
		HS-20(Opr)	36.000	--	2.92	105.12	1.35	0.26	2.92	40′	EL	19.50	0.64	3.01	40′	EL	31.50	N/A	--	--	--	--	--	
LEGAL LOAD RATING	SV	SNSH	13.500	--	5.21	70.34	1.4	0.26	5.21	40′	EL	19.50	0.64	6.12	40′	EL	7.50	0.80	0.26	5.26	40′	EL	19.50	
		SNGARBS2	20.000	--	4.33	86.60	1.4	0.26	4.33	40′	EL	23.50	0.64	4.59	40′	EL	7.50	0.80	0.26	4.37	40′	EL	19.50	
		SNAGRIS2	22.000	--	4.23	93.06	1.4	0.26	4.23	40′	EL	23.50	0.64	4.38	40′	EL	7.50	0.80	0.26	4.30	40′	EL	23.50	
		SNCOTTS3	27.250	--	2.61	71.12	1.4	0.26	2.61	40′	EL	19.50	0.64	2.96	40′	EL	7.50	0.80	0.26	2.63	40′	EL	19.50	
		SNAGGRS4	34.925	--	2.34	81.72	1.4	0.26	2.34	40′	EL	19.50	0.64	2.64	40′	EL	7.50	0.80	0.26	2.37	40′	EL	19.50	
		SNS5A	35.550	--	2.28	81.05	1.4	0.26	2.28	40′	EL	19.50	0.64	2.79	40′	EL	7.50	0.80	0.26	2.30	40′	EL	19.50	
		SNS6A	39.950	--	2.17	86.69	1.4	0.26	2.17	40′	EL	19.50	0.64	2.61	40′	EL	7.50	0.80	0.26	2.19	40′	EL	19.50	
		SNS7B	42.000	3	2.07	86.94	1.4	0.26	2.07	40′	EL	19.50	0.64	2.68	40′	EL	7.50	0.80	0.26	2.09	40′	EL	19.50	
	TTST	TNAGRIT3	33.000	--	2.67	88.11	1.4	0.26	2.67	40′	EL	19.50	0.64	3.12	40′	EL	31.50	0.80	0.26	2.69	40′	EL	19.50	
		TNT4A	33.075	--	2.70	89.30	1.4	0.26	2.70	40′	EL	19.50	0.64	2.91	40′	EL	31.50	0.80	0.26	2.73	40′	EL	19.50	
		TNT6A	41.600	--	2.29	95.26	1.4	0.26	2.29	40′	EL	19.50	0.64	2.84	40′	EL	7.50	0.80	0.26	2.31	40′	EL	19.50	
		TNT7A	42.000	--	2.35	98.70	1.4	0.26	2.35	40′	EL	19.50	0.64	2.64	40′	EL	31.50	0.80	0.26	2.37	40′	EL	19.50	
		TNT7B	42.000	--	2.40	100.80	1.4	0.26	2.40	40′	EL	19.50	0.64	2.54	40′	EL	7.50	0.80	0.26	2.43	40′	EL	19.50	
		TNAGRIT4	43.000	--	2.34	100.62	1.4	0.26	2.34	40′	EL	19.50	0.64	2.45	40′	EL	7.50	0.80	0.26	2.36	40′	EL	19.50	
		TNAGT5A	45.000	--	2.17	97.65	1.4	0.26	2.17	40′	EL	19.50	0.64	2.63	40′	EL	7.50	0.80	0.26	2.18	40′	EL	19.50	
		TNAGT5B	45.000	--	2.10	94.50	1.4	0.26	2.10	40′	EL	19.50	0.64	2.31	40′	EL	7.50	0.80	0.26	2.12	40′	EL	19.50	

LOAD FACTORS:

DESIGN LOAD RATING FACTORS	LIMIT STATE	γ_{DC}	γ_{DW}
	STRENGTH I	1.25	1.50
	SERVICE III	1.00	1.00

NOTES:

MINIMUM RATING FACTORS ARE BASED ON THE STRENGTH I AND SERVICE III LIMIT STATES.

ALLOWABLE STRESSES FOR SERVICE III LIMIT STATE ARE AS REQUIRED FOR DESIGN.

COMMENTS:

1.
2.
3.
4.

⟨#⟩ CONTROLLING LOAD RATING
⟨1⟩ DESIGN LOAD RATING (HL-93)
⟨2⟩ DESIGN LOAD RATING (HS-20)
⟨3⟩ LEGAL LOAD RATING **
** SEE CHART FOR VEHICLE TYPE

GIRDER LOCATION
I - INTERIOR GIRDER
EL - EXTERIOR LEFT GIRDER
ER - EXTERIOR RIGHT GIRDER

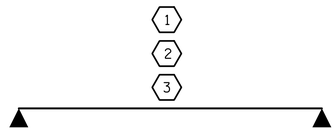

LRFR SUMMARY

FOR SPAN "A" & "C"

DocuSigned by: Jason Griscom

JASON T. GRISCOM
NORTH CAROLINA PROFESSIONAL ENGINEER SEAL 029429

6/21/2023

STV Engineers, Inc.
900 West Trade St., Suite 715
Charlotte, NC 28202
NC License Number F-0991

DOCUMENT NOT CONSIDERED FINAL UNLESS ALL SIGNATURES COMPLETED

PROJECT NO. BP11.R003.1

ASHE COUNTY

STATION: 16+85.00 -L-

STATE OF NORTH CAROLINA
DEPARTMENT OF TRANSPORTATION
RALEIGH

LRFR SUMMARY FOR 40′ CORED SLAB UNIT (SPAN A & C)

(NON-INTERSTATE TRAFFIC)

REVISIONS						SHEET NO.
NO.	BY:	DATE:	NO.	BY:	DATE:	S-6
1			3			TOTAL SHEETS
2			4			29

DRAWN BY : SGH DATE : 9-22
CHECKED BY : JAD DATE : 9-22
DESIGN ENGINEER OF RECORD : J. GRISCOM DATE : 6-23

HensleSG 6/20/2023 2:16:38 PM R:\Structures\Ustation\Sealed Bridge Plans\40L_OIL_BP11R003_1_SMU_LRFR_006_40063.dgn

DocuSign Envelope ID: 0908AB87-C088-4523-BEAB-A55EC9F5191D

LOAD AND RESISTANCE FACTOR RATING (LRFD) SUMMARY FOR PRESTRESSED CONCRETE GIRDERS

LEVEL		VEHICLE	WEIGHT (W) (TONS)	CONTROLLING LOAD RATING	MINIMUM RATING FACTORS (RF)	TONS = W X RF	STRENGTH I LIMIT STATE											SERVICE III LIMIT STATE						COMMENT NUMBER
								MOMENT					SHEAR						MOMENT					
							LIVELOAD FACTORS	DISTRIBUTION FACTORS (DF)	RATING FACTOR	SPAN	GIRDER LOCATION	DISTANCE FROM LEFT END OF SPAN (ft)	DISTRIBUTION FACTORS (DF)	RATING FACTOR	SPAN	GIRDER LOCATION	DISTANCE FROM LEFT END OF SPAN (ft)	LIVELOAD FACTORS	DISTRIBUTION FACTORS (DF)	RATING FACTOR	SPAN	GIRDER LOCATION	DISTANCE FROM LEFT END OF SPAN (ft)	
DESIGN LOAD RATING		HL-93(Inv)	N/A	1	1.30	--	1.75	0.25	1.30	70′	EL	34.50	0.65	1.35	70′	EL	6.50	0.80	0.23	1.73	70′	I	34.50	
		HL-93(Opr)	N/A	--	1.68	--	1.35	0.25	1.68	70′	EL	34.50	0.65	1.90	70′	EL	6.50	N/A	--	--	--	--	--	
		HS-20(Inv)	36.000	2	1.68	60.48	1.75	0.25	1.68	70′	EL	34.50	0.65	1.82	70′	EL	6.50	0.80	0.23	2.25	70′	I	34.50	
		HS-20(Opr)	36.000	--	2.18	78.48	1.35	0.25	2.18	70′	EL	34.50	0.65	2.41	70′	EL	6.50	N/A	--	--	--	--	--	
LEGAL LOAD RATING	SV	SNSH	13.500	--	4.70	63.45	1.4	0.25	4.70	70′	EL	34.50	0.65	5.66	70′	EL	6.50	0.80	0.23	5.02	70′	I	34.50	
		SNGARBS2	20.000	--	3.52	70.40	1.4	0.25	3.52	70′	EL	34.50	0.65	4.00	70′	EL	6.50	0.80	0.23	3.76	70′	I	34.50	
		SNAGRIS2	22.000	--	3.34	73.48	1.4	0.25	3.34	70′	EL	34.50	0.65	3.71	70′	EL	6.50	0.80	0.23	3.57	70′	I	34.50	
		SNCOTTS3	27.250	--	2.34	63.77	1.4	0.25	2.34	70′	EL	34.50	0.65	2.78	70′	EL	6.50	0.80	0.23	2.50	70′	I	34.50	
		SNAGGRS4	34.925	--	1.96	68.45	1.4	0.25	1.96	70′	EL	34.50	0.65	2.29	70′	EL	6.50	0.80	0.23	2.10	70′	I	34.50	
		SNS5A	35.550	--	1.92	68.26	1.4	0.25	1.92	70′	EL	34.50	0.65	2.32	70′	EL	6.50	0.80	0.23	2.05	70′	I	34.50	
		SNS6A	39.950	--	1.76	70.31	1.4	0.25	1.76	70′	EL	34.50	0.65	2.12	70′	EL	6.50	0.80	0.23	1.88	70′	I	34.50	
		SNS7B	42.000	--	1.68	70.56	1.4	0.25	1.68	70′	EL	34.50	0.65	2.08	70′	EL	6.50	0.80	0.23	1.79	70′	I	34.50	
	TTST	TNAGRIT3	33.000	--	2.15	70.95	1.4	0.25	2.15	70′	EL	34.50	0.65	2.54	70′	EL	6.50	0.80	0.23	2.30	70′	I	34.50	
		TNT4A	33.075	--	2.16	71.44	1.4	0.25	2.16	70′	EL	34.50	0.65	2.47	70′	EL	6.50	0.80	0.23	2.31	70′	I	34.50	
		TNT6A	41.600	--	1.77	73.63	1.4	0.25	1.77	70′	EL	34.50	0.65	2.22	70′	EL	6.50	0.80	0.23	1.89	70′	I	34.50	
		TNT7A	42.000	--	1.78	74.76	1.4	0.25	1.78	70′	EL	34.50	0.65	2.17	70′	EL	6.50	0.80	0.23	1.90	70′	I	34.50	
		TNT7B	42.000	--	1.85	77.70	1.4	0.25	1.85	70′	EL	34.50	0.65	2.01	70′	EL	6.50	0.80	0.23	1.97	70′	I	34.50	
		TNAGRIT4	43.000	--	1.75	75.25	1.4	0.25	1.75	70′	EL	34.50	0.65	1.95	70′	EL	6.50	0.80	0.23	1.87	70′	I	34.50	
		TNAGT5A	45.000	--	1.65	74.25	1.4	0.25	1.65	70′	EL	34.50	0.65	1.94	70′	EL	6.50	0.80	0.23	1.76	70′	I	34.50	
		TNAGT5B	45.000	3	1.63	73.35	1.4	0.25	1.63	70′	EL	34.50	0.65	1.85	70′	EL	6.50	0.80	0.23	1.74	70′	I	34.50	

LOAD FACTORS:

DESIGN LOAD RATING FACTORS	LIMIT STATE	γ_{DC}	γ_{DW}
	STRENGTH I	1.25	1.50
	SERVICE III	1.00	1.00

NOTES:

MINIMUM RATING FACTORS ARE BASED ON THE STRENGTH I AND SERVICE III LIMIT STATES.

ALLOWABLE STRESSES FOR SERVICE III LIMIT STATE ARE AS REQUIRED FOR DESIGN.

COMMENTS:

1.
2.
3.
4.

⟨#⟩ CONTROLLING LOAD RATING
⟨1⟩ DESIGN LOAD RATING (HL-93)
⟨2⟩ DESIGN LOAD RATING (HS-20)
⟨3⟩ LEGAL LOAD RATING **
** SEE CHART FOR VEHICLE TYPE

GIRDER LOCATION
I - INTERIOR GIRDER
EL - EXTERIOR LEFT GIRDER
ER - EXTERIOR RIGHT GIRDER

⟨1⟩
⟨2⟩
⟨3⟩

LRFR SUMMARY

FOR SPAN "B"

DocuSigned by: Jason Griscom

NORTH CAROLINA PROFESSIONAL SEAL 029429 ENGINEER JASON T. GRISCOM

6/21/2023

STV Engineers, Inc.
900 West Trade St., Suite 715
Charlotte, NC 28202
NC License Number F-0991

DOCUMENT NOT CONSIDERED FINAL UNLESS ALL SIGNATURES COMPLETED

PROJECT NO. BP11.R003.1

ASHE COUNTY

STATION: 16+85.00 -L-

STATE OF NORTH CAROLINA
DEPARTMENT OF TRANSPORTATION
RALEIGH

LRFR SUMMARY FOR 70′ CORED SLAB UNIT (SPAN B)

(NON-INTERSTATE TRAFFIC)

REVISIONS						SHEET NO.
NO.	BY:	DATE:	NO.	BY:	DATE:	S-7
1			3			TOTAL SHEETS
2			4			29

DRAWN BY : SGH DATE : 9-22
CHECKED BY : JAD DATE : 9-22
DESIGN ENGINEER OF RECORD : J. GRISCOM DATE : 6-23

HensleSG 6/20/2023 2:17:06 PM R:\Structures\Ustation\Sealed Bridge Plans\401_013_BP11_R003J_SMLLRFR2_007_40063.dgn

DocuSign Envelope ID: 0908AB87-C088-4523-BEAB-A55EC9F5191D

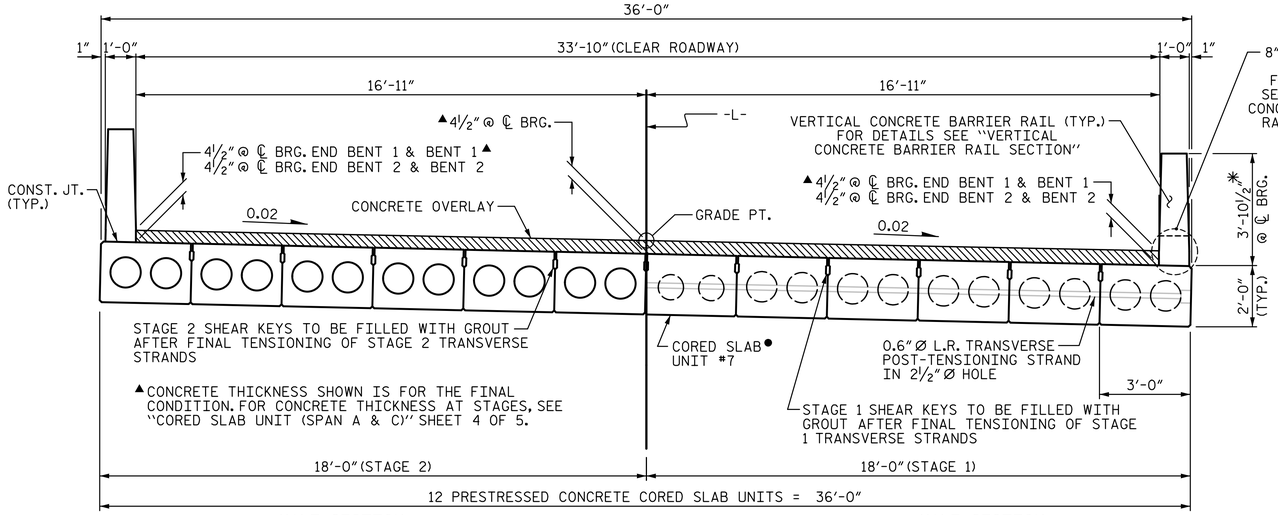

HALF SECTION
THROUGH VOIDS

HALF SECTION
AT INTERMEDIATE DIAPHRAGMS

TYPICAL SECTION

●CORED SLAB UNITS ARE NUMBERED FROM LEFT TO RIGHT, LOOKING UPSTATION.

✳- THE MAXIMUM BARRIER RAIL HEIGHT AND CONCRETE OVERLAY THICKNESS IS SHOWN. THE HEIGHT OF THE BARRIER RAIL AND CONCRETE OVERLAY THICKNESS VARIES WHILE THE TOP OF THE BARRIER RAIL FOLLOWS THE PROFILE OF THE GUTTERLINE. FOR RAIL HEIGHT DETAILS AND CONCRETE OVERLAY THICKNESS, SEE THE ''VERTICAL CONCRETE BARRIER RAIL SECTION'' DETAIL.

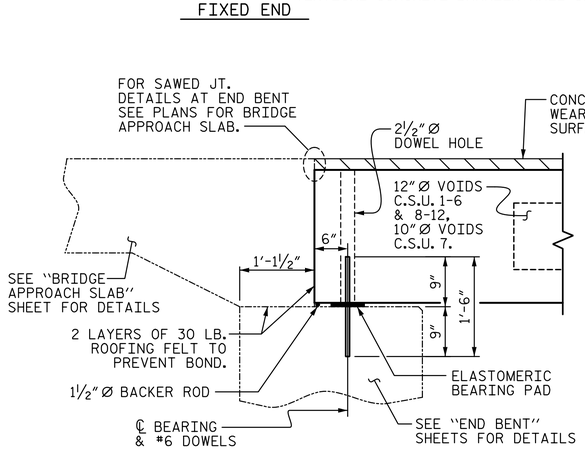

SECTION AT END BENT No. 1

(END BENT 1 SHOWN. END BENT 2 SIMILAR)

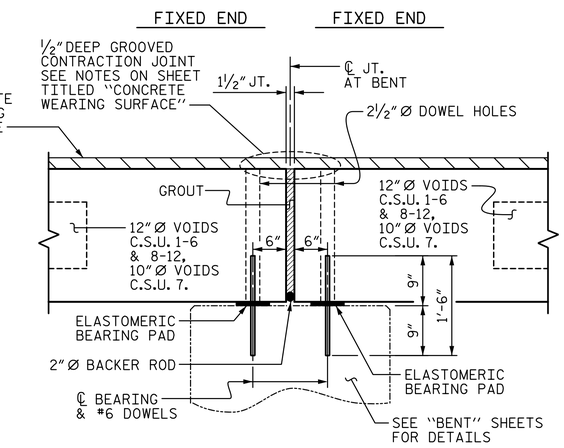

SECTION AT BENT No. 1

(BENT 1 SHOWN. BENT 2 SIMILAR)

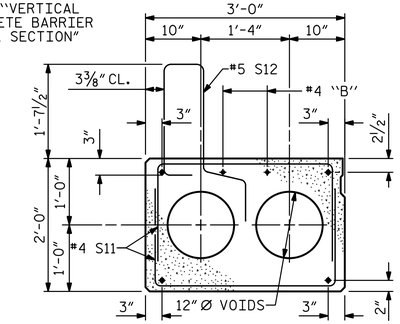

EXTERIOR SLAB SECTION

(FOR PRESTRESSED STRAND LAYOUT, SEE INTERIOR SLAB SECTION.)

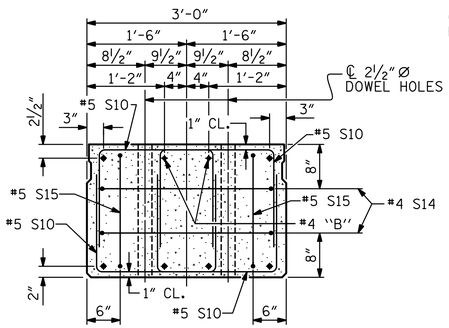

END ELEVATION

SHOWING PLACEMENT OF DOUBLE STIRRUPS AND LOCATION OF DOWEL HOLES. (STRAND LAYOUT NOT SHOWN.) INTERIOR SLAB UNIT SHOWN-EXTERIOR SLAB UNIT SIMILAR EXCEPT SHEAR KEY LOCATION.

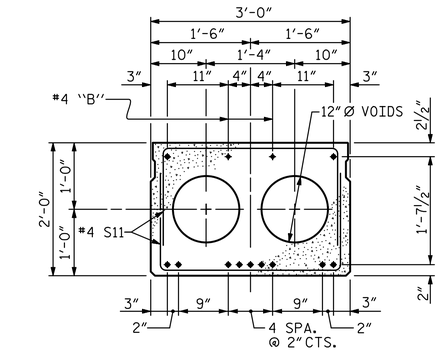

INTERIOR SLAB SECTION (EXCEPT C.S.U. 7)

(11 STRANDS REQUIRED)

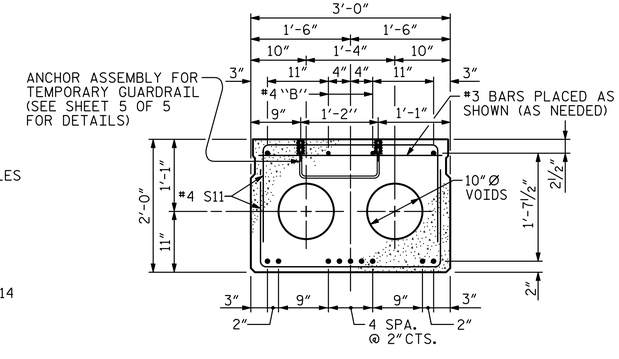

INTERIOR SLAB SECTION (C.S.U. 7 ONLY)

(11 STRANDS REQUIRED)
THE #3 BARS ARE INCIDENTAL AND THE COST SHALL BE INCLUDED IN THE PRICE BID FOR PRESTRESSED CONCRETE CORED SLABS

0.6″Ø LOW RELAXATION STRAND LAYOUT

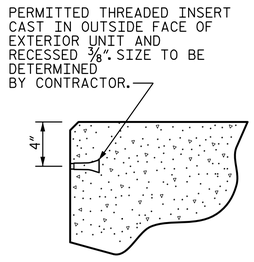

THREADED INSERT DETAIL

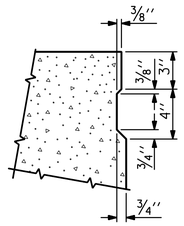

SHEAR KEY DETAIL

NOTE: OMIT SHEAR KEY ON OUTSIDE FACE OF EXTERIOR CORED SLABS.

DocuSigned by: Jason Griscom
EXACTEC8E0...

NORTH CAROLINA PROFESSIONAL SEAL 029429 ENGINEER JASON T. GRISCOM

6/21/2023

stv STV Engineers, Inc.
900 West Trade St., Suite 715
Charlotte, NC 28202
NC License Number F-0991

DOCUMENT NOT CONSIDERED FINAL UNLESS ALL SIGNATURES COMPLETED

PROJECT NO. BP11.R003.1
ASHE COUNTY
STATION: 16+85.00 -L-

SHEET 1 OF 5

STATE OF NORTH CAROLINA
DEPARTMENT OF TRANSPORTATION
RALEIGH

3′-0″ X 2′-0″ PRESTRESSED CONCRETE CORED SLAB UNIT (SPAN A & C)

REVISIONS						SHEET NO.
NO.	BY:	DATE:	NO.	BY:	DATE:	S-8
1			3			TOTAL SHEETS
2			4			29

DRAWN BY :	SGH	DATE : 9-22
CHECKED BY :	JAD	DATE : 9-22
DESIGN ENGINEER OF RECORD :	J. GRISCOM	DATE : 6-23

HensleSG 6/20/2023 2:18:40 PM R:\Structures\ustation\Sealed Bridge Plans\40L015_BP11R003.1_SMU_CSI_008_40063.dgn

DocuSign Envelope ID: 0908AB87-C088-4523-BEAB-A55EC9F5191D

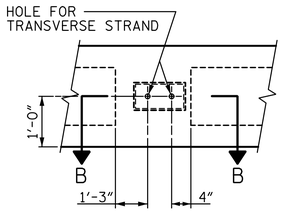

VIEW E-E

OUTSIDE FACE OF CORED SLAB UNIT #12 SHOWN

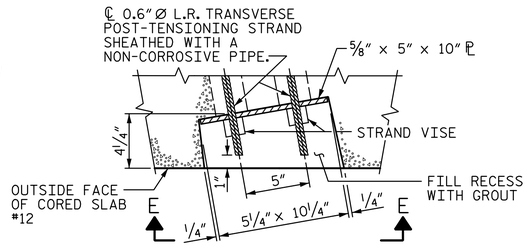

SECTION B-B

CORED SLAB UNIT #12

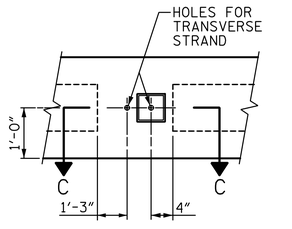

VIEW F-F

LEFT SIDE OF CORED SLAB UNIT #7 SHOWN

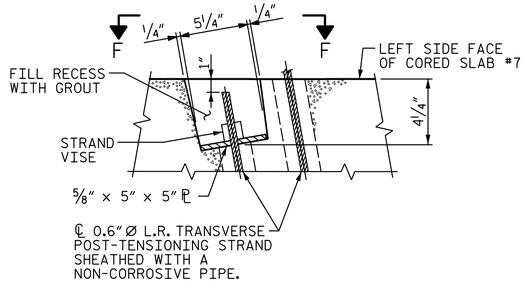

SECTION C-C

CORED SLAB UNIT #7

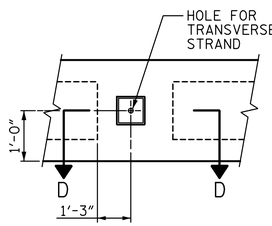

VIEW G-G

OUTSIDE FACE OF CORED SLAB UNIT #1 SHOWN

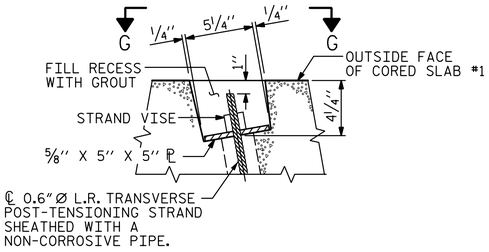

SECTION D-D

CORED SLAB UNIT #1

GROUTED RECESS AT END OF POST-TENSIONED STRAND CORED SLABS

(SEE SHEET 3 OF 5 FOR LOCATIONS)

DocuSigned by: Jason Griscom
EXAC5EE7E1E4E0...

NORTH CAROLINA PROFESSIONAL SEAL 029429 ENGINEER JASON T. GRISCOM

6/21/2023

STV Engineers, Inc.
900 West Trade St., Suite 715
Charlotte, NC 28202
NC License Number F-0991

DOCUMENT NOT CONSIDERED FINAL UNLESS ALL SIGNATURES COMPLETED

PROJECT NO. BP11.R003.1

ASHE COUNTY

STATION: 16+85.00 -L-

SHEET 2 OF 5

STATE OF NORTH CAROLINA
DEPARTMENT OF TRANSPORTATION
RALEIGH

STANDARD
3'-0'' X 2'-0''
PRESTRESSED CONCRETE
CORED SLAB UNIT
(SPAN A & C)

REVISIONS						SHEET NO.
NO.	BY:	DATE:	NO.	BY:	DATE:	S-9
1			3			TOTAL SHEETS
2			4			29

DRAWN BY :	SGH	DATE : 9-22
CHECKED BY :	JAD	DATE : 9-22
DESIGN ENGINEER OF RECORD :	J. GRISCOM	DATE : 6-23

HensleSG 6/20/2023 2:19:05 PM R:\Structures\ustation\Sealed Bridge Plans\40L017_BP11R003.1_SMU_CS2_009_40063.dgn

DocuSign Envelope ID: 0908AB87-C088-4523-BEAB-A55EC9F5191D

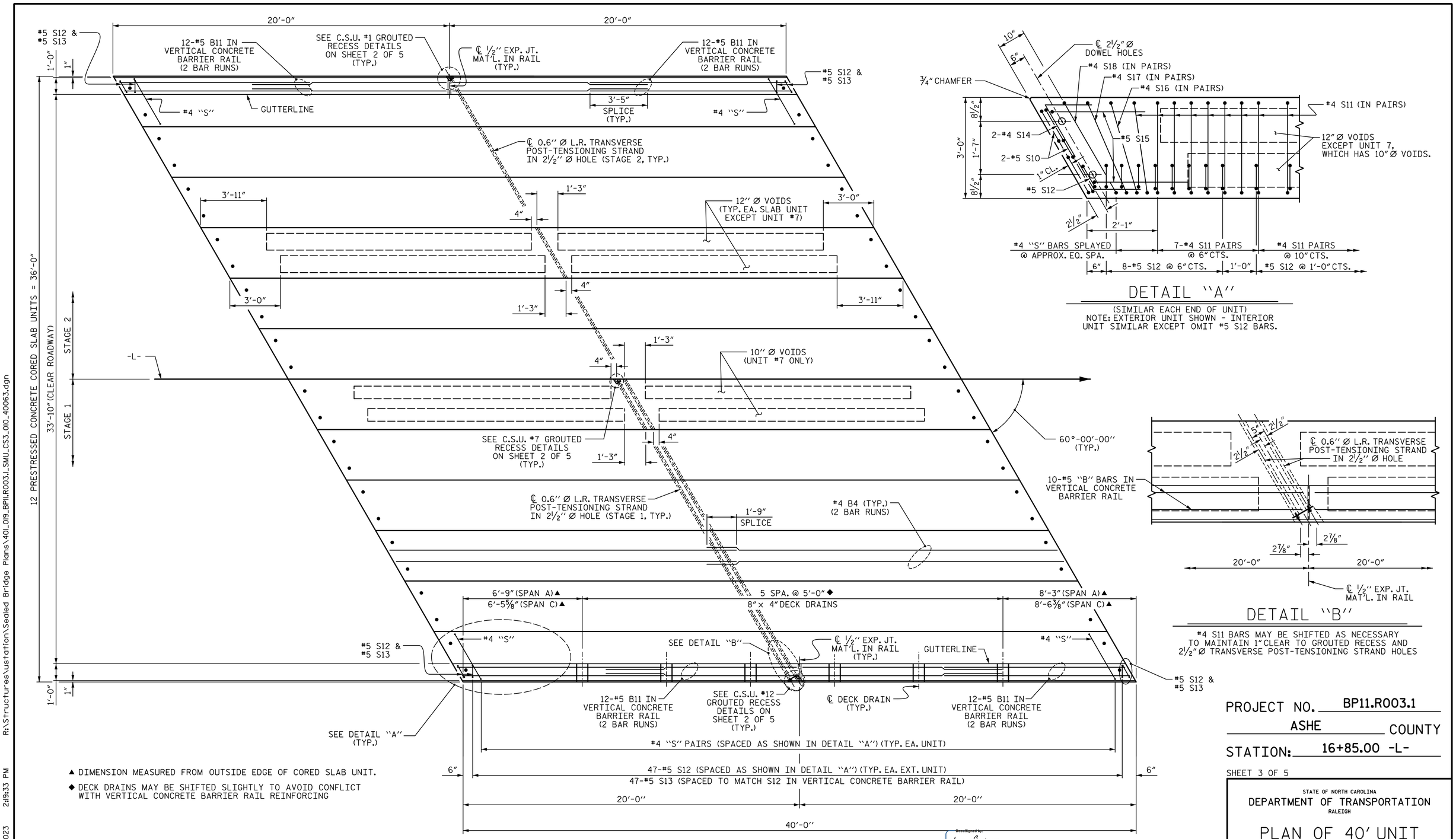

DETAIL ″A″

(SIMILAR EACH END OF UNIT)
NOTE: EXTERIOR UNIT SHOWN - INTERIOR UNIT SIMILAR EXCEPT OMIT #5 S12 BARS.

#4 S11 BARS MAY BE SHIFTED AS NECESSARY TO MAINTAIN 1″ CLEAR TO GROUTED RECESS AND 2½″ Ø TRANSVERSE POST-TENSIONING STRAND HOLES

DETAIL ″B″

▲ DIMENSION MEASURED FROM OUTSIDE EDGE OF CORED SLAB UNIT.

◆ DECK DRAINS MAY BE SHIFTED SLIGHTLY TO AVOID CONFLICT WITH VERTICAL CONCRETE BARRIER RAIL REINFORCING

PLAN OF UNIT

(SPAN A & C)

PROJECT NO. BP11.R003.1

ASHE COUNTY

STATION: 16+85.00 -L-

SHEET 3 OF 5

STATE OF NORTH CAROLINA
DEPARTMENT OF TRANSPORTATION
RALEIGH

PLAN OF 40′ UNIT 33′-10″ CLEAR ROADWAY 60° SKEW (SPAN A & C)

REVISIONS						SHEET NO.
NO.	BY:	DATE:	NO.	BY:	DATE:	S-10
1			3			TOTAL SHEETS
2			4			29

DocuSigned by: Jason Griscom
6/21/2023

NORTH CAROLINA PROFESSIONAL SEAL 029429 ENGINEER JASON T. GRISCOM

STV Engineers, Inc.
900 West Trade St., Suite 715
Charlotte, NC 28202
NC License Number F-0991

DOCUMENT NOT CONSIDERED FINAL UNLESS ALL SIGNATURES COMPLETED

DRAWN BY :	SGH	DATE : 9-22
CHECKED BY :	JAD	DATE : 9-22
DESIGN ENGINEER OF RECORD :	J. GRISCOM	DATE : 6-23

HensleSG 6/20/2023 2:19:33 PM R:\Structures\ustation\Sealed Bridge Plans\401_019_BP11_R003_1_SMU_CS3_010_40063.dgn

DocuSign Envelope ID: 0908AB87-C088-4523-BEAB-A55EC9F5191D

CORED SLABS REQUIRED (SPAN A & C)

STAGE NUMBER		NUMBER	LENGTH	TOTAL LENGTH
1	EXTERIOR C.S.	2	40′-0″	80′-0″
	INTERIOR C.S.	8	40′-0″	320′-0″
	INTERIOR C.S. W/ 10″Ø VOIDS	2	40′-0″	80′-0″
	TOTAL	12	—	480′-0″
2	EXTERIOR C.S.	2	40′-0″	80′-0″
	INTERIOR C.S.	10	40′-0″	400′-0″
	TOTAL	12	—	480′-0″

GUTTERLINE CONCRETE THICKNESS & RAIL HEIGHT

	CONCRETE OVERLAY THICKNESS			RAIL HEIGHT		
SPAN A	℄ BRG. EB1	@ MID-SPAN	℄ BRG. B1	℄ BRG. EB1	@ MID-SPAN	℄ BRG. B1
STAGE 1	4½″	4¼″	4½″	3′-10½″	3′-10¼″	3′-10½″
STAGE 2	4½″	4⅛″	4½″	3′-10½″	3′-10⅛″	3′-10½″
SPAN C	℄ BRG. B2	@ MID-SPAN	℄ BRG. EB2	℄ BRG. B2	@ MID-SPAN	℄ BRG. EB2
STAGE 1	4½″	4¼″	4½″	3′-10½″	3′-10¼″	3′-10½″
STAGE 2	4½″	4⅛″	4½″	3′-10½″	3′-10⅛″	3′-10½″

BAR TYPES

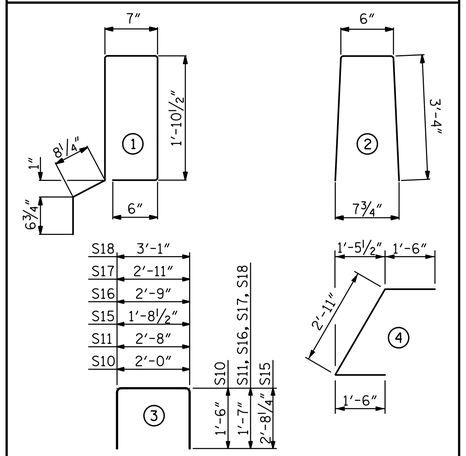

ALL BAR DIMENSIONS ARE OUT TO OUT

NOTES

ALL PRESTRESSING STRANDS SHALL BE 7-WIRE LOW RELAXATION GRADE 270 STRANDS AND SHALL CONFORM TO AASHTO M203 EXCEPT FOR SAMPLING REQUIREMENTS WHICH SHALL BE IN ACCORDANCE WITH THE STANDARD SPECIFICATIONS.

ALL REINFORCING STEEL CAST WITH THE CORED SLAB SECTIONS SHALL BE GRADE 60 AND SHALL BE INCLUDED IN THE UNIT PRICE BID FOR PRESTRESSED CONCRETE CORED SLABS.

RECESSES FOR TRANSVERSE STRANDS SHALL BE GROUTED AFTER THE TENSIONING OF THE STRANDS.

THE 2½″Ø DOWEL HOLES AT FIXED ENDS OF SLAB SECTIONS SHALL BE FILLED WITH NON-SHRINK GROUT.

THE BACKER RODS SHALL CONFORM TO THE REQUIREMENTS OF TYPE M BOND BREAKER. SEE SECTION 1028 OF THE STANDARD SPECIFICATIONS.

WHEN CORED SLABS ARE CAST, AN INTERNAL HOLD-DOWN SYSTEM SHALL BE EMPLOYED TO PREVENT VOIDS FROM RISING OR MOVING SIDEWAYS. AT LEAST SIX WEEKS PRIOR TO CASTING CORED SLABS, THE CONTRACTOR SHALL SUBMIT TO THE ENGINEER FOR REVIEW AND COMMENT, DETAILED DRAWINGS OF THE PROPOSED HOLD-DOWN SYSTEM. IN ADDITION TO STRUCTURAL DETAILS, LOCATION AND SPACING OF THE HOLD-DOWNS SHALL BE INDICATED.

THE TRANSFER OF LOAD FROM THE ANCHORAGES TO THE CORED SLAB UNIT SHALL BE DONE WHEN THE CONCRETE HAS REACHED A COMPRESSIVE STRENGTH OF NOT LESS THAN THE REQUIRED STRENGTH SHOWN IN THE "CONCRETE RELEASE STRENGTH" TABLE.

ALL REINFORCING STEEL IN VERTICAL CONCRETE BARRIER RAILS SHALL BE EPOXY COATED.

PRESTRESSING STRANDS SHALL BE CUT FLUSH WITH THE CORED SLAB UNIT ENDS.

APPLY EPOXY PROTECTIVE COATING TO CORED SLAB UNIT ENDS.

GROOVED CONTRACTION JOINTS, ½″ IN DEPTH, SHALL BE TOOLED IN ALL EXPOSED FACES OF THE BARRIER RAIL AND IN ACCORDANCE WITH ARTICLE 825-10(B) OF THE STANDARD SPECIFICATIONS. A CONTRACTION JOINT SHALL BE LOCATED AT EACH THIRD POINT BETWEEN BARRIER RAIL EXPANSION JOINTS. ONLY ONE CONTRACTION JOINT IS REQUIRED AT MIDPOINT OF BARRIER RAIL SEGMENTS LESS THAN 20 FEET IN LENGTH AND NO CONTRACTION JOINTS ARE REQUIRED FOR THOSE SEGMENTS LESS THAN 10 FEET IN LENGTH.

FLAME CUTTING OF THE TRANSVERSE POST-TENSIONING STRAND IS NOT ALLOWED.

MAINTAIN A SYMMETRIC TENSION FORCE BETWEEN EACH PAIR OF TRANSVERSE POST TENSIONING STRANDS IN THE DIAPHRAGM.

THE #4 S11 STIRRUPS MAY BE SHIFTED AS NECESSARY TO MAINTAIN 1″CLEAR TO THE GROUTED RECESS AND 2½″DIA. TRANSVERSE POST-TENSIONING STRAND HOLES.

FOR GROUT FOR STRUCTURES, SEE SPECIAL PROVISIONS.

THE PERMITTED THREADED INSERTS ARE DETAILED AS AN OPTION FOR THE CONTRACTOR TO ATTACH FALSEWORK AND FORMWORK DURING CONSTRUCTION.

THE PERMITTED THREADED INSERTS IN THE EXTERIOR UNITS SHALL BE SIZED BY THE CONTRACTOR, SPACED AT 4′-0″CENTERS AND GALVANIZED IN ACCORDANCE WITH SECTION 1076 OF THE STANDARD SPECIFICATIONS. STAINLESS STEEL THREADED INSERTS MAY BE USED AS AN ALTERNATE.

THE PERMITTED THREADED INSERTS SHALL BE GROUTED BY THE CONTRACTOR IMMEDIATELY FOLLOWING REMOVAL OF THE FALSEWORK.

THE COST OF THE PERMITTED THREADED INSERTS SHALL BE INCLUDED IN THE PRICE BID FOR THE PRECAST UNITS.

THE DRAIN OPENING AT THE GUTTERLINE SHALL BE 4″X 8″. THE HEIGHT OF THE BLOCKOUT IN THE VERTICAL CONCRETE BARRIER RAIL SHALL EXTEND FROM THE TOP OF THE CORED SLAB UNIT TO THE TOP OF THE DRAIN OPENING.

APPLY EPOXY PROTECTIVE COATING TO EXTERIOR FACE OF THE EXTERIOR CORED SLAB UNITS THAT REQUIRE DRAINS IN THE BARRIER RAIL.

"B" BARS IN VERTICAL CONCRETE BARRIER RAIL MAY BE CUT AS NEEDED TO AVOID CONFLICT WITH DECK DRAINS.

GRADE 270 STRANDS

	0.6″Ø L.R.
AREA (SQUARE INCHES)	0.217
ULTIMATE STRENGTH (LBS. PER STRAND)	58,600
APPLIED PRESTRESS (LBS. PER STRAND)	43,950

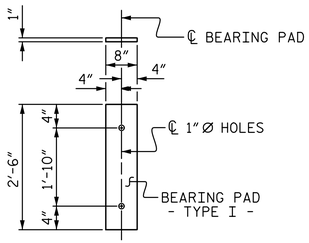

FIXED END
(TYPE I - 48 REQ'D)

DEAD LOAD DEFLECTION AND CAMBER (SPAN A & C)

	3′-0″x 2′-0″
40′ CORED SLAB UNIT	0.6″Ø L.R. STRAND
CAMBER (SLAB ALONE IN PLACE)	7/16″ ↑
DEFLECTION DUE TO SUPERIMPOSED DEAD LOAD**	1/8″ ↓
FINAL CAMBER	5/16″ ↑

** INCLUDES FUTURE WEARING SURFACE

CONCRETE RELEASE STRENGTH

UNIT	PSI
40′ UNITS	4000

ELASTOMERIC BEARING DETAILS

ELASTOMER IN ALL BEARINGS SHALL BE 60 DUROMETER HARDNESS.

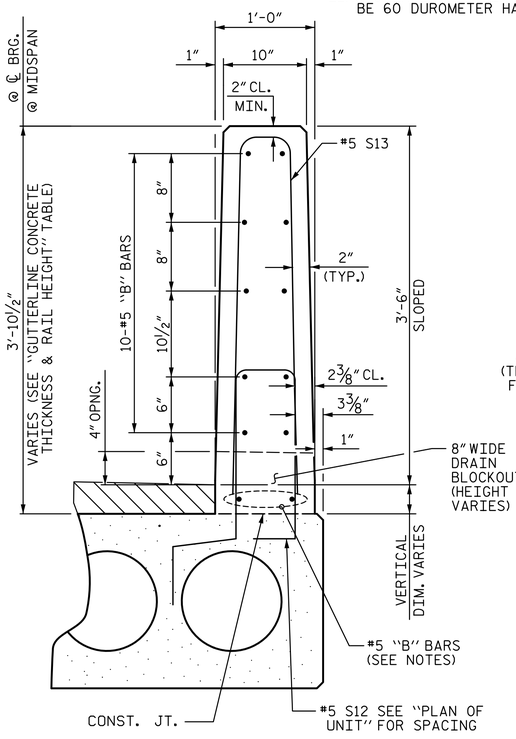

SECTION THRU RAIL

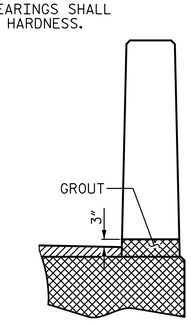

SECTION T-T
AT OPEN JOINT AT BENT
(THIS IS TO BE USED WHERE FOAM JOINT IS NOT USED)

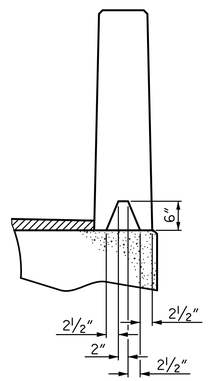

SECTION S-S
AT DAM IN OPEN JOINT
(THIS IS TO BE USED ONLY WHEN SLIP FORM IS USED)

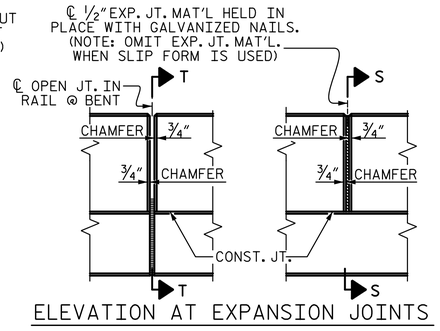

ELEVATION AT EXPANSION JOINTS

BILL OF MATERIAL FOR VERTICAL CONCRETE BARRIER RAIL (SPAN A & C)

BAR	BARS PER PAIR OF EXTERIOR UNITS	TOTAL NO.	SIZE	TYPE	LENGTH	WEIGHT
	40′ UNIT					
✳B11	96	192	#5	STR	11′-9″	2,353
✳S13	98	196	#5	2	7′-2″	1,465
✳EPOXY COATED REINFORCING STEEL				LBS.		3,818
CLASS AA CONCRETE				CU.YDS.		21.1
TOTAL VERTICAL CONCRETE BARRIER RAIL				LN. FT.		160.58

BILL OF MATERIAL FOR ONE 40′ CORED SLAB UNIT

				EXTERIOR UNITS C.S.U. 1 & 12		INTERIOR UNITS C.S.U. 2-6 & 8-11		INTERIOR UNIT C.S.U. 7	
BAR	NUMBER	SIZE	TYPE	LENGTH	WEIGHT	LENGTH	WEIGHT	LENGTH	WEIGHT
B4	4	#4	STR	20′-9″	55	20′-9″	55	20′-9″	55
S10	8	#5	3	5′-0″	42	5′-0″	42	5′-0″	42
S11	98	#4	3	5′-10″	382	5′-10″	382	5′-10″	382
✳S12	49	#5	1	6′-1″	311				
S14	4	#4	4	5′-11″	16	5′-11″	16	5′-11″	16
S15	4	#5	3	7′-1″	30	7′-1″	30	7′-1″	30
S16	4	#4	3	5′-11″	16	5′-11″	16	5′-11″	16
S17	4	#4	3	6′-1″	16	6′-1″	16	6′-1″	16
S18	4	#4	3	6′-3″	17	6′-3″	17	6′-3″	17
REINFORCING STEEL			LBS.		574		574		574
✳EPOXY COATED REINFORCING STEEL			LBS.		311				
5000 P.S.I. CONCRETE			CU. YDS.		6.9		6.9		7.5
0.6″Ø L.R. STRANDS			No.		11		11		11

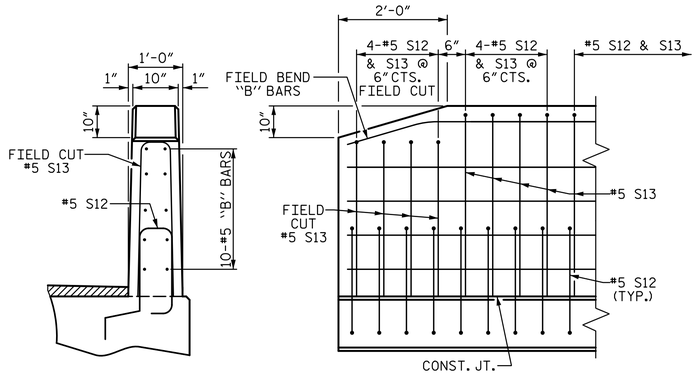

END VIEW

SIDE VIEW

END OF RAIL DETAILS

VERTICAL CONCRETE BARRIER RAIL DETAILS

DocuSigned by: Jason Griscom
6/21/2023

STV Engineers, Inc.
900 West Trade St., Suite 715
Charlotte, NC 28202
NC License Number F-0991

DOCUMENT NOT CONSIDERED FINAL UNLESS ALL SIGNATURES COMPLETED

PROJECT NO. BP11.R003.1
ASHE COUNTY
STATION: 16+85.00 -L-
SHEET 4 OF 5

STATE OF NORTH CAROLINA
DEPARTMENT OF TRANSPORTATION
RALEIGH

3′-0″ X 2′-0″ PRESTRESSED CONCRETE CORED SLAB UNIT 60° SKEW (SPAN A & C)

REVISIONS						SHEET NO.
NO.	BY:	DATE:	NO.	BY:	DATE:	S-11
1			3			TOTAL SHEETS
2			4			29

DRAWN BY : SGH DATE : 9-22
CHECKED BY : JAD DATE : 9-22
DESIGN ENGINEER OF RECORD : J. GRISCOM DATE : 6-23

R:\Structures\Ustation\Sealed Bridge Plans\40L02L_BPIIR003I_SMU_CS4_OIL_40063.dgn 6/20/2023 2:20:02 PM HensleSG

DocuSign Envelope ID: 0908AB87-C088-4523-BEAB-A55EC9F5191D

ANCHOR ASSEMBLY NOTES

THE TEMPORARY GUARDRAIL ASSEMBLY SHALL CONSIST OF THE FOLLOWING COMPONENTS:

A. FERRULES SHALL BE MADE FROM STEEL MEETING THE REQUIREMENTS OF AASHTO M169, GRADE 12L14 AND SHALL HAVE A MINIMUM LENGTH OF THREADS OF 2½".

B. 4 - 1"Ø x 3" ANCHOR BOLTS WITH WASHERS. BOLTS SHALL CONFORM TO THE REQUIREMENTS OF ASTM A307. BOLTS AND WASHERS SHALL BE GALVANIZED. (AT THE CONTRACTOR'S OPTION, STAINLESS STEEL BOLTS AND WASHERS MAY BE USED AS AN ALTERNATE FOR THE 1"Ø x 3" GALVANIZED BOLTS AND WASHERS. THEY SHALL CONFORM TO OR EXCEED THE MECHANICAL REQUIREMENTS OF ASTM A307. THE USE OF THIS ALTERNATE SHALL BE APPROVED BY THE ENGINEER.)

C. WIRE STRUTS SHOWN IN THE ANCHOR ASSEMBLY DETAIL ARE MINIMUM ALLOWABLE SIZE AND SHALL HAVE A MINIMUM TENSILE STRENGTH OF 100,000 P.S.I.

ANCHOR ASSEMBLY WITH BOLTS SHALL BE ASSEMBLED IN THE SHOP. BOLT THREADS MAY BE RECUT AS NECESSARY TO ENSURE FIT.

THE COST OF THE ANCHOR ASSEMBLY, COMPLETE IN PLACE, SHALL BE INCLUDED, AS APPLICABLE, IN THE UNIT CONTRACT PRICE BID FOR 3'-0" x 2'-0" PRESTRESSED CONCRETE CORED SLAB OR LUMP SUM FOR THE APPROACH SLABS.

FERRULES TO BE PLUGGED DURING CASTING OF THE CORED SLAB UNITS OR POURING OF APPROACH SLABS AS RECOMMENDED BY THE MANUFACTURER.

AT THE CONTRACTOR'S OPTION, FERRULES WITH OPEN OR CLOSED ENDS MAY BE USED.

PAYMENT FOR THE TEMPORARY GUARDRAIL, POST AND POST BASE PLATES IS INCLUDED IN THE TRAFFIC CONTROL PLANS.

ONCE THE TEMPORARY GUARDRAIL HAS BEEN REMOVED, COMPLETELY FILL ANCHOR ASSEMBLY HOLES WITH AN NCDOT APPROVED, NON-SHRINK, NON-METALLIC GROUT, OR AS DIRECTED BY THE ENGINEER.

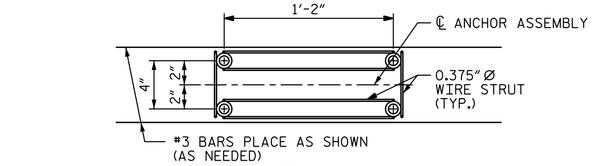

PLAN

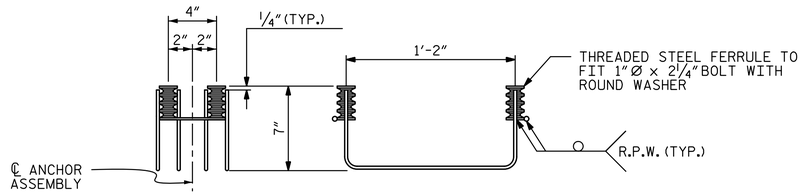

SIDE VIEW ELEVATION

TEMPORARY GUARDRAIL ANCHOR ASSEMBLY

(6 ASSEMBLIES REQUIRED IN CORED SLAB UNIT 7, SPAN A)
(7 ASSEMBLIES REQUIRED IN CORED SLAB UNIT 7, SPAN C)

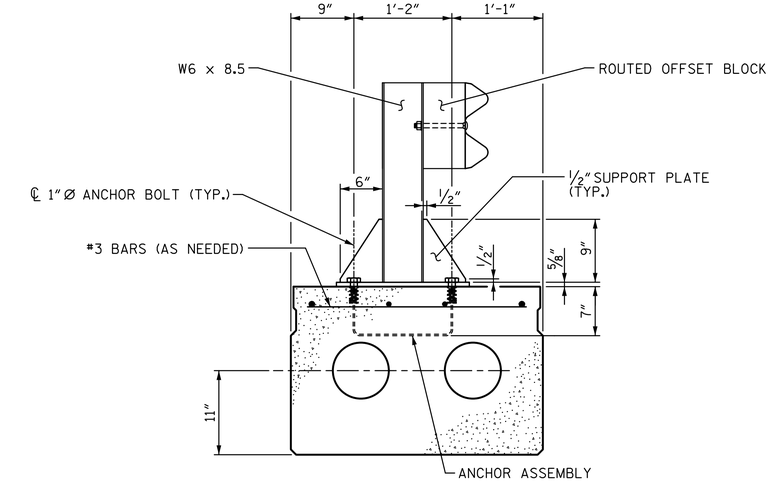

SECTION A-A

(SHOWING PLACEMENT OF ANCHOR ASSEMBLIES)

NOTE: THE #3 BARS ARE INCIDENTAL AND THEIR COST SHALL BE INCLUDED IN THE PRICE BID FOR THE PRESTRESSED CONCRETE CORED SLAB.

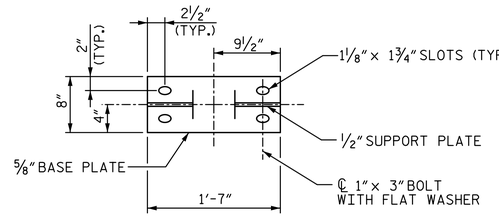

PLAN VIEW

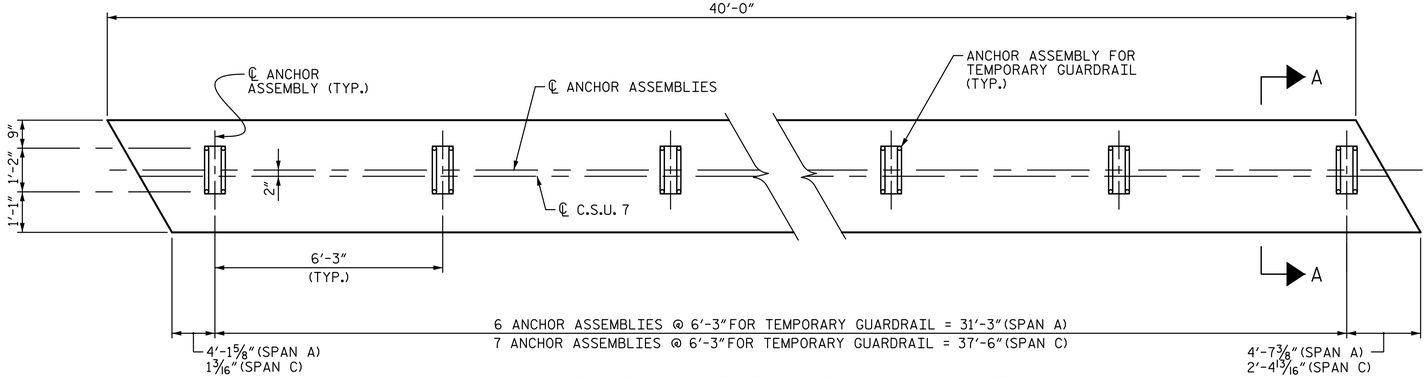

PLAN OF CORED SLAB UNIT #7

(SHOWING LOCATION OF ANCHOR ASSEMBLIES)
(FOR ANCHOR ASSEMBLY SPACING ON APPROACH SLABS, SEE "APPROACH SLAB DETAILS" SHEET 2 OF 2.)

DocuSigned by: Jason Griscom
EXECUTED ON: 6/21/2023

NORTH CAROLINA PROFESSIONAL SEAL 029429 ENGINEER JASON T. GRISCOM

6/21/2023

STV Engineers, Inc.
900 West Trade St., Suite 715
Charlotte, NC 28202
NC License Number F-0991

DOCUMENT NOT CONSIDERED FINAL UNLESS ALL SIGNATURES COMPLETED

PROJECT NO. BP11.R003.1
ASHE COUNTY
STATION: 16+85.00 -L-

SHEET 5 OF 5

STATE OF NORTH CAROLINA
DEPARTMENT OF TRANSPORTATION
RALEIGH

3'-0" X 2'-0" PRESTRESSED CONCRETE CORED SLAB UNIT 60° SKEW (SPAN A & C)

REVISIONS						SHEET NO.
NO.	BY:	DATE:	NO.	BY:	DATE:	S-12
1			3			TOTAL SHEETS
2			4			29

DRAWN BY : SGH DATE : 9-22
CHECKED BY : JAD DATE : 9-22
DESIGN ENGINEER OF RECORD : J. GRISCOM DATE : 6-23

HensleSG 6/20/2023 2:30:30 PM R:\Structures\ustation\Sealed Bridge Plans\401_023_BPII.R003.1_SMU_CS5_012_40063.dgn

DocuSign Envelope ID: 0908AB87-C088-4523-BEAB-A55EC9F5191D

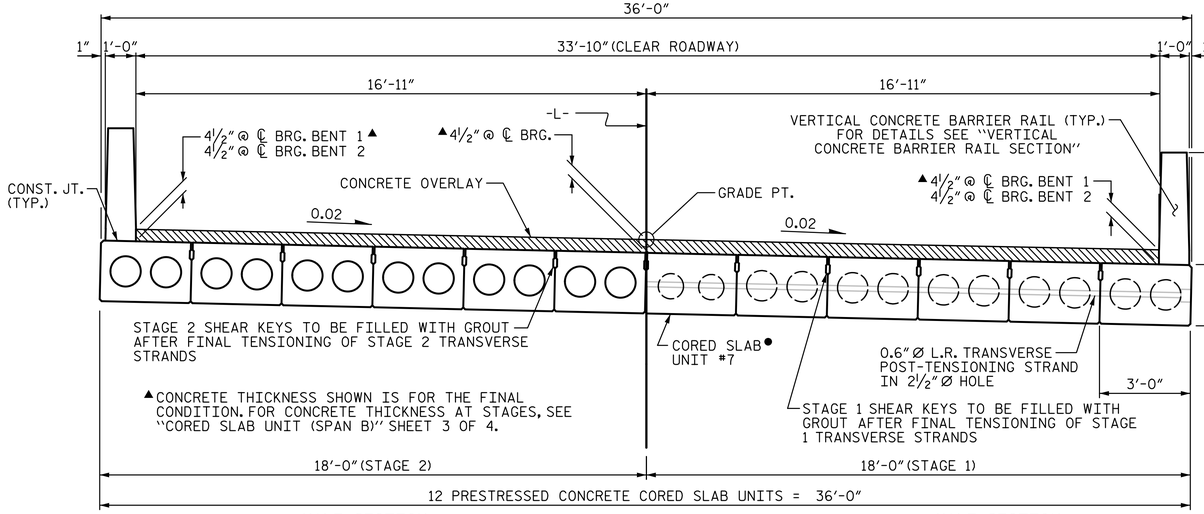

▲ CONCRETE THICKNESS SHOWN IS FOR THE FINAL CONDITION. FOR CONCRETE THICKNESS AT STAGES, SEE "CORED SLAB UNIT (SPAN B)" SHEET 3 OF 4.

● CORED SLAB UNITS ARE NUMBERED FROM LEFT TO RIGHT, LOOKING UPSTATION.

HALF SECTION THROUGH VOIDS

HALF SECTION AT INTERMEDIATE DIAPHRAGMS

TYPICAL SECTION

* - THE MAXIMUM BARRIER RAIL HEIGHT AND CONCRETE OVERLAY THICKNESS IS SHOWN. THE HEIGHT OF THE BARRIER RAIL AND CONCRETE OVERLAY THICKNESS VARIES WHILE THE TOP OF THE BARRIER RAIL FOLLOWS THE PROFILE OF THE GUTTERLINE. FOR RAIL HEIGHT DETAILS AND CONCRETE OVERLAY THICKNESS, SEE THE "VERTICAL CONCRETE BARRIER RAIL SECTION" DETAIL.

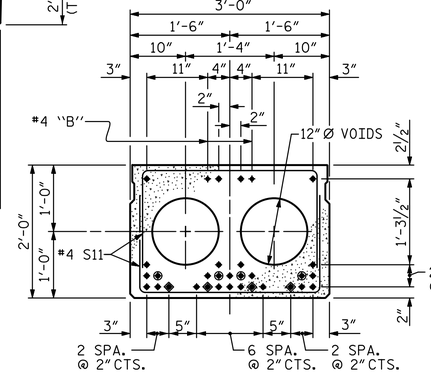

INTERIOR SLAB SECTION (EXCEPT C.S.U. 7)

(30 STRANDS REQUIRED)

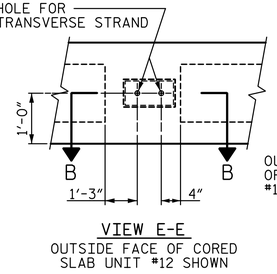

VIEW E-E

OUTSIDE FACE OF CORED SLAB UNIT #12 SHOWN

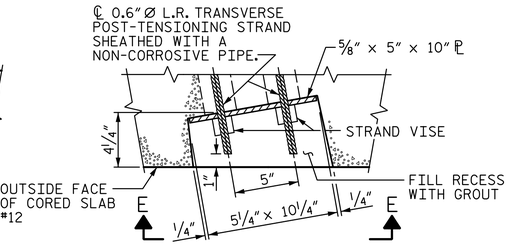

SECTION B-B

CORED SLAB UNIT #12

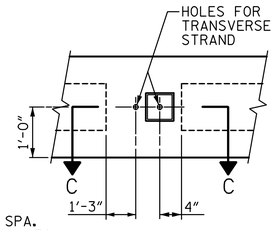

VIEW F-F

LEFT SIDE OF CORED SLAB UNIT #7 SHOWN

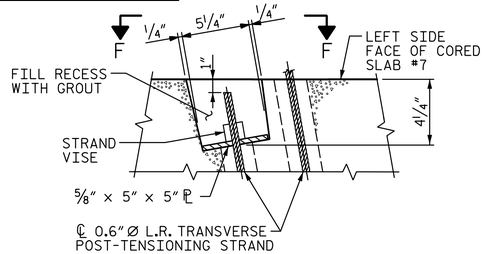

SECTION C-C

CORED SLAB UNIT #7

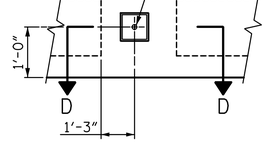

VIEW G-G

OUTSIDE FACE OF CORED SLAB UNIT #1 SHOWN

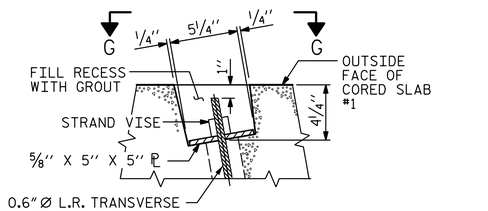

SECTION D-D

CORED SLAB UNIT #1

GROUTED RECESS AT END OF POST-TENSIONED STRAND CORED SLABS

(SEE SHEET 2 OF 4 FOR LOCATIONS)

FIXED END FIXED END

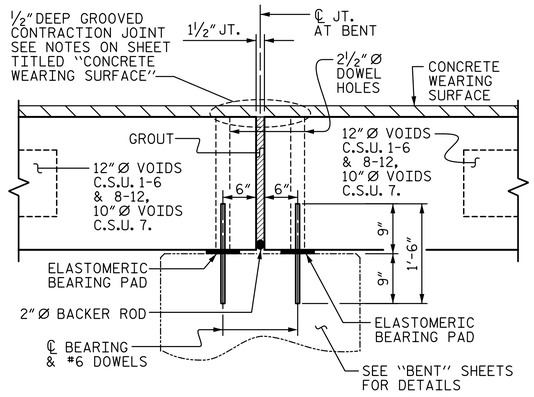

SECTION AT BENT No. 1 & No. 2

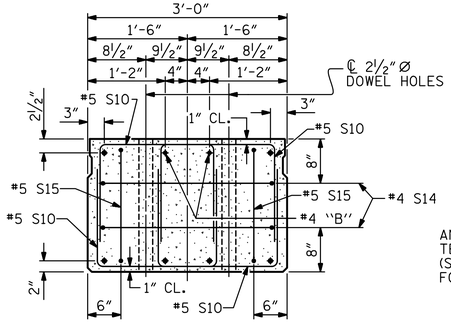

END ELEVATION

SHOWING PLACEMENT OF DOUBLE STIRRUPS AND LOCATION OF DOWEL HOLES. (STRAND LAYOUT NOT SHOWN.) INTERIOR SLAB UNIT SHOWN-EXTERIOR SLAB UNIT SIMILAR EXCEPT SHEAR KEY LOCATION.

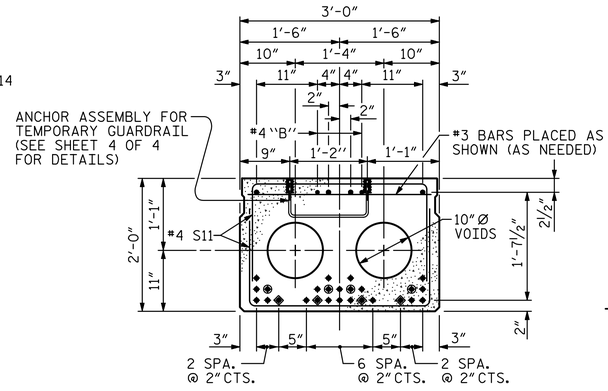

INTERIOR SLAB SECTION (C.S.U. 7 ONLY)

(30 STRANDS REQUIRED)

THE #3 BARS ARE INCIDENTAL AND THE COST SHALL BE INCLUDED IN THE PRICE BID FOR PRESTRESSED CONCRETE CORED SLABS

0.6" Ø LOW RELAXATION STRAND LAYOUT

◈ BOND SHALL BE BROKEN ON THESE STRANDS FOR A DISTANCE OF 12'-0" FROM END OF CORED SLAB UNIT. SEE STANDARD SPECIFICATIONS, ARTICLE 1078-7.

◉ BOND SHALL BE BROKEN ON THESE STRANDS FOR A DISTANCE OF 10'-0" FROM END OF CORED SLAB UNIT. SEE STANDARD SPECIFICATIONS, ARTICLE 1078-7.

DEBONDING LEGEND

PERMITTED THREADED INSERT CAST IN OUTSIDE FACE OF EXTERIOR UNIT AND RECESSED ⅜". SIZE TO BE DETERMINED BY CONTRACTOR.

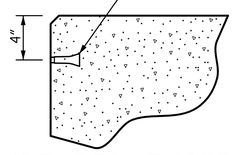

THREADED INSERT DETAIL

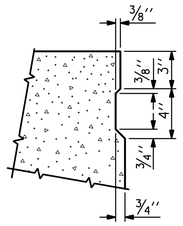

SHEAR KEY DETAIL

NOTE: OMIT SHEAR KEY ON OUTSIDE FACE OF EXTERIOR CORED SLABS.

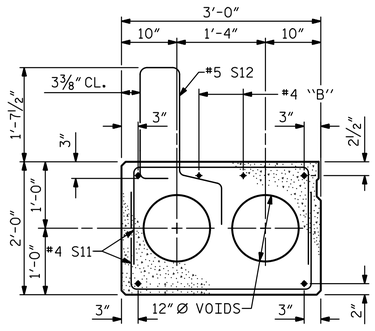

EXTERIOR SLAB SECTION

(FOR PRESTRESSED STRAND LAYOUT, SEE INTERIOR SLAB SECTION.)

DocuSigned by: Jason Griscom

NORTH CAROLINA PROFESSIONAL SEAL 029429 ENGINEER JASON T. GRISCOM

6/21/2023

stv STV Engineers, Inc.
900 West Trade St., Suite 715
Charlotte, NC 28202
NC License Number F-0991

DOCUMENT NOT CONSIDERED FINAL UNLESS ALL SIGNATURES COMPLETED

PROJECT NO. BP11.R003.1

ASHE COUNTY

STATION: 16+85.00 -L-

SHEET 1 OF 4

STATE OF NORTH CAROLINA
DEPARTMENT OF TRANSPORTATION
RALEIGH

3'-0" X 2'-0" PRESTRESSED CONCRETE CORED SLAB UNIT (SPAN B)

REVISIONS						SHEET NO.
NO.	BY:	DATE:	NO.	BY:	DATE:	S-13
1			3			TOTAL SHEETS
2			4			29

DRAWN BY :	SGH	DATE : 9-22
CHECKED BY :	JAD	DATE : 9-22
DESIGN ENGINEER OF RECORD :	J. GRISCOM	DATE : 6-23

R:\Structures\ustation\Sealed Bridge Plans\40_025_BPII.R003_SMU_CS6_013_40063.dgn
6/20/2023 2:10:00 PM
HensleSG

DocuSign Envelope ID: 0908AB87-C088-4523-BEAB-A55EC9F5191D

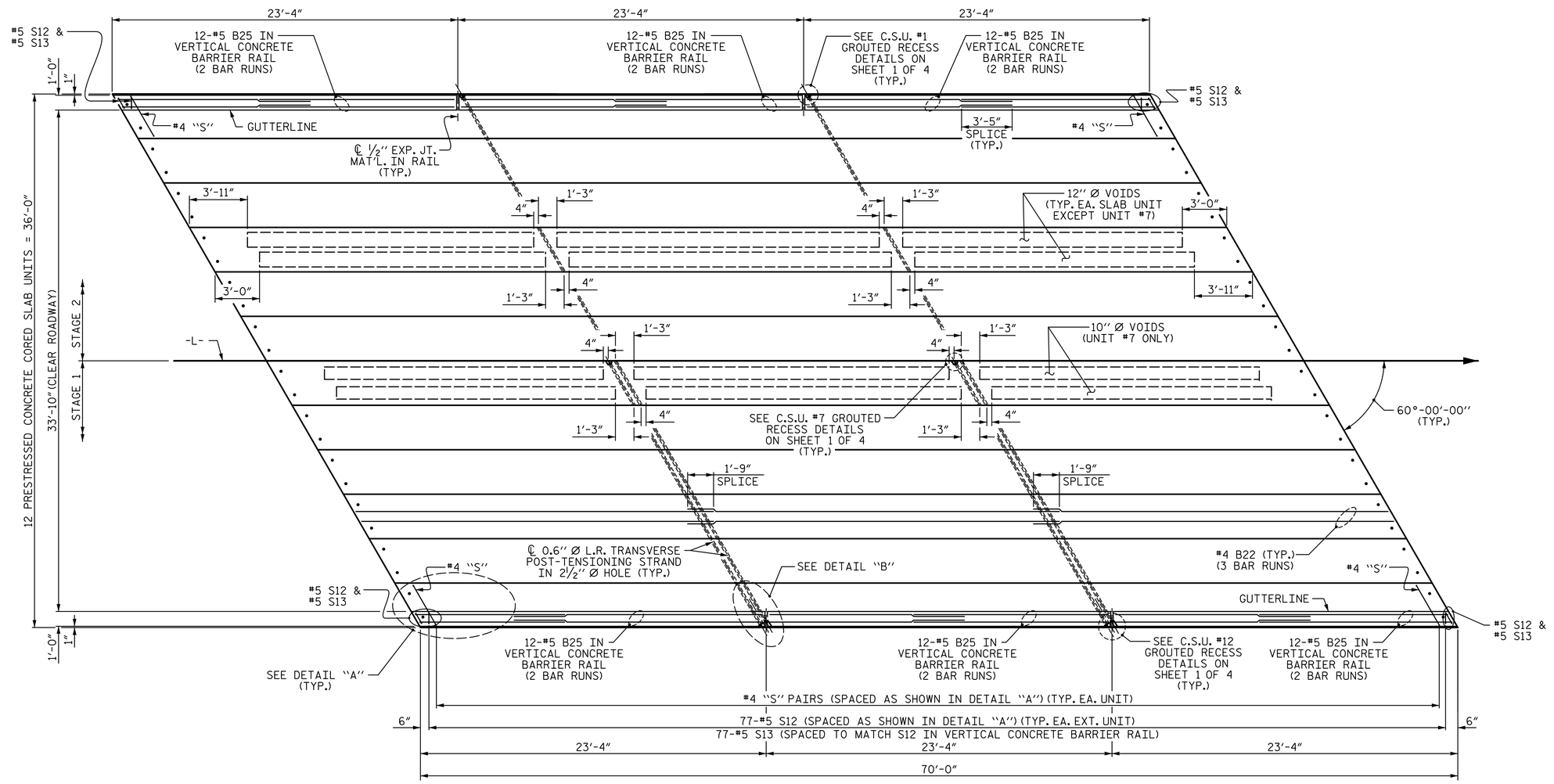

PLAN OF UNIT

(SPAN B)

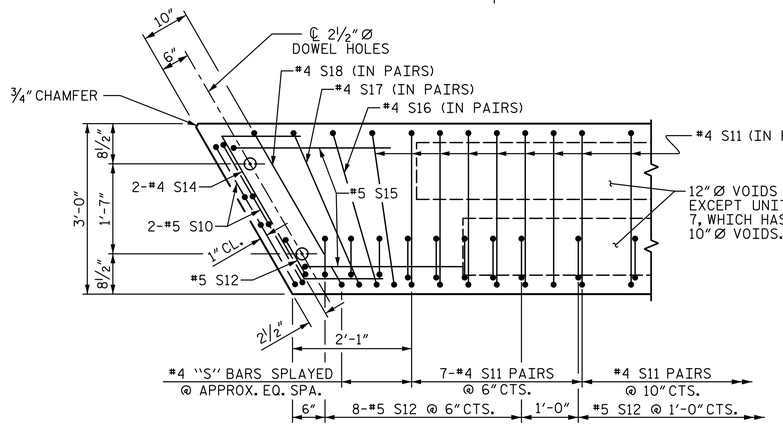

DETAIL "A"

(SIMILAR EACH END OF UNIT)
NOTE: EXTERIOR UNIT SHOWN - INTERIOR UNIT SIMILAR EXCEPT OMIT #5 S12 BARS.

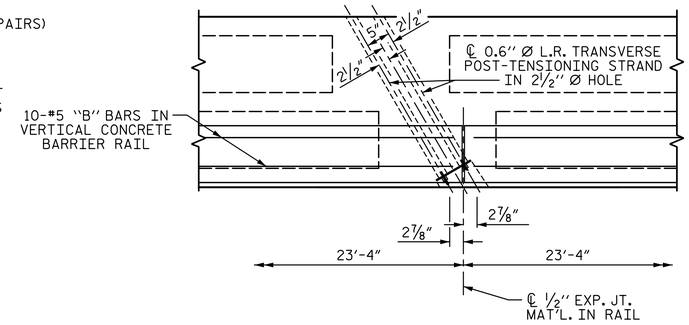

DETAIL "B"

#4 S11 BARS MAY BE SHIFTED AS NECESSARY TO MAINTAIN 1" CLEAR TO GROUTED RECESS AND 2 1/2" Ø TRANSVERSE POST-TENSIONING STRAND HOLES

DocuSigned by: Jason Griscom
Engineering

NORTH CAROLINA PROFESSIONAL SEAL 029429 ENGINEER JASON T. GRISCOM

6/21/2023

stv STV Engineers, Inc.
900 West Trade St., Suite 715
Charlotte, NC 28202
NC License Number F-0991

DOCUMENT NOT CONSIDERED FINAL UNLESS ALL SIGNATURES COMPLETED

DRAWN BY :	SGH	DATE :	9-22
CHECKED BY :	JAD	DATE :	9-22
DESIGN ENGINEER OF RECORD :	J. GRISCOM	DATE :	6-23

PROJECT NO. BP11.R003.1
ASHE COUNTY
STATION: 16+85.00 -L-

SHEET 2 OF 4

STATE OF NORTH CAROLINA
DEPARTMENT OF TRANSPORTATION
RALEIGH

PLAN OF 70′ UNIT 33′-10″ CLEAR ROADWAY 60° SKEW (SPAN B)

REVISIONS						SHEET NO.
NO.	BY:	DATE:	NO.	BY:	DATE:	S-14
1			3			TOTAL SHEETS
2			4			29

HensleSG 6/20/2023 2:22:53 PM R:\Structures\ustation\Sealed Bridge Plans\40I_027_BP11_R003_L_SMU_CST_014_40063.dgn

DocuSign Envelope ID: 0908AB87-C088-4523-BEAB-A55EC9F5191D

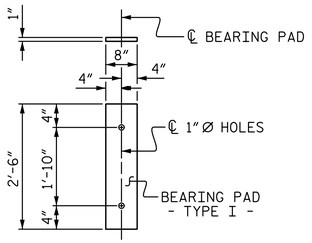

FIXED END
(TYPE I - 24 REQ'D)

ELASTOMERIC BEARING DETAILS

ELASTOMER IN ALL BEARINGS SHALL BE 60 DUROMETER HARDNESS.

GUTTERLINE CONCRETE THICKNESS & RAIL HEIGHT

	CONCRETE OVERLAY THICKNESS			RAIL HEIGHT		
SPAN B	℄ BRG. B1	@ MID-SPAN	℄ BRG. B2	℄ BRG. B1	@ MID-SPAN	℄ BRG. B2
STAGE 1	4½"	3⅜"	4½"	3'-10½"	3'-9⅜"	3'-10½"
STAGE 2	4½"	3¾"	4½"	3'-10½"	3'-9¾"	3'-10½"

DEAD LOAD DEFLECTION AND CAMBER (SPAN B)

	3'-0" x 2'-0"
70' CORED SLAB UNIT	0.6" Ø L.R. STRAND
CAMBER (SLAB ALONE IN PLACE)	1½" ↑
DEFLECTION DUE TO SUPERIMPOSED DEAD LOAD**	13⁄16" ↓
FINAL CAMBER	11⁄16" ↑

** INCLUDES FUTURE WEARING SURFACE

BAR TYPES

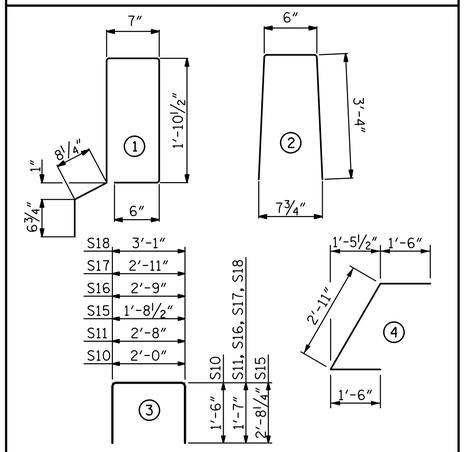

ALL BAR DIMENSIONS ARE OUT TO OUT

CORED SLABS REQUIRED (SPAN B)

STAGE NUMBER		NUMBER	LENGTH	TOTAL LENGTH
1	EXTERIOR C.S.	1	70'-0"	70'-0"
	INTERIOR C.S.	4	70'-0"	280'-0"
	INTERIOR C.S. W/ 10"Ø VOIDS	1	70'-0"	70'-0"
	TOTAL	6	—	420'-0"
2	EXTERIOR C.S.	1	70'-0"	70'-0"
	INTERIOR C.S.	5	70'-0"	350'-0"
	TOTAL	6	—	420'-0"

GRADE 270 STRANDS

	0.6" Ø L.R.
AREA (SQUARE INCHES)	0.217
ULTIMATE STRENGTH (LBS. PER STRAND)	58,600
APPLIED PRESTRESS (LBS. PER STRAND)	43,950

BILL OF MATERIAL FOR VERTICAL CONCRETE BARRIER RAIL (SPAN B)

BAR	BARS PER PAIR OF EXTERIOR UNITS	TOTAL NO.	SIZE	TYPE	LENGTH	WEIGHT
	70' UNIT					
*B25	144	144	#5	STR	13'-8"	2,053
*S13	158	158	#5	2	7'-2"	1,181
* EPOXY COATED REINFORCING STEEL				LBS.		3,234
CLASS AA CONCRETE				CU.YDS.		18.1
TOTAL VERTICAL CONCRETE BARRIER RAIL				LN. FT.		140.29

BILL OF MATERIAL FOR ONE 70' CORED SLAB UNIT

				EXTERIOR UNITS C.S.U. 1 & 12		INTERIOR UNITS C.S.U. 2-6 & 8-11		INTERIOR UNIT C.S.U. 7	
BAR	NUMBER	SIZE	TYPE	LENGTH	WEIGHT	LENGTH	WEIGHT	LENGTH	WEIGHT
B22	6	#4	STR	24'-6"	98	24'-6"	98	24'-6"	98
S10	8	#5	3	5'-0"	42	5'-0"	42	5'-0"	42
S11	170	#4	3	5'-10"	662	5'-10"	662	5'-10"	662
*S12	79	#5	1	6'-1"	501				
S14	4	#4	4	5'-11"	16	5'-11"	16	5'-11"	16
S15	4	#5	3	7'-1"	30	7'-1"	30	7'-1"	30
S16	4	#4	3	5'-11"	16	5'-11"	16	5'-11"	16
S17	4	#4	3	6'-1"	16	6'-1"	16	6'-1"	16
S18	4	#4	3	6'-3"	17	6'-3"	17	6'-3"	17
REINFORCING STEEL			LBS.		897		897		897
* EPOXY COATED REINFORCING STEEL			LBS.		501				
8000 P.S.I. CONCRETE			CU. YDS.		12.0		12.0		13.1
0.6" Ø L.R. STRANDS			No.		30		30		30

NOTES

ALL PRESTRESSING STRANDS SHALL BE 7-WIRE LOW RELAXATION GRADE 270 STRANDS AND SHALL CONFORM TO AASHTO M203 EXCEPT FOR SAMPLING REQUIREMENTS WHICH SHALL BE IN ACCORDANCE WITH THE STANDARD SPECIFICATIONS.

ALL REINFORCING STEEL CAST WITH THE CORED SLAB SECTIONS SHALL BE GRADE 60 AND SHALL BE INCLUDED IN THE UNIT PRICE BID FOR PRESTRESSED CONCRETE CORED SLABS.

RECESSES FOR TRANSVERSE STRANDS SHALL BE GROUTED AFTER THE TENSIONING OF THE STRANDS.

THE 2½"Ø DOWEL HOLES AT FIXED ENDS OF SLAB SECTIONS SHALL BE FILLED WITH NON-SHRINK GROUT.

THE BACKER RODS SHALL CONFORM TO THE REQUIREMENTS OF TYPE M BOND BREAKER. SEE SECTION 1028 OF THE STANDARD SPECIFICATIONS.

WHEN CORED SLABS ARE CAST, AN INTERNAL HOLD-DOWN SYSTEM SHALL BE EMPLOYED TO PREVENT VOIDS FROM RISING OR MOVING SIDEWAYS. AT LEAST SIX WEEKS PRIOR TO CASTING CORED SLABS, THE CONTRACTOR SHALL SUBMIT TO THE ENGINEER FOR REVIEW AND COMMENT, DETAILED DRAWINGS OF THE PROPOSED HOLD-DOWN SYSTEM. IN ADDITION TO STRUCTURAL DETAILS, LOCATION AND SPACING OF THE HOLD-DOWNS SHALL BE INDICATED.

THE TRANSFER OF LOAD FROM THE ANCHORAGES TO THE CORED SLAB UNIT SHALL BE DONE WHEN THE CONCRETE HAS REACHED A COMPRESSIVE STRENGTH OF NOT LESS THAN THE REQUIRED STRENGTH SHOWN IN THE "CONCRETE RELEASE STRENGTH" TABLE.

ALL REINFORCING STEEL IN VERTICAL CONCRETE BARRIER RAILS SHALL BE EPOXY COATED.

PRESTRESSING STRANDS SHALL BE CUT FLUSH WITH THE CORED SLAB UNIT ENDS.

APPLY EPOXY PROTECTIVE COATING TO CORED SLAB UNIT ENDS.

GROOVED CONTRACTION JOINTS, ½" IN DEPTH, SHALL BE TOOLED IN ALL EXPOSED FACES OF THE BARRIER RAIL AND IN ACCORDANCE WITH ARTICLE 825-10(B) OF THE STANDARD SPECIFICATIONS. A CONTRACTION JOINT SHALL BE LOCATED AT EACH THIRD POINT BETWEEN BARRIER RAIL EXPANSION JOINTS. ONLY ONE CONTRACTION JOINT IS REQUIRED AT MIDPOINT OF BARRIER RAIL SEGMENTS LESS THAN 20 FEET IN LENGTH AND NO CONTRACTION JOINTS ARE REQUIRED FOR THOSE SEGMENTS LESS THAN 10 FEET IN LENGTH.

FLAME CUTTING OF THE TRANSVERSE POST-TENSIONING STRAND IS NOT ALLOWED.

MAINTAIN A SYMMETRIC TENSION FORCE BETWEEN EACH PAIR OF TRANSVERSE POST TENSIONING STRANDS IN THE DIAPHRAGM.

THE #4 S11 STIRRUPS MAY BE SHIFTED AS NECESSARY TO MAINTAIN 1" CLEAR TO THE GROUTED RECESS AND 2½"DIA. TRANSVERSE POST-TENSIONING STRAND HOLES.

FOR GROUT FOR STRUCTURES, SEE SPECIAL PROVISIONS.

THE PERMITTED THREADED INSERTS ARE DETAILED AS AN OPTION FOR THE CONTRACTOR TO ATTACH FALSEWORK AND FORMWORK DURING CONSTRUCTION.

THE PERMITTED THREADED INSERTS IN THE EXTERIOR UNITS SHALL BE SIZED BY THE CONTRACTOR, SPACED AT 4'-0" CENTERS AND GALVANIZED IN ACCORDANCE WITH SECTION 1076 OF THE STANDARD SPECIFICATIONS. STAINLESS STEEL THREADED INSERTS MAY BE USED AS AN ALTERNATE.

THE PERMITTED THREADED INSERTS SHALL BE GROUTED BY THE CONTRACTOR IMMEDIATELY FOLLOWING REMOVAL OF THE FALSEWORK.

THE COST OF THE PERMITTED THREADED INSERTS SHALL BE INCLUDED IN THE PRICE BID FOR THE PRECAST UNITS.

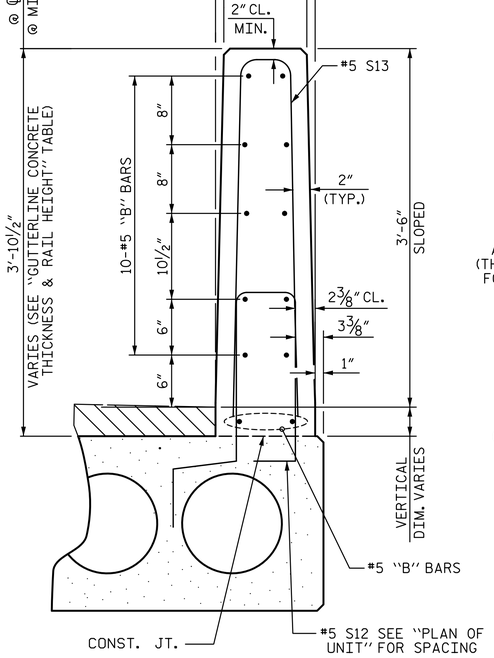

SECTION THRU RAIL

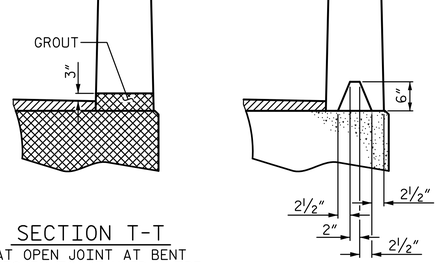

SECTION T-T
AT OPEN JOINT AT BENT
(THIS IS TO BE USED WHERE FOAM JOINT IS NOT USED)

SECTION S-S
AT DAM IN OPEN JOINT
(THIS IS TO BE USED ONLY WHEN SLIP FORM IS USED)

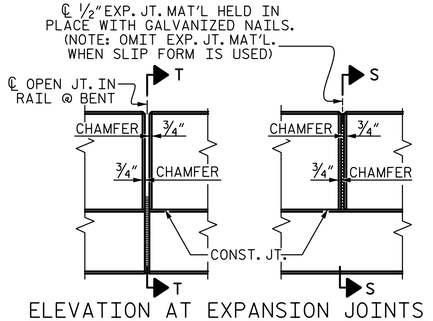

ELEVATION AT EXPANSION JOINTS

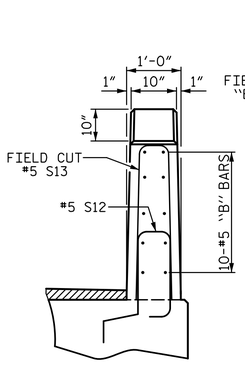

END VIEW

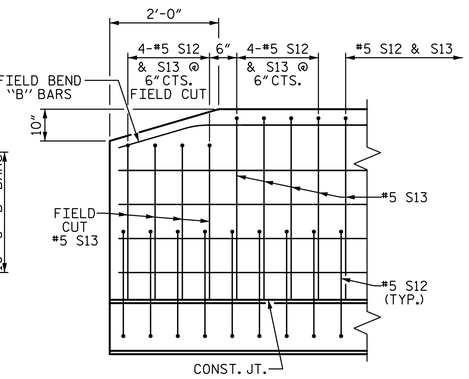

SIDE VIEW

VERTICAL CONCRETE BARRIER RAIL DETAILS

END OF RAIL DETAILS

CONCRETE RELEASE STRENGTH	
UNIT	PSI
70' UNITS	5500

DocuSigned by: Jason Griscom
EXECUTED ON: 6/21/2023

NORTH CAROLINA PROFESSIONAL SEAL 029429 ENGINEER JASON T. GRISCOM

6/21/2023

STV Engineers, Inc.
900 West Trade St., Suite 715
Charlotte, NC 28202
NC License Number F-0991

DOCUMENT NOT CONSIDERED FINAL UNLESS ALL SIGNATURES COMPLETED

PROJECT NO. BP11.R003.1
ASHE COUNTY
STATION: 16+85.00 -L-

SHEET 3 OF 4

STATE OF NORTH CAROLINA
DEPARTMENT OF TRANSPORTATION
RALEIGH
STANDARD
3'-0" X 2'-0"
PRESTRESSED CONCRETE CORED SLAB UNIT (SPAN B)

REVISIONS						SHEET NO.
NO.	BY:	DATE:	NO.	BY:	DATE:	S-15
1			3			TOTAL SHEETS
2			4			29

DRAWN BY :	SGH	DATE : 9-22
CHECKED BY :	JAD	DATE : 9-22
DESIGN ENGINEER OF RECORD :	J. GRISCOM	DATE : 6-23

HensleSG 6/20/2023 2:23:17 PM R:\Structures\ustation\Sealed Bridge Plans\401_029_BPII.R003.1_SMU_CS8.01S_40063.dgn

DocuSign Envelope ID: 0908AB87-C088-4523-BEAB-A55EC9F5191D

ANCHOR ASSEMBLY NOTES

THE TEMPORARY GUARDRAIL ASSEMBLY SHALL CONSIST OF THE FOLLOWING COMPONENTS:

A. FERRULES SHALL BE MADE FROM STEEL MEETING THE REQUIREMENTS OF AASHTO M169, GRADE 12L14 AND SHALL HAVE A MINIMUM LENGTH OF THREADS OF 2½".

B. 4 - 1"Ø x 3" ANCHOR BOLTS WITH WASHERS. BOLTS SHALL CONFORM TO THE REQUIREMENTS OF ASTM A307. BOLTS AND WASHERS SHALL BE GALVANIZED. (AT THE CONTRACTOR'S OPTION, STAINLESS STEEL BOLTS AND WASHERS MAY BE USED AS AN ALTERNATE FOR THE 1"Ø x 3" GALVANIZED BOLTS AND WASHERS. THEY SHALL CONFORM TO OR EXCEED THE MECHANICAL REQUIREMENTS OF ASTM A307. THE USE OF THIS ALTERNATE SHALL BE APPROVED BY THE ENGINEER.)

C. WIRE STRUTS SHOWN IN THE ANCHOR ASSEMBLY DETAIL ARE MINIMUM ALLOWABLE SIZE AND SHALL HAVE A MINIMUM TENSILE STRENGTH OF 100,000 P.S.I.

ANCHOR ASSEMBLY WITH BOLTS SHALL BE ASSEMBLED IN THE SHOP. BOLT THREADS MAY BE RECUT AS NECESSARY TO ENSURE FIT.

THE COST OF THE ANCHOR ASSEMBLY, COMPLETE IN PLACE, SHALL BE INCLUDED, AS APPLICABLE, IN THE UNIT CONTRACT PRICE BID FOR 3'-0" x 2'-0" PRESTRESSED CONCRETE CORED SLAB OR LUMP SUM FOR THE APPROACH SLABS.

FERRULES TO BE PLUGGED DURING CASTING OF THE CORED SLAB UNITS OR POURING OF APPROACH SLABS AS RECOMMENDED BY THE MANUFACTURER.

AT THE CONTRACTOR'S OPTION, FERRULES WITH OPEN OR CLOSED ENDS MAY BE USED.

PAYMENT FOR THE TEMPORARY GUARDRAIL, POST AND POST BASE PLATES IS INCLUDED IN THE TRAFFIC CONTROL PLANS.

ONCE THE TEMPORARY GUARDRAIL HAS BEEN REMOVED, COMPLETELY FILL ANCHOR ASSEMBLY HOLES WITH AN NCDOT APPROVED, NON-SHRINK, NON-METALLIC GROUT, OR AS DIRECTED BY THE ENGINEER.

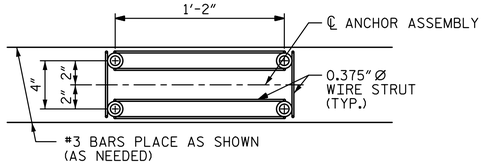

PLAN

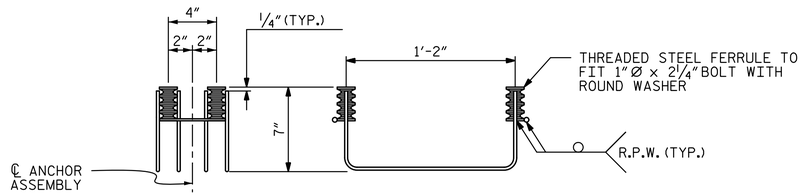

SIDE VIEW ELEVATION

TEMPORARY GUARDRAIL ANCHOR ASSEMBLY

(11 ASSEMBLIES REQUIRED IN CORED SLAB UNIT 7, SPAN B)

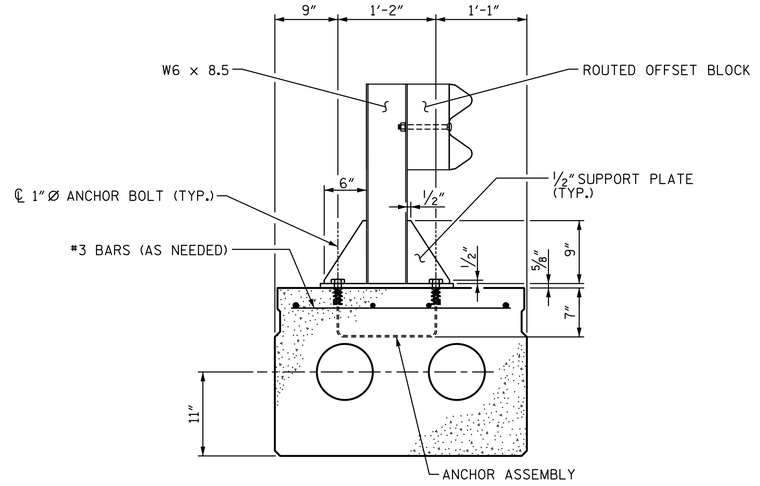

SECTION A-A

(SHOWING PLACEMENT OF ANCHOR ASSEMBLIES)

NOTE: THE #3 BARS ARE INCIDENTAL AND THEIR COST SHALL BE INCLUDED IN THE PRICE BID FOR THE PRESTRESSED CONCRETE CORED SLAB.

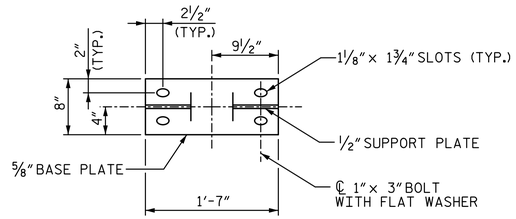

PLAN VIEW

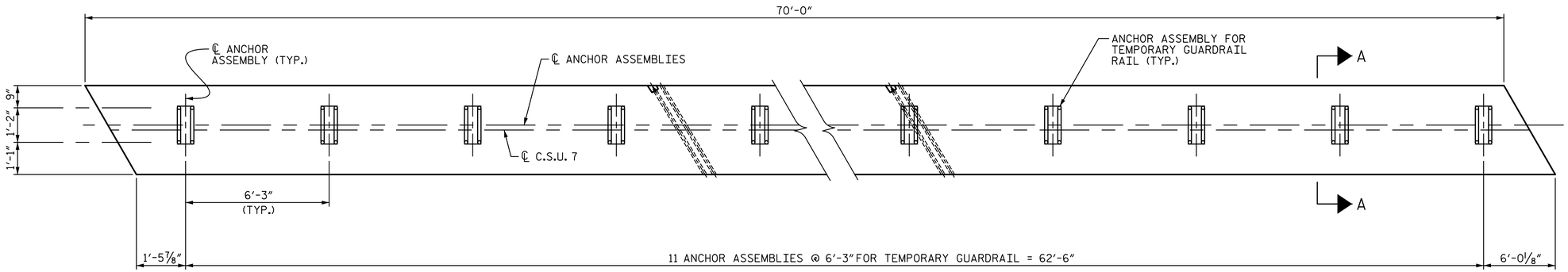

PLAN OF CORED SLAB UNIT #7

(SHOWING LOCATION OF ANCHOR ASSEMBLIES)

DocuSigned by: Jason Griscom
E4ACDEFEEEF8...

NORTH CAROLINA PROFESSIONAL SEAL 029429 ENGINEER JASON T. GRISCOM

6/21/2023

STV Engineers, Inc.
900 West Trade St., Suite 715
Charlotte, NC 28202
NC License Number F-0991

DOCUMENT NOT CONSIDERED FINAL UNLESS ALL SIGNATURES COMPLETED

PROJECT NO. BP11.R003.1

ASHE COUNTY

STATION: 16+85.00 -L-

SHEET 4 OF 4

STATE OF NORTH CAROLINA
DEPARTMENT OF TRANSPORTATION
RALEIGH

3'-0" X 2'-0" PRESTRESSED CONCRETE CORED SLAB UNIT 60° SKEW (SPAN B)

REVISIONS						SHEET NO.
NO.	BY:	DATE:	NO.	BY:	DATE:	S-16
1			3			TOTAL SHEETS
2			4			29

DRAWN BY :	SGH	DATE :	9-22
CHECKED BY :	JAD	DATE :	9-22
DESIGN ENGINEER OF RECORD :	J. GRISCOM	DATE :	6-23

HensleSG 6/20/2023 2:23:44 PM R:\Structures\Ustation\Sealed Bridge Plans\401_03_BP11_R003_1_SMU_CS9_016_40063.dgn

DocuSign Envelope ID: 0908AB87-C088-4523-BEAB-A55EC9F5191D

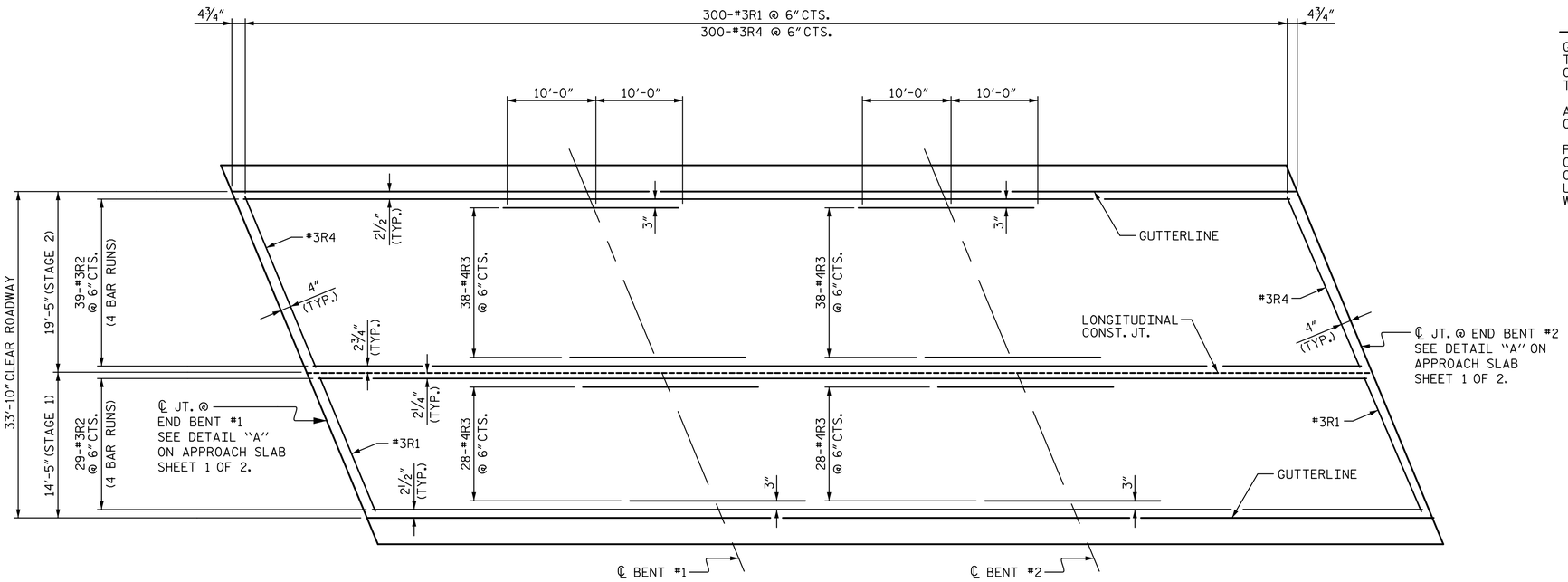

PLAN SHOWING CONCRETE WEARING SURFACE REINFORCING STEEL

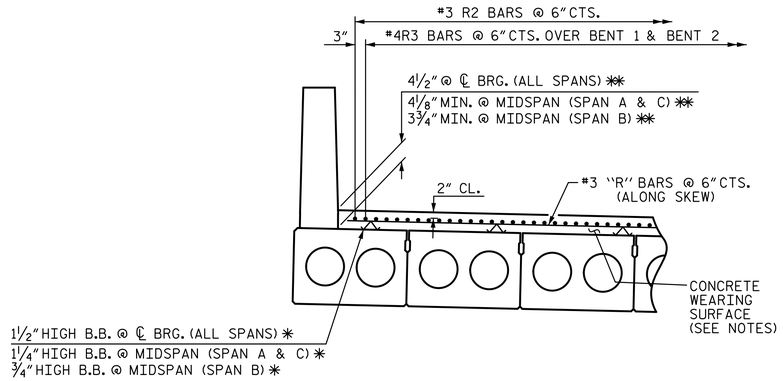

REINFORCING FOR CONCRETE WEARING SURFACE

✱ BEAM BOLSTERS (B.B.) SHALL BE PLACED AT 2'-0" CENTERS.

✱✱ MINIMUM VALUES ARE SHOWN BASED ON PREDICTED FINAL CAMBER AND THEORETICAL GRADE LINE ELEVATIONS. FOR THICKNESSES PER SPAN & STAGE SEE "3'-0" X 2'-0" PRESTRESSED CONCRETE CORED SLAB UNIT (SPAN A & C)" SHEET 4 OF 5, & "3'-0" X 2'-0" PRESTRESSED CONCRETE CORED SLAB UNIT (SPAN B)" SHEET 3 OF 4.

NOTES

GROOVED CONTRACTION JOINTS, ½" IN DEPTH, SHALL BE TOOLED IN THE TOP OF WEARING SURFACE AT INTERIOR BENTS WITH CONTINUOUS CONCRETE WEARING SURFACE IN ACCORDANCE WITH ARTICLE 825-10(B) OF THE STANDARD SPECIFICATIONS.

ALL REINFORCING STEEL IN CONCRETE WEARING SURFACE SHALL BE EPOXY COATED.

PLACEMENT OF THE CONCRETE WEARING SURFACE SHALL OCCUR AFTER CASTING THE CONCRETE RAIL. THE COST OF THE #3 BARS AND #4 BARS CAST WITH THE CONCRETE WEARING SURFACE SHALL BE INCLUDED IN THE UNIT PRICE BID FOR CONCRETE WEARING SURFACE. FOR CONCRETE WEARING SURFACE, SEE SPECIAL PROVISIONS.

BILL OF MATERIAL FOR CONCRETE WEARING SURFACE (STAGE 1)

BAR	NO.	SIZE	TYPE	LENGTH	WEIGHT
✱R1	300	#3	STR	16'-3"	1,833
✱R2	116	#3	STR	38'-8"	1,686
✱R3	56	#4	STR	20'-0"	748
✱EPOXY COATED REINFORCING STEEL LBS.					4,267
CONCRETE WEARING SURFACE SQ.FT.					2,167

BILL OF MATERIAL FOR CONCRETE WEARING SURFACE (STAGE 2)

BAR	NO.	SIZE	TYPE	LENGTH	WEIGHT
✱R2	156	#3	STR	38'-8"	2,268
✱R3	76	#4	STR	20'-0"	1,015
✱R4	300	#3	STR	22'-0"	2,482
✱EPOXY COATED REINFORCING STEEL LBS.					5,765
CONCRETE WEARING SURFACE SQ.FT.					2,919

GROOVING BRIDGE FLOORS

APPROACH SLABS (STAGE 1)	363 SQ.FT.
APPROACH SLABS (STAGE 2)	504 SQ.FT.
BRIDGE DECK (STAGE 1)	1,933 SQ.FT.
BRIDGE DECK (STAGE 2)	2,689 SQ.FT.
TOTAL	5,489 SQ.FT.

SPLICE LENGTH CHART

BAR SIZE	EPOXY COATED
#3	1'-6"
#4	1'-11"

PROJECT NO. BP11.R003.1

ASHE COUNTY

STATION: 16+85.00 -L-

DocuSigned by: Jason Griscom
EXAC6E6F1E1B4D5...

NORTH CAROLINA PROFESSIONAL SEAL 029429 ENGINEER JASON T. GRISCOM

6/21/2023

STV Engineers, Inc.
900 West Trade St., Suite 715
Charlotte, NC 28202
NC License Number F-0991

DOCUMENT NOT CONSIDERED FINAL UNLESS ALL SIGNATURES COMPLETED

STATE OF NORTH CAROLINA
DEPARTMENT OF TRANSPORTATION
RALEIGH

CONCRETE WEARING SURFACE

REVISIONS						SHEET NO.
NO.	BY:	DATE:	NO.	BY:	DATE:	S-17
1			3			TOTAL SHEETS
2			4			29

DRAWN BY : SGH DATE : 9-22
CHECKED BY : JAD DATE : 9-22
DESIGN ENGINEER OF RECORD : J. GRISCOM DATE : 6-23

HensleSG 6/20/2023 2:24:10 PM R:\Structures\ustation\Sealed Bridge Plans\40L033.BP11.R003.L_SMU_COL017_40063.dgn

DocuSign Envelope ID: 0908AB87-C088-4523-BEAB-A55EC9F5191D

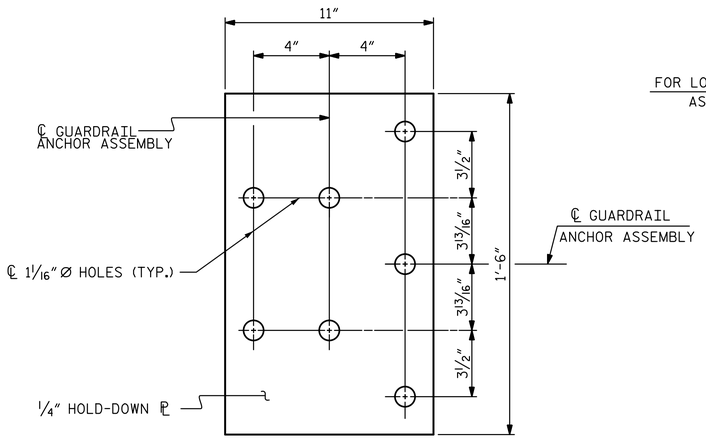

PLAN

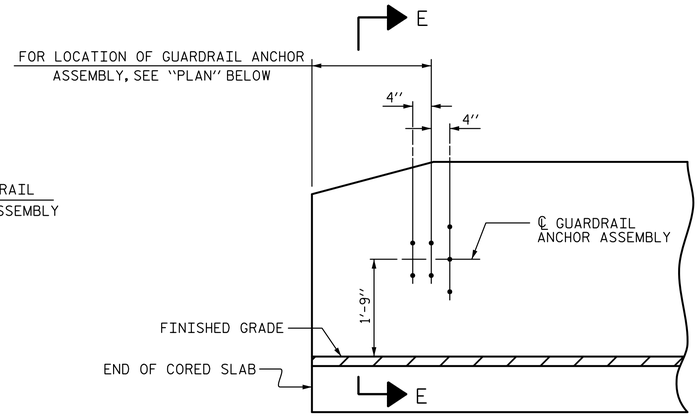

ELEVATION

NOTES

THE GUARDRAIL ANCHOR ASSEMBLY SHALL CONSIST OF A 1/4″ HOLD DOWN PLATE AND 7 - 7/8″ Ø BOLTS WITH NUTS AND WASHERS.

THE HOLD-DOWN PLATE SHALL CONFORM TO AASHTO M270 GRADE 36. AFTER FABRICATION, THE HOLD-DOWN PLATE SHALL BE HOT-DIP GALVANIZED IN ACCORDANCE WITH AASHTO M111.

BOLTS SHALL CONFORM TO THE REQUIREMENTS OF ASTM A307 AND NUTS SHALL CONFORM TO THE REQUIREMENTS OF AASHTO M291. BOLTS, NUTS AND WASHERS SHALL BE GALVANIZED. (AT THE CONTRACTOR'S OPTION, STAINLESS STEEL BOLTS, NUTS AND WASHERS MAY BE USED AS AN ALTERNATE FOR THE 7/8″ Ø GALVANIZED BOLTS, NUTS AND WASHERS. THEY SHALL CONFORM TO OR EXCEED THE MECHANICAL REQUIREMENTS OF ASTM A307. THE USE OF THIS ALTERNATE SHALL BE APPROVED BY THE ENGINEER.)

THE GUARDRAIL ANCHOR ASSEMBLY IS REQUIRED AT ALL POINTS WHERE APPROACH GUARDRAIL IS TO BE ATTACHED TO THE END OF BARRIER RAIL. FOR POINTS OF ATTACHMENT, SEE SKETCH.

AFTER INSTALLATION, THE EXPOSED THREAD OF THE BOLT SHALL BE BURRED WITH A SHARP POINTED TOOL.

THE COST OF THE GUARDRAIL ANCHOR ASSEMBLY SHALL BE INCLUDED IN THE UNIT CONTRACT PRICE BID FOR VERTICAL CONCRETE BARRIER RAIL.

THE VERTICAL REINFORCING BARS MAY BE SHIFTED SLIGHTLY IN THE VERTICAL CONCRETE BARRIER RAIL TO CLEAR ASSEMBLY BOLTS.

THE 1 1/4″ Ø HOLES SHALL BE FORMED OR DRILLED WITH A CORE BIT. IMPACT TOOLS WILL NOT BE PERMITTED. ANY CONCRETE DAMAGED BY THIS WORK SHALL BE REPAIRED TO THE SATISFACTION OF THE ENGINEER.

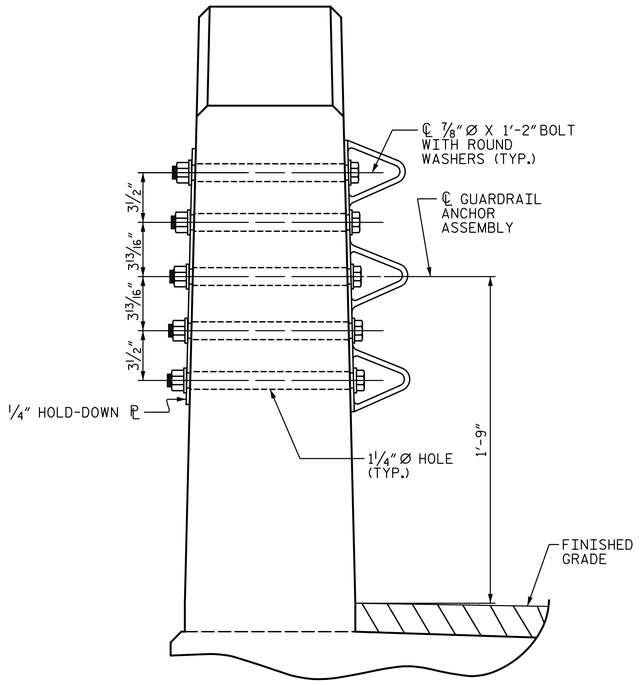

SECTION E-E

GUARDRAIL ANCHOR ASSEMBLY DETAILS

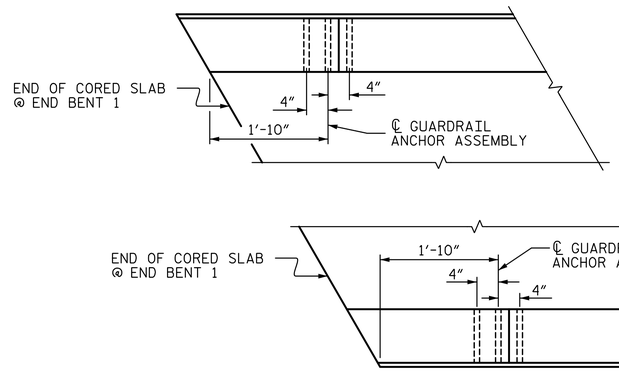

PLAN

LOCATION OF ANCHORS FOR GUARDRAIL

END BENT #1 SHOWN, END BENT #2 SIMILAR.



SKETCH SHOWING POINTS OF ATTACHMENT

✳ DENOTES GUARDRAIL ANCHOR ASSEMBLY

PROJECT NO. BP11.R003.1

ASHE COUNTY

STATION: 16+85.00 -L-

DocuSigned by: Jason Griscom
E4ACDDFEE1F94BD...

NORTH CAROLINA PROFESSIONAL SEAL 029429 ENGINEER JASON T. GRISCOM

6/21/2023

stv STV Engineers, Inc.
900 West Trade St., Suite 715
Charlotte, NC 28202
NC License Number F-0991

DOCUMENT NOT CONSIDERED FINAL UNLESS ALL SIGNATURES COMPLETED

STATE OF NORTH CAROLINA
DEPARTMENT OF TRANSPORTATION
RALEIGH

STANDARD
GUARDRAIL ANCHORAGE DETAILS FOR VERTICAL CONCRETE BARRIER RAIL

REVISIONS						SHEET NO.
NO.	BY:	DATE:	NO.	BY:	DATE:	S-18
1			3			TOTAL SHEETS
2			4			29

DRAWN BY :	SGH	DATE :	9-22
CHECKED BY :	JAD	DATE :	9-22
DESIGN ENGINEER OF RECORD :	J. GRISCOM	DATE :	6-23
DRAWN BY : MAA 5/10	REV. 1/15	MAA/TMG	
CHECKED BY : GM 5/10	REV. 12/17	MAA/THC	
	REV. 5/18	MAA/THC	

STD. NO. GRA3

HensleSG 6/20/2023 2:24:36 PM R:\Structures\Ustation\Sealed Bridge Plans\401_035_BPII_R003_I_SMU_GR_018_40063.dgn

DocuSign Envelope ID: 0908AB87-C088-4523-BEAB-A55EC9F5191D

HensleSG 6/20/2023 2:25:08 PM R:\Structures\Justation\Sealed Bridge Plans\401_037_BPII_R003_L_SMU_EBI_019_40063.dgn

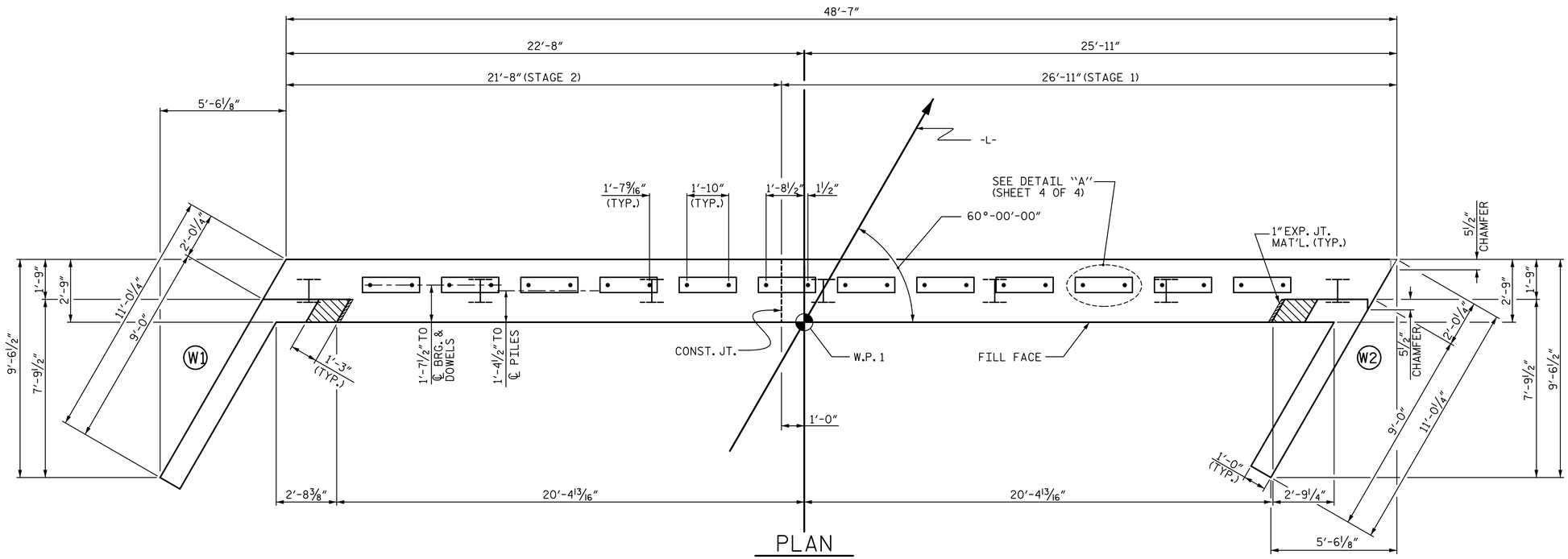

PLAN

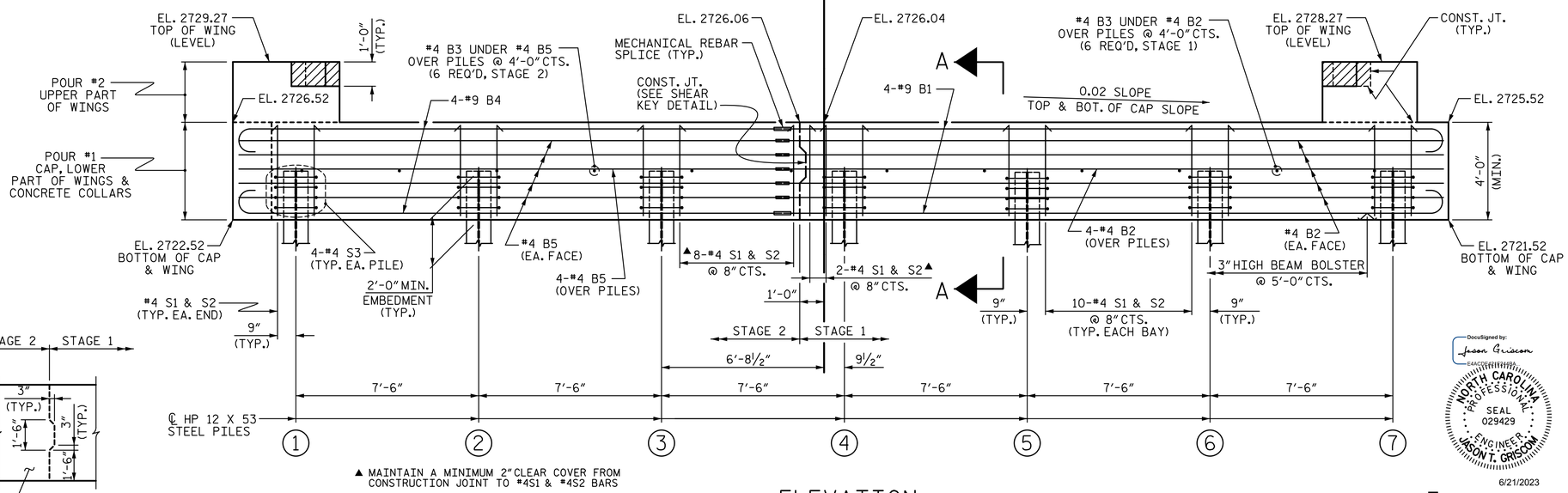

▲ MAINTAIN A MINIMUM 2" CLEAR COVER FROM CONSTRUCTION JOINT TO #4S1 & #4S2 BARS

ELEVATION

WINGS NOT SHOWN FOR CLARITY.
FOR SECTION A-A, SEE SHEET 4 OF 4.
CONCRETE COLLARS FOR STEEL PILES NOT SHOWN IN PLAN AND ELEVATION VIEWS FOR CLARITY.
SEE "CORROSION PROTECTION FOR STEEL PILES DETAIL", SHEET 4 OF 4.

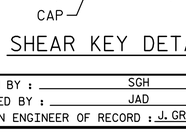

SHEAR KEY DETAIL

NOTES

STIRRUPS IN CAP MAY BE SHIFTED AS NECESSARY TO CLEAR DOWELS.

THE CONCRETE IN THE SHADED AREA OF THE WING SHALL BE POURED AFTER THE VERTICAL CONCRETE BARRIER RAIL IS CAST IF SLIP FORMING IS USED.

FOR PILE SPLICE DETAILS, SEE SHEET 4 OF 4.

FOR WING DETAILS, SEE SHEET 3 OF 4.

FOR MECHANICAL SPLICES, SEE SECTION 425-5(B) OF THE STANDARD SPECIFICATIONS.

TOP OF PILE ELEVATIONS	
①	2724.48
②	2724.33
③	2724.18
④	2724.03
⑤	2723.88
⑥	2723.73
⑦	2723.58

PROJECT NO. BP11.R003.1

ASHE COUNTY

STATION: 16+85.00 -L-

SHEET 1 OF 4

STATE OF NORTH CAROLINA
DEPARTMENT OF TRANSPORTATION
RALEIGH

SUBSTRUCTURE

END BENT No. 1

DocuSigned by: Jason Griscom E4AC1B8F4B8E4B0...

NORTH CAROLINA PROFESSIONAL SEAL 029429 ENGINEER JASON T. GRISCOM

6/21/2023

STV Engineers, Inc.
900 West Trade St, Suite 715
Charlotte, NC 28202
NC License Number F-0991

DOCUMENT NOT CONSIDERED FINAL UNLESS ALL SIGNATURES COMPLETED

REVISIONS						SHEET NO.
NO.	BY:	DATE:	NO.	BY:	DATE:	S-19
1			3			TOTAL SHEETS
2			4			29

DRAWN BY : SGH DATE : 9-22
CHECKED BY : JAD DATE : 9-22
DESIGN ENGINEER OF RECORD : J. GRISCOM DATE : 6-23

DocuSign Envelope ID: 0908AB87-C088-4523-BEAB-A55EC9F5191D

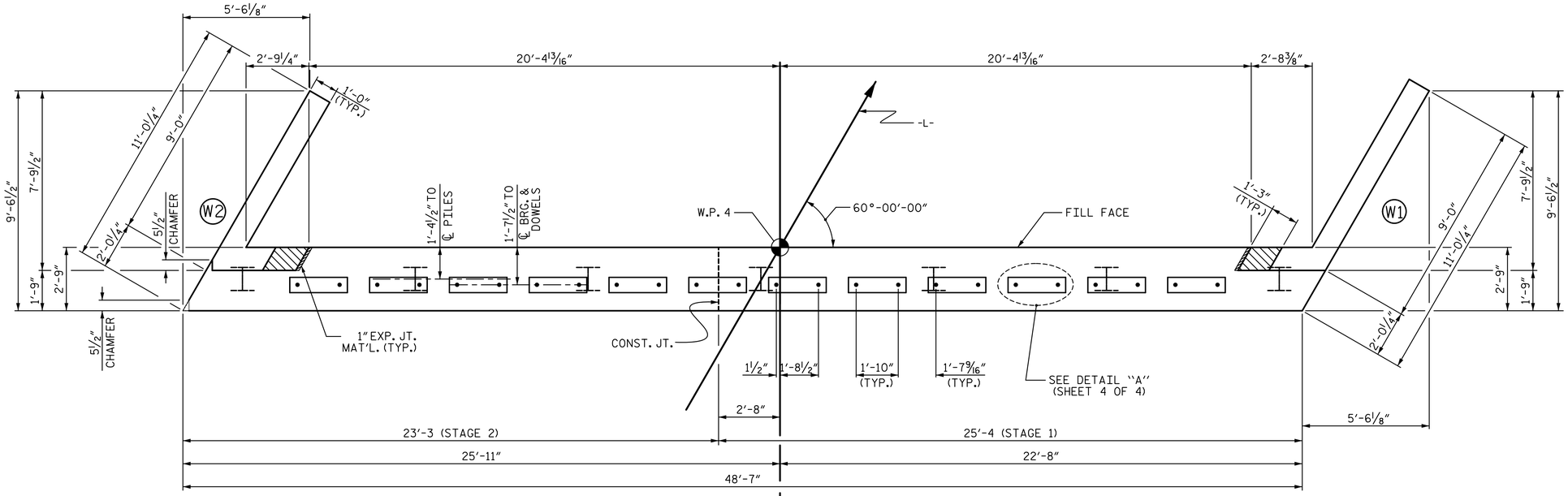

PLAN

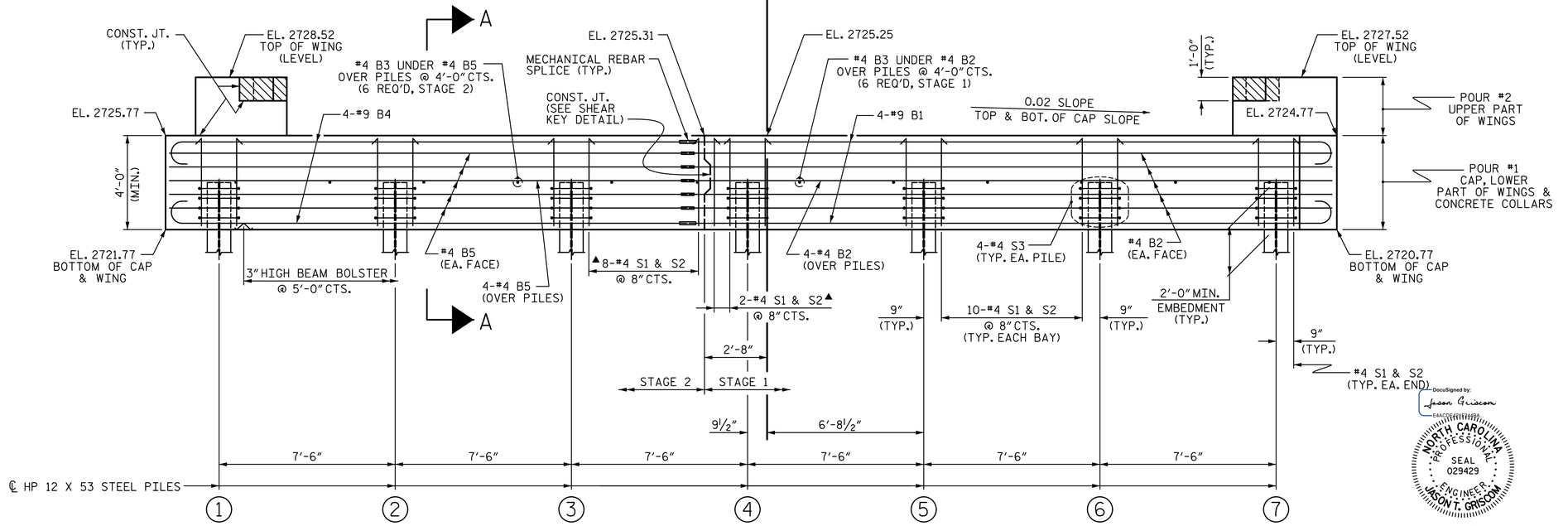

▲ MAINTAIN A MINIMUM 2″CLEAR COVER FROM CONSTRUCTION JOINT TO #4S1 & #4S2 BARS

ELEVATION

WINGS NOT SHOWN FOR CLARITY.
FOR SECTION A-A, SEE SHEET 4 OF 4.
CONCRETE COLLARS FOR STEEL PILES NOT SHOWN IN PLAN AND ELEVATION VIEWS FOR CLARITY.
SEE ″CORROSION PROTECTION FOR STEEL PILES DETAIL″, SHEET 4 OF 4.

NOTES

STIRRUPS IN CAP MAY BE SHIFTED AS NECESSARY TO CLEAR DOWELS.

THE CONCRETE IN THE SHADED AREA OF THE WING SHALL BE POURED AFTER THE VERTICAL CONCRETE BARRIER RAIL IS CAST IF SLIP FORMING IS USED.

FOR PILE SPLICE DETAILS, SEE SHEET 4 OF 4.

FOR WING DETAILS, SEE SHEET 3 OF 4.

FOR MECHANICAL SPLICES, SEE SECTION 425-5(B) OF THE STANDARD SPECIFICATIONS.

TOP OF PILE ELEVATIONS	
①	2723.73
②	2723.58
③	2723.43
④	2723.28
⑤	2723.13
⑥	2722.98
⑦	2722.83

SHEAR KEY DETAIL

PROJECT NO. BP11.R003.1

ASHE COUNTY

STATION: 16+85.00 -L-

SHEET 2 OF 4

STATE OF NORTH CAROLINA
DEPARTMENT OF TRANSPORTATION
RALEIGH

SUBSTRUCTURE

END BENT No. 2

DocuSigned by: Jason Griscom
EXECUTED (DS)
NORTH CAROLINA PROFESSIONAL SEAL 029429 ENGINEER JASON T. GRISCOM
6/21/2023

STV Engineers, Inc.
900 West Trade St., Suite 715
Charlotte, NC 28202
NC License Number F-0991

DOCUMENT NOT CONSIDERED FINAL UNLESS ALL SIGNATURES COMPLETED

REVISIONS						SHEET NO.
NO.	BY:	DATE:	NO.	BY:	DATE:	S-20
1			3			TOTAL SHEETS
2			4			29

DRAWN BY : SGH DATE : 9-22
CHECKED BY : JAD DATE : 9-22
DESIGN ENGINEER OF RECORD : J. GRISCOM DATE : 6-23

HensleSG 6/20/2023 2:25:39 PM R:\Structures\ustation\Sealed Bridge Plans\40L039_BP11.R003.1_SMU_EB2_020_40063.dgn

DocuSign Envelope ID: 0908AB87-C088-4523-BEAB-A55EC9F5191D

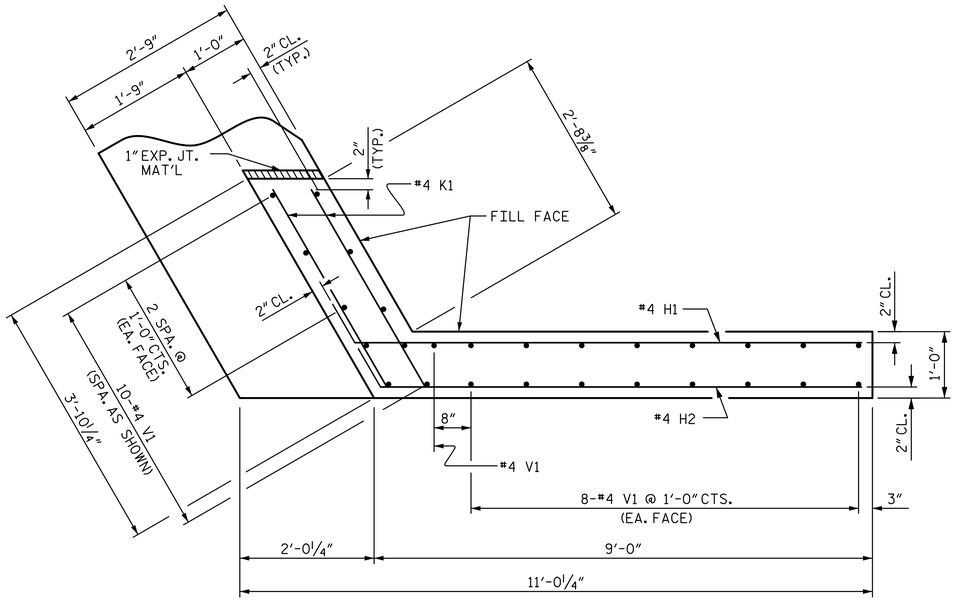

PLAN OF WING (W1)

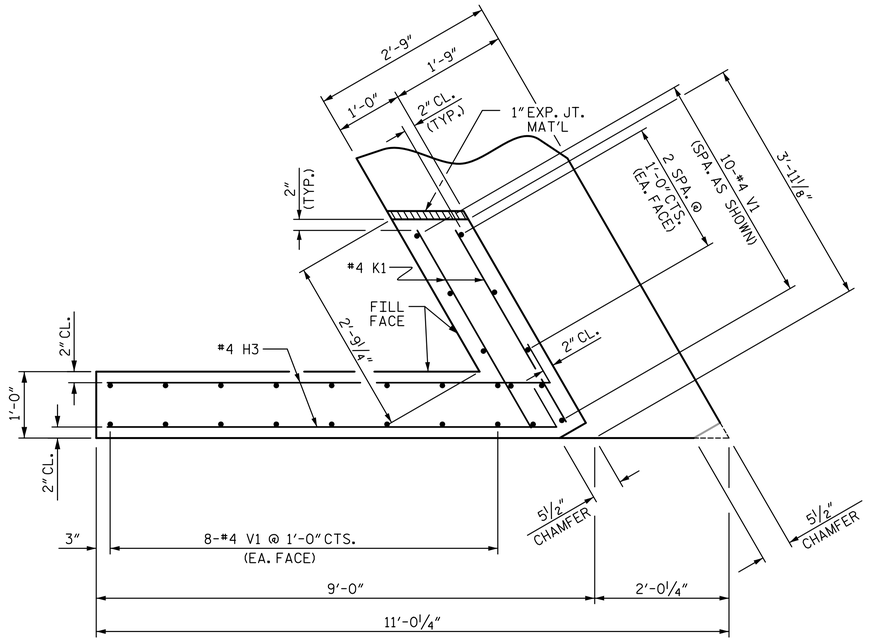

PLAN OF WING (W2)

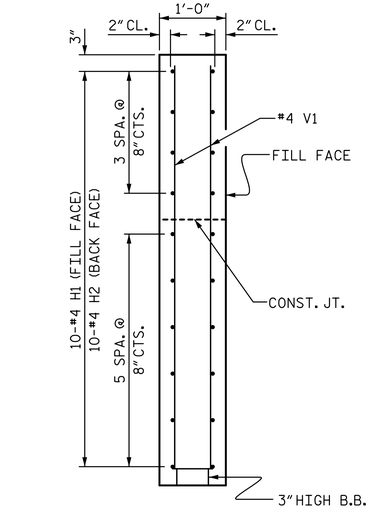

SECTION X-X

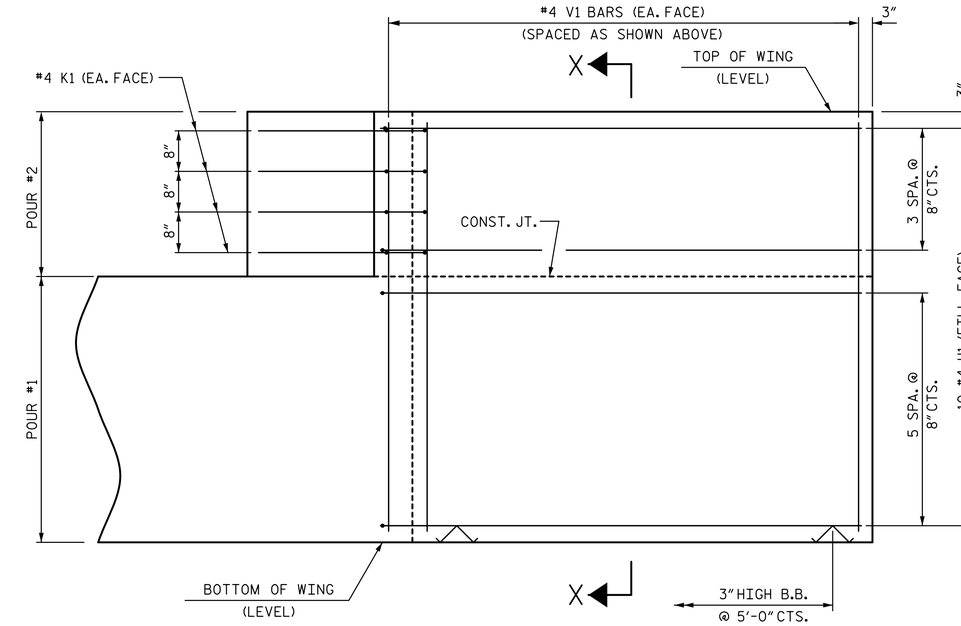

ELEVATION OF WING (W1)

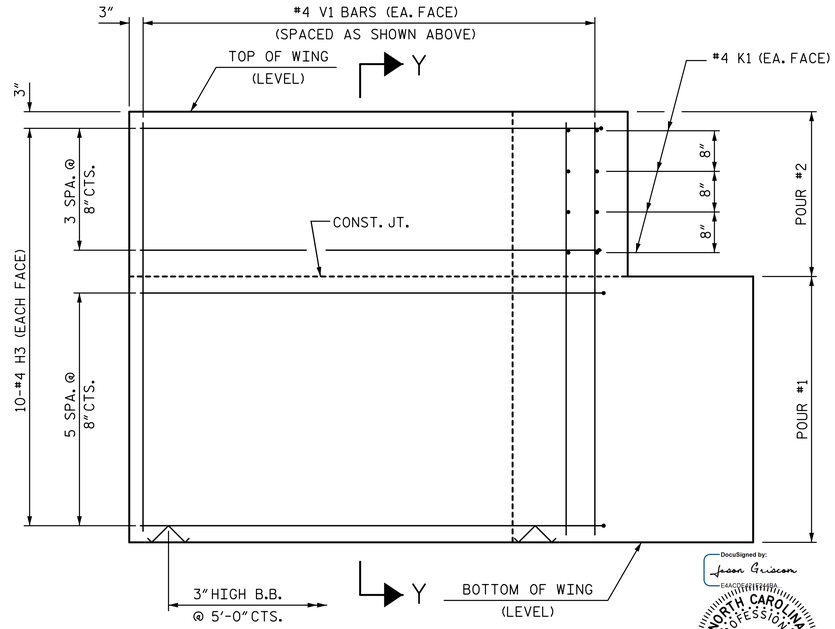

ELEVATION OF WING (W2)

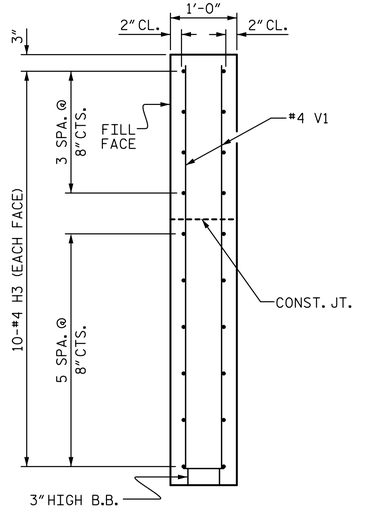

SECTION Y-Y

WING DETAILS

PROJECT NO. BP11.R003.1

ASHE COUNTY

STATION: 16+85.00 -L-

SHEET 3 OF 4

DocuSigned by: Jason Griscom
6/21/2023

NORTH CAROLINA PROFESSIONAL SEAL 029429 ENGINEER JASON T. GRISCOM

STV Engineers, Inc.
900 West Trade St., Suite 715
Charlotte, NC 28202
NC License Number F-0991

DOCUMENT NOT CONSIDERED FINAL UNLESS ALL SIGNATURES COMPLETED

STATE OF NORTH CAROLINA
DEPARTMENT OF TRANSPORTATION
RALEIGH

SUBSTRUCTURE
END BENT
WING DETAILS

REVISIONS						SHEET NO.
NO.	BY:	DATE:	NO.	BY:	DATE:	S-21
1			3			TOTAL SHEETS
2			4			29

DRAWN BY :	SGH	DATE : 9-22
CHECKED BY :	JAD	DATE : 9-22
DESIGN ENGINEER OF RECORD :	J. GRISCOM	DATE : 6-23

R:\Structures\ustation\Sealed Bridge Plans\40I_04I_BPII_R003.1_SMU_EB3_02I_40063.dgn
6/20/2023 2:26:13 PM
HenseSG

DocuSign Envelope ID: 0908AB87-C088-4523-BEAB-A55EC9F5191D

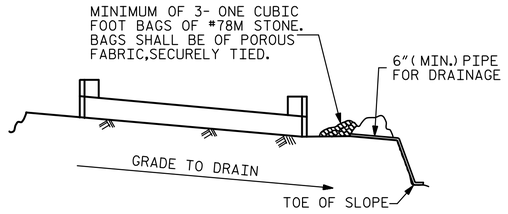

BAGGED STONE AND PIPE SHALL BE PLACED IMMEDIATELY AFTER COMPLETION OF END BENT EXCAVATION. PIPE MAY BE EITHER CONCRETE, CORRUGATED STEEL, CORRUGATED ALUMINUM ALLOY, OR CORRUGATED PLASTIC. PERFORATED PIPE WILL NOT BE ALLOWED.

BAGGED STONE SHALL REMAIN IN PLACE UNTIL THE ENGINEER DIRECTS THAT IT BE REMOVED. THE CONTRACTOR SHALL REMOVE AND DISPOSE OF SILT ACCUMULATIONS AT BAGGED STONE WHEN SO DIRECTED BY THE ENGINEER. BAGS SHALL BE REMOVED AND REPLACED WHENEVER THE ENGINEER DETERMINES THAT THEY HAVE DETERIORATED AND LOST THEIR EFFECTIVENESS.

NO SEPARATE PAYMENT WILL BE MADE FOR THIS WORK AND THE ENTIRE COST OF THIS WORK SHALL BE INCLUDED IN THE UNIT CONTRACT PRICE BID FOR THE SEVERAL PAY ITEMS.

TEMPORARY DRAINAGE AT END BENT

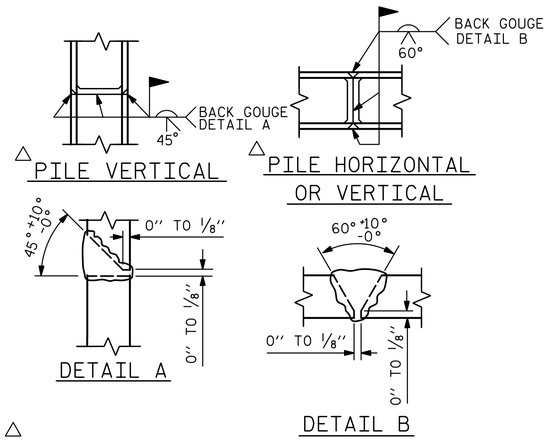

△ POSITION OF PILE DURING WELDING.

PILE SPLICE DETAILS

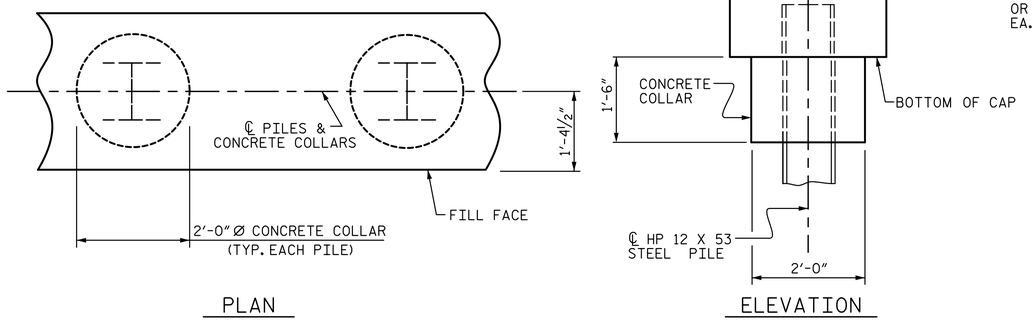

CORROSION PROTECTION FOR STEEL PILES DETAIL

(END BENT No. 1 SHOWN, END BENT No. 2 SIMILAR BY ROTATION)

BAR TYPES

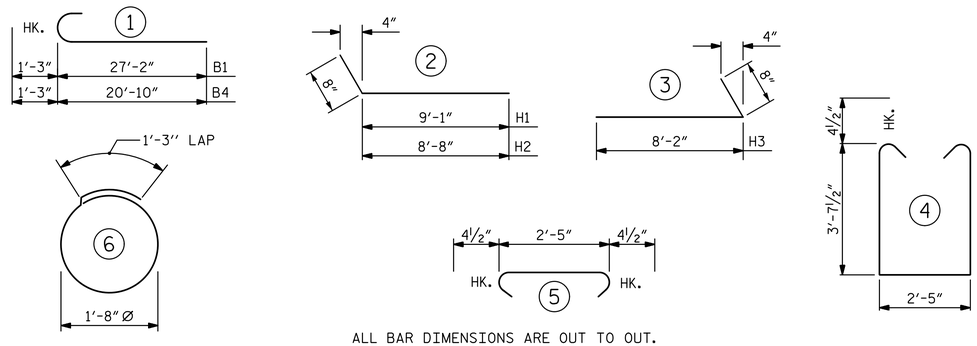

ALL BAR DIMENSIONS ARE OUT TO OUT.

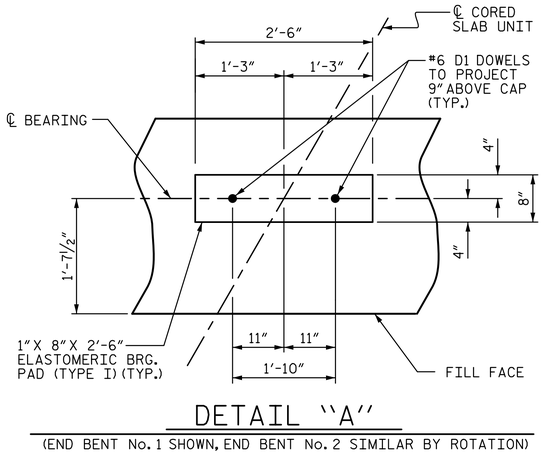

DETAIL "A"

(END BENT No. 1 SHOWN, END BENT No. 2 SIMILAR BY ROTATION)

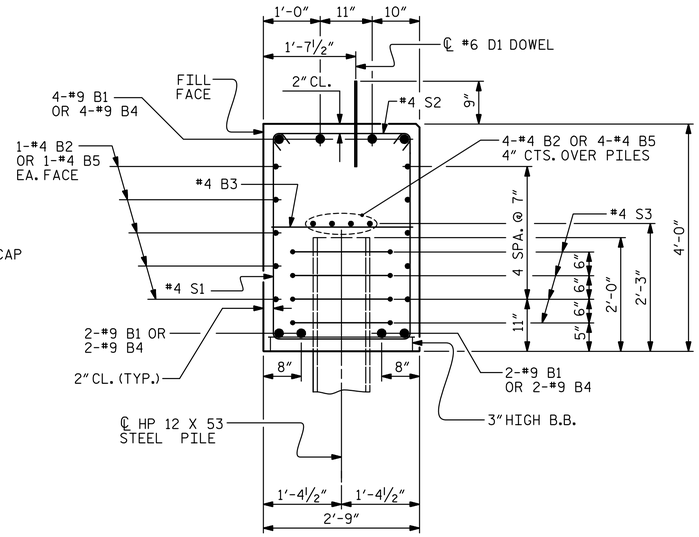

SECTION A-A

(CONCRETE COLLAR NOT SHOWN FOR CLARITY. SEE "CORROSION PROTECTION FOR STEEL PILES DETAIL.")

BILL OF MATERIAL — END BENT 1 (STAGE 1)

BAR	NO.	SIZE	TYPE	LENGTH	WEIGHT
B1	8	#9	1	28'-5"	773
B2	14	#4	STR	27'-2"	254
B3	6	#4	STR	2'-5"	10
D1	12	#6	STR	1'-6"	27
H3	20	#4	3	8'-10"	118
K1	8	#4	STR	3'-3"	17
S1	33	#4	4	10'-5"	230
S2	33	#4	5	3'-2"	70
S3	16	#4	6	6'-6"	69
V1	26	#4	STR	6'-2"	107

REINFORCING STEEL (END BENT 1 STAGE 1) 1,675 LBS.

CLASS A CONCRETE BREAKDOWN (END BENT 1 STAGE 1)

POUR #1	CAP, LOWER PART OF WING & COLLARS	12.5 C.Y.
POUR #2	UPPER PART OF WING	1.2 C.Y.
TOTAL CLASS A CONCRETE		13.7 C.Y.

BILL OF MATERIAL — END BENT 1 (STAGE 2)

BAR	NO.	SIZE	TYPE	LENGTH	WEIGHT
B3	6	#4	STR	2'-5"	10
B4	8	#9	1	22'-1"	601
B5	14	#4	STR	20'-10"	195
D1	12	#6	STR	1'-6"	27
H1	10	#4	2	9'-9"	65
H2	10	#4	2	9'-4"	62
K1	8	#4	STR	3'-3"	17
S1	29	#4	4	10'-5"	202
S2	29	#4	5	3'-2"	61
S3	12	#4	6	6'-6"	52
V1	27	#4	STR	6'-2"	111

REINFORCING STEEL (END BENT 1 STAGE 2) 1,403 LBS.

CLASS A CONCRETE BREAKDOWN (END BENT 1 STAGE 2)

POUR #1	CAP, LOWER PART OF WING & COLLARS	10.9 C.Y.
POUR #2	UPPER PART OF WING	1.2 C.Y.
TOTAL CLASS A CONCRETE		12.1 C.Y.

BILL OF MATERIAL — END BENT 2 (STAGE 1)

BAR	NO.	SIZE	TYPE	LENGTH	WEIGHT
B1	8	#9	1	28'-5"	773
B2	14	#4	STR	27'-2"	254
B3	6	#4	STR	2'-5"	10
D1	12	#6	STR	1'-6"	27
H1	10	#4	2	9'-9"	65
H2	10	#4	2	9'-4"	62
K1	8	#4	STR	3'-3"	17
S1	33	#4	4	10'-5"	230
S2	33	#4	5	3'-2"	70
S3	16	#4	6	6'-6"	69
V1	27	#4	STR	6'-2"	111

REINFORCING STEEL (END BENT 2 STAGE 1) 1,688 LBS.

CLASS A CONCRETE BREAKDOWN (END BENT 2 STAGE 1)

POUR #1	CAP, LOWER PART OF WING & COLLARS	12.5 C.Y.
POUR #2	UPPER PART OF WING	1.2 C.Y.
TOTAL CLASS A CONCRETE		13.7 C.Y.

BILL OF MATERIAL — END BENT 2 (STAGE 2)

BAR	NO.	SIZE	TYPE	LENGTH	WEIGHT
B3	6	#4	STR	2'-5"	10
B4	8	#9	1	22'-1"	601
B5	14	#4	STR	20'-10"	195
D1	12	#6	STR	1'-6"	27
H3	20	#4	3	8'-10"	118
K1	8	#4	STR	3'-3"	17
S1	29	#4	4	10'-5"	202
S2	29	#4	5	3'-2"	61
S3	12	#4	6	6'-6"	52
V1	26	#4	STR	6'-2"	107

REINFORCING STEEL (END BENT 2 STAGE 2) 1,390 LBS.

CLASS A CONCRETE BREAKDOWN (END BENT 2 STAGE 2)

POUR #1	CAP, LOWER PART OF WING & COLLARS	10.8 C.Y.
POUR #2	UPPER PART OF WING	1.2 C.Y.
TOTAL CLASS A CONCRETE		12.0 C.Y.

PROJECT NO. BP11.R003.1

ASHE COUNTY

STATION: 16+85.00 -L-

SHEET 4 OF 4

STATE OF NORTH CAROLINA
DEPARTMENT OF TRANSPORTATION
RALEIGH

SUBSTRUCTURE

END BENT No. 1 & 2 DETAILS

REVISIONS						SHEET NO.
NO.	BY:	DATE:	NO.	BY:	DATE:	S-22
1			3			TOTAL SHEETS
2			4			29

DocuSigned by: Jason Griscom
E4ACC5E2E1E14E2...

NORTH CAROLINA PROFESSIONAL SEAL 029429 ENGINEER JASON T. GRISCOM

6/21/2023

STV Engineers, Inc.
900 West Trade St., Suite 715
Charlotte, NC 28202
NC License Number F-0991

DOCUMENT NOT CONSIDERED FINAL UNLESS ALL SIGNATURES COMPLETED

DRAWN BY :	SGH	DATE :	9-22
CHECKED BY :	JAD	DATE :	9-22
DESIGN ENGINEER OF RECORD :	J. GRISCOM	DATE :	6-23

HensleSG 6/20/2023 2:26:37 PM R:\Structures\ustation\Sealed Bridge Plans\40I_043_BPII_R003_I_SMU_EB4_022_40063.dgn

DocuSign Envelope ID: 0908AB87-C088-4523-BEAB-A55EC9F5191D

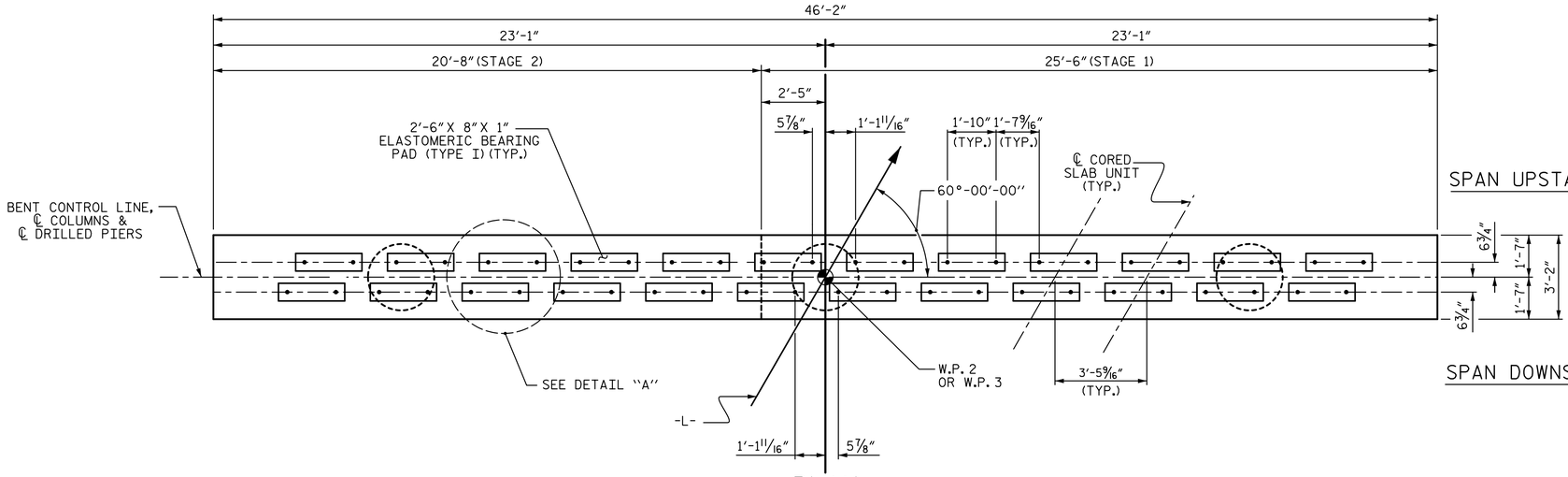

SPAN UPSTATION

SPAN DOWNSTATION

PLAN

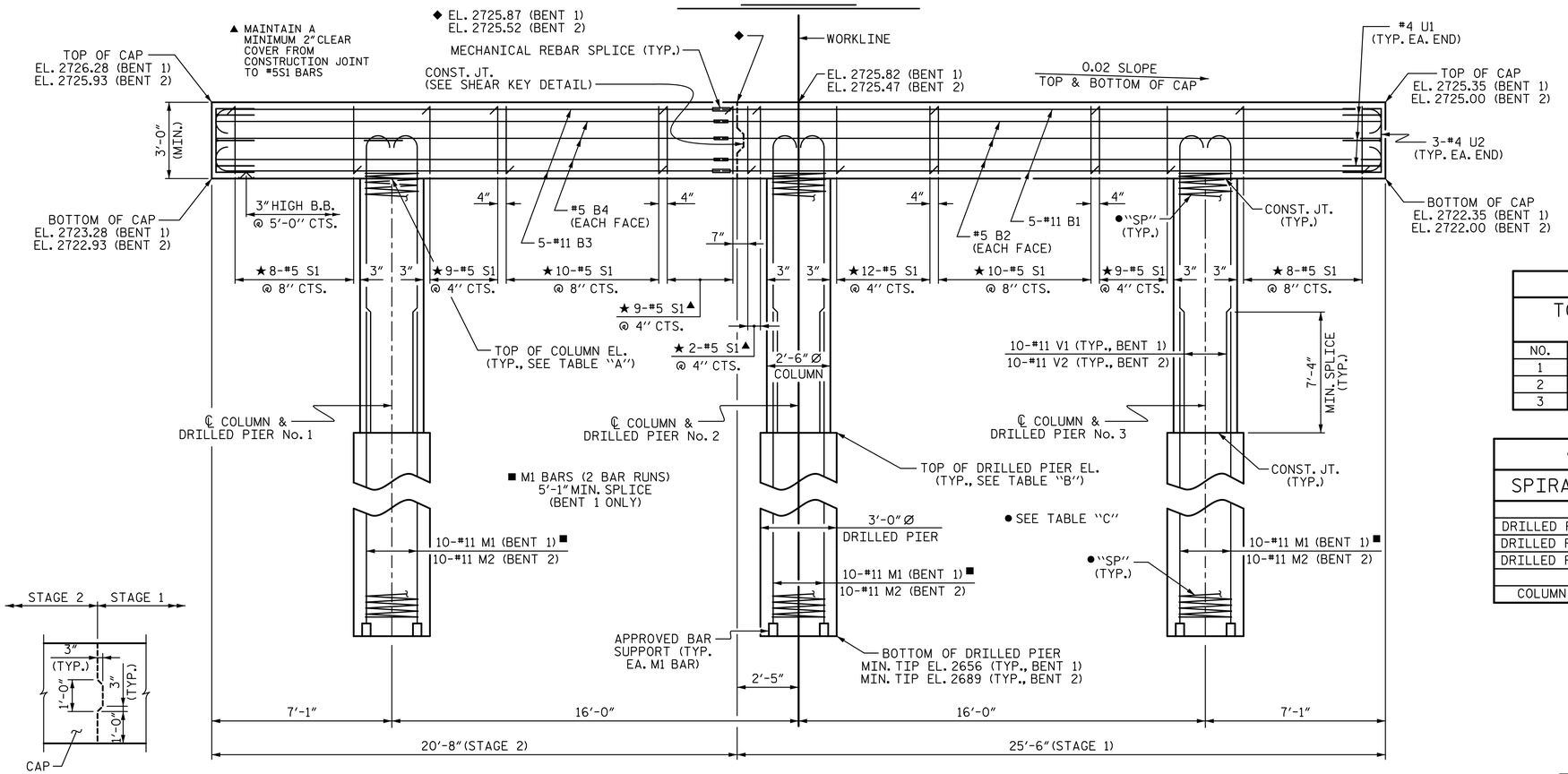

ELEVATION

DIMENSIONS & REINFORCING STEEL ARE TYPICAL FOR EACH COLUMN & DRILLED PIER UNLESS OTHERWISE NOTED.

SHEAR KEY DETAIL

NOTES

STIRRUPS IN CAP MAY BE SHIFTED AS NECESSARY TO CLEAR DOWELS.

HOOKS ON ″V″ BARS MAY BE TURNED AS NECESSARY FOR PLACING REINFORCING STEEL.

FOR DRILLED PIERS, SEE SECTION 411 OF THE STANDARD SPECIFICATIONS.

ALL STEEL IN THE DRILLED PIERS IS INCLUDED IN THE PAY ITEMS FOR ″REINFORCING STEEL″ AND ″SPIRAL COLUMN REINFORCING STEEL.″

★ INVERT ALTERNATE STIRRUPS.

THE LOCATION OF THE CONSTRUCTION JOINT IN THE DRILLED PIERS IS BASED ON AN APPROXIMATE GROUND LINE ELEVATION. IF THE CONSTRUCTION JOINT IS ABOVE THE ACTUAL GROUND LINE ELEVATION, THE CONTRACTOR SHALL PLACE THE CONSTRUCTION JOINT ONE FOOT BELOW THE GROUND LINE.

DRILLED PIERS SHALL BE TERMINATED ONE FOOT ± ABOVE NORMAL WATER SURFACE ELEVATION FOR SHAFTS LOCATED IN WATER.

THE CONTRACTOR'S ATTENTION IS CALLED TO THE FACT THAT THE LONGITUDINAL REINFORCEMENT FOR DRILLED PIERS IS DETAILED WITH 3 FEET OF EXTRA LENGTH.

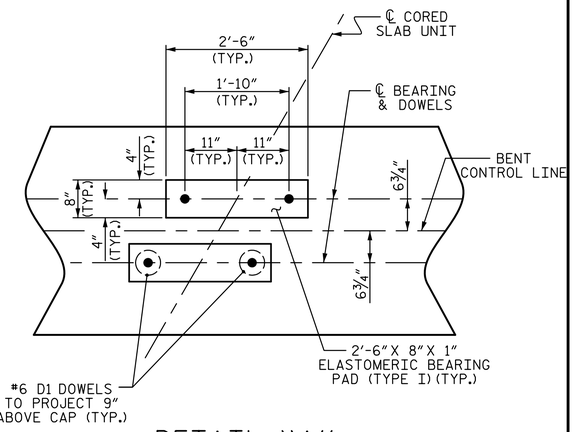

DETAIL ″A″

(DIMENSIONS ARE TYPICAL EACH BEARING)

TABLE ″A″ TOP OF COLUMN ELEVATIONS		
NO.	BENT 1	BENT 2
1	2723.14	2722.79
2	2722.82	2722.47
3	2722.50	2722.15

TABLE ″B″ TOP OF DRILLED PIER ELEVATIONS		
NO.	BENT 1	BENT 2
1	2712.14	2714.54
2	2711.82	2714.22
3	2711.50	2713.90

● TABLE ″C″ SPIRAL REINFORCEMENT		
	BENT 1	BENT 2
DRILLED PIER No. 1	SP-1	SP-5
DRILLED PIER No. 2	SP-2	SP-6
DRILLED PIER No. 3	SP-3	SP-7
COLUMN No. 1-3	SP-4	SP-8

DocuSigned by: Jason Griscom

NORTH CAROLINA PROFESSIONAL SEAL 029429 ENGINEER JASON T. GRISCOM

6/21/2023

STV Engineers, Inc.
900 West Trade St., Suite 715
Charlotte, NC 28202
NC License Number F-0991

DOCUMENT NOT CONSIDERED FINAL UNLESS ALL SIGNATURES COMPLETED

PROJECT NO. BP11.R003.1

ASHE COUNTY

STATION: 16+85.00 -L-

SHEET 1 OF 3

STATE OF NORTH CAROLINA
DEPARTMENT OF TRANSPORTATION
RALEIGH

SUBSTRUCTURE
BENT No. 1 & 2

REVISIONS						SHEET NO.
NO.	BY:	DATE:	NO.	BY:	DATE:	S-23
1			3			TOTAL SHEETS
2			4			29

DRAWN BY : SGH DATE : 9-22
CHECKED BY : JAD DATE : 9-22
DESIGN ENGINEER OF RECORD : J. GRISCOM DATE : 6-23

R:\Structures\Substation\Sealed Bridge Plans\401_045_BPII_R003.1_SMU_BT1_023_40063.dgn 6/20/2023 2:27:04 PM HenselSG

DocuSign Envelope ID: 0908AB87-C088-4523-BEAB-A55EC9F5191D

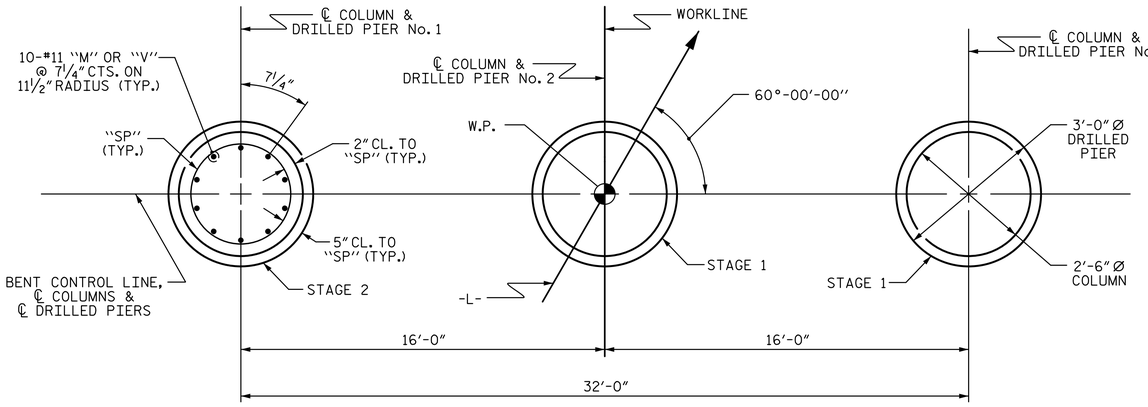

PLAN OF DRILLED PIERS & COLUMNS

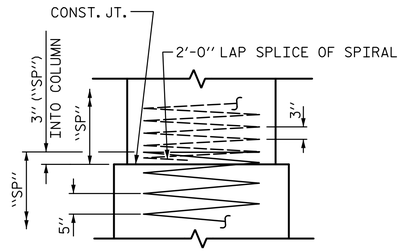

CONSTRUCTION JOINT DETAIL

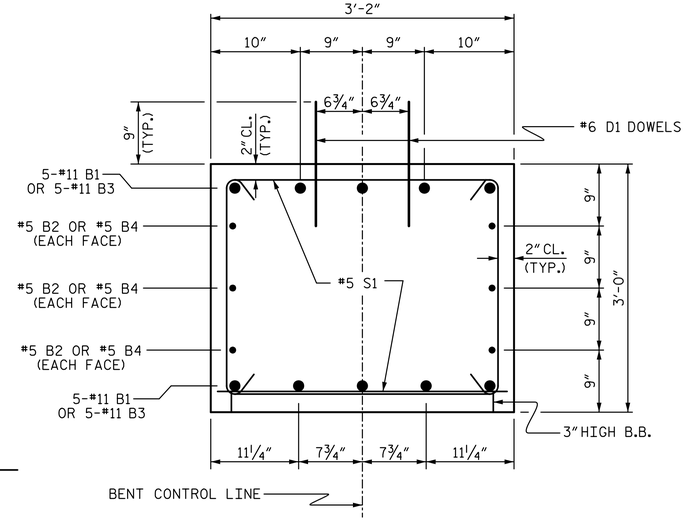

SECTION THRU CAP

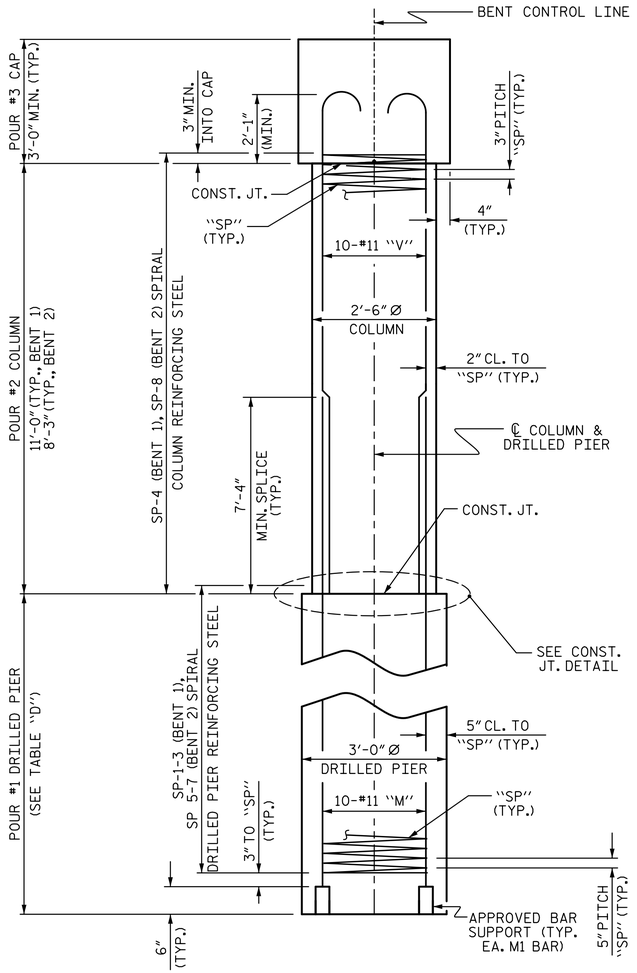

END ELEVATION

TABLE "D"		
DRILLED PIER LENGTH		
	BENT 1	BENT 2
DRILLED PIER No. 1	56'-1⅝"	25'-6½"
DRILLED PIER No. 2	55'-9⅞"	25'-2⅝"
DRILLED PIER No. 3	55'-6"	24'-10¾"

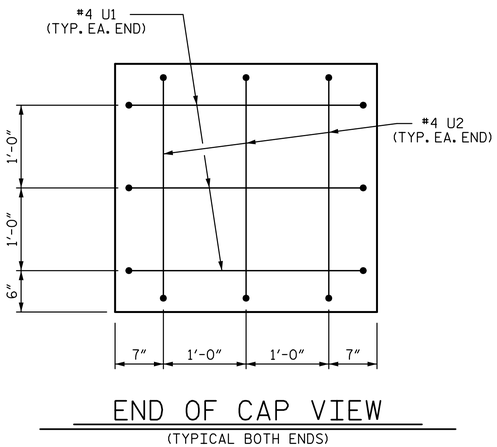

END OF CAP VIEW

(TYPICAL BOTH ENDS)

DocuSigned by: Jason Griscom
E4AC0DE1EEEF4FD...

NORTH CAROLINA PROFESSIONAL SEAL 029429 ENGINEER JASON T. GRISCOM

6/21/2023

STV Engineers, Inc.
900 West Trade St., Suite 715
Charlotte, NC 28202
NC License Number F-0991

DOCUMENT NOT CONSIDERED FINAL UNLESS ALL SIGNATURES COMPLETED

DRAWN BY : SGH DATE : 9-22
CHECKED BY : JAD DATE : 9-22
DESIGN ENGINEER OF RECORD : J. GRISCOM DATE : 6-23

PROJECT NO. BP11.R003.1
ASHE COUNTY
STATION: 16+85.00 -L-

SHEET 2 OF 3

STATE OF NORTH CAROLINA
DEPARTMENT OF TRANSPORTATION
RALEIGH

SUBSTRUCTURE

BENT No. 1 & 2

REVISIONS						SHEET NO.
NO.	BY:	DATE:	NO.	BY:	DATE:	S-24
1			3			TOTAL SHEETS
2			4			29

HenseSG 6/20/2023 2:27:30 PM R:\Structures\Substation\Sealed Bridge Plans\40L047_BP11.R003.1_SMU_BT2.024_40063.dgn

DocuSign Envelope ID: 0908AB87-C088-4523-BEAB-A55EC9F5191D

BAR TYPES

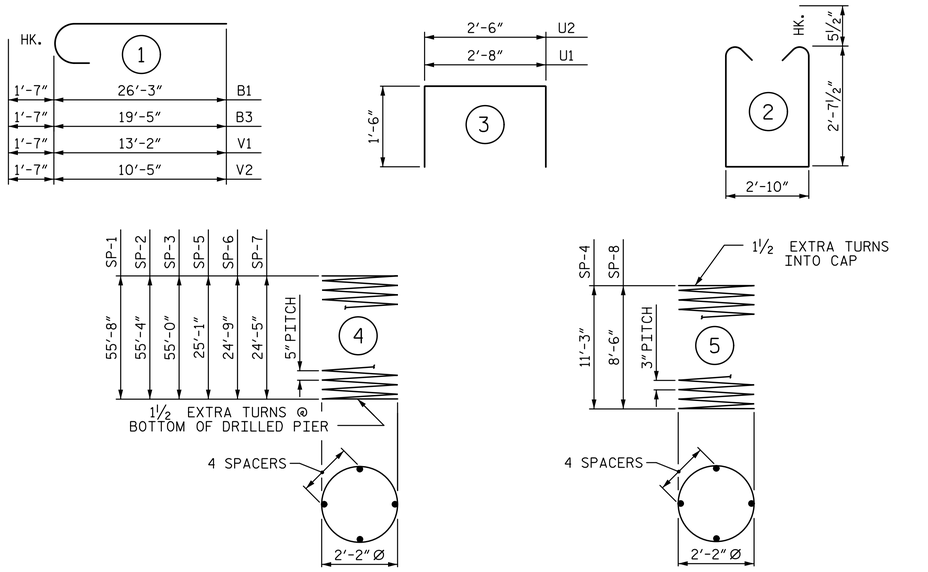

ALL BAR DIMENSIONS ARE OUT TO OUT

BILL OF MATERIAL — BENT 1 (STAGE 1)

BAR	NO.	SIZE	TYPE	LENGTH	WEIGHT
B1	10	#11	1	27'-10"	1,479
B2	6	#5	STR	26'-3"	164
D1	24	#6	STR	1'-6"	54
M1	40	#11	STR	35'-7"	7,562
S1	41	#5	2	9'-0"	385
U1	3	#4	3	5'-8"	11
U2	3	#4	3	5'-6"	11
V1	20	#11	1	14'-9"	1,567

REINFORCING STEEL (BENT 1 STAGE 1) 11,233 LBS.

SP-2	1	✳	4	893'-9"	932
SP-3	1	✳	4	888'-8"	927
SP-4	2	✳✳	5	310'-8"	415

SPIRAL COLUMN REINFORCING STEEL (BENT 1 STAGE 1) 2,274 LBS.

✳ THE SP-2 & SP-3 SPIRAL REINFORCING STEEL SHALL BE W31 OR D-31 COLD DRAWN WIRE OR #5 PLAIN OR DEFORMED BAR

✳✳ THE SP-4 SPIRAL REINFORCING STEEL SHALL BE W20 OR D-20 COLD DRAWN WIRE OR #4 PLAIN OR DEFORMED BAR

CLASS A CONCRETE BREAKDOWN (BENT 1 STAGE 1)

POUR #2 (COLUMNS)	4.0 C.Y.
POUR #3 (CAP)	9.0 C.Y.
TOTAL CLASS A CONCRETE	13.0 C.Y.

DRILLED PIERS: (BENT 1 STAGE 1)

DRILLED PIER CONCRETE	
POUR #1 (DRILLED PIERS)	29.2 C.Y.

BILL OF MATERIAL — BENT 1 (STAGE 2)

BAR	NO.	SIZE	TYPE	LENGTH	WEIGHT
B3	10	#11	1	21'-0"	1,116
B4	6	#5	STR	19'-5"	122
D1	24	#6	STR	1'-6"	54
M1	20	#11	STR	35'-7"	3,781
S1	36	#5	2	9'-0"	338
U1	3	#4	3	5'-8"	11
U2	3	#4	3	5'-6"	11
V1	10	#11	1	14'-9"	784

REINFORCING STEEL (BENT 1 STAGE 2) 6,217 LBS.

SP-1	1	✳	4	898'-10"	937
SP-4	1	✳✳	5	310'-8"	208

SPIRAL COLUMN REINFORCING STEEL (BENT 1 STAGE 2) 1,145 LBS.

✳ THE SP-1 SPIRAL REINFORCING STEEL SHALL BE W31 OR D-31 COLD DRAWN WIRE OR #5 PLAIN OR DEFORMED BAR

✳✳ THE SP-4 SPIRAL REINFORCING STEEL SHALL BE W20 OR D-20 COLD DRAWN WIRE OR #4 PLAIN OR DEFORMED BAR

CLASS A CONCRETE BREAKDOWN (BENT 1 STAGE 2)

POUR #2 (COLUMNS)	2.0 C.Y.
POUR #3 (CAP)	7.3 C.Y.
TOTAL CLASS A CONCRETE	9.3 C.Y.

DRILLED PIERS: (BENT 1 STAGE 2)

DRILLED PIER CONCRETE	
POUR #1 (DRILLED PIERS)	14.7 C.Y.

BILL OF MATERIAL — BENT 2 (STAGE 1)

BAR	NO.	SIZE	TYPE	LENGTH	WEIGHT
B1	10	#11	1	27'-10"	1,479
B2	6	#5	STR	26'-3"	164
D1	24	#6	STR	1'-6"	54
M2	20	#11	STR	35'-5"	3,763
S1	41	#5	2	9'-0"	385
U1	3	#4	3	5'-8"	11
U2	3	#4	3	5'-6"	11
V2	20	#11	1	12'-0"	1,275

REINFORCING STEEL (BENT 2 STAGE 1) 7,142 LBS.

SP-6	1	✳	4	404'-11"	422
SP-7	1	✳	4	399'-10"	417
SP-8	2	✳✳	5	237'-2"	317

SPIRAL COLUMN REINFORCING STEEL (BENT 2 STAGE 1) 1,156 LBS.

✳ THE SP-6 & SP-7 SPIRAL REINFORCING STEEL SHALL BE W31 OR D-31 COLD DRAWN WIRE OR #5 PLAIN OR DEFORMED BAR

✳✳ THE SP-8 SPIRAL REINFORCING STEEL SHALL BE W20 OR D-20 COLD DRAWN WIRE OR #4 PLAIN OR DEFORMED BAR

CLASS A CONCRETE BREAKDOWN (BENT 2 STAGE 1)

POUR #2 (COLUMNS)	3.0 C.Y.
POUR #3 (CAP)	9.0 C.Y.
TOTAL CLASS A CONCRETE	12.0 C.Y.

DRILLED PIERS: (BENT 2 STAGE 1)

DRILLED PIER CONCRETE	
POUR #1 (DRILLED PIERS)	13.2 C.Y.

BILL OF MATERIAL — BENT 2 (STAGE 2)

BAR	NO.	SIZE	TYPE	LENGTH	WEIGHT
B3	10	#11	1	21'-0"	1,116
B4	6	#5	STR	19'-5"	122
D1	24	#6	STR	1'-6"	54
M2	10	#11	STR	35'-5"	1,882
S1	36	#5	2	9'-0"	338
U1	3	#4	3	5'-8"	11
U2	3	#4	3	5'-6"	11
V2	10	#11	1	12'-0"	638

REINFORCING STEEL (BENT 2 STAGE 2) 4,172 LBS.

SP-5	1	✳	4	410'-0"	428
SP-8	1	✳✳	5	237'-2"	158

SPIRAL COLUMN REINFORCING STEEL (BENT 2 STAGE 2) 586 LBS.

✳ THE SP-5 SPIRAL REINFORCING STEEL SHALL BE W31 OR D-31 COLD DRAWN WIRE OR #5 PLAIN OR DEFORMED BAR

✳✳ THE SP-8 SPIRAL REINFORCING STEEL SHALL BE W20 OR D-20 COLD DRAWN WIRE OR #4 PLAIN OR DEFORMED BAR

CLASS A CONCRETE BREAKDOWN (BENT 2 STAGE 2)

POUR #2 (COLUMNS)	1.5 C.Y.
POUR #3 (CAP)	7.3 C.Y.
TOTAL CLASS A CONCRETE	8.8 C.Y.

DRILLED PIERS: (BENT 2 STAGE 2)

DRILLED PIER CONCRETE	
POUR #1 (DRILLED PIERS)	6.7 C.Y.

DocuSigned by: Jason Griscom
6/21/2023
NORTH CAROLINA PROFESSIONAL SEAL 029429 ENGINEER JASON T. GRISCOM

STV Engineers, Inc.
900 West Trade St., Suite 715
Charlotte, NC 28202
NC License Number F-0991

DOCUMENT NOT CONSIDERED FINAL UNLESS ALL SIGNATURES COMPLETED

PROJECT NO. BP11.R003.1

ASHE COUNTY

STATION: 16+85.00 -L-

SHEET 3 OF 3

STATE OF NORTH CAROLINA
DEPARTMENT OF TRANSPORTATION
RALEIGH

SUBSTRUCTURE

BENT No. 1 & 2

REVISIONS					
NO.	BY:	DATE:	NO.	BY:	DATE:
1			3		
2			4		

SHEET NO. S-25

TOTAL SHEETS 29

DRAWN BY : SGH DATE : 9-22
CHECKED BY : JAD DATE : 9-22
DESIGN ENGINEER OF RECORD : J. GRISCOM DATE : 6-23

HensleSG 6/20/2023 2:27:54 PM R:\Structures\ustation\Sealed Bridge Plans\40I_049_BP11_R003.1_SMU_BT3_025_40063.dgn

DocuSign Envelope ID: 0908AB87-C088-4523-BEAB-A55EC9F5191D

ESTIMATED QUANTITIES

BRIDGE @ STA. 16+85.00 -L-		RIP RAP CLASS II (2'-0" THICK)	GEOTEXTILE FOR DRAINAGE
		TONS	SQUARE YARDS
STAGE 1	END BENT 1	145	160
	END BENT 2	130	140
STAGE 2	END BENT 1	90	100
	END BENT 2	100	110

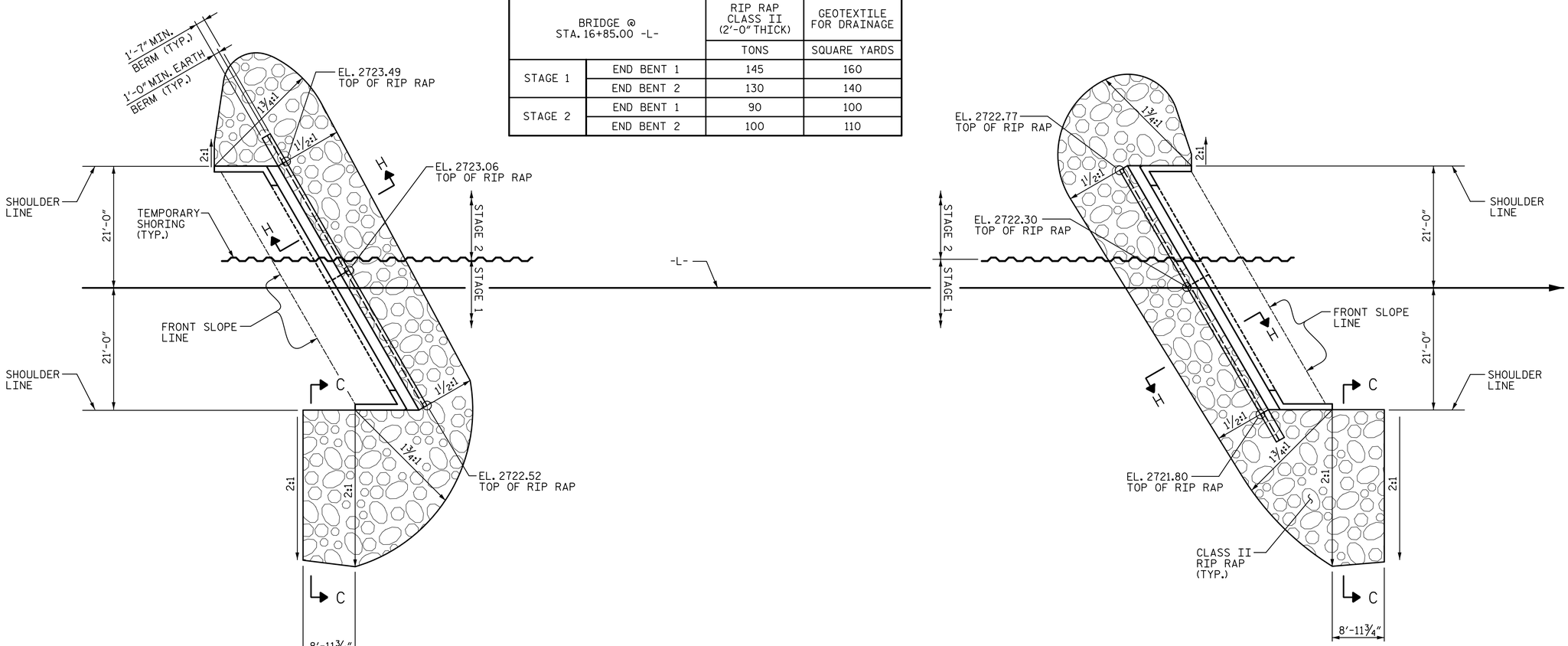

PLAN

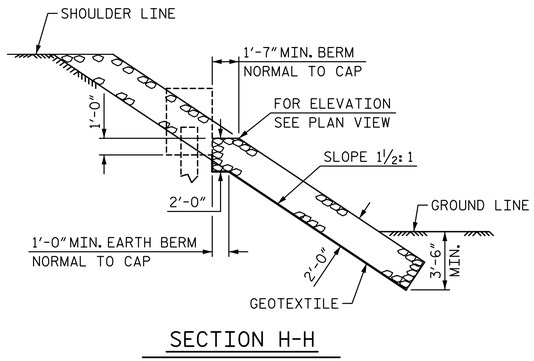

SECTION H-H

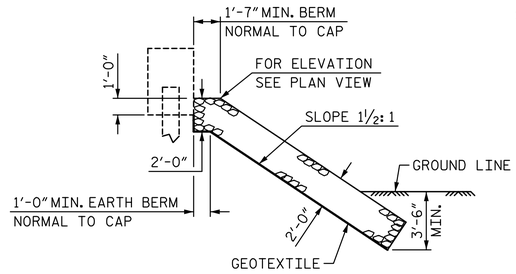

℄ SECTION

BERM RIP RAPPED

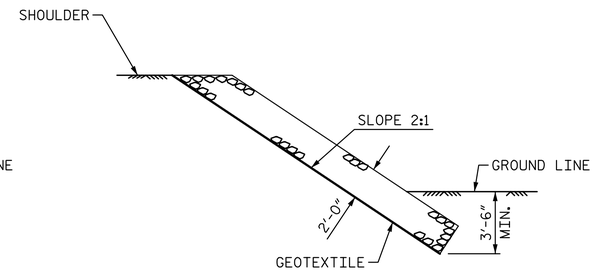

SECTION C-C

DocuSigned by: Jason Griscom
E4AC1F1E1F1E4D2...

NORTH CAROLINA PROFESSIONAL SEAL 029429 ENGINEER JASON T. GRISCOM

6/21/2023

STV Engineers, Inc.
900 West Trade St., Suite 715
Charlotte, NC 28202
NC License Number F-0991

DOCUMENT NOT CONSIDERED FINAL UNLESS ALL SIGNATURES COMPLETED

PROJECT NO. BP11.R003.1

ASHE COUNTY

STATION: 16+85.00 -L-

STATE OF NORTH CAROLINA
DEPARTMENT OF TRANSPORTATION
RALEIGH

RIP RAP DETAILS

REVISIONS						SHEET NO.
NO.	BY:	DATE:	NO.	BY:	DATE:	S-26
1			3			TOTAL SHEETS
2			4			29

DRAWN BY :	SGH	DATE : 9-22
CHECKED BY :	JAD	DATE : 9-22
DESIGN ENGINEER OF RECORD :	J. GRISCOM	DATE : 6-23

HensleSG 6/20/2023 2:28:15 PM R:\Structures\ustation\Sealed Bridge Plans\40I_05I_BPII.R003.I_SMU_RR_026_40063.dgn

DocuSign Envelope ID: 0908AB87-C088-4523-BEAB-A55EC9F5191D

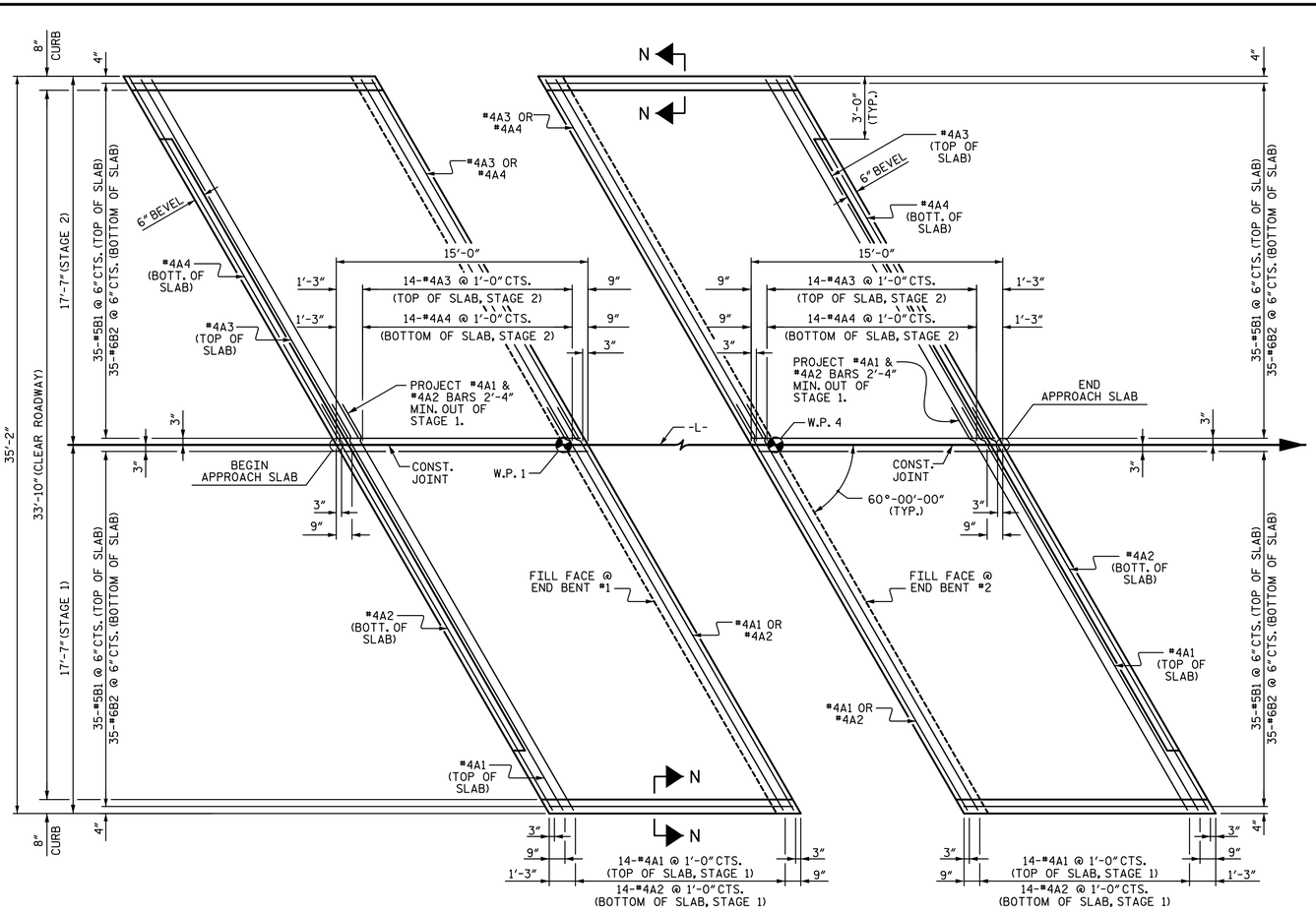

PLAN @ END BENT #1

PLAN @ END BENT #2

DIMENSIONS SHOWN ARE TYPICAL FOR BOTH APPROACH SLABS.
TEMPORARY GUARDRAIL TO BE ANCHORED IN STAGE 1
NOT SHOWN FOR CLARITY, SEE DETAILS ON SHEET 2 OF 2

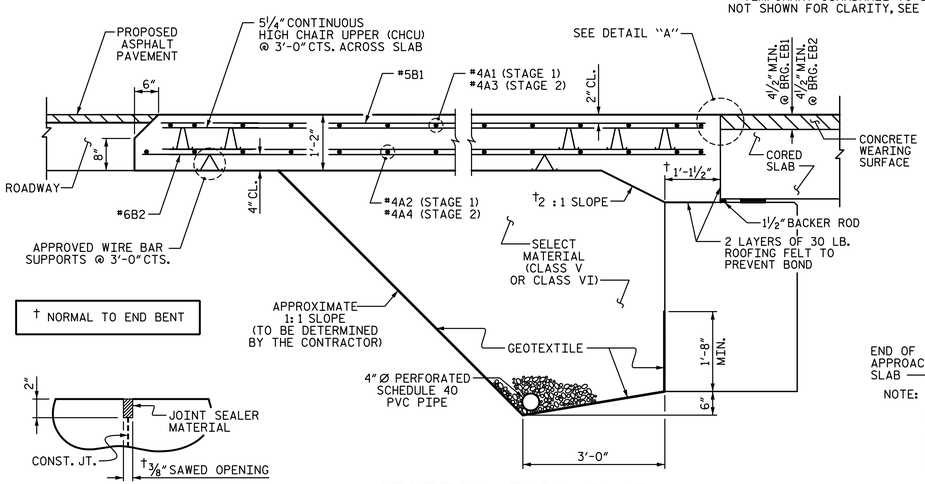

DETAIL "A"

SECTION THRU SLAB

(TYPE II - MODIFIED APPROACH FILL)

NOTES

FOR BRIDGE APPROACH FILL INCLUDING GEOTEXTILE, 4" Ø DRAINAGE PIPE, AND SELECT MATERIAL BACKFILL, SEE ROADWAY PLANS.

GEOTEXTILE SHALL BE TYPE 1 IN ACCORDANCE WITH THE STANDARD SPECIFICATIONS SECTION 1056.

SELECT MATERIAL BACKFILL (CLASS V OR CLASS VI) SHALL BE IN ACCORDANCE WITH STANDARD SPECIFICATIONS SECTION 1016.

SELECT MATERIAL BACKFILL IS TO BE CONTINUOUS ALONG FILL FACE OF BACKWALL FROM OUTSIDE EDGE TO OUTSIDE EDGE OF APPROACH SLAB.

FOR THE 4" Ø DRAINAGE PIPE OUTLET(S), SEE ROADWAY STANDARD DRAWINGS.

AREA BETWEEN THE WINGWALL AND APPROACH SLAB SHALL BE GRADED TO DRAIN THE WATER AWAY FROM THE FILL FACE OF THE BRIDGE AND SHALL BE PAVED. SEE ROADWAY PLANS.

APPROACH SLAB SHALL BE POURED AFTER CONCRETE WEARING SURFACE ON BRIDGE IS POURED.

THE JOINT OPENING AT THE APPROACH SLAB/DECK INTERFACE SHALL BE SAWED NO MORE THAN 12 HOURS AFTER THE APPROACH SLAB IS CAST. THE JOINT SHALL

A 2" DEEP CONTRACTION JOINT AT EACH END BENT SHALL BE SAWED NO MORE THAN 12 HOURS AFTER THE APPROACH SLAB IS CAST. THE JOINT SHALL BE CLEANED OF ALL DEBRIS BEFORE THE SEALANT IS APPLIED. THE JOINT SEALER MATERIAL SHALL CONFORM TO THE REQUIREMENTS OF SECTION 1028-3 OF THE STANDARD SPECIFICATIONS.

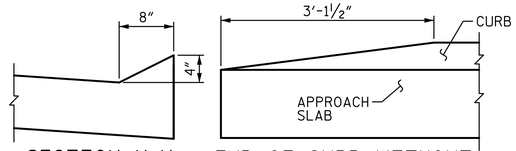

SECTION N-N

END OF CURB WITHOUT SHOULDER BERM GUTTER

CURB DETAILS

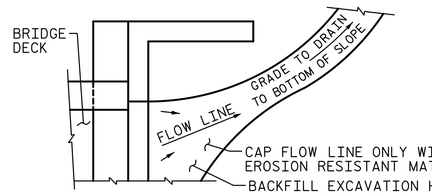

NOTE: IF THE APPROACH SLAB IS NOT CONSTRUCTED IMMEDIATELY AFTER THE BACKFILLING OF THE END BENT EXCAVATION, GRADE TO DRAIN TO THE BOTTOM OF THE SLOPE AND PROVIDE EROSION RESISTANT MATERIAL, SUCH AS FIBERGLASS ROVING OR AS DIRECTED BY THE ENGINEER TO PREVENT SOIL EROSION AND TO PROTECT THE AREA ADJACENT TO THE STRUCTURE. THE CONTRACTOR WILL BE REQUIRED TO REMOVE THESE MATERIALS PRIOR TO CONSTRUCTION OF THE APPROACH SLAB.

TEMPORARY DRAINAGE DETAIL

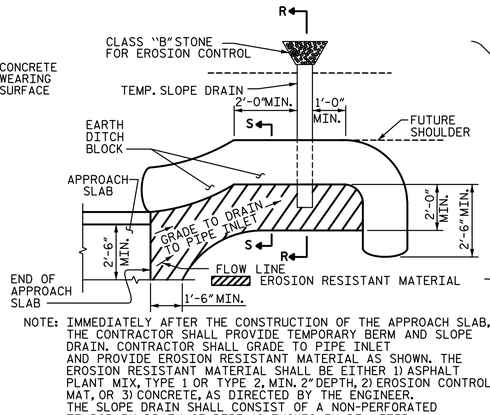

NOTE: IMMEDIATELY AFTER THE CONSTRUCTION OF THE APPROACH SLAB, THE CONTRACTOR SHALL PROVIDE TEMPORARY BERM AND SLOPE DRAIN. CONTRACTOR SHALL GRADE TO PIPE INLET AND PROVIDE EROSION RESISTANT MATERIAL AS SHOWN. THE EROSION RESISTANT MATERIAL SHALL BE EITHER 1) ASPHALT PLANT MIX, TYPE 1 OR TYPE 2, MIN. 2" DEPTH, 2) EROSION CONTROL MAT, OR 3) CONCRETE, AS DIRECTED BY THE ENGINEER. THE SLOPE DRAIN SHALL CONSIST OF A NON-PERFORATED TEMPORARY DRAINAGE PIPE, 12 INCHES IN DIAMETER.

PLAN VIEW

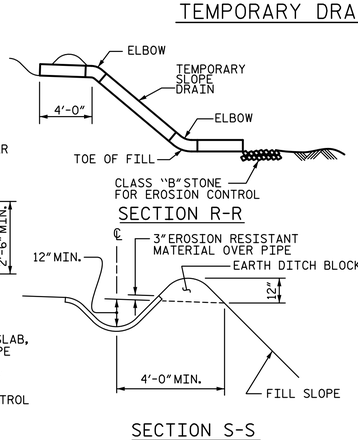

SECTION S-S

TEMPORARY BERM AND SLOPE DRAIN DETAILS

(TO BE USED WHEN SHOULDER BERM GUTTER IS REQUIRED)

SPLICE LENGTHS		
BAR SIZE	EPOXY COATED	UNCOATED
#4	1'-11"	1'-7"
#5	2'-5"	2'-0"
#6	3'-7"	2'-5"

BILL OF MATERIAL

APPROACH SLAB AT EB 1 (STAGE 1)

BAR	NO.	SIZE	TYPE	LENGTH	WEIGHT
✳ A1	16	#4	STR	22'-6"	240
A2	16	#4	STR	22'-6"	240
✳ B1	35	#5	STR	14'-1"	514
B2	35	#6	STR	14'-7"	767
REINFORCING STEEL				LBS.	1,007
✳ EPOXY COATED REINFORCING STEEL				LBS.	754
CLASS AA CONCRETE				C.Y.	14.0

APPROACH SLAB AT EB 1 (STAGE 2)

BAR	NO.	SIZE	TYPE	LENGTH	WEIGHT
✳ A3	16	#4	STR	19'-9"	211
A4	16	#4	STR	19'-5"	208
✳ B1	35	#5	STR	14'-1"	514
B2	35	#6	STR	14'-7"	767
REINFORCING STEEL				LBS.	975
✳ EPOXY COATED REINFORCING STEEL				LBS.	725
CLASS AA CONCRETE				C.Y.	14.0

APPROACH SLAB AT EB 2 (STAGE 1)

BAR	NO.	SIZE	TYPE	LENGTH	WEIGHT
✳ A1	16	#4	STR	22'-6"	240
A2	16	#4	STR	22'-6"	240
✳ B1	35	#5	STR	14'-1"	514
B2	35	#6	STR	14'-7"	767
REINFORCING STEEL				LBS.	1,007
✳ EPOXY COATED REINFORCING STEEL				LBS.	754
CLASS AA CONCRETE				C.Y.	14.0

APPROACH SLAB AT EB 2 (STAGE 2)

BAR	NO.	SIZE	TYPE	LENGTH	WEIGHT
✳ A3	16	#4	STR	19'-9"	211
A4	16	#4	STR	19'-5"	208
✳ B1	35	#5	STR	14'-1"	514
B2	35	#6	STR	14'-7"	767
REINFORCING STEEL				LBS.	975
✳ EPOXY COATED REINFORCING STEEL				LBS.	725
CLASS AA CONCRETE				C.Y.	14.0

PROJECT NO. BP11.R003.1

ASHE COUNTY

STATION: 16+85.00 -L-

SHEET 1 OF 2

DocuSigned by: Jason Griscom
E4ACDE1E1E1F4DA...

NORTH CAROLINA PROFESSIONAL SEAL 029429 ENGINEER JASON T. GRISCOM

6/21/2023

STV Engineers, Inc.
900 West Trade St., Suite 715
Charlotte, NC 28202
NC License Number F-0991

DOCUMENT NOT CONSIDERED FINAL UNLESS ALL SIGNATURES COMPLETED

STATE OF NORTH CAROLINA
DEPARTMENT OF TRANSPORTATION
RALEIGH

BRIDGE APPROACH SLAB FOR PRESTRESSED CONCRETE CORED SLAB UNIT (SUB-REGIONAL TIER) 60° SKEW

REVISIONS						SHEET NO.
NO.	BY:	DATE:	NO.	BY:	DATE:	S-27
1			3			TOTAL SHEETS
2			4			29

DRAWN BY : SGH DATE : 9-22
CHECKED BY : JAD DATE : 9-22
DESIGN ENGINEER OF RECORD : J. GRISCOM DATE : 6-23

HenseSG 6/20/2023 2:28:39 PM R:\Structures\sustain\Sealed Bridge Plans\40I_053_BP11.R003.1_SMU_ASL027_40063.dgn

DocuSign Envelope ID: 0908AB87-C088-4523-BEAB-A55EC9F5191D

ANCHOR ASSEMBLY NOTES

THE TEMPORARY GUARDRAIL ASSEMBLY SHALL CONSIST OF THE FOLLOWING COMPONENTS:

A. FERRULES SHALL BE MADE FROM STEEL MEETING THE REQUIREMENTS OF AASHTO M169, GRADE 12L14 AND SHALL HAVE A MINIMUM LENGTH OF THREADS OF 2½".

B. 4 - 1"Ø x 3" ANCHOR BOLTS WITH WASHERS. BOLTS SHALL CONFORM TO THE REQUIREMENTS OF ASTM A307. BOLTS AND WASHERS SHALL BE GALVANIZED. (AT THE CONTRACTOR'S OPTION, STAINLESS STEEL BOLTS AND WASHERS MAY BE USED AS AN ALTERNATE FOR THE 1"Ø x 3" GALVANIZED BOLTS AND WASHERS. THEY SHALL CONFORM TO OR EXCEED THE MECHANICAL REQUIREMENTS OF ASTM A307. THE USE OF THIS ALTERNATE SHALL BE APPROVED BY THE ENGINEER.)

C. WIRE STRUTS SHOWN IN THE ANCHOR ASSEMBLY DETAIL ARE MINIMUM ALLOWABLE SIZE AND SHALL HAVE A MINIMUM TENSILE STRENGTH OF 100,000 P.S.I.

ANCHOR ASSEMBLY WITH BOLTS SHALL BE ASSEMBLED IN THE SHOP. BOLT THREADS MAY BE RECUT AS NECESSARY TO ENSURE FIT.

THE COST OF THE ANCHOR ASSEMBLY, COMPLETE IN PLACE, SHALL BE INCLUDED, AS APPLICABLE, IN THE UNIT CONTRACT PRICE BID FOR 3'-0" x 2'-0" PRESTRESSED CONCRETE CORED SLAB OR LUMP SUM FOR THE APPROACH SLABS.

FERRULES TO BE PLUGGED DURING CASTING OF THE CORED SLAB UNITS OR POURING OF APPROACH SLABS AS RECOMMENDED BY THE MANUFACTURER.

AT THE CONTRACTOR'S OPTION, FERRULES WITH OPEN OR CLOSED ENDS MAY BE USED.

PAYMENT FOR THE TEMPORARY GUARDRAIL, POST AND POST BASE PLATES IS INCLUDED IN THE TRAFFIC CONTROL PLANS.

ONCE THE TEMPORARY GUARDRAIL HAS BEEN REMOVED, COMPLETELY FILL ANCHOR ASSEMBLY HOLES WITH AN NCDOT APPROVED, NON-SHRINK, NON-METALLIC GROUT, OR AS DIRECTED BY THE ENGINEER.

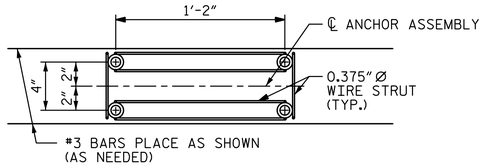

PLAN

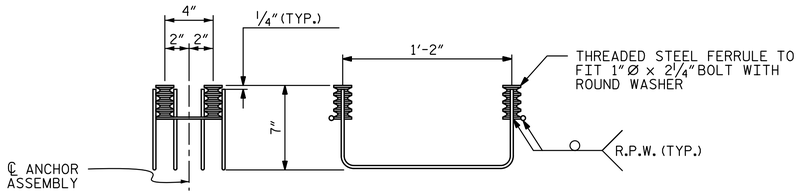

SIDE VIEW ELEVATION

TEMPORARY GUARDRAIL ANCHOR ASSEMBLY

(3 ASSEMBLIES REQUIRED IN BEGIN APPROACH SLAB)
(2 ASSEMBLIES REQUIRED IN END APPROACH SLAB)

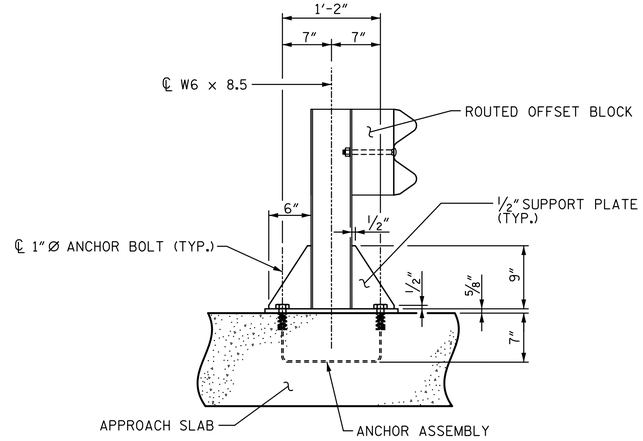

SECTION B-B

(SHOWING PLACEMENT OF ANCHOR ASSEMBLIES)
(APPROACH SLAB REINFORCEMENT NOT SHOWN FOR CLARITY)

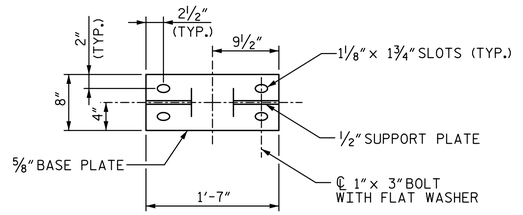

PLAN VIEW

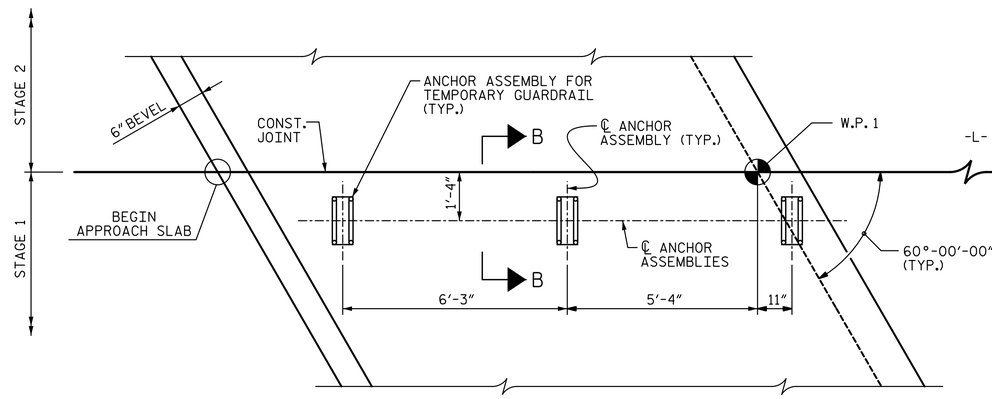

PLAN OF BEGIN APPROACH SLAB

(SHOWING LOCATION OF ANCHOR ASSEMBLIES)
(3 ASSEMBLIES REQUIRED)

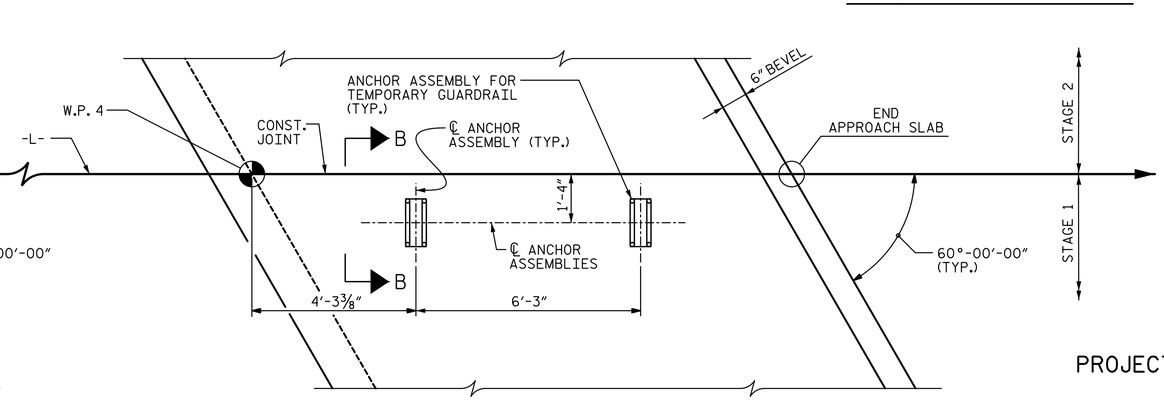

PLAN OF END APPROACH SLAB

(SHOWING LOCATION OF ANCHOR ASSEMBLIES)
(2 ASSEMBLIES REQUIRED)

DocuSigned by: Jason Griscom
E4ACDDE1E1E84DB...

NORTH CAROLINA PROFESSIONAL SEAL 029429 ENGINEER JASON T. GRISCOM

6/21/2023

stv STV Engineers, Inc.
900 West Trade St., Suite 715
Charlotte, NC 28202
NC License Number F-0991

DOCUMENT NOT CONSIDERED FINAL UNLESS ALL SIGNATURES COMPLETED

PROJECT NO. BP11.R003.1
ASHE COUNTY
STATION: 16+85.00 -L-

SHEET 2 OF 2

STATE OF NORTH CAROLINA
DEPARTMENT OF TRANSPORTATION
RALEIGH

APPROACH SLAB DETAILS

REVISIONS						SHEET NO.
NO.	BY:	DATE:	NO.	BY:	DATE:	S-28
1			3			TOTAL SHEETS
2			4			29

DRAWN BY : SGH DATE : 9-22
CHECKED BY : JAD DATE : 9-22
DESIGN ENGINEER OF RECORD : J. GRISCOM DATE : 6-23

HensleSG 6/20/2023 2:29:04 PM R:\Structures\Ustation\Sealed Bridge Plans\40L055_BP11R003_L_SMU_AS2_028_40063.dgn

DocuSign Envelope ID: 0908AB87-C088-4523-BEAB-A55EC9F5191D

STANDARD NOTES

DESIGN DATA:

SPECIFICATIONS	A.A.S.H.T.O. (CURRENT)
LIVE LOAD	SEE PLANS
IMPACT ALLOWANCE	SEE A.A.S.H.T.O.
STRESS IN EXTREME FIBER OF STRUCTURAL STEEL - AASHTO M270 GRADE 36	20,000 LBS. PER SQ. IN.
- AASHTO M270 GRADE 50W	27,000 LBS. PER SQ. IN.
- AASHTO M270 GRADE 50	27,000 LBS. PER SQ. IN.
REINFORCING STEEL IN TENSION - GRADE 60	24,000 LBS. PER SQ. IN.
CONCRETE IN COMPRESSION	1,200 LBS. PER SQ. IN.
CONCRETE IN SHEAR	SEE A.A.S.H.T.O.
STRUCTURAL TIMBER - TREATED OR UNTREATED EXTREME FIBER STRESS	1,800 LBS. PER SQ. IN.
COMPRESSION PERPENDICULAR TO GRAIN OF TIMBER	375 LBS. PER SQ. IN.
EQUIVALENT FLUID PRESSURE OF EARTH	30 LBS. PER CU. FT. (MINIMUM)

MATERIAL AND WORKMANSHIP:

EXCEPT AS MAY OTHERWISE BE SPECIFIED ON PLANS OR IN THE SPECIAL PROVISIONS, ALL MATERIAL AND WORKMANSHIP SHALL BE IN ACCORDANCE WITH THE 2018 "STANDARD SPECIFICATIONS FOR ROADS AND STRUCTURES" OF THE N. C. DEPARTMENT OF TRANSPORTATION.

STEEL SHEET PILING FOR PERMANENT OR TEMPORARY APPLICATIONS SHALL BE HOT ROLLED.

CONCRETE:

UNLESS OTHERWISE REQUIRED ON PLANS, CLASS A CONCRETE SHALL BE USED FOR ALL PORTIONS OF ALL STRUCTURES WITH THE EXCEPTION THAT: CLASS AA CONCRETE SHALL BE USED IN BRIDGE SUPERSTRUCTURES, ABUTMENT BACKWALLS, AND APPROACH SLABS; AND CLASS B CONCRETE SHALL BE USED FOR SLOPE PROTECTION AND RIP RAP.

CONCRETE CHAMFERS:

UNLESS OTHERWISE NOTED ON THE PLANS, ALL EXPOSED CORNERS ON STRUCTURES SHALL BE CHAMFERED ¾" WITH THE FOLLOWING EXCEPTIONS: TOP CORNERS OF CURBS MAY BE ROUNDED TO 1½" RADIUS WHICH IS BUILT INTO CURB FORMS; CORNERS OF TRANSVERSE FLOOR EXPANSION JOINTS SHALL BE ROUNDED WITH A ¼" FINISHING TOOL UNLESS OTHERWISE REQUIRED ON PLANS; AND CORNERS OF EXPANSION JOINTS IN THE ROADWAY FACES AND TOPS OF CURBS AND SIDEWALKS SHALL BE ROUNDED TO A ¼" RADIUS WITH A FINISHING STONE OR TOOL UNLESS OTHERWISE REQUIRED ON PLANS.

DOWELS:

DOWELS WHEN INDICATED ON PLANS AS FOR CULVERT EXTENSIONS, SHALL BE EMBEDDED AT LEAST 12" INTO THE OLD CONCRETE AND GROUTED INTO PLACE WITH 1:2 CEMENT MORTAR.

ALLOWANCE FOR DEAD LOAD DEFLECTION, SETTLEMENT, ETC. IN CASTING SUPERSTRUCTURES:

BRIDGES SHALL BE BUILT ON THE GRADE OR VERTICAL CURVE SHOWN ON PLANS. SLABS, CURBS AND PARAPETS SHALL CONFORM TO THE GRADE OR CURVE.

ALL DIMENSIONS WHICH ARE GIVEN IN SECTION AND ARE AFFECTED BY DEAD LOAD DEFLECTIONS ARE DIMENSIONS AT CENTER LINE OF BEARING UNLESS OTHERWISE NOTED ON PLANS. IN SETTING FORMS FOR STEEL BEAM BRIDGES AND PRESTRESSED CONCRETE GIRDER BRIDGES, ADJUSTMENTS SHALL BE MADE DUE TO THE DEAD LOAD DEFLECTIONS FOR THE ELEVATIONS SHOWN. WHERE BLOCKS ARE SHOWN OVER BEAMS FOR BUILDING UP TO THE SLAB, THE VERTICAL DIMENSIONS OF THE BLOCKS SHALL BE ADJUSTED BETWEEN BEARINGS TO COMPENSATE FOR DEAD LOAD DEFLECTIONS, VERTICAL CURVE ORDINATE, AND ACTUAL BEAM CAMBER. WHERE BOTTOM OF SLAB IS IN LINE WITH BOTTOM OF TOP FLANGES, DEPTH OF SLAB BETWEEN BEARINGS SHALL BE ADJUSTED TO COMPENSATE FOR DEAD LOAD DEFLECTION, VERTICAL CURVE ORDINATE, AND ACTUAL BEAM CAMBER.

IN SETTING FALSEWORK AND FORMS FOR REINFORCED CONCRETE SPANS, AN ALLOWANCE SHALL BE MADE FOR DEAD LOAD DEFLECTIONS, SETTLEMENT OF FALSEWORK, AND PERMANENT CAMBER WHICH SHALL BE PROVIDED FOR IN ADDITION TO THE ELEVATIONS SHOWN. AFTER REMOVAL OF THE FALSEWORK, THE FINISHED STRUCTURES SHALL CONFORM TO THE PROFILE AND ELEVATIONS SHOWN ON THE PLANS AND CONSTRUCTION ELEVATIONS FURNISHED BY THE ENGINEER.

DETAILED DRAWINGS FOR FALSEWORK OR FORMS FOR BRIDGE SUPERSTRUCTURE AND ANY STRUCTURE OR PARTS OF A STRUCTURE AS NOTED ON THE PLANS SHALL BE SUBMITTED TO THE ENGINEER FOR APPROVAL BEFORE CONSTRUCTION OF THE FALSEWORK OR FORMS IS STARTED.

REINFORCING STEEL:

ALL REINFORCING STEEL SHALL BE DEFORMED. DIMENSIONS RELATIVE TO PLACEMENT OF REINFORCING ARE TO CENTERS OF BARS UNLESS OTHERWISE INDICATED IN THE PLANS. DIMENSIONS ON BAR DETAILS ARE TO CENTERS OF BARS OR ARE OUT TO OUT AS INDICATED ON PLANS.

WIRE BAR SUPPORTS SHALL BE PROVIDED FOR REINFORCING STEEL WHERE INDICATED ON THE PLANS. WHEN BAR SUPPORT PIECES ARE PLACED IN CONTINUOUS LINES, THEY SHALL BE SO PLACED THAT THE ENDS OF THE SUPPORTING WIRES SHALL BE LAPPED TO LOCK LEGS ON ADJOINING PIECES.

STRUCTURAL STEEL:

AT THE CONTRACTOR'S OPTION, HE MAY SUBSTITUTE ⅞" Ø SHEAR STUDS FOR THE ¾" Ø STUDS SPECIFIED ON THE PLANS. THIS SUBSTITUTION SHALL BE MADE AT THE RATE OF 3 - ⅞" Ø STUDS FOR 4 - ¾" Ø STUDS, AND STUD SPACING CHANGES SHALL BE MADE AS NECESSARY TO PROVIDE THE SAME EQUIVALENT NUMBER OF ⅞" Ø STUDS ALONG THE BEAM AS SHOWN FOR ¾" Ø STUDS BASED ON THE RATIO OF 3 - ⅞" Ø STUDS FOR 4 - ¾" Ø STUDS. STUDS OF THE LENGTH SPECIFIED ON THE PLANS MUST BE PROVIDED. THE MAXIMUM SPACING SHALL BE 2'-0".

EXCEPT AT THE INTERIOR SUPPORTS OF CONTINUOUS BEAMS WHERE THE COVER PLATE IS IN CONTACT WITH BEARING PLATE, THE CONTRACTOR MAY, AT HIS OPTION, SUBSTITUTE FOR THE COVER PLATES DESIGNATED ON THE PLANS COVER PLATES OF THE EQUIVALENT AREA PROVIDED THESE PLATES ARE AT LEAST 5/16" IN THICKNESS AND DO NOT EXCEED A WIDTH EQUAL TO THE FLANGE WIDTH LESS 2" OR A THICKNESS EQUAL TO 2 TIMES THE FLANGE THICKNESS. THE SIZE OF FILLET WELDS SHALL CONFORM TO THE REQUIREMENTS OF THE CURRENT ANSI/AASHTO/AWS "BRIDGE WELDING CODE". ELECTROSLAG WELDING WILL NOT BE PERMITTED.

WITH THE SOLE EXCEPTION OF EDGES AT SURFACES WHICH BEAR ON OTHER SURFACES, ALL SHARP EDGES AND ENDS OF SHAPES AND PLATES SHALL BE SLIGHTLY ROUNDED BY SUITABLE MEANS TO A RADIUS OF APPROXIMATELY 1/16 INCH OR EQUIVALENT FLAT SURFACE AT A SUITABLE ANGLE PRIOR TO PAINTING, GALVANIZING, OR METALLIZING.

HANDRAILS AND POSTS:

METAL STANDARDS AND FACES OF THE CONCRETE END POSTS FOR THE METAL RAIL SHALL BE SET NORMAL TO THE GRADE OF THE CURB, UNLESS OTHERWISE SHOWN ON PLANS. THE METAL RAIL AND TOPS OF CONCRETE POSTS USED WITH THE ALUMINUM RAIL SHALL BE BUILT PARALLEL TO THE GRADE OF THE CURB.

METAL HANDRAILS SHALL BE IN ACCORDANCE WITH THE PLANS. RAILS SHALL BE AS MANUFACTURED FOR BRIDGE RAILING. CASTINGS SHALL BE OF A UNIFORM APPEARANCE. FINS AND OTHER DEFORMATIONS RESULTING FROM CASTING OR OTHERWISE SHALL BE REMOVED IN A MANNER SO THAT A UNIFORM COLORING OF THE COMPLETED CASTING SHALL BE OBTAINED. CASTINGS WITH DISCOLORATIONS OR OF NON-UNIFORM COLORING WILL NOT BE ACCEPTED. CERTIFIED MILL REPORTS ARE REQUIRED FOR METAL RAILS AND POSTS.

SPECIAL NOTES:

GENERALLY, IN CASE OF DISCREPANCY, THIS STANDARD SHEET OF NOTES SHALL GOVERN OVER THE SPECIFICATIONS, BUT THE REMAINDER OF THE PLANS SHALL GOVERN OVER NOTES HEREON, AND SPECIAL PROVISIONS SHALL GOVERN OVER ALL. SEE SPECIFICATIONS ARTICLE 105-4.

ENGLISH

JANUARY, 1990