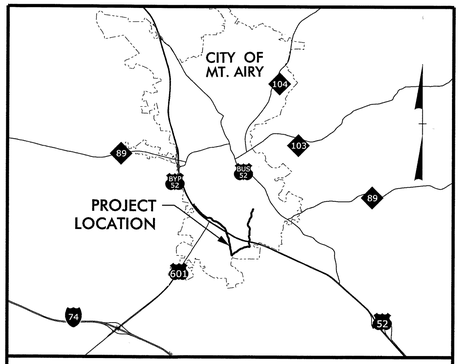

CITY OF MOUNT AIRY
NORTH CAROLINA

LOVILLS CREEK AND ARARAT RIVER GREENWAY

LOCATION:
FROM WORTH STREET TO THARINGTON PARK

NCDOT TIP:EB-5014
WBS: 45522.3.1
FA# STPEB-1117(15)

TYPE OF WORK:
GRADING, PAVING, STRUCTURE, DRAINAGE, & EROSION CONTROL

PERMITS REQUIRED:
NCDENR (DWQ & DLR permit)
USACOE (404 Permit)

INDEX OF SHEETS

1	TITLE
1A	PLAN SHEET SYMBOLS
1B	GENERAL NOTES
2-2A	TYPICAL SECTIONS
2B-2F	DETAILS
3-3A	SUMMARIES
4-13	PLAN & PROFILE SHEETS
EC-1 TO EC-13	EROSION CONTROL PLAN
SIG-01 TO SIG-02	TRAFFIC SIGNAL PLANS
TMP-1 TO TMP-2	TRANSPORTATION MANAGEMENT PLAN
S-1 TO SB-7	STRUCTURES PLANS
X-1 - X-18	CROSS SECTIONS

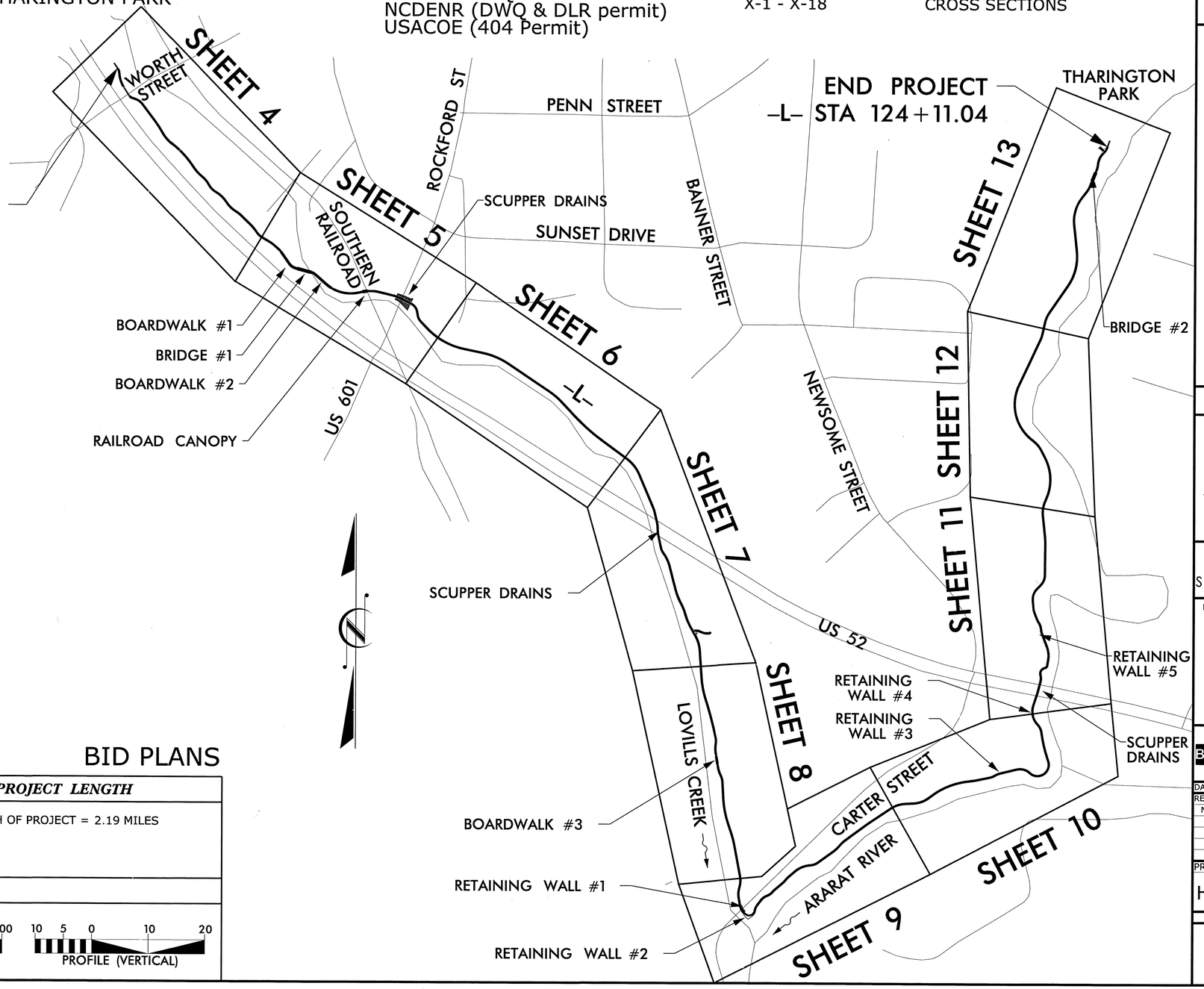

BID PLANS

DESIGN DATA	*PROJECT LENGTH*
DESIGN SPEED = 20 MPH LEAN ANGLE = 15 DEGRESS FUNC. CLASSIFICATION = GREENWAY	LENGTH OF PROJECT = 2.19 MILES

GRAPHIC SCALES

50 25 0 50 100 PLANS
50 25 0 50 100 PROFILE (HORIZONTAL)
10 5 0 10 20 PROFILE (VERTICAL)

LOVILLS CREEK AND ARARAT RIVER GREENWAY
WORTH STREET TO THARINGTON PARK

GREENWAY ENGINEER
NORTH CAROLINA PROFESSIONAL SEAL 20615 ENGINEER MATTHEW C. LUNN
11/12/14

STEWART
Firm License No. C-1551
421 Fayetteville St.
Suite 400
Raleigh, NC 27601
T 919.380.8750
www.stewartinc.com

HYDRAULICS ENGINEER
NORTH CAROLINA PROFESSIONAL SEAL 035700 ENGINEER KEVIN P. HIGGINS
11/13/14

Baker
Michael Baker Engineering Inc.
8000 Regency Parkway, Suite 600
Cary, North Carolina 27518
Phone: 919.463.5488
Fax: 919.463.5490
License # C-1588

DATE: NOVEMBER 12, 2014

REVISIONS:

NO.	DATE

PROJECT NO.:
H13007.00

1

Note: Not to Scale

****S.U.E. = Subsurface Utility Engineering***

STATE OF NORTH CAROLINA
DIVISION OF HIGHWAYS

CONVENTIONAL PLAN SHEET SYMBOLS

BOUNDARIES AND PROPERTY:

- State Line
- County Line
- Township Line
- City Line
- Reservation Line
- Property Line
- Existing Iron Pin — EIP
- Property Corner
- Property Monument — ECM
- Parcel/Sequence Number — 123
- Existing Fence Line
- Proposed Woven Wire Fence
- Proposed Chain Link Fence
- Proposed Barbed Wire Fence
- Existing Wetland Boundary — WLB
- Proposed Wetland Boundary — WLB
- Existing Endangered Animal Boundary — EAB
- Existing Endangered Plant Boundary — EPB
- Known Soil Contamination: Area or Site
- Potential Soil Contamination: Area or Site

BUILDINGS AND OTHER CULTURE:

- Gas Pump Vent or U/G Tank Cap
- Sign — S
- Well — W
- Small Mine
- Foundation
- Area Outline
- Cemetery
- Building
- School
- Church
- Dam

HYDROLOGY:

- Stream or Body of Water
- Hydro, Pool or Reservoir
- Jurisdictional Stream — JS
- Buffer Zone 1 — BZ 1
- Buffer Zone 2 — BZ 2
- Flow Arrow
- Disappearing Stream
- Spring
- Wetland
- Proposed Lateral, Tail, Head Ditch — FLOW
- False Sump

RAILROADS:

- Standard Gauge — CSX TRANSPORTATION
- RR Signal Milepost — MILEPOST 35
- Switch — SWITCH
- RR Abandoned
- RR Dismantled

RIGHT OF WAY:

- Baseline Control Point
- Existing Right of Way Marker
- Existing Right of Way Line
- Proposed Right of Way Line — RW
- Proposed Right of Way Line with Iron Pin and Cap Marker — RW
- Proposed Right of Way Line with Concrete or Granite R/W Marker — RW
- Proposed Control of Access Line with Concrete C/A Marker — CA
- Existing Control of Access — CA
- Proposed Control of Access — CA
- Existing Easement Line — E
- Proposed Temporary Construction Easement — E
- Proposed Temporary Drainage Easement — TDE
- Proposed Permanent Drainage Easement — PDE
- Proposed Permanent Drainage / Utility Easement — DUE
- Proposed Permanent Utility Easement — PUE
- Proposed Temporary Utility Easement — TUE
- Proposed Aerial Utility Easement — AUE
- Proposed Permanent Easement with Iron Pin and Cap Marker

ROADS AND RELATED FEATURES:

- Existing Edge of Pavement
- Existing Curb
- Proposed Slope Stakes Cut — C
- Proposed Slope Stakes Fill — F
- Proposed Curb Ramp — CR
- Existing Metal Guardrail
- Proposed Guardrail
- Existing Cable Guiderail
- Proposed Cable Guiderail
- Equality Symbol
- Pavement Removal

VEGETATION:

- Single Tree
- Single Shrub
- Hedge
- Woods Line
- Orchard
- Vineyard — Vineyard

EXISTING STRUCTURES:

MAJOR:

- Bridge, Tunnel or Box Culvert — CONC
- Bridge Wing Wall, Head Wall and End Wall — CONC WW

MINOR:

- Head and End Wall — CONC HW
- Pipe Culvert
- Footbridge
- Drainage Box: Catch Basin, DI or JB — CB
- Paved Ditch Gutter
- Storm Sewer Manhole — S
- Storm Sewer — S

UTILITIES:

POWER:

- Existing Power Pole
- Proposed Power Pole
- Existing Joint Use Pole
- Proposed Joint Use Pole
- Power Manhole — P
- Power Line Tower
- Power Transformer
- U/G Power Cable Hand Hole
- H–Frame Pole
- Recorded U/G Power Line — P
- Designated U/G Power Line (S.U.E.*) — P

TELEPHONE:

- Existing Telephone Pole
- Proposed Telephone Pole
- Telephone Manhole — T
- Telephone Booth
- Telephone Pedestal — T
- Telephone Cell Tower
- U/G Telephone Cable Hand Hole — TH
- Recorded U/G Telephone Cable — T
- Designated U/G Telephone Cable (S.U.E.*) — T
- Recorded U/G Telephone Conduit — TC
- Designated U/G Telephone Conduit (S.U.E.*) — TC
- Recorded U/G Fiber Optics Cable — T FO
- Designated U/G Fiber Optics Cable (S.U.E.*) — T FO

WATER:

- Water Manhole — W
- Water Meter
- Water Valve
- Water Hydrant
- Recorded U/G Water Line — W
- Designated U/G Water Line (S.U.E.*) — W
- Above Ground Water Line — A/G Water

TV:

- TV Satellite Dish
- TV Pedestal — TC
- TV Tower
- U/G TV Cable Hand Hole — TH
- Recorded U/G TV Cable — TV
- Designated U/G TV Cable (S.U.E.*) — TV
- Recorded U/G Fiber Optic Cable — TV FO
- Designated U/G Fiber Optic Cable (S.U.E.*) — TV FO

GAS:

- Gas Valve
- Gas Meter — G
- Recorded U/G Gas Line — G
- Designated U/G Gas Line (S.U.E.*) — G
- Above Ground Gas Line — A/G Gas

SANITARY SEWER:

- Sanitary Sewer Manhole
- Sanitary Sewer Cleanout
- U/G Sanitary Sewer Line — SS
- Above Ground Sanitary Sewer — A/G Sanitary Sewer
- Recorded SS Forced Main Line — FSS
- Designated SS Forced Main Line (S.U.E.*) — FSS

MISCELLANEOUS:

- Utility Pole
- Utility Pole with Base
- Utility Located Object
- Utility Traffic Signal Box — S
- Utility Unknown U/G Line — ?UTL
- U/G Tank; Water, Gas, Oil
- Underground Storage Tank, Approx. Loc. — UST
- A/G Tank; Water, Gas, Oil
- Geoenvironmental Boring
- U/G Test Hole (S.U.E.*)
- Abandoned According to Utility Records — AATUR
- End of Information — E.O.I.

THE GREAT SEAL OF THE CITY OF RALEIGH NORTH CAROLINA 1885

LOVILLS CREEK AND ARARAT RIVER GREENWAY
WORTH STREET TO THARINGTON PARK

STEWART
Firm License No. C-1051
421 Fayetteville St.
Suite 400
Raleigh, NC 27601
T: 919.380.8750
www.stewartinc.com

Baker
Michael Baker Engineering Inc.
8000 Regency Parkway, Suite 600
Cary, North Carolina 27518
Phone: 919.463.5488
Fax: 919.463.5490
License # P-1084

DATE: NOVEMBER 12, 2014

REVISIONS:

NO.	DATE

PROJECT NO.:
H13007.00

1A

NOTES

GENERAL NOTES

1 THE CONTRACTOR SHALL PERFORM ALL CONSTRUCTION ACTIVITIES IN ACCORDANCE WITH THE APPLICABLE REQUIREMENTS OF THE JANUARY 2012 NCDOT STANDARD SPECIFICATIONS FOR ROADS AND STRUCTURES.

2 ALL DEMOLITION SHALL BE APPROVED BY CITY OF MOUNT AIRY.

3 ALL DEMOLITION AND SUBSEQUENT CONSTRUCTION TO BE IN ACCORDANCE WITH PERMITS ISSUED AND APPLICABLE STATE, COUNTY, AND LOCAL CODES. THE CONTRACTOR SHALL OBTAIN AND PAY FOR ALL INSPECTIONS, CERTIFICATIONS, PERMITS, EQUIPMENT, ETC. THAT MAY BE REQUIRED.

4 WHERE ASPHALT SECTION IS REMOVED, CONTRACTOR SHALL USE A SAW CUT AT THE LIMITS OF DEMOLITION TO OBTAIN A CLEAN EDGE.

5 ALL TREE PROTECTION FENCING SHALL BE INSTALLED PRIOR TO LAND DISTURBANCE OPERATIONS INCLUDING TREE REMOVAL, IN SUCH A MANNER AS TO CLEARLY AND ADEQUATELY SEPARATE ALL TREES TO BE REMOVED FROM REMAINING VEGETATION.

6 CONTACT THE CITY OF MOUNT AIRY PUBLIC WORKS DEPARTMENT TO SET UP A PRE-CONSTRUCTION MEETING PRIOR TO LAND DISTURBANCE. TREE PROTECTION FENCING CAN AND SHOULD BE INSTALLED PRIOR TO PRE-CONSTRUCTION.

7 NO GRADING IS TO OCCUR IN THE TREE PROTECTION AREAS OR TREE CRITICAL ROOT ZONES.

8 THE CONTRACTOR SHALL OBTAIN AND PAY FOR ALL INSPECTIONS, CERTIFICATIONS, EQUIPMENT, ETC. THAT MAY BE REQUIRED.

9 THE CONTRACTOR MUST, AT ALL TIMES, KEEP THE PREMISES FREE FROM ACCUMULATIONS OF WASTE MATERIALS OR RUBBISH CAUSED BY HIM, HIS EMPLOYEES, OR HIS WORK. ALL DEBRIS SHALL BE REMOVED FROM THE SITE ON A DAILY BASIS.

10 RELOCATION OF EXISTING UTILITIES TO BE COORDINATED WITH THE LOCAL UTILITY PROVIDER(S).

11 EXISTING UTILITIES AND STRUCTURES SHOWN BOTH UNDERGROUND AND ABOVE ARE BASED ON THE BEST AVAILABLE RECORD DRAWINGS. THE CONTRACTOR SHALL VERIFY FIELD CONDITIONS PRIOR TO BEGINNING RELATED CONSTRUCTION. ANY DISCREPANCIES SHALL BE REPORTED TO THE OWNER'S REPRESENTATIVE IMMEDIATELY.

12 CONTRACTOR SHALL LOCATE ALL UTILITIES AND UTILITY ELEVATIONS PRIOR TO CONSTRUCTION. ALL UTILITIES TO REMAIN SHALL BE PROTECTED BY THE CONTRACTOR. ANY UTILITIES DAMAGED DURING CONSTRUCTION SHALL BE REPAIRED BY CONTRACTOR AT HIS EXPENSE.

13 CONTRACTOR SHALL RESTORE ALL LAY DOWN AND STAGING AREAS TO ORIGINAL CONDITIONS AND TO THE SATISFACTION OF THE OWNER, PRIOR TO DEMOBILIZATION AT THE CONCLUSION OF THE PROJECT.

14 ANY EXCAVATION MUST BE FILLED IN AND TAMPED AT THE CONCLUSION OF EACH WORK PERIOD, AND EQUIPMENT AND SUPPLIES RETURNED TO THE CONSTRUCTION STAGING AREA.

15 CONSTRUCTION/SAFETY FENCING REMOVED TO FACILITATE ACCESS BY THE CONTRACTOR FOR CONSTRUCTION MUST BE REPLACED AT THE END OF EACH WORK PERIOD TO DIRECT PEDESTRIAN TRAFFIC AWAY FROM HAZARDOUS AREAS.

16 DEMOLITION, AND SUBSEQUENT CONSTRUCTION OF STORM DRAINAGE FACILITIES SHALL BE PERFORMED IN SUCH A MANNER THAT THE OLD PIPE AND STRUCTURES ARE REMOVED AND NEW STRUCTURES AND PIPING ARE IMMEDIATELY PUT INTO SERVICE. CONTRACTOR SHALL ENSURE THAT STORM DRAINAGE DOES NOT REMAIN OUT OF SERVICE FOR LONGER THAN 12 HOURS AT A TIME. PROVISIONS SHALL BE MADE TO MAINTAIN STORM WATER DRAINAGE DURING CONSTRUCTION.

17 CONTRACTOR SHALL STAKE CENTERLINE OF TRAIL ACCORDING TO PLANS AND OBTAIN APPROVAL FROM OWNER'S REPRESENTATIVE PRIOR TO CONSTRUCTION. ANY DISCREPANCIES SHALL BE RESOLVED PRIOR TO CONSTRUCTION.

18 CONTRACTOR SHALL VERIFY ALL STATIONING FOR APPLICABILITY TO EXISTING CONDITIONS PRIOR TO CONSTRUCTION. DEVIATION FROM ALIGNMENT DUE TO LARGE TREES OR OTHER OBSTACLES ETC SHALL BE APPROVED BY THE CITY OF MOUNT AIRY AND THE ENGINEER OF RECORD.

19 CONTRACTOR SHALL MAINTAIN ALL ABOVE AND BELOW GROUND STORM WATER DRAINAGE AND PATTERNS AND PIPING AS THEY CURRENTLY EXIST UNLESS NOTED OTHERWISE. ANY DISTURBANCE OF THE PATTERNS OR STRUCTURES BY THE CONTRACTOR SHALL BE CORRECTED BY THE CONTRACTOR TO CONDITION PRIOR TO DISTURBANCE. CLEAN OUT STORM WATER PIPE ONLY IF NOTED ON PLAN AND ACCORDING TO DETAIL.

20 CONTRACTOR ACCESS FOR TRAIL CONSTRUCTION SHALL BE CONFIRMED BY CONTRACTOR WITH OWNER'S REPRESENTATIVE AND PROPERTY OWNER PRIOR TO CONSTRUCTION.

21 CONTRACTOR SHALL REVIEW TREE REMOVAL WITH OWNER'S REPRESENTATIVE AND OBTAIN APPROVAL PRIOR TO TREE REMOVAL. CONTRACTOR SHALL REMOVE ALL VEGETATION TO 3' BEYOND ASPHALT EDGE OF TRAIL OR WITH IN REQUIRED DRAINAGE DITCHES. TRIM UP BRANCHES OF TREES TO PROVIDE 10' VERTICAL CLEARANCE.

22 ALL CONSTRUCTION SHALL COMPLY WITH CITY OF MOUNT AIRY AND NCDOT STANDARDS. SHOULD A CONFLICT ARISE, THE ENGINEER SHALL DETERMINE WHICH STANDARD SHALL GOVERN.

23 CONTRACTOR SHALL PROVIDE SILT FENCING IN ALL AREAS AND EROSION CONTROL MEASURES AS NEEDED OR DIRECTED BY THE EROSION CONTROL INSPECTOR. IF ADDITIONAL MEASURES ARE REQUIRED IN ADDITION TO THE PLANS, COMPENSATION WILL BE PROVIDED PER THE CONTRACT PROVISIONS.

24 VEGETATION ON BANKS AND WETLANDS SHOULD BE HAND CUT WITH ROOT MATS UNDISTURBED.

25 PERMANENT STREAM CROSSINGS SHALL BE COMPLETED, SEEDED, MULCHED, AND ANCHORED OR LINED WITH ROLLED EROSION CONTROL PRODUCT AND ANCHORED AT THE END OF THE WORK DAY.

26 THE ENGINEER AND/OR OWNER DISCLAIM ANY ROLE IN THE CONSTRUCTION MEANS AND METHODS ASSOCIATED WITH PROJECT AS SET FORTH IN THESE PLANS. IF DEPARTURES FROM THE SPECIFICATIONS OR DRAWINGS ARE DEEMED NECESSARY BY THE CONTRACTOR, DETAILS OF SUCH DEPARTURES AND REASONS THEREOF SHALL BE SUBMITTED TO THE OWNER IN WRITING FOR REVIEW. NO DEPARTURES FROM THE CONTRACT DOCUMENTS SHALL BE MADE WITHOUT THE WRITTEN PERMISSION OF THE OWNER.

27 TREES AND PLANTS WILL NOT BE DAMAGED OR REMOVED IN ORDER TO SERVICE AND MAINTAIN THE UTILITY, SIDEWALK, GREENWAY OR OTHER SIMILAR FEATURE

28 SUPERELEVATION TRANSITION IS SHOWN ON THE PLAN VIEW.

COMPACTION NOTES

STRUCTURAL FILL SHOULD BE PLACED IN UNIFORM LIFTS OF 8 INCHES OR LESS (LOOSE MEASURE), AND COMPACTED TO AT LEAST 95 PERCENT OF MAXIMUM DRY DENSITY AND WITHIN 3 PERCENT OF THE OPTIMUM MOISTURE AS DEFINED BY THE STANDARD PROCTOR COMPACTION TEST. THE UPPER 12 INCHES OF THE STRUCTURAL FILL PLACED SHOULD BE COMPACTED TO 98 PERCENT OF THE STANDARD PROCTOR MAXIMUM DRY DENSITY. TO CONFIRM THAT THE SPECIFIED DEGREE OF COMPACTION IS OBTAINED, FIELD DENSITY TESTING SHOULD BE PERFORMED IN EACH LIFT BY A SOILS TECHNICIAN. SEE PROJECT GEOTECH REPORT FOR MORE DETAILED INFORMATION.

THE PLACEMENT OF ANY FILL MATERIAL MUST BE CONDUCTED UNDER THE OBSERVATION OF A QUALIFIED LICENSED GEOTECHNICAL ENGINEER AND UPON COMPLETION OF THE EARTHWORK ACTIVITIES THE TOWN MUST BE PROVIDED WITH A FINAL GRADING REPORT THAT INCLUDES THE CORRESPONDING COMPACTION TEST RESULTS AND CERTIFIES THE TYPE OF FILL MATERIAL AND ITS PROPER PLACEMENT.

2012 NCDOT ROADWAY ENGLISH STD. DRAWINGS

ROADWAY STANDARDS AS APPEAR IN "ROADWAY STANDARD DRAWINGS" HIGHWAY DESIGN BRANCH - N.C. DEPARTMENT OR TRANSPORTATION - RALEIGH, N.C., DATED JANUARY, 2012 ARE APPLICABLE TO THIS PROJECT AND BY REFERENCE HEREBY ARE CONSIDERED A PART OF THESE PLANS.

PROPERTY & EASEMENT LINES

THE PROPERTY LINES AND EASEMENTS CONTAINED IN THIS PLAN SET WERE NOT LOCATED BY A PROFESSIONAL LICENSED SURVEYOR. ALL PROPERTY AND EASEMENT LINES SHOWN ARE APPROXIMATE AND HAVE BEEN BASED UPON GEOGRAPHICAL INFORMATION SYSTEMS INFORMATION AND AVAILABLE RECORDS.

THE GREAT SEAL OF THE CITY OF MOUNT AIRY 1885 NORTH CAROLINA

LOVILLS CREEK AND
ARARAT RIVER GREENWAY
WORTH STREET TO THARINGTON PARK

GREENWAY ENGINEER

NORTH CAROLINA PROFESSIONAL ENGINEER SEAL 40615 MATTHEW C. LUDWIG
11/12/14

Firm License No. C-1051
421 Fayetteville St.
Suite 400
Raleigh, NC 27601
T. 919.380.8750
www.stewartinc.com
STEWART

DATE: NOVEMBER 12, 2014

REVISIONS:

NO.	DATE

PROJECT NO.:
H13007.00

1B

PAVEMENT SCHEDULE	
A1	4.5″ PORTLAND CONCRETE CEMENT PAVEMENT
C1	PROPOSED 2″ ASPHALT CONCRETE SURFACE COURSE, TYPE S9.5B, AT AN AVERAGE RATE OF 224 LBS. PER SQ. YD.
J1	PROPOSED 8″ AGGREGATE BASE COURSE.
T	EARTH MATERIAL.
U	EXISTING PAVEMENT
V1	GEOTEXTILE SEPERATOR FABRIC.

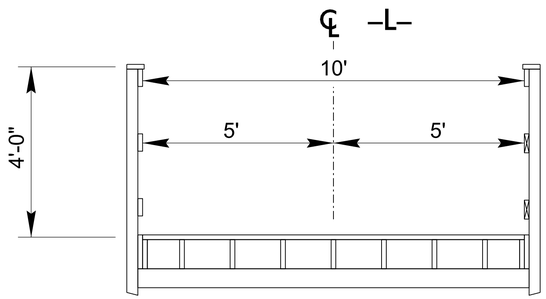

BOARDWALK TYPICAL SECTION

CHAIN	BOARDWALK NO.	BEGIN STATION	END STATION
-L-	1	21+80.00	23+07.00
	2	23+87.00	25+20.00
	3	60+90.00	61+30.00

SEE SB-1 TO SB-5 FOR DETAILS

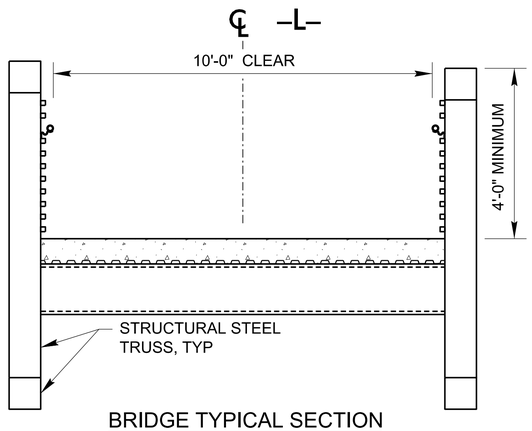

BRIDGE TYPICAL SECTION

CHAIN	BRIDGE NO.	BEGIN STATION	END STATION
-L-	1	23+07.00	23+87.00
	2	122+08.00	122+58.00

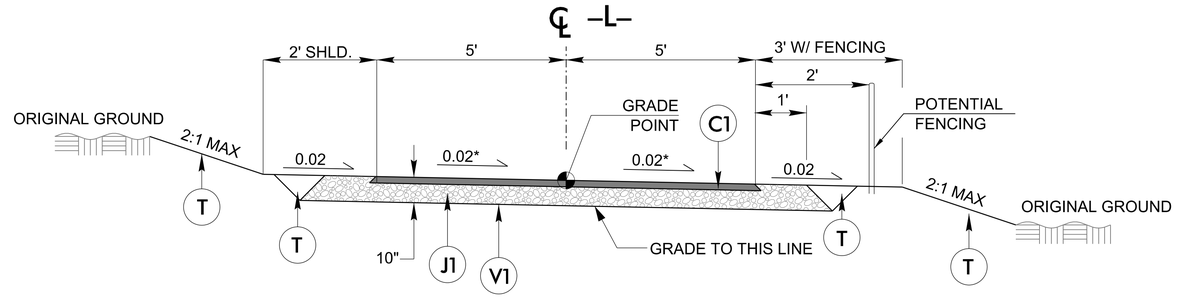

TYPICAL SECTION #1- ASPHALT TRAIL

*SEE PLANS FOR CROSS SLOPES

CHAIN	BEGIN STATION		END STATION	
-L-	(MATCH EXISTING GREENWAY)	8+47.46	9+52.00	(MATCH WORTH STREET)
	(MATCH WORTH STREET)	10+10.00	21+70.00	(BEGIN BOARDWALK 1 APP SLAB)
		31+20.00	53+25.00	
		55+00.00	60+80.00	(BEGIN BOARDWALK 3 APP SLAB)
	(END BOARDWALK 3 APP SLAB)	61+40.00	68+00.00	
		71+30.00	90+38.00	
		97+84.00	121+98.00	(BEGIN BRIDGE 2 APP SLAB)
	(END BRIDGE 2 APP SLAB)	122+68.00	124+11.04	(MATCH EXISTING GREENWAY)

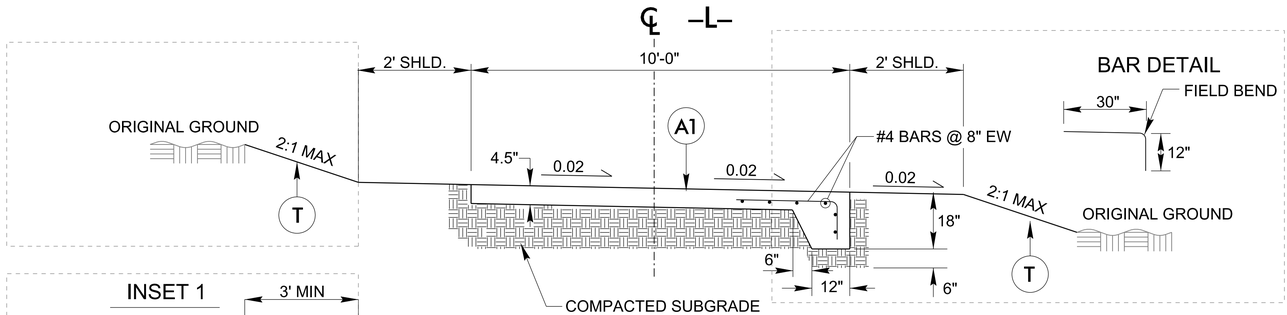

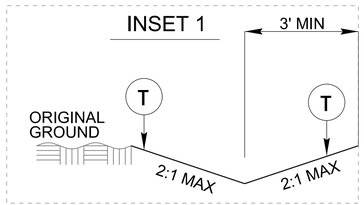

USE INSET 1

-L- 26+70.00 TO 28+55.00 (LEFT SIDE)
-L- 29+62.00 TO 30+50.00 (LEFT SIDE)

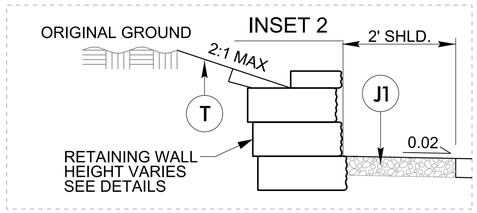

USE INSET 2

-L- 68+70.00 TO 69+40.00 (LEFT SIDE)
-L- 70+20.00 TO 71+30.00 (LEFT SIDE)
-L- 91+25.00 TO 91+65.00 (LEFT SIDE)
-L- 96+65.00 TO 97+35.00 (LEFT SIDE)

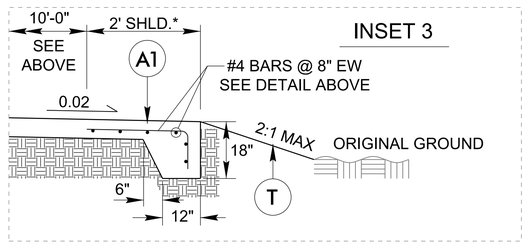

USE INSET 3

-L- 69+05.00 TO 69+50.00 (RIGHT SIDE)
-L- 69+50.00 TO 69+93.26 (RIGHT SIDE) *SHOULDER WIDTH VARIES,
-L- 69+93.26 TO 71+00.00 (RIGHT SIDE) SEE SHEET 9A
-L- 90+50.00 TO 90+85.00 (RIGHT SIDE)
-L- 92+60.00 TO 95+30.00 (RIGHT SIDE)
-L- 96+84.00 TO 97+00.00 (RIGHT SIDE)

TYPICAL SECTION #2 - CONCRETE TRAIL

CHAIN	BEGIN STATION		END STATION	
-L-	(END BOARDWALK 2 APP SLAB)	25+30.00	28+75.00	
		29+62.00	31+20.00	
		53+25.00	55+00.00	
		68+00.00	71+30.00	
		90+38.00	97+84.00	
-Y1-		10+00.00	10+95.19	(MATCH EXISTING PARKING LOT)

LOVILLS CREEK AND ARARAT RIVER GREENWAY

WORTH STREET TO THARINGTON PARK

GREENWAY ENGINEER

STEWART
Firm License No. C-1053
421 Fayetteville St.
Suite 400
Raleigh, NC 27601
T. 919.380.8750
www.stewartinc.com

DATE: NOVEMBER 12, 2014

REVISIONS:

NO.	DATE

PROJECT NO.:

H13007.00

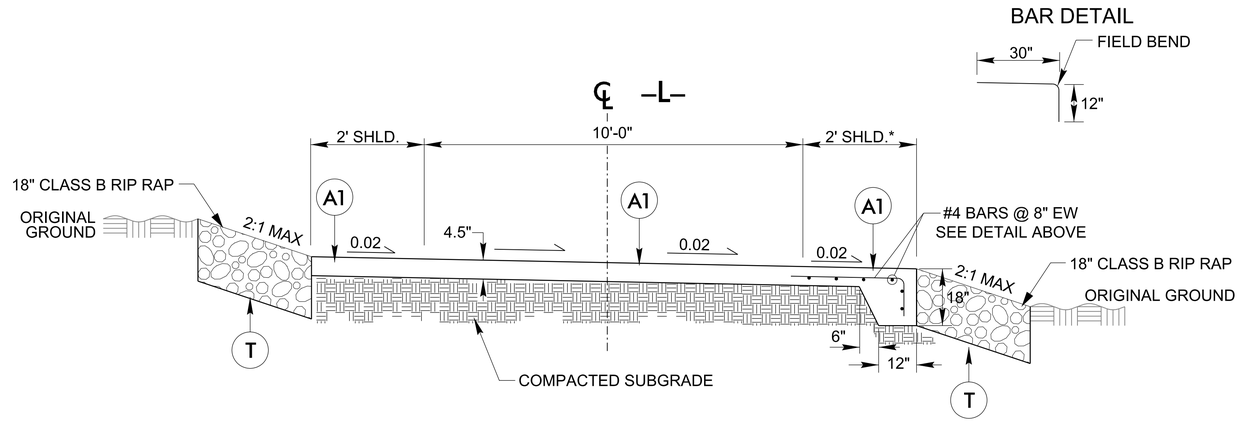

TYPICAL SECTION #3 - CONCRETE TRAIL W/ SHOULDERS

-L- 28+75.00 TO 29+62.00

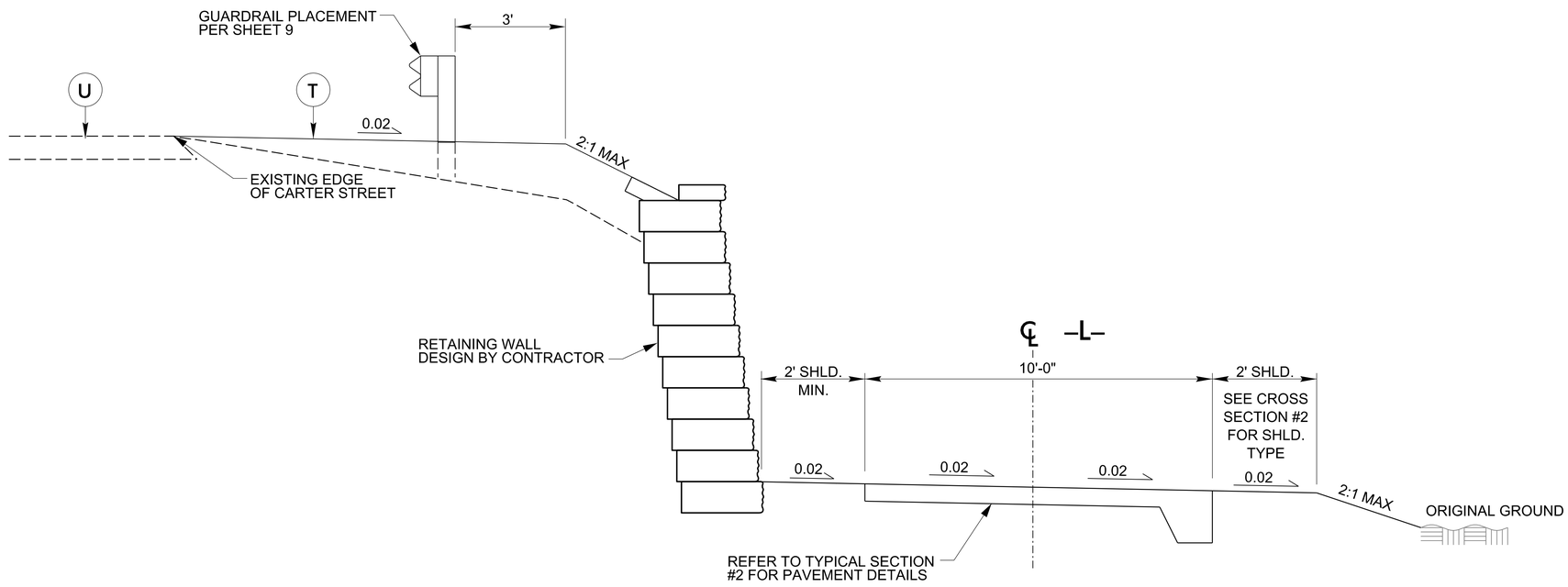

TYPICAL SECTION #4 - CARTER STREET

-L- 70+20.00 TO 71+30.00

LOVILLS CREEK AND
ARARAT RIVER GREENWAY

WORTH STREET TO THARINGTON PARK

GREENWAY ENGINEER

NORTH CAROLINA PROFESSIONAL ENGINEER SEAL 40615 MATTHEW C. LLOYD 11/12/14

Firm License No. C-1051
421 Fayetteville St.
Suite 400
Raleigh, NC 27601
T. 919.380.8750
www.stewartinc.com
STEWART

DATE: NOVEMBER 12, 2014

REVISIONS:

NO.	DATE

PROJECT NO.:

H13007.00

2A

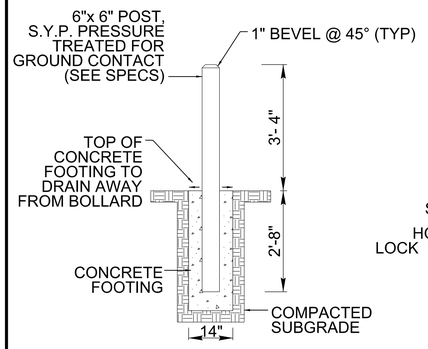

PERMANENT BARRIER
WOOD BOLLARD

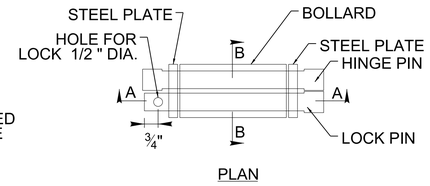

PLAN

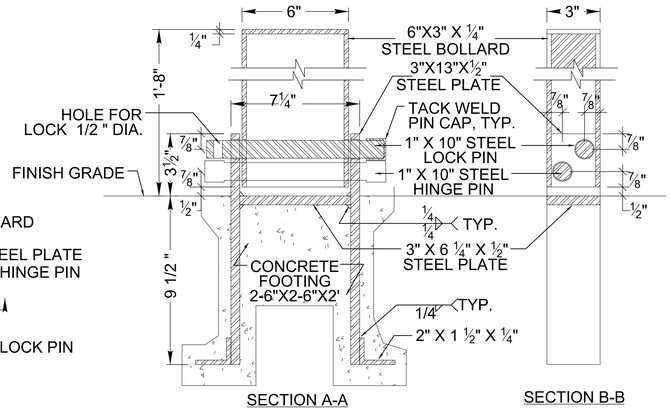

SECTION A-A

SECTION B-B

HINGED BOLLLARD

1 BOLLARDS

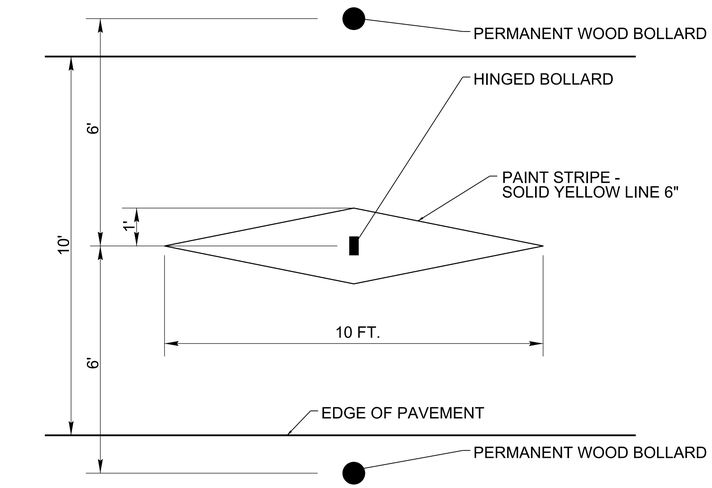

2 TYPICAL BOLLARD PLACEMENT & PAVEMENT MARKING

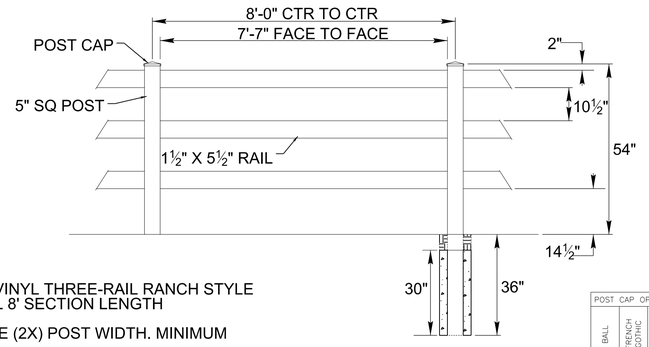

NOTES:
FENCE TO BE WHITE VINYL THREE-RAIL RANCH STYLE FENCE WITH NOMINAL 8' SECTION LENGTH

FOOTING WIDTH TO BE (2X) POST WIDTH. MINIMUM DEPTH 36".

MINIMUM CONCRETE STRENGTH = 3000 psi
MINIMUM CONCRETE DEPTH = 30"

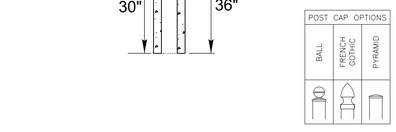

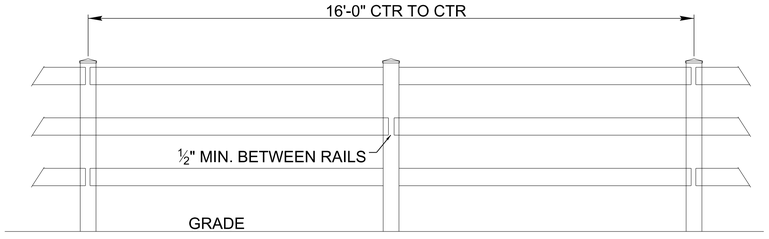

NOTES:
USE 16' TOP RAIL FROM ALL CORNERS AND ENDS.

RUN RAILS IN STAGGERED PATTERN. FREE END OF RAIL MAY BE NOTCHED OR CUT TO FIT PROPERLY

RAILS CANNOT BE BUTTED AGAINST ON ANOTHER

3 DETAIL FOR WHITE VINYL FENCE

NOTES:
1) ALL WOOD FOR SPLIT RAIL FENCE TO BE PRESSURE TREATED.
2) END POST SHALL BE TERMINAL POST.

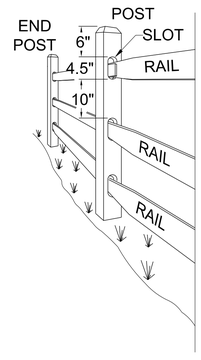

PERSPECTIVE VIEW

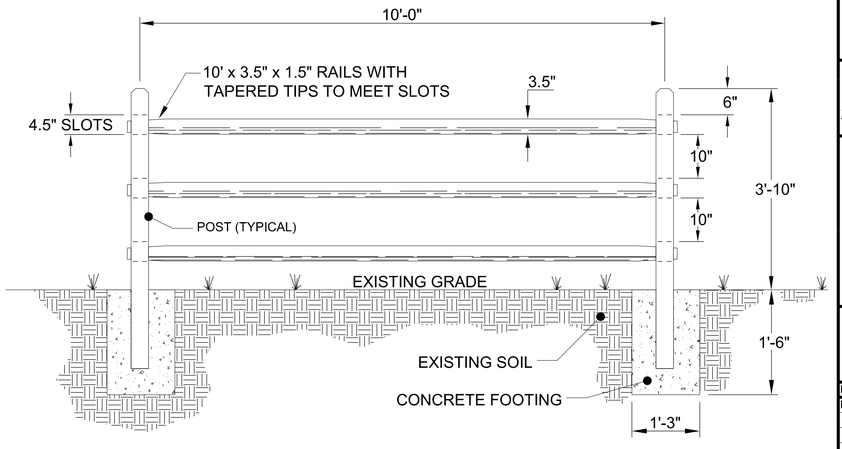

FRONT VIEW

4 DETAIL FOR SPLIT RAIL FENCE

LOVILLS CREEK AND ARARAT RIVER GREENWAY
WORTH STREET TO THARINGTON PARK

GREENWAY ENGINEER

NORTH CAROLINA PROFESSIONAL ENGINEER SEAL 40615 MATTHEW C. VOSS 11/12/14

Firm License No. C-1051
421 Fayetteville St.
Suite 400
Raleigh, NC 27601
T. 919.380.8750
www.stewartinc.com
STEWART

DATE: NOVEMBER 12, 2014

REVISIONS:

NO.	DATE

PROJECT NO.:
H13007.00

2B

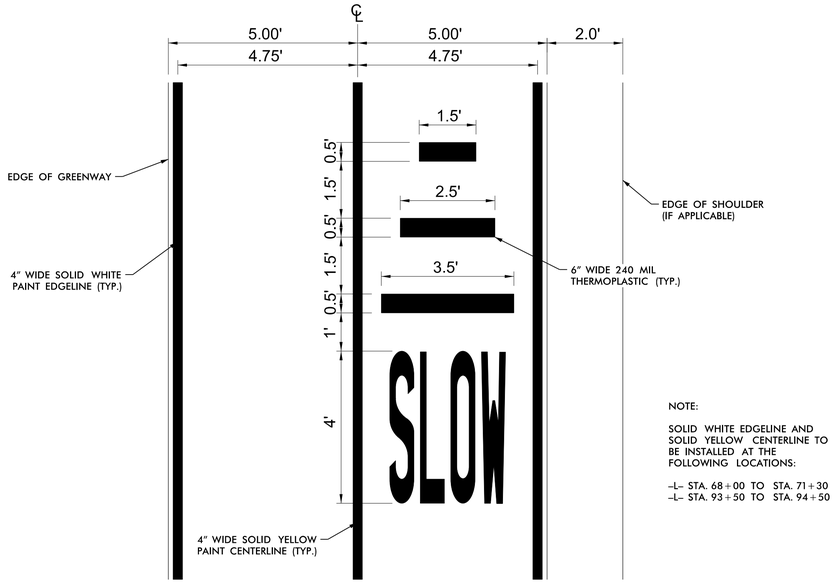

NOTE:

SOLID WHITE EDGELINE AND SOLID YELLOW CENTERLINE TO BE INSTALLED AT THE FOLLOWING LOCATIONS:

–L– STA. 68+00 TO STA. 71+30
–L– STA. 93+50 TO STA. 94+50

1 TYPICAL PAVEMENT MARKINGS WITH "SLOW" MARKING ASSEMBLY

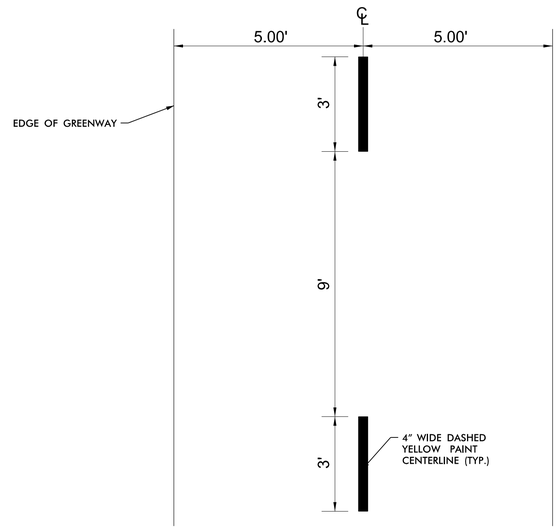

NOTE:

DASHED YELLOW CENTERLINE TO BE AN ALTERNATE BID ITEM, INSTALLED PER DIRECTION OF THE CITY OF MOUNT AIRY.

2 DASHED CENTERLINE MARKING

NOTE:
TRUNCATED DOMES ARE TO BE PLACED AT TRAIL ENTRANCES AT:

WORTH STREET (–L– STA. 9+52 & STA. 10+10)
PARK AND RIDE LOT (–Y1– STA. 10+95)
THARRINGTON PARK (–L– STA. 123+81)

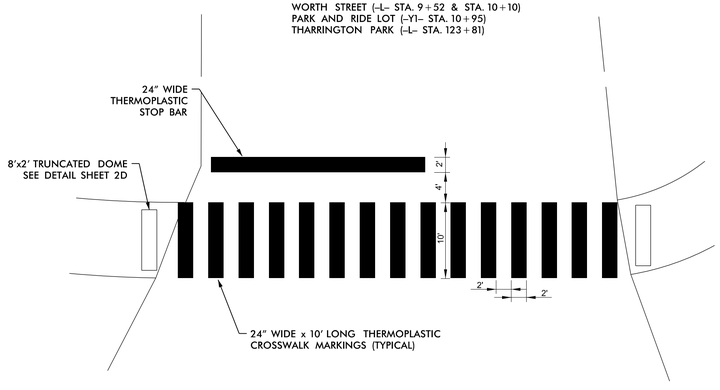

3 TYPICAL STOP BAR, CROSSWALK, AND RAMP DETAIL

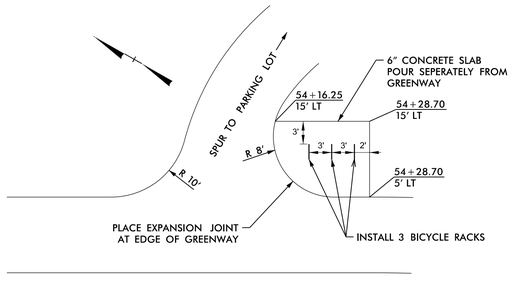

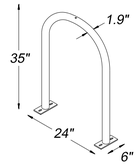

STANDARD BIKE RACK

BIKE RACK INSTALLATION:
WHEN INSTALLED ON CONCRETE SURFACE, USE ⅜" ANCHORS TO PLATE MOUNT. SHIM AS NECESSARY TO ENSURE VERTICAL PLACEMENT.

4 BICYCLE RACK PLAN & DETAIL

LOVILLS CREEK AND ARARAT RIVER GREENWAY

WORTH STREET TO THARINGTON PARK

GREENWAY ENGINEER

NORTH CAROLINA PROFESSIONAL SEAL 40615 ENGINEER MATTHEW C. LUDWIG
11/12/14

Firm License No: C-1051
421 Fayetteville St.
Suite 1100
Raleigh, NC 27601
T 919.380.8750
www.stewartinc.com
STEWART

DATE: NOVEMBER 12, 2014

REVISIONS:

NO.	DATE

PROJECT NO.:

H13007.00

2C

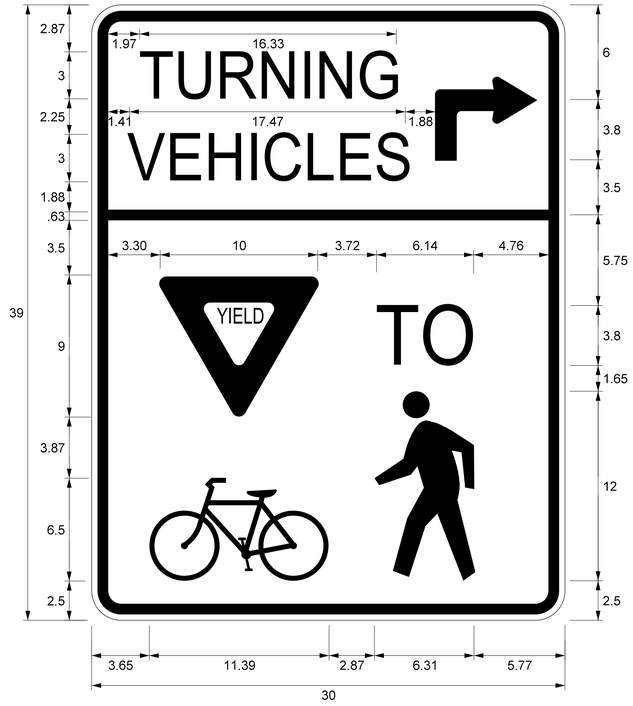

NOTES:

FABRICATE MODIFIED R10-15 SIGN AS SHOWN. ALL OTHER SIGN SPECIFICATIONS SHALL FOLLOW NCDOT SECTIONS 900 & 901

DIMENSIONS SHOWN IN INCHES

1 MODIFIED R10-15 SIGN

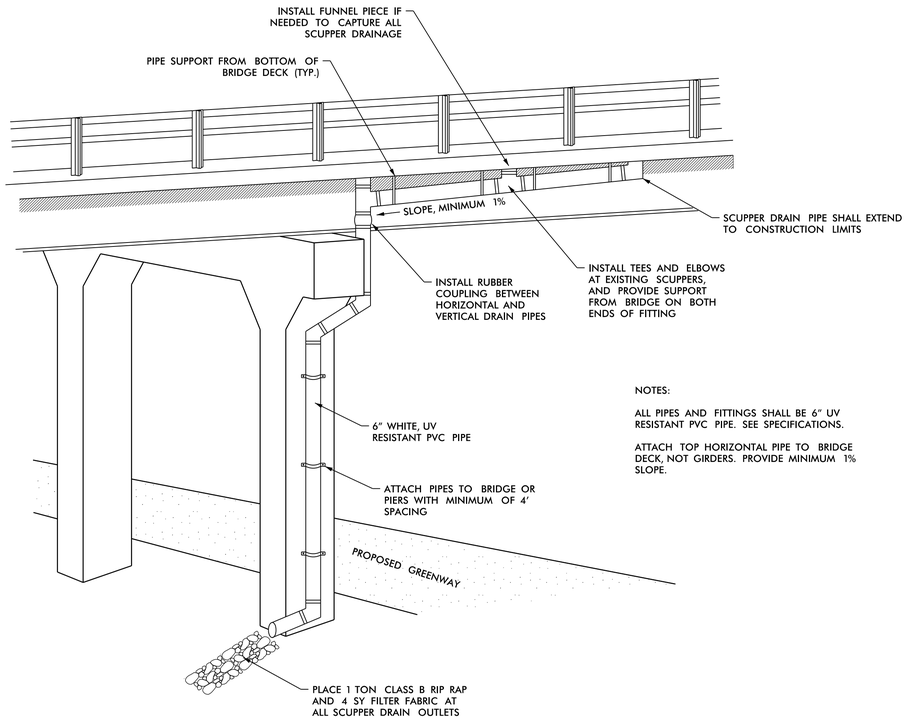

NOTES:

ALL PIPES AND FITTINGS SHALL BE 6" UV RESISTANT PVC PIPE. SEE SPECIFICATIONS.

ATTACH TOP HORIZONTAL PIPE TO BRIDGE DECK, NOT GIRDERS. PROVIDE MINIMUM 1% SLOPE.

2 SCUPPER DRAIN PIPE

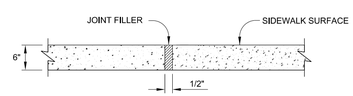

TRANSVERSE EXPANSION JOINT

NOTES:

1. TRANSVERSE EXPANSION JOINTS TO BE A MAXIMUM OF 40 FEET.
2. ALL CONCRETE TO BE 3000 PSI AND FINISHED WITH CURING COMPOUND.

3 CONCRETE GREENWAY EXPANSION JOINTS

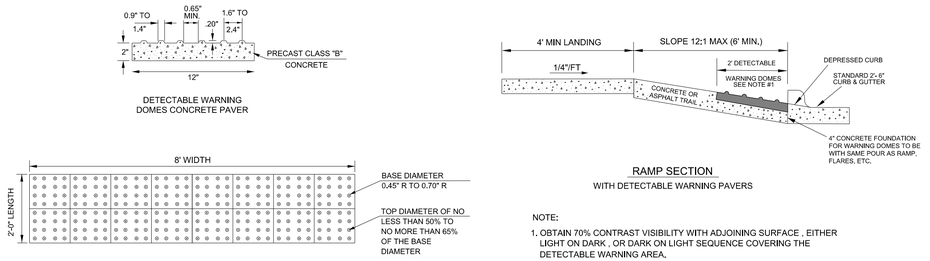

RAMP SECTION
WITH DETECTABLE WARNING PAVERS

NOTE:

1. OBTAIN 70% CONTRAST VISIBILITY WITH ADJOINING SURFACE , EITHER LIGHT ON DARK , OR DARK ON LIGHT SEQUENCE COVERING THE DETECTABLE WARNING AREA.

4 TRUNCATED DOME PAVERS

LOVILLS CREEK AND ARARAT RIVER GREENWAY
WORTH STREET TO THARINGTON PARK

GREENWAY ENGINEER

NORTH CAROLINA PROFESSIONAL SEAL 40615 ENGINEER MATTHEW C. LUDWIG 11/12/14

Firm License No. C-1051
421 Fayetteville St.
Suite 400
Raleigh, NC 27601
T: 919.380.8750
www.stewartinc.com
STEWART

DATE: NOVEMBER 12, 2014

REVISIONS:

NO.	DATE

PROJECT NO.:
H13007.00

2D

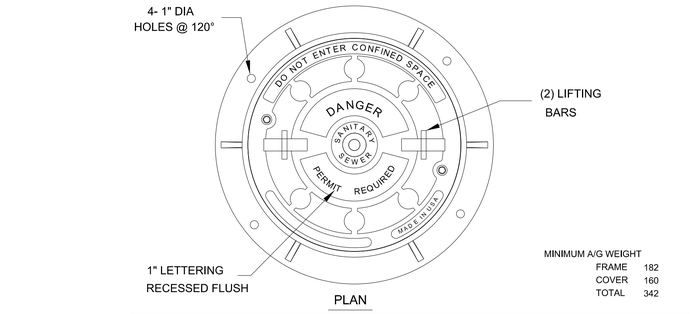

PLAN

MINIMUM A/G WEIGHT

FRAME	182
COVER	160
TOTAL	342

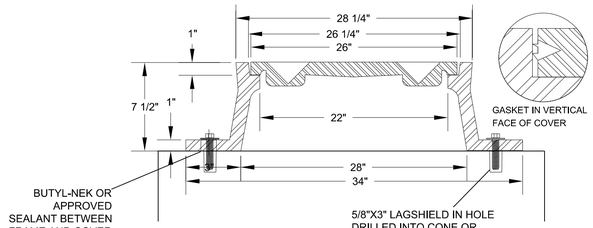

NOTES:
1) ALL MANHOLE FRAMES SHALL BE DOMESTICALLY CAST.
2) FRAME SHALL BE A MINIMUM WEIGHT OF 182 LBS. WITHIN PUBLIC ROW AND 160 LBS. WITHIN EASEMENTS.
3) COVER SHALL WEIGH A MIN. OF 120 LBS.
4) ALL MANHOLE FRAMES SHALL BE BOLTED TO THE CONE SECTION OR RING WITH A MINIMUM OF 4 BOLTS PER FRAME.

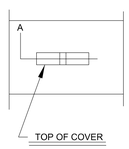

TYPICAL LIFTING DEVICE

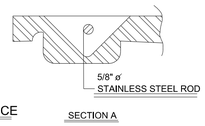

SECTION A

1 SEWER MANHOLE ADJUSTMENTS/REPLACEMENT

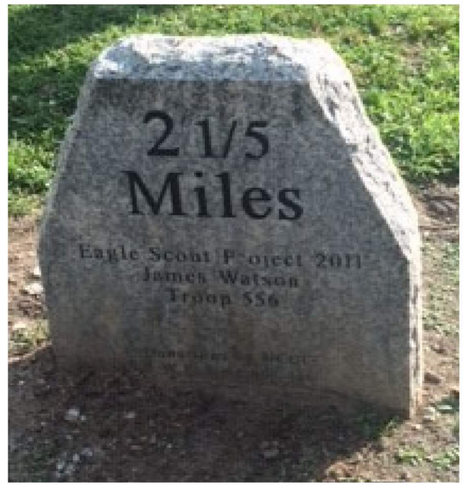

PHOTOGRAPH OF EXISTING MARKERS

NOTES:
PROPOSED GRANITE MARKERS SHALL MATCH FONT, DIMENSIONS, AND FINISH OF EXISTING MARKERS ON ARARAT RIVER TRAIL BETWEEN THARINGTON PARK AND RIVERSIDE PARK.

IDENTICAL TEXT SHALL BE ON BOTH SIDES OF MARKER.

BURIAL DEPTH SHALL BE 24 INCHES BELOW FINISHED GRADE.

CENTER OF MARKER SHALL BE PLACED 3 FEET LEFT OF EDGE OF PAVEMENT.

SEE SPECIFICATIONS FOR MORE INFORMATION.

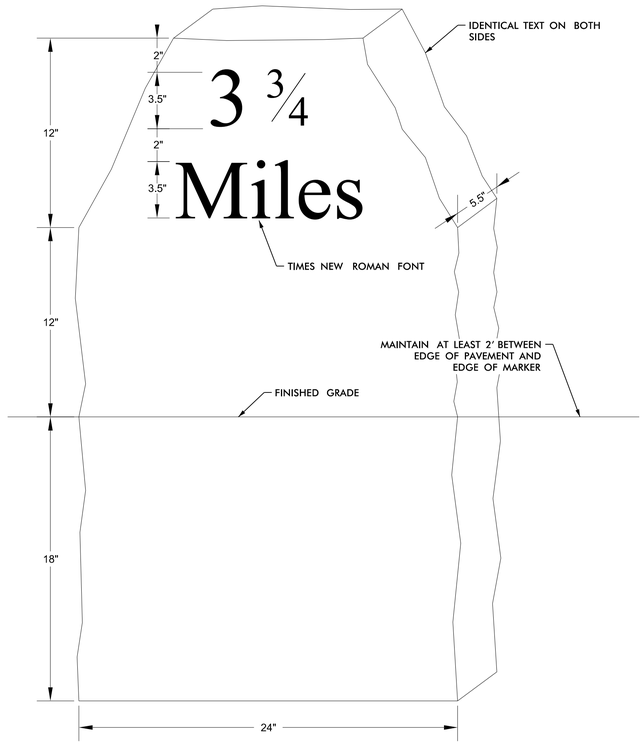

DIMENSIONS OF PROPOSED MARKERS

2 GRANITE MILE MARKER

LOVILLS CREEK AND ARARAT RIVER GREENWAY

WORTH STREET TO THARINGTON PARK

GREENWAY ENGINEER

NORTH CAROLINA PROFESSIONAL SEAL 030515 ENGINEER MATTHEW C. LUDWIG 11/12/14

Firm License No. C-1059
421 Fayetteville St.
Suite 400
Raleigh, NC 27601
T: 919.380.8750
www.stewartinc.com
STEWART

DATE: NOVEMBER 12, 2014

REVISIONS:

NO.	DATE

PROJECT NO.:

H13007.00

2E

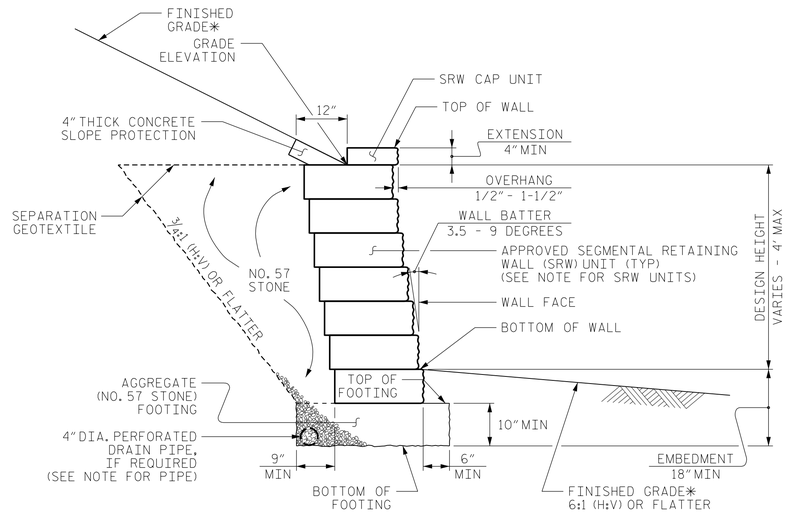

STANDARD SEGMENTAL GRAVITY WALL WITH SLOPE

*SEE ROADWAY PLANS FOR FINISHED GRADE DETAILS.

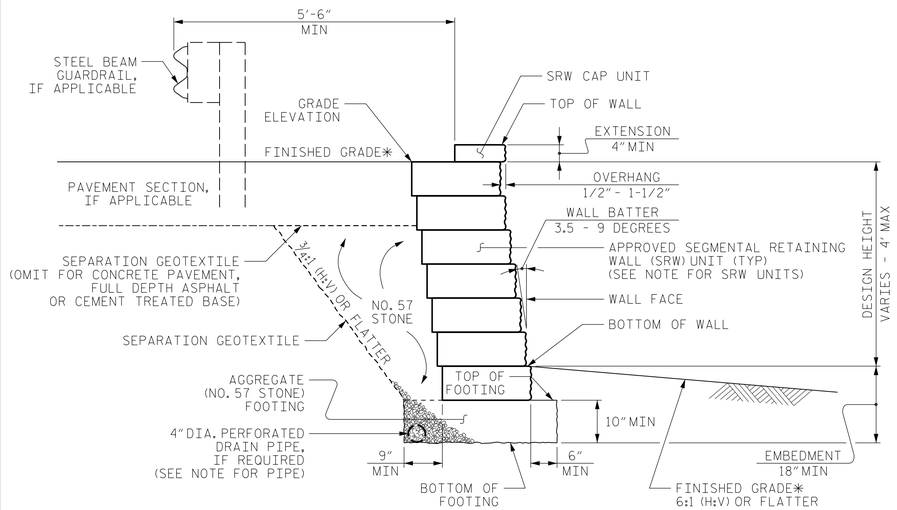

STANDARD SEGMENTAL GRAVITY WALL WITHOUT SLOPE

*SEE ROADWAY PLANS FOR FINISHED GRADE DETAILS.

NOTES:

FOR STANDARD SEGMENTAL GRAVITY RETAINING WALLS, SEE SEGMENTAL GRAVITY RETAINING WALLS PROVISION.

FOR STEEL BEAM GUARDRAIL, SEE ROADWAY PLANS AND SECTION 862 OF THE STANDARD SPECIFICATIONS.

DO NOT ATTACH FENCES OR HANDRAILS TO STANDARD SEGMENTAL GRAVITY WALLS.

DO NOT USE STANDARD SEGMENTAL GRAVITY WALLS FOR INTERSTATE HIGHWAY OR RAILROAD PROJECTS.

DO NOT USE STANDARD SEGMENTAL GRAVITY WALLS WHEN SURCHARGE LOADS WILL BE WITHIN 5'-6" OF THE BACK OF SRW CAP UNITS.

DO NOT USE STANDARD SEGMENTAL GRAVITY WALLS WHEN VERY LOOSE OR SOFT SOIL OR MUCK IS BELOW WALLS.

SEGMENTAL RETAINING WALL (SRW) UNITS ARE APPROVED FOR EITHER 2' OR 4' MAXIMUM DESIGN HEIGHTS. FOR DETAILS AND DIMENSIONS OF APPROVED SRW UNITS AND MAXIMUM DESIGN HEIGHTS, SEE connect.ncdot.gov/resources/Geological/Pages/Products.aspx

DO NOT MIX APPROVED SRW UNITS FROM DIFFERENT VENDORS ON THE SAME STANDARD SEGMENTAL GRAVITY WALL. USE THE SAME SIZE APPROVED SRW UNITS FOR EACH WALL SECTION.

BEFORE BEGINNING STANDARD SEGMENTAL GRAVITY WALL CONSTRUCTION, SURVEY WALL LOCATIONS AND SUBMIT WALL PROFILE VIEWS (WALL ENVELOPES) FOR REVIEW. FOR WALL ENVELOPES, INCLUDE BOTTOM OF WALL, EXISTING GROUND AND GRADE ELEVATIONS AND OTHER ELEVATIONS AS NEEDED AT INTERVALS OF 25' OR LESS ALONG WALLS. DO NOT START WALL CONSTRUCTION UNTIL WALL ENVELOPES ARE ACCEPTED.

A DRAIN PIPE IS REQUIRED IF GROUNDWATER IS ABOVE BOTTOM OF FOOTINGS.

DO NOT PLACE NO. 57 STONE FOR FOOTINGS UNTIL EXCAVATION DIMENSIONS AND FOUNDATION MATERIAL ARE APPROVED.

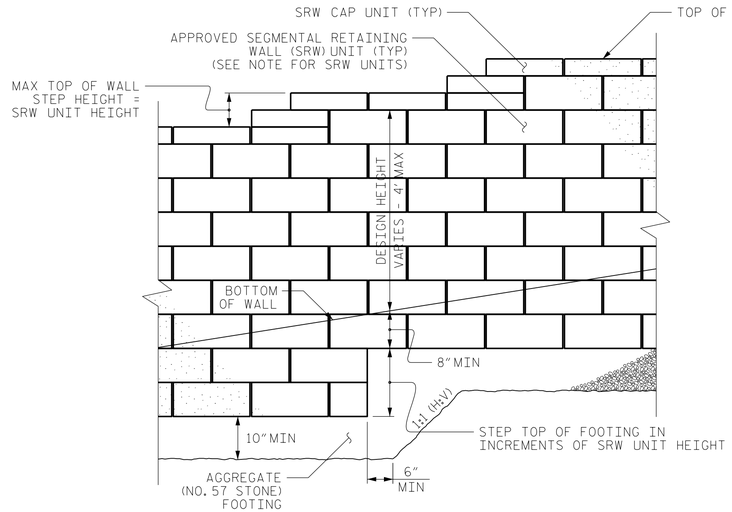

STANDARD SEGMENTAL GRAVITY WALL - PARTIAL ELEVATION

LOVILLS CREEK AND ARARAT RIVER GREENWAY

WORTH STREET TO THARINGTON PARK

GREENWAY ENGINEER

NORTH CAROLINA PROFESSIONAL SEAL 40615 ENGINEER MATTHEW C. LUNDY 11/12/14

Firm License No. C-1051
421 Fayetteville St.
Suite 450
Raleigh, NC 27601
T: 919.380.8750
www.stewartinc.com
STEWART

DATE: NOVEMBER 12, 2014

REVISIONS:

NO.	DATE

PROJECT NO.: H13007.00

2F

PROJECT NO.: ***EB-5014***

SURRY ***COUNTY***

STATION: ***-L- STA. 68+70 TO 69+40, STA. 85+30 TO 85+80, STA. 96+65 TO 97+35***

GEOTECHNICAL ENGINEERING UNIT

STATE OF NORTH CAROLINA DEPARTMENT OF TRANSPORTATION RALEIGH

STANDARD DRAWING NO. 453.02

STANDARD SEGMENTAL GRAVITY RETAINING WALL

DATE: 11-19-13

SHEET NO. 2F

TOTAL SHEETS 1

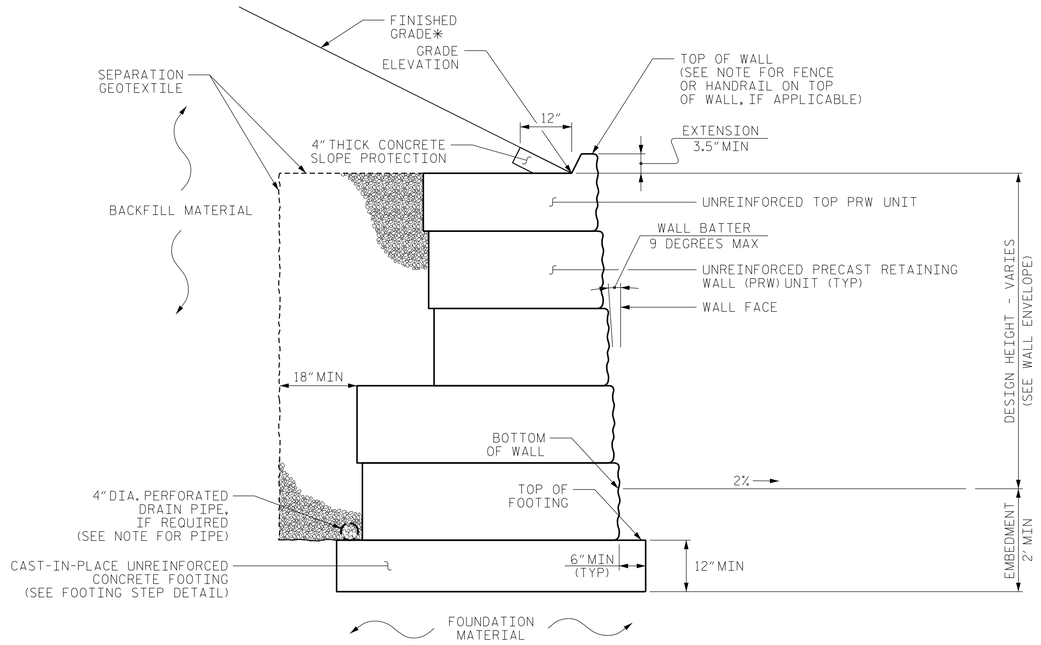

PRECAST GRAVITY WALL - TYPICAL SECTION

*SEE ROADWAY PLANS FOR FINISHED GRADE DETAILS.

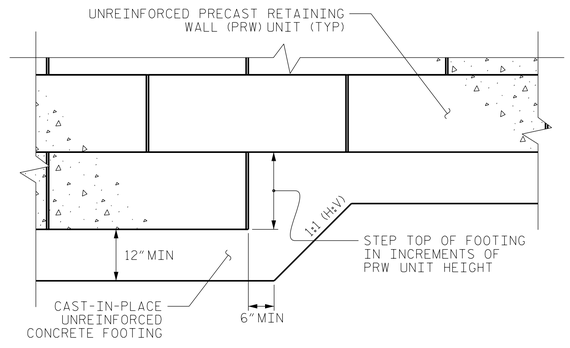

FOOTING STEP DETAIL

NOTES:

FOR PRECAST GRAVITY RETAINING WALLS, SEE PRECAST GRAVITY RETAINING WALLS PROVISION.

THE FACE AND COLOR OF PRW UNITS MUST BE APPROVED BY THE CITY OF MOUNT AIRY PRIOR TO PROCUREMENT.

A DRAIN PIPE IS REQUIRED.

BEFORE BEGINNING PRECAST GRAVITY WALL DESIGN FOR RETAINING WALLS, SURVEY WALL LOCATION AND SUBMIT A REVISED WALL PROFILE VIEW (WALL ENVELOPE) FOR REVIEW. DO NOT START WALL DESIGN OR CONSTRUCTION UNTIL THE REVISED WALL ENVELOPE IS ACCEPTED.

DESIGN RETAINING WALLS FOR WALL HEIGHTS EQUAL TO THE DESIGN HEIGHT PLUS DEPTH TO TOP OF FOOTING (DIFFERENCE BETWEEN GRADE ELEVATION AND TOP OF FOOTING ELEVATION).

DESIGN RETAINING WALLS FOR THE FOLLOWING:
1) MAXIMUM FACTORED VERTICAL STRESS ON FOUNDATION MATERIAL = 2000 LB/SF
2) MINIMUM EMBEDMENT ELEVATION = 2 FT
3) IN-SITU ASSUMED MATERIAL PARAMETERS:

MATERIAL TYPE	UNIT WEIGHT (γ) LB/CF	FRICTION ANGLE (ϕ) DEGREES	COHESION (c) LB/SF
BACKFILL	110	36	0
FOUNDATION	120	30	0

DESIGN RETAINING WALL NO. 2 FOR A LIVE LOAD (TRAFFIC) SURCHARGE.

DO NOT PLACE CONCRETE FOR FOOTINGS FOR RETAINING WALLS UNTIL EXCAVATION DIMENSIONS AND FOUNDATION MATERIAL ARE APPROVED.

"TEMPORARY SHORING" MAY BE REQUIRED FOR RETAINING WALL NO. 2 IN ACCORDANCE WITH THE SPECIAL PROVISIONS AND TRAFFIC CONTROL PLANS.

PROJECT NO.: EB-5014

SURRY COUNTY

STATION: -L- STA. 70+20 TO STA. 71+30, STA. 91+25 TO STA. 91+65

GEOTECHNICAL ENGINEERING UNIT

STATE OF NORTH CAROLINA
DEPARTMENT OF TRANSPORTATION
RALEIGH

PRECAST GRAVITY WALL WITH BACK SLOPE - TYPICAL, NOTES & FOOTING STEP DETAIL

DATE: 11-19-13

THE GREAT SEAL OF THE CITY OF MOUNT AIRY · NORTH CAROLINA · 1885

LOVILLS CREEK AND ARARAT RIVER GREENWAY

WORTH STREET TO THARINGTON PARK

GREENWAY ENGINEER

NORTH CAROLINA PROFESSIONAL ENGINEER SEAL 40615 MATTHEW C. LUDWIG 11/12/14

Firm License No. C-1051
421 Fayetteville St.
Suite 400
Raleigh, NC 27601
T. 919.380.8750
www.stewartinc.com
STEWART

DATE: NOVEMBER 12, 2014

REVISIONS:

NO.	DATE

PROJECT NO.: H13007.00

2G

CAST–IN–PLACE DEBRIS WALL ELEVATION

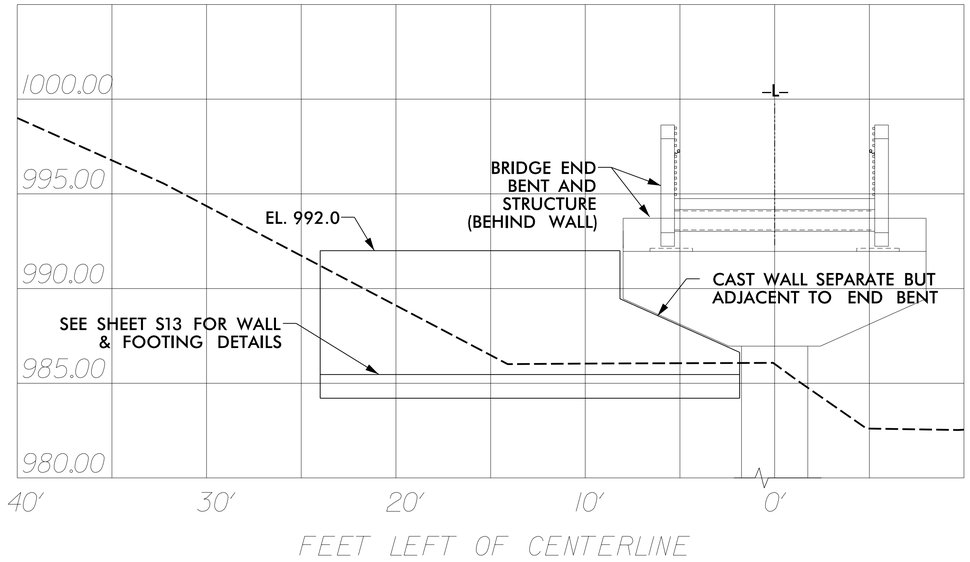

SOLDIER PILE DEBRIS WALL ELEVATION

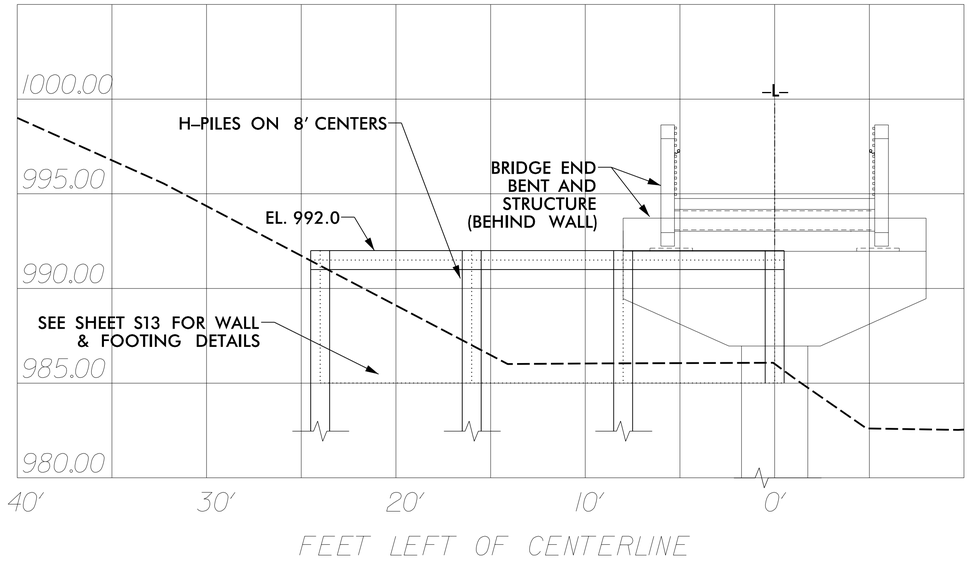

THE GREAT SEAL OF THE CITY OF RALEIGH · NORTH CAROLINA · 1885

LOVILLS CREEK AND ARARAT RIVER GREENWAY

WORTH STREET TO THARINGTON PARK

GREENWAY ENGINEER

NORTH CAROLINA PROFESSIONAL ENGINEER SEAL 40615 MATTHEW C. LUDWIG 11/12/14

Firm License No. C-1051
421 Fayetteville St.
Suite 400
Raleigh, NC 27601
T. 919.380.8750
www.stewartinc.com
STEWART

DATE: NOVEMBER 12, 2014

REVISIONS:

NO.	DATE

PROJECT NO.:

H13007.00

2H

PROJECT Mt. Airy
LOCATION Surry County, NC

COMPUTED BY CAA
CHECKED BY

7/18/2014

Drainage Structure Table

STATION	SHEET NUMBER	LOCATION (LT, RT OR CL)	STRUCTURE NUMBER FROM	STRUCTURE NUMBER TO	TOP ELEVATION FT.	INVERT ELEVATION FT.	INVERT ELEVATION FT.	SLOPE (%)	15"	18"	24"	30"	36"	42"	48"	54"	60"	66"	72"
									SYSTEM A...										
L 9+07	4	RT	A1	A2	997.54	996.00	995.60	1.25	32										
									SYSTEM C...										
L 28+05	5	LT	C2		982.15														
L 28+08	5	LT	C1	C2	983.20	980.37	980.15	1.18			19								
									SYSTEM D...										
L 28+62	5	LT	D1	D2	984.17	980.90	980.60	1.18				25							
L 28+55	5	LT	D3	D1	984.16	980.99	980.90	1.29				7							
L 29+62	5	LT	D4	D1	988.00	984.77	981.90	2.81		102									
									SYSTEM E...										
L 33+42	6	LT	E1	E2	983.30	980.80	979.40	3.50						40					
									SYSTEM F...										
L 38+86	6	LT	F1	F2	986.00	983.50	983.00	2.09				24							
									SYSTEM G...										
L 46+50	7	LT	G1	G2	985.00	983.00	982.30	2.50			56								
									SYSTEM H...										
L 91+82	11	LT	H1	H2	983.00	981.50	981.25	0.89		28									
									SYSTEM I...										
L 112+60	12	LT	I1	I2	984.50	982.00	981.50	1.79				56							
									SYSTEM J...										
L 117+95	13	LT	J1	J2	987.75	985.75	985.50	0.89			56								
TOTAL									32	130	131	112	0	40	0	0	0	0	0
GRAND TOTAL									32	130	131	112	0	40	0	0	0	0	0

STATION	STRUCTURE FROM	ENDWALLS STD. 838.01 OR STD. 838.11 (UNLESS NOTED OTHERWISE) CY	REINFORCED ENDWALLS CY	DRAINAGE STRUCTURE MASONRY CY	QUANTITIES FOR FOR DRAINAGE STRUCTURES TOTAL L.F. FOR QUANTITIY SHALL BE COL. "A" + (1.3 X COL. "B") 0 THRU 5.0' EACH	L.F. A 5' - 10 LIN. FT	L.F. B 10' AND ABOVE LIN. FT	C.B. STD. 840.01 OR STD. 840.02	FRAME, GRATES AND HOOD STANDARD 840.03 TYPE OF GRATE E	F	G	O.T.C.B STD. 840.04 OR STD. 840.05	N.D.I. STD. 840.14 OR STD. 840.15	N.D.I. FRAME & GRATE STD. 840.16	FRAME WITH TWO GRATES STD. 840.20	FRAME WITH TWO GRATES STD. 840.22	M.D.I. TYPE "A" STD. 840.17 OR STD. 840.26	TYPE "B" STD. 840.18 OR STD. 840.27	TYPE "D" STD. 840.19 OR STD. 840.28	J.B. STD. 840.31 OR 840.32	T.B.J.B. STD 840.34	T.B.D.I. STD. 840.35	T.B.D.I. STD. 840.36	STEEL FRAME WITH TWO GRATES STD. 840.37	M.H. STD. 840.51, STD. 840.52, OR STD. 840.53	M.H. FRAME AND COVER STD. 840.54	B.D.O. STD. 850.10	CONVERT EXISTING C.B. TO J.B.	CONVERT EXISTING C.B. TO D.I.	CONVERT EXISTING D.I. TO C.B.	ADJUST C.B.	CONC. & BRICK PIPE PLUG, C.Y. STD. 840.71	CONCRETE COLLARS CL. "B" STD. 840.72	PIPE REMOVAL LIN. FT.	FLOWABLE FILL LIN. FT.	FLARED END SECTION	SPECIAL RISER	REMARKS
L 9+07	A1																																					This pipe only needed if existing pipe cannot be reused
L 28+05	C2	1.5																																				Endwall
L 28+08	C1				1							1																										Open Throat CB
L 28+62	D1				1							1																										Open Throat CB
L 28+55	D3				1							1																										Open Throat CB
L 29+62	D4	1.0																																				Endwall
L 46+50	G1																																					Total length of double 24" rcp
L 112+60	I1																																					Total length of double 30" rcp
L 117+95	J1																																					Total length of double 24" rcp
TOTAL		2.5	0	0	3	0.0	0.0	0	0	0	0	3	0	0	0	0	0	0	0	0	0	0	0	0	0	0	0	0	0	0	0	0.000	0.0000	0	0	0	0	
GRAND TOTAL		2.5	0	0	3	0.00		0	0	0	0	3	0	0	0	0	0	0	0	0	0	0	0	0	0	0	0	0	0	0	0	0.000	0.0000	0	0	0	0	

ABBREVIATIONS
- **C.A.A.** CORRUGATED ALUMINIUM ALLOY
- **C.B.** CATCH BASIN
- **C.S.** CORRUGATED STEEL
- **D.I.** DROP INLET
- **G.D.I.** GRATED DROP INLET
- **H.D.P.E.** HIGH DENSITY POLYETHYLENE
- **J.B.** JUNCTION BOX
- **M.H.** MANHOLE
- **N.S.** NARROW SLOT
- **P.V.C.** POLYVINYL CHLORIDE
- **R.C.** REINFORCED CONCRETE
- **T.B.D.I.** TRAFFIC BEARING DROP INLET
- **T.B.J.B.** TRAFFIC BEARING JUNCTION BOX
- **W.S.** WIDE SLOT

THE GREAT SEAL OF THE CITY OF MOUNT AIRY · NORTH CAROLINA · 1885

LOVILLS CREEK AND
ARARAT RIVER GREENWAY
WORTH STREET TO THARINGTON PARK

STEWART
Firm License No. C-1051
421 Fayetteville St, Suite 400
Raleigh, NC 27601
T 919.380.8750
www.stewartinc.com

NORTH CAROLINA PROFESSIONAL SEAL 035700 ENGINEER KEVIN P. HIGGINS
Kevin P. Higgins 11/13/14

Baker
Michael Baker Engineering Inc.
8000 Regency Parkway, Suite 600
Cary, NORTH CAROLINA 27518
Phone 919 463 5488
Fax 919 463 5490
License # F-1084

DATE: NOVEMBER 12, 2014

REVISIONS:

NO.	DATE

PROJECT NO.: H13007.00

NOTE:
CONTRACTOR SHALL KEEP EXISTING SECTION OF GREENWAY OPEN TO WORTH STREET UNTIL HE IS READY TO PAVE NEW SECTION. ONCE EXISTING GREENWAY IS CLOSED TO MAKE NEW CONNECTION, CONTRACTOR MUST REOPEN SECTION TO WORTH STREET WITHIN 7 DAYS.

TORRES DEBORAH G
TORRES VENANCIO
Parcel ID: 502018405738
Deed Book: 00912 Pg: 0224

RELOCATE TRASH CAN AND SIGNS PER CITY DIRECTION

REMOVE 156 SY ASPHALT PAVEMENT & BOLLARDS AT COMPLETION OF PROJECT

PROP CLASS 'B' RIP RAP L=5 FEET, 1 TON W/5 SY FF

LOVILLS CREEK

INSTALL STOP BAR (28 LF) AND HIGH VISIBILITY CROSSWALK

BEGIN EB-5014
-L- STA. 8+47.46
BEGIN 10' ASPHALT GREENWAY MATCH EXISTING ASPHALT

PC Sta8+47.46
POT Sta8+15.00

INSTALL TYPICAL BOLLARD PLACEMENT 5' IN FRONT OF EXISTING BOARDWALK

S 35° 41' 07.1" E

PRC Sta8+75.81
PT Sta9+52.41
PC Sta10+06.92
PT Sta10+92.20
PRC Sta12+05.71
PRC Sta12+76.47
PRC Sta13+59.28
PRC Sta15+28.63
PRC Sta15+92.36
PRC Sta16+51.69
PRC Sta17+83.83
PRC Sta18+55.11
PRC Sta19+62.33
PT Sta19+97.07
PC Sta20+49.81

WORTH STREET

KODIAK LANE

AMFIKLIA LLC
Parcel ID: 502018407376
Deed Book: 01358 Pg: 1079

SLATE G EDWARD
Parcel ID: 502019500104
Deed Book: 00538 Pg: 0437
Plat Book: 012 Pg: 0173

SLATE MOTOR CO INC
C/O G EDWARD SLATE
Parcel ID: 592907592915
Deed Book: 00538 Pg: 0434
Plat Book: 012 Pg: 0173

S 70° 51' 40.6" E
S 36° 46' 05.7" E
S 32° 27' 48.3" E
S 45° 49' 31.1" E
S 35° 52' 21.2" E

REMOVE 15" & REPLACE W/ 32LF 15" RCP, -L- STA. 9+06
INV IN=996.00
INV OUT=995.60

REMOVE EXISTING STOPBAR AND PAVEMENT MARKING LINES THAT CONFLICT (APPROX. 145 LF)

MATCH EXISTING PAVEMENT
INSTALL DETECTABLE WARNING STRIPS
-L- 9+52.00 & -L- 10+10.00

PC Sta10+47.45
PT Sta10+27.08

10' ASPHALT GREENWAY

INSTALL GRANITE MILE MARKER "4.25 MILES"
-L- STA. 15+20, 8' LT

PRC Sta17+08.27
PT Sta18+96.53
PC Sta20+19.10

-L- STA. 20+50.00 SEE SHEET 5

US 52 NB

INSTALL MODIFIED R10-15 SIGNS (30"x39")
-L- STA. 10+26, 32' RT
-L- STA. 9+49, 11' LT
SEE TRAFFIC SIGNAL PLANS FOR ADDITIONAL LOCATIONS

US 52 SB

MODIFIED R10-15 (30"x39")

TURNING VEHICLES TO

-L-

PI STA 8+62.03 Δ = 32° 28' 58.6" (RT) D = 114° 35' 29.6" L = 28.35' T = 14.57' R = 50.00'	PI STA 9+14.96 Δ = 29° 15' 39.8" (LT) D = 38° 11' 49.9" L = 76.61' T = 39.16' R = 150.00'	PI STA 10+17.40 Δ = 38° 29' 52.3" (LT) D = 190° 59' 09.4" L = 20.16' T = 10.48' R = 30.00'	PI STA 10+70.51 Δ = 34° 11' 34.9" (RT) D = 76° 23' 39.7" L = 44.76' T = 23.07' R = 75.00'	PI STA 12+41.15 Δ = 8° 06' 32.1" (RT) D = 11° 27' 33.0" L = 70.76' T = 35.44' R = 500.00'	PI STA 13+18.48 Δ = 23° 43' 18.8" (LT) D = 28° 38' 52.4" L = 82.80' T = 42.00' R = 200.00'
PI STA 14+44.77 Δ = 19° 24' 20.2" (RT) D = 11° 27' 33.0" L = 169.35' T = 85.49' R = 500.00'	PI STA 15+60.77 Δ = 18° 15' 32.3" (LT) D = 28° 38' 52.4" L = 63.74' T = 32.14' R = 200.00'	PI STA 16+22.42 Δ = 22° 39' 47.9" (RT) D = 38° 11' 49.9" L = 59.33' T = 30.06' R = 150.00'	PI STA 16+80.76 Δ = 32° 25' 02.1" (LT) D = 57° 17' 44.8" L = 56.58' T = 29.07' R = 100.00'	PI STA 17+46.87 Δ = 28° 51' 35.9" (RT) D = 38° 11' 49.9" L = 75.56' T = 38.60' R = 150.00'	PI STA 18+20.15 Δ = 27° 13' 34.2" (LT) D = 38° 11' 49.9" L = 71.28' T = 36.33' R = 150.00'
PI STA 18+72.90 Δ = 13° 31' 45.8" (RT) D = 38° 11' 49.9" L = 35.42' T = 17.79' R = 150.00'	PI STA 19+79.74 Δ = 9° 57' 10.0" (RT) D = 28° 38' 52.4" L = 34.74' T = 17.41' R = 200.00'	PI STA 20+34.68 Δ = 23° 27' 33.2" (LT) D = 76° 23' 39.7" L = 30.71' T = 15.57' R = 75.00'			

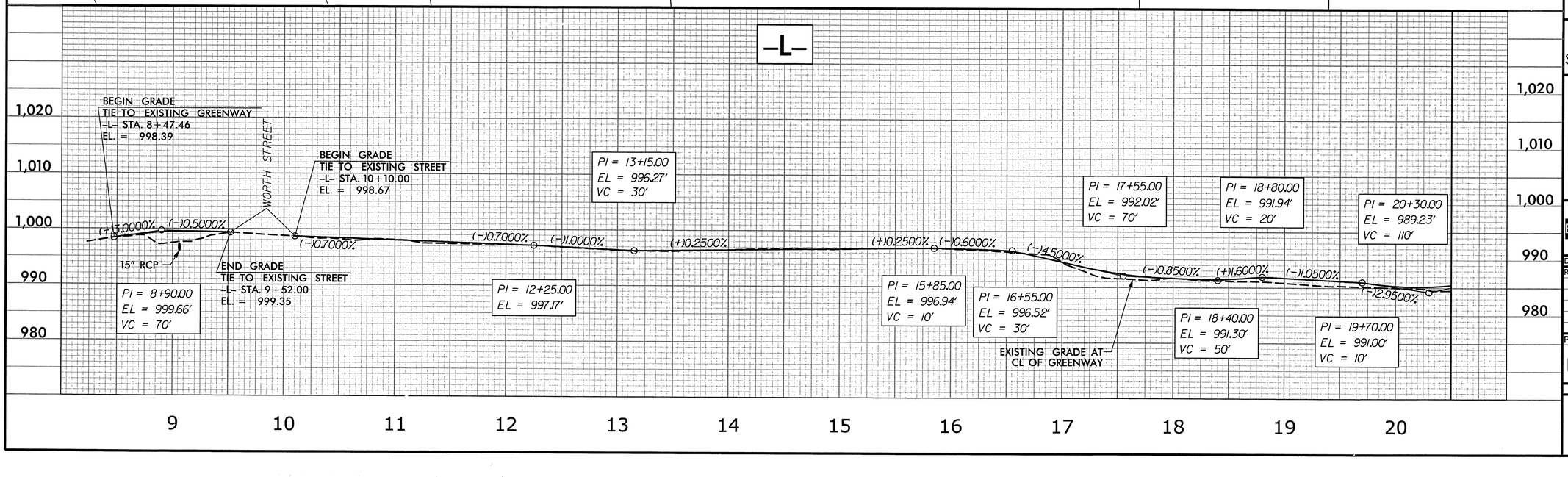

LOVILLS CREEK AND ARARAT RIVER GREENWAY

WORTH STREET TO THARINGTON PARK

GREENWAY ENGINEER
NORTH CAROLINA PROFESSIONAL SEAL 20615 ENGINEER MATTHEW C. LUMPKIN
11/12/14

STEWART
Firm License No. C-1051
423 Fayetteville St.
Suite 400
Raleigh, NC 27601
T: 919.380.8750
www.stewartinc.com

HYDRAULICS ENGINEER
NORTH CAROLINA PROFESSIONAL SEAL 035700 ENGINEER KEVIN P. HIGGINS
11/13/14

Baker
Michael Baker Engineering Inc.
8000 Regency Parkway, Suite 600
Cary, NORTH CAROLINA 27518
Fax 919.463.5490
License # C-1045

DATE: NOVEMBER 12, 2014

REVISIONS:

NO.	DATE

PROJECT NO.:
H13007.00

4

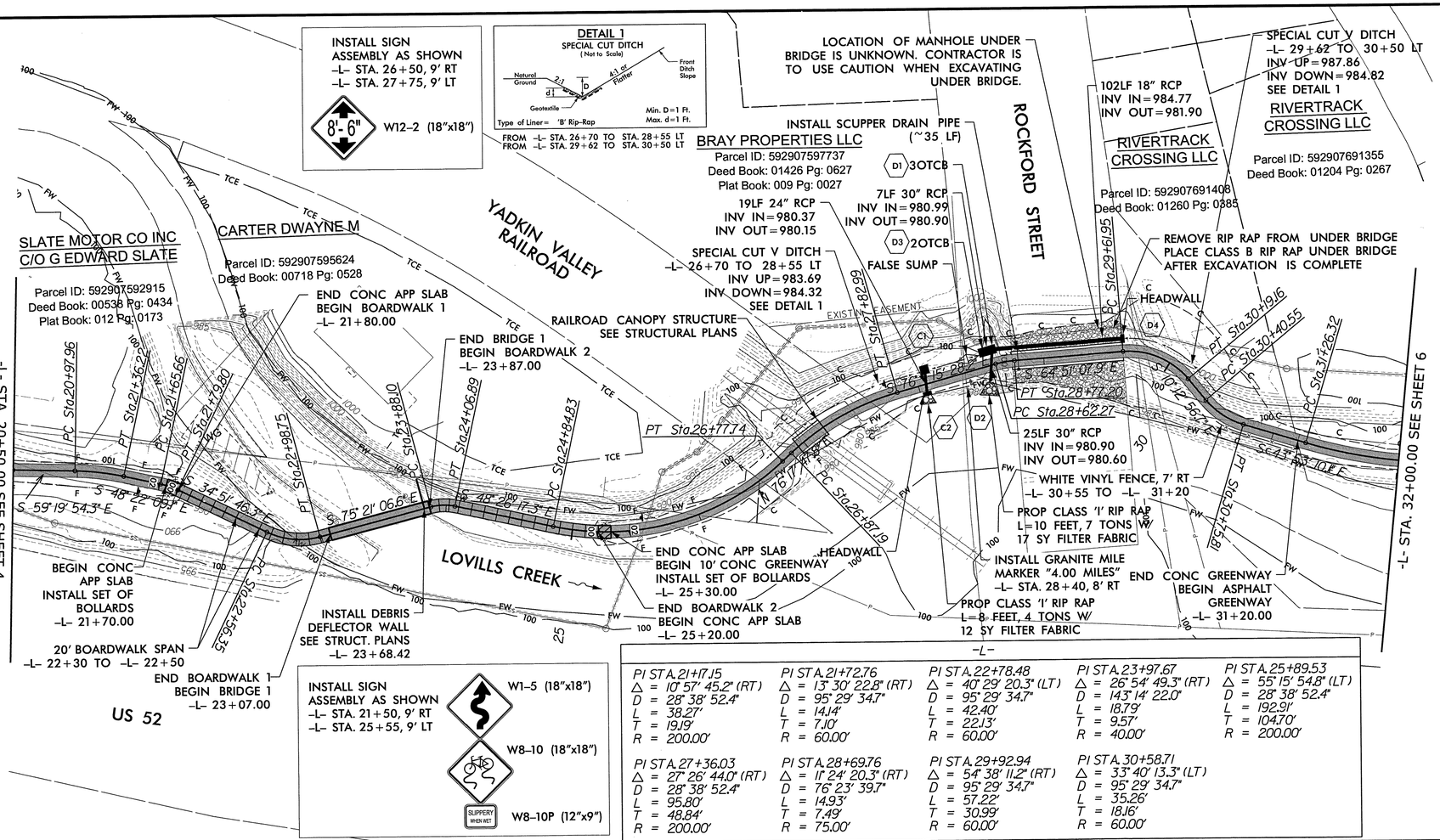

–L–

PI STA. 21+17.15 Δ = 10° 57' 45.2" (RT) D = 28° 38' 52.4" L = 38.27' T = 19.19' R = 200.00'	PI STA. 21+72.76 Δ = 13° 30' 22.8" (RT) D = 95° 29' 34.7" L = 14.14' T = 7.10' R = 60.00'	PI STA. 22+78.48 Δ = 40° 29' 20.3" (LT) D = 95° 29' 34.7" L = 42.40' T = 22.13' R = 60.00'	PI STA. 23+97.67 Δ = 26° 54' 49.3" (RT) D = 143° 14' 22.0" L = 18.79' T = 9.57' R = 40.00'	PI STA. 25+89.53 Δ = 55° 15' 54.8" (LT) D = 28° 38' 52.4" L = 192.91' T = 104.70' R = 200.00'
PI STA. 27+36.03 Δ = 27° 26' 44.0" (RT) D = 28° 38' 52.4" L = 95.80' T = 48.84' R = 200.00'	PI STA. 28+69.76 Δ = 11° 24' 20.3" (RT) D = 76° 23' 39.7" L = 14.93' T = 7.49' R = 75.00'	PI STA. 29+92.94 Δ = 54° 38' 11.2" (RT) D = 95° 29' 34.7" L = 57.22' T = 30.99' R = 60.00'	PI STA. 30+58.71 Δ = 33° 40' 13.3" (LT) D = 95° 29' 34.7" L = 35.26' T = 18.16' R = 60.00'	

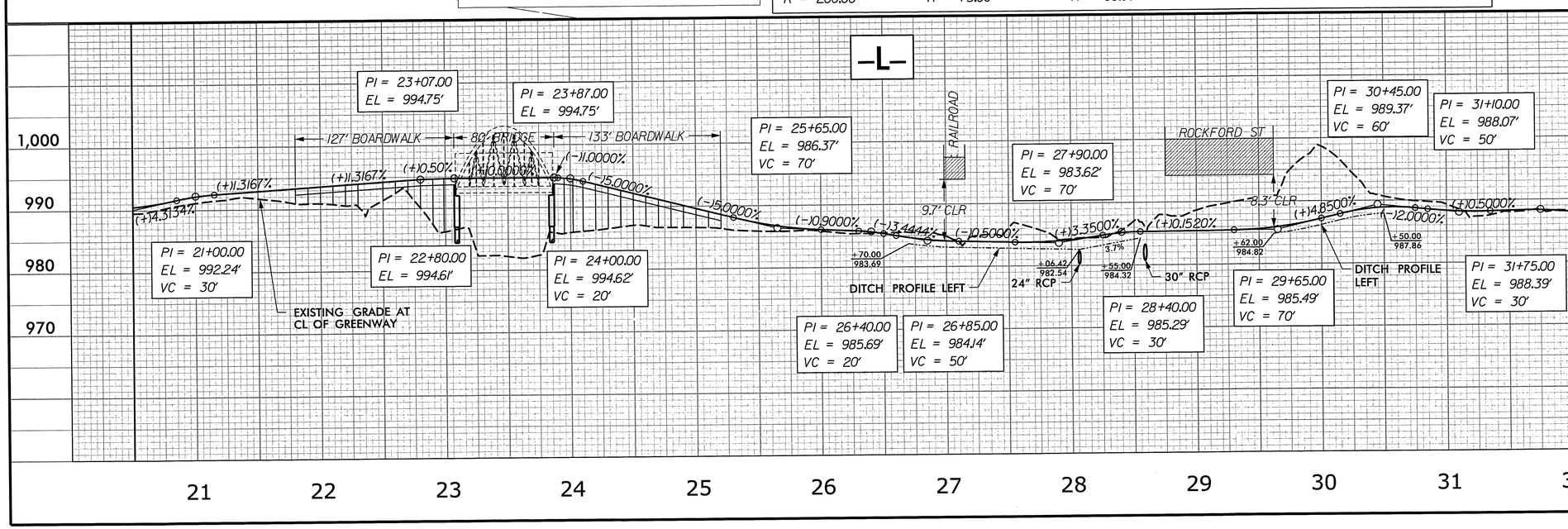

LOVILLS CREEK AND ARARAT RIVER GREENWAY

WORTH STREET TO THARINGTON PARK

GREENWAY ENGINEER

NORTH CAROLINA PROFESSIONAL SEAL 40915 ENGINEER MATTHEW C. LUDWIG
11/12/14

STEWART

Firm License No. C-1051
421 Fayetteville St.
Suite 400
Raleigh, NC 27601
T 919.380.8750
www.stewartinc.com

HYDRAULICS ENGINEER

NORTH CAROLINA PROFESSIONAL SEAL 035700 ENGINEER KEVIN P. HIGGINS
11/13/14

Baker

Michael Baker Engineering Inc.
8000 Regency Parkway
Suite 600
Cary, North Carolina 27518
Phone: 919.481.5400
Fax: 919.463.5490
License # P-1084

DATE: NOVEMBER 12, 2014

REVISIONS:

NO.	DATE

PROJECT NO.:

H13007.00

5

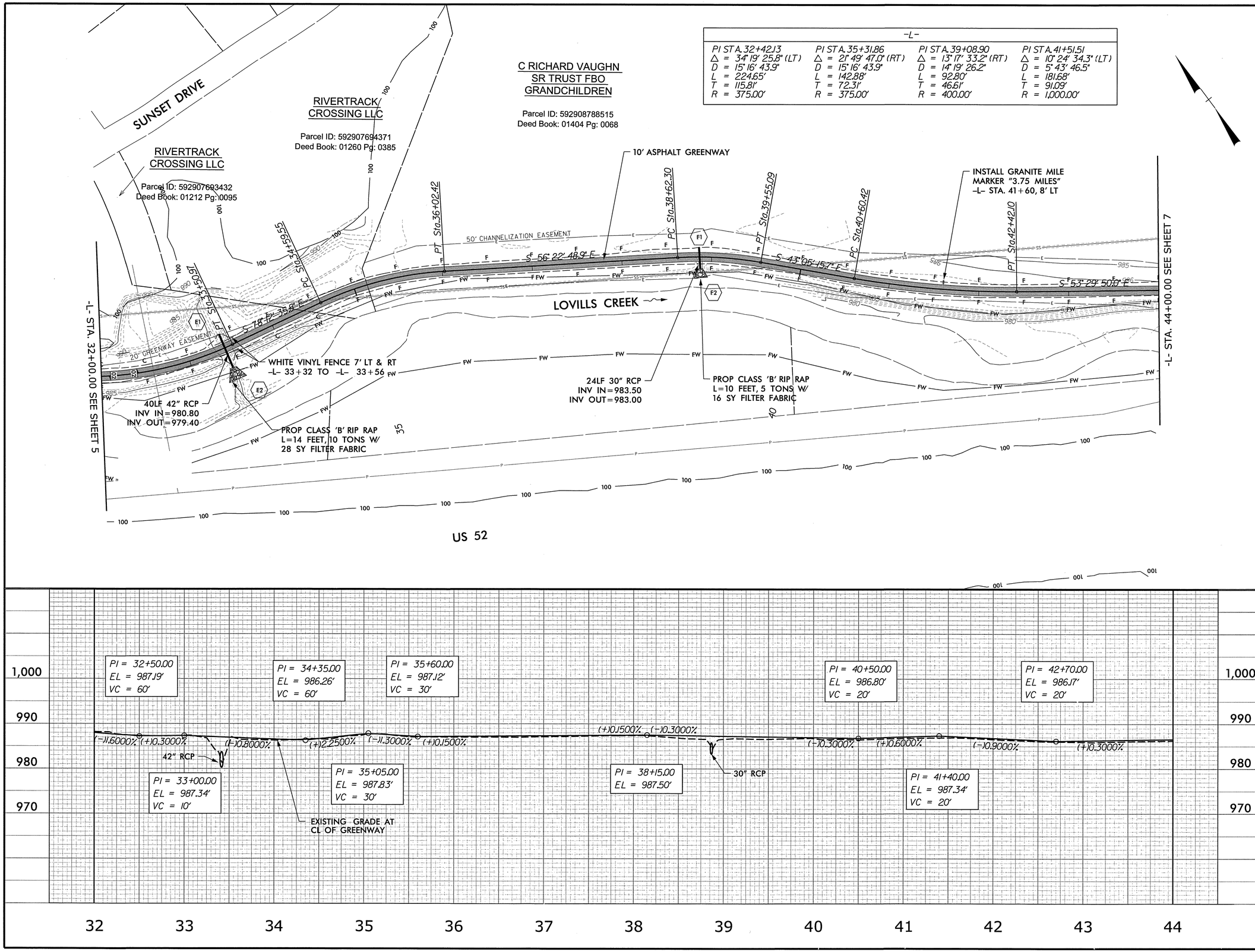

-L-			
PI STA. 32+42.13	PI STA. 35+31.86	PI STA. 39+08.90	PI STA. 41+51.51
△ = 34° 19' 25.8" (LT)	△ = 21° 49' 47.0" (RT)	△ = 13° 17' 33.2" (RT)	△ = 10° 24' 34.3" (LT)
D = 15° 16' 43.9"	D = 15° 16' 43.9"	D = 14° 19' 26.2"	D = 5° 43' 46.5"
L = 224.65'	L = 142.88'	L = 92.80'	L = 181.68'
T = 115.81'	T = 72.31'	T = 46.61'	T = 91.09'
R = 375.00'	R = 375.00'	R = 400.00'	R = 1,000.00'

LOVILLS CREEK AND ARARAT RIVER GREENWAY

WORTH STREET TO THARINGTON PARK

GREENWAY ENGINEER

NORTH CAROLINA PROFESSIONAL SEAL 40615 ENGINEER MATTHEW C. LUDWIG 11/12/14

STEWART

Firm License No. C-1051
421 Fayetteville St.
Suite 400
Raleigh, NC 27601
T 919.380.8750
www.stewartinc.com

HYDRAULICS ENGINEER

NORTH CAROLINA PROFESSIONAL SEAL 035700 ENGINEER KEVIN P. HIGGINS 11/13/14

Baker

Michael Baker Engineering Inc.
8000 Regency Parkway, Suite 600
Cary, NORTH CAROLINA 27518
Phone: 919.463.5600
Fax: 919.463.5601
License # F-1084

DATE: NOVEMBER 12, 2014

REVISIONS:

NO.	DATE

PROJECT NO.:

H13007.00

6

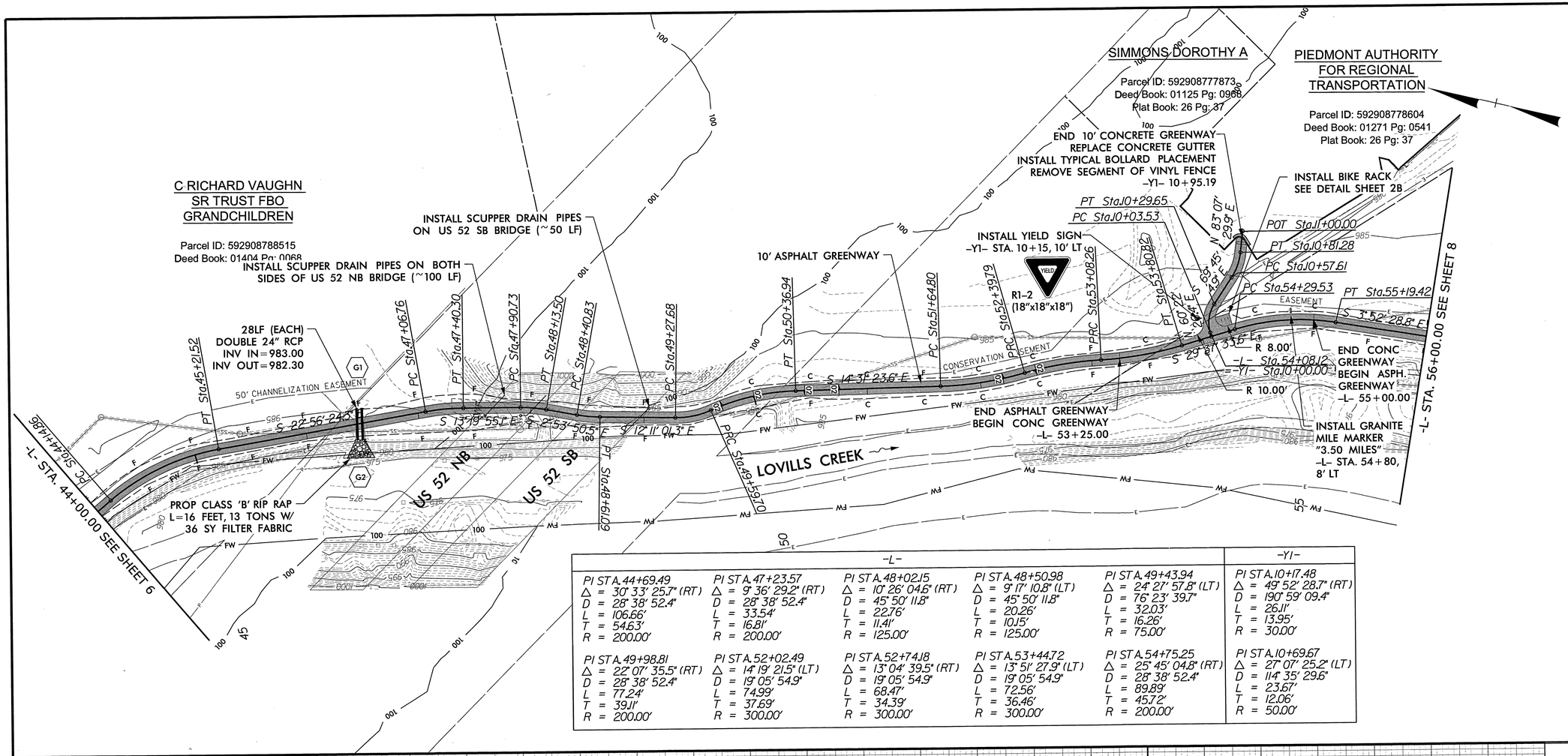

-L-					-Y1-
PI STA. 44+69.49 Δ = 30° 33' 25.7" (RT) D = 28° 38' 52.4" L = 106.66' T = 54.63' R = 200.00'	PI STA. 47+23.57 Δ = 9° 36' 29.2" (RT) D = 28° 38' 52.4" L = 33.54' T = 16.81' R = 200.00'	PI STA. 48+02.15 Δ = 10° 26' 04.6" (RT) D = 45° 50' 11.8" L = 22.76' T = 11.41' R = 125.00'	PI STA. 48+50.98 Δ = 9° 17' 10.8" (LT) D = 45° 50' 11.8" L = 20.26' T = 10.15' R = 125.00'	PI STA. 49+43.94 Δ = 24° 27' 57.8" (LT) D = 76° 23' 39.7" L = 32.03' T = 16.26' R = 75.00'	PI STA. 10+17.48 Δ = 49° 52' 28.7" (RT) D = 190° 59' 09.4" L = 26.11' T = 13.95' R = 30.00'
PI STA. 49+98.81 Δ = 22° 07' 35.5" (RT) D = 28° 38' 52.4" L = 77.24' T = 39.11' R = 200.00'	PI STA. 52+02.49 Δ = 14° 19' 21.5" (LT) D = 19° 05' 54.9" L = 74.99' T = 37.69' R = 300.00'	PI STA. 52+74.18 Δ = 13° 04' 39.5" (RT) D = 19° 05' 54.9" L = 68.47' T = 34.39' R = 300.00'	PI STA. 53+44.72 Δ = 13° 51' 27.9" (LT) D = 19° 05' 54.9" L = 72.56' T = 36.46' R = 300.00'	PI STA. 54+75.25 Δ = 25° 45' 04.8" (RT) D = 28° 38' 52.4" L = 89.89' T = 45.72' R = 200.00'	PI STA. 10+69.67 Δ = 27° 07' 25.2" (LT) D = 114° 35' 29.6" L = 23.67' T = 12.06' R = 50.00'

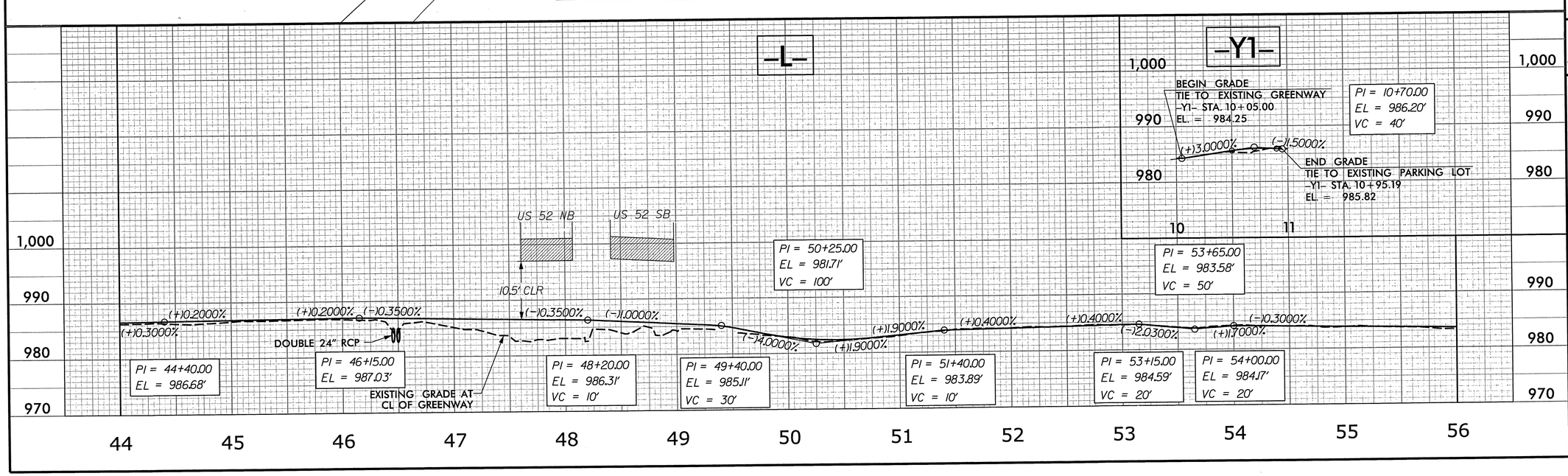

LOVILLS CREEK AND
ARARAT RIVER GREENWAY
WORTH STREET TO THARINGTON PARK

GREENWAY ENGINEER
NORTH CAROLINA PROFESSIONAL ENGINEER SEAL 40615 MATTHEW C. LUMSDEN 11/12/14
STEWART
Firm License No. C-1051
423 Fayetteville St.
Suite 600
Raleigh, NC 27601
T. 919.380.8750
www.stewartinc.com

HYDRAULICS ENGINEER
NORTH CAROLINA PROFESSIONAL ENGINEER SEAL 035300 KEVIN P. HIGGINS 11/13/14
Baker
Michael Baker Engineering Inc.
8000 Regency Parkway, Suite 600
Cary, NORTH CAROLINA 27518
Phone: 919.463.5488
Fax: 919.463.5490
License # C-1048

DATE: NOVEMBER 12, 2014
REVISIONS:

NO.	DATE

PROJECT NO.:
H13007.00

7

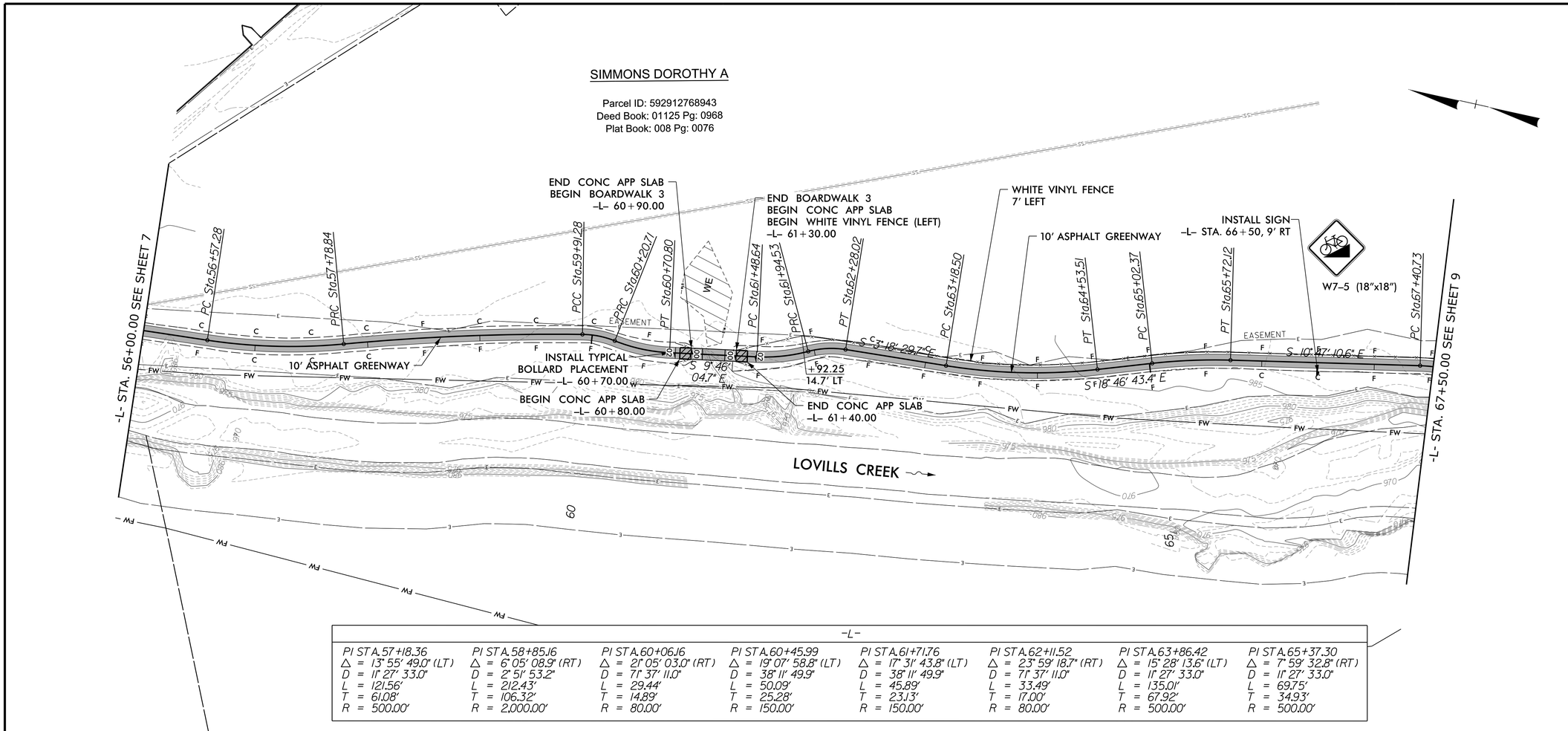

-L-

PI STA.57+18.36	PI STA.58+85.16	PI STA.60+06.16	PI STA.60+45.99	PI STA.61+71.76	PI STA.62+11.52	PI STA.63+86.42	PI STA.65+37.30
Δ = 13° 55' 49.0" (LT)	Δ = 6° 05' 08.9" (RT)	Δ = 21° 05' 03.0" (RT)	Δ = 19° 07' 58.8" (LT)	Δ = 17° 31' 43.8" (LT)	Δ = 23° 59' 18.7" (RT)	Δ = 15° 28' 13.6" (LT)	Δ = 7° 59' 32.8" (RT)
D = 11° 27' 33.0"	D = 2° 51' 53.2"	D = 71° 37' 11.0"	D = 38° 11' 49.9"	D = 38° 11' 49.9"	D = 71° 37' 11.0"	D = 11° 27' 33.0"	D = 11° 27' 33.0"
L = 121.56'	L = 212.43'	L = 29.44'	L = 50.09'	L = 45.89'	L = 33.49'	L = 135.01'	L = 69.75'
T = 61.08'	T = 106.32'	T = 14.89'	T = 25.28'	T = 23.13'	T = 17.00'	T = 67.92'	T = 34.93'
R = 500.00'	R = 2,000.00'	R = 80.00'	R = 150.00'	R = 150.00'	R = 80.00'	R = 500.00'	R = 500.00'

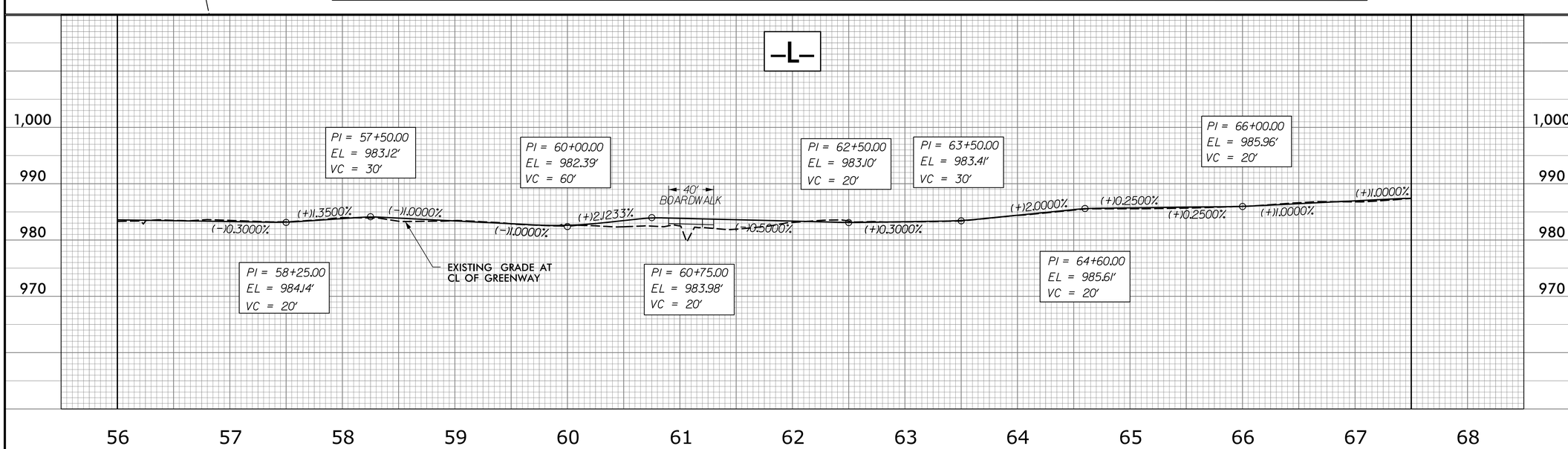

LOVILLS CREEK AND ARARAT RIVER GREENWAY

WORTH STREET TO THARINGTON PARK

GREENWAY ENGINEER

STEWART

DATE: NOVEMBER 12, 2014

REVISIONS:

NO.	DATE

PROJECT NO.:

H13007.00

8

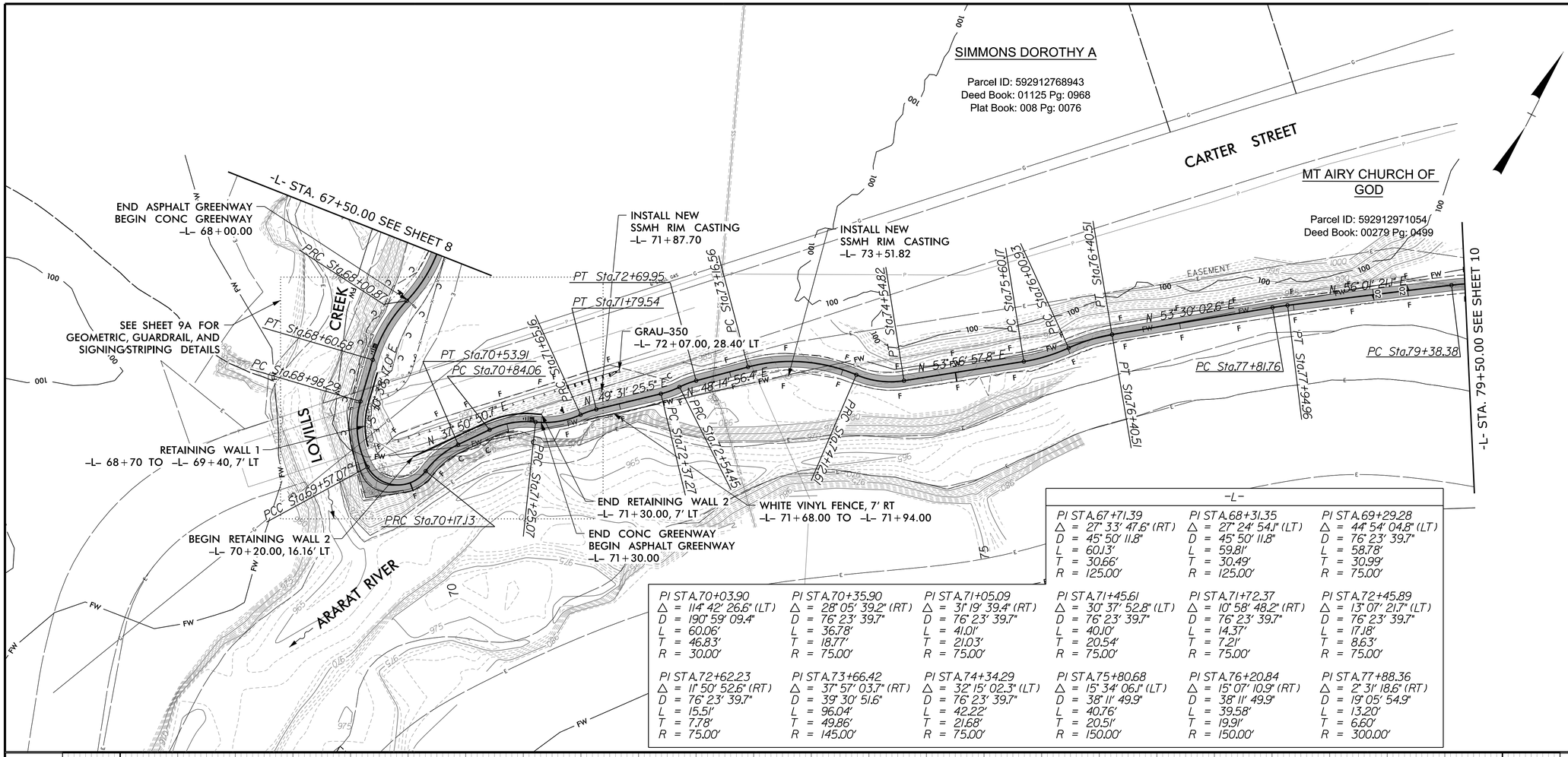

-L-

PI STA.67+71.39 △ = 27° 33' 47.6" (RT) D = 45° 50' 11.8" L = 60.13' T = 30.66' R = 125.00'	PI STA.68+31.35 △ = 27° 24' 54.1" (LT) D = 45° 50' 11.8" L = 59.81' T = 30.49' R = 125.00'	PI STA.69+29.28 △ = 44° 54' 04.8" (LT) D = 76° 23' 39.7" L = 58.78' T = 30.99' R = 75.00'
PI STA.70+03.90 △ = 114° 42' 26.6" (LT) D = 190° 59' 09.4" L = 60.06' T = 46.83' R = 30.00'	PI STA.70+35.90 △ = 28° 05' 39.2" (RT) D = 76° 23' 39.7" L = 36.78' T = 18.77' R = 75.00'	PI STA.71+05.09 △ = 31° 19' 39.4" (RT) D = 76° 23' 39.7" L = 41.01' T = 21.03' R = 75.00'
PI STA.71+45.61 △ = 30° 37' 52.8" (LT) D = 76° 23' 39.7" L = 40.10' T = 20.54' R = 75.00'	PI STA.71+72.37 △ = 10° 58' 48.2" (RT) D = 76° 23' 39.7" L = 14.37' T = 7.21' R = 75.00'	PI STA.72+45.89 △ = 13° 07' 21.7" (LT) D = 76° 23' 39.7" L = 17.18' T = 8.63' R = 75.00'
PI STA.72+62.23 △ = 11° 50' 52.6" (RT) D = 76° 23' 39.7" L = 15.51' T = 7.78' R = 75.00'	PI STA.73+66.42 △ = 37° 57' 03.7" (RT) D = 39° 30' 51.6" L = 96.04' T = 49.86' R = 145.00'	PI STA.74+34.29 △ = 32° 15' 02.3" (LT) D = 76° 23' 39.7" L = 42.22' T = 21.68' R = 75.00'
PI STA.75+80.68 △ = 15° 34' 06.1" (LT) D = 38° 11' 49.9" L = 40.76' T = 20.51' R = 150.00'	PI STA.76+20.84 △ = 15° 07' 10.9" (RT) D = 38° 11' 49.9" L = 39.58' T = 19.91' R = 150.00'	PI STA.77+88.36 △ = 2° 31' 18.6" (RT) D = 19° 05' 54.9" L = 13.20' T = 6.60' R = 300.00'

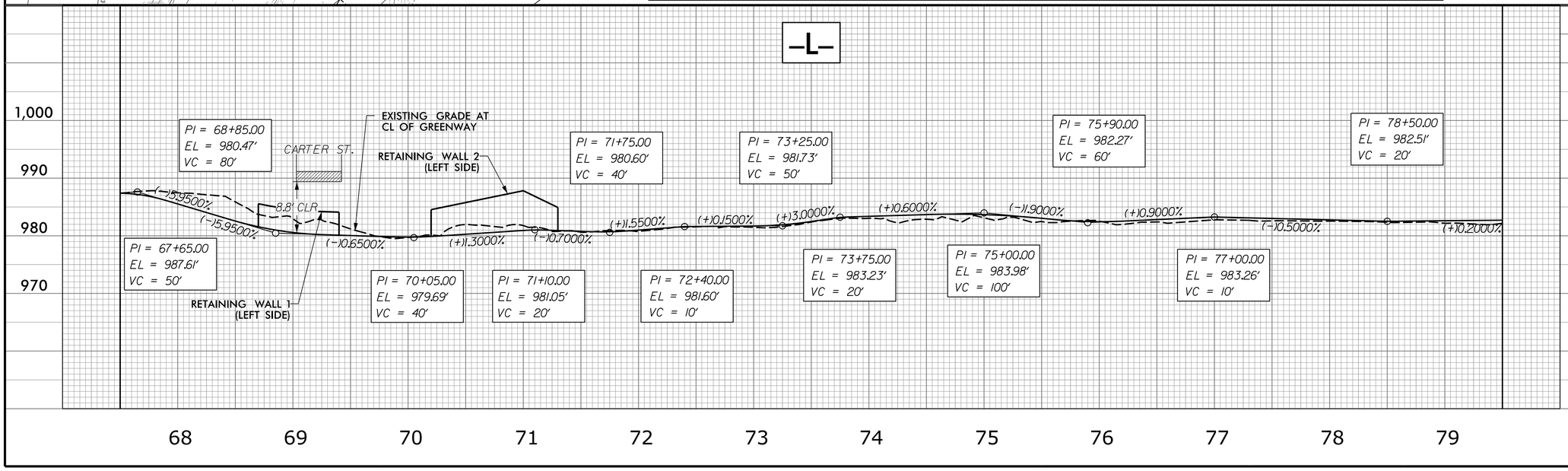

LOVILLS CREEK AND ARARAT RIVER GREENWAY

WORTH STREET TO THARINGTON PARK

GREENWAY ENGINEER

NORTH CAROLINA PROFESSIONAL SEAL 40615 ENGINEER MATTHEW C. LIDDY
11/12/14

STEWART
Firm License No. C-1051
421 Fayetteville St.
Suite 400
Raleigh, NC 27601
T 919.380.8750
www.stewartinc.com

DATE: NOVEMBER 12, 2014

REVISIONS:

NO.	DATE

PROJECT NO.:

H13007.00

9

INSTALL SIGN ASSEMBLY
–L– STA. 68+00, 9' RT

W1–1, 18"x18"

5 MPH CUSTOM, 18"x9"

BEGIN CENTERLINE AND EDGE LINE PAINT STRIPES
–L– STA. 68+00

INSTALL GRANITE MILE MARKER "3.25 MILES"
–L– STA. 68+00, 8' LT

PRC Sta.68+00.87

BEGIN WHITE VINYL FENCE
–L– 68+40.00, 7' RT

INSTALL "SLOW" PAVEMENT MARKING
–L– STA. 68+45 RT

END WHITE VINYL FENCE
STA. –L– 68+36.00, 33.50' LT

SHOP CURVED GUARDRAIL
(R=40') WITH AT–1 TERMINAL
STA. –L– 68+43.41, 34.48' LT

PT Sta.68+60.68

PC Sta.68+98.29

SEE CROSS SECTIONS FOR ROADWAY SHOULDER GRADING

TIE PROPOSED GUARDRAIL TO EXISTING GUARDRAIL ON BRIDGE

LOVILLS CREEK

RETAINING WALL 1
–L– 68+70 TO –L– 69+40, 7' LT

PLACE CLASS B RIP RAP ABOVE RETAINING WALL UNDER BRIDGE

BEGIN RETAINING WALL 2
–L– 70+20.00, 16.16' LT

+42.67
0.00' LT

BEGIN WHITE VINYL FENCE
–L– 69+70.00, 6' LT

+49.67
7.68' RT

+55.00
6.62' RT

+55.00
1.02' RT

+79.31
7.0' LT

+70.00
1.91' RT

+85.00
0.63' RT

PCC Sta.69+57.07

R 25'

+70.00
9.06' RT

+85.00
6.37' RT

R 25'

+71.22
19.86' RT

+93.26
7.00' RT

4" WHITE EDGELINE BULBOUT

4" YELLOW CENTERLINE BULBOUT

NOTE:
BULB OUT PAVEMENT MARKINGS AS SHOWN BETWEEN –L– STA. 69+42 AND STA. 69+93

PRC Sta.70+17.13

END WHITE VINYL FENCE
–L– 70+17.00, 7' LT

PT Sta.70+53.91

PC Sta.70+84.06

END WHITE VINYL FENCE
–L– 71+03.00, 7' RT

THE CONTRACTOR MUST PROVIDE PORTABLE CONCRETE BARRIER ALONG THE EAST EDGE OF CARTER STREET BETWEEN THE CLEARING AND GRUBBING PHASE AND THE INSTALLATION OF PERMANENT GUARDRAIL. THE PORTABLE CONCRETE BARRIER MUST BE NO CLOSER THAN 2' TO THE EDGE OF THE ROADWAY. PORTABLE CONCRETE BARRIER IS INCIDENTAL TO THE TRAFFIC CONTROL PLAN.

CARTER STREET

BEGIN GUARDRAIL ANCHOR UNIT
–L– STA. 71+60.63, 28.15' LT

156 LF GUARDRAIL PLACED IN–LINE WITH CURRENT BRIDGE GUARDRAIL

END RETAINING WALL 2
–L– 71+30.00, 7' LT

END CENTERLINE AND EDGE LINE PAINT STRIPES
–L– STA. 71+30

PRC Sta.71+25.07

PRC Sta.71+66.16

PT Sta.71+79.54

INSTALL "SLOW" PAVEMENT MARKING
–L– STA. 71+25 LT

INSTALL SIGN ASSEMBLY
–L– STA. 71+50, 9' LT

W1–1, 18"x18"

5 MPH CUSTOM, 18"x9"

10 5 0 10 20
PLANS

LOVILLS CREEK AND ARARAT RIVER GREENWAY
WORTH STREET TO THARINGTON PARK

GREENWAY ENGINEER

NORTH CAROLINA PROFESSIONAL SEAL 40615 ENGINEER MATTHEW LUNN
11/12/14

Firm License No. C-1051
421 Fayetteville St. Mall
Suite 400
Raleigh, NC 27601
T. 919.380.8750
www.stewartinc.com
STEWART

DATE: NOVEMBER 12, 2014

REVISIONS:

NO.	DATE

PROJECT NO.:
H13007.00

9A

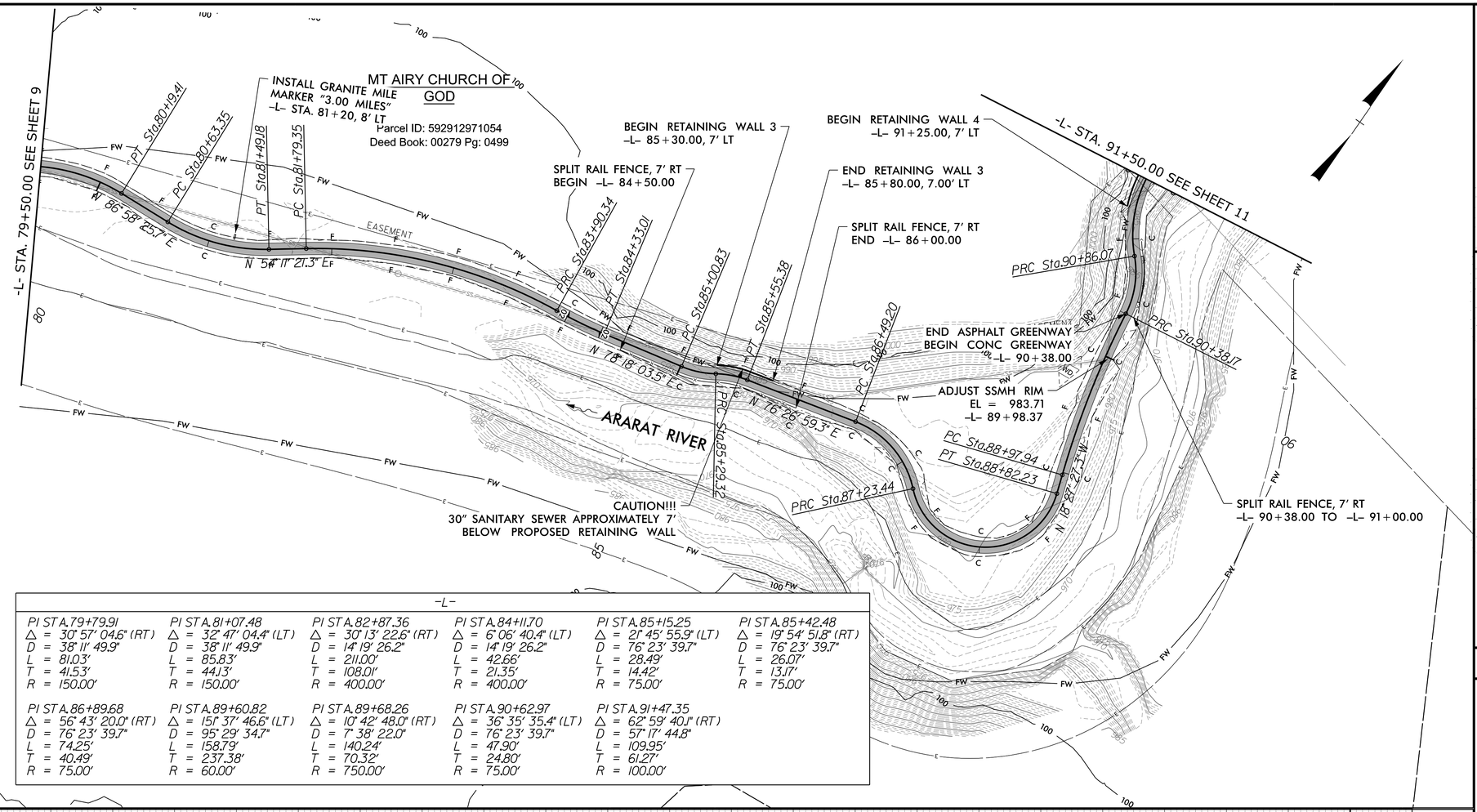

-L-

PI STA. 79+79.91	PI STA. 81+07.48	PI STA. 82+87.36	PI STA. 84+11.70	PI STA. 85+15.25	PI STA. 85+42.48
△ = 30° 57' 04.6" (RT)	△ = 32° 47' 04.4" (LT)	△ = 30° 13' 22.6" (RT)	△ = 6° 06' 40.4" (LT)	△ = 21° 45' 55.9" (LT)	△ = 19° 54' 51.8" (RT)
D = 38° 11' 49.9"	D = 38° 11' 49.9"	D = 14° 19' 26.2"	D = 14° 19' 26.2"	D = 76° 23' 39.7"	D = 76° 23' 39.7"
L = 81.03'	L = 85.83'	L = 211.00'	L = 42.66'	L = 28.49'	L = 26.07'
T = 41.53'	T = 44.13'	T = 108.01'	T = 21.35'	T = 14.42'	T = 13.17'
R = 150.00'	R = 150.00'	R = 400.00'	R = 400.00'	R = 75.00'	R = 75.00'

PI STA. 86+89.68	PI STA. 89+60.82	PI STA. 89+68.26	PI STA. 90+62.97	PI STA. 91+47.35	
△ = 56° 43' 20.0" (RT)	△ = 151° 37' 46.6" (LT)	△ = 10° 42' 48.0" (RT)	△ = 36° 35' 35.4" (LT)	△ = 62° 59' 40.1" (RT)	
D = 76° 23' 39.7"	D = 95° 29' 34.7"	D = 7° 38' 22.0"	D = 76° 23' 39.7"	D = 57° 17' 44.8"	
L = 74.25'	L = 158.79'	L = 140.24'	L = 47.90'	L = 109.95'	
T = 40.49'	T = 237.38'	T = 70.32'	T = 24.80'	T = 61.27'	
R = 75.00'	R = 60.00'	R = 750.00'	R = 75.00'	R = 100.00'	

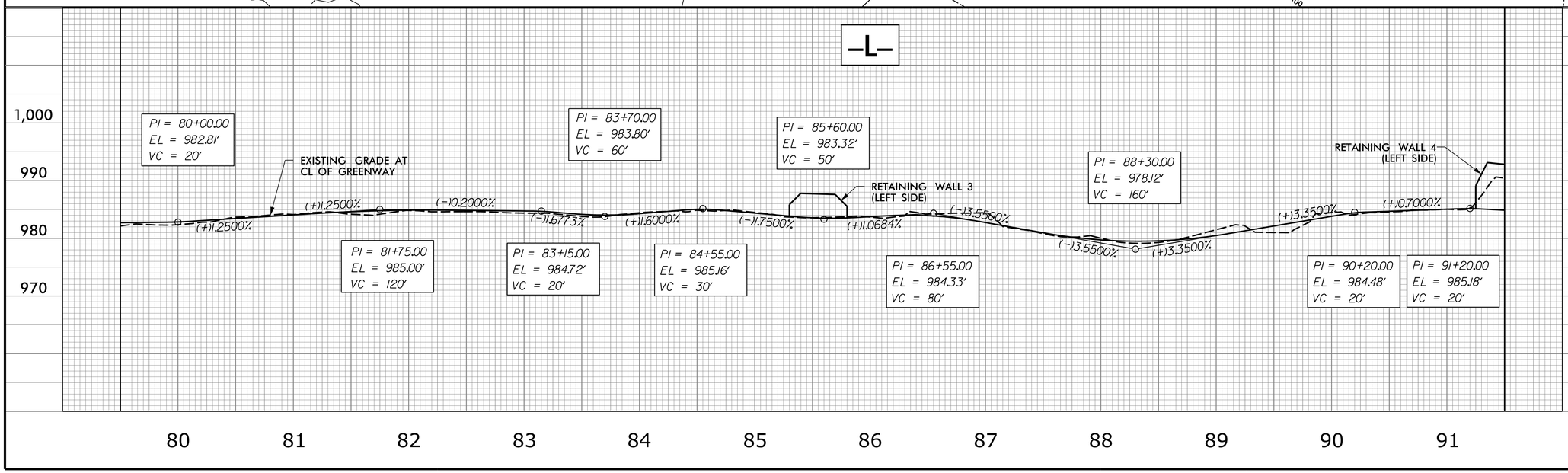

LOVILLS CREEK AND ARARAT RIVER GREENWAY

WORTH STREET TO THARINGTON PARK

GREENWAY ENGINEER

NORTH CAROLINA PROFESSIONAL SEAL 40615 ENGINEER MATTHEW C. LUDWIG 11/12/14

Firm License No. C-1051
421 Fayetteville St.
Suite 1100
Raleigh, NC 27601
T 919.380.8750
www.stewartinc.com
STEWART

DATE: NOVEMBER 12, 2014

REVISIONS:

NO.	DATE

PROJECT NO.:

H13007.00

10

INSTALL SIGN ASSEMBLY AS SHOWN
–L– STA. 92+60, 10' RT
–L– STA. 95+40, 9' RT

W1-5 (18"x18")

5 MPH

CUSTOM, 18"x9"

–L–					
PI STA. 92+61.94 Δ = 4° 10' 50.9" (LT) D = 22° 55' 05.9" L = 18.24' T = 9.13' R = 250.00'	PI STA. 93+46.07 Δ = 29° 00' 01.9" (LT) D = 76° 23' 39.7" L = 37.96' T = 19.40' R = 75.00'	PI STA. 93+96.78 Δ = 93° 56' 33.3" (RT) D = 190° 59' 09.4" L = 49.19' T = 32.14' R = 30.00'	PI STA. 94+24.32 Δ = 69° 57' 45.8" (LT) D = 38° 58' 18.7" L = 18.32' T = 10.50' R = 15.00'	PI STA. 94+99.51 Δ = 30° 29' 00.8" (LT) D = 42° 26' 28.7" L = 71.83' T = 36.78' R = 135.00'	PI STA. 96+19.96 Δ = 17° 07' 04.7" (RT) D = 76° 23' 39.7" L = 22.41' T = 11.29' R = 75.00'
PI STA. 96+52.06 Δ = 31° 15' 21.6" (LT) D = 76° 23' 39.7" L = 40.91' T = 20.98' R = 75.00'	PI STA. 96+81.08 Δ = 13° 48' 25.2" (RT) D = 76° 23' 39.7" L = 18.07' T = 9.08' R = 75.00'	PI STA. 97+39.71 Δ = 16° 24' 01.9" (RT) D = 57° 17' 44.8" L = 28.62' T = 14.41' R = 100.00'	PI STA. 98+27.36 Δ = 48° 14' 20.0" (RT) D = 76° 23' 39.7" L = 63.14' T = 33.58' R = 75.00'	PI STA. 99+20.24 Δ = 42° 48' 41.1" (LT) D = 76° 23' 39.7" L = 56.04' T = 29.40' R = 75.00'	PI STA. 101+32.23 Δ = 6° 19' 22.0" (LT) D = 19° 05' 54.9" L = 33.11' T = 16.57' R = 300.00'

BEROTH OIL CO INC
Parcel ID: 592908972658
Deed Book: 01260 Pg: 1093

HIRA PROPERTIES INC
Parcel ID: 592908971858
Deed Book: 01394 Pg: 1001

CENTRAL CONTINUING CARE ASSOC
Parcel ID: 592908980106
Deed Book: 00497 Pg: 1367

CITY OF MOUNT AIRY
Parcel ID: 592908974645
Deed Book: 01260 Pg: 1093
Plat Book: 25 Pg: 187

CITY OF MOUNT AIRY
Parcel ID: 592908985064
Deed Book: 01054 Pg: 0888

ARARAT RIVER

-L- STA. 91+50.00 SEE SHEET 10

-L- STA. 103+00.00 SEE SHEET 12

END RETAINING WALL 4
–L– 91+65.00, 7' LT

INSTALL SCUPPER DRAIN PIPES ON US 52 SB BRIDGE (~60 LF)

SPLIT RAIL FENCE, 7' RT
–L– 92+32.00 TO –L– 93+30.00

CENTERLINE AND EDGE LINE PAINT STRIPES
–L– STA. 93+50 TO 94+50

INSTALL GRANITE MILE MARKER "2.75 MILES"
–L– STA. 94+40, 8' LT

SPLIT RAIL FENCE, 7' RT
–L– 94+25.00 TO –L– 95+48.00

28LF 18" RCP
INV IN=981.50
INV OUT=981.25

PROP CLASS 'B' RIP RAP
L=6 FEET, 2 TONS W/
7 SY FILTER FABRIC

INSTALL SCUPPER DRAIN PIPES ON BOTH SIDES OF US 52 NB BRIDGE (~90 LF)

INSTALL NEW SSMH RIM CASTING
EL = 985.25
–L– 93+97.86

SPLIT RAIL FENCE, 7' RT
–L– 96+00.00 TO –L– 96+25.00

END RETAINING WALL 5
–L– 96+65.00, 7' LT

END RETAINING WALL 5
–L– 97+35.00, 7' LT

END CONC GREENWAY
BEGIN ASPHALT GREENWAY
–L– 97+84.00

SPLIT RAIL FENCE, 8' RT
–L– 96+84.00 TO –L– 97+84.00

US 52 SB
US 52 NB

PC Sta.91+96.02
PT Sta.92+52.82
PT Sta.92+71.06
PRC Sta.93+26.68
PRC Sta.93+64.64
PC Sta.94+13.83
PT Sta.94+32.14
PC Sta.94+62.12
PT Sta.95+31.55
PC Sta.96+08.68
PC Sta.96+31.08
PRC Sta.96+72.00
PT Sta.97+25.10
PC Sta.97+53.92
PT Sta.97+93.78
PT Sta.98+46.88
PT Sta.98+56.93
PC Sta.98+90.84
PC Sta.101+15.66
PT Sta.101+48.76
PC Sta.102+63.77

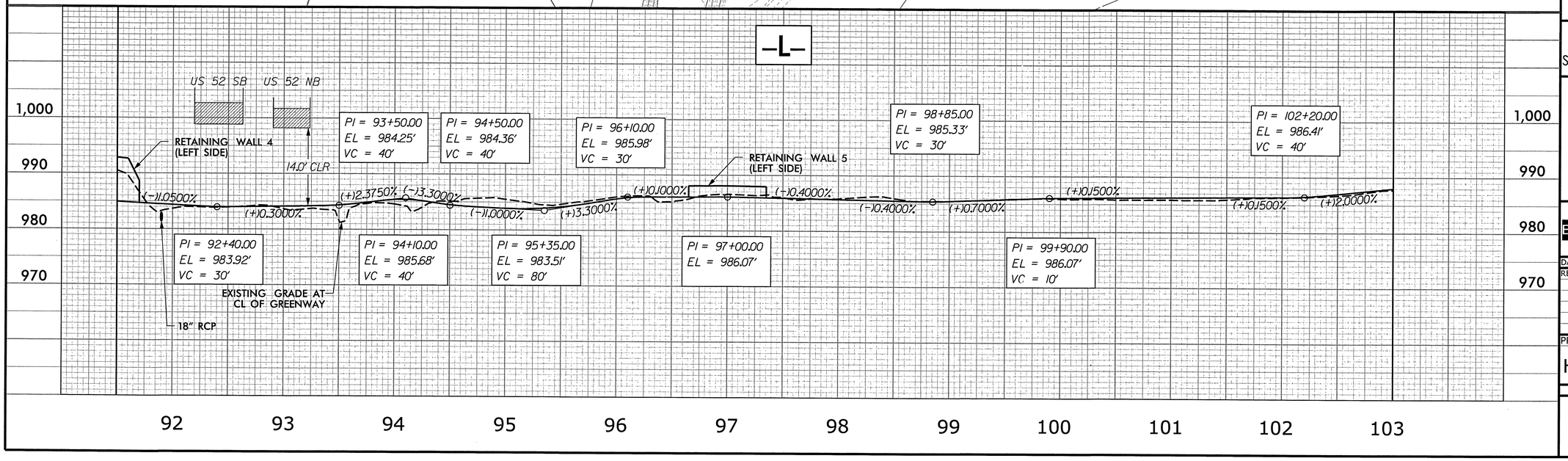

LOVILLS CREEK AND ARARAT RIVER GREENWAY

WORTH STREET TO THARINGTON PARK

GREENWAY ENGINEER

NORTH CAROLINA PROFESSIONAL SEAL 40615 ENGINEER MATTHEW C. LUDWIG
11/12/14

STEWART
Firm License No. C-1051
421 Fayetteville St.
Suite 400
Raleigh, NC 27601
T. 919.380.8750
www.stewartinc.com

HYDRAULICS ENGINEER

NORTH CAROLINA PROFESSIONAL SEAL 035700 ENGINEER P. HIGGINS
11/13/14

Baker
Michael Baker Engineering Inc.
8000 Regency Parkway, Suite 600
Cary, NC 27518
Phone: 919.463.5488
Fax: 919.463.5490
License # P-1084

DATE: NOVEMBER 12, 2014

REVISIONS:

NO.	DATE

PROJECT NO.:
H13007.00

11

GARDEN TERRACE
C/O JOHN EAGAN

Parcel ID: 592908980617
Deed Book: 00545 Pg: 1404
Plat Book: 012 Pg: 0190

HOUSING AUTHORITY
OF THE TOWN OF MT
AIRY

Parcel ID: 592908896311
Deed Book: 00291 Pg: 0273

INSTALL GRANITE MILE MARKER
"2.50 MILES"
-L- STA. 107+60, 8' LT
Parcel ID: 592908980400
Deed Book: 01054 Pg: 0888

28LF (EACH)
DOUBLE 30" RCP
INV IN = 982.00
INV OUT = 981.50

SPLIT RAIL FENCE, 7' RT
BEGIN -L- 106+16.00

SPLIT RAIL FENCE, 7' RT
BEGIN -L- 112+46.00

-L- STA. 103+00.00 SEE SHEET 11

-L- STA. 113+50.00 SEE SHEET 13

ARARAT RIVER

ADJUST SSMH RIM
EL = 988.02
-L- 106+73.74

SPLIT RAIL FENCE, 7' RT
END -L- 106+48.00

PROP CLASS 'B' RIP RAP
L=20 FEET, 20 TONS W/
53 SY FILTER FABRIC

SPLIT RAIL FENCE, 7' RT
END -L- 112+64.00

-L-				
PI STA. 103+01.21	PI STA. 104+80.31	PI STA. 106+61.03	PI STA. 108+93.33	PI STA. 113+04.45
Δ = 28° 01' 43.8" (RT)	Δ = 49° 33' 19.7" (LT)	Δ = 26° 25' 52.1" (LT)	Δ = 79° 08' 22.2" (RT)	Δ = 12° 53' 16.0" (LT)
D = 38° 11' 49.9"	D = 22° 55' 05.9"	D = 38° 11' 49.9"	D = 23° 52' 23.7"	D = 38° 11' 49.9"
L = 73.38'	L = 216.23'	L = 69.20'	L = 331.50'	L = 33.74'
T = 37.44'	T = 115.40'	T = 35.23'	T = 198.33'	T = 16.94'
R = 150.00'	R = 250.00'	R = 150.00'	R = 240.00'	R = 150.00'

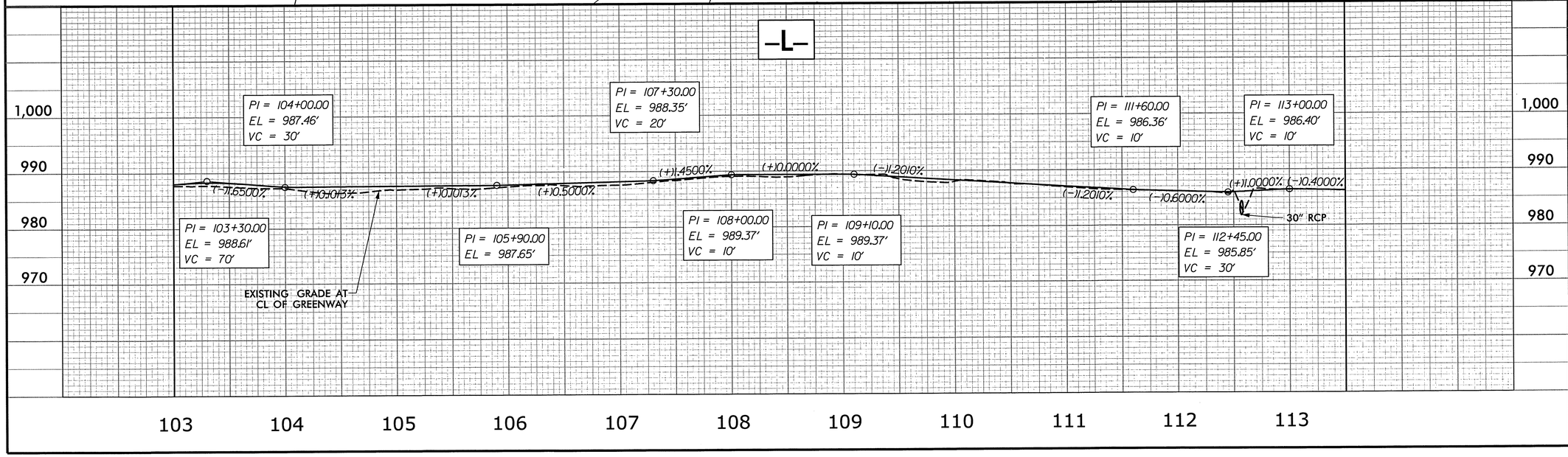

LOVILLS CREEK AND ARARAT RIVER GREENWAY

WORTH STREET TO THARINGTON PARK

GREENWAY ENGINEER

NORTH CAROLINA PROFESSIONAL SEAL 40615 ENGINEER MATTHEW C. LIDDY
11/12/14

STEWART
Firm License No. C-1051
421 Fayetteville St.
Suite 530
Raleigh, NC 27601
T 919.380.8750
www.stewartinc.com

HYDRAULICS ENGINEER

NORTH CAROLINA PROFESSIONAL SEAL 035700 ENGINEER JUSTIN P. HIGGINS
11/13/14

Baker
Michael Baker Engineering Inc.
8000 Regency Parkway, Suite 600
Cary, NORTH CAROLINA 27518
Phone: 919.463.5488
Fax: 919.463.5490
License #: P-1084

DATE: NOVEMBER 12, 2014

REVISIONS:

NO.	DATE

PROJECT NO.:
H13007.00

12

–L–			
PI STA. 114+12.52 Δ = 21° 52' 28.4" (RT) D = 38° 11' 49.9" L = 57.27' T = 28.99' R = 150.00'	PI STA. 117+16.90 Δ = 40° 35' 06.3" (LT) D = 20° 50' 05.4" L = 194.79' T = 101.68' R = 275.00'	PI STA. 120+30.62 Δ = 44° 36' 23.3" (RT) D = 28° 38' 52.4" L = 155.71' T = 82.04' R = 200.00'	PI STA. 121+59.68 Δ = 16° 15' 50.0" (LT) D = 38° 11' 49.9" L = 42.58' T = 21.43' R = 150.00'
PI STA. 122+86.22 Δ = 17° 07' 11.7" (LT) D = 57° 17' 44.8" L = 29.88' T = 15.05' R = 100.00'	PI STA. 123+38.61 Δ = 41° 10' 47.9" (RT) D = 57° 17' 44.8" L = 71.87' T = 37.57' R = 100.00'	PI STA. 123+90.61 Δ = 26° 32' 39.7" (LT) D = 76° 23' 39.7" L = 34.75' T = 17.69' R = 75.00'	

SURRY COUNTY

Parcel ID: 502020901180
Deed Book: 01312 Pg: 0352

MT AIRY CITY BOARD OF ED

Parcel ID: 502020907747
Deed Book: 01218 Pg: 1052

THARINGTON PARK

HOUSING AUTHORITY OF THE TOWN OF MT AIRY

Parcel ID: 592908896311
Deed Book: 00291 Pg: 0273

INSTALL GRANITE MILE MARKER "2.25 MILES" –L– STA. 120+80, 8' LT

INSTALL 10' WIDE ASPHALT CONNECTION W/DETECTABLE WARNING AND TYPICAL BOLLARD PLACEMENT AT END –L– 123+81.19

END EB-5014
–L– STA. 124+11.04
END 10' ASPHALT GREENWAY MATCH EXISTING ASPHALT

NOTE:
CONTRACTOR SHALL ALLOW PED/BIKE ACCESS TO EXISTING GREENWAY AT ALL TIMES.

–L– STA. 113+50.00 SEE SHEET 12

PC Sta113+83.54
PT Sta114+40.80
PC Sta116+15.21
PT Sta118+00.00
PC Sta119+48.58
PT Sta121+04.29
PC Sta121+38.24
PT Sta121+80.82
PC Sta122+71.16
PRC Sta123+12.92
PRC Sta123+40.04
PT Sta124+07.66
POT Sta124+46.73

N 34° 18' 53.0" E
N 6° 16' 13.3" W
N 38° 20' 10.0" E
N 22° 04' 19.9" E
N 19° 35' 16.5" E

CITY OF MOUNT AIRY

Parcel ID: 592908996921
Deed Book: 01222 Pg: 0185
Plat Book: 025 Pg: 0051

J1
J2

28LF (EACH)
DOUBLE 24" RCP
INV IN = 985.75
INV OUT = 985.50

PROP CLASS 'B' RIP RAP
L=16 FEET, 13 TONS W/
36 SY FILTER FABRIC

ARARAT RIVER

SPLIT RAIL FENCE, 7' RT
BEGIN –L– 121+61.00

BEGIN CONC APP SLAB
–L– 121+98.00

END CONC APP SLAB
BEGIN BRIDGE 2
–L– 122+08.00

END CONC APP SLAB
–L– 122+68.00

END BRIDGE 2
BEGIN CONC APP SLAB
–L– 122+58.00

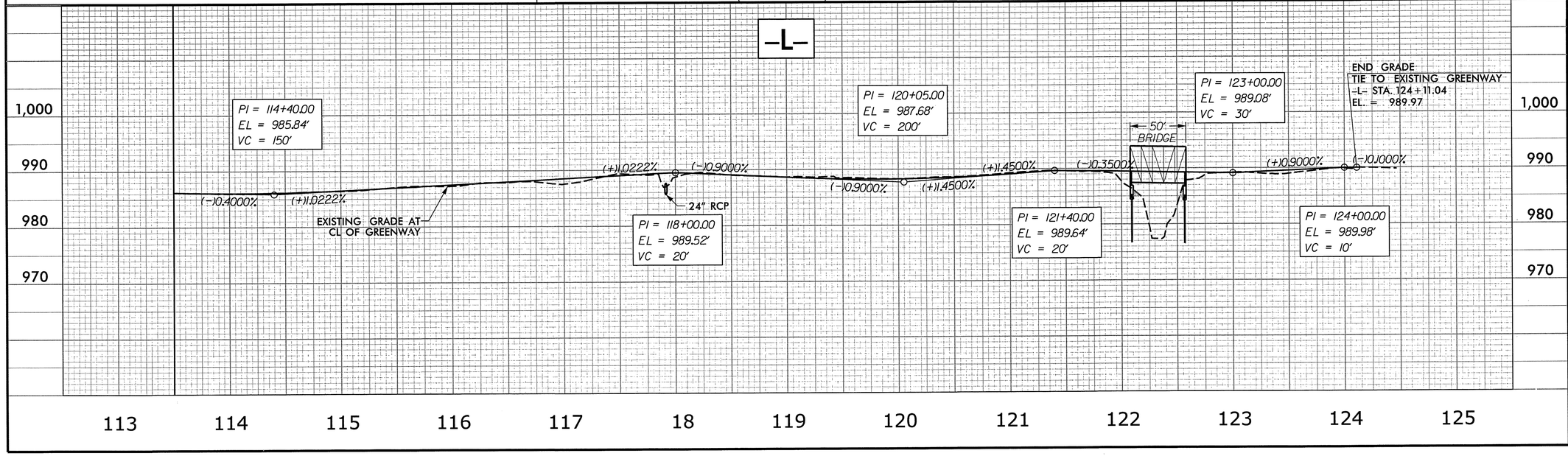

LOVILLS CREEK AND ARARAT RIVER GREENWAY

WORTH STREET TO THARINGTON PARK

GREENWAY ENGINEER

NORTH CAROLINA PROFESSIONAL SEAL 40615 ENGINEER MATTHEW C. LUDWIG 11/12/14

STEWART
Firm License No. C-1051
421 Fayetteville St.
Suite 401
Raleigh, NC 27601
T 919.380.8750
www.stewartinc.com

HYDRAULICS ENGINEER

NORTH CAROLINA PROFESSIONAL SEAL 035700 ENGINEER KEVIN P. HIGGINS 11/13/14

Baker
Michael Baker Engineering Inc.
8000 Regency Parkway, Suite 600
Cary, North Carolina 27518
Phone: 919.463.5488
Fax: 919.463.5490
License # F-1084

DATE: NOVEMBER 12, 2014

REVISIONS:

NO.	DATE

PROJECT NO.:
H13007.00

13

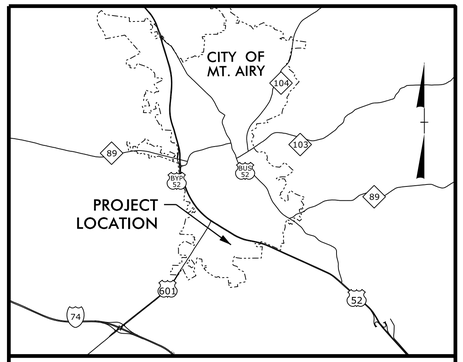

VICINITY MAP

CITY OF MOUNT AIRY
NORTH CAROLINA

LOVILLS CREEK AND ARARAT RIVER GREENWAY

LOCATION:
FROM WORTH STREET TO THARINGTON PARK

NCDOT TIP:EB-5014
WBS: 45522.3.1
FA# STPEB-1117(15)

TYPE OF WORK:
GRADING, PAVING, STRUCTURE, DRAINAGE, & EROSION CONTROL

PERMITS REQUIRED:
NCDENR (DWQ & DLR permit)
USACE (404 Permit)

SEDIMENTATION & EROSION CONTROL PLAN

BEGIN PROJECT
–L– STA 8+47.46

END PROJECT
–L– STA 124+11.04

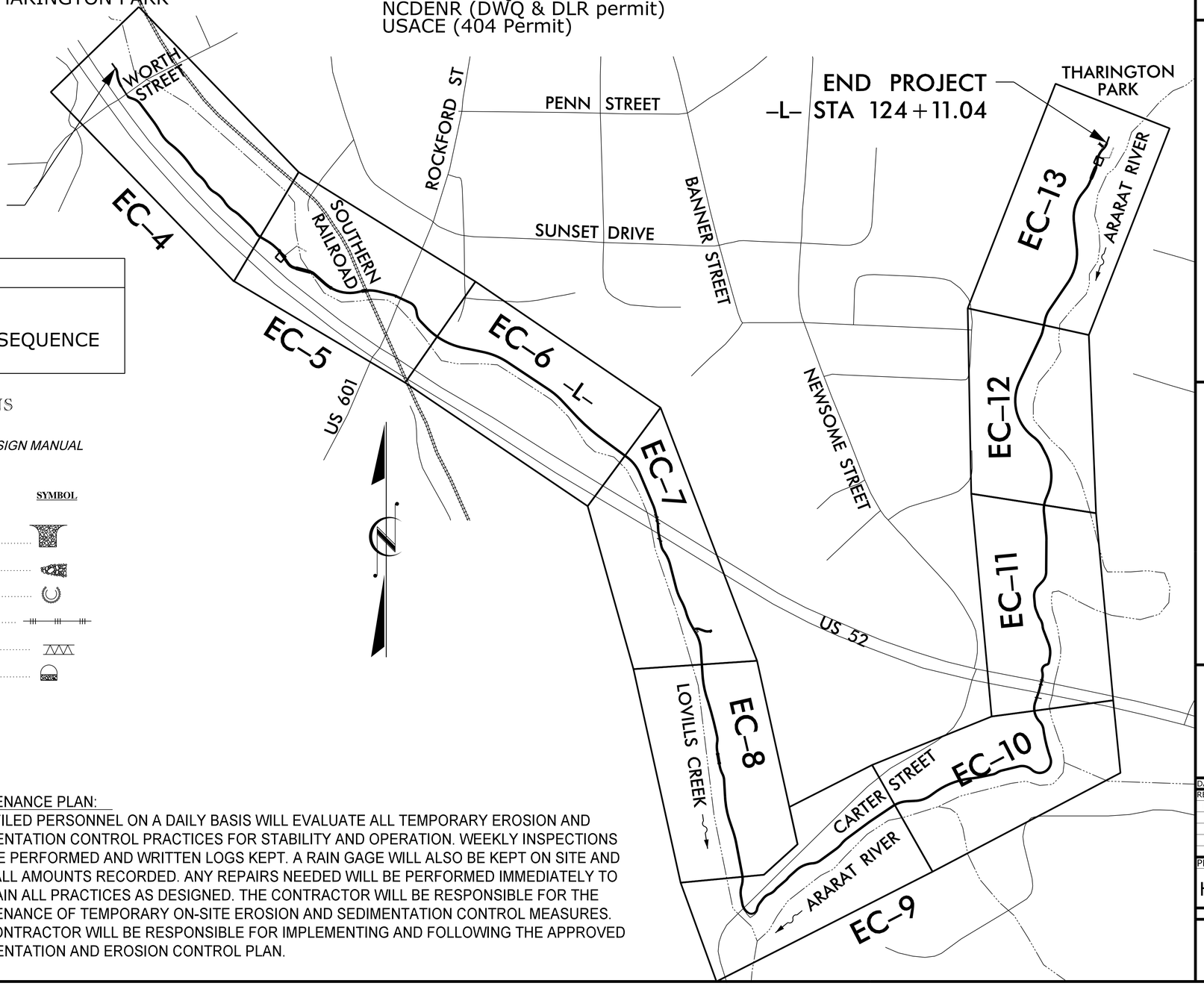

INDEX OF SHEETS	
EC-1	TITLE
EC-2 - EC-3A	DETAILS & CONSTRUCTION SEQUENCE
EC-4 - EC-13	PLANSHEETS

STANDARD SPECIFICATIONS

NORTH CAROLINA
EROSION AND SEDIMENT CONTROL PLANNING AND DESIGN MANUAL
MARCH 2009

STD. NO.	DESCRIPTION	SYMBOL
6.06	TEMPORARY GRAVEL CONSTRUCTION ACCESS	
6.41	OUTLET STABILIZATION STRUCTURE	
6.55	ROCK PIPE INLET PROTECTION	
6.62	SILT FENCE	
N/A	SPECIAL SILT FENCE	
6.63	TEMPORARY ROCK DAM	

DESIGN DATA
DESIGN SPEED = 20 MPH
LEAN ANGLE = 15 DEGRESS
FUNC. CLASSIFICATION = GREENWAY
DESIGN DATA
LENGTH OF PROJECT = 2.19 MILES
GRAPHIC SCALE

50 25 0 50 100
PLANS

MAINTENANCE PLAN:
QUALIFILED PERSONNEL ON A DAILY BASIS WILL EVALUATE ALL TEMPORARY EROSION AND SEDIMENTATION CONTROL PRACTICES FOR STABILITY AND OPERATION. WEEKLY INSPECTIONS WILL BE PERFORMED AND WRITTEN LOGS KEPT. A RAIN GAGE WILL ALSO BE KEPT ON SITE AND RAINFALL AMOUNTS RECORDED. ANY REPAIRS NEEDED WILL BE PERFORMED IMMEDIATELY TO MAINTAIN ALL PRACTICES AS DESIGNED. THE CONTRACTOR WILL BE RESPONSIBLE FOR THE MAINTENANCE OF TEMPORARY ON-SITE EROSION AND SEDIMENTATION CONTROL MEASURES. THE CONTRACTOR WILL BE RESPONSIBLE FOR IMPLEMENTING AND FOLLOWING THE APPROVED SEDIMENTATION AND EROSION CONTROL PLAN.

LOVILLS CREEK AND ARARAT RIVER GREENWAY
WORTH STREET TO THARINGTON PARK

Michael Baker Engineering Inc.
8000 Regency Parkway, Suite 600
Cary, NORTH CAROLINA 27518
Phone: 919.463.5488
Fax: 919.463.5490
License #: P-1084

Baker

DATE: NOVEMBER 11, 2014

REVISIONS:

NO.	DATE

PROJECT NO.:
H13007.00

EC-1

EROSION CONTROL NOTES

TOTAL ACREAGE OF DISTURBED AREA IS 11.81 AC., ACREAGE OF PERMANENT SEEDING IS 9.11 AC. ACERAGE OF TEMPORARY SEEDING IS 9.11 AC. SEE CONTRACT DOCUMENTS FOR SEEDING SPECIFICATIONS.

ON-SITE BURIAL PITS ARE NOT ACCEPTABLE.

ANY GRADING BEYOND THE LIMITS SHOWN ON THE PLAN IS A VIOLATION OF THE STATE/COUNTY EROSION CONTROL ORDINANCE AND IS SUBJECT TO FINE.

STABILIZATION IS THE BEST FORM OF EROSION CONTROL. ALL DISTURBED AREAS SHALL BE STABILIZED WITH TEMPORARY / PERMANENT SEEDING AND MULCH.

ALL GRADED SLOPES MUST BE SEEDED AND MULCHED WITHIN THE TIMEFRAME DEFINED BY THE PROJECT STABILIZATION REQUIREMENTS.

DURING UNSUITABLE GROWING SEASONS, MULCH WILL BE USED AS A TEMPORARY COVER ON SLOPES THAT ARE 4:1 OR STEEPER, MULCH WILL BE ANCHORED.

ADDITIONAL MEASURES TO CONTROL EROSION AND SEDIMENT MAY BE REQUIRED BY A LOCAL REPRESENTATIVE OF THE STATE/COUNTY STORM WATER MANAGEMENT SECTION AND THE LOCAL INSPECTIONS DEPARTMENT.

CONSTRUCTION, MAINTENANCE, REMOVAL OF ALL EROSION CONTROL DEVICES, ALL FINES, LEGAL FEES AND RESTORATION COSTS ARE THE RESPONSIBILITY OF THE CONTRACTOR UNLESS OTHERWISE NOTED.

A COPY OF THE APPROVED PLANS MUST BE ON FILE AT THE JOB SITE.

CONTRACTOR SHALL OBTAIN A COPY OF EACH SUBSURFACE INVESTIGATION REPORT AND FOLLOW THE RECOMMENDATIONS OR AS DIRECTED FOR GRADING, COMPLETION AND PAVEMENT DESIGN, ETC.

STABILIZATION FOR THIS PROJECT SHALL COMPLY WITH THE TIME FRAME GUIDELINES AS SPECIFIED BY THE NCG-010000 GENERAL CONSTRUCTION PERMIT EFFECTIVE AUGUST 3, 2011 ISSUED BY THE NORTH CAROLINA DEPARTMENT OF ENVIRONMENT AND NATURAL RESOURCES DIVISION OF WATER QUALITY.

EROSION PROVISIONS

THE CONTRACTOR SHALL BE REQUIRED TO TAKE EVERY REASONABLE PRECAUTION THROUGHOUT THE CONTRACT TO PREVENT THE EROSION OF SOIL AND THE SEDIMENTATION OF STREAMS, LAKES, RESERVOIRS, OTHER WATER IMPOUNDMENTS, GROUND SURFACES, OR OTHER PROPERTY AS REQUIRED BY THE SEDIMENT POLLUTION CONTROL ACT OF 1973 AND THE 1974 AMENDMENTS TO THE ACT.

FAILURE ON THE PART OF THE CONTRACTOR TO COMPLY WITH THE PROVISIONS OF THE EROSION CONTROL PLAN OR TO PERFORM EROSION CONTROL WORK AS DIRECTED WILL RESULT IN THE ENGINEER, INSPECTOR OR NCDENR NOTIFYING THE CONTRACTOR TO COMPLY WITH THESE PROVISIONS. IN THE EVENT THAT THE CONTRACTOR FAILS TO BEGIN SUCH REMEDIAL ACTION OR FAILS TO BEGIN EROSION CONTROL WORK WITHIN 24 HOURS AFTER RECEIPT OF SUCH NOTICE WITH ADEQUATE FORCES AND EQUIPMENT, THE ENGINEER MAY PROCEED TO HAVE THE WORK PERFORMED WITH OTHER FORCES. NO PAYMENT WILL BE MADE TO THE CONTRACTOR FOR WORK PERFORMED BY OTHERS. ANY COSTS INCURRED BY THE CITY DUE TO THE FAILURE OF THE CONTRACTOR TO COMPLY WITH THESE PROVISIONS WILL BE BORNE BY THE CONTRACTOR. SUCH COSTS WILL INCLUDE CIVIL PENALTIES ASSESSED FOR SOIL EROSION AND SEDIMENTATION CONTROL VIOLATIONS.

ANY COSTS INCURRED BY THE CITY FOR WORK PERFORMED BY OTHERS AS PROVIDED ABOVE IN THE EXCESS OF THE COSTS THAT WOULD HAVE BEEN INCURRED HAD THE WORK BEEN PERFORMED BY THE CONTRACTOR WILL BE DEDUCTED FROM RETAINAGE OR OTHER MONIES DUE THE CONTRACTOR OR HIS CONTRACT.

MISC - WETLANDS. TREES. STORM PIPING

CONTRACTOR TO VERIFY ACTUAL WETLAND BOUNDARY IN THE FIELD PRIOR TO CONSTRUCTION OF BOARDWALK. WETLAND BOUNDARIES WILL BE BORDERED BY SAFETY FENCE AS SHOWN ON THE PLANS

NO EQUIPMENT IS ALLOWED IN THE WETLANDS. EQUIPMENT MUST BE ON TIMBER MATS. TIMBER MATS SHALL BE CAROLINA MAT INCORPORATED BRIDGE/TIMBER MAT (6" MIN. THICKNESS) OR APPROVED ALTERNATE. TEMPORARY WETLAND CROSSINGS SHALL REQUIRE TIMBER MATS.

WETLAND LOCATION/DELINEATION BY MICHAEL BAKER ENGINEERING, INC.

LOCATION OF PIPING FOR DITCHES IS APPROXIMATE. CONTRACTOR SHALL FIELD VERIFY LOCATION AND MATCH PIPING TO DITCH CENTERLINE.

SAVE ALL PROMINENT EXISTING TREES PLUS EXISTING TREES AS FLAGGED. IF JUDGMENT IS REQUIRED, CONTACT DESIGNER FOR FIELD ADJUSTMENT. IF EGREGIOUS VIOLATIONS OCCUR AS DETERMINED BY THE OWNER, REPLANTING MAY BE ORDERED AT A COMPENSATORY RATE AT THE CONTRACTORS EXPENSE.

ALL STORM PIPING SHALL BE REINFORCED CONCRETE PIPE EXCEPT WHERE OTHERWISE NOTED. SEE DRAINAGE SUMMARY SHEET.

ON ALL STORM PIPING, BURY INVERTS ONLY AS NEEDED.

PROTECTION

A. PROTECT SEEDED AREAS FROM DAMAGE BY BARRICADES, SIGNS, AND OTHER APPROPRIATE MEANS. MAINTAIN AND PROTECT SLOPES FROM WEATHER-DAMAGE.

MULCHING AND MATTING

A. APPLY MULCH OR MATTING AS REQUIRED TO RETAIN SOIL AND GRASS, BUT NO LESS THEN THE FOLLOWING:

   1. SLOPES 2:1 AND GREATER BY SPREADING A LIGHT COVER OF MULCH OVER SEEDED AREA AT THE RATE OF NOT LESS THAN 92 LBS. PER 1000 SQ.FT.
   2. SLOPES LESS THAN 2:1 MULCH WITH MATTING. PIN MATTING TO THE GROUND WITH WIRE STAPLES AT 5 FOOT INTERVALS, IMMEDIATELY AFTER SEEDING.
   3. USE TACK TO PREVENT DISRUPTION OF MULCH.

B. FOR TACK USE AN ASPHALT TIE-DOWN OF EMULSIFIED ASPHALT GRADE AE-E OR CUT-BACK ASPHALT GRADE RC-2 OR OTHER APPROVED EQUAL. AN APPROVED JUTE MESH OR NET MAY BE USED IN LIEU OF TACKING STRAW MULCH.

C. OTHER TYPES OF MULCH AND ANCHORING METHODS MAY BE USED UPON APPROVAL BY THE ENGINEER.

D. EXCELSIOR MATTING SHALL MEET NCDOT STANDARD SPECIFICATIONS AND SHALL BE INSTALLED PER APPROVED PLANS.

SEEDING

A. ACCOMPLISH SEEDING BY MEANS OF AN APPROVED POWER-DRAWN SEED DRILL, COMBINATION CORRUGATED ROLLER-SEEDER, APPROVED HAND OPERATED MECHANICAL SEEDER, OR OTHER APPROVED METHODS TO PROVIDE EVEN DISTRIBUTION OF SEED.

B. DO NOT SEED WHEN GROUND IS EXCESSIVELY WET OR EXCESSIVELY DRY. AFTER SEEDING, ROLL AREA WITH A ROLLER, NOT LESS THAN 18 INCHES IN DIAMETER AND WEIGHING NOT MORE THAN 210 POUNDS PER FOOT OF WIDTH. UPON COMPLETION OF ROLLING, WATER AREA WITH A FINE SPRAY.

C. IMMEDIATELY FOLLOWING SEEDING APPLY MULCH OR MATTING. DO NOT SEED AREAS IN EXCESS OF THAT WHICH CAN BE MULCHED ON SAME DAY.

D. APPLY WATER WITH A FINE SPRAY IMMEDIATELY AFTER EACH AREA HAS BEEN MULCHED. SATURATE TO 4 INCHES OF SOIL DEPTH.

E. PRIOR TO SEEDING, CONTRACTOR SHALL APPLY 10-10-10 FERTILIZER AT A RATE OF 1,000 LBS PER ACRE AND AGRICULTURAL LIME STONE AT 4,000 LBS PER ACRE TO ALL AREAS TO RECEIVE SEEDING.

F. THE FOLLOWING PERMANENT SEEDING SPECIES SHALL BE PLANTED A THE SPECIFIED RATES:

COMMON NAME	*SCIENTIFIC NAME*	PERCENTAGE	DENSITY (lbs/ac)
Tall fescue	*Festuca arundinacea*	72%	200
Kentucky bluegrass	*Poa pratensis*	14%	40
Red (fine) fescue	*Festcua rubra*	14%	40
	Total	100%	280

SEQUENCE OF CONSTRUCTION ACTIVITIES

1. A PRECONSTRUCTION CONFERENCE MUST BE HELD PRIOR TO THE START OF ANY CONSTRUCTION ACTIVITIES.
2. INSTALL CONSTRUCTION ENTRANCES AS NEEDED AT LOCATIONS SHOWN ON APPROVED PLANS. STAGING AREAS WILL NEED TO BE DISCUSSED WITH THE CITY OF MOUNT AIRY PRIOR TO THE START OF CONSTRUCTION.
3. DETERMINE AND MARK LIMITS OF DISTURBANCE.
4. INSTALL TREE PROTECTION FENCING, SILT FENCE, SILT FENCE OUTLETS. SILT FENCE OUTLETS SHALL BE INSTALLED PER FIELD LOCATED LOW POINTS AND AS SHOWN ON APPROVED PLANS.
5. CLEAR ONLY AS NECESSARY TO INSTALL THESE DEVICES.
6. IF TOPSOIL IS ALLOWED TO BE STORED ON SITE, STORAGE AREAS SHALL BE CONTAINED WITHIN THE PROPOSED LIMITS OF DISTURBANCE. TOPSOIL STORAGE AREAS WILL NEED TO BE DISCUSSED WITH THE CITY OF MOUNT AIRY PRIOR TO THE START OF CONSTRUCTION.
7. BEGIN CLEARING AND GRUBBING ACTIVITIES. INSTALL AND MAINTAIN DEVICES AS NEEDED.
8. ROUGH GRADE SITE AND INSURE THAT SEDIMENT LADEN WATER IS DIRECTED TO SEDIMENT CONTROL DEVICES.
9. INSPECT AND MAINTAIN ALL EROSION CONTROL MEASURES EVERY 7 DAYS AND AFTER EACH SIGNIFICANT RAINFALL (0.5 INCHES OR GREATER) AND DOCUMENT WITH INSPECTION REPORTS.
10. CULVERTS ARE TO BE CONSTRUCTED IN THE DRY. CONTRACTOR IS TO COORDINATE WITH EROSION CONTROL INSPECTOR.
11. AS AREAS ARE BOUGHT UP TO FINISH GRADE SPREAD TOPSOIL OVER ALL AREAS TO RECEIVE TURF OR LANDSCAPING. SEED ALL AREAS WITHIN NCDENR STABILIZATION TIMEFRAMES. PERMANENT GRASS SHALL BE INSTALLED FOR ALL AREAS AT FINAL GRADE AND IN SEASON. FERTILIZE, WATER AND RESEED AS REQUIRED TO ESTABLISH AND MAINTAIN A VIGOROUS STAND OF GRASS.
12. AFTER COMPLETION OF CONSTRUCTION AND THE SITE IS STABILIZED, REMOVE ALL ACCUMULATED SEDIMENT FROM SEDIMENT TRAPPING MEASURES AND SPREAD EVENLY ACROSS THE SITE. ALL APPLICABLE E&S CONTROL MEASURES ARE TO REMAIN AND BE PROPERLY MAINTAINED UNTIL PERMANENT VEGETATION IS ESTABLISHED. USE NPDES TABLE FOR ESTABLISHMENT OF VEGETATION.
13. WHEN VEGETATION HAS BECOME ESTABLISHED, REMOVE TEMPORARY EROSION AND SEDIMENTATION CONTROL MEASURES. CALL FOR FINAL SITE INSPECTION BY ENVIRONMENTAL OFFICER. OBTAIN CERTIFICATE OF COMPLIANCE.
14. CONTRACTOR IS REQUIRED TO MAINTAIN A WEEKLY WRITTEN REPORT OF SEDIMENT AND EROSION CONTROL DEVICES.

THE GREAT SEAL OF THE CITY OF MOUNT AIRY NORTH CAROLINA

LOVILLS CREEK AND ARARAT RIVER GREENWAY

WORTH STREET TO THARINGTON PARK

Michael Baker Engineering Inc.
8000 Regency Parkway, Suite 600
Cary, NORTH CAROLINA 27518
Phone: 919.463.5488
Fax: 919.463.5490
License #: F-1084

Baker

DATE: NOVEMBER 11, 2014

REVISIONS:

NO.	DATE

PROJECT NO.:

H13007.00

EC-2

TEMPORARY SILT FENCE

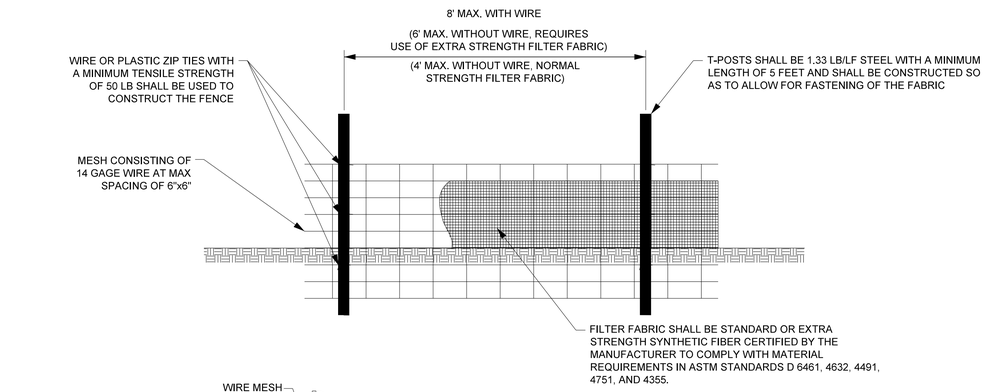

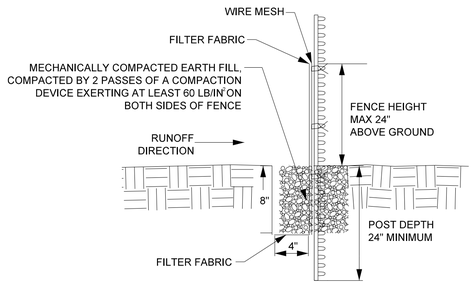

NOTES:
1. AVOID JOINTS, UNAVOIDABLE JOINTS MUST HAVE 4 FEET OF CLOTH OVERLAP AND SHOULD TIE INTO THE NEXT ADJACENT POST
2. PLACE ON CONTOUR EXCEPT ENDS WHICH SHOULD BE 1' ABOVE GRADE TO PREVENT CUT AROUND.
3. WRAP APPROX. 6" OF GEOTEXTILE FABRIC AROUND END POSTS AND SECURE WITH TIES.
4. REMOVE ONCE AREA IS STABLE.

ORANGE SAFETY FENCE

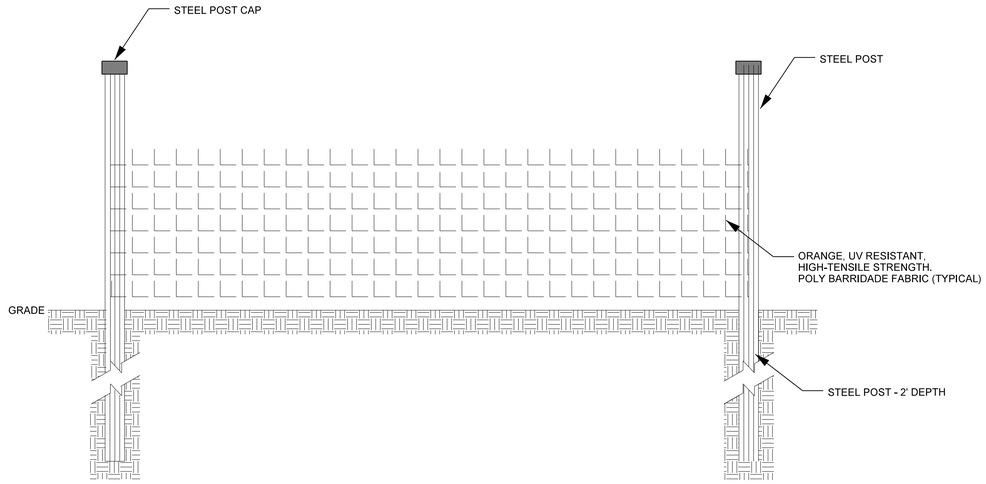

NOTES:

1. PROVIDE 5' STEEL POST OF THE SELF-FASTENER ANGLE STEEL TYPE.
2. PROVIDE CAPS ON TOP OF STEEL POSTS.

SPECIAL SILT FENCE

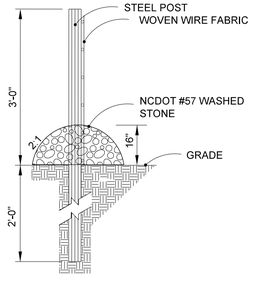

SIDE VIEW

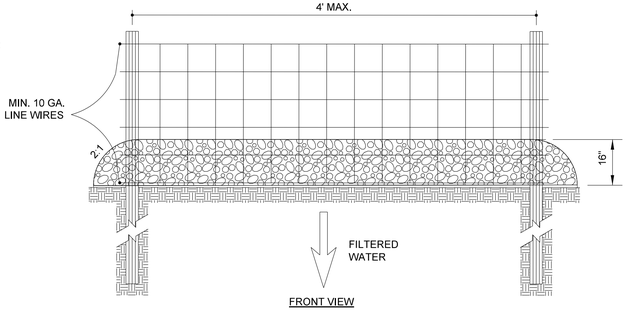

FRONT VIEW

MAINTENANCE

INSPECT AT LEAST WEEKLY AND AFTER EACH SIGNIFICATN (1/2 INCH OR GREATER) RAINFALL EVENT. MAKE ANY REPAIRS IMMEDIATELY.

CHECK THE STRUCTURE FOR EROSION, PIPING, AND ROCK DISPLACEMENT. REPLACE STONE AS NEEDED.

REMOVE SEDIMENT DEPOSITS AS NECESSARY TO PROVIDE ADEQUATE STORAGE VOLUME FOR THE NEXT RAIN. CLEAR THE MESH WIRE OF ANY DEBRIS OR OTHER OBJECTS TO PROVIDE ADEQUATE FLOW FOR SUBSEQUENT RAINS. TAKE CARE NOT TO DAMAGE OR UNDERCUT THE WIRE MESH DURING SEDIMENT REMOVAL.

REMOVE ALL FENCING MATERIALS AND UNSTABLE SEDIMENT DEPOSITS AND BRING THE AREA TO GRADE AND STABILIZE IT AFTER CONTRIBUTING DRAINAGE AREA HAS BEEN PROPERLY STABILIZED.

OUTLET STABILIZATION STRUCTURE

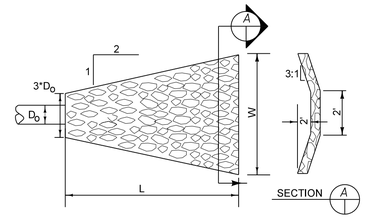

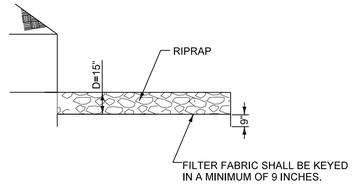

NOTES:

1. FILTER FABRIC SHALL BE INSTALLED BETWEEN THE RIPRAP AND SOIL FOUNDATION.
2. SEE PLANS FOR LENGTH.
3. ALL RIPRAP AND FABRIC SHALL CONFORM TO NCDOT STANDARD SPECIFICATIONS.

LOVILLS CREEK AND ARARAT RIVER GREENWAY

WORTH STREET TO THARINGTON PARK

Michael Baker Engineering Inc.
8000 Regency Parkway, Suite 600
Cary, NORTH CAROLINA 27518
Phone: 919.463.5488
Fax: 919.463.5490
License #: F-1084

Baker

DATE: NOVEMBER 11, 2014

REVISIONS:

NO.	DATE

PROJECT NO.:

H13007.00

EC-3

SPECIAL CUT 'V' DITCH

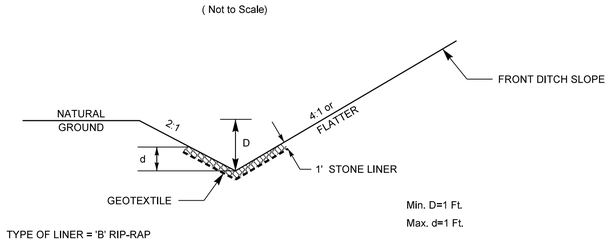

FROM -L- STA. 27+50 TO STA. 28+07 LT

ROCK PIPE INLET PROTECTION

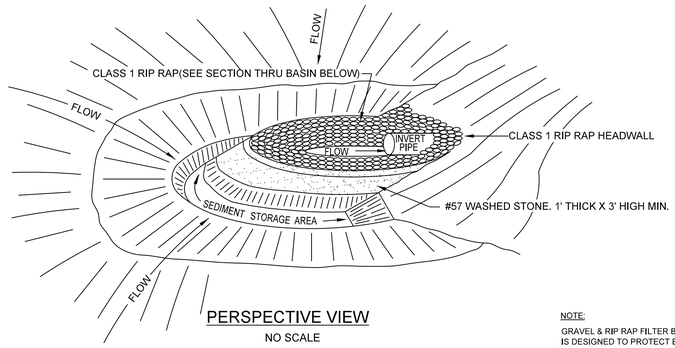

PERSPECTIVE VIEW
NO SCALE

NOTE:
GRAVEL & RIP RAP FILTER BERM BASIN DETAIL IS DESIGNED TO PROTECT EXISTING PIPE INVERTS

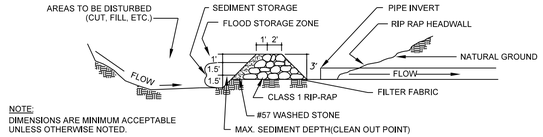

NOTE:
DIMENSIONS ARE MINIMUM ACCEPTABLE UNLESS OTHERWISE NOTED.

SECTION THRU BASIN, FILTER AND CULVERT PIPE
NO SCALE

TEMPORARY ROCK DAM

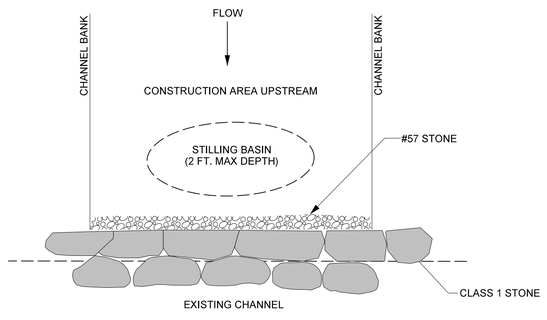

PLAN VIEW

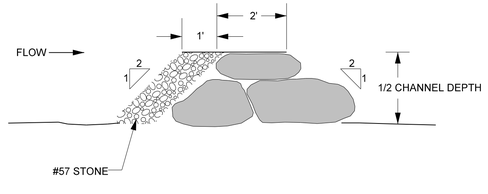

CROSS SECTION

NOTES:
CLEAN OUT STILLING BASIN OF TRAPPED SEDIMENT PRIOR TO REMOVAL.

TEMPORARY GRAVEL CONSTRUCTION ENTRANCE

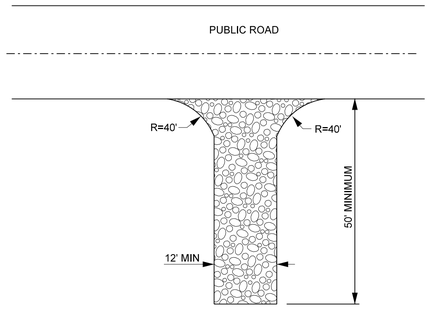

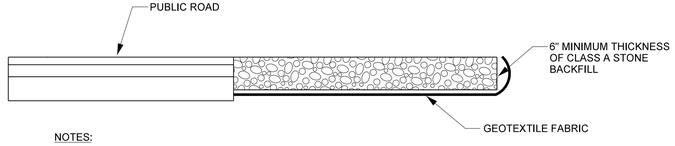

NOTES:

SPECIFICATION NO. 6.06 - CONSTRUCTION ACCESS "N.C. EROSION AND SEDIMENT CONTROL PLANNING AND DESIGN MANUAL MARCH 2009"

THE GREAT SEAL OF THE CITY OF MOUNTAIN NORTH CAROLINA

LOVILLS CREEK AND ARARAT RIVER GREENWAY

WORTH STREET TO THARINGTON PARK

Michael Baker Engineering Inc.
8000 Regency Parkway, Suite 600
Cary, NORTH CAROLINA 27518
Phone: 919.463.5488
Fax: 919.463.5490
License # F-1084

Baker

DATE: NOVEMBER 11, 2014

REVISIONS:

NO.	DATE

PROJECT NO.:
H13007.00

EC-3A

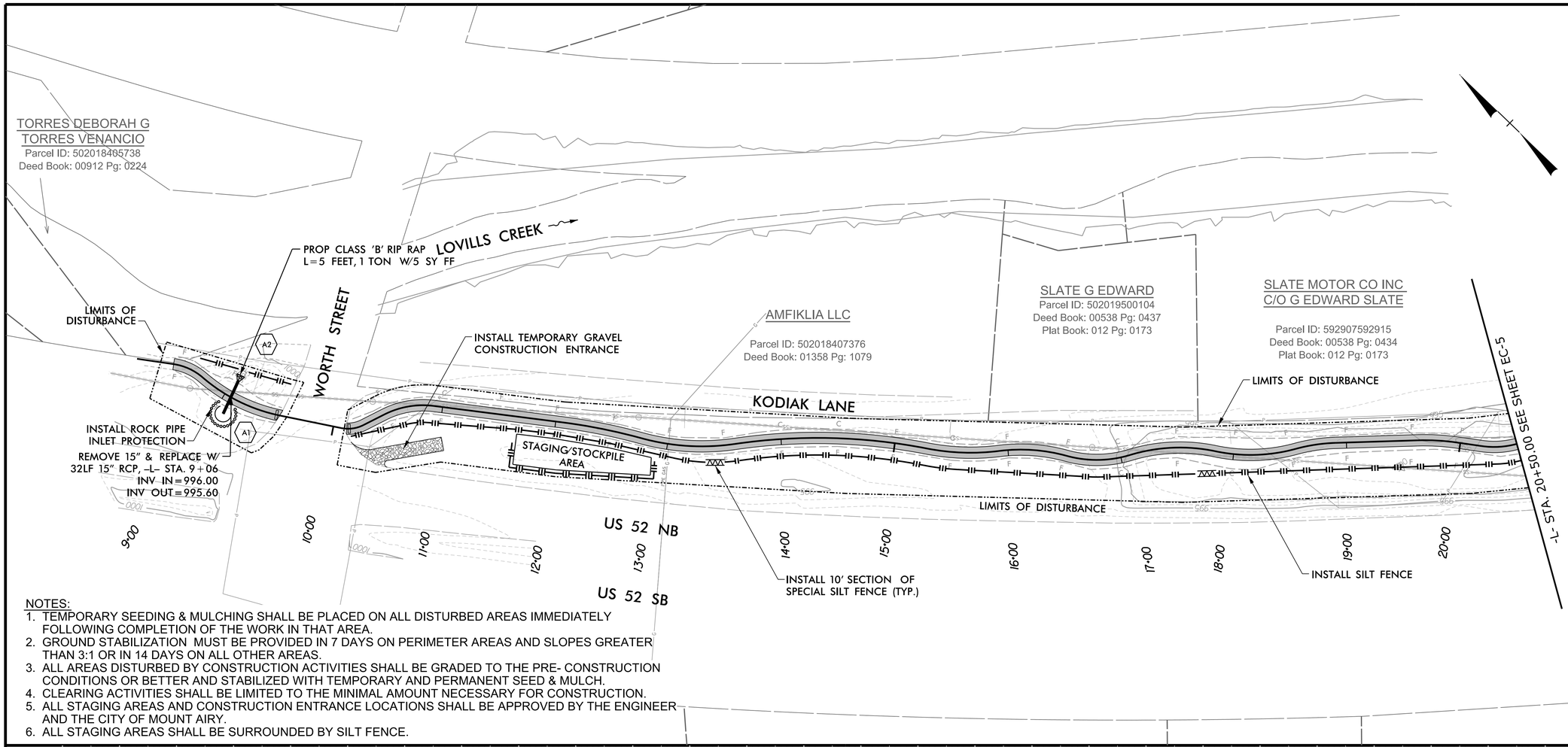

NOTES:

1. TEMPORARY SEEDING & MULCHING SHALL BE PLACED ON ALL DISTURBED AREAS IMMEDIATELY FOLLOWING COMPLETION OF THE WORK IN THAT AREA.
2. GROUND STABILIZATION MUST BE PROVIDED IN 7 DAYS ON PERIMETER AREAS AND SLOPES GREATER THAN 3:1 OR IN 14 DAYS ON ALL OTHER AREAS.
3. ALL AREAS DISTURBED BY CONSTRUCTION ACTIVITIES SHALL BE GRADED TO THE PRE- CONSTRUCTION CONDITIONS OR BETTER AND STABILIZED WITH TEMPORARY AND PERMANENT SEED & MULCH.
4. CLEARING ACTIVITIES SHALL BE LIMITED TO THE MINIMAL AMOUNT NECESSARY FOR CONSTRUCTION.
5. ALL STAGING AREAS AND CONSTRUCTION ENTRANCE LOCATIONS SHALL BE APPROVED BY THE ENGINEER AND THE CITY OF MOUNT AIRY.
6. ALL STAGING AREAS SHALL BE SURROUNDED BY SILT FENCE.

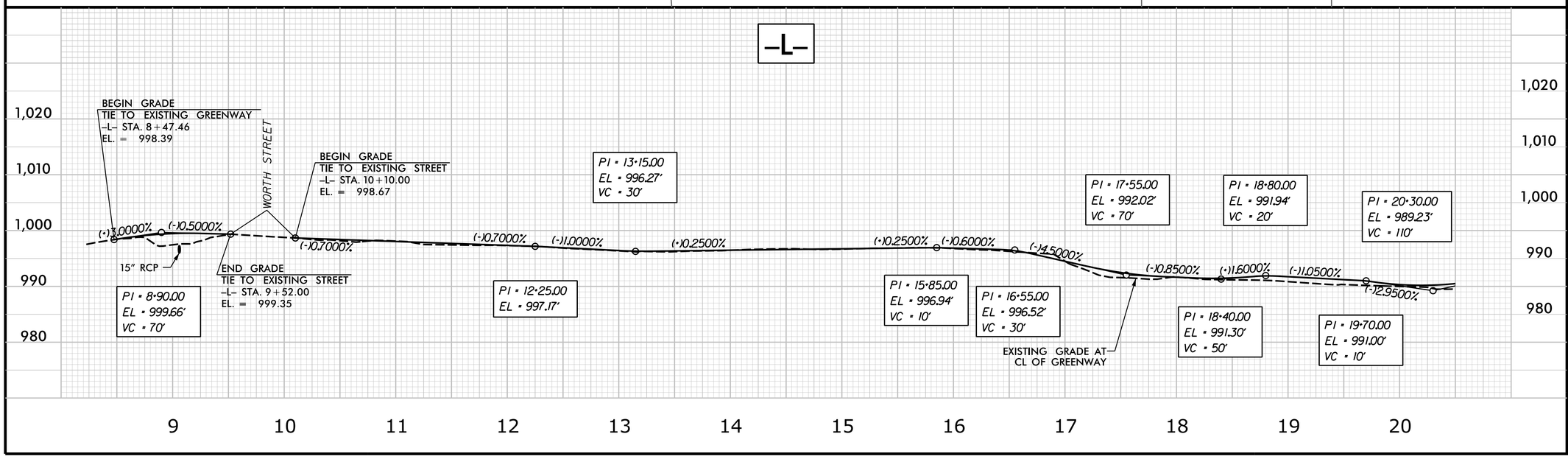

LOVILLS CREEK AND ARARAT RIVER GREENWAY

WORTH STREET TO THARINGTON PARK

Michael Baker Engineering Inc.
8000 Regency Parkway, Suite 600
Cary, NORTH CAROLINA 27518
Phone: 919.463.5488
Fax: 919.463.5490
License #: F-1084

Baker

DATE: NOVEMBER 11, 2014

REVISIONS:

NO.	DATE

PROJECT NO.:

H13007.00

EC-4

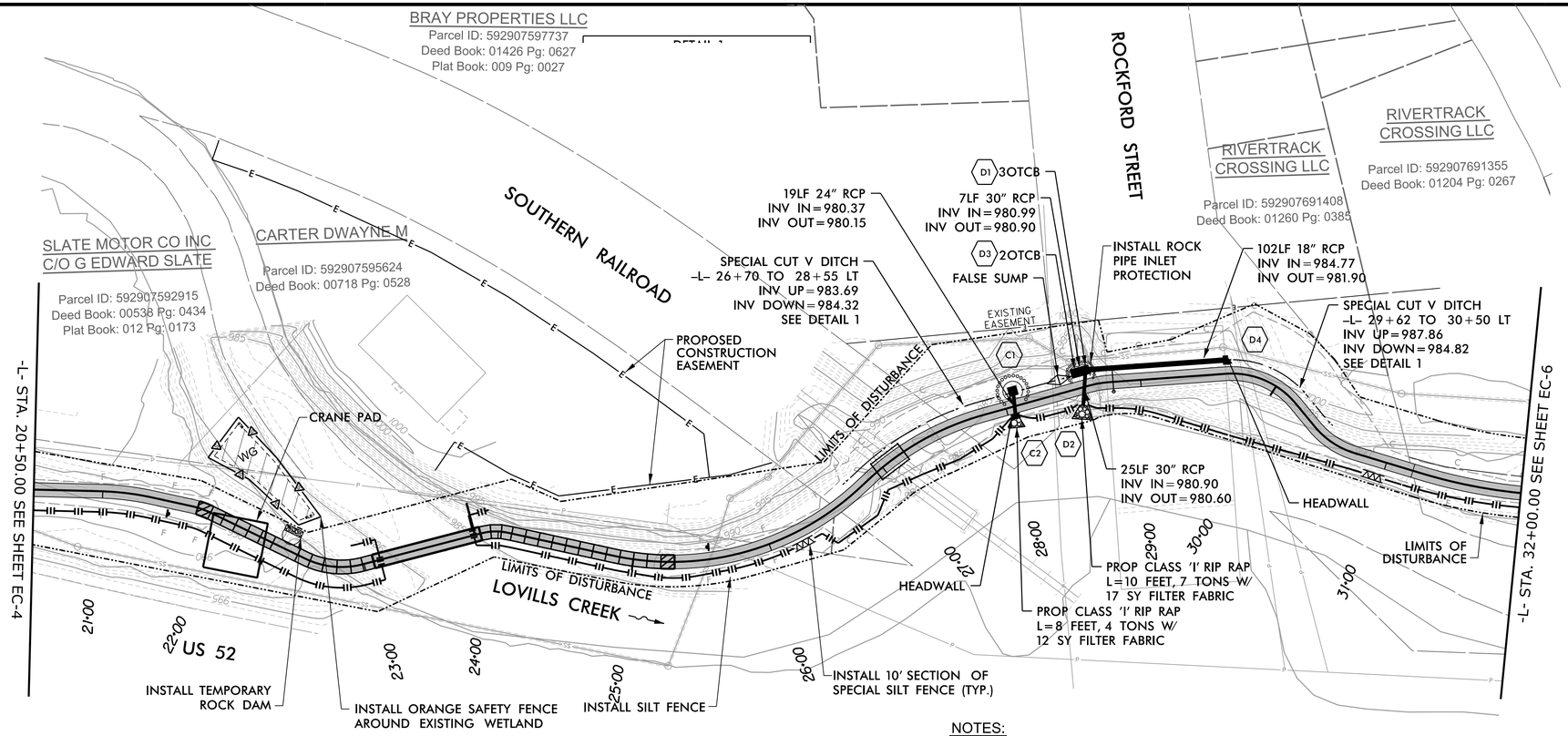

NOTES:

1. TEMPORARY SEEDING & MULCHING SHALL BE PLACED ON ALL DISTURBED AREAS IMMEDIATELY FOLLOWING COMPLETION OF THE WORK IN THAT AREA.
2. GROUND STABILIZATION MUST BE PROVIDED IN 7 DAYS ON PERIMETER AREAS AND SLOPES GREATER THAN 3:1 OR IN 14 DAYS ON ALL OTHER AREAS.
3. ALL AREAS DISTURBED BY CONSTRUCTION ACTIVITIES SHALL BE GRADED TO THE PRE- CONSTRUCTION CONDITIONS OR BETTER AND STABILIZED WITH TEMPORARY AND PERMANENT SEED & MULCH.
4. CLEARING ACTIVITIES SHALL BE LIMITED TO THE MINIMAL AMOUNT NECESSARY FOR CONSTRUCTION.
5. ALL STAGING AREAS AND CONSTRUCTION ENTRANCE LOCATIONS SHALL BE APPROVED BY THE ENGINEER AND THE CITY OF MOUNT AIRY.
6. ALL STAGING AREAS SHALL BE SURROUNDED BY SILT FENCE.

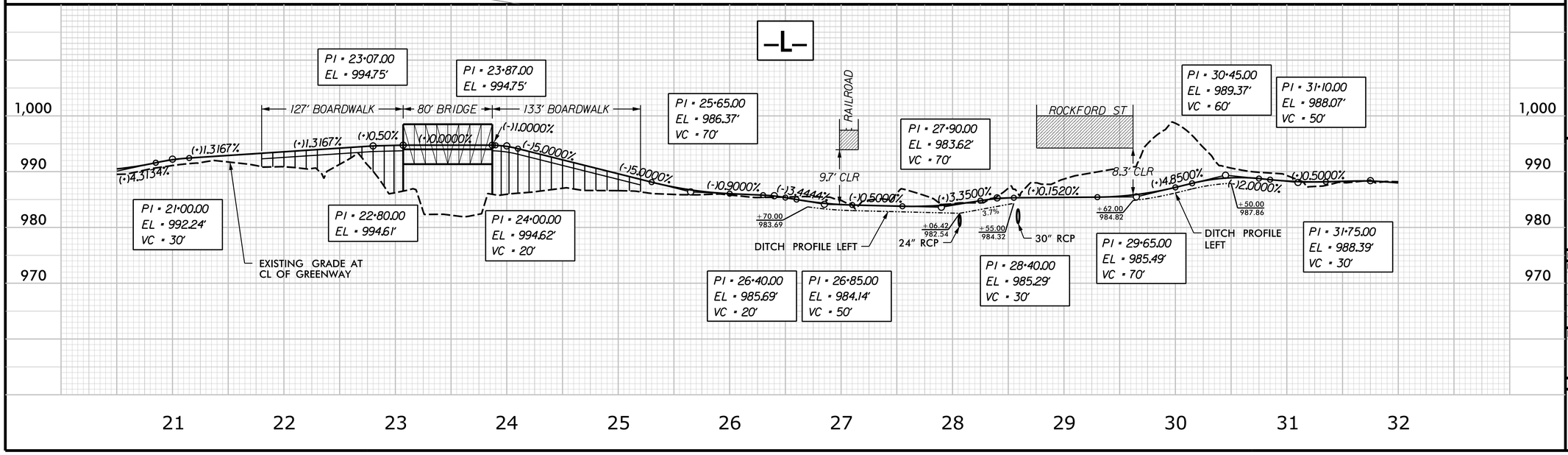

Michael Baker Engineering Inc.
8000 Regency Parkway Suite 600
Cary, NORTH CAROLINA 27518
Phone: 919.463.5488
Fax: 919.463.5490
License #: F-1084

LOVILLS CREEK AND ARARAT RIVER GREENWAY

WORTH STREET TO THARINGTON PARK

DATE: NOVEMBER 11, 2014

REVISIONS:

NO.	DATE

PROJECT NO.: H13007.00

EC-5

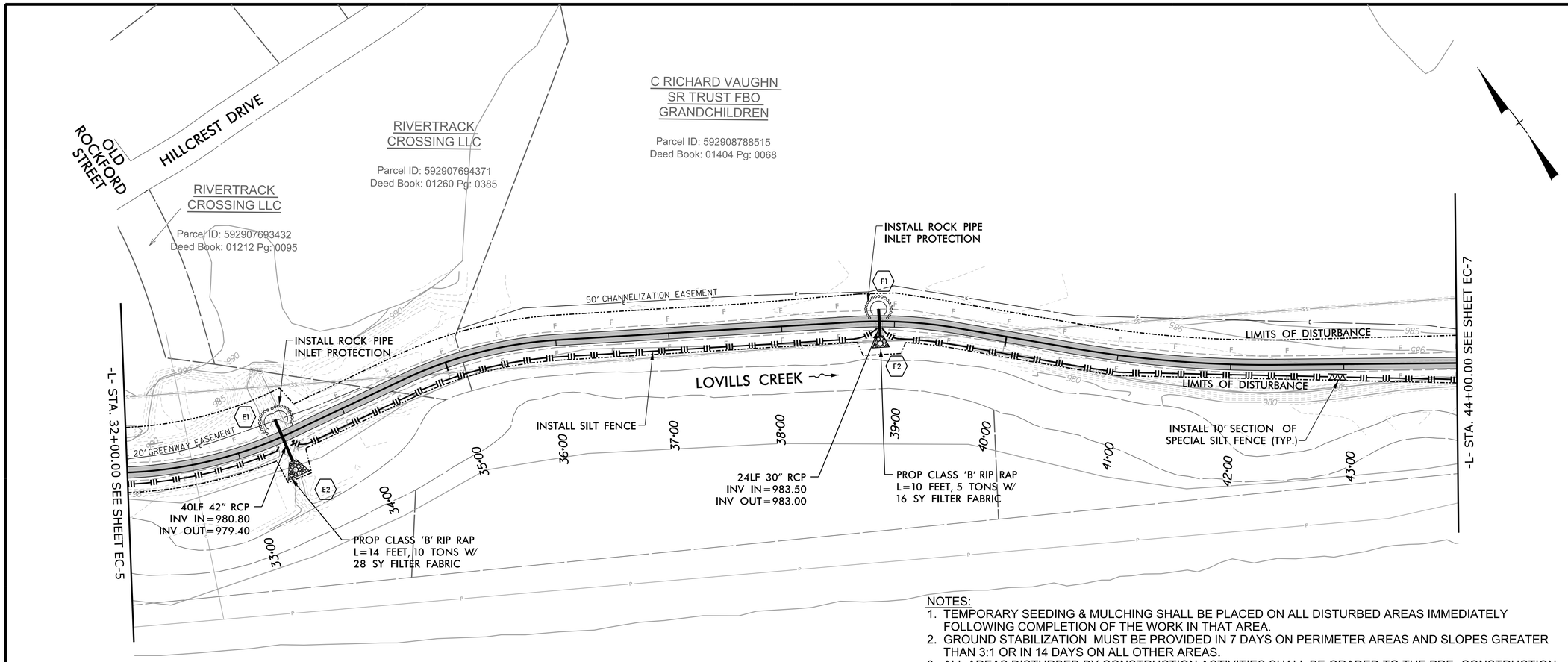

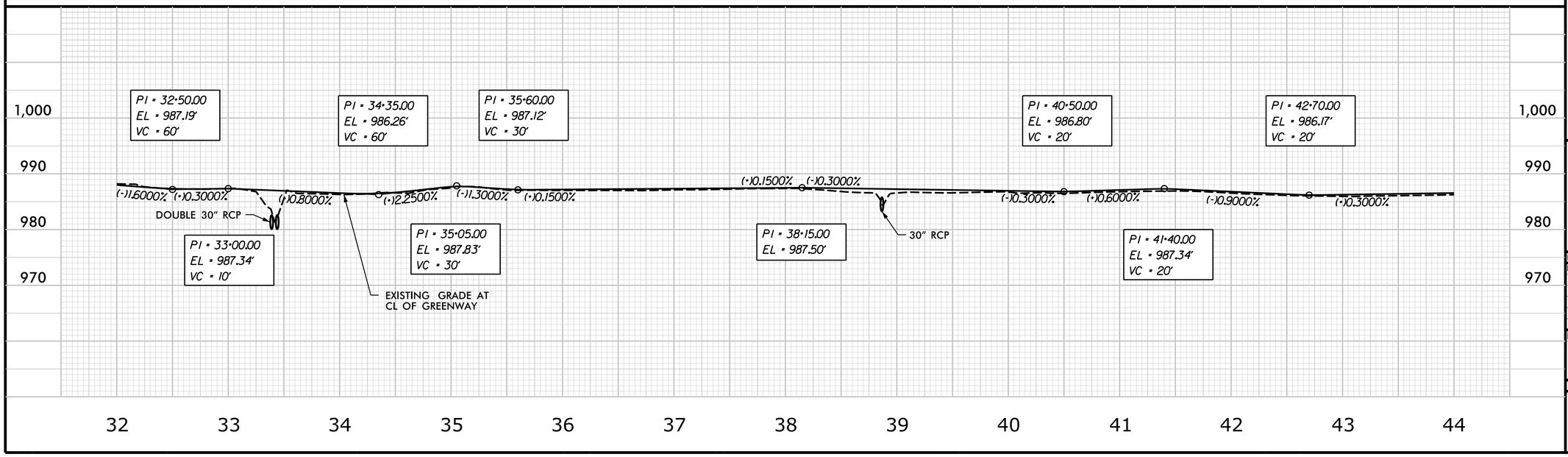

NOTES:

1. TEMPORARY SEEDING & MULCHING SHALL BE PLACED ON ALL DISTURBED AREAS IMMEDIATELY FOLLOWING COMPLETION OF THE WORK IN THAT AREA.
2. GROUND STABILIZATION MUST BE PROVIDED IN 7 DAYS ON PERIMETER AREAS AND SLOPES GREATER THAN 3:1 OR IN 14 DAYS ON ALL OTHER AREAS.
3. ALL AREAS DISTURBED BY CONSTRUCTION ACTIVITIES SHALL BE GRADED TO THE PRE- CONSTRUCTION CONDITIONS OR BETTER AND STABILIZED WITH TEMPORARY AND PERMANENT SEED & MULCH.
4. CLEARING ACTIVITIES SHALL BE LIMITED TO THE MINIMAL AMOUNT NECESSARY FOR CONSTRUCTION.
5. ALL STAGING AREAS AND CONSTRUCTION ENTRANCE LOCATIONS SHALL BE APPROVED BY THE ENGINEER AND THE CITY OF MOUNT AIRY.
6. ALL STAGING AREAS SHALL BE SURROUNDED BY SILT FENCE.

LOVILLS CREEK AND ARARAT RIVER GREENWAY

WORTH STREET TO THARINGTON PARK

Michael Baker Engineering Inc.
8000 Regency Parkway, Suite 600
Cary, NORTH CAROLINA 27518
Phone: 919.463.5488
Fax: 919.463.5490
License # F-1084

Baker

DATE: NOVEMBER 11, 2014

REVISIONS:

NO.	DATE

PROJECT NO.:

H13007.00

EC-6

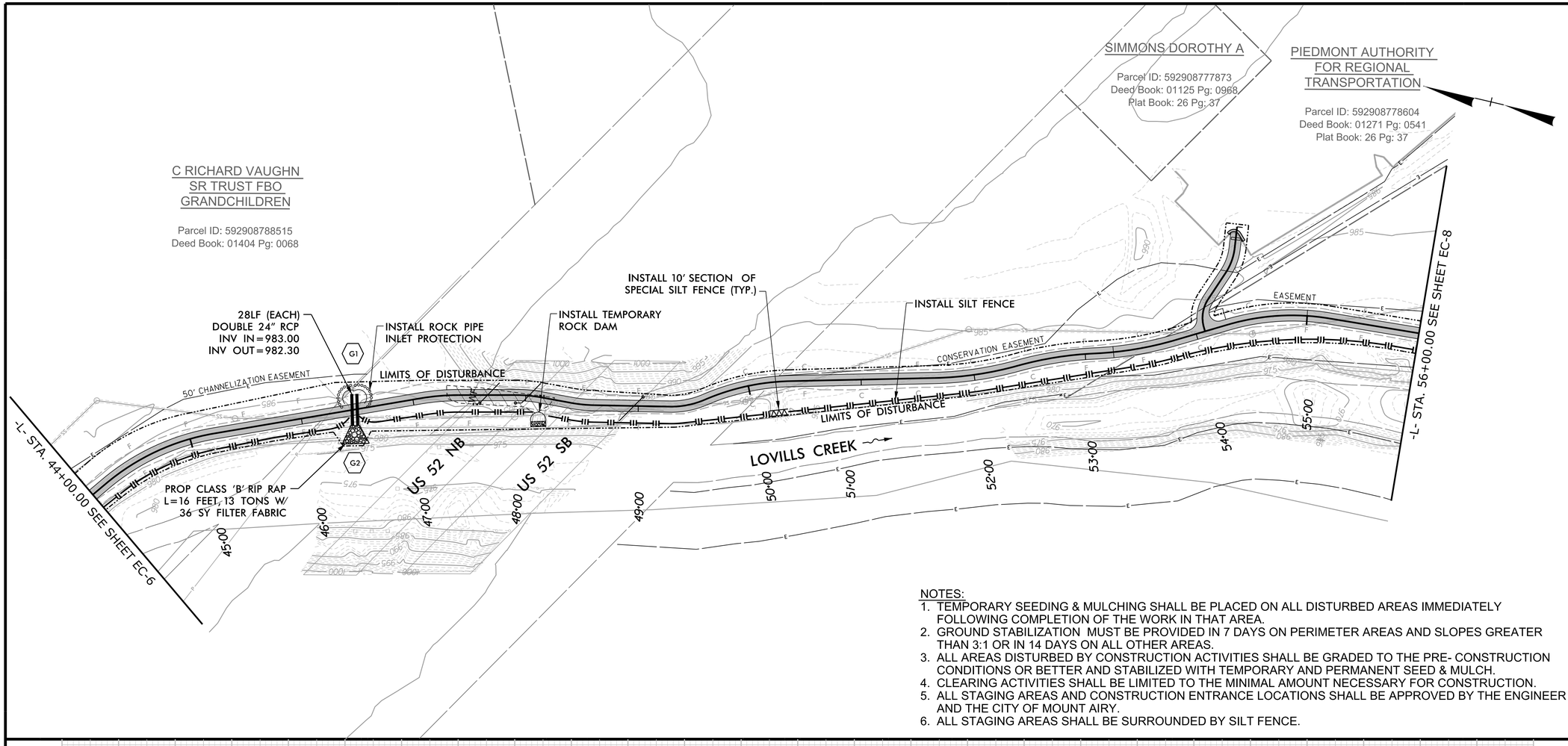

NOTES:

1. TEMPORARY SEEDING & MULCHING SHALL BE PLACED ON ALL DISTURBED AREAS IMMEDIATELY FOLLOWING COMPLETION OF THE WORK IN THAT AREA.
2. GROUND STABILIZATION MUST BE PROVIDED IN 7 DAYS ON PERIMETER AREAS AND SLOPES GREATER THAN 3:1 OR IN 14 DAYS ON ALL OTHER AREAS.
3. ALL AREAS DISTURBED BY CONSTRUCTION ACTIVITIES SHALL BE GRADED TO THE PRE- CONSTRUCTION CONDITIONS OR BETTER AND STABILIZED WITH TEMPORARY AND PERMANENT SEED & MULCH.
4. CLEARING ACTIVITIES SHALL BE LIMITED TO THE MINIMAL AMOUNT NECESSARY FOR CONSTRUCTION.
5. ALL STAGING AREAS AND CONSTRUCTION ENTRANCE LOCATIONS SHALL BE APPROVED BY THE ENGINEER AND THE CITY OF MOUNT AIRY.
6. ALL STAGING AREAS SHALL BE SURROUNDED BY SILT FENCE.

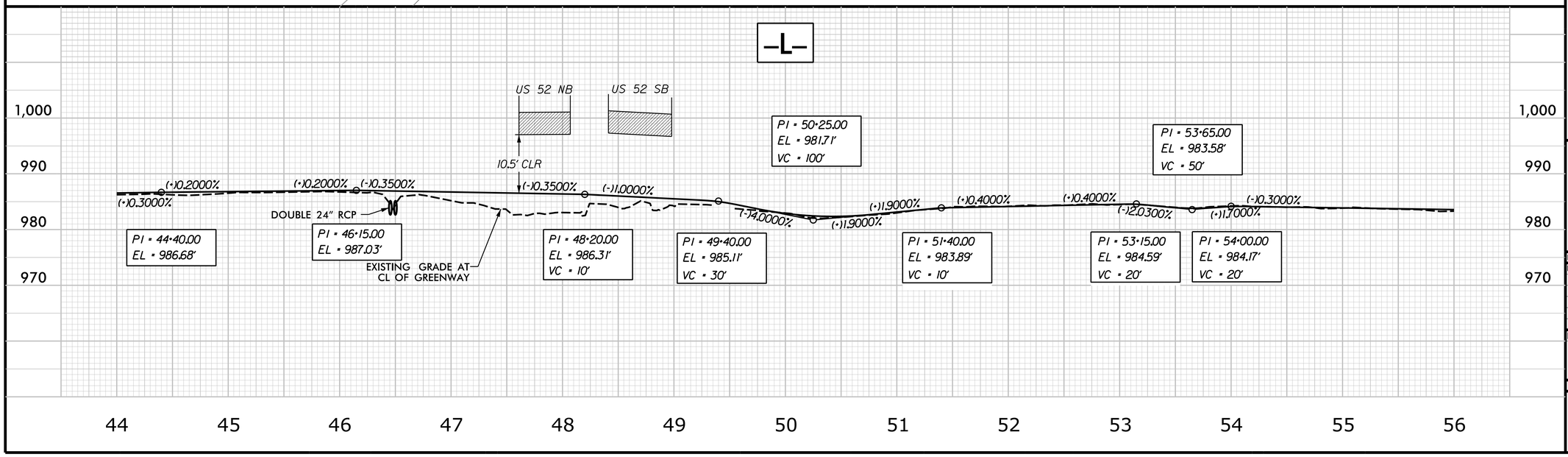

LOVILLS CREEK AND ARARAT RIVER GREENWAY

WORTH STREET TO THARINGTON PARK

Michael Baker Engineering Inc.
8000 Regency Parkway, Suite 600
Cary, NORTH CAROLINA 27518
Phone: 919.463.5488
Fax: 919.463.5490
License # F-1084

Baker

DATE: NOVEMBER 11, 2014

REVISIONS:

NO.	DATE

PROJECT NO.:

H13007.00

EC-7

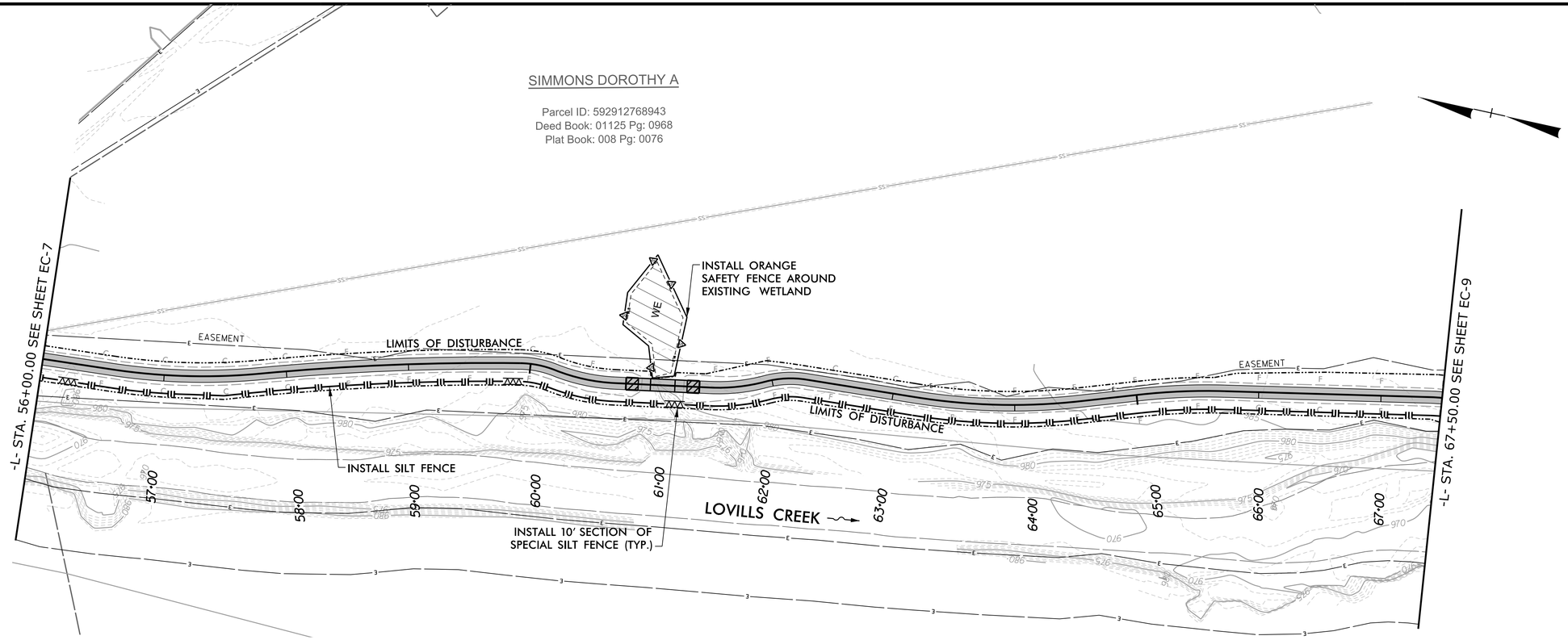

NOTES:
1. TEMPORARY SEEDING & MULCHING SHALL BE PLACED ON ALL DISTURBED AREAS IMMEDIATELY FOLLOWING COMPLETION OF THE WORK IN THAT AREA.
2. GROUND STABILIZATION MUST BE PROVIDED IN 7 DAYS ON PERIMETER AREAS AND SLOPES GREATER THAN 3:1 OR IN 14 DAYS ON ALL OTHER AREAS.
3. ALL AREAS DISTURBED BY CONSTRUCTION ACTIVITIES SHALL BE GRADED TO THE PRE- CONSTRUCTION CONDITIONS OR BETTER AND STABILIZED WITH TEMPORARY AND PERMANENT SEED & MULCH.
4. CLEARING ACTIVITIES SHALL BE LIMITED TO THE MINIMAL AMOUNT NECESSARY FOR CONSTRUCTION.
5. ALL STAGING AREAS AND CONSTRUCTION ENTRANCE LOCATIONS SHALL BE APPROVED BY THE ENGINEER AND THE CITY OF MOUNT AIRY.
6. ALL STAGING AREAS SHALL BE SURROUNDED BY SILT FENCE.

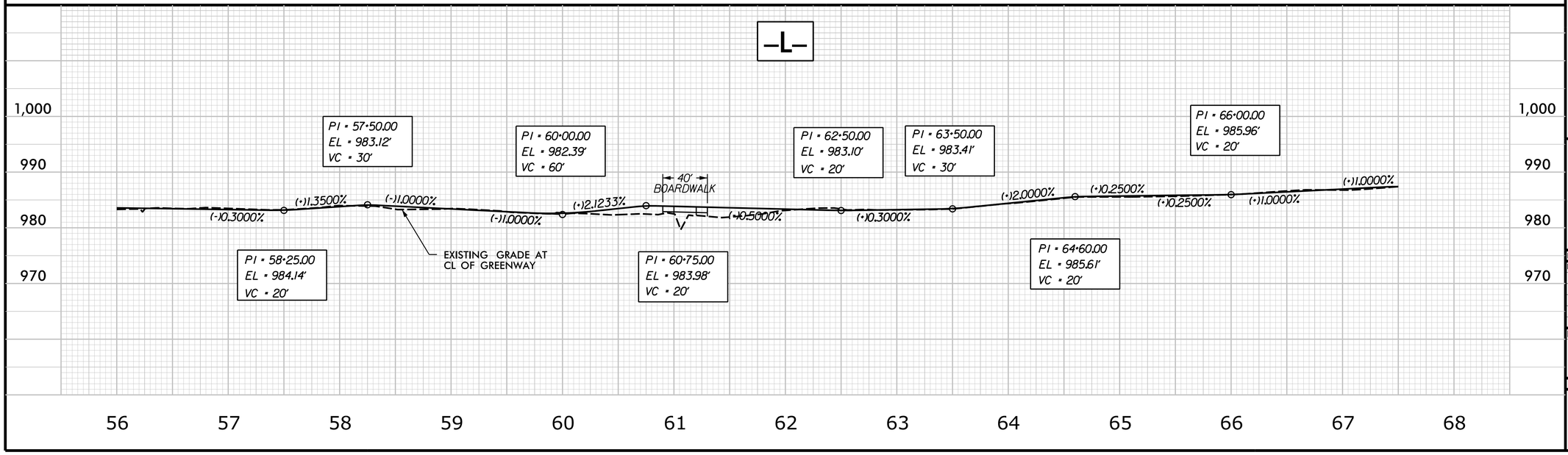

LOVILLS CREEK AND ARARAT RIVER GREENWAY

WORTH STREET TO THARINGTON PARK

Michael Baker Engineering Inc.
8000 Regency Parkway, Suite 600
Cary, NORTH CAROLINA 27518
Phone: 919.463.5488
Fax: 919.463.5490
License #: F-1084

Baker

DATE: NOVEMBER 11, 2014

REVISIONS:

NO.	DATE

PROJECT NO.: H13007.00

EC-8

SIMMONS DOROTHY A

Parcel ID: 592912768943
Deed Book: 01125 Pg: 0968
Plat Book: 008 Pg: 0076

MT AIRY CHURCH OF GOD

Parcel ID: 592912971054
Deed Book: 00279 Pg: 0499

-L- STA. 67+50.00 SEE SHEET EC-8

-L- STA. 79+50.00 SEE SHEET EC-10

LOVILLS CREEK

ARARAT RIVER

INSTALL TEMPORARY GRAVEL CONSTRUCTION ENTRANCE

LIMITS OF DISTURBANCE

INSTALL SILT FENCE

STAGING/STOCKPILE AREA

INSTALL 10' SECTION OF SPECIAL SILT FENCE (TYP.)

EASEMENT

NOTES:

1. TEMPORARY SEEDING & MULCHING SHALL BE PLACED ON ALL DISTURBED AREAS IMMEDIATELY FOLLOWING COMPLETION OF THE WORK IN THAT AREA.
2. GROUND STABILIZATION MUST BE PROVIDED IN 7 DAYS ON PERIMETER AREAS AND SLOPES GREATER THAN 3:1 OR IN 14 DAYS ON ALL OTHER AREAS.
3. ALL AREAS DISTURBED BY CONSTRUCTION ACTIVITIES SHALL BE GRADED TO THE PRE- CONSTRUCTION CONDITIONS OR BETTER AND STABILIZED WITH TEMPORARY AND PERMANENT SEED & MULCH.
4. CLEARING ACTIVITIES SHALL BE LIMITED TO THE MINIMAL AMOUNT NECESSARY FOR CONSTRUCTION.
5. ALL STAGING AREAS AND CONSTRUCTION ENTRANCE LOCATIONS SHALL BE APPROVED BY THE ENGINEER AND THE CITY OF MOUNT AIRY.
6. ALL STAGING AREAS SHALL BE SURROUNDED BY SILT FENCE.

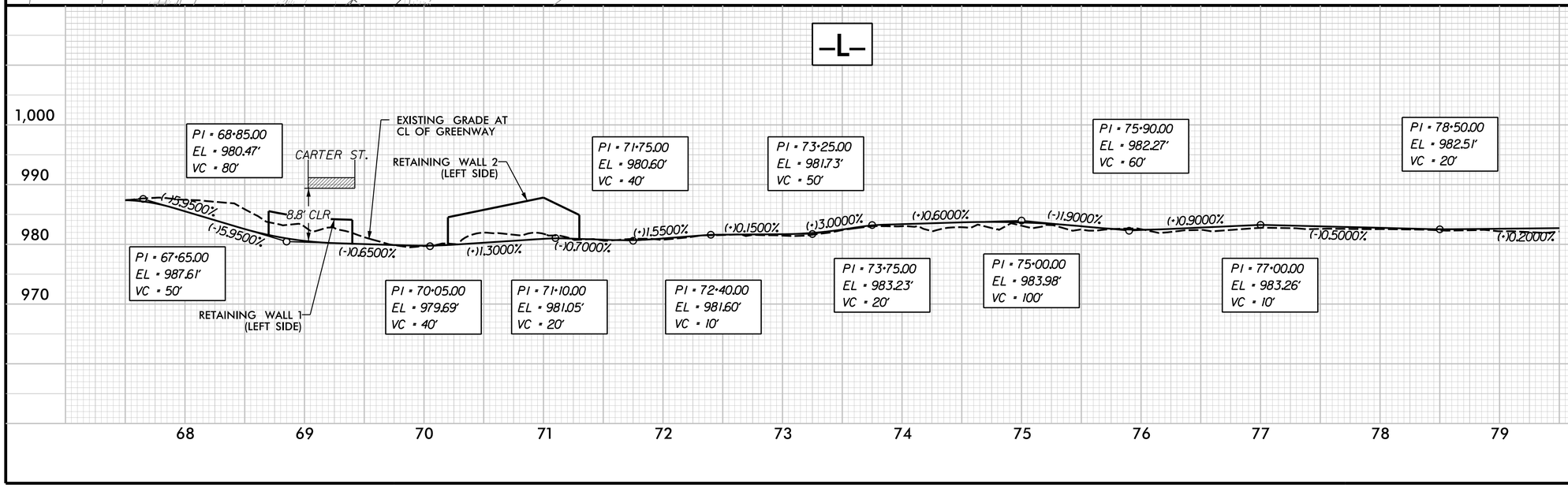

LOVILLS CREEK AND ARARAT RIVER GREENWAY

WORTH STREET TO THARINGTON PARK

Michael Baker Engineering Inc.
8000 Regency Parkway, Suite 600
Cary, NORTH CAROLINA 27518
Phone: 919.463.5488
Fax: 919.463.5490
License #: F-1084

Baker

DATE: NOVEMBER 11, 2014

REVISIONS:

NO.	DATE

PROJECT NO.:

H13007.00

EC-9

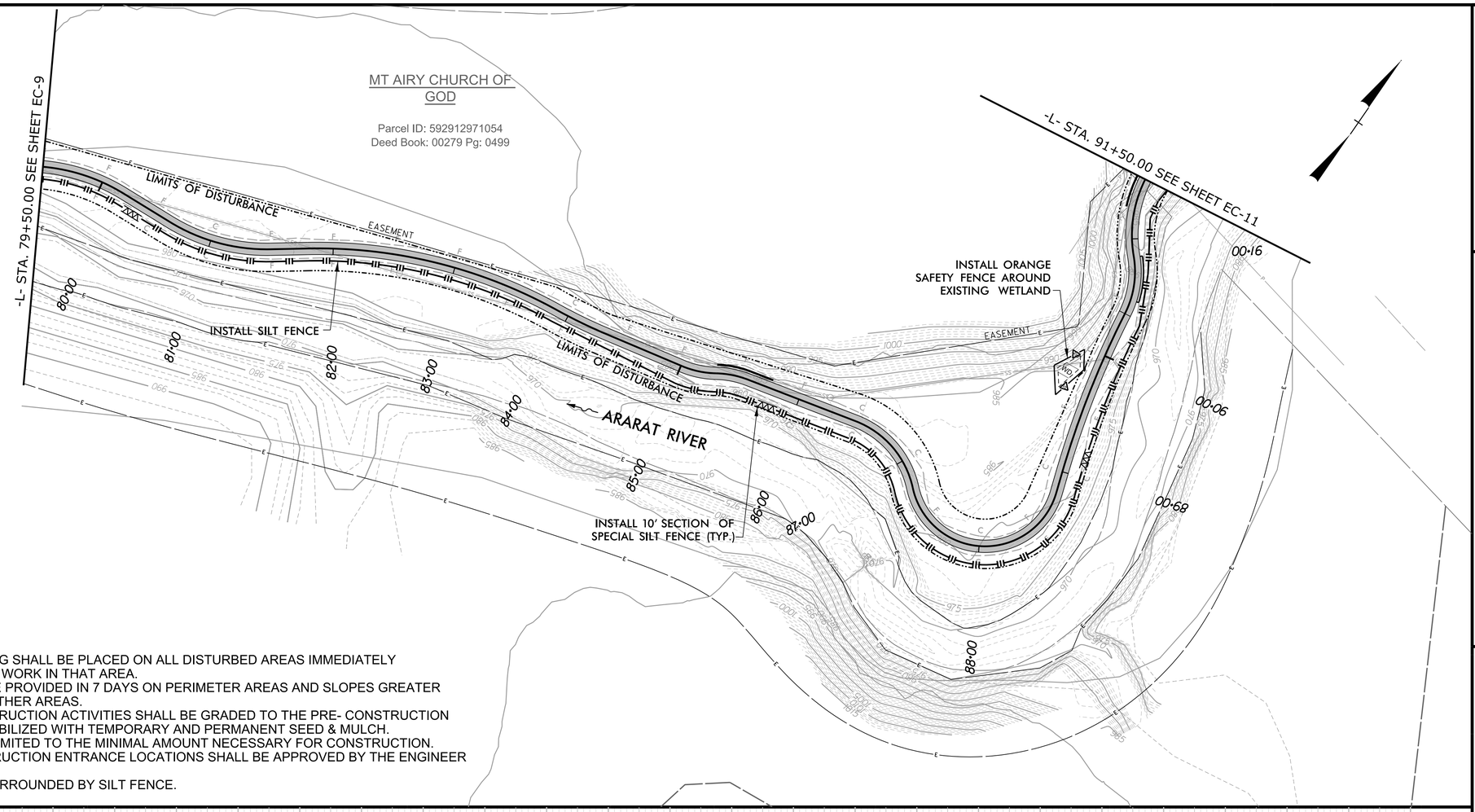

NOTES:
1. TEMPORARY SEEDING & MULCHING SHALL BE PLACED ON ALL DISTURBED AREAS IMMEDIATELY FOLLOWING COMPLETION OF THE WORK IN THAT AREA.
2. GROUND STABILIZATION MUST BE PROVIDED IN 7 DAYS ON PERIMETER AREAS AND SLOPES GREATER THAN 3:1 OR IN 14 DAYS ON ALL OTHER AREAS.
3. ALL AREAS DISTURBED BY CONSTRUCTION ACTIVITIES SHALL BE GRADED TO THE PRE- CONSTRUCTION CONDITIONS OR BETTER AND STABILIZED WITH TEMPORARY AND PERMANENT SEED & MULCH.
4. CLEARING ACTIVITIES SHALL BE LIMITED TO THE MINIMAL AMOUNT NECESSARY FOR CONSTRUCTION.
5. ALL STAGING AREAS AND CONSTRUCTION ENTRANCE LOCATIONS SHALL BE APPROVED BY THE ENGINEER AND THE CITY OF MOUNT AIRY.
6. ALL STAGING AREAS SHALL BE SURROUNDED BY SILT FENCE.

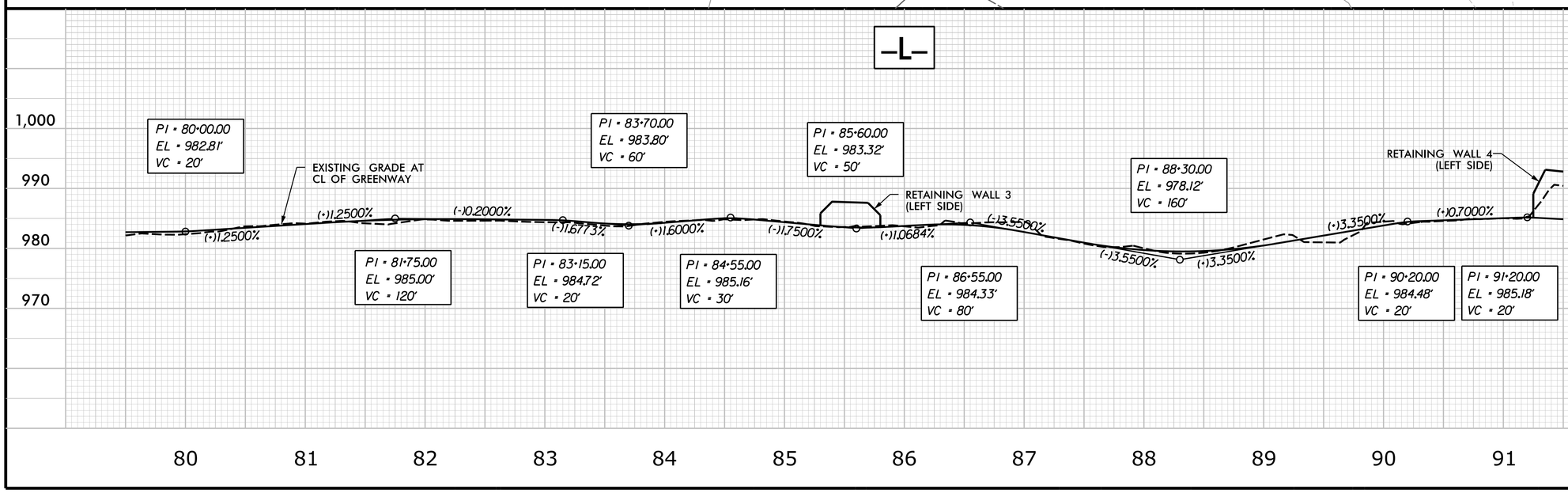

LOVILLS CREEK AND ARARAT RIVER GREENWAY

WORTH STREET TO THARINGTON PARK

Michael Baker Engineering Inc.
8000 Regency Parkway, Suite 600
Cary, NORTH CAROLINA 27518
Phone: 919.463.5488
Fax: 919.463.5490
License #: F-1084

DATE: NOVEMBER 11, 2014

REVISIONS:

NO.	DATE

PROJECT NO.: H13007.00

EC-10

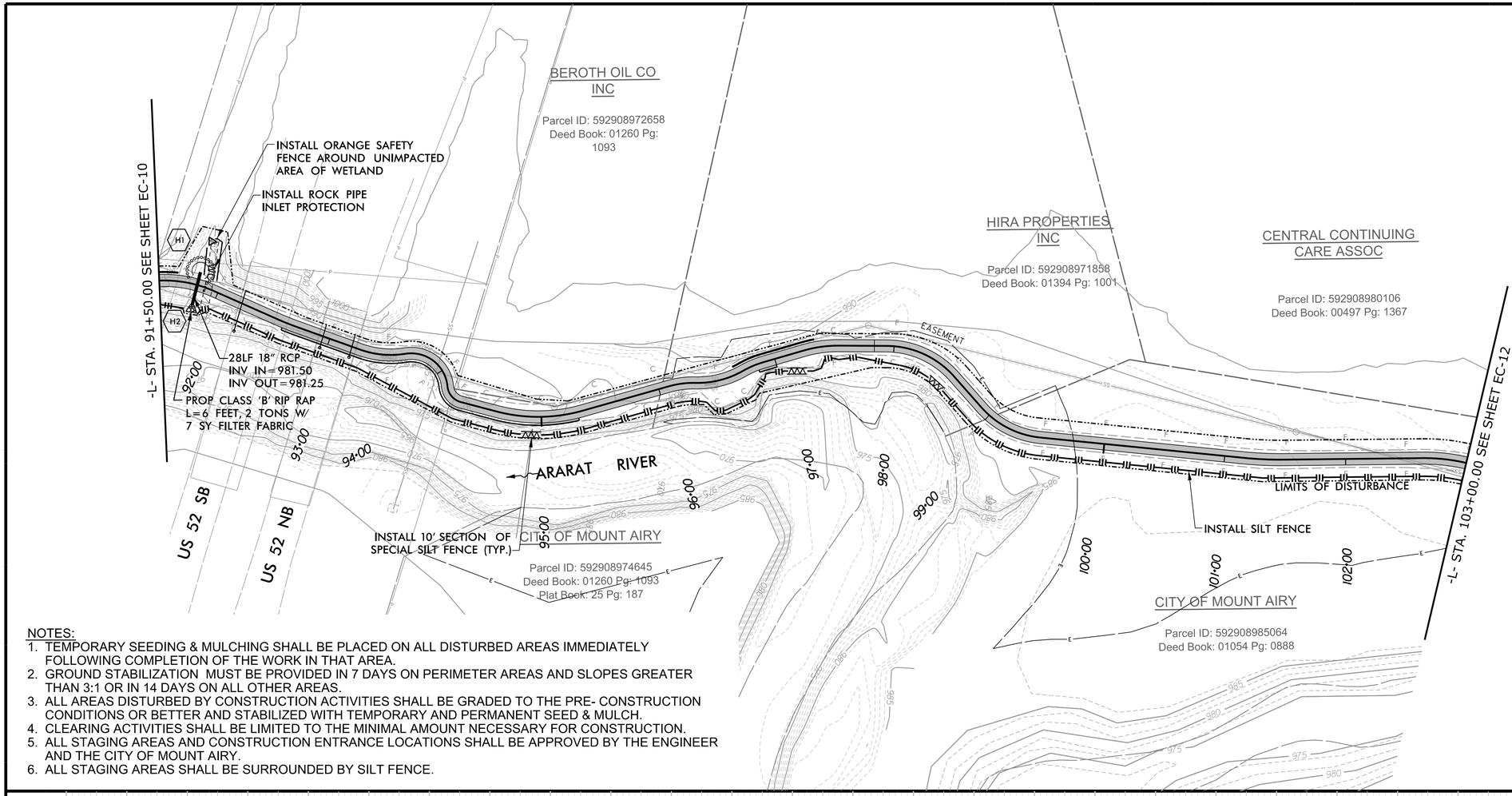

NOTES:

1. TEMPORARY SEEDING & MULCHING SHALL BE PLACED ON ALL DISTURBED AREAS IMMEDIATELY FOLLOWING COMPLETION OF THE WORK IN THAT AREA.
2. GROUND STABILIZATION MUST BE PROVIDED IN 7 DAYS ON PERIMETER AREAS AND SLOPES GREATER THAN 3:1 OR IN 14 DAYS ON ALL OTHER AREAS.
3. ALL AREAS DISTURBED BY CONSTRUCTION ACTIVITIES SHALL BE GRADED TO THE PRE- CONSTRUCTION CONDITIONS OR BETTER AND STABILIZED WITH TEMPORARY AND PERMANENT SEED & MULCH.
4. CLEARING ACTIVITIES SHALL BE LIMITED TO THE MINIMAL AMOUNT NECESSARY FOR CONSTRUCTION.
5. ALL STAGING AREAS AND CONSTRUCTION ENTRANCE LOCATIONS SHALL BE APPROVED BY THE ENGINEER AND THE CITY OF MOUNT AIRY.
6. ALL STAGING AREAS SHALL BE SURROUNDED BY SILT FENCE.

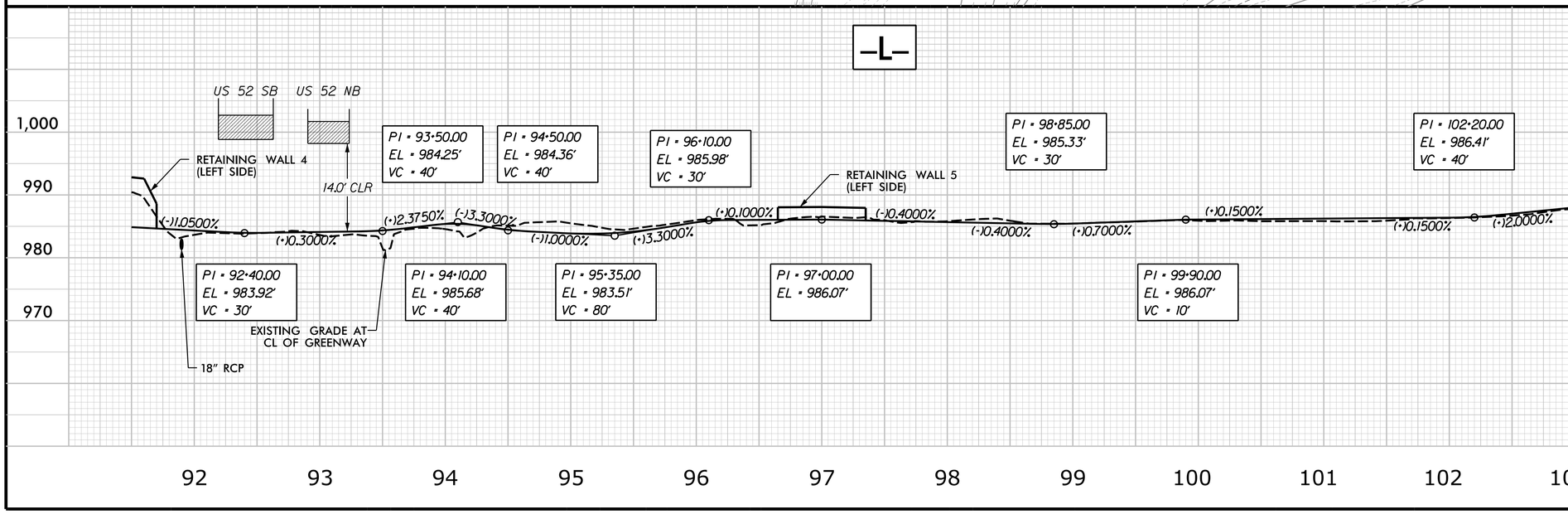

LOVILLS CREEK AND ARARAT RIVER GREENWAY

WORTH STREET TO THARINGTON PARK

Michael Baker Engineering Inc.
8000 Regency Parkway, Suite 600
Cary, NORTH CAROLINA 27518
Phone: 919.463.5488
Fax: 919.463.5490
License # F-1084

Baker

DATE: NOVEMBER 11, 2014

REVISIONS:

NO.	DATE

PROJECT NO.: H13007.00

EC-11

NOTES:
1. TEMPORARY SEEDING & MULCHING SHALL BE PLACED ON ALL DISTURBED AREAS IMMEDIATELY FOLLOWING COMPLETION OF THE WORK IN THAT AREA.
2. GROUND STABILIZATION MUST BE PROVIDED IN 7 DAYS ON PERIMETER AREAS AND SLOPES GREATER THAN 3:1 OR IN 14 DAYS ON ALL OTHER AREAS.
3. ALL AREAS DISTURBED BY CONSTRUCTION ACTIVITIES SHALL BE GRADED TO THE PRE- CONSTRUCTION CONDITIONS OR BETTER AND STABILIZED WITH TEMPORARY AND PERMANENT SEED & MULCH.
4. CLEARING ACTIVITIES SHALL BE LIMITED TO THE MINIMAL AMOUNT NECESSARY FOR CONSTRUCTION.
5. ALL STAGING AREAS AND CONSTRUCTION ENTRANCE LOCATIONS SHALL BE APPROVED BY THE ENGINEER AND THE CITY OF MOUNT AIRY.
6. ALL STAGING AREAS SHALL BE SURROUNDED BY SILT FENCE.

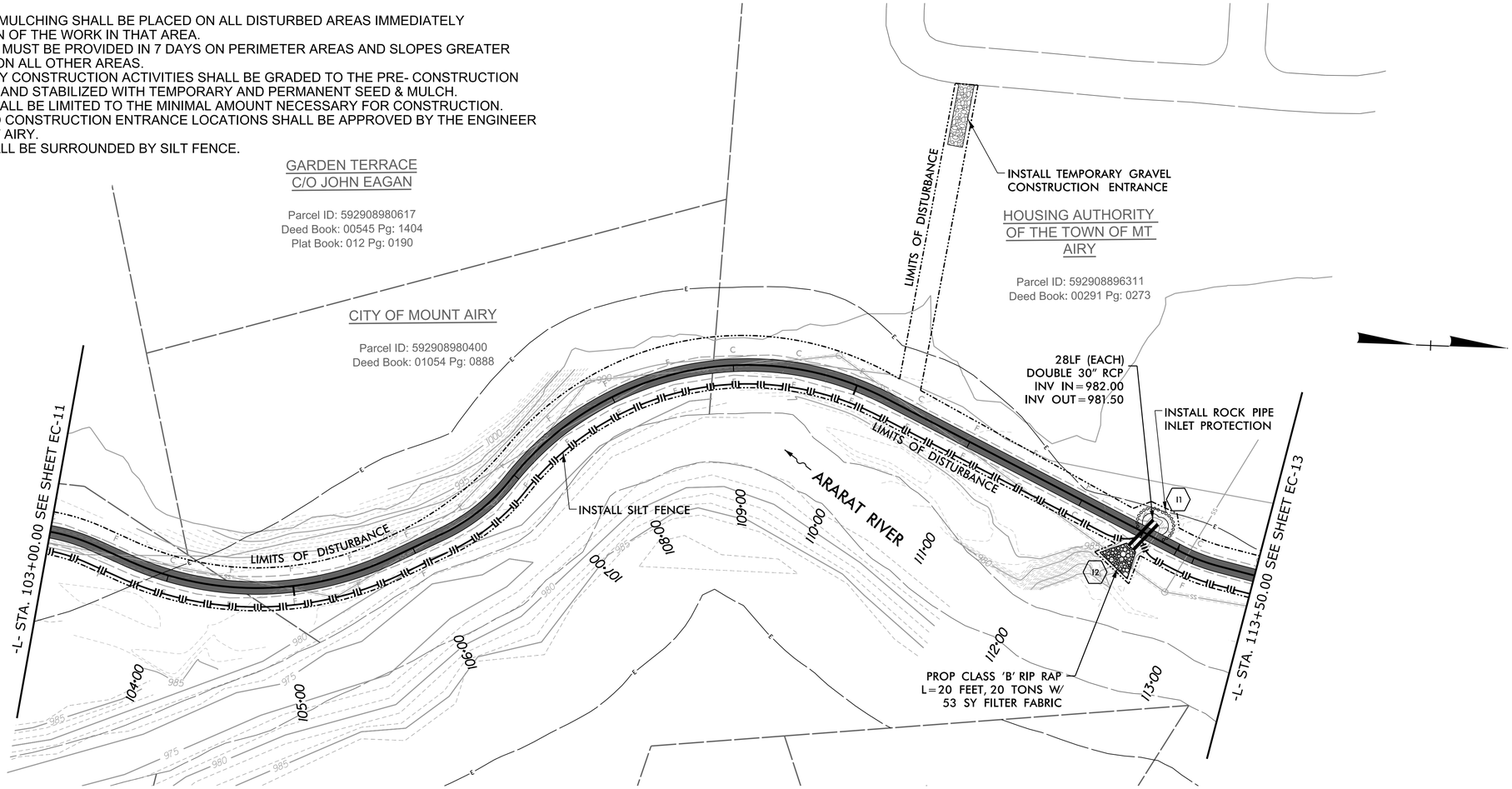

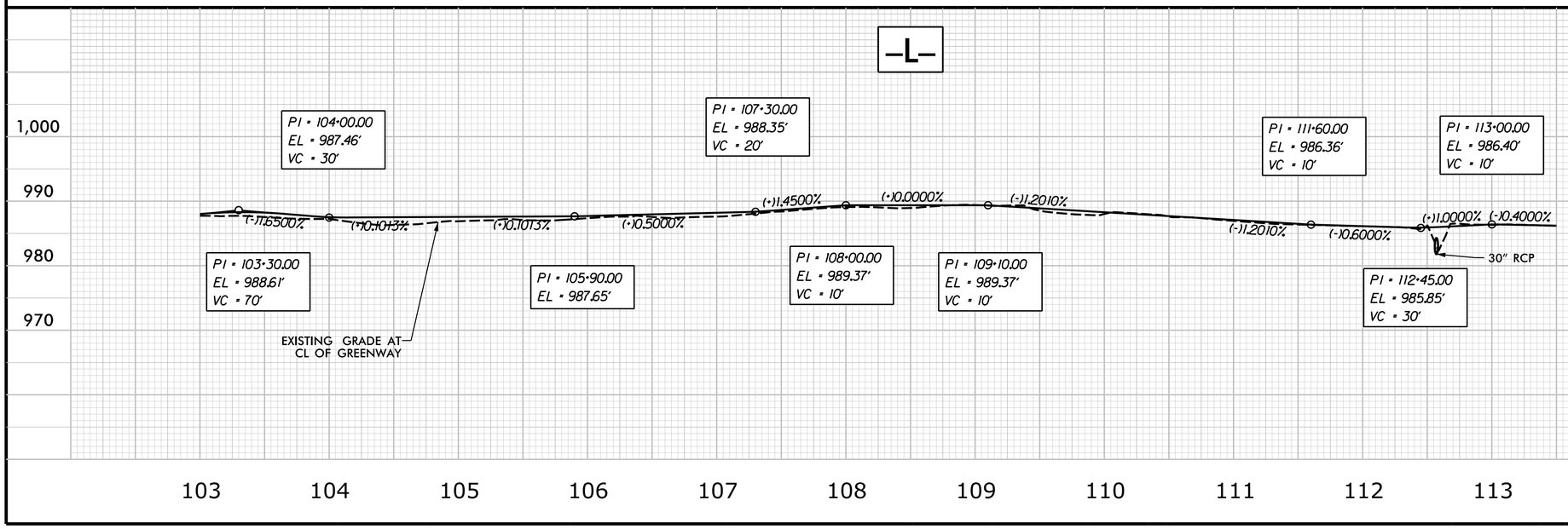

LOVILLS CREEK AND ARARAT RIVER GREENWAY

WORTH STREET TO THARINGTON PARK

Michael Baker Engineering Inc.
8000 Regency Parkway, Suite 600
Cary, NORTH CAROLINA 27518
Phone: 919.463.5488
Fax: 919.463.5490
License #: F-1084

Baker

DATE: NOVEMBER 11, 2014

REVISIONS:

NO.	DATE

PROJECT NO.:

H13007.00

EC-12

SURRY COUNTY

Parcel ID: 502020901180
Deed Book: 01312 Pg: 0352

MT AIRY CITY BOARD OF ED

Parcel ID: 502020907747
Deed Book: 01218 Pg: 1052

THARINGTON PARK

HOUSING AUTHORITY OF THE TOWN OF MT AIRY

Parcel ID: 592908896311
Deed Book: 00291 Pg: 0273

INSTALL ORANGE SAFETY FENCE AROUND EXISTING WETLAND

INSTALL SILT FENCE

INSTALL TEMPORARY GRAVEL CONSTRUCTION ENTRANCE

INSTALL ROCK PIPE INLET PROTECTION

28LF (EACH)
DOUBLE 24" RCP
INV IN = 985.75
INV OUT = 985.50

J1

J2

LIMITS OF DISTURBANCE

LIMITS OF DISTURBANCE

CRANE PAD

INSTALL SILT FENCE

-L- STA. 113+50.00 SEE SHEET EC-12

CITY OF MOUNT AIRY

Parcel ID: 592908996921
Deed Book: 01222 Pg: 0185
Plat Book: 025 Pg: 0051

ARARAT RIVER

PROP CLASS 'B' RIP RAP
L=16 FEET, 13 TONS W/
36 SY FILTER FABRIC

NOTES:

1. TEMPORARY SEEDING & MULCHING SHALL BE PLACED ON ALL DISTURBED AREAS IMMEDIATELY FOLLOWING COMPLETION OF THE WORK IN THAT AREA.
2. GROUND STABILIZATION MUST BE PROVIDED IN 7 DAYS ON PERIMETER AREAS AND SLOPES GREATER THAN 3:1 OR IN 14 DAYS ON ALL OTHER AREAS.
3. ALL AREAS DISTURBED BY CONSTRUCTION ACTIVITIES SHALL BE GRADED TO THE PRE- CONSTRUCTION CONDITIONS OR BETTER AND STABILIZED WITH TEMPORARY AND PERMANENT SEED & MULCH.
4. CLEARING ACTIVITIES SHALL BE LIMITED TO THE MINIMAL AMOUNT NECESSARY FOR CONSTRUCTION.
5. ALL STAGING AREAS AND CONSTRUCTION ENTRANCE LOCATIONS SHALL BE APPROVED BY THE ENGINEER AND THE CITY OF MOUNT AIRY.
6. ALL STAGING AREAS SHALL BE SURROUNDED BY SILT FENCE.

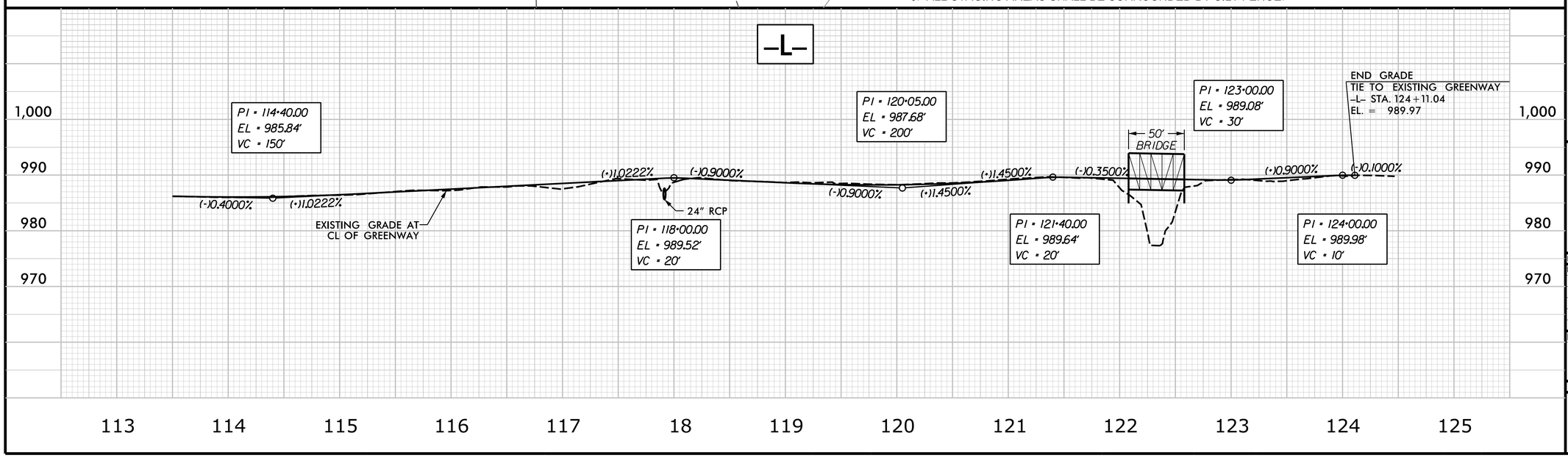

LOVILLS CREEK AND ARARAT RIVER GREENWAY

WORTH STREET TO THARINGTON PARK

Michael Baker Engineering Inc.
8000 Regency Parkway, Suite 600
Cary, NORTH CAROLINA 27518
Phone: 919.463.5488
Fax: 919.463.5490
License #: F-1084

Baker

DATE: NOVEMBER 11, 2014

REVISIONS:

NO.	DATE

PROJECT NO.:

H13007.00

EC-13

PROJECT REFERENCE NO.	SHEET NO.
H13007.00	SIG-01

PHASING DIAGRAM

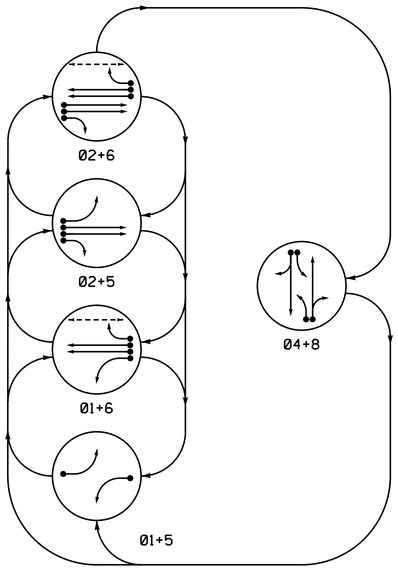

PHASING DIAGRAM DETECTION LEGEND

- DETECTED MOVEMENT
- UNDETECTED MOVEMENT (OVERLAP)
- UNSIGNALIZED MOVEMENT
- PEDESTRIAN MOVEMENT

TABLE OF OPERATION

SIGNAL FACE	PHASE 0 1 + 5	0 1 + 6	0 2 + 5	0 2 + 6	0 4 + 8	FLASH
11	←	←	~~R~~	~~R~~	~~R~~	~~Y~~
21,22	R	R	G	G	R	Y
41,42,43	R	R	R	R	G	R
51	←	~~R~~	←	~~R~~	~~R~~	~~Y~~
61,62	R	G	R	G	R	Y
81,82	R	R	R	R	G	R
P61,P62	DW	W	DW	W	DW	DW

TURNING VEHICLES TO

FIGURE 1
(R10-15 MOD)

SIGNAL FACE I.D.

All Heads L.E.D.

11
51

21,22
41,42,43
61,62
81,82

P61, P62

OASIS 2070 LOOP & DETECTOR INSTALLATION CHART

INDUCTIVE LOOPS					DETECTOR PROGRAMMING						
LOOP	SIZE (FT)	DISTANCE FROM STOPBAR (FT)	TURNS	NEW LOOP	PHASE	CALLING	EXTENSION	FULL TIME DELAY	STRETCH TIME	DELAY TIME	SYSTEM LOOP	NEW CARD
1A	6x60	0	EXIST	-	1	Y	Y	-	-	-	-	-
2A	6x6	300	EXIST	-	2	Y	Y	-	-	-	-	-
2B	6x6	300	EXIST	-	2	Y	Y	-	-	-	-	-
4A	6x40	0	2-4-2	Y	4	Y	Y	-	-	3	-	-
4B	6x40	0	2-4-2	Y	4	Y	Y	-	-	10	-	-
5A	6x60	0	EXIST	-	5	Y	Y	-	-	-	-	-
6A	6x6	300	EXIST	-	6	Y	Y	-	-	-	-	-
6B	6x6	300	EXIST	-	6	Y	Y	-	-	-	-	-
8A	6x60	+5	EXIST	-	8	Y	Y	-	-	3	-	-
8B	6x60	+5	EXIST	-	8	Y	Y	-	-	10	-	-
8C	6x15	+5	EXIST	-	8	Y	Y	-	-	15	-	-
S13	6x6	+200	EXIST	-	-	-	-	-	-	-	Y	-
S14	6x6	+200	EXIST	-	-	-	-	-	-	-	Y	-

5 PHASE FULLY-ACTUATED US-601/US-52 BYPASS CLS

NOTES

1. Refer to "Roadway Standard Drawings NCDOT" dated January 2012 and "Standard Specifications for Roads and Structures" dated January 2012.
2. Do not program for late night flashing operation unless otherwise directed by the Engineer.
3. Phase 1 and/or phase 5 may be lagged.
4. Set all detector units to presence mode.
5. Omit "WALK" and flashing "DON'T WALK" with no pedestrian calls.
6. Program pedestrian heads to countdown the flashing "DON'T WALK" time only.
7. Maximum times shown in timing chart are for free-run operation only. Coordinated signal system timing values supersede these values.
8. Closed loop system data: Controller Asset #0540.

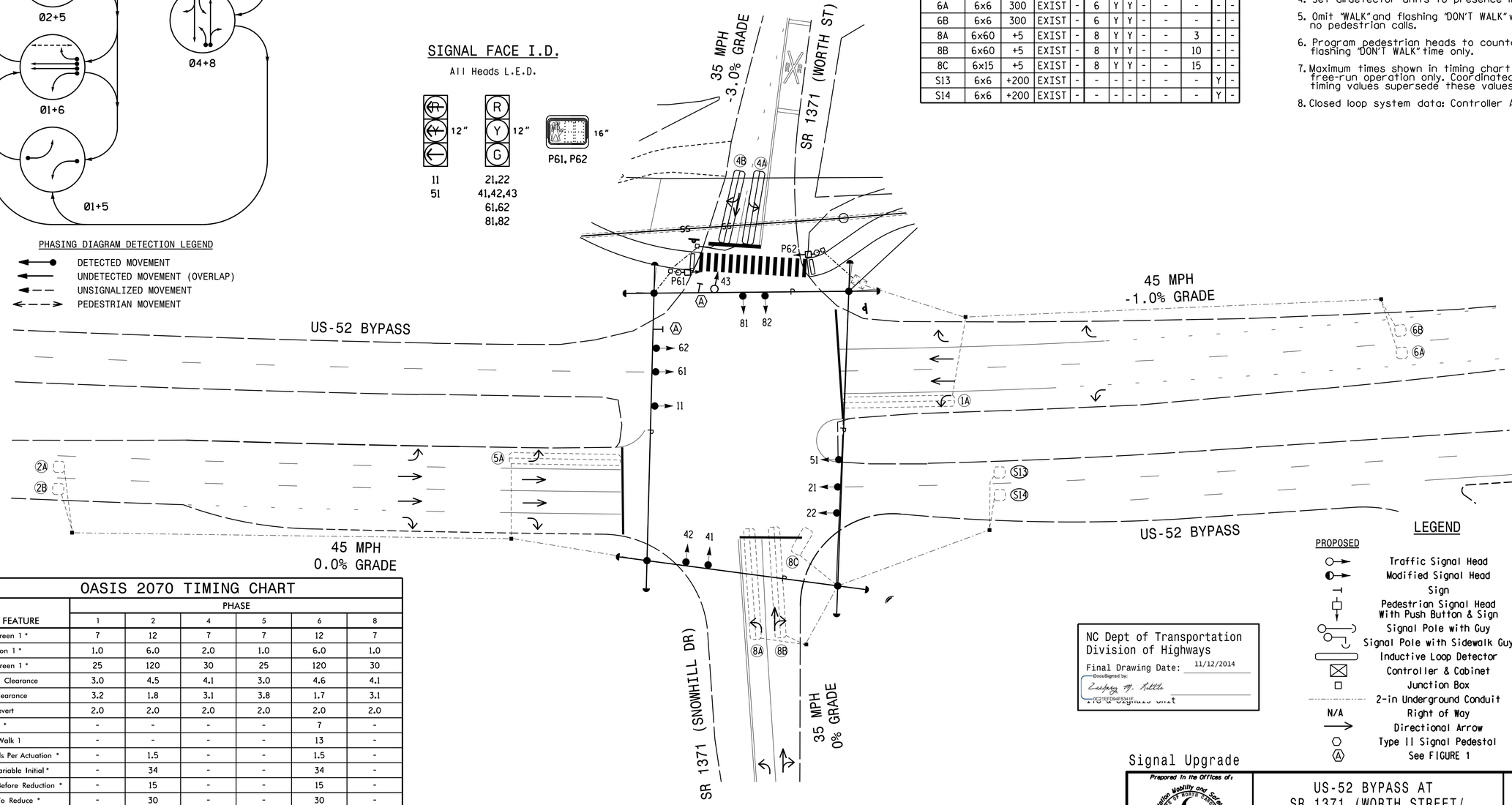

OASIS 2070 TIMING CHART

FEATURE	PHASE 1	2	4	5	6	8
Min Green 1 *	7	12	7	7	12	7
Extension 1 *	1.0	6.0	2.0	1.0	6.0	1.0
Max Green 1 *	25	120	30	25	120	30
Yellow Clearance	3.0	4.5	4.1	3.0	4.6	4.1
Red Clearance	3.2	1.8	3.1	3.8	1.7	3.1
Red Revert	2.0	2.0	2.0	2.0	2.0	2.0
Walk 1 *	-	-	-	-	7	-
Don't Walk 1	-	-	-	-	13	-
Seconds Per Actuation *	-	1.5	-	-	1.5	-
Max Variable Initial *	-	34	-	-	34	-
Time Before Reduction *	-	15	-	-	15	-
Time To Reduce *	-	30	-	-	30	-
Minimum Gap	-	3.2	-	-	3.2	-
Recall Mode	-	MIN RECALL	-	-	MIN RECALL	-
Vehicle Call Memory	-	YELLOW	-	-	YELLOW	-
Dual Entry	-	-	ON	-	-	ON
Simultaneous Gap	ON	ON	ON	ON	ON	ON

* These values may be field adjusted. Do not adjust Min Green and Extension times for phases 2 and 6 lower than what is shown. Min Green for all other phases should not be lower than 4 seconds.

LEGEND

PROPOSED		EXISTING
○→	Traffic Signal Head	●→
◐→	Modified Signal Head	N/A
⊣	Sign	⊣
□↓	Pedestrian Signal Head With Push Button & Sign	■↓
○	Signal Pole with Guy	●
○	Signal Pole with Sidewalk Guy	●
▭	Inductive Loop Detector	▭
⊠	Controller & Cabinet	⛶
□	Junction Box	■
·····	2-in Underground Conduit	·····
N/A	Right of Way	
→	Directional Arrow	→
⬡	Type II Signal Pedestal	⬢
Ⓐ	See FIGURE 1	Ⓐ

NC Dept of Transportation
Division of Highways
Final Drawing Date: 11/12/2014
DocuSigned by: Zachary M. Little
DC21EED94E5941F...
PE's & Signals Unit

Signal Upgrade

Baker
Michael Baker Engineering Inc.
8000 Regency Parkway, Suite 600
Cary, NORTH CAROLINA 27518
Phone: 919.463.5488
Fax: 919.463.5490
License #: F-1084

Prepared in the Offices of:
Transportation Mobility and Safety Division
Traffic Engineering Branch
NORTH CAROLINA DEPARTMENT OF TRANSPORTATION
Signal Design Section
750 N.Greenfield Pkwy.Garner,NC 27529

US-52 BYPASS AT SR 1371 (WORTH STREET/ SNOWHILL DRIVE)

DIVISION 11 SURRY COUNTY MOUNT AIRY

PLAN DATE: November 2014 REVIEWED BY: W M Ruhsam

PREPARED BY: K M Cory REVIEWED BY:

SCALE 0 30 1"=30'

REVISIONS	INIT.	DATE

SEAL
NORTH CAROLINA PROFESSIONAL SEAL 038970 ENGINEER KELLY M CORY
DocuSigned by: Kelly M. Cory 11/12/2014
E2F270FFB1C142E...
DATE
SIG. INVENTORY NO. 11-0540

$$$$$$$SISTIME$$$$
$$$$$$$$$$$$$$$$$$$$DGN$$$$$$$$$$$$$$$$$$$$
$$$$USERNAME$$$$

PROJECT REFERENCE NO.	SHEET NO.
H13007.00	SIG-02

EDI MODEL 2010ECL CONFLICT MONITOR PROGRAMMING DETAIL

(remove jumpers and set switches as shown)

REMOVE JUMPERS AS SHOWN

■ = DENOTES POSITION OF SWITCH

NOTES:

1. Card is provided with all diode jumpers in place. Removal of any jumper allows its channels to run concurrently.
2. Make sure jumpers SEL2-SEL5 are present on the monitor board.

NOTES

1. To prevent "flash-conflict" problems, insert red flash program blocks for all unused vehicle load switches in the output file. The installer shall verify that signal heads flash in accordance with the Signal Plans.
2. Ensure that Red Enable is active at all times during normal operation. To prevent Red Failures on unused monitor channels, tie unused red monitor inputs 3,7,9,10, 11,12,13,14,15 & 16 to load switch AC+ per the cabinet manufacturer's instructions.
3. Program phases 4 and 8 for Dual Entry.
4. Enable Simultaneous Gap-Out, for all phases.
5. Program phases 2 and 6 for Variable Initial and Gap Reduction.
6. Program phases 2 and 6 for Start Up In Green.
7. Program phase 6 for 'STARTUP PED CALL'.
8. Program phases 2 and 6 for Yellow Flash.
9. The cabinet and controller are part of the US-601/ US-52 Bypass Closed Loop System.

SIGNAL HEAD HOOK-UP CHART

LOAD SWITCH NO.	S1	S2	S2P	S3	S4	S4P	S5	S6	S6P	S7	S8	S8P
PHASE	1	2	2 PED	3	4	4 PED	5	6	6 PED	7	8	8 PED
SIGNAL HEAD NO.	11	21,22	NU	NU	41,42 43	NU	51	61,62	P61, P62	NU	81,82	NU
RED		128			101			134			107	
YELLOW		129			102			135			108	
GREEN		130			103			136			109	
RED ARROW	125						131					
YELLOW ARROW	126						132					
GREEN ARROW	127						133					
(hand symbol)									119			
(pedestrian symbol)									121			

NU = Not Used

EQUIPMENT INFORMATION

CONTROLLER..............SAFETRAN 2070L
CABINET.................SAFETRAN 332
SOFTWARE................ECONOLITE OASIS
CABINET MOUNT...........BASE
OUTPUT FILE POSITIONS...12
LOAD SWITCHES USED......S1,S2,S4,S5,S6,S6P,S8
PHASES USED.............1,2,4,5,6,6PED,8
OVERLAPS................NONE

INPUT FILE POSITION LAYOUT

(front view)

FILE		1	2	3	4	5	6	7	8	9	10	11	12	13	14
FILE "I"	U	Ø 1 1A	Ø 2 2A	SLOT EMPTY	SLOT EMPTY	SLOT EMPTY	Ø 4 4A	SLOT EMPTY	SLOT EMPTY	SLOT EMPTY	SLOT EMPTY	SLOT EMPTY	SLOT EMPTY	Ø6 PED DC ISOLATOR	FS DC ISOLATOR
	L	NOT USED	Ø 2 2B				Ø 4 4B							NOT USED	ST DC ISOLATOR
FILE "J"	U	Ø 5 5A	Ø 6 6A	SLOT EMPTY	SLOT EMPTY	SLOT EMPTY	Ø 8 8A	Ø 8 8C	SLOT EMPTY	SYS. DET. S13	SLOT EMPTY	SLOT EMPTY	SLOT EMPTY	SLOT EMPTY	SLOT EMPTY
	L	NOT USED	Ø 6 6B				Ø 8 8B	NOT USED		SYS. DET. S14					

EX.: 1A, 2A, ETC. = LOOP NO.'S

FS = FLASH SENSE
ST = STOP TIME

INPUT FILE CONNECTION & PROGRAMMING CHART

LOOP NO.	LOOP TERMINAL	INPUT FILE POS.	PIN NO.	INPUT ASSIGNMENT NO.	DETECTOR NO.	NEMA PHASE	CALL	EXTEND	FULL TIME DELAY	STRETCH TIME	DELAY TIME
1A	TB2-1,2	I1U	56	18	1	1	Y	Y			
2A	TB2-5,6	I2U	39	1	2	2	Y	Y			
2B	TB2-7,8	I2L	43	5	12	2	Y	Y			
4A	TB4-9,10	I6U	41	3	4	4	Y	Y			3
4B	TB4-11,12	I6L	45	7	14	4	Y	Y			10
5A	TB3-1,2	J1U	55	17	5	5	Y	Y			
6A	TB3-5,6	J2U	40	2	6	6	Y	Y			
6B	TB3-7,8	J2L	44	6	16	6	Y	Y			
8A	TB5-9,10	J6U	42	4	8	8	Y	Y			3
8B	TB5-11,12	J6L	46	8	18	8	Y	Y			10
8C	TB7-1,2	J7U	66	28	38	8	Y	Y			15
* S13	TB7-9,10	J9U	59	21	15	SYS					
* S14	TB7-11,12	J9L	61	23	17	SYS					
PED PUSH BUTTONS											
P61,P62	TB8-7,9	I13U	68	30	PED 6	6 PED					

NOTE:
INSTALL DC ISOLATORS IN INPUT FILE SLOT I13.

* System detector only. Remove the vehicle phase assigned to this detector in the default programming.

INPUT FILE POSITION LEGEND: J2L
FILE J
SLOT 2
LOWER

COUNTDOWN PEDESTRIAN SIGNAL OPERATION

Countdown Ped Signals are required to display timing only during Ped Clearance Interval. Consult Ped Signal Module user's manual for instructions on selecting this feature.

THIS ELECTRICAL DETAIL IS FOR
THE SIGNAL DESIGN: 11-0540
DESIGNED: November 2014
SEALED: 11/12/2014
REVISED: N/A

NC Dept of Transportation
Division of Highways
Final Drawing Date: 11/12/2014
DocuSigned by: Zachary M. Little
0C21EFD94F5341F...

Baker
Michael Baker Engineering Inc.
8000 Regency Parkway, Suite 600
Cary, NORTH CAROLINA 27518
Phone: 919.463.5488
Fax: 919.463.5490
License #: F-1084

Signal Upgrade

ELECTRICAL AND PROGRAMMING DETAILS FOR:

Prepared in the Offices of: Transportation Mobility and Safety Division, Signal Design Section, 750 N.Greenfield Pkwy, Garner, NC 27529

US-52 BYPASS AT
SR 1371 (WORTH STREET/
SNOWHILL DRIVE)

DIVISION 11 SURRY COUNTY MOUNT AIRY

PLAN DATE: November 2014	REVIEWED BY: W Ruhsam
PREPARED BY: K M Cory	REVIEWED BY:

REVISIONS	INIT.	DATE

SEAL
NORTH CAROLINA PROFESSIONAL SEAL 038970 ENGINEER KELLY M CORY
DocuSigned by: Kelly M. Cory
E2F270FFB1C142E...
11/12/2014
DATE

SIG. INVENTORY NO. 11-0540

$$$$$SYSTIME$$$$$
$$$$$$$$$$$$$$$DGN$$$$$$$$$$$$$$$$
$$$$USERNAME$$$$

CITY OF MOUNT AIRY
NORTH CAROLINA

LOVILLS CREEK AND ARARAT RIVER GREENWAY

TRANSPORTATION MANAGEMENT PLAN

SURRY COUNTY

BEGIN EB-5014
-L- STA. 8+47.46

END EB-5014
-L- STA. 124+11.04

INDEX OF SHEETS

SHEET NO.	TITLE
TMP-1	TITLE SHEET, VICINITY MAP AND INDEX OF SHEETS
TMP-1A	LIST OF APPLICABLE ROADWAY STANDARD DRAWINGS, AND LEGEND
TMP-1B	TRANSPORTATION OPERATIONS PLAN: (MANAGEMENT STRATEGIES, GENERAL NOTES AND LOCAL NOTES)
TMP-2	OVERALL PLAN

NCDOT TIP:EB-5014
WBS: 45522.3.1
FA# STPEB-1117(15)

APPROVED: 2014.11.14
DATE: 10:16:41 -05'00'

SEAL

NORTH CAROLINA PROFESSIONAL SEAL 034367 ENGINEER TODD H. BUCKNER

THE GREAT SEAL OF THE CITY OF MOUNT AIRY • NORTH CAROLINA • 1885

LOVILLS CREEK AND ARARAT RIVER GREENWAY
WORTH STREET TO THARINGTON PARK

Michael Baker Engineering Inc.
8000 Regency Parkway, Suite 600
Cary, NORTH CAROLINA 27518
Phone: 919.463.5488
Fax: 919.463.5490
License #: F-1084

Baker

DATE: JUNE 17, 2014

REVISIONS:

NO.	DATE

PROJECT NO.: H13007.00

TMP-1

OVERVIEW

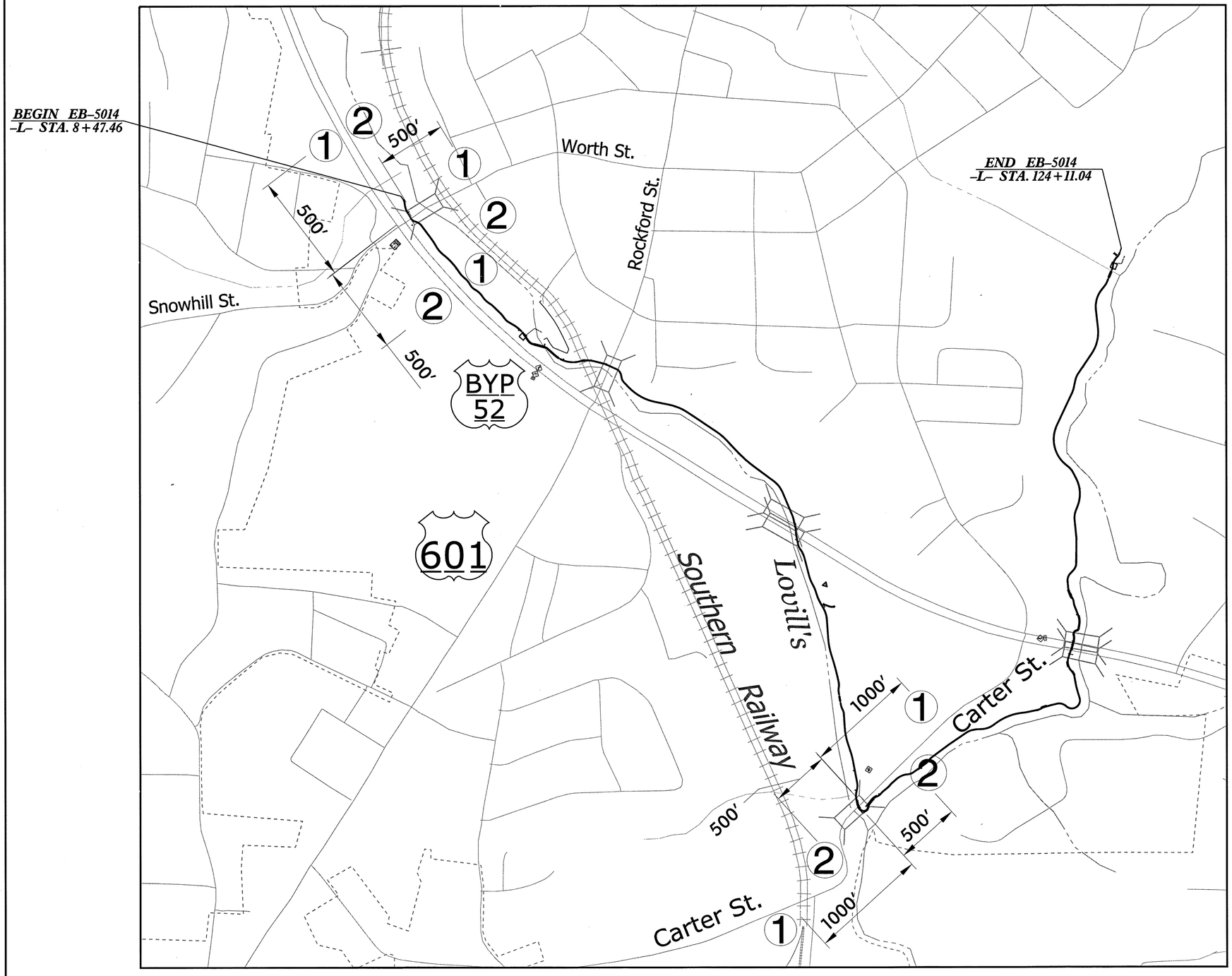

1 — BEGIN ROAD WORK — SP-11299 48" X 48"

2 — END ROAD WORK — G20-2 A 48" X 24"

NCDOT TIP:EB-5014
WBS: 45522.3.1
FA# STPEB-1117(15)

APPROVED: 2014.11.14
DATE: 10:18:28 -05'00'

SEAL

NORTH CAROLINA PROFESSIONAL SEAL 034367 ENGINEER TODD H. BUCKNER

THE GREAT SEAL OF THE CITY OF MOUNT AIRY • NORTH CAROLINA • 1885

LOVILLS CREEK AND ARARAT RIVER GREENWAY
WORTH STREET TO THARINGTON PARK

Michael Baker Engineering Inc.
8000 Regency Parkway, Suite 600
Cary, NORTH CAROLINA 27518
Phone: 919.463.5488
Fax: 919.463.5490
License # F-1084

Baker

DATE: JUNE 17, 2014

REVISIONS:

NO.	DATE

PROJECT NO.: H13007.00

TMP-2

ROADWAY STANDARD DRAWINGS

THE FOLLOWING ROADWAY STANDARDS AS SHOWN IN "ROADWAY STANDARD DRAWINGS" - PROJECT SERVICES UNIT - N.C. DEPARTMENT OF TRANSPORTATION - RALEIGH, N.C., DATED JANUARY 2012 ARE APPLICABLE TO THIS PROJECT AND BY REFERENCE HEREBY ARE CONSIDERED A PART OF THESE PLANS:

STD. NO.	TITLE
1101.01	WORK ZONE ADVANCE WARNING SIGNS
1101.02	TEMPORARY LANE CLOSURES
1101.03	TEMPORARY ROAD CLOSURES
1101.04	TEMPORARY SHOULDER CLOSURES
1101.05	WORK ZONE VEHICLE ACCESSES
1101.11	TRAFFIC CONTROL DESIGN TABLES
1110.01	STATIONARY WORK ZONE SIGNS
1110.02	PORTABLE WORK ZONE SIGNS
1115.01	FLASHING ARROW BOARDS
1130.01	DRUM
1135.01	CONES
1145.01	BARRICADES
1150.01	FLAGGING DEVICES

LEGEND

GENERAL

- DIRECTION OF TRAFFIC FLOW
- DIRECTION OF PEDESTRIAN TRAFFIC FLOW
- EXIST. PVMT.
- NORTH ARROW
- PROPOSED PVMT.
- TEMP. SHORING (LOCATION PURPOSES ONLY)
- WORK AREA
- REMOVAL

SIGNALS

EXISTING PROPOSED TEMPORARY

PAVEMENT MARKINGS

EXISTING LINES

TEMPORARY LINES

TRAFFIC CONTROL DEVICES

- BARRICADE (TYPE III)
- CONE
- DRUM SKINNY DRUM TUBULAR MARKER
- TEMPORARY CRASH CUSHION
- FLASHING ARROW BOARD
- FLAGGER
- CHANGEABLE MESSAGE SIGN

TEMPORARY SIGNING

- PORTABLE SIGN
- STATIONARY SIGN
- STATIONARY OR PORTABLE SIGN

PHASING

PHASE 1 INSTALL ADVANCE WARNING SIGNS ON ALL ROADS IN ACCORDANCE WITH ROADWAY STANDARD DRAWING 1101.01. IF SIGNS ARE INSTALLED MORE THAN THREE (3) DAYS BEFORE CONSTRUCTION BEGINS, COVER SIGNS ACCORDING TO NCDOT STANDARD SPECIFICATION DIVISION 12.

PHASE 2 UTILIZE TEMPORARY LANE CLOSURES TO COMPLETE THE WORK AT WORTH STREET AND CARTER STREET IN ACCORDANCE WITH NCDOT STANDARD DRAWING 1101.02. INSTALL TEMPORARY PAVEMENT MARKINGS TO REPLACE ANY DAMAGED OR CONFLICTING MARKINGS DURING CONSTRUCTION.

PHASE 3 UPON COMPLETION OF CONSTRUCTION, REMOVE ALL TEMPORARY TRAFFIC CONTROL DEVICES.

NCDOT TIP:EB-5014
WBS: 45522.3.1
FA# STPEB-1117(15)

APPROVED: 2014.11.14
DATE: 10:17:02 -05'00'

SEAL

NORTH CAROLINA PROFESSIONAL SEAL 034367 ENGINEER TODD H. BUCKNER

THE GREAT SEAL OF THE CITY OF MOUNT AIRY • NORTH CAROLINA • 1885

LOVILLS CREEK AND ARARAT RIVER GREENWAY
WORTH STREET TO THARINGTON PARK

Michael Baker Engineering Inc.
8000 Regency Parkway, Suite 600
Cary, NORTH CAROLINA 27518
Phone: 919.463.5488
Fax: 919.463.5490
License #: F-1084

Baker

DATE: JUNE 17, 2014

REVISIONS:

NO.	DATE

PROJECT NO.:

H13007.00

TMP-1A

GENERAL NOTES / LOCAL NOTES

CHANGES MAY BE REQUIRED WHEN PHYSICAL DIMENSIONS IN THE DETAIL DRAWINGS, STANDARD DETAILS, AND ROADWAY DETAILS ARE NOT ATTAINABLE TO MEET FIELD CONDITIONS OR RESULT IN DUPLICATE OR UNDESIRED OVERLAPPING OF DEVICES.
MODIFICATION MAY INCLUDE: MOVING, SUPPLEMENTING, COVERING, OR REMOVAL OF DEVICES AS DIRECTED BY THE ENGINEER.

THE FOLLOWING GENERAL NOTES APPLY AT ALL TIMES FOR THE DURATION OF THE CONSTRUCTION PROJECT EXCEPT WHEN OTHERWISE NOTED IN THE PLAN OR DIRECTED BY THE ENGINEER.

TIME RESTRICTIONS

A) DO NOT CLOSE OR NARROW TRAVEL LANES AS FOLLOWS:

ROAD NAME	DAY AND TIME RESTRICTIONS
US 52 BYPASS	MONDAY THRU FRIDAY, 6:00 A.M. TO 9:00 A.M. MONDAY THRU FRIDAY, 4:00 P.M. TO 6:00 P.M.
WORTH ST.	MONDAY THRU FRIDAY, 6:00 A.M. TO 9:00 A.M. MONDAY THRU FRIDAY, 4:00 P.M. TO 6:00 P.M.
CARTER ST.	MONDAY THRU FRIDAY, 6:00 A.M. TO 9:00 A.M. MONDAY THRU FRIDAY, 4:00 P.M. TO 6:00 P.M.

B) DO NOT CLOSE OR NARROW TRAVEL LANES DURING HOLIDAYS AND SPECIAL EVENTS AS FOLLOWS:

ROAD NAME

ALL

HOLIDAY

1. FOR ANY UNEXPECTED OCCURRENCE THAT CREATES UNUSUALLY HIGH TRAFFIC VOLUMES, AS DIRECTED BY THE ENGINEER.
2. FOR NEW YEAR'S, BETWEEN THE HOURS OF 4:00 P.M. DECEMBER 31st AND 9:00 A.M. JANUARY 2ND. IF NEW YEAR'S DAY IS ON A FRIDAY, SATURDAY, SUNDAY, OR MONDAY, THEN UNTIL 9:00 A.M. THE FOLLOWING TUESDAY.
3. FOR EASTER, BETWEEN THE HOURS OF 4:00 P.M. THURSDAY AND 9:00 A.M. MONDAY.
4. FOR MEMORIAL DAY, BETWEEN THE HOURS OF 4:00 P.M. FRIDAY TO 9:00 A.M. TUESDAY.
5. FOR INDEPENDENCE DAY, BETWEEN THE HOURS OF 4:00 P.M. THE DAY BEFORE INDEPENDENCE DAY AND 9:00 A.M. THE DAY AFTER INDEPENDENCE DAY.

   IF INDEPENDENCE DAY IS ON A FRIDAY, SATURDAY, SUNDAY OR MONDAY, THEN BETWEEN THE HOURS OF 4:00 P.M. THE THURSDAY BEFORE INDEPENDENCE DAY AND 9:00 A.M. THE TUESDAY AFTER INDEPENDENCE DAY.
6. FOR LABOR DAY, BETWEEN THE HOURS OF 4:00 P.M. FRIDAY AND 9:00 A.M. TUESDAY.
7. FOR THANKSGIVING DAY, BETWEEN THE HOURS OF 4:00 P.M. TUESDAY AND 9:00 A.M. MONDAY.
8. FOR CHRISTMAS, BETWEEN THE HOURS OF 4:00 P.M. THE FRIDAY BEFORE THE WEEK OF CHRISTMAS DAY AND 9:00 A.M. THE FOLLOWING TUESDAY AFTER THE WEEK OF CHRISTMAS DAY.
9. COORDINATE WITH SPECIAL EVENTS IN THE AREA AND PERFOMR LANE CLOSURES AS DIRECTED BY THE ENGINEER.

LANE AND SHOULDER CLOSURE REQUIREMENTS

C) REMOVE LANE CLOSURE DEVICES FROM THE LANE WHEN WORK IS NOT BEING PERFORMED BEHIND THE LANE CLOSURE OR WHEN A LANE CLOSURE IS NO LONGER NEEDED OR AS DIRECTED BY THE ENGINEER.

D) WHEN PERSONNEL AND/OR EQUIPMENT ARE WORKING WITHIN 15 FT OF AN OPEN TRAVEL LANE, CLOSE THE NEAREST OPEN SHOULDER USING ROADWAY STANDARD DRAWING NO. 1101.04 UNLESS THE WORK AREA IS PROTECTED BY BARRIER OR GUARDRAIL OR A LANE CLOSURE IS INSTALLED.

E) WHEN PERSONNEL AND/OR EQUIPMENT ARE WORKING ON THE SHOULDER ADJACENT TO AN UNDIVIDED FACILITY AND WITHIN 5 FT OF AN OPEN TRAVEL LANE, CLOSE THE NEAREST OPEN TRAVEL LANE USING ROADWAY STANDARD DRAWING NO. 1101.02 UNLESS THE WORK AREA IS PROTECTED BY BARRIER OR GUARDRAIL.

   WHEN PERSONNEL AND/OR EQUIPMENT ARE WORKING ON THE SHOULDER ADJACENT TO A DIVIDED FACILITY AND WITHIN 10 FT OF AN OPEN TRAVEL LANE, CLOSE THE NEAREST OPEN TRAVEL LANE USING ROADWAY STANDARD DRAWING NO. 1101.02 UNLESS THE WORK AREA IS PROTECTED BY BARRIER OR GUARDRAIL.

F) WHEN PERSONNEL AND/OR EQUIPMENT ARE WORKING WITHIN A LANE OF TRAVEL OF AN UNDIVIDED OR DIVIDED FACILITY, CLOSE THE LANE ACCORDING TO THE TRAFFIC CONTROL PLANS, ROADWAY STANDARD DRAWINGS, OR AS DIRECTED BY THE ENGINEER. CONDUCT THE WORK SO THAT ALL PERSONNEL AND/OR EQUIPMENT REMAIN WITHIN THE CLOSED TRAVEL LANE.

G) DO NOT WORK SIMULTANEOUSLY WITHIN 15 FT ON BOTH SIDES OF AN OPEN TRAVELWAY, RAMP, OR LOOP WITHIN THE SAME LOCATION UNLESS PROTECTED WITH GUARDRAIL OR BARRIER.

PAVEMENT EDGE DROP OFF REQUIREMENTS

H) BACKFILL AT A 6:1 SLOPE UP TO THE EDGE AND ELEVATION OF EXISTING PAVEMENT IN AREAS ADJACENT TO AN OPEN TRAVEL LANE THAT HAS A DROP-OFF AS FOLLOWS:

*BACKFILL DROP-OFFS THAT EXCEED 2 INCHES ON ROADWAYS WITH POSTED SPEED LIMITS OF 45 MPH OR GREATER.

*BACKFILL DROP-OFFS THAT EXCEED 3 INCHES ON ROADWAYS WITH POSTED SPEED LIMITS LESS THAN 45 MPH.

*BACKFILL WITH SUITABLE COMPACTED MATERIAL, AS APPROVED BY THE ENGINEER, AT NO EXPENSE TO THE DEPARTMENT.

I) DO NOT EXCEED A DIFFERENCE OF 2 INCHES IN ELEVATION BETWEEN OPEN LANES OF TRAFFIC FOR NOMINAL LIFTS OF 1.5 INCHES. INSTALL ADVANCE WARNING "UNEVEN LANES" SIGNS (W8-11) 175 FT IN ADVANCE AND A MINIMUM OF ONCE EVERY HALF MILE THROUGHOUT THE UNEVEN AREA.

TRAFFIC PATTERN ALTERATIONS

J) NOTIFY THE ENGINEER TWENTY ONE (21) CALENDAR DAYS PRIOR TO ANY TRAFFIC PATTERN ALTERATION.

SIGNING

K) INSTALL ADVANCE WORK ZONE WARNING SIGNS WHEN WORK IS WITHIN 40 FT FROM THE EDGE OF TRAVEL LANE AND NO MORE THAN THREE (3) DAYS PRIOR TO THE BEGINNING OF CONSTRUCTION.

L) ENSURE ALL NECESSARY SIGNING IS IN PLACE PRIOR TO ALTERING ANY TRAFFIC PATTERN.

TRAFFIC CONTROL DEVICES

M) WHEN LANE CLOSURES ARE IN EFFECT SPACE CHANNELIZING DEVICES IN WORK AREAS NO GREATER IN FEET THAN TWICE THE POSTED SPEED LIMIT (MPH), EXCEPT, 10 FT ON-CENTER IN RADII, AND 3 FT OFF THE EDGE OF AN OPEN TRAVELWAY. REFER TO STANDARD SPECIFICATIONS FOR ROADS AND STRUCTURES SECTIONS 1130 (DRUMS), 1135 (CONES) AND 1180 (SKINNY DRUMS) FOR ADDITIONAL REQUIREMENTS.

N) PLACE ADDITIONAL SETS OF THREE CHANNELIZING DEVICES (DRUMS, CONES OR SKINNY DRUMS) PERPENDICULAR TO THE EDGE OF TRAVELWAY ON 500 FT CENTERS WHEN UNOPENED LANES ARE CLOSED TO TRAFFIC.

PAVEMENT MARKINGS AND MARKERS

O) INSTALL TEMPORARY PAVEMENT MARKINGS AND TEMPORARY PAVEMENT MARKERS ON INTERIM LAYERS OF PAVEMENT AS FOLLOWS:

ROAD NAME	MARKING	MARKER
ALL ROADS	PAINT	NONE

P) PLACE ONE APPLICATION OF PAINT FOR TEMPORARY TRAFFIC PATTERNS. PLACE A SECOND APPLICATION OF PAINT SIX (6) MONTHS AFTER THE INITIAL APPLICATION AND EVERY SIX MONTHS AS DIRECTED BY THE ENGINEER.

Q) TIE PROPOSED PAVEMENT MARKING LINES TO EXISTING PAVEMENT MARKING LINES.

R) REMOVE/REPLACE ANY CONFLICTING/DAMAGED PAVEMENT MARKINGS AND MARKERS BY THE END OF EACH DAY'S OPERATION.

MISCELLANEOUS

S) LAW ENFORCEMENT MAY BE USED TO MAINTAIN TRAFFIC THROUGH THE WORK AREA AND/OR INTERSECTIONS AS DIRECTED BY THE ENGINEER.

T) ALL CURB RAMP LOCATIONS SHALL BE DERIVED FROM STATIONING SHOWN ON PAVEMENT MARKING PLANS OR AS DIRECTED BY THE ENGINEER IN COORDINATION WITH THE SIGNING AND DELINEATION UNIT.

U) CONTRACTOR SHALL MAINTAIN SIDEWALK ACCESS AT ALL TIMES AS STATED IN THE PHASING. CONTRACTOR SHALL BE RESPONSIBLE TO PROVIDE TEMPORARY SIDEWALKS (CONCRETE, ASPHALT, OR OTHER SUITABLE MATERIAL AS APPROVED BY THE ENGINEER) AT ALL LOCATIONS WHERE THE OPEN PEDESTRIAN TRAVELWAY HAS BEEN REMOVED FOR CONSTRUCTION OPERATIONS (UTILITIES, DRAINAGE, ETC.).

NCDOT TIP:EB-5014
WBS: 45522.3.1
FA# STPEB-1117(15)

APPROVED: 2014.11.14
DATE: 10:17:59 -05'00'

SEAL

NORTH CAROLINA PROFESSIONAL SEAL 034367 ENGINEER TODD H. BUCKNER

THE GREAT SEAL OF THE CITY OF MOUNT AIRY NORTH CAROLINA 1885

LOVILLS CREEK AND ARARAT RIVER GREENWAY
WORTH STREET TO THARINGTON PARK

Michael Baker Engineering Inc.
8000 Regency Parkway, Suite 600
Cary, NORTH CAROLINA 27518
Phone: 919.463.5488
Fax: 919.463.5490
License #: F-1084

Baker

DATE: JUNE 17, 2014
REVISIONS:

NO.	DATE

PROJECT NO.:
H13007.00

TMP-1B

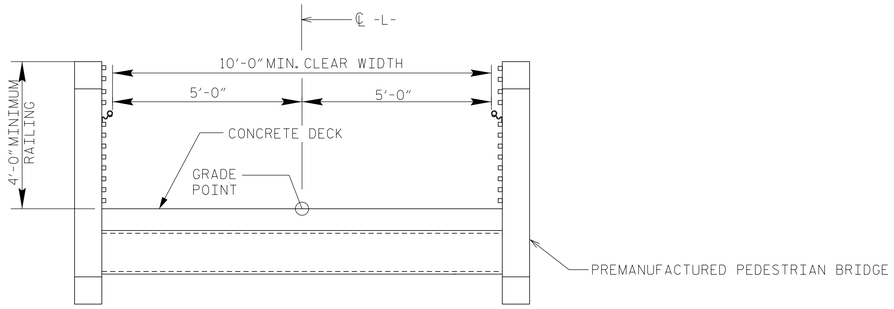

TYPICAL SECTION
PREMANUFACTURED PEDESTRIAN BRIDGE

BRIDGE NO.	CHAIN	BEGIN STATION	END STATION
S1	-L-	23+07.00	23+87.00
S2	-L-	122+08.00	122+58.00

NOTES:

1. ASSUMED LIVE LOAD = 90psf AS PER LRFD GUIDE SPECIFICATIONS FOR DESIGN OF PEDESTRIAN BRIDGES, 2nd EDITION.
2. THESE BRIDGES HAVE BEEN DESIGNED IN ACCORDANCE WITH THE AASHTO LRFD BRIDGE DESIGN SPECIFICATIONS.
3. FOR OTHER DESIGN DATA AND GENERAL NOTES, SEE SHEET S-13.
4. ALL STRUCTURAL STEEL SHALL BE AASHTO M270 GRADE HPS 50W.
5. CONTRACTOR SHALL LOCATE ALL UTILITIES AND UTILITY ELEVATIONS PRIOR TO CONSTRUCTION. ALL UTILITIES TO REMAIN SHALL BE PROTECTED BY THE CONTRACTOR. ANY UTILITIES DAMAGED DURING CONSTRUCTION SHALL BE REPAIRED BY CONTRACTOR.
6. FOR SUBMITTALS, SEE SPECIAL PROVISIONS.
7. FOR FALSEWORK AND FORMWORK, SEE SPECIAL PROVISIONS.
8. FOR CRANE SAFETY, SEE SPECIAL PROVISIONS.
9. FOR CURING CONCRETE, SEE SPECIAL PROVISIONS.
10. FOR PLACING LOAD ON STRUCTURAL MEMBERS, SEE SPECIAL PROVISIONS.
11. FOR PREMANUFACTURED PEDESTRIAN BRIDGE, SEE SPECIAL PROVISIONS.
12. FOR ADHESIVELY ANCHORED ANCHOR BOLTS OR DOWELS, SEE SPECIAL PROVISIONS.
13. CONCRETE DECKS SHALL BE CLASS AA CONCRETE AND BE COLORED. FOR COLORED CONCRETE, SEE SPECIAL PROVISIONS.
14. BRIDGE S1 SHALL BE A PREMANUFACTURED BOWSTRING TRUSS. BRIDGE S2 SHALL BE A PREMANUFACTURED PRATT OR WARREN PONY TRUSS. FOR PREMANUFACTURED PEDESTRIAN BRIDGES, SEE SPECIAL PROVISIONS.

TYPICAL SECTION AND GENERAL NOTES FOR BRIDGES

THE GREAT SEAL OF THE CITY OF MOUNT AIRY NORTH CAROLINA

LOVILLS CREEK AND
ARARAT RIVER GREENWAY
WORTH STREET TO THARINGTON PARK

Firm License No. C-1051
421 Fayetteville St.
Suite 400
Raleigh, NC 27601
T 919.380.8750
www.stewartinc.com
STEWART

NORTH CAROLINA PROFESSIONAL SEAL 037760 ENGINEER PAUL I JACOBS
11/14/2014

DATE: NOVEMBER 14, 2014

REVISIONS:

NO.	DATE

PROJECT NO.:
H13007.00

NTS

S1

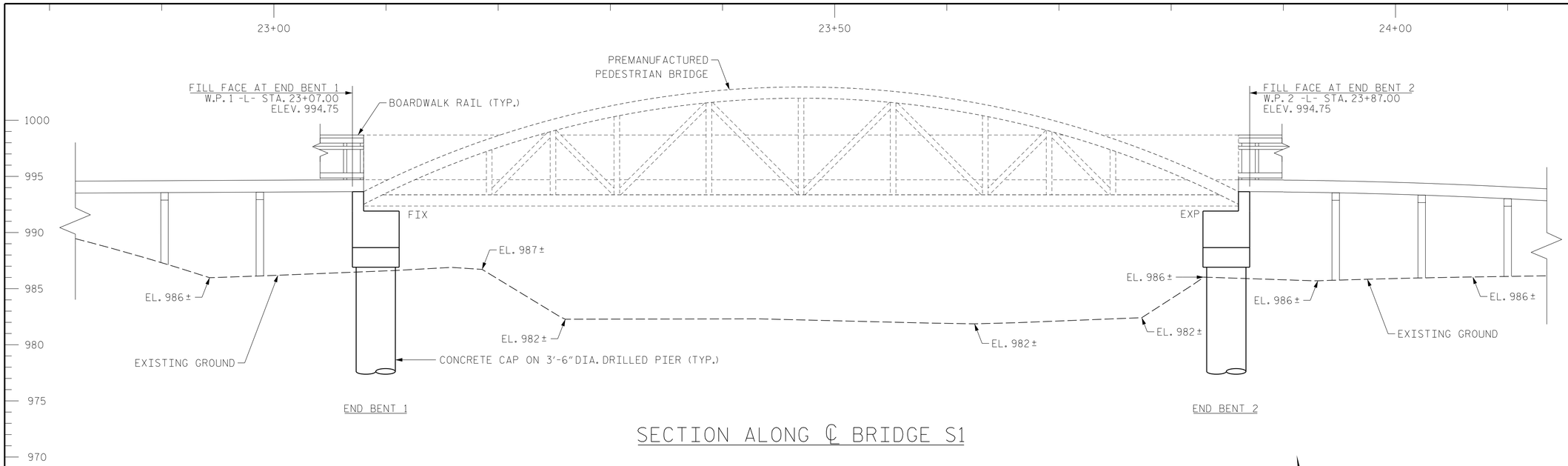

SECTION ALONG ℄ BRIDGE S1

-L- PROFILE DATA

VPI STATION	ELEVATION	GRADE IN %	GRADE OUT %	VERT. CURVE LENGTH
22+80.00	994.615	+1.3167	+0.5000	-
23+07.00	994.750	+0.5000	0.0000	-
23+87.00	994.750	0.0000	-1.0000	-
24+00.00	994.620	-1.0000	-5.0000	20'

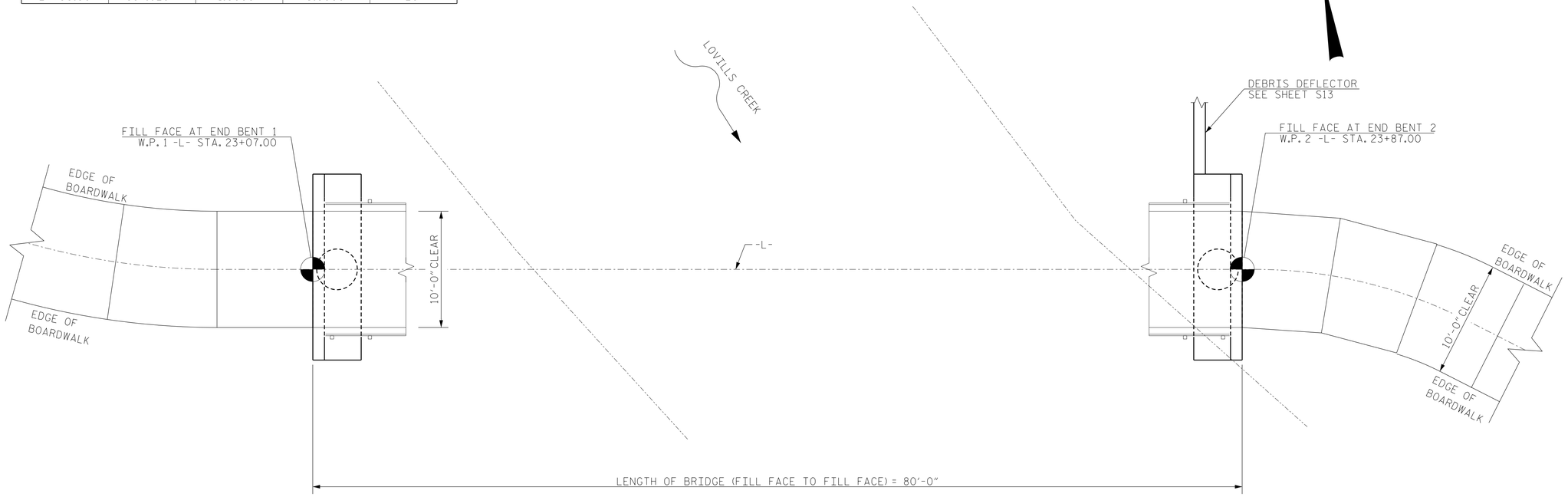

BRIDGE S1 PLAN - LOVILLS CREEK

NOTE:
1. FOR TYPICAL SECTION AND NOTES SEE SHEET S1
2. FOR BOARDWALK DETAILS SEE SHEET SB-1 TO SB-5

LOVILLS CREEK AND ARARAT RIVER GREENWAY

WORTH STREET TO THARINGTON PARK

Firm License No. C-1051
421 Fayetteville St.
Suite 400
Raleigh, NC 27601
T 919.380.8750
www.stewartinc.com

STEWART

NORTH CAROLINA PROFESSIONAL SEAL 037760 ENGINEER PAUL I. JACOB

11/14/2014

DATE: NOVEMBER 14, 2014

REVISIONS:

NO.	DATE

PROJECT NO.:

H13007.00

S2

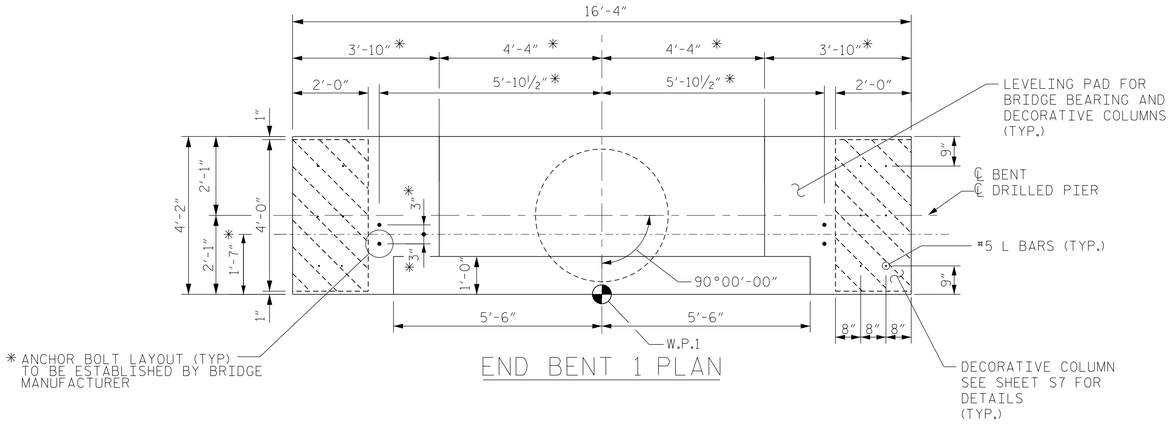

END BENT 1 PLAN

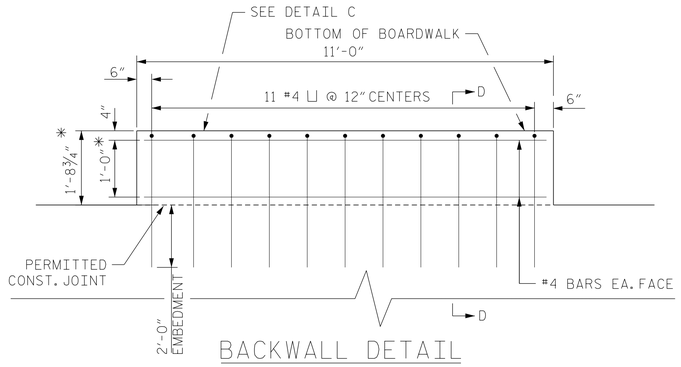

BACKWALL DETAIL

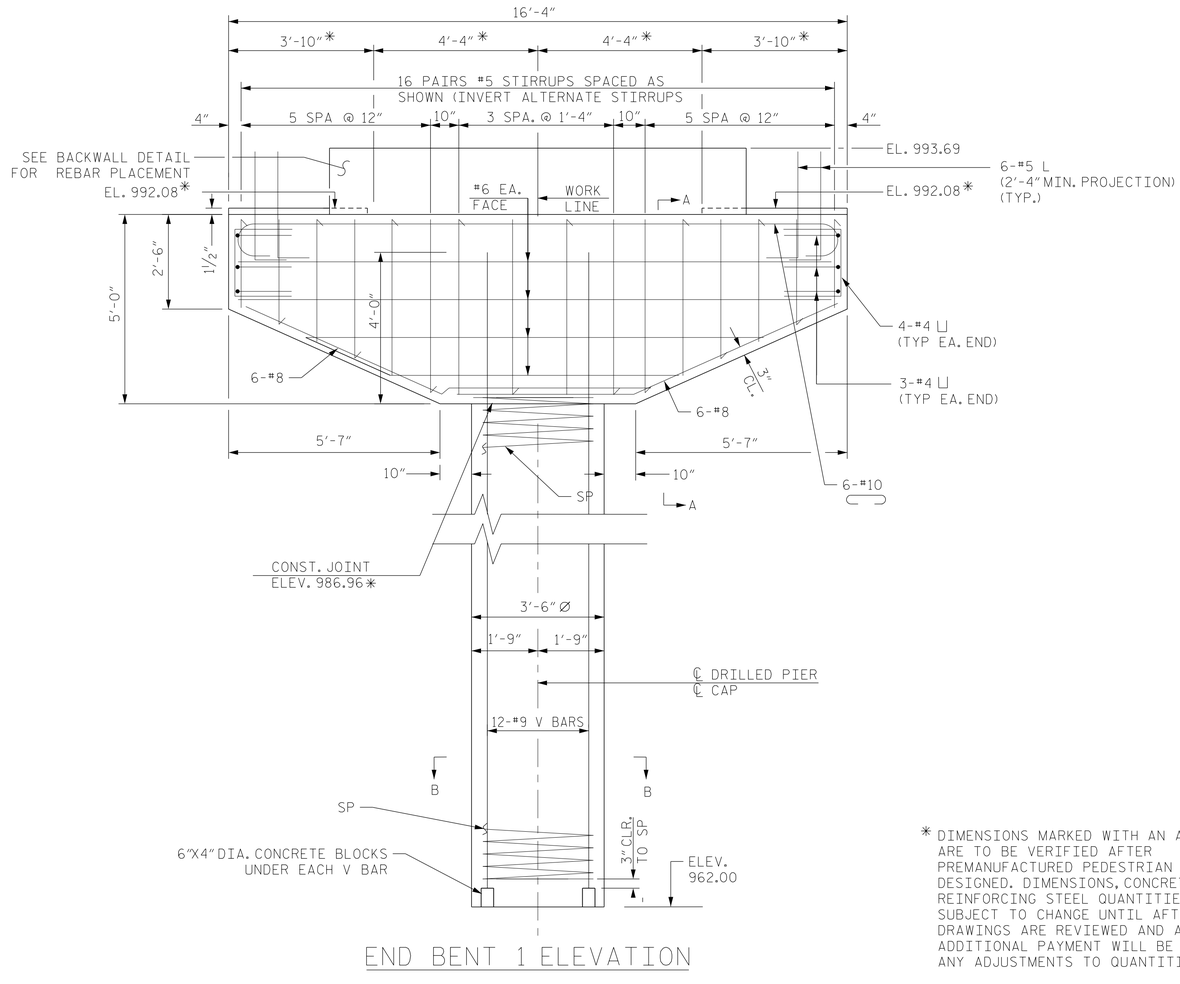

END BENT 1 ELEVATION

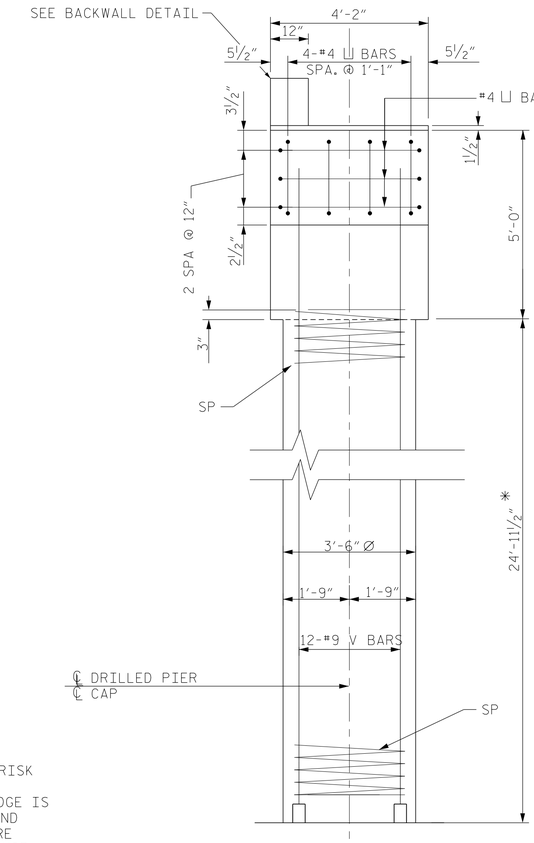

END ELEVATION

NOTE: ONLY END REINFORCEMENT IN CAP SHOWN FOR CLARITY.

* DIMENSIONS MARKED WITH AN ASTERISK ARE TO BE VERIFIED AFTER PREMANUFACTURED PEDESTRIAN BRIDGE IS DESIGNED. DIMENSIONS, CONCRETE AND REINFORCING STEEL QUANTITIES ARE SUBJECT TO CHANGE UNTIL AFTER SHOP DRAWINGS ARE REVIEWED AND APPROVED. NO ADDITIONAL PAYMENT WILL BE MADE FOR ANY ADJUSTMENTS TO QUANTITIES.

LOVILLS CREEK BRIDGE END BENT 1

LOVILLS CREEK AND ARARAT RIVER GREENWAY

WORTH STREET TO THARINGTON PARK

Firm License No. C-1051
421 Fayetteville St.
Suite 400
Raleigh, NC 27601
T 919.380.8750
www.stewartinc.com

STEWART

NORTH CAROLINA PROFESSIONAL SEAL 037760 ENGINEER PAUL L. JACOB
11/14/2014

DATE: NOVEMBER 14, 2014

REVISIONS:

NO.	DATE

PROJECT NO.:

H13007.00

NTS

S3

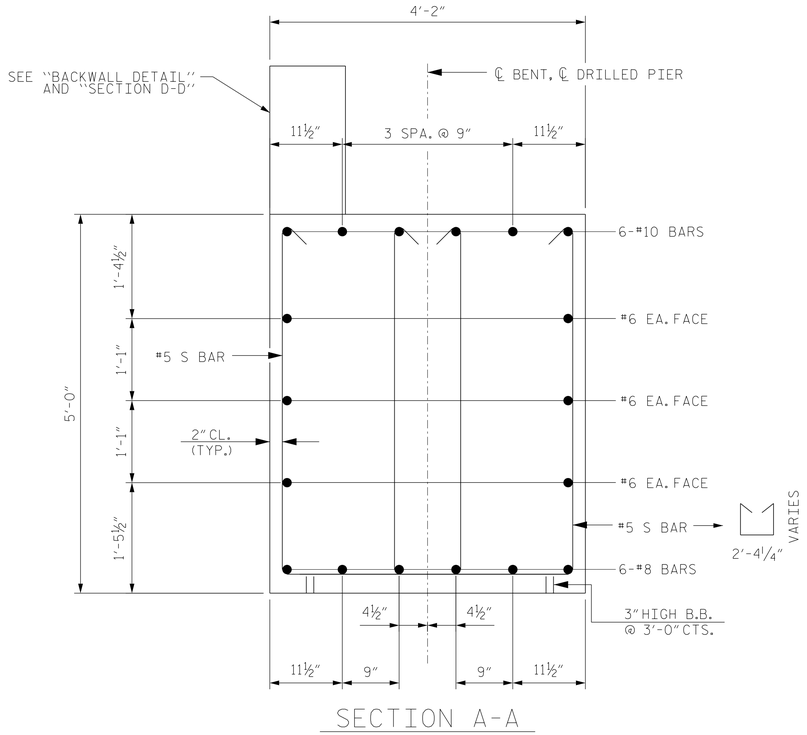

SECTION A-A

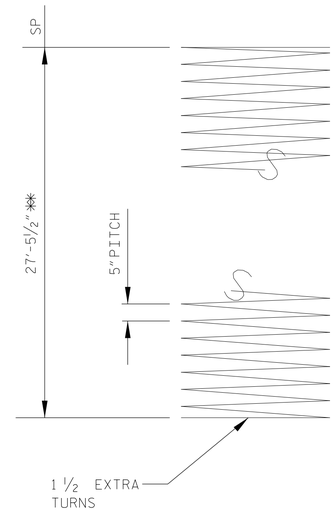

** INCLUDES 3 FT. OF EXTRA HEIGHT

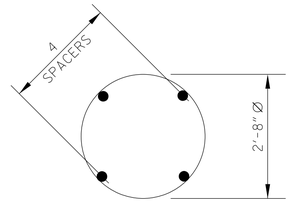

SPIRAL REINFORCEMENT DETAIL

NOTES:

STIRRUPS IN CAP MAY BE SHIFTED AS NECESSARY TO CLEAR ANCHOR BOLTS.

STIRRUPS TO BE PLACED VERTICALLY AND INVERTED ALTERNATELY.

THE SPIRAL REINFORCING STEEL SHALL BE W31 OR D-31 COLD DRAWN WIRE OR #5 PLAIN OR DEFORMED BAR.

DETAILED DRAWINGS FOR FALSEWORK AND FORMS FOR THIS HAMMERHEAD BENT SHALL BE SUBMITTED. SEE SHEET S14.

THE TOP SURFACE OF THE CAP EXCEPT THE BRIDGE SEAT LEVELING PADS SHALL BE SLOPED TRANSVERSELY FROM THE BACKWALL TO EDGE OF CAP AT THE RATE OF 2%.

ANCHOR BOLTS SHALL BE SET BY DRILLING HOLES AND GROUTING AFTER THE CAP HAS BEEN POURED AND CURED. ANCHOR BOLTS SHALL HAVE A MINIMUM EMBEDMENT OF 15" INTO THE CAP. WHEN PLACING MAIN CAP STEEL, ENSURE THAT FUTURE DRILLING FOR ANCHOR BOLTS WILL BE AT LEAST ONE INCH CLEAR FROM EDGE OF REINFORCING BAR.

NO ADDITIONAL PAYMENT IS MADE FOR REINFORCING STEEL OR CONCRETE. THE ENTIRE COST OF THIS WORK TO BE INCLUDED AMONG THE VARIOUS PAY ITEMS.

WHEN PROCURING LONGITUDINAL REINFORCEMENT FOR THE DRILLED PIERS, CONTRACTOR TO ORDER LENGTHS WITH 3 FEET OF EXTRA LENGTH PROVIDED TO ACCOUNT FOR POSSIBLE VARIATIONS IN FOUNDATION CONDITIONS. PROVIDE SPIRAL REINFORCEMENT WITH 3 FEET OF EXTRA LENGTH.

SPLICING OF THE LONGITUDINAL BARS IN THE DRILLED PIER WILL NOT BE PERMITTED UNLESS THE BAR LENGTH EXCEEDS 60 FEET. IF REQUIRED, MECHANICAL COUPLERS SHALL BE USED TO SPLICE THE LONGITUDINAL DRILLED PIER REINFORCING STEEL. THE HEIGHT OF THE COUPLERS SHALL BE STAGGERED ON ALTERNATING BARS BY 1 FOOT AND THE DRILLED PIER STEEL SHALL BE CUT ACCORDINGLY.

NO SEPARATE PAYMENT SHALL BE MADE FOR ANY ADDITIONAL STEEL REQUIRED IN CONSTRUCTION OF DRILLED PIER AS THIS IS CONSIDERED INCIDENTAL.

FOR DRILLED PIERS, SEE SECTION 411 OF THE STANDARD SPECIFICATIONS.

DRILLED PIER AT END BENT 1 ARE DESIGNED FOR A FACTORED RESISTANCE OF 300 KIPS PER PIER.

INSTALL DRILLED PIER AT END BENT 1 TO A TIP ELEVATION NO HIGHER THAN 962 FT AND WITH THE REQUIRED TIP RESISTANC EAND PENETRATION OF AT LEAST 2 FT INTO ROCK AS DEFINED BY ARTICLE 411-1 OF THE STANDARD SPECIFICATIONS.

THE SCOUR CRITICAL ELEVATION FOR END BENT 1 IS 978.50 FT. SCOUR CRITICAL ELEVATIONS ARE USED TO MONITOR POSSIBLE SCOUR PROBLEMS DURING THE LIFE OF THE STRUCTURE.

CSL TUBES ARE REQUIRED AND CSL TESTING MAY BE REQUIRED FOR DRILLED PIERS. THE ENGINEER WILL DETERMINE THE NEED FOR CSL TESTING. FOR CSL TESTING, SEE SECTION 411 OF THE STANDARD SPECIFICATIONS.

SID INSPECTIONS MAY BE REQUIRED FOR DRILLED PIERS. THE ENGINEER WILL DETERMINE THE NEED FOR SID INSPECTIONS. FOR SID INSPECTIONS, SEE SECTION 411 OF THE STANDARD SPECIFICATIONS.

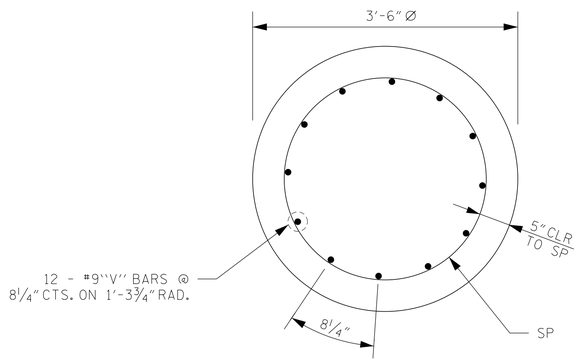

SECTION B-B

* DIMENSIONS MARKED WITH AN ASTERISK ARE TO BE VERIFIED AFTER PREMANUFACTURED PEDESTRIAN BRIDGE IS DESIGNED. DIMENSIONS, CONCRETE AND REINFORCING STEEL QUANTITIES ARE SUBJECT TO CHANGE UNTIL AFTER SHOP DRAWINGS ARE REVIEWED AND APPROVED. NO ADDITIONAL PAYMENT WILL BE MADE FOR ANY ADJUSTMENTS TO QUANTITIES.

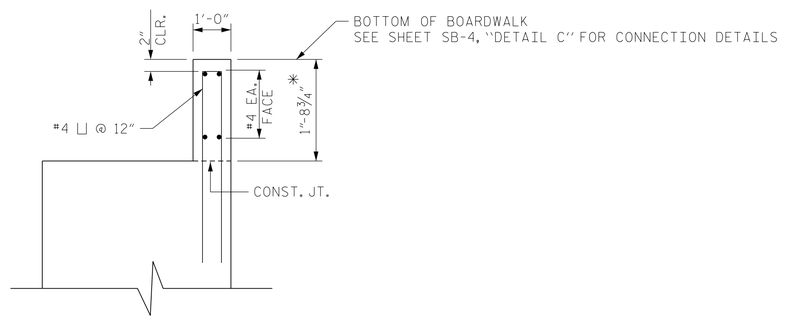

SECTION D-D

LOVILLS CREEK BRIDGE END BENT 1

THE GREAT SEAL OF THE CITY OF MOUNT AIRY • NORTH CAROLINA •

LOVILLS CREEK AND ARARAT RIVER GREENWAY

WORTH STREET TO THARINGTON PARK

Firm License No. C-1051
421 Fayetteville St.
Suite 400
Raleigh, NC 27601
T 919.380.8750
www.stewartinc.com

STEWART

NORTH CAROLINA PROFESSIONAL SEAL 037760 ENGINEER PAUL I. JACOB

11/14/2014

DATE: NOVEMBER 14, 2014

REVISIONS:

NO.	DATE

PROJECT NO.:

H13007.00

NTS

S4

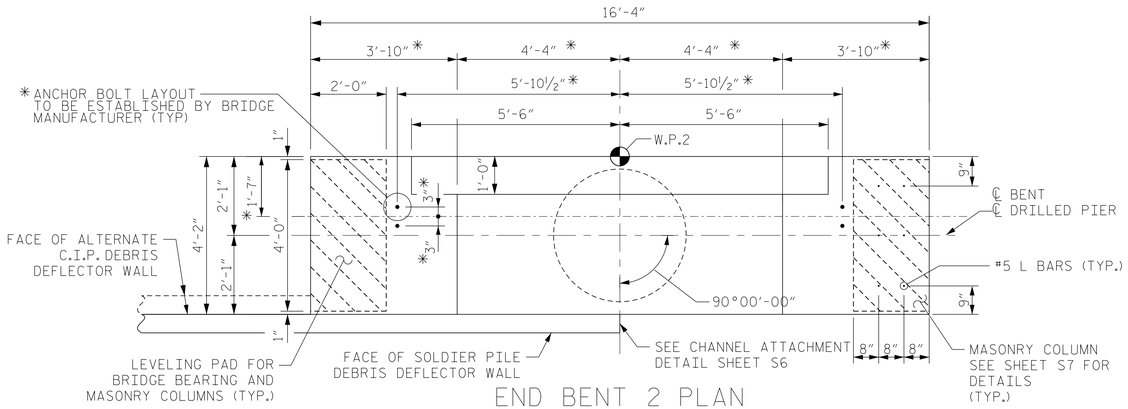

END BENT 2 PLAN

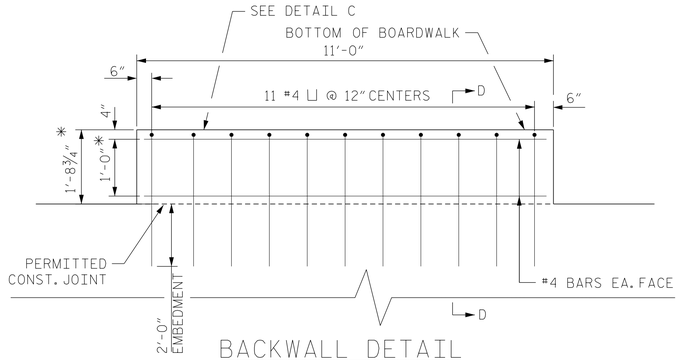

BACKWALL DETAIL

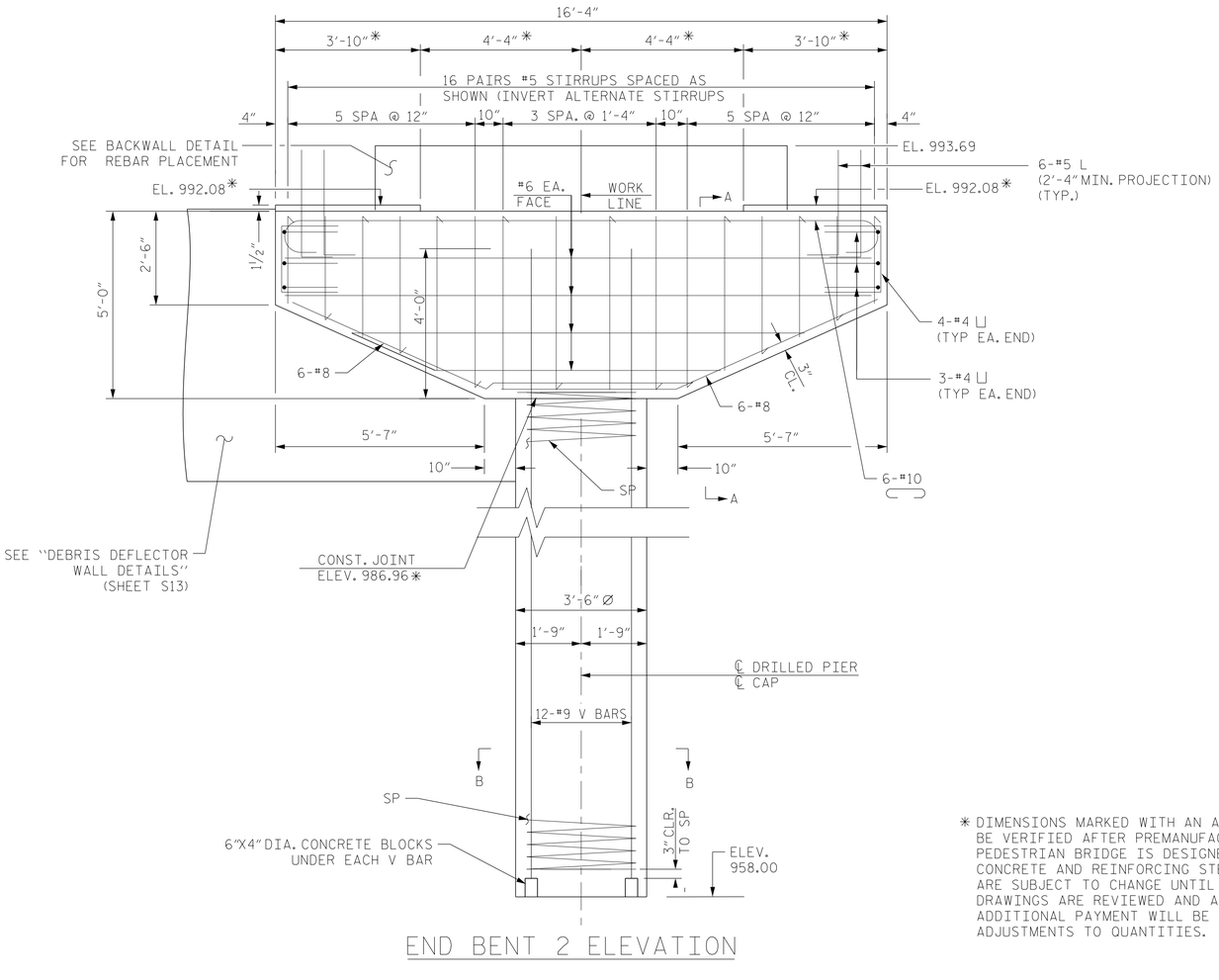

END BENT 2 ELEVATION

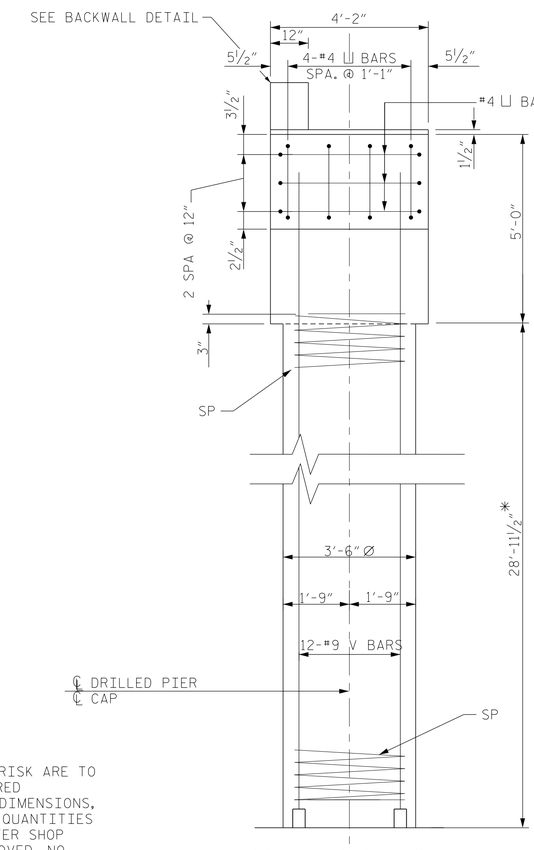

END ELEVATION

NOTE: ONLY END REINFORCEMENT IN CAP SHOWN FOR CLARITY.

* DIMENSIONS MARKED WITH AN ASTERISK ARE TO BE VERIFIED AFTER PREMANUFACTURED PEDESTRIAN BRIDGE IS DESIGNED. DIMENSIONS, CONCRETE AND REINFORCING STEEL QUANTITIES ARE SUBJECT TO CHANGE UNTIL AFTER SHOP DRAWINGS ARE REVIEWED AND APPROVED. NO ADDITIONAL PAYMENT WILL BE MADE FOR ANY ADJUSTMENTS TO QUANTITIES.

LOVILLS CREEK BRIDGE END BENT 2

THE GREAT SEAL OF THE CITY OF MOUNT AIRY NORTH CAROLINA

LOVILLS CREEK AND ARARAT RIVER GREENWAY

WORTH STREET TO THARINGTON PARK

Firm License No. C-1051
421 Fayetteville St.
Suite 400
Raleigh, NC 27601
T 919.380.8750
www.stewartinc.com

STEWART

NORTH CAROLINA PROFESSIONAL SEAL 037760 ENGINEER PAUL J. TAYLOR

11/14/2014

DATE: NOVEMBER 14, 2014

REVISIONS:

NO.	DATE

PROJECT NO.:

H13007.00

NTS

S5

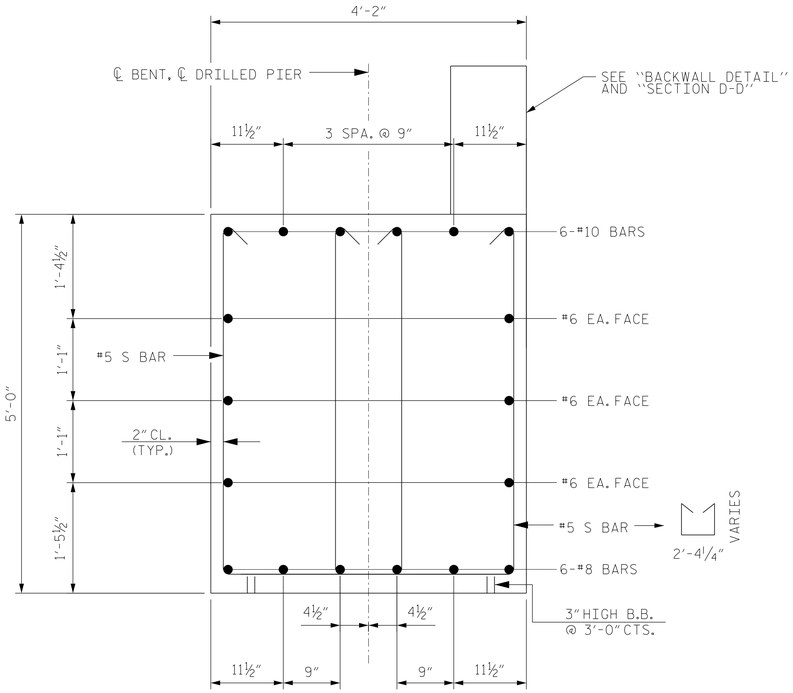

SECTION A-A

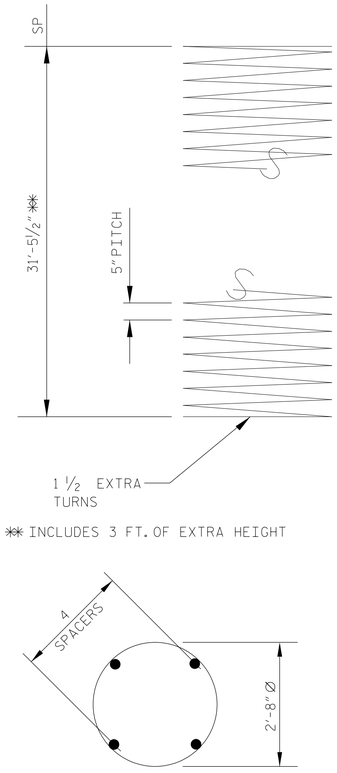

** INCLUDES 3 FT. OF EXTRA HEIGHT

SPIRAL REINFORCEMENT DETAIL

* DIMENSIONS MARKED WITH AN ASTERISK ARE TO BE VERIFIED AFTER PREMANUFACTURED PEDESTRIAN BRIDGE IS DESIGNED. DIMENSIONS, CONCRETE AND REINFORCING STEEL QUANTITIES ARE SUBJECT TO CHANGE UNTIL AFTER SHOP DRAWINGS ARE REVIEWED AND APPROVED. NO ADDITIONAL PAYMENT WILL BE MADE FOR ANY ADJUSTMENTS TO QUANTITIES.

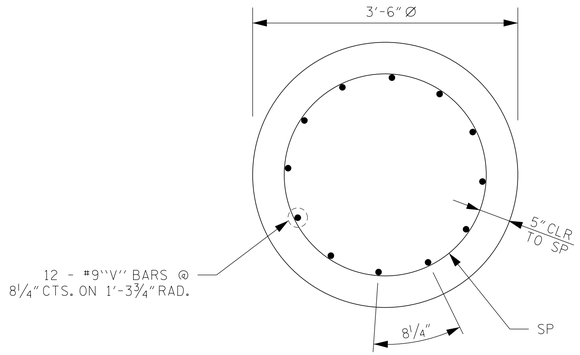

SECTION B-B

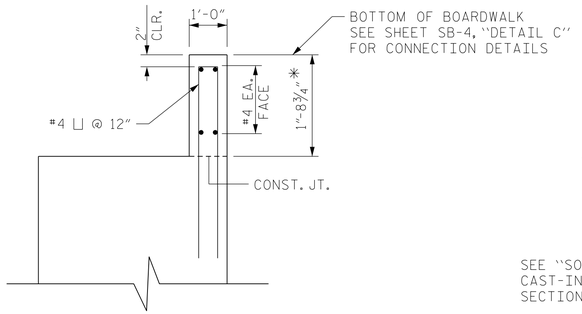

SECTION D-D

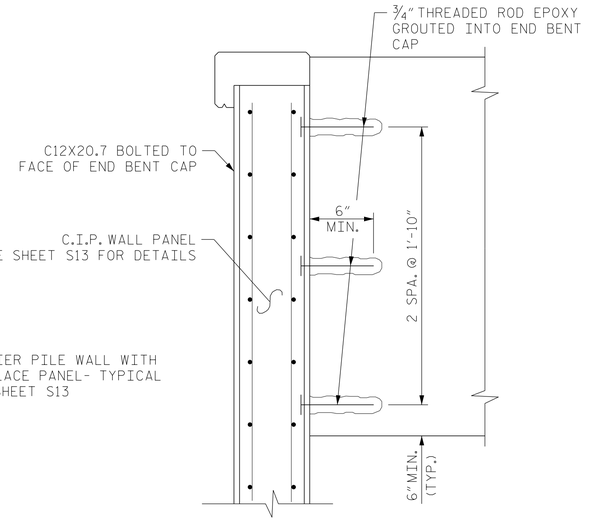

SEE "SOLDIER PILE WALL WITH CAST-IN-PLACE PANEL- TYPICAL SECTION" SHEET S13

CHANNEL ATTACHMENT DETAIL

CHANNEL ATTACHMENT IS NOT REQUIRED FOR ALTERNATE C.I.P. DEBRIS DEFLECTOR WALL

LOVILLS CREEK BRIDGE END BENT 2

NOTES:

STIRRUPS IN CAP MAY BE SHIFTED AS NECESSARY TO CLEAR ANCHOR BOLTS.

STIRRUPS TO BE PLACED VERTICALLY AND INVERTED ALTERNATELY.

THE SPIRAL REINFORCING STEEL SHALL BE W31 OR D-31 COLD DRAWN WIRE OR #5 PLAIN OR DEFORMED BAR.

DETAILED DRAWINGS FOR FALSEWORK AND FORMS FOR THIS HAMMERHEAD BENT SHALL BE SUBMITTED. SEE SHEET S14.

THE TOP SURFACE OF THE CAP EXCEPT THE BRIDGE LEVELING PADS SHALL BE SLOPED TRANSVERSELY FROM THE BACKWALL TO EDGE OF CAP AT THE RATE OF 2%.

ANCHOR BOLTS SHALL BE SET BY DRILLING HOLES AND GROUTING AFTER THE CAP HAS BEEN POURED AND CURED. ANCHOR BOLTS SHALL HAVE A MINIMUM EMBEDMENT OF 15" INTO THE CAP. WHEN PLACING MAIN CAP STEEL, ENSURE THAT FUTURE DRILLING FOR ANCHOR BOLTS WILL BE AT LEAST ONE INCH CLEAR FROM EDGE OF REINFORCING BAR.

NO ADDITIONAL PAYMENT IS MADE FOR REINFORCING STEEL OR CONCRETE. THE ENTIRE COST OF THIS WORK TO BE INCLUDED AMONG THE VARIOUS PAY ITEMS.

WHEN PROCURING LONGITUDINAL REINFORCEMENT FOR THE DRILLED PIERS, CONTRACTOR TO ORDER LENGTHS WITH 3 FEET OF EXTRA LENGTH PROVIDED TO ACCOUNT FOR POSSIBLE VARIATIONS IN FOUNDATION CONDITIONS. PROVIDE SPIRAL REINFORCEMENT WITH 3 FEET OF EXTRA LENGTH.

SPLICING OF THE LONGITUDINAL BARS IN THE DRILLED PIER WILL NOT BE PERMITTED UNLESS THE BAR LENGTH EXCEEDS 60 FEET. IF REQUIRED, MECHANICAL COUPLERS SHALL BE USED TO SPLICE THE LONGITUDINAL DRILLED PIER REINFORCING STEEL. THE HEIGHT OF THE COUPLERS SHALL BE STAGGERED ON ALTERNATING BARS BY 1 FOOT AND THE DRILLED PIER STEEL SHALL BE CUT ACCORDINGLY.

NO SEPARATE PAYMENT SHALL BE MADE FOR ANY ADDITIONAL STEEL REQUIRED IN CONSTRUCTION OF DRILLED PIER AS THIS IS CONSIDERED INCIDENTAL.

FOR DRILLED PIERS, SECTION 411 OF THE STANDARD SPECIFICATIONS.

DRILLED PIER AT END BENT 2 IS DESIGNED FOR A FACTORED RESISTANCE OF 300 KIPS PER PIER.

INSTALL DRILLED PIER AT END BENT 2 TO A TIP ELEVATION NO HIGHER THAN 958 FT AND WITH THE REQUIRED TIP RESISTANCE AND PENETRATION OF AT LEAST 5 FT INTO ROCK AS DEFINED BY ARTICLE 411-1 OF THE STANDARD SPECIFICATIONS.

THE SCOUR CRITICAL ELEVATION FOR END BENT 2 IS 978.00 FT. SCOUR CRITICAL ELEVATIONS ARE USED TO MONITOR POSSIBLE SCOUR PROBLEMS DURING THE LIFE OF THE STRUCTURE.

CSL TUBES ARE REQUIRED AND CSL TESTING MAY BE REQUIRED FOR DRILLED PIERS. THE ENGINEER WILL DETERMINE THE NEED FOR CSL TESTING. FOR CSL TESTING, SEE SECTION 411 OF THE STANDARD SPECIFICATIONS.

SID INSPECTIONS MAY BE REQUIRED FOR DRILLED PIERS. THE ENGINEER WILL DETERMINE THE NEED FOR SID INSPECTIONS. FOR SID INSPECTIONS, SEE SECTION 411 OF THE STANDARD SPECIFICATIONS.

THE GREAT SEAL OF THE CITY OF MOUNT AIRY NORTH CAROLINA

LOVILLS CREEK AND ARARAT RIVER GREENWAY

WORTH STREET TO THARINGTON PARK

Firm License No. C-1051
421 Fayetteville St.
Suite 400
Raleigh, NC 27601
T 919.380.8750
www.stewartinc.com

STEWART

NORTH CAROLINA PROFESSIONAL SEAL 037760 ENGINEER PAUL J. JACOB
11/14/2014

DATE: NOVEMBER 14, 2014

REVISIONS:

NO.	DATE

PROJECT NO.:

H13007.00

NTS

S6

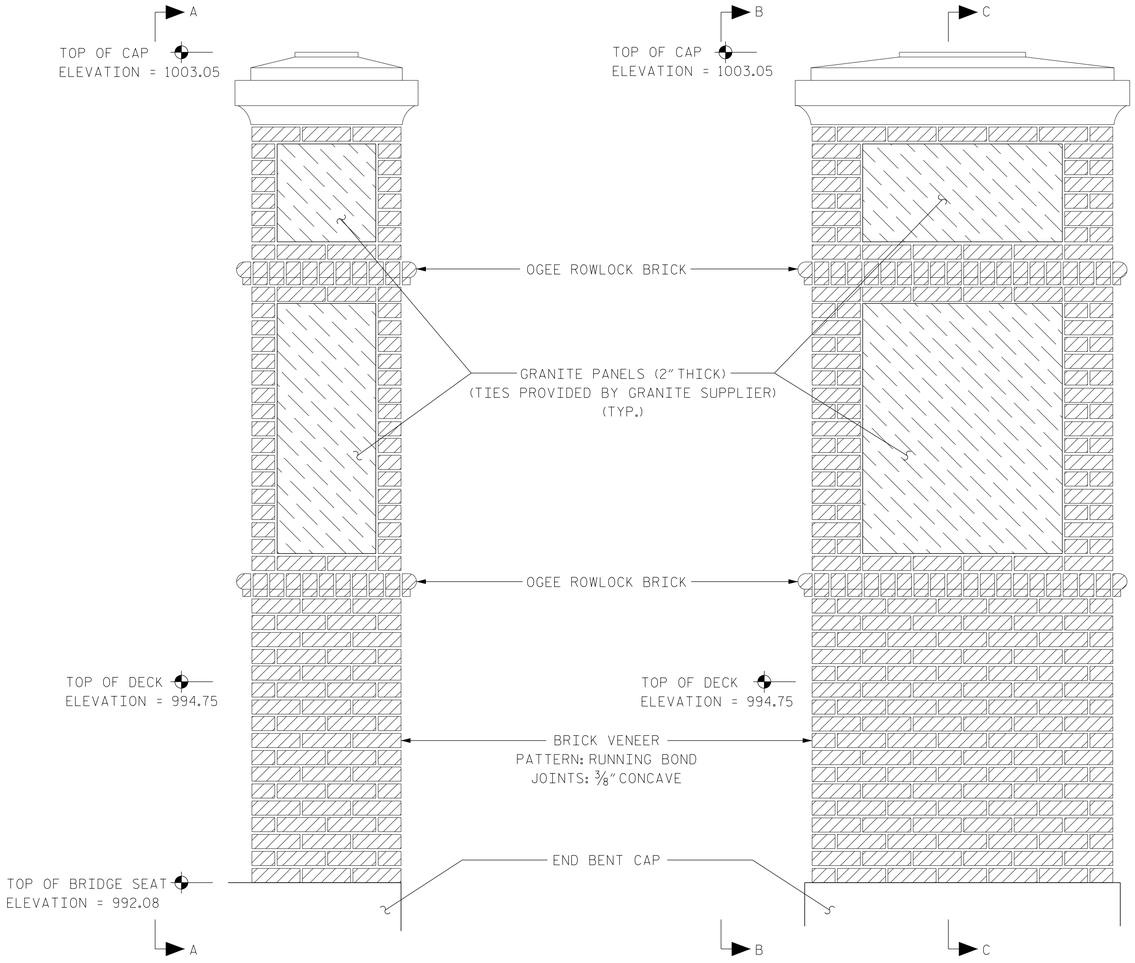

ELEVATION B-B

ELEVATION A-A

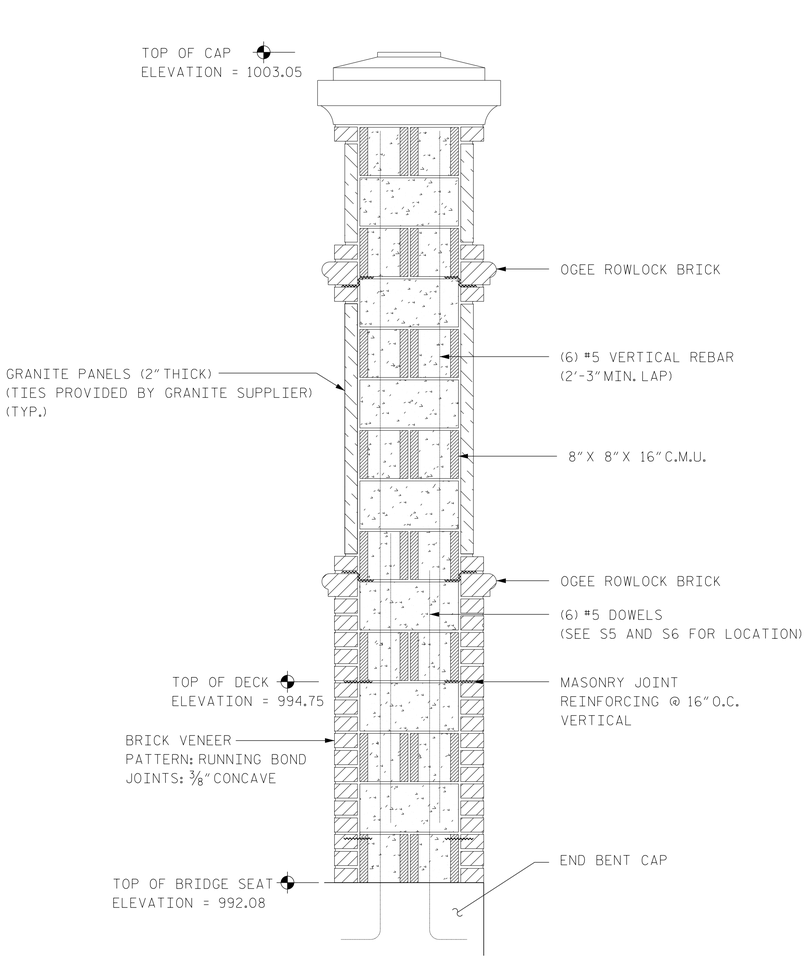

SECTION C-C

DECORATIVE COLUMN DETAILS

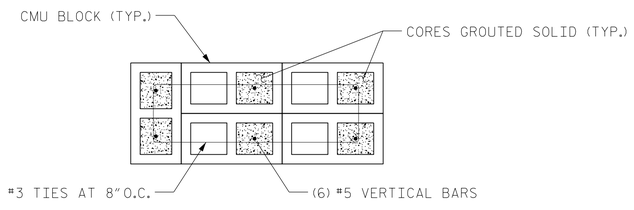

CMU CORE DETAILS

NOTE:
1. DIMENSIONS SHOW DESIGN INTENT. MANUFACTURER TO PROVIDE SHOP DRAWINGS.

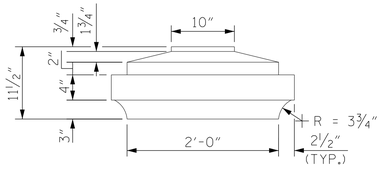

SIDE ELEVATION

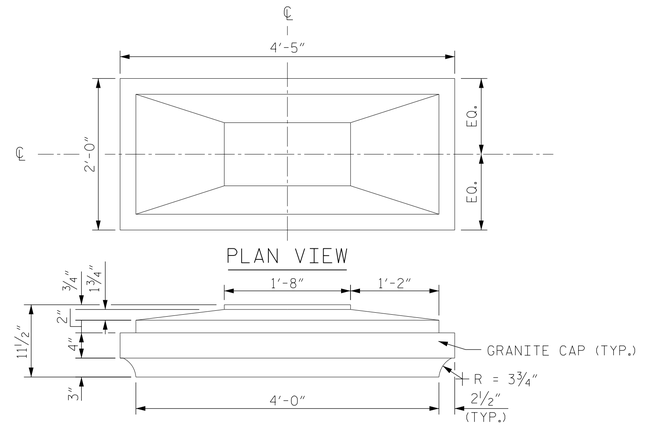

PLAN VIEW

FRONT ELEVATION

GRANITE CAP DETAILS

LOVILLS CREEK AND ARARAT RIVER GREENWAY
WORTH STREET TO THARINGTON PARK

Firm License No. C-1051
421 Fayetteville St.
Suite 400
Raleigh, NC 27601
T 919.380.8750
www.stewartinc.com
STEWART

NORTH CAROLINA PROFESSIONAL SEAL 037760 ENGINEER PAUL I. JACOB
11/14/2014

DATE: NOVEMBER 14, 2014

REVISIONS:

NO.	DATE

PROJECT NO.:
H13007.00

S7

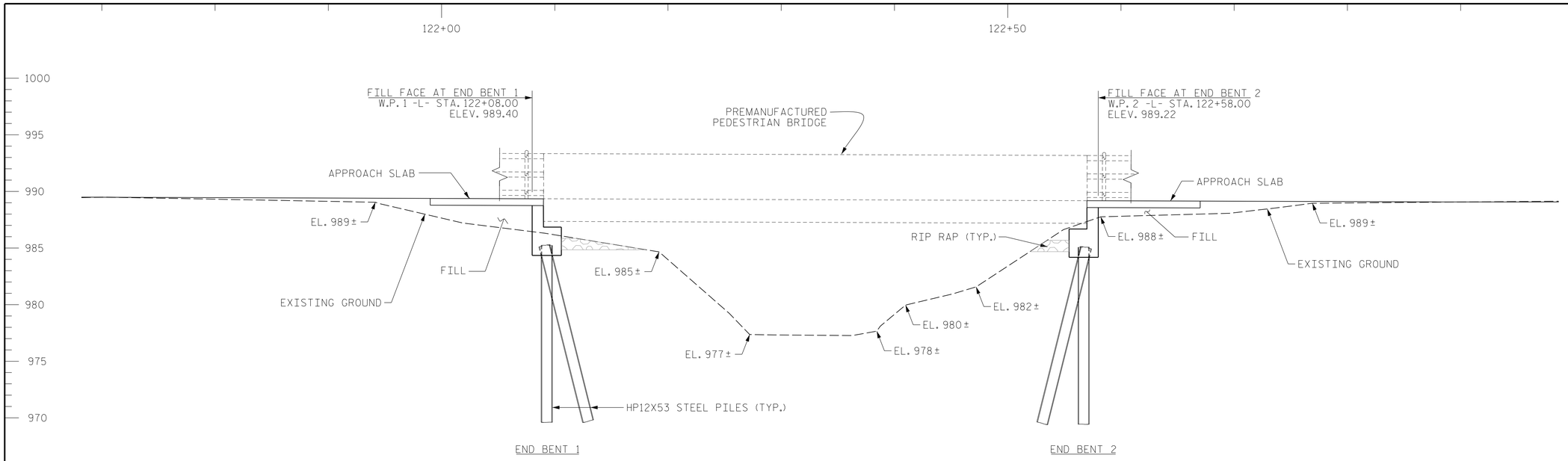

SECTION ALONG ℄ BRIDGE S2

-L- PROFILE DATA

VPI STATION	ELEVATION	GRADE IN %	GRADE OUT %	VERT. CURVE LENGTH
120+05.00	987.680	-0.9000	+1.4500	200′
121+40.00	989.637	+1.4500	-0.3500	20′
123+00.00	989.077	-0.3500	+0.9000	30′
124+00.00	989.977	+0.9000	-0.1000	10′

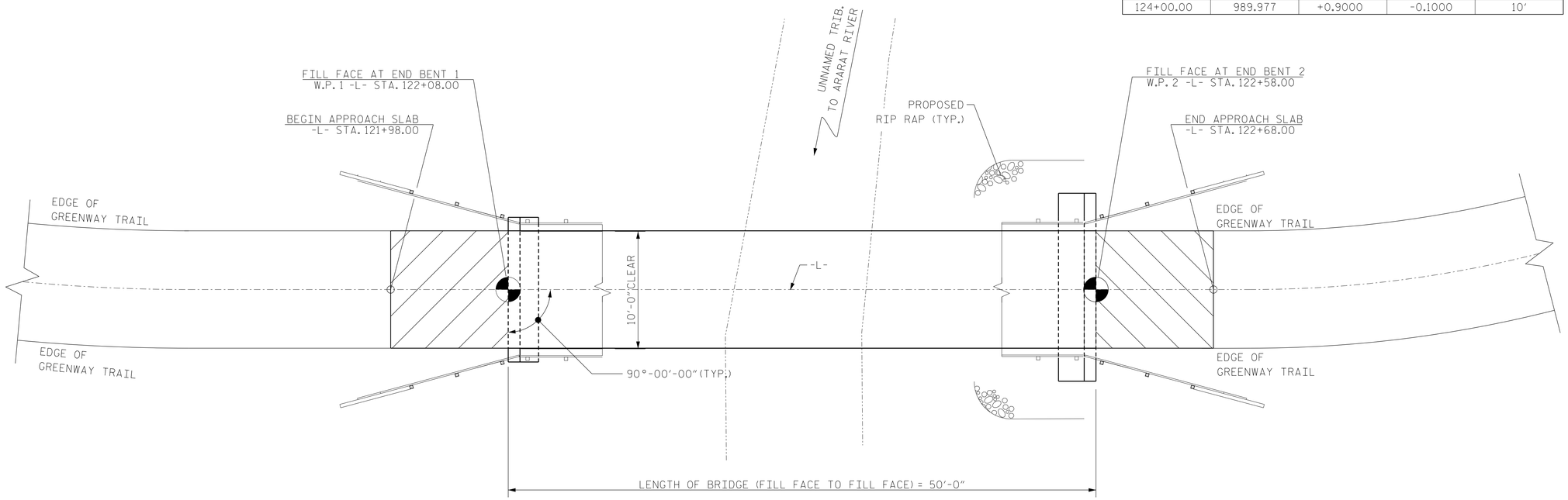

BRDIGE S2 PLAN

LOVILLS CREEK AND ARARAT RIVER GREENWAY

WORTH STREET TO THARINGTON PARK

Firm License No. C-1051
421 Fayetteville St.
Suite 400
Raleigh, NC 27601
T 919.380.8750
www.stewartinc.com

STEWART

NORTH CAROLINA PROFESSIONAL SEAL 037760 ENGINEER PAUL JACOB

11/14/2014

DATE: NOVEMBER 14, 2014

REVISIONS:

NO.	DATE

PROJECT NO.:

H13007.00

S8

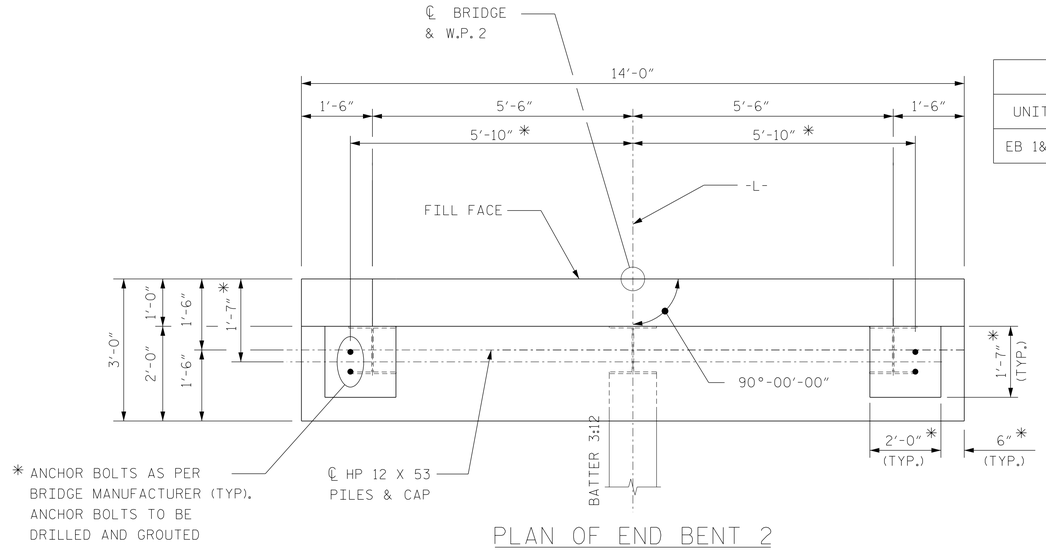

PLAN OF END BENT 2

NOTE:
END BENT 1 IS SIMILAR BY ROTATION

BRIDGE REACTIONS			
UNIT	DEAD LOAD	UNIFORM LIVE LOAD	WIND LOAD
EB 1&2	28.2 K	11.8 K	7.5 K

END BENT ELEVATIONS			
LOCATION	EL. A	EL. B *	EL. C *
W.P.1 -L- STA. 122+08.00	988.36	986.40	983.90
W.P.2 -L- STA. 122+58.00	988.18	986.22	983.72

NOTES:
- DEAD LOAD AND UNIFORM LIVE LOAD ARE APPLIED VERTICALLY AT EACH BEARING (2 PER END BENT).
- WIND LOAD IS APPLIED HORIZONTALLY AT EACH LINE OF BEARINGS (1 PER END BENT).
- LOADS ARE SUBJECT TO CHANGE UNTIL BRIDGE SHOP DRAWINGS ARE REVIEWED AND APPROVED.
- FOR ADDITIONAL NOTES, SEE DWG. S1
- ANCHOR BOLTS ARE TO BE DRILLED AND GROUTED INTO PLACE UNLESS NOTED OTHERWISE. EMBEDMENT DEPTH OF ANCHORS SHALL BE AT LEAST 15 INCHES.
- FOR PILES, SEE SECTION 450 OF THE STANDARD SPECIFICATIONS.
- PILES AT END BENTS NO. 1 AND 2 ARE DESIGNED FOR A FACTORED RESISTANCE OF 60 KIPS PER PILE.
- DRIVE PILES AT END BENTS NO. 1 AND 2 TO A REQUIRED DRIVING RESISTANCE OF 100 KIPS PER PILE.
- STEEL H-PILE POINTS ARE REQUIRED FOR STEEL H-PILES AT END BENTS NO. 1 AND 2. FOR STEEL PILE POINTS, SEE SECTION 450 OF THE STANDARD SPECIFICATIONS.

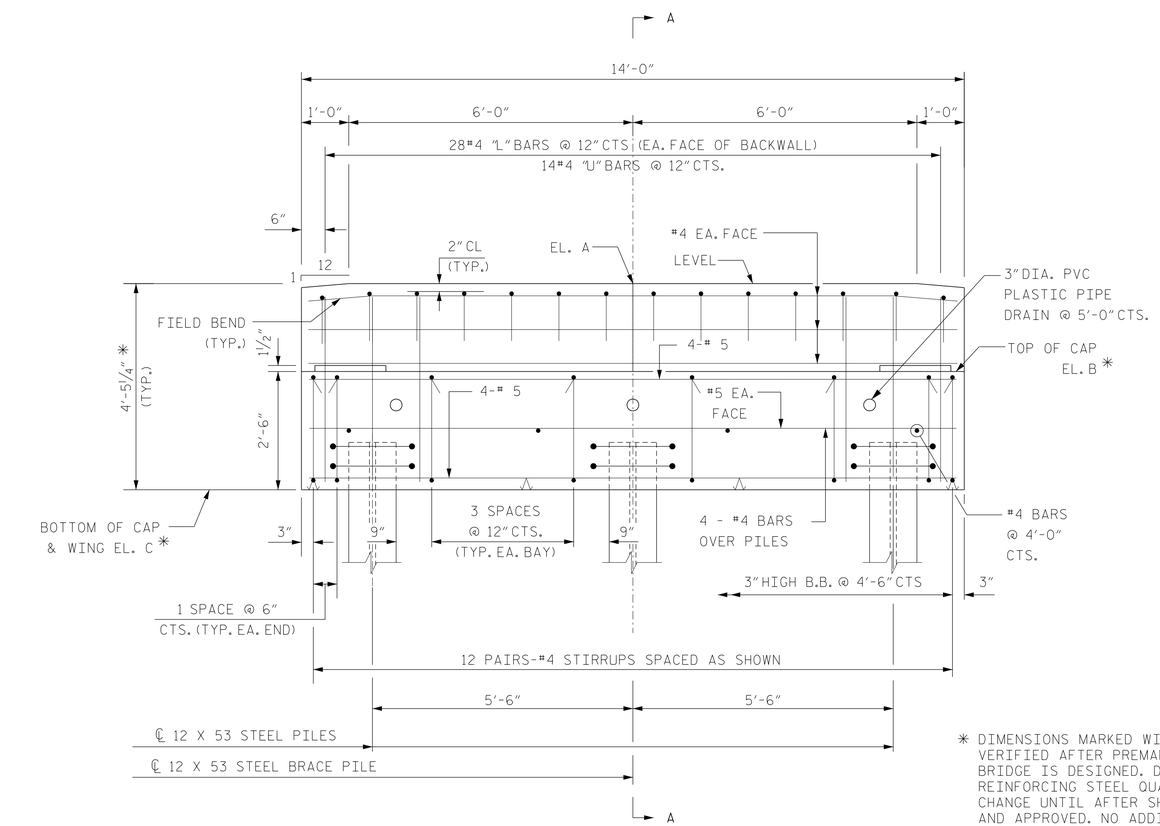

ELEVATION OF END BENT 2

* DIMENSIONS MARKED WITH AN ASTERISK ARE TO BE VERIFIED AFTER PREMANUFACTURED PEDESTRIAN BRIDGE IS DESIGNED. DIMENSIONS, CONCRETE AND REINFORCING STEEL QUANTITIES ARE SUBJECT TO CHANGE UNTIL AFTER SHOP DRAWINGS ARE REVIEWED AND APPROVED. NO ADDITIONAL PAYMENT WILL BE MADE FOR ANY ADJUSTMENTS TO QUANTITIES.

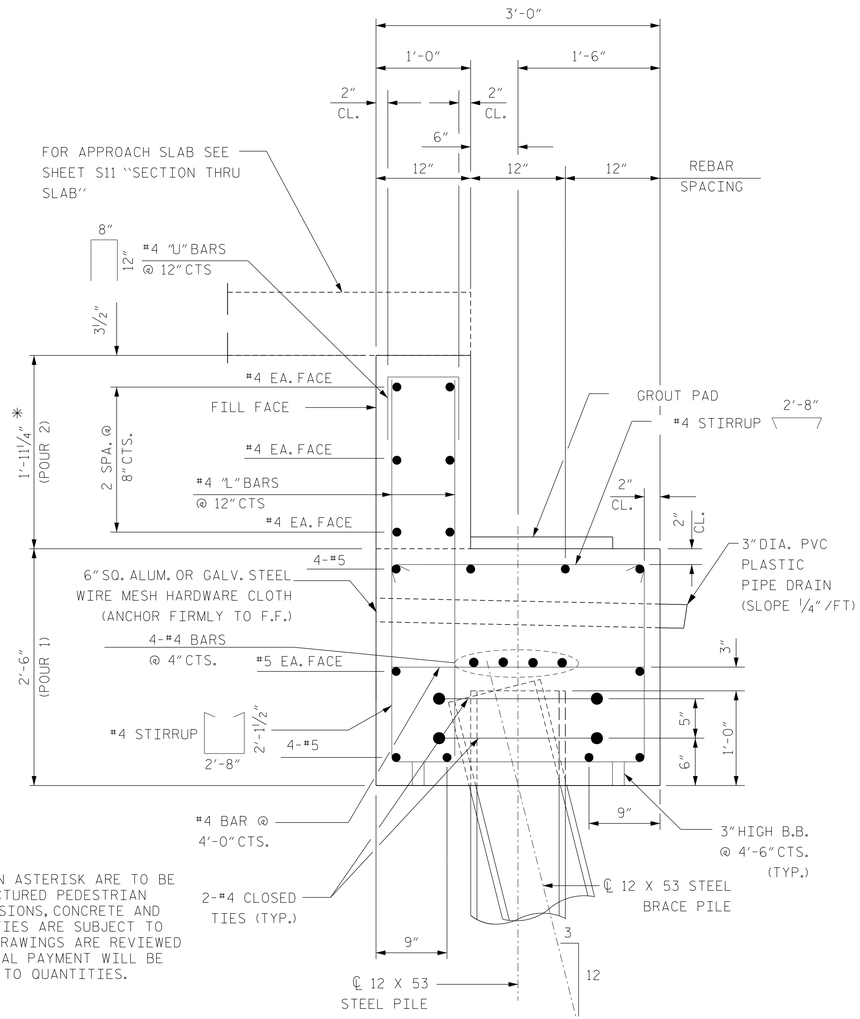

SECTION A-A

BRIDGE S2

LOVILLS CREEK AND ARARAT RIVER GREENWAY
WORTH STREET TO THARINGTON PARK

Firm License No.: C-1051
421 Fayetteville St.
Suite 400
Raleigh, NC 27601
T 919.380.8750
www.stewartinc.com
STEWART

NORTH CAROLINA PROFESSIONAL SEAL 037760 ENGINEER PAUL IACOS
11/14/2014

DATE: NOVEMBER 14, 2014

REVISIONS:

NO.	DATE

PROJECT NO.: H13007.00

S9

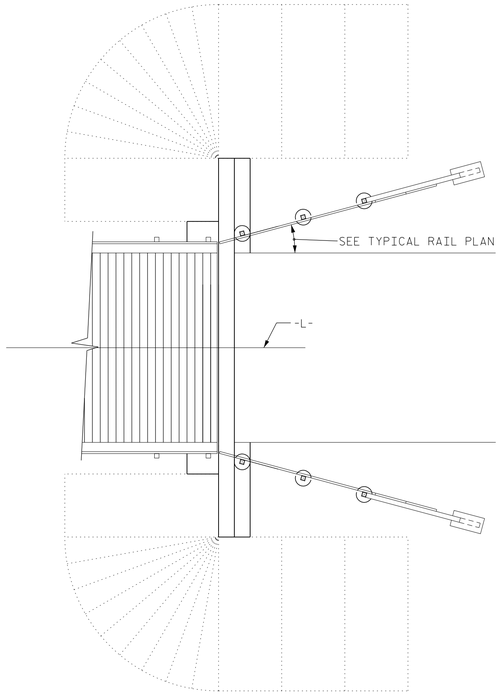

PLAN

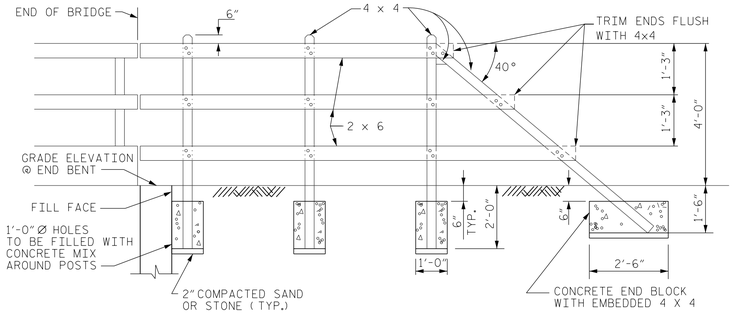

TYPICAL APPROACH RAIL ELEVATION

(GREENWAY SIDE)

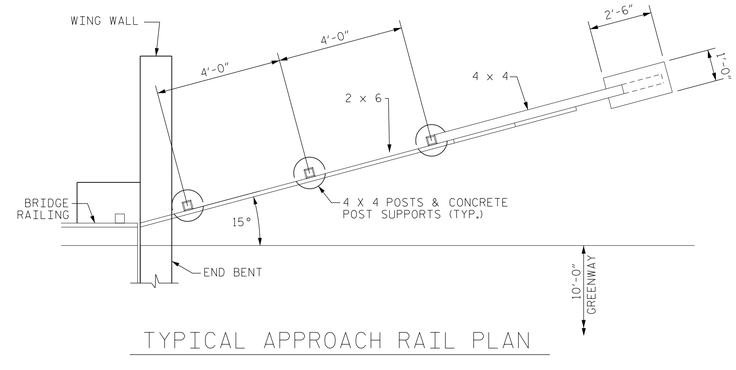

TYPICAL APPROACH RAIL PLAN

NOTES

ALL TREATED LUMBER FOR THE GUARDRAIL & POSTS SHALL MEET THE REQUIREMENTS OF SECTION 1082 OF THE NCDOT STANDARD SPECIFICATIONS.

ALL SCREWS, BOLTS, NUTS AND WASHERS ARE TO BE HOT DIPPED GALVANIZED.

THE LOCATION OF POST FOOTINGS AND END BLOCKS ARE TO BE FIELD VERIFIED. DEVIATIONS FROM PLAN DIMENSIONS ARE TO BE APPROVED BY THE ENGINEER.

THE APPROACH RAIL SET INCLUDES TWO RAILS FOR A PARTICULAR INSTALLATION. THE COST OF INSTALLING THE APPROACH RAIL SET SHALL BE DISTRIBUTED AMONGST THE OTHER PAY ITEMS. NO ADDITIONAL PAYMENT SHALL BE MADE FOR THE MATERIALS, LABOR, AND ANY OTHER ITEMS NECESSARY TO FURNISH THE APPROACH RAIL SET.

APPROACH RAILS ARE REQUIRED AT THE BEGINNING OF BOARDWALK 1, THE END OF BOARDWALK 2, BOTH END OF BOARDWALK 3, AND BOTH ENDS OF BRIDGE 2 (6 SETS TOTAL).

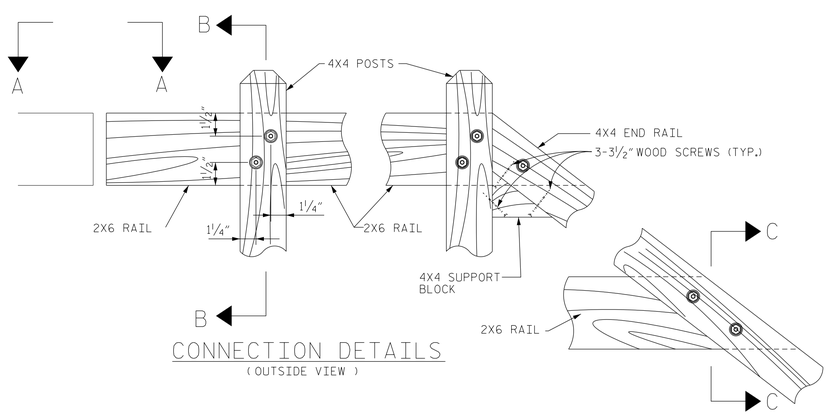

CONNECTION DETAILS

(OUTSIDE VIEW)

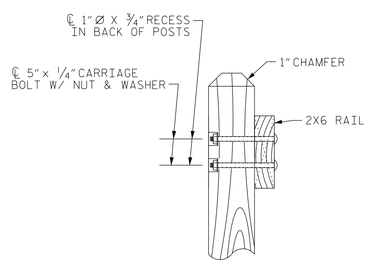

SECTION B-B

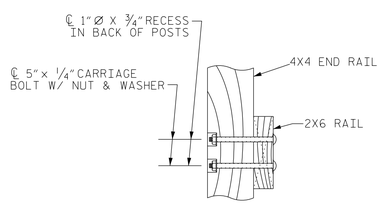

SECTION C-C

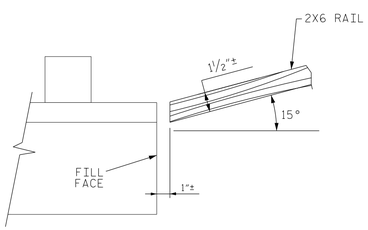

SECTION A-A

APPROACH RAIL DETAILS

(BRIDGE APPROACH SHOWN, BOARDWALK APPROACH SIMILAR)

Firm License No. C-1051
421 Fayetteville St.
Suite 400
Raleigh, NC 27601
T 919.380.8750
www.stewartinc.com

STEWART

NORTH CAROLINA PROFESSIONAL SEAL 037760 ENGINEER PAUL I. JACES

11/14/2014

DATE: NOVEMBER 14, 2014

REVISIONS:

NO.	DATE

PROJECT NO.:

H13007.00

NTS

S10

LOVILLS CREEK AND
ARARAT RIVER GREENWAY

WORTH STREET TO THARINGTON PARK

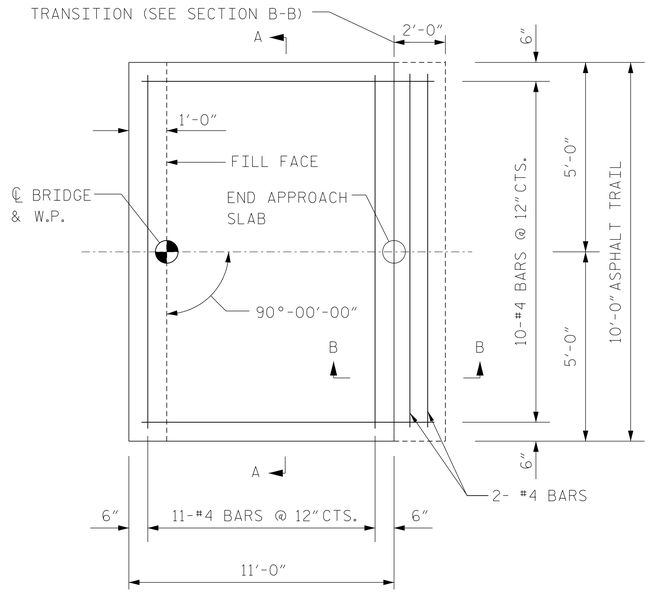

APPROACH SLAB AT END BENT

(END BENT 2 SHOWN, END BENT 1 SIMILAR)

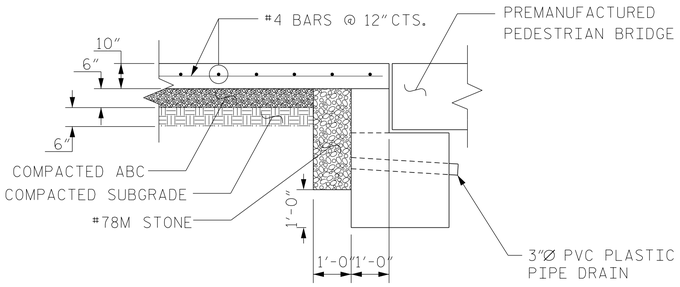

SECTION THRU SLAB

APPROACH SLAB ELEVATIONS				
BRIDGE	END BENT 1 LOCATION	ELEVATION	END BENT 2 LOCATION	ELEVATION
S2	-L- STA. 121+98.00	989.43	-L- STA. 122+57.00	989.23
	-L- STA. 122+09.00	989.40	-L- STA. 122+68.00	989.19

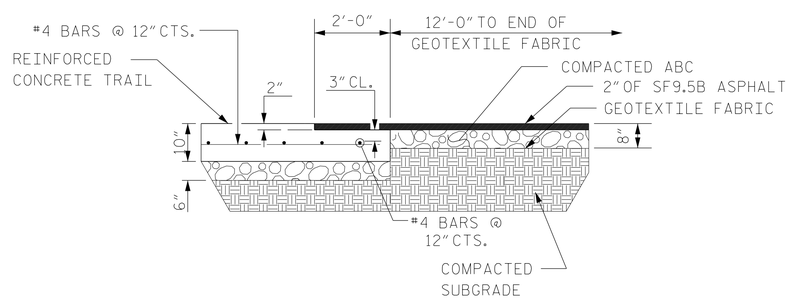

SECTION B-B

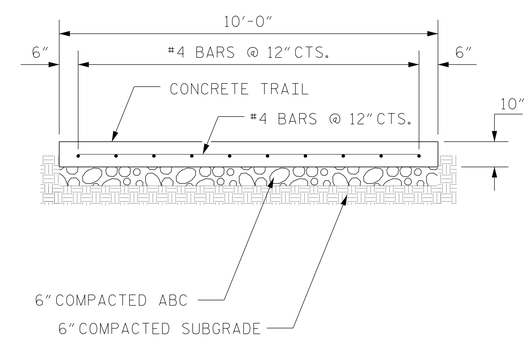

SECTION A-A

TYPICAL DETAILS FOR BRIDGE S2 APPROACH SLABS

LOVILLS CREEK AND ARARAT RIVER GREENWAY

WORTH STREET TO THARINGTON PARK

Firm License No. C-1051
421 Fayetteville St.
Suite 400
Raleigh, NC 27601
T 919.380.8750
www.stewartinc.com

STEWART

NORTH CAROLINA PROFESSIONAL SEAL 037760 ENGINEER PAUL L. JACOB

11/14/2014

DATE: NOVEMBER 14, 2014

REVISIONS:

NO.	DATE

PROJECT NO.:

H13007.00

NTS

S11

NOTE: HSS TUBING SHALL BE 50 KSI ASTM A847 WEATHERING STEEL
COLOR OF CORRUGATED METAL ROOF PANELS SHALL BE COORDINATED WITH THE OWNER
TEMPORARY DEWATERING AND TEMPORARY CASING MAY BE REQUIRED DURING DRILLING OR EXCAVATION OF HOLES FOR POST FOOTING.

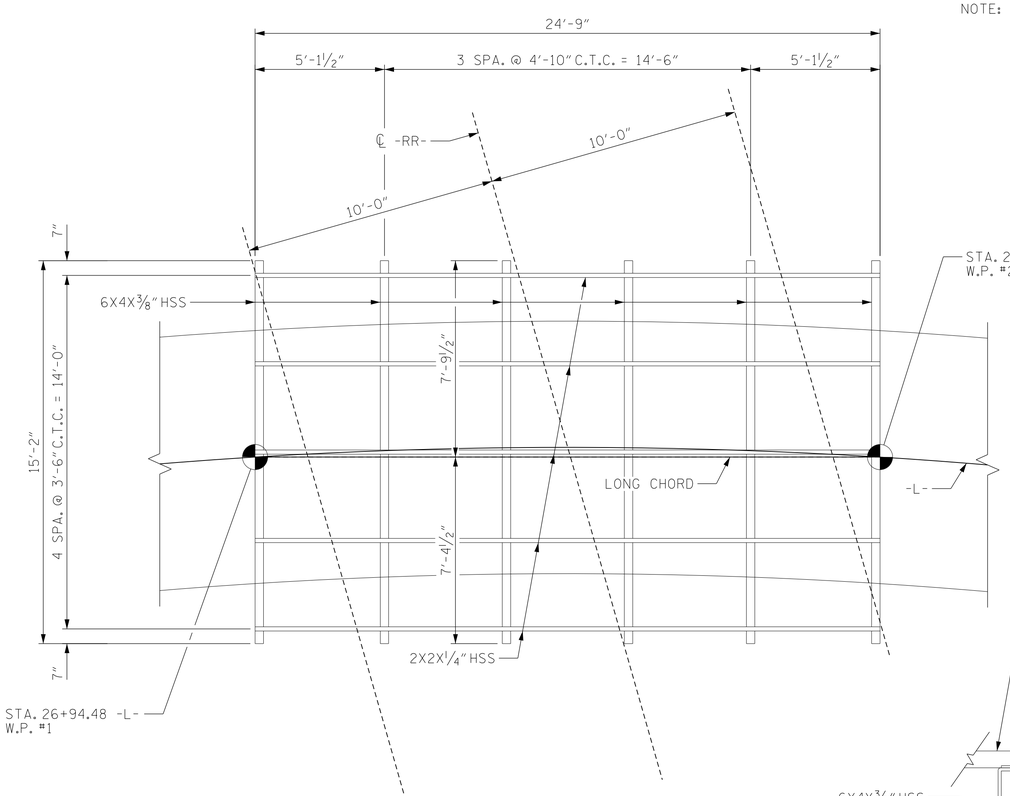

PLAN VIEW - CANOPY

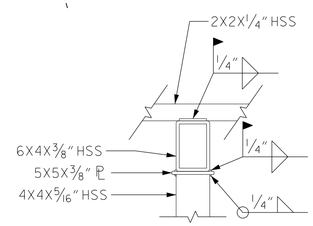

CONNECTION DETAILS

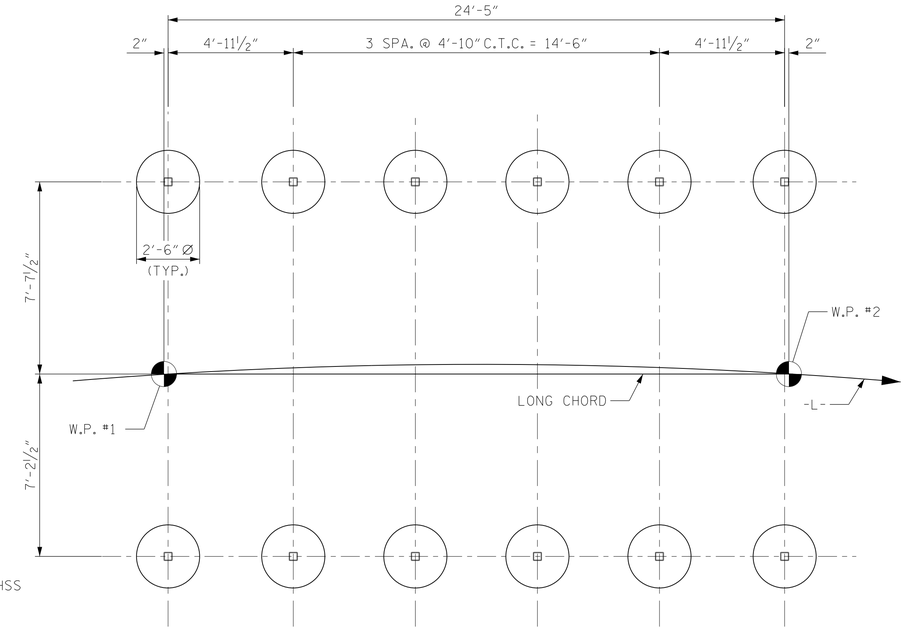

FOUNDATION LAYOUT

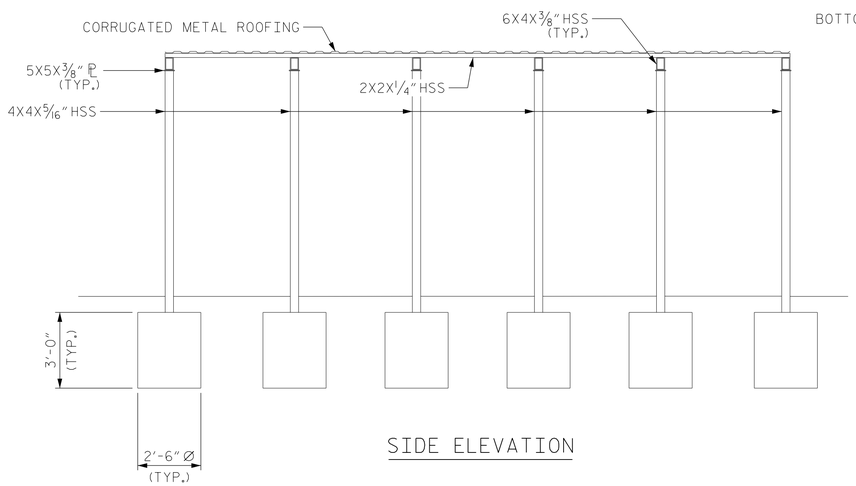

SIDE ELEVATION

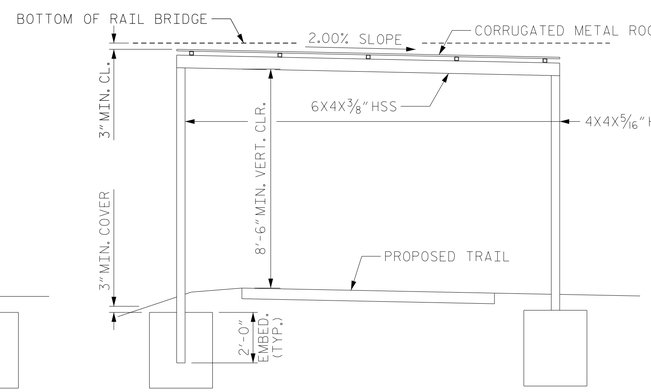

END ELEVATION

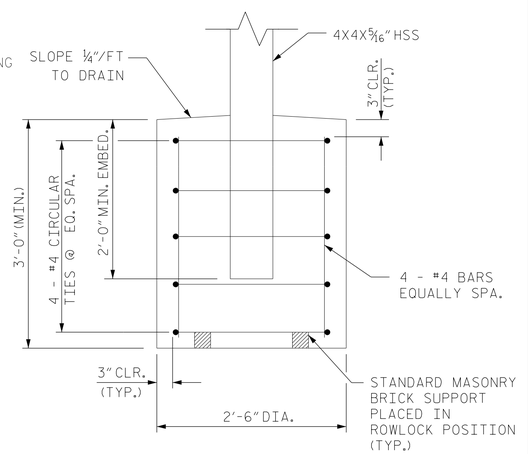

CONCRETE POST FOOTING DETAIL

RAILROAD CANOPY DETAILS

THE GREAT SEAL OF THE CITY OF MOUNT AIRY NORTH CAROLINA

LOVILLS CREEK AND
ARARAT RIVER GREENWAY
WORTH STREET TO THARINGTON PARK

Firm License No. C-1051
421 Fayetteville St.
Suite 400
Raleigh, NC 27601
T 919.380.8750
www.stewartinc.com
STEWART

NORTH CAROLINA PROFESSIONAL SEAL 037760 ENGINEER PAUL J. ISAACS
11/14/2014

DATE: NOVEMBER 14, 2014

REVISIONS:

NO.	DATE

PROJECT NO.:
H13007.00

S12

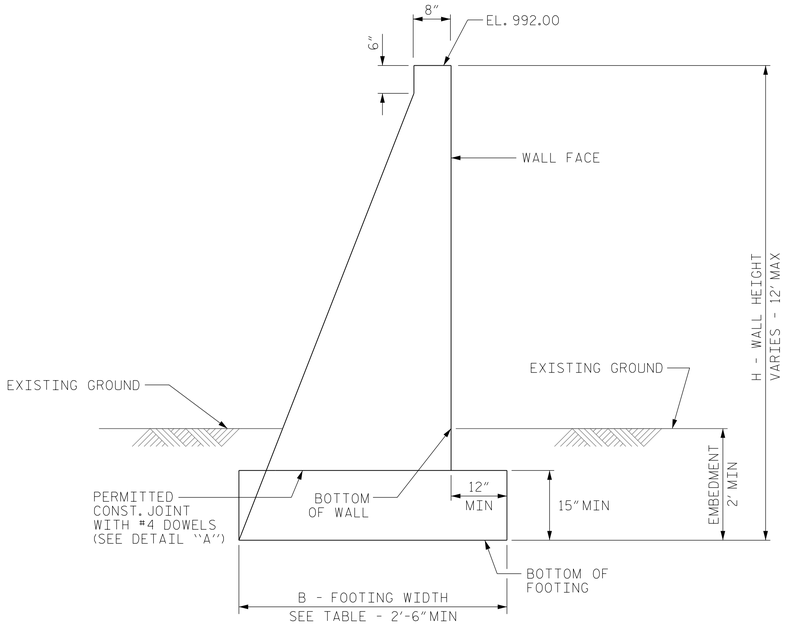

STANDARD CIP GRAVITY WALL

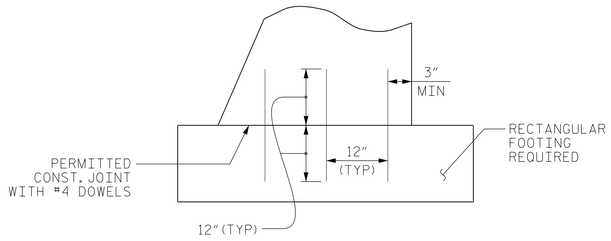

DETAIL "A"

H (FT)	3 - < 6	6 - 9	> 9 - 12
NO SLOPE CASE WITHOUT TRAFFIC SURCHARGE	.60	.60	.60

B/H RATIO (B = 2'-6"MIN)

NOTES:

FOR STANDARD CAST-IN-PLACE (CIP) GRAVITY RETAINING WALLS, SEE CAST-IN-PLACE GRAVITY RETAINING WALLS PROVISION.

STANDARD CIP GRAVITY WALLS ARE BASED ON THE FOLLOWING IN-SITU ASSUMED SOIL PARAMETERS:
- UNIT WEIGHT, γ = 120 LB/CF
- FRICTION ANGLE, ϕ = 35 DEGREES (GROUNDWATER WITHIN 7' OF BOTTOM OF FOOTING)
- FRICTION ANGLE, ϕ = 30 DEGREES (GROUNDWATER MORE THAN 7' BELOW BOTTOM OF FOOTING)
- COHESION, c = 0 LB/SF

DO NOT USE STANDARD CIP GRAVITY WALLS IF ASSUMED SOIL PARAMETERS ARE NOT APPLICABLE OR GROUNDWATER IS ABOVE BOTTOM OF FOOTING.

DO NOT USE STANDARD CIP GRAVITY WALLS WHEN VERY LOOSE OR SOFT SOIL OR MUCK IS BELOW WALLS.

BEFORE BEGINNING STANDARD CIP GRAVITY WALL CONSTRUCTION, SURVEY WALL LOCATIONS AND SUBMIT WALL PROFILE VIEWS (WALL ENVELOPES) FOR REVIEW. FOR WALL ENVELOPES, INCLUDE BOTTOM OF WALL, EXISTING GROUND AND GRADE ELEVATIONS AND OTHER ELEVATIONS AS NEEDED AT INTERVALS OF 25' OR LESS ALONG WALLS. DO NOT START WALL CONSTRUCTION UNTIL WALL ENVELOPES ARE ACCEPTED.

DO NOT PLACE CONCRETE FOR FOOTINGS UNTIL EXCAVATION DIMENSIONS AND FOUNDATION MATERIAL ARE APPROVED.

WHEN CONSTRUCTING STANDARD CIP GRAVITY WALLS WITH A CONSTRUCTION JOINT AS SHOWN IN DETAIL "A", PROVIDE A MINIMUM OF 3 EQUALLY SPACED #4 DOWELS AT INTERVALS OF 1'-6" ALONG WALLS.

EXCAVATION TO CONSTRUCT THE THE C.I.P. GRAVITY WALL SHALL REQUIRE THE REMOVAL OF INTERLOCKING CONCRETE BLOCK BANK STABILIZATION. BLOCKING SHALL BE REMOVED TO THE SMALLEST LIMITS NECESSARY TO COMPLETE CONSTRUCTION OF THE DEBRIS DEFLECTOR WALL. ONCE THE WALL IS COMPLETE, GROUT THE REGION BETWEEN THE INTERLOCKING BLOCK AND THE WALL SOLID TO THE DEPTH OF THE INTERLOCKING BLOCKS. THE COST OF THIS WORK SHALL BE DISTRIBUTED TO THE OTHER BID ITEMS. NO ADDITIONAL PAYMENT WILL BE MADE FOR MATERIALS OR LABOR NECESSARY TO COMPLETE THIS WORK.

ALTERNATE DEBRIS DEFLECTOR WALL DETAILS

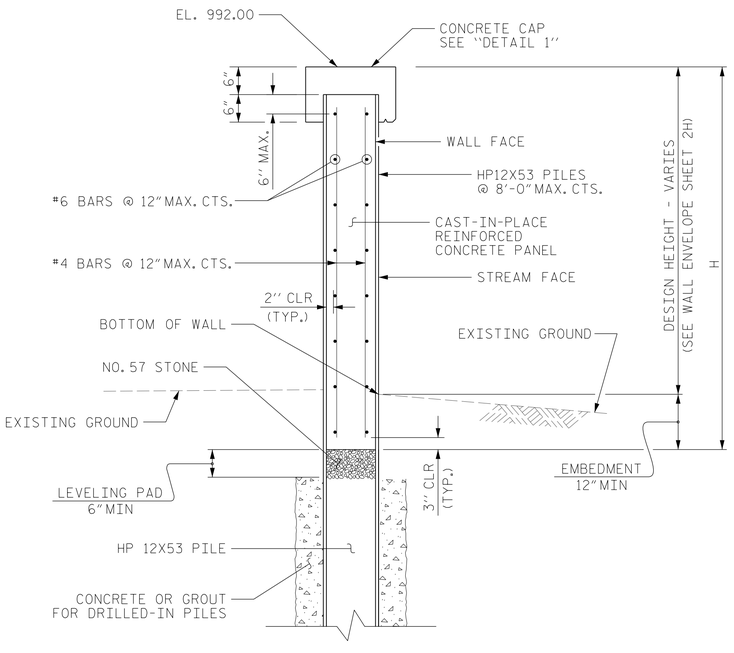

SOLDIER PILE WALL WITH
CAST-IN-PLACE PANEL - TYPICAL SECTION

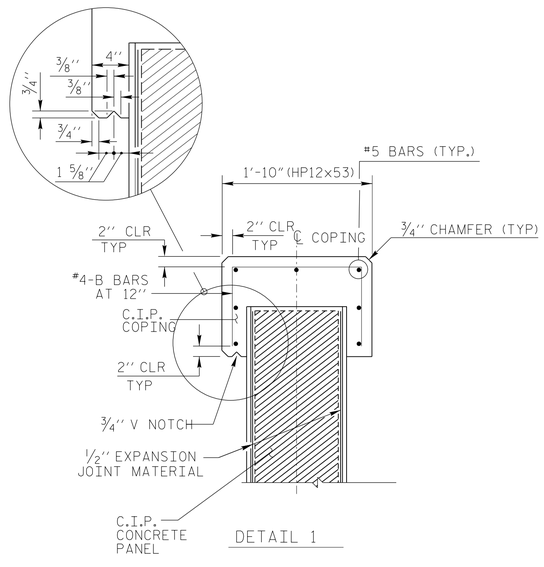

DETAIL 1

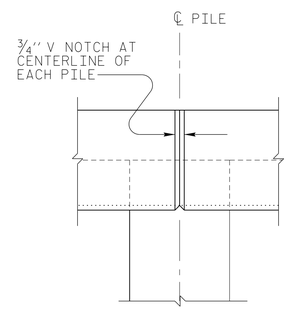

COPING JOINT DETAIL

NOTES:

FOR DEBRIS DEFLECTOR WALL, SEE SPECIAL PROVISIONS.

PAINT GALVANIZED H-PILES GRAY IN ACCORDANCE WITH ARTICLE 442-12 OF THE STANDARD SPECIFICATIONS FOR DEBRIS DEFLECTOR WALL NO.1.

USE A SOLDIER PILE RETAINING WALL WITH A CAST-IN-PLACE REINFORCED CONCRETE FACE FOR DEBRIS DEFLECTOR WALL.

BEFORE BEGINNING DEBRIS DEFLECTOR CONSTRUCTION, SURVEY WALL LOCATION AND SUBMIT A REVISED WALL PROFILE VIEW (WALL ENVELOPE) FOR REVIEW. DO NOT START WALL CONSTRUCTION UNTIL THE REVISED WALL ENVELOPE IS ACCEPTED.

DEBRIS DEFLECTOR DESIGN IS BASED UPON THE FOLLOWING PARAMETERS:
1) H = DESIGN HEIGHT + EMBEDMENT = 7' MAX.
3) MINIMUM PANEL EMBEDMENT DEPTH = 1.0 FT
4) MINIMUM PILE PENETRATION = 17' BELOW EXISTING GRADE
5) MAXIMUM PILE SPACING = 8'-0"

EXCAVATION TO CONSTRUCT THE THE SOLDIER PILE WALL SHALL REQUIRE THE REMOVAL OF INTERLOCKING CONCRETE BLOCK BANK STABILIZATION. BLOCKING SHALL BE REMOVED TO THE SMALLEST LIMITS NECESSARY TO COMPLETE CONSTRUCTION OF THE DEBRIS DEFLECTOR WALL. ONCE THE WALL IS COMPLETE, GROUT THE REGION BETWEEN THE INTERLOCKING BLOCK AND THE WALL SOLID TO THE DEPTH OF THE INTERLOCKING BLOCKS. THE COST OF THIS WORK SHALL BE DISTRIBUTED TO THE OTHER PAY ITEMS. NO ADDITIONAL PAYMENT WILL BE MADE FOR THE MATERIALS OR LABOR NECESSARY TO COMPLETE THIS WORK.

DEBRIS DEFLECTOR WALL DETAILS

THE GREAT SEAL OF THE CITY OF MOUNT AIRY NORTH CAROLINA

LOVILLS CREEK AND
ARARAT RIVER GREENWAY
WORTH STREET TO THARINGTON PARK

Firm License No. C-1051
421 Fayetteville St.
Suite 400
Raleigh, NC 27601
T 919.380.8750
www.stewartinc.com
STEWART

NORTH CAROLINA PROFESSIONAL SEAL 037760 ENGINEER JAMES I. FAULCON
11/14/2014

DATE: NOVEMBER 14, 2014

REVISIONS:

NO.	DATE

PROJECT NO.:
H13007.00

S13

STANDARD NOTES

DESIGN DATA:

SPECIFICATIONS - - - - - - - - - - - - - - - -	A.A.S.H.T.O. (CURRENT)
LIVE LOAD - - - - - - - - - - - - - - - - - -	SEE PLANS
IMPACT ALLOWANCE - - - - - - - - - - - - - - -	SEE A.A.S.H.T.O.
STRESS IN EXTREME FIBER OF	
STRUCTURAL STEEL - AASHTO M270 GRADE 36 -	20,000 LBS. PER SQ. IN.
- AASHTO M270 GRADE 50W -	27,000 LBS. PER SQ. IN.
- AASHTO M270 GRADE 50 -	27,000 LBS. PER SQ. IN.
REINFORCING STEEL IN TENSION	
GRADE 60 - -	24,000 LBS. PER SQ. IN.
CONCRETE IN COMPRESSION - - - - - - - - - - -	1,200 LBS. PER SQ. IN.
CONCRETE IN SHEAR - - - - - - - - - - - - - -	SEE A.A.S.H.T.O.
STRUCTURAL TIMBER - TREATED OR	
UNTREATED - EXTREME FIBER STRESS - - - - -	1,800 LBS. PER SQ. IN.
COMPRESSION PERPENDICULAR TO GRAIN OF TIMBER - - - -	375 LBS. PER SQ. IN.
EQUIVALENT FLUID PRESSURE OF EARTH - - - - -	30 LBS. PER CU. FT. (MINIMUM)

MATERIAL AND WORKMANSHIP:

EXCEPT AS MAY OTHERWISE BE SPECIFIED ON PLANS OR IN THE SPECIAL PROVISIONS, ALL MATERIAL AND WORKMANSHIP SHALL BE IN ACCORDANCE WITH THE 2012 "STANDARD SPECIFICATIONS FOR ROADS AND STRUCTURES" OF THE N. C. DEPARTMENT OF TRANSPORTATION.

STEEL SHEET PILING FOR PERMANENT OR TEMPORARY APPLICATIONS SHALL BE HOT ROLLED.

CONCRETE:

UNLESS OTHERWISE REQUIRED ON PLANS, CLASS A CONCRETE SHALL BE USED FOR ALL PORTIONS OF ALL STRUCTURES WITH THE EXCEPTION THAT: CLASS AA CONCRETE SHALL BE USED IN BRIDGE SUPERSTRUCTURES, ABUTMENT BACKWALLS, AND APPROACH SLABS; AND CLASS B CONCRETE SHALL BE USED FOR SLOPE PROTECTION AND RIP RAP.

CONCRETE CHAMFERS:

UNLESS OTHERWISE NOTED ON THE PLANS, ALL EXPOSED CORNERS ON STRUCTURES SHALL BE CHAMFERED 3/4" WITH THE FOLLOWING EXCEPTIONS: TOP CORNERS OF CURBS MAY BE ROUNDED TO 1-1/2" RADIUS WHICH IS BUILT INTO CURB FORMS; CORNERS OF TRANSVERSE FLOOR EXPANSION JOINTS SHALL BE ROUNDED WITH A 1/4" FINISHING TOOL UNLESS OTHERWISE REQUIRED ON PLANS; AND CORNERS OF EXPANSION JOINTS IN THE ROADWAY FACES AND TOPS OF CURBS AND SIDEWALKS SHALL BE ROUNDED TO A 1/4" RADIUS WITH A FINISHING STONE OR TOOL UNLESS OTHERWISE REQUIRED ON PLANS.

DOWELS:

DOWELS WHEN INDICATED ON PLANS AS FOR CULVERT EXTENSIONS, SHALL BE EMBEDDED AT LEAST 12" INTO THE OLD CONCRETE AND GROUTED INTO PLACE WITH 1:2 CEMENT MORTAR.

ALLOWANCE FOR DEAD LOAD DEFLECTION, SETTLEMENT, ETC. IN CASTING SUPERSTRUCTURES:

BRIDGES SHALL BE BUILT ON THE GRADE OR VERTICAL CURVE SHOWN ON PLANS. SLABS, CURBS AND PARAPETS SHALL CONFORM TO THE GRADE OR CURVE.

ALL DIMENSIONS WHICH ARE GIVEN IN SECTION AND ARE AFFECTED BY DEAD LOAD DEFLECTIONS ARE DIMENSIONS AT CENTER LINE OF BEARING UNLESS OTHERWISE NOTED ON PLANS. IN SETTING FORMS FOR STEEL BEAM BRIDGES AND PRESTRESSED CONCRETE GIRDER BRIDGES, ADJUSTMENTS SHALL BE MADE DUE TO THE DEAD LOAD DEFLECTIONS FOR THE ELEVATIONS SHOWN. WHERE BLOCKS ARE SHOWN OVER BEAMS FOR BUILDING UP TO THE SLAB, THE VERTICAL DIMENSIONS OF THE BLOCKS SHALL BE ADJUSTED BETWEEN BEARINGS TO COMPENSATE FOR DEAD LOAD DEFLECTIONS, VERTICAL CURVE ORDINATE, AND ACTUAL BEAM CAMBER. WHERE BOTTOM OF SLAB IS IN LINE WITH BOTTOM OF TOP FLANGES, DEPTH OF SLAB BETWEEN BEARINGS SHALL BE ADJUSTED TO COMPENSATE FOR DEAD LOAD DEFLECTION, VERTICAL CURVE ORDINATE, AND ACTUAL BEAM CAMBER.

IN SETTING FALSEWORK AND FORMS FOR REINFORCED CONCRETE SPANS, AN ALLOWANCE SHALL BE MADE FOR DEAD LOAD DEFLECTIONS, SETTLEMENT OF FALSEWORK, AND PERMANENT CAMBER WHICH SHALL BE PROVIDED FOR IN ADDITION TO THE ELEVATIONS SHOWN. AFTER REMOVAL OF THE FALSEWORK, THE FINISHED STRUCTURES SHALL CONFORM TO THE PROFILE AND ELEVATIONS SHOWN ON THE PLANS AND CONSTRUCTION ELEVATIONS FURNISHED BY THE ENGINEER.

DETAILED DRAWINGS FOR FALSEWORK OR FORMS FOR BRIDGE SUPERSTRUCTURE AND ANY STRUCTURE OR PARTS OF A STRUCTURE AS NOTED ON THE PLANS SHALL BE SUBMITTED TO THE ENGINEER FOR APPROVAL BEFORE CONSTRUCTION OF THE FALSEWORK OR FORMS IS STARTED.

REINFORCING STEEL:

ALL REINFORCING STEEL SHALL BE DEFORMED. DIMENSIONS RELATIVE TO PLACEMENT OF REINFORCING ARE TO CENTERS OF BARS UNLESS OTHERWISE INDICATED IN THE PLANS. DIMENSIONS ON BAR DETAILS ARE TO CENTERS OF BARS OR ARE OUT TO OUT AS INDICATED ON PLANS.

WIRE BAR SUPPORTS SHALL BE PROVIDED FOR REINFORCING STEEL WHERE INDICATED ON THE PLANS. WHEN BAR SUPPORT PIECES ARE PLACED IN CONTINUOUS LINES, THEY SHALL BE SO PLACED THAT THE ENDS OF THE SUPPORTING WIRES SHALL BE LAPPED TO LOCK LEGS ON ADJOINING PIECES.

STRUCTURAL STEEL:

AT THE CONTRACTOR'S OPTION, HE MAY SUBSTITUTE 7/8" Ø SHEAR STUDS FOR THE ¾" Ø STUDS SPECIFIED ON THE PLANS. THIS SUBSTITUTION SHALL BE MADE AT THE RATE OF 3 - 7/8" Ø STUDS FOR 4 - 3/4" Ø STUDS, AND STUD SPACING CHANGES SHALL BE MADE AS NECESSARY TO PROVIDE THE SAME EQUIVALENT NUMBER OF 7/8" Ø STUDS ALONG THE BEAM AS SHOWN FOR 3/4" Ø STUDS BASED ON THE RATIO OF 3 - 7/8" Ø STUDS FOR 4 - 3/4" Ø STUDS. STUDS OF THE LENGTH SPECIFIED ON THE PLANS MUST BE PROVIDED. THE MAXIMUM SPACING SHALL BE 2'-0".

EXCEPT AT THE INTERIOR SUPPORTS OF CONTINUOUS BEAMS WHERE THE COVER PLATE IS IN CONTACT WITH BEARING PLATE, THE CONTRACTOR MAY, AT HIS OPTION, SUBSTITUTE FOR THE COVER PLATES DESIGNATED ON THE PLANS COVER PLATES OF THE EQUIVALENT AREA PROVIDED THESE PLATES ARE AT LEAST 5/16" IN THICKNESS AND DO NOT EXCEED A WIDTH EQUAL TO THE FLANGE WIDTH LESS 2" OR A THICKNESS EQUAL TO 2 TIMES THE FLANGE THICKNESS. THE SIZE OF FILLET WELDS SHALL CONFORM TO THE REQUIREMENTS OF THE CURRENT ANSI/AASHTO/AWS "BRIDGE WELDING CODE". ELECTROSLAG WELDING WILL NOT BE PERMITTED.

WITH THE SOLE EXCEPTION OF EDGES AT SURFACES WHICH BEAR ON OTHER SURFACES, ALL SHARP EDGES AND ENDS OF SHAPES AND PLATES SHALL BE SLIGHTLY ROUNDED BY SUITABLE MEANS TO A RADIUS OF APPROXIMATELY 1/16 INCH OR EQUIVALENT FLAT SURFACE AT A SUITABLE ANGLE PRIOR TO PAINTING, GALVANIZING, OR METALLIZING.

HANDRAILS AND POSTS:

METAL STANDARDS AND FACES OF THE CONCRETE END POSTS FOR THE METAL RAIL SHALL BE SET NORMAL TO THE GRADE OF THE CURB, UNLESS OTHERWISE SHOWN ON PLANS. THE METAL RAIL AND TOPS OF CONCRETE POSTS USED WITH THE ALUMINUM RAIL SHALL BE BUILT PARALLEL TO THE GRADE OF THE CURB.

METAL HANDRAILS SHALL BE IN ACCORDANCE WITH THE PLANS. RAILS SHALL BE AS MANUFACTURED FOR BRIDGE RAILING. CASTINGS SHALL BE OF A UNIFORM APPEARANCE. FINS AND OTHER DEFORMATIONS RESULTING FROM CASTING OR OTHERWISE SHALL BE REMOVED IN A MANNER SO THAT A UNIFORM COLORING OF THE COMPLETED CASTING SHALL BE OBTAINED. CASTINGS WITH DISCOLORATIONS OR OF NON-UNIFORM COLORING WILL NOT BE ACCEPTED. CERTIFIED MILL REPORTS ARE REQUIRED FOR METAL RAILS AND POSTS.

SPECIAL NOTES:

GENERALLY, IN CASE OF DISCREPANCY, THIS STANDARD SHEET OF NOTES SHALL GOVERN OVER THE SPECIFICATIONS, BUT THE REMAINDER OF THE PLANS SHALL GOVERN OVER NOTES HEREON, AND SPECIAL PROVISIONS SHALL GOVERN OVER ALL. SEE SPECIFICATIONS ARTICLE 105-4.

THE GREAT SEAL OF THE CITY OF MOULTRIE · GEORGIA · NORTH CAROLINA

LOVILLS CREEK AND
ARARAT RIVER GREENWAY
WORTH STREET TO THARINGTON PARK

Firm License No. C-1051
421 Fayetteville St.
Suite 400
Raleigh, NC 27601
T 919.380.8750
www.stewartinc.com

STEWART

NORTH CAROLINA PROFESSIONAL SEAL 037760 ENGINEER FAULKNER, JEFFREY LEE
11/14/2014

DATE: NOVEMBER 14, 2014

REVISIONS:

NO.	DATE

PROJECT NO.:

H13007.00

N/A

S14

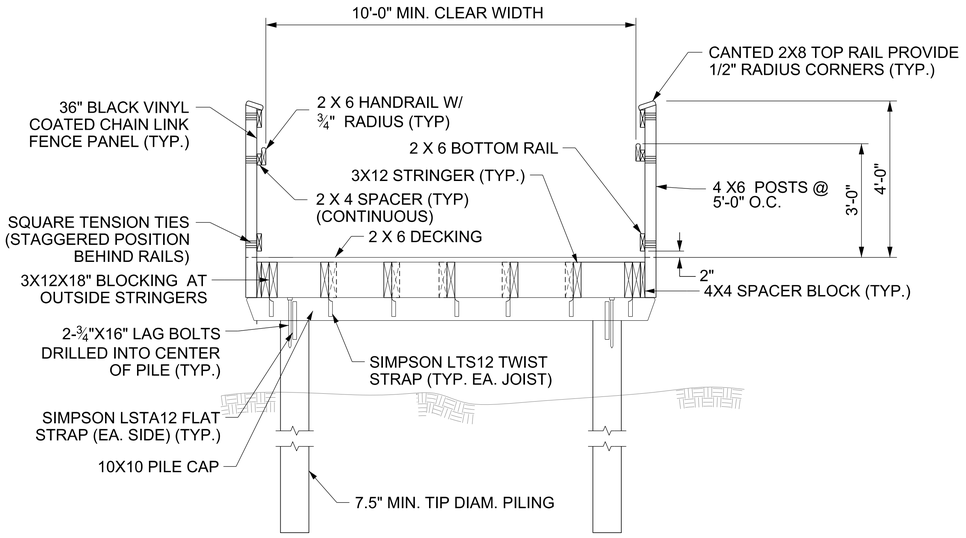

SECTION A-A

NOTE: SEE SHEET SB-2 FOR SECTION CUT LOCATION
TYPICAL 10' SPAN CONSTRUCTION SHOWN

BOARDWALK LOCATIONS								
CHAIN	BEGIN STATION	ELEVATION	CHAIN	END STATION	ELEVATION	LENGTH	20' SPAN	REMARKS
-L-	21+80.00	993.30	-L-	23+07.00	994.75	127.00'	YES	-
-L-	23+87.00	994.75	-L-	25+20.00	988.62	133.00'	NO	-
-L-	60+90.00	983.91	-L-	61+30.00	983.71	40.00'	YES	-

NOTE: THERE IS ONE 20 FOOT BOARDWALK SPAN IN BOARDWALKS THAT INDICATE "YES" IN THE 20' SPAN COLUMN.
BEGN AND END ELEVATIONS SHOWN. FOR INTERMEDIATE ELEVATIONS, SEE PROFILE.

REQUIRED PILE TIP DEPTHS		
	10 FOOT SPAN	20 FOOT SPAN
BOARDWALK 1	11	13
BOARDWALK 2	10	N/A
BOARDWALK 3	12	12

NOTES:

1. BOARDWALKS ARE TO BE SUPPORTED ON 7.5" MIN. TIP DIAMETER PILING.
2. PILE DRIVING (BLOW COUNT) CRITERIA IS TO BE ESTABLISHED USING A PILE DRIVING ANALYZER (PDA). ONE PDA TEST WILL BE REQUIRED PER 1,000 LINEAL FEET OF BOARDWALK BUT NOT LESS THAN ONE PDA TEST PER BOARDWALK UNLESS ALLOWED BY THE DESIGN ENGINEER. PDA TESTING SHALL BE THE RESPONSIBILITY OF THE PILE CONTRACTOR. FOR PDA TESTING SEE SPECIAL PROVISIONS FOR TIMBER BOARDWALK (SECTION 06100).
3. BOARDWALK PILES MAY BE ADVANCED WITH IMPACT OR VIBRATORY PILE DRIVING EQUIPMENT. IF A VIBRATORY HAMMER IS USED, A MINIMUM OF ONE PILE PER TEN PILES MUST BE STRUCK WITH AN IMPACT HAMMER AFTER VIBRATORY INSTALLATION. IMPACT HAMMER BLOW COUNTS MUST MEET THE CRITERIA ESTABLISHED BY THE AFOREMENTIONED PDA TESTING. ALL PILES INSTALLED USING VIBRATORY EQUIPMENT, INCLUDING PDA PILES AND PILES RECEIVING FINAL HAMMER VERIFICATION, SHOULD BE CONTINOUSLY MONITORED TO RECORD PILE PENETRATION RATES. PENETRATION RATES SHOULD BE COMPARED TO THE NEAREST IMPACT HAMMER VERIFIED PILE FOR CAPACITY SUBSTANTIATION.
4. MINIMUM PENETRATION FOR TIMBER PILING SHALL AS SHOWN IN THE REQUIRED PILE TIP DEPTHS TABLE. WHEN MINIMUM PENETRATION CAN NOT BE ACHIEVED WITHOUT CAUSING DAMAGE TO THE PILING, CROSS BRACING AND HELICAL ANCHOR TIE DOWNS SHALL BE UTILIZED TO ACHIEVE THE NECESSARY LATERAL/UPLIFT RESISTANCE. FOR DETAILS OF HELICAL ANCHORS, SEE SHEET SB-7 AND THE PROJECT SPECIFICATIONS.
5. PILING SHALL BE INSTALLED TO SUPPORT THE FOLLOWING LOADS:

   10 FOOT SPAN ADJACENT TO 10 FOOT SPAN:
   COMPRESSION 5.3 KIPS PER PILE (DEAD + LIVE)
   UPLIFT 0.6 KIPS PER PILE
   LATERAL 1.0 KIPS PER PILE

   10 FOOT SPAN ADJACENT TO 20 FOOT SPAN:
   COMPRESSION 8.1 KIPS PER PILE (DEAD + LIVE)
   UPLIFT 0.9 KIPS PER PILE
   LATERAL 1.5 KIPS PER PILE

6. ALL TIMBER DIMENSIONS ARE BASED ON NOMINAL TIMBER SIZES.
7. ALL EXPOSED CORNERS OF 2 X 8 TOP RAILS SHALL BE FINISHED WITH 1/2" MINIMUM RADIUS.
8. PRE-DRILLED HOLES MAY BE NECESSARY TO PREVENT SPLITTING OF TIMBERS DURING CONSTRUCTION. 2 X 6 DECKING TO BE ATTACHED TO JOISTS USING 3" X 1/8" GALVANIZED SCREWS. DECKING SHALL BE ATTACHED WITH TWO GALVANIZED OR STAINLESS STEEL SCREWS AT EVERY JOIST.
9. ALL BOLTS, NUTS, WASHERS, ETC. SHALL BE HOT DIPPED GALVANIZED AFTER FABRICATION IN ACCORDANCE WITH ASTM A153. SIMPSON STRONG TIE CONNECTORS (WHERE USED) SHALL BE GALVANIZED.
10. TREATED TIMBER AND LUMBER SHALL BE USED AND SHALL BE IN ACCORDANCE WITH 2012 NCDOT STANDARD SPECIFICATIONS, SECTION 1082 AND SHALL BE SOUTHERN PINE, GRADE 1 OR BETTER.
11. ALL WORK SHALL BE ACCOMPLISHED AS DIRECTED BY THE ENGINEER. ANY DISCREPANCIES FOUND ON THIS DRAWING SHALL BE BROUGHT TO THE ATTENTION OF THE ENGINEER BEFORE PROCEEDING.
12. BASIS OF PAYMENT FOR THE BOARDWALK WILL BE AT THE CONTRACT UNIT PRICES FOR BOARDWALK - 10 FT SPAN, BOARDWALK - 20 FT SPAN, BOARDWALK POSTS 7.5" MIN. TIP DIAM., AND WILL BE FULL COMPENSATION FOR FURNISHING ALL MATERIAL, LABOR, TOOLS, AND INCIDENTALS NECESSARY FOR INSTALLING IN PLACE.
13. FOR TIMBER BOARDWALK, SEE SPECIAL PROVISIONS.
14. X-BRACE TIMBER PILES IN THE TRANSVERSE DIRECTION IN ALL BAYS WHEN TOP OF BOARDWALK EXCEEDS 6'-0" IN HEIGHT FROM TOP OF DECK TO GROUND SURFACE. X-BRACE IN LONGITUDINAL DIRECTION WILL NOT BE ALLOWED. ATTACH X-BRACING TO POSTS W/ 5/8 " DIA. HEX BOLT AT EACH END. FOR BRACING DETAILS SEE DWG. SB-4.
15. 2X6 BOTTOM SUPPORT RAIL TO BE INSTALLED 2" ABOVE DECK SURFACE.
16. THE PILE HAMMER USED BY THE CONTRACTOR MUST BE APPROVED BY THE ENGINEER AND BY THE CITY OF MOUNT AIRY PRIOR TO CONSTRUCTION.
17. VINYL COATED CHAIN LINK FENCE SHALL BE KNUCKLED AT BOTH ENDS.
18. UNO = UNLESS NOTED OTHERWISE

TYPICAL BOARDWALK DETAILS

LOVILLS CREEK AND ARARAT RIVER GREENWAY
WORTH STREET TO THARINGTON PARK

Firm License No.: C-1051
421 Fayetteville St.
Suite 400
Raleigh, NC 27601
T 919.380.8750
www.stewartinc.com
STEWART

NORTH CAROLINA PROFESSIONAL SEAL 037760 ENGINEER PAUL L. JACOB
11/14/2014

DATE: NOVEMBER 14, 2014

REVISIONS:

NO.	DATE

PROJECT NO.:
H13007.00

NTS

SB-1

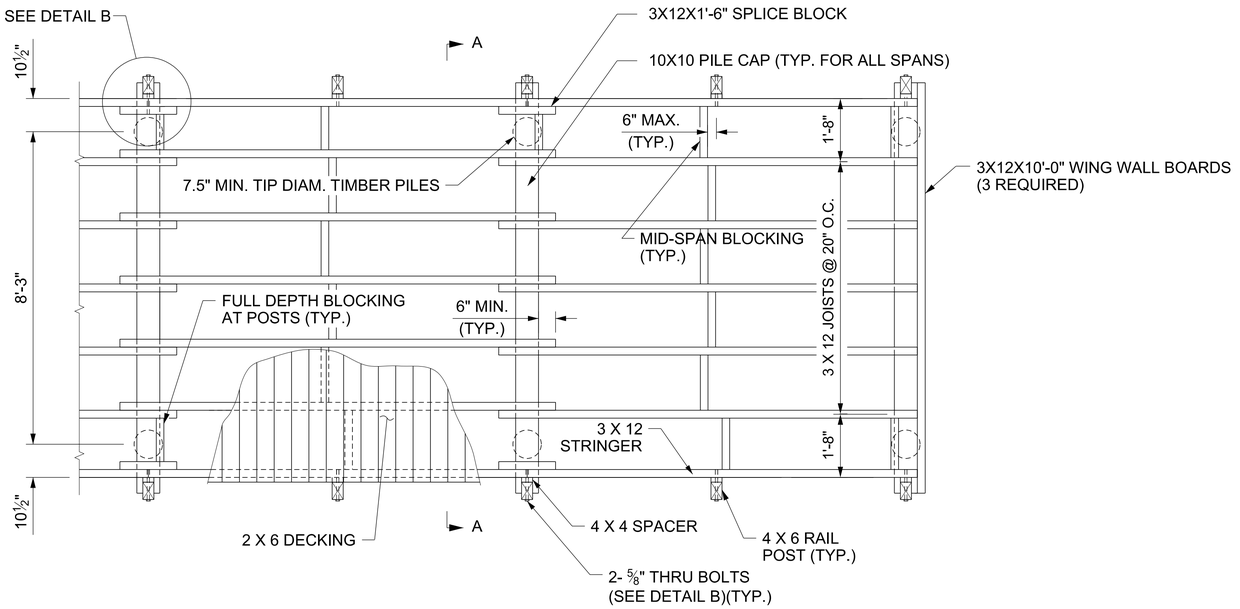

PLAN VIEW - BOARDWALKS

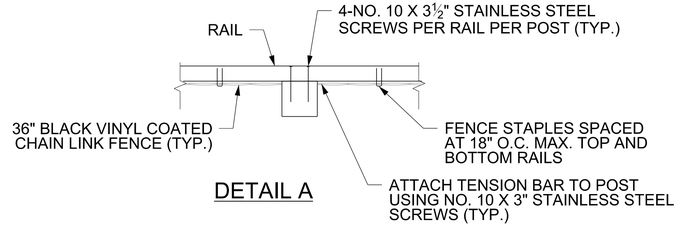

DETAIL A

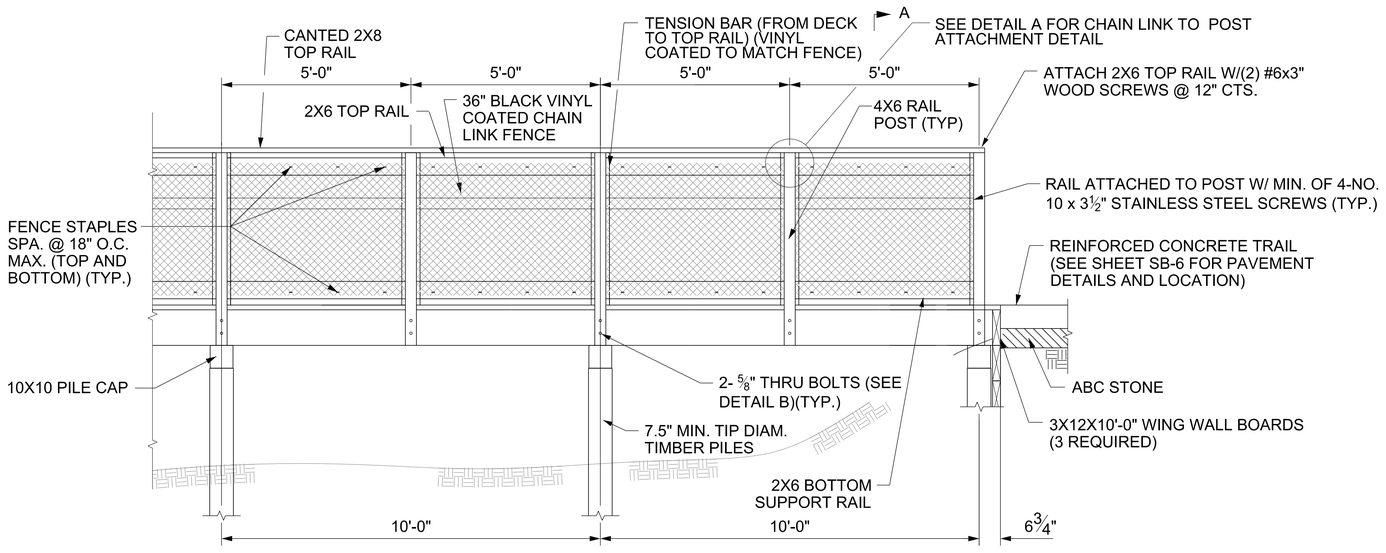

ELEVATION VIEW-BOARDWALKS A

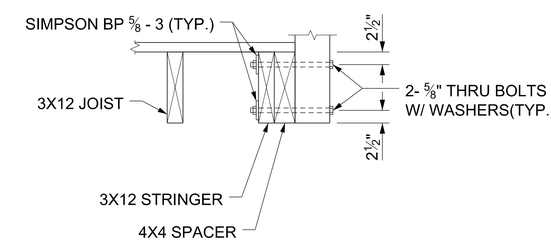

DETAIL B

DESIGN LOADS

PEDESTRIAN LIVE LOAD	90 PSF
VEHICLE LIVE LOAD	10,000LB
WIND LOAD ON SUPERSTRUCTURE	54 PSF

TYPICAL BOARDWALK DETAILS

LOVILLS CREEK AND
ARARAT RIVER GREENWAY
WORTH STREET TO THARINGTON PARK

Firm License No. C-1051
421 Fayetteville St,
Suite 400
Raleigh, NC 27601
T 919.380.8750
www.stewartinc.com
STEWART

NORTH CAROLINA PROFESSIONAL SEAL 037760 ENGINEER PAUL L. JACOB
11/14/2014

DATE: NOVEMBER 14, 2014

REVISIONS:

NO.	DATE

PROJECT NO.:
H13007.00

NTS

SB-2

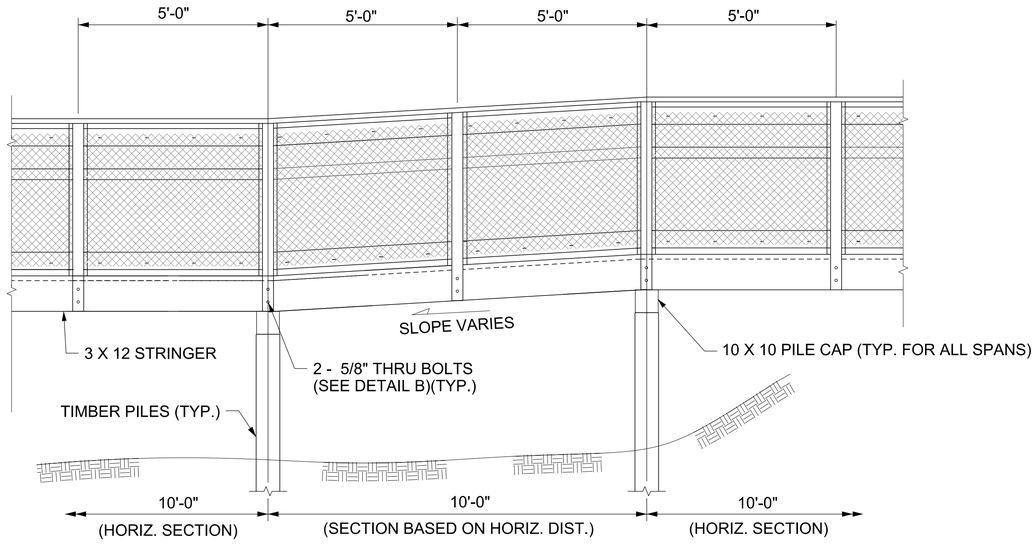

ELEVATION VIEW WITH SLOPED DECKING

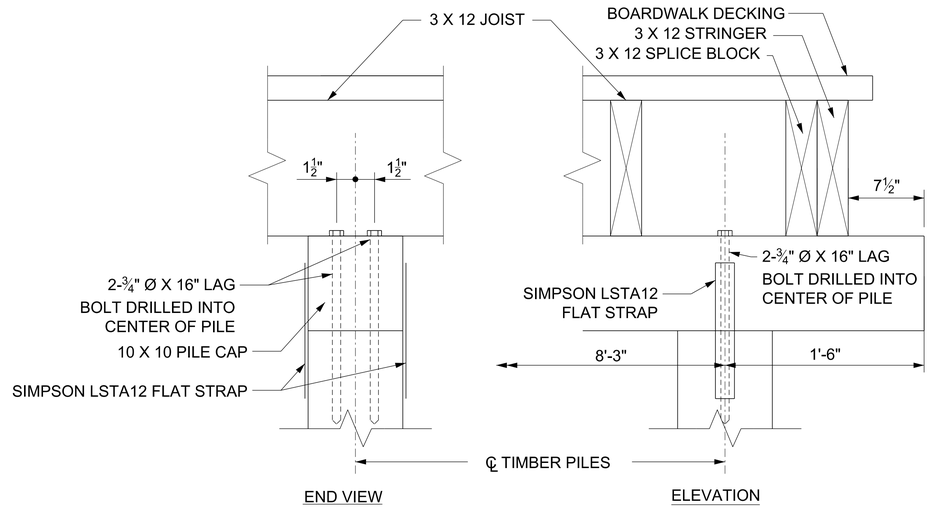

BEAM CONNECTION TO TIMBER PILES

(TYPICAL 10' SPANS)

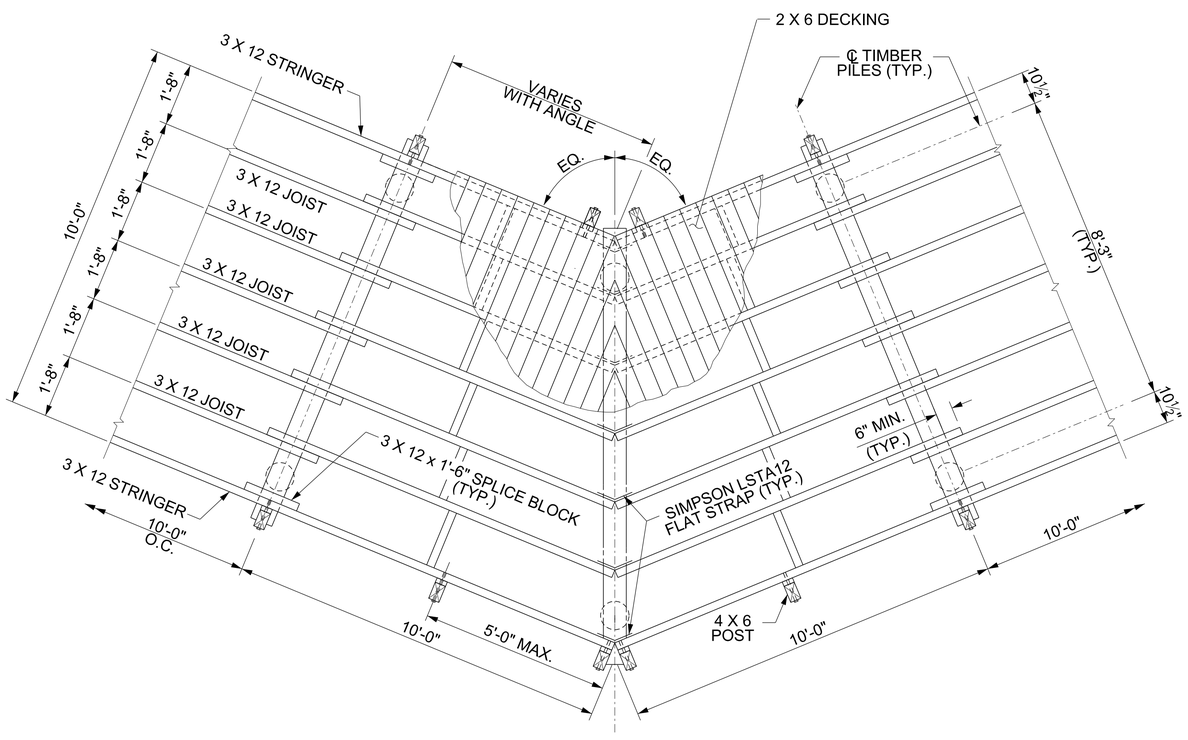

FRAMING PLAN AT BEND

TYPICAL BOARDWALK DETAILS

LOVILLS CREEK AND
ARARAT RIVER GREENWAY
WORTH STREET TO THARINGTON PARK

Firm License No. C-1051
421 Fayetteville St.
Suite 400
Raleigh, NC 27601
T 919.380.8750
www.stewartinc.com

STEWART

NORTH CAROLINA PROFESSIONAL SEAL 037760 ENGINEER PAUL L. JACOB
11/14/2014

DATE: NOVEMBER 14, 2014

REVISIONS:

NO.	DATE

PROJECT NO.:

H13007.00

NTS

SB-3

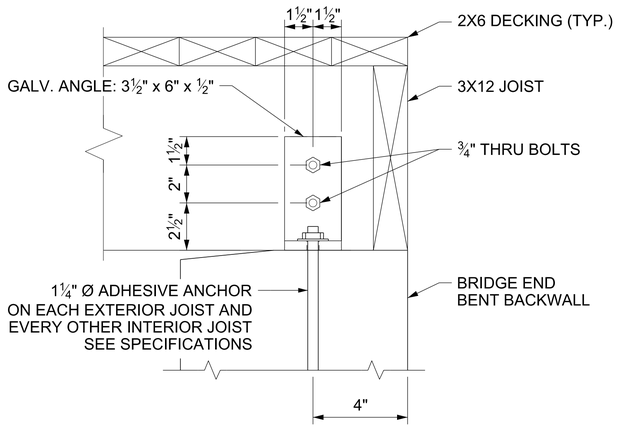

DETAIL C

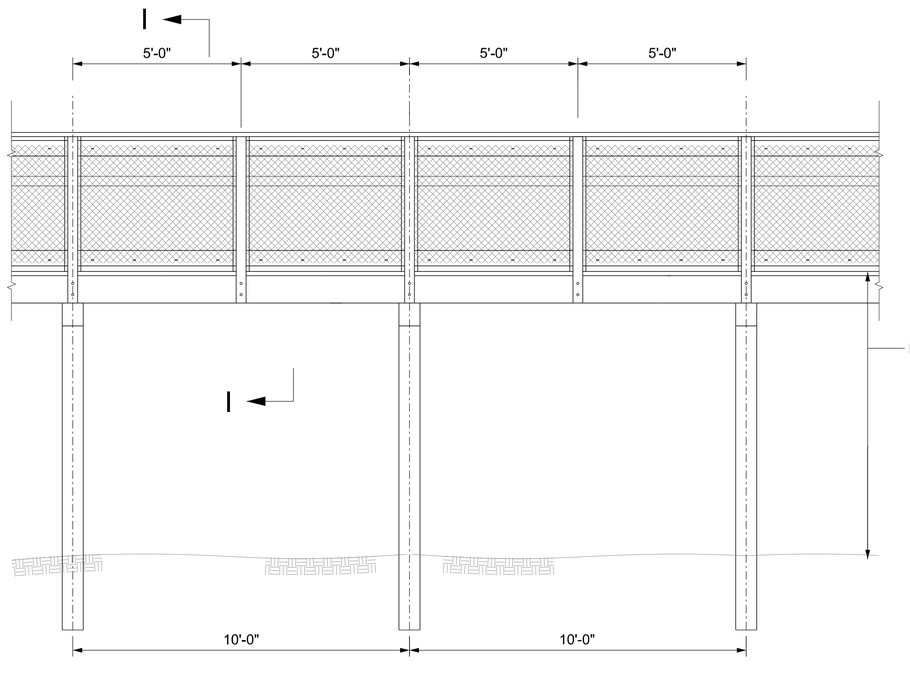

NOTE: LONGITUDINAL BRACING WILL NOT BE REQUIRED ON THESE STRUCTURES

TYPICAL BOARDWALK ELEVATION - WOOD POSTS

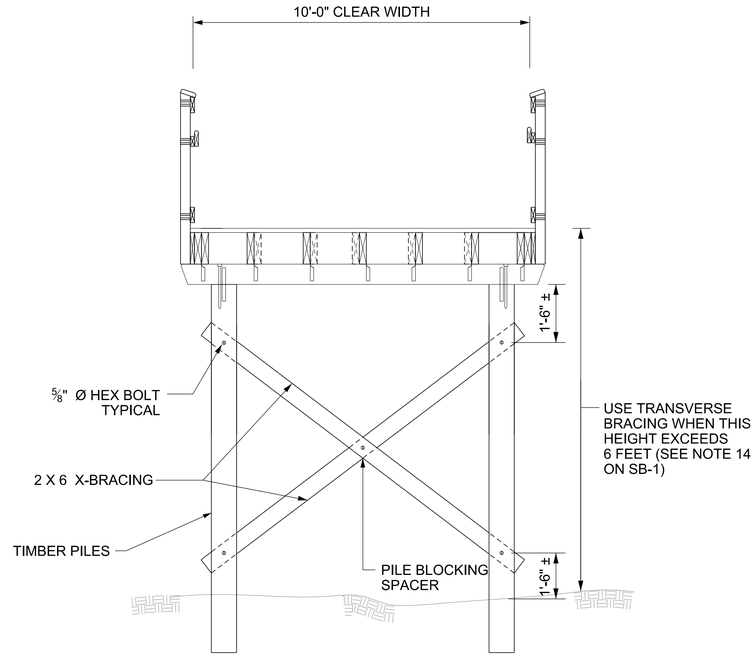

SECTION I-I

TYPICAL BOARDWALK BRACING DETAIL ON TIMBER PILES
(TRANSVERSE DIRECTION)

LOVILLS CREEK AND
ARARAT RIVER GREENWAY

WORTH STREET TO THARINGTON PARK

Firm License No. C-1051
421 Fayetteville St.
Suite 400
Raleigh, NC 27601
T 919.380.8750
www.stewartinc.com

STEWART

NORTH CAROLINA PROFESSIONAL SEAL 037760 ENGINEER PAUL JACOB
11/14/2014

DATE: NOVEMBER 14, 2014

REVISIONS:

NO.	DATE

PROJECT NO.:

H13007.00

SB-4

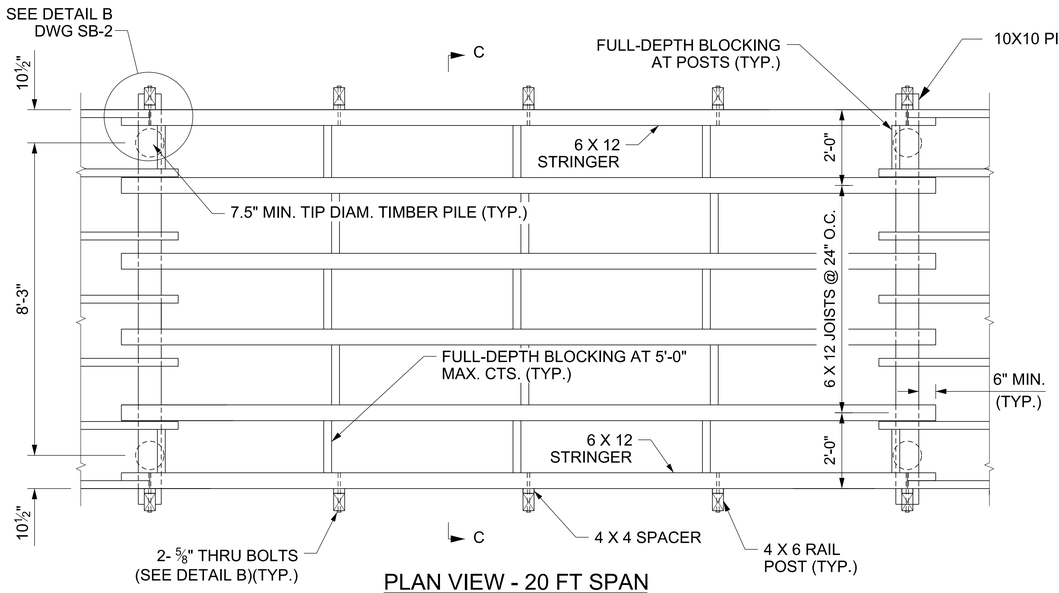

PLAN VIEW - 20 FT SPAN

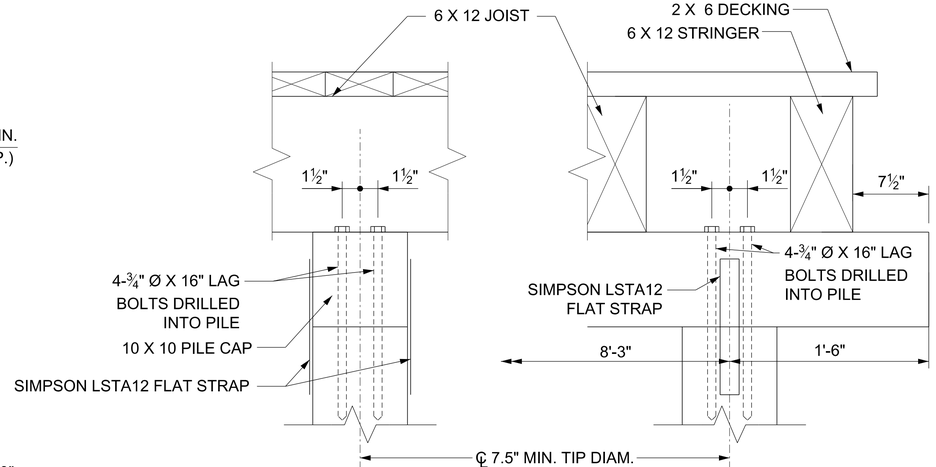

BEAM CONNECTION TO TIMBER PILES

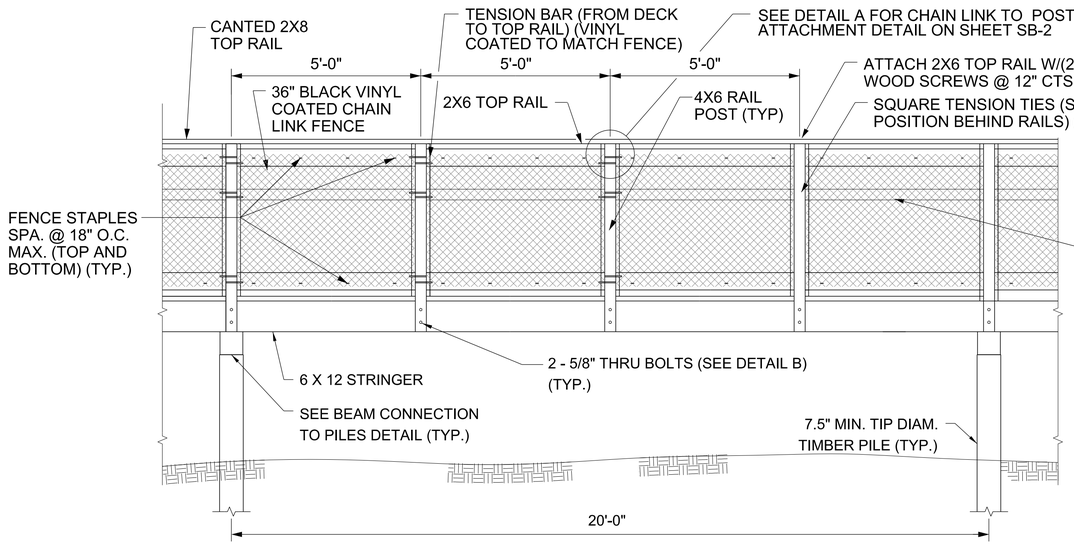

ELEVATION VIEW - 20 FT SPAN

FOR NOTES, SEE SHEET SB-1

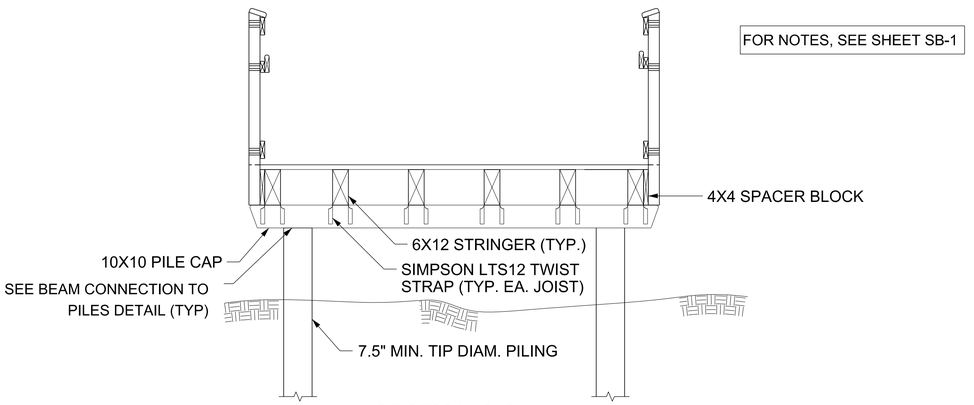

SECTION C-C

NOTE: FOR ADDTIONAL DETAILS, SEE SECTION A-A ON DWG. SB-1

DESIGN LOADS

PEDESTRIAN LIVE LOAD	90 PSF
VEHICLE LIVE LOAD	10,000LB
WIND LOAD ON SUPERSTRUCTURE	54 PSF

TYPICAL DETAILS FOR 20 FT BOARDWALK UNIT

THE GREAT SEAL OF THE CITY OF MOUNTAIN NORTH CAROLINA

LOVILLS CREEK AND
ARARAT RIVER GREENWAY
WORTH STREET TO THARINGTON PARK

Firm License No. C-1051
421 Fayetteville St.
Suite 400
Raleigh, NC 27601
T 919.380.8750
www.stewartinc.com
STEWART

NORTH CAROLINA PROFESSIONAL SEAL 037760 ENGINEER PAUL JACOB
11/14/2014

DATE: NOVEMBER 14, 2014

REVISIONS:

NO.	DATE

PROJECT NO.:
H13007.00

SB-5

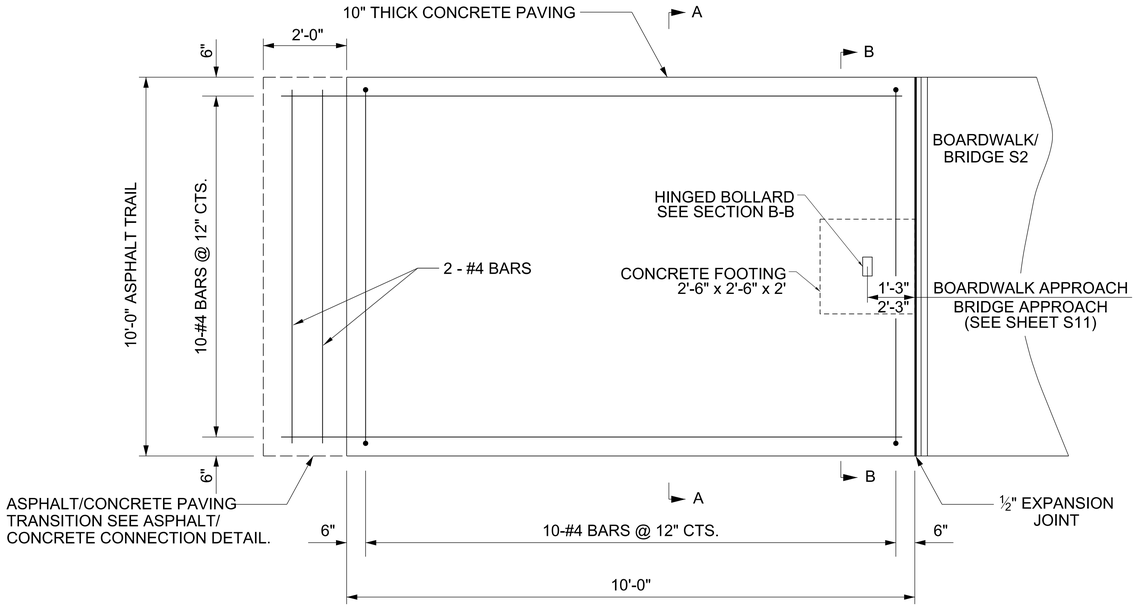

PLAN VIEW

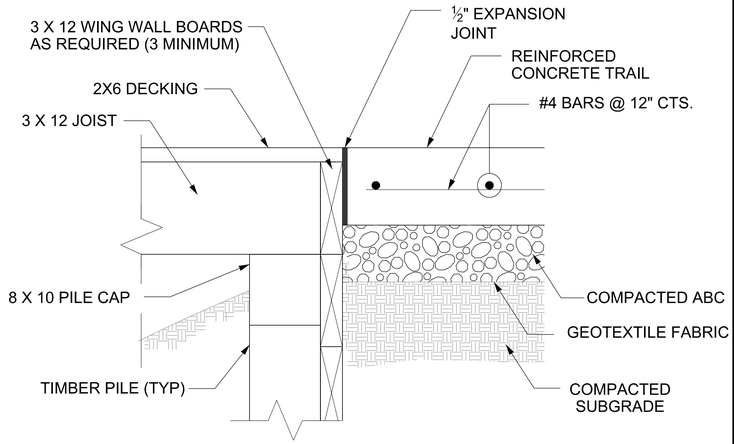

CONCRETE/BOARDWALK CONNECTION

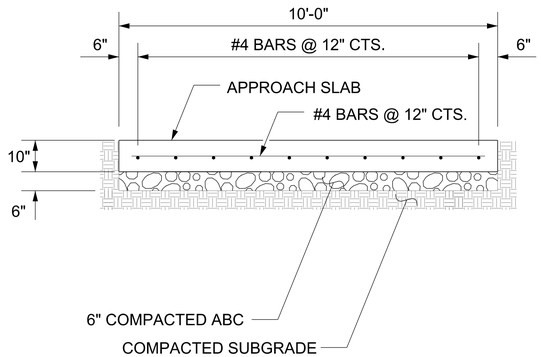

SECTION A-A

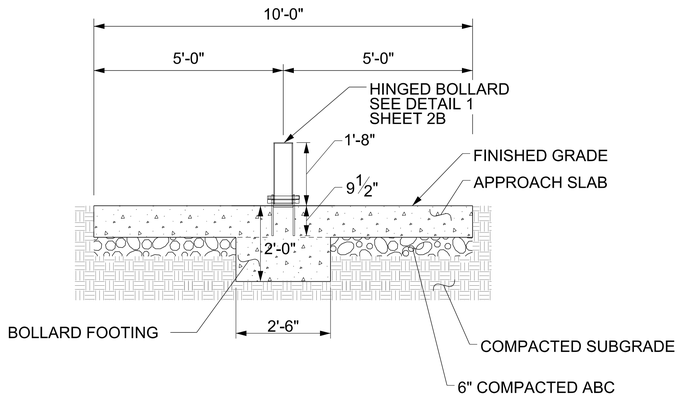

SECTION B-B

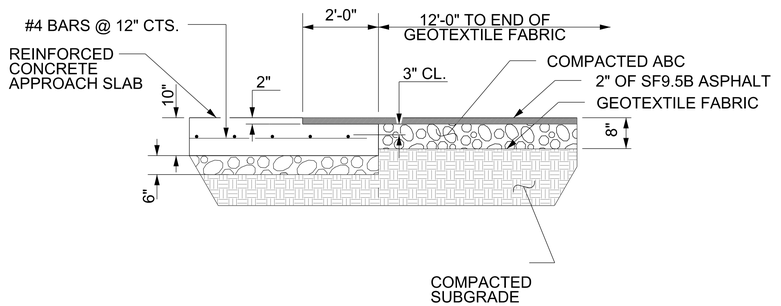

ASPHALT/CONCRETE CONNECTION

NOTE: GEOTEXTILE TO EXTEND FULL WIDTH OF TRANSITION.
COST OF GEOTEXTILE TO BE INCLUDED WITH THE PAY ITEM
"CONCRETE APPROACH".

NOTE:
PAYMENT FOR CONCRETE TRAIL AT EACH END OF BOARDWALK WILL BE MADE
UNDER THE PAY ITEM "CONCRETE APPROACH".

TYPICAL DETAILS FOR BOARDWALK APPROACH

THE GREAT SEAL OF THE CITY OF MOUNTAIN · NORTH CAROLINA

LOVILLS CREEK AND
ARARAT RIVER GREENWAY
WORTH STREET TO THARINGTON PARK

Firm License No. C-1051
421 Fayetteville St.
Suite 400
Raleigh, NC 27601
T 919.380.8750
www.stewartinc.com

STEWART

NORTH CAROLINA PROFESSIONAL SEAL 037760 ENGINEER PAUL JACOB

11/14/2014

DATE: NOVEMBER 14, 2014

REVISIONS:

NO.	DATE

PROJECT NO.:

H13007.00

NTS

SB-6

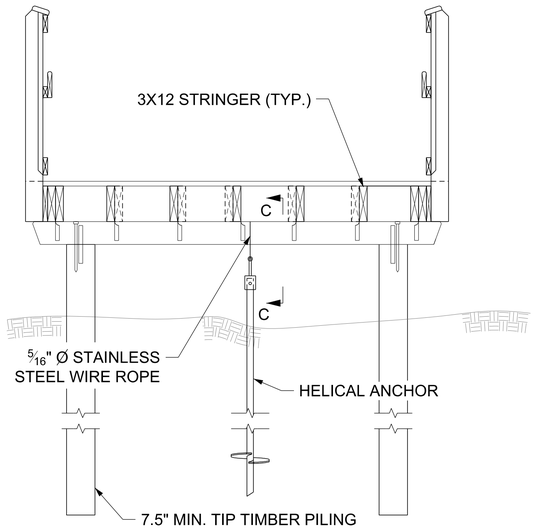

SECTION

NOTE: CROSS BRACING NOT SHOWN FOR CLARITY

HELICAL ANCHORS ARE REQUIRED WHEN PILES ARE NOT INSTALLED TO THE MINIMUM DEPTH INDICATED IN NOTE 4 ON SHEET SB-1 AND/OR AS DIRECTED BY THE ENGINEER.

HELICAL ANCHOR SHALL BE LOCATED AS CLOSE TO THE POST CAP CENTERLINE AS POSSIBLE WITHOUT CAUSING DAMAGE TO JOISTS, POST CAPS, AND CROSS BRACING DURING INSTALLATION.

INSTALLATION OF HELICAL ANCHORS SHALL BE DONE USING TOP DOWN METHODS. EQUIPMENT WEIGHING LESS THAN 10,000 LBS CAN ACCESS THE BENTS BY TRAVELING DOWN THE BOARDWALK. A LIMITED NUMBER OF DECK BOARDS WILL NEED TO BE REMOVED AND REPLACED AT EACH BENT LOCATION TO COMPLETE THIS WORK. THE CONTRACTOR IS RESPONSIBLE FOR PROTECTING THE DECK SURFACE FROM DAMAGE DONE BY THE EQUIPMENT. ANY DECK BOARDS REMOVED WOULD NEED TO BE REPLACED IN LIKE CONDITION. DAMAGE DONE TO THE BOARDWALKS FROM THIS WORK WOULD BE THE RESPONSIBILITY OF THE CONTRACTOR AND WOULD NEED TO BE REPAIRED TO THE SATISFACTION OF THE ENGINEER.

FOR ADDITIONAL NOTES ON HELICAL INSTALLATION, SEE SPECIFICATIONS.

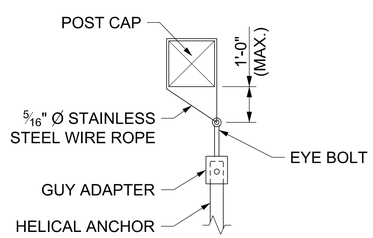

VIEW C-C

HELICAL TIE-DOWN DETAILS

LOVILLS CREEK AND
ARARAT RIVER GREENWAY
WORTH STREET TO THARINGTON PARK

Firm License No. C-1051
421 Fayetteville St,
Suite 400
Raleigh, NC 27601
T 919.380.8750
www.stewartinc.com
STEWART

NORTH CAROLINA PROFESSIONAL SEAL 037760 ENGINEER PAUL L. JACOB
11/14/2014

DATE: NOVEMBER 14, 2014

REVISIONS:

NO.	DATE

PROJECT NO.:
H13007.00

SB-7

8/23/99

0 5 10	PROJ. REFERENCE NO.	SHEET NO.
	H13007.00	X-1

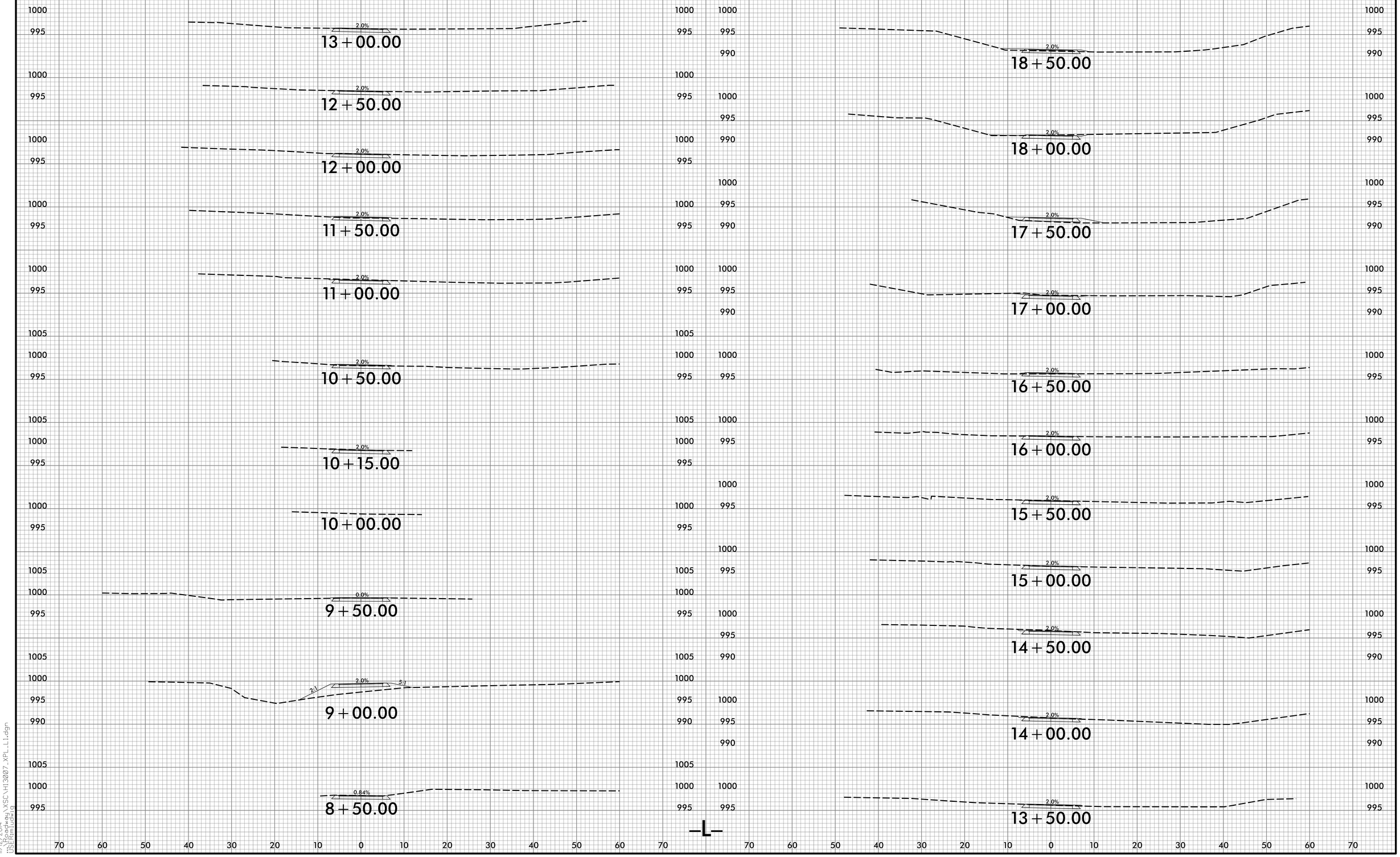

11/12/2014
R:\2014_Projects\XSC\H13007_XPL_L1.dgn
USER:mludwig

PROJ. REFERENCE NO.	SHEET NO.
H13007.00	X-2

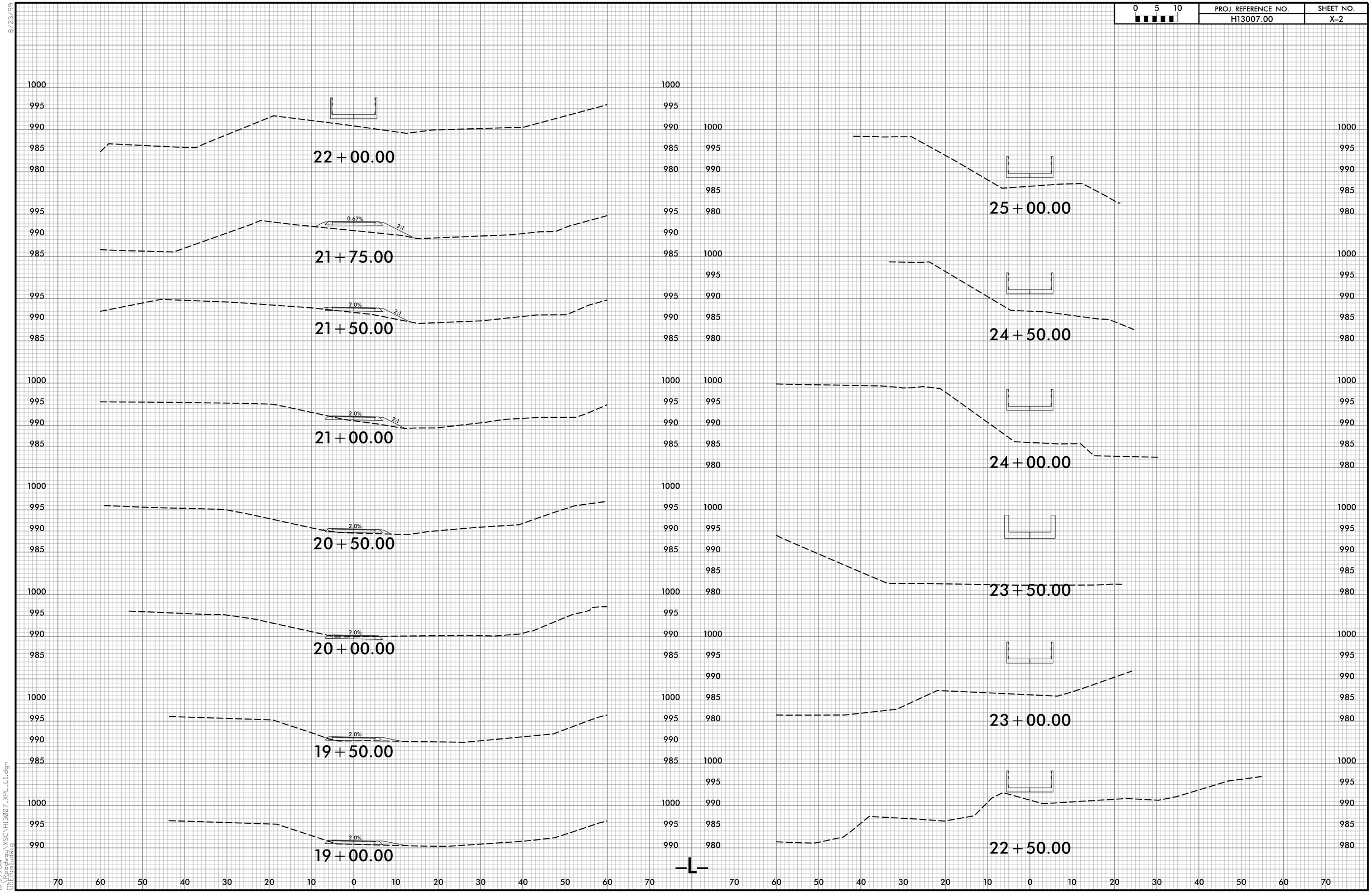

8/23/99

11/12/2014
...\Roadway\XSC\H13007_XPL_L1.dgn
USER:mludwig

8/23/99

0 5 10	PROJ. REFERENCE NO.	SHEET NO.
	H13007.00	X-3

28+00.00

27+50.00

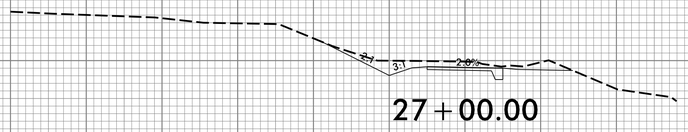

27+00.00

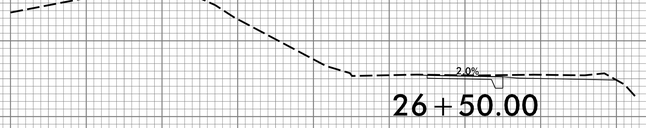

26+50.00

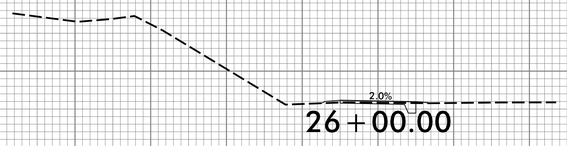

26+00.00

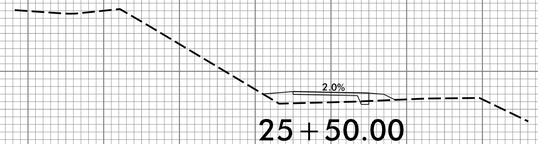

25+50.00

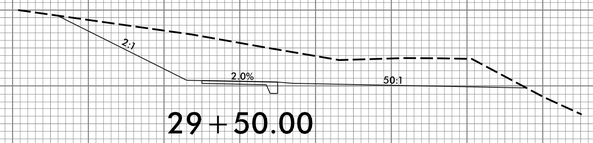

29+50.00

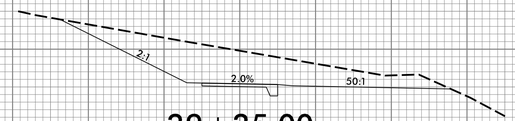

29+25.00

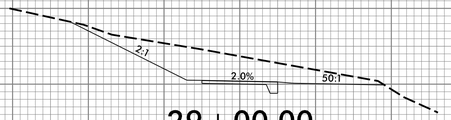

29+00.00

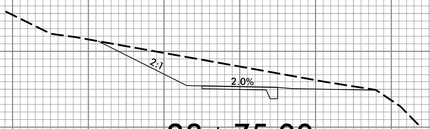

28+75.00

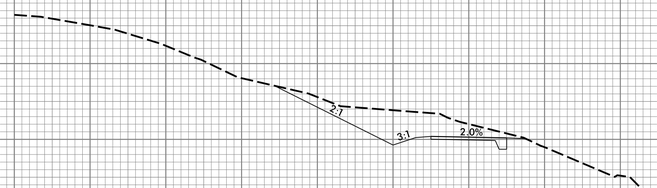

28+50.00

—L—

11/12/2014
C:\Projects\Highway\XSC\H13007_XPL_L1.dgn
USER:mludwig

8/23/99

0 5 10	PROJ. REFERENCE NO.	SHEET NO.
	H13007.00	X-4

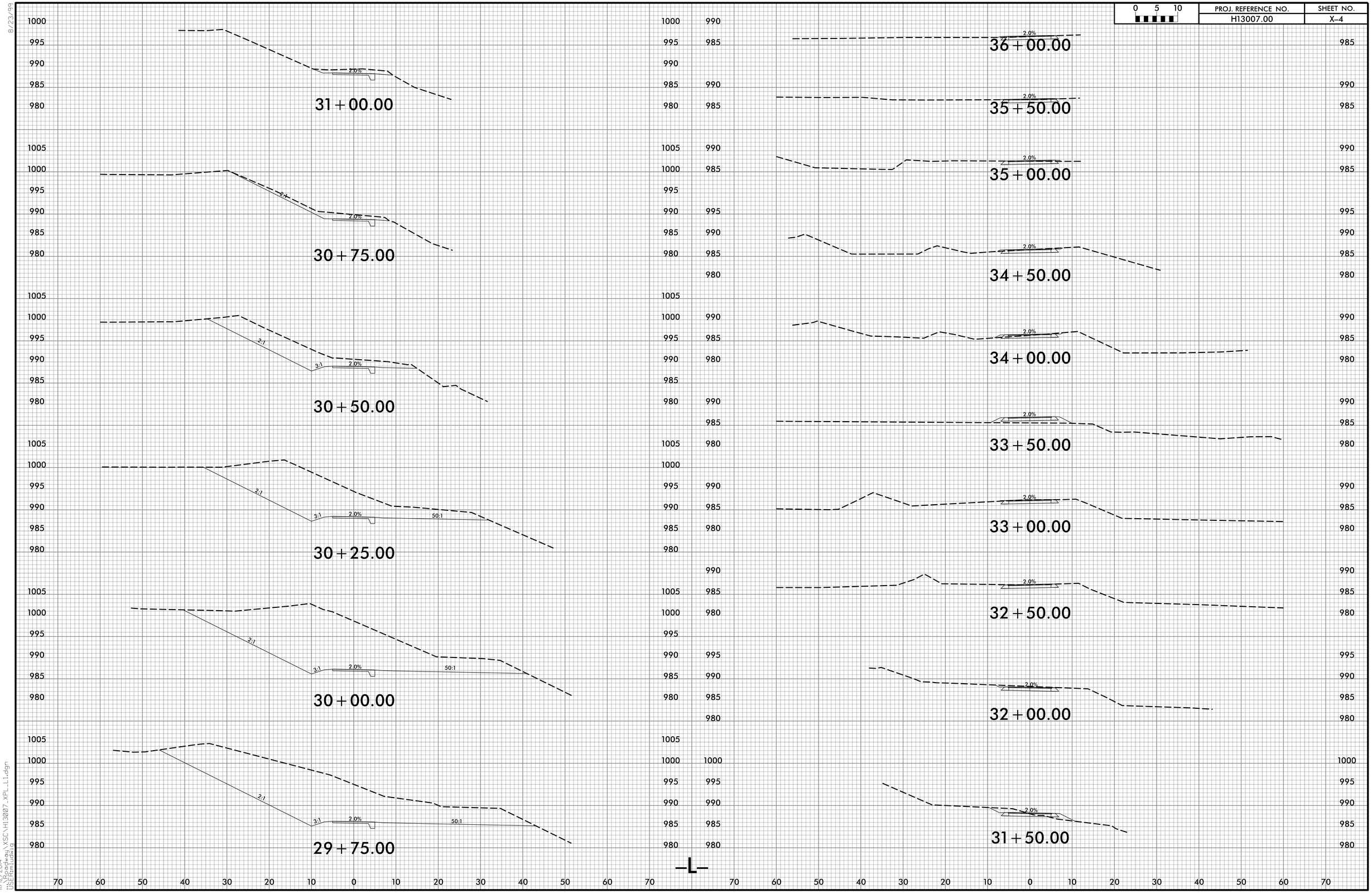

11/12/2014
I:\2014\Roadway\XSC\H13007_XPL_L1.dgn
USER:mludwig

8/23/99

0 5 10	PROJ. REFERENCE NO.	SHEET NO.
	H13007.00	X-5

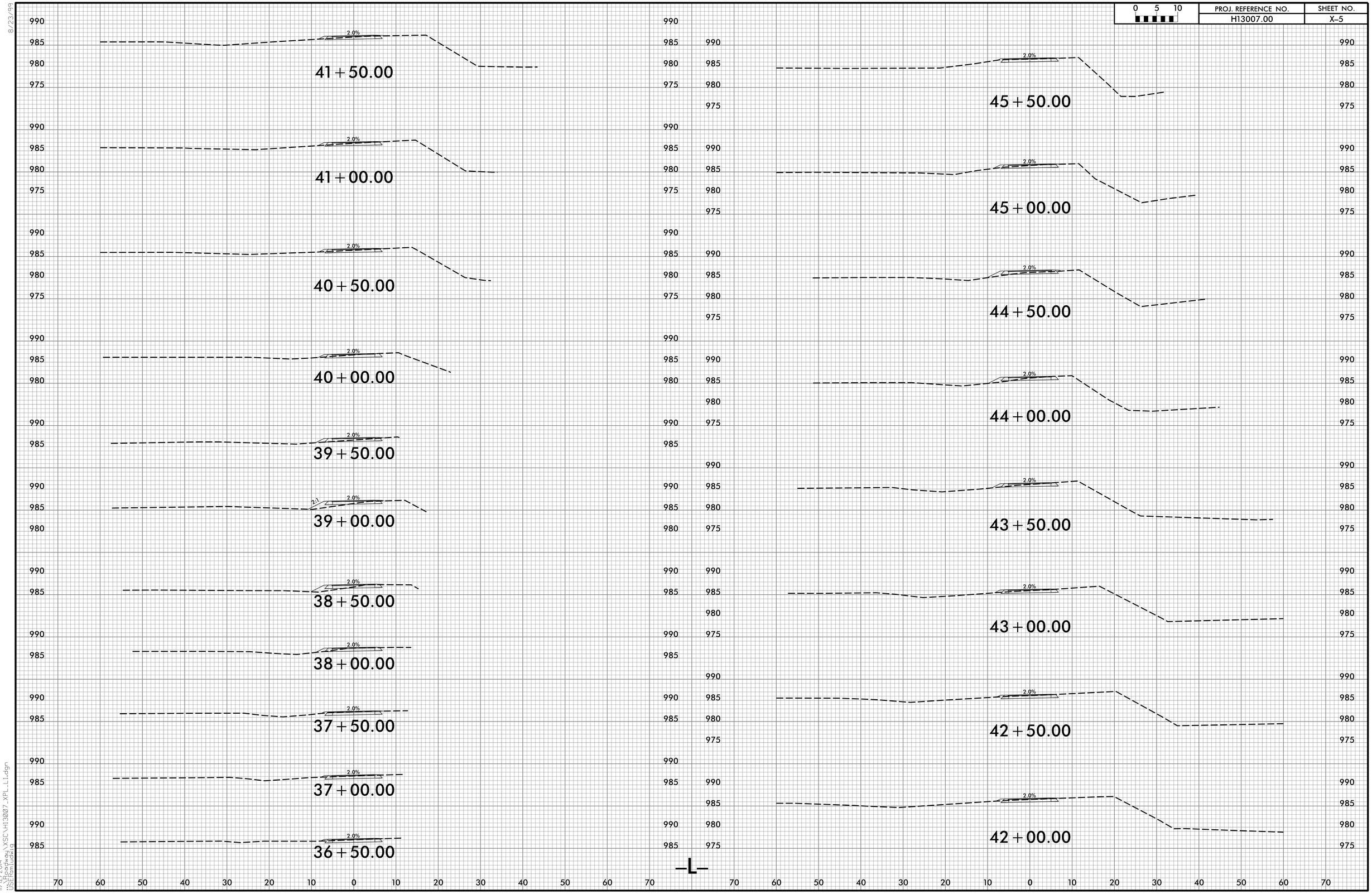

11/12/2014
R:\Projects\XSC\H13007_XPL_L1.dgn
USER:mludwig

PROJ. REFERENCE NO.	SHEET NO.
H13007.00	X-6

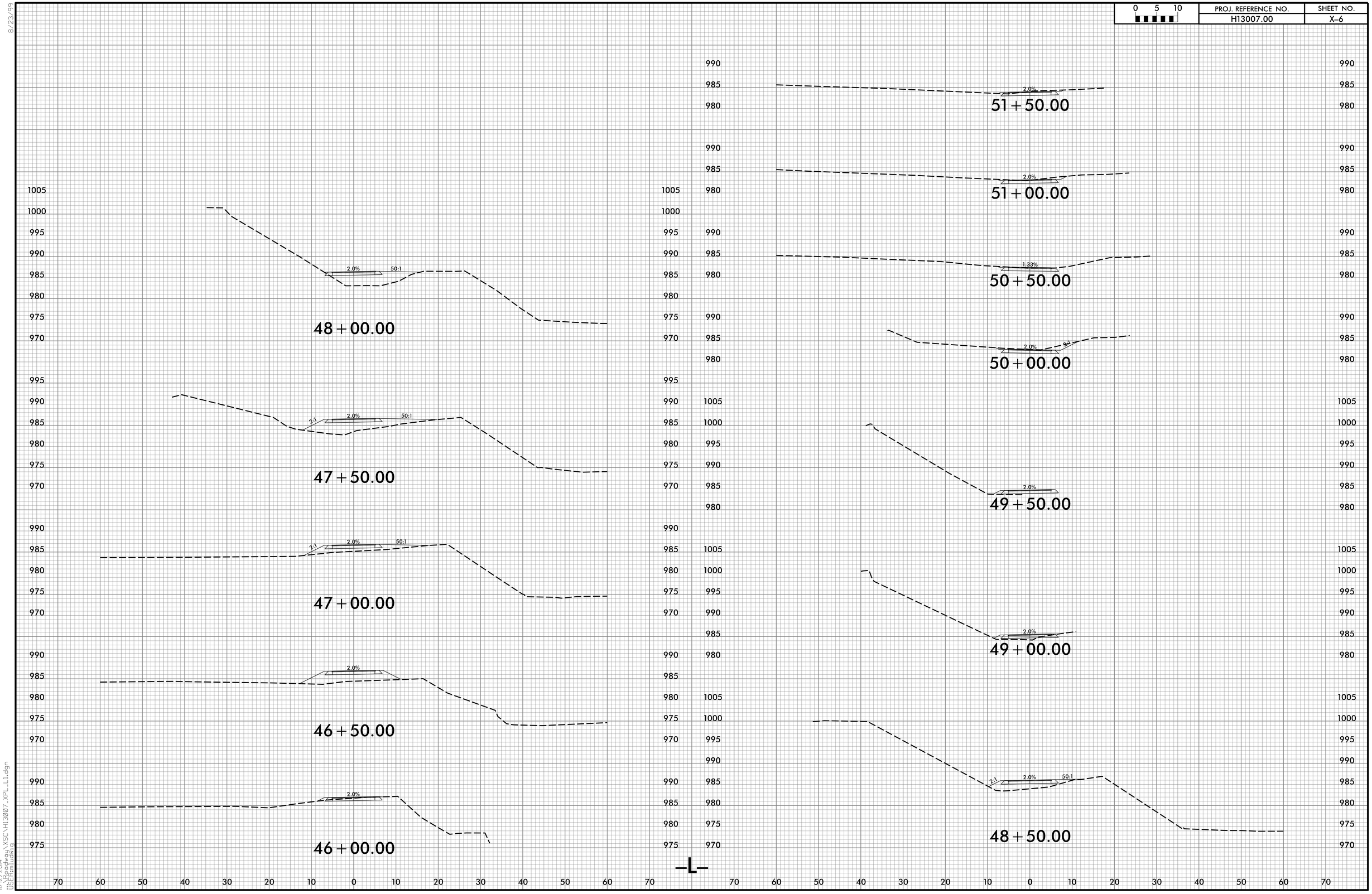

8/23/99

11/12/2014
...\Roadway\XSC\H13007_XPL_L1.dgn
USER:mludwig

8/23/99

0 5 10	PROJ. REFERENCE NO.	SHEET NO.
	H13007.00	X-7

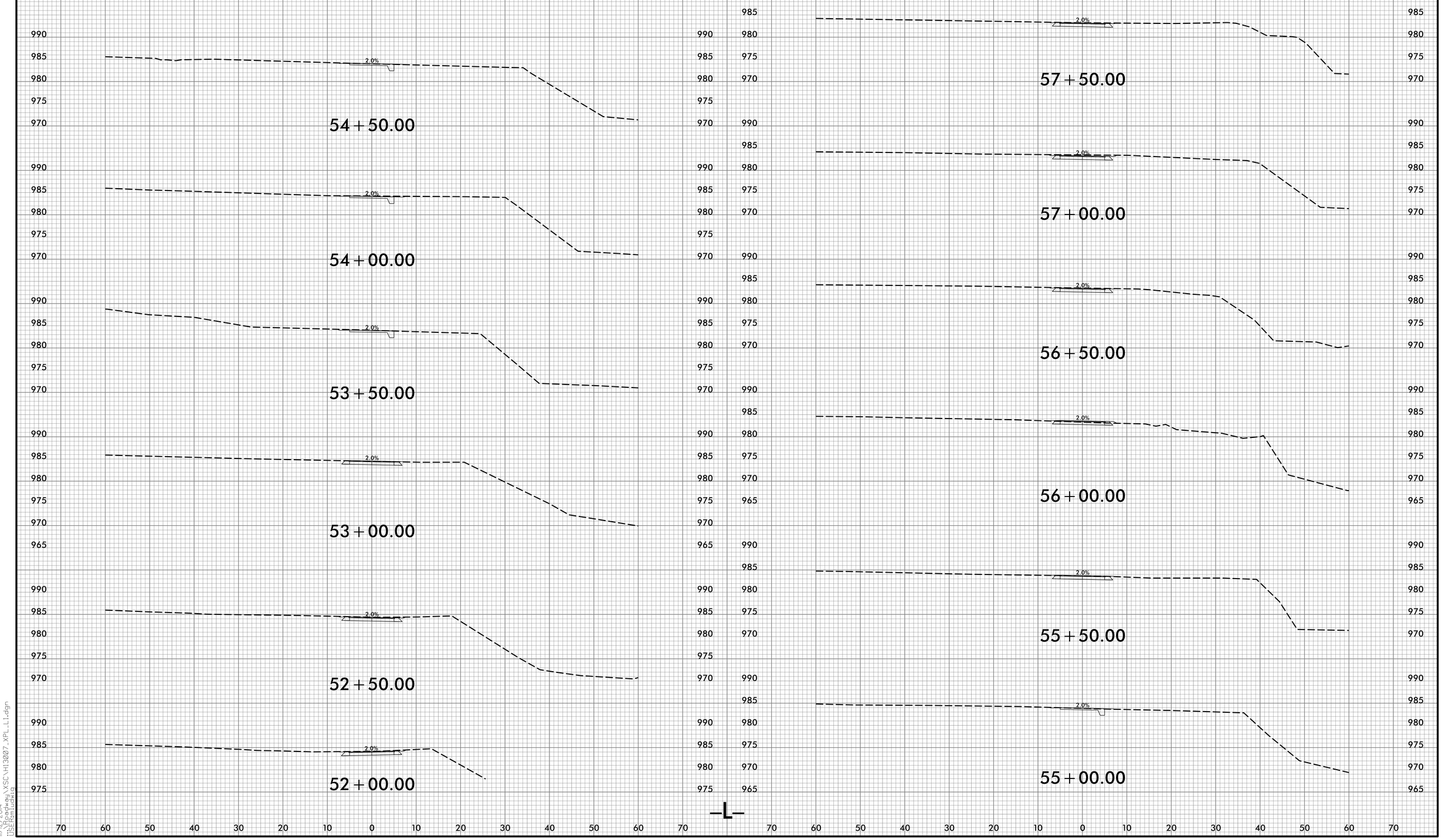

11/2/2014
R:\Projects\XSC\H13007_XPL_L1.dgn
USER:mludwig

PROJ. REFERENCE NO.	SHEET NO.
H13007.00	X-8

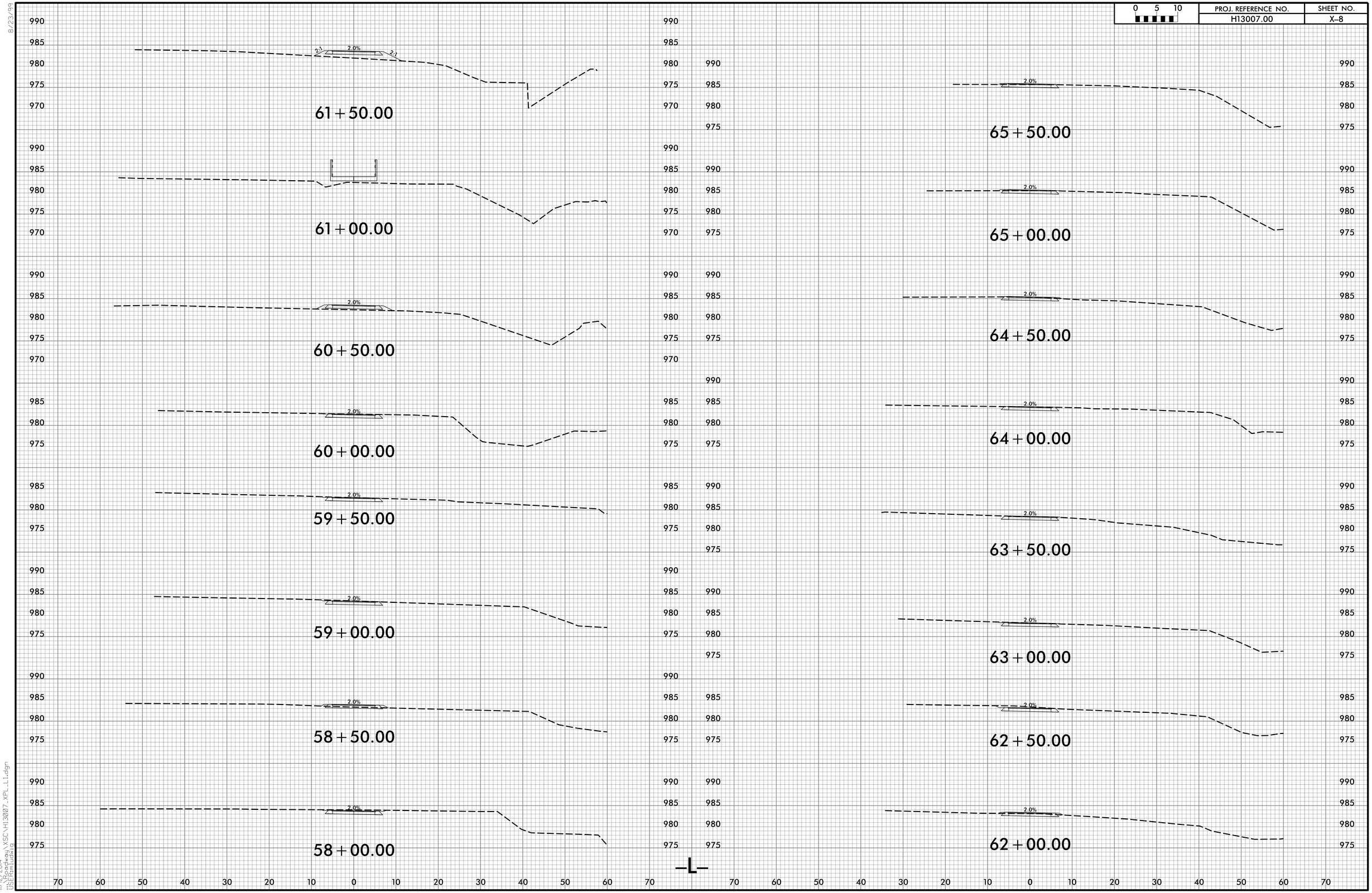

8/23/99

11/12/2014
...\Roadway\XSC\H13007_XPL_L1.dgn
USER:mludwig

8/23/99

0 5 10	PROJ. REFERENCE NO.	SHEET NO.
	H13007.00	X-9

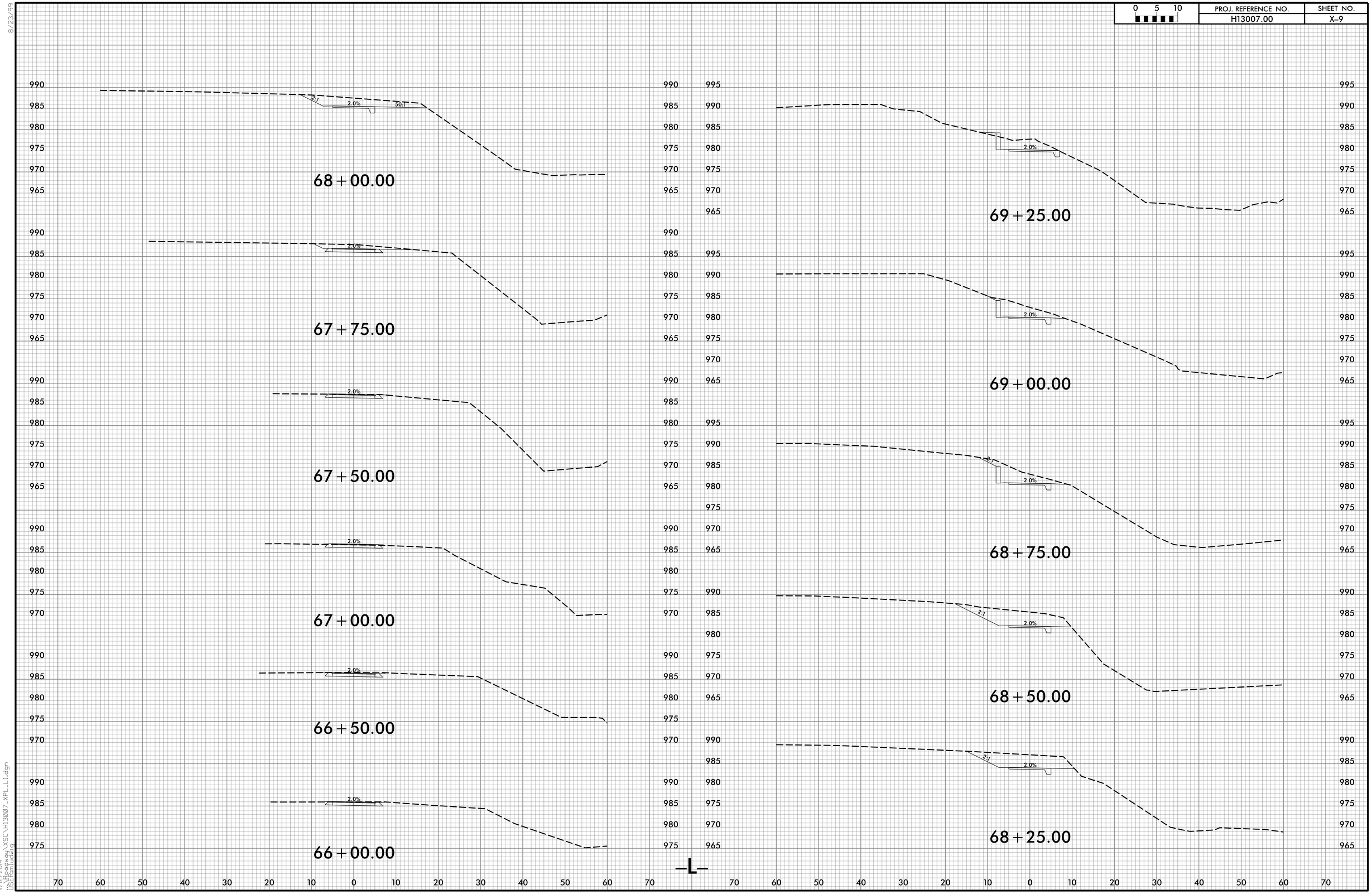

11/12/2014
\\Roadway\XSC\H13007_XPL_L1.dgn
USER:mludwig

PROJ. REFERENCE NO.	SHEET NO.
H13007.00	X-10

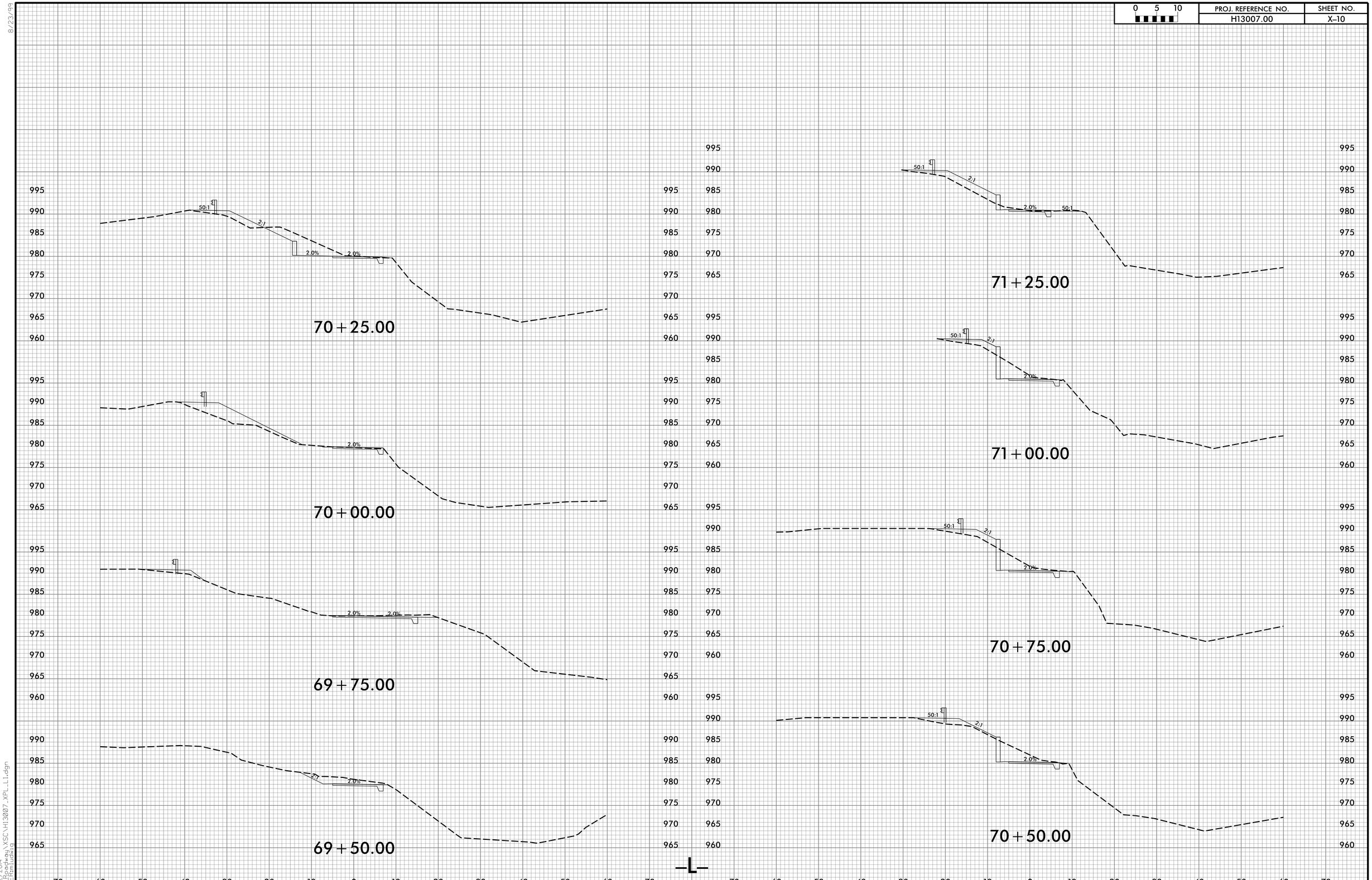

8/23/99

11/12/2014
...\Roadway\XSC\H13007_XPL_L1.dgn
USER:mludwig

PROJ. REFERENCE NO.	SHEET NO.
H13007.00	X-11

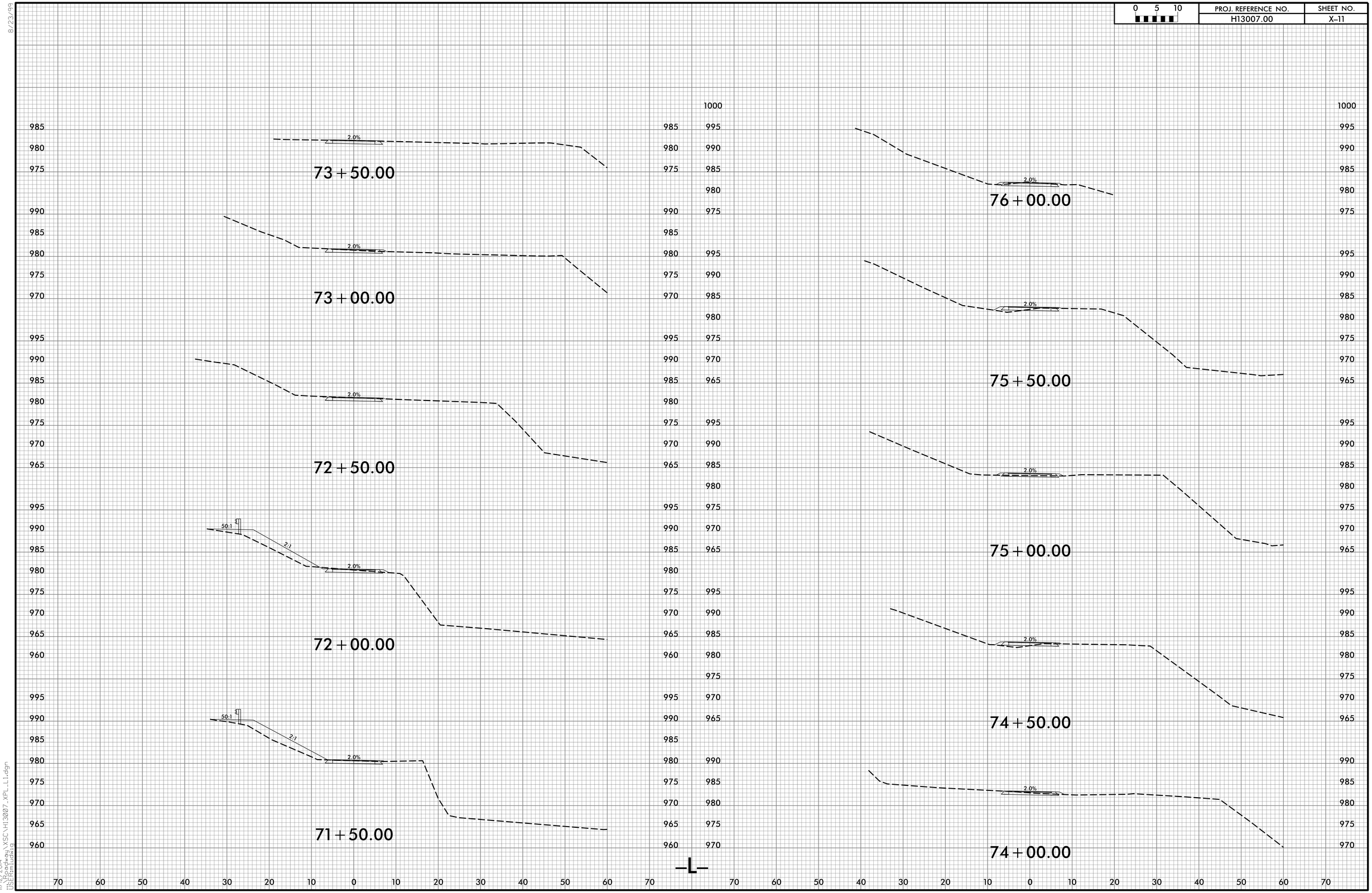

8/23/99

11/12/2014
...\Roadway\XSC\H13007_XPL_L1.dgn
USER:mludwig

PROJ. REFERENCE NO.	SHEET NO.
H13007.00	X-12

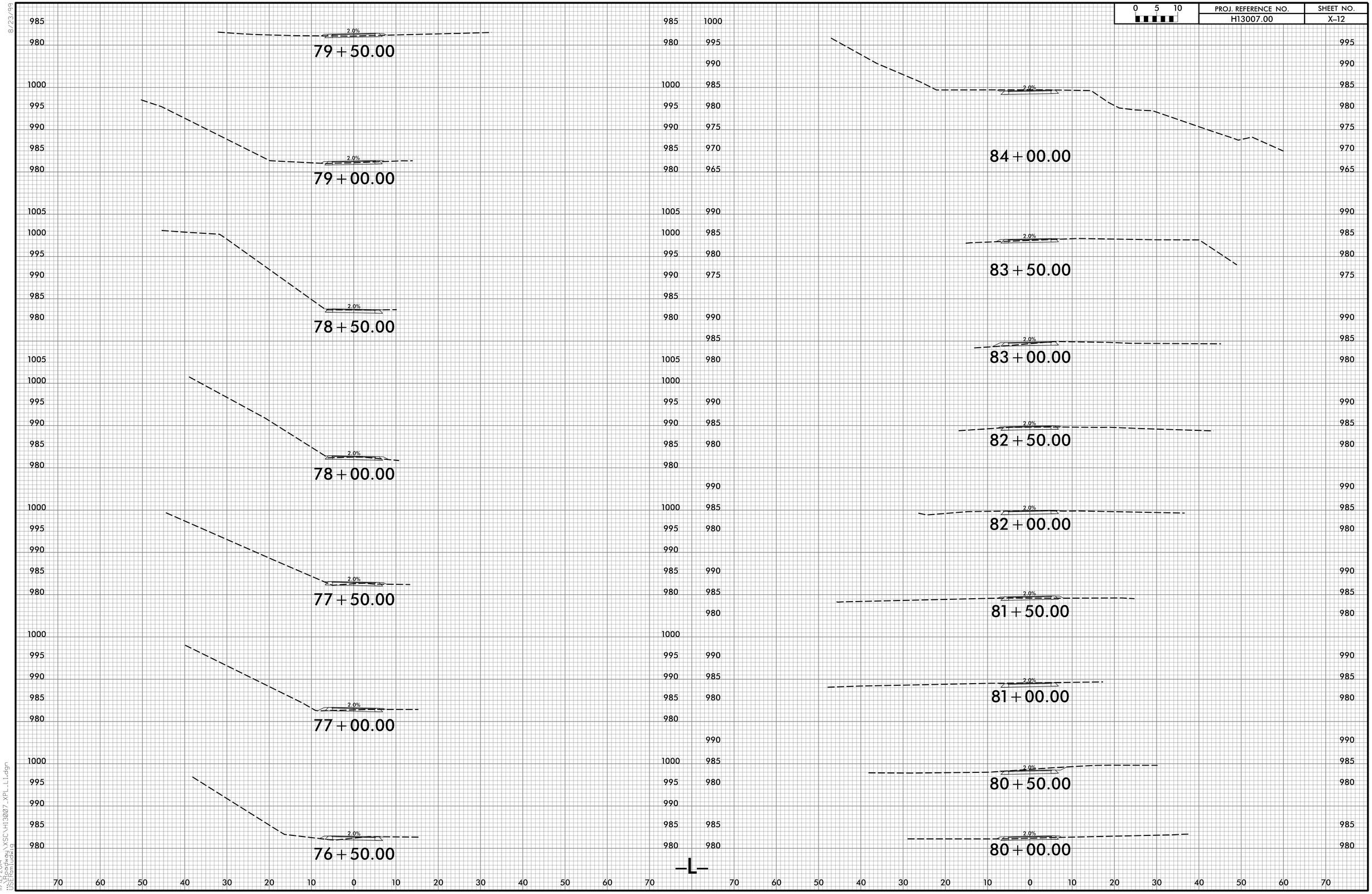

8/23/99

11/12/2014
...\Roadway\XSC\H13007_XPL_L1.dgn
USER:mludwig

8/23/99

0 5 10	PROJ. REFERENCE NO.	SHEET NO.
	H13007.00	X-13

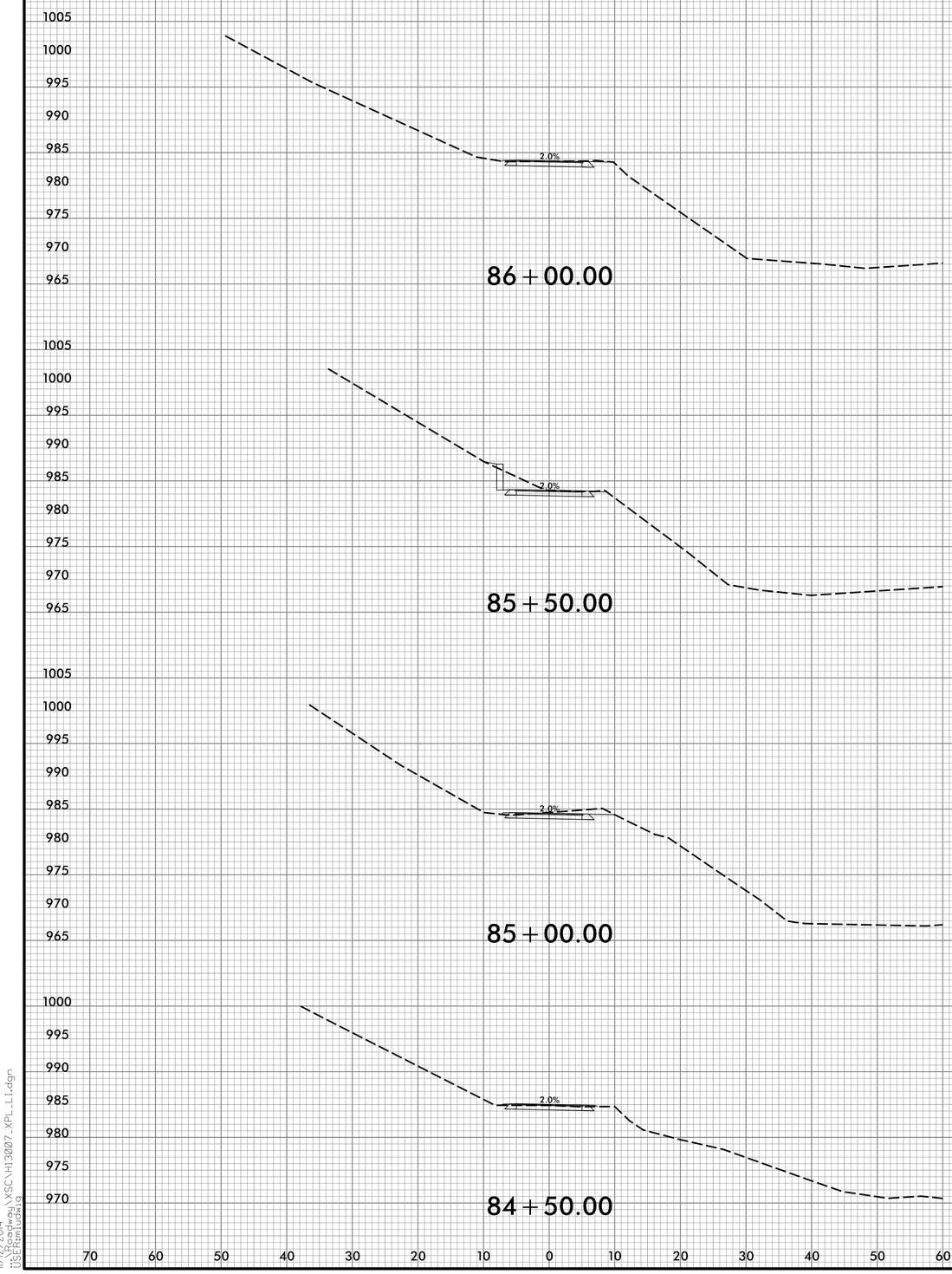

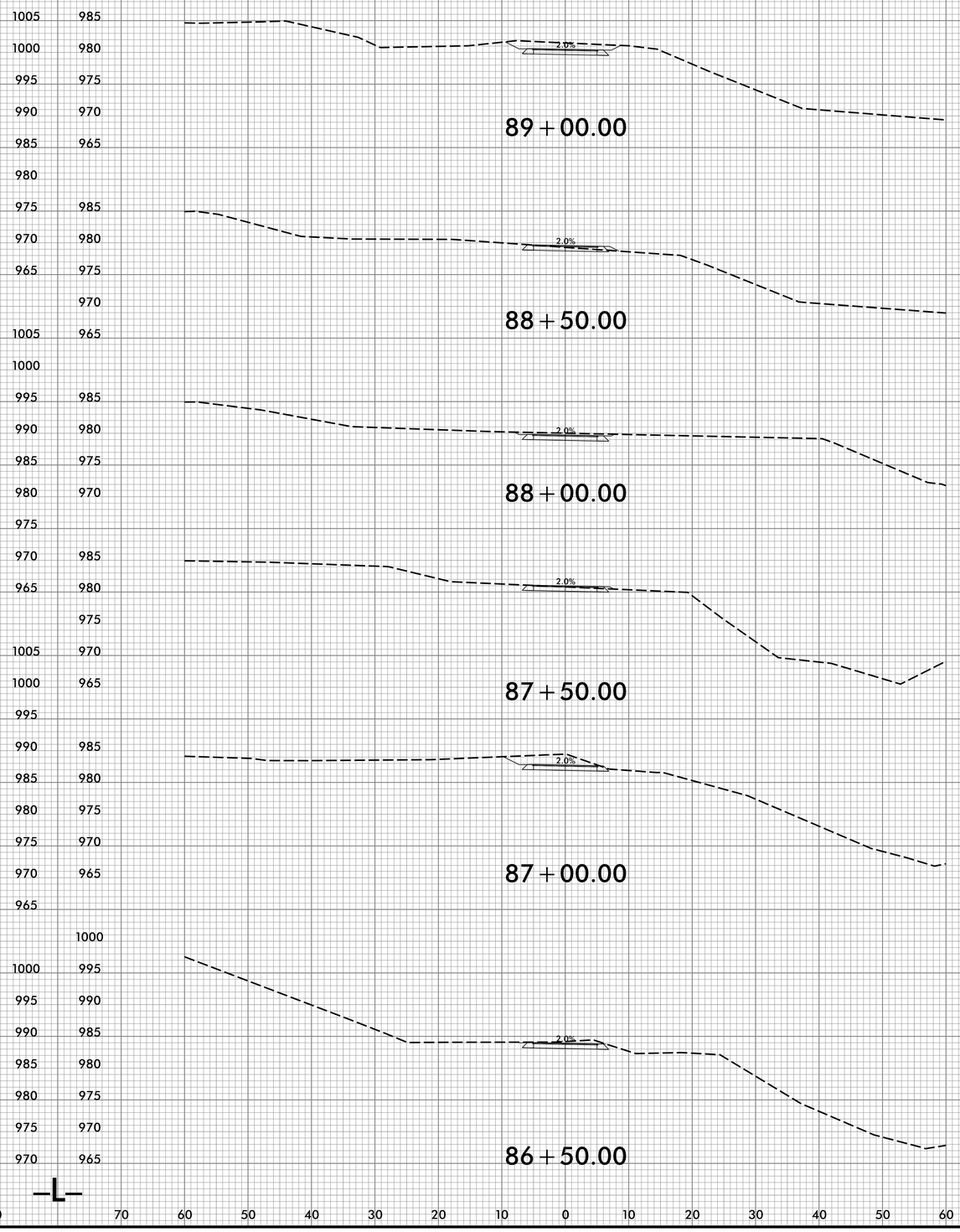

—L—

11/12/2014
V:\Projects\XSC\H13007_XPL_L1.dgn
USER:mludwig

8/23/99

0 5 10	PROJ. REFERENCE NO.	SHEET NO.
	H13007.00	X-14

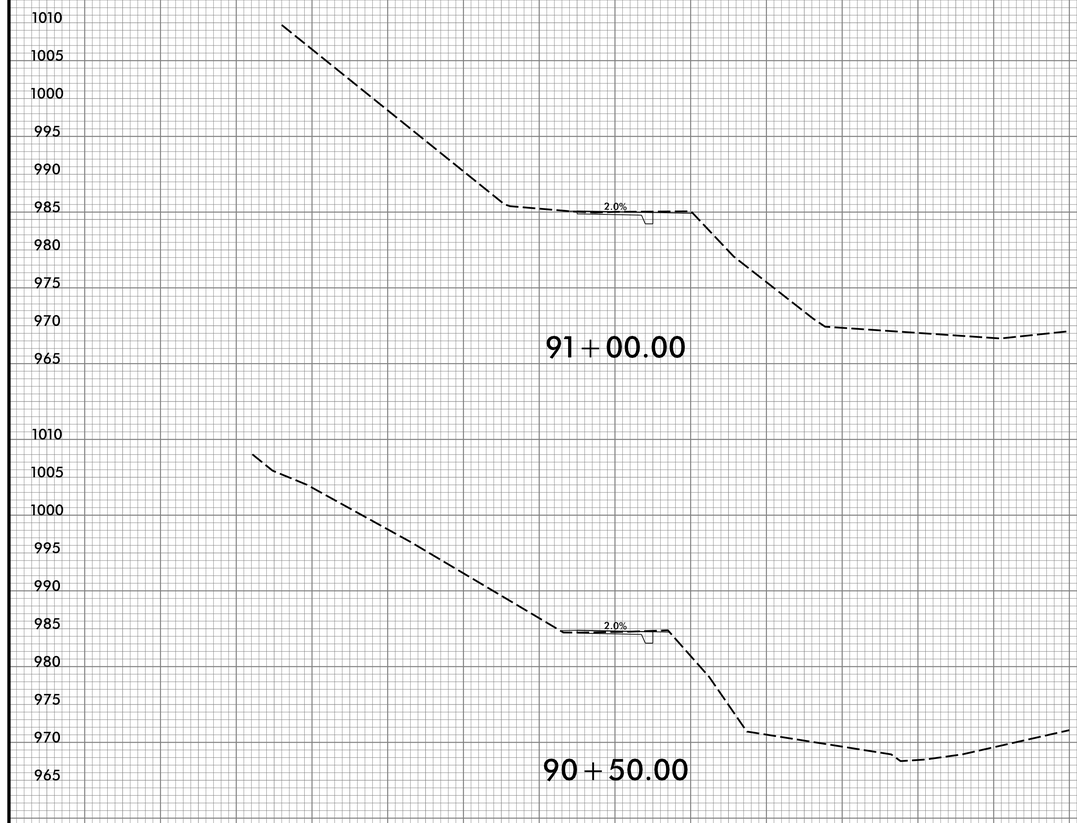

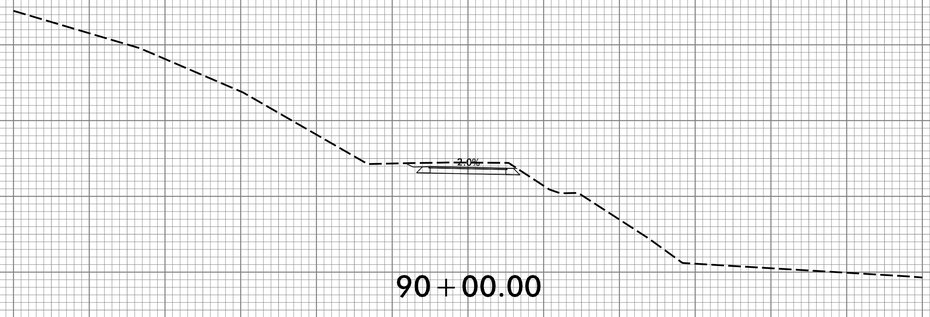

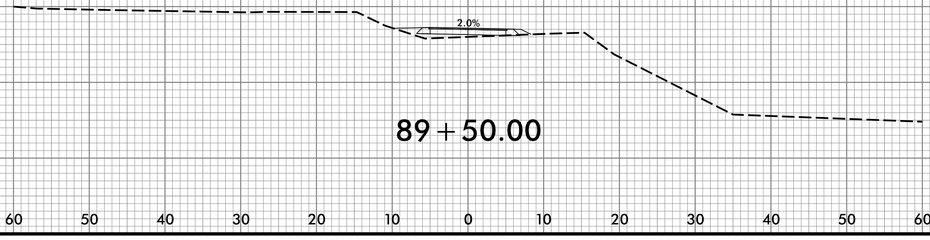

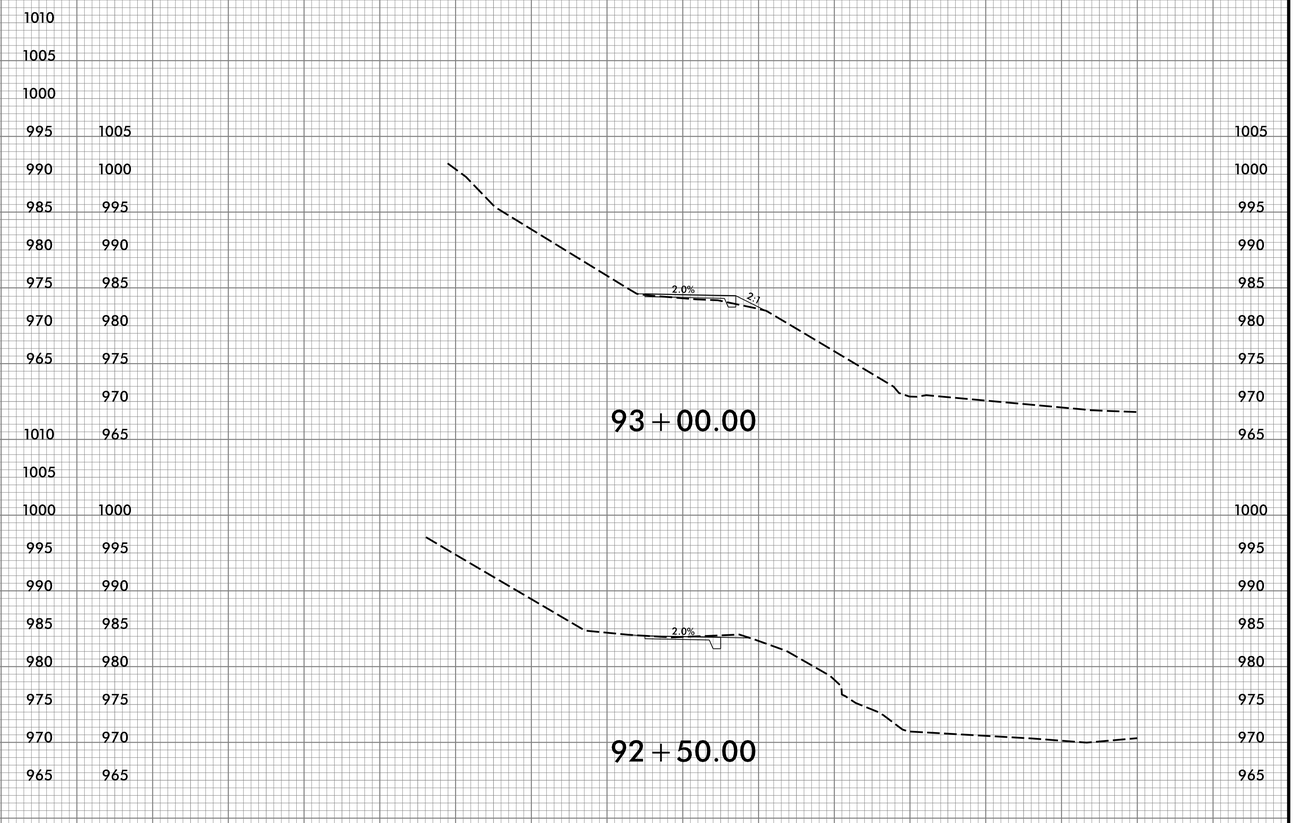

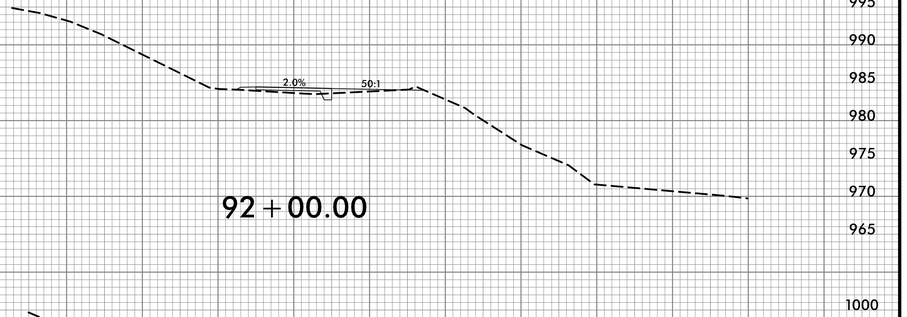

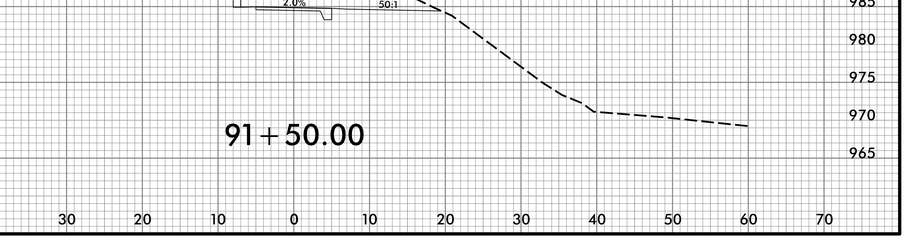

11/12/2014
USER:mludwig
I:\Roadway\XSC\H13007_XPL_L1.dgn

PROJ. REFERENCE NO.	SHEET NO.
H13007.00	X-15

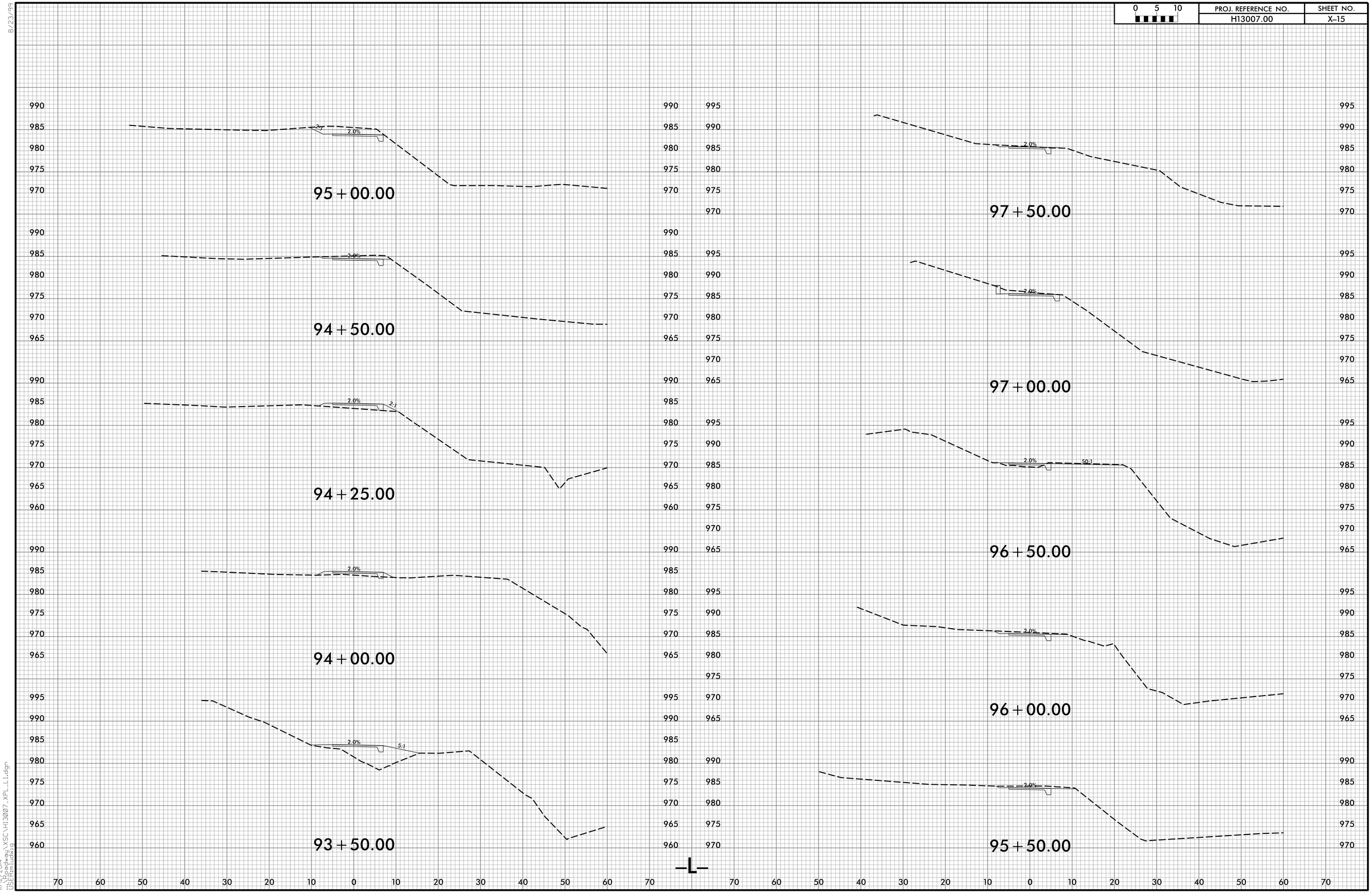

8/23/99

11/12/2014
...\Roadway\XSC\H13007_XPL_L1.dgn
USER:mludwig

8/23/99

0 5 10	PROJ. REFERENCE NO.	SHEET NO.
	H13007.00	X-16

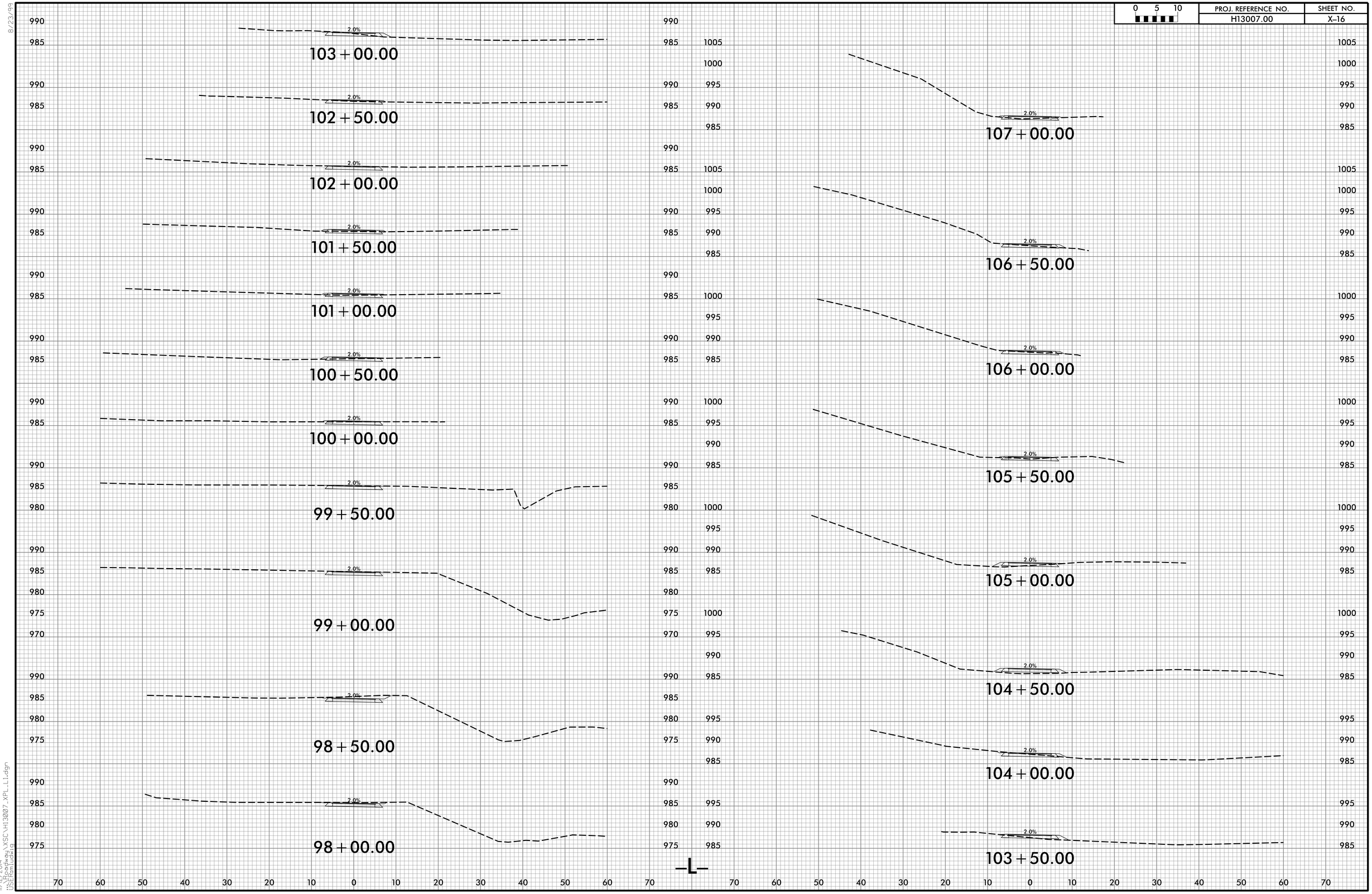

11/12/2014
F:\Highway\XSC\H13007_XPL_L1.dgn
USER:mludwig

8/23/99

0 5 10	PROJ. REFERENCE NO.	SHEET NO.
	H13007.00	X-17

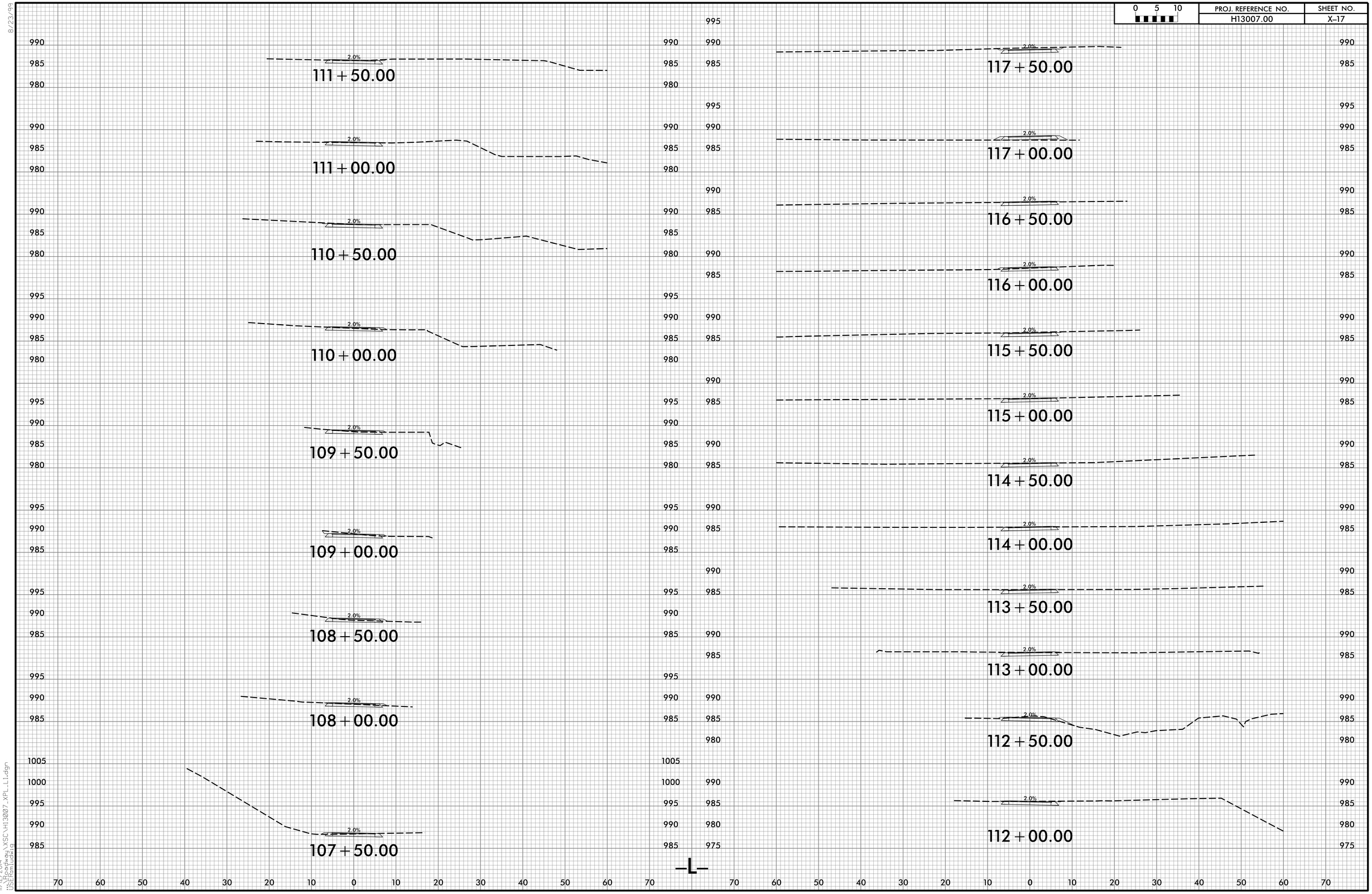

11/12/2014
C:\Projects\Highway\XSC\H13007_XPL_L1.dgn
USER:mludwig

PROJ. REFERENCE NO.	SHEET NO.
H13007.00	X-18

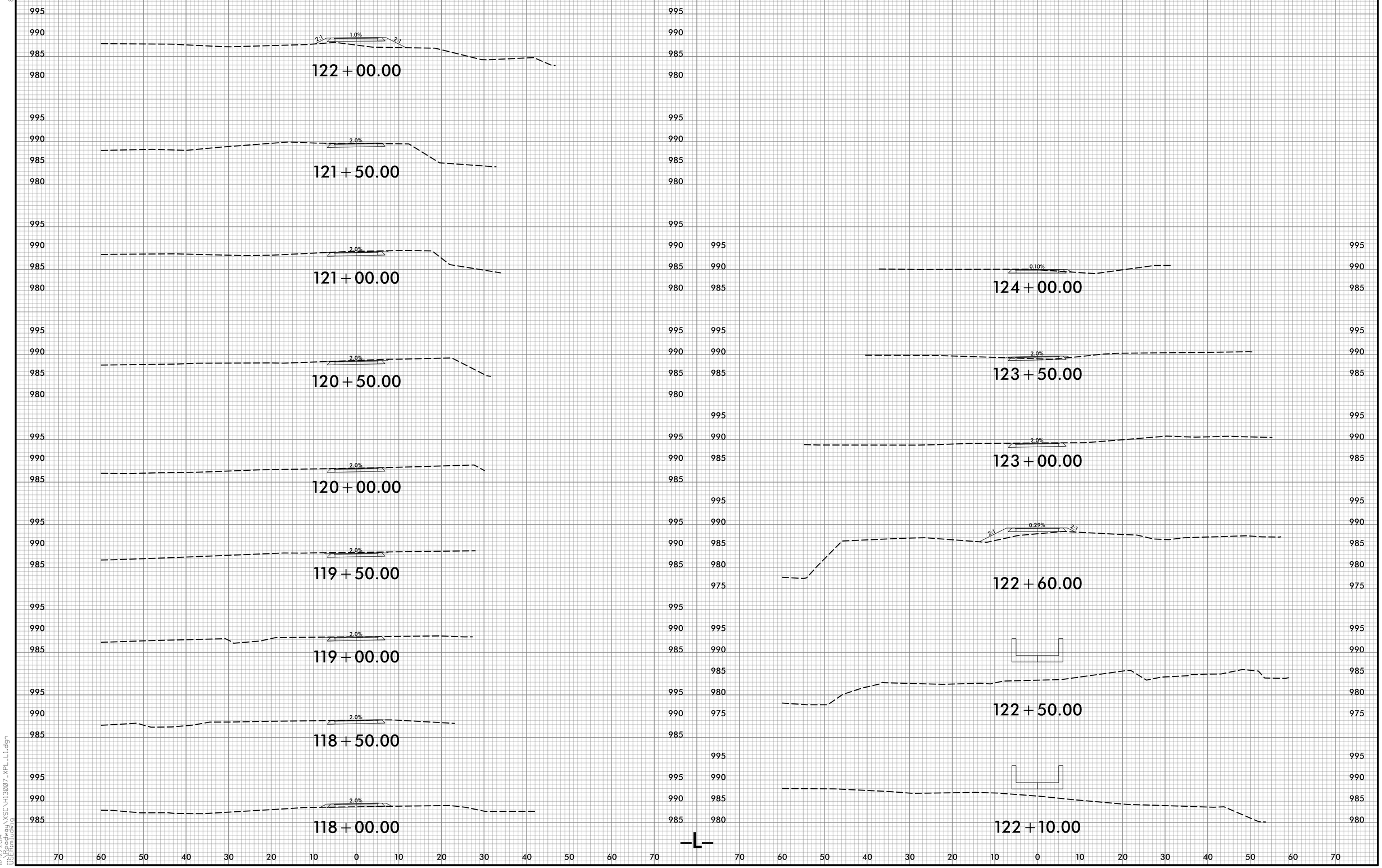

8/23/99

11/12/2014
...\Roadway\XSC\H13007_XPL_L1.dgn
USER:mludwig