BD-5111AC

BRIDGE NO. 41 WILKES COUNTY

F.A. PROJECT NO. BRZ-2488 (1)

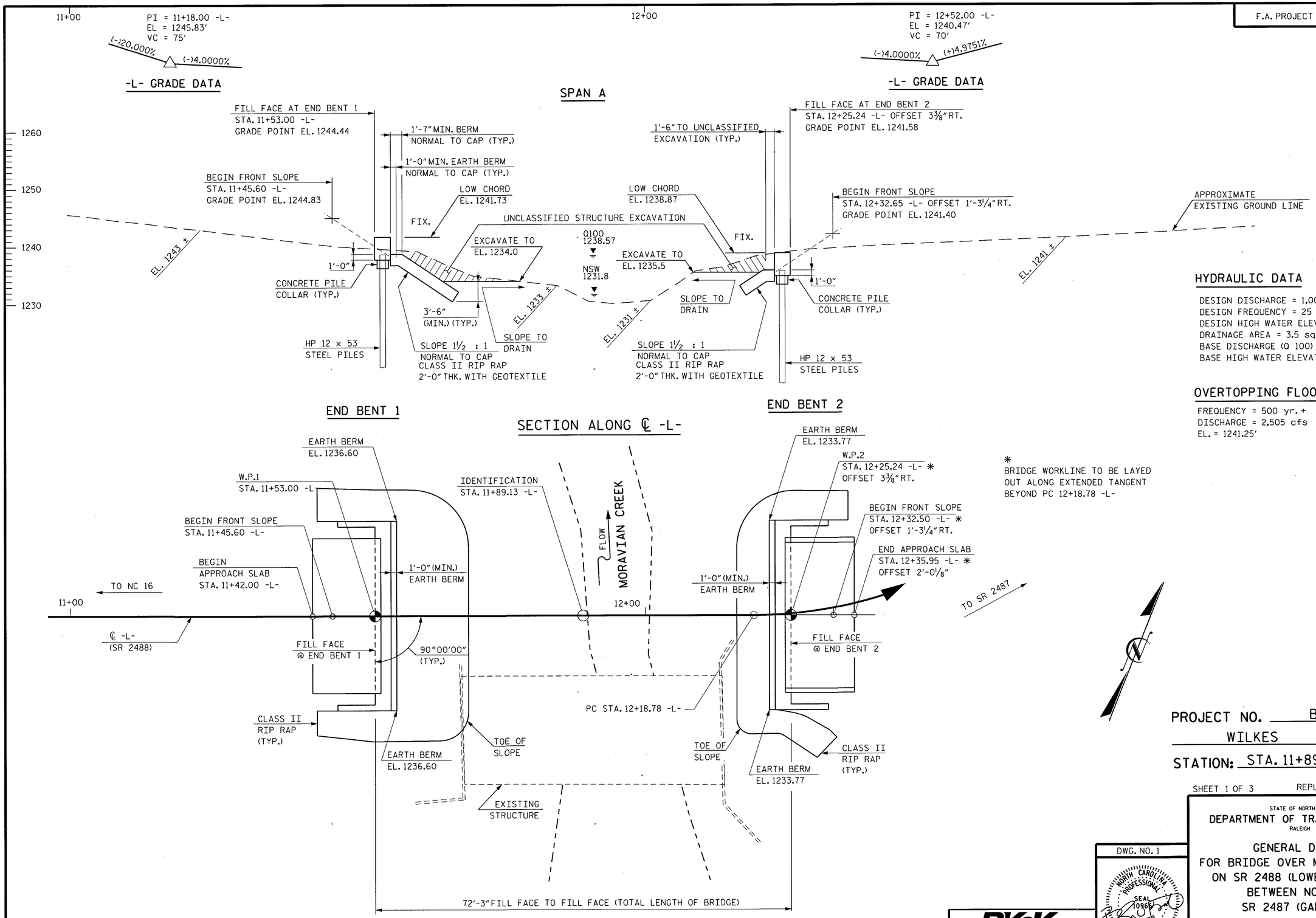

HYDRAULIC DATA

DESIGN DISCHARGE = 1,000 cfs
DESIGN FREQUENCY = 25 yr.
DESIGN HIGH WATER ELEVATION = 1237.5'
DRAINAGE AREA = 3.5 sq. mi.
BASE DISCHARGE (Q 100) = 1,400 cfs
BASE HIGH WATER ELEVATION = 1238.57'

OVERTOPPING FLOOD DATA

FREQUENCY = 500 yr. +
DISCHARGE = 2,505 cfs
EL. = 1241.25'

* BRIDGE WORKLINE TO BE LAYED OUT ALONG EXTENDED TANGENT BEYOND PC 12+18.78 -L-

PROJECT NO. BD-5111AC
WILKES COUNTY
STATION: STA. 11+89.13 -L-

SHEET 1 OF 3 REPLACES BRIDGE NO. 41

STATE OF NORTH CAROLINA
DEPARTMENT OF TRANSPORTATION
RALEIGH

GENERAL DRAWING
FOR BRIDGE OVER MORAVIAN CREEK
ON SR 2488 (LOWE CREEK ROAD)
BETWEEN NC 16 AND
SR 2487 (GARDEN DR.)

DWG. NO. 1

NORTH CAROLINA PROFESSIONAL SEAL 10969 ENGINEER RICKY V. KEITH
4/4/2014

RK&K
RUMMEL, KLEPPER & KAHL, LLP
900 RIDGEFIELD DRIVE SUITE 350
RALEIGH, NORTH CAROLINA 27609-3960
NC LICENSE NUMBER: F-0112

REVISIONS						SHEET NO.
NO.	BY:	DATE:	NO.	BY:	DATE:	S-1
1			3			TOTAL SHEETS
2			4			22

DRAWN BY : F.D. WEEDEN DATE : MAR. 2014
CHECKED BY : R.V. KEITH DATE : MAR. 2014

M:\projects\2009\09085_NCDOT_Div_OnCall\P01_Div11Bridges_GRP4\BD5111AC_Wilkes41\Design\Structures\DGN\GENERAL_AC.dgn

TOTAL BILL OF MATERIALS

	REMOVAL OF EXISTING STRUCTURE	PILE EXCAVATION IN SOIL	PILE EXCAVATION NOT IN SOIL	UNCLASSIFIED STRUCTURE EXCAVATION	CLASS A CONCRETE	BRIDGE APPROACH SLABS	REINFORCING STEEL	HP 12 X 53 STEEL PILES		VERTICAL CONCRETE BARRIER RAIL	RIP RAP CLASS II (2'-0" THICK)	GEOTEXTILE FOR DRAINAGE	ELASTOMERIC BEARINGS	3'-0" X 2'-0" PRESTRESSED CONCRETE CORED SLABS	
	LUMP SUM	LIN. FT.	LIN. FT.	LUMP SUM	CU. YDS.	LUMP SUM	LBS.	NO.	LIN. FT.	LIN. FT.	TONS	SQ. YDS.	LUMP SUM	NO.	LIN. FT.
SUPERSTRUCTURE						LUMP SUM				140.25				9	630.0
END BENT NO. 1				LUMP SUM	19.1		2,299	5	150.0		115	130			
END BENT NO. 2		17.0	33.0	LUMP SUM	19.5		2,633	5	50.0		50	55			
TOTAL	LUMP SUM	17.0	33.0	LUMP SUM	38.6	LUMP SUM	4,932	10	200.0	140.25	165	185	LUMP SUM	9	630.0

BENCH MARK : BM #1, -L- STA. 10+99.17, 17.24' LT. N 848595 E 1356996 8" SPIKE IN 15" POPLAR ELEV. 1242.69

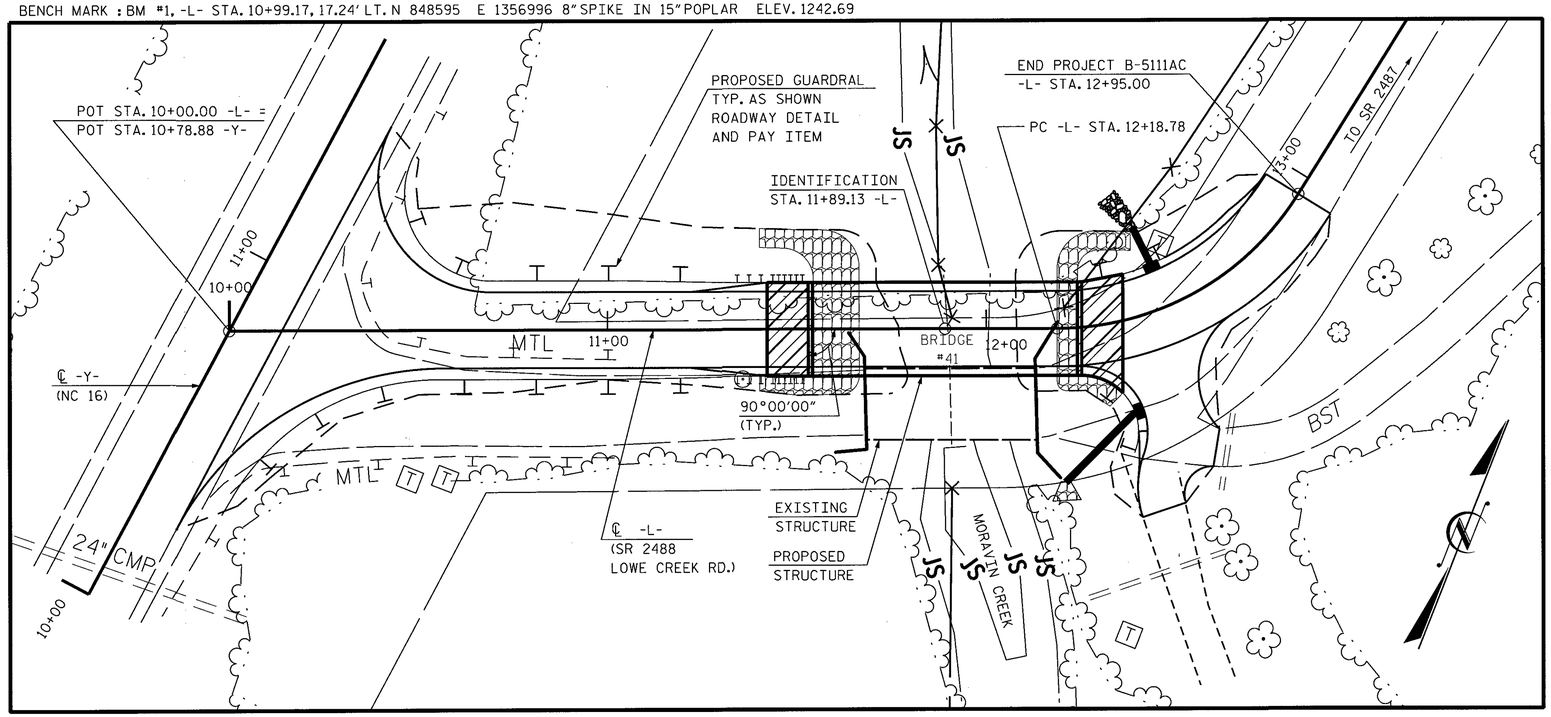

FOR UTILITY INFORMATION,
SEE UTILITY PLANS AND SPECIAL PROVISIONS

LOCATION SKETCH

PROJECT NO. BD-5111AC

WILKES COUNTY

STATION: STA. 11+89.13 -L-

SHEET 2 OF 3

STATE OF NORTH CAROLINA
DEPARTMENT OF TRANSPORTATION
RALEIGH

GENERAL DRAWING
FOR BRIDGE OVER MORAVIAN CREEK
ON SR 2488 (LOWE CREEK ROAD)
BETWEEN NC 16 AND
SR 2487 (GARDEN DR.)

DWG. NO. 2

NORTH CAROLINA PROFESSIONAL SEAL 10960 ENGINEER RICKY V. KEITH

3/21/2014

RK&K
RUMMEL, KLEPPER & KAHL, LLP
900 RIDGEFIELD DRIVE SUITE 350
RALEIGH, NORTH CAROLINA 27609-3960
NC LICENSE NUMBER: F-0112

REVISIONS						SHEET NO.
NO.	BY:	DATE:	NO.	BY:	DATE:	S-2
1			3			TOTAL SHEETS
2			4			22

DRAWN BY : F.D. WEEDEN DATE : MAR. 2014
CHECKED BY : R.V. KEITH DATE : MAR. 2014

M:\projects\2009\09085_NCDOT_Div_OnCall\P01_Div11Bridges_GRP4\BD5111AC_Wilkes41\Design\Structures\DGN\TYPLOCL_AC.dgn

NOTES:

ASSUMED LIVE LOAD = HL-93 OR ALTERNATE LOADING.

FOR OTHER DESIGN DATA AND GENERAL NOTES, SEE SHEET SN.

FOR EROSION CONTROL MEASURES, SEE EROSION CONTROL PLANS.

THIS BRIDGE HAS BEEN DESIGNED IN ACCORDANCE WITH THE AASHTO LRFD BRIDGE DESIGN SPECIFICATIONS.

THIS BRIDGE IS LOCATED IN SEISMIC ZONE 1.

THE EXISTING STRUCTURE CONSISTING OF 2 SPANS, 1 @ 22'-7" AND 1 @ 23'-0", WITH AN ASPHALT WEARING SURFACE OVER A TIMBER FLOOR ON I-BEAM SUPERSTRUCTURE AND A CLEAR ROADWAY WIDTH OF 19.1' ON A SUBSTRUCTURE CONSISTING OF TIMBER POSTS, SILLS AND TIMBER CAP AND LOCATED AT THE PROPOSED STRUCTURE LOCATION SHALL BE REMOVED. SEE SPECIAL PROVISION FOR "REMOVAL OF EXISTING STRUCTURE AT STA. 11+89.13 -L-".

REMOVAL OF THE EXISTING BRIDGE SHALL BE PERFORMED SO AS NOT TO ALLOW DEBRIS TO FALL INTO THE WATER. THE CONTRACTOR SHALL REMOVE THE BRIDGE AND SUBMIT PLANS FOR DEMOLITION IN ACCORDANCE WITH ARTICLE 402-2 OF THE STANDARD SPECIFICATIONS.

THE MATERIAL SHOWN IN THE CROSS-HATCHED AREA SHALL BE EXCAVATED FOR A DISTANCE OF 25 FEET EACH SIDE OF CENTERLINE ROADWAY AS DIRECTED BY THE ENGINEER. THIS WORK WILL BE PAID FOR AT THE CONTRACT LUMP SUM PRICE FOR UNCLASSIFIED STRUCTURE EXCAVATION. SEE SECTION 412 OF THE STANDARD SPECIFICATIONS.

THE SUBSTRUCTURE OF THE EXISTING BRIDGE INDICATED ON THE PLANS IS FROM THE BEST INFORMATION AVAILABLE. SINCE THIS INFORMATION IS SHOWN FOR THE CONVENIENCE OF THE CONTRACTOR, THE CONTRACTOR SHALL HAVE NO CLAIM WHATSOEVER AGAINST THE DEPARTMENT OF TRANSPORTATION FOR ANY DELAYS OR ADDITIONAL COST INCURRED BASED ON DIFFERENCES BETWEEN THE EXISTING BRIDGE SUBSTRUCTURE SHOWN ON THE PLANS AND THE ACTUAL CONDITIONS AT THE PROJECT SITE.

ASPHALT WEARING SURFACE IS INCLUDED IN ROADWAY QUANTITY ON ROADWAY PLANS.

THIS STRUCTURE HAS BEEN DESIGNED IN ACCORDANCE WITH HEC 18, "EVALUATING SCOUR AT BRIDGES".

THE CONTRACTOR SHALL PROVIDE INDEPENDENT ASSURANCE SAMPLES OF REINFORCING STEEL AS FOLLOWS: FOR PROJECTS REQUIRING UP TO 400 TONS OF REINFORCING STEEL, ONE 30 INCH SAMPLE OF EACH SIZE BAR USED, AND FOR PROJECTS REQUIRING OVER 400 TONS OF REINFORCING STEEL, TWO 30 INCH SAMPLES OF EACH SIZE BAR USED. THE BARS FROM WHICH THE SAMPLES ARE TAKEN MUST THEN BE SPLICED WITH REPLACEMENT BARS OF THE SIZE AND LENGTH OF THE SAMPLE PLUS A MINIMUM LAP SPLICE OF THIRTY BAR DIAMETERS. PAYMENT FOR THE SAMPLES OF REINFORCING STEEL SHALL BE CONSIDERED INCIDENTAL TO VARIOUS PAY ITEMS.

INASMUCH AS THE PAINT SYSTEM ON THE EXISTING STRUCTURAL STEEL CONTAINS LEAD, THE CONTRACTOR'S ATTENTION IS DIRECTED TO ARTICLE 107-1 OF THE STANDARD SPECIFICATIONS. ANY COSTS RESULTING FROM COMPLIANCE WITH APPLICABLE STATE OR FEDERAL REGULATIONS PERTAINING TO HANDLING OF MATERIALS CONTAINING LEAD BASED PAINT SHALL BE INCLUDED IN THE BID PRICE FOR "REMOVAL OF EXISTING STRUCTURE AT STATION 11+89.13 -L-".

FOR SUBMITTAL OF WORKING DRAWINGS, SEE SPECIAL PROVISIONS.

FOR FALSEWORK AND FORMWORK, SEE SPECIAL PROVISIONS.

FOR CRANE SAFETY, SEE SPECIAL PROVISIONS.

FOR GROUT FOR STRUCTURES, SEE SPECIAL PROVISIONS.

FOR CONSTRUCTION STAGING, SEE TRAFFIC CONTROL PLANS.

SEE TRAFFIC CONTROL PLANS FOR LOCATION AND PAY LIMITS OF ANCHORED PORTABLE CONCRETE BARRIER.

FOUNDATION NOTES:

FOR PILES, SEE SECTION 450 OF THE STANDARD SPECIFICATIONS.

PILES AT END BENT NO. 1 AND END BENT NO. 2 ARE DESIGNED FOR A FACTORED RESISTANCE OF 95 TONS PER PILE.

DRIVE PILES AT END BENT NO. 1 AND END BENT NO. 2 TO A REQUIRED DRIVING RESISTANCE OF 160 TONS PER PILE.

PILE EXCAVATION IS REQUIRED TO INSTALL PILES AT END BENT NO. 2. EXCAVATE HOLES AT PILE LOCATIONS TO ELEVATION 1225 FT. FOR PILE EXCAVATION, SEE SECTION 450 OF THE STANDARD SPECIFICATIONS.

CONCRETE OR GROUT IS REQUIRED TO FILL HOLES FOR PILE EXCAVATION AT END BENT NO. 2.

PROJECT NO. BD-5111AC

WILKES COUNTY

STATION: STA. 11+89.13 -L-

SHEET 3 OF 3

STATE OF NORTH CAROLINA
DEPARTMENT OF TRANSPORTATION
RALEIGH

GENERAL DRAWING
FOR BRIDGE OVER MORAVIAN CREEK
ON SR 2488 (LOWE CREEK ROAD)
BETWEEN NC 16 AND
SR 2487 (GARDEN DR.)

DWG. NO. 2A

NORTH CAROLINA PROFESSIONAL SEAL 10966 ENGINEER RICKY V. KEITH

4/4/2014

RK&K
RUMMEL, KLEPPER & KAHL, LLP
900 RIDGEFIELD DRIVE SUITE 350
RALEIGH, NORTH CAROLINA 27609-3960
NC LICENSE NUMBER: F-0112

REVISIONS									SHEET NO.
NO.	BY:	DATE:	NO.	BY:	DATE:				S-2A
1			3						TOTAL SHEETS
2			4						22

DRAWN BY : F.D. WEEDEN DATE : MAR. 2014
CHECKED BY : R.V. KEITH DATE : MAR. 2014

M:\projects\2009\09085_NCDOT_Div_OnCall\P01_Div11Bridges_GRP4\BD5111AC_Wilkes41\Design\Structures\DGN\TYPLOCL_AC.dgn

LOAD AND RESISTANCE FACTOR RATING (LRFD) SUMMARY FOR PRESTRESSED CONCRETE GIRDERS

LEVEL		VEHICLE	WEIGHT (W) (TONS)	CONTROLLING LOAD RATING	MINIMUM RATING FACTORS (RF)	TONS = W X RF	STRENGTH I LIMIT STATE											SERVICE III LIMIT STATE						COMMENT NUMBER
							LIVELOAD FACTORS	MOMENT					SHEAR					LIVELOAD FACTORS	MOMENT					
								DISTRIBUTION FACTORS (DF)	RATING FACTOR	SPAN	GIRDER LOCATION	DISTANCE FROM LEFT END OF SPAN (ft)	DISTRIBUTION FACTORS (DF)	RATING FACTOR	SPAN	GIRDER LOCATION	DISTANCE FROM LEFT END OF SPAN (ft)		DISTRIBUTION FACTORS (DF)	RATING FACTOR	SPAN	GIRDER LOCATION	DISTANCE FROM LEFT END OF SPAN (ft)	
DESIGN LOAD RATING		HL-93(Inv)	N/A	1	1.006	--	1.75	0.273	1.03	70'	EL	34.5	0.507	1.32	70'	EL	6.9	0.80	0.273	**1.01**	70'	EL	**34.5**	
		HL-93(Opr)	N/A	--	1.341	--	1.35	0.273	1.34	70'	EL	34.5	0.507	1.72	70'	EL	6.9	N/A	--	--	--	--	--	
		HS-20(Inv)	36.000	2	1.306	47.02	1.75	0.273	1.34	70'	EL	34.5	0.507	1.65	70'	EL	6.9	0.80	0.273	**1.31**	70'	EL	**34.5**	
		HS-20(Opr)	36.000	--	1.74	62.64	1.35	0.273	1.74	70'	EL	34.5	0.507	2.14	70'	EL	6.9	N/A	--	--	--	--	--	
LEGAL LOAD RATING	SV	SNSH	13.500	--	2.917	39.379	1.4	0.273	3.75	70'	EL	34.5	0.507	4.87	70'	EL	6.9	0.80	0.273	2.92	70'	EL	34.5	
		SNGARBS2	20.000	--	2.187	43.741	1.4	0.273	2.81	70'	EL	34.5	0.507	3.47	70'	EL	6.9	0.80	0.273	2.19	70'	EL	34.5	
		SNAGRIS2	22.000	--	2.077	45.69	1.4	0.273	2.67	70'	EL	34.5	0.507	3.23	70'	EL	6.9	0.80	0.273	2.08	70'	EL	34.5	
		SNCOTTS3	27.250	--	1.452	39.565	1.4	0.273	1.87	70'	EL	34.5	0.507	2.43	70'	EL	6.9	0.80	0.273	1.45	70'	EL	34.5	
		SNAGGRS4	34.925	--	1.218	42.554	1.4	0.273	1.57	70'	EL	34.5	0.507	2.03	70'	EL	6.9	0.80	0.273	1.22	70'	EL	34.5	
		SNS5A	35.550	--	1.191	42.346	1.4	0.273	1.53	70'	EL	34.5	0.507	2.06	70'	EL	6.9	0.80	0.273	1.19	70'	EL	34.5	
		SNS6A	39.950	--	1.095	43.747	1.4	0.273	1.41	70'	EL	34.5	0.507	1.88	70'	EL	6.9	0.80	0.273	1.10	70'	EL	34.5	
		SNS7B	42.000	--	1.043	43.801	1.4	0.273	1.34	70'	EL	34.5	0.507	1.85	70'	EL	6.9	0.80	0.273	1.04	70'	EL	34.5	
	TTST	TNAGRIT3	33.000	--	1.336	44.087	1.4	0.273	1.72	70'	EL	34.5	0.507	2.23	70'	EL	6.9	0.80	0.273	1.34	70'	EL	34.5	
		TNT4A	33.075	--	1.342	44.401	1.4	0.273	1.72	70'	EL	34.5	0.507	2.17	70'	EL	6.9	0.80	0.273	1.34	70'	EL	34.5	
		TNT6A	41.600	--	1.1	45.746	1.4	0.273	1.41	70'	EL	34.5	0.507	1.98	70'	EL	6.9	0.80	0.273	1.10	70'	EL	34.5	
		TNT7A	42.000	--	1.106	46.462	1.4	0.273	1.42	70'	EL	34.5	0.507	1.94	70'	EL	6.9	0.80	0.273	1.11	70'	EL	34.5	
		TNT7B	42.000	--	1.147	48.18	1.4	0.273	1.47	70'	EL	34.5	0.507	1.8	70'	EL	6.9	0.80	0.273	1.15	70'	EL	34.5	
		TNAGRIT4	43.000	--	1.089	46.838	1.4	0.273	1.4	70'	EL	34.5	0.507	1.74	70'	EL	6.9	0.80	0.273	1.09	70'	EL	34.5	
		TNAGT5A	45.000	--	1.026	46.175	1.4	0.273	1.32	70'	EL	34.5	0.507	1.74	70'	EL	6.9	0.80	0.273	1.03	70'	EL	34.5	
		TNAGT5B	45.000	3	1.013	45.579	1.4	0.273	1.3	70'	EL	34.5	0.507	1.66	70'	EL	6.9	0.80	0.273	**1.01**	70'	EL	**34.5**	

LOAD FACTORS:

DESIGN LOAD RATING FACTORS	LIMIT STATE	γ_{DC}	γ_{DW}
	STRENGTH I	1.25	1.50
	SERVICE III	1.00	1.00

NOTES:

MINIMUM RATING FACTORS ARE BASED ON THE STRENGTH I AND SERVICE III LIMIT STATES.

ALLOWABLE STRESSES FOR SERVICE III LIMIT STATE ARE AS REQUIRED FOR DESIGN.

COMMENTS:

1.
2.
3.
4.

CONTROLLING LOAD RATING
1 DESIGN LOAD RATING (HL-93)
2 DESIGN LOAD RATING (HS-20)
3 LEGAL LOAD RATING **
** SEE CHART FOR VEHICLE TYPE

GIRDER LOCATION
I - INTERIOR GIRDER
EL - EXTERIOR LEFT GIRDER
ER - EXTERIOR RIGHT GIRDER

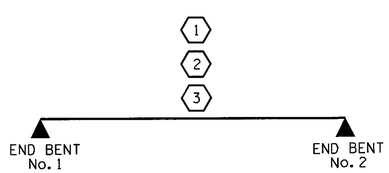

LRFR SUMMARY

FOR SPAN 'A'

PROJECT NO. BD-5111AC

WILKES COUNTY

STATION: 11+89.13 -L-

STATE OF NORTH CAROLINA
DEPARTMENT OF TRANSPORTATION
RALEIGH

STANDARD
LRFR SUMMARY FOR
70' CORED SLAB UNIT
90° SKEW
(NON-INTERSTATE TRAFFIC)

NORTH CAROLINA PROFESSIONAL SEAL 15825 BRIDGE ENGINEER D. KLAPPENBACH
3-18-2014

REVISIONS						SHEET NO.
NO.	BY:	DATE:	NO.	BY:	DATE:	S-3
1			3			TOTAL SHEETS
2			4			22

ASSEMBLED BY :	W DEBREW	DATE :	2-14
CHECKED BY :	H. T. BARBOUR	DATE :	2-14
DRAWN BY : CVC	6/10		
CHECKED BY : DNS	6/10		

18-MAR-2014 12:41
R:\Structures\Plans\wdebrew\Microstation\BD-5111AC_SD_DE_Super.dgn
bklappenbach

STD. NO. 24LRFR1_90S_70L

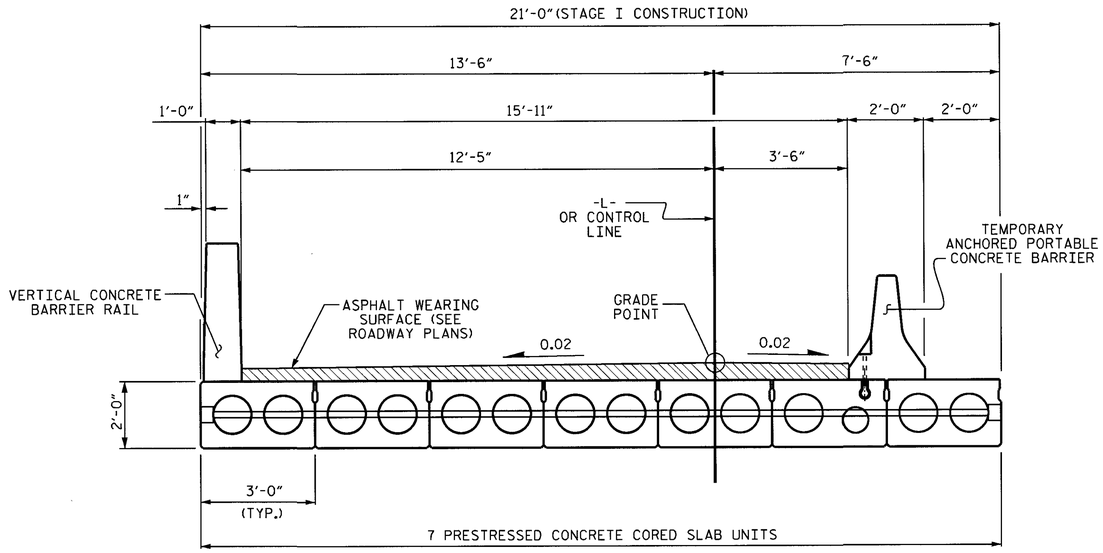

STAGE I

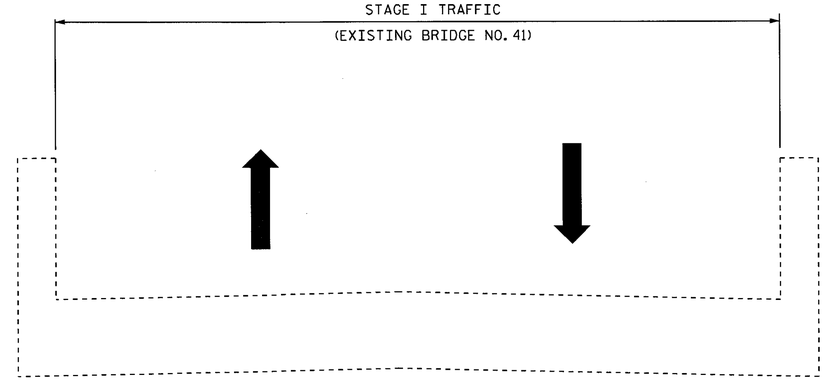

NOTES

FOR TEMPORARY ANCHORED PORTABLE CONCRETE BARRIER, SEE TRAFFIC CONTROL PLANS.

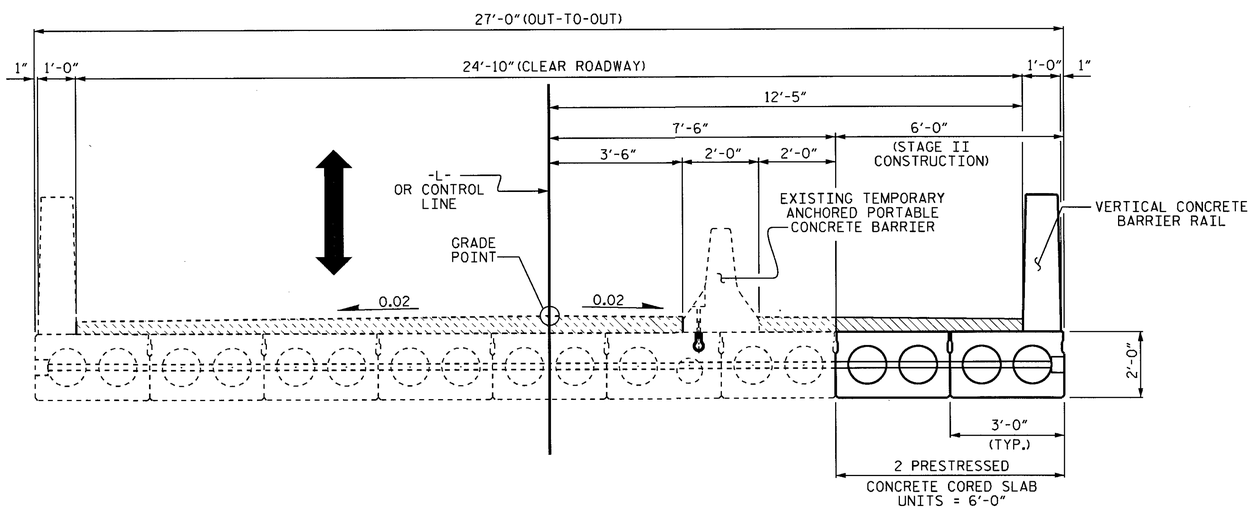

STAGE II

STAGING SEQUENCE

PROJECT NO. BD-5111AC
WILKES COUNTY
STATION: 11+89.13 -L-

STATE OF NORTH CAROLINA
DEPARTMENT OF TRANSPORTATION
RALEIGH

CONSTRUCTION STAGING

NORTH CAROLINA PROFESSIONAL SEAL 15825 ENGINEER BRUCE D. KLAPPENBACH 3-18-2014

REVISIONS						SHEET NO.
NO.	BY:	DATE:	NO.	BY:	DATE:	S-4
1			3			TOTAL SHEETS
2			4			22

DRAWN BY : W DEBREW DATE : 2-14
CHECKED BY : H. T. BARBOUR DATE : 2-14

18-MAR-2014 12:41
R:\Structures\Plans\wdebrew\Microstation\BD-5111AC_SD_DE_Super.dgn
bklappenbach

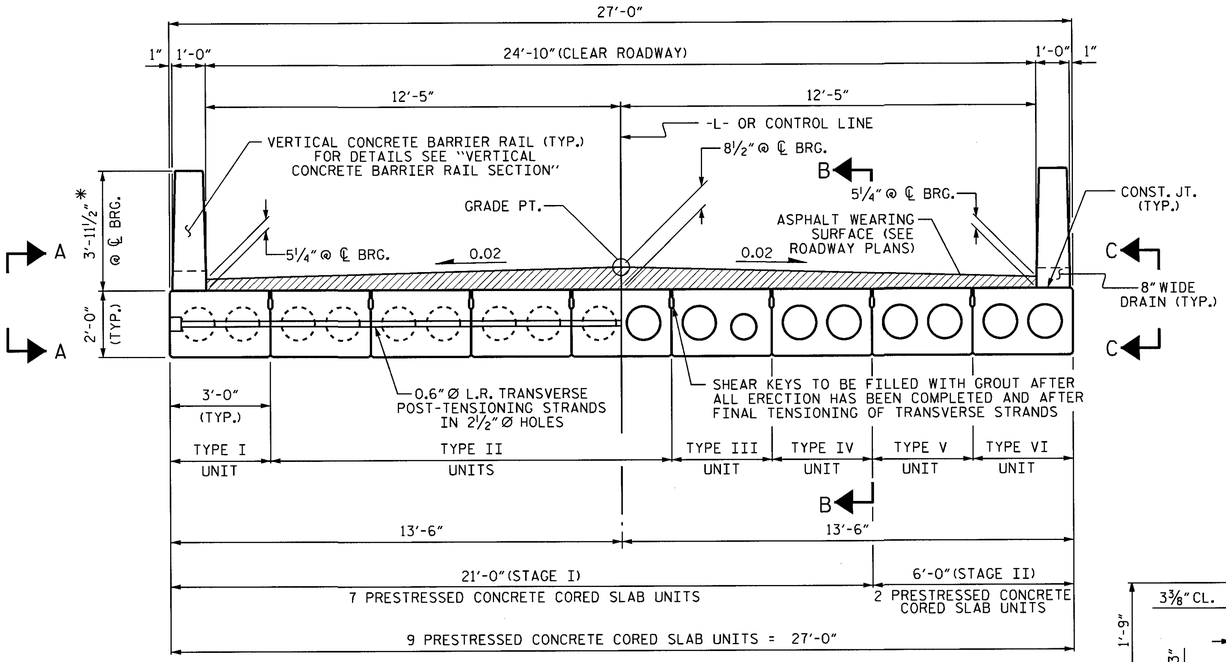

HALF SECTION
AT INTERMEDIATE DIAPHRAGMS

HALF SECTION
THROUGH VOIDS

TYPICAL SECTION

* - THE MAXIMUM BARRIER RAIL HEIGHT AND ASPHALT THICKNESS IS SHOWN. THE HEIGHT OF THE BARRIER RAIL AND ASPHALT THICKNESS VARIES WHILE THE TOP OF THE BARRIER RAIL FOLLOWS THE PROFILE OF THE GUTTERLINE. FOR RAIL HEIGHT DETAILS AND ASPHALT THICKNESS, SEE THE "VERTICAL CONCRETE BARRIER RAIL SECTION" DETAIL.

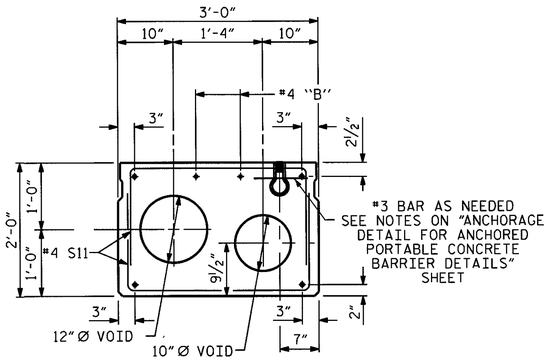

INTERIOR SLAB SECTION

(TYPE III UNIT)
(FOR PRESTRESSED STRAND LAYOUT, SEE INTERIOR SLAB SECTION. TYPE II, IV & V UNITS.)

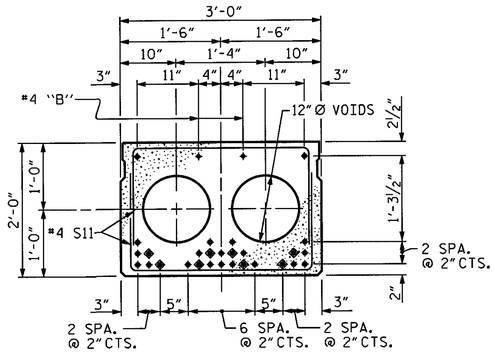

INTERIOR SLAB SECTION (70' UNIT)

(TYPE II, IV & V)
(28 STRANDS REQUIRED)

0.6" Ø LOW RELAXATION STRAND LAYOUT

◈ BOND SHALL BE BROKEN ON THESE STRANDS FOR A DISTANCE OF 12'-0" FROM END OF CORED SLAB UNIT. SEE STANDARD SPECIFICATIONS, ARTICLE 1078-7.

DEBONDING LEGEND

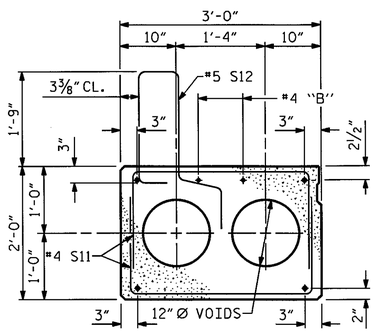

EXTERIOR SLAB SECTION

(TYPE I & VI UNIT)
(FOR PRESTRESSED STRAND LAYOUT, SEE INTERIOR SLAB SECTION. TYPE II, IV & V.)

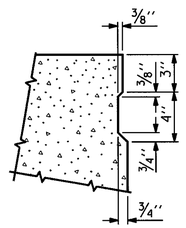

SHEAR KEY DETAIL

NOTE: OMIT SHEAR KEY ON OUTSIDE FACE OF EXTERIOR CORED SLABS.

FIXED END

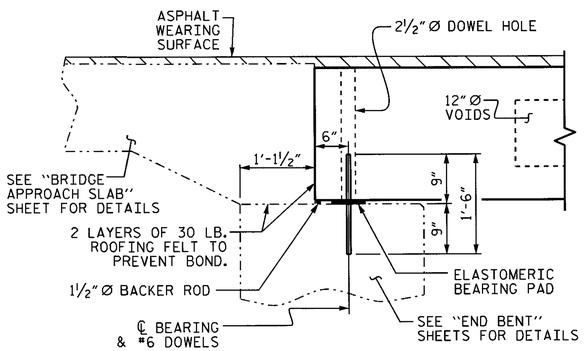

SECTION AT END BENT

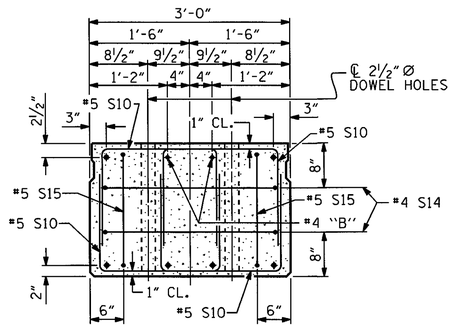

END ELEVATION

SHOWING PLACEMENT OF DOUBLE STIRRUPS AND LOCATION OF DOWEL HOLES. (STRAND LAYOUT NOT SHOWN.) INTERIOR SLAB UNIT SHOWN-EXTERIOR SLAB UNIT SIMILAR EXCEPT SHEAR KEY LOCATION.

PROJECT NO. BD-5111AC
WILKES COUNTY
STATION: 11+89.13 -L-

SHEET 1 OF 5

STATE OF NORTH CAROLINA
DEPARTMENT OF TRANSPORTATION
RALEIGH

3'-0" X 2'-0" PRESTRESSED CONCRETE CORED SLAB UNIT

NORTH CAROLINA PROFESSIONAL SEAL 15828 ENGINEER BRUCE D. KLAPPENBACH
3-18-2014

ASSEMBLED BY : W DEBREW	DATE : 2-14		
CHECKED BY : H. T. BARBOUR	DATE : 2-14		
DRAWN BY : MAA 6/10	REV. 12/11	MAA/AAC	
CHECKED BY : MKT 7/10			

REVISIONS						SHEET NO.
NO.	BY:	DATE:	NO.	BY:	DATE:	S-5
1			3			TOTAL SHEETS
2			4			22

18-MAR-2014 12:41
R:\Structures\Plans\wdebrew\Microstation\BD-5111AC_SD_DE_Super.dgn
bklappenbach

STRANDS #1 & #2 GO THRU 7 CORED SLAB UNITS (TO BE TENSIONED DURING STAGE I CONSTRUCTION)

STRANDS #3 & #4 GO THRU ALL 9 CORED SLAB UNITS (TO BE TENSIONED DURING STAGE II CONSTRUCTION)

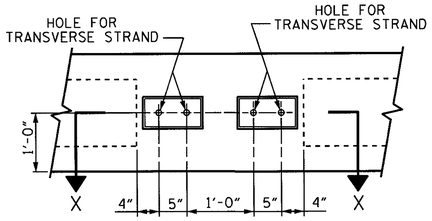

VIEW A-A

SEE SHEET 1 OF 5

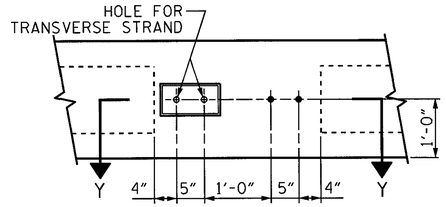

VIEW B-B

SEE SHEET 1 OF 5

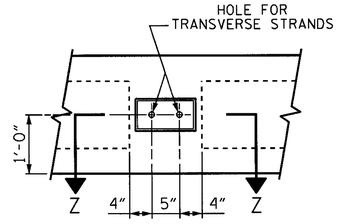

VIEW C-C

SEE SHEET 1 OF 5

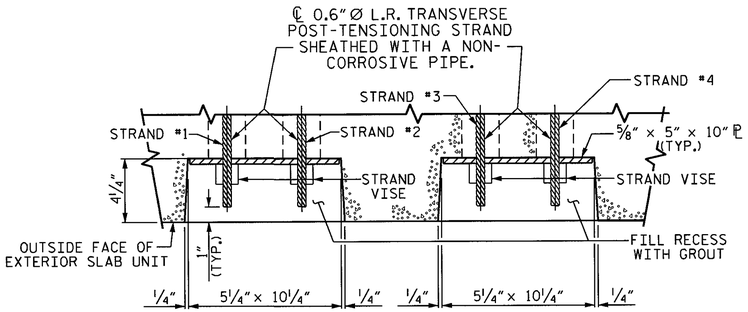

SECTION X-X

(TYPE I UNIT)

UP STATION

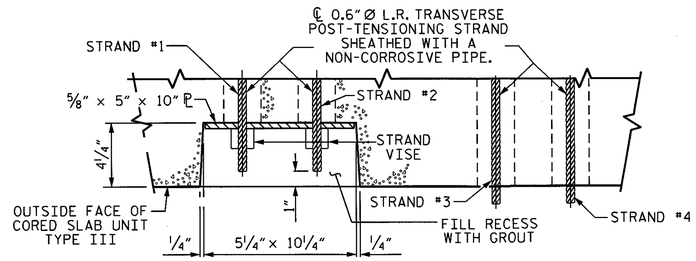

SECTION Y-Y

(TYPE IV UNIT)

UP STATION

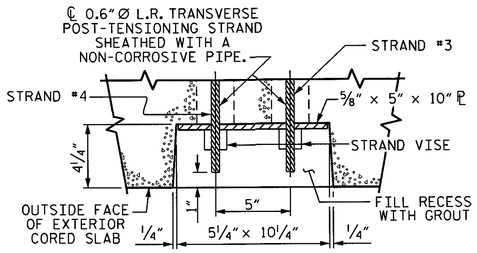

SECTION Z-Z

(TYPE VI UNIT)

UP STATION

GROUTED RECESS AT END OF POST-TENSIONED STRAND

PROJECT NO. BD-5111AC

WILKES COUNTY

STATION: 11+89.13 -L-

SHEET 2 OF 5

STATE OF NORTH CAROLINA
DEPARTMENT OF TRANSPORTATION
RALEIGH

SUPERSTRUCTURE
3'-0" X 2'-0"
PRESTRESSED CONCRETE
CORED SLAB UNIT

NORTH CAROLINA PROFESSIONAL SEAL 15825 ENGINEER BRUCE D. KLAPPENBACH
3-18-2014

REVISIONS						SHEET NO.
NO.	BY:	DATE:	NO.	BY:	DATE:	S-6
1			3			TOTAL SHEETS
2			4			22

DRAWN BY :	W DEBREW	DATE :	2-14
CHECKED BY :	H. T. BARBOUR	DATE :	2-14
DESIGN ENGINEER OF RECORD:	B. D. KLAPPENBACH	DATE :	2-14

18-MAR-2014 12:41
R:\Structures\Plans\wdebrew\Microstation\BD-5111AC_SD_DE_Super.dgn
bklappenbach

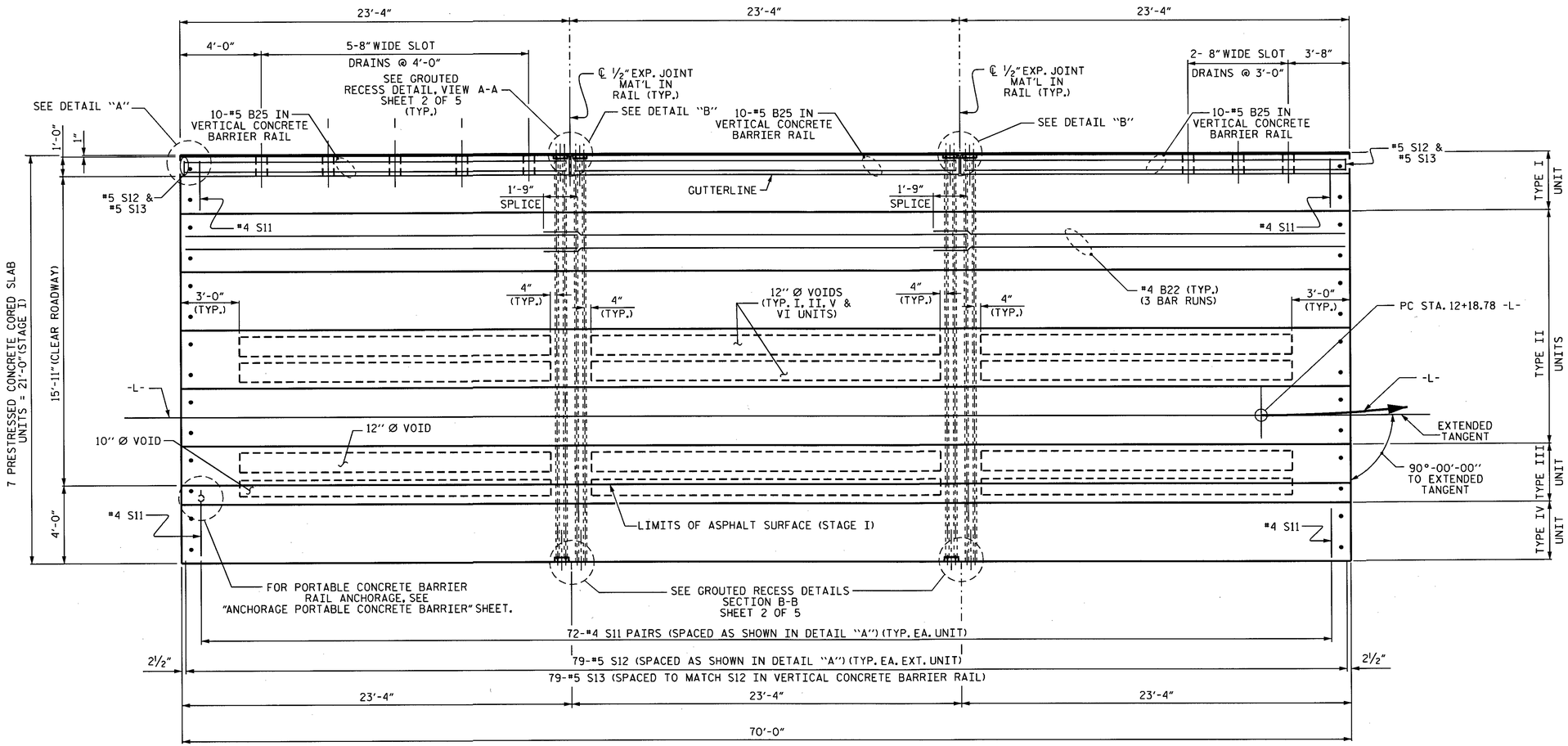

PLAN OF UNIT
(STAGE I)

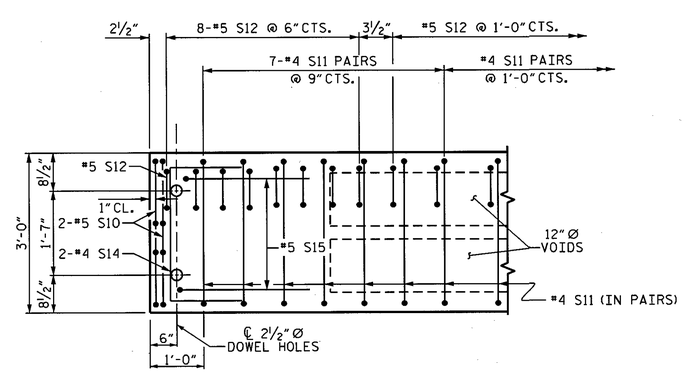

DETAIL "A"
NOTE: EXTERIOR UNIT SHOWN - INTERIOR UNIT SIMILAR EXCEPT OMIT #5 S12 BARS.

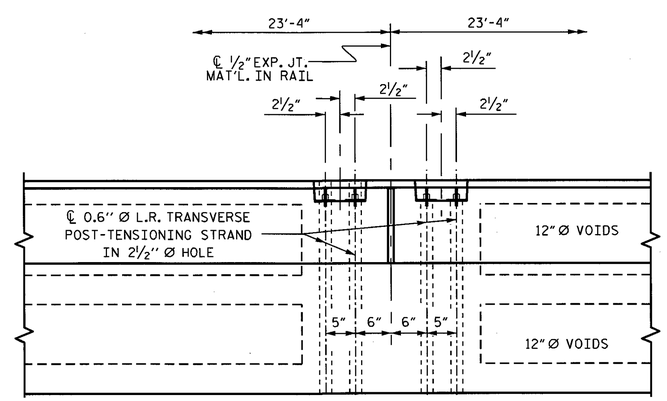

DETAIL "B"
#4 S11 BARS MAY BE SHIFTED AS NECESSARY TO MAINTAIN 1" CLEAR TO GROUTED RECESS AND 2 1/2" Ø TRANSVERSE POST-TENSIONING STRAND HOLES

DESIGN ENGINEER OF RECORD: B. D. KLAPPENBACH		DATE :	2-15
ASSEMBLED BY : W DEBREW		DATE :	2-14
CHECKED BY : H. T. BARBOUR		DATE :	2-14
DRAWN BY : MAA	6/10	REV. 12/5/11	MAA/AAC
CHECKED BY : MKT	7/10		

26-MAR-2014 13:54
R:\Structures\Plans\wdebrew\Microstation\BD-5111AC_SD_DE_Super.dgn
bklappenbach

NORTH CAROLINA PROFESSIONAL SEAL 15825 ENGINEER BRUCE D. KLAPPENBACH
3-26-2014

PROJECT NO. BD-5111AC
WILKES COUNTY
STATION: 11+89.13 -L-
SHEET 3 OF 5

STATE OF NORTH CAROLINA
DEPARTMENT OF TRANSPORTATION
RALEIGH

SUPERSTRUCTURE
PLAN OF 70' UNIT
STAGE I

REVISIONS								SHEET NO.
NO.	BY:	DATE:	NO.	BY:	DATE:			S-7
1			3					TOTAL SHEETS
2			4					22

STD. NO. 24PCS_27_90S_70L

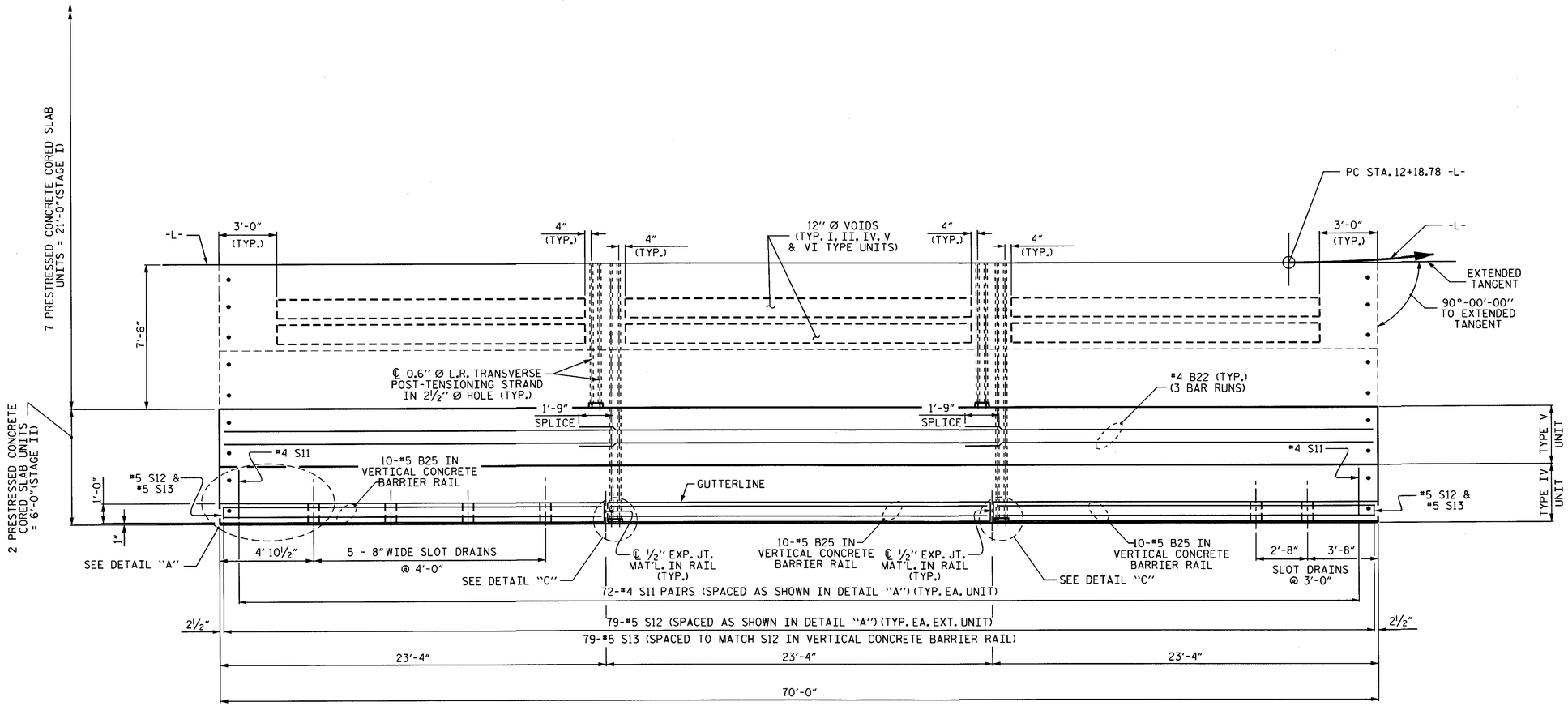

PLAN OF UNIT

(STAGE II)

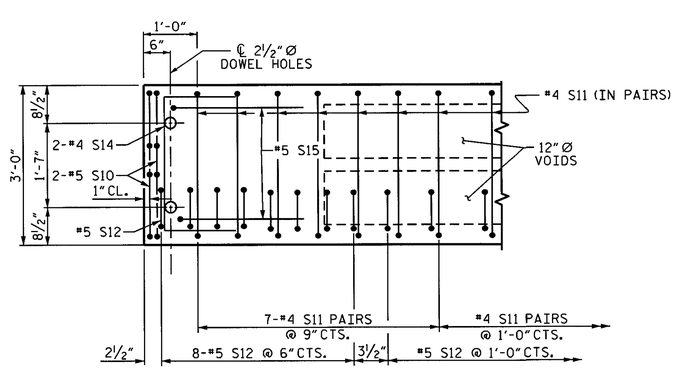

DETAIL "A"

NOTE: EXTERIOR UNIT SHOWN - INTERIOR UNIT SIMILAR EXCEPT OMIT #5 S12 BARS.

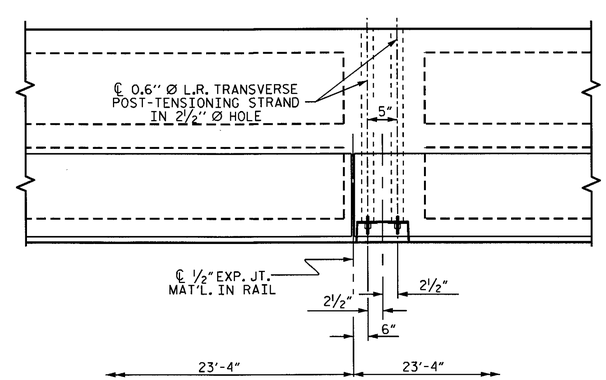

DETAIL "C"

#4 S11 BARS MAY BE SHIFTED AS NECESSARY TO MAINTAIN 1" CLEAR TO GROUTED RECESS AND 2½" Ø TRANSVERSE POST-TENSIONING STRAND HOLES

DESIGN ENGINEER OF RECORD: B. D. KLAPPENBACH		DATE :	2-15
ASSEMBLED BY : W DEBREW		DATE :	2-14
CHECKED BY : H. T. BARBOUR		DATE :	2-14
DRAWN BY : MAA	6/10	REV. 12/5/11	MAA/AAC
CHECKED BY : MKT	7/10		

18-MAR-2014 12:41
R:\Structures\Plans\wdebrew\Microstation\BD-5111AC_SD_DE_Super.dgn
bklappenbach

PROJECT NO. BD-5111AC

WILKES COUNTY

STATION: 11+89.13 -L-

SHEET 4 OF 5

STATE OF NORTH CAROLINA
DEPARTMENT OF TRANSPORTATION
RALEIGH

SUPERSTRUCTURE
PLAN OF 70' UNIT
STAGE II

NORTH CAROLINA PROFESSIONAL SEAL 15826 ENGINEER BRUCE D. KLAPPENBACH 3-18-2014

REVISIONS						SHEET NO.
NO.	BY:	DATE:	NO.	BY:	DATE:	S-8
1			3			TOTAL SHEETS
2			4			22

STD. NO. 24PCS_27_90S_70L

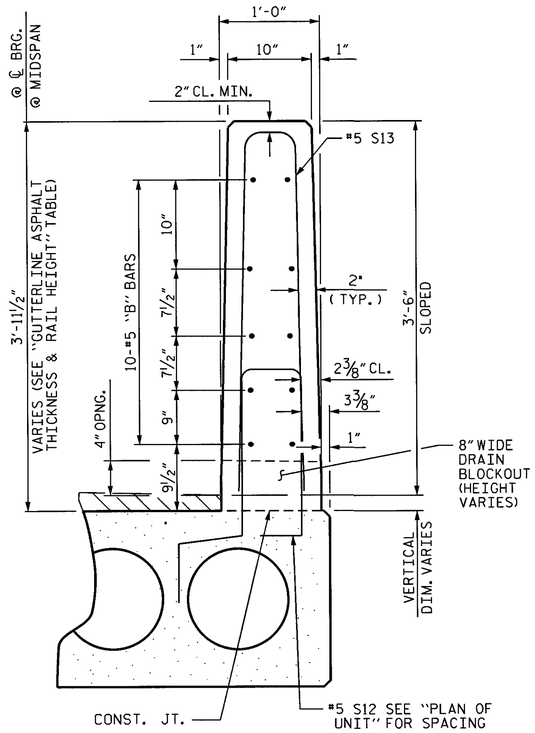

BILL OF MATERIAL FOR VERTICAL CONCRETE BARRIER RAIL

STAGE I

BAR	BARS PER EXTERIOR UNITS	TOTAL NO.	SIZE	TYPE	LENGTH	WEIGHT
	70' UNIT					
*B25	30	30	#5	STR	22'-11"	717
*S13	79	79	#5	2	7'-2"	590
* EPOXY COATED REINFORCING STEEL				LBS.		1307
CLASS AA CONCRETE				CU.YDS.		9.5
TOTAL VERTICAL CONCRETE BARRIER RAIL						70.125

STAGE II

BAR	BARS PER EXTERIOR UNITS	TOTAL NO.	SIZE	TYPE	LENGTH	WEIGHT
	70' UNIT					
*B25	30	30	#5	STR	22'-11"	717
*S13	79	79	#5	2	7'-2"	590
* EPOXY COATED REINFORCING STEEL				LBS.		1307
CLASS AA CONCRETE				CU.YDS.		9.5
TOTAL VERTICAL CONCRETE BARRIER RAIL						70.125

BAR TYPES

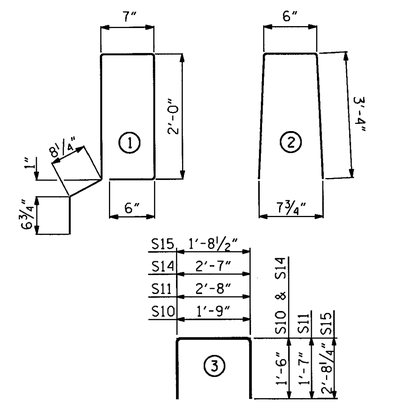

ALL BAR DIMENSIONS ARE OUT TO OUT

NOTES

ALL PRESTRESSING STRANDS SHALL BE 7-WIRE LOW RELAXATION GRADE 270 STRANDS AND SHALL CONFORM TO AASHTO M203 EXCEPT FOR SAMPLING REQUIREMENTS WHICH SHALL BE IN ACCORDANCE WITH THE STANDARD SPECIFICATIONS.

ALL REINFORCING STEEL CAST WITH THE CORED SLAB SECTIONS SHALL BE GRADE 60 AND SHALL BE INCLUDED IN THE UNIT PRICE BID FOR PRESTRESSED CONCRETE CORED SLABS.

RECESSES FOR TRANSVERSE STRANDS SHALL BE GROUTED AFTER THE TENSIONING OF THE STRANDS.

THE 2½" Ø DOWEL HOLES AT FIXED ENDS OF SLAB SECTIONS SHALL BE FILLED WITH NON-SHRINK GROUT.

THE BACKER RODS SHALL CONFORM TO THE REQUIREMENTS OF TYPE M BOND BREAKER. SEE SECTION 1028 OF THE STANDARD SPECIFICATIONS.

WHEN CORED SLABS ARE CAST, AN INTERNAL HOLD-DOWN SYSTEM SHALL BE EMPLOYED TO PREVENT VOIDS FROM RISING OR MOVING SIDEWAYS. AT LEAST SIX WEEKS PRIOR TO CASTING CORED SLABS, THE CONTRACTOR SHALL SUBMIT TO THE ENGINEER FOR REVIEW AND COMMENT, DETAILED DRAWINGS OF THE PROPOSED HOLD-DOWN SYSTEM. IN ADDITION TO STRUCTURAL DETAILS, LOCATION AND SPACING OF THE HOLD-DOWNS SHALL BE INDICATED.

THE TRANSFER OF LOAD FROM THE ANCHORAGES TO THE CORED SLAB UNIT SHALL BE DONE WHEN THE CONCRETE HAS REACHED A COMPRESSIVE STRENGTH OF NOT LESS THAN THE REQUIRED STRENGTH SHOWN IN THE "CONCRETE RELEASE STRENGTH" TABLE.

ALL REINFORCING STEEL IN VERTICAL CONCRETE BARRIER RAILS SHALL BE EPOXY COATED.

PRESTRESSING STRANDS SHALL BE CUT FLUSH WITH THE CORED SLAB UNIT ENDS.

APPLY EPOXY PROTECTIVE COATING TO CORED SLAB UNIT ENDS.

GROOVED CONTRACTION JOINTS, ½" IN DEPTH, SHALL BE TOOLED IN ALL EXPOSED FACES OF THE BARRIER RAIL AND IN ACCORDANCE WITH ARTICLE 825-10(B) OF THE STANDARD SPECIFICATIONS. A CONTRACTION JOINT SHALL BE LOCATED AT EACH THIRD POINT BETWEEN BARRIER RAIL EXPANSION JOINTS. ONLY ONE CONTRACTION JOINT IS REQUIRED AT MIDPOINT OF BARRIER RAIL SEGMENTS LESS THAN 20 FEET IN LENGTH AND NO CONTRACTION JOINTS ARE REQUIRED FOR THOSE SEGMENTS LESS THAN 10 FEET IN LENGTH.

TRANSVERSE POST TENSIONING OF THE CORED SLAB UNITS SHALL BE DONE IN ACCORDANCE WITH THE STANDARD SPECIFICATIONS.

MAINTAIN A SYMMETRIC TENSION FORCE BETWEEN EACH PAIR OF TRANSVERSE POST TENSIONING STRANDS IN THE DIAPHRAGM.

THE #4 S11 STIRRUPS MAY BE SHIFTED AS NECESSARY TO MAINTAIN 1" CLEAR TO THE GROUTED RECESS.

FOR GROUT FOR STRUCTURES, SEE SPECIAL PROVISIONS.

THE DRAIN OPENING AT THE GUTTERLINE SHALL BE 4" X 8". THE HEIGHT OF THE BLOCKOUT IN THE VERTICAL CONCRETE BARRIER RAIL SHALL EXTEND FROM THE TOP OF THE CORED SLAB UNIT TO THE TOP OF THE DRAIN OPENING.

APPLY EPOXY PROTECTIVE COATING TO EXTERIOR FACE OF THE EXTERIOR CORED SLAB UNITS THAT REQUIRE DRAINS IN THE BARRIER RAIL.

BILL OF MATERIAL FOR ONE 70' CORED SLAB UNIT

				STAGE I						STAGE II			
				TYPE I UNIT		TYPE II & IV UNIT		TYPE III UNIT		TYPE V UNIT		TYPE VI UNIT	
BAR	NUMBER	SIZE	TYPE	LENGTH	WEIGHT	LENGTH	WEIGHT	LENGTH	WEIGHT	LENGTH	WEIGHT	LENGTH	WEIGHT
B22	6	#4	STR	24'-6"	98	24'-6"	98	24'-6"	98	24'-6"	98	24'-6"	98
S10	8	#5	3	4'-9"	40	4'-9"	40	4'-9"	40	4'-9"	40	4'-9"	40
S11	144	#4	3	5'-10"	561	5'-10"	561	5'-10"	561	5'-10"	561	5'-10"	561
*S12	79	#5	1	6'-4"	522							6'-4"	522
S14	4	#4	3	5'-7"	15	5'-7"	15	5'-7"	15	5'-7"	15	5'-7"	15
S15	4	#5	3	7'-1"	30	7'-1"	30	7'-1"	30	7'-1"	30	7'-1"	30
REINFORCING STEEL			LBS.		744		744		744		744		744
* EPOXY COATED REINFORCING STEEL			LBS.		522								522
7000 P.S.I. CONCRETE			CU. YDS.		11.9		12.4		13.0		12.4		11.9
0.6" Ø L.R. STRANDS			No.		28		28		28		28		28

CORED SLABS REQUIRED

		NUMBER	LENGTH	TOTAL LENGTH
STAGE I	EXTERIOR C.S.	1	70'-0"	70'-0"
	INTERIOR C.S.	6	70'-0"	420'-0"
STAGE II	EXTERIOR C.S.	1	70'-0"	70'-0"
	INTERIOR C.S.	1	70'-0"	70'-0"
	TOTAL	9		630'-0"

DEAD LOAD DEFLECTION AND CAMBER

	3'-0" x 2'-0"
70' CORED SLAB UNIT	0.6" Ø L.R. STRAND
CAMBER (SLAB ALONE IN PLACE)	4 5/16" ↑
DEFLECTION DUE TO SUPERIMPOSED DEAD LOAD**	13/16" ↓
FINAL CAMBER	3½" ↑

** INCLUDES FUTURE WEARING SURFACE

GUTTERLINE ASPHALT THICKNESS & RAIL HEIGHT

	ASPHALT OVERLAY THICKNESS @ MID-SPAN	RAIL HEIGHT @ MID-SPAN
70' UNITS	1¾"	3'-8"

CONCRETE RELEASE STRENGTH

UNIT	PSI
70' UNITS	5500

GRADE 270 STRANDS

	0.6" Ø L.R.
AREA (SQUARE INCHES)	0.217
ULTIMATE STRENGTH (LBS. PER STRAND)	58,600
APPLIED PRESTRESS (LBS. PER STRAND)	43,950

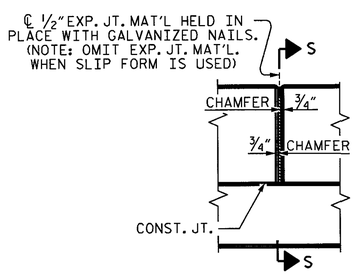

ELEVATION AT EXPANSION JOINTS

VERTICAL CONCRETE BARRIER RAIL DETAILS

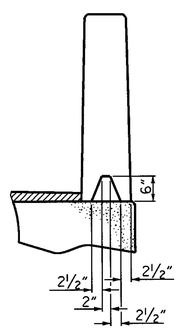

SECTION S-S

AT DAM IN OPEN JOINT (THIS IS TO BE USED ONLY WHEN SLIP FORM IS USED)

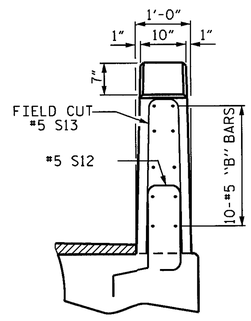

END VIEW

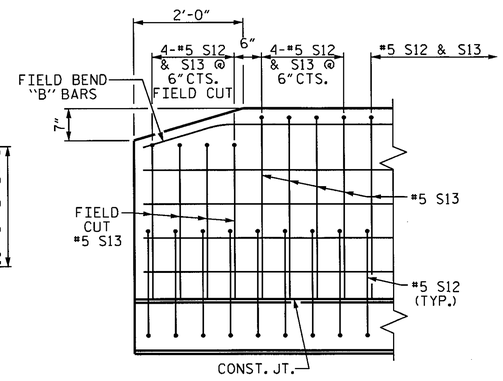

SIDE VIEW

END OF RAIL DETAILS

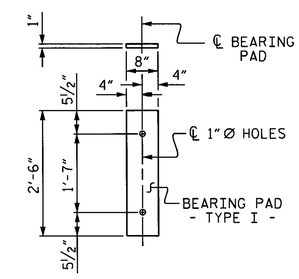

FIXED END

(TYPE I - 18 REQ'D)

ELASTOMERIC BEARING DETAILS

ELASTOMER IN ALL BEARINGS SHALL BE 60 DUROMETER HARDNESS.

NORTH CAROLINA PROFESSIONAL SEAL 15825 PROJECT ENGINEER D. KLAPPENBACH 3-18-2014

PROJECT NO. BD-5111AC

WILKES COUNTY

STATION: 11+89.13 -L-

SHEET 5 OF 5

STATE OF NORTH CAROLINA
DEPARTMENT OF TRANSPORTATION
RALEIGH

STANDARD

3'-0" X 2'-0" PRESTRESSED CONCRETE CORED SLAB UNIT

REVISIONS						SHEET NO.
NO.	BY:	DATE:	NO.	BY:	DATE:	S-9
1			3			TOTAL SHEETS
2			4			22

DESIGN ENGINEER OF RECORD: B. D. KLAPPENBACH		DATE :	2-14
ASSEMBLED BY :	W DEBREW	DATE :	2-14
CHECKED BY :	H. T. BARBOUR	DATE :	2-14
DRAWN BY : MAA 6/10	REV. 12/11	MAA/AAC	
CHECKED BY : MKT 7/10			

18-MAR-2014 12:41
R:\Structures\Plans\wdebrew\Microstation\BD-5111AC_SD_DE_Super.dgn
bklappenbach

STD. NO. 24PCS3_27_90S

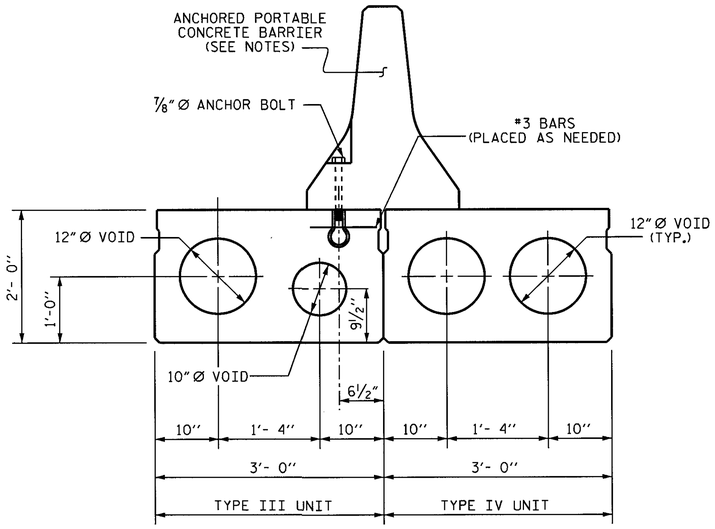

CONCRETE INSERT LOCATION

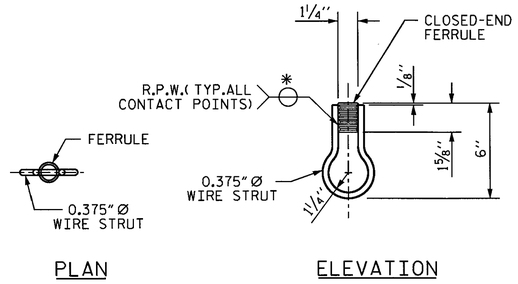

STRUCTURAL CONCRETE INSERT

* EACH WELDED ATTACHMENT OF WIRE TO FERRULE SHALL DEVELOP THE TENSILE STRENGTH OF THE WIRE.

NOTES

THE STRUCTURAL CONCRETE INSERT ASSEMBLY SHALL CONSIST OF THE FOLLOWING COMPONENTS:

A. FERRULES SHALL BE MADE FROM STEEL MEETING THE REQUIREMENTS OF AASHTO M169, GRADE 12L14 AND SHALL HAVE A MINIMUM LENGTH OF THREADS OF 1 5/8".

B. 1 - 7/8" Ø X 8 1/2" BOLT WITH WASHER. BOLT SHALL CONFORM TO THE REQUIREMENTS OF ASTM A307. BOLT AND WASHER SHALL BE GALVANIZED. AT THE CONTRACTORS OPTION, STAINLESS STEEL BOLT AND WASHER MAY BE USED AS AN ALTERNATE FOR THE 7/8" Ø X 8 1/2" GALVANIZED BOLT AND WASHER. THEY SHALL CONFORM TO OR EXCEED THE MECHANICAL REQUIREMENTS OF ASTM A307. THE USE OF THIS ALTERNATE SHALL BE APPROVED BY THE ENGINEER.

C. WIRE STRUT SHOWN IN THE CONCRETE INSERT ASSEMBLY DETAIL IS THE MINIMUM ALLOWABLE SIZE AND SHALL HAVE A MINIMUM TENSILE STRENGTH OF 100,000 PSI.

D. STRUCTURAL CONCRETE INSERT ASSEMBLIES SHALL BE HOT-DIP GALVANIZED IN ACCORDANCE WITH AASHTO M111.

THE COST OF THE STRUCTURAL CONCRETE INSERT ASSEMBLY, COMPLETE IN PLACE, SHALL BE INCLUDED IN THE UNIT CONTRACT PRICE BID FOR 3'-0" x 1'-9" PRESTRESSED CONCRETE CORED SLABS.

TO FACILITATE PLACEMENT OF STRUCTURAL CONCRETE INSERT ASSEMBLIES, #3 BARS MAY BE TIED TO THE #4 B22 BARS IN THE CORED SLAB UNITS. THE COST OF THE #3 BARS SHALL BE INCLUDED IN THE UNIT CONTRACT PRICE BID FOR 3'-0" x 1'-9" PRESTRESSED CONCRETE CORED SLABS.

STIRRUPS IN THE CORED SLAB UNITS MAY BE SHIFTED SLIGHTLY AS NECESSARY TO CLEAR STRUCTURAL CONCRETE INSERT ASSEMBLIES.

FERRULES TO BE PLUGGED DURING CASTING OF THE CORED SLAB UNITS AS RECOMMENDED BY THE MANUFACTURER.

ANCHORED PORTABLE CONCRETE BARRIER SHALL BE AS SPECIFIED IN ROADWAY STANDARD NO. 1170.01. SEE TRAFFIC CONTROL PLANS.

AFTER REMOVAL OF ANCHORED PORTABLE CONCRETE BARRIER, THE STRUCTURAL CONCRETE INSERTS SHALL BE FILLED WITH GROUT.

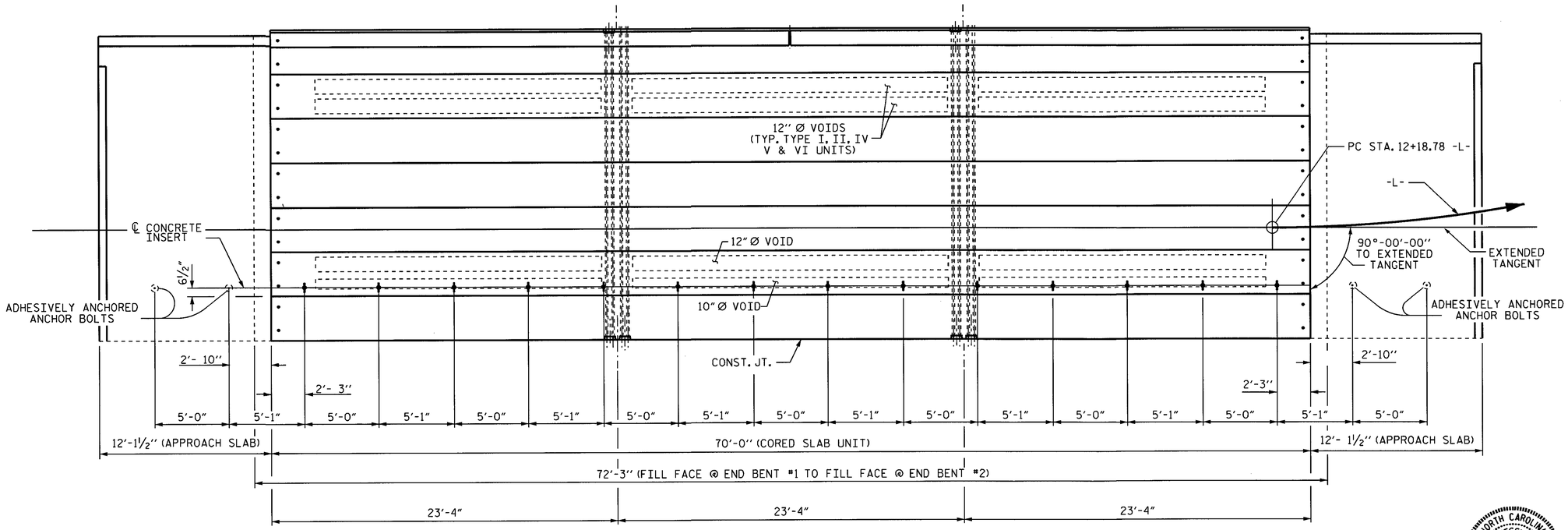

PROJECT NO. BD-5111AC

WILKES COUNTY

STATION: 11+89.13 -L-

STATE OF NORTH CAROLINA
DEPARTMENT OF TRANSPORTATION
RALEIGH

ANCHORAGE DETAIL FOR ANCHORED PORTABLE CONCRETE BARRIER DETAILS

NORTH CAROLINA PROFESSIONAL SEAL 15825 ENGINEER BRUCE D. KLAPPENBACH
3-18-2014

REVISIONS								SHEET NO.
NO.	BY:	DATE:	NO.	BY:	DATE:			S-10
1			3					TOTAL SHEETS
2			4					22

DRAWN BY : W DEBREW DATE : 2-14
CHECKED BY : H. T. BARBOUR DATE : 2-14
DESIGN ENGINEER OF RECORD: B. D. KLAPPENBACH DATE : 2-14

18-MAR-2014 12:41
R:\Structures\Plans\wdebrew\Microstation\BD-5111AC_SD_DE_Super.dgn
bklappenbach

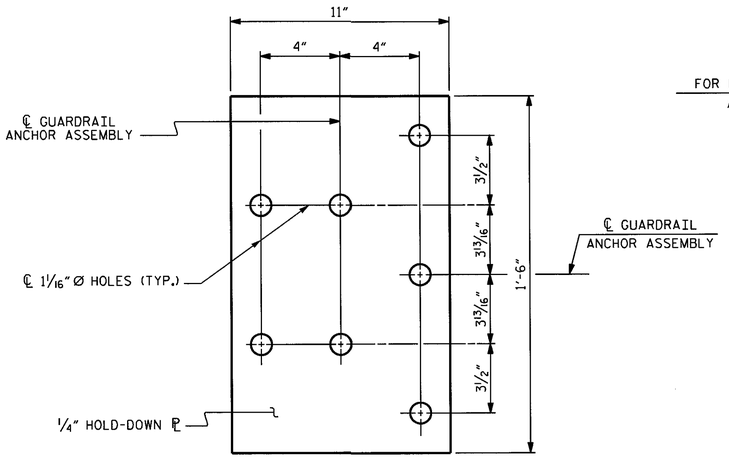

PLAN

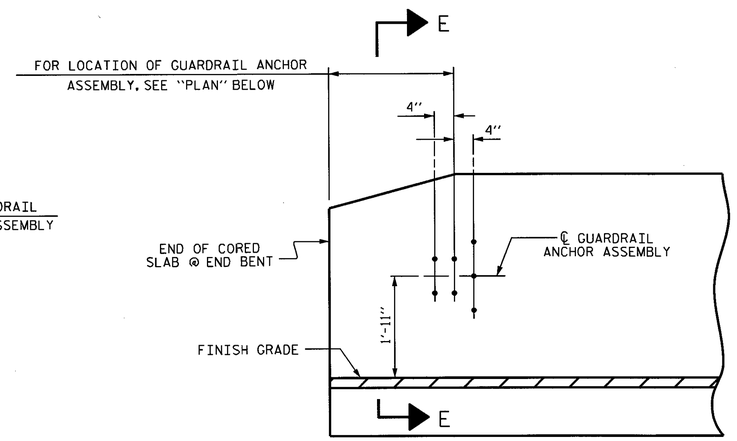

ELEVATION

NOTES

THE GUARDRAIL ANCHOR ASSEMBLY SHALL CONSIST OF A 1/4" HOLD DOWN PLATE AND 7 - 7/8" Ø BOLTS WITH NUTS AND WASHERS.

THE HOLD-DOWN PLATE SHALL CONFORM TO AASHTO M270 GRADE 36. AFTER FABRICATION, THE HOLD-DOWN PLATE SHALL BE HOT-DIP GALVANIZED IN ACCORDANCE WITH AASHTO M111.

BOLTS SHALL CONFORM TO THE REQUIREMENTS OF ASTM A307 AND NUTS SHALL CONFORM TO THE REQUIREMENTS OF AASHTO M291. BOLTS, NUTS AND WASHERS SHALL BE GALVANIZED. (AT THE CONTRACTOR'S OPTION, STAINLESS STEEL BOLTS, NUTS AND WASHERS MAY BE USED AS AN ALTERNATE FOR THE 7/8" Ø GALVANIZED BOLTS, NUTS AND WASHERS. THEY SHALL CONFORM TO OR EXCEED THE MECHANICAL REQUIREMENTS OF ASTM A307. THE USE OF THIS ALTERNATE SHALL BE APPROVED BY THE ENGINEER.)

THE GUARDRAIL ANCHOR ASSEMBLY IS REQUIRED AT ALL POINTS WHERE APPROACH GUARDRAIL IS TO BE ATTACHED TO THE END OF BARRIER RAIL. FOR POINTS OF ATTACHMENT, SEE SKETCH.

AFTER INSTALLATION, THE EXPOSED THREAD OF THE BOLT SHALL BE BURRED WITH A SHARP POINTED TOOL.

THE COST OF THE GUARDRAIL ANCHOR ASSEMBLY SHALL BE INCLUDED IN THE UNIT CONTRACT PRICE BID FOR VERTICAL CONCRETE BARRIER RAIL.

THE VERTICAL REINFORCING BARS MAY BE SHIFTED SLIGHTLY IN THE VERTICAL CONCRETE BARRIER RAIL TO CLEAR ASSEMBLY BOLTS.

THE 1 1/4" Ø HOLES SHALL BE FORMED OR DRILLED WITH A CORE BIT. IMPACT TOOLS WILL NOT BE PERMITTED. ANY CONCRETE DAMAGED BY THIS WORK SHALL BE REPAIRED TO THE SATISFACTION OF THE ENGINEER.

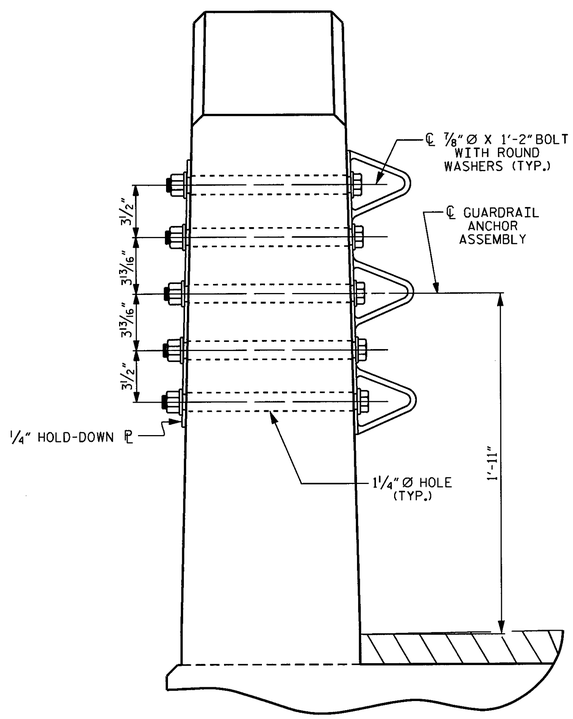

SECTION E-E

GUARDRAIL ANCHOR ASSEMBLY DETAILS

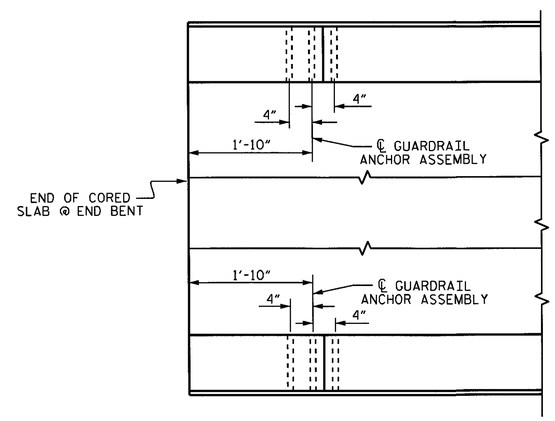

PLAN

LOCATION OF ANCHORS FOR GUARDRAIL

END BENT #1 SHOWN, END BENT #2 SIMILAR.

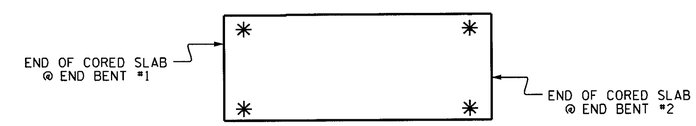

SKETCH SHOWING POINTS OF ATTACHMENT

* DENOTES GUARDRAIL ANCHOR ASSEMBLY

PROJECT NO. BD-5111AC
WILKES COUNTY
STATION: 11+89.13 -L-

STATE OF NORTH CAROLINA
DEPARTMENT OF TRANSPORTATION
RALEIGH

STANDARD
GUARDRAIL ANCHORAGE FOR VERTICAL CONCRETE BARRIER RAIL

NORTH CAROLINA PROFESSIONAL SEAL 15825 ENGINEER BRUCE D. KLAPPENBACH
3-18-2014

REVISIONS						SHEET NO.
NO.	BY:	DATE:	NO.	BY:	DATE:	S-11
1			3			TOTAL SHEETS
2			4			22

ASSEMBLED BY :	W DEBREW	DATE :	2-14
CHECKED BY :	H. T. BARBOUR	DATE :	2-24
DRAWN BY : MAA	5/10	REV. 10/1/11	MAA/GM
CHECKED BY : GM	5/10	REV. 12/5/11	MAA/GM
		REV. 6/13	MAA/GM

18-MAR-2014 12:41
R:\Structures\Plans\wdebrew\Microstation\BD-5111AC_SD_DE_Super.dgn
bklappenbach

NOTES

STIRRUPS IN CAP MAY BE SHIFTED AS NECESSARY TO CLEAR DOWELS.

THE CONCRETE IN THE SHADED AREA OF THE WING SHALL BE POURED AFTER THE VERTICAL CONCRETE BARRIER RAIL IS CAST IF SLIP FORMING IS USED.

FOR PILE SPLICE DETAILS, SEE SHEET 4 OF 4.

FOR WING DETAILS, SEE SHEET 3 OF 4.

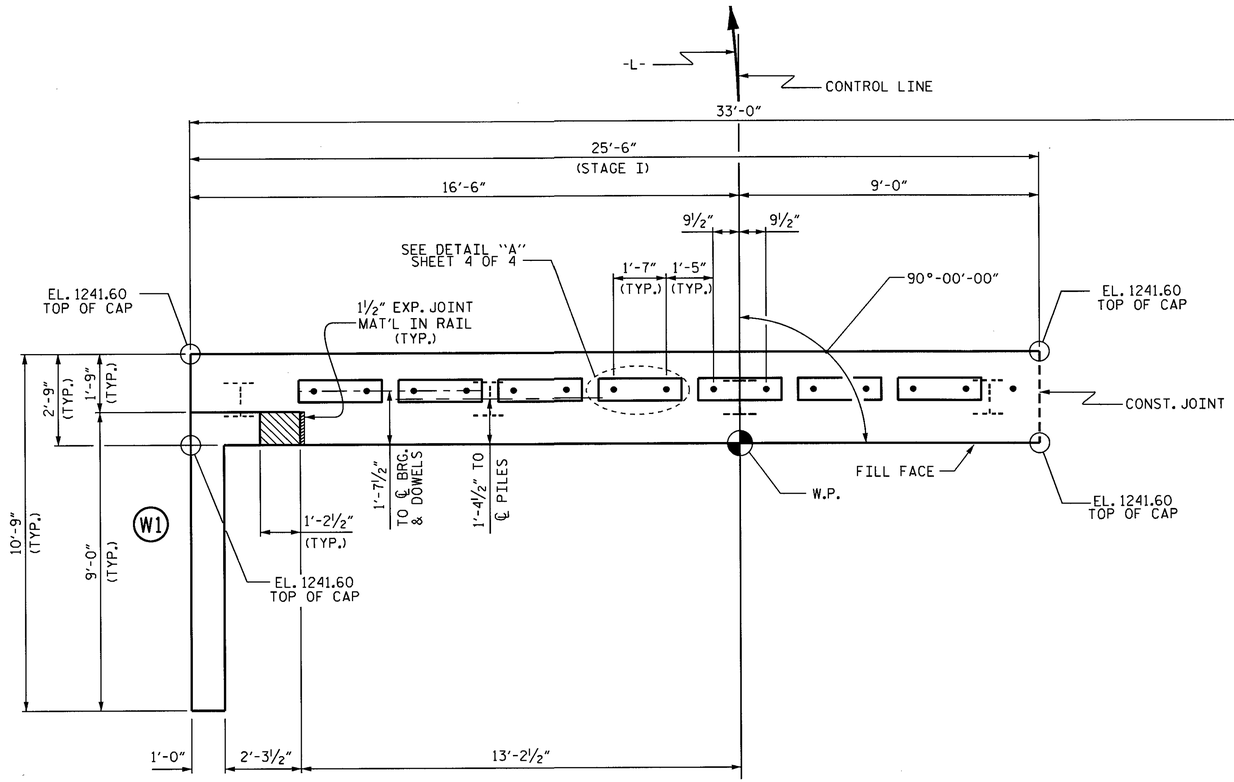

PLAN (STAGE 1)

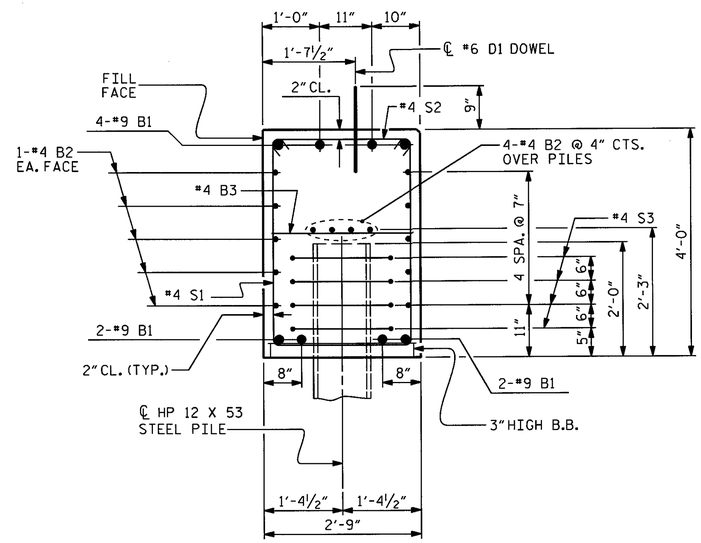

SECTION A-A

(CONCRETE COLLAR NOT SHOWN FOR CLARITY. SEE "CORROSION PROTECTION FOR STEEL PILES DETAIL.")

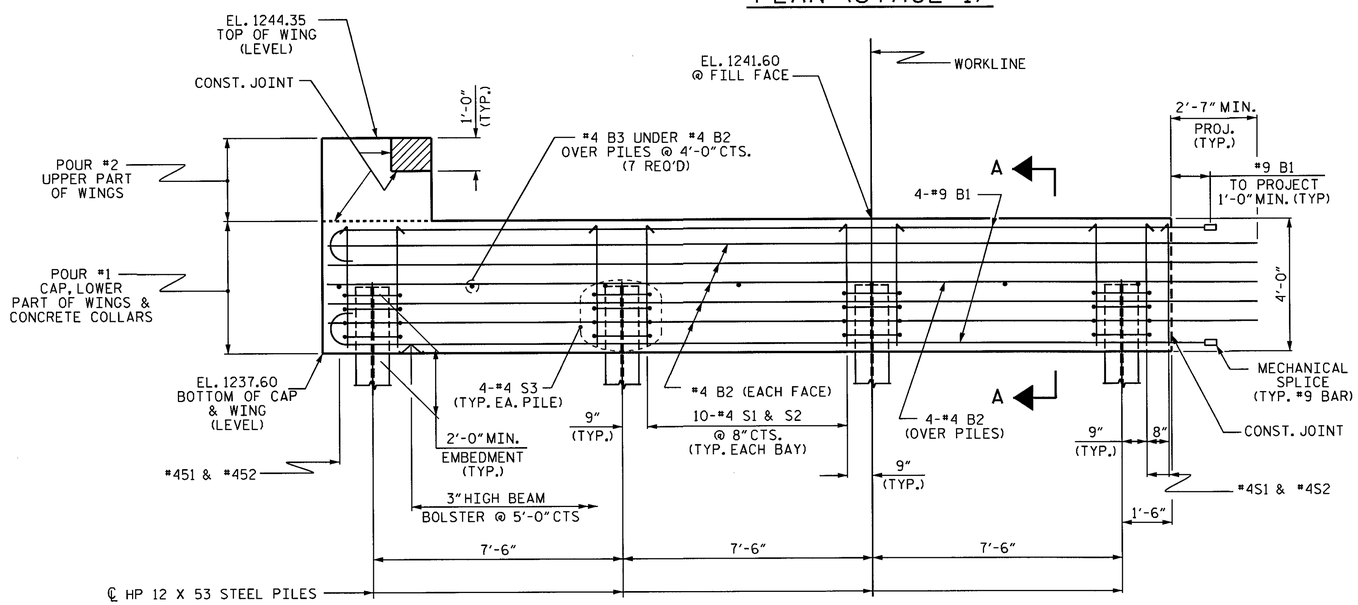

ELEVATION

WINGS NOT SHOWN FOR CLARITY.
CONCRETE COLLARS FOR STEEL PILES NOT SHOWN IN PLAN AND ELEVATION VIEWS FOR CLARITY.
SEE "CORROSION PROTECTION FOR STEEL PILES DETAIL", SHEET 4 OF 4.

PROJECT NO. BD-5111AC
WILKES COUNTY
STATION: 11+89.13 -L-

SHEET 1 OF 4

STATE OF NORTH CAROLINA
DEPARTMENT OF TRANSPORTATION
RALEIGH

SUBSTRUCTURE

END BENT #1
STAGE I

NORTH CAROLINA PROFESSIONAL SEAL 16825 ENGINEER BRUCE D. KLAPPENBACH
3-18-2014

REVISIONS							SHEET NO.
NO.	BY:	DATE:	NO.	BY:	DATE:		S-12
1			3				TOTAL SHEETS
2			4				22

ASSEMBLED BY :	W DEBREW	DATE :	2-14
CHECKED BY :	H. T. BARBOUR	DATE :	2-14
DRAWN BY :	WJH	12/11	
CHECKED BY :	AAC	12/11	

R:\Structures\Plans\wdebrew\Microstation\BD-5111AC_SD_DE_Sub.dgn

STD. NO. EB_27_90S4

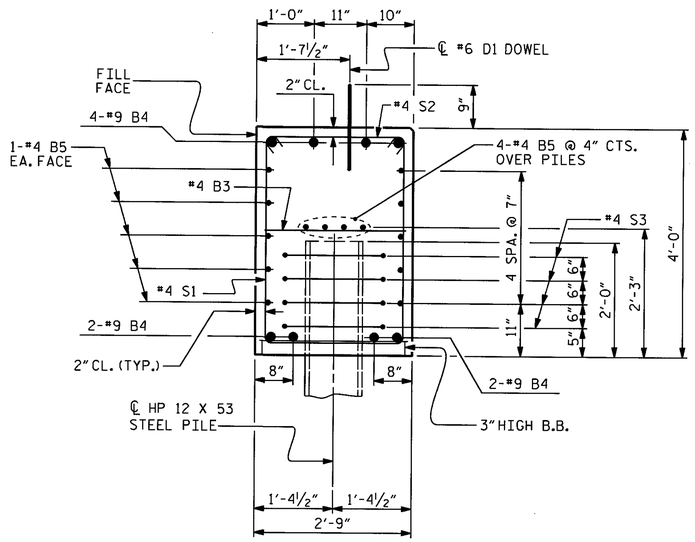

SECTION B-B

(CONCRETE COLLAR NOT SHOWN FOR CLARITY.
SEE "CORROSION PROTECTION FOR STEEL PILES DETAIL.")

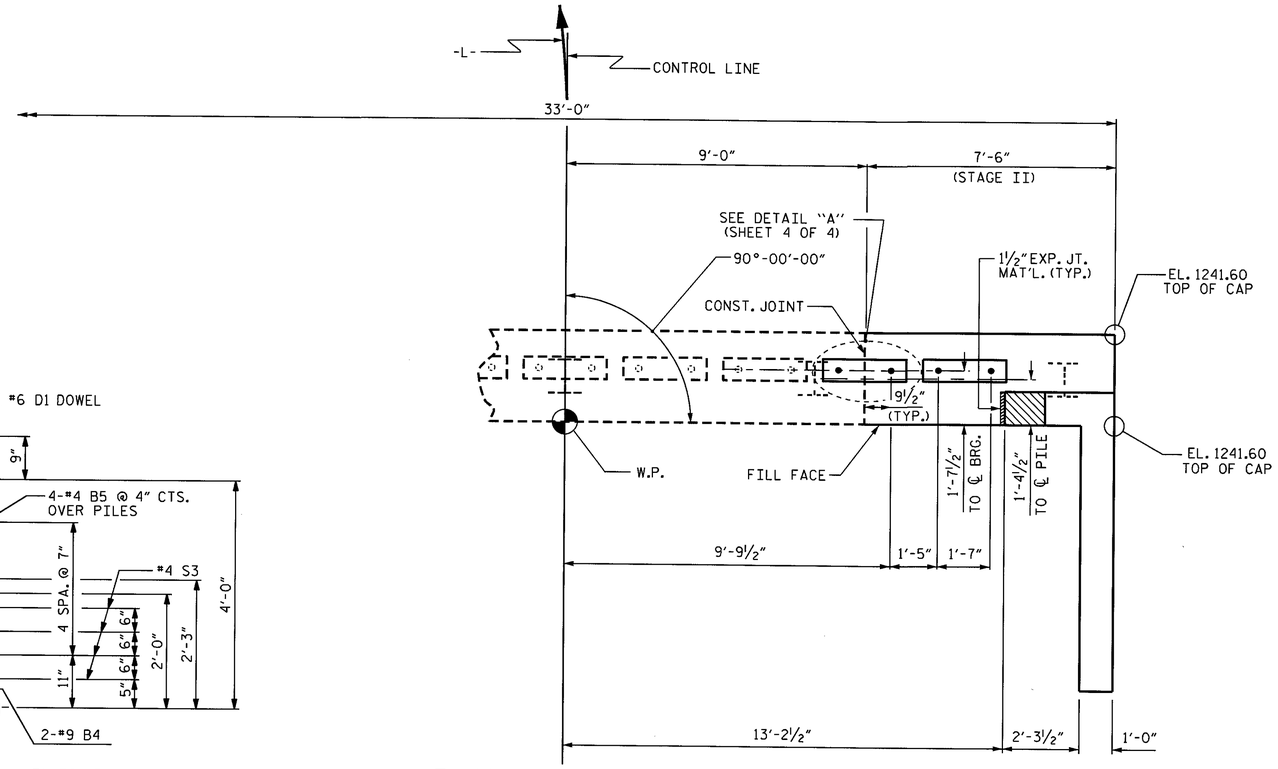

PLAN (STAGE II)

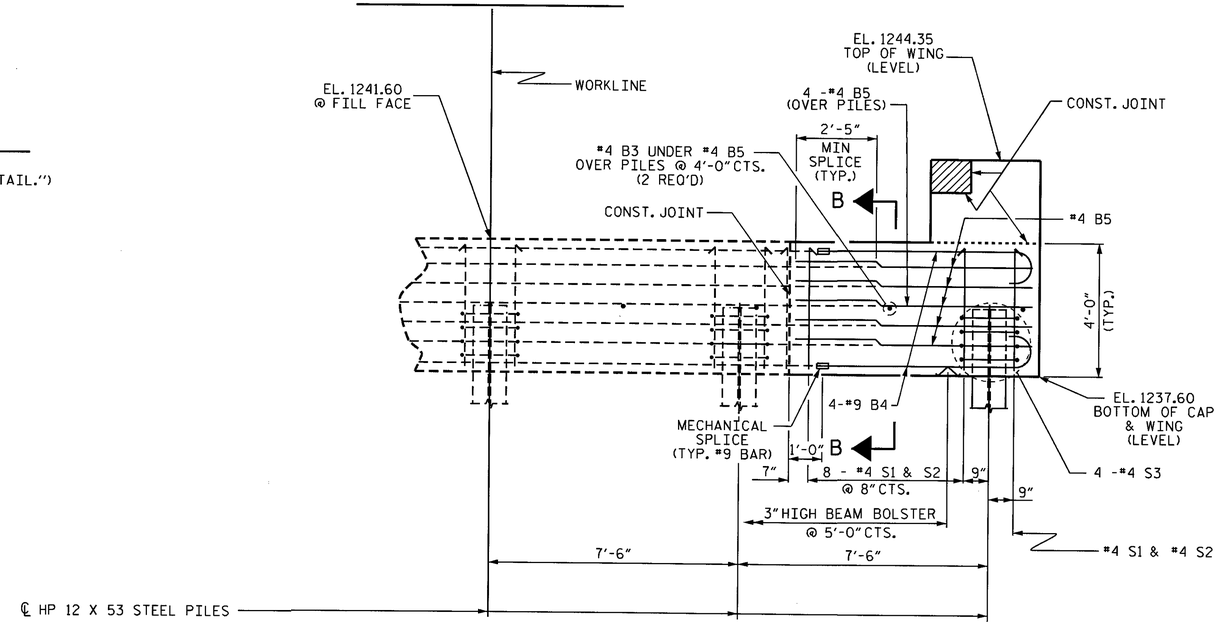

ELEVATION (STAGE II)

WINGS NOT SHOWN FOR CLARITY.
CONCRETE COLLARS FOR STEEL PILES NOT SHOWN IN PLAN AND ELEVATION VIEWS FOR CLARITY.
SEE "CORROSION PROTECTION FOR STEEL PILES DETAIL", SHEET 4 OF 4.

NOTES

STIRRUPS IN CAP MAY BE SHIFTED AS NECESSARY TO CLEAR DOWELS.

THE CONCRETE IN THE SHADED AREA OF THE WING SHALL BE POURED AFTER THE VERTICAL CONCRETE BARRIER RAIL IS CAST IF SLIP FORMING IS USED.

FOR PILE SPLICE DETAILS, SEE SHEET 4 OF 4.

FOR WING DETAILS, SEE SHEET 3 OF 4.

PROJECT NO. BD-5111AC
WILKES COUNTY
STATION: 11+89.13 -L-

SHEET 2 OF 4

STATE OF NORTH CAROLINA
DEPARTMENT OF TRANSPORTATION
RALEIGH

SUBSTRUCTURE

END BENT #1
STAGE II

NORTH CAROLINA PROFESSIONAL SEAL 15825 ENGINEER BRUCE D. KLAPPENBACH
3-18-2014

REVISIONS						SHEET NO.
NO.	BY:	DATE:	NO.	BY:	DATE:	S-13
1			3			TOTAL SHEETS
2			4			22

ASSEMBLED BY :	W DEBREW	DATE :	2/14
CHECKED BY :	H. T. BARBOUR	DATE :	2-14
DRAWN BY : WJH	12/11		
CHECKED BY : AAC	12/11		

18-MAR-2014 12:41
R:\Structures\Plans\wdebrew\Microstation\BD-5111AC_SD_DE_Sub.dgn
bklappenbach

STD. NO. EB_27_90S4

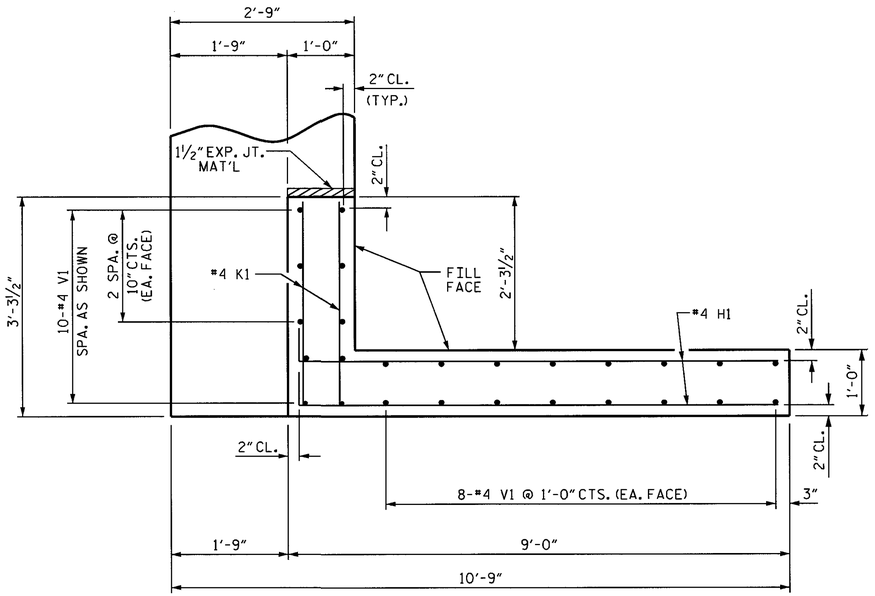

PLAN OF WING (W1)

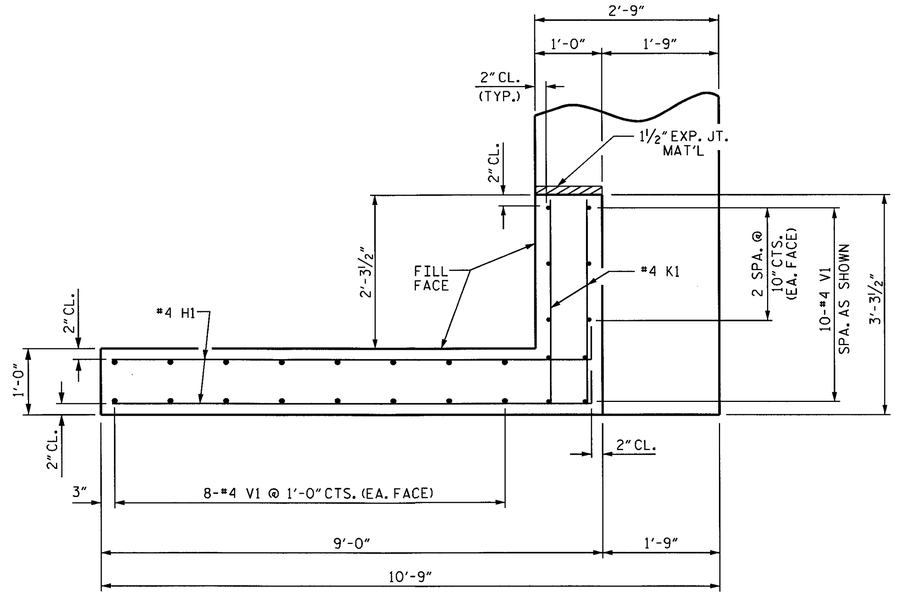

PLAN OF WING (W2)

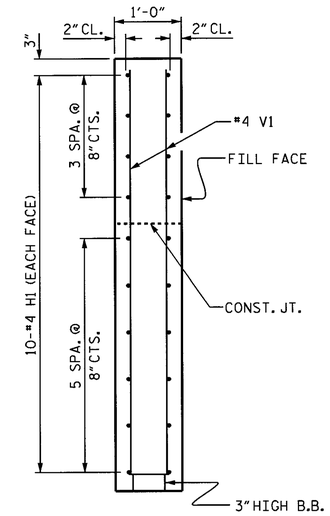

SECTION X-X

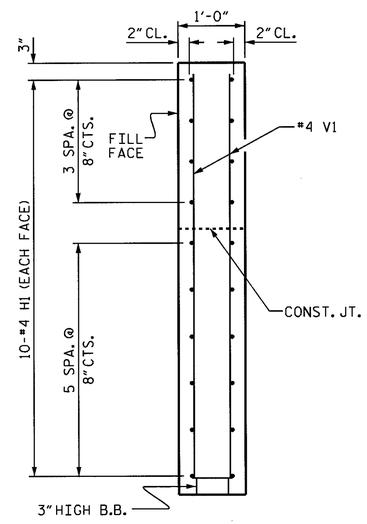

SECTION Y-Y

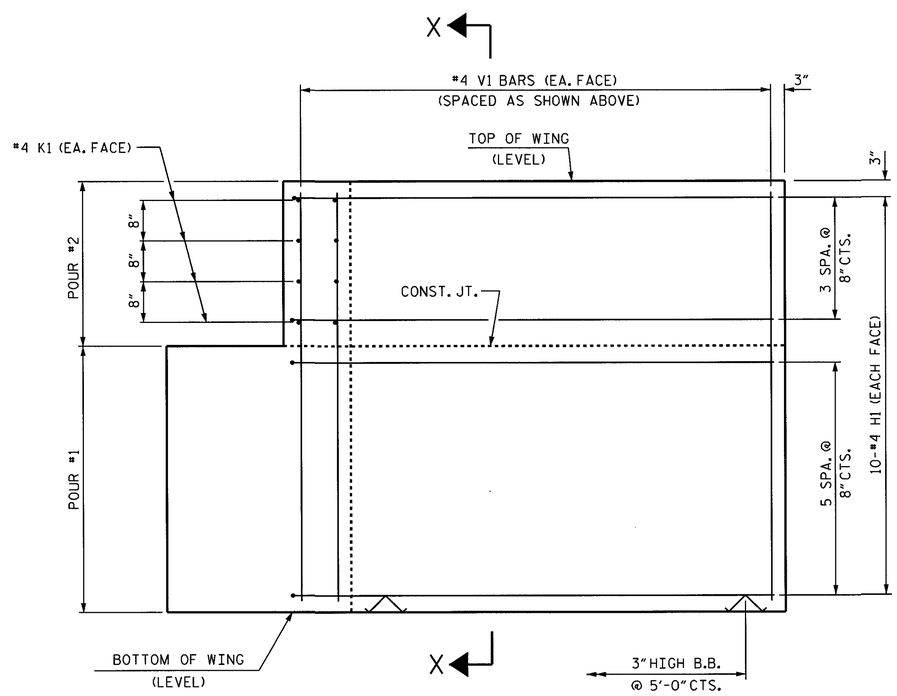

ELEVATION OF WING (W1)

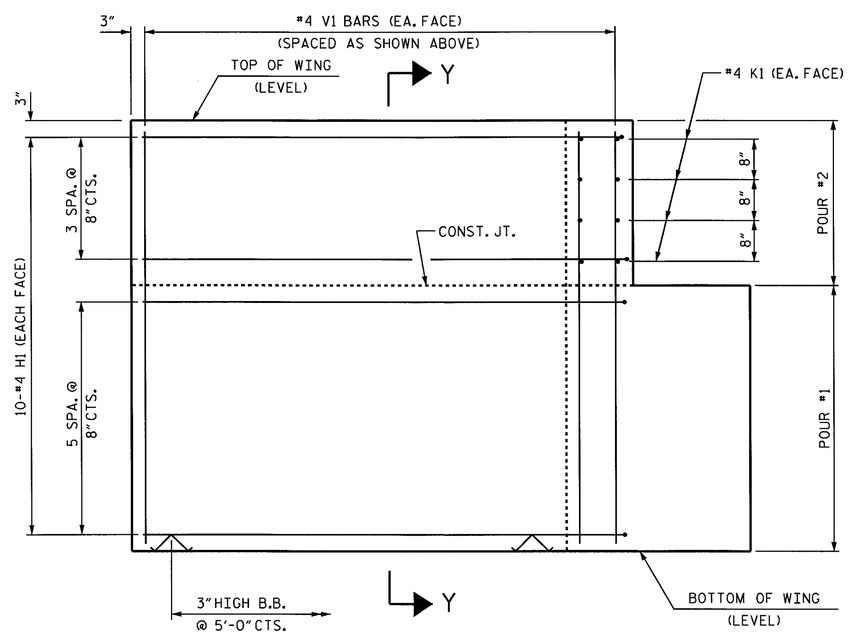

ELEVATION OF WING (W2)

WING DETAILS

PROJECT NO. BD-5111AC

WILKES COUNTY

STATION: 11+89.13 -L-

SHEET 3 OF 4

STATE OF NORTH CAROLINA
DEPARTMENT OF TRANSPORTATION
RALEIGH

SUBSTRUCTURE

END BENT #1
WING DETAILS

NORTH CAROLINA PROFESSIONAL SEAL 19825 ENGINEER BRUCE D. KLAPPENBACH
3-18-2014

REVISIONS						SHEET NO.
NO.	BY:	DATE:	NO.	BY:	DATE:	S-14
1			3			TOTAL SHEETS
2			4			22

ASSEMBLED BY :	W DEBREW	DATE :	2-14
CHECKED BY :	H. T. BARBOUR	DATE :	2-14
DRAWN BY :	WJH	12/11	
CHECKED BY :	AAC	12/11	

18-MAR-2014 12:41
R:\Structures\Plans\wdebrew\Microstation\BD-5111AC_SD_DE_Sub.dgn
bklappenbach

STD. NO. EB_27_90S4

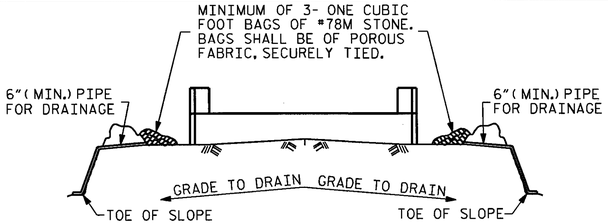

BAGGED STONE AND PIPE SHALL BE PLACED IMMEDIATELY AFTER COMPLETION OF END BENT EXCAVATION. PIPE MAY BE EITHER CONCRETE, CORRUGATED STEEL, CORRUGATED ALUMINUM ALLOY, OR CORRUGATED PLASTIC. PERFORATED PIPE WILL NOT BE ALLOWED.

BAGGED STONE SHALL REMAIN IN PLACE UNTIL THE ENGINEER DIRECTS THAT IT BE REMOVED. THE CONTRACTOR SHALL REMOVE AND DISPOSE OF SILT ACCUMULATIONS AT BAGGED STONE WHEN SO DIRECTED BY THE ENGINEER. BAGS SHALL BE REMOVED AND REPLACED WHENEVER THE ENGINEER DETERMINES THAT THEY HAVE DETERIORATED AND LOST THEIR EFFECTIVENESS.

NO SEPARATE PAYMENT WILL BE MADE FOR THIS WORK AND THE ENTIRE COST OF THIS WORK SHALL BE INCLUDED IN THE UNIT CONTRACT PRICE BID FOR THE SEVERAL PAY ITEMS.

TEMPORARY DRAINAGE AT END BENT

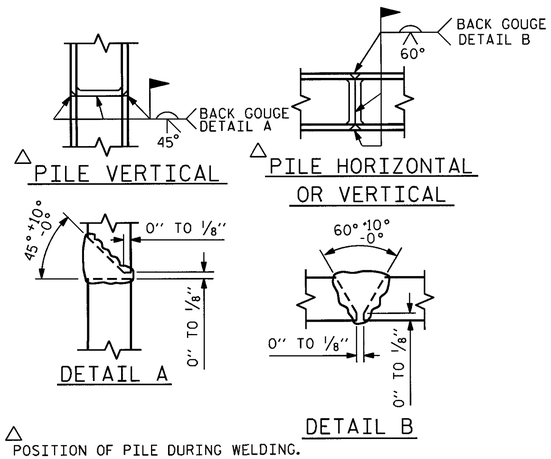

△ POSITION OF PILE DURING WELDING.

PILE SPLICE DETAILS

BAR TYPES

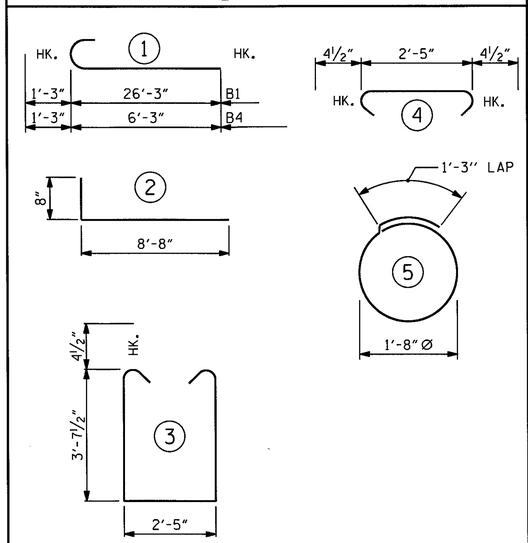

ALL BAR DIMENSIONS ARE OUT TO OUT.

BILL OF MATERIAL
END BENT #1 - STAGE I

BAR	NO.	SIZE	TYPE	LENGTH	WEIGHT
B1	8	#9	1	27'-6"	748
B2	14	#4	STR	27'-11"	261
B3	7	#4	STR	2'-5"	11
D1	15	#6	STR	1'-6"	34
H1	20	#4	2	9'-4"	125
K1	8	#4	STR	2'-11"	16
S1	33	#4	3	10'-5"	230
S2	33	#4	4	3'-2"	70
S3	16	#4	5	6'-6"	69
V1	26	#4	STR	6'-2"	107

REINFORCING STEEL 1671 LBS.

CLASS A CONCRETE BREAKDOWN (STAGE I)

POUR #1 CAP, LOWER PART OF WING & COLLARS 12.3 C.Y.

POUR #2 UPPER PART OF WING 1.2 C.Y.

STAGE I TOTAL CLASS A CONCRETE 13.5 C.Y.

(STAGE I)

HP 12 X 53 STEEL PILES
NO: 4 LIN. FT.= 120

BILL OF MATERIAL
END BENT #1 STAGE II

BAR	NO.	SIZE	TYPE	LENGTH	WEIGHT
B3	2	#4	STR	2'-5"	3
B4	8	#9	1	7'-6"	204
B5	14	#4	STR	7'-2"	67
D1	3	#6	STR	1'-6"	7
H1	20	#4	2	9'-4"	125
K1	8	#4	STR	2'-11"	16
S1	9	#4	3	10'-5"	63
S2	9	#4	4	3'-2"	19
S3	4	#4	5	6'-6"	17
V1	26	#4	STR	6'-2"	107

REINFORCING STEEL 628 LBS.

CLASS A CONCRETE BREAKDOWN (STAGE II)

POUR #1 CAP, LOWER PART OF WINGS & COLLARS 4.4 C.Y.

POUR #2 UPPER PART OF WINGS 1.2 C.Y.

STAGE II TOTAL CLASS A CONCRETE 5.6 C.Y.

(STAGE II)

HP 12 X 53 STEEL PILES
NO: 1 LIN. FT.= 30

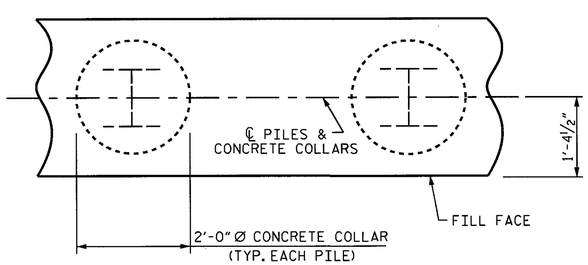

PLAN

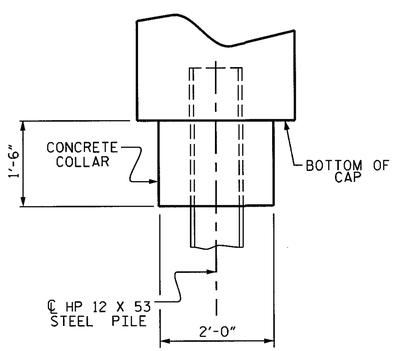

ELEVATION

CORROSION PROTECTION FOR STEEL PILES DETAIL

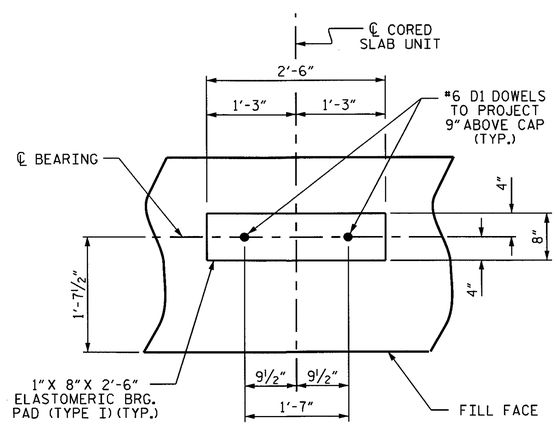

DETAIL "A"

PROJECT NO. BD-5111AC
WILKES COUNTY
STATION: 11+89.13 -L-

SHEET 4 OF 4

STATE OF NORTH CAROLINA
DEPARTMENT OF TRANSPORTATION
RALEIGH

SUBSTRUCTURE
END BENT #1
DETAILS
STAGES I & II

REVISIONS						SHEET NO.
NO.	BY:	DATE:	NO.	BY:	DATE:	S-15
1			3			TOTAL SHEETS
2			4			22

NORTH CAROLINA PROFESSIONAL SEAL 15825 ENGINEER BRIGITTE D. KLAPPENBACH
3-18-2014

ASSEMBLED BY : W DEBREW		DATE :	2-14
CHECKED BY : H. T. BARBOUR		DATE :	2-14
DRAWN BY : WJH	12/11		
CHECKED BY : AAC	12/11		

18-MAR-2014 12:41
R:\Structures\Plans\wdebrew\Microstation\BD-5111AC_SD_DE_Sub.dgn
bklappenbach

STD. NO. EB_27_90S4

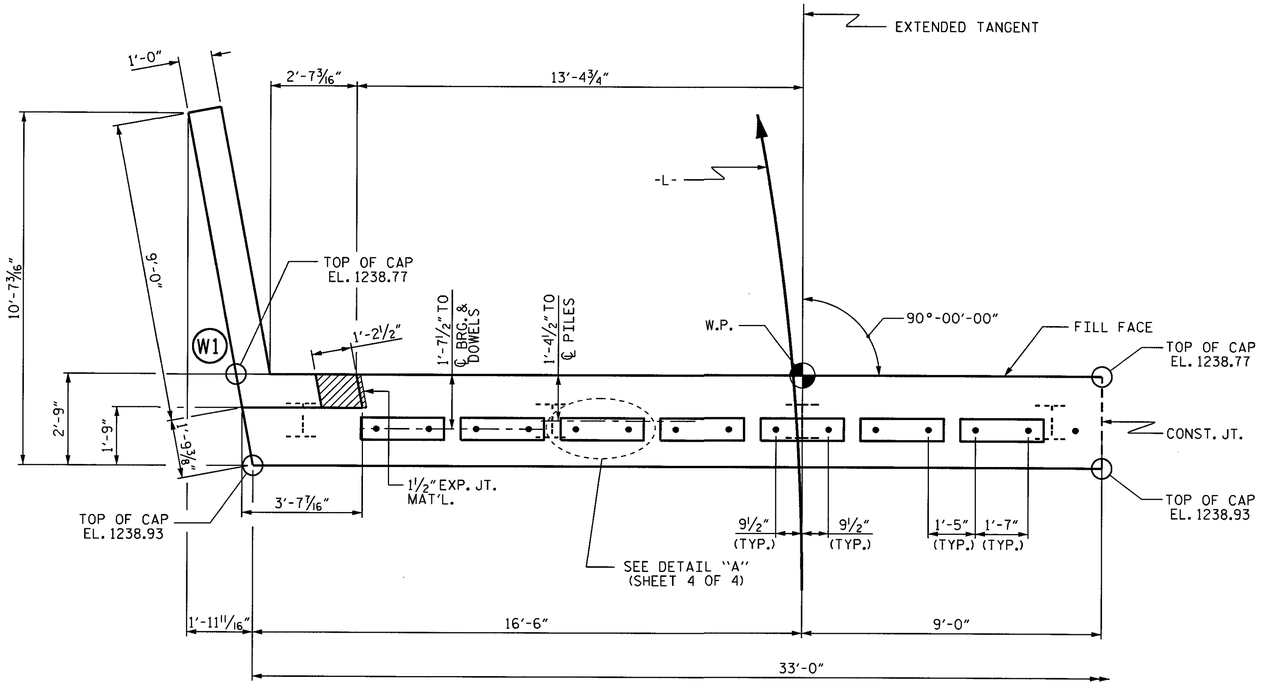

PLAN (STAGE 1)

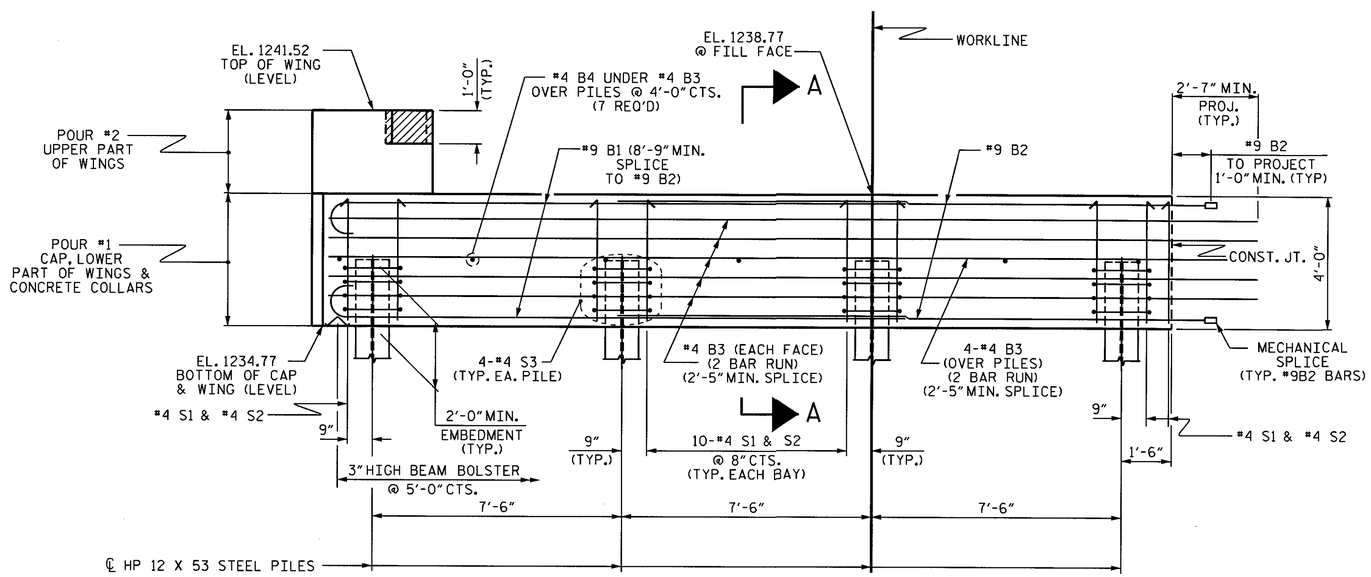

ELEVATION (STAGE I)

WING NOT SHOWN FOR CLARITY.
CONCRETE COLLARS FOR STEEL PILES NOT SHOWN IN PLAN AND ELEVATION VIEWS FOR CLARITY.
SEE "CORROSION PROTECTION FOR STEEL PILES DETAIL", SHEET 4 OF 4.

NOTES

STIRRUPS IN CAP MAY BE SHIFTED AS NECESSARY TO CLEAR DOWELS.

THE CONCRETE IN THE SHADED AREA OF THE WING SHALL BE POURED AFTER THE VERTICAL CONCRETE BARRIER RAIL IS CAST IF SLIP FORMING IS USED.

FOR PILE SPLICE DETAILS, SEE SHEET 4 OF 4.

FOR WING DETAILS, SEE SHEET 3 OF 4.

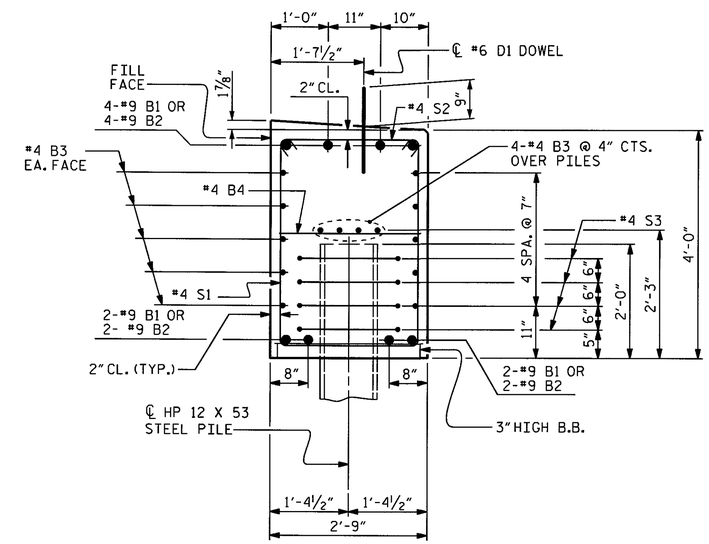

SECTION A-A

(CONCRETE COLLAR NOT SHOWN FOR CLARITY.
SEE "CORROSION PROTECTION FOR STEEL PILES DETAIL.")

PROJECT NO. BD-5111AC

WILKES COUNTY

STATION: 11+89.13-L-

SHEET 1 OF 4

STATE OF NORTH CAROLINA
DEPARTMENT OF TRANSPORTATION
RALEIGH

SUBSTRUCTURE

END BENT #2
STAGE I

NORTH CAROLINA PROFESSIONAL SEAL 15825 ENGINEER BRUCE D. KLAPPENBACH
3-18-2014

REVISIONS						SHEET NO.
NO.	BY:	DATE:	NO.	BY:	DATE:	S-16
1			3			TOTAL SHEETS
2			4			22

DRAWN BY : H. T. BARBOUR DATE : 2-17-14
CHECKED BY : S. B. WILLIAMS DATE : 2-24-14
DESIGN ENGINEER OF RECORD: B. D. KLAPPENBACH DATE : 2-14

18-MAR-2014 12:41
R:\Structures\Plans\tbarbour\Microstation\BD5111AC_SD_E*2.dgn
bklappenbach

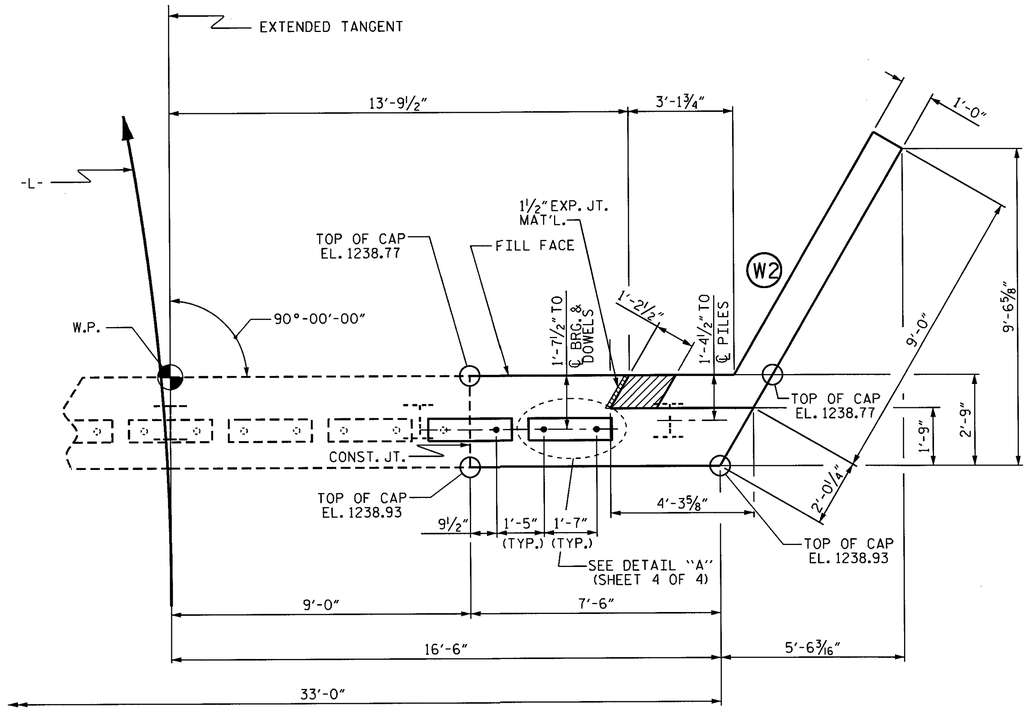

PLAN (STAGE II)

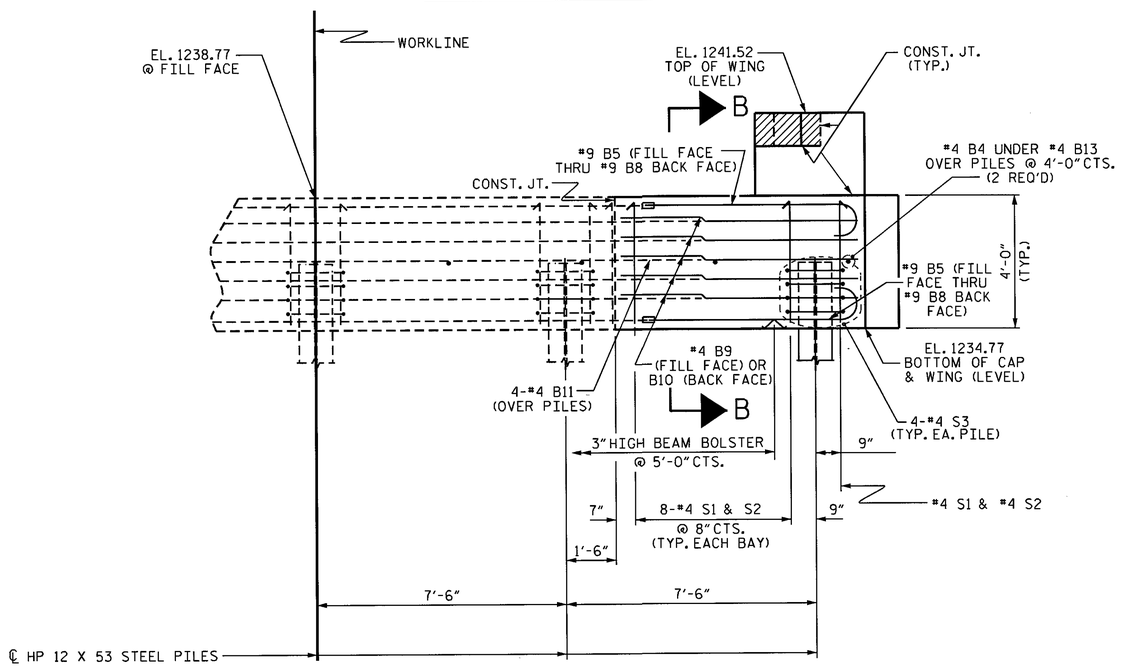

ELEVATION (STAGE II)

WING NOT SHOWN FOR CLARITY.
CONCRETE COLLARS FOR STEEL PILES NOT SHOWN IN PLAN AND ELEVATION VIEWS FOR CLARITY.
SEE "CORROSION PROTECTION FOR STEEL PILES DETAIL", SHEET 4 OF 4.

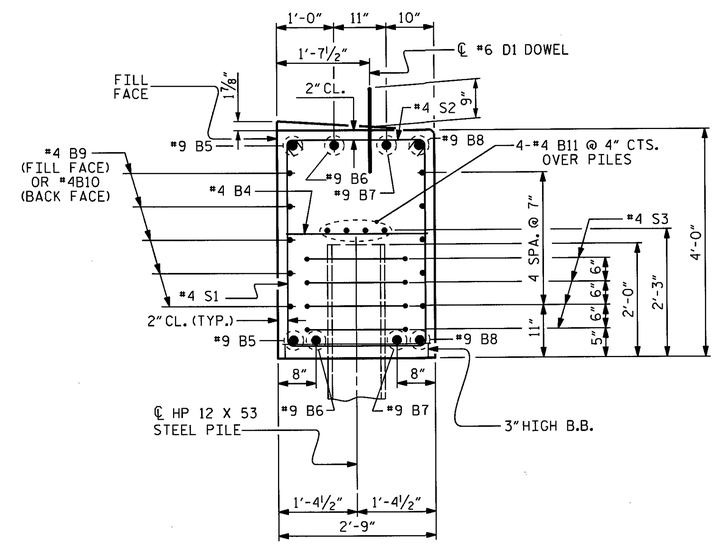

SECTION B-B

(CONCRETE COLLAR NOT SHOWN FOR CLARITY.
SEE "CORROSION PROTECTION FOR STEEL PILES DETAIL.")

PROJECT NO. BD-5111AC
WILKES COUNTY
STATION: 11+89.13-L-

SHEET 2 OF 4

STATE OF NORTH CAROLINA
DEPARTMENT OF TRANSPORTATION
RALEIGH

SUBSTRUCTURE

END BENT #2
STAGE II

NORTH CAROLINA PROFESSIONAL SEAL 15825 ENGINEER B. D. KLAPPENBACH
3-26-2014

REVISIONS						SHEET NO.
NO.	BY:	DATE:	NO.	BY:	DATE:	S-17
1			3			TOTAL SHEETS
2			4			22

DRAWN BY :	H. T. BARBOUR	DATE :	2-17-14
CHECKED BY :	S. B. WILLIAMS	DATE :	2-24-14
DESIGN ENGINEER OF RECORD:	B. D. KLAPPENBACH	DATE :	2-14

26-MAR-2014 13:49
R:\Structures\Plans\tbarbour\Microstation\BD5111AC_SD_E*2.dgn
bklappenbach

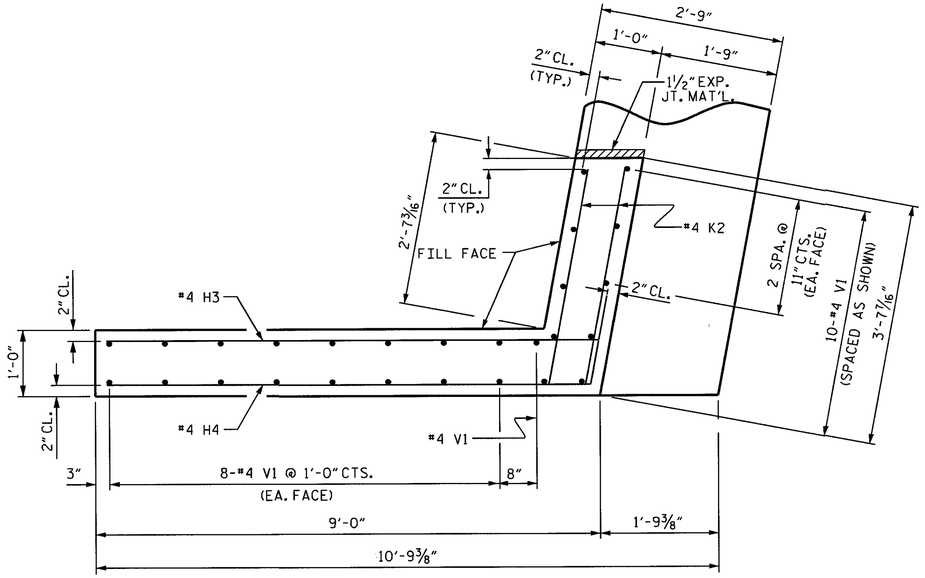

PLAN OF WING (W1)

(STAGE I)

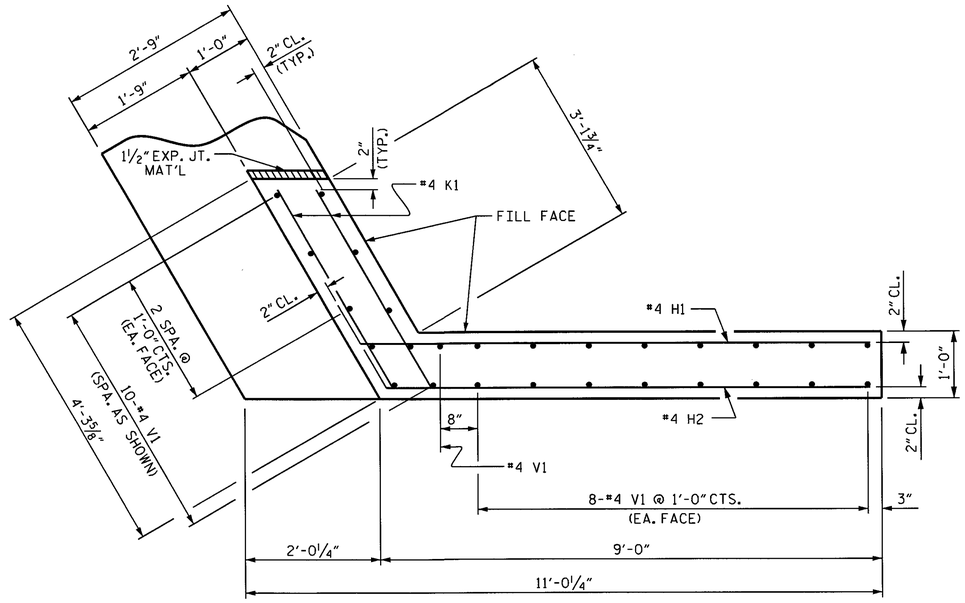

PLAN OF WING (W2)

(STAGE II)

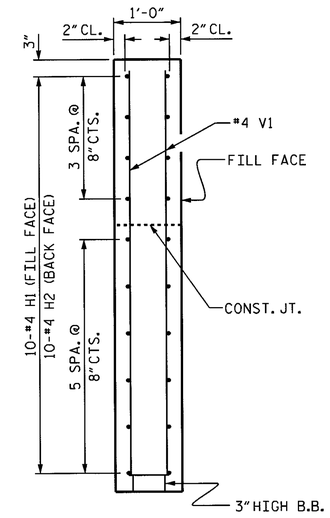

SECTION X-X

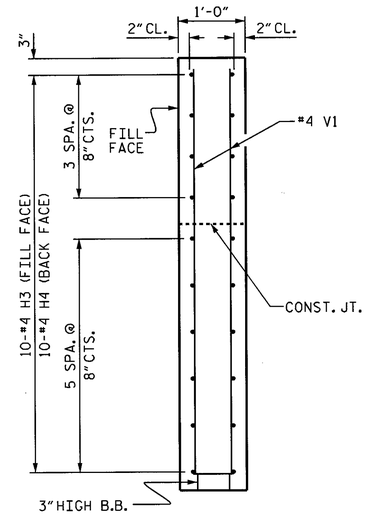

SECTION Y-Y

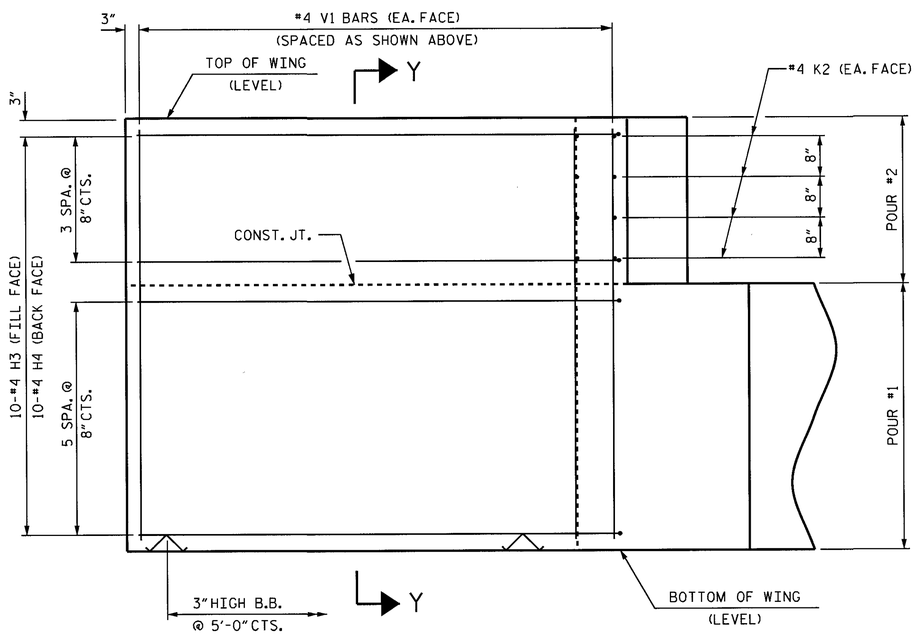

ELEVATION OF WING (W1)

(STAGE I)

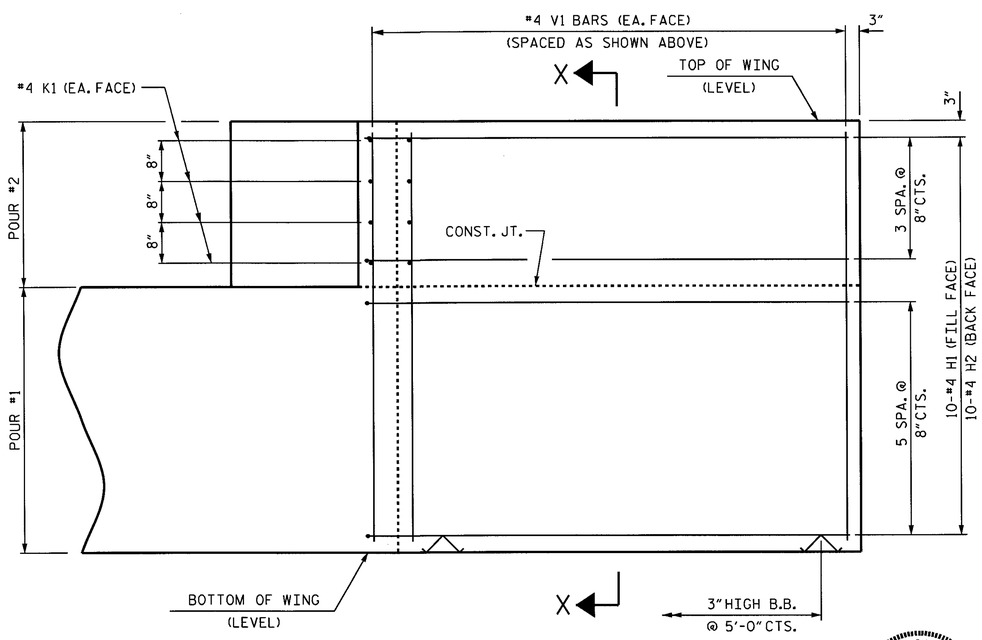

ELEVATION OF WING (W2)

(STAGE II)

WING DETAILS

PROJECT NO. BD-5111AC

WILKES COUNTY

STATION: 11+89.13-L-

SHEET 3 OF 4

STATE OF NORTH CAROLINA
DEPARTMENT OF TRANSPORTATION
RALEIGH

SUBSTRUCTURE
END BENT #2
WING DETAILS

NORTH CAROLINA PROFESSIONAL SEAL 15825 ENGINEER BRUCE D. KLAPPENBACH 3-18-2014

REVISIONS						SHEET NO.
NO.	BY:	DATE:	NO.	BY:	DATE:	S-18
1			3			TOTAL SHEETS
2			4			22

DRAWN BY : H. T. BARBOUR DATE : 2-18-14
CHECKED BY : S. B. WILLIAMS DATE : 2-24-14
DESIGN ENGINEER OF RECORD: B. D. KLAPPENBACH DATE : 2-14

18-MAR-2014 12:41
R:\Structures\Plans\tbarbour\Microstation\BD5111AC_SD_E*2.dgn
bklappenbach

STD. NO. EB_27_60S4

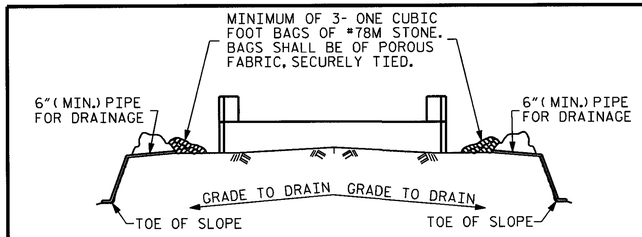

BAGGED STONE AND PIPE SHALL BE PLACED IMMEDIATELY AFTER COMPLETION OF END BENT EXCAVATION. PIPE MAY BE EITHER CONCRETE, CORRUGATED STEEL, CORRUGATED ALUMINUM ALLOY, OR CORRUGATED PLASTIC. PERFORATED PIPE WILL NOT BE ALLOWED.

BAGGED STONE SHALL REMAIN IN PLACE UNTIL THE ENGINEER DIRECTS THAT IT BE REMOVED. THE CONTRACTOR SHALL REMOVE AND DISPOSE OF SILT ACCUMULATIONS AT BAGGED STONE WHEN SO DIRECTED BY THE ENGINEER. BAGS SHALL BE REMOVED AND REPLACED WHENEVER THE ENGINEER DETERMINES THAT THEY HAVE DETERIORATED AND LOST THEIR EFFECTIVENESS.

NO SEPARATE PAYMENT WILL BE MADE FOR THIS WORK AND THE ENTIRE COST OF THIS WORK SHALL BE INCLUDED IN THE UNIT CONTRACT PRICE BID FOR THE SEVERAL PAY ITEMS.

TEMPORARY DRAINAGE AT END BENT

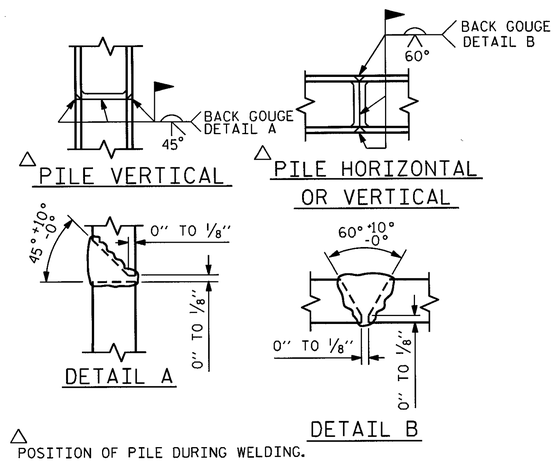

△ POSITION OF PILE DURING WELDING.

PILE SPLICE DETAILS

BAR TYPES

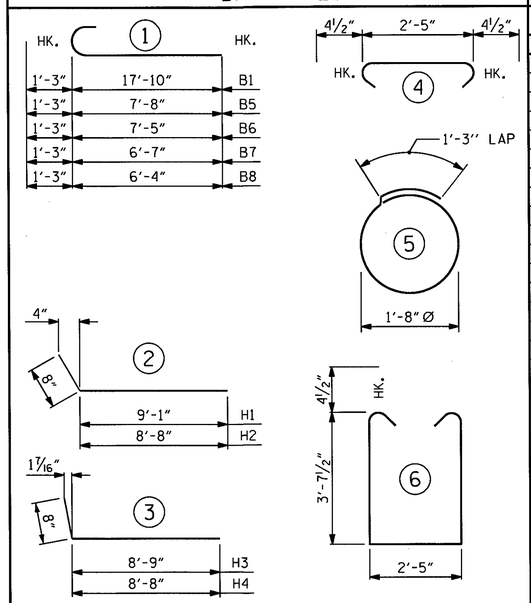

ALL BAR DIMENSIONS ARE OUT TO OUT.

BILL OF MATERIAL
END BENT #2 - STAGE I

BAR	NO.	SIZE	TYPE	LENGTH	WEIGHT
B1	8	#9	1	19'-1"	519
B2	8	#9	STR	17'-10"	485
B3	28	#4	STR	15'-6"	290
B4	7	#4	STR	2'-5"	11
D1	15	#6	STR	1'-6"	34
H3	10	#4	3	9'-5"	63
H4	10	#4	3	9'-4"	62
K2	8	#4	STR	3'-3"	17
S1	33	#4	6	10'-5"	230
S2	33	#4	4	3'-2"	70
S3	16	#4	5	6'-6"	69
V1	27	#4	STR	6'-4"	114

REINFORCING STEEL 1964 LBS.

CLASS A CONCRETE BREAKDOWN (STAGE I)

POUR #1 CAP, LOWER PART OF WINGS & COLLARS 12.3 C.Y.

POUR #2 UPPER PART OF WING 1.2 C.Y.

TOTAL CLASS A CONCRETE 13.5 C.Y.

STAGE I
HP 12 X 53 STEEL PILES
NO: 4 LIN. FT.= 40

BILL OF MATERIAL
END BENT #2 STAGE II

BAR	NO.	SIZE	TYPE	LENGTH	WEIGHT
B4	2	#4	STR	2'-5"	3
B5	2	#9	1	8'-11"	61
B6	2	#9	1	8'-8"	59
B7	2	#9	1	7'-10"	53
B8	2	#9	1	7'-7"	52
B9	5	#4	STR	8'-7"	29
B10	5	#4	STR	7'-3"	24
B11	4	#4	STR	7'-6"	20
D1	3	#6	STR	1'-6"	7
H1	10	#4	2	9'-9"	65
H2	10	#4	2	9'-4"	62
K1	8	#4	STR	3'-11"	21
S1	9	#4	6	10'-5"	63
S2	9	#4	4	3'-2"	19
S3	4	#4	5	6'-6"	17
V1	27	#4	STR	6'-4"	114

REINFORCING STEEL 669 LBS.

CLASS A CONCRETE BREAKDOWN (STAGE II)

POUR #1 CAP, LOWER PART OF WING & COLLAR 4.8 C.Y.

POUR #2 UPPER PART OF WING 1.2 C.Y.

TOTAL CLASS A CONCRETE 6.0 C.Y.

STAGE II
HP 12 X 53 STEEL PILES
NO: 1 LIN. FT.= 10

PILE EXCAVATION IN SOIL LIN. FT.= 17
PILE EXCAVATION NOT IN SOIL LIN. FT.= 30

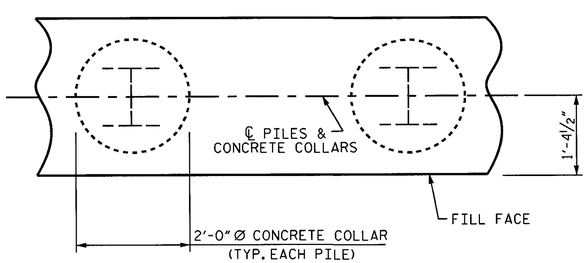

PLAN

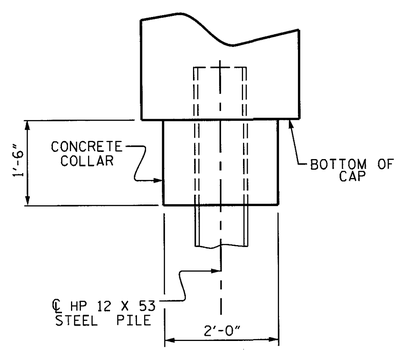

ELEVATION

CORROSION PROTECTION FOR STEEL PILES DETAIL

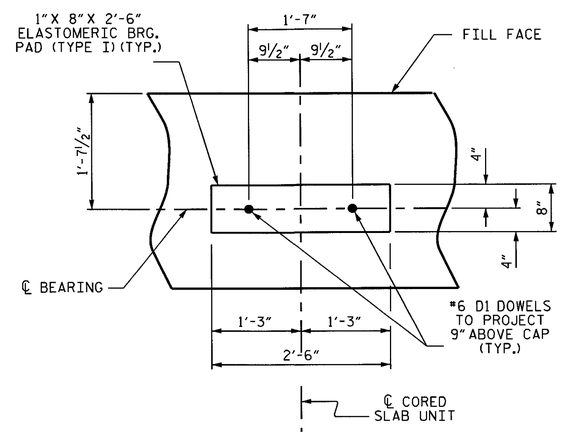

DETAIL "A"

PROJECT NO. BD-5111AC
WILKES COUNTY
STATION: 11+89.13 -L-

SHEET 4 OF 4

STATE OF NORTH CAROLINA
DEPARTMENT OF TRANSPORTATION
RALEIGH

SUBSTRUCTURE
END BENT #2
DETAILS
STAGES I & II

NORTH CAROLINA PROFESSIONAL SEAL 15825 ENGINEER BRUCE D. KLAPPENBACH
3-18-2014

REVISIONS						SHEET NO.
NO.	BY:	DATE:	NO.	BY:	DATE:	S-19
1			3			TOTAL SHEETS
2			4			22

DRAWN BY : H. T. BARBOUR DATE : 2-18-14
CHECKED BY : S. B. WILLIAMS DATE : 2-25-14
DESIGN ENGINEER OF RECORD: B. D. KLAPPENBACH DATE : 2-14

18-MAR-2014 12:41
R:\Structures\Plans\tbarbour\Microstation\BD5111AC_SD_E*2.dgn
bklappenbach

STD. NO. EB_27_90S4

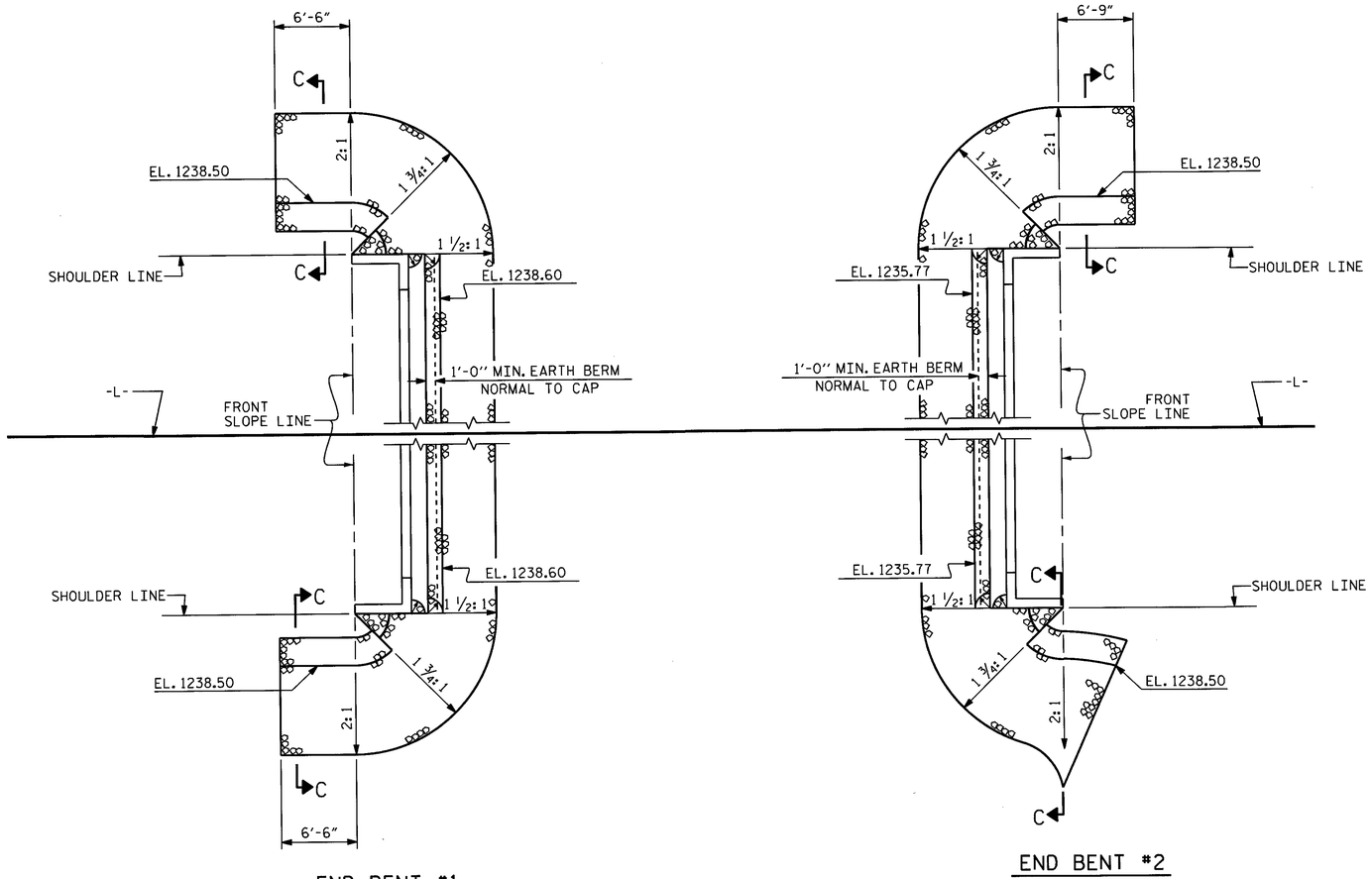

PLAN

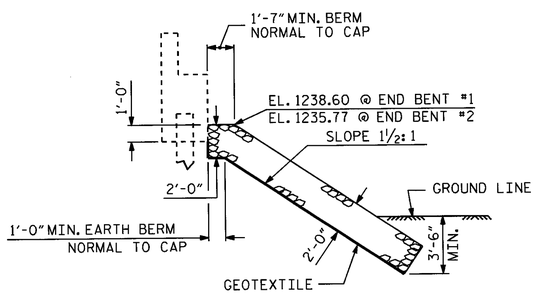

℄ SECTION

BERM RIP RAPPED

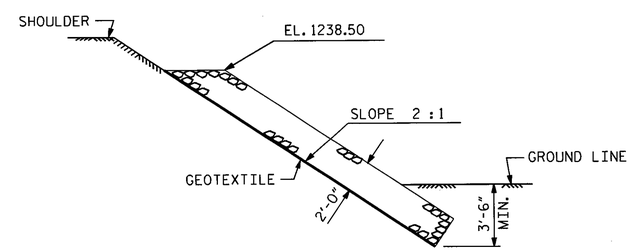

SECTION C-C

ESTIMATED QUANTITIES		
BRIDGE @ STA. 11+89.13-L-	RIP RAP CLASS II (2'-0" THICK)	GEOTEXTILE FOR DRAINAGE
	TONS	SQUARE YARDS
END BENT 1	115	130
END BENT 2	50	55
TOTAL	165	185

PROJECT NO. BD-5111AC

WILKES COUNTY

STATION: 11+89.13-L-

STATE OF NORTH CAROLINA
DEPARTMENT OF TRANSPORTATION
RALEIGH

RIP RAP DETAILS

NORTH CAROLINA PROFESSIONAL SEAL 15825 ENGINEER BRYCE D. KLAPPENBACH
3-18-2014

REVISIONS							SHEET NO.
NO.	BY:	DATE:	NO.	BY:	DATE:		S-20
1			3				TOTAL SHEETS
2			4				22

ASSEMBLED BY : H. T. BARBOUR		DATE : 1-14-14	
CHECKED BY : B. D. KLAPPENBACH		DATE : 2-14	
DRAWN BY : REK 1/84	REV. 5/1/06R	TLA/GM	
CHECKED BY : RDU 1/84	REV. 10/1/11	MAA/GM	
	REV. 12/21/11	MAA/GM	

STD. NO. RR1 (Sht 2)

18-MAR-2014 12:41
R:\Structures\Plans\tbarbour\Microstation\BD5111AC_SD_RR.dgn
RKlappenbach

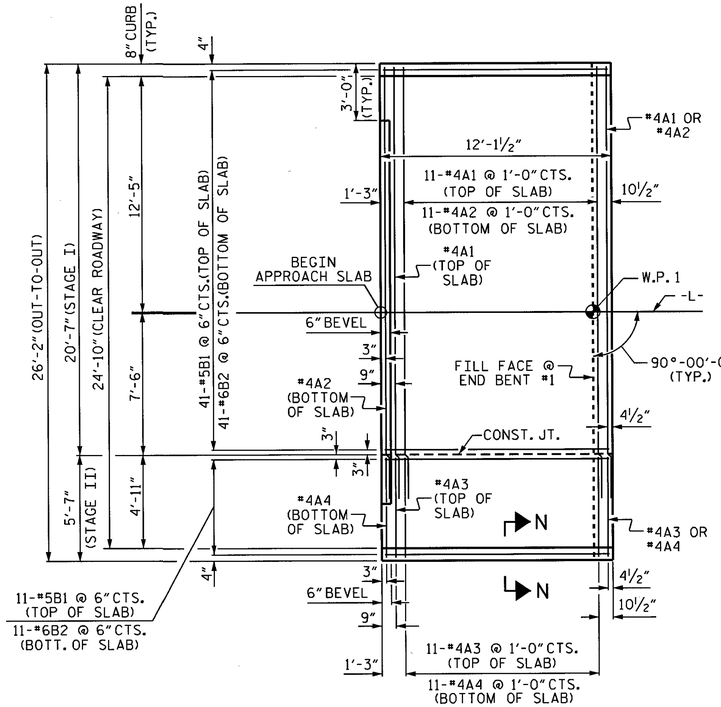

PLAN @ END BENT #1

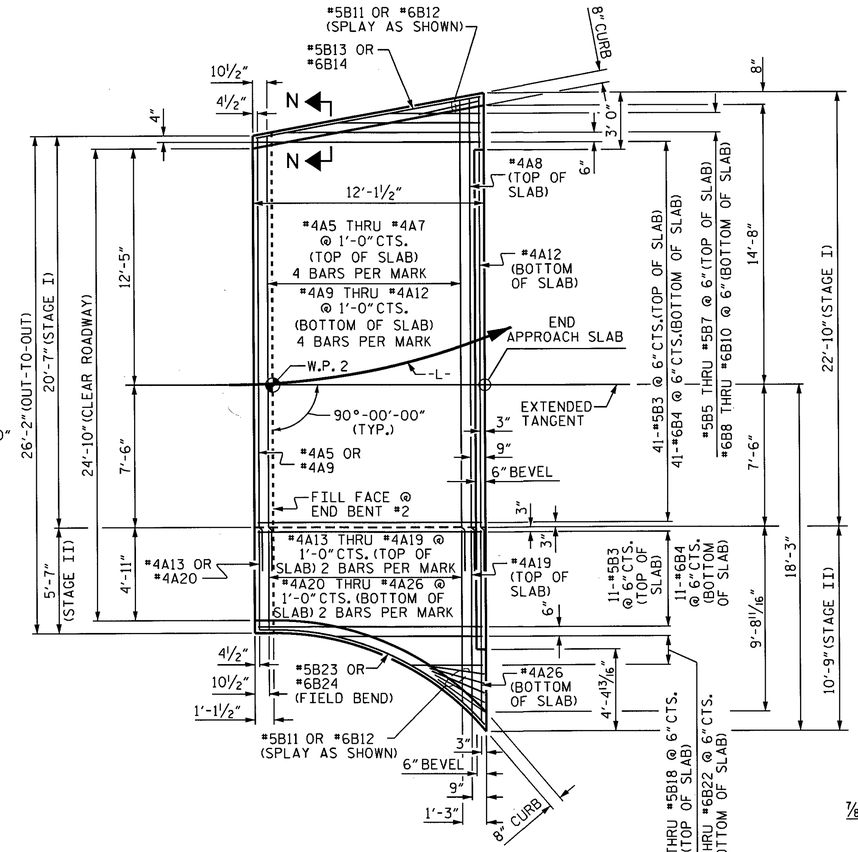

PLAN @ END BENT #2

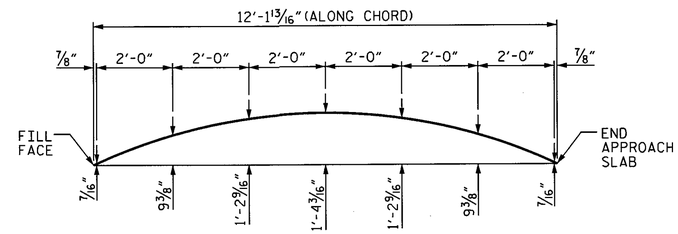

ARC OFFSETS

APPROACH SLAB @ END BENT #2
STAGE II

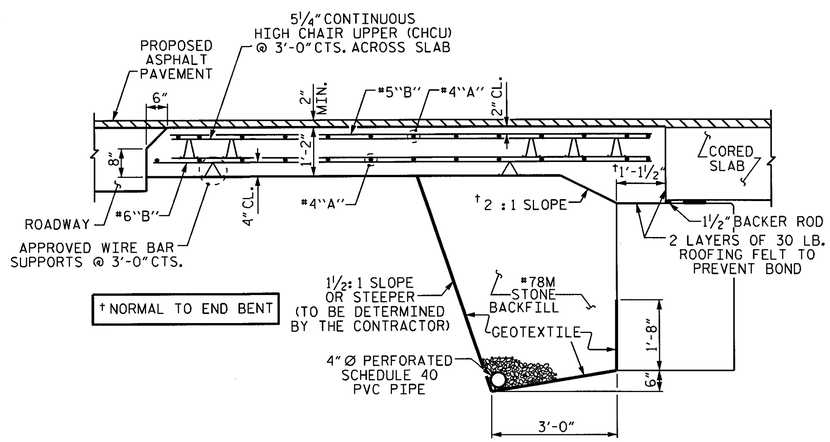

SECTION THRU SLAB

PROJECT NO. BD-5111AC

WILKES COUNTY

STATION: 11+89.13 -L-

SHEET 1 OF 2

STATE OF NORTH CAROLINA
DEPARTMENT OF TRANSPORTATION
RALEIGH

BRIDGE APPROACH SLAB FOR PRESTRESSED CONCRETE CORED SLAB UNIT

NORTH CAROLINA PROFESSIONAL SEAL 15826 ENGINEER B. D. KLAPPENBACH
3-26-2014

REVISIONS						SHEET NO.
NO.	BY:	DATE:	NO.	BY:	DATE:	S-21
1			3			TOTAL SHEETS
2			4			22

DRAWN BY : H. T. BARBOUR DATE : 2-14
CHECKED BY : B. D. KLAPPENBACH DATE : 2-14

26-MAR-2014 13:53
R:\Structures\Plans\wdebrew\Microstation\BD-5111AC_SD_DE_Super.dgn
bklappenbach

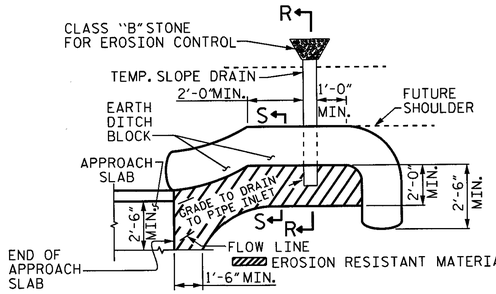

NOTE: IMMEDIATELY AFTER THE CONSTRUCTION OF THE APPROACH SLAB, THE CONTRACTOR SHALL PROVIDE TEMPORARY BERM AND SLOPE DRAIN. CONTRACTOR SHALL GRADE TO PIPE INLET AND PROVIDE EROSION RESISTANT MATERIAL AS SHOWN. THE EROSION RESISTANT MATERIAL SHALL BE EITHER 1) ASPHALT PLANT MIX, TYPE 1 OR TYPE 2, MIN. 2" DEPTH, 2) EROSION CONTROL MAT, OR 3) CONCRETE, AS DIRECTED BY THE ENGINEER. THE SLOPE DRAIN SHALL CONSIST OF A NON-PERFORATED TEMPORARY DRAINAGE PIPE, 12 INCHES IN DIAMETER.

PLAN VIEW

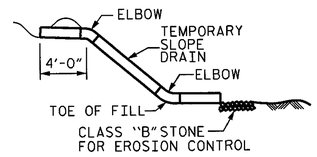

SECTION R-R

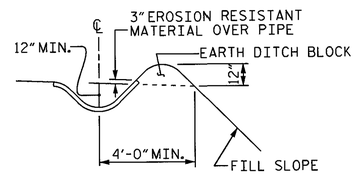

SECTION S-S

TEMPORARY BERM AND SLOPE DRAIN DETAILS

(TO BE USED WHEN SHOULDER BERM GUTTER IS REQUIRED)

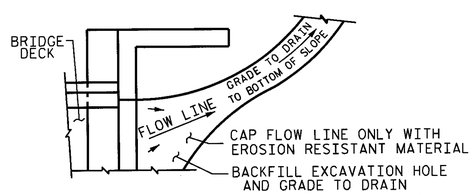

NOTE: IF THE APPROACH SLAB IS NOT CONSTRUCTED IMMEDIATELY AFTER THE BACKFILLING OF THE END BENT EXCAVATION, GRADE TO DRAIN TO THE BOTTOM OF THE SLOPE AND PROVIDE EROSION RESISTANT MATERIAL, SUCH AS FIBERGLASS ROVING OR AS DIRECTED BY THE ENGINEER TO PREVENT SOIL EROSION AND TO PROTECT THE AREA ADJACENT TO THE STRUCTURE. THE CONTRACTOR WILL BE REQUIRED TO REMOVE THESE MATERIALS PRIOR TO CONSTRUCTION OF THE APPROACH SLAB.

TEMPORARY DRAINAGE DETAIL

BILL OF MATERIAL

APPROACH SLAB AT EB #1 (STAGE I)

BAR	NO.	SIZE	TYPE	LENGTH	WEIGHT
* A1	13	#4	STR	22'-7"	196
A2	13	#4	STR	22'-4"	194
* B1	41	#5	STR	11'-3"	481
B2	41	#6	STR	11'-9"	724
REINFORCING STEEL				LBS.	918
* EPOXY COATED REINFORCING STEEL				LBS.	677
CLASS AA CONCRETE				C. Y.	12.8

APPROACH SLAB AT EB #1 (STAGE II)

BAR	NO.	SIZE	TYPE	LENGTH	WEIGHT
* A3	13	#4	STR	5'-3"	46
A4	13	#4	STR	5'-3"	46
* B1	11	#5	STR	11'-3"	129
B2	11	#6	STR	11'-9"	194
REINFORCING STEEL				LBS.	240
* EPOXY COATED REINFORCING STEEL				LBS.	175
CLASS AA CONCRETE				C. Y.	3.5

APPROACH SLAB AT EB #2 (STAGE I)

BAR	NO.	SIZE	TYPE	LENGTH	WEIGHT
* A5	4	#4	STR	22'-8"	61
* A6	4	#4	STR	23'-4"	62
* A7	4	#4	STR	23'-10"	64
* A8	1	#4	STR	24'-6"	16
A9	4	#4	STR	22'-5"	60
A10	4	#4	STR	23'-1"	62
A11	4	#4	STR	23'-7"	63
A12	1	#4	STR	24'-3"	16
* B3	41	#5	STR	11'-3"	481
B4	41	#6	STR	11'-9"	724
* B5	1	#5	STR	10'-1"	11
* B6	1	#5	STR	7'-5"	8
* B7	1	#5	STR	4'-9"	5
B8	1	#6	STR	10'-1"	15
B9	1	#6	STR	7'-5"	11
B10	1	#6	STR	4'-9"	7
* B11	1	#5	STR	3'-0"	3
B12	1	#6	STR	3'-0"	5
* B13	1	#5	STR	11'-11"	12
B14	1	#6	STR	11'-11"	18
REINFORCING STEEL				LBS.	981
* EPOXY COATED REINFORCING STEEL				LBS.	723
CLASS AA CONCRETE				C. Y.	13.6

APPROACH SLAB AT EB #2 (STAGE II)

BAR	NO.	SIZE	TYPE	LENGTH	WEIGHT
* A13	2	#4	STR	5'-3"	7
* A14	2	#4	STR	5'-4"	7
* A15	2	#4	STR	5'-6"	7
* A16	2	#4	STR	6'-0"	8
* A17	2	#4	STR	6'-11"	9
* A18	2	#4	STR	8'-2"	11
* A19	1	#4	STR	10'-0"	7
A20	2	#4	STR	5'-3"	7
A21	2	#4	STR	5'-4"	7
A22	2	#4	STR	5'-6"	7
A23	2	#4	STR	6'-0"	8
A24	2	#4	STR	6'-11"	9
A25	2	#4	STR	8'-2"	11
A26	1	#4	STR	10'-0"	7
* B3	11	#5	STR	11'-3"	129
B4	11	#6	STR	11'-9"	194
* B11	5	#5	STR	3'-0"	16
B12	5	#6	STR	3'-0"	23
* B15	1	#5	STR	7'-3"	8
* B16	1	#5	STR	5'-5"	6
* B17	1	#5	STR	4'-3"	4
* B18	1	#5	STR	3'-3"	3
B19	1	#6	STR	7'-9"	12
B20	1	#6	STR	6'-0"	9
B21	1	#6	STR	4'-9"	7
B22	1	#6	STR	3'-9"	6
* B23	1	#5	STR	13'-1"	14
B24	1	#6	STR	13'-1"	20
REINFORCING STEEL				LBS.	327
* EPOXY COATED REINFORCING STEEL				LBS.	236
CLASS AA CONCRETE				C. Y.	6.0

NOTES

FOR BRIDGE APPROACH FILL INCLUDING GEOTEXTILE, 4" Ø DRAINAGE PIPE, AND #78M STONE BACKFILL, SEE ROADWAY PLANS.

GEOTEXTILE SHALL BE TYPE 1 IN ACCORDANCE WITH THE STANDARD SPECIFICATIONS SECTION 1056.

#78M STONE BACKFILL (CLASS V SELECT MATERIAL) SHALL BE IN ACCORDANCE WITH STANDARD SPECIFICATIONS SECTION 1016.

#78M STONE BACKFILL IS TO BE CONTINUOUS ALONG FILL FACE OF BACKWALL FROM OUTSIDE EDGE TO OUTSIDE EDGE OF APPROACH SLAB.

FOR THE 4" Ø DRAINAGE PIPE OUTLET(S), SEE ROADWAY STANDARD DRAWINGS.

AREA BETWEEN THE WINGWALL AND APPROACH SLAB SHALL BE GRADED TO DRAIN THE WATER AWAY FROM THE FILL FACE OF THE BRIDGE AND SHALL BE PAVED. SEE ROADWAY PLANS.

APPROACH SLAB GROOVING IS NOT REQUIRED.

FOR ANCHORAGE OF THE PORTABLE BARRIER "SEE ANCHORAGE DETAIL FOR ANCHORED PORTABLE CONCRETE BARRIER DETAIL" SHEET.

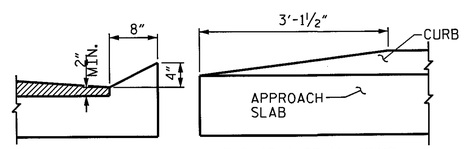

SECTION N-N

END OF CURB WITHOUT SHOULDER BERM GUTTER

CURB DETAILS

SPLICE LENGTHS		
BAR SIZE	EPOXY COATED	UNCOATED
#4	2'-0"	1'-9"
#5	2'-6"	2'-2"
#6	3'-10"	2'-7"

PROJECT NO. BD-5111AC

WILKES COUNTY

STATION: 11+89.13 -L-

SHEET 2 OF 2

STATE OF NORTH CAROLINA
DEPARTMENT OF TRANSPORTATION
RALEIGH

BRIDGE APPROACH SLAB FOR PRESTRESSED CONCRETE CORED SLAB UNIT

NORTH CAROLINA PROFESSIONAL SEAL 15825 ENGINEER BRIDGE D. KLAPPENBACH

3-18-2014

REVISIONS						SHEET NO.
NO.	BY:	DATE:	NO.	BY:	DATE:	S-22
1			3			TOTAL SHEETS
2			4			22

DRAWN BY : H. T. BARBOUR DATE : 2-14

CHECKED BY : B. D. KLAPPENBACH DATE : 2-14

18-MAR-2014 12:41
R:\Structures\Plans\wdebrew\Microstation\BD-5111AC_SD_DE_Super.dgn
bklappenbach

STANDARD NOTES

DESIGN DATA:

SPECIFICATIONS	A.A.S.H.T.O. (CURRENT)
LIVE LOAD	SEE PLANS
IMPACT ALLOWANCE	SEE A.A.S.H.T.O.
STRESS IN EXTREME FIBER OF	
STRUCTURAL STEEL - AASHTO M270 GRADE 36	20,000 LBS. PER SQ. IN.
- AASHTO M270 GRADE 50W	27,000 LBS. PER SQ. IN.
- AASHTO M270 GRADE 50	27,000 LBS. PER SQ. IN.
REINFORCING STEEL IN TENSION	
GRADE 60	24,000 LBS. PER SQ. IN.
CONCRETE IN COMPRESSION	1,200 LBS. PER SQ. IN.
CONCRETE IN SHEAR	SEE A.A.S.H.T.O.
STRUCTURAL TIMBER - TREATED OR	
UNTREATED - EXTREME FIBER STRESS	1,800 LBS. PER SQ. IN.
COMPRESSION PERPENDICULAR TO GRAIN OF TIMBER	375 LBS. PER SQ. IN.
EQUIVALENT FLUID PRESSURE OF EARTH	30 LBS. PER CU. FT. (MINIMUM)

MATERIAL AND WORKMANSHIP:

EXCEPT AS MAY OTHERWISE BE SPECIFIED ON PLANS OR IN THE SPECIAL PROVISIONS, ALL MATERIAL AND WORKMANSHIP SHALL BE IN ACCORDANCE WITH THE 2012 "STANDARD SPECIFICATIONS FOR ROADS AND STRUCTURES" OF THE N. C. DEPARTMENT OF TRANSPORTATION.

STEEL SHEET PILING FOR PERMANENT OR TEMPORARY APPLICATIONS SHALL BE HOT ROLLED.

CONCRETE:

UNLESS OTHERWISE REQUIRED ON PLANS, CLASS A CONCRETE SHALL BE USED FOR ALL PORTIONS OF ALL STRUCTURES WITH THE EXCEPTION THAT: CLASS AA CONCRETE SHALL BE USED IN BRIDGE SUPERSTRUCTURES, ABUTMENT BACKWALLS, AND APPROACH SLABS; AND CLASS B CONCRETE SHALL BE USED FOR SLOPE PROTECTION AND RIP RAP.

CONCRETE CHAMFERS:

UNLESS OTHERWISE NOTED ON THE PLANS, ALL EXPOSED CORNERS ON STRUCTURES SHALL BE CHAMFERED 3/4" WITH THE FOLLOWING EXCEPTIONS: TOP CORNERS OF CURBS MAY BE ROUNDED TO 1-1/2" RADIUS WHICH IS BUILT INTO CURB FORMS; CORNERS OF TRANSVERSE FLOOR EXPANSION JOINTS SHALL BE ROUNDED WITH A 1/4" FINISHING TOOL UNLESS OTHERWISE REQUIRED ON PLANS; AND CORNERS OF EXPANSION JOINTS IN THE ROADWAY FACES AND TOPS OF CURBS AND SIDEWALKS SHALL BE ROUNDED TO A 1/4" RADIUS WITH A FINISHING STONE OR TOOL UNLESS OTHERWISE REQUIRED ON PLANS.

DOWELS:

DOWELS WHEN INDICATED ON PLANS AS FOR CULVERT EXTENSIONS, SHALL BE EMBEDDED AT LEAST 12" INTO THE OLD CONCRETE AND GROUTED INTO PLACE WITH 1:2 CEMENT MORTAR.

ALLOWANCE FOR DEAD LOAD DEFLECTION, SETTLEMENT, ETC. IN CASTING SUPERSTRUCTURES:

BRIDGES SHALL BE BUILT ON THE GRADE OR VERTICAL CURVE SHOWN ON PLANS. SLABS, CURBS AND PARAPETS SHALL CONFORM TO THE GRADE OR CURVE.

ALL DIMENSIONS WHICH ARE GIVEN IN SECTION AND ARE AFFECTED BY DEAD LOAD DEFLECTIONS ARE DIMENSIONS AT CENTER LINE OF BEARING UNLESS OTHERWISE NOTED ON PLANS. IN SETTING FORMS FOR STEEL BEAM BRIDGES AND PRESTRESSED CONCRETE GIRDER BRIDGES, ADJUSTMENTS SHALL BE MADE DUE TO THE DEAD LOAD DEFLECTIONS FOR THE ELEVATIONS SHOWN. WHERE BLOCKS ARE SHOWN OVER BEAMS FOR BUILDING UP TO THE SLAB, THE VERTICAL DIMENSIONS OF THE BLOCKS SHALL BE ADJUSTED BETWEEN BEARINGS TO COMPENSATE FOR DEAD LOAD DEFLECTIONS, VERTICAL CURVE ORDINATE, AND ACTUAL BEAM CAMBER. WHERE BOTTOM OF SLAB IS IN LINE WITH BOTTOM OF TOP FLANGES, DEPTH OF SLAB BETWEEN BEARINGS SHALL BE ADJUSTED TO COMPENSATE FOR DEAD LOAD DEFLECTION, VERTICAL CURVE ORDINATE, AND ACTUAL BEAM CAMBER.

IN SETTING FALSEWORK AND FORMS FOR REINFORCED CONCRETE SPANS, AN ALLOWANCE SHALL BE MADE FOR DEAD LOAD DEFLECTIONS, SETTLEMENT OF FALSEWORK, AND PERMANENT CAMBER WHICH SHALL BE PROVIDED FOR IN ADDITION TO THE ELEVATIONS SHOWN. AFTER REMOVAL OF THE FALSEWORK, THE FINISHED STRUCTURES SHALL CONFORM TO THE PROFILE AND ELEVATIONS SHOWN ON THE PLANS AND CONSTRUCTION ELEVATIONS FURNISHED BY THE ENGINEER.

DETAILED DRAWINGS FOR FALSEWORK OR FORMS FOR BRIDGE SUPERSTRUCTURE AND ANY STRUCTURE OR PARTS OF A STRUCTURE AS NOTED ON THE PLANS SHALL BE SUBMITTED TO THE ENGINEER FOR APPROVAL BEFORE CONSTRUCTION OF THE FALSEWORK OR FORMS IS STARTED.

REINFORCING STEEL:

ALL REINFORCING STEEL SHALL BE DEFORMED. DIMENSIONS RELATIVE TO PLACEMENT OF REINFORCING ARE TO CENTERS OF BARS UNLESS OTHERWISE INDICATED IN THE PLANS. DIMENSIONS ON BAR DETAILS ARE TO CENTERS OF BARS OR ARE OUT TO OUT AS INDICATED ON PLANS.

WIRE BAR SUPPORTS SHALL BE PROVIDED FOR REINFORCING STEEL WHERE INDICATED ON THE PLANS. WHEN BAR SUPPORT PIECES ARE PLACED IN CONTINUOUS LINES, THEY SHALL BE SO PLACED THAT THE ENDS OF THE SUPPORTING WIRES SHALL BE LAPPED TO LOCK LEGS ON ADJOINING PIECES.

STRUCTURAL STEEL:

AT THE CONTRACTOR'S OPTION, HE MAY SUBSTITUTE 7/8" Ø SHEAR STUDS FOR THE 3/4" Ø STUDS SPECIFIED ON THE PLANS. THIS SUBSTITUTION SHALL BE MADE AT THE RATE OF 3 - 7/8" Ø STUDS FOR 4 - 3/4" Ø STUDS, AND STUD SPACING CHANGES SHALL BE MADE AS NECESSARY TO PROVIDE THE SAME EQUIVALENT NUMBER OF 7/8" Ø STUDS ALONG THE BEAM AS SHOWN FOR 3/4" Ø STUDS BASED ON THE RATIO OF 3 - 7/8" Ø STUDS FOR 4 - 3/4" Ø STUDS. STUDS OF THE LENGTH SPECIFIED ON THE PLANS MUST BE PROVIDED. THE MAXIMUM SPACING SHALL BE 2'-0".

EXCEPT AT THE INTERIOR SUPPORTS OF CONTINUOUS BEAMS WHERE THE COVER PLATE IS IN CONTACT WITH BEARING PLATE, THE CONTRACTOR MAY, AT HIS OPTION, SUBSTITUTE FOR THE COVER PLATES DESIGNATED ON THE PLANS COVER PLATES OF THE EQUIVALENT AREA PROVIDED THESE PLATES ARE AT LEAST 5/16" IN THICKNESS AND DO NOT EXCEED A WIDTH EQUAL TO THE FLANGE WIDTH LESS 2" OR A THICKNESS EQUAL TO 2 TIMES THE FLANGE THICKNESS. THE SIZE OF FILLET WELDS SHALL CONFORM TO THE REQUIREMENTS OF THE CURRENT ANSI/AASHTO/AWS "BRIDGE WELDING CODE". ELECTROSLAG WELDING WILL NOT BE PERMITTED.

WITH THE SOLE EXCEPTION OF EDGES AT SURFACES WHICH BEAR ON OTHER SURFACES, ALL SHARP EDGES AND ENDS OF SHAPES AND PLATES SHALL BE SLIGHTLY ROUNDED BY SUITABLE MEANS TO A RADIUS OF APPROXIMATELY 1/16 INCH OR EQUIVALENT FLAT SURFACE AT A SUITABLE ANGLE PRIOR TO PAINTING, GALVANIZING, OR METALLIZING.

HANDRAILS AND POSTS:

METAL STANDARDS AND FACES OF THE CONCRETE END POSTS FOR THE METAL RAIL SHALL BE SET NORMAL TO THE GRADE OF THE CURB, UNLESS OTHERWISE SHOWN ON PLANS. THE METAL RAIL AND TOPS OF CONCRETE POSTS USED WITH THE ALUMINUM RAIL SHALL BE BUILT PARALLEL TO THE GRADE OF THE CURB.

METAL HANDRAILS SHALL BE IN ACCORDANCE WITH THE PLANS. RAILS SHALL BE AS MANUFACTURED FOR BRIDGE RAILING. CASTINGS SHALL BE OF A UNIFORM APPEARANCE. FINS AND OTHER DEFORMATIONS RESULTING FROM CASTING OR OTHERWISE SHALL BE REMOVED IN A MANNER SO THAT A UNIFORM COLORING OF THE COMPLETED CASTING SHALL BE OBTAINED. CASTINGS WITH DISCOLORATIONS OR OF NON-UNIFORM COLORING WILL NOT BE ACCEPTED. CERTIFIED MILL REPORTS ARE REQUIRED FOR METAL RAILS AND POSTS.

SPECIAL NOTES:

GENERALLY, IN CASE OF DISCREPANCY, THIS STANDARD SHEET OF NOTES SHALL GOVERN OVER THE SPECIFICATIONS, BUT THE REMAINDER OF THE PLANS SHALL GOVERN OVER NOTES HEREON, AND SPECIAL PROVISIONS SHALL GOVERN OVER ALL. SEE SPECIFICATIONS ARTICLE 105-4.

ENGLISH

JANUARY, 1990

8/17/99

TYPICAL SECTION

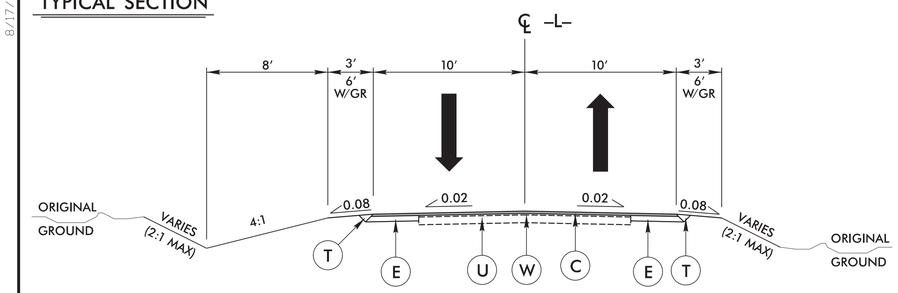

PAVEMENT SCHEDULE	
C	1½" SURFACE COURSE, TYPE SF9.5A
E	5½" BASE COURSE, TYPE B25.0B
T	EARTH MATERIAL
U	EXISTING PAVEMENT.
W	WEDGING

RIGHT-OF-WAY AREAS

PARCEL #	PROPERTY OWNER'S NAME	TOTAL AREA	AREA TAKEN	AREA REMAINING RIGHT	AREA REMAINING LEFT	CONSTRUCTION EASEMENT	PERMANENT DRAINAGE EASEMENT	TEMPORARY DRAINAGE EASEMENT	PERMANENT UTILITY EASEMENT
1	CAROLINE H. BENTLEY	N/A	0.104 Ac.	N/A	N/A	0.020 Ac.	0.005 Ac.	0 Ac.	0 Ac.

PROJECT REFERENCE NO.	SHEET NO.
BD-5111AC	RDY-1
R/W SHEET NO.	

ROADWAY DESIGN ENGINEER: NORTH CAROLINA PROFESSIONAL SEAL 38649 ENGINEER MATTHEW E. LAY 4/15/14

HYDRAULICS ENGINEER: NORTH CAROLINA PROFESSIONAL SEAL 23090 ENGINEER AUDREY B. BURNETTE 4/15/14

GRAPHIC SCALES

50 0 50 100 PLANS

50 0 50 100 PROFILE (HORIZONTAL)

10 0 10 20 PROFILE (VERTICAL)

DESIGN SPEED = 25 mph
ADT = 130 (2000)

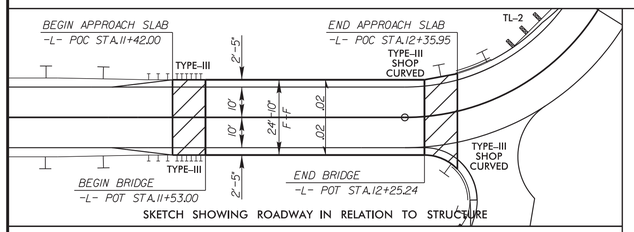

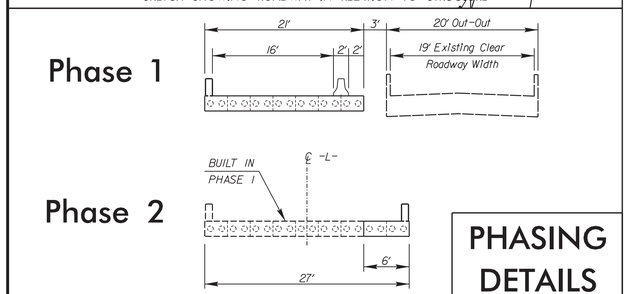

PHASING DETAILS

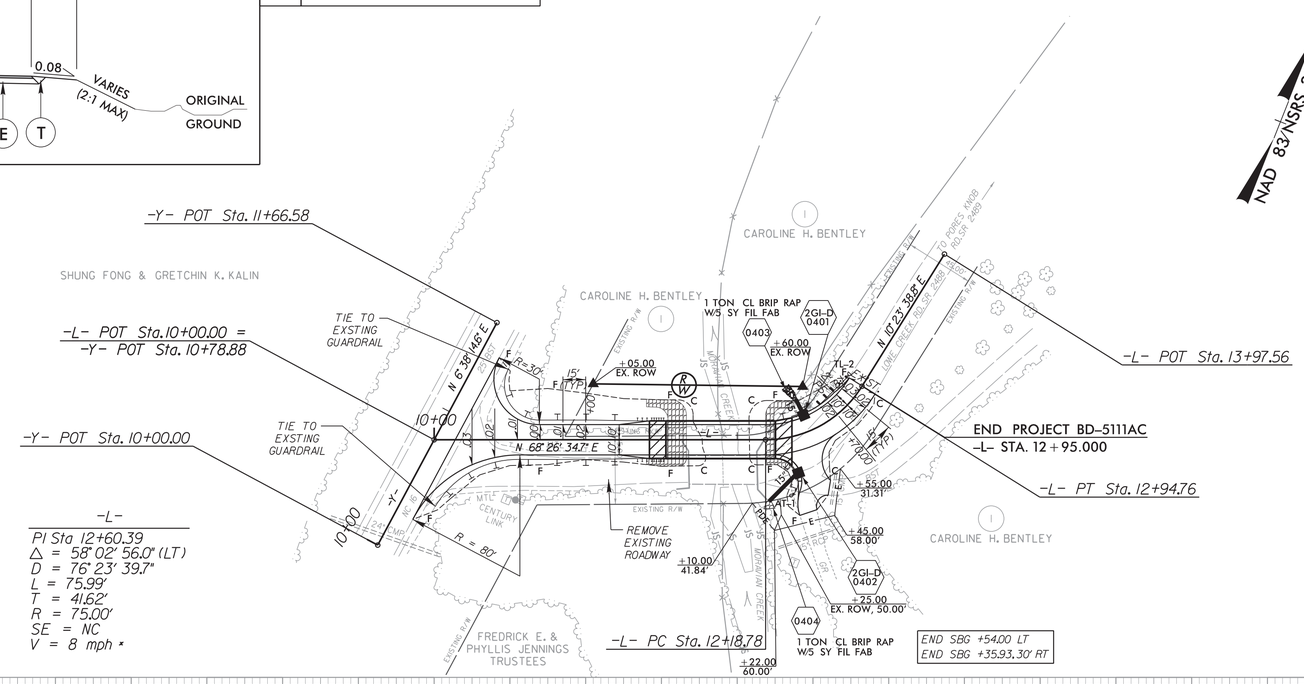

DATUM DESCRIPTION

THE LOCALIZED COORDINATE SYSTEM DEVELOPED FOR THIS PROJECT IS BASED ON THE STATE PLANE COORDINATES ESTABLISHED BY NCDOT FOR MONUMENT "BD5111AC-2"
WITH NAD 83/NSRS 2007 STATE PLANE GRID COORDINATES OF
NORTHING: 848575.1647(ft) EASTING: 1356936.2143(ft)
ELEVATION: 1262.1145'(ft)
THE AVERAGE COMBINED GRID FACTOR USED ON THIS PROJECT (GROUND TO GRID) IS: 0.9999174232
THE N.C. LAMBERT GRID BEARING AND LOCALIZED HORIZONTAL GROUND DISTANCE FROM "BD5111AC-2" TO -L- STATION IS
N 31° 28' 02.3" E 45.61 (ft)
ALL LINEAR DIMENSIONS ARE LOCALIZED HORIZONTAL DISTANCES
VERTICAL DATUM USED IS NAVD 88

* DESIGN EXCEPTION REQUIRED

BM#1 EL = 1,242.69'
-L- STA.10+99.17 23.98' LT.
8" SPIKE IN 15" POPLAR

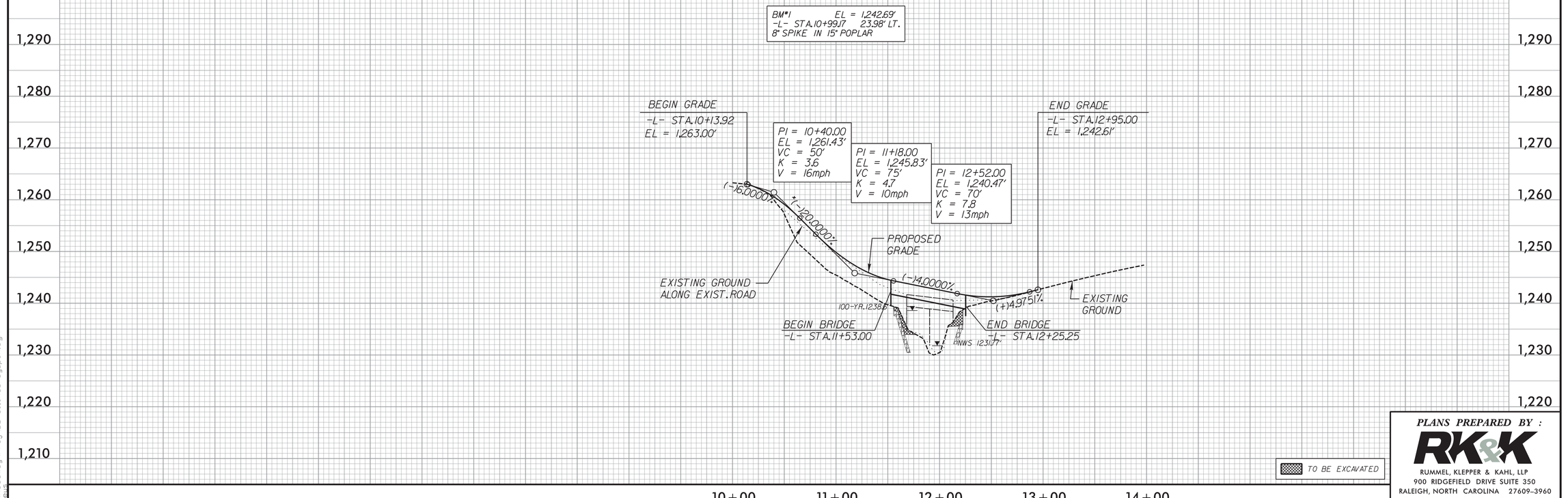

PLANS PREPARED BY :

RK&K

RUMMEL, KLEPPER & KAHL, LLP
900 RIDGEFIELD DRIVE SUITE 350
RALEIGH, NORTH CAROLINA 27609-3960
NC LICENSE NO. F-0112 • (919) 878-9560

4/10/2014
R:\Roadway\Proj\BD-5111AC_rdy_psh.dgn
kevin

WILKES BD-5111AC

TIP PROJECT:

STATE OF NORTH CAROLINA
DIVISION OF HIGHWAYS

STATE PROJECT REFERENCE NO.	SHEET NO.
BD-5111AC	TCP-1

PLAN FOR PROPOSED TRAFFIC CONTROL, MARKING & DELINEATION

WILKES COUNTY

INDEX OF SHEETS

SHEET NO.	TITLE
TCP-1	TITLE SHEET, LIST OF APPLICABLE ROADWAY STANDARD DRAWINGS, LEGEND, TEMP. AND FINAL PAVEMENT MARKING SCHEDULE AND VICINITY MAP
TCP-2	GENERAL NOTES AND TRAFFIC CONTROL PHASING
TCP-3	PHASE I DETAIL
TCP-4	PHASE II DETAIL

ROADWAY STANDARD DRAWINGS

THE FOLLOWING ROADWAY STANDARDS AS APPEAR IN "ROADWAY STANDARD DRAWINGS"-PROJECT SERVICES UNTI-N.C. DEPARTMENT OF TRANSPORTATION-RALEIGH, N.C., DATED JANUARY 2012 ARE APPLICABLE TO THIS PROJECT AND BY REFERENCE HEREBY ARE CONSIDERED A PART OF THESE PLANS:

STD. NO.	TITLE
1101.01	WORK ZONE WARNING SIGNS
1101.02	TEMPORARY LANE CLOSURES
1101.03	TEMPORARY ROAD CLOSURES
1101.04	TEMPORARY SHOULDER CLOSURES
1101.11	TRAFFIC CONTROL DESIGN TABLES
1110.01	STATIONARY WORK ZONE SIGNS
1110.02	PORTABLE WORK ZONE SIGNS
1130.01	DRUMS
1145.01	BARRICADES
1150.01	FLAGGING DEVICES
1160.01	TEMPORARY CRASH CUSHION
1165.01	WORK VEHICLE LIGHTING SYSTEMS AND TMA DELINEATION
1170.01	POSITIVE PROTECTION
1205.01	PAVEMENT MARKINGS - LINE TYPES AND OFFSETS
1205.02	PAVEMENT MARKINGS - TWO LANE AND MULTILANE ROADWAYS
1205.12	PAVEMENT MARKINGS - BRIDGES
1250.01	RAISED PAVEMENT MARKERS - INSTALLATION SPACING
1251.01	RAISED PAVEMENT MARKERS - (PERMANENT AND TEMPORARY)
1261.01	GUARDRAIL AND BARRIER DELINEATORS - INSTALLATION SPACING
1261.02	GUARDRAIL AND BARRIER DELINEATORS - TYPES AND MOUNTING
1262.01	GUARDRAIL END DELINEATION

LEGEND

GENERAL

- DIRECTION OF TRAFFIC FLOW
- EXIST. PVMT.
- NORTH ARROW
- PROPOSED PVMT.
- WORK AREA

TRAFFIC CONTROL DEVICES

- BARRICADE (TYPE III)
- DRUM
- TEMPORARY CRASH CUSHION
- PORTABLE CONCRETE BARRIER
- FLAGGER
- TRUCK MOUNTED ATTENUATOR (TMA)

TEMPORARY SIGNING

- PORTABLE SIGN
- STATIONARY SIGN

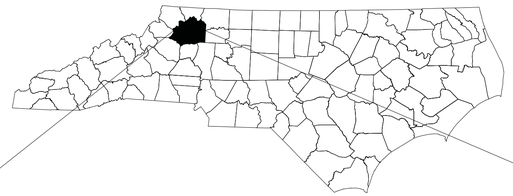

VICINITY MAP BRIDGE #41

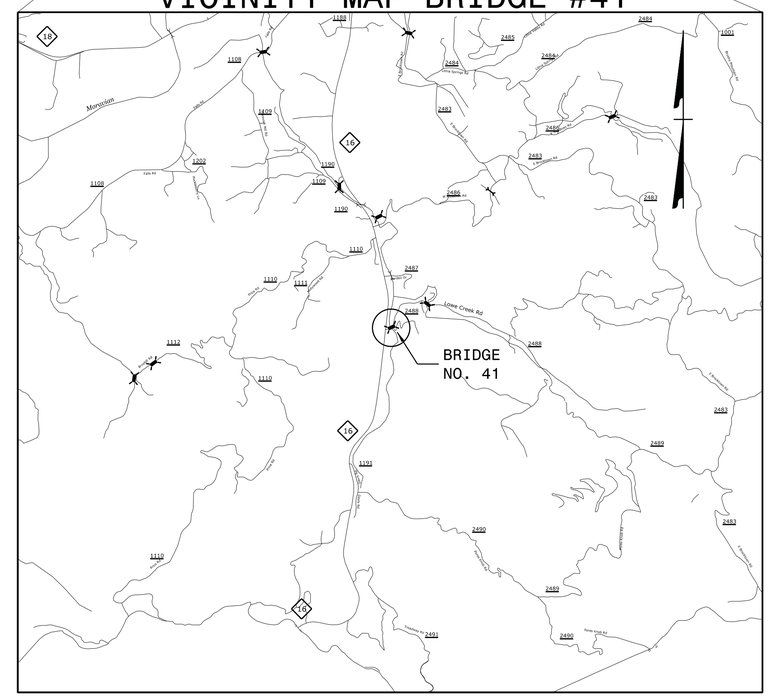

TEMP. PAVEMENT MARKING SCHEDULE

SYMBOL	DESCRIPTION	QUANTITY BREAKDOWN	PAY ITEM	TOTAL QUANTITY
	PAVEMENT MARKING LINES			
			PAINT (4")	
PA	WHITE EDGELINE 2X	950 LF		
				TOTAL 950 LF

2X = TWO APPLICATIONS

FINAL PAVEMENT MARKING SCHEDULE

SYMBOL	DESCRIPTION	QUANTITY BREAKDOWN	PAY ITEM	TOTAL QUANTITY
	PAVEMENT MARKING LINES			
			PAINT (4")	
PA	WHITE EDGELINE 2X	1145 LF		
PI	YELLOW DOUBLE CENTER 2X	1148 LF		
				TOTAL 2296 LF

2X = TWO APPLICATIONS

PLANS PREPARED BY :

RK&K

RUMMEL, KLEPPER & KAHL, LLP
900 RIDGEFIELD DRIVE SUITE 350
RALEIGH, NORTH CAROLINA 27609-3960
NC LICENSE NO. F-0112 • (919) 878-9560

FOR DIVISION OF HIGHWAYS

SEAL

NORTH CAROLINA PROFESSIONAL SEAL 21047 ENGINEER KEVIN W. BISBY

4-15-2014

K. W. BISBY, PE — TRAFFIC CONTROL ENGINEER

M. A. COLE — TRAFFIC CONTROL PROJECT DESIGNER

4/3/2014
M:\projects\2009\09085_NCDOT_Div_OnCall\POL\DivIlBridges_GRP4\BD5111AC_Wilkes4\Design\Traffic\TrafficControl\TCP\BD5111AC_TCP01.dgn
mcole

PROJ. REFERENCE NO.	SHEET NO.
BD-5111AC	TCP-2

GENERAL NOTES

CHANGES MAY BE REQUIRED WHEN PHYSICAL DIMENSIONS IN THE DETAIL DRAWINGS, STANDARD DETAILS, AND ROADWAY DETAILS ARE NOT ATTAINABLE TO MEET FIELD CONDITIONS OR RESULT IN DUPLICATE OR UNDESIRED OVERLAPPING OF DEVICES. MODIFICATION MAY INCLUDE: MOVING, SUPPLEMENTING, COVERING, OR REMOVAL OF DEVICES AS DIRECTED BY THE ENGINEER

THE FOLLOWING GENERAL NOTES APPLY AT ALL TIMES FOR THE DURATION OF THE CONSTRUCTION PROJECT EXCEPT WHEN OTHERWISE NOTED IN THE PLAN OR DIRECTED BY THE ENGINEER.

LANE AND SHOULDER CLOSURE REQUIREMENTS

A. REMOVE LANE CLOSURE DEVICES FROM THE LANE WHEN WORK IS NOT BEING PERFORMED BEHIND THE LANE CLOSURE OR WHEN A LANE CLOSURE IS NO LONGER NEEDED OR AS DIRECTED BY THE ENGINEER.

B. WHEN PERSONNEL AND/OR EQUIPMENT ARE WORKING WITHIN 15 FT OF AN OPEN TRAVEL LANE, CLOSE THE NEAREST OPEN SHOULDER USING ROADWAY STANDARD DRAWING NO. 1101.04 UNLESS THE WORK AREA IS PROTECTED BY BARRIER OR GUARDRAIL OR A LANE CLOSURE IS INSTALLED.

C. WHEN PERSONNEL AND/OR EQUIPMENT ARE WORKING ON THE SHOULDER ADJACENT TO AN UNDIVIDED FACILITY AND WITHIN 5 FT OF AN OPEN TRAVEL LANE, CLOSE THE NEAREST OPEN TRAVEL LANE USING ROADWAY STANDARD DRAWING NO. 1101.02 UNLESS THE WORK AREA IS PROTECTED BY BARRIER OR GUARDRAIL.

D. WHEN PERSONNEL AND/OR EQUIPMENT ARE WORKING WITHIN A LANE OF TRAVEL OF AN UNDIVIDED OR DIVIDED FACILITY, CLOSE THE LANE ACCORDING TO THE TRAFFIC CONTROL PLANS, ROADWAY STANDARD DRAWINGS, OR AS DIRECTED BY THE ENGINEER. CONDUCT THE WORK SO THAT ALL PERSONNEL AND/OR EQUIPMENT REMAIN WITHIN THE CLOSED TRAVEL LANE.

E. DO NOT WORK SIMULTANEOUSLY WITHIN 15 FT ON BOTH SIDES OF AN OPEN TRAVELWAY, RAMP, OR LOOP WITHIN THE SAME LOCATION UNLESS PROTECTED WITH GUARDRAIL OR BARRIER.

PAVEMENT EDGE DROP OFF REQUIREMENTS

F. BACKFILL AT A 6:1 SLOPE UP TO THE EDGE AND ELEVATION OF EXISTING PAVEMENT IN AREAS ADJACENT TO AN OPENED TRAVEL LANE THAT HAS AN EDGE OF PAVEMENT DROP-OFF AS FOLLOWS:

BACKFILL DROP-OFFS THAT EXCEED 2 INCHES ON ROADWAYS WITH POSTED SPEED LIMITS OF 45 MPH OR GREATER.

BACKFILL DROP-OFFS THAT EXCEED 3 INCHES ON ROADWAYS WITH POSTED SPEED LIMITS LESS THAN 45 MPH.

BACKFILL WITH SUITABLE COMPACTED MATERIAL, AS APPROVED BY THE ENGINEER, AT NO EXPENSE TO THE DEPARTMENT.

G. DO NOT EXCEED A DIFFERENCE OF 2 INCHES IN ELEVATION BETWEEN OPEN LANES OF TRAFFIC FOR NOMINAL LIFTS OF 1.5 INCHES. INSTALL ADVANCE WARNING "UNEVEN LANES" SIGNS (W8-11) (500') IN ADVANCE AND A MINIMUM OF EVERY HALF MILE THROUGHOUT THE UNEVEN AREA.

SIGNING

H. INSTALL ADVANCE WORK ZONE WARNING SIGNS WHEN WORK IS WITHIN 40 FT FROM THE EDGE OF TRAVEL LANE AND NO MORE THAN THREE (3) DAYS PRIOR TO THE BEGINNING OF CONSTRUCTION.

TRAFFIC BARRIER

I. INSTALL TEMPORARY BARRIER ACCORDING TO THE TRANSPORTATION MANAGEMENT PLANS A MAXIMUM OF TWO (2) WEEKS PRIOR TO BEGINNING WORK IN ANY LOCATION. ONCE TEMPORARY BARRIER IS INSTALLED AT ANY LOCATION PROCEED IN A CONTINUOUS MANNER TO COMPLETE THE PROPOSED WORK IN THAT LOCATION UNLESS OTHERWISE STATED IN THE TRANSPORTATION MANAGEMENT PLANS OR AS DIRECTED BY THE ENGINEER.

DO NOT PLACE BARRIER DIRECTLY ON ANY SURFACE OTHER THAN ASPHALT OR CONCRETE.

ONCE TEMPORARY BARRIER IS INSTALLED AT ANY LOCATION AND NO WORK IS PERFORMED BEHIND THE TEMPORARY BARRIER FOR A PERIOD LONGER THAN TWO (2) MONTHS, REMOVE/RESET TEMPORARY BARRIER AT NO COST TO THE DEPARTMENT UNLESS OTHERWISE STATED IN THE TRANSPORTATION MANAGEMENT PLANS, TEMPORARY BARRIER IS PROTECTING A HAZARD, OR AS DIRECTED BY THE ENGINEER.

INSTALL TEMPORARY BARRIER WITH THE TRAFFIC FLOW BEGINNING WITH THE UPSTREAM SIDE OF TRAFFIC. REMOVE TEMPORARY BARRIER AGAINST THE TRAFFIC FLOW BEGINNING WITH THE DOWNSTREAM SIDE OF TRAFFIC.

INSTALL AND SPACE DRUMS NO GREATER THAN TWICE THE POSTED SPEED LIMIT (MPH) TO CLOSE OR KEEP THE SECTION OF THE ROADWAY CLOSED UNTIL THE TEMPORARY BARRIER IS REMOVED.

J. PROTECT THE APPROACH END OF MOVABLE/PORTABLE CONCRETE BARRIER AT ALL TIMES DURING THE INSTALLATION AND REMOVAL OF THE BARRIER BY EITHER A TRUCK MOUNTED ATTENUATOR (MAXIMUM 72 HOURS) OR A TEMPORARY CRASH CUSHION.

PROTECT THE APPROACH END OF MOVEABLE/PORTABLE CONCRETE BARRIER FROM ONCOMING TRAFFIC AT ALL TIMES BY A TEMPORARY CRASH CUSHION UNLESS THE APPROACH END OF MOVEABLE/PORTABLE CONCRETE BARRIER IS OFFSET FROM ONCOMING TRAFFIC AS FOLLOWS OR AS SHOWN IN THE PLANS: (SEE ALSO 1101.05)

POSTED SPEED LIMIT	MINIMUM OFFSET
40 OR LES	15 FT
45 - 50	20 FT
55	25 FT
60 MPH OR HIGHER	30 FT

TRAFFIC CONTROL DEVICES

K. SPACE CHANNELIZING DEVICES IN WORK AREAS NO GREATER IN FEET THAN TWICE THE POSTED SPEED LIMIT (MPH), EXCEPT 10 FT ON-CENTER IN RADII, AND 3 FT OFF THE EDGE OF AN OPEN TRAVELWAY WHEN LANE CLOSURES ARE NOT IN EFFECT. WHEN SKINNY DRUMS ARE ALLOWED REFER TO SECTION 1180 OF STANDARD SPECIFICATIONS FOR ROADS AND STRUCTURES OR AS SHOWN IN THE PLANS.

L. PLACE TYPE III BARRICADES, WITH "ROAD CLOSED" SIGN R11-2 ATTACHED, OF SUFFICIENT LENGTH TO CLOSE ENTIRE ROADWAY.

PAVEMENT MARKINGS AND MARKERS

M. INSTALL PAVEMENT MARKINGS AND PAVEMENT MARKERS ON THE FINAL SURFACE AS SHOWN IN THE PAVEMENT MARKING PLAN.

N. INSTALL TEMPORARY PAVEMENT MARKINGS AND TEMPORARY PAVEMENT MARKERS ON INTERIM LAYERS OF PAVEMENT AS FOLLOWS:

ROAD TYPE	MARKING	MARKER
ASPHALT	PAINT	RAISED
CONCRETE	COLD APPLIED PLASTIC (TYPE IV)	RAISED

O. INSTALL PAVEMENT MARKINGS AND PAVEMENT MARKERS ON THE FINAL SURFACE.

P. PLACE ONE APPLICATION OF PAINT FOR TEMPORARY TRAFFIC PATTERNS. PLACE A SECOND APPLICATION OF PAINT SIX (6) MONTHS AFTER THE INITIAL APPLICATION AND EVERY SIX MONTHS AS DIRECTED BY THE ENGINEER.

Q. TIE PROPOSED PAVEMENT MARKING LINES TO EXISTING PAVEMENT MARKING LINES.

R. REMOVE/REPLACE ANY CONFLICTING/DAMAGED PAVEMENT MARKINGS AND MARKERS BY THE END OF EACH DAY'S OPERATION.

TRAFFIC CONTROL PHASING

PHASE I

STEP 1:

ERECT ADVANCED WORK ZONE SIGNS ON NC 16 AND SR 2488 (LOWE CREEK RD.) IN ACCORDANCE WITH RDWY STD 1101.01 SHEET 3.

STEP 2:

USING RDWY STD 1101.02 SHEET 1 TO MAINTAIN SR 2488 TRAFFIC IN A ONE LANE TWO WAY TRAFFIC PATTERN, INSTALL ONE LANE BRIDGE SIGNS ON SR 2488 AND NC 16 AS DIRECTED BY THE ENGINEER. PLACE TEMPORARY PAVEMENT MARKING FROM -L- STA 10+63 TO -L- STA 12+77 AND PLACE PORTABLE CONCRETE BARRIER (ANCHORED) FROM -L- STA. 11+41 TO -L- STA. 12+16 WITH TEMPORARY CRASH CUSHIONS, (SEE TCP-3).

STEP 3:

USING RDWY STD 1101.02 SHEET 1 IN A CONTINUOUS OPERATION DIRECT TRAFFIC ON SR 2488 TO ITS TEMPORARY ONE LANE TWO WAY TRAFFIC PATTERN. CONSTRUCT PROPOSED -L- SR 2488 STRUCTURE AND APPROACHES FROM -L- 10+13 TO -L- STA. 12+95, UP TO BUT NOT INCLUDING THE FINAL LAYER OF SURFACE COURSE PAVEMENT, (SEE TCP-3, ROADWAY AND STRUCTURE PLANS).

PHASE II

STEP 1:

USING RDWY STD 1101.02 SHEET 1 IN A CONTINUOUS OPERATION PLACE TEMPORARY PAVEMENT MARKING FROM -L- STA 10+57 TO -L- STA 12+95 AND REMOVE AND RESET PORTABLE CONCRETE BARRIER (ANCHORED) FROM -L- STA. 11+39 TO -L- STA. 12+28 WITH TEMPORARY CRASH CUSHIONS. DIRECT TRAFFIC ON SR 2488 TO ITS TEMPORARY ONE LANE TWO WAY TRAFFIC PATTERN ONTO THE NEWLY CONSTRUCTED STRUCTURE STAGE I, (SEE TCP-4).

STEP 2:

USING RDWY STD 1101.02 SHEET 1, COMPLETE CONSTRUCTION OF PROPOSED -L- SR 2488 STRUCTURE AND APPROACHES FROM -L- 10+13 TO -L- STA. 12+95, UP TO BUT NOT INCLUDING THE FINAL LAYER OF SURFACE COURSE, (SEE TMP-4, ROADWAY AND STRUCTURE PLANS).

PHASE III

STEP 1:

USING RDWY STD 1101.02 SHEET 1 IN A CONTINUOUS OPERATION (ALTERNATING LANE CLOSURES), PLACE THE FINAL LAYER OF SURFACE COURSE, FINAL PAVEMENT MARKINGS AND MARKERS FROM -L- STA. 10+13 TO -L- STA. 12+95,(SEE NCDOT ROADWAY STANDARD DRAWINGS).

STEP 2:

REMOVE ANY REMAINING TRAFFIC CONTROL DEVICES FROM THE PROJECT LIMITS AND OPEN SR 2488 TO ITS PROPOSED TRAFFIC PATTERN.

APPROVED:_____ DATE:_____

SEAL

NORTH CAROLINA PROFESSIONAL SEAL 21047 ENGINEER KEVIN W. BIGLEY

DIVISION OF HIGHWAYS STATE OF NORTH CAROLINA DEPARTMENT OF TRANSPORTATION WORK ZONE TRAFFIC CONTROL

TRAFFIC CONTROL GENERAL NOTES AND PROJECT PHASING

6/18/2013
M:\projects\2009\09085_NCDOT_Div_OnCall\P01_DivIlBridges_GRP4\BD5111AC_Wilkes4\Design\Traffic\TrafficControl\TCP\BD5111AC_TCP02.dgn
mccole

PROJ. REFERENCE NO.	SHEET NO.
BD-5111AC	TCP-3

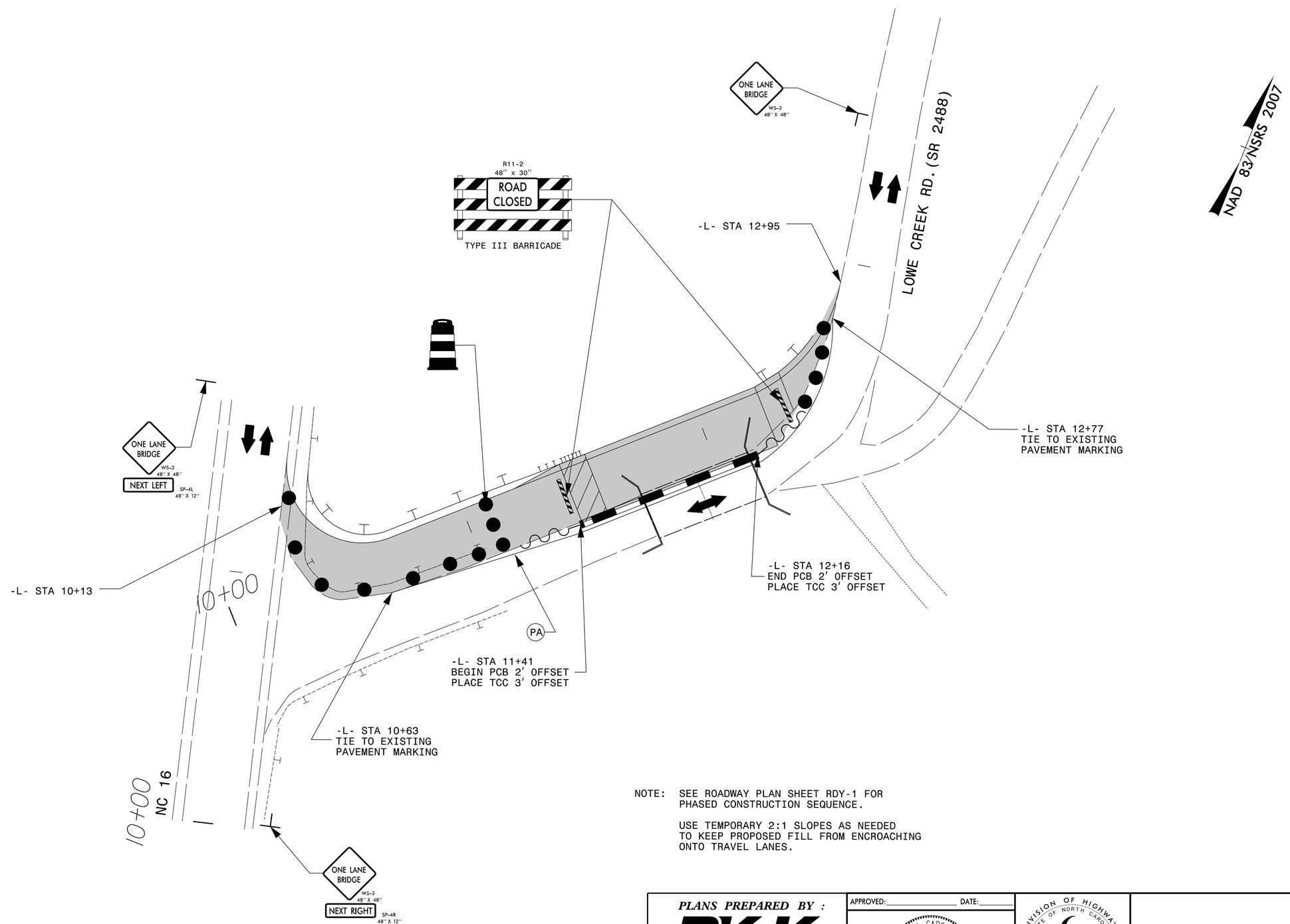

NOTE: SEE ROADWAY PLAN SHEET RDY-1 FOR PHASED CONSTRUCTION SEQUENCE.

USE TEMPORARY 2:1 SLOPES AS NEEDED TO KEEP PROPOSED FILL FROM ENCROACHING ONTO TRAVEL LANES.

PLANS PREPARED BY :

RK&K

RUMMEL, KLEPPER & KAHL, LLP
900 RIDGEFIELD DRIVE SUITE 350
RALEIGH, NORTH CAROLINA 27609-3960
NC LICENSE NO. F-0112 • (919) 878-9560

APPROVED:_____ DATE:_____

SEAL

NORTH CAROLINA PROFESSIONAL SEAL 21047 ENGINEER KEVIN W. BIGGS

4-15-2014

DIVISION OF HIGHWAYS
STATE OF NORTH CAROLINA
DEPARTMENT OF TRANSPORTATION
WORK ZONE TRAFFIC CONTROL

PHASE I DETAIL

4/15/2014
M:\projects\2009\09085_NCDOT_Div_OnCall\P01_Div\Bridges_GRP4\BD5111AC_Wilkes4\Design\Traffic\TrafficControl\TCP\BD5111AC_TCP03.dgn
mcole

PROJ. REFERENCE NO.	SHEET NO.
BD-5111AC	TCP-4

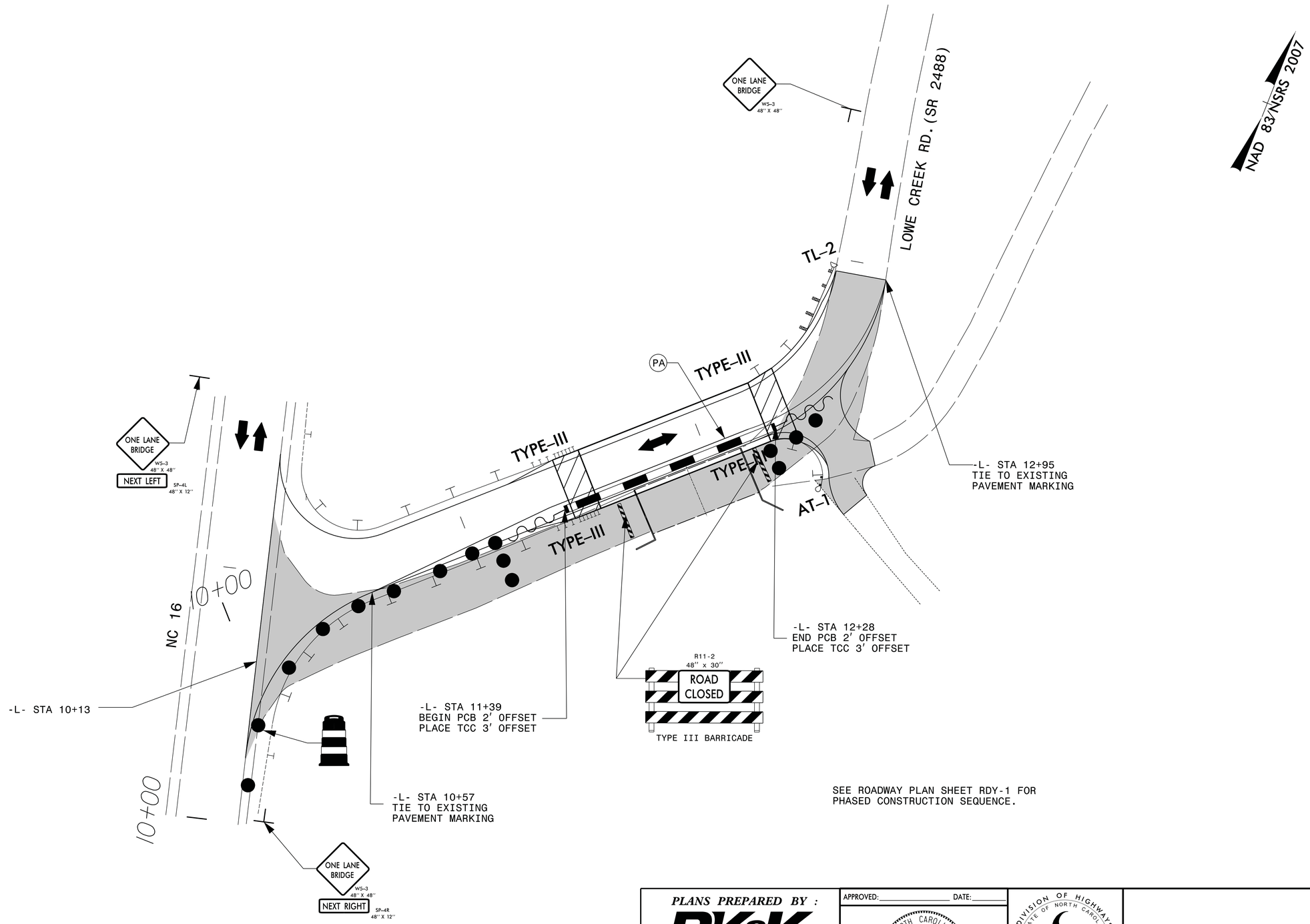

SEE ROADWAY PLAN SHEET RDY-1 FOR
PHASED CONSTRUCTION SEQUENCE.

PLANS PREPARED BY :

RK&K

RUMMEL, KLEPPER & KAHL, LLP
900 RIDGEFIELD DRIVE SUITE 350
RALEIGH, NORTH CAROLINA 27609-3960
NC LICENSE NO. F-0112 • (919) 878-9560

APPROVED:_____ DATE:_____

SEAL

NORTH CAROLINA PROFESSIONAL SEAL 21047 ENGINEER KEVIN W. BIGGS

4-15-2014

DIVISION OF HIGHWAYS
STATE OF NORTH CAROLINA
DEPARTMENT OF TRANSPORTATION
WORK ZONE TRAFFIC CONTROL

PHASE II DETAIL

6/18/2013
M:\projects\2009\09085_NCDOT_Div_OnCall\P01_DivIIBridges_GRP4\BD5111AC_Wilkes4l\Design\Traffic\TrafficControl\TCP\BD5111AC_TCP04.dgn
mcole

EROSION CONTROL PLAN

PROJECT REFERENCE NO.	SHEET NO.
BD-5111AC	EC-1
R/W SHEET NO.	
ROADWAY DESIGN ENGINEER	HYDRAULICS ENGINEER

GRAPHIC SCALES

PLANS: 50 0 50 100

PROFILE (HORIZONTAL): 50 0 50 100

PROFILE (VERTICAL): 10 0 10 20

Std. #	Description	Symbol
1605.01	Temporary Silt Fence	
1606.01	Special Sediment Control Fence	
1622.01	Temporary Berms and Slope Drains	
1630.02	Silt Basin Type B	
1630.03	Temporary Silt Ditch	TSD
1630.05	Temporary Diversion	TD
1630.06	Special Stilling Basin	
1632.03	Rock Inlet Sediment Trap Type C	
1633.01	Temporary Rock Silt Check Type-A	
	Temporary Rock Silt Check Type-A with Matting and Polyacrylamide (PAM)	
1633.02	Temporary Rock Silt Check Type-B	
	Wattle	
	Wattle with Polyacrylamide (PAM)	
1634.02	Temporary Rock Sediment Dam Type-B	
1635.01	Rock Pipe Inlet Sediment Trap Type-A	

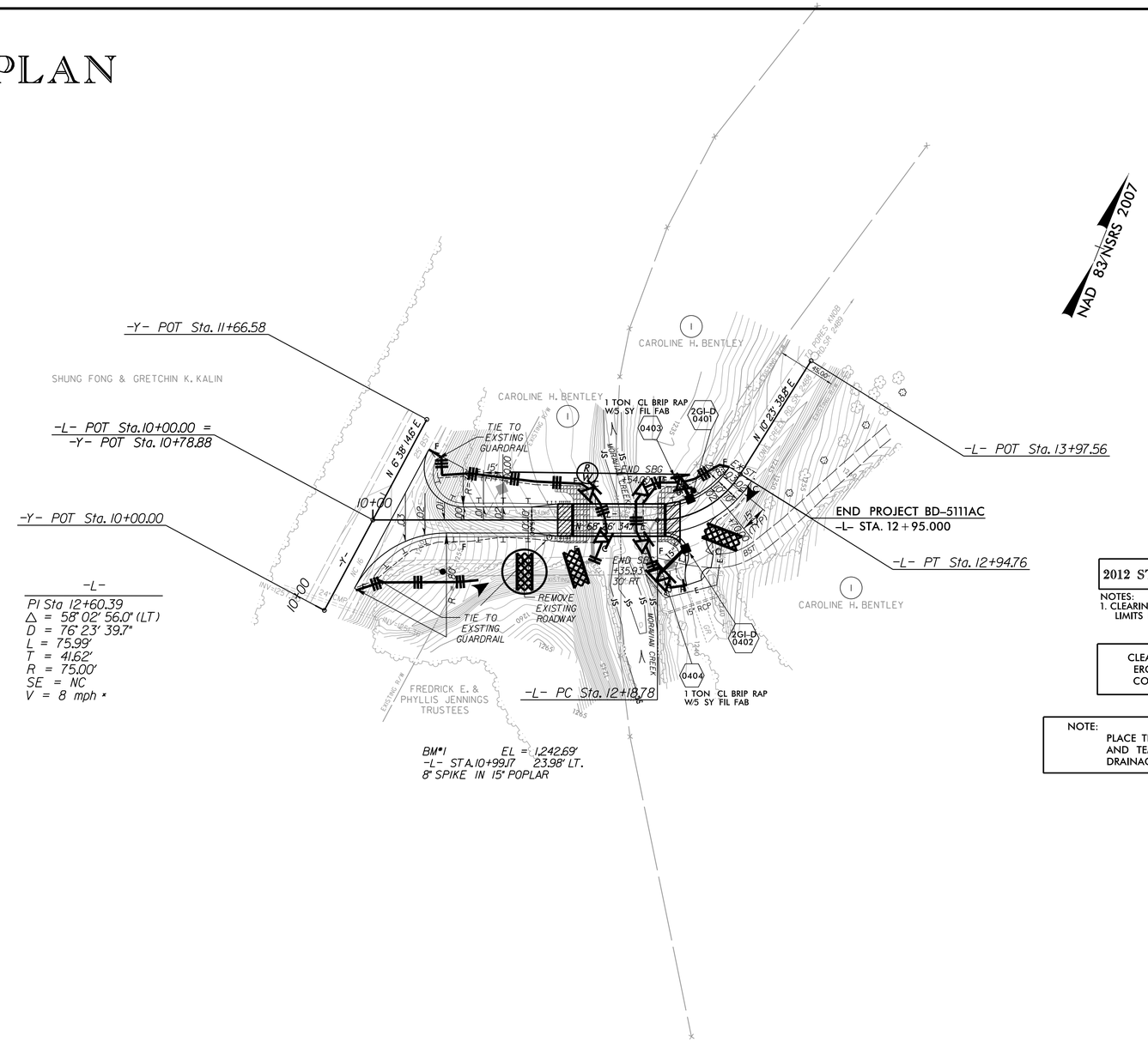

2012 STANDARD SPECIFICATIONS

NOTES:
1. CLEARING ON THIS PROJECT SHALL BE PERFORMED TO THE LIMITS ESTABLISHED BY METHOD II.

CLEARING AND GRUBBING
EROSION CONTROL FOR
CONSTRUCTION SHEET 4

NOTE:
PLACE TEMPORARY ROCK SEDIMENT DAMS TYPE – B AND TEMPORARY ROCK SILT CHECKS TYPE – A AT DRAINAGE OUTLETS.

2012 STANDARD DRAWINGS

1604.01	Railroad Erosion Control Detail	1632.01	Rock Inlet Sediment Trap Type A
1605.01	Temporary Silt Fence	1632.02	Rock Inlet Sediment Trap Type B
1606.01	Special Sediment Control Fence	1632.03	Rock Inlet Sediment Trap Type C
1607.01	Gravel Construction Entrance	1633.01	Temporary Rock Silt Check Type A
1622.01	Temporary Berms and Slope Drains	1633.02	Temporary Rock Silt Check Type B
1630.01	Riser Basin	1634.01	Temporary Rock Sediment Dam Type A
1630.02	Silt Basin Type B	1634.02	Temporary Rock Sediment Dam Type B
1630.03	Temporary Silt Ditch	1635.01	Rock Pipe Inlet Sediment Trap Type A
1630.04	Stilling Basin	1635.02	Rock Pipe Inlet Sediment Trap Type B
1630.05	Temporary Diversion	1640.01	Coir Fiber Baffle
1630.06	Special Stilling Basin	1645.01	Temporary Stream Crossing
1631.01	Matting Installation		

THESE EROSION AND SEDIMENT CONTROL PLANS COMPLY WITH THE REGULATIONS SET FORTH BY THE NCG-010000 GENERAL CONSTRUCTION PERMIT EFFECTIVE AUGUST 3, 2011 ISSUED BY THE NORTH CAROLINA DEPARTMENT OF ENVIRONMENT AND NATURAL RESOURCES DIVISION OF WATER QUALITY.

NOTES: ANY DEVIATION FROM OPTIONS GIVEN WILL REQUIRE PRIOR APPROVAL BY ENGINEER.

ADDITIONAL EROSION CONTROL DEVICES MAY NEED TO BE INSTALLED AS DIRECTED BY THE ENGINEER.

AUDREY BURNETTE
LEVEL IIIA NAME

3081
LEVEL IIIA CERTIFICATION NO.

TO BE EXCAVATED

PLANS PREPARED BY :
RK&K
RUMMEL, KLEPPER & KAHL, LLP
900 RIDGEFIELD DRIVE SUITE 350
RALEIGH, NORTH CAROLINA 27609-3960
NC LICENSE NO. F-0112 • (919) 878-9560

8/17/99
4/4/2014
R:\Hydraulics\CADD\EC\BD5111ac_hyd_EC04.dgn

8/17/99

EROSION CONTROL PLAN

PROJECT REFERENCE NO.	SHEET NO.
BD-5111AC	EC-1A
R/W SHEET NO.	
ROADWAY DESIGN ENGINEER	HYDRAULICS ENGINEER

GRAPHIC SCALES

50 0 50 100 PLANS

50 0 50 100 PROFILE (HORIZONTAL)

10 0 10 20 PROFILE (VERTICAL)

Std. #	Description	Symbol
1605.01	Temporary Silt Fence	
1606.01	Special Sediment Control Fence	
1622.01	Temporary Berms and Slope Drains	
1630.02	Silt Basin Type B	
1630.03	Temporary Silt Ditch	TSD
1630.05	Temporary Diversion	TD
1630.06	Special Stilling Basin	
1632.03	Rock Inlet Sediment Trap Type C	
1633.01	Temporary Rock Silt Check Type-A	
	Temporary Rock Silt Check Type-A with Matting and Polyacrylamide (PAM)	
1633.02	Temporary Rock Silt Check Type-B	
	Wattle	
	Wattle with Polyacrylamide (PAM)	
1634.02	Temporary Rock Sediment Dam Type-B	
1635.01	Rock Pipe Inlet Sediment Trap Type-A	

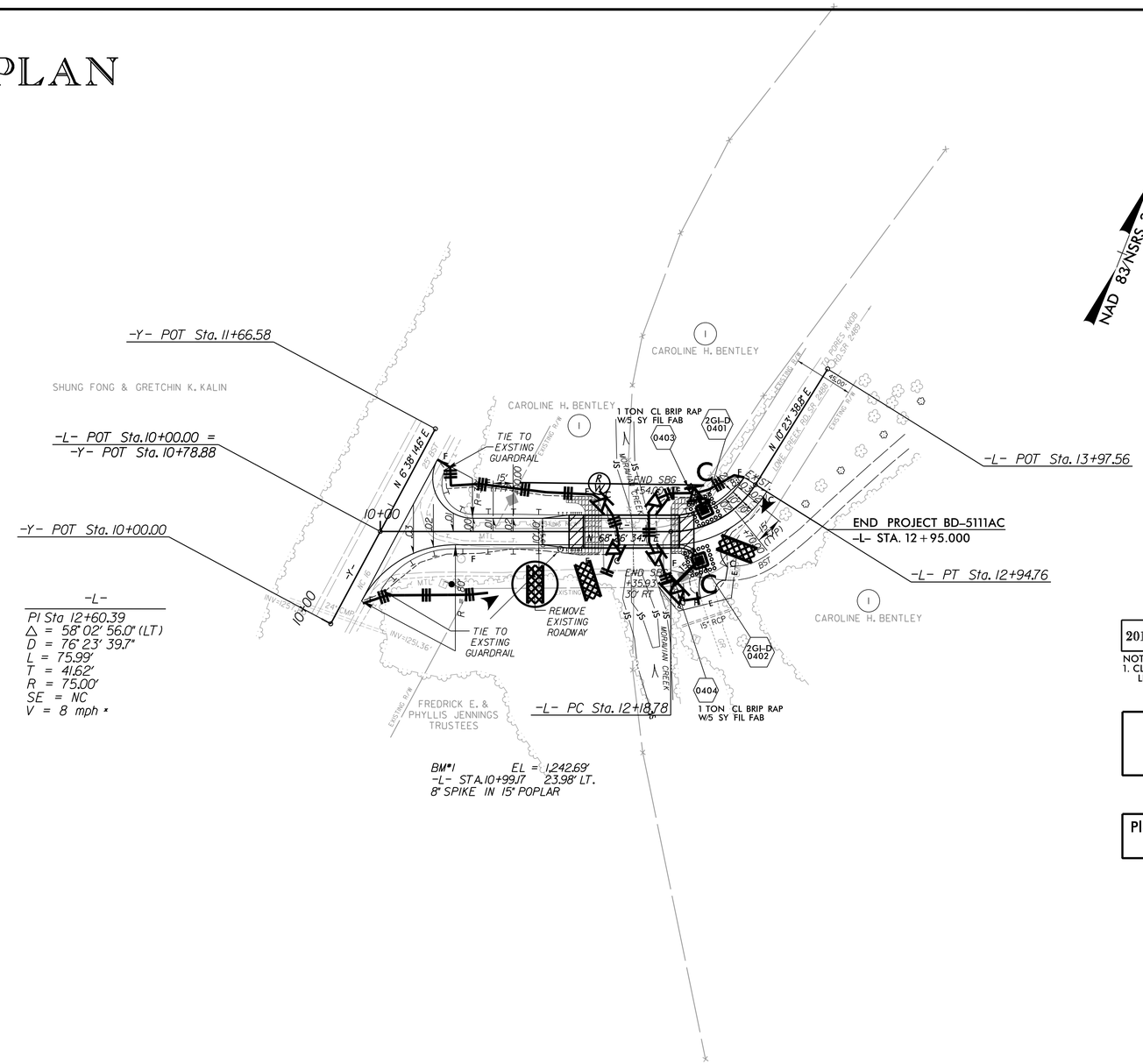

2012 STANDARD SPECIFICATIONS

NOTES:
1. CLEARING ON THIS PROJECT SHALL BE PERFORMED TO THE LIMITS ESTABLISHED BY METHOD II.

Place Coir Fiber Matting For Work Under Bridge Along Stream.

Place Matting for Erosion Control on Slope as Work Allows.

2012 STANDARD DRAWINGS

1604.01	Railroad Erosion Control Detail	1632.01	Rock Inlet Sediment Trap Type A
1605.01	Temporary Silt Fence	1632.02	Rock Inlet Sediment Trap Type B
1606.01	Special Sediment Control Fence	1632.03	Rock Inlet Sediment Trap Type C
1607.01	Gravel Construction Entrance	1633.01	Temporary Rock Silt Check Type A
1622.01	Temporary Berms and Slope Drains	1633.02	Temporary Rock Silt Check Type B
1630.01	Riser Basin	1634.01	Temporary Rock Sediment Dam Type A
1630.02	Silt Basin Type B	1634.02	Temporary Rock Sediment Dam Type B
1630.03	Temporary Silt Ditch	1635.01	Rock Pipe Inlet Sediment Trap Type A
1630.04	Stilling Basin	1635.02	Rock Pipe Inlet Sediment Trap Type B
1630.05	Temporary Diversion	1640.01	Coir Fiber Baffle
1630.06	Special Stilling Basin	1645.01	Temporary Stream Crossing
1631.01	Matting Installation		

THESE EROSION AND SEDIMENT CONTROL PLANS COMPLY WITH THE REGULATIONS SET FORTH BY THE NCG-010000 GENERAL CONSTRUCTION PERMIT EFFECTIVE AUGUST 3, 2011 ISSUED BY THE NORTH CAROLINA DEPARTMENT OF ENVIRONMENT AND NATURAL RESOURCES DIVISION OF WATER QUALITY.

NOTES: ANY DEVIATION FROM OPTIONS GIVEN WILL REQUIRE PRIOR APPROVAL BY ENGINEER.

ADDITIONAL EROSION CONTROL DEVICES MAY NEED TO BE INSTALLED AS DIRECTED BY THE ENGINEER.

AUDREY BURNETTE
LEVEL IIIA NAME

3081
LEVEL IIIA CERTIFICATION NO.

TO BE EXCAVATED

PLANS PREPARED BY :
RK&K
RUMMEL, KLEPPER & KAHL, LLP
900 RIDGEFIELD DRIVE SUITE 350
RALEIGH, NORTH CAROLINA 27609-3960
NC LICENSE NO. F-0112 • (919) 878-9560

4/4/2014
R:\Hydraulics\CADD\EC\BD5111ec_hyd_EC05.dgn

PROJECT REFERENCE NO.	SHEET NO.
BD-5111AC	EC-2
R/W SHEET NO.	
ROADWAY DESIGN ENGINEER	HYDRAULICS ENGINEER

TEMPORARY ROCK SILT CHECK TYPE 'A' WITH EXCELSIOR MATTING AND POLYACRYLAMIDE (PAM)

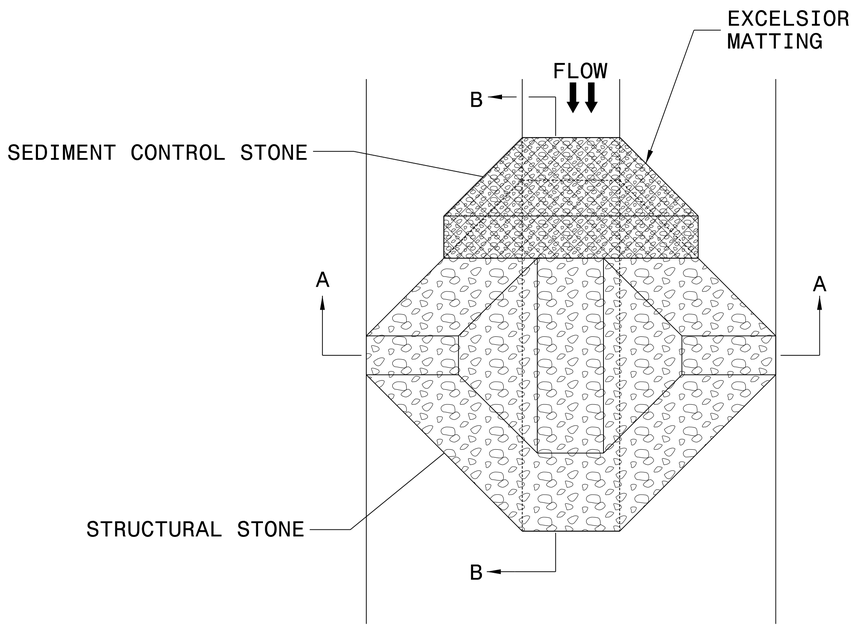

PLAN

NOTES:

INSTALL TEMPORARY ROCK SILT CHECK TYPE A IN ACCORDANCE WITH ROADWAY STANDARD DRAWING NO. 1633.01.

USE EXCELSIOR FOR MATTING MATERIAL AND ANCHOR MATTING SECTION AT TOP AND BOTTOM WITH CLASS B STONE.

PRIOR TO POLYACRYLAMIDE (PAM) APPLICATION, OBTAIN A SOIL SAMPLE FROM PROJECT LOCATION, AND FROM OFFSITE MATERIAL, AND ANALYZE FOR APPROPRIATE PAM FLOCCULANT TO BE APPLIED TO EACH ROCK SILT CHECK.

INITIALLY APPLY 4 OUNCES OF POLYACRYLAMIDE (PAM) TO TOP OF MATTING SECTION AND AFTER EVERY RAINFALL EVENT THAT EQUALS OR EXCEEDS 0.50 INCHES.

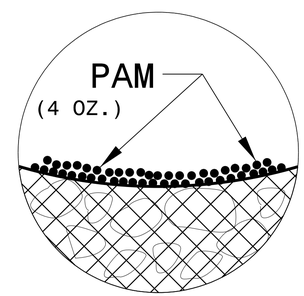

INSET A

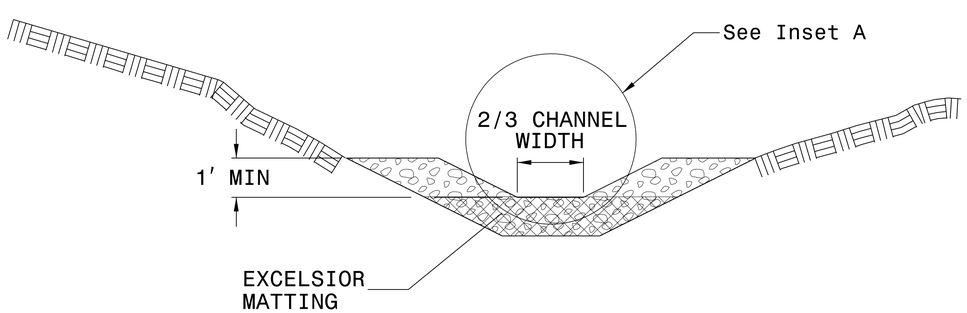

SECTION A-A

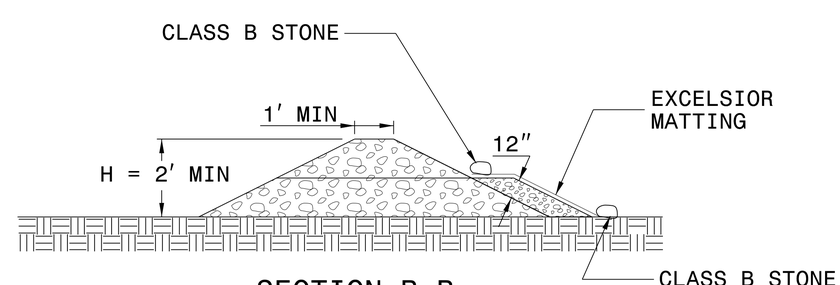

SECTION B-B

NOT TO SCALE

PROJECT REFERENCE NO.	SHEET NO.
BD-5111AC	EC-3
ROADWAY DESIGN ENGINEER	HYDRAULICS ENGINEER

DIVISION OF HIGHWAYS
STATE OF NORTH CAROLINA

SOIL STABILIZATION TIMEFRAMES

SITE DESCRIPTION	STABILIZATION TIME	TIMEFRAME EXCEPTIONS
PERIMETER DIKES, SWALES, DITCHES AND SLOPES	7 DAYS	NONE
HIGH QUALITY WATER (HQW) ZONES	7 DAYS	NONE
SLOPES STEEPER THAN 3:1	7 DAYS	IF SLOPES ARE 10' OR LESS IN LENGTH AND ARE NOT STEEPER THAN 2:1, 14 DAYS ARE ALLOWED.
SLOPES 3:1 OR FLATTER	14 DAYS	7 DAYS FOR SLOPES GREATER THAN 50' IN LENGTH.
ALL OTHER AREAS WITH SLOPES FLATTER THAN 4:1	14 DAYS	NONE, EXCEPT FOR PERIMETERS AND HQW ZONES.

PROJECT REFERENCE NO.	SHEET NO.
BD-5111AC	UO-1

UTILITIES BY OTHERS

NOTE:
ALL PROPOSED UTILITY WORK SHOWN ON THIS SHEET WILL BE DONE BY OTHERS

TYPICAL SECTION

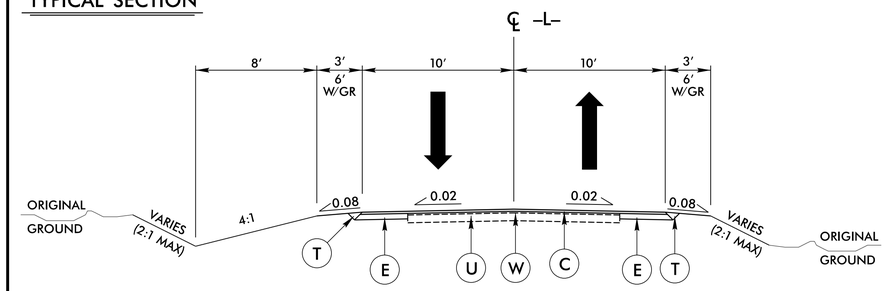

PAVEMENT SCHEDULE	
C	1½" SURFACE COURSE, TYPE SF9.5A
E	5½" BASE COURSE, TYPE B25.0B
T	EARTH MATERIAL
U	EXISTING PAVEMENT.
W	WEDGING

RIGHT-OF-WAY AREAS

PARCEL #	PROPERTY OWNER'S NAME	TOTAL AREA	AREA TAKEN	AREA REMAINING RIGHT	AREA REMAINING LEFT	CONSTRUCTION EASEMENT	PERMANENT DRAINAGE EASEMENT	TEMPORARY DRAINAGE EASEMENT
1	FREDRICK E. & PHYLLIS JENNINGS TRUSTEES	N/A	0 Ac.	N/A	N/A	0 Ac.	0 Ac.	0 Ac.
2	CAROLINE H. BENTLEY	N/A	0 Ac.	N/A	N/A	0 Ac.	0 Ac.	0 Ac.
3	NO OWNER LISTED	N/A	0 Ac.	N/A	N/A	0 Ac.	0 Ac.	0 Ac.
4	CAROLINE H. BENTLEY	N/A	0 Ac.	N/A	N/A	0 Ac.	0 Ac.	0 Ac.

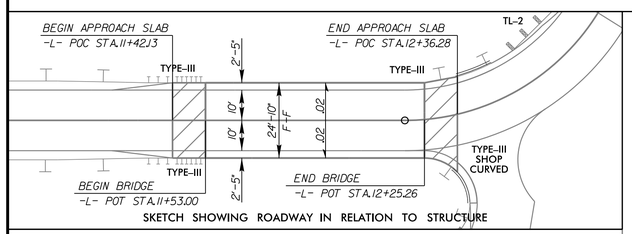

Phase 1

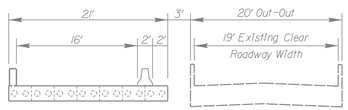

Phase 2

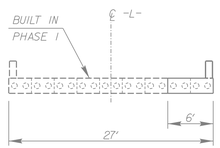

PHASING DETAILS

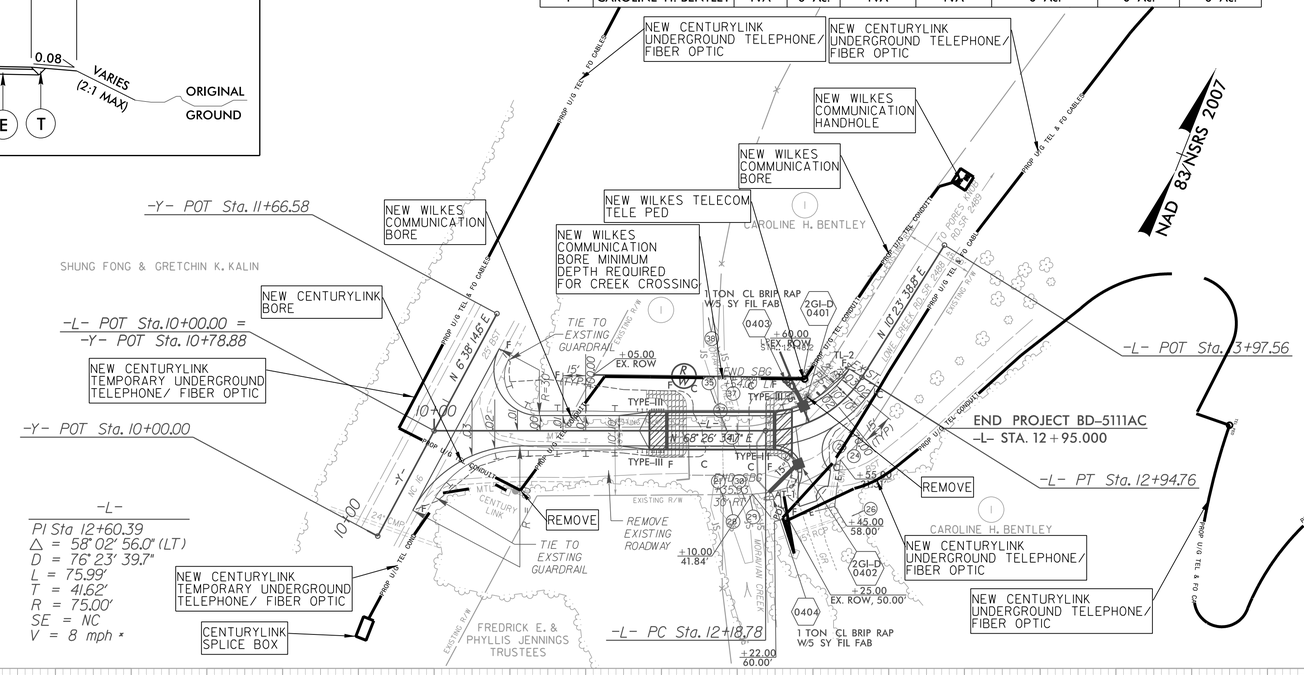

-L-
PI Sta 12+60.39
Δ = 58° 02' 56.0" (LT)
D = 76° 23' 39.7"
L = 75.99'
T = 41.62'
R = 75.00'
SE = NC
V = 8 mph *

BM#1 EL = 1,242.69'
-L- STA.10+99.17 23.98' LT.
8" SPIKE IN 15" POPLAR

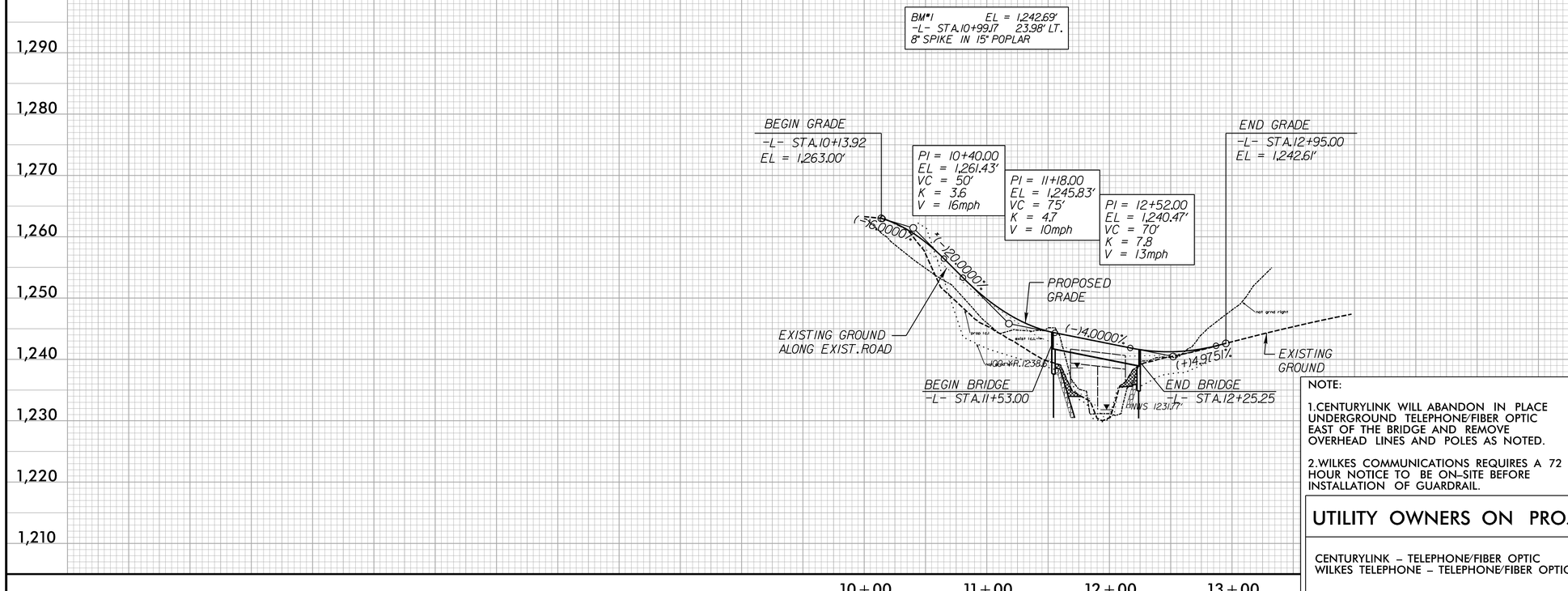

GRAPHIC SCALES

50 0 50 100
PLANS

50 0 50 100
PROFILE (HORIZONTAL)

10 0 10 20
PROFILE (VERTICAL)

DESIGN SPEED = 25 mph
ADT = 130 (2000)

DATUM DESCRIPTION

THE LOCALIZED COORDINATE SYSTEM DEVELOPED FOR THIS PROJECT IS BASED ON THE STATE PLANE COORDINATES ESTABLISHED BY NCDOT FOR MONUMENT "BD5111AC-2"
WITH NAD 83/NSRS 2007 STATE PLANE GRID COORDINATES OF
NORTHING: 848575.1647(ft) EASTING: 1356936.2143(ft)
ELEVATION: 1262.1145'(ft)
THE AVERAGE COMBINED GRID FACTOR USED ON THIS PROJECT (GROUND TO GRID) IS: 0.9999174232
THE N.C. LAMBERT GRID BEARING AND LOCALIZED HORIZONTAL GROUND DISTANCE FROM "BD5111AC-2" TO -L- STATION IS
N 31° 28' 02.3" E 45.61 (ft)
ALL LINEAR DIMENSIONS ARE LOCALIZED HORIZONTAL DISTANCES
VERTICAL DATUM USED IS NAVD 88

* DESIGN EXCEPTION REQUIRED

NOTE:

1. CENTURYLINK WILL ABANDON IN PLACE UNDERGROUND TELEPHONE/FIBER OPTIC EAST OF THE BRIDGE AND REMOVE OVERHEAD LINES AND POLES AS NOTED.

2. WILKES COMMUNICATIONS REQUIRES A 72 HOUR NOTICE TO BE ON-SITE BEFORE INSTALLATION OF GUARDRAIL.

UTILITY OWNERS ON PROJECT

CENTURYLINK – TELEPHONE/FIBER OPTIC
WILKES TELEPHONE – TELEPHONE/FIBER OPTIC

PLANS PREPARED BY :
RK&K
RUMMEL, KLEPPER & KAHL, LLP
900 RIDGEFIELD DRIVE SUITE 350
RALEIGH, NORTH CAROLINA 27609-3960
NC LICENSE NO. F-0112 • (919) 878-9560

0 2.5 5	PROJ. REFERENCE NO.	SHEET NO.
	BD-5111AC	X-1

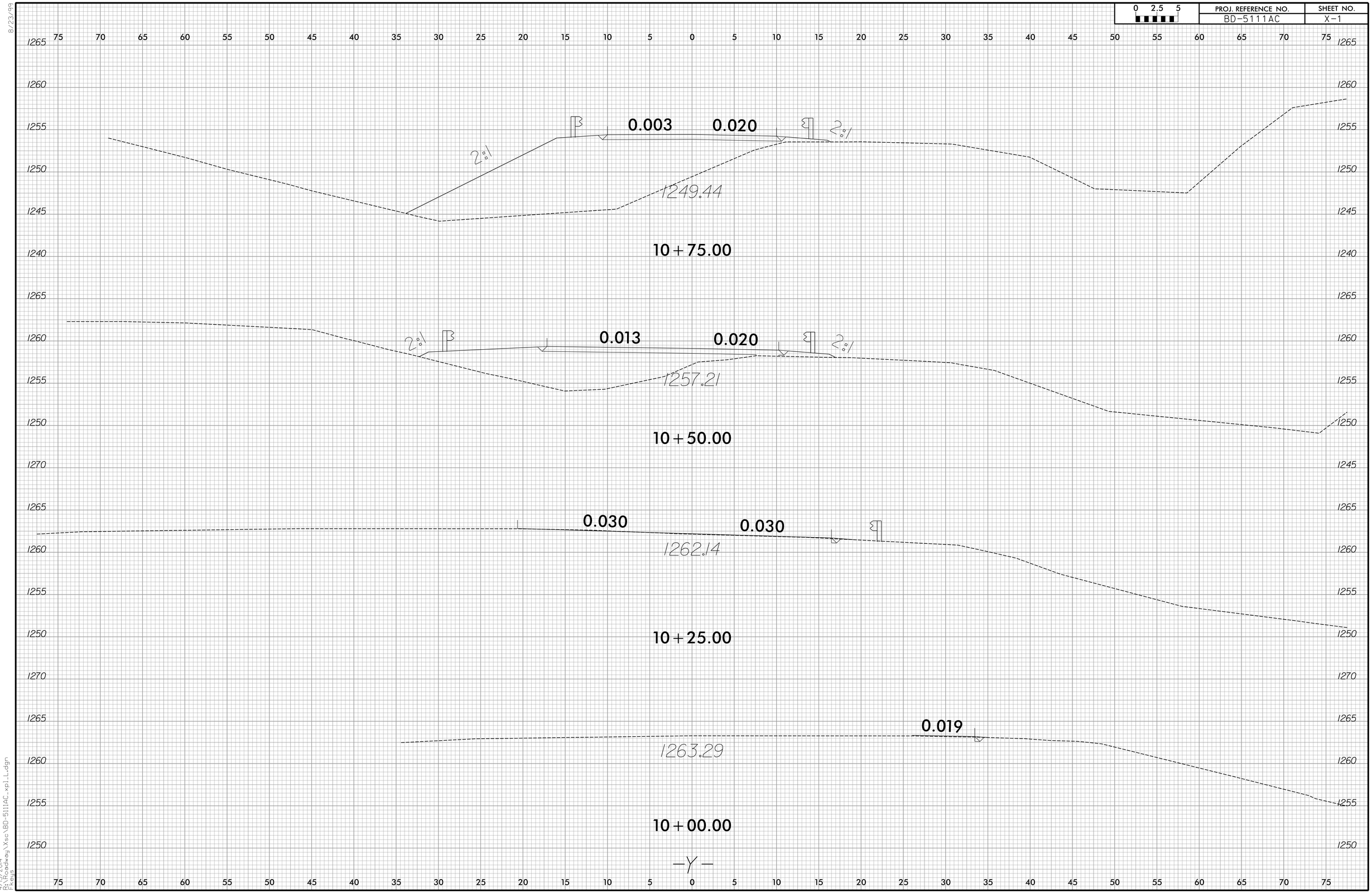

8/23/99

4/15/2014
R:\Roadway\Xsc\BD-5111AC_xp1_L.dgn
F.Keys

8/23/99

0 2.5 5	PROJ. REFERENCE NO.	SHEET NO.
	BD-5111AC	X-2

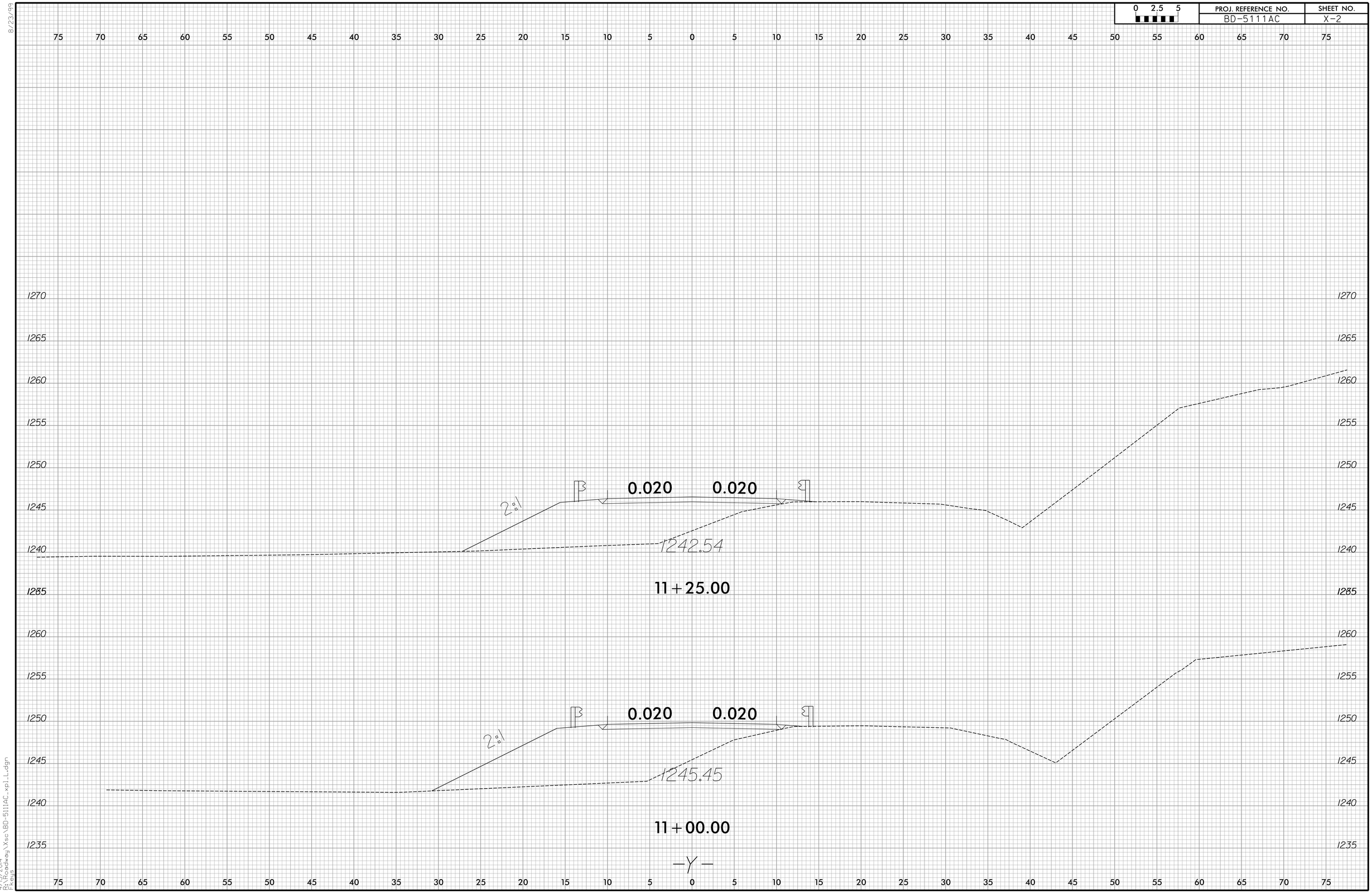

4/15/2014
R:\Roadway\Xsc\BD-5111AC_xp1_L.dgn
F.Keys

0 2.5 5	PROJ. REFERENCE NO.	SHEET NO.
	BD-5111AC	X-3

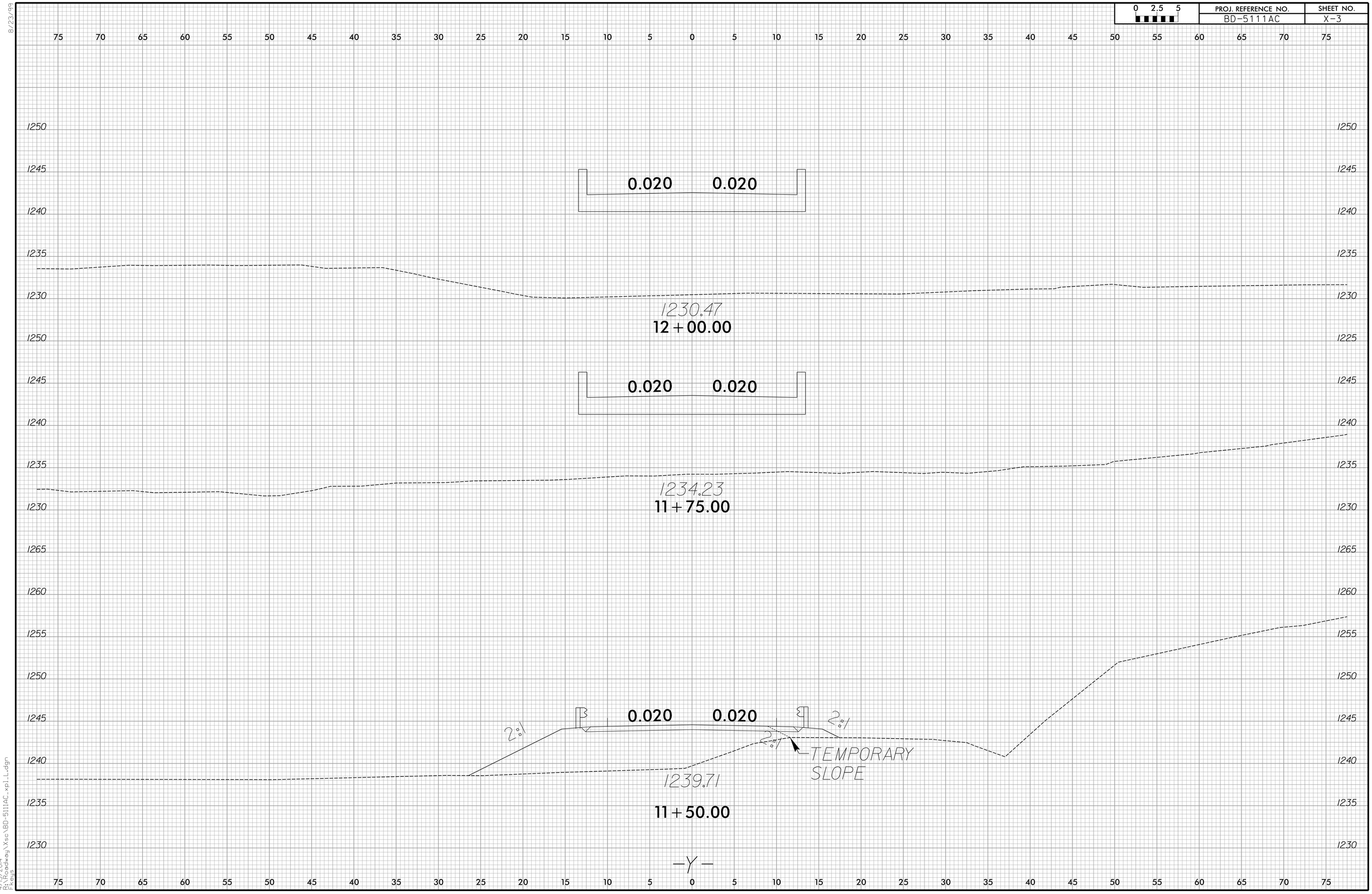

8/23/99

4/15/2014
R:\Roadway\Xsc\BD-5111AC_xp1_L.dgn
Fkeys

0 2.5 5	PROJ. REFERENCE NO.	SHEET NO.
	BD-5111AC	X-4

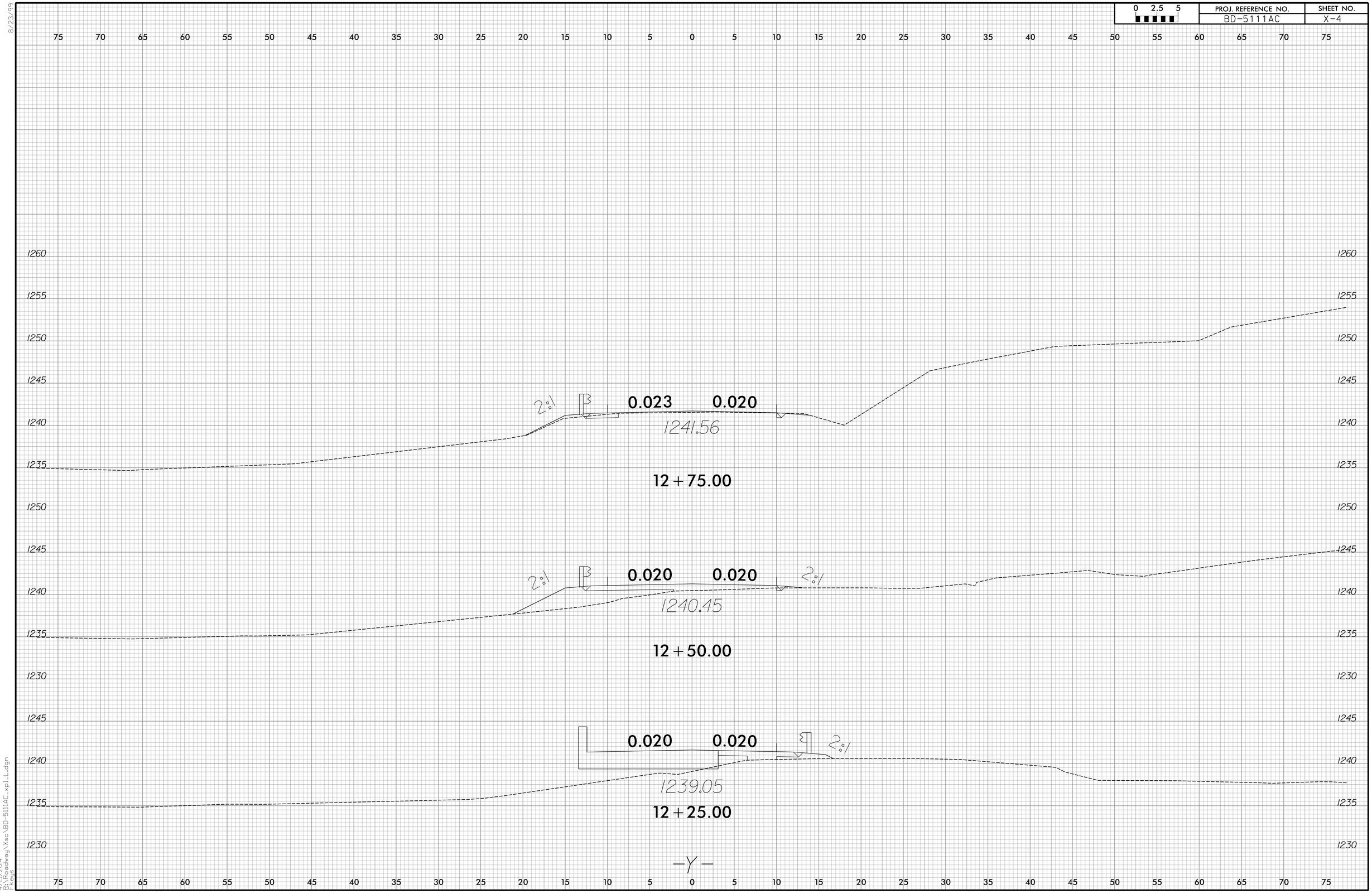

8/23/99

4/15/2014
R:\Roadway\Xsc\BD-5111AC_xpl_L.dgn
Fkeys

8/23/99

0 2.5 5	PROJ. REFERENCE NO.	SHEET NO.
	BD-5111AC	X-5

4/15/2014
R:\Roadway\Xsc\BD-5111AC_xp1_L.dgn
F keys