09/08/99

BRIDGE NO. 193 WILKES COUNTY TIP PROJECT: W-5511

STATE OF NORTH CAROLINA
DIVISION OF HIGHWAYS

WILKES COUNTY

STATE	STATE PROJECT REFERENCE NO.	SHEET NO.	TOTAL SHEETS
N.C.	W-5511	1	

STATE PROJ. NO.	F.A. PROJ. NO.	DESCRIPTION
50082.2.FD1	HSIP-2324(2)	PE, ROW, UTIL. & CONST.

LOCATION: BRIDGE NO. 960193 OVER BRIER CREEK ON SR 2324 (RED WHITE AND BLUE RD)

TYPE OF WORK: GRADING, DRAINAGE, PAVING, STRUCTURES AND RESURFACING

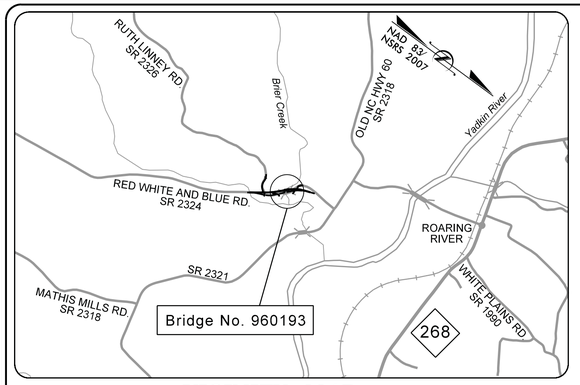

VICINITY MAP

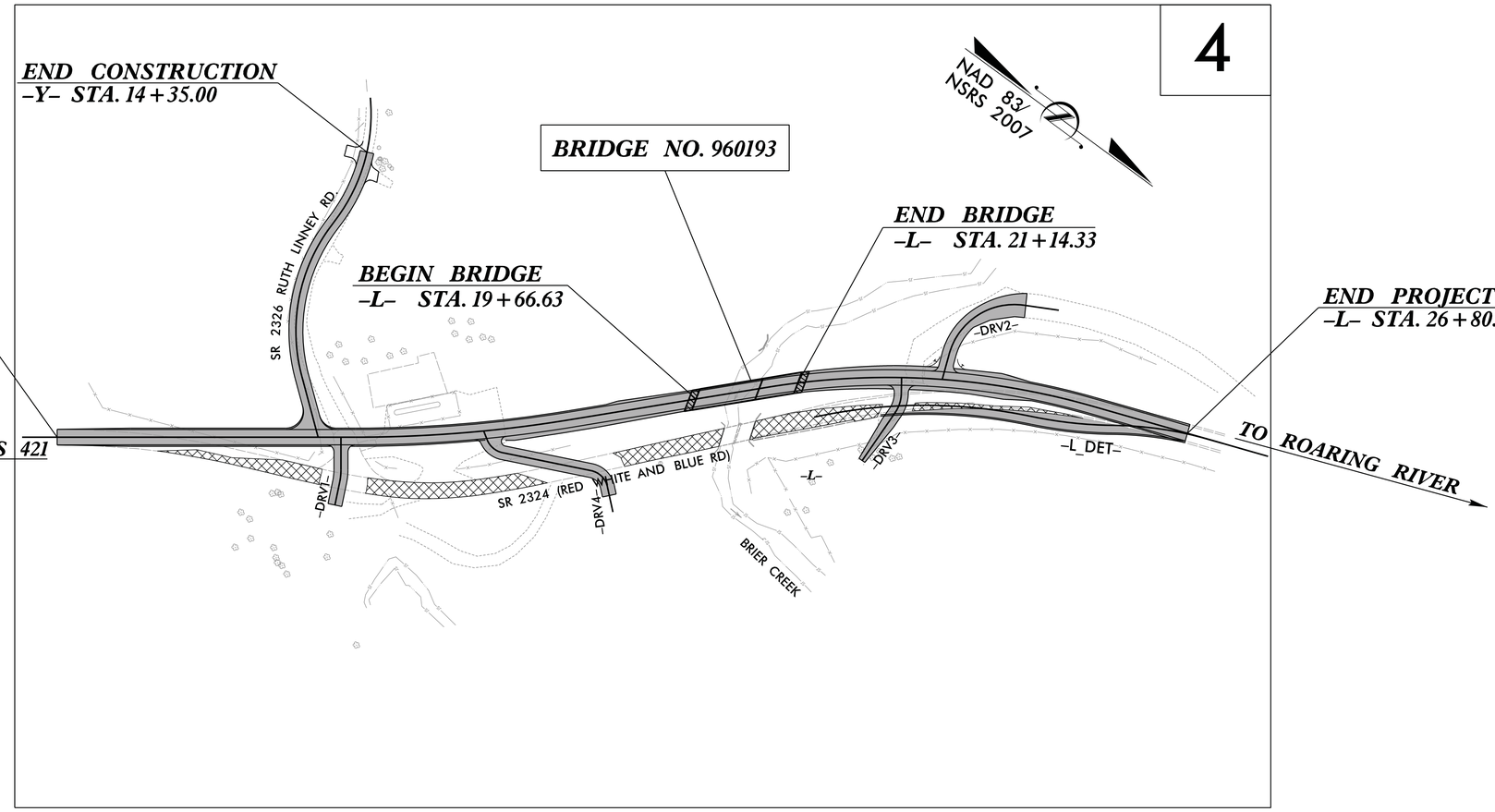

GRAPHIC SCALES

50 25 0 50 100
PLANS

50 25 0 50 100
PROFILE (HORIZONTAL)

10 5 0 10 20
PROFILE (VERTICAL)

DESIGN DATA

ADT = 2,600
V = 55 MPH

FUNC CLASS =
MINOR COLLECTOR

PROJECT LENGTH

LENGTH ROADWAY TIP PROJECT W-5511..... 0.281 mi
LENGTH STRUCTURE TIP PROJECT W-5511..... 0.028 mi
TOTAL LENGTH TIP PROJECT W-5511..... 0.309 mi

RK&K
RUMMEL, KLEPPER & KAHL, LLP
900 RIDGEFIELD DRIVE, SUITE 350
RALEIGH, NORTH CAROLINA 27609
NC LICENSE NO. F-0112
1-888-521-4455 OR 919-878-9560

FOR
DIVISION OF HIGHWAYS

2012 STANDARD SPECIFICATIONS

RIGHT OF WAY DATE:
OCTOBER 14, 2013

LETTING DATE:

B. Keith Skinner, P.E.
PROJECT ENGINEER

Stephen E. Roberts, P.E.
PROJECT DESIGN ENGINEER

HYDRAULICS ENGINEER

NORTH CAROLINA PROFESSIONAL SEAL 036821 ENGINEER CLINT M. PARKS

SIGNATURE: 10/15/14 P.E.

ROADWAY DESIGN ENGINEER

NORTH CAROLINA PROFESSIONAL SEAL 040878 ENGINEER MARY E. LYNCH

SIGNATURE: 10/15/14 P.E.

STATE OF NORTH CAROLINA DEPARTMENT OF TRANSPORTATION

10/15/2014
R:\Roadway\Proj\BD-5111Y_rdy_tsh.dgn
myahl

PAVEMENT SCHEDULE	
C	3" SURFACE COURSE, TYPE S9.5B
E	4" BASE COURSE, TYPE B25.0B
J	8" ABC
T	EARTH MATERIAL
U	EXISTING PAVEMENT
W	WEDGING

PROJECT REFERENCE NO.	SHEET NO.
W-5511	2
R/W SHEET NO.	

ROADWAY DESIGN ENGINEER

NORTH CAROLINA PROFESSIONAL SEAL 040878 ENGINEER MARY E. YAHL

6/24/14

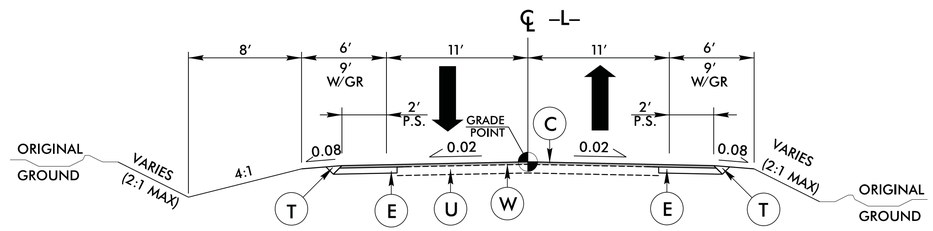

TYPICAL SECTION NO. 1

USE TYPICAL SECTION NO. 1
–L– STA. 10+50.00 TO 19+66.63 (BEGIN BRIDGE)
–L– STA. 21+14.33 (END BRIDGE) TO 26+80.00

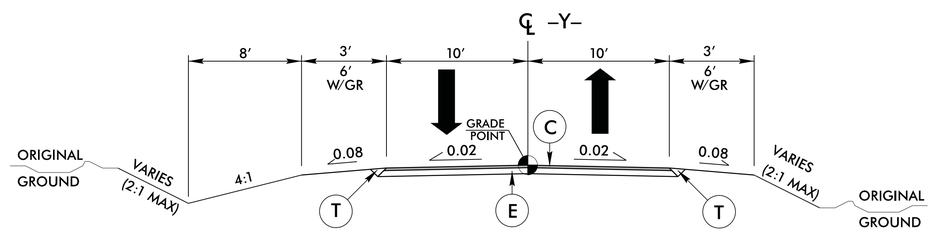

TYPICAL SECTION NO. 2

USE TYPICAL SECTION NO. 2
–Y– STA. 10+11.39 TO 14+35.00

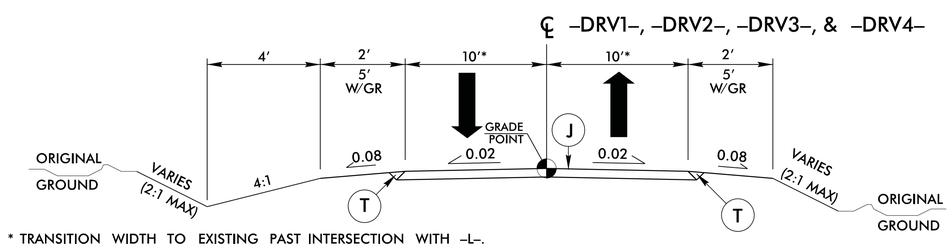

* TRANSITION WIDTH TO EXISTING PAST INTERSECTION WITH –L–.

TYPICAL SECTION NO. 3

USE TYPICAL SECTION NO. 3
–DRV1– STA. 10+11.00 TO 10+95.00
–DRV2– STA. 10+11.20 TO 11+79.65
–DRV3– STA. 10+11.00 TO 11+35.00
–DRV4– STA. 10+11.42 TO 12+20.00

RIGHT–OF–WAY AREAS									
PARCEL #	PROPERTY OWNER'S NAME	TOTAL AREA	AREA TAKEN	AREA REMAINING RIGHT	AREA REMAINING LEFT	CONSTRUCTION EASEMENT	PERMANENT DRAINAGE EASEMENT	PERMANENT DRAINAGE UTILITY EASEMENT	PERMANENT UTILITY EASEMENT
1	TONY ALBERT MATHIS	N/A	0.516 Ac.	N/A	N/A	0 Ac.	0.065 Ac.	0 Ac.	0.249 Ac.
2	TONY ALBERT MATHIS & DANIEL THOMAS MATHIS	N/A	1.138 Ac.	N/A	N/A	0.245 Ac.	0 Ac.	0 Ac.	0.035 Ac.
3	KELLY & AMANDA WELBORN	N/A	0.376 Ac.	N/A	N/A	0.296 Ac.	0.185 Ac.	0.011 Ac.	0.314 Ac.
4	DAVID LEE SPICER	N/A	0 Ac.	N/A	N/A	0 Ac.	0.012 Ac.	0.037 Ac.	0.188 Ac.

PLANS PREPARED BY :
RK&K
RUMMEL, KLEPPER & KAHL, LLP
900 RIDGEFIELD DRIVE SUITE 350
RALEIGH, NORTH CAROLINA 27609–3960
NC LICENSE NO. F–0112 • (919) 878–9560

8/17/99
6/24/2014
R:\Roadway\Proj\BD-5111Y_rdy_typ02.dgn
mwahl

PROJECT REFERENCE NO.	SHEET NO.
W-5511	2A
R/W SHEET NO.	

ROADWAY DESIGN ENGINEER: NORTH CAROLINA PROFESSIONAL SEAL 040878 ENGINEER MARY E. YAHL — 6/24/14

HYDRAULICS ENGINEER: NORTH CAROLINA PROFESSIONAL SEAL 036821 ENGINEER ELENI M. RIGGS — 6/24/14

DETAIL OF TEMPORARY ON-SITE DETOUR

NAD 83 (NSRS 2007)

-L_DET-

PI Sta 11+49.10	PI Sta 13+04.92	PI Sta 13+73.06	PI Sta 14+99.15
Δ = 22° 47' 03.0" (RT)	Δ = 1° 11' 25.9" (RT)	Δ = 11° 08' 58.4" (LT)	Δ = 15° 22' 21.3" (RT)
D = 7° 44' 33.6"	D = 5° 35' 23.4"	D = 9° 43' 39.5"	D = 11° 12' 44.9"
L = 294.27'	L = 21.30'	L = 114.62'	L = 137.10'
T = 149.10'	T = 10.65'	T = 57.49'	T = 68.97'
R = 740.00'	R = 1,025.00'	R = 589.00'	R = 511.00'

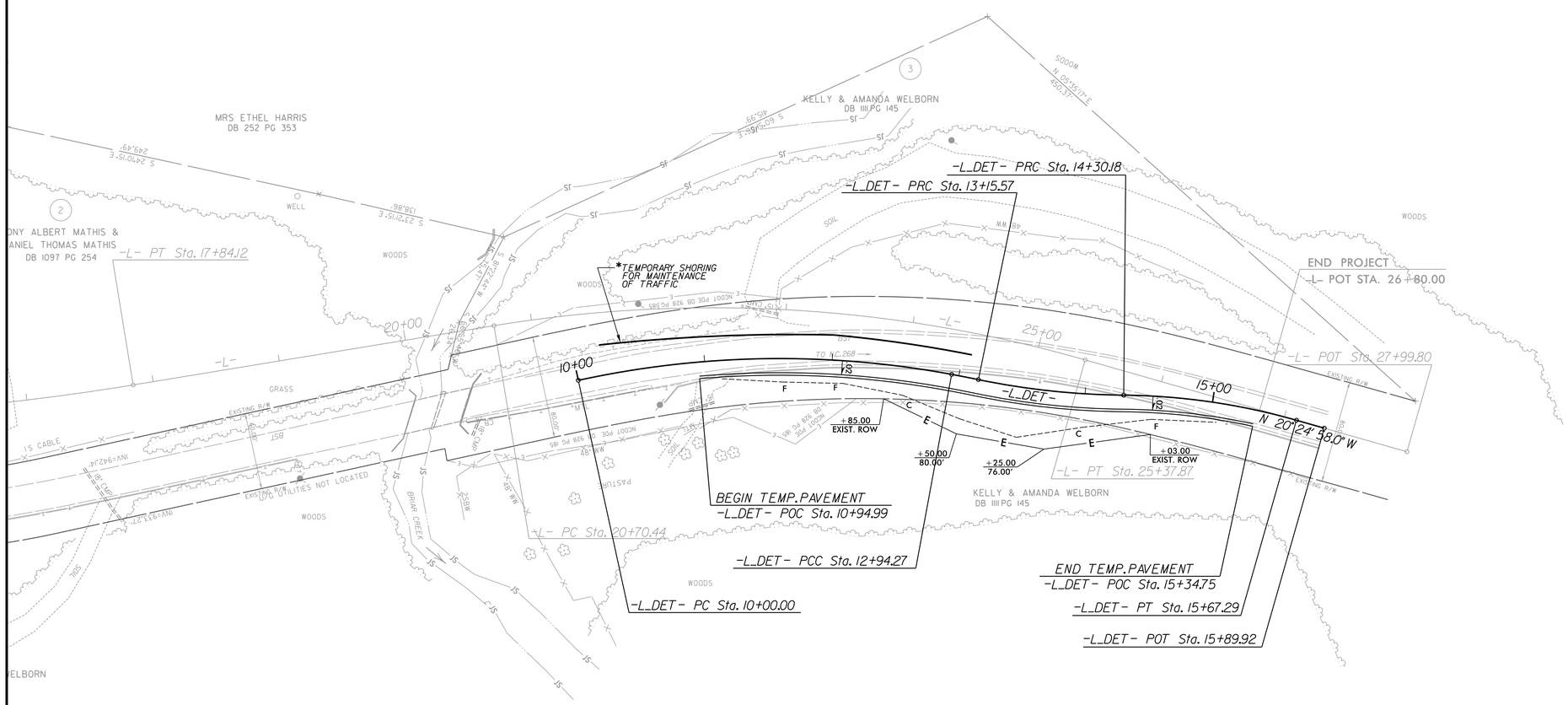

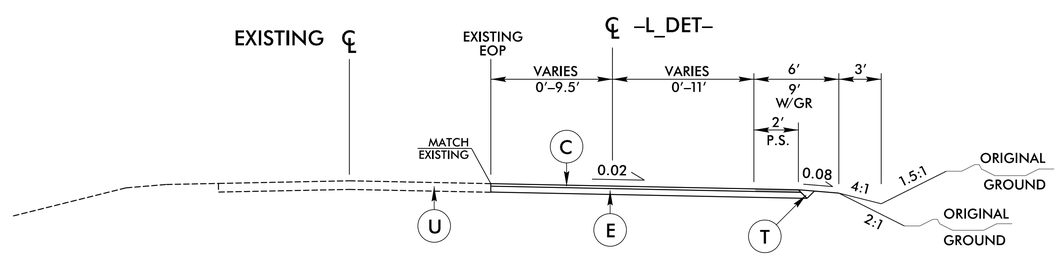

DETOUR TYPICAL SECTION NO. 1

PAVEMENT SCHEDULE	
C	3" SURFACE COURSE, TYPE S9.5B
E	4" BASE COURSE, TYPE B25.0B
T	EARTH MATERIAL
U	EXISTING PAVEMENT

USE DETOUR TYPICAL SECTION NO. 1
-L_DET- STA. 10+94.99 TO 15+34.75

* FOR LIMITS OF TEMPORARY SHORING FOR MAINTENANCE OF TRAFFIC, SEE TRAFFIC CONTROL PLANS.

PLANS PREPARED BY :
RK&K
RUMMEL, KLEPPER & KAHL, LLP
900 RIDGEFIELD DRIVE SUITE 350
RALEIGH, NORTH CAROLINA 27609-3960
NC LICENSE NO. F-0112 • (919) 878-9560

8/17/99
6/24/2014
R:\Roadway\Proj\BD-5111Y_rdy_psh02A.dgn
mlohr

PROJECT REFERENCE NO.	SHEET
45357.1.25 (BD-5111Y)	2B

GEOTECHNICAL ENGINEER

NORTH CAROLINA PROFESSIONAL SEAL 39779 ENGINEER JEREMY R. HAM

SIGNATURE 4/29/14 DATE

GROUNDWATER CONDITION (SEE NOTE 6)	H SHORING HEIGHT (FT)	SLOPE OR SURCHARGE CASE WITH NO TRAFFIC IMPACT					SURCHARGE CASE WITH TRAFFIC IMPACT				
		SHEET PILES		H-PILES WITH TIMBER LAGGING			SHEET PILES		H-PILES WITH TIMBER LAGGING		
		MINIMUM REQUIRED EMBEDMENT (FT)	MINIMUM REQUIRED SECTION MODULUS (IN^3/FT)	MINIMUM REQUIRED EMBEDMENT* (FT) (SEE NOTE 10)			MINIMUM REQUIRED EMBEDMENT (FT)	MINIMUM REQUIRED SECTION MODULUS (IN^3/FT)	MINIMUM REQUIRED EMBEDMENT* (FT) (SEE NOTE 10)		
				HP 10x42	HP 12x53	HP 14x73			HP 10x42	HP 12x53	HP 14x73
GROUNDWATER ELEVATION BETWEEN BOTTOM OF SHORING AND PILE TIP	< 6	11.5	4.5	11.5	11.5	11.5	16.0	12.0	13.0	13.0	13.0
	7	13.0	7.0	13.0	13.0	13.0	17.0	14.5	14.5	14.5	14.5
	8	15.0	10.0	--	15.0	15.0	18.0	17.0	--	15.5	15.5
	9	17.0	14.0	--	17.0	17.0	19.0	20.0	--	17.0	17.0
	10	18.5	19.5	--	--	18.5	20.0	23.5	--	--	18.5
	11	20.5	26.0	--	--	--	21.0	28.0	--	--	20.0
	12	22.5	33.0	--	--	--	22.0	33.0	--	--	21.5
GROUNDWATER ELEVATION BELOW PILE TIP	< 6	7.5	3.0	8.0	8.0	8.0	11.0	10.0	9.5	9.5	9.5
	7	8.5	4.5	9.5	9.5	9.5	12.0	12.0	10.5	10.5	10.5
	8	10.0	6.5	10.5	10.5	10.5	12.5	14.0	11.5	11.5	11.5
	9	11.0	9.5	--	12.0	12.0	13.5	16.5	--	12.5	12.5
	10	12.5	13.0	--	--	13.5	14.0	19.5	--	13.5	13.5
	11	13.5	17.0	--	--	14.5	15.0	22.5	--	--	14.5
	12	15.0	21.5	--	--	16.0	16.0	25.5	--	--	15.5

MINIMUM REQUIRED EMBEDMENT AND SECTION MODULUS

*DO NOT USE H-PILES WITH TIMBER LAGGING FOR GROUNDWATER CONDITION, SHORING HEIGHT AND H-PILE SIZE SHOWN IF MINIMUM REQUIRED EMBEDMENT IS "--".

NOTES:

1. AT THE CONTRACTOR'S OPTION, USE STANDARD TEMPORARY SHORING AS NOTED IN THE PLANS.
2. FOR STANDARD TEMPORARY SHORING, SEE STANDARD SHORING PROVISION.
3. STANDARD TEMPORARY SHORING IS BASED ON THE FOLLOWING IN-SITU ASSUMED SOIL PARAMETERS:
   UNIT WEIGHT, γ = 120 LB/CF
   FRICTION ANGLE, ϕ = 30 DEGREES
   COHESION, c = 0 LB/SF
   GROUNDWATER ELEVATION = 925 FT
4. DO NOT USE STANDARD TEMPORARY SHORING IF ASSUMED SOIL PARAMETERS ARE NOT APPLICABLE.
5. DO NOT USE STANDARD TEMPORARY SHORING WHEN VERY LOOSE OR SOFT SOIL OR MUCK IS WITHIN THE EMBEDMENT DEPTH.
6. USE GROUNDWATER ELEVATION NOTED IN THE PLANS. IF NO GROUNDWATER ELEVATION IS SHOWN IN THE PLANS, USE "GROUNDWATER ELEVATION BETWEEN BOTTOM OF SHORING AND PILE TIP" FOR GROUNDWATER CONDITION. DO NOT USE STANDARD TEMPORARY SHORING IF GROUNDWATER IS ABOVE BOTTOM OF SHORING.
7. AT THE CONTRACTOR'S OPTION OR IF AVAILABLE CLEAR DISTANCE IS LESS THAN THE MINIMUM REQUIRED FOR CONCRETE BARRIER, SET BARRIER NEXT TO AND UP AGAINST TRAFFIC SIDE OF PILES AND USE "SURCHARGE CASE WITH TRAFFIC IMPACT".
8. AT THE CONTRACTOR'S OPTION OR IF AVAILABLE CLEAR DISTANCE IS LESS THAN 4' FOR TEMPORARY GUARDRAIL, ATTACH GUARDRAIL TO TRAFFIC SIDE OF PILES AS SHOWN IN THE PLANS AND USE "SURCHARGE CASE WITH TRAFFIC IMPACT".
9. MINIMUM REQUIRED EXTENSION IS 6" FOR "SLOPE OR SURCHARGE CASE WITH NO TRAFFIC IMPACT" AND 32" FOR "SURCHARGE CASE WITH TRAFFIC IMPACT".
10. MINIMUM REQUIRED EMBEDMENT FOR H-PILES WITH TIMBER LAGGING IS BASED ON DRIVEN H-PILES AT MAXIMUM 6' SPACING. AT THE CONTRACTOR'S OPTION, EMBEDMENT DEPTHS MAY BE REDUCED BY 25% FOR DRILLED-IN H-PILES.
11. SUBMIT A "STANDARD TEMPORARY SHORING SELECTION FORM" AT LEAST 7 DAYS BEFORE STARTING TEMPORARY SHORING CONSTRUCTION. UP TO 3 SHORING LOCATIONS MAY BE INCLUDED ON EACH FORM. STANDARD SHORING SELECTION FORMS ARE AVAILABLE FROM: connect.ncdot.gov/resources/Geological/Pages/Geotech_Forms_Details.aspx
12. CONTACT THE ENGINEER IF PILES DO NOT ATTAIN THE MINIMUM REQUIRED EMBEDMENT.

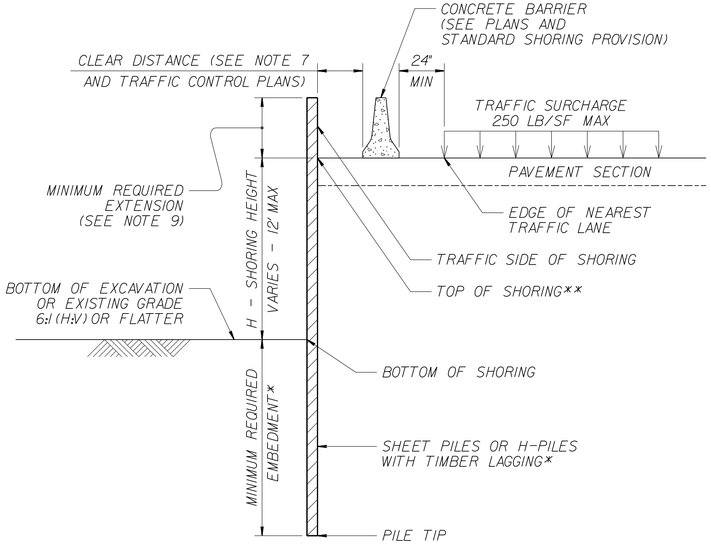

CONCRETE BARRIER

**TOP OF SHORING = EDGE OF PAVEMENT

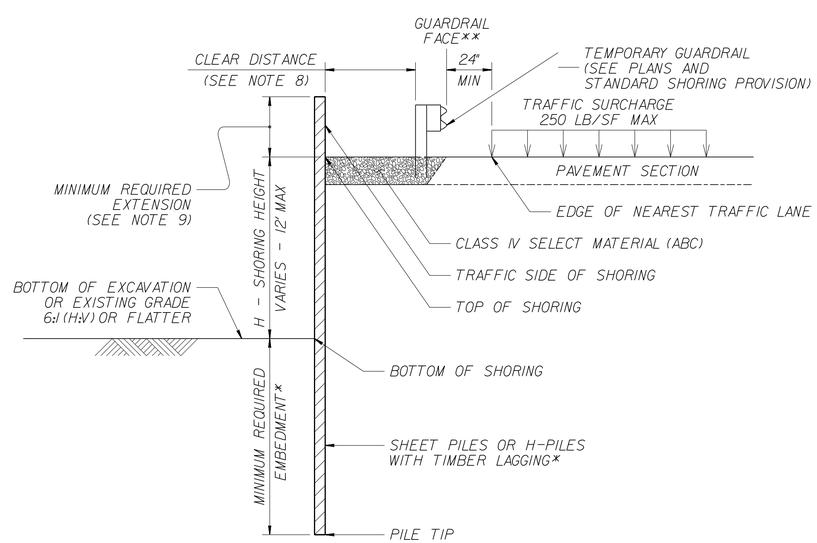

TEMPORARY GUARDRAIL

**GUARDRAIL FACE = EDGE OF PAVEMENT

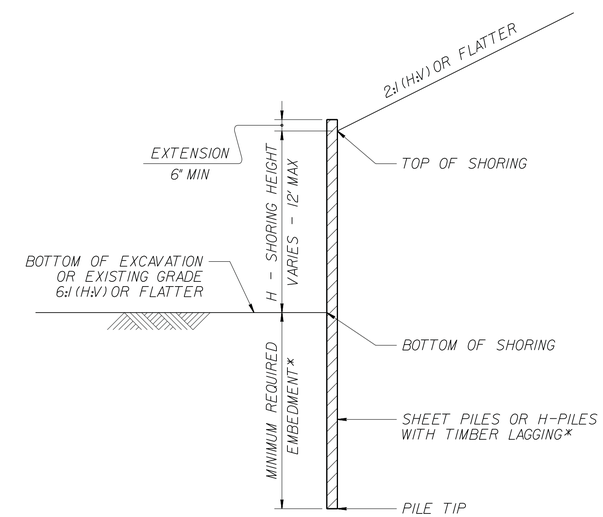

STANDARD TEMPORARY SHORING

(SLOPE CASE)
*SEE TABLE ABOVE.

STANDARD TEMPORARY SHORING

(SURCHARGE CASE)
*SEE TABLE ABOVE.

STATE OF NORTH CAROLINA DEPARTMENT OF TRANSPORTATION

GEOTECHNICAL ENGINEERING UNIT

STATE OF NORTH CAROLINA DEPARTMENT OF TRANSPORTATION RALEIGH

STANDARD DRAWING NO. 1801.01

STANDARD TEMPORARY SHORING

DATE: 11-19-13

PROJECT REFERENCE NO.	SHEET
45357.1.25 (BD-5111Y)	2C

GEOTECHNICAL ENGINEER

NORTH CAROLINA PROFESSIONAL SEAL 39779 ENGINEER JEFFREY R. HAWK

SIGNATURE 4/29/14 DATE

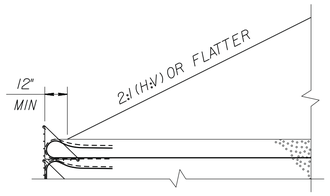

SLOPE CASE

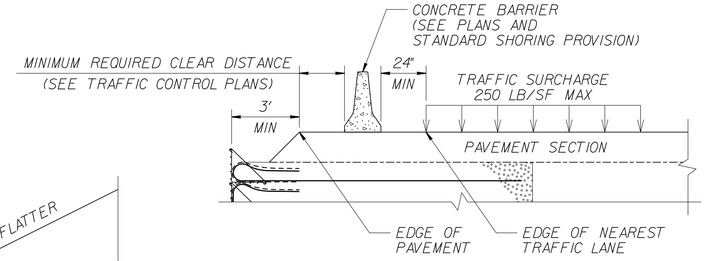

SURCHARGE CASE

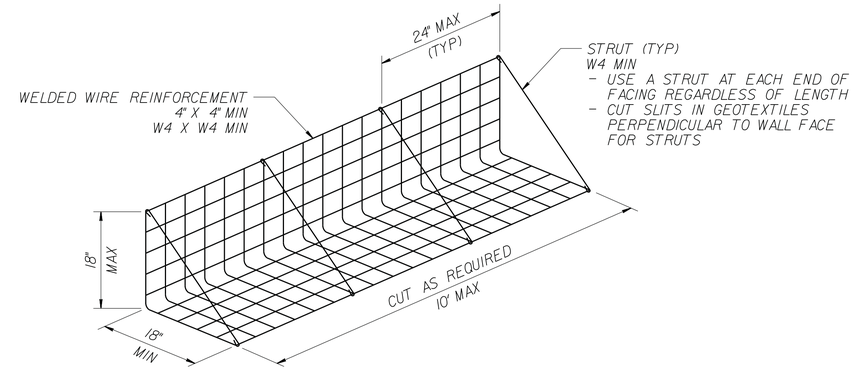

FACING DETAIL

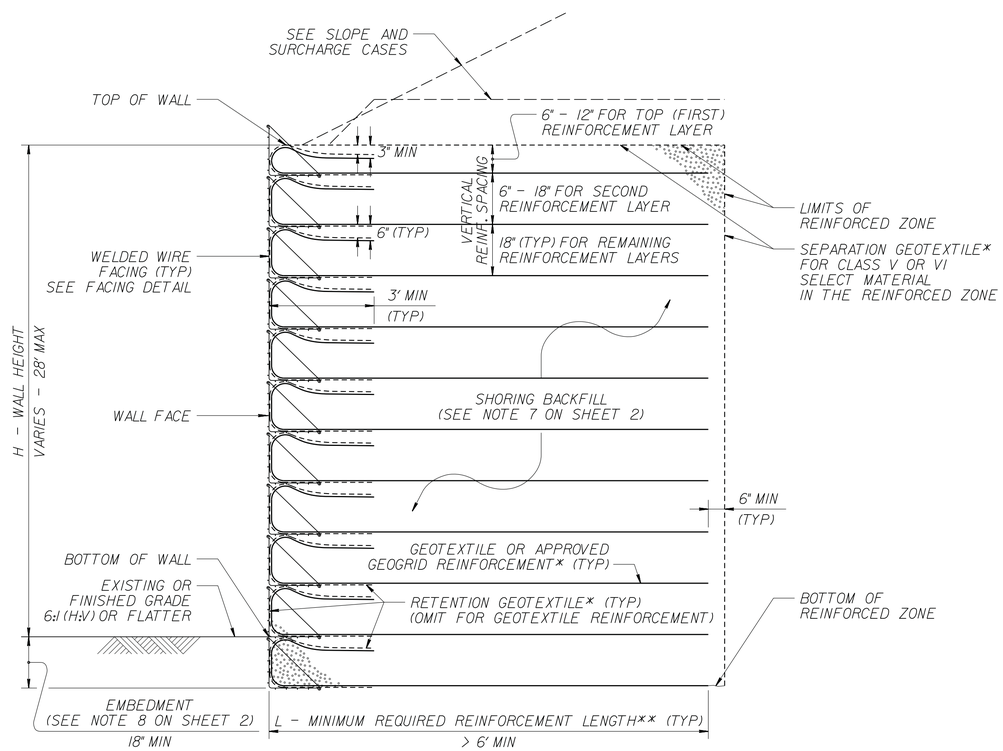

STANDARD TEMPORARY WALL

(FOR STANDARD TEMPORARY WALLS ON STRUCTURES, SEE TEMPORARY WALL ON STRUCTURE DETAIL ON SHEET 2.)
*SEE GEOSYNTHETIC PLACEMENT DETAILS ON SHEET 2.
**SEE REINFORCEMENT TABLES ON SHEET 3.

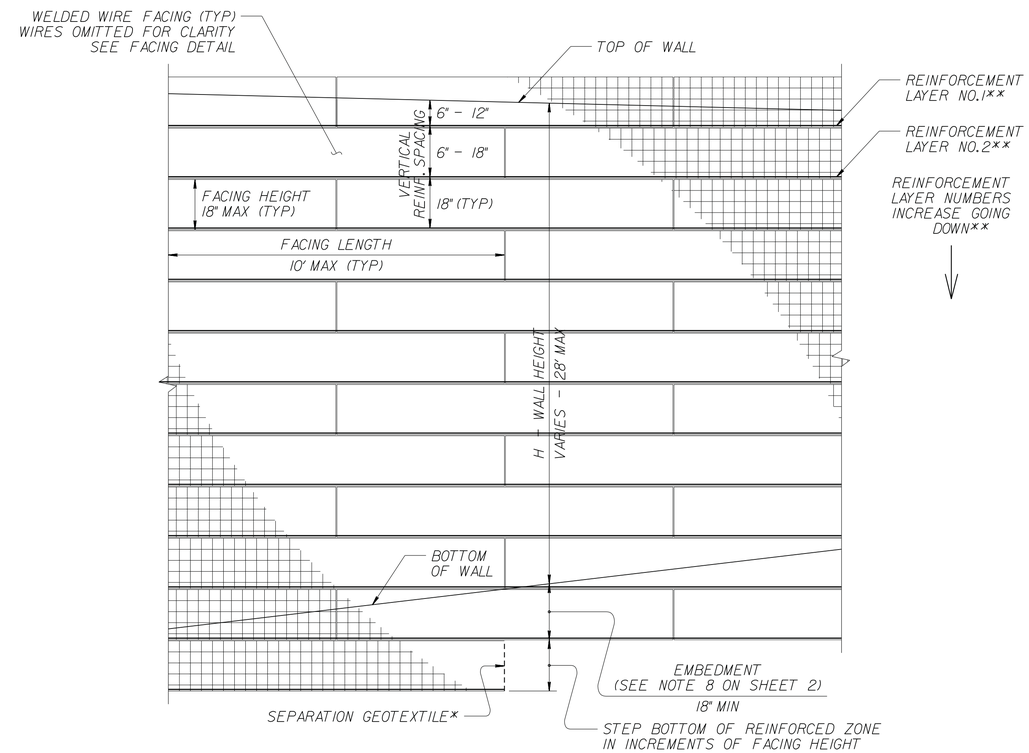

STANDARD TEMPORARY WALL – PARTIAL ELEVATION

*SEE GEOSYNTHETIC PLACEMENT DETAILS ON SHEET 2.
**SEE REINFORCEMENT TABLES ON SHEET 3.

STATE OF NORTH CAROLINA DEPARTMENT OF TRANSPORTATION

GEOTECHNICAL ENGINEERING UNIT

STATE OF NORTH CAROLINA DEPARTMENT OF TRANSPORTATION RALEIGH

STANDARD DRAWING NO. 1801.02

STANDARD TEMPORARY WALL SHEET 1 OF 3

DATE: 11-19-13

PROJECT REFERENCE NO.	SHEET
45357.1.25 (BD-5111Y)	2D

GEOTECHNICAL ENGINEER

NORTH CAROLINA PROFESSIONAL SEAL 39779 ENGINEER JEREMY R. HAMM

SIGNATURE 4/29/14 DATE

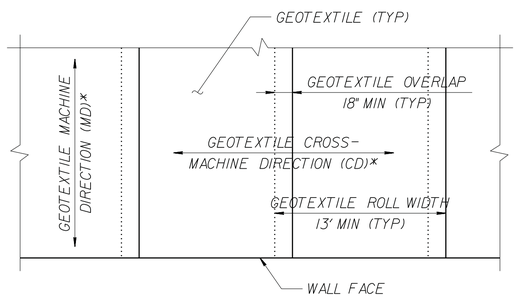

GEOTEXTILE PLACEMENT

(100% COVERAGE MIN FOR GEOTEXTILE REINFORCEMENT)

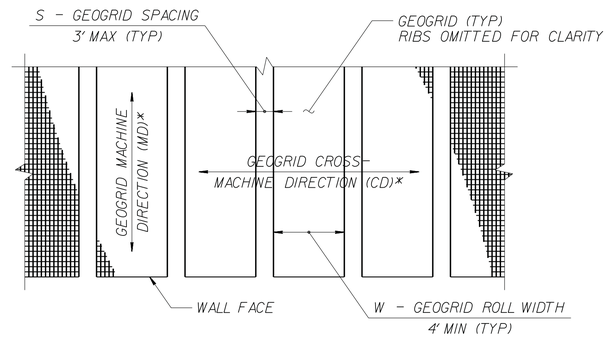

GEOGRID PLACEMENT

(80% COVERAGE MIN FOR GEOGRID REINFORCEMENT – $\frac{W}{W+S} \times 100 \geq 80\%$, SEE NOTE 11)

GEOSYNTHETIC PLACEMENT DETAILS

(PLAN VIEW)
*SEE NOTE 12.

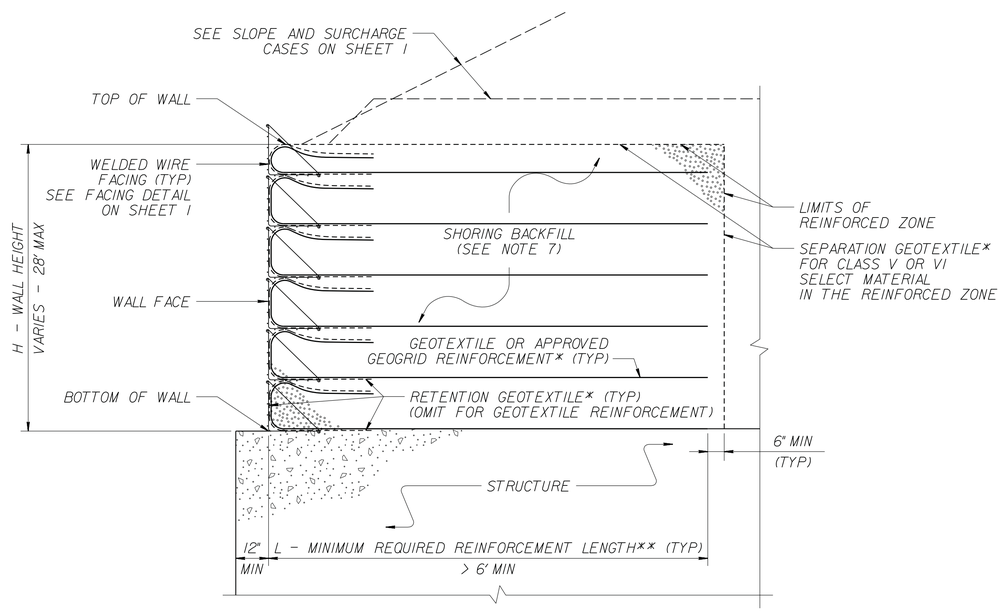

TEMPORARY WALL ON STRUCTURE DETAIL

*SEE GEOSYNTHETIC PLACEMENT DETAILS.
**SEE REINFORCEMENT TABLES ON SHEET 3.

NOTES:

1. AT THE CONTRACTOR'S OPTION, USE STANDARD TEMPORARY WALLS AS NOTED IN THE PLANS.
2. FOR STANDARD TEMPORARY WALLS, SEE STANDARD SHORING PROVISION.
3. STANDARD TEMPORARY WALLS ARE BASED ON THE FOLLOWING IN-SITU ASSUMED SOIL PARAMETERS:
   UNIT WEIGHT, γ = 120 LB/CF
   FRICTION ANGLE, ϕ = 30 DEGREES
   COHESION, c = 0 LB/SF
   GROUNDWATER ELEVATION = 925 FT
4. DO NOT USE STANDARD TEMPORARY WALLS IF ASSUMED SOIL PARAMETERS ARE NOT APPLICABLE.
5. DO NOT USE STANDARD TEMPORARY WALLS WHEN VERY LOOSE OR SOFT SOIL OR MUCK IS BELOW TEMPORARY WALLS.
6. USE GROUNDWATER ELEVATION NOTED IN THE PLANS. IF NO GROUNDWATER ELEVATION IS SHOWN IN THE PLANS, ASSUME GROUNDWATER DEPTH IS LESS THAN 7' BELOW BOTTOM OF REINFORCED ZONE. DO NOT USE STANDARD TEMPORARY WALLS IF GROUNDWATER IS ABOVE BOTTOM OF REINFORCED ZONE.
7. DO NOT USE A-2-4 SOIL FOR STANDARD TEMPORARY WALLS AROUND CULVERTS OR IN THE REINFORCED ZONE OF STANDARD TEMPORARY WALLS FOR SLOPE CASES. DO NOT USE CLASS VI SELECT MATERIAL IN THE REINFORCED ZONE OF STANDARD TEMPORARY WALLS WITH GEOTEXTILE REINFORCEMENT.
8. EMBEDMENT IS NOT REQUIRED FOR STANDARD TEMPORARY WALLS ON STRUCTURES OR ROCK AS DETERMINED BY THE ENGINEER.
9. DO NOT USE MORE THAN 4 DIFFERENT REINFORCEMENT STRENGTHS FOR EACH STANDARD TEMPORARY WALL.
10. GEOGRIDS ARE TYPICALLY APPROVED FOR ULTIMATE TENSILE STRENGTHS IN THE MACHINE DIRECTION (MD) AND CROSS-MACHINE DIRECTION (CD) OR SHORT-TERM DESIGN STRENGTHS FOR A 3-YEAR DESIGN LIFE IN THE MD BASED ON MATERIAL TYPE. THE LIST OF APPROVED GEOGRIDS WITH DESIGN STRENGTHS IS AVAILABLE FROM:
    connect.ncdot.gov/resources/Materials/Pages/SoilsLaboratory.aspx
    DEFINE MATERIAL TYPE FROM THE WEBSITE ABOVE FOR SHORING BACKFILL AS FOLLOWS:

MATERIAL TYPE	SHORING BACKFILL
BORROW	A-2-4 SOIL
FINE AGGREGATE	CLASS II, TYPE I OR CLASS III SELECT MATERIAL
COARSE AGGREGATE	CLASS V OR VI SELECT MATERIAL

    IF THE WEBSITE DOES NOT LIST A SHORT-TERM DESIGN STRENGTH FOR AN APPROVED GEOGRID, USE A SHORT-TERM DESIGN STRENGTH EQUAL TO THE ULTIMATE TENSILE STRENGTH DIVIDED BY 3.5 FOR THE GEOGRID REINFORCEMENT.
11. FOR GEOGRID REINFORCEMENT WITH LESS THAN 100% COVERAGE, STAGGER REINFORCEMENT SO GEOGRIDS ARE CENTERED OVER GAPS IN THE REINFORCEMENT LAYER BELOW.
12. AT THE CONTRACTOR'S OPTION, REINFORCEMENT MAY BE INSTALLED WITH THE MD PARALLEL TO THE WALL FACE IF BOTH OF THE FOLLOWING CONDITIONS OCCUR:
    - W (REINFORCEMENT ROLL WIDTH) ≥ (MINIMUM REQUIRED REINFORCEMENT LENGTH) + 4.5' AND
    - REINFORCEMENT STRENGTH IN CD ≥ MINIMUM REQUIRED REINFORCEMENT STRENGTH IN MD.
13. SUBMIT A "STANDARD TEMPORARY WALL SELECTION FORM" AT LEAST 7 DAYS BEFORE STARTING TEMPORARY WALL CONSTRUCTION. STANDARD SHORING SELECTION FORMS ARE AVAILABLE FROM:
    connect.ncdot.gov/resources/Geological/Pages/Geotech_Forms_Details.aspx
14. DO NOT PLACE SHORING BACKFILL OR REINFORCEMENT UNTIL EXCAVATION DIMENSIONS AND FOUNDATION MATERIAL ARE APPROVED.
15. FOR STANDARD TEMPORARY WALLS WITH PILE FOUNDATIONS IN THE REINFORCED ZONE, DRIVE PILES THROUGH REINFORCEMENT AFTER CONSTRUCTING TEMPORARY WALLS.
16. DO NOT SPLICE OR OVERLAP REINFORCEMENT SO SEAMS ARE PARALLEL TO THE WALL FACE.
17. CONTACT THE ENGINEER WHEN EXISTING OR FUTURE OBSTRUCTIONS SUCH AS FOUNDATIONS, PAVEMENTS, PIPES, INLETS OR UTILITIES WILL INTERFERE WITH REINFORCEMENT.
18. FOR STANDARD TEMPORARY WALLS WITH INTERIOR ANGLES LESS THAN 90 DEGREES, WRAP GEOSYNTHETICS AT ACUTE CORNERS AS DIRECTED BY THE ENGINEER.
19. FOR STANDARD TEMPORARY WALLS WITH TOP OF WALL WITHIN 5' OF FINISHED GRADE, REMOVE TOP FACING AND INCORPORATE TOP REINFORCEMENT LAYER INTO FILL WHEN PLACING FILL IN FRONT OF WALL.

STATE OF NORTH CAROLINA DEPARTMENT OF TRANSPORTATION

GEOTECHNICAL ENGINEERING UNIT

STATE OF NORTH CAROLINA DEPARTMENT OF TRANSPORTATION RALEIGH

STANDARD DRAWING NO. 1801.02

STANDARD TEMPORARY WALL SHEET 2 OF 3

DATE: 11-19-13

PROJECT REFERENCE NO.	SHEET
45357.1.25 (BD-5111Y)	2E

GEOTECHNICAL ENGINEER

NORTH CAROLINA PROFESSIONAL SEAL 39779 ENGINEER JEREMY R. HAMM

SIGNATURE 4/29/14 DATE

SLOPE OR SURCHARGE CASE	GROUNDWATER DEPTH BELOW BOTTOM OF REINFORCED ZONE (SEE NOTE 6 ON SHEET 2) (FT)	SHORING BACKFILL TYPE IN THE REINFORCED ZONE (SEE NOTE 7 ON SHEET 2)	H – WALL HEIGHT (FT)																								
			< 4	5	6	7	8	9	10	11	12	13	14	15	16	17	18	19	20	21	22	23	24	25	26	27	28
SLOPE CASE	> 0	CLASS II, TYPE I, CLASS III, CLASS V OR CLASS VI SELECT MATERIAL	6	6	7	8	9	11	12	13	13	14	15	16	17	18	19	20	21	22	23	24	24	25	26	27	27
SURCHARGE CASE	> 0 TO 7 FOR H < 20′ > 0 TO 10 FOR H ≥ 20′	ALL SHORING BACKFILL TYPES	6	7	7	8	8	9	9	10	11	11	12	12	13	14	14	15	16	17	17	18	19	19	20	21	22
	> 7 FOR H < 20′ > 10 FOR H ≥ 20′	A-2-4 SOIL	6	6	7	8	8	9	9	10	11	11	12	12	13	14	14	15	16	16	17	18	18	19	20	20	21
		CLASS II, TYPE I OR CLASS III SELECT MATERIAL	6	6	7	7	8	8	9	10	10	11	11	12	12	13	14	15	15	16	16	17	17	18	18	19	20
		CLASS V OR CLASS VI SELECT MATERIAL	6	6	7	7	7	8	8	9	9	10	10	11	12	13	13	14	14	15	15	16	17	17	18	19	19

L – MINIMUM REQUIRED REINFORCEMENT LENGTH (FT)

(FOR ALL REINFORCEMENT TYPES)

WALL HEIGHT (H) + EMBEDMENT (FT)	NUMBER OF REINFORCEMENT LAYERS*
2.5 – 4	3
4 – 5.5	4
5.5 – 7	5
7 – 8.5	6
8.5 – 10	7
10 – 11.5	8
11.5 – 13	9
13 – 14.5	10
14.5 – 16	11
16 – 17.5	12
17.5 – 19	13
19 – 20.5	14
20.5 – 22	15
22 – 23.5	16
23.5 – 25	17
25 – 26.5	18
26.5 – 28	19
28 – 29.5	20

*BASED ON VERTICAL REINFORCEMENT SPACING SHOWN ON SHEET 1.

REINFORCEMENT LAYER NUMBER*	SHORING BACKFILL TYPE IN THE REINFORCED ZONE (SEE NOTE 7 ON SHEET 2)				
	SLOPE CASE		SURCHARGE CASE		
	CLASS II, TYPE I OR CLASS III SELECT MATERIAL	CLASS V SELECT MATERIAL	A-2-4 SOIL	CLASS II, TYPE I OR CLASS III SELECT MATERIAL	CLASS V SELECT MATERIAL
1	2400	2400	2400	2400	2400
2	2400	2400	2400	2400	2400
3	2400	2400	2400	2400	2400
4	2400	2400	2500	2400	2400
5	2500	2400	3000	2400	2400
6	3000	2400	3500	2800	2400
7	3500	2700	4000	3200	2600
8	4000	3100	4500	3600	2900
9	4500	3500	5000	4000	3200
10	5000	3900	5500	4400	3500
11	5500	4300	6000	4800	3800
12	6000	4700	6500	5200	4100
13	6500	5100	7000	5600	4400
14	7000	5400	7500	6000	4700
15	7500	5800	8000	6400	5000
16	8000	6200	8500	6800	5300
17	8500	6600	9000	7200	5600
18	9000	7000	9500	7600	5900
19	9500	7400	10000	8000	6200
20	10000	7800	10500	8400	6500

GEOTEXTILE REINFORCEMENT
ULTIMATE TENSILE STRENGTH (LB/FT)

REINFORCEMENT LAYER NUMBER*	SHORING BACKFILL TYPE IN THE REINFORCED ZONE (SEE NOTE 7 ON SHEET 2)				
	SLOPE CASE		SURCHARGE CASE		
	CLASS II, TYPE I OR CLASS III SELECT MATERIAL	CLASS V OR CLASS VI SELECT MATERIAL	A-2-4 SOIL	CLASS II, TYPE I OR CLASS III SELECT MATERIAL	CLASS V OR CLASS VI SELECT MATERIAL
1	240	200	340	290	240
2	380	310	520	430	350
3	530	420	700	570	460
4	690	550	870	720	570
5	860	690	1050	860	680
6	1030	830	1220	1000	790
7	1200	970	1400	1150	900
8	1370	1110	1580	1290	1010
9	1550	1240	1750	1430	1120
10	1720	1380	1930	1580	1230
11	1890	1520	2100	1720	1340
12	2060	1660	2280	1860	1450
13	2240	1800	2450	2010	1560
14	2410	1940	2630	2150	1670
15	2580	2080	2800	2290	1780
16	2750	2220	2980	2440	1890
17	2930	2360	3160	2580	2000
18	3100	2500	3330	2720	2110
19	3270	2640	3510	2860	2220
20	3440	2780	3690	3000	2330

GEOGRID REINFORCEMENT
SHORT–TERM DESIGN STRENGTH (LB/FT)

(SEE NOTE 10 ON SHEET 2.)

MINIMUM REQUIRED REINFORCEMENT STRENGTH IN MD

(SEE NOTE 9 ON SHEET 2.)
*SEE PARTIAL ELEVATION ON SHEET 1
FOR REINFORCEMENT LAYER NUMBERING.

STATE OF NORTH CAROLINA DEPARTMENT OF TRANSPORTATION

GEOTECHNICAL ENGINEERING UNIT

STATE OF NORTH CAROLINA
DEPARTMENT OF TRANSPORTATION
RALEIGH

STANDARD DRAWING NO. 1801.02

STANDARD
TEMPORARY WALL
SHEET 3 OF 3

DATE: 11-19-13

8/17/99

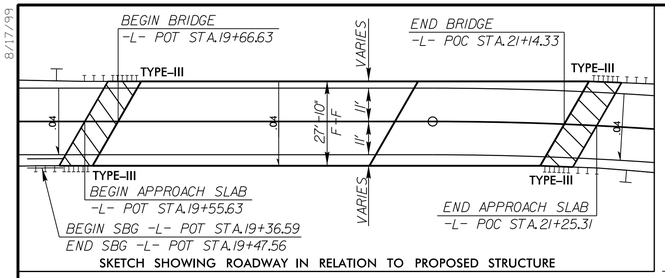

SKETCH SHOWING ROADWAY IN RELATION TO PROPOSED STRUCTURE

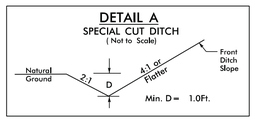

-L- STA. 17+50 TO STA. 19+00 LT
-L- STA. 25+50 TO STA. 26+58 LT
-Y- STA. 14+00 TO STA. 14+79 LT
-Y- STA. 14+20 TO STA. 14+60 RT
-DR1- STA. 10+20 TO STA. 11+00 RT
-DR1- STA. 10+40 TO STA. 10+90 LT

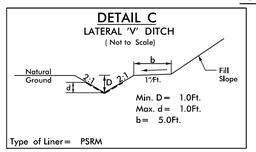

-L- STA. 11+26 TO STA. 13+50 LT

-Y- STA. 10+17 TO STA. 10+50 RT
-Y- STA. 10+37 TO STA. 11+00 LT

FROM -L- STA. 19+60 TO STA. 20+07 RT
FROM -L- STA. 20+29 TO STA. 20+70 RT

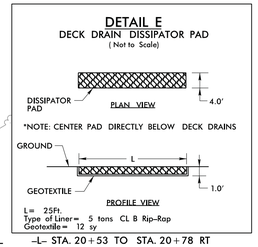

-L- STA. 20+53 TO STA. 20+78 RT

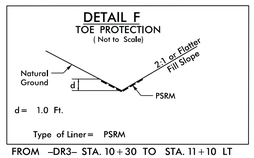

FROM -DR3- STA. 10+30 TO STA. 11+10 LT

NAD 83 (NSRS 2007)

GRAPHIC SCALES

50 0 50 100
PLANS

50 0 50 100
PROFILE (HORIZONTAL)

10 0 10 20
PROFILE (VERTICAL)

PROJECT REFERENCE NO.	SHEET NO.
W-5511	4
R/W SHEET NO.	

ROADWAY DESIGN ENGINEER: NORTH CAROLINA PROFESSIONAL SEAL 040878 ENGINEER MARK E. SMITH 10/15/14

HYDRAULICS ENGINEER: NORTH CAROLINA PROFESSIONAL SEAL 036821 ENGINEER GLENN MILLER 10/15/14

DESIGN SPEED = 55mph
ADT = 2,600 (2010)

WILKES #193

* FOR LIMITS OF TEMPORARY SHORING FOR MAINTENANCE OF TRAFFIC, SEE TRAFFIC CONTROL PLANS.

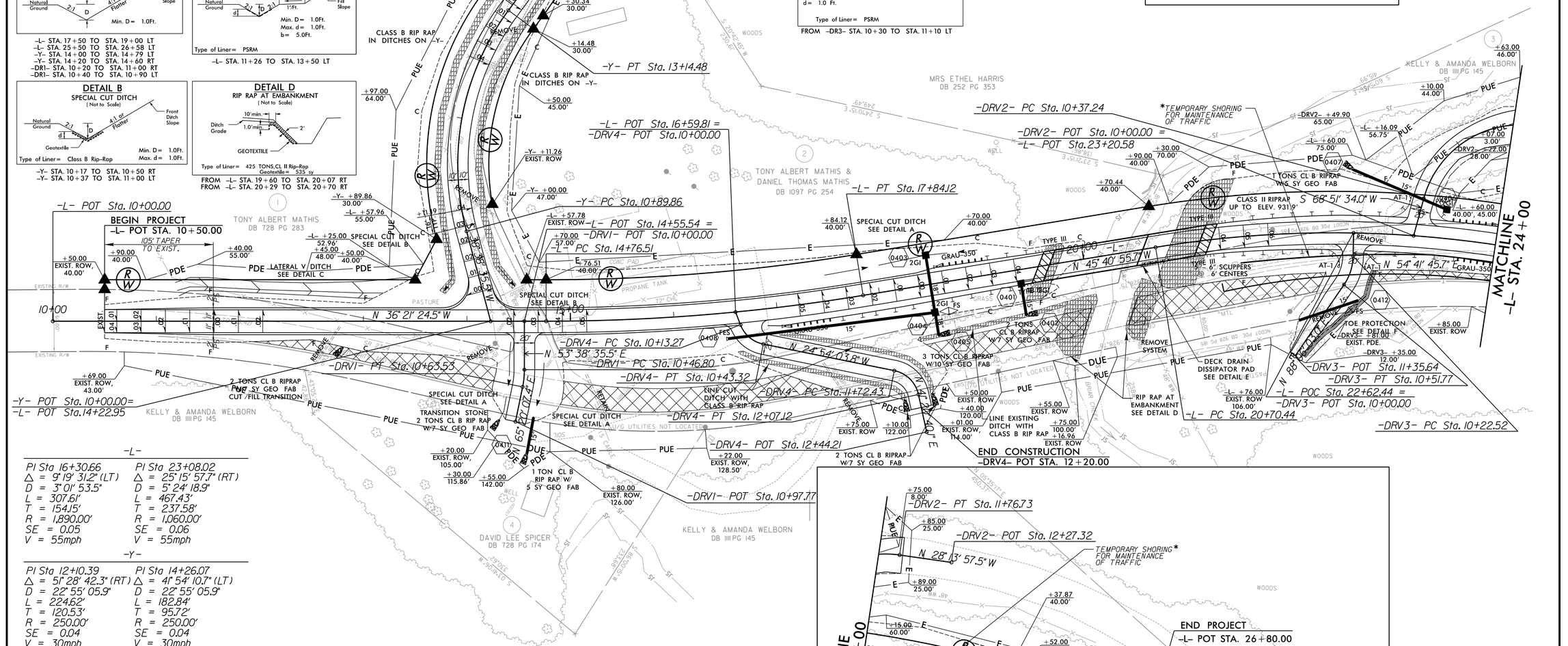

-L-

PI Sta 16+30.66	PI Sta 23+08.02
△ = 9° 19' 31.2" (LT)	△ = 25° 15' 57.7" (RT)
D = 3° 01' 53.5"	D = 5° 24' 18.9"
L = 307.61'	L = 467.43'
T = 154.15'	T = 237.58'
R = 1,890.00'	R = 1,060.00'
SE = 0.05	SE = 0.06
V = 55mph	V = 55mph

-Y-

PI Sta 12+10.39	PI Sta 14+26.07
△ = 51° 28' 42.3" (RT)	△ = 41° 54' 10.7" (LT)
D = 22° 55' 05.9"	D = 22° 55' 05.9"
L = 224.62'	L = 182.84'
T = 120.53'	T = 95.72'
R = 250.00'	R = 250.00'
SE = 0.04	SE = 0.04
V = 30mph	V = 30mph

-DRV1-

PI Sta 10+55.19
△ = 11° 41' 31.8" (RT)
D = 69° 52' 22.5"
L = 16.73'
T = 8.40'
R = 82.00'
SE = NC

-DRV2-

PI Sta 11+22.39
△ = 82° 54' 28.5" (RT)
D = 59° 26' 13.0"
L = 139.49'
T = 85.15'
R = 96.40'
SE = RC

-DRV3-

PI Sta 10+37.57
△ = 33° 24' 17.3" (RT)
D = 114° 10' 53.6"
L = 29.26'
T = 15.06'
R = 50.18'
SE = NC

-DRV4-

PI Sta 10+29.69	PI Sta 11+92.01
△ = 57° 23' 42.2" (LT)	△ = 66° 14' 43.9" (RT)
D = 190° 59' 09.4"	D = 190° 59' 09.4"
L = 30.05'	L = 34.69'
T = 16.42'	T = 19.57'
R = 30.00'	R = 30.00'
SE = NC	SE = NC

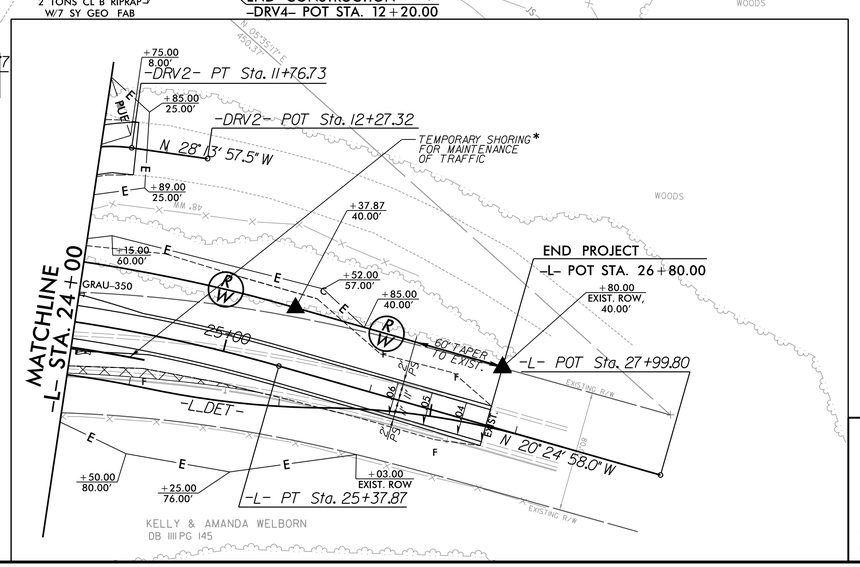

DATUM DESCRIPTION

THE LOCALIZED COORDINATE SYSTEM DEVELOPED FOR THIS PROJECT IS BASED ON THE STATE PLANE COORDINATES ESTABLISHED BY NCDOT FOR MONUMENT "BD5111Y-1"
WITH NAD 83/NSRS 2007 STATE PLANE GRID COORDINATES OF
NORTHING: 894805.9393(ft) EASTING: 1410542.0995(ft)
ELEVATION: 951.4204(ft)
THE AVERAGE COMBINED GRID FACTOR USED ON THIS PROJECT (GROUND TO GRID) IS: 0.9999670323
THE N.C. LAMBERT GRID BEARING AND LOCALIZED HORIZONTAL GROUND DISTANCE FROM "BD5111Y-1" TO -L- STATION 10+00 IS
S 32° 08' 31.32" E 658.39 (ft)
ALL LINEAR DIMENSIONS ARE LOCALIZED HORIZONTAL DISTANCES
VERTICAL DATUM USED IS NAVD 88

SEE SHT. 2 FOR TYPICAL SECTIONS AND ROW AREAS

PLANS PREPARED BY :

RK&K
RUMMEL, KLEPPER & KAHL, LLP
900 RIDGEFIELD DRIVE SUITE 350
RALEIGH, NORTH CAROLINA 27609-3960
NC LICENSE NO. F-0112 • (919) 878-9560

10/15/2014
R:\Roadway\Proj\BD-5111Y_rdy_psh04.dgn
mwhite

PROJECT REFERENCE NO.	SHEET NO.
W-5511	5
ROADWAY DESIGN ENGINEER	HYDRAULICS ENGINEER

NORTH CAROLINA PROFESSIONAL SEAL 040878 ENGINEER MARY E. VANN 6/24/14

NORTH CAROLINA PROFESSIONAL SEAL 036821 ENGINEER ELENA R. GOS 6/24/14

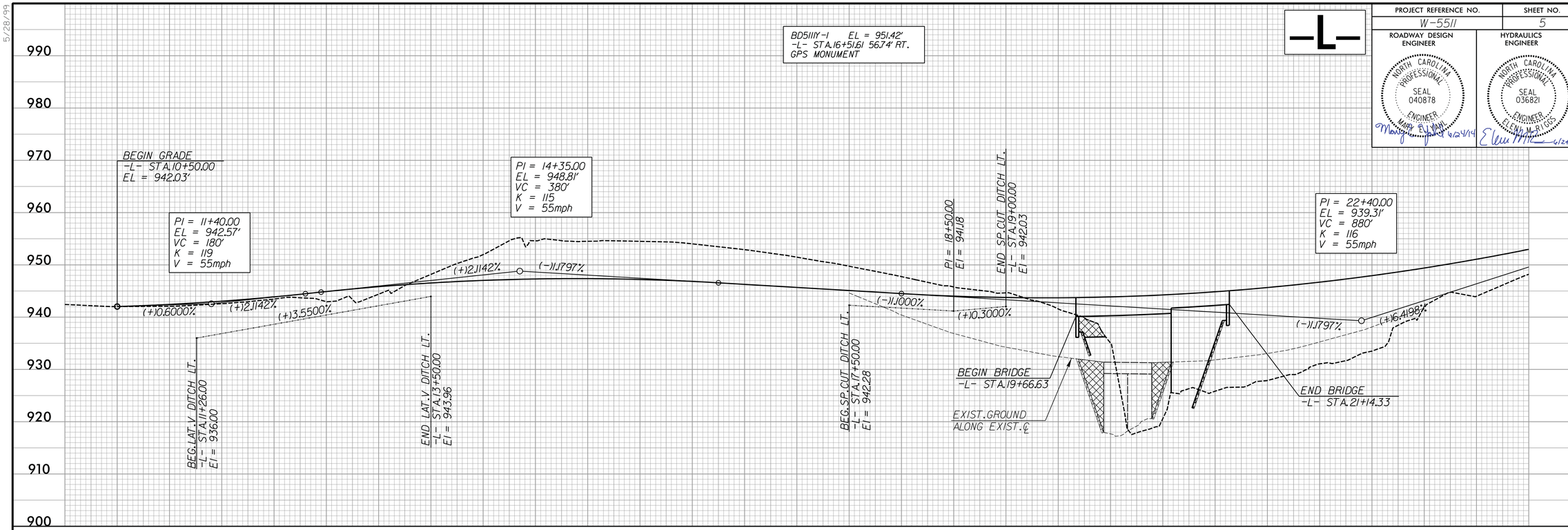

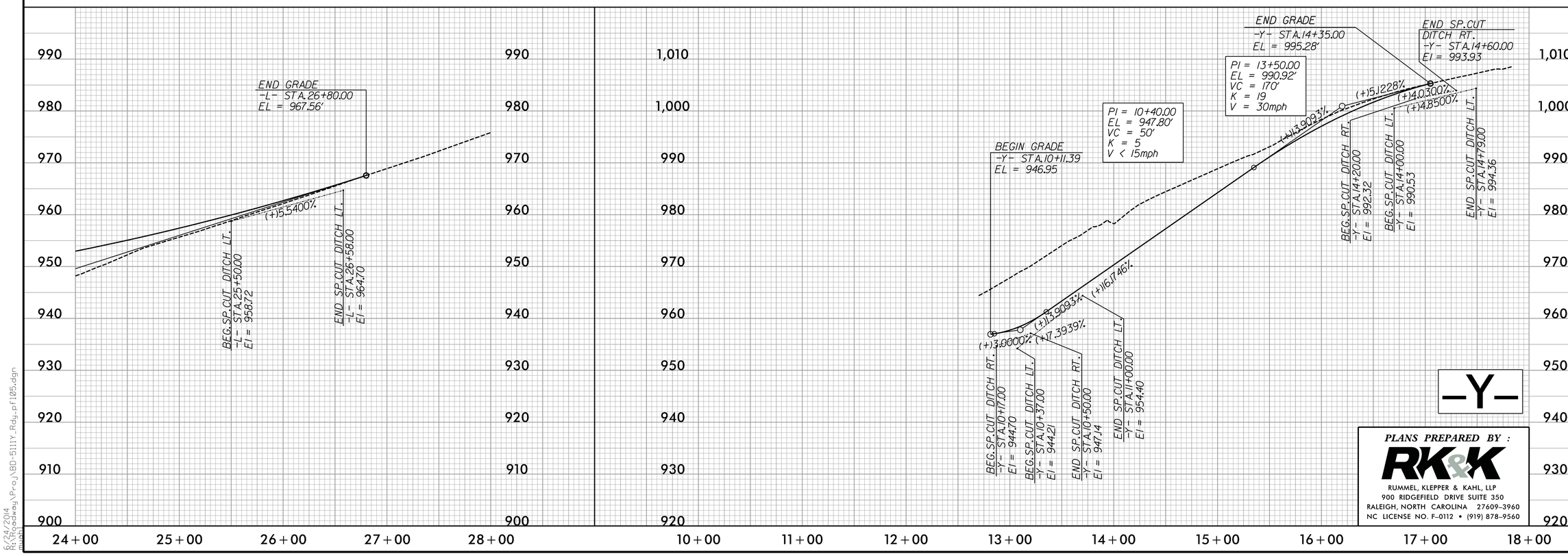

PLANS PREPARED BY :

RK&K

RUMMEL, KLEPPER & KAHL, LLP
900 RIDGEFIELD DRIVE SUITE 350
RALEIGH, NORTH CAROLINA 27609-3960
NC LICENSE NO. F-0112 • (919) 878-9560

5/28/99

6/24/2014
R:\Roadway\Proj\BD-5111Y_Rdy_pf105.dgn
mjohnson

PROJECT REFERENCE NO.	SHEET NO.
W-5511	6

ROADWAY DESIGN ENGINEER — NORTH CAROLINA PROFESSIONAL SEAL 040878 ENGINEER — MARK E. LYNN — 6/24/14

HYDRAULICS ENGINEER — NORTH CAROLINA PROFESSIONAL SEAL 036821 ENGINEER — ELENA M. RIGGS — 6/24/14

-DRV1-

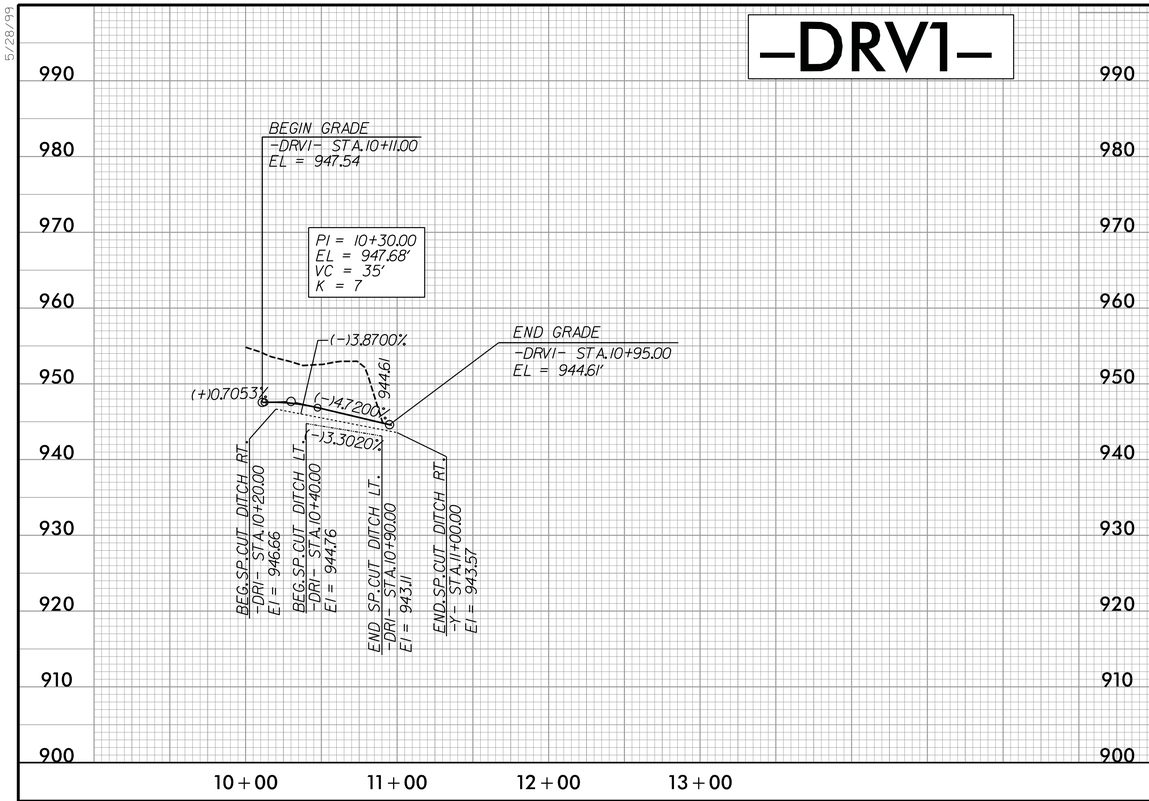

-DRV2-

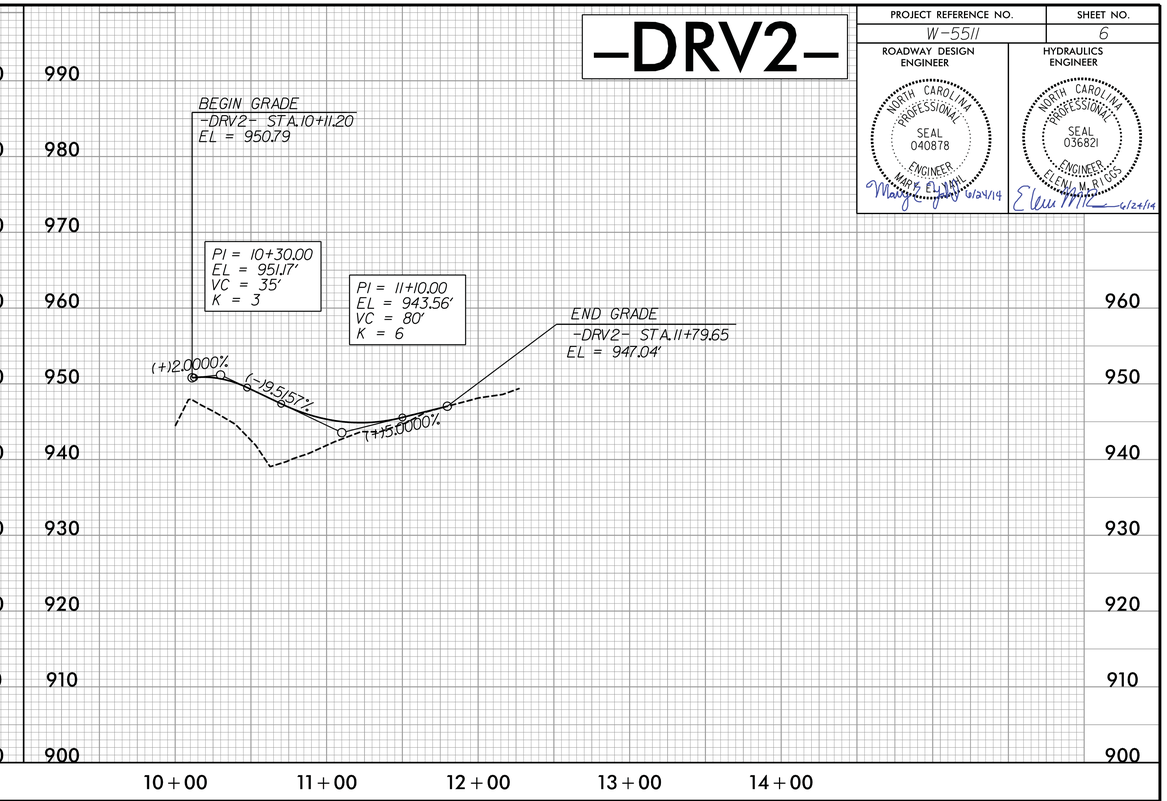

-DRV3-

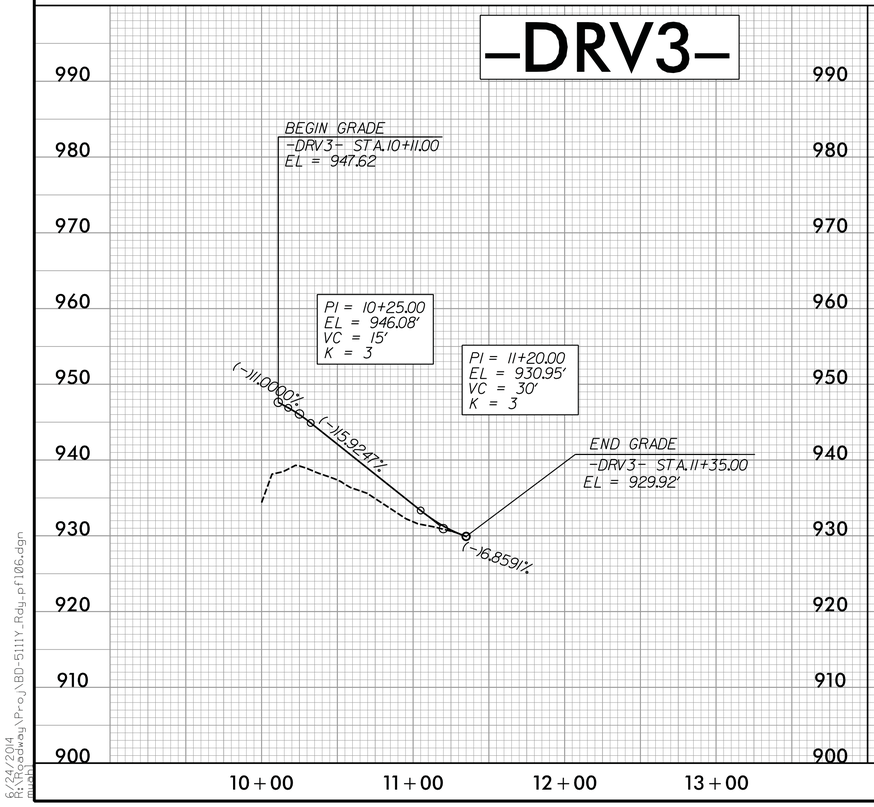

-DRV4-

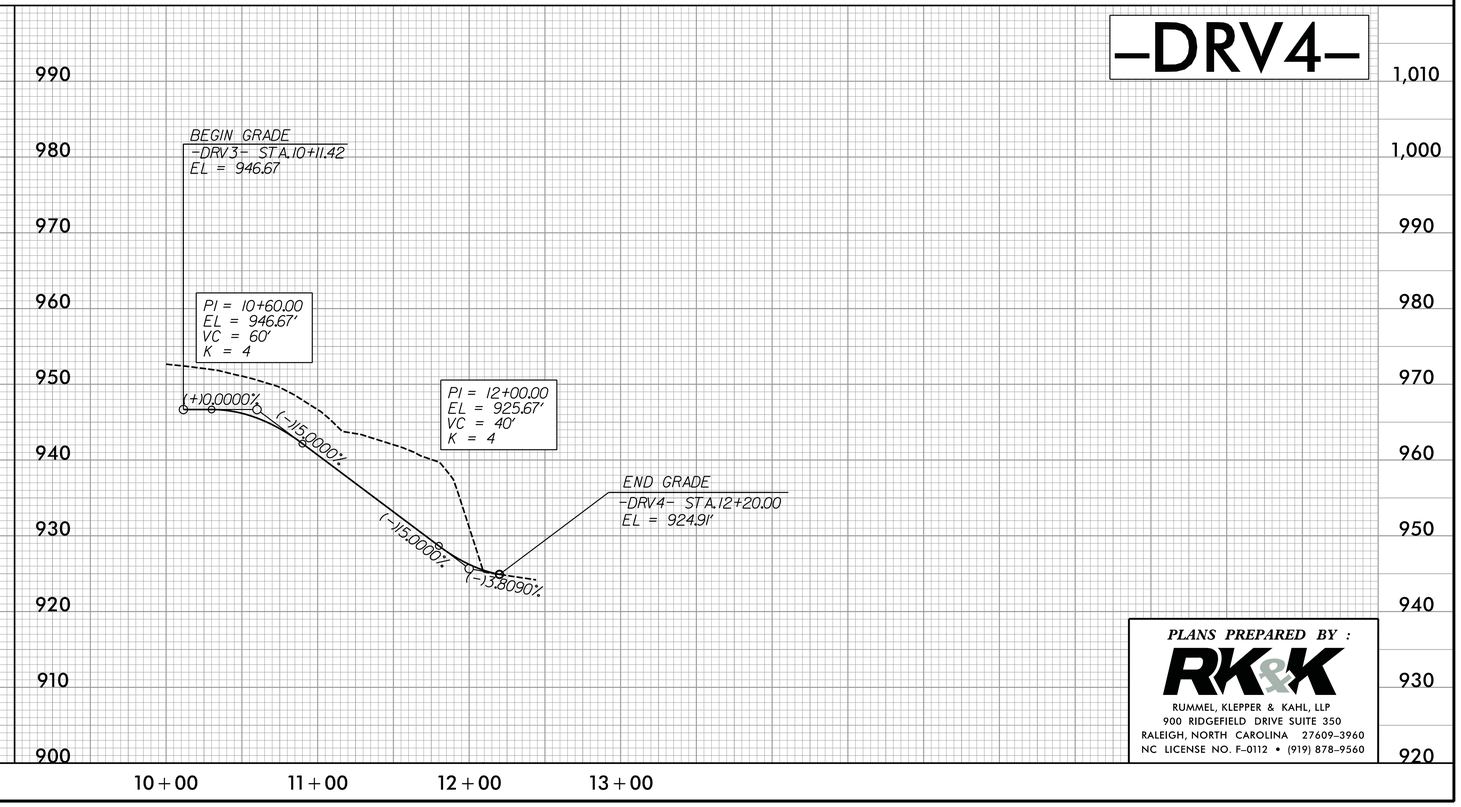

PLANS PREPARED BY :

RK&K

RUMMEL, KLEPPER & KAHL, LLP
900 RIDGEFIELD DRIVE SUITE 350
RALEIGH, NORTH CAROLINA 27609-3960
NC LICENSE NO. F-0112 • (919) 878-9560

5/28/99

6/24/2014
8:24:29 AM
mmcdonald
pw:\\Pw-pw\Projects\BD-5111Y_Rdy_pf106.dgn

STATE PROJECT REFERENCE NO.	SHEET NO.
W-5511	TCP-1

STATE OF NORTH CAROLINA
DIVISION OF HIGHWAYS

PLAN FOR PROPOSED TRAFFIC CONTROL, MARKING & DELINEATION

WILKES COUNTY

W-5511

TIP PROJECT:

INDEX OF SHEETS

SHEET NO.	TITLE
TCP-1	TITLE SHEET, LIST OF APPLICABLE ROADWAY STANDARD DRAWINGS, LEGEND, TEMP. AND FINAL PAVEMENT MARKING SCHEDULE AND VICINITY MAP
TCP-2	GENERAL NOTES AND TRAFFIC CONTROL PHASING
TCP-3	PHASE I DETAIL
TCP-4	PHASE II DETAIL
TCP-5	PHASE III DETAIL
TCP-6	OFFSITE DETOUR SR 2326 RUTH LINNEY RD

ROADWAY STANDARD DRAWINGS

THE FOLLOWING ROADWAY STANDARDS AS APPEAR IN "ROADWAY STANDARD DRAWINGS"-PROJECT SERVICES UNTI-N.C. DEPARTMENT OF TRANSPORTATION-RALEIGH, N.C., DATED JANUARY 2012 ARE APPLICABLE TO THIS PROJECT AND BY REFERENCE HEREBY ARE CONSIDERED A PART OF THESE PLANS:

STD. NO.	TITLE
1101.01	WORK ZONE WARNING SIGNS
1101.02	TEMPORARY LANE CLOSURES
1101.03	TEMPORARY ROAD CLOSURES
1101.04	TEMPORARY SHOULDER CLOSURES
1101.11	TRAFFIC CONTROL DESIGN TABLES
1110.01	STATIONARY WORK ZONE SIGNS
1110.02	PORTABLE WORK ZONE SIGNS
1130.01	DRUMS
1145.01	BARRICADES
1150.01	FLAGGING DEVICES
1160.01	TEMPORARY CRASH CUSHIONS
1165.01	WORK ZONE VEHICLE LIGHTING SYSTEMS AND TMA DELINEATION
1170.01	POSITIVE PROTECTION
1205.01	PAVEMENT MARKINGS - LINE TYPES AND OFFSETS
1205.02	PAVEMENT MARKINGS - TWO LANE AND MULTILANE ROADWAYS
1205.12	PAVEMENT MARKINGS - BRIDGES
1250.01	RAISED PAVEMENT MARKERS - INSTALLATION SPACING
1251.01	RAISED PAVEMENT MARKERS - (PERMANENT AND TEMPORARY)
1261.01	GUARDRAIL AND BARRIER DELINEATORS - INSTALLATION SPACING
1261.02	GUARDRAIL AND BARRIER DELINEATORS - TYPES AND MOUNTING
1262.01	GUARDRAIL END DELINEATION

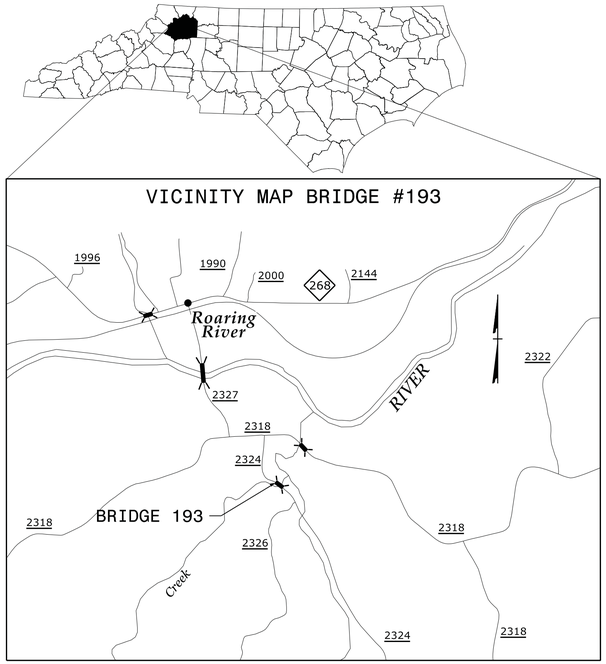

LEGEND

GENERAL

- DIRECTION OF TRAFFIC FLOW
- EXIST. PVMT.
- NORTH ARROW
- PROPOSED PVMT.
- WORK AREA

TRAFFIC CONTROL DEVICES

- BARRICADE (TYPE III)
- DRUM
- TEMPORARY CRASH CUSHION
- PORTABLE CONCRETE BARRIER
- FLAGGER
- TRUCK MOUNTED ATTENUATOR (TMA)

TEMPORARY SIGNING

- PORTABLE SIGN
- STATIONARY SIGN

TEMP. PAVEMENT MARKING SCHEDULE

SYMBOL	DESCRIPTION	QUANTITY BREAKDOWN	PAY ITEM	TOTAL QUANTITY
	PAVEMENT MARKING LINES			
		COLD APPLIED PLASTIC TYPE IV (4")		
CA	WHITE EDGELINE	340 LF		
CI	YELLOW DOUBLE CENTER LINE	340 LF		
			TOTAL	680 LF
			PAINT (4")	
PA	WHITE EDGELINE 2X	9660 LF		
PD	WHITE MINI-SKIP LINE 2X	38 LF		
PI	YELLOW DOUBLE CENTER 2X	9660 LF		
	2X = TWO APPLICATIONS			TOTAL 19358 LF
	PAVEMENT MARKERS			
MH	TEMPORARY RAISED YELLOW & YELLOW	54 EA		
				TOTAL 54 EA

FINAL PAVEMENT MARKING SCHEDULE

SYMBOL	DESCRIPTION	QUANTITY BREAKDOWN	PAY ITEM	TOTAL QUANTITY
	PAVEMENT MARKING LINES			
		COLD APPLIED PLASTIC TYPE II (4")		
CA	WHITE EDGELINE	340 LF		
CI	YELLOW DOUBLE CENTER LINE	340 LF		
			TOTAL	680 LF
		THERMOPLASTIC (4")		
TA	WHITE EDGELINE (90 MILS)	3020 LF		
TD	WHITE MINI-SKIP LINE (120 MILS)	19 LF		
TI	YELLOW DOUBLE CENTER (120 MILS)	3020 LF		
			TOTAL	6059 LF
	PAVEMENT MARKERS			
MA	PERMANENT RAISED YELLOW & YELLOW	2 EA		
ME	SNOWPLOWABLE RAISED YELLOW & YELLOW	19 EA		
			TOTAL	21 EA

PLANS PREPARED BY :
RK&K
RUMMEL, KLEPPER & KAHL, LLP
900 RIDGEFIELD DRIVE SUITE 350
RALEIGH, NORTH CAROLINA 27609-3960
NC LICENSE NO. F-0112 • (919) 878-9560
FOR DIVISION OF HIGHWAYS

SEAL

NORTH CAROLINA PROFESSIONAL SEAL 21047 ENGINEER KEVIN W. BISBY

4.29.2014

K. W. BISBY, PE — TRAFFIC CONTROL ENGINEER

M. A. COLE — TRAFFIC CONTROL PROJECT DESIGNER

4/28/2014
R:\Traffic\TrafficControl\TCP\B05III_TCP_tcp01.dgn
mcole

PROJ. REFERENCE NO.	SHEET NO.
W-5511	TCP-2

GENERAL NOTES

CHANGES MAY BE REQUIRED WHEN PHYSICAL DIMENSIONS IN THE DETAIL DRAWINGS, STANDARD DETAILS, AND ROADWAY DETAILS ARE NOT ATTAINABLE TO MEET FIELD CONDITIONS OR RESULT IN DUPLICATE OR UNDESIRED OVERLAPPING OF DEVICES. MODIFICATION MAY INCLUDE: MOVING, SUPPLEMENTING, COVERING, OR REMOVAL OF DEVICES AS DIRECTED BY THE ENGINEER

THE FOLLOWING GENERAL NOTES APPLY AT ALL TIMES FOR THE DURATION OF THE CONSTRUCTION PROJECT EXCEPT WHEN OTHERWISE NOTED IN THE PLAN OR DIRECTED BY THE ENGINEER.

LANE AND SHOULDER CLOSURE REQUIREMENTS

A. REMOVE LANE CLOSURE DEVICES FROM THE LANE WHEN WORK IS NOT BEING PERFORMED BEHIND THE LANE CLOSURE OR WHEN A LANE CLOSURE IS NO LONGER NEEDED OR AS DIRECTED BY THE ENGINEER.

B. WHEN PERSONNEL AND/OR EQUIPMENT ARE WORKING WITHIN 15 FT OF AN OPEN TRAVEL LANE, CLOSE THE NEAREST OPEN SHOULDER USING ROADWAY STANDARD DRAWING NO. 1101.04 UNLESS THE WORK AREA IS PROTECTED BY BARRIER OR GUARDRAIL OR A LANE CLOSURE IS INSTALLED.

C. WHEN PERSONNEL AND/OR EQUIPMENT ARE WORKING ON THE SHOULDER ADJACENT TO AN UNDIVIDED FACILITY AND WITHIN 5 FT OF AN OPEN TRAVEL LANE, CLOSE THE NEAREST OPEN TRAVEL LANE USING ROADWAY STANDARD DRAWING NO. 1101.02 UNLESS THE WORK AREA IS PROTECTED BY BARRIER OR GUARDRAIL.

D. WHEN PERSONNEL AND/OR EQUIPMENT ARE WORKING WITHIN A LANE OF TRAVEL OF AN UNDIVIDED OR DIVIDED FACILITY, CLOSE THE LANE ACCORDING TO THE TRAFFIC CONTROL PLANS, ROADWAY STANDARD DRAWINGS, OR AS DIRECTED BY THE ENGINEER. CONDUCT THE WORK SO THAT ALL PERSONNEL AND/OR EQUIPMENT REMAIN WITHIN THE CLOSED TRAVEL LANE.

E. DO NOT WORK SIMULTANEOUSLY WITHIN 15 FT ON BOTH SIDES OF AN OPEN TRAVELWAY, RAMP, OR LOOP WITHIN THE SAME LOCATION UNLESS PROTECTED WITH GUARDRAIL OR BARRIER.

PAVEMENT EDGE DROP OFF REQUIREMENTS

F. BACKFILL AT A 6:1 SLOPE UP TO THE EDGE AND ELEVATION OF EXISTING PAVEMENT IN AREAS ADJACENT TO AN OPENED TRAVEL LANE THAT HAS AN EDGE OF PAVEMENT DROP-OFF AS FOLLOWS:

BACKFILL DROP-OFFS THAT EXCEED 2 INCHES ON ROADWAYS WITH POSTED SPEED LIMITS OF 45 MPH OR GREATER.

BACKFILL DROP-OFFS THAT EXCEED 3 INCHES ON ROADWAYS WITH POSTED SPEED LIMITS LESS THAN 45 MPH.

BACKFILL WITH SUITABLE COMPACTED MATERIAL, AS APPROVED BY THE ENGINEER, AT NO EXPENSE TO THE DEPARTMENT.

G. DO NOT EXCEED A DIFFERENCE OF 2 INCHES IN ELEVATION BETWEEN OPEN LANES OF TRAFFIC FOR NOMINAL LIFTS OF 1.5 INCHES. INSTALL ADVANCE WARNING "UNEVEN LANES" SIGNS (W8-11) (500') IN ADVANCE AND A MINIMUM OF EVERY HALF MILE THROUGHOUT THE UNEVEN AREA.

SIGNING

H. INSTALL ADVANCE WORK ZONE WARNING SIGNS WHEN WORK IS WITHIN 40 FT FROM THE EDGE OF TRAVEL LANE AND NO MORE THAN THREE (3) DAYS PRIOR TO THE BEGINNING OF CONSTRUCTION.

TRAFFIC BARRIER

I. INSTALL TEMPORARY BARRIER ACCORDING TO THE TRANSPORTATION MANAGEMENT PLANS A MAXIMUM OF TWO (2) WEEKS PRIOR TO BEGINNING WORK IN ANY LOCATION. ONCE TEMPORARY BARRIER IS INSTALLED AT ANY LOCATION PROCEED IN A CONTINUOUS MANNER TO COMPLETE THE PROPOSED WORK IN THAT LOCATION UNLESS OTHERWISE STATED IN THE TRANSPORTATION MANAGEMENT PLANS OR AS DIRECTED BY THE ENGINEER.

DO NOT PLACE BARRIER DIRECTLY ON ANY SURFACE OTHER THAN ASPHALT OR CONCRETE.

ONCE TEMPORARY BARRIER IS INSTALLED AT ANY LOCATION AND NO WORK IS PERFORMED BEHIND THE TEMPORARY BARRIER FOR A PERIOD LONGER THAN TWO (2) MONTHS, REMOVE/RESET TEMPORARY BARRIER AT NO COST TO THE DEPARTMENT UNLESS OTHERWISE STATED IN THE TRANSPORTATION MANAGEMENT PLANS, TEMPORARY BARRIER IS PROTECTING A HAZARD, OR AS DIRECTED BY THE ENGINEER.

INSTALL TEMPORARY BARRIER WITH THE TRAFFIC FLOW BEGINNING WITH THE UPSTREAM SIDE OF TRAFFIC. REMOVE TEMPORARY BARRIER AGAINST THE TRAFFIC FLOW BEGINNING WITH THE DOWNSTREAM SIDE OF TRAFFIC.

INSTALL AND SPACE DRUMS NO GREATER THAN TWICE THE POSTED SPEED LIMIT (MPH) TO CLOSE OR KEEP THE SECTION OF THE ROADWAY CLOSED UNTIL THE TEMPORARY BARRIER IS REMOVED.

J. PROTECT THE APPROACH END OF MOVABLE/PORTABLE CONCRETE BARRIER AT ALL TIMES DURING THE INSTALLATION AND REMOVAL OF THE BARRIER BY EITHER A TRUCK MOUNTED ATTENUATOR (MAXIMUM 72 HOURS) OR A TEMPORARY CRASH CUSHION.

PROTECT THE APPROACH END OF MOVEABLE/PORTABLE CONCRETE BARRIER FROM ONCOMING TRAFFIC AT ALL TIMES BY A TEMPORARY CRASH CUSHION UNLESS THE APPROACH END OF MOVEABLE/PORTABLE CONCRETE BARRIER IS OFFSET FROM ONCOMING TRAFFIC AS FOLLOWS OR AS SHOWN IN THE PLANS: (SEE ALSO 1101.05)

POSTED SPEED LIMIT	MINIMUM OFFSET
40 OR LES	15 FT
45 - 50	20 FT
55	25 FT
60 MPH OR HIGHER	30 FT

TRAFFIC CONTROL DEVICES

K. SPACE CHANNELIZING DEVICES IN WORK AREAS NO GREATER IN FEET THAN TWICE THE POSTED SPEED LIMIT (MPH), EXCEPT 10 FT ON-CENTER IN RADII, AND 3 FT OFF THE EDGE OF AN OPEN TRAVELWAY WHEN LANE CLOSURES ARE NOT IN EFFECT. WHEN SKINNY DRUMS ARE ALLOWED REFER TO SECTION 1180 OF STANDARD SPECIFICATIONS FOR ROADS AND STRUCTURES OR AS SHOWN IN THE PLANS.

L. PLACE TYPE III BARRICADES, WITH "ROAD CLOSED" SIGN R11-2 ATTACHED, OF SUFFICIENT LENGTH TO CLOSE ENTIRE ROADWAY.

PAVEMENT MARKINGS AND MARKERS

M. INSTALL PAVEMENT MARKINGS AND PAVEMENT MARKERS ON THE FINAL SURFACE AS SHOWN IN THE PAVEMENT MARKING PLAN.

N. INSTALL TEMPORARY PAVEMENT MARKINGS AND TEMPORARY PAVEMENT MARKERS ON INTERIM LAYERS OF PAVEMENT AS FOLLOWS:

ROAD TYPE	MARKING	MARKER
ASPHALT	PAINT	RAISED
CONCRETE	COLD APPLIED PLASTIC (TYPE IV)	RAISED

O. INSTALL PAVEMENT MARKINGS AND PAVEMENT MARKERS ON THE FINAL SURFACE.

P. PLACE ONE APPLICATION OF PAINT FOR TEMPORARY TRAFFIC PATTERNS. PLACE A SECOND APPLICATION OF PAINT SIX (6) MONTHS AFTER THE INITIAL APPLICATION AND EVERY SIX MONTHS AS DIRECTED BY THE ENGINEER.

Q. TIE PROPOSED PAVEMENT MARKING LINES TO EXISTING PAVEMENT MARKING LINES.

R. REMOVE/REPLACE ANY CONFLICTING/DAMAGED PAVEMENT MARKINGS AND MARKERS BY THE END OF EACH DAY'S OPERATION.

TRAFFIC CONTROL PHASING

PHASE I

STEP 1:
ERECT ADVANCED WORK ZONE SIGNS ON SR 2324 (RED WHITE AND BLUE RD) AND SR 2326 (RUTH LINNEY RD) IN ACCORDANCE WITH RDWY STD 1101.01 SHEET 3. USING ROADWAY STANDARD DRAWING NUMBER 1101.04, INSTALL ADVANCE WARNING SIGNS FOR THE SR 2326 (RUTH LINNEY RD) OFFSITE DETOUR, KEEPING SIGNS COVERED. REFER TO ROADWAY STANDARD DRAWING 1101.03 SHEET 1 AND TCP-6 FOR SIGN LOCATIONS.

STEP 2:
USING RDWY STD 1101.02 SHEET 1, BEGIN CONSTRUCTION OF PROPOSED -L- SR 2324 (RED WHITE AND BLUE RD) STRUCTURE AND ROADWAY APPROACHES FROM -L- STA 10+50 +/- TO -L- STA 26+80 +/-, DRIVE 2 FROM -DRV2- STA10+00 +/- TO -DRV2- STA. 11+76 +/- AND TEMPORARY PAVEMENT ALONG SR 2324 FROM -L- STA 22+38 +/- TO -L- STA 27+18 +/-. PLACE PORTABLE CONCRETE BARRIER AND TEMPORARY CRASH CUSHION ALONG SR 2324, (SEE TCP-3, TCP-4, ROADWAY AND STRUCTURE PLANS).

PHASE II

NOTE:
COMPLETE THE WORK REQUIRED IN PHASE II, STEP 1 IN 90 CALENDAR DAYS, (CONSTRUCTION OPERATIONS IN STEPS 1 AND 2 MAY OCCUR SIMULTANEOUSLY).

STEP 1:
CLOSE -Y- SR 2326, (RUTH LINNEY RD) TO TRAFFIC, USING ROADWAY STANDARD DRAWING 1101.03 SHEET 1. UNCOVER ALL ADVANCE WARNING SIGNS FOR ROAD CLOSURE, OFFSITE DETOUR AND SHIFT TRAFFIC TO TEMPORARY DETOUR, (SEE TCP-6). COMPLETE CONSTRUCTION OF -Y- SR 2326 ROADWAY FROM -Y- STA 10+00 +/- TO -Y- STA 14+35 +/- UP TO BUT NOT INCLUDING THE FINAL LAYER OF SURFACE COURSE,(SEE TCP-4 AND ROADWAY PLANS).

USING RDWY STD 1101.02 SHEET 1, PLACE REMAINING PORTABLE CONCRETE BARRIER AND RESET TEMPORARY CRASH CUSHION ALONG SR 2324 (RED WHITE AND BLUE RD). PLACE TEMPORARY PAVEMENT MARKINGS AND MARKERS ON THE TEMPORARY PAVEMENT AND SHIFT SR 2324 TRAFFIC TO ITS TEMPORARY TRAFFIC PATTERN, (SEE TCP-4).

STEP 2:
COMPLETE CONSTRUCTION OF -L- SR 2324 (RED WHITE AND BLUE RD) ROADWAY APPROCHES BEGUN IN PHASE I STEP 2, (SEE TCP-4).

PHASE III

NOTE:
COMPLETE THE WORK REQUIRED IN PHASE III, STEP 1 IN A CONTINUOUS OPERATION.

STEP 1:
USING RDWY STD 1101.02 SHEET 1 (ALTERNATING LANE CLOSURES), WEDGE/PLACE REMAINING PAVEMENT AND TEMPORARY PAVEMENT MARKINGS ON SR 2324 (RED WHITE AND BLUE RD) AND ON SR 2326 (RUTH LINNEY RD) AND SHIFT TRAFFIC ONTO THE COMPLETED ROADWAYS, (SEE TCP-5).

STEP 2:
USING RDWY STD 1101.02 SHEET 1, CONSTRUCT PROPOSED DRIVE 1 FROM -DRV1- STA 10+11 +/- TO -DRV1- STA 10+97 +/- AND DRIVE 3 FROM -DRV3- STA 10+10 +/- TO -DRV3- STA 11+35 +/-. REMOVE EXISTING SR 2324 (RED WHITE AND BLUE RD) ROADWAY AND BRIDGE NO. 193, (SEE TCP-5).

PHASE IV

STEP 1:
USING RDWY STD 1101.02 SHEET 1 (ALTERNATING LANE CLOSURES), PLACE THE FINAL LAYER OF SURFACE COURSE, FINAL PAVEMENT MARKINGS AND MARKERS ON SR 2324 (RED WHITE AND BLUE RD) FROM -L- STA. 10+50 +/- TO -L- STA. 26+80 +/- AND ON SR 2326 (RUTH LINNEY RD) FROM -Y- STA. 10+27 +/- TO -Y- STA. 14+35 +/-, (SEE TCP-5).

STEP 2:
REMOVE TRAFFIC CONTROL DEVICES AND OPEN SR 2324 (RED WHITE AND BLUE RD) AND SR 2326 (RUTH LINNEY RD) TO ITS FINAL TRAFFIC PATTERN, (SEE TCP-5).

APPROVED:_____ DATE:_____

SEAL

NORTH CAROLINA PROFESSIONAL SEAL 20417 ENGINEER KEVIN W. BIRD

4-29-14

DIVISION OF HIGHWAYS STATE OF NORTH CAROLINA DEPARTMENT OF TRANSPORTATION WORK ZONE TRAFFIC CONTROL

GENERAL NOTES AND TRAFFIC CONTROL PHASING

4/28/2014
R:\Traffic\TrafficControl\TCP\BD5111Y_TCP_tcp02.dgn
mcole

PROJ. REFERENCE NO.	SHEET NO.
W-5511	TCP-3

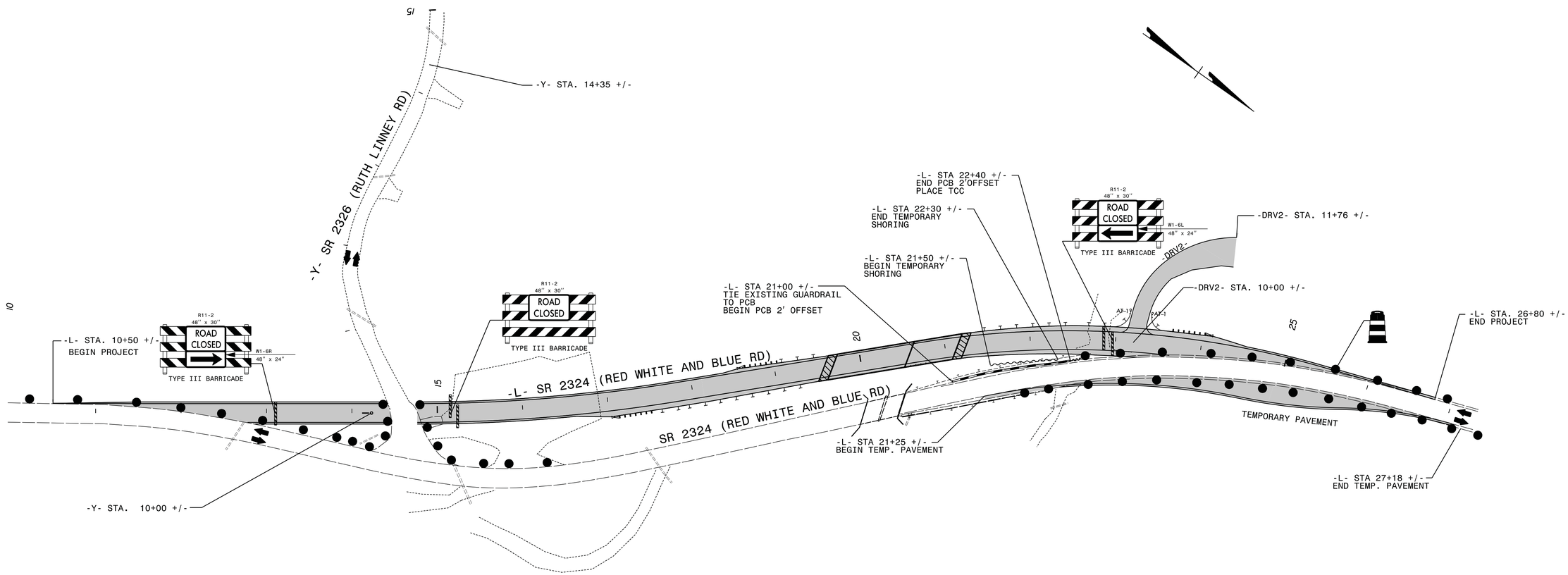

PLANS PREPARED BY :

RK&K

RUMMEL, KLEPPER & KAHL, LLP
900 RIDGEFIELD DRIVE SUITE 350
RALEIGH, NORTH CAROLINA 27609-3960
NC LICENSE NO. F-0112 • (919) 878-9560

APPROVED:_____ DATE:_____

SEAL

NORTH CAROLINA PROFESSIONAL SEAL 21047 ENGINEER KEVIN W. BISBY

4-29

DIVISION OF HIGHWAYS
STATE OF NORTH CAROLINA
DEPARTMENT OF TRANSPORTATION
WORK ZONE TRAFFIC CONTROL

PHASE I DETAIL

4/28/2014
R:\Traffic\TrafficControl\TCP\BD5111Y_TCP_tcp03.dgn
mcole

PROJ. REFERENCE NO.	SHEET NO.
W-5511	TCP-4

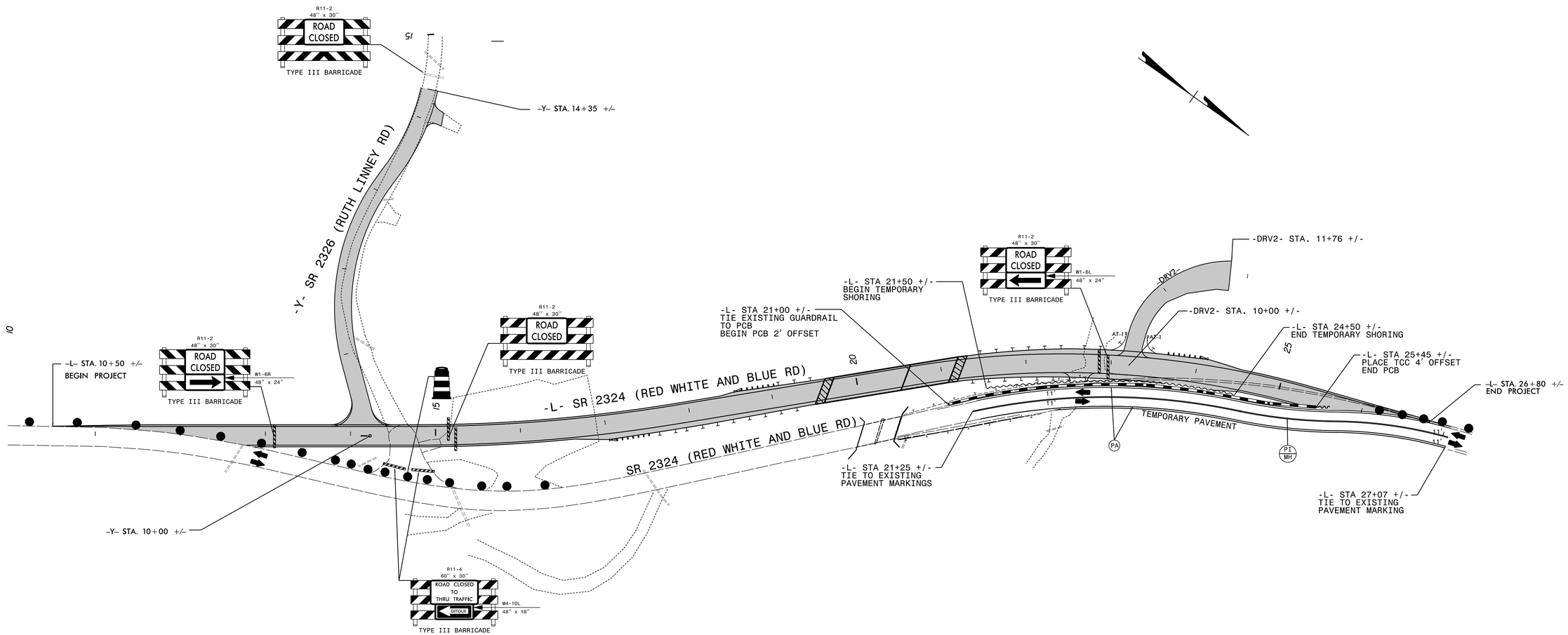

SEE TCP-6 FOR OFFSITE DETOUR ROUTE.

REFER TO RDWY STD 1101.03 SHEET 2 FOR ADDITIONAL SIGNING AND TRAFFIC CONTROL DEVICES.

PLANS PREPARED BY :

RK&K

RUMMEL, KLEPPER & KAHL, LLP
900 RIDGEFIELD DRIVE SUITE 350
RALEIGH, NORTH CAROLINA 27609-3960
NC LICENSE NO. F-0112 • (919) 878-9560

APPROVED:_____ DATE:_____

SEAL

NORTH CAROLINA PROFESSIONAL SEAL 21047 ENGINEER KEVIN W. BISBY

4-29-14

DIVISION OF HIGHWAYS
STATE OF NORTH CAROLINA
DEPARTMENT OF TRANSPORTATION
WORK ZONE TRAFFIC CONTROL

PHASE II DETAIL

4/28/2014
R:\Traffic\TrafficControl\TCP\BD5111Y_TCP_tcp04.dgn
mcole

PROJ. REFERENCE NO.	SHEET NO.
W-5511	TCP-5

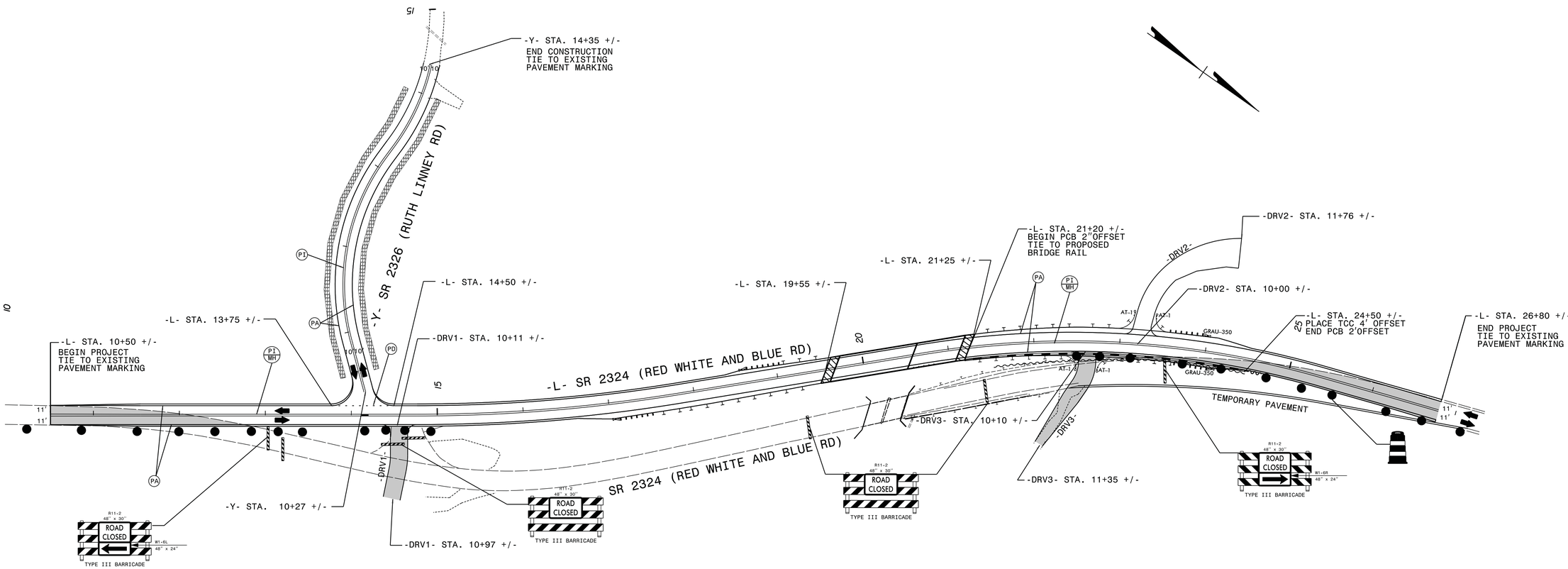

PLANS PREPARED BY :

RK&K

RUMMEL, KLEPPER & KAHL, LLP
900 RIDGEFIELD DRIVE SUITE 350
RALEIGH, NORTH CAROLINA 27609-3960
NC LICENSE NO. F-0112 • (919) 878-9560

APPROVED:_____ DATE:_____

SEAL

NORTH CAROLINA PROFESSIONAL SEAL 21047 ENGINEER KEVIN W. BIBBY

4-29-14

DIVISION OF HIGHWAYS
STATE OF NORTH CAROLINA
DEPARTMENT OF TRANSPORTATION
WORK ZONE TRAFFIC CONTROL

PHASE III DETAIL

4/28/2014
R:\Traffic\TrafficControl\TCP\BD5111Y_tcp_tcp05.dgn
mcole

PROJ. REFERENCE NO.	SHEET NO.
W-5511	TCP-6

(A)

SR 2326 24″ X 12″
DETOUR M4-8 24″ X 12″
M6-1 21″ X 15″

(B)

SR 2326 24″ X 12″
DETOUR M4-8 24″ X 12″
M5-1 21″ X 15″

(C)

SR 2326 24″ X 12″
DETOUR M4-8 24″ X 12″
M6-1 21″ X 15″

(D)

SR 2326 24″ X 12″
DETOUR M4-8 24″ X 12″
M5-1 21″ X 15″

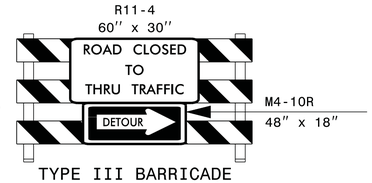

TYPE III BARRICADE

(E)

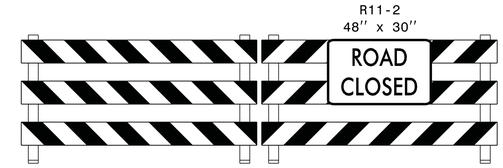

TYPE III BARRICADE(S)

(F)

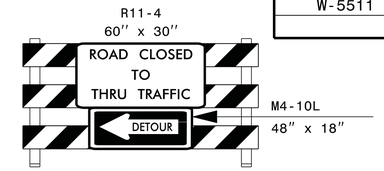

TYPE III BARRICADE

(G)

(H)

SR 2326 24″ X 12″
END DETOUR M4-8A 24″ X 18″

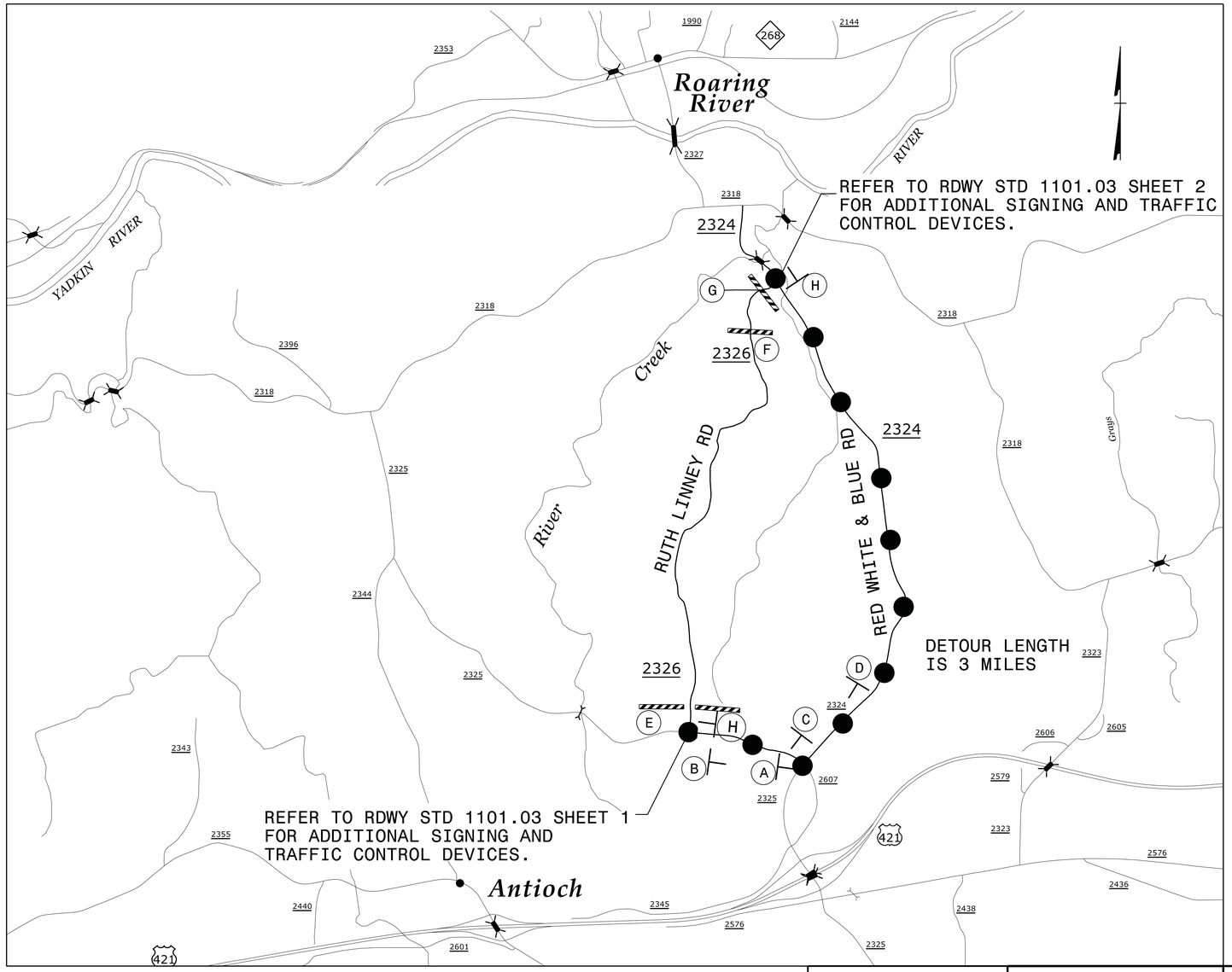

PLANS PREPARED BY :

RK&K

RUMMEL, KLEPPER & KAHL, LLP
900 RIDGEFIELD DRIVE SUITE 350
RALEIGH, NORTH CAROLINA 27609-3960
(919) 878-9560
FOR
DIVISION OF HIGHWAYS

SEAL

NORTH CAROLINA PROFESSIONAL SEAL 21047 ENGINEER KEVIN W. BISSELL

4·29·2014

OFFSITE DETOUR
SR 2326 RUTH LINNEY RD

SCALE:	NONE
DATE:	4/2014
DWG. BY:	MAC
DESIGN BY:	MAC
REVIEWED BY:	KWB

REVISIONS

CADD FILE w5111_tcp_tcp05.dgn

4/28/2014
R:\Traffic\TrafficControl\TCP\BD5111Y_tcp_tcp06.dgn
mcole

EROSION CONTROL PLAN

PROJECT REFERENCE NO.	SHEET NO.
W-5511	EC-1/CONST.4
R/W SHEET NO.	
ROADWAY DESIGN ENGINEER	HYDRAULICS ENGINEER

NOTES: ANY DEVIATION FROM OPTIONS GIVEN WILL REQUIRE PRIOR APPROVAL BY ENGINEER.

ADDITIONAL EROSION CONTROL DEVICES MAY NEED TO BE INSTALLED AS DIRECTED BY THE ENGINEER.

2012 STANDARD SPECIFICATIONS

NOTES:
1. CLEARING ON THIS PROJECT SHALL BE PERFORMED TO THE LIMITS ESTABLISHED BY METHOD II.

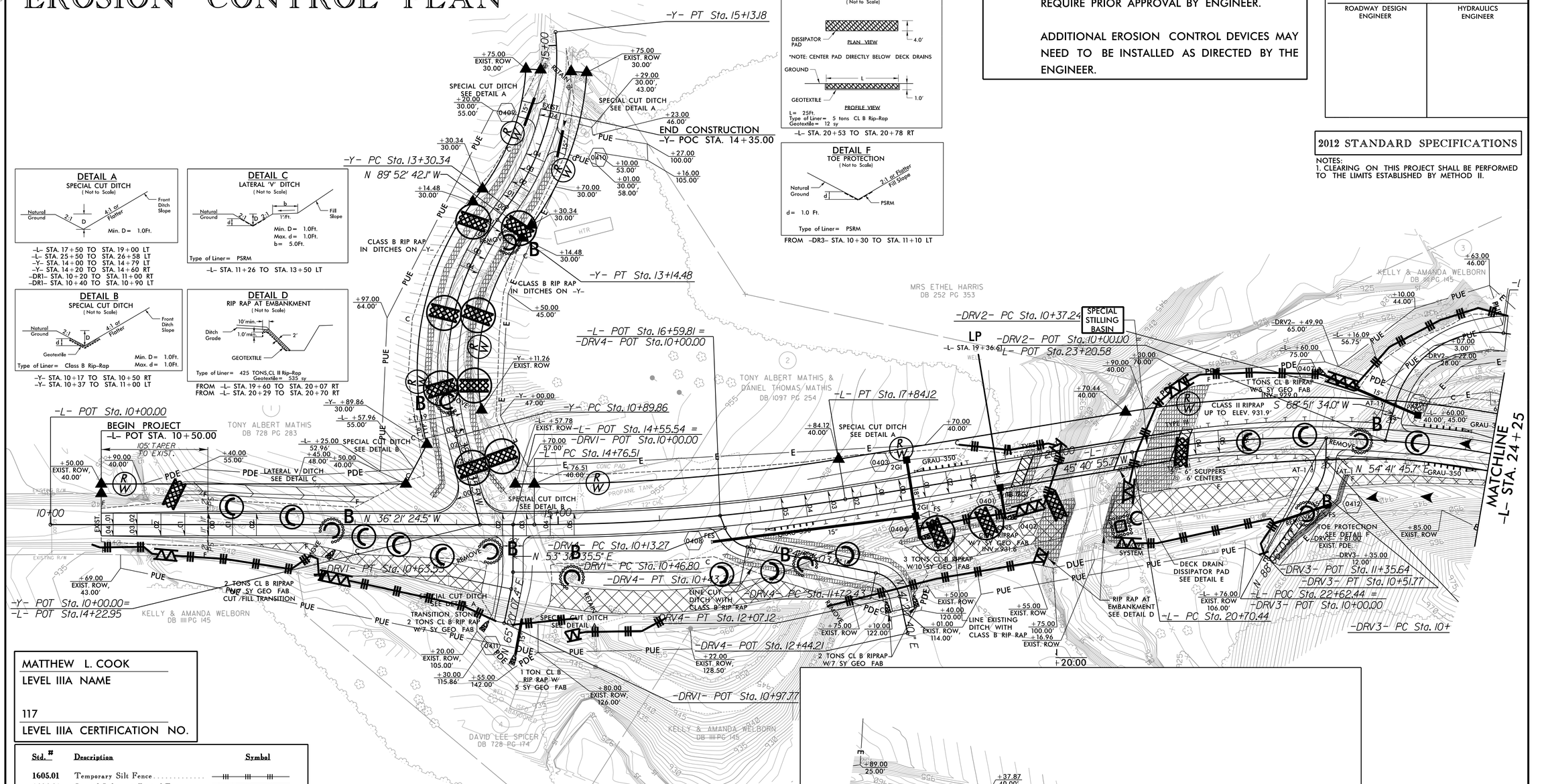

DETAIL A
SPECIAL CUT DITCH
(Not to Scale)

Min. D = 1.0Ft.

-L- STA. 17+50 TO STA. 19+00 LT
-L- STA. 25+50 TO STA. 26+58 LT
-Y- STA. 14+00 TO STA. 14+79 LT
-Y- STA. 14+20 TO STA. 14+60 RT
-DR1- STA. 10+20 TO STA. 11+00 RT
-DR1- STA. 10+40 TO STA. 10+90 LT

DETAIL B
SPECIAL CUT DITCH
(Not to Scale)

Min. D = 1.0Ft.
Max. d = 1.0Ft.

Type of Liner = Class B Rip-Rap

-Y- STA. 10+17 TO STA. 10+50 RT
-Y- STA. 10+37 TO STA. 11+00 LT

DETAIL C
LATERAL 'V' DITCH
(Not to Scale)

Min. D = 1.0Ft.
Max. d = 1.0Ft.
b = 5.0Ft.

Type of Liner = PSRM

-L- STA. 11+26 TO STA. 13+50 LT

DETAIL D
RIP RAP AT EMBANKMENT
(Not to Scale)

Type of Liner = 425 TONS,CL II Rip-Rap
Geotextile = 535 sy

FROM -L- STA. 19+60 TO STA. 20+07 RT
FROM -L- STA. 20+29 TO STA. 20+70 RT

DETAIL E
DECK DRAIN DISSIPATOR PAD
(Not to Scale)

L = 25Ft.
Type of Liner = 5 tons CL B Rip-Rap
Geotextile = 12 sy

-L- STA. 20+53 TO STA. 20+78 RT

DETAIL F
TOE PROTECTION
(Not to Scale)

d = 1.0 Ft.

Type of Liner = PSRM

FROM -DR3- STA. 10+30 TO STA. 11+10 LT

MATTHEW L. COOK
LEVEL IIIA NAME

117
LEVEL IIIA CERTIFICATION NO.

Std. #	Description	Symbol
1605.01	Temporary Silt Fence	
1606.01	Special Sediment Control Fence	
1622.01	Temporary Berms and Slope Drains	
1630.02	Silt Basin Type B	
1630.03	Temporary Silt Ditch	TSD
1630.05	Temporary Diversion	TD
1630.06	Special Stilling Basin	
1632.03	Rock Inlet Sediment Trap Type C	
1633.01	Temporary Rock Silt Check Type-A	
	Temporary Rock Silt Check Type-A with Matting and Polyacrylamide (PAM)	
1633.02	Temporary Rock Silt Check Type-B	
	Wattle	
	Wattle with Polyacrylamide (PAM)	
1634.02	Temporary Rock Sediment Dam Type-B	
1635.01	Rock Pipe Inlet Sediment Trap Type-A	

THESE EROSION AND SEDIMENT CONTROL PLANS COMPLY WITH THE REGULATIONS SET FORTH BY THE NCG-010000 GENERAL CONSTRUCTION PERMIT EFFECTIVE AUGUST 3, 2011 ISSUED BY THE NORTH CAROLINA DEPARTMENT OF ENVIRONMENT AND NATURAL RESOURCES DIVISION OF WATER QUALITY.

2012 STANDARD DRAWINGS

1604.01	Railroad Erosion Control Detail	1632.01	Rock Inlet Sediment Trap Type A
1605.01	Temporary Silt Fence	1632.02	Rock Inlet Sediment Trap Type B
1606.01	Special Sediment Control Fence	1632.03	Rock Inlet Sediment Trap Type C
1607.01	Gravel Construction Entrance	1633.01	Temporary Rock Silt Check Type A
1622.01	Temporary Berms and Slope Drains	1633.02	Temporary Rock Silt Check Type B
1630.01	Riser Basin	1634.01	Temporary Rock Sediment Dam Type A
1630.02	Silt Basin Type B	1634.02	Temporary Rock Sediment Dam Type B
1630.03	Temporary Silt Ditch	1635.01	Rock Pipe Inlet Sediment Trap Type A
1630.04	Stilling Basin	1635.02	Rock Pipe Inlet Sediment Trap Type B
1630.05	Temporary Diversion	1640.01	Coir Fiber Baffle
1630.06	Special Stilling Basin	1645.01	Temporary Stream Crossing
1631.01	Matting Installation		

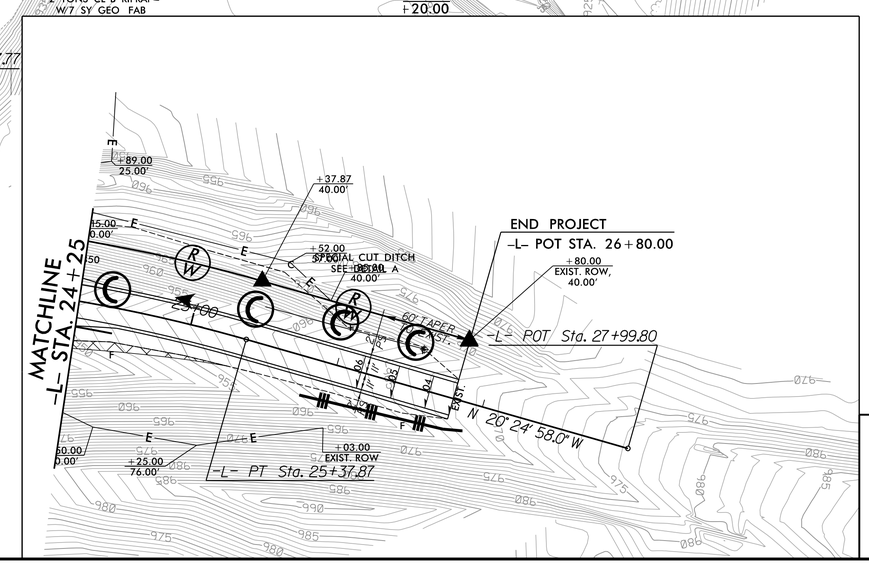

SEE SHT. 2 FOR TYPICAL SECTIONS AND ROW AREAS

PLANS PREPARED BY :
RK&K
RUMMEL, KLEPPER & KAHL, LLP
900 RIDGEFIELD DRIVE SUITE 350
RALEIGH, NORTH CAROLINA 27609-3960
NC LICENSE NO. F-0112 • (919) 878-9560

8/17/99
10/15/2014
R:\Roadways\Hydraulics\CADD\PSH\Erosion Control\BD-5111Y_EC_psh04.dgn

EROSION CONTROL PLAN

PROJECT REFERENCE NO.	SHEET NO.
W-5511	EC-1A/CONST.4
R/W SHEET NO.	
ROADWAY DESIGN ENGINEER	HYDRAULICS ENGINEER

NOTES: ANY DEVIATION FROM OPTIONS GIVEN WILL REQUIRE PRIOR APPROVAL BY ENGINEER.

ADDITIONAL EROSION CONTROL DEVICES MAY NEED TO BE INSTALLED AS DIRECTED BY THE ENGINEER.

Place Matting for Erosion Control on Slope as Work Allows.

2012 STANDARD SPECIFICATIONS

NOTES:
1. CLEARING ON THIS PROJECT SHALL BE PERFORMED TO THE LIMITS ESTABLISHED BY METHOD II.

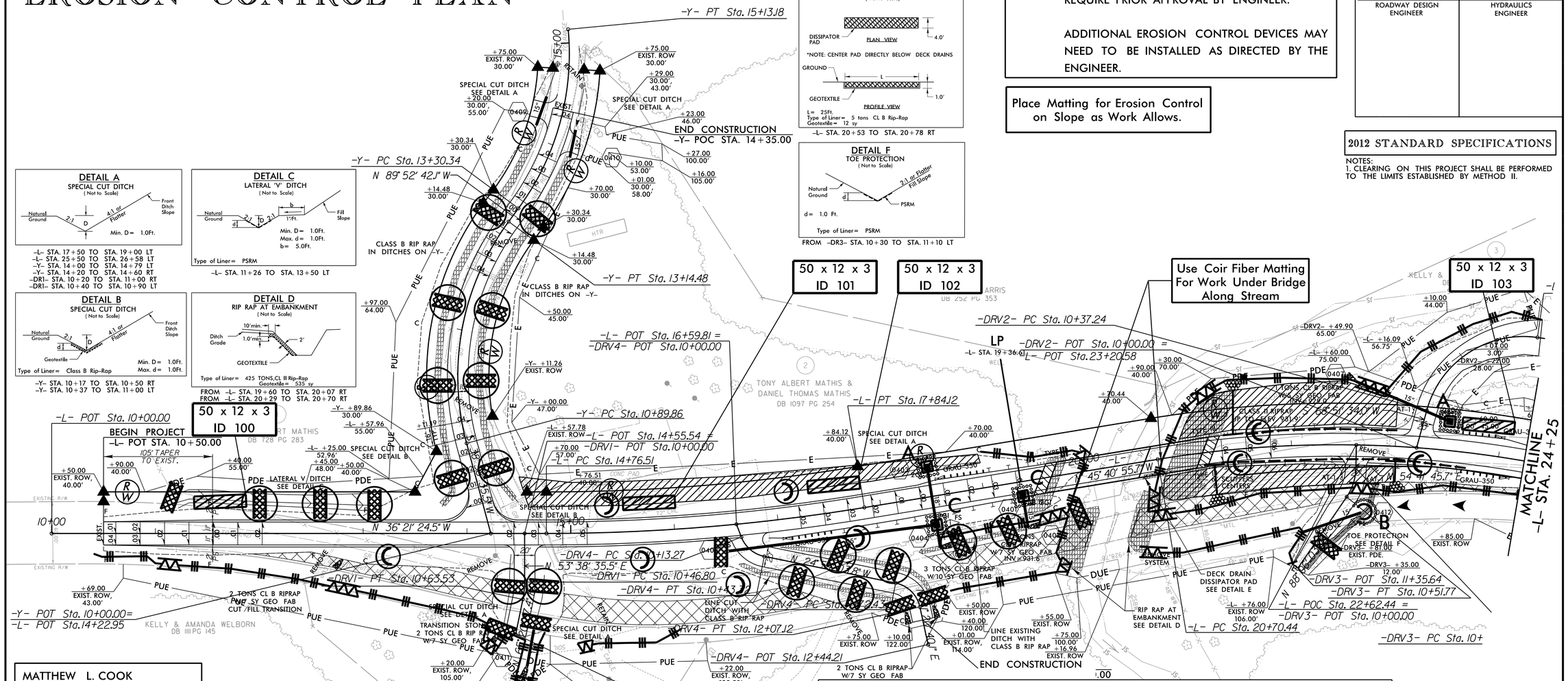

DETAIL A
SPECIAL CUT DITCH
(Not to Scale)

-L- STA. 17+50 TO STA. 19+00 LT
-L- STA. 25+50 TO STA. 26+58 LT
-Y- STA. 14+00 TO STA. 14+79 LT
-Y- STA. 14+20 TO STA. 14+60 RT
-DR1- STA. 10+20 TO STA. 11+00 RT
-DR1- STA. 10+40 TO STA. 10+90 LT

DETAIL B
SPECIAL CUT DITCH
(Not to Scale)

-Y- STA. 10+17 TO STA. 10+50 RT
-Y- STA. 10+37 TO STA. 11+00 LT

DETAIL C
LATERAL 'V' DITCH
(Not to Scale)

-L- STA. 11+26 TO STA. 13+50 LT

DETAIL D
RIP RAP AT EMBANKMENT
(Not to Scale)

FROM -L- STA. 19+60 TO STA. 20+07 RT
FROM -L- STA. 20+29 TO STA. 20+70 RT

DETAIL E
DECK DRAIN DISSIPATOR PAD
(Not to Scale)

-L- STA. 20+53 TO STA. 20+78 RT

DETAIL F
TOE PROTECTION
(Not to Scale)

FROM -DR3- STA. 10+30 TO STA. 11+10 LT

MATTHEW L. COOK
LEVEL IIIA NAME

117
LEVEL IIIA CERTIFICATION NO.

Std. #	Description	Symbol
1605.01	Temporary Silt Fence	
1606.01	Special Sediment Control Fence	
1622.01	Temporary Berms and Slope Drains	
1630.02	Silt Basin Type B	
1630.03	Temporary Silt Ditch	TRD
1630.05	Temporary Diversion	TD
1630.06	Special Stilling Basin	
1632.03	Rock Inlet Sediment Trap Type C	
1633.01	Temporary Rock Silt Check Type-A	
	Temporary Rock Silt Check Type-A with Matting and Polyacrylamide (PAM)	
1633.02	Temporary Rock Silt Check Type-B	
	Wattle	
	Wattle with Polyacrylamide (PAM)	
1634.02	Temporary Rock Sediment Dam Type-B	
1635.01	Rock Pipe Inlet Sediment Trap Type-A	

THESE EROSION AND SEDIMENT CONTROL PLANS COMPLY WITH THE REGULATIONS SET FORTH BY THE NCG-010000 GENERAL CONSTRUCTION PERMIT EFFECTIVE AUGUST 3, 2011 ISSUED BY THE NORTH CAROLINA DEPARTMENT OF ENVIRONMENT AND NATURAL RESOURCES DIVISION OF WATER QUALITY.

2012 STANDARD DRAWINGS

1604.01	Railroad Erosion Control Detail	1632.01	Rock Inlet Sediment Trap Type A
1605.01	Temporary Silt Fence	1632.02	Rock Inlet Sediment Trap Type B
1606.01	Special Sediment Control Fence	1632.03	Rock Inlet Sediment Trap Type C
1607.01	Gravel Construction Entrance	1633.01	Temporary Rock Silt Check Type A
1622.01	Temporary Berms and Slope Drains	1633.02	Temporary Rock Silt Check Type B
1630.01	Riser Basin	1634.01	Temporary Rock Sediment Dam Type A
1630.02	Silt Basin Type B	1634.02	Temporary Rock Sediment Dam Type B
1630.03	Temporary Silt Ditch	1635.01	Rock Pipe Inlet Sediment Trap Type A
1630.04	Stilling Basin	1635.02	Rock Pipe Inlet Sediment Trap Type B
1630.05	Temporary Diversion	1640.01	Coir Fiber Baffle
1630.06	Special Stilling Basin	1645.01	Temporary Stream Crossing
1631.01	Matting Installation		

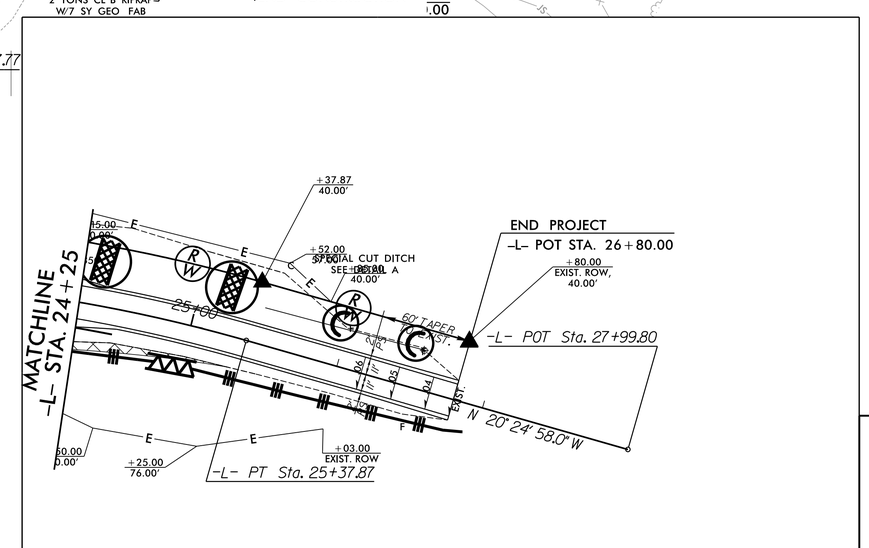

SEE SHT. 2 FOR TYPICAL SECTIONS AND ROW AREAS

PLANS PREPARED BY :

RK&K
RUMMEL, KLEPPER & KAHL, LLP
900 RIDGEFIELD DRIVE SUITE 350
RALEIGH, NORTH CAROLINA 27609-3960
NC LICENSE NO. F-0112 • (919) 878-9560

8/17/99

10/15/2014
R:\Roadway\Proj\Hydraulics\CADD\PSH\Erosion Control\BD-5111Y_EC_psh05.dgn
erlewis

PROJECT REFERENCE NO.	SHEET NO.
W-5511	EC-2
R/W SHEET NO.	
ROADWAY DESIGN ENGINEER	HYDRAULICS ENGINEER

WATTLE WITH POLYACRYLAMIDE (PAM) DETAIL

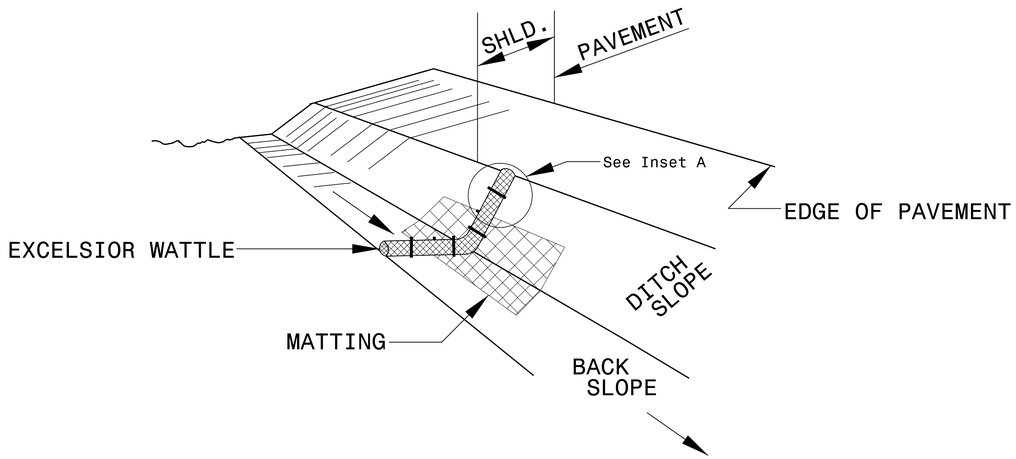

ISOMETRIC VIEW

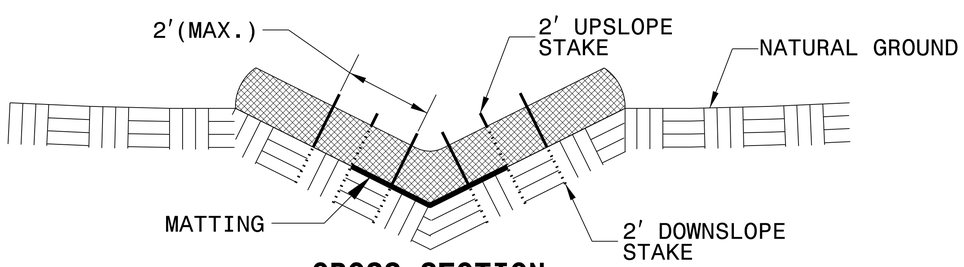

CROSS SECTION VEE DITCH

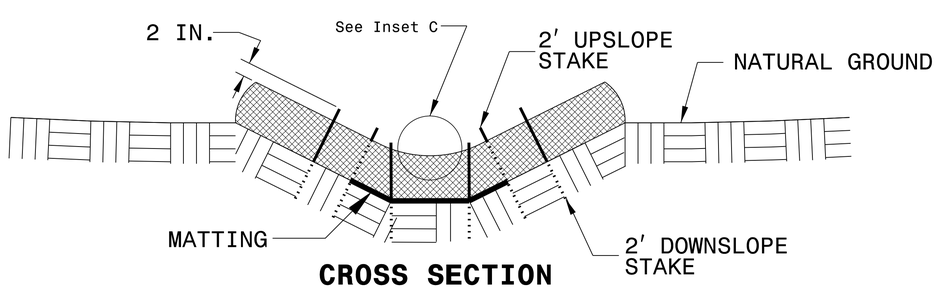

CROSS SECTION TRAPEZOIDAL DITCH

NOTES:

USE MINIMUM 12 IN. DIAMETER EXCELSIOR WATTLE.

USE 2 FT. WOODEN STAKES WITH A 2 IN. BY 2 IN. NOMINAL CROSS SECTION.

ONLY INSTALL WATTLE(S) TO A HEIGHT IN DITCH SO FLOW WILL NOT WASH AROUND WATTLE AND SCOUR DITCH SLOPES AND AS DIRECTED.

INSTALL A MINIMUM OF 2 UPSLOPE STAKES AND 4 DOWNSLOPE STAKES AT AN ANGLE TO WEDGE WATTLE TO BOTTOM OF DITCH.

PROVIDE STAPLES MADE OF 0.125 IN. DIAMETER STEEL WIRE FORMED INTO A U SHAPE NOT LESS THAN 12″ IN LENGTH.

INSTALL STAPLES APPROXIMATELY EVERY 1 LINEAR FOOT ON BOTH SIDES OF WATTLE AND AT EACH END TO SECURE IT TO THE SOIL.

INSTALL MATTING IN ACCORDANCE WITH SECTION 1631 OF THE STANDARD SPECIFICATIONS.

PRIOR TO POLYACRYLAMIDE (PAM) APPLICATION, OBTAIN A SOIL SAMPLE FROM PROJECT LOCATION, AND FROM OFFSITE MATERIAL, AND ANALYZE FOR APPROPRIATE PAM FLOCCULANT TO BE APPLIED TO EACH WATTLE.

INITIALLY APPLY 2 OUNCES OF ANIONIC OR NEUTRALLY CHARGED PAM OVER WATTLE WHERE WATER WILL FLOW AND 1 OUNCE OF PAM ON MATTING ON EACH SIDE OF WATTLE. REAPPLY PAM AFTER EVERY RAINFALL EVENT THAT IS EQUAL TO OR EXCEEDS 0.50 IN.

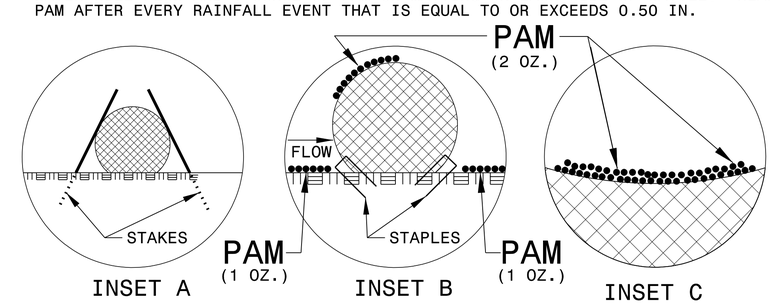

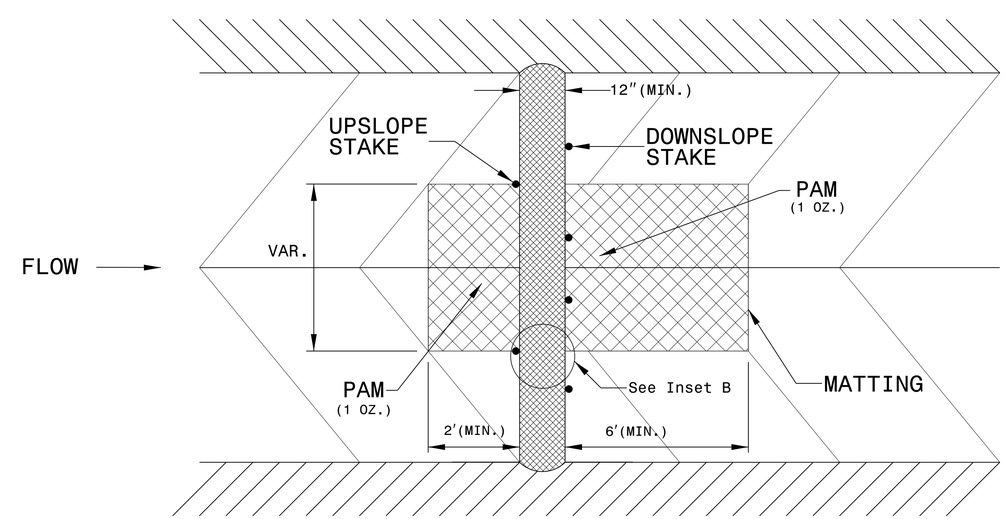

TOP VIEW

PROJECT REFERENCE NO.	SHEET NO.
W-5511	EC-2A
R/W SHEET NO.	
ROADWAY DESIGN ENGINEER	HYDRAULICS ENGINEER

TEMPORARY ROCK SILT CHECK TYPE 'A' WITH EXCELSIOR MATTING AND POLYACRYLAMIDE (PAM)

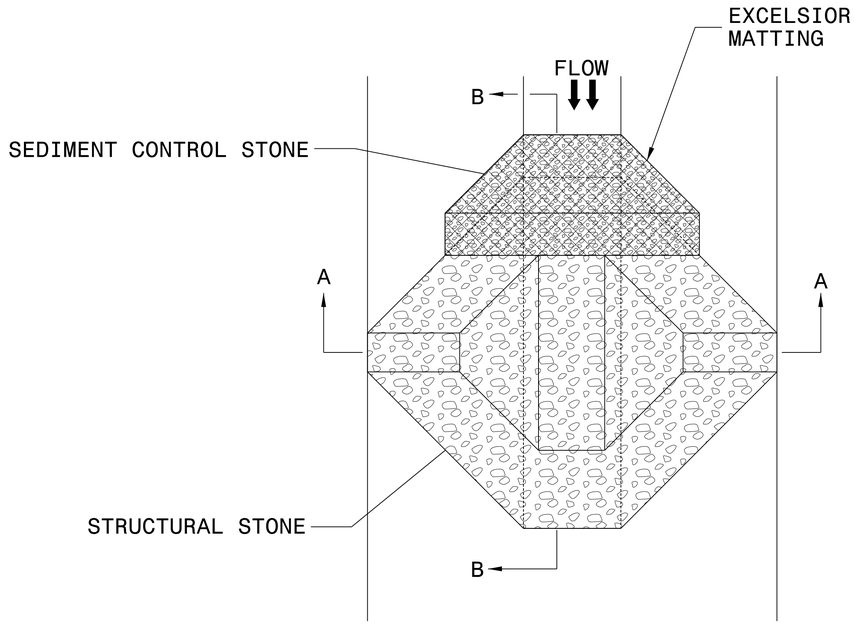

PLAN

NOTES:

INSTALL TEMPORARY ROCK SILT CHECK TYPE A IN ACCORDANCE WITH ROADWAY STANDARD DRAWING NO. 1633.01.

USE EXCELSIOR FOR MATTING MATERIAL AND ANCHOR MATTING SECTION AT TOP AND BOTTOM WITH CLASS B STONE.

PRIOR TO POLYACRYLAMIDE (PAM) APPLICATION, OBTAIN A SOIL SAMPLE FROM PROJECT LOCATION, AND FROM OFFSITE MATERIAL, AND ANALYZE FOR APPROPRIATE PAM FLOCCULANT TO BE APPLIED TO EACH ROCK SILT CHECK.

INITIALLY APPLY 4 OUNCES OF POLYACRYLAMIDE (PAM) TO TOP OF MATTING SECTION AND AFTER EVERY RAINFALL EVENT THAT EQUALS OR EXCEEDS 0.50 INCHES.

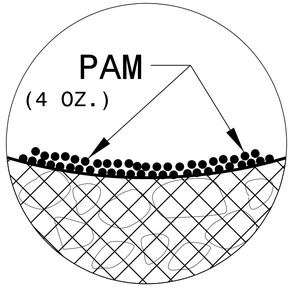

INSET A

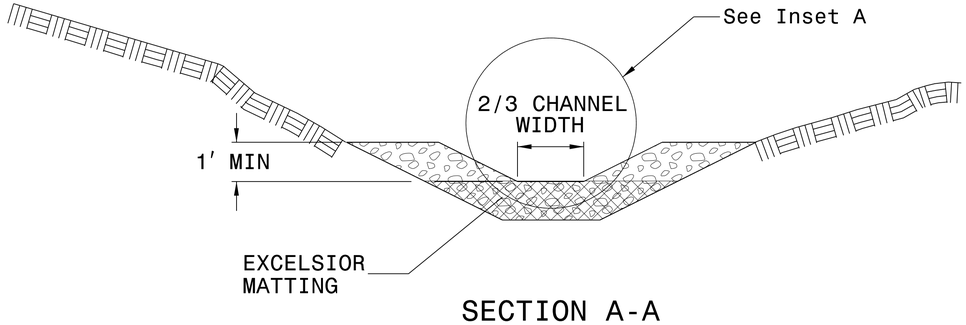

SECTION A-A

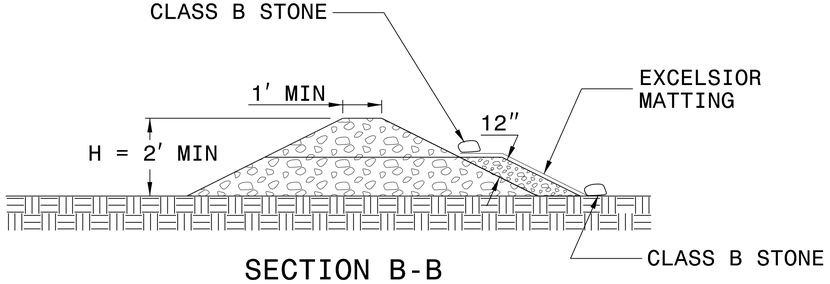

SECTION B-B

NOT TO SCALE

PROJECT REFERENCE NO.	SHEET NO.
W-5511	EC-3
ROADWAY DESIGN ENGINEER	HYDRAULICS ENGINEER

DIVISION OF HIGHWAYS
STATE OF NORTH CAROLINA

SOIL STABILIZATION SUMMARY SHEET

MATTING FOR EROSION CONTROL

CONST SHEET NO.	LINE	FROM STATION	TO STATION	SIDE	ESTIMATE (SY)
4	-L-	14+50	17+50	LT	210
4	-L-	17+50	18+00	LT	35
4	-L-	18+00	19+00	LT	70
4	-L-	25+50	26+58	LT	80
4	-L-	13+00	15+00	RT	140
4	-L-	15+00	16+50	RT	105
4	-L-	17+50	18+50	RT	70
4	-DR1-	10+20	11+00	RT	60
4	-DR1-	10+40	10+90	LT	35
				SUBTOTAL	805
MISCELLANEOUS MATTING TO BE INSTALLED AS DIRECTED BY THE ENGINEER					85
				TOTAL	890
				SAY	890

PERMANENT SOIL REINFORCEMENT MAT

CONST SHEET NO.	LINE	FROM STATION	TO STATION	SIDE	ESTIMATE (SY)
4	-L-	11+26	13+50	LT	115
4	-L-	23+50	25+50	LT	140
4	-Y-	14+00	14+79	LT	60
4	-Y-	14+00	14+60	RT	45
				SUBTOTAL	360
		ADDITIONAL PSRM TO BE INSTALLED			40
				TOTAL	400
				SAY	400

PROJECT REFERENCE NO.	SHEET NO.
W-5511	EC-3A
ROADWAY DESIGN ENGINEER	HYDRAULICS ENGINEER

DIVISION OF HIGHWAYS
STATE OF NORTH CAROLINA

SOIL STABILIZATION TIMEFRAMES

SITE DESCRIPTION	STABILIZATION TIME	TIMEFRAME EXCEPTIONS
PERIMETER DIKES, SWALES, DITCHES AND SLOPES	7 DAYS	NONE
HIGH QUALITY WATER (HQW) ZONES	7 DAYS	NONE
SLOPES STEEPER THAN 3:1	7 DAYS	IF SLOPES ARE 10' OR LESS IN LENGTH AND ARE NOT STEEPER THAN 2:1, 14 DAYS ARE ALLOWED.
SLOPES 3:1 OR FLATTER	14 DAYS	7 DAYS FOR SLOPES GREATER THAN 50' IN LENGTH.
ALL OTHER AREAS WITH SLOPES FLATTER THAN 4:1	14 DAYS	NONE, EXCEPT FOR PERIMETERS AND HQW ZONES.

PROJECT REFERENCE NO.	SHEET NO.
W-5511	UO-1

UTILITIES BY OTHERS

GRAPHIC SCALES

50 0 50 100

PLANS

NOTE:
ALL PROPOSED UTILITY WORK SHOWN ON THIS SHEET WILL BE DONE BY OTHERS

DESIGN SPEED = 55mph
ADT = 2,600 (2010)

WILKES #193

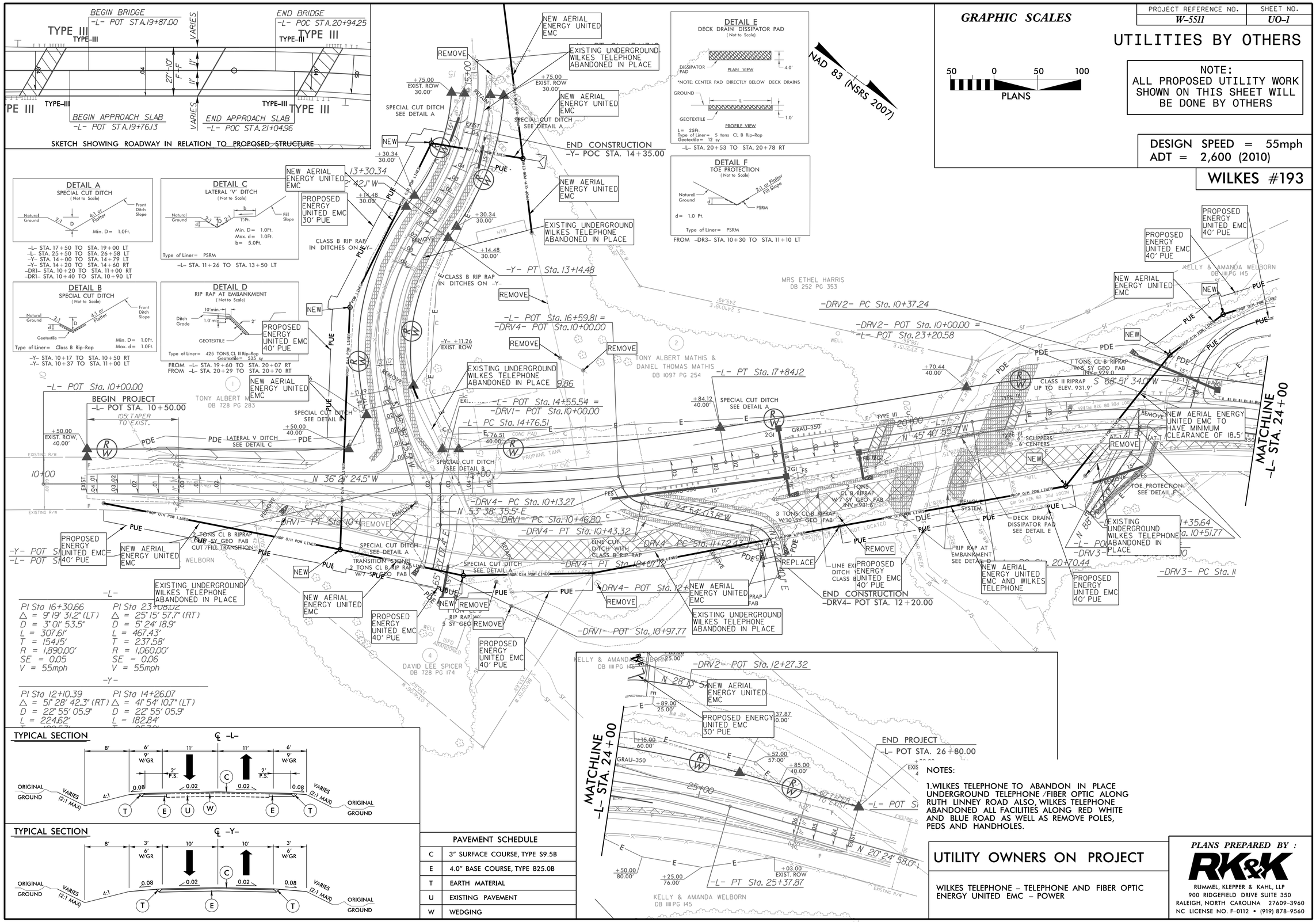

TYPICAL SECTION

TYPICAL SECTION

-L-

PI Sta 16+30.66
△ = 9° 19' 31.2" (LT)
D = 3° 01' 53.5"
L = 307.61'
T = 154.15'
R = 1,890.00'
SE = 0.05
V = 55mph

PI Sta 23+08.02
△ = 25° 15' 57.7" (RT)
D = 5° 24' 18.9"
L = 467.43'
T = 237.58'
R = 1,060.00'
SE = 0.06
V = 55mph

-Y-

PI Sta 12+10.39
△ = 51° 28' 42.3" (RT)
D = 22° 55' 05.9"
L = 224.62'

PI Sta 14+26.07
△ = 41° 54' 10.7" (LT)
D = 22° 55' 05.9"
L = 182.84'

PAVEMENT SCHEDULE	
C	3" SURFACE COURSE, TYPE S9.5B
E	4.0" BASE COURSE, TYPE B25.0B
T	EARTH MATERIAL
U	EXISTING PAVEMENT
W	WEDGING

NOTES:

1. WILKES TELEPHONE TO ABANDON IN PLACE UNDERGROUND TELEPHONE /FIBER OPTIC ALONG RUTH LINNEY ROAD ALSO, WILKES TELEPHONE ABANDONED ALL FACILITIES ALONG RED WHITE AND BLUE ROAD AS WELL AS REMOVE POLES, PEDS AND HANDHOLES.

UTILITY OWNERS ON PROJECT

WILKES TELEPHONE – TELEPHONE AND FIBER OPTIC
ENERGY UNITED EMC – POWER

PLANS PREPARED BY :
RK&K
RUMMEL, KLEPPER & KAHL, LLP
900 RIDGEFIELD DRIVE SUITE 350
RALEIGH, NORTH CAROLINA 27609-3960
NC LICENSE NO. F-0112 • (919) 878-9560

8/23/99

0 2.5 5	PROJ. REFERENCE NO.	SHEET NO.
	W-5511	X-1

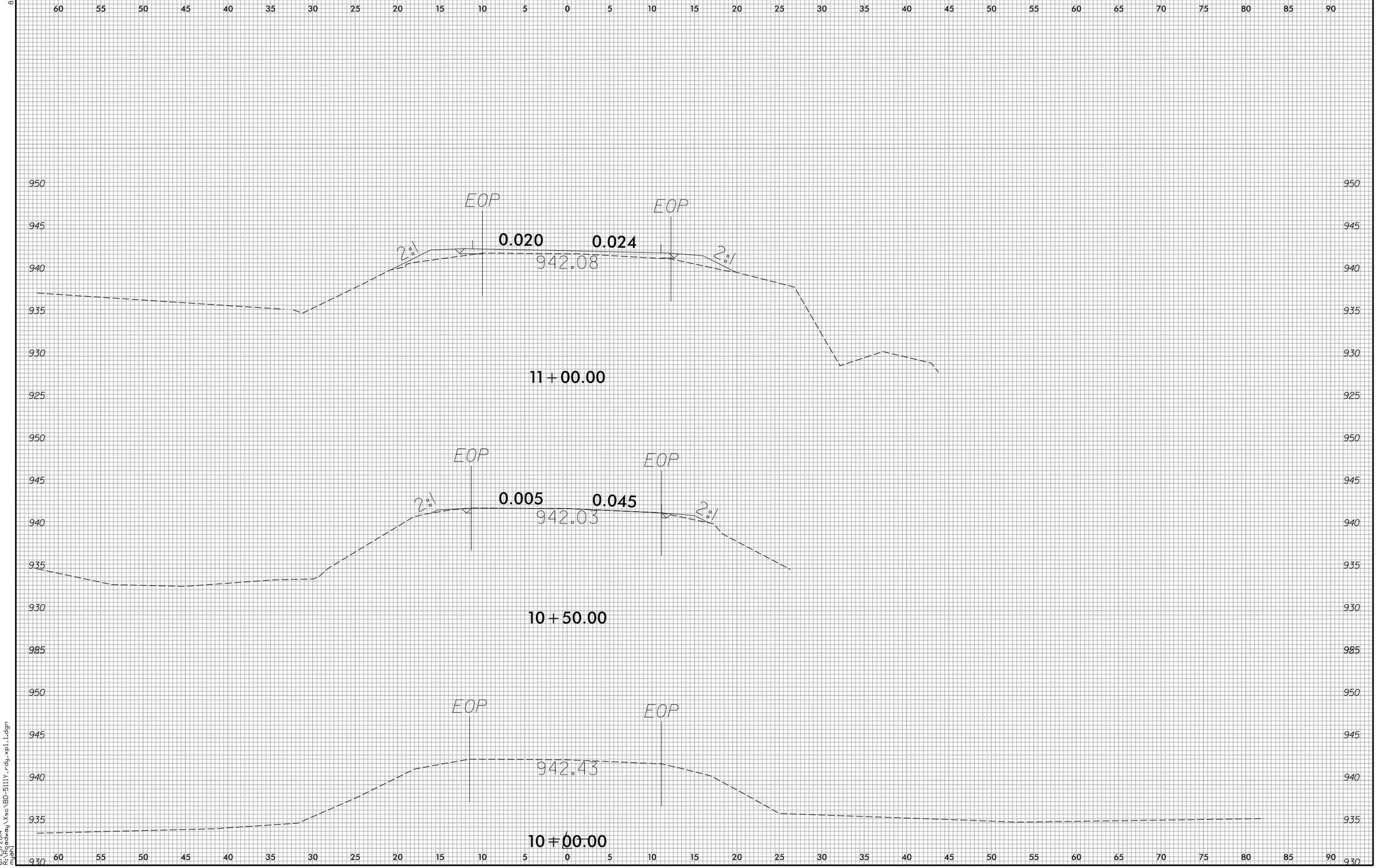

6/23/2014
R:\Roadway\Xsc\BD-5111Y_rdy_xpl_1.dgn
mjahl

8/23/99

0 2.5 5	PROJ. REFERENCE NO.	SHEET NO.
	W-5511	X-2

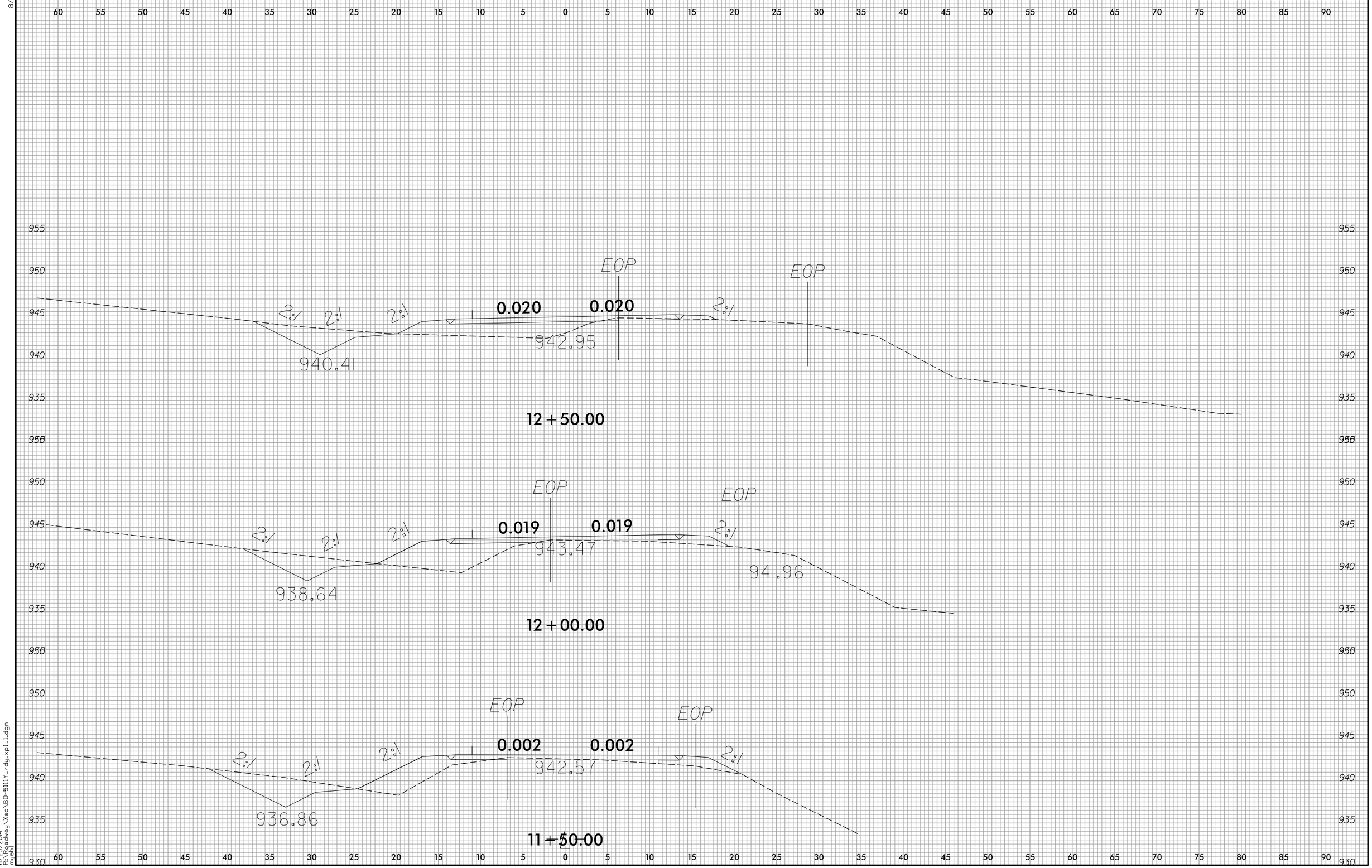

6/23/2014
R:\Projects\dwg\Xsc\BD-5111Y_rdy_xpl_1.dgn
mjahl

0 2.5 5	PROJ. REFERENCE NO.	SHEET NO.
	W-5511	X-3

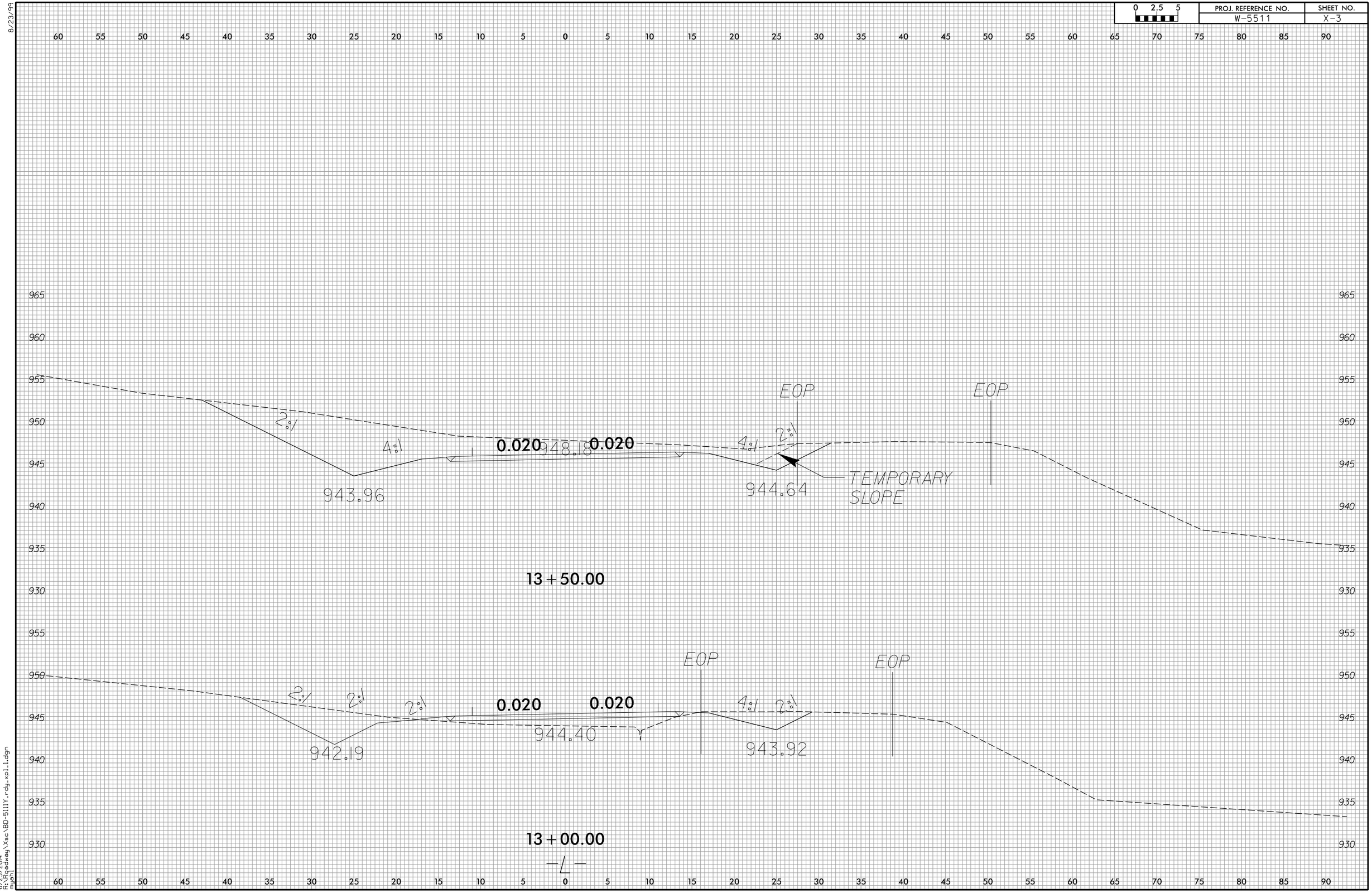

8/23/99

6/23/2014
R:\Roadway\Xsc\BD-5111Y_rdy_xpl_1.dgn
mjoh

8/23/99

0 2.5 5	PROJ. REFERENCE NO.	SHEET NO.
	W-5511	X-4

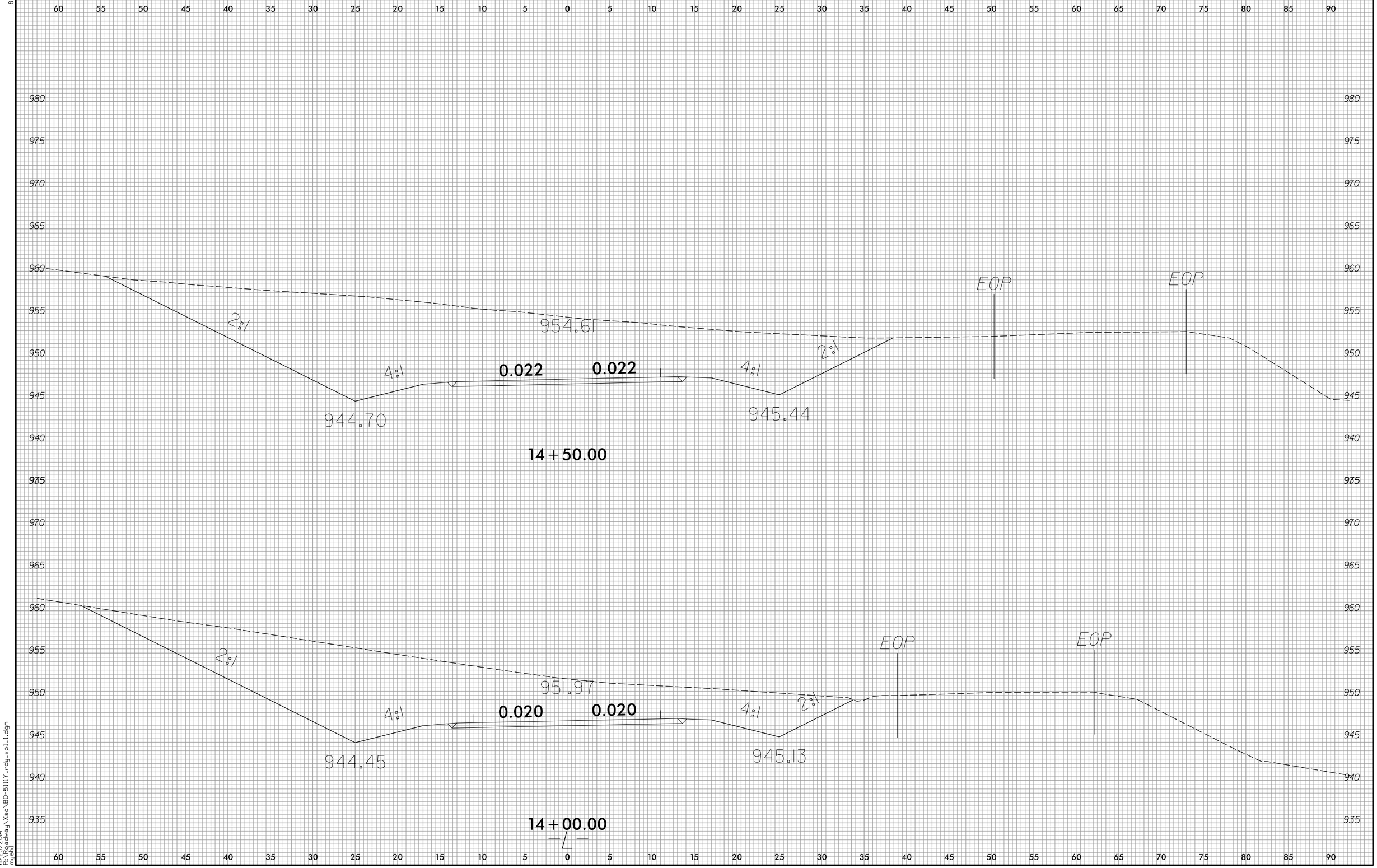

6/23/2014
R:\Projects\dwg\Xsc\BD-5111Y_rdy_xpl_1.dgn
mjahn

0 2.5 5	PROJ. REFERENCE NO.	SHEET NO.
	W-5511	X-5

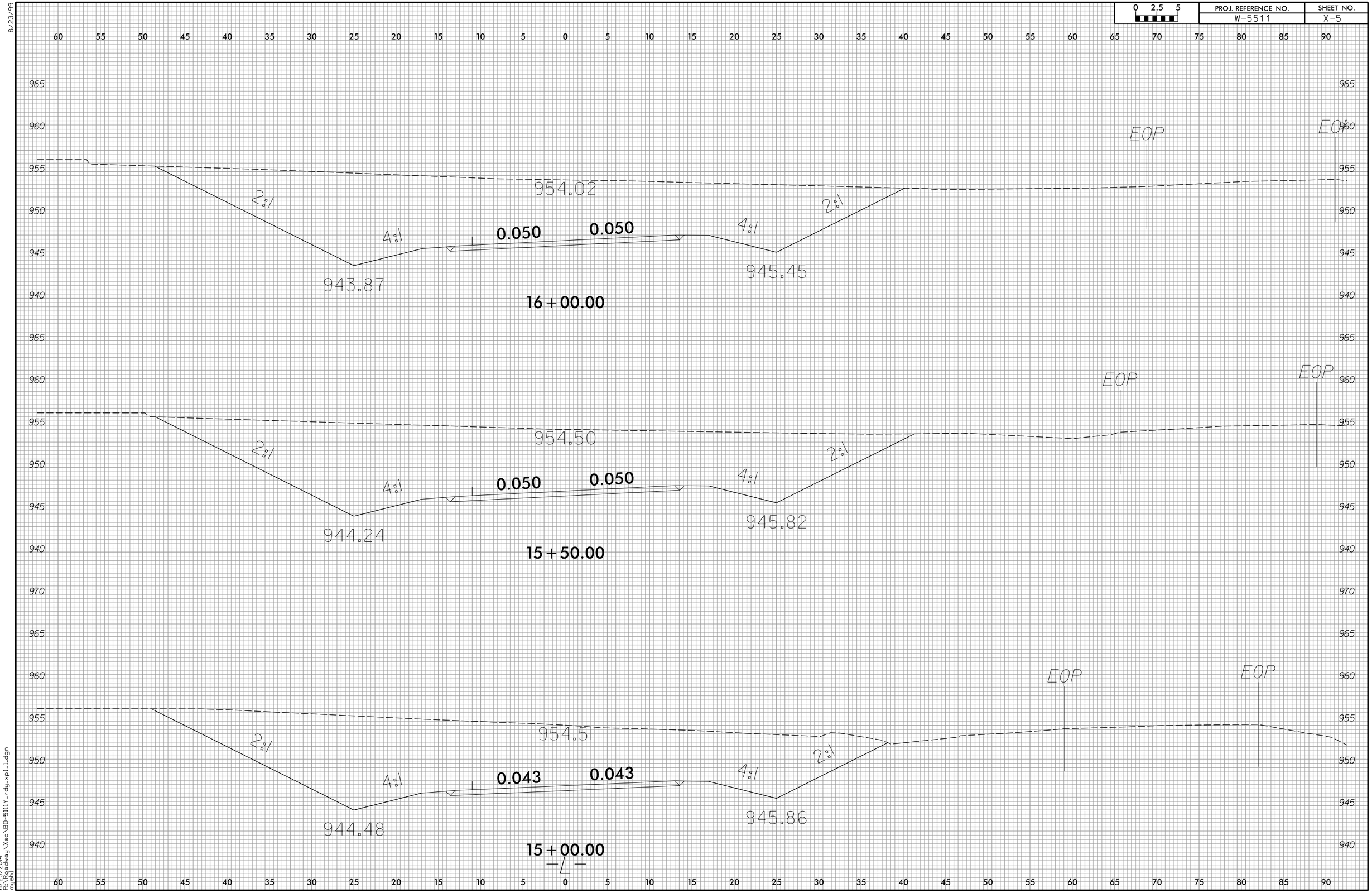

8/23/99

6/23/2014
R:\Roadway\Xsc\BD-5111Y_rdy_xpl_1.dgn
mjohl

8/23/99

0 2.5 5	PROJ. REFERENCE NO.	SHEET NO.
	W-5511	X-6

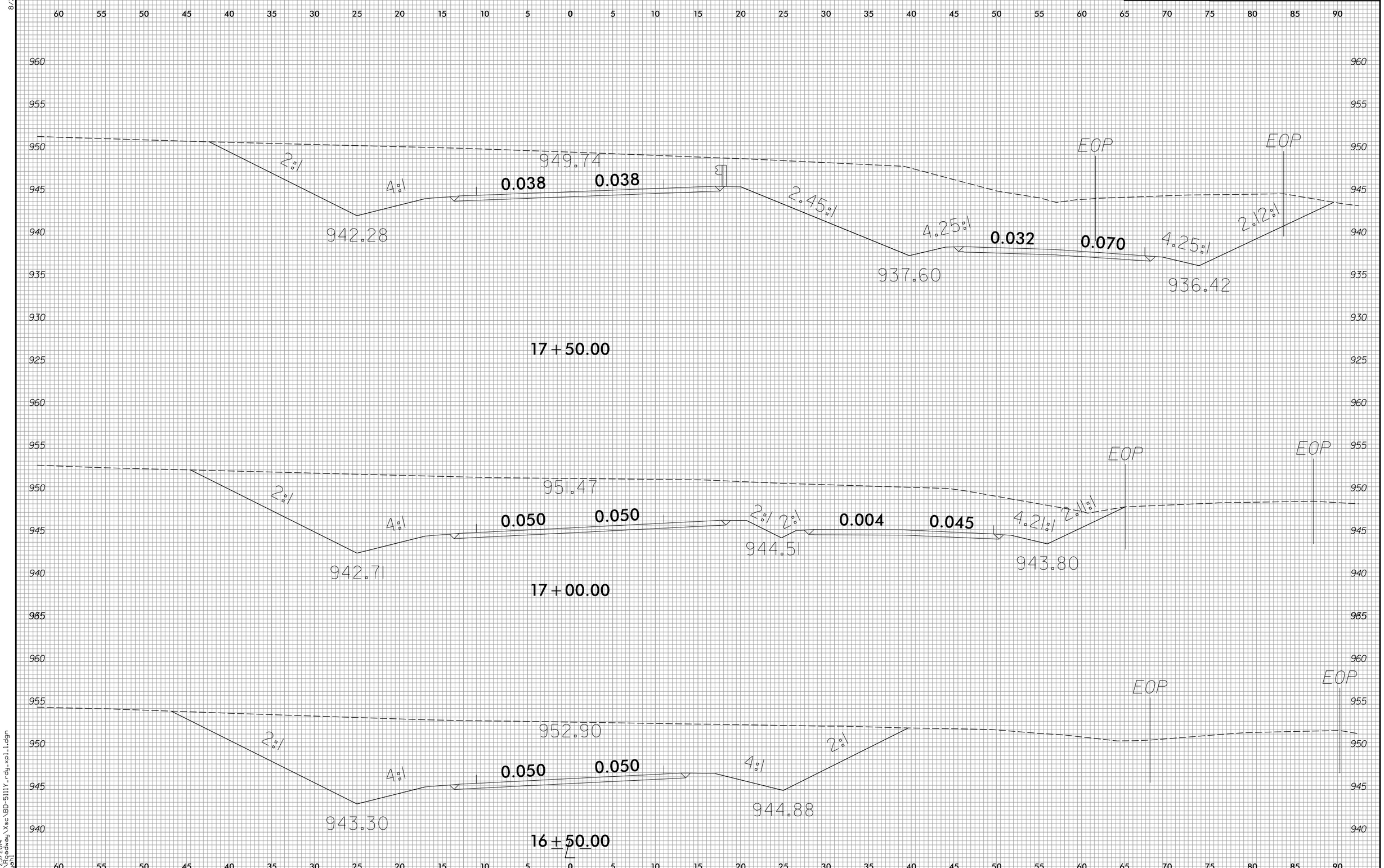

6/23/2014
R:\Projects\Hwy\Xsc\BD-5111Y_rdy_xpl_1.dgn
mjahl

0 2.5 5	PROJ. REFERENCE NO.	SHEET NO.
	W-5511	X-7

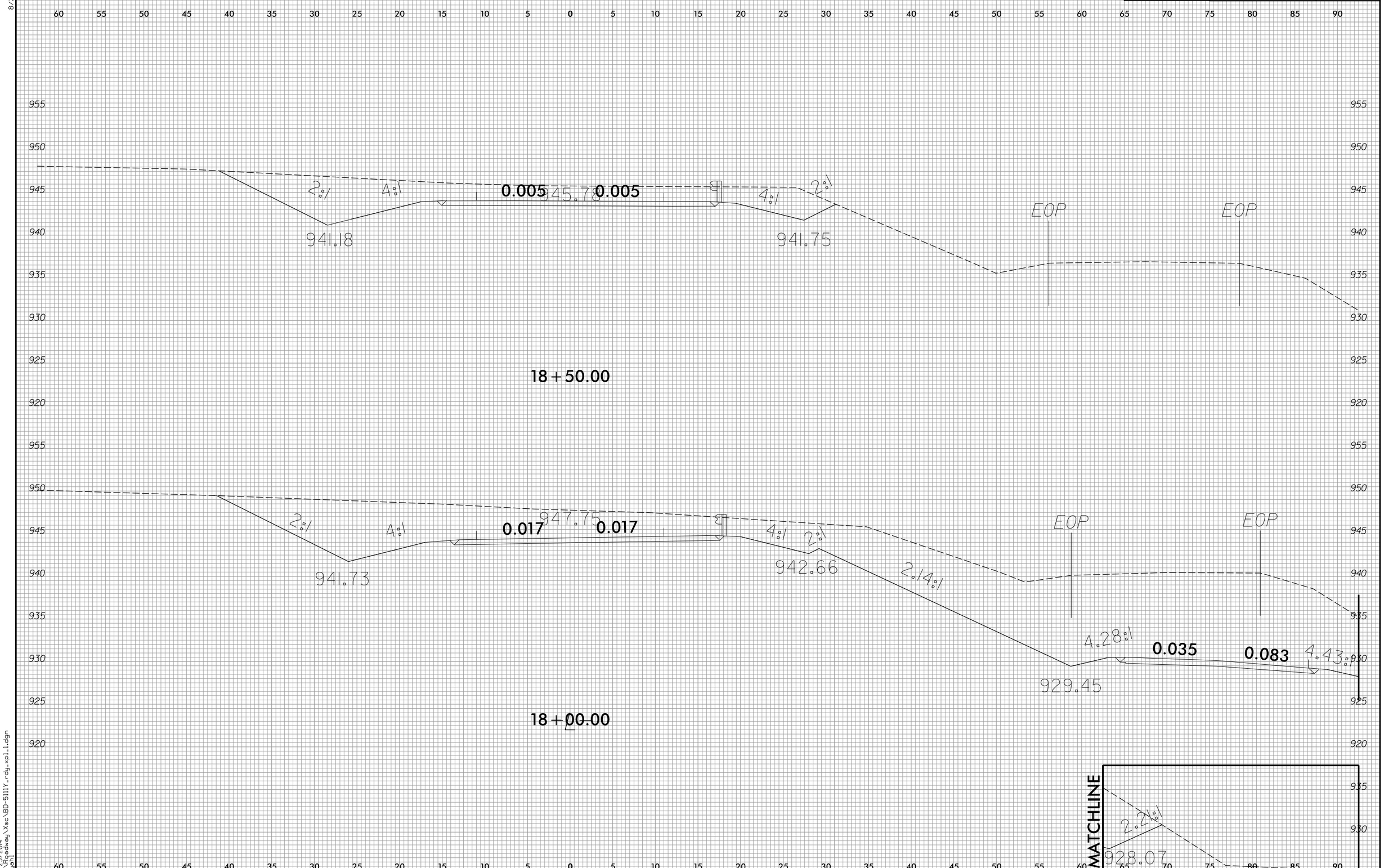

8/23/99

6/23/2014
R:\Projects\Hwy\Xsc\BD-5111Y_rdy_xpl1.dgn
mjahl

PROJ. REFERENCE NO.	SHEET NO.
W-5511	X-8

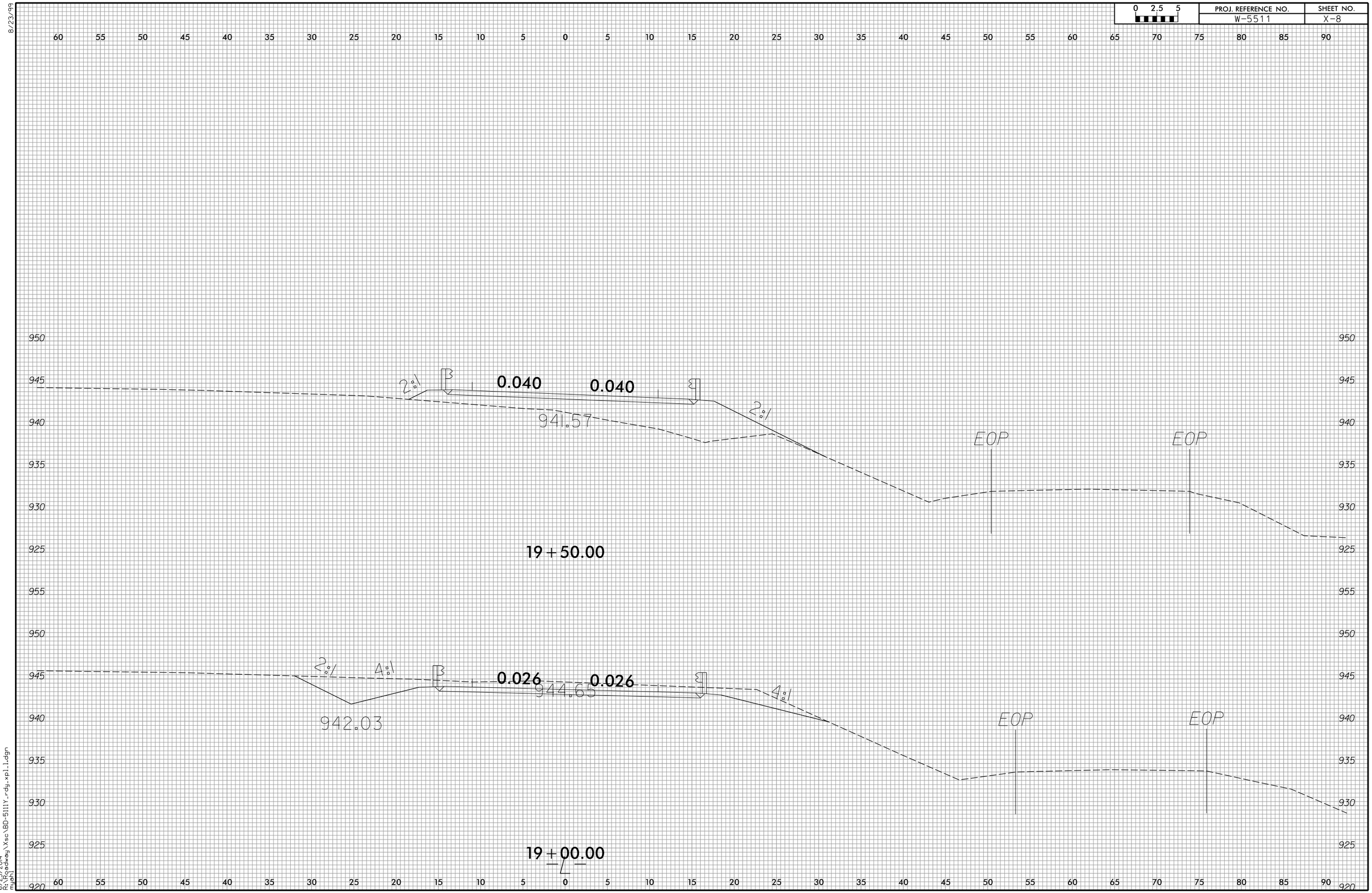

8/23/99

6/23/2014
R:\Projects\Hwy\Xsc\BD-5111Y_rdy_xpl1.dgn
mjohl

8/23/99

0 2.5 5	PROJ. REFERENCE NO.	SHEET NO.
	W-5511	X-9

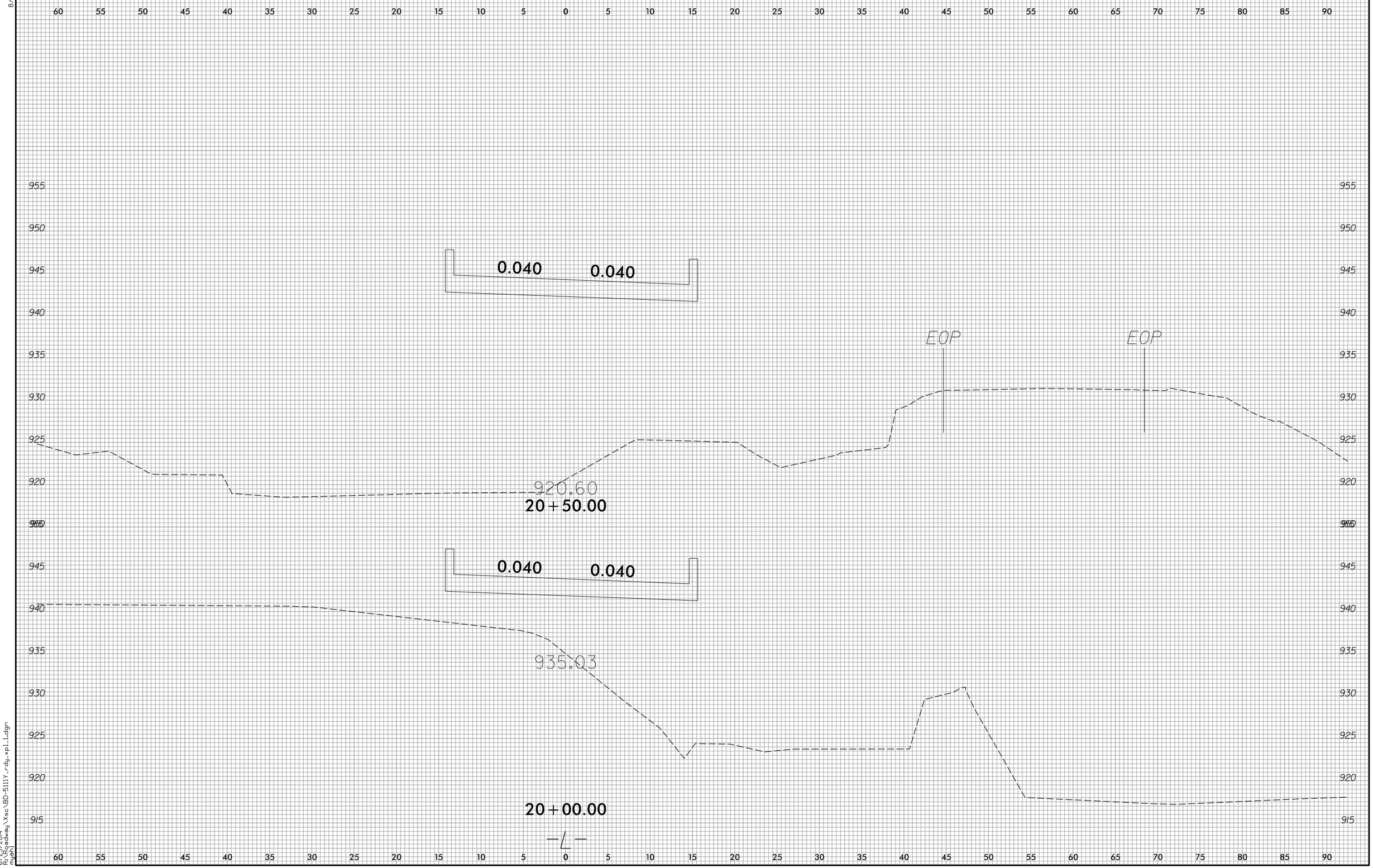

6/23/2014
R:\Roadway\Xsc\BD-5111Y_rdy_xpl_1.dgn
mjohl

8/23/99

0 2.5 5	PROJ. REFERENCE NO.	SHEET NO.
	W-5511	X-10

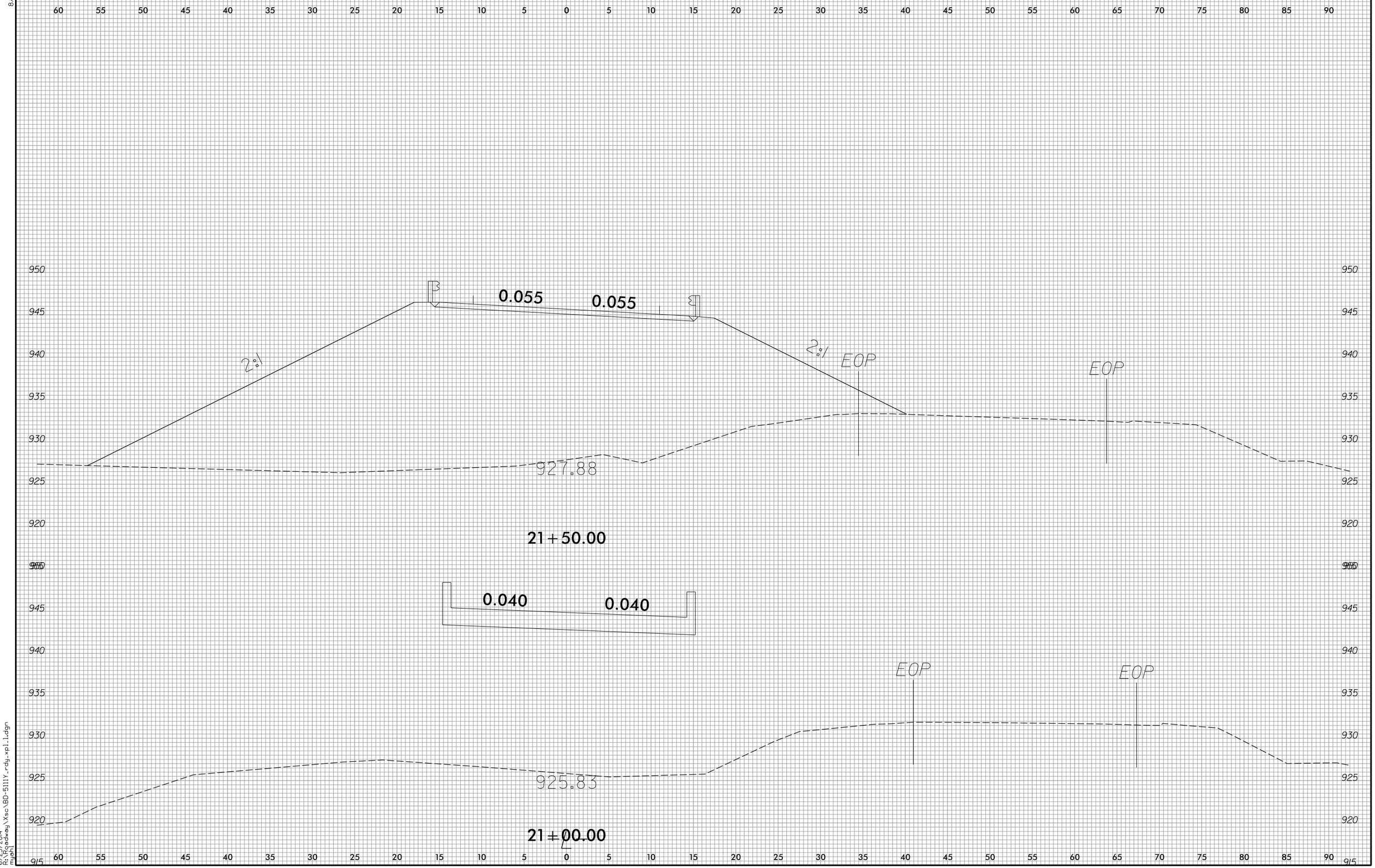

6/23/2014
R:\Roadway\Xsc\BD-5111Y_rdy_xp1_1.dgn
mjohl

0 2.5 5	PROJ. REFERENCE NO.	SHEET NO.
	W-5511	X-11

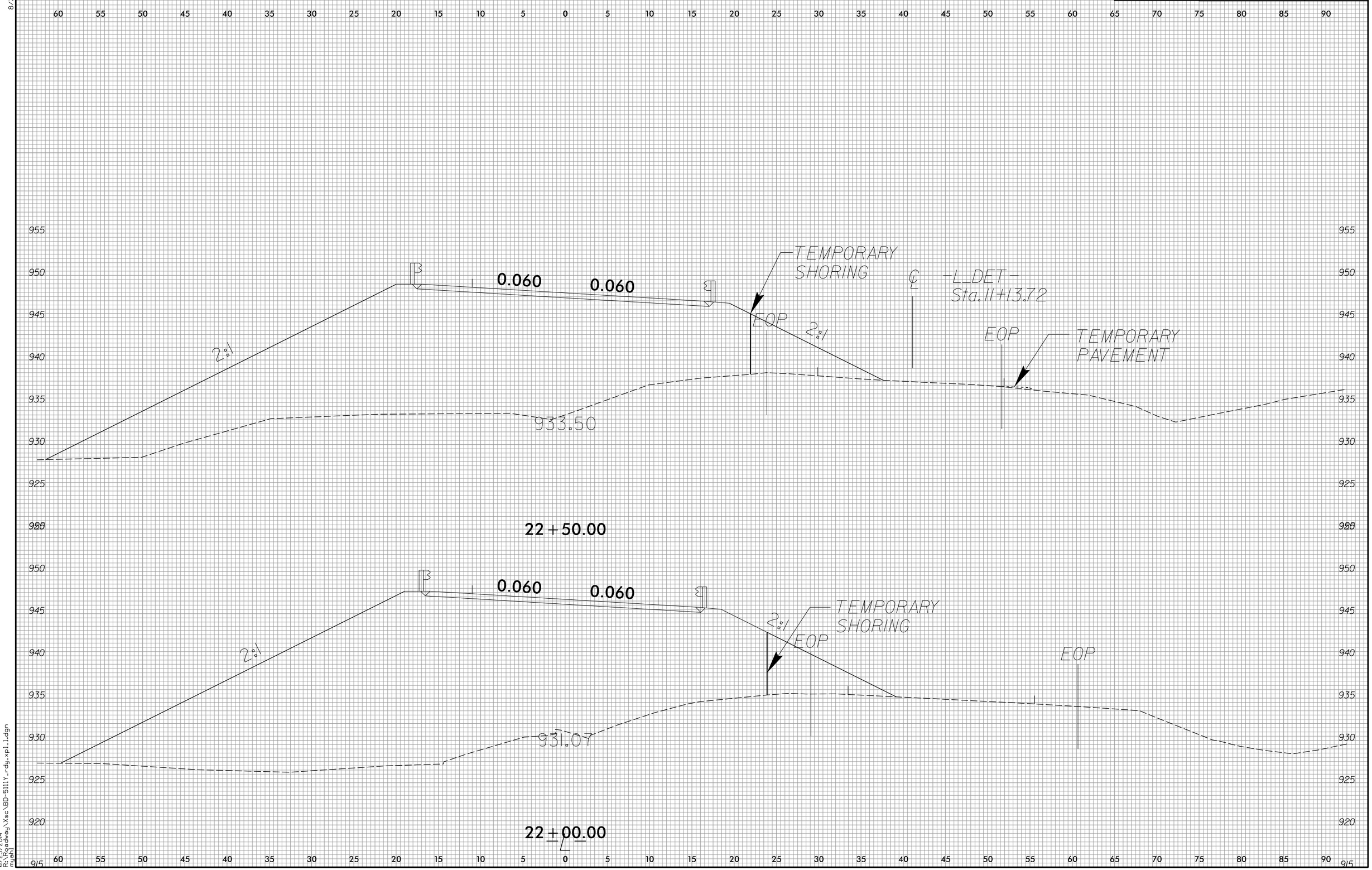

8/23/99

6/23/2014
R:\Structure\mgh\Xsec\BD-5111Y_rdy_xpl1.dgn

0 2.5 5	PROJ. REFERENCE NO.	SHEET NO.
	W-5511	X-12

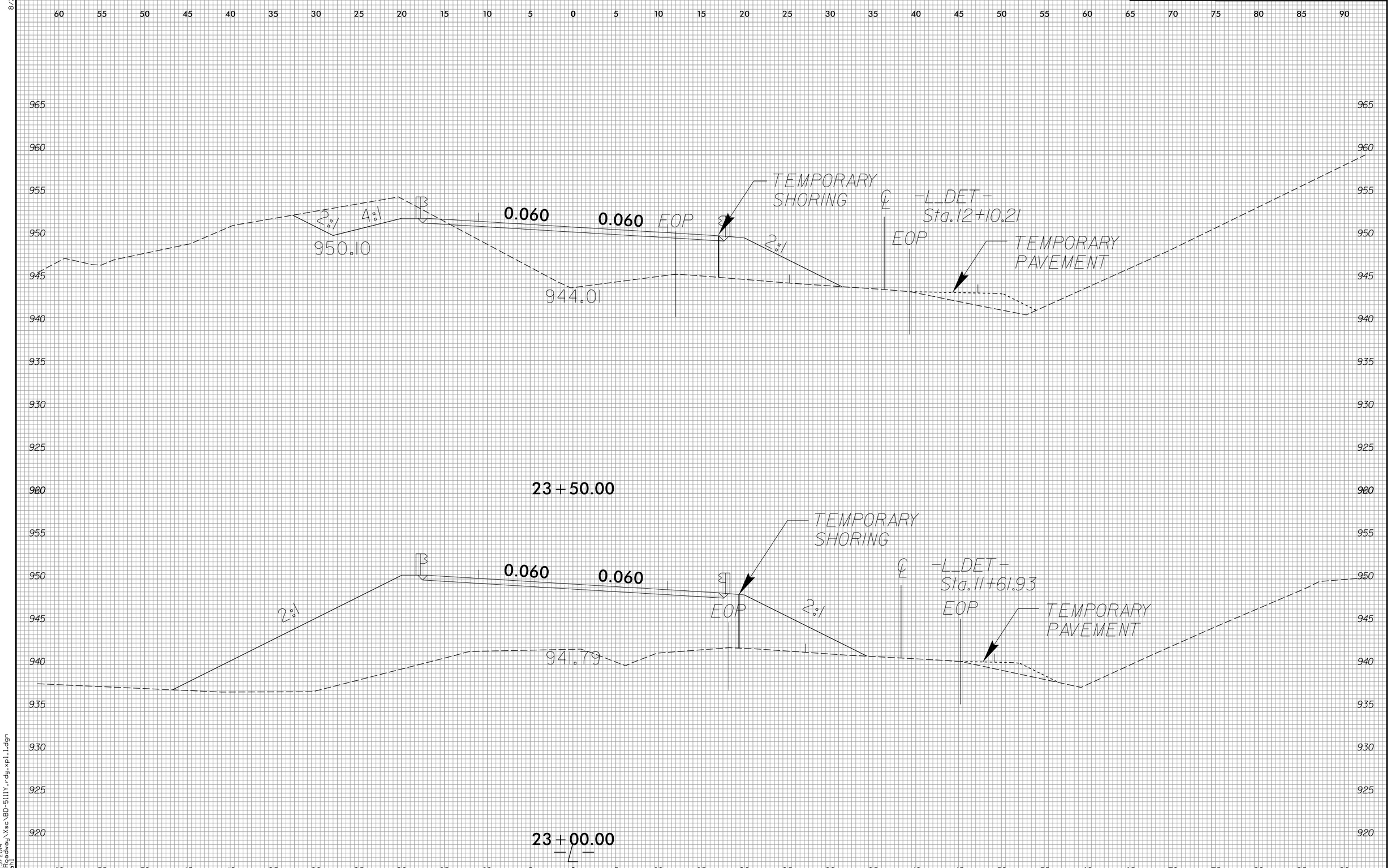

8/23/99

6/23/2014
R:\Roadway\Xsc\BD-5111Y_rdy_xpl_1.dgn
mjahl

0 2.5 5	PROJ. REFERENCE NO.	SHEET NO.
	W-5511	X-13

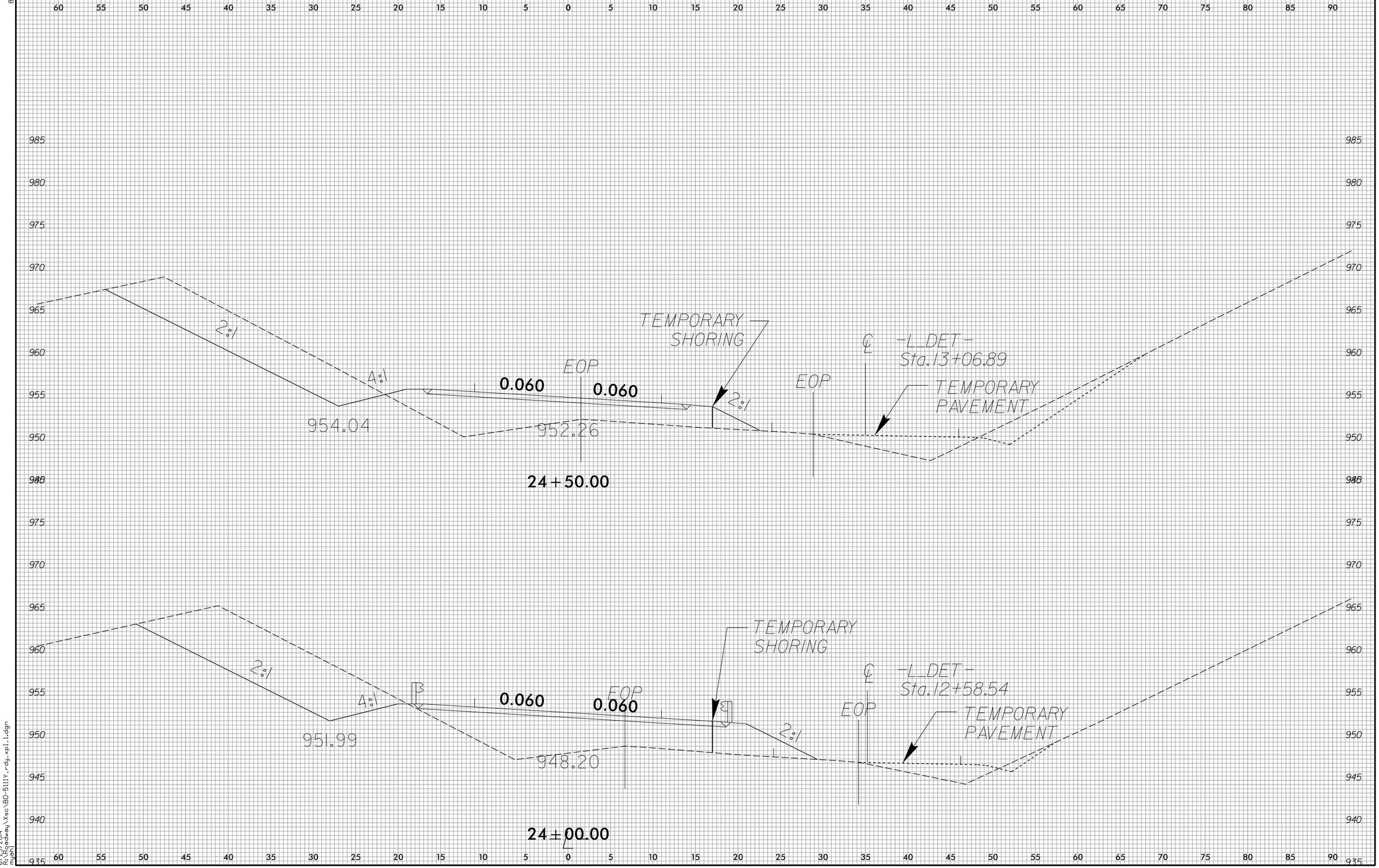

8/23/99

6/23/2014
R:\Roadway\Xsec\BD-5111Y_rdy_xpl1.dgn
mgh1

0 2.5 5	PROJ. REFERENCE NO.	SHEET NO.
	W-5511	X-14

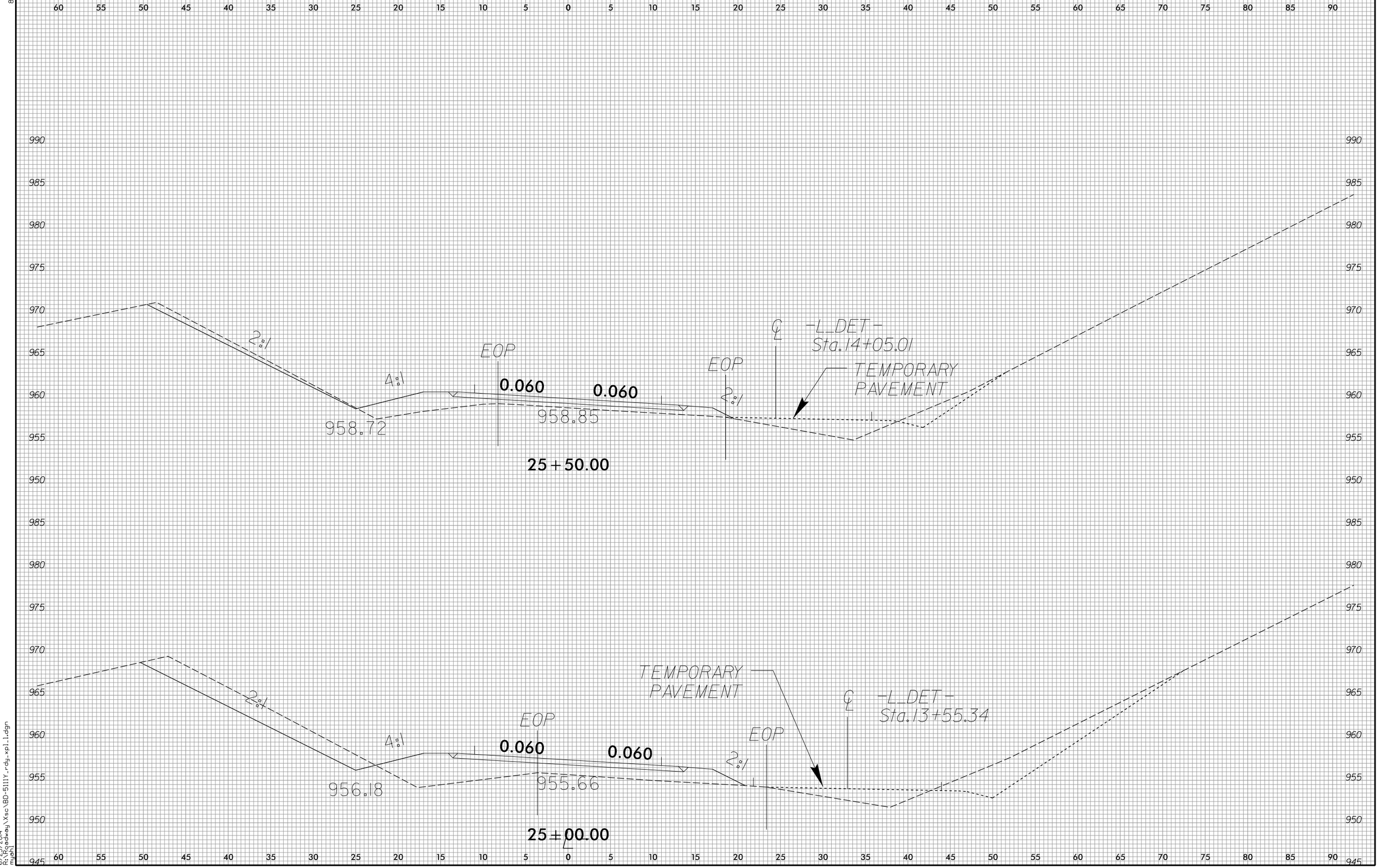

8/23/99

6/23/2014
R:\Projects\Hwy\Xsc\BD-5111Y_rdy_xpl_1.dgn
mjoh

PROJ. REFERENCE NO.	SHEET NO.
W-5511	X-15

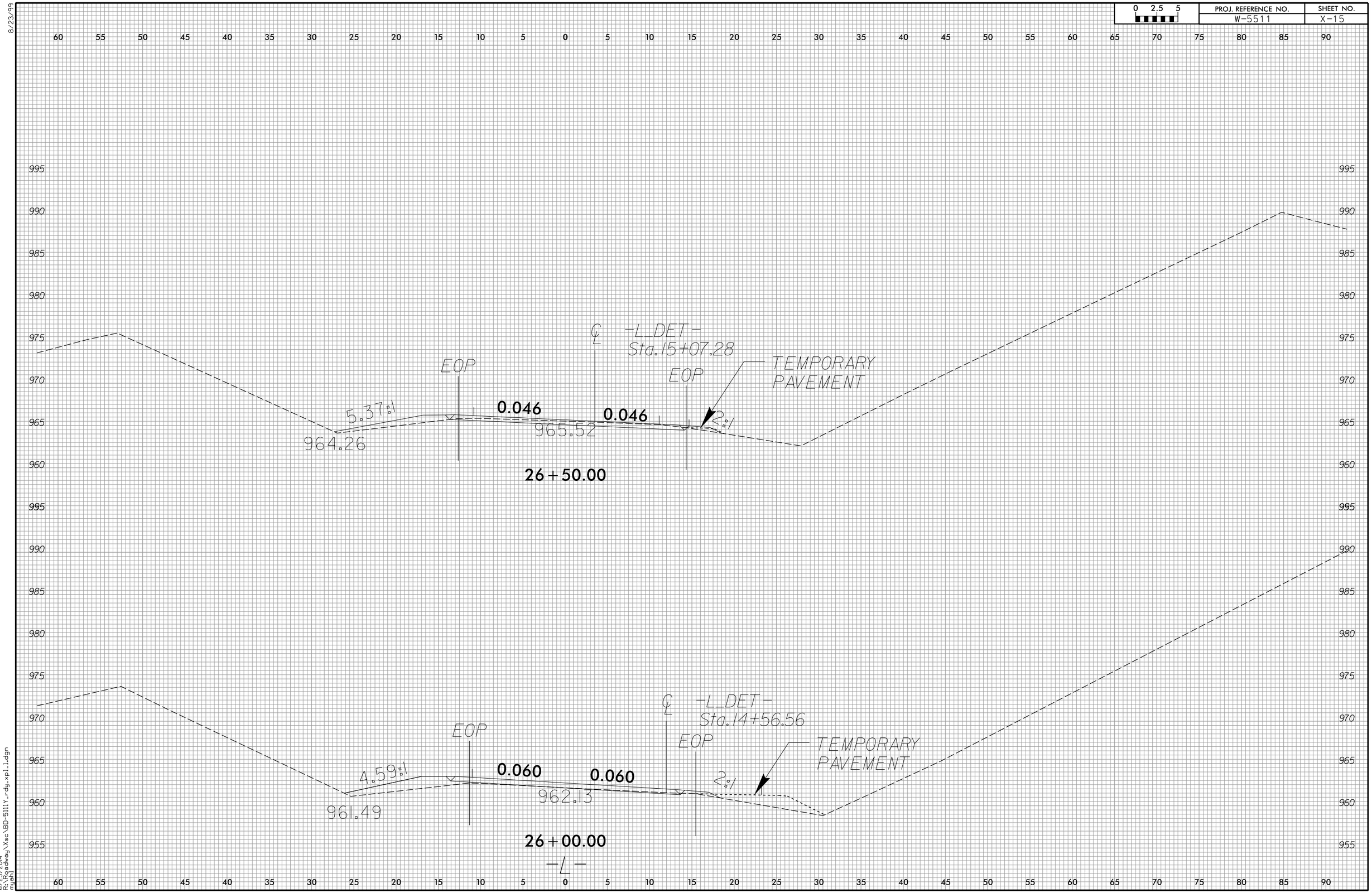

8/23/99

6/23/2014
R:\Roadway\Xsec\BD-5111Y_rdy_xpl_1.dgn
mychesney

8/23/99

0 2.5 5	PROJ. REFERENCE NO.	SHEET NO.
	W-5511	X-16

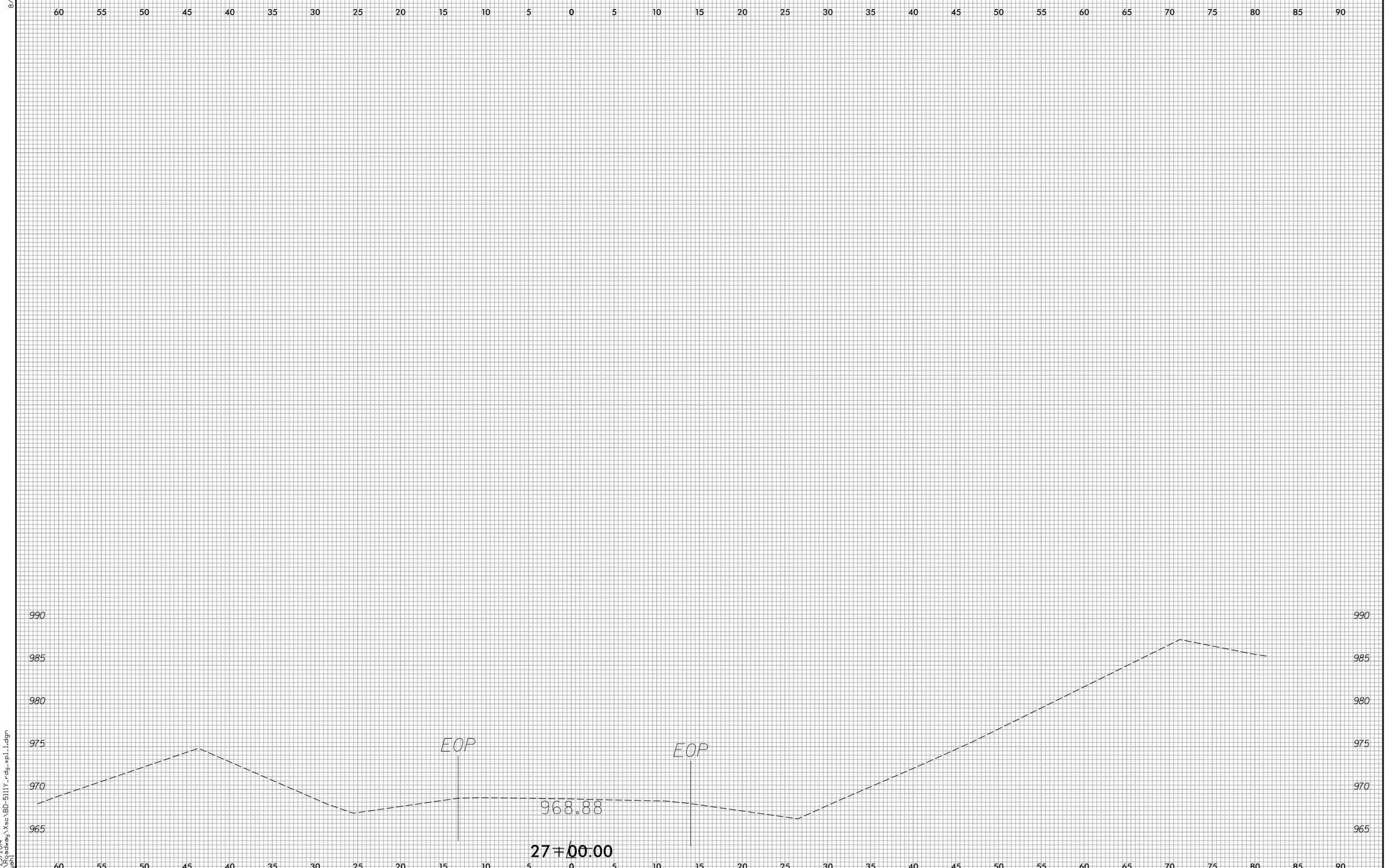

6/23/2014
R:\Projects\dwg\Xsc\BD-5111Y_rdy_xpl_1.dgn
mjahl

0 2.5 5	PROJ. REFERENCE NO.	SHEET NO.
	W-5511	X-17

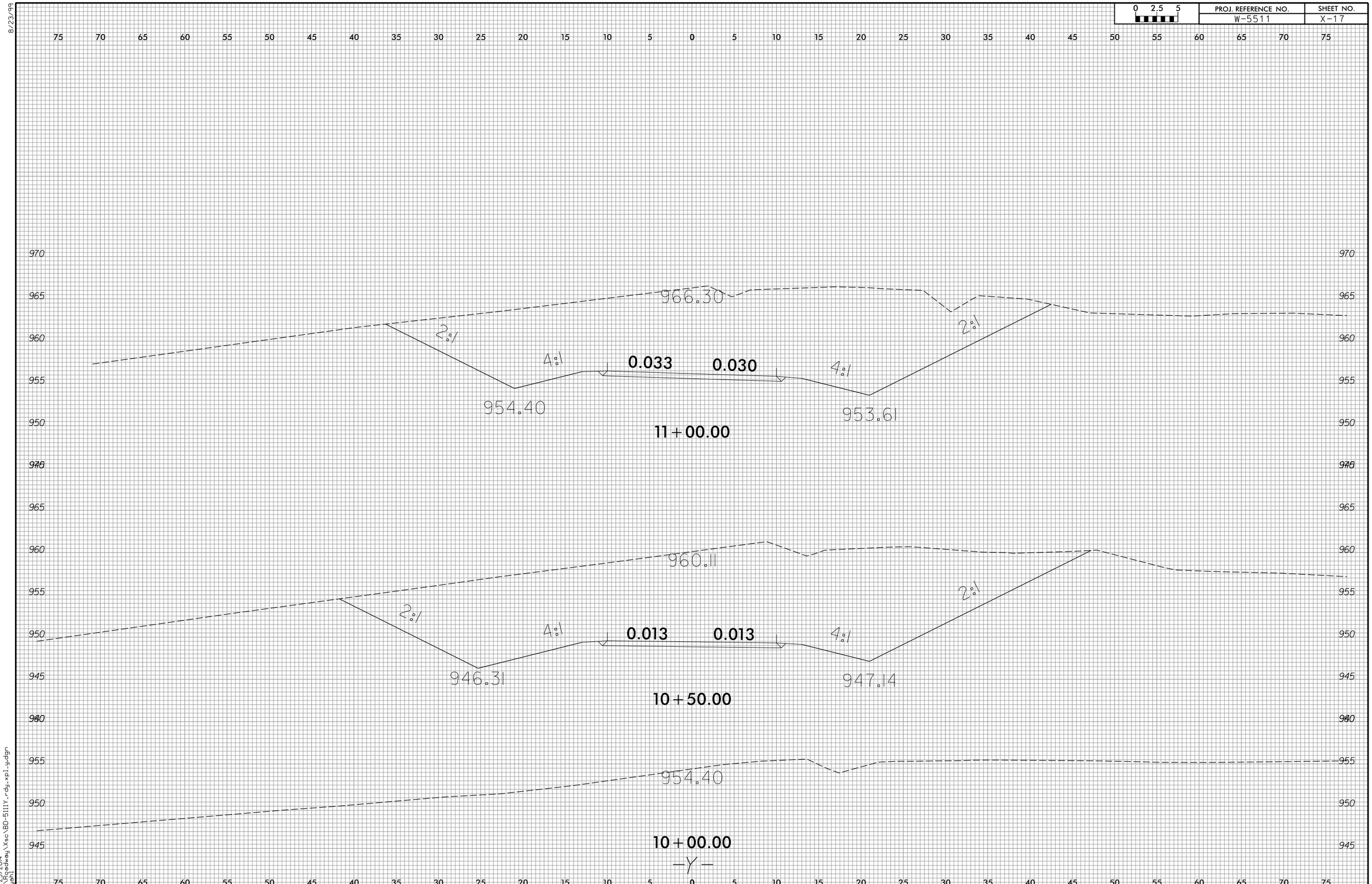

8/23/99

6/23/2014
R:\Projects\dwy\Xsc\BD-5111Y_rdy_xpl_yd.dgn
mjahl

0 2.5 5	PROJ. REFERENCE NO.	SHEET NO.
	W-5511	X-18

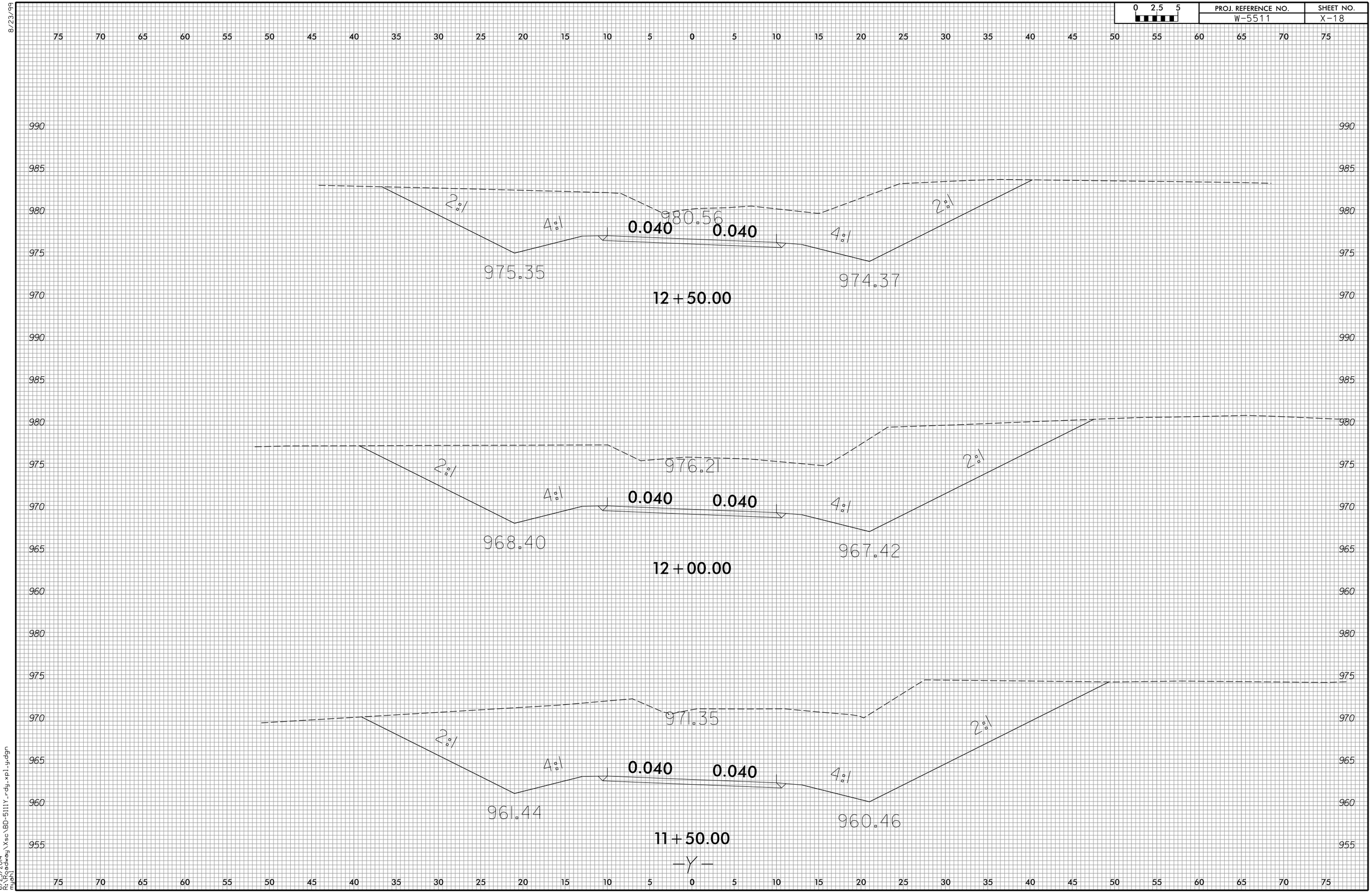

8/23/99

6/23/2014
R:\Roadway\Xsc\BD-5111Y_rdy_xpl_y.dgn
mjahi

0 2.5 5	PROJ. REFERENCE NO.	SHEET NO.
	W-5511	X-19

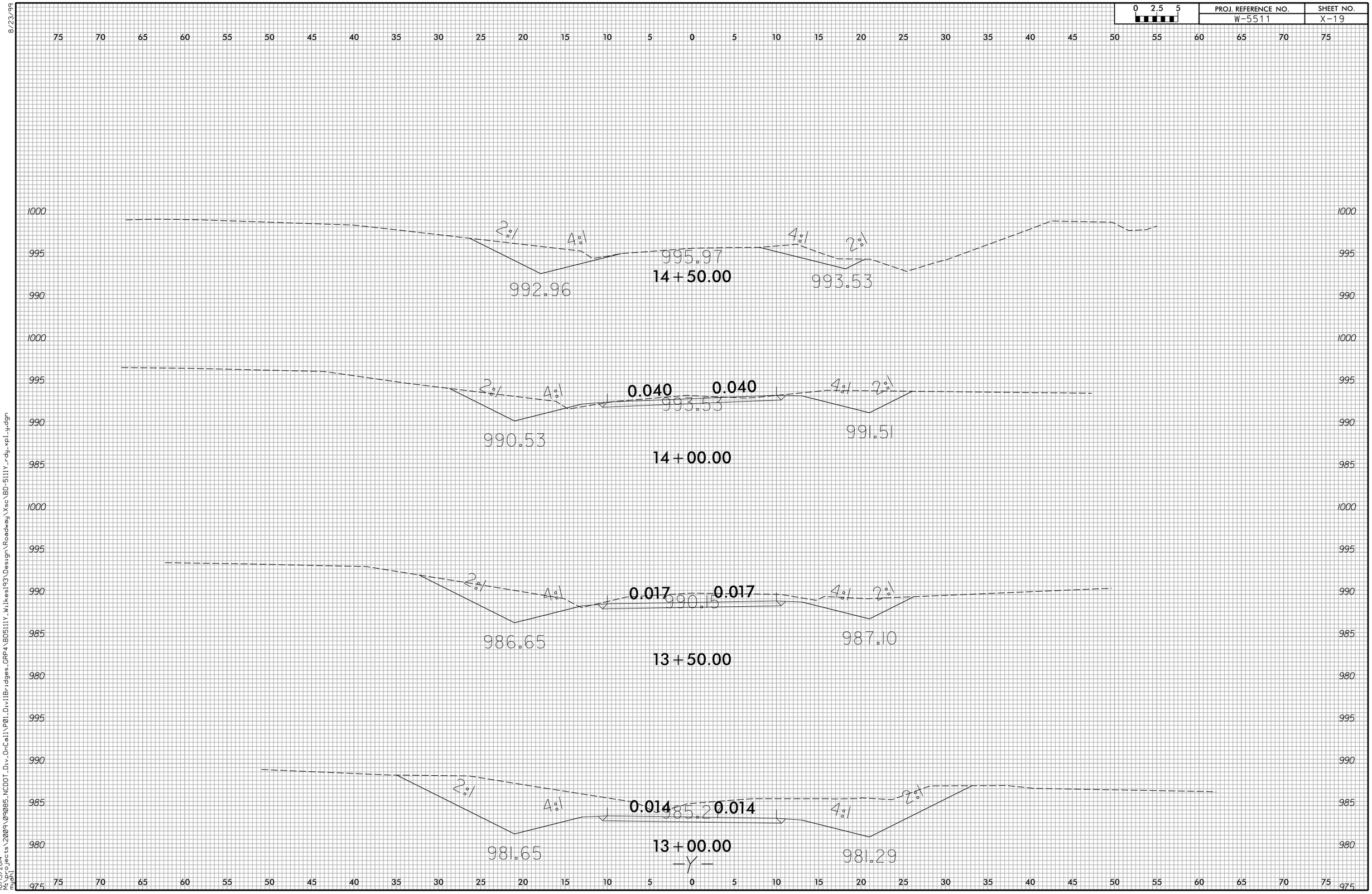

8/23/99

10/15/2014
M:\projects\2009\09085_NCDOT_Div_OnCall\P01_Div11Bridges_GRP4\BD5111Y_Wilkes193\Design\Roadway\Xsc\BD-5111Y_rdy-tx-fdy-1.dgn
mijah1

0 2.5 5	PROJ. REFERENCE NO.	SHEET NO.
	W-5511	X-20

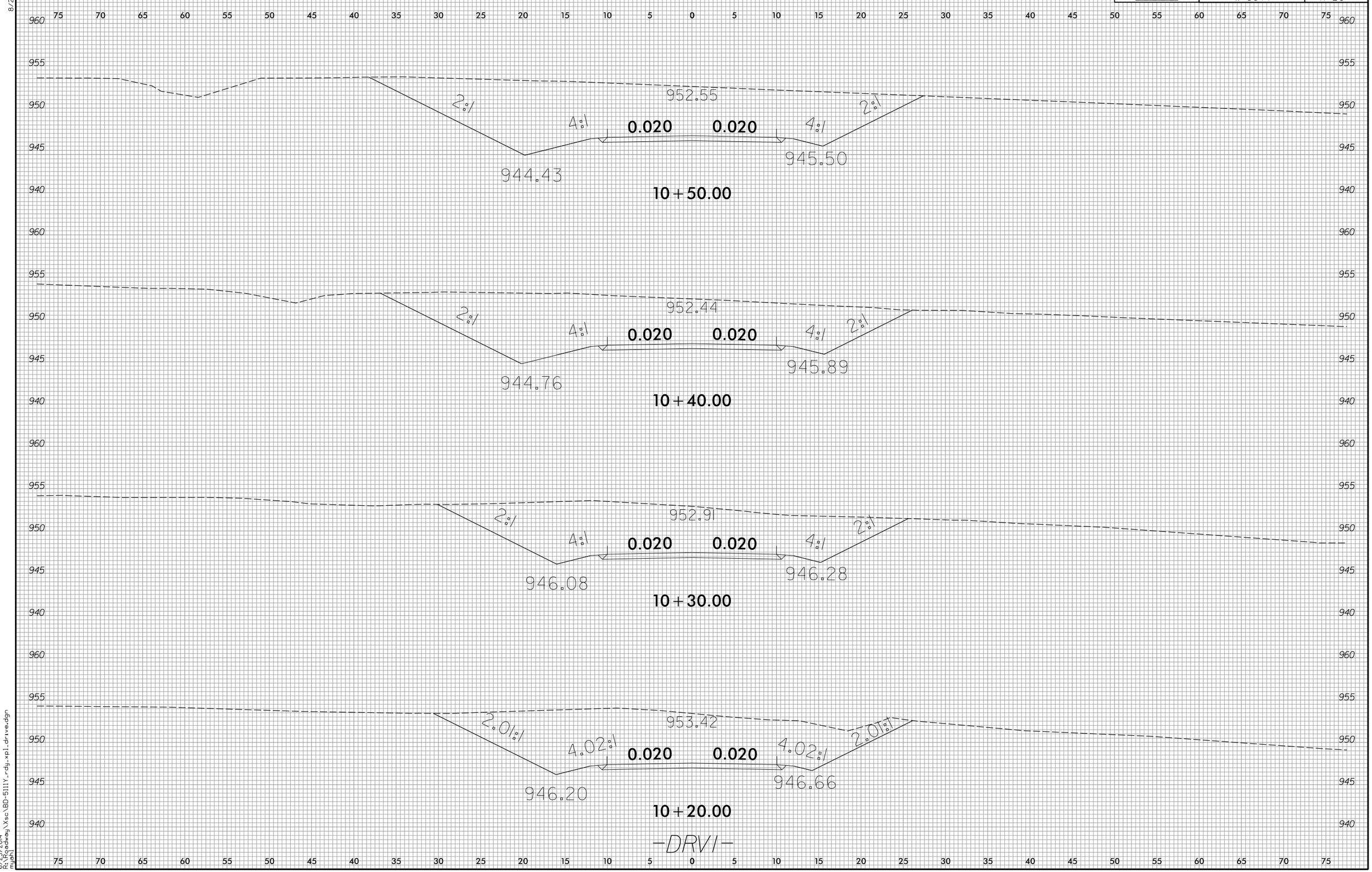

8/23/99

6/23/2014
R:\Projects\dwg\Xsc\BD-5111Y_rdy_xpl_drive.dgn
mjahl

0 2.5 5	PROJ. REFERENCE NO.	SHEET NO.
	W-5511	X-21

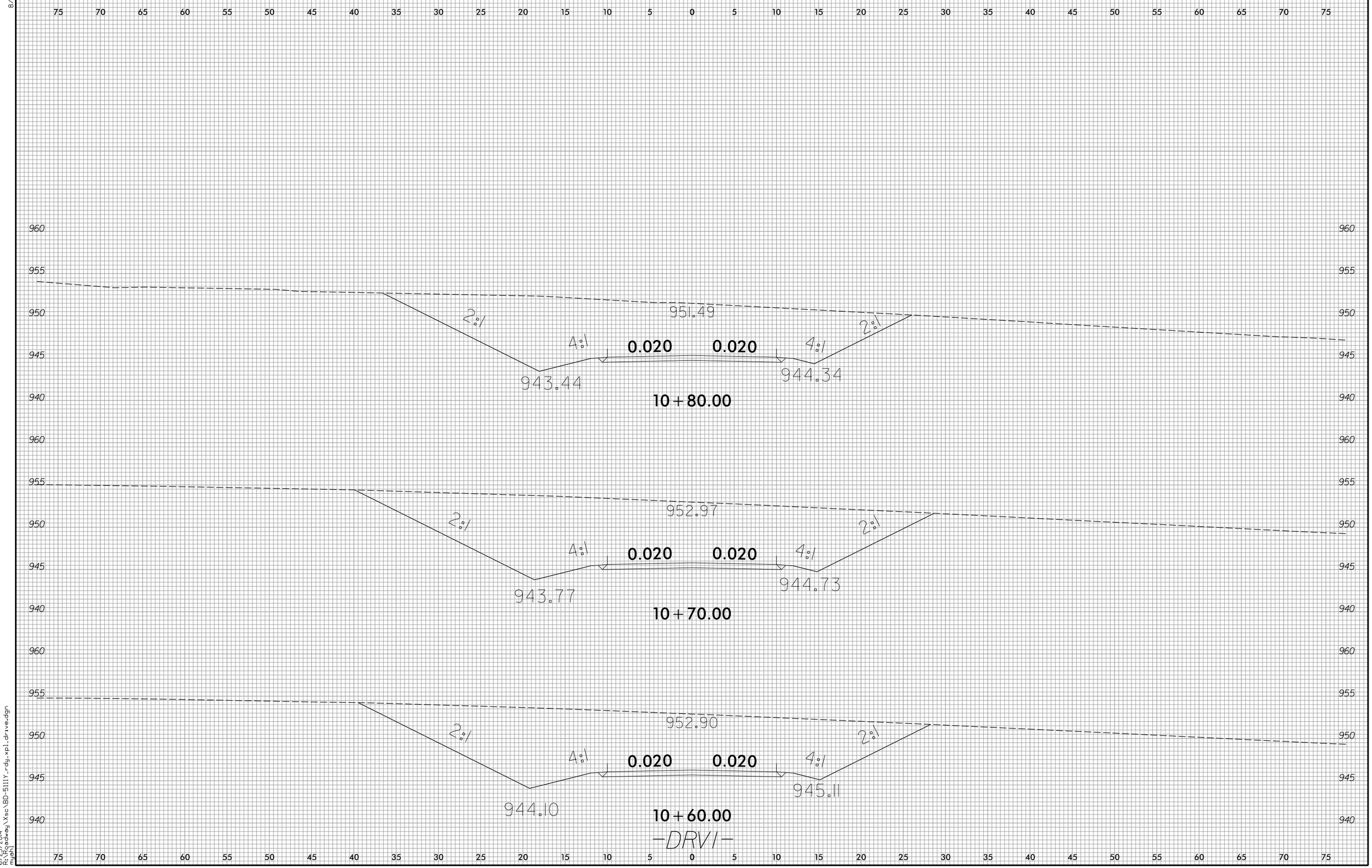

8/23/99

6/23/2014
R:\Projects\Hwy\Xsc\BD-5111Y_rdy_xpl_drive.dgn
mjohn

8/23/99

0 2.5 5	PROJ. REFERENCE NO.	SHEET NO.
	W-5511	X-22

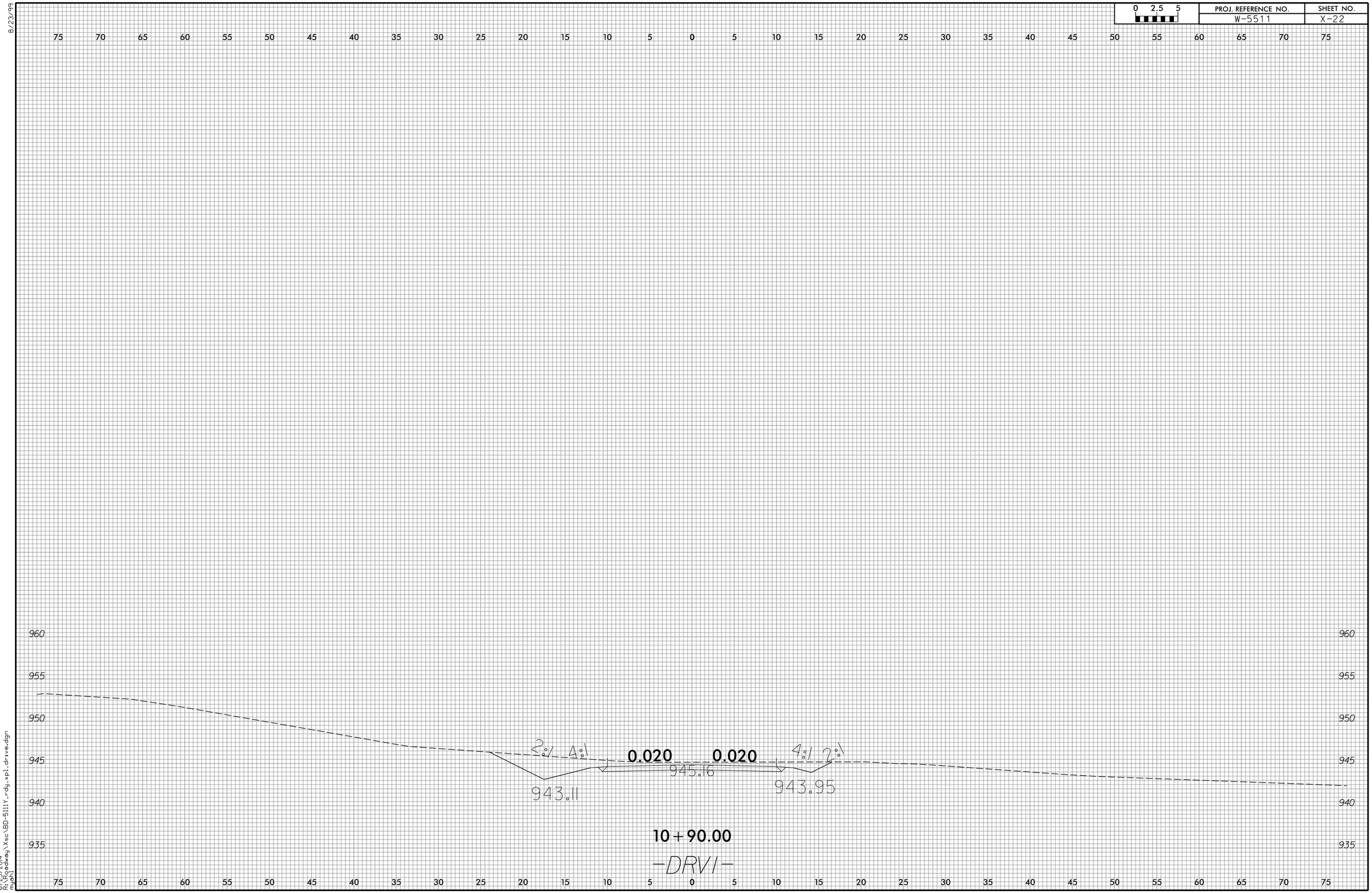

6/23/2014
R:\Projects\dwg\Xsc\BD-5111Y_rdy_xpl_drive.dgn
mjahl

0 2.5 5	PROJ. REFERENCE NO.	SHEET NO.
	W-5511	X-23

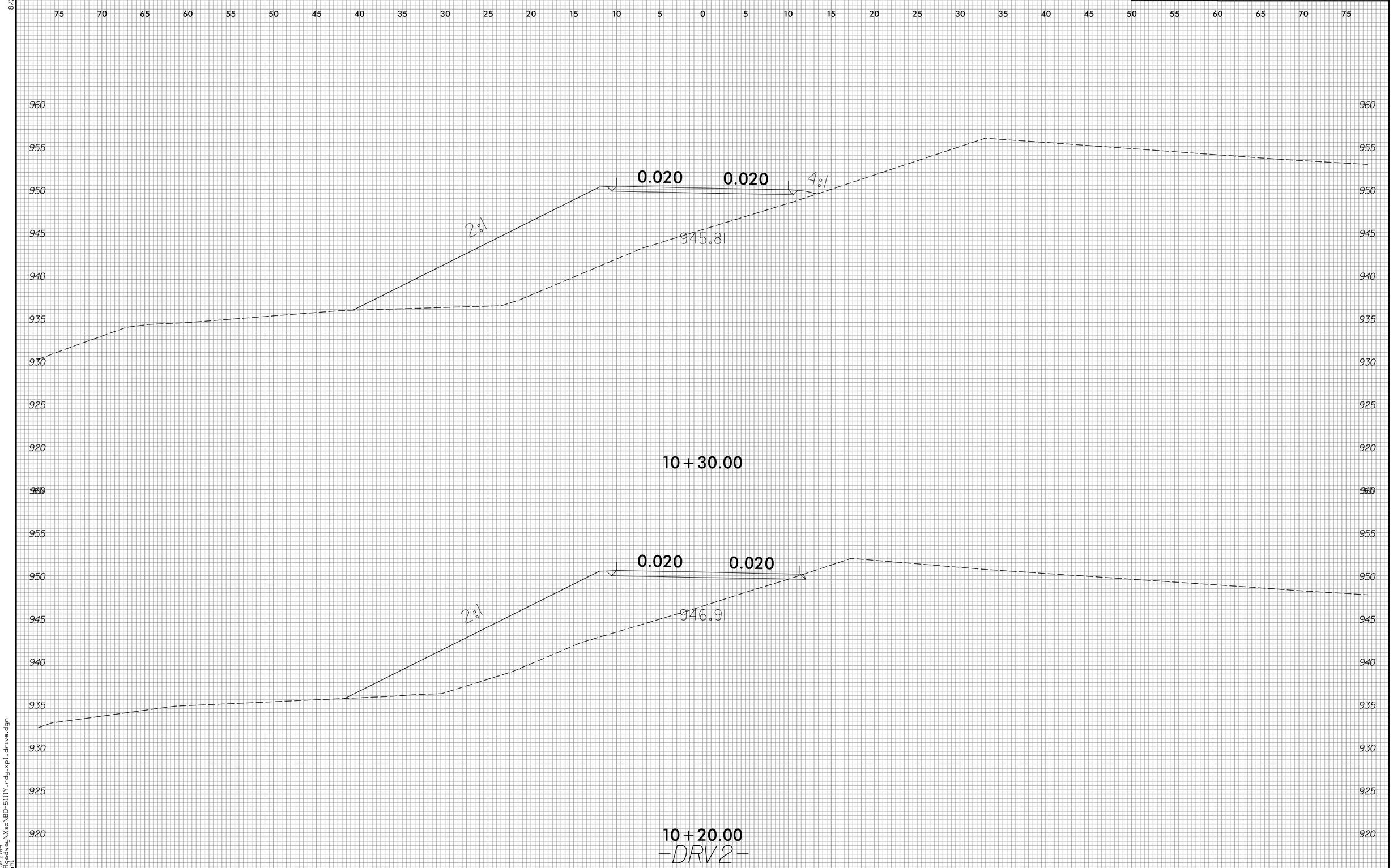

8/23/99

6/23/2014
R:\Projects\dwg\Xsc\BD-5111Y_rdy_xpl_drive.dgn
mjahl

8/23/99

0 2.5 5	PROJ. REFERENCE NO.	SHEET NO.
	W-5511	X-24

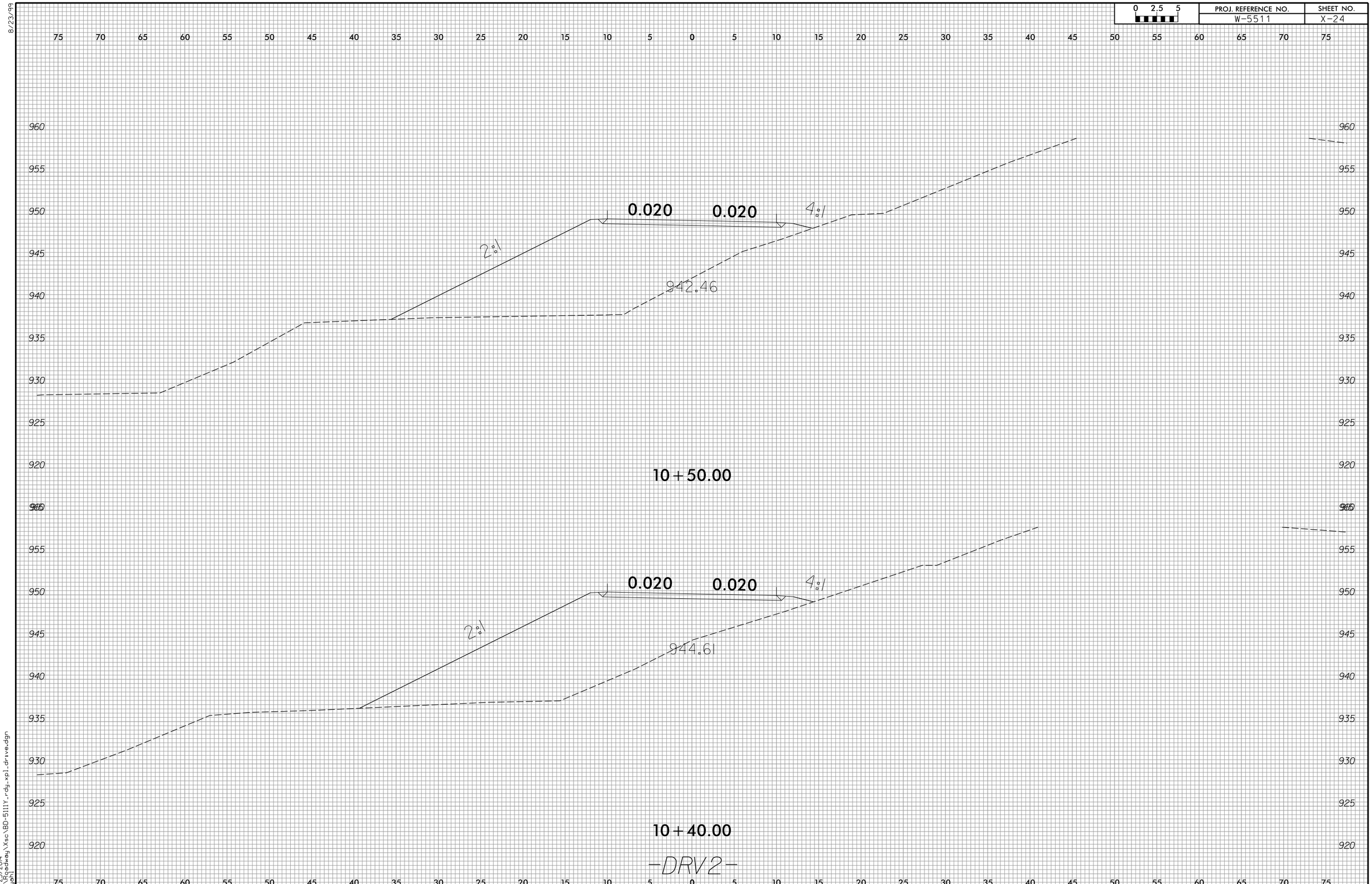

6/23/2014
R:\Projects\dwg\Xsc\BD-5111Y_rdy_xpl_drive.dgn
mjohn

0 2.5 5	PROJ. REFERENCE NO.	SHEET NO.
	W-5511	X-25

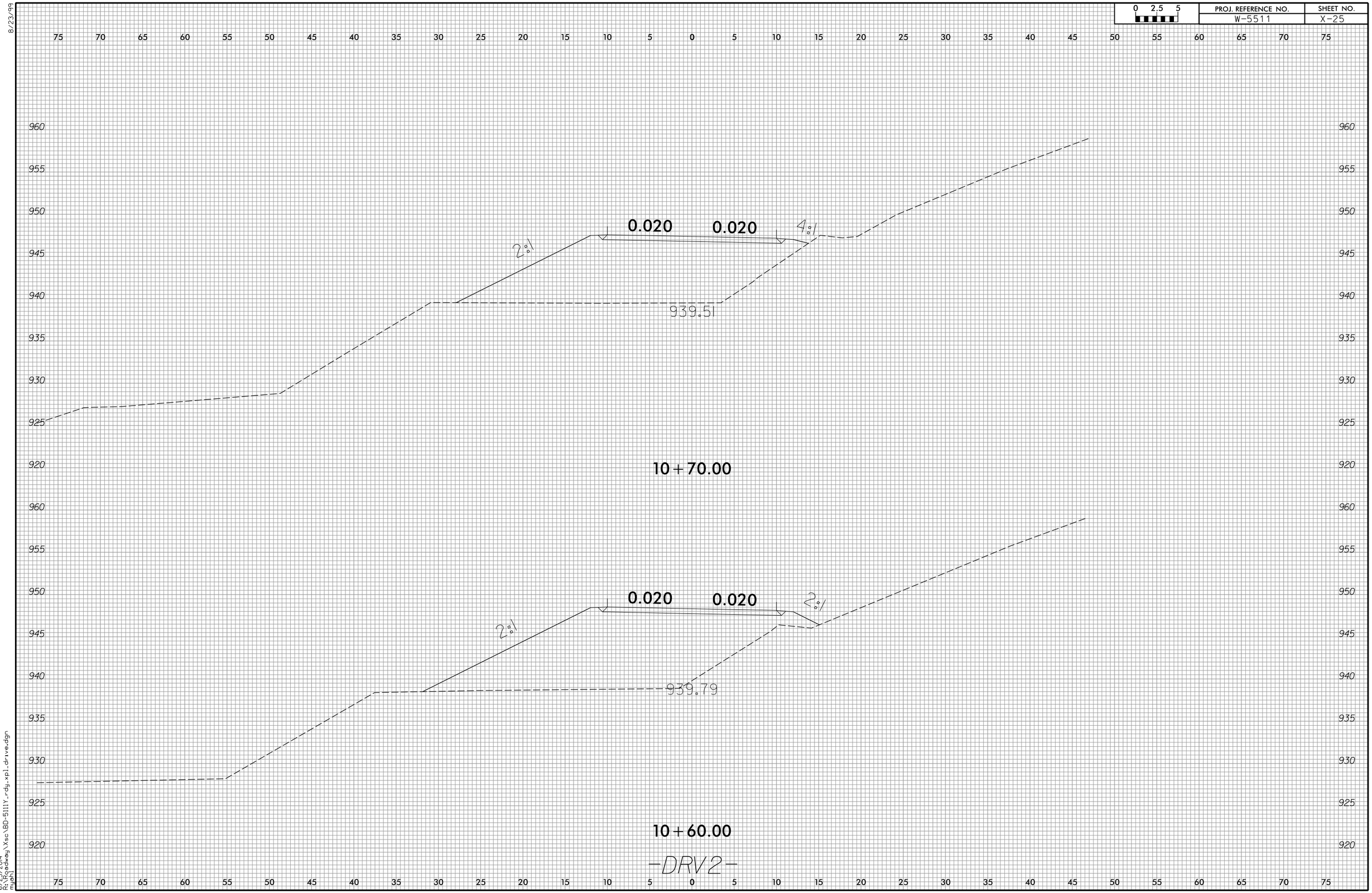

8/23/99

6/23/2014
R:\Projects\dwg\Xsc\BD-5111Y_rdy_xpl_drive.dgn
mjohn

0 2.5 5	PROJ. REFERENCE NO.	SHEET NO.
	W-5511	X-26

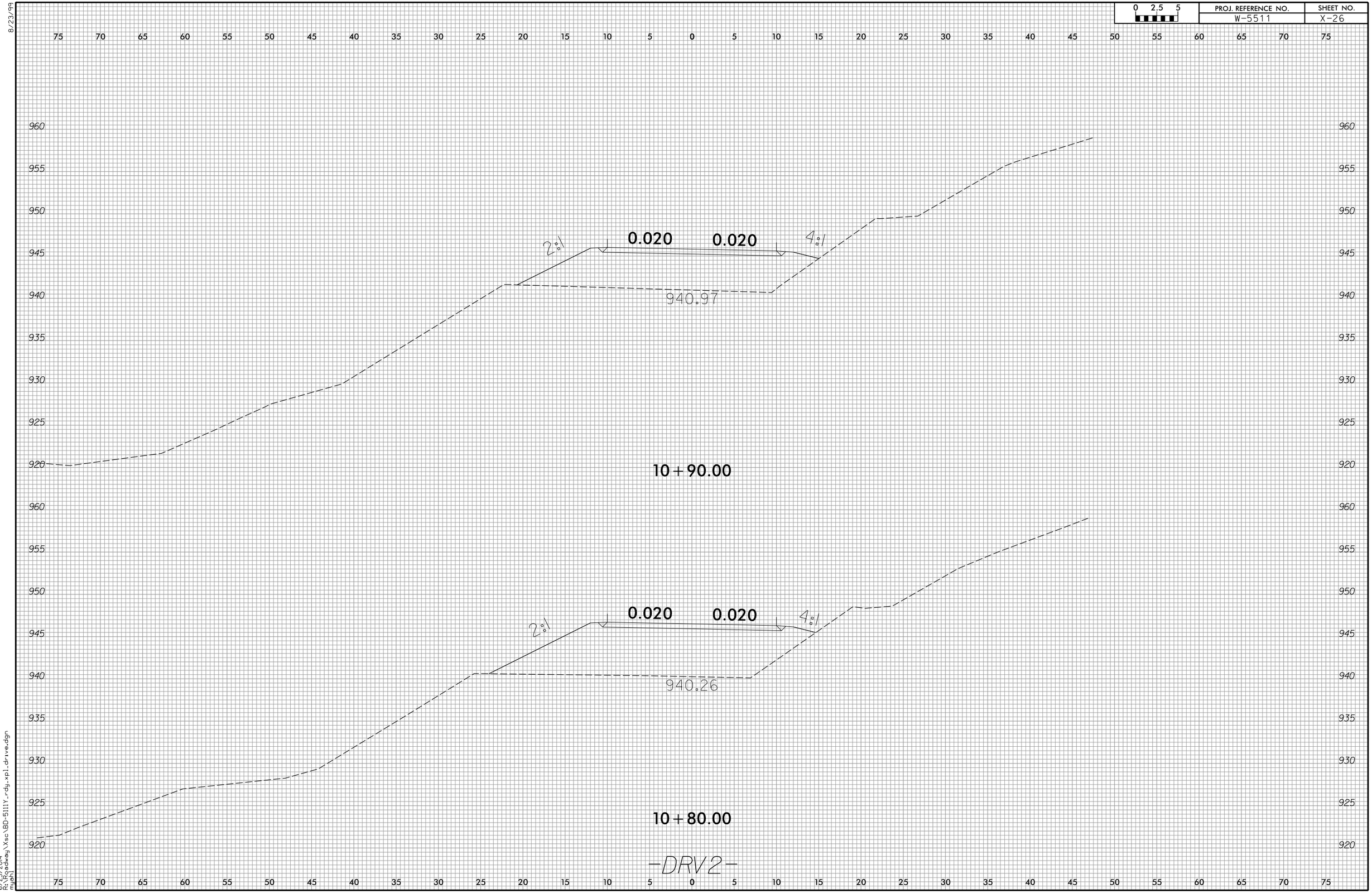

8/23/99

6/23/2014
R:\Roadway\Xsc\BD-5111Y_rdy_xpl_drive.dgn
mjahl

8/23/99

0 2.5 5	PROJ. REFERENCE NO.	SHEET NO.
	W-5511	X-27

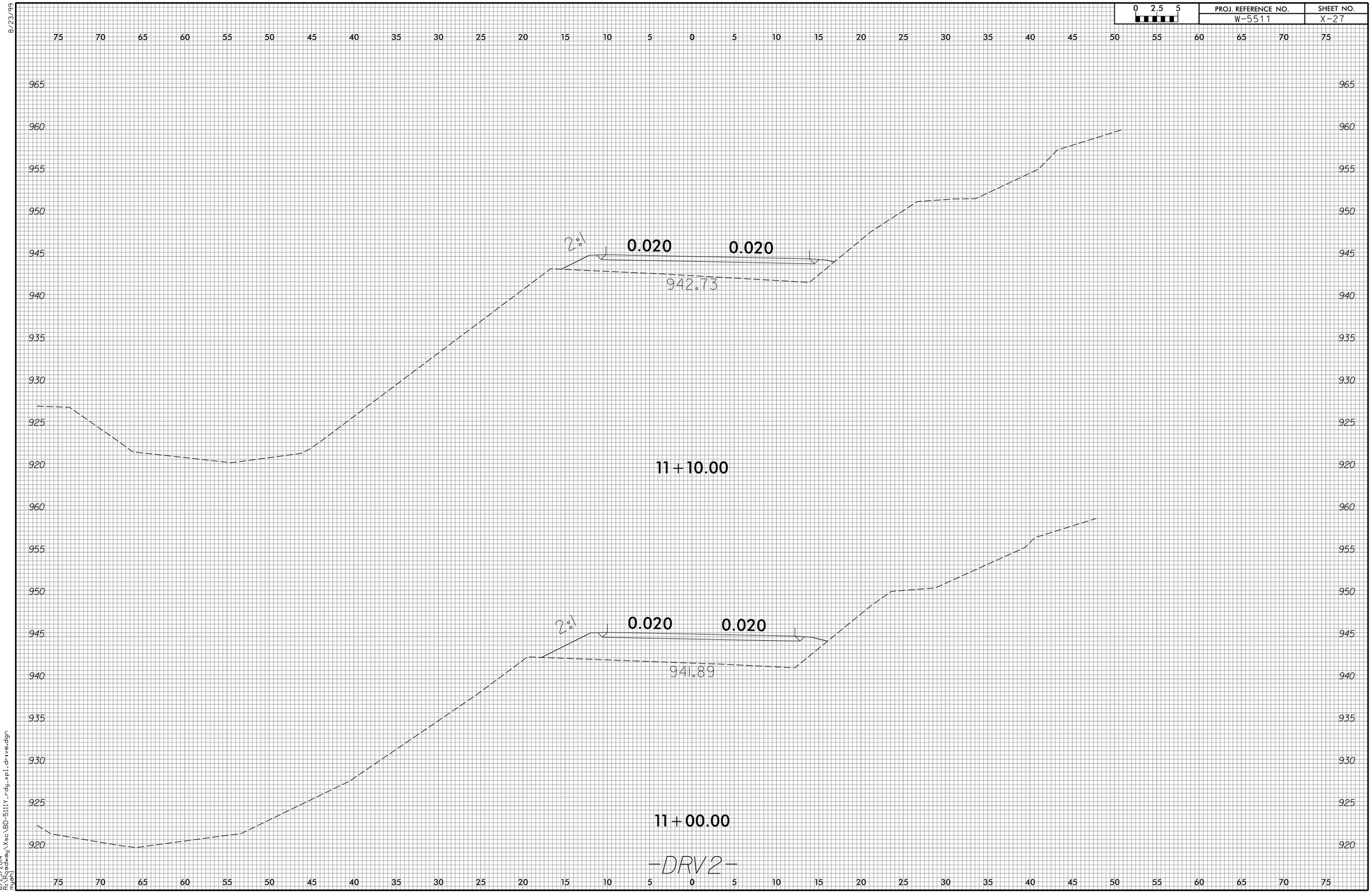

6/23/2014
R:\Roadway\Xsc\BD-5111Y_rdy_xp1_drive.dgn
mjohn

8/23/99

0 2.5 5	PROJ. REFERENCE NO.	SHEET NO.
	W-5511	X-28

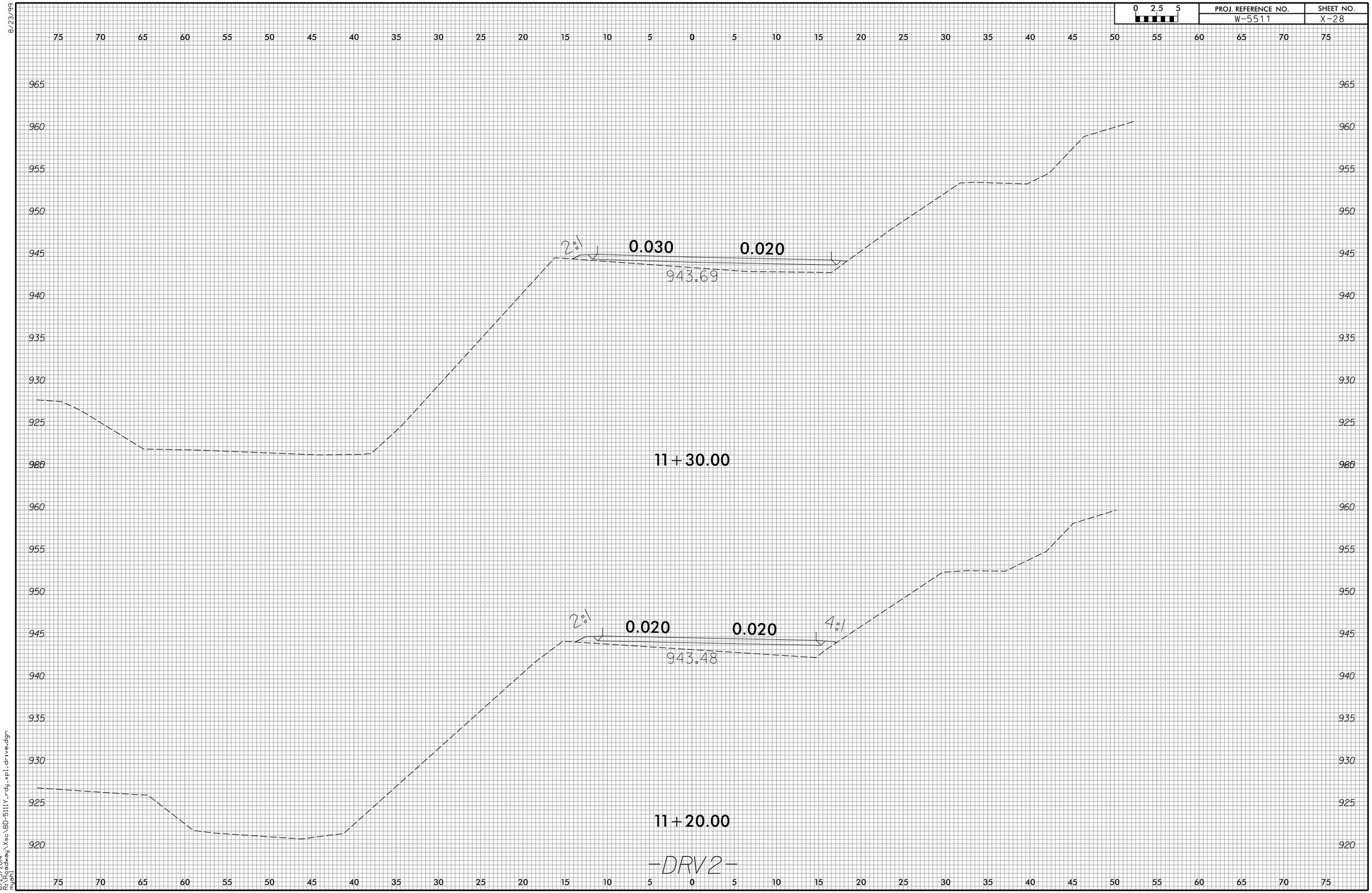

6/23/2014
R:\Projects\Hwy\Xsc\BD-5111Y_rdy_xpl_drive.dgn
mjohl

8/23/99

0 2.5 5	PROJ. REFERENCE NO.	SHEET NO.
	W-5511	X-29

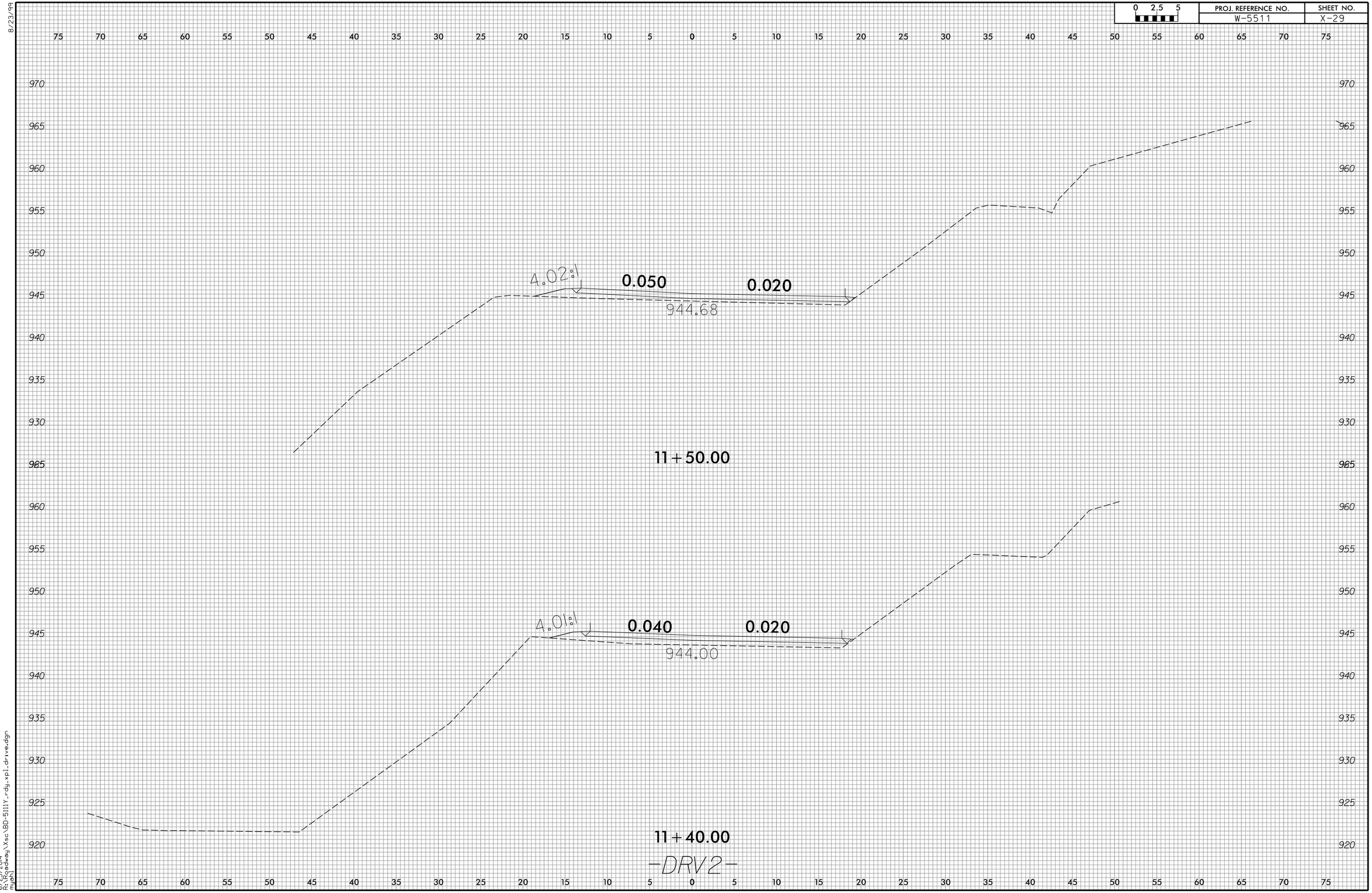

6/23/2014
R:\Roadway\Xsc\BD-5111Y_rdy_xp1_drive.dgn
mjohl

8/23/99

0 2.5 5	PROJ. REFERENCE NO.	SHEET NO.
	W-5511	X-30

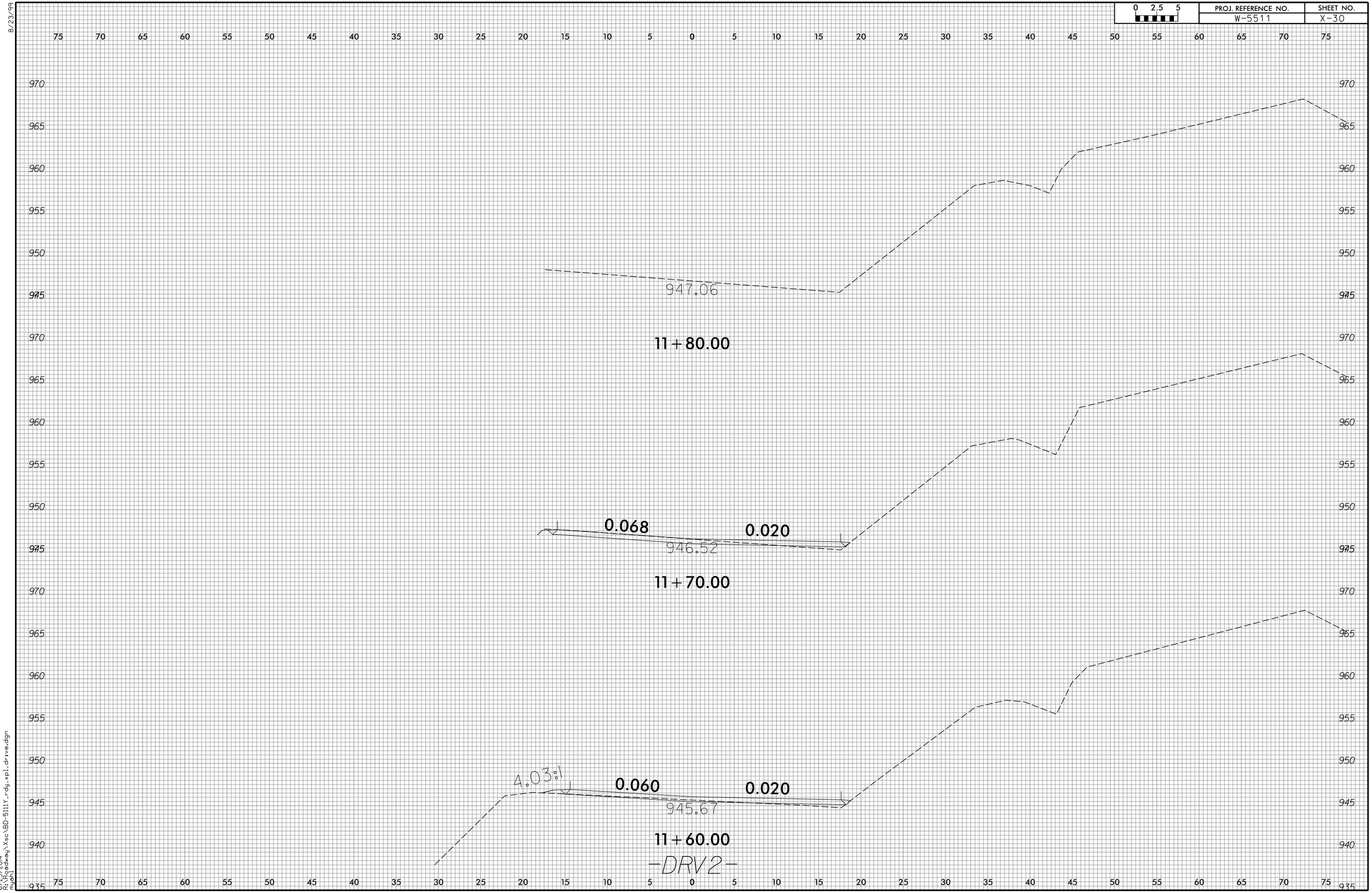

6/23/2014
R:\Roadway\Xsc\BD-5111Y_rdy_xp1_drive.dgn
mjohl

8/23/99

0 2.5 5	PROJ. REFERENCE NO.	SHEET NO.
	W-5511	X-31

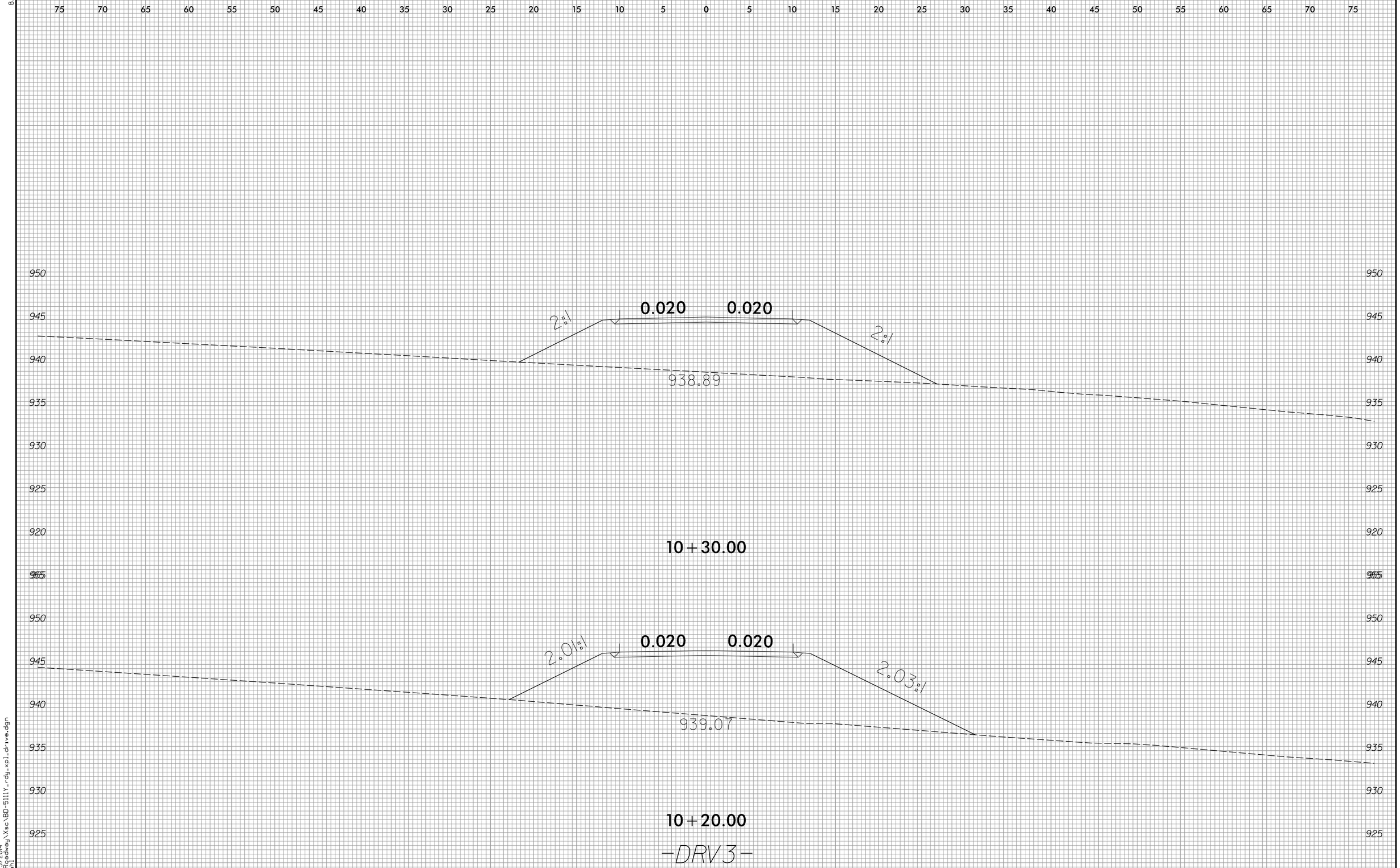

6/23/2014
R:\Projects\dwg\Xsc\BD-5111Y_rdy_xpl_drive.dgn
mjahl

8/23/99

0 2.5 5	PROJ. REFERENCE NO.	SHEET NO.
	W-5511	X-32

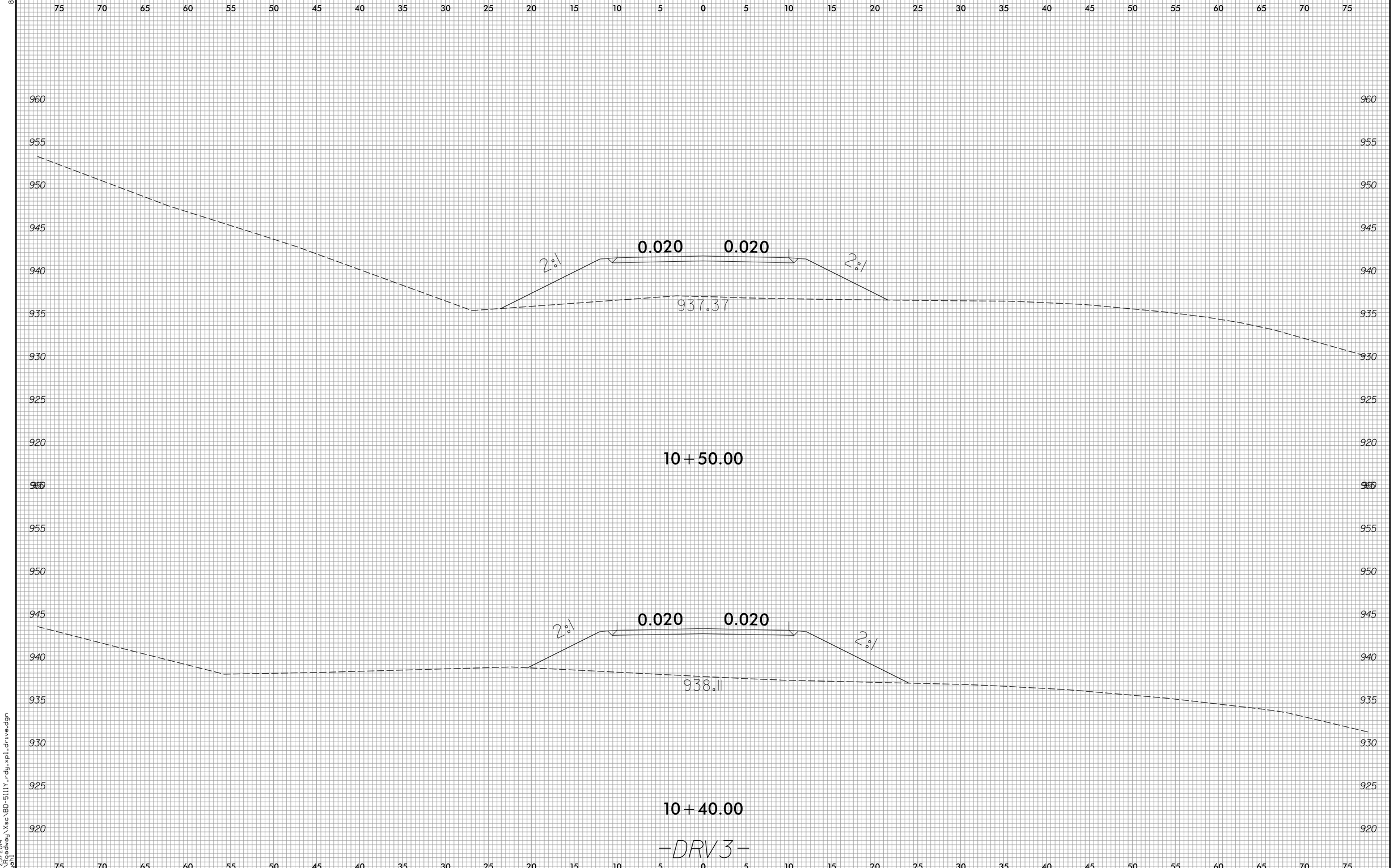

6/23/2014
R:\Roadway\Xsc\BD-5111Y_rdy_xpl_drive.dgn
mjahl

0 2.5 5	PROJ. REFERENCE NO.	SHEET NO.
	W-5511	X-33

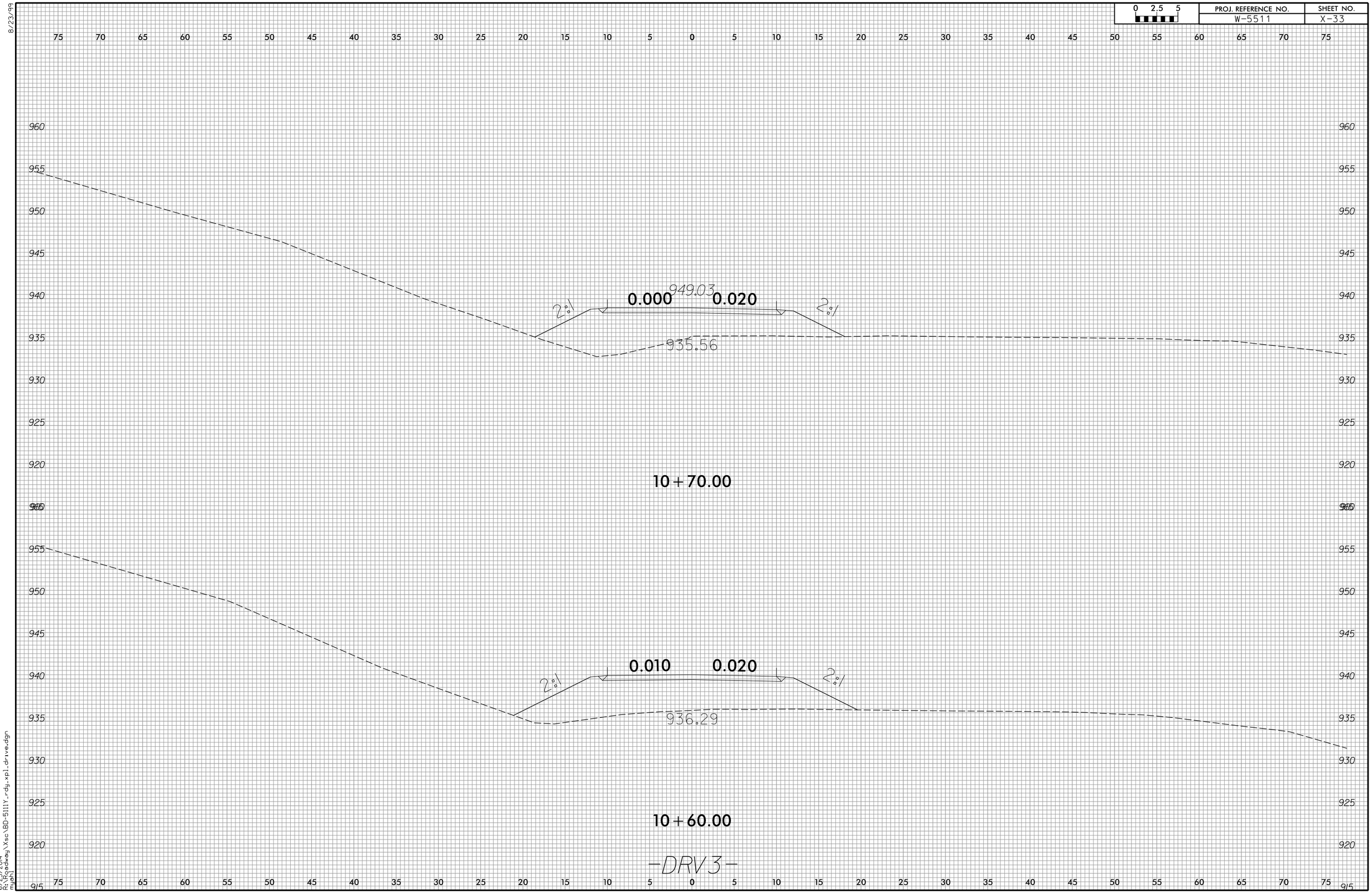

8/23/99

6/23/2014
R:\Projects\dwg\Xsc\BD-5111Y_rdy_xpl_drive.dgn
mjohn

8/23/99

0 2.5 5	PROJ. REFERENCE NO.	SHEET NO.
	W-5511	X-34

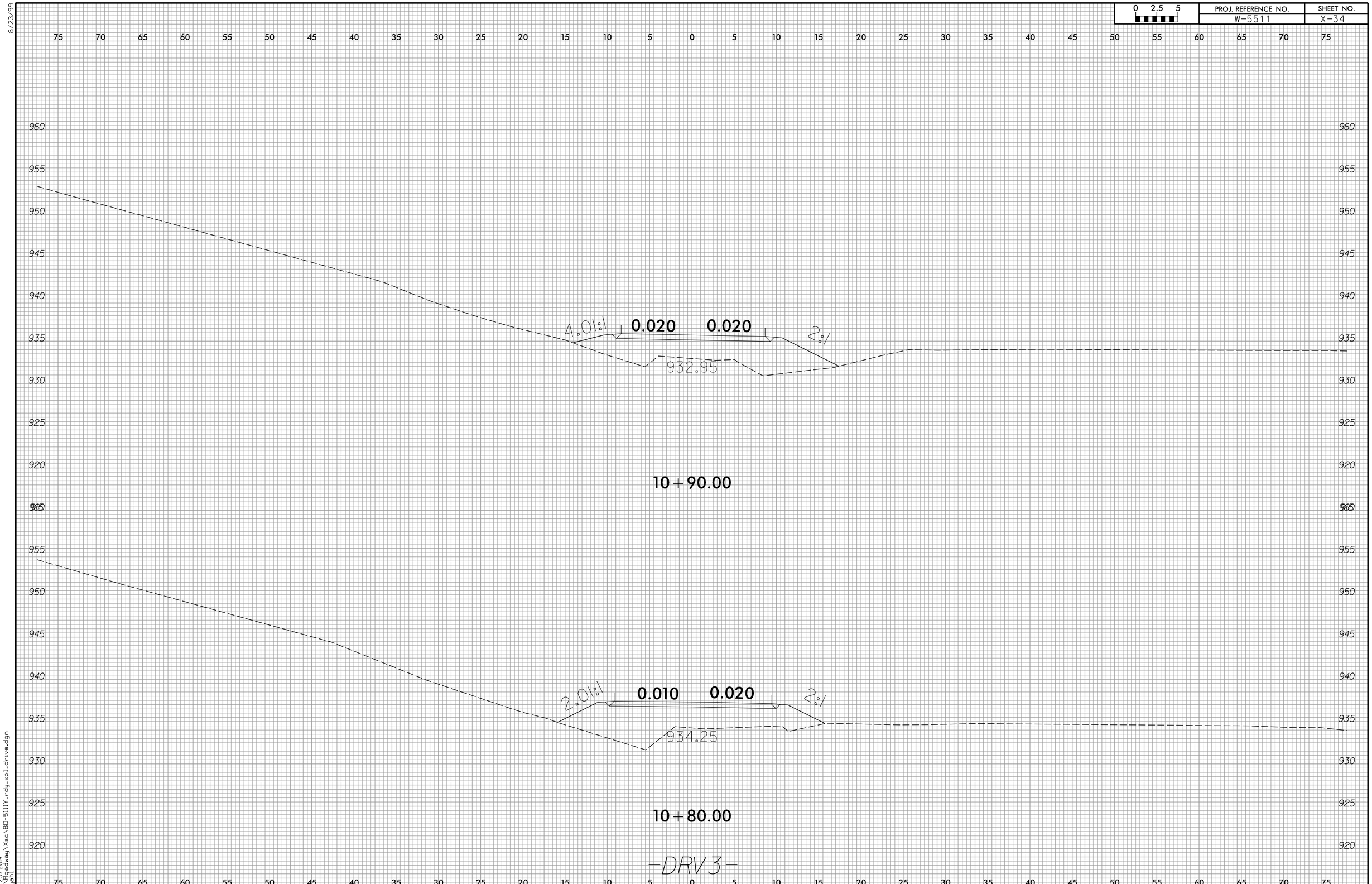

6/23/2014
R:\Roadway\Xsc\BD-5111Y_rdy_xpl_drive.dgn
mjohn

8/23/99

0 2.5 5	PROJ. REFERENCE NO.	SHEET NO.
	W-5511	X-35

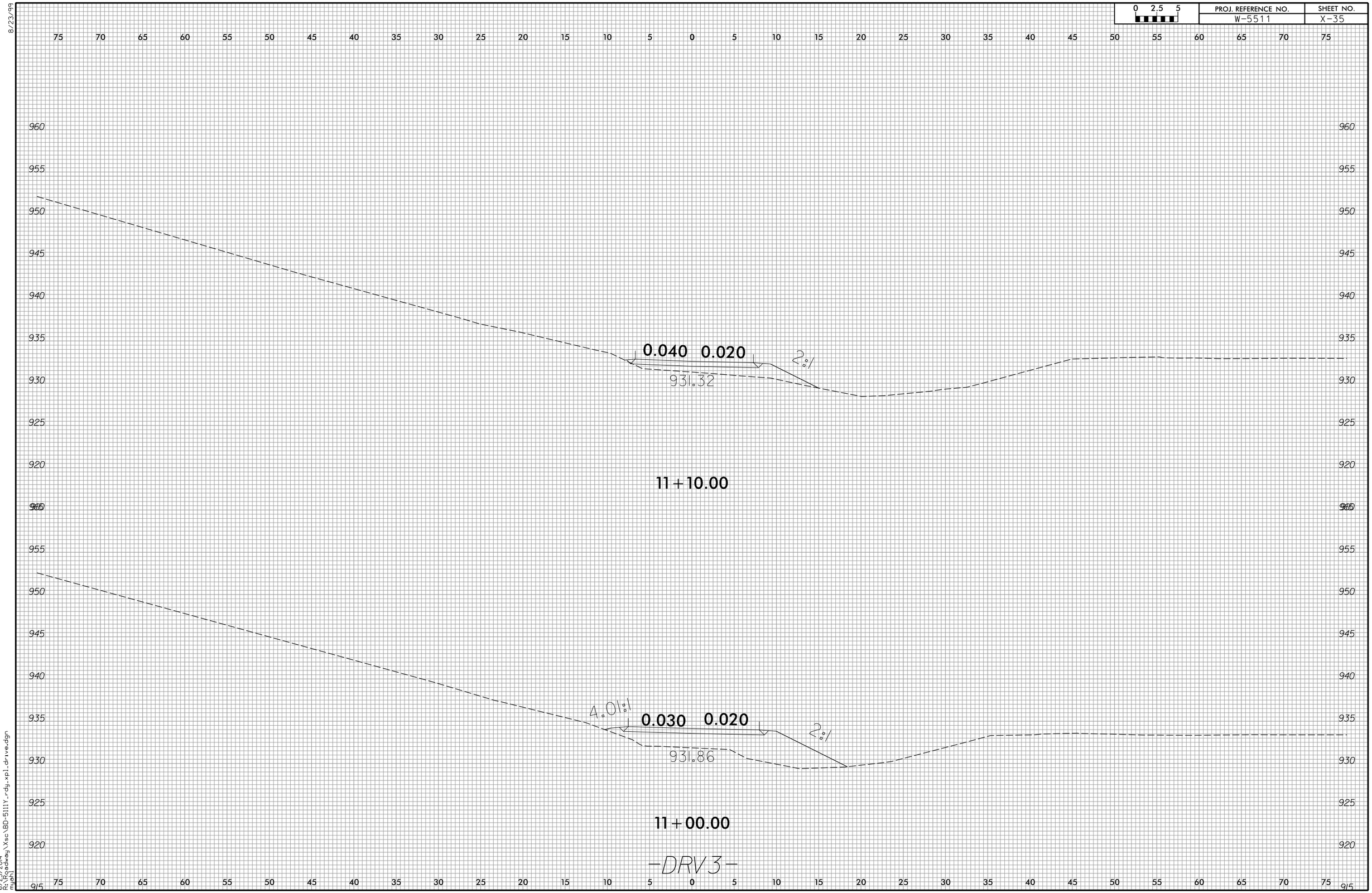

6/23/2014
R:\Projects\dwg\Xsc\BD-5111Y_rdy_xpl_drive.dgn
mjahl

8/23/99

0 2.5 5	PROJ. REFERENCE NO.	SHEET NO.
	W-5511	X-36

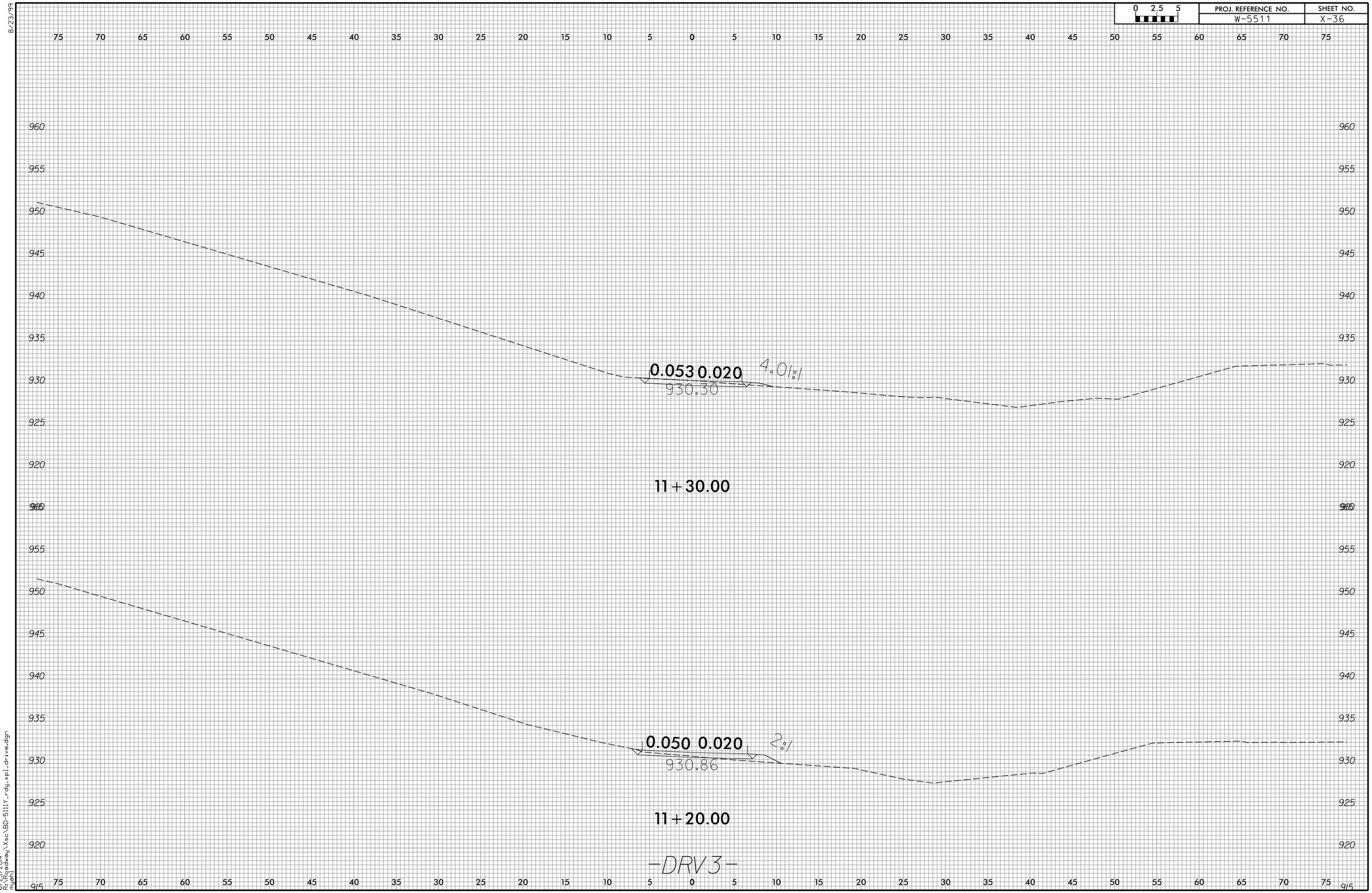

6/23/2014
R:\Projects\dwg\Xsc\BD-5111Y_rdy_xpl_drive.dgn
mjohn

0 2.5 5	PROJ. REFERENCE NO.	SHEET NO.
	W-5511	X-37

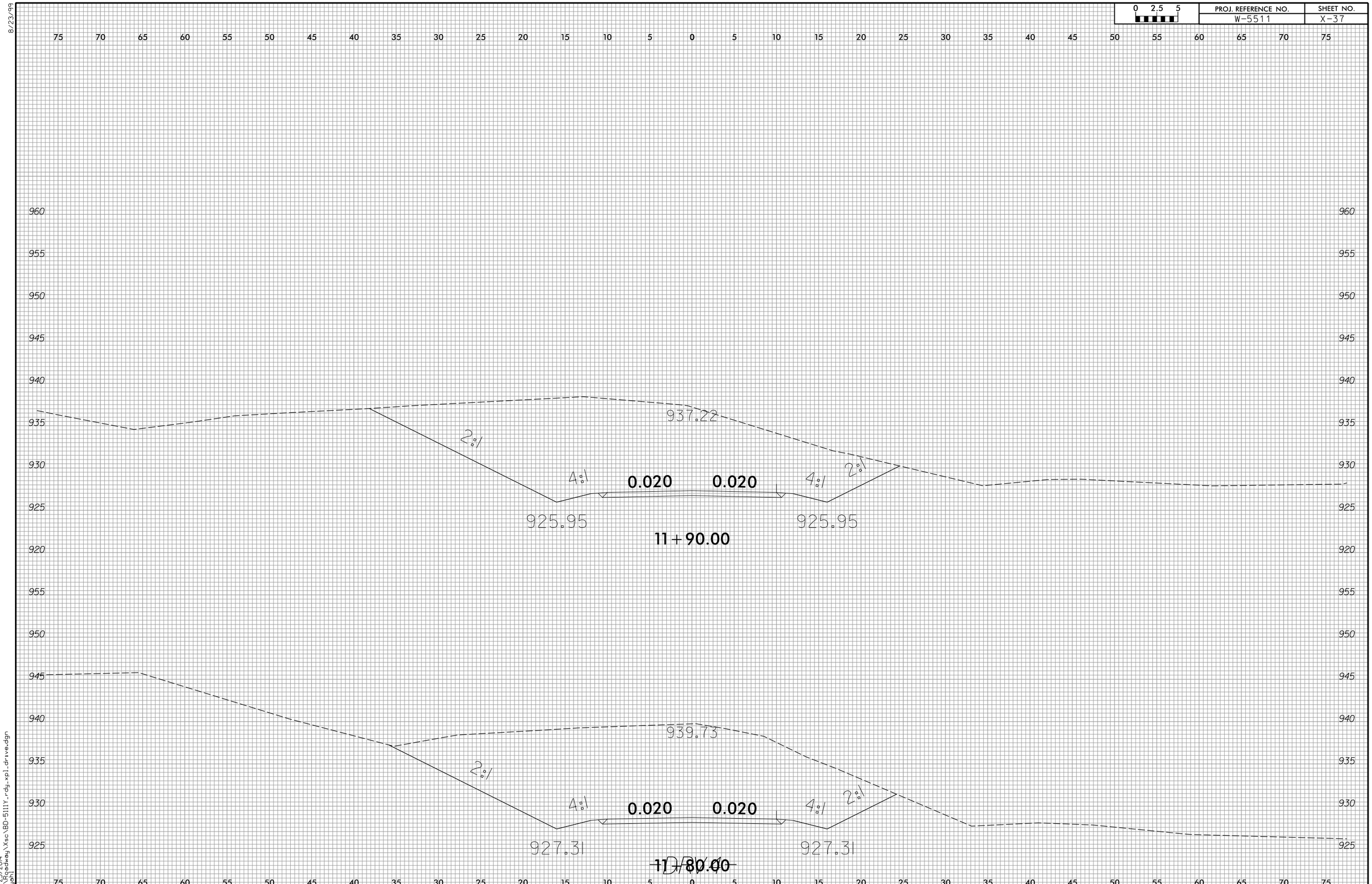

8/23/99

6/23/2014
R:\Roadway\Xsc\BD-5111Y_rdy_xpl_drive.dgn
mjahl

8/23/99

0 2.5 5	PROJ. REFERENCE NO.	SHEET NO.
	W-5511	X-38

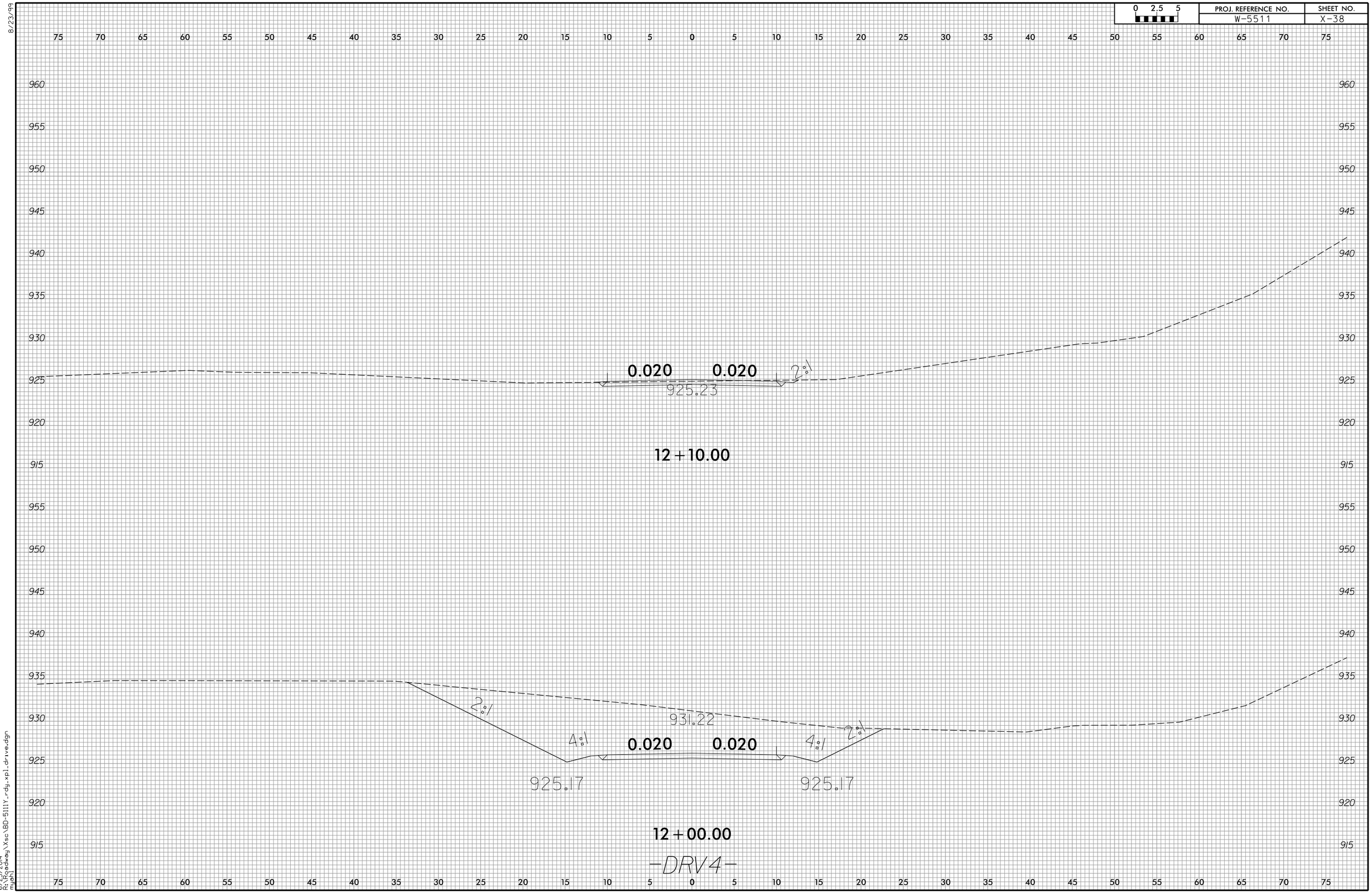

6/23/2014
R:\Roadway\Xsc\BD-5111Y_rdy_xp1_drive.dgn
mjohl

8/23/99

0 2.5 5	PROJ. REFERENCE NO.	SHEET NO.
	W-5511	X-39

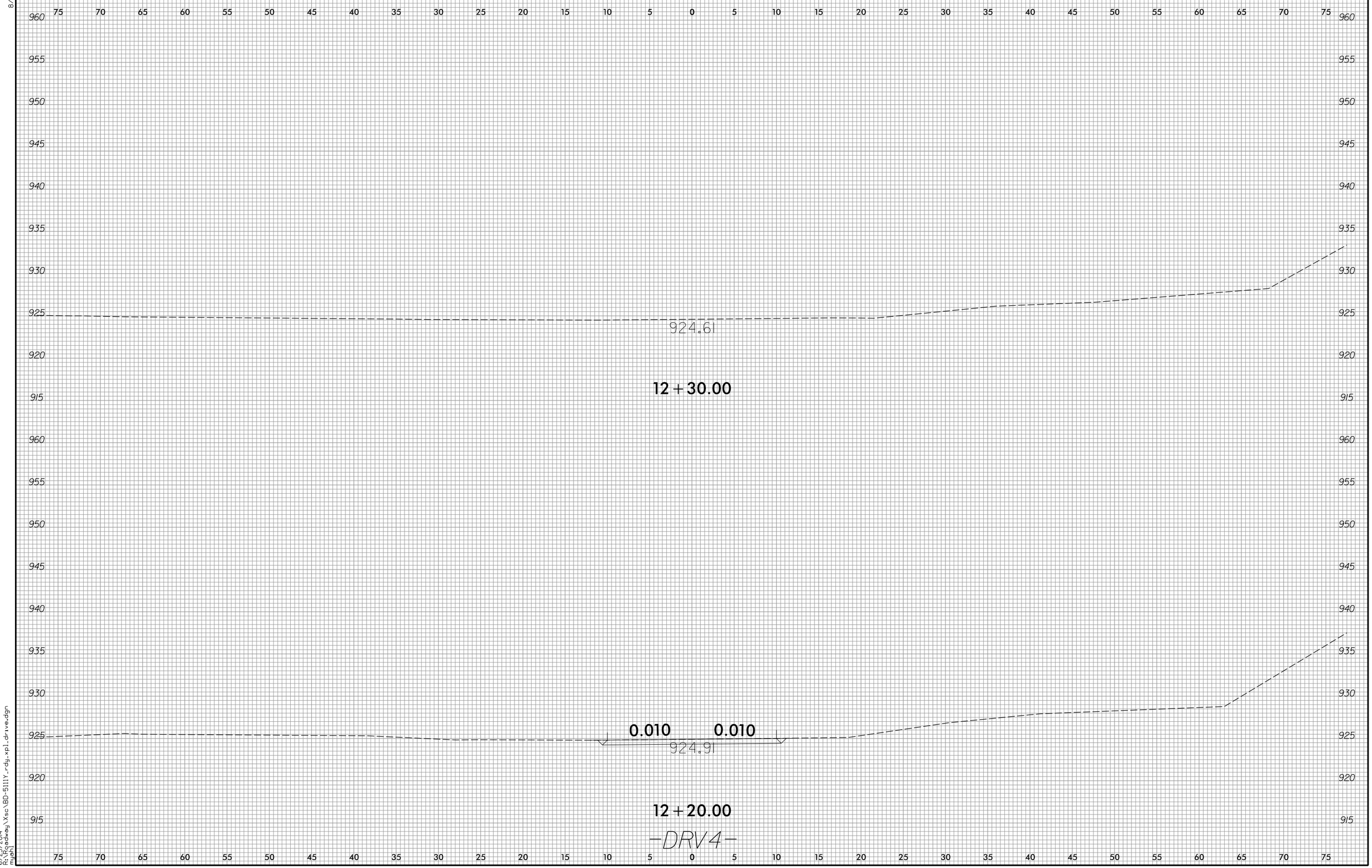

6/23/2014
R:\Roadway\Xsc\BD-5111Y_rdy_xpl_drive.dgn
mjohn

F.A. RPOJECT NO. HSIP - 2324(2)

W-5511

BRIDGE NO. 193 WILKES COUNTY

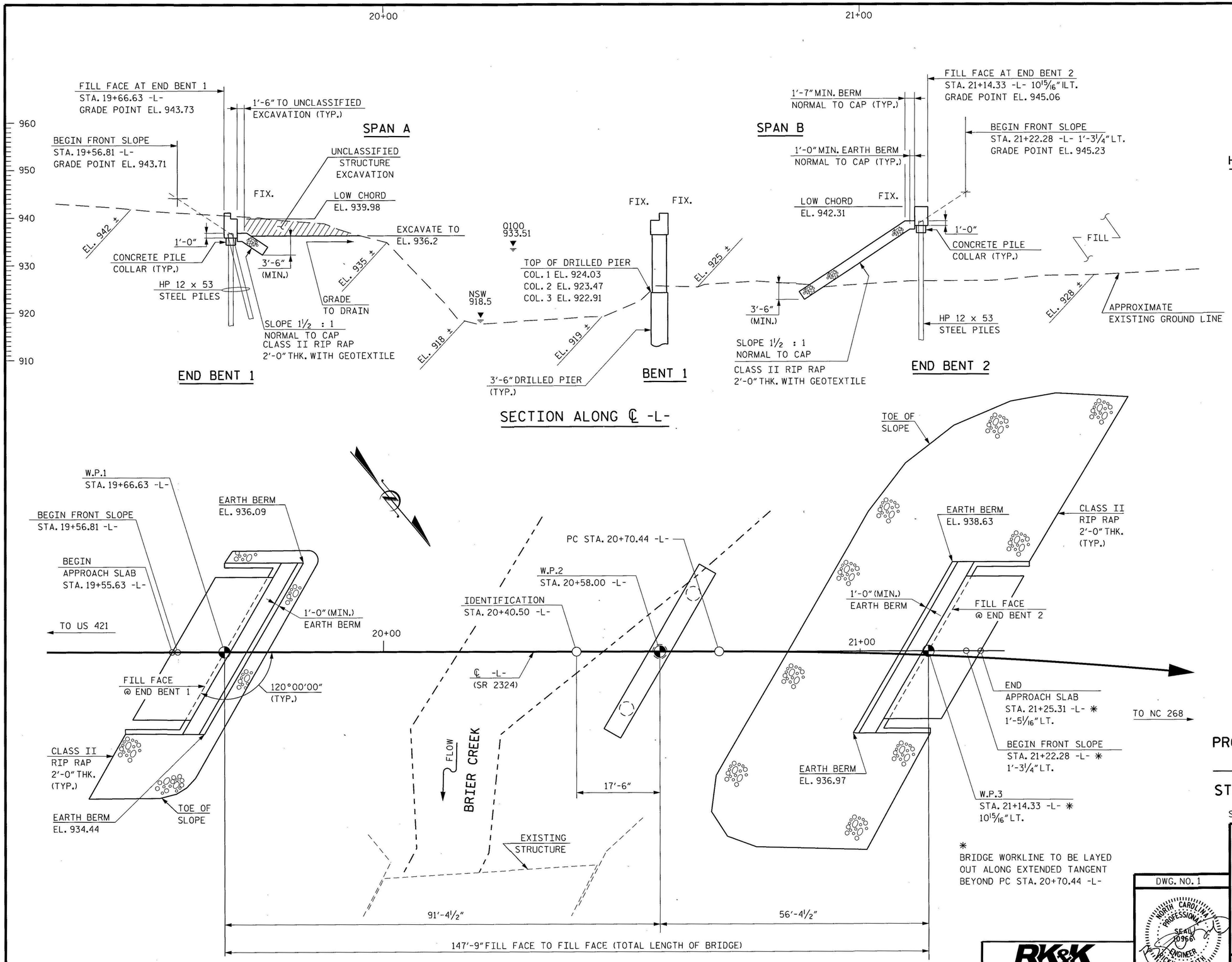

PLAN

PILES NOT SHOWN IN PLAN VIEW FOR CLARITY

* BRIDGE WORKLINE TO BE LAYED OUT ALONG EXTENDED TANGENT BEYOND PC STA. 20+70.44 -L-

PVI = 22+40.00 -L-
EL.= 939.31
V.C. = 880'
(-)1.1797% (+)6.4198%

-L- GRADE DATA

HORIZONTAL CURVE DATA -L-

PI Sta 16+30.66	PI Sta 23+08.02
Δ = 9° 19' 31.2" (LT)	Δ = 25° 15' 57.7" (RT)
D = 3° 01' 53.5"	D = 5° 24' 18.9"
L = 307.61'	L = 467.43'
T = 154.15'	T = 237.58'
R = 1,890.00'	R = 1,060.00'

HYDRAULIC DATA

DESIGN DISCHARGE = 3,500 cfs
DESIGN FREQUENCY = 25 yr.
DESIGN HIGH WATER ELEVATION = 930.9'
DRAINAGE AREA = 6.9 sq. mi.
BASE DISCHARGE (Q 100) = 5,260 cfs
BASE HIGH WATER ELEVATION = 933.51'

OVERTOPPING FLOOD DATA

FREQUENCY = 500 yr. +
DISCHARGE = 14,000 cfs
ELEV. = 944.1

I HEREBY CERTIFY THESE PLANS ARE THE AS-BUILT PLANS

PROJECT NO. W-5511
WILKES COUNTY
STATION: STA. 20+40.50 -L-

SHEET 1 OF 3 REPLACES BRIDGE NO. 193

STATE OF NORTH CAROLINA
DEPARTMENT OF TRANSPORTATION
RALEIGH

GENERAL DRAWING
FOR BRIDGE OVER BRIER CREEK
ON SR 2324
(RED WHITE AND BLUE RD.)
BETWEEN US 421 AND NC 268

DWG. NO. 1

NORTH CAROLINA PROFESSIONAL SEAL 10960 ENGINEER RICKY V. KEITH
3/26/2014

RK&K
RUMMEL, KLEPPER & KAHL, LLP
900 RIDGEFIELD DRIVE SUITE 350
RALEIGH, NORTH CAROLINA 27609-3960
NC LICENSE NUMBER: F-0112

REVISIONS								SHEET NO.
NO.	BY:	DATE:	NO.	BY:	DATE:			S-1
1			3					TOTAL SHEETS
2			4					23

DRAWN BY : F.D. WEEDEN DATE : MAR. 2014
CHECKED BY : R.V. KEITH DATE : MAR. 2014

M:\projects\2009\09085_NCDOT_Div_OnCall\P01_Div11Bridges_GRP4\BD5111Y_Wilkes193\Design\Structures\DGN\B5111Y_str_gen.dgn

TOTAL BILL OF MATERIALS

	REMOVAL OF EXISTING STRUCTURE	3'-6"Ø DRILLED PIERS IN SOIL	3'-6"Ø DRILLED PIERS NOT IN SOIL	PERMANENT STEEL CASING FOR 3'-6"Ø DRILLED PIERS	SID INSPECTION	SPT TESTING	CROSSHOLE SONIC LOGGING	UNCLASSIFIED STRUCTURE EXCAVATION	CLASS A CONCRETE	BRIDGE APPROACH SLABS	REINFORCING STEEL	SPIRAL COLUMN REINFORCING STEEL	HP 12 X 53 STEEL PILES		VERTICAL CONCRETE BARRIER RAIL	RIP RAP CLASS II (2'-0" THICK)	GEOTEXTILE FOR DRAINAGE	ELASTOMERIC BEARINGS	3'-0" x 2'-9" PRESTRESSED CONCRETE BOX BEAMS		3'-0" X 1'-9" PRESTRESSED CONCRETE CORED SLABS	
	LUMP SUM	LIN. FT.	LIN. FT.	LIN. FT.	EA.	EA.	EA.	LUMP SUM	CU. YDS.	LUMP SUM	LBS.	LBS.	NO.	LIN. FT.	LIN. FT.	TONS	SQ. YDS.	LUMP SUM	NO.	LIN. FT.	NO.	LIN. FT.
SUPERSTRUCTURE															290.29				10	900	10	550
END BENT NO. 1									26.5		3,692		5	225		100	110					
BENT 1		79.4	45.0	40.4					33.1		18,519	3,531										
END BENT NO. 2									22.5		2,998		5	190		440	490					
TOTAL	LUMP SUM	79.4	45.0	40.4	1	3	1	LUMP SUM	82.1	LUMP SUM	25,209	3,531	10	415	290.29	540	600	LUMP SUM	10	900	10	550

BENCH MARK : BL-3 ON -L- STA. 17+90.72, 49.8' LT., DISC IN GROUND N 895093.264 E 1410226.967 ELEV. 930.99'

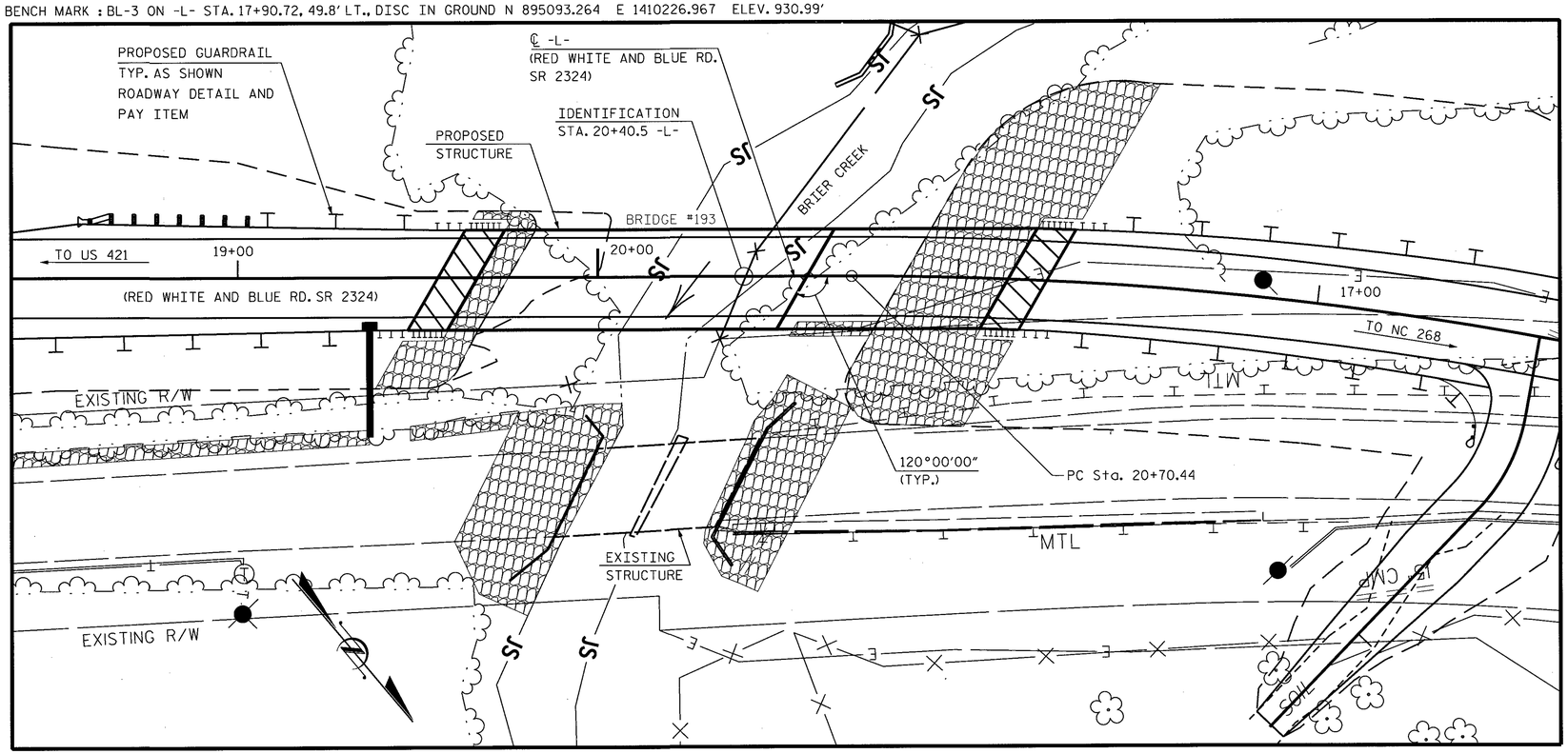

FOR UTILITY INFORMATION,
SEE UTILITY PLANS AND SPECIAL PROVISIONS

LOCATION SKETCH

PROJECT NO. W-5511
WILKES COUNTY
STATION: STA. 20+40.50 -L-

SHEET 2 OF 3

STATE OF NORTH CAROLINA
DEPARTMENT OF TRANSPORTATION
RALEIGH

GENERAL DRAWING
FOR BRIDGE OVER BRIER CREEK
ON SR 2324
(RED WHITE AND BLUE RD.)
BETWEEN US 421 AND US NC 268

DWG. NO. 2

NORTH CAROLINA PROFESSIONAL SEAL 10966 ENGINEER RICKY V. KEITH
3/11/14

RK&K
RUMMEL, KLEPPER & KAHL, LLP
900 RIDGEFIELD DRIVE SUITE 350
RALEIGH, NORTH CAROLINA 27609-3960
NC LICENSE NUMBER: F-0112

REVISIONS								SHEET NO.
NO.	BY:	DATE:	NO.	BY:	DATE:			S-2
1			3					TOTAL SHEETS
2			4					23

DRAWN BY : F.D. WEEDEN DATE : MAR. 2014
CHECKED BY : R.V. KEITH DATE : MAR. 2014

M:\projects\2009\09085_NCDOT_Div_OnCall\P01_Div11Bridges_GRP4\BD5111Y_Wilkes193\Design\Structures\DGN\B5111Y_str_loc.dgn

NOTES:

ASSUMED LIVE LOAD = HL-93 OR ALTERNATE LOADING.

THIS BRIDGE HAS BEEN DESIGNED IN ACCORDANCE WITH THE AASHTO LRFD BRIDGE DESIGN SPECIFICATIONS.

FOR OTHER DESIGN DATA AND GENERAL NOTES, SEE SHEET SN.

THIS BRIDGE IS LOCATED IN SEISMIC ZONE 1.

FOR EROSION CONTROL MEASURES, SEE EROSION CONTROL PLANS.

THIS STRUCTURE HAS BEEN DESIGNED IN ACCORDANCE WITH HEC 18, "EVALUATING SCOUR AT BRIDGES".

THE CONTRACTOR SHALL PROVIDE INDEPENDENT ASSURANCE SAMPLES OF REINFORCING STEEL AS FOLLOWS: FOR PROJECTS REQUIRING UP TO 400 TONS OF REINFORCING STEEL, ONE 30 INCH SAMPLE OF EACH SIZE BAR USED, AND FOR PROJECTS REQUIRING OVER 400 TONS OF REINFORCING STEEL, TWO 30 INCH SAMPLES OF EACH SIZE BAR USED. THE BARS FROM WHICH THE SAMPLES ARE TAKEN MUST THEN BE SPLICED WITH REPLACEMENT BARS OF THE SIZE AND LENGTH OF THE SAMPLE PLUS A MINIMUM LAP SPLICE OF THIRTY BAR DIAMETERS. PAYMENT FOR THE SAMPLES OF REINFORCEMENT STEEL SHALL BE CONSIDERED INCIDENTAL TO VARIOUS PAY ITEMS.

THE EXISTING STRUCTURE CONSISTING OF 2 SPAN @ 22'-9" CONTINUOUS WITH AN ASPHALT WEARING SURFACE OVER A STEEL PLANK FLOOR ON I BEAM SUPERSTRUCTURE WITH A CLEAR ROADWAY WIDTH OF 24.1' ON A SUBSTRUCTURE CONSISTING OF TIMBER POSTS AND CONCRETE SILLS AND STEEL CAP ON CONCRETE ENCASED H-PLILES AND LOCATED DOWN STREAM OF THE PROPOSED STRUCTURE LOCATION SHALL BE REMOVED. SEE SPECIAL PROVISIONS FOR "REMOVAL OF EXISTING STRUCTURE AT STA. 20+40.50 -L-".

REMOVAL OF THE EXISTING BRIDGE SHALL BE PERFORMED SO AS NOT TO ALLOW DEBRIS TO FALL INTO THE WATER. THE CONTRACTOR SHALL REMOVE THE BRIDGE AND SUBMIT PLANS FOR DEMOLITION IN ACCORDANCE WITH ARTICLE 402-2 OF THE STANDARD SPECIFICATIONS.

INASMUCH AS THE PAINT SYSTEM ON THE EXISTING STRUCTURAL STEEL CONTAINS LEAD, THE CONTRACTOR'S ATTENTION IS DIRECTED TO ARTICLE 107-1 OF THE STANDARD SPECIFICATIONS. ANY COSTS RESULTING FROM COMPLIANCE WITH APPLICABLE STATE OR FEDERAL REGULATIONS PERTAINING TO HANDLING OF MATERIALS CONTAINING LEAD BASED PAINT SHALL BE INCLUDED IN THE BID PRICE FOR "REMOVAL OF EXISTING STRUCTURE AT STATION 12+21.00 -L-".

THE MATERIAL SHOWN IN THE CROSS-HATCHED AREA SHALL BE EXCAVATED FOR A DISTANCE OF 30 FEET EACH SIDE OF WORK WILL BE MEASURED AND PAID FOR AT THE CONTRACT LUMP SUM PRICE FOR UNCLASSIFIED STRUCTURE EXCAVATIONS.

THE SUBSTRUCTURE OF THE EXISTING BRIDGE INDICATED ON THE PLANS IS FROM THE BEST INFORMATION AVAILABLE. SINCE THIS INFORMATION IS SHOWN FOR THE CONVENIENCE OF THE CONTRACTOR, THE CONTRACTOR SHALL HAVE NO CLAIM WHATSOEVER AGAINST THE DEPARTMENT OF TRANSPORTATION FOR ANY DELAYS OR ADDITIONAL COST INCURRED BASED ON DIFFERENCES BETWEEN THE EXISTING BRIDGE SUBSTRUCTURE SHOWN ON THE PLANS AND THE ACTUAL CONDITIONS AT THE PROJECT SITE.

FOR "CRANE SAFETY". SEE SPECIAL PROVISIONS.

FOR " FALSEWORK AND FORMWORK", SEE SPECIAL PROVISIONS.

FOR "GROUT FOR STRUCTURES", SEE SPECIAL PROVISIONS.

FOR "SUBMITTAL FOR WORKING DRAWINGS", SEE SPECIAL PROVISIONS.

ASPHALT WEARING SURFACE IS INCLUDED IN ROADWAY QUANTITY ON ROADWAY PLANS.

FOUNDATION NOTES:

FOR PILES, SEE SECTION 450 OF THE STANDARD SPECIFICATIONS.

PILES AT BENT NO. 1 ARE DESIGNED FOR A FACTORED RESISTANCE OF 130 TONS PER PILE.

DRIVE PILES AT END BENT NO. 1 TO A REQUIRED DRIVING RESISTANCE OF 220 TONS PER PILE.

FOR DRILLED PIERS, SEE SECTION 411 OF THE STANDARD SPECIFICATIONS.

DRILLED PIERS AT BENT NO. 1 ARE DESIGNED FOR A FACTORED RESISTANCE OF 380 TONS PER PIER. CHECK FIELD CONDITIONS FOR THE REQUIRED TIP RESISTANCE OF 20 TSF.

PERMANENT STEEL CASINGS MAY BE REQUIRED FOR DRILLED PIERS AT BENT NO. 1. IF REQUIRED, DO NOT EXTEND PERMANENT STEEL CASINGS BELOW ELEVATION 910 FEET, WITHOUT PRIOR APPROVAL FROM THE ENGINEER. THE ENGINEER WILL DETERMINE THE NEED FOR PERMANENT STEEL CASING.

INSTALL DRILLED PIERS AT BENT NO. 1 TO A TIP ELEVATION NO HIGHER THAN 882 FEET AND WITH THE REQUIRED TIP RESISTANCE AND PENETRATION OF AT LEAST 15 FEET INTO WEATHERED ROCK OR ROCK AS DEFINED BY ARTICLE 411-1 OF THE STANDARD SPECIFICATIONS.

THE SCOUR CRITICAL ELEVATION FOR BENT NO. 1 IS 906 FEET. SCOUR CRITICAL ELEVATIONS ARE USED TO MONITOR POSSIBLE SCOUR PROBLEMS DURING THE LIFE OF THE STRUCTURE.

CSL TUBES ARE REQUIRED AND CSL TESTING MAY BE REQUIRED FOR DRILLED PIERS. THE ENGINEER WILL DETERMINE THE NEED FOR CSL TESTING. FOR CSL TESTING, SEE SECTION 411 OF THE STANDARD SPECIFICATIONS.

SID INSPECTIONS MAY BE REQUIRED FOR DRILLED PIERS. THE ENGINEER WILL DETERMINE THE NEED FOR SID INSPECTIONS. FOR SID INSPECTIONS, SEE SECTION 411 OF THE STANDARD SPECIFICATIONS.

SPT MAY BE REQUIRED FOR DRILLED PIERS, IF REQUIRED N60 VALUE IS 12 INCHES OF PENETRATION IN THE FIRST FOOT OF THE DRIVE. THE ENGINEER WILL DETERMINE THE NEED FOR SPT. FOR SPT TESTING, SEE SECTION 411 OF THE STANDARD SPECIFICATIONS.

PILES AT END BENT NO. 2 ARE DESIGNED FOR A FACTORED RESISTANCE OF 85 TONS PER PILE.

DRIVE PILES AT END BENT NO. 2 TO A REQUIRED DRIVING RESISTANCE OF 145 TONS PER PILE.

MONITOR SETTLEMENT FOR 2 MONTHS USING SURVEY HUBS AFTER CONSTRUCTING THE EMBANKMENT TO WITHIN 2 FT OF FINISHED GRADE BEFORE BEGINNING END BENT CONSTRUCTION AT END BENT NO. 2.

IT HAS BEEN ESTIMATED THAT A HAMMER WITH AN EQUIVALENT RATED ENERGY IN THE RANGE OF 42,000 TO 52,000 FT-LBS PER BLOW WILL BE REQUIRED TO DRIVE PILES AT END BENT NO. 1 AND NO. 2 THIS ESTIMATED ENERGY RANGE DOES NOT RELEASE THE CONTRACTOR FROM PROVIDING DRIVING EQUIPMENT IN ACCORDANCE WITH SUBARTICLE 450-3(D)(2) OF THE STANDARD SPECIFICATIONS.

PROJECT NO. W-5511

WILKES COUNTY

STATION: STA. 20+40.50 -L-

SHEET 3 OF 3

STATE OF NORTH CAROLINA
DEPARTMENT OF TRANSPORTATION
RALEIGH

GENERAL DRAWING
FOR BRIDGE OVER BRIER CREEK
ON SR 2324
(RED WHITE AND BLUE RD.)
BETWEEN US 421 AND NC 268

DWG. NO. 2A

NORTH CAROLINA PROFESSIONAL SEAL 10986 ENGINEER RICKY V. KEITH

3/11/14

RK&K
RUMMEL, KLEPPER & KAHL, LLP
900 RIDGEFIELD DRIVE SUITE 350
RALEIGH, NORTH CAROLINA 27609-3960
NC LICENSE NUMBER: F-0112

REVISIONS						SHEET NO.
NO.	BY:	DATE:	NO.	BY:	DATE:	S-2A
1			3			TOTAL SHEETS
2			4			23

DRAWN BY : F.D. WEEDEN DATE : MAR. 2014
CHECKED BY : R.V. KEITH DATE : MAR. 2014

M:\projects\2009\09085_NCDOT_Div_OnCall\P01_Div11Bridges_GRP4\BD5111Y_Wilkes193\Design\Structures\DGN\B5111Y_str_gn.dgn

LOAD AND RESISTANCE FACTOR RATING (LRFD) SUMMARY FOR PRESTRESSED CONCRETE GIRDERS

LEVEL		VEHICLE	WEIGHT (W) (TONS)	CONTROLLING LOAD RATING	MINIMUM RATING FACTORS (RF)	TONS = W X RF	STRENGTH I LIMIT STATE											SERVICE III LIMIT STATE						COMMENT NUMBER
							LIVELOAD FACTORS	MOMENT					SHEAR					LIVELOAD FACTORS	MOMENT					
								DISTRIBUTION FACTORS (DF)	RATING FACTOR	SPAN	GIRDER LOCATION	DISTANCE FROM LEFT END OF SPAN (ft)	DISTRIBUTION FACTORS (DF)	RATING FACTOR	SPAN	GIRDER LOCATION	DISTANCE FROM LEFT END OF SPAN (ft)		DISTRIBUTION FACTORS (DF)	RATING FACTOR	SPAN	GIRDER LOCATION	DISTANCE FROM LEFT END OF SPAN (ft)	
DESIGN LOAD RATING		HL-93(Inv)	N/A	1	1.034	--	1.75	0.246	1.63	A	ER	44.134	0.627	**1.03**	A	ER	**8.827**	0.80	0.246	1.23	A	ER	44.134	
		HL-93(Opr)	N/A	--	1.34	--	1.35	0.246	2.11	A	ER	44.134	0.627	1.34	A	ER	8.827	N/A	--	--	--	--	--	
		HS-20(Inv)	36.000	2	1.343	48.336	1.75	0.246	2.21	A	ER	44.134	0.627	**1.34**	A	ER	**8.827**	0.80	0.246	1.67	A	ER	44.134	
		HS-20(Opr)	36.000	--	1.741	62.658	1.35	0.246	2.87	A	ER	44.134	0.627	1.74	A	ER	8.827	N/A	--	--	--	--	--	
LEGAL LOAD RATING	SV	SNSH	13.500	--	3.909	52.766	1.4	0.246	6.46	A	ER	44.134	0.627	4.08	A	ER	8.827	0.80	0.246	3.91	A	ER	44.134	
		SNGARBS2	20.000	--	2.857	57.143	1.4	0.246	4.72	A	ER	44.134	0.627	2.88	A	ER	8.827	0.80	0.246	2.86	A	ER	44.134	
		SNAGRIS2	22.000	--	2.658	58.474	1.4	0.246	4.44	A	ER	44.134	0.627	2.66	A	ER	8.827	0.80	0.246	2.68	A	ER	44.134	
		SNCOTTS3	27.250	--	1.943	52.958	1.4	0.246	3.21	A	ER	44.134	0.627	2.04	A	ER	8.827	0.80	0.246	1.94	A	ER	44.134	
		SNAGGRS4	34.925	--	1.603	55.974	1.4	0.246	2.65	A	ER	44.134	0.627	1.67	A	ER	8.827	0.80	0.246	1.60	A	ER	44.134	
		SNS5A	35.550	--	1.569	55.767	1.4	0.246	2.59	A	ER	44.134	0.627	1.68	A	ER	8.827	0.80	0.246	1.57	A	ER	44.134	
		SNS6A	39.950	--	1.431	57.149	1.4	0.246	2.36	A	ER	44.134	0.627	1.53	A	ER	8.827	0.80	0.246	1.43	A	ER	44.134	
		SNS7B	42.000	--	1.362	57.202	1.4	0.246	2.25	A	ER	44.134	0.627	1.49	A	ER	8.827	0.80	0.246	1.36	A	ER	44.134	
	TTST	TNAGRIT3	33.000	--	1.742	57.481	1.4	0.246	2.88	A	ER	44.134	0.627	1.82	A	ER	8.827	0.80	0.246	1.74	A	ER	44.134	
		TNT4A	33.075	--	1.747	57.786	1.4	0.246	2.89	A	ER	44.134	0.627	1.78	A	ER	8.827	0.80	0.246	1.75	A	ER	44.134	
		TNT6A	41.600	--	1.42	59.082	1.4	0.246	2.35	A	ER	44.134	0.627	1.57	A	ER	8.827	0.80	0.246	1.42	A	ER	44.134	
		TNT7A	42.000	--	1.423	59.764	1.4	0.246	2.35	A	ER	44.134	0.627	1.54	A	ER	8.827	0.80	0.246	1.42	A	ER	44.134	
		TNT7B	42.000	--	1.461	61.373	1.4	0.246	2.42	A	ER	44.134	0.627	1.46	A	ER	8.827	0.80	0.246	1.46	A	ER	44.134	
		TNAGRIT4	43.000	--	1.398	60.12	1.4	0.246	2.31	A	ER	44.134	0.627	1.42	A	ER	8.827	0.80	0.246	1.40	A	ER	44.134	
		TNAGT5A	45.000	--	1.322	59.491	1.4	0.246	2.19	A	ER	44.134	0.627	1.4	A	ER	8.827	0.80	0.246	1.32	A	ER	44.134	
		TNAGT5B	45.000	3	1.309	58.923	1.4	0.246	2.16	A	ER	44.134	0.627	1.35	A	ER	8.827	0.80	0.246	**1.31**	A	ER	**44.134**	

LOAD FACTORS:

DESIGN LOAD RATING FACTORS	LIMIT STATE	γ_{DC}	γ_{DW}
	STRENGTH I	1.25	1.50
	SERVICE III	1.00	1.00

NOTES:

MINIMUM RATING FACTORS ARE BASED ON THE STRENGTH I AND SERVICE III LIMIT STATES.

ALLOWABLE STRESSES FOR SERVICE III LIMIT STATE ARE AS REQUIRED FOR DESIGN.

COMMENTS:

1.
2.
3.
4.

CONTROLLING LOAD RATING
1 DESIGN LOAD RATING (HL-93)
2 DESIGN LOAD RATING (HS-20)
3 LEGAL LOAD RATING **
** SEE CHART FOR VEHICLE TYPE

GIRDER LOCATION
I - INTERIOR GIRDER
EL - EXTERIOR LEFT GIRDER
ER - EXTERIOR RIGHT GIRDER

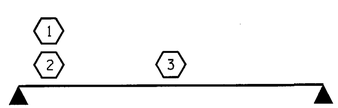

LRFR SUMMARY

FOR SPAN 'A'

PROJECT NO. W-5511

WILKES COUNTY

STATION: 20+40.50-L-

STATE OF NORTH CAROLINA
DEPARTMENT OF TRANSPORTATION
RALEIGH

LRFR SUMMARY FOR 90' BOX BEAM UNIT 120° SKEW (SPAN A) (NON-INTERSTATE TRAFFIC)

NORTH CAROLINA PROFESSIONAL SEAL 18828 ENGINEER BRYCE D. KLAPPENBACH

2-27-2014

REVISIONS						SHEET NO.
NO.	BY:	DATE:	NO.	BY:	DATE:	S-3
1			3			TOTAL SHEETS
2			4			23

ASSEMBLED BY :	H. T. BARBOUR	DATE :	12-9-13
CHECKED BY :	S. B. WILLIAMS	DATE :	2-19-14
DRAWN BY :	TMG		11/11
CHECKED BY :	AAC		11/11

27-FEB-2014 11:25
R:\Structures\Plans\tbarbour\Microstation\BD5111Y_SD_TS.dgn
bklappenbach

STD. NO. 33LRFR1_60&120S_90L

LOAD AND RESISTANCE FACTOR RATING (LRFD) SUMMARY FOR PRESTRESSED CONCRETE GIRDERS

LEVEL		VEHICLE	WEIGHT (W) (TONS)	CONTROLLING LOAD RATING	MINIMUM RATING FACTORS (RF)	TONS = W X RF	STRENGTH I LIMIT STATE											SERVICE III LIMIT STATE						COMMENT NUMBER
								MOMENT					SHEAR						MOMENT					
							LIVELOAD FACTORS	DISTRIBUTION FACTORS (DF)	RATING FACTOR	SPAN	GIRDER LOCATION	DISTANCE FROM LEFT END OF SPAN (ft)	DISTRIBUTION FACTORS (DF)	RATING FACTOR	SPAN	GIRDER LOCATION	DISTANCE FROM LEFT END OF SPAN (ft)	LIVELOAD FACTORS	DISTRIBUTION FACTORS (DF)	RATING FACTOR	SPAN	GIRDER LOCATION	DISTANCE FROM LEFT END OF SPAN (ft)	
DESIGN LOAD RATING		HL-93(Inv)	N/A	(1)	1.202	--	1.75	0.256	2.04	30'	EL	14.423	0.655	**1.20**	30'	EL	**1.442**	0.80	0.256	1.75	30'	EL	14.423	
		HL-93(Opr)	N/A	--	1.558	--	1.35	0.256	2.64	30'	EL	14.423	0.655	1.56	30'	EL	1.442	N/A	--	--	--	--	--	
		HS-20(Inv)	36.000	(2)	1.365	49.124	1.75	0.256	2.82	30'	EL	11.538	0.655	**1.36**	30'	EL	**1.442**	0.80	0.256	2.45	30'	EL	11.538	
		HS-20(Opr)	36.000	--	1.769	63.679	1.35	0.256	3.65	30'	EL	11.538	0.655	1.77	30'	EL	1.442	N/A	--	--	--	--	--	
LEGAL LOAD RATING	SV	SNSH	13.500	--	3.333	45.002	1.4	0.256	5.76	30'	EL	14.423	0.655	3.33	30'	EL	1.442	0.80	0.256	3.95	30'	EL	14.423	
		SNGARBS2	20.000	--	2.581	51.624	1.4	0.256	5.04	30'	EL	11.538	0.655	2.58	30'	EL	1.442	0.80	0.256	3.50	30'	EL	11.538	
		SNAGRIS2	22.000	--	2.487	54.723	1.4	0.256	5.13	30'	EL	11.538	0.655	2.49	30'	EL	1.442	0.80	0.256	3.56	30'	EL	11.538	
		SNCOTTS3	27.250	--	1.684	45.891	1.4	0.256	2.89	30'	EL	14.423	0.655	1.68	30'	EL	1.442	0.80	0.256	1.99	30'	EL	14.423	
		SNAGGRS4	34.925	--	1.551	54.185	1.4	0.256	2.79	30'	EL	14.423	0.655	1.55	30'	EL	1.442	0.80	0.256	1.91	30'	EL	14.423	
		SNS5A	35.550	--	1.645	58.469	1.4	0.256	2.7	30'	EL	14.423	0.655	1.64	30'	EL	1.442	0.80	0.256	1.85	30'	EL	14.423	
		SNS6A	39.950	--	1.547	61.791	1.4	0.256	2.55	30'	EL	14.423	0.655	1.55	30'	EL	1.442	0.80	0.256	1.75	30'	EL	14.423	
		SNS7B	42.000	--	1.578	66.285	1.4	0.256	2.48	30'	EL	14.423	0.655	1.58	30'	EL	1.442	0.80	0.256	1.70	30'	EL	14.423	
	TTST	TNAGRIT3	33.000	--	1.838	60.67	1.4	0.256	3.31	30'	EL	14.423	0.655	1.84	30'	EL	1.442	0.80	0.256	2.27	30'	EL	14.423	
		TNT4A	33.075	--	1.71	56.559	1.4	0.256	3.13	30'	EL	14.423	0.655	1.71	30'	EL	1.442	0.80	0.256	2.15	30'	EL	14.423	
		TNT6A	41.600	--	1.652	68.714	1.4	0.256	2.85	30'	EL	14.423	0.655	1.65	30'	EL	1.442	0.80	0.256	1.96	30'	EL	14.423	
		TNT7A	42.000	--	1.573	66.067	1.4	0.256	2.94	30'	EL	14.423	0.655	1.57	30'	EL	1.442	0.80	0.256	2.02	30'	EL	14.423	
		TNT7B	42.000	--	1.536	64.525	1.4	0.256	2.77	30'	EL	14.423	0.655	1.54	30'	EL	1.442	0.80	0.256	1.90	30'	EL	14.423	
		TNAGRIT4	43.000	--	1.486	63.9	1.4	0.256	2.87	30'	EL	14.423	0.655	1.49	30'	EL	1.442	0.80	0.256	1.97	30'	EL	14.423	
		TNAGT5A	45.000	--	1.594	71.736	1.4	0.256	2.79	30'	EL	14.423	0.655	1.59	30'	EL	1.442	0.80	0.256	1.92	30'	EL	14.423	
		TNAGT5B	45.000	(3)	1.399	62.946	1.4	0.256	2.68	30'	EL	11.538	0.655	**1.40**	30'	EL	**1.442**	0.80	0.256	1.85	30'	EL	11.538	

LOAD FACTORS:

DESIGN LOAD RATING FACTORS	LIMIT STATE	γ_{DC}	γ_{DW}
	STRENGTH I	1.25	1.50
	SERVICE III	1.00	1.00

NOTES:

MINIMUM RATING FACTORS ARE BASED ON THE STRENGTH I AND SERVICE III LIMIT STATES.

ALLOWABLE STRESSES FOR SERVICE III LIMIT STATE ARE AS REQUIRED FOR DESIGN.

COMMENTS:

1.
2.
3.
4.

(#) CONTROLLING LOAD RATING

(1) DESIGN LOAD RATING (HL-93)

(2) DESIGN LOAD RATING (HS-20)

(3) LEGAL LOAD RATING **

** SEE CHART FOR VEHICLE TYPE

GIRDER LOCATION

I - INTERIOR GIRDER
EL - EXTERIOR LEFT GIRDER
ER - EXTERIOR RIGHT GIRDER

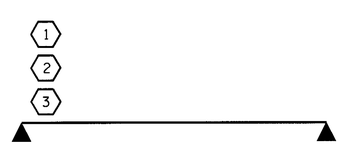

LRFR SUMMARY

FOR SPAN 'B'

PROJECT NO. W-5511

WILKES COUNTY

STATION: 20+40.50-L-

STATE OF NORTH CAROLINA
DEPARTMENT OF TRANSPORTATION
RALEIGH

LRFR SUMMARY FOR
30' CORED SLAB UNIT
120° SKEW
(SPAN B)
(NON-INTERSTATE TRAFFIC)

NORTH CAROLINA PROFESSIONAL SEAL 15828 ENGINEER BRUCE O. KLAPPENBACH
2-27-2014

REVISIONS								SHEET NO.
NO.	BY:	DATE:	NO.	BY:	DATE:			S-4
1			3					TOTAL SHEETS
2			4					23

ASSEMBLED BY :	H. T. BARBOUR	DATE :	12-9-13
CHECKED BY :	S. B. WILLIAMS	DATE :	2-19-14
DRAWN BY : CVC	6/10		
CHECKED BY : DNS	6/10		

27-FEB-2014 11:28
R:\Structures\Plans\tbarbour\Microstation\BD5111Y_SD_TS.dgn
bklappenbach

STD. NO. 21LRFR1_60&120S_30L

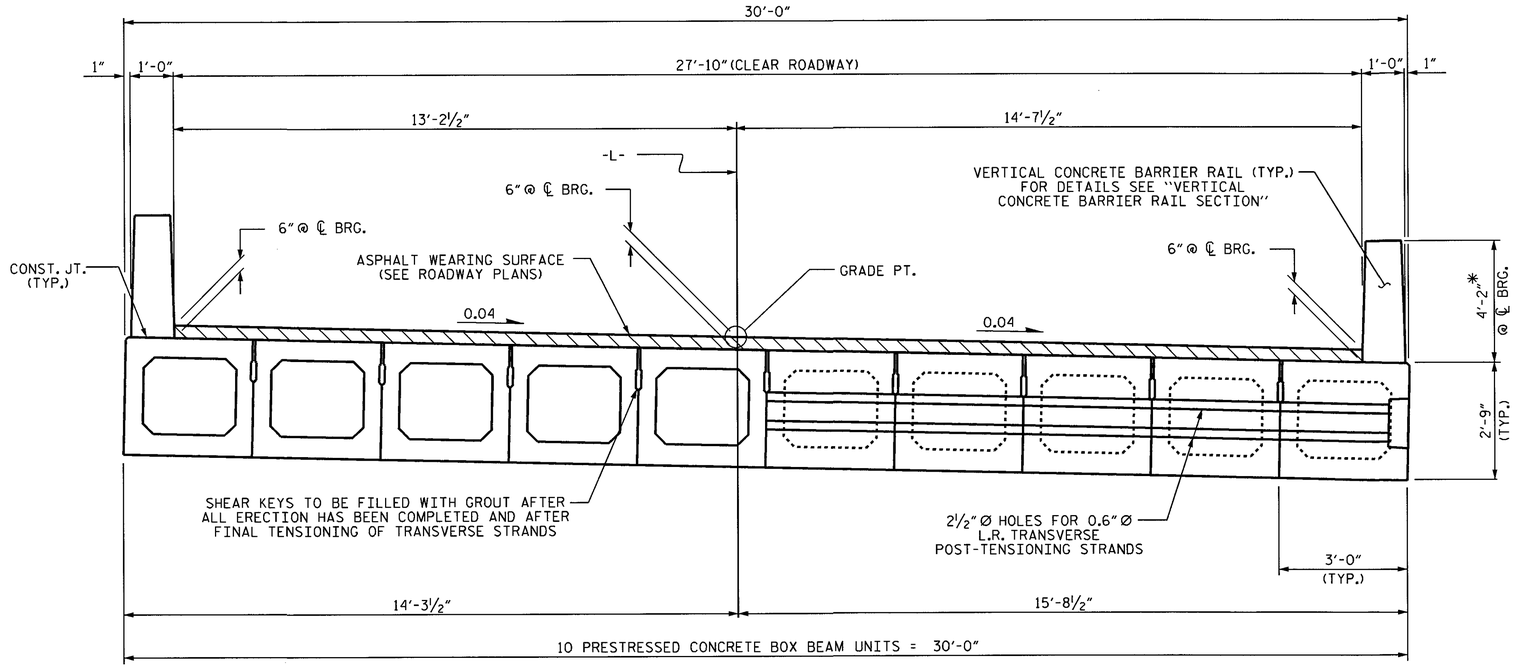

HALF SECTION
THROUGH VOIDS

HALF SECTION
AT INTERMEDIATE DIAPHRAGMS

TYPICAL SECTION

*THE MAXIMUM BARRIER RAIL HEIGHT AND ASPHALT THICKNESS IS SHOWN. THE HEIGHT OF THE BARRIER RAIL AND ASPHALT THICKNESS VARIES WHILE THE TOP OF THE BARRIER RAIL FOLLOWS THE PROFILE OF THE GUTTERLINE. FOR RAIL HEIGHT DETAILS AND ASPHALT THICKNESS, SEE THE "VERTICAL CONCRETE BARRIER RAIL SECTION" DETAIL.

FIXED END

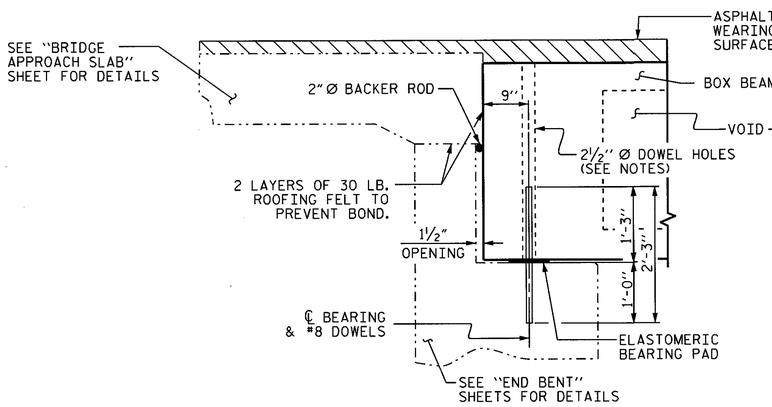

SECTION AT END BENT NO. 1

FIXED END FIXED END

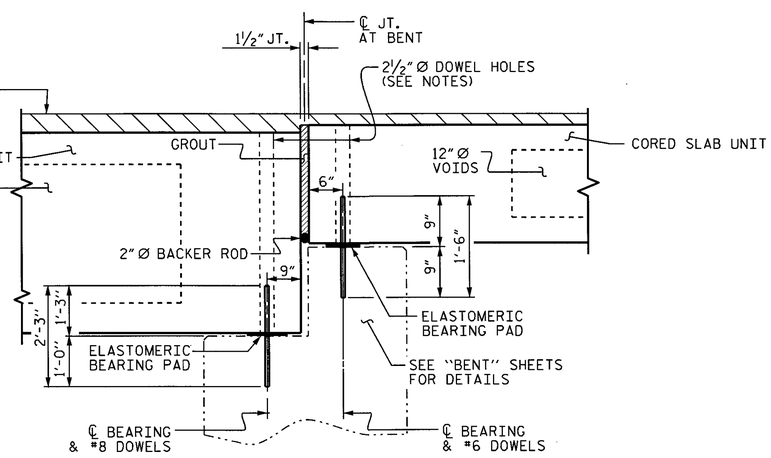

SECTION AT BENT

NOTES

ALL PRESTRESSING STRANDS SHALL BE 7-WIRE LOW RELAXATION GRADE 270 STRANDS AND SHALL CONFORM TO AASHTO M203 EXCEPT FOR SAMPLING REQUIREMENTS WHICH SHALL BE IN ACCORDANCE WITH THE STANDARD SPECIFICATIONS.

ALL REINFORCING STEEL CAST WITH THE BOX BEAM SECTIONS SHALL BE GRADE 60 AND SHALL BE INCLUDED IN THE UNIT PRICE BID FOR PRESTRESSED CONCRETE BOX BEAMS.

RECESSES FOR TRANSVERSE STRANDS SHALL BE GROUTED AFTER THE TENSIONING OF THE STRANDS.

THE 2½" Ø DOWEL HOLES AT FIXED ENDS OF BOX BEAM SECTIONS SHALL BE FILLED WITH NON-SHRINK GROUT.

THE BACKER RODS SHALL CONFORM TO THE REQUIREMENTS OF TYPE M BOND BREAKER. SEE SECTION 1028 OF THE STANDARD SPECIFICATIONS.

THE TRANSFER OF LOAD FROM THE ANCHORAGES TO THE BOX BEAM UNIT SHALL BE DONE WHEN THE CONCRETE HAS REACHED A COMPRESSIVE STRENGTH OF NOT LESS THAN 6000 PSI.

ALL REINFORCING STEEL IN VERTICAL CONCRETE BARRIER RAILS SHALL BE EPOXY COATED.

PRESTRESSING STRANDS SHALL BE CUT FLUSH WITH THE BOX BEAM UNIT ENDS.

APPLY EPOXY PROTECTIVE COATING TO BOX BEAM UNIT ENDS.

VERTICAL GROOVED CONTRACTION JOINTS, ½" IN DEPTH, SHALL BE TOOLED IN ALL EXPOSED FACES OF THE BARRIER RAIL AND IN ACCORDANCE WITH ARTICLE 825-10(B) OF THE STANDARD SPECIFICATIONS. A VERTICAL CONTRACTION JOINT SHALL BE LOCATED AT EACH THIRD POINT BETWEEN BARRIER RAIL EXPANSION JOINTS. ONLY ONE CONTRACTION JOINT IS REQUIRED AT MIDPOINT OF BARRIER RAIL SEGMENTS LESS THAN 20 FEET IN LENGTH AND NO CONTRACTION JOINTS ARE REQUIRED FOR THOSE SEGMENTS LESS THAN 10 FEET IN LENGTH.

THE LOCATION OF THE VOID DRAINS MAY BE SHIFTED SLIGHTLY WHERE NECESSARY TO CLEAR PRESTRESSING STRANDS OR TRANSVERSE REINFORCING STEEL.

FOR GROUT FOR STRUCTURES, SEE SPECIAL PROVISIONS.

PROJECT NO. W-5511
WILKES COUNTY
STATION: 20+40.50-L-

SHEET 1 OF 5

STATE OF NORTH CAROLINA
DEPARTMENT OF TRANSPORTATION
RALEIGH

3'-0" X 2'-9"
PRESTRESSED CONCRETE
BOX BEAM UNIT
(SPAN A)

NORTH CAROLINA PROFESSIONAL SEAL 15825 ENGINEER BRUCE D. KLAPPENBACH
2-27-2014

ASSEMBLED BY :	H. T. BARBOUR	DATE :	12-9-13
CHECKED BY :	S. B. WILLIAMS	DATE :	2-19-14
DRAWN BY :	DGE 8/11		
CHECKED BY :	TMG 11/11		

REVISIONS								SHEET NO.
NO.	BY:	DATE:	NO.	BY:	DATE:			S-5
1			3					TOTAL SHEETS
2			4					23

27-FEB-2014 11:28
R:\Structures\Plans\tbarbour\Microstation\BD5111Y_SD_TS.dgn
bklappenbach

STD. NO. STD.33PCBB1_30

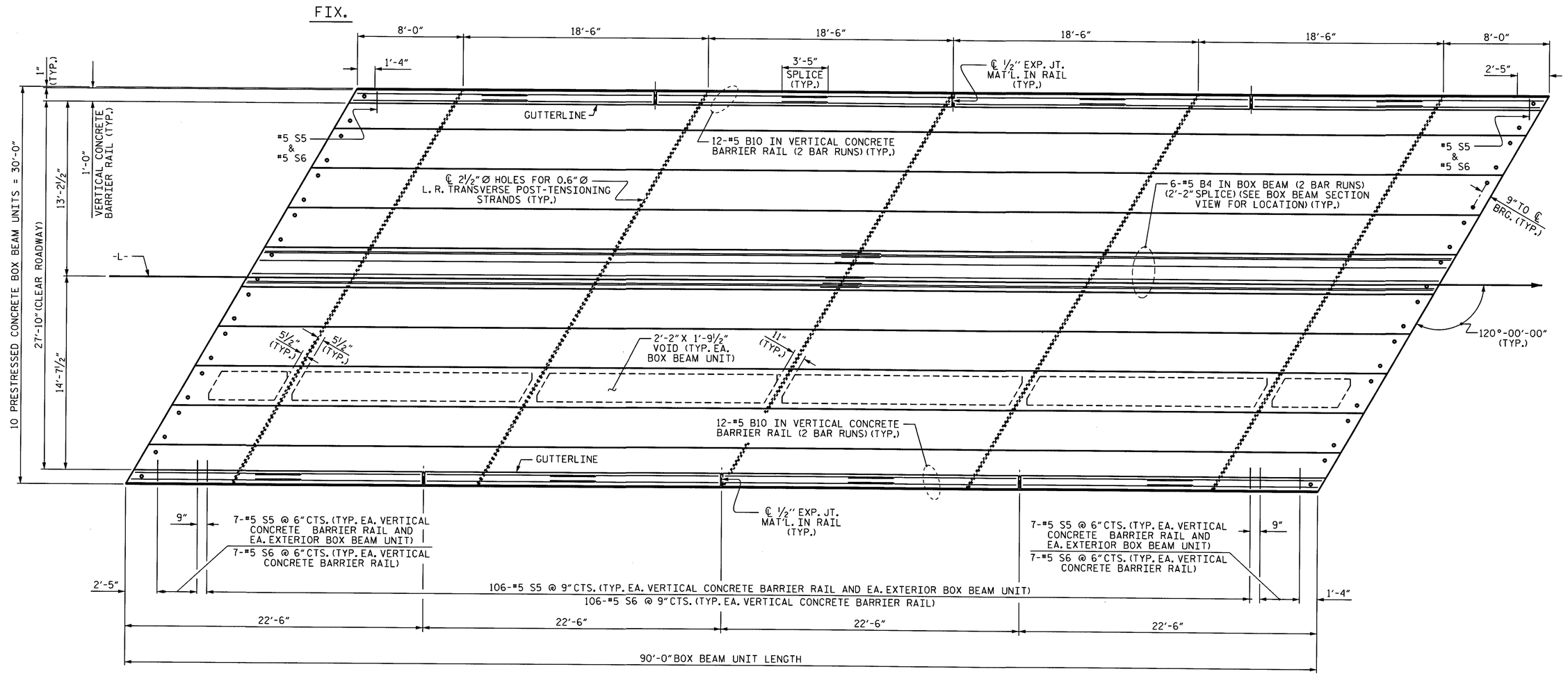

PLAN OF UNIT

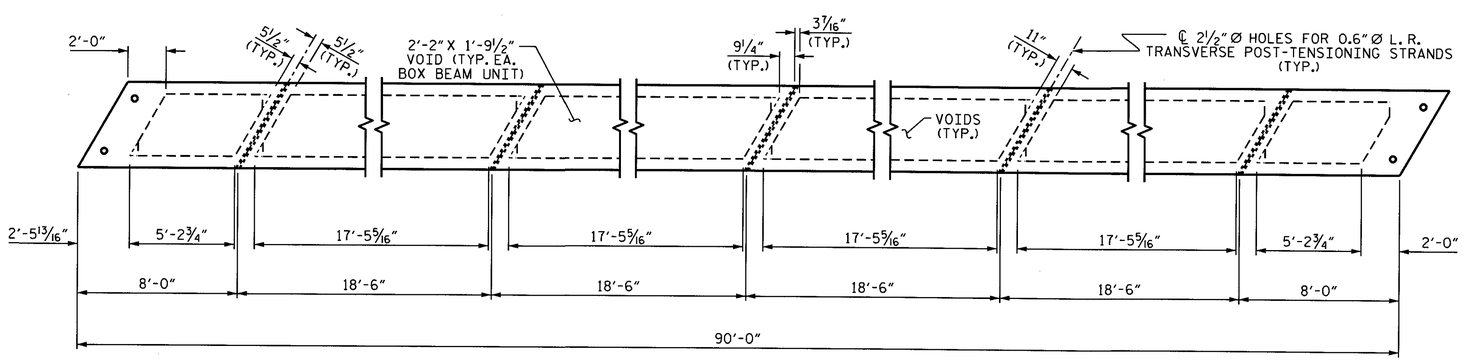

DIAPHRAGM AND VOID LAYOUT

ASSEMBLED BY :	H. T. BARBOUR	DATE :	12-9-13
CHECKED BY :	S. B. WILLIAMS	DATE :	2-19-14
DRAWN BY :	DGE 8/11		
CHECKED BY :	TMG 11/11		

27-FEB-2014 11:28
R:\Structures\Plans\tbarbour\Microstation\BD5111Y_SD_TS.dgn
bkloppenbach

PROJECT NO. W-5511
WILKES COUNTY
STATION: 20+40.50-L-

SHEET 2 OF 5

STATE OF NORTH CAROLINA
DEPARTMENT OF TRANSPORTATION
RALEIGH

PLAN OF 90' UNIT 27'-10" CLEAR ROADWAY 120° SKEW (SPAN A)

NORTH CAROLINA PROFESSIONAL SEAL 15829 ENGINEER BRIAN D. KLAPPENBACH
2-27-2014

REVISIONS							
NO.	BY:	DATE:	NO.	BY:	DATE:		
1			3				
2			4				

SHEET NO. S-6
TOTAL SHEETS 23

STD.NO.33PCBB_30_120S_90L

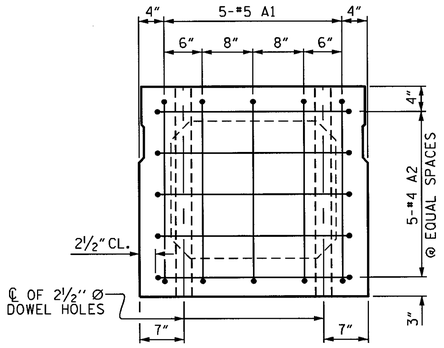

END ELEVATION

SHOWING PLACEMENT OF #5 & #4 "A" BARS AND LOCATION OF DOWEL HOLES. (INTERIOR BOX BEAM SECTION SHOWN-EXTERIOR SECTION SIMILAR EXCEPT SHEAR KEY LOCATION. STRAND LAYOUT NOT SHOWN.)

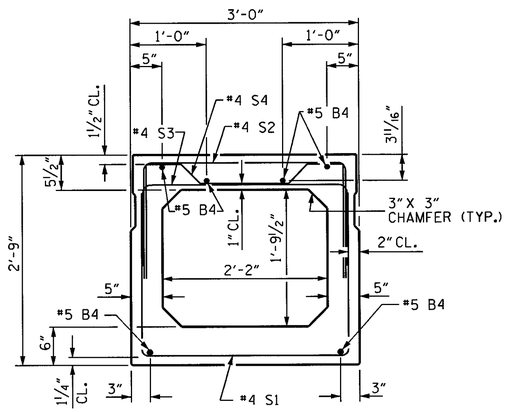

INTERIOR BOX BEAM SECTION

(STRAND LAYOUT NOT SHOWN)

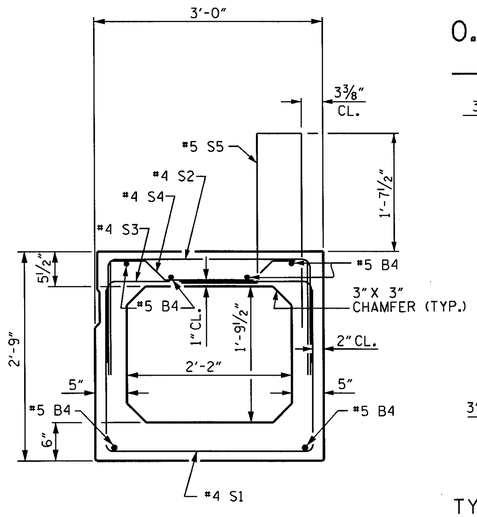

EXTERIOR BOX BEAM SECTION

(STRAND LAYOUT NOT SHOWN)

0.6" Ø LOW RELAXATION STRAND LAYOUT

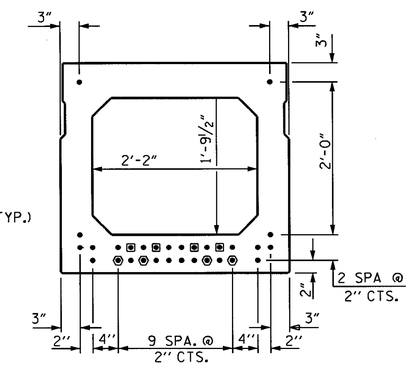

TYPICAL STRAND LOCATION

(30 STRANDS REQUIRED)

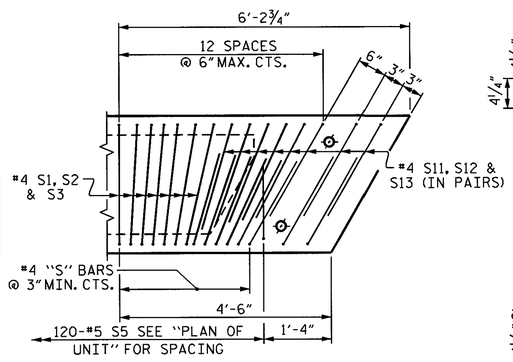

DETAIL "B"

EXTERIOR UNIT SHOWN, INTERIOR UNIT SIMILAR EXCEPT OMIT #5 S5 BARS. "B" BARS AND "A" BARS NOT SHOWN.

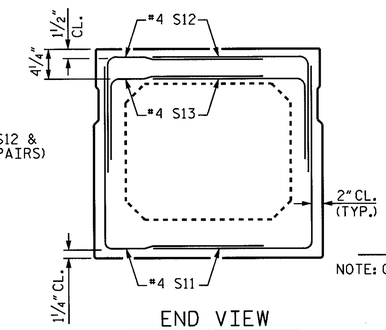

END VIEW

(SHOWING #4 "S" BARS IN END OF BEAM)

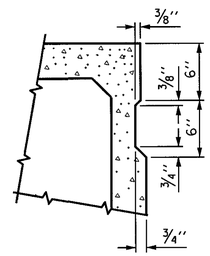

SHEAR KEY DETAIL

NOTE: OMIT SHEAR KEY ON OUTSIDE FACE OF EXTERIOR BOX BEAMS.

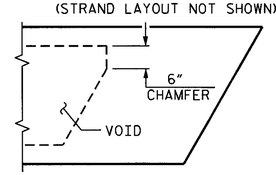

CHAMFER DETAIL

SHOWING 6" VOID CHAMFER

DEBONDING LEGEND

- ● FULLY BONDED STRANDS
- ▣ STRANDS DEBONDED FOR 4'-0" FROM END OF GIRDER
- ⬢ STRANDS DEBONDED FOR 12'-0" FROM END OF GIRDER

BOND SHALL BE BROKEN ON STRANDS AS SHOWN FOR THE SPECIFIED LENGTH FROM EACH END OF THE BOX BEAM. SEE STANDARD SPECIFICATIONS ARTICLE 1078-7.

GRADE 270 STRANDS	
	0.6" Ø L.R.
AREA (SQUARE INCHES)	0.217
ULTIMATE STRENGTH (LBS. PER STRAND)	58,600
APPLIED PRESTRESS (LBS. PER STRAND)	43,950

BAR TYPES

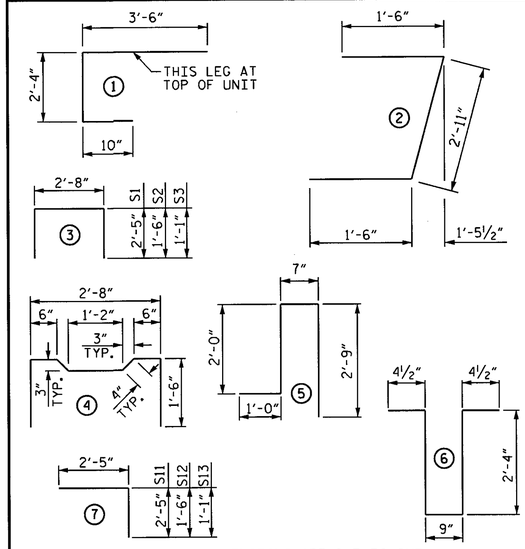

ALL BAR DIMENSIONS ARE OUT TO OUT

BILL OF MATERIAL FOR ONE BOX BEAM SECTION

				EXTERIOR UNIT		INTERIOR UNIT	
BAR	NUMBER	SIZE	TYPE	LENGTH	WEIGHT	LENGTH	WEIGHT
A1	10	#5	1	6'-8"	70	6'-8"	70
A2	40	#4	2	5'-11"	158	5'-11"	158
B4	12	#5	STR	45'-11"	575	45'-11"	575
K1	15	#4	6	6'-2"	62	6'-2"	62
K2	10	#4	STR	2'-10"	19	2'-10"	19
S1	67	#4	3	7'-6"	336	7'-6"	336
S2	67	#4	3	5'-8"	254	5'-8"	254
S3	119	#4	3	4'-10"	384	4'-10"	384
S4	52	#4	4	5'-10"	203	5'-10"	203
S11	32	#4	7	4'-10"	93	4'-10"	93
S12	32	#4	7	3'-11"	84	3'-11"	84
S13	32	#4	7	3'-6"	75	3'-6"	75
✱ S5	120	#5	5	6'-4"	793	--	--
REINFORCING STEEL				2313	LBS.	2313	LBS.
✱ EPOXY COATED REINF. STEEL				793	LBS.		
8000 P.S.I. CONCRETE				16.1	CU. YDS.	16.0	CU. YDS.
0.6" Ø L.R. STRANDS				No. 30		No. 30	

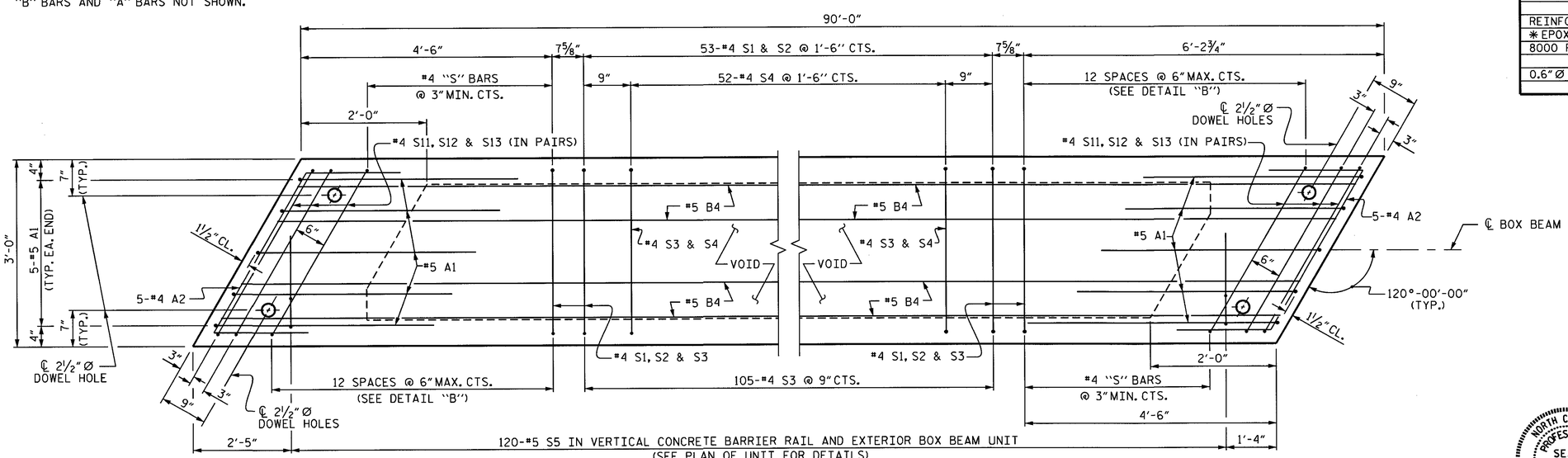

PLAN OF BOX BEAM

EXTERIOR UNIT SHOWN, INTERIOR UNIT SIMILAR EXCEPT OMIT #5 S5 BARS. FOR LOCATION OF DIAPHRAGMS, SEE PLAN OF UNIT. FOR REINFORCING STEEL IN DIAPHRAGMS, SEE DIAPHRAGM DETAILS.

PROJECT NO. W-5511
WILKES COUNTY
STATION: 20+40.50-L-

SHEET 3 OF 5

STATE OF NORTH CAROLINA
DEPARTMENT OF TRANSPORTATION
RALEIGH

3'-0" X 2'-9" PRESTRESSED CONCRETE BOX BEAM UNIT (SPAN A)

NORTH CAROLINA PROFESSIONAL SEAL 15825 ENGINEER BRIAN D. KLAPPENBACH
2-27-2014

ASSEMBLED BY : H. T. BARBOUR	DATE : 12-9-13
CHECKED BY : S. B. WILLIAMS	DATE : 2-19-14
DRAWN BY : DGE 11/11	
CHECKED BY : TMG 11/11	

REVISIONS						SHEET NO.
NO.	BY:	DATE:	NO.	BY:	DATE:	S-7
1			3			TOTAL SHEETS
2			4			23

27-FEB-2014 11:28
R:\Structures\Plans\tbarbour\Microstation\BD5111Y_SD_TS.dgn
bklappenbach

STD. NO. 33PCBB4_120S_90L

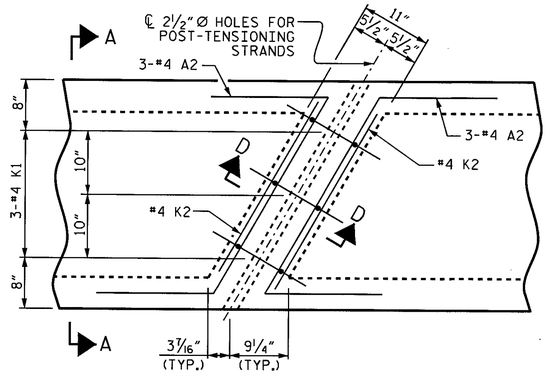

PLAN

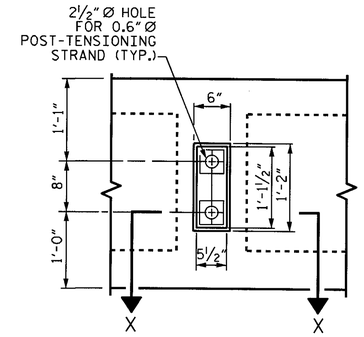

VIEW Y-Y

SHOWING ELEVATION VIEW OF GROUTED RECESS

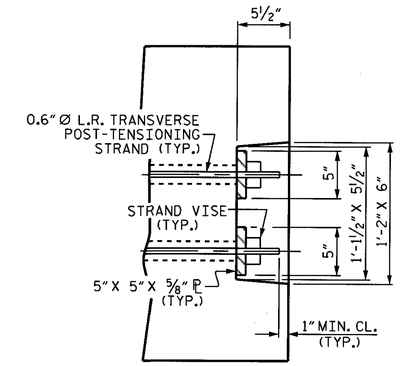

DETAIL "C"

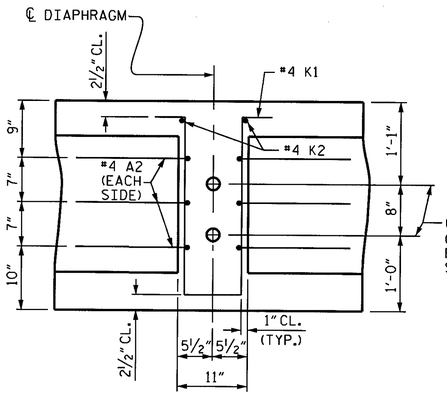

SECTION D-D

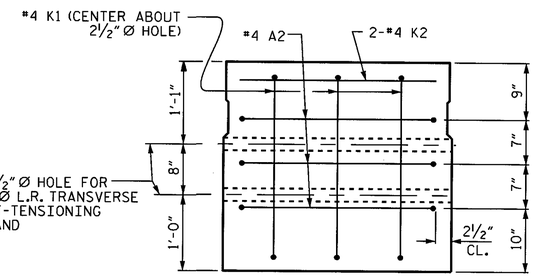

SECTION A-A

VOIDS NOT SHOWN

DOUBLE DIAPHRAGM DETAILS

#4 "S" BARS NOT SHOWN. #4 "S" BARS MAY BE SHIFTED SLIGHTLY TO CLEAR 2½" Ø HOLE.

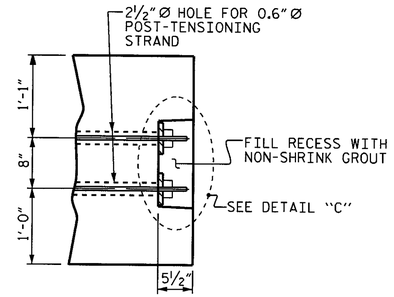

PART SECTION AT RECESS

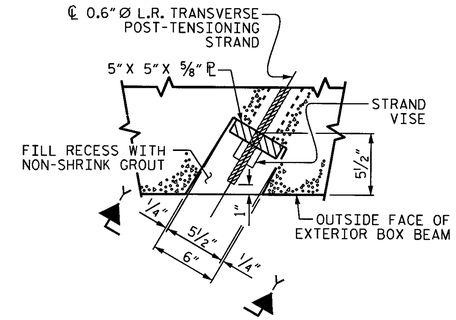

SECTION X-X

SHOWING PLAN VIEW OF GROUTED RECESS

GROUTED RECESS DETAIL AT END OF POST-TENSIONED STRANDS OF EXTERIOR BOX BEAM

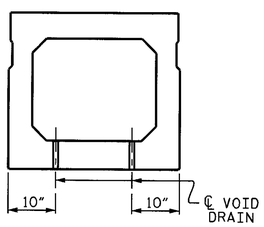

SECTION B-B

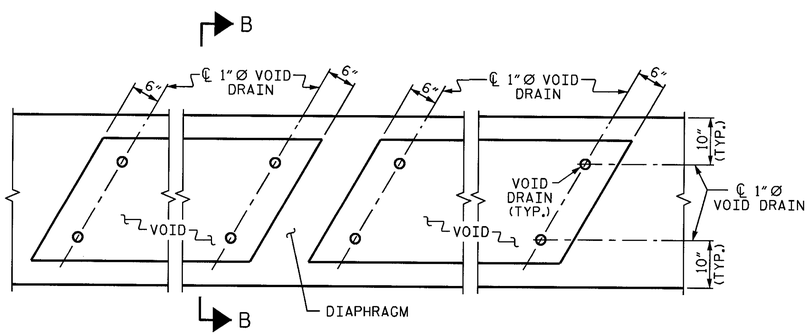

PART PLAN

VOID DRAIN DETAILS

(DIMENSIONS SHOWN ARE TYPICAL FOR EACH VOID)

DEAD LOAD DEFLECTION AND CAMBER	
	3'-0" x 2'-9"
90' BOX BEAM UNIT (NC & SE)	0.6"Ø L.R. STRAND
CAMBER (SLAB ALONE IN PLACE)	3¾" ↑
DEFLECTION DUE TO SUPERIMPOSED DEAD LOAD**	¾" ↑
FINAL CAMBER	3" ↑

** INCLUDES FUTURE WEARING SURFACE

PROJECT NO. W-5511

WILKES COUNTY

STATION: 20+40.50-L-

SHEET 4 OF 5

STATE OF NORTH CAROLINA
DEPARTMENT OF TRANSPORTATION
RALEIGH

3'-0" X 2'-9"
PRESTRESSED CONCRETE
BOX BEAM UNIT
(SPAN A)

NORTH CAROLINA PROFESSIONAL SEAL 15825 ENGINEER BRUCE D. KLAPPENBACH
2-27-2014

REVISIONS								SHEET NO.
NO.	BY:	DATE:	NO.	BY:	DATE:			S-8
1			3					TOTAL SHEETS
2			4					23

ASSEMBLED BY :	H. T. BARBOUR	DATE :	12-9-13
CHECKED BY :	S. B. WILLIAMS	DATE :	2-19-14
DRAWN BY :	DGE 11/11		
CHECKED BY :	TMG 11/11		

27-FEB-2014 11:28
R:\Structures\Plans\tbarbour\Microstation\BD5111Y_SD_TS.dgn
bklappenbach

STD.NO.33PCBB5_120S

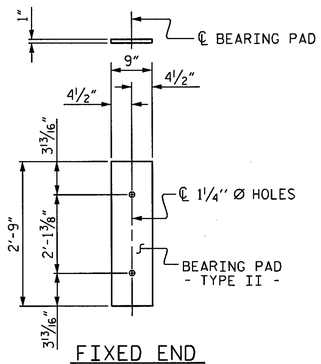

FIXED END

(TYPE II - 20 REQ'D)

ELASTOMERIC BEARING DETAILS

ELASTOMER IN ALL BEARINGS SHALL BE 60 DUROMETER HARDNESS.

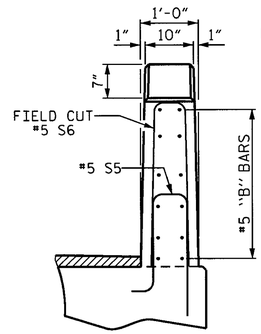

END VIEW

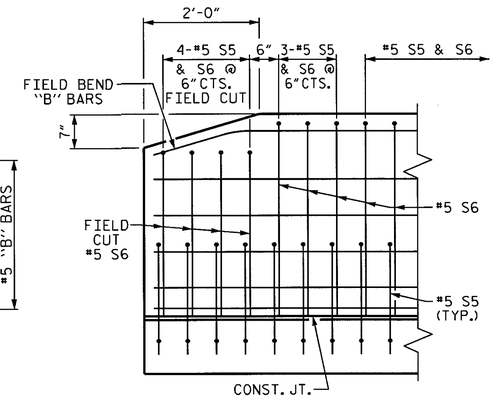

SIDE VIEW

END OF RAIL DETAILS

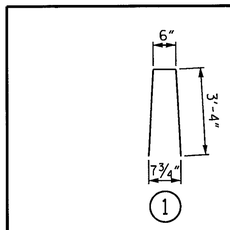

BAR TYPE

BAR DIMENSIONS ARE OUT TO OUT

BOX BEAM UNITS REQUIRED			
	NUMBER	LENGTH	TOTAL LENGTH
EXTERIOR B.B.	2	90'-0"	180'-0"
INTERIOR B.B.	8	90'-0"	720'-0"
TOTAL	10	———	900'-0"

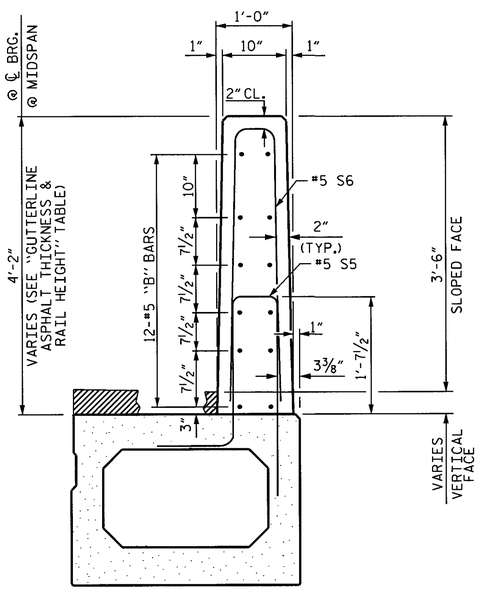

SECTION THRU RAIL

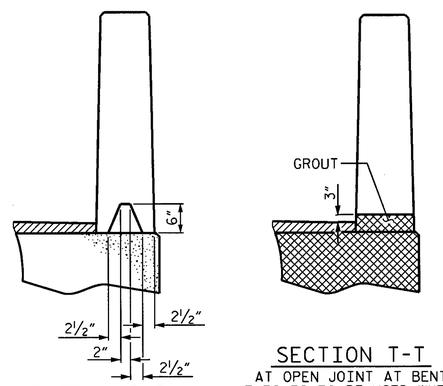

SECTION S-S

AT DAM IN OPEN JOINT
(THIS IS TO BE USED ONLY
WHEN SLIP FORM IS USED)

SECTION T-T

AT OPEN JOINT AT BENT
(THIS IS TO BE USED WHERE
FOAM JOINT IS NOT USED)

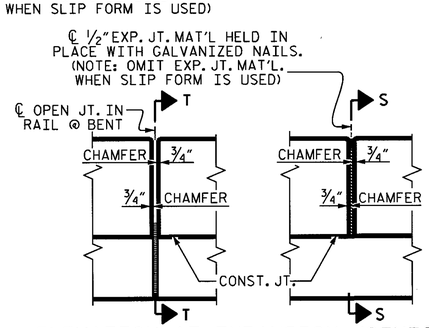

ELEVATION AT EXPANSION JOINTS

VERTICAL CONCRETE BARRIER RAIL DETAILS

BILL OF MATERIAL FOR VERTICAL CONCRETE BARRIER RAIL					
BAR	BARS PER PAIR OF EXTERIOR UNITS	SIZE	TYPE	LENGTH	WEIGHT
	90' UNIT				
*B10	192	#5	STR	13'-0"	2603
* S6	240	#5	1	7'-2"	1794
*EPOXY COATED REINFORCING STEEL			LBS.		4397
CLASS AA CONCRETE			CU.YDS.		24.2
TOTAL VERTICAL CONCRETE BARRIER RAIL			LN. FT.		180.0

GUTTERLINE ASPHALT THICKNESS & RAIL HEIGHT		
	ASPHALT OVERLAY THICKNESS @ MID-SPAN	RAIL HEIGHT @ MID-SPAN
90' UNITS	2" *	3'-10" *

*THICKNESS AT MID-SPAN REFLECTS THE EFFECTS OF THE VERTICAL CURVE. VERTICAL CURVE ORDINATE = 1"

PROJECT NO. W-5511

WILKES COUNTY

STATION: 20+40.50-L-

SHEET 5 OF 5

STATE OF NORTH CAROLINA
DEPARTMENT OF TRANSPORTATION
RALEIGH

3'-0" X 2'-9" PRESTRESSED CONCRETE BOX BEAM UNIT (SPAN A)

NORTH CAROLINA PROFESSIONAL SEAL 15825 ENGINEER D. K. LAPPENBACH
2-27-2014

REVISIONS						SHEET NO.
NO.	BY:	DATE:	NO.	BY:	DATE:	S-9
1			3			TOTAL SHEETS
2			4			23

ASSEMBLED BY :	H. T. BARBOUR	DATE :	12-9-13
CHECKED BY :	S. B. WILLIAMS	DATE :	2-19-14
DRAWN BY :	DGE 10/11		
CHECKED BY :	TMG 11/11		

27-FEB-2014 11:28
R:\Structures\Plans\tbarbour\Microstation\B05111Y_SD_TS.dgn
bklappenbach

STD. NO. 33PCBB8_60&120S

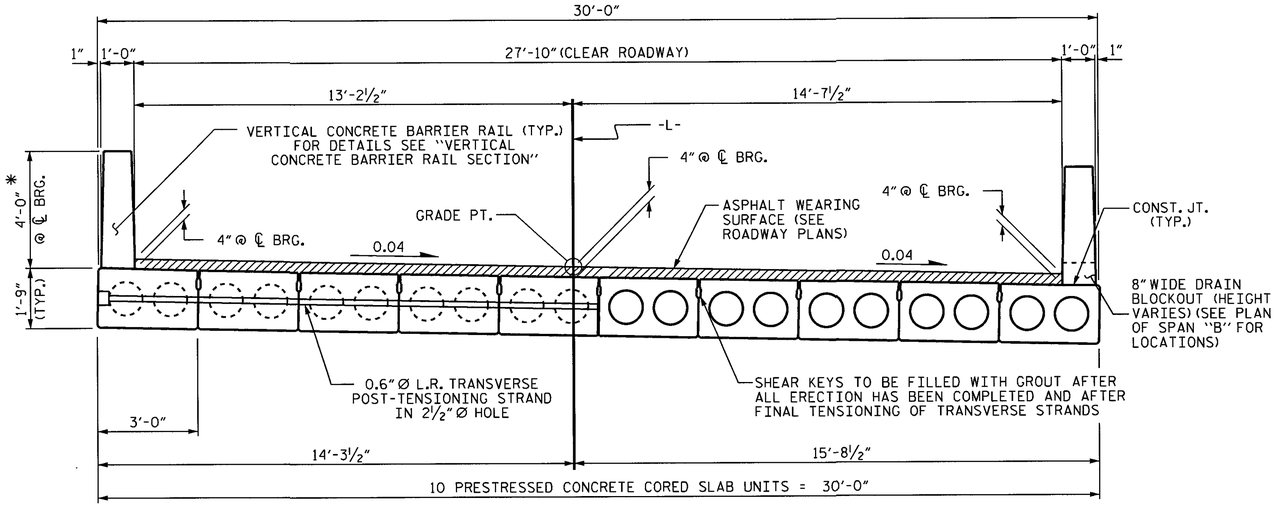

HALF SECTION
AT INTERMEDIATE DIAPHRAGMS

HALF SECTION
THROUGH VOIDS

TYPICAL SECTION

* - THE MAXIMUM BARRIER RAIL HEIGHT AND ASPHALT THICKNESS IS SHOWN. THE HEIGHT OF THE BARRIER RAIL AND ASPHALT THICKNESS VARIES WHILE THE TOP OF THE BARRIER RAIL FOLLOWS THE PROFILE OF THE GUTTERLINE. FOR RAIL HEIGHT DETAILS AND ASPHALT THICKNESS SEE THE "VERTICAL CONCRETE BARRIER RAIL SECTION" DETAIL.

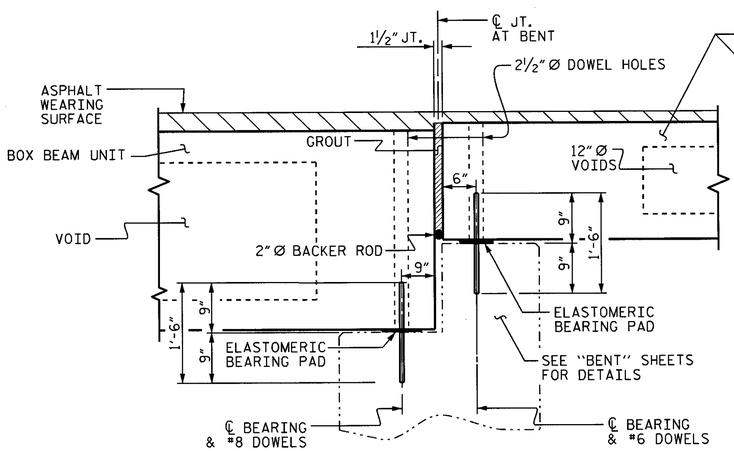

SECTION AT BENT

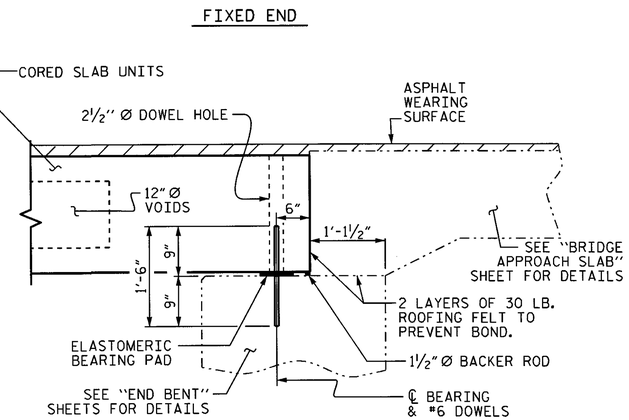

SECTION AT END BENT NO. 2

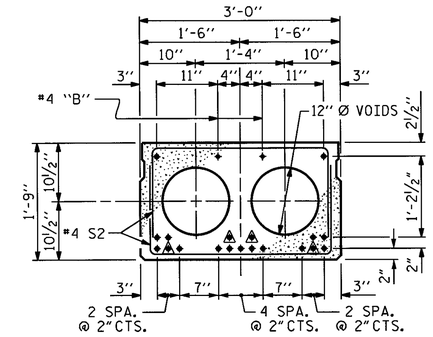

INTERIOR SLAB SECTION
(55' UNIT)
(19 STRANDS REQUIRED)

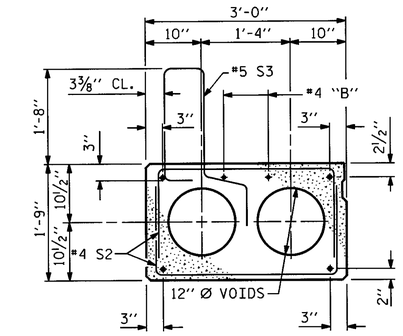

EXT. SLAB SECTION

(FOR PRESTRESSED STRAND LAYOUT, SEE INTERIOR SLAB SECTION.)

0.6" Ø LOW RELAXATION STRAND LAYOUT

▲ BOND SHALL BE BROKEN ON THESE STRANDS FOR A DISTANCE OF 6'-0" FROM END OF CORED SLAB UNIT. SEE STANDARD SPECIFICATIONS, ARTICLE 1078-7.

DEBONDING LEGEND

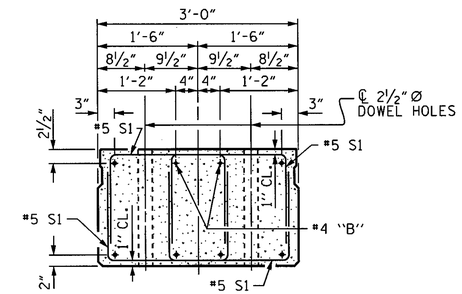

END ELEVATION

SHOWING PLACEMENT OF DOUBLE STIRRUPS AND LOCATION OF DOWEL HOLES. (STRAND LAYOUT NOT SHOWN.) INTERIOR SLAB UNIT SHOWN-EXTERIOR SLAB UNIT SIMILAR EXCEPT SHEAR KEY LOCATION.

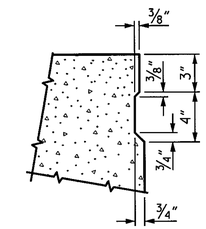

SHEAR KEY DETAIL

NOTE: OMIT SHEAR KEY ON OUTSITE FACE OF EXTERIOR CORED SLABS.

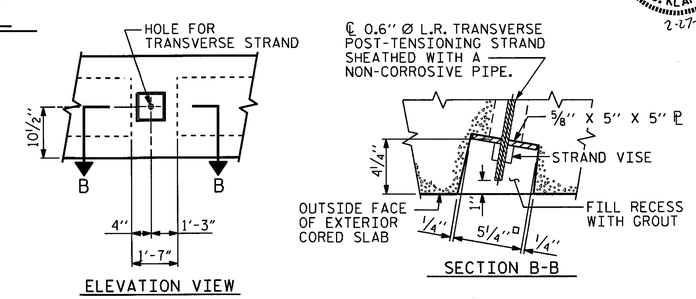

GROUTED RECESS AT END OF POST-TENSIONED STRAND OF CORED SLABS

NORTH CAROLINA PROFESSIONAL SEAL 15825 ENGINEER BRUCE D. KLAPPENBACH
2-27-2014

PROJECT NO. W-5511
WILKES COUNTY
STATION: 20+40.50-L-

SHEET 1 OF 3

STATE OF NORTH CAROLINA
DEPARTMENT OF TRANSPORTATION
RALEIGH

3'-0" X 1'-9"
PRESTRESSED CONCRETE
CORED SLAB UNIT
120° SKEW
(SPAN B)

REVISIONS						SHEET NO.
NO.	BY:	DATE:	NO.	BY:	DATE:	S-10
1			3			TOTAL SHEETS
2			4			23

ASSEMBLED BY : H. T. BARBOUR		DATE : 12-9-13	
CHECKED BY : S. B. WILLIAMS		DATE : 2-19-14	
DRAWN BY : DGE 5/09	REV. 12/11	MAA/AAC	
CHECKED BY : BCH 6/09			

27-FEB-2014 11:28
R:\Structures\Plans\tbarbour\Microstation\BD5111Y_SD_TS.dgn
bklappenbach

STD. NO. 21" PCS2_30_120S

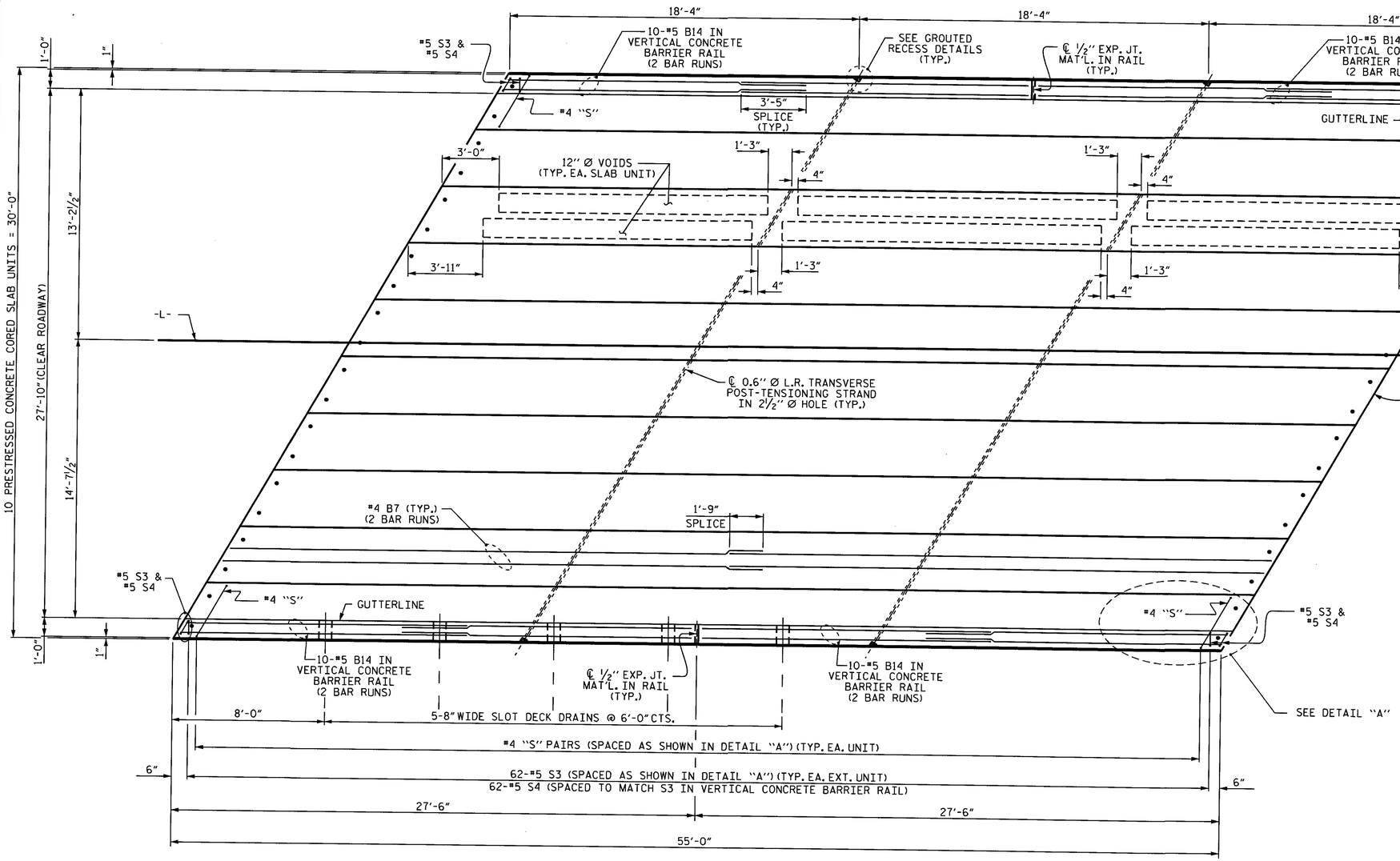

PLAN OF UNIT

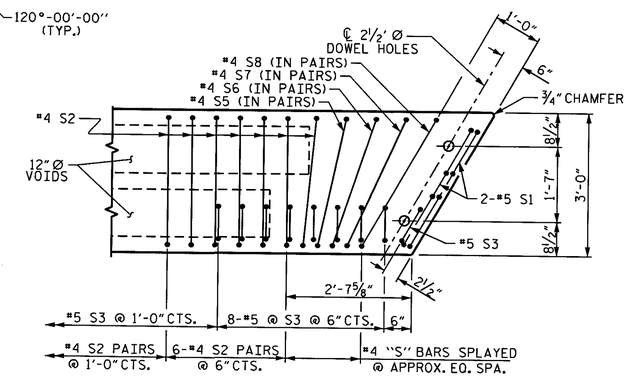

DETAIL "A"

NOTE: EXTERIOR UNIT SHOWN - INTERIOR UNIT SIMILAR EXCEPT OMIT #5 S3 BARS.

PROJECT NO. W-5511

WILKES COUNTY

STATION: 20+40.50-L-

SHEET 2 OF 3

STATE OF NORTH CAROLINA
DEPARTMENT OF TRANSPORTATION
RALEIGH

PLAN OF 55' UNIT
27'-10" CLEAR ROADWAY
120° SKEW
(SPAN B)

NORTH CAROLINA PROFESSIONAL SEAL 15826 ENGINEER BRUCE O. KLAPPENBACH
2-27-2014

REVISIONS							
NO.	BY:	DATE:	NO.	BY:	DATE:	SHEET NO. S-11
1			3			TOTAL SHEETS 23
2			4			

ASSEMBLED BY : H. T. BARBOUR		DATE : 12-9-13	
CHECKED BY : S. B. WILLIAMS		DATE : 2-19-14	
DRAWN BY : DGE 3/09	REV. 12/5/11	MAA/AAC	
CHECKED BY : BCH 3/09			

27-FEB-2014 11:28
R:\Structures\Plans\tbarbour\Microstation\BD5111Y_SD_TS.dgn
bklappenbach

STD. NO. 21" PCS_30_120S_55L

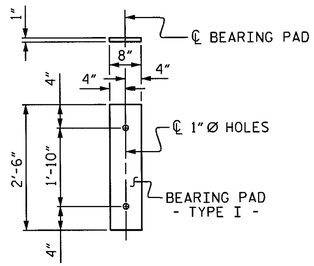

FIXED END
(TYPE I - 20 REQ'D)

ELASTOMERIC BEARING DETAILS

ELASTOMER IN ALL BEARINGS SHALL BE 50 DUROMETER HARDNESS.

CORED SLABS REQUIRED			
	NUMBER	LENGTH	TOTAL LENGTH
55' UNIT			
EXTERIOR C.S.	2	55'-0"	110'-0"
INTERIOR C.S.	8	55'-0"	440'-0"
TOTAL	10	——	550'-0"

DEAD LOAD DEFLECTION AND CAMBER	
	3'-0" x 1'-9"
55' CORED SLAB UNIT	0.6"Ø L.R. STRAND
CAMBER (SLAB ALONE IN PLACE)	2½" ↑
DEFLECTION DUE TO SUPERIMPOSED DEAD LOAD**	⅜" ↓
FINAL CAMBER	1 ⅞" ↑

** INCLUDES FUTURE WEARING SURFACE

BAR TYPES

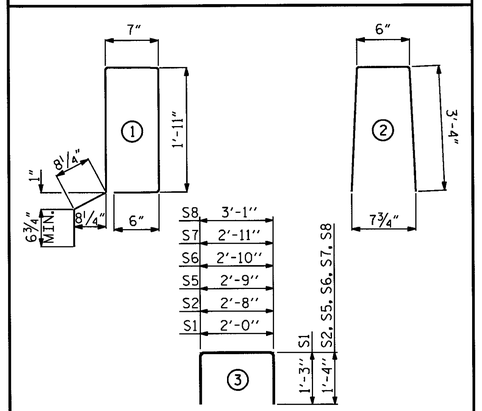

ALL BAR DIMENSIONS ARE OUT TO OUT

NOTES

ALL PRESTRESSING STRANDS SHALL BE 7-WIRE LOW RELAXATION GRADE 270 STRANDS AND SHALL CONFORM TO AASHTO M203 EXCEPT FOR SAMPLING REQUIREMENTS WHICH SHALL BE IN ACCORDANCE WITH THE STANDARD SPECIFICATIONS.

ALL REINFORCING STEEL CAST WITH THE CORED SLAB SECTIONS SHALL BE GRADE 60 AND SHALL BE INCLUDED IN THE UNIT PRICE BID FOR PRESTRESSED CONCRETE CORED SLABS.

RECESSES FOR TRANSVERSE STRANDS SHALL BE GROUTED AFTER THE TENSIONING OF THE STRANDS.

THE 2½"Ø DOWEL HOLES AT FIXED ENDS OF SLAB SECTIONS SHALL BE FILLED WITH NON-SHRINK GROUT.

THE BACKER RODS SHALL CONFORM TO THE REQUIREMENTS OF TYPE M BOND BREAKER. SEE SECTION 1028 OF THE STANDARD SPECIFICATIONS.

WHEN CORED SLABS ARE CAST, AN INTERNAL HOLD-DOWN SYSTEM SHALL BE EMPLOYED TO PREVENT VOIDS FROM RISING OR MOVING SIDEWAYS. AT LEAST SIX WEEKS PRIOR TO CASTING CORED SLABS, THE CONTRACTOR SHALL SUBMIT TO THE ENGINEER FOR REVIEW AND COMMENT, DETAILED DRAWINGS OF THE PROPOSED HOLD-DOWN SYSTEM. IN ADDITION TO STRUCTURAL DETAILS, LOCATION AND SPACING OF THE HOLD-DOWNS SHALL BE INDICATED.

ALL REINFORCING STEEL IN THE VERTICAL CONCRETE BARRIER RAIL SHALL BE EPOXY COATED.

PRESTRESSING STRANDS SHALL BE CUT FLUSH WITH THE CORED SLAB UNIT ENDS.

APPLY EPOXY PROTECTIVE COATING TO CORED SLAB UNIT ENDS.

GROOVED CONTRACTION JOINTS, ½" IN DEPTH, SHALL BE TOOLED IN ALL EXPOSED FACES OF THE BARRIER RAIL AND IN ACCORDANCE WITH ARTICLE 825-10(B) OF THE STANDARD SPECIFICATIONS. A CONTRACTION JOINT SHALL BE LOCATED AT EACH THIRD POINT BETWEEN BARRIER RAIL EXPANSION JOINTS. ONLY ONE CONTRACTION JOINT IS REQUIRED AT MIDPOINT OF BARRIER RAIL SEGMENTS LESS THAN 20 FEET IN LENGTH AND NO CONTRACTION JOINTS ARE REQUIRED FOR THOSE SEGMENTS LESS THAN 10 FEET IN LENGTH.

TRANSVERSE POST TENSIONING OF THE CORED SLAB UNITS SHALL BE DONE IN ACCORDANCE WITH THE STANDARD SPECIFICATIONS.

THE TRANSFER OF LOAD FROM THE ANCHORAGES TO THE CORED SLAB UNIT SHALL BE DONE WHEN THE CONCRETE HAS REACHED A COMPRESSIVE STRENGTH OF NOT LESS THAN THE REQUIRED STRENGTH SHOWN IN THE "CONCRETE RELEASE STRENGTH" TABLE.

FOR GROUT FOR STRUCTURES, SEE SPECIAL PROVISIONS.

THE DRAIN OPENING AT THE GUTTERLINE SHALL BE 4" X 8". THE HEIGHT OF THE BLOCKOUT IN THE VERTICAL CONCRETE BARRIER RAIL SHALL EXTEND FROM THE TOP OF THE CORED SLAB UNIT TO THE TOP OF THE DRAIN OPENING.

APPLY EPOXY PROTECTIVE COATING TO EXTERIOR FACE OF THE EXTERIOR CORED SLAB UNITS THAT REQUIRE DRAINS IN THE BARRIER RAIL.

BILL OF MATERIAL FOR VERTICAL CONCRETE BARRIER RAIL						
BAR	BARS PER PAIR OF EXTERIOR UNITS	TOTAL NO.	SIZE	TYPE	LENGTH	WEIGHT
	55' UNIT					
*B14	80	80	#5	STR	15'-6"	1293
* S4	128	128	#5	2	7'-2"	957
* EPOXY COATED REINFORCING STEEL				LBS.		2250
CLASS AA CONCRETE				CU.YDS.		14.4
TOTAL VERTICAL CONCRETE BARRIER RAIL				LN. FT.		110.29

BILL OF MATERIAL FOR ONE 55' CORED SLAB UNIT							
				EXTERIOR UNIT		INTERIOR UNIT	
BAR	NUMBER	SIZE	TYPE	LENGTH	WEIGHT	LENGTH	WEIGHT
B7	4	#4	STR	28'-3"	75	28'-3"	75
S1	8	#5	3	4'-6"	38	4'-6"	38
S2	112	#4	3	5'-4"	399	5'-4"	399
* S3	64	#5	1	6'-2"	412		
S5	4	#4	3	5'-5"	14	5'-5"	14
S6	4	#4	3	5'-6"	15	5'-6"	15
S7	4	#4	3	5'-7"	15	5'-7"	15
S8	4	#4	3	5'-9"	15	5'-9"	15
REINFORCING STEEL			LBS.		571		571
* EPOXY COATED REINFORCING STEEL			LBS.		412		
6500 P.S.I. CONCRETE			CU. YDS.		8.0		8.0
0.6"Ø L.R. STRANDS			No.		19		19

GUTTERLINE ASPHALT THICKNESS & RAIL HEIGHT		
27'-10" CLEAR ROADWAY	ASPHALT OVERLAY THICKNESS	RAIL HEIGHT
	@ MID-SPAN	@ MID-SPAN
	SUPERED SECTION	
55' UNITS	1¾" *	3'-9¾" *

* THICKNESS AT MIDSPAN REFLECTS THE EFFECTS OF THE VERTICAL CURVE. VERTICAL CURVE ORDINATE = ⅜"

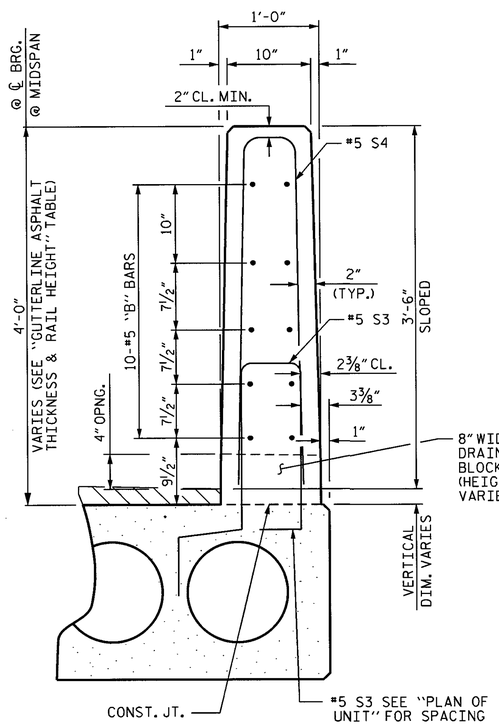

VERTICAL CONCRETE BARRIER RAIL SECTION

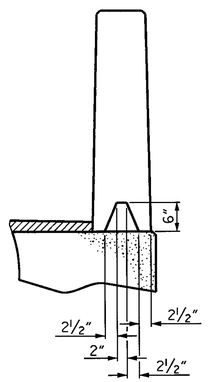

SECTION S-S
AT DAM IN OPEN JOINT
(THIS IS TO BE USED ONLY WHEN SLIP FORM IS USED)

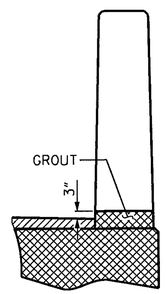

SECTION T-T
AT OPEN JOINT AT BENT
(THIS IS TO BE USED WHERE FOAM JOINT IS NOT USED)

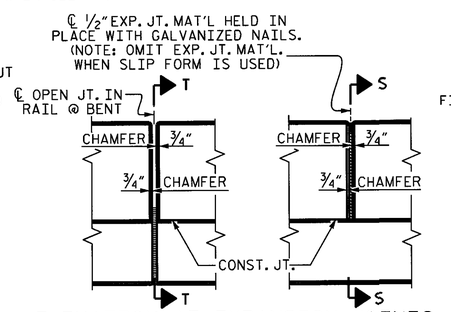

ELEVATION AT EXPANSION JOINTS

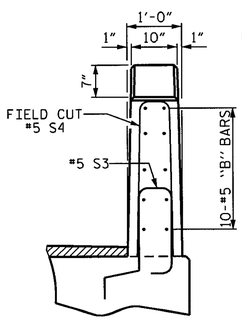

END VIEW

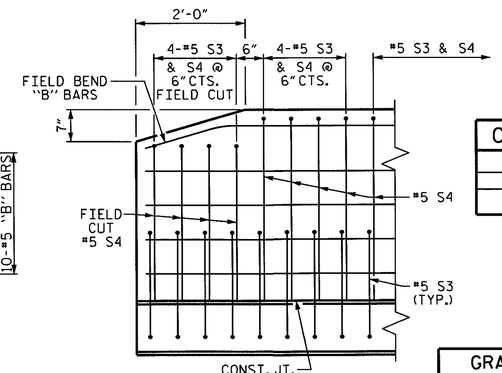

SIDE VIEW

END OF RAIL DETAILS

CONCRETE RELEASE STRENGTH	
UNIT	PSI
55' UNITS	4900

GRADE 270 STRANDS	
	0.6"Ø L.R.
AREA (SQUARE INCHES)	0.217
ULTIMATE STRENGTH (LBS. PER STRAND)	58,600
APPLIED PRESTRESS (LBS. PER STRAND)	43,950

NORTH CAROLINA PROFESSIONAL SEAL 15825 ENGINEER BRUCE D. KLAPPENBACH 2-27-2014

PROJECT NO. W-5511
WILKES COUNTY
STATION: 20+40.50-L-

SHEET 3 OF 3

STATE OF NORTH CAROLINA
DEPARTMENT OF TRANSPORTATION
RALEIGH

STANDARD
3'-0" X 1'-9"
PRESTRESSED CONCRETE
CORED SLAB UNIT
120° SKEW
(SPAN B)

REVISIONS						SHEET NO.
NO.	BY:	DATE:	NO.	BY:	DATE:	S-12
1			3			TOTAL SHEETS
2			4			23

ASSEMBLED BY : H. T. BARBOUR		DATE : 12-9-13	
CHECKED BY : S. B. WILLIAMS		DATE : 2-19-14	
DRAWN BY : DGE 5/09	REV. 12/11	MAA/AAC	
CHECKED BY : BCH 6/09			

27-FEB-2014 11:28
R:\Structures\Plans\tbarbour\Microstation\BD5111Y_SD_TS.dgn
bklappenbach

STD. NO. 21"PCS3_30_120S

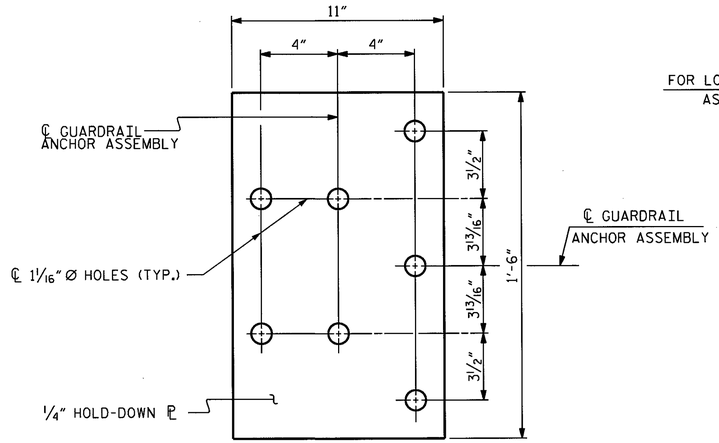

PLAN

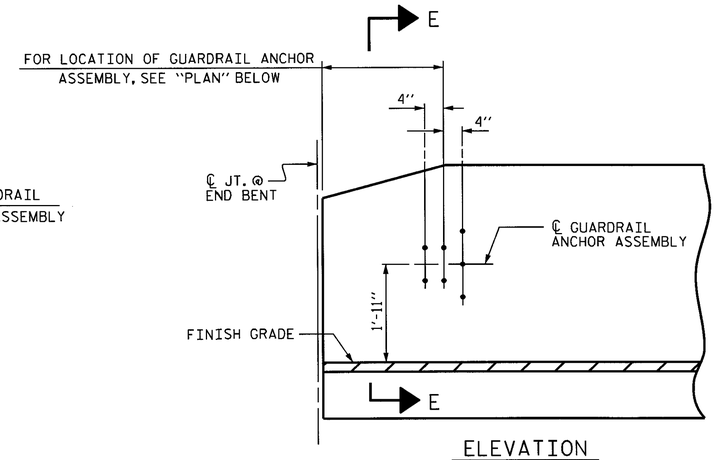

ELEVATION

NOTES

THE GUARDRAIL ANCHOR ASSEMBLY SHALL CONSIST OF A 1/4" HOLD DOWN PLATE AND 7 - 7/8" Ø BOLTS WITH NUTS AND WASHERS.

THE HOLD-DOWN PLATE SHALL CONFORM TO AASHTO M270 GRADE 36. AFTER FABRICATION, THE HOLD-DOWN PLATE SHALL BE HOT-DIP GALVANIZED IN ACCORDANCE WITH AASHTO M111.

BOLTS SHALL CONFORM TO THE REQUIREMENTS OF ASTM A307 AND NUTS SHALL CONFORM TO THE REQUIREMENTS OF AASHTO M291. BOLTS, NUTS AND WASHERS SHALL BE GALVANIZED. (AT THE CONTRACTOR'S OPTION, STAINLESS STEEL BOLTS, NUTS AND WASHERS MAY BE USED AS AN ALTERNATE FOR THE 7/8" Ø GALVANIZED BOLTS, NUTS AND WASHERS. THEY SHALL CONFORM TO OR EXCEED THE MECHANICAL REQUIREMENTS OF ASTM A307. THE USE OF THIS ALTERNATE SHALL BE APPROVED BY THE ENGINEER.)

THE GUARDRAIL ANCHOR ASSEMBLY IS REQUIRED AT ALL POINTS WHERE APPROACH GUARDRAIL IS TO BE ATTACHED TO THE END OF BARRIER RAIL. FOR POINTS OF ATTACHMENT, SEE SKETCH.

AFTER INSTALLATION, THE EXPOSED THREAD OF THE BOLT SHALL BE BURRED WITH A SHARP POINTED TOOL.

THE COST OF THE GUARDRAIL ANCHOR ASSEMBLY SHALL BE INCLUDED IN THE UNIT CONTRACT PRICE BID FOR VERTICAL CONCRETE BARRIER RAIL.

THE VERTICAL REINFORCING BARS MAY BE SHIFTED SLIGHTLY IN THE VERTICAL CONCRETE BARRIER RAIL TO CLEAR ASSEMBLY BOLTS.

THE 1 1/4" Ø HOLES SHALL BE FORMED OR DRILLED WITH A CORE BIT. IMPACT TOOLS WILL NOT BE PERMITTED. ANY CONCRETE DAMAGED BY THIS WORK SHALL BE REPAIRED TO THE SATISFACTION OF THE ENGINEER.

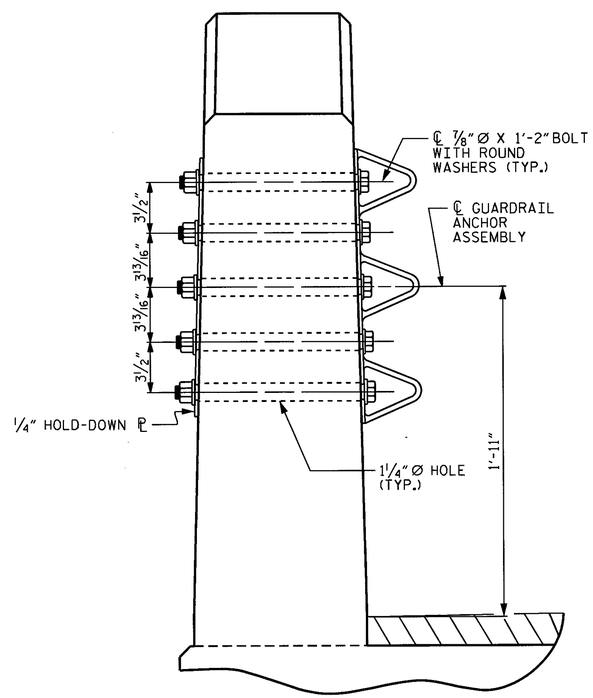

SECTION E-E

GUARDRAIL ANCHOR ASSEMBLY DETAILS

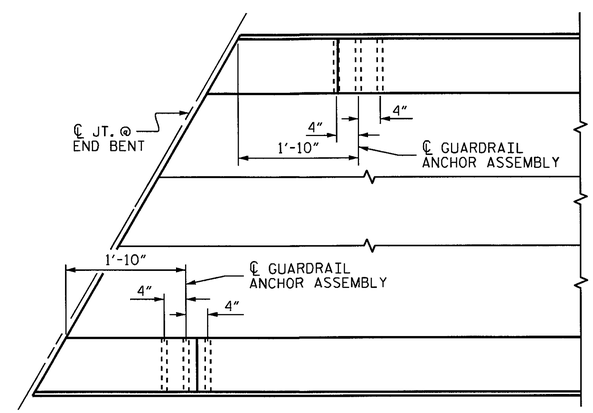

PLAN

LOCATION OF ANCHORS FOR GUARDRAIL

END BENT #1 SHOWN, END BENT #2 SIMILAR.

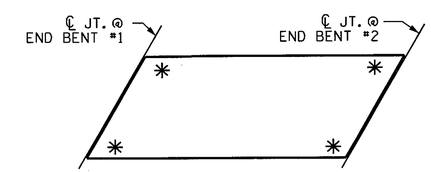

SKETCH SHOWING POINTS OF ATTACHMENT

✳ DENOTES GUARDRAIL ANCHOR ASSEMBLY

PROJECT NO. W-5511

WILKES COUNTY

STATION: 20+40.50-L-

STATE OF NORTH CAROLINA
DEPARTMENT OF TRANSPORTATION
RALEIGH

STANDARD
GUARDRAIL ANCHORAGE FOR VERTICAL CONCRETE BARRIER RAIL

NORTH CAROLINA PROFESSIONAL SEAL 15825 ENGINEER BRUCE D. KLAPPENBACH
2-27-2014

REVISIONS						SHEET NO.
NO.	BY:	DATE:	NO.	BY:	DATE:	S-13
1			3			TOTAL SHEETS
2			4			23

ASSEMBLED BY : H. T. BARBOUR		DATE :	12-9-13
CHECKED BY : S. B. WILLIAMS		DATE :	2-19-14
DRAWN BY : MAA 5/10	REV. 10/1/11		MAA/GM
CHECKED BY : GM 5/10	REV. 12/5/11		MAA/GM
	REV. 6/13		MAA/GM

27-FEB-2014 11:28
R:\Structures\Plans\tbarbour\Microstation\BD5111Y_SD_TS.dgn
bklappenbach

(SHT 2) STD. NO. GRA3

NOTES

STIRRUPS IN CAP MAY BE SHIFTED AS NECESSARY TO CLEAR DOWELS.

THE CONCRETE IN THE SHADED AREA OF THE WING SHALL BE POURED AFTER THE VERTICAL CONCRETE BARRIER RAIL IS CAST IF SLIP FORMING IS USED.

FOR PILE SPLICE DETAILS, SEE SHEET 4 OF 4.

FOR WING DETAILS, SEE SHEET 3 OF 4.

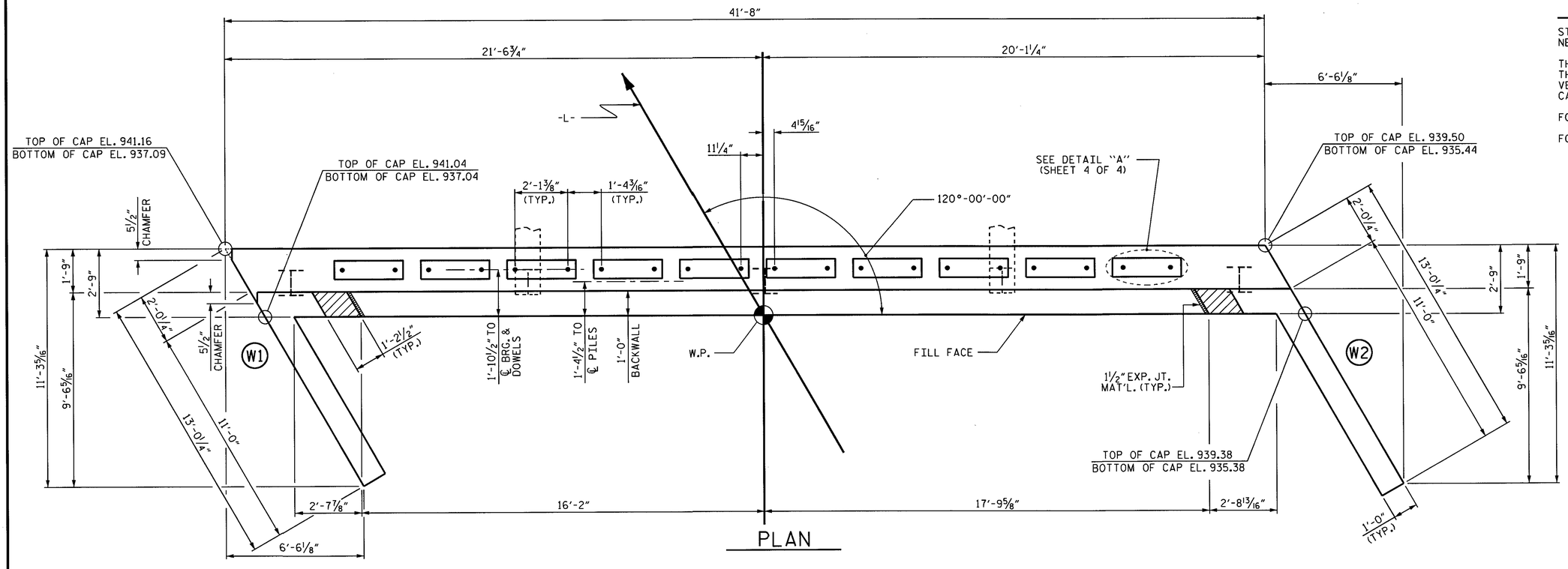

TOP OF PILE ELEVATIONS	
1	939.00
2	938.62
3	938.24
4	937.86
5	937.49

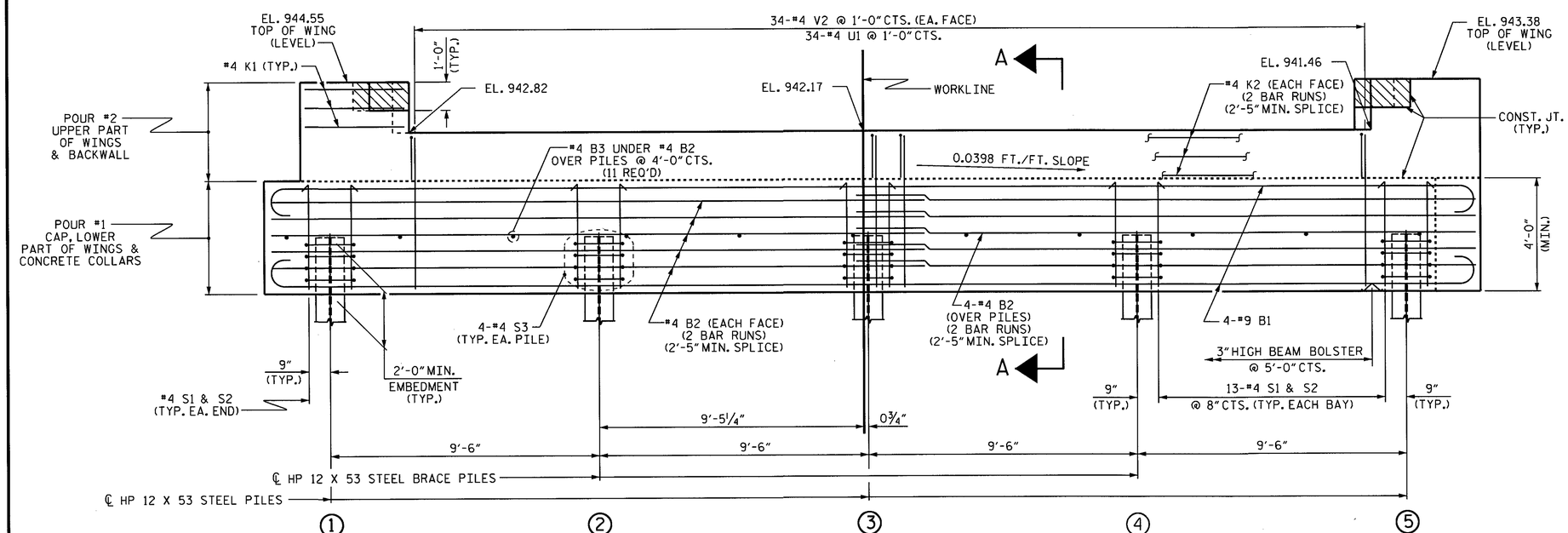

ELEVATION

WINGS NOT SHOWN FOR CLARITY.
FOR SECTION A-A, SEE SHEET 4 OF 4.
CONCRETE COLLARS FOR STEEL PILES NOT SHOWN IN PLAN AND ELEVATION VIEWS FOR CLARITY.
SEE "CORROSION PROTECTION FOR STEEL PILES DETAIL", SHEET 3 OF 3.

PROJECT NO. W-5511
WILKES COUNTY
STATION: 20+40.50-L-

SHEET 1 OF 3

STATE OF NORTH CAROLINA
DEPARTMENT OF TRANSPORTATION
RALEIGH

SUBSTRUCTURE

END BENT No. 1

NORTH CAROLINA PROFESSIONAL SEAL 15825 BRADLEY D. KLAPPENBACH
2-27-2014

ASSEMBLED BY :	H. T. BARBOUR	DATE :	1-15-14
CHECKED BY :	S. B. WILLIAMS	DATE :	2-19-14
DRAWN BY :	WJH	12/11	
CHECKED BY :	AAC	12/11	

REVISIONS								SHEET NO.
NO.	BY:	DATE:	NO.	BY:	DATE:			S-14
1			3					TOTAL SHEETS
2			4					23

27-FEB-2014 11:28
R:\Structures\Plans\tbarbour\Microstation\BD5111Y_SD_E*.dgn
bklappenbach

STD. NO. EB_30_120S4_33BB

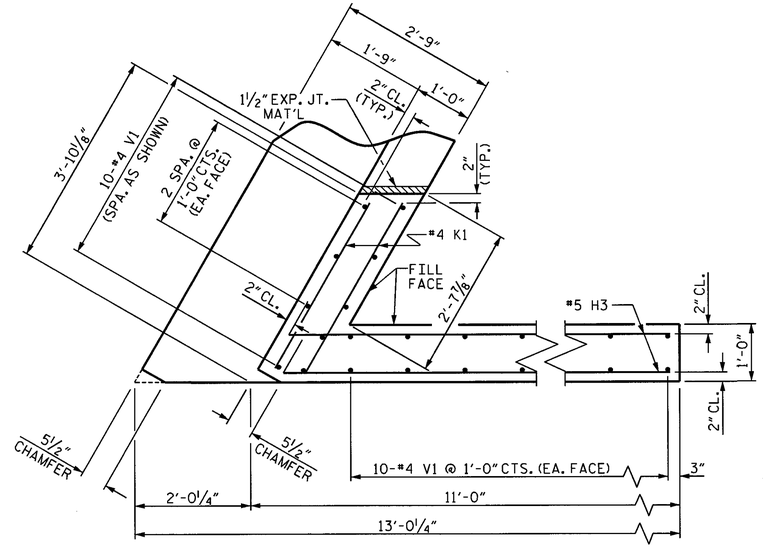

PLAN OF WING (W1)

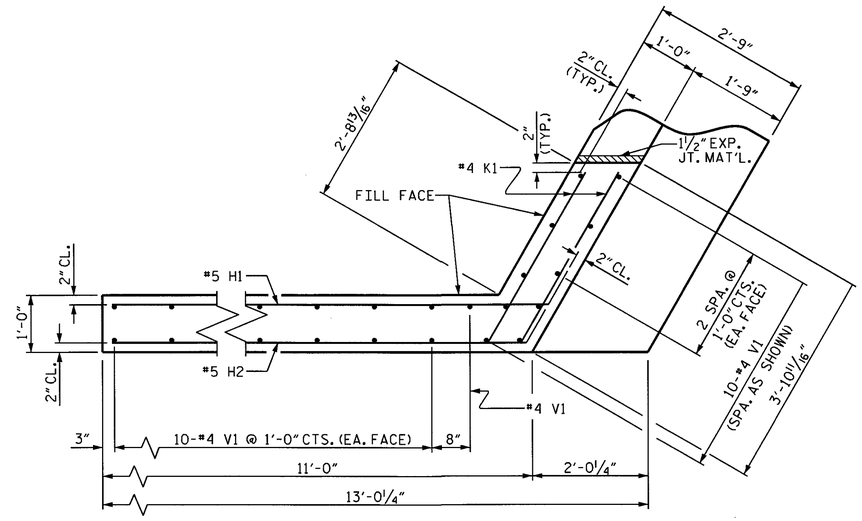

PLAN OF WING (W2)

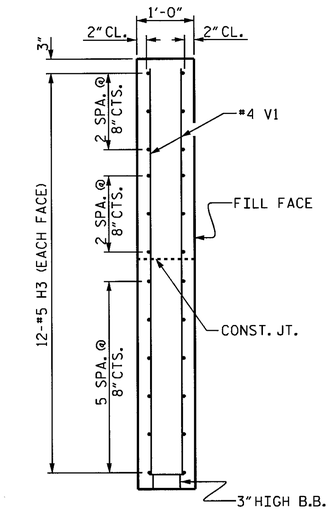

SECTION X-X

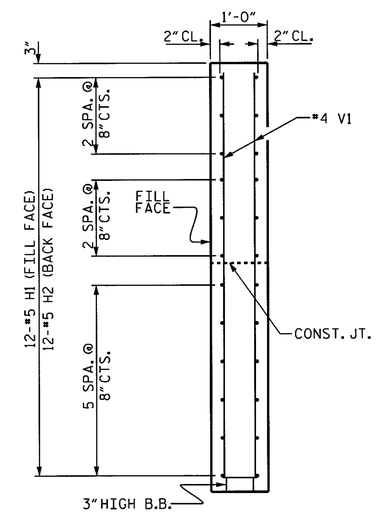

SECTION Y-Y

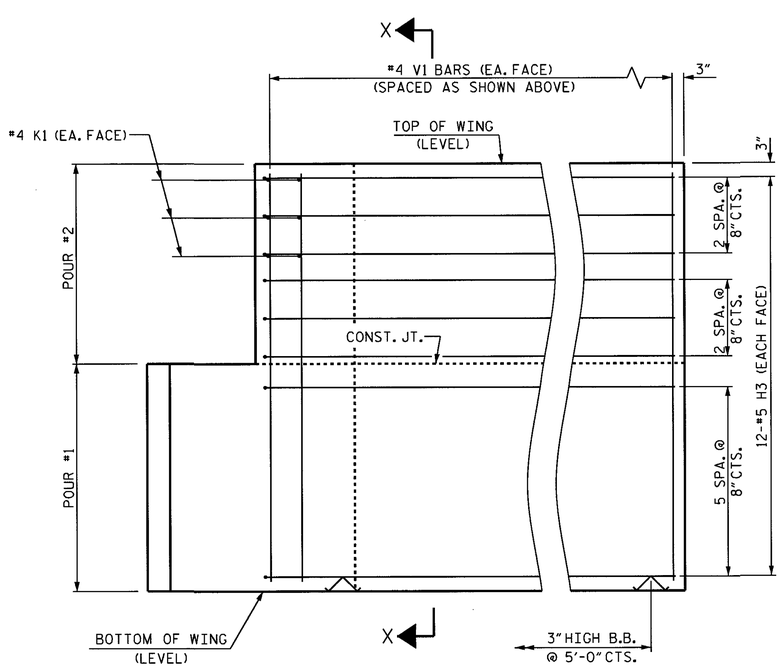

ELEVATION OF WING (W1)

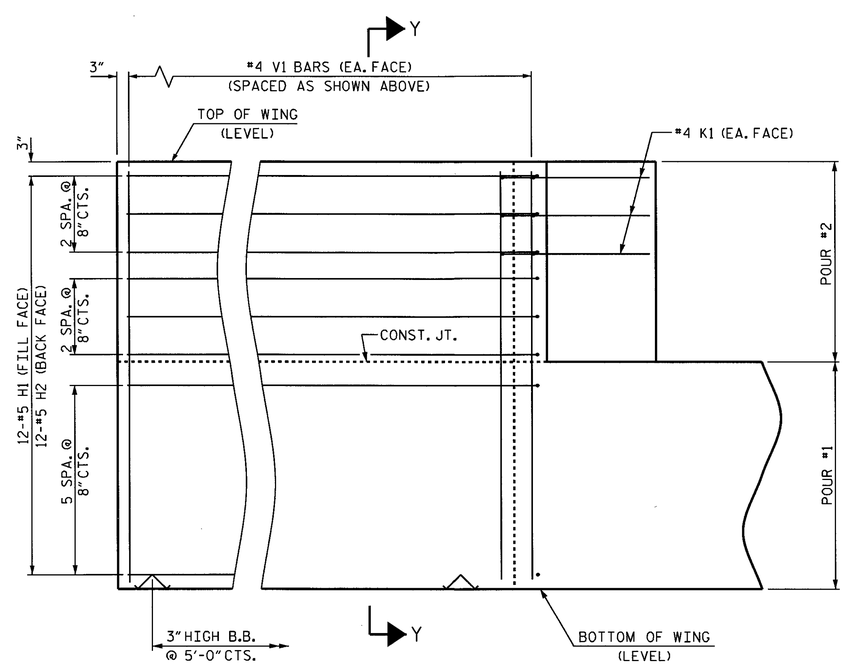

ELEVATION OF WING (W2)

WING DETAILS

PROJECT NO. W-5511

WILKES COUNTY

STATION: 20+40.50-L-

SHEET 2 OF 3

STATE OF NORTH CAROLINA
DEPARTMENT OF TRANSPORTATION
RALEIGH

SUBSTRUCTURE

END BENT NO. 1
WING DETAILS

NORTH CAROLINA PROFESSIONAL SEAL 15825 ENGINEER BRUCE D. KLAPPENBACH
2-27-2014

REVISIONS						SHEET NO.
NO.	BY:	DATE:	NO.	BY:	DATE:	S-15
1			3			TOTAL SHEETS
2			4			23

ASSEMBLED BY :	H. T. BARBOUR	DATE :	1-15-14
CHECKED BY :	S. B. WILLIAMS	DATE :	2-19-14
DRAWN BY :	WJH 12/11		
CHECKED BY :	AAC 12/11		

27-FEB-2014 11:28
R:\Structures\Plans\tbarbour\Microstation\BD5111Y_SD_E*.dgn
bklappenbach

STD. NO. EB_30_120S4_33BB

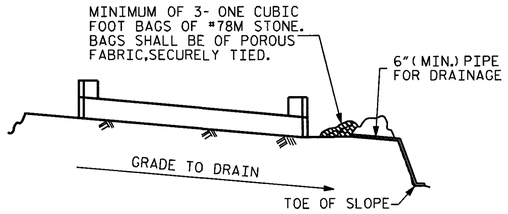

BAGGED STONE AND PIPE SHALL BE PLACED IMMEDIATELY AFTER COMPLETION OF END BENT EXCAVATION. PIPE MAY BE EITHER CONCRETE, CORRUGATED STEEL, CORRUGATED ALUMINUM ALLOY, OR CORRUGATED PLASTIC. PERFORATED PIPE WILL NOT BE ALLOWED.

BAGGED STONE SHALL REMAIN IN PLACE UNTIL THE ENGINEER DIRECTS THAT IT BE REMOVED. THE CONTRACTOR SHALL REMOVE AND DISPOSE OF SILT ACCUMULATIONS AT BAGGED STONE WHEN SO DIRECTED BY THE ENGINEER. BAGS SHALL BE REMOVED AND REPLACED WHENEVER THE ENGINEER DETERMINES THAT THEY HAVE DETERIORATED AND LOST THEIR EFFECTIVENESS.

NO SEPARATE PAYMENT WILL BE MADE FOR THIS WORK AND THE ENTIRE COST OF THIS WORK SHALL BE INCLUDED IN THE UNIT CONTRACT PRICE BID FOR THE SEVERAL PAY ITEMS.

TEMPORARY DRAINAGE AT END BENT

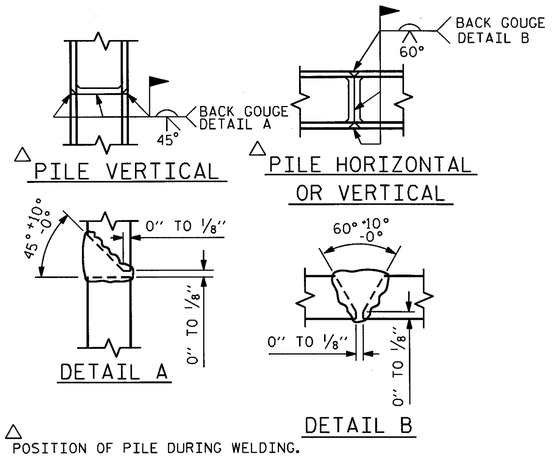

△ POSITION OF PILE DURING WELDING.

PILE SPLICE DETAILS

BAR TYPES

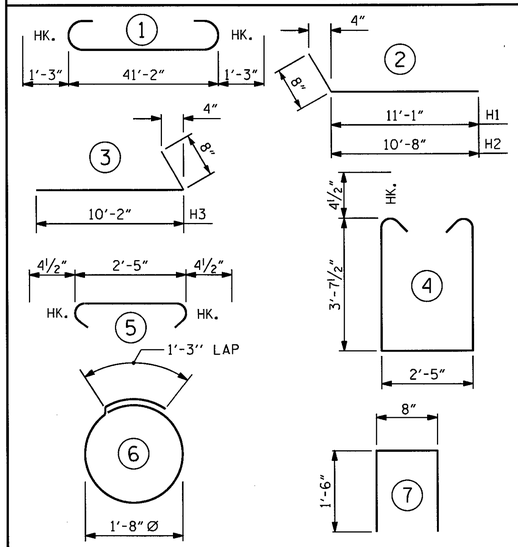

ALL BAR DIMENSIONS ARE OUT TO OUT.

END BENT No. 1
HP 12 X 53 STEEL PILES
NO: 5 LIN. FT.= 225

BILL OF MATERIAL

BAR	NO.	SIZE	TYPE	LENGTH	WEIGHT
B1	8	#9	1	43'-8"	1188
B2	28	#4	STR	21'-11"	410
B3	11	#4	STR	2'-5"	18
D1	20	#8	STR	2'-3"	120
H1	12	#5	2	11'-9"	147
H2	12	#5	2	11'-4"	142
H3	24	#5	3	10'-10"	271
K1	12	#4	STR	3'-3"	26
K2	12	#4	STR	21'-11"	176
S1	54	#4	4	10'-5"	376
S2	54	#4	5	3'-2"	114
S3	20	#4	6	6'-6"	87
U1	34	#4	7	3'-8"	83
V1	61	#4	STR	7'-2"	292
V2	68	#4	STR	5'-4"	242

REINFORCING STEEL (FOR ONE END BENT) 3692 LBS.

CLASS A CONCRETE BREAKDOWN (FOR ONE END BENT)

POUR #1 CAP, LOWER PART OF WINGS & COLLARS 20.8 C.Y.

POUR #2 BACKWALL & UPPER PART OF WINGS 5.7 C.Y.

TOTAL CLASS A CONCRETE 26.5 C.Y.

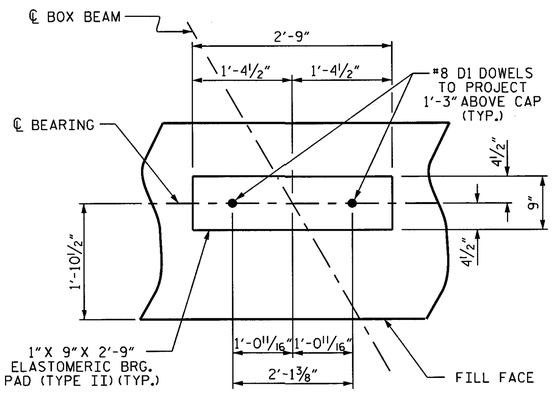

DETAIL "A"

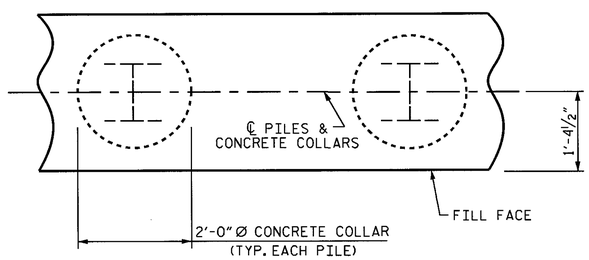

PLAN

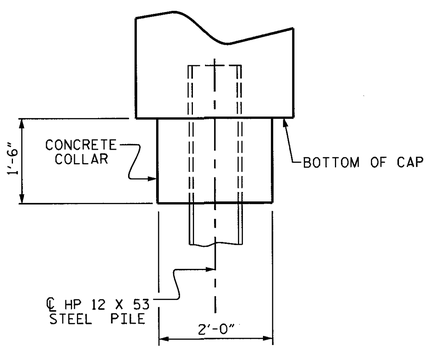

ELEVATION

CORROSION PROTECTION FOR STEEL PILES DETAIL

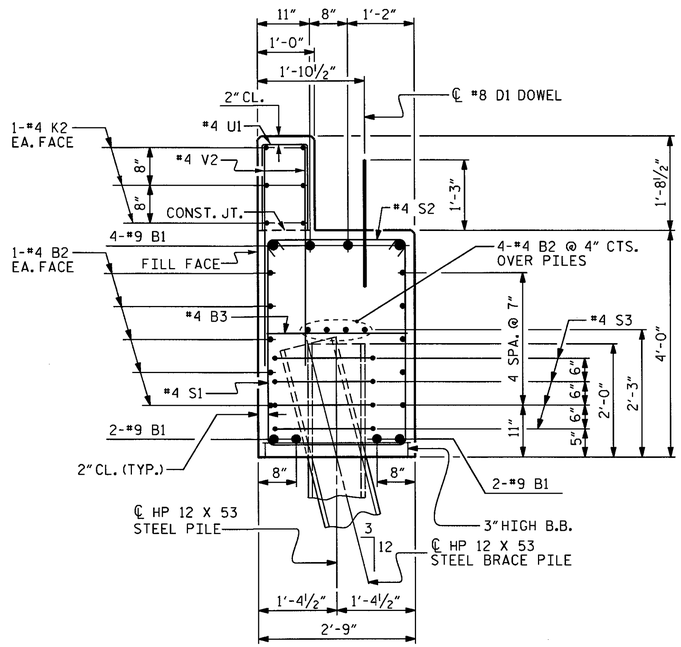

SECTION A-A

(CONCRETE COLLAR NOT SHOWN FOR CLARITY. SEE "CORROSION PROTECTION FOR STEEL PILES DETAIL.")

NORTH CAROLINA PROFESSIONAL SEAL 15825 ENGINEER D. KLAPPENBACH
2-27-2014

PROJECT NO. W-5511
WILKES COUNTY
STATION: 20+40.50-L-

SHEET 3 OF 3

STATE OF NORTH CAROLINA
DEPARTMENT OF TRANSPORTATION
RALEIGH

SUBSTRUCTURE

END BENT NO. 1
DETAILS

REVISIONS						SHEET NO.
NO.	BY:	DATE:	NO.	BY:	DATE:	S-16
1			3			TOTAL SHEETS
2			4			23

ASSEMBLED BY : H. T. BARBOUR DATE : 1-15-14
CHECKED BY : S. W. WILLIAMS DATE : 2-19-14
DRAWN BY : WJH 12/11
CHECKED BY : AAC 12/11

27-FEB-2014 11:28
R:\Structures\Plans\tbarbour\Microstation\BD5111Y_SD_E*.dgn
bklappenbach

STD. NO. EB_30_120S4_33BB

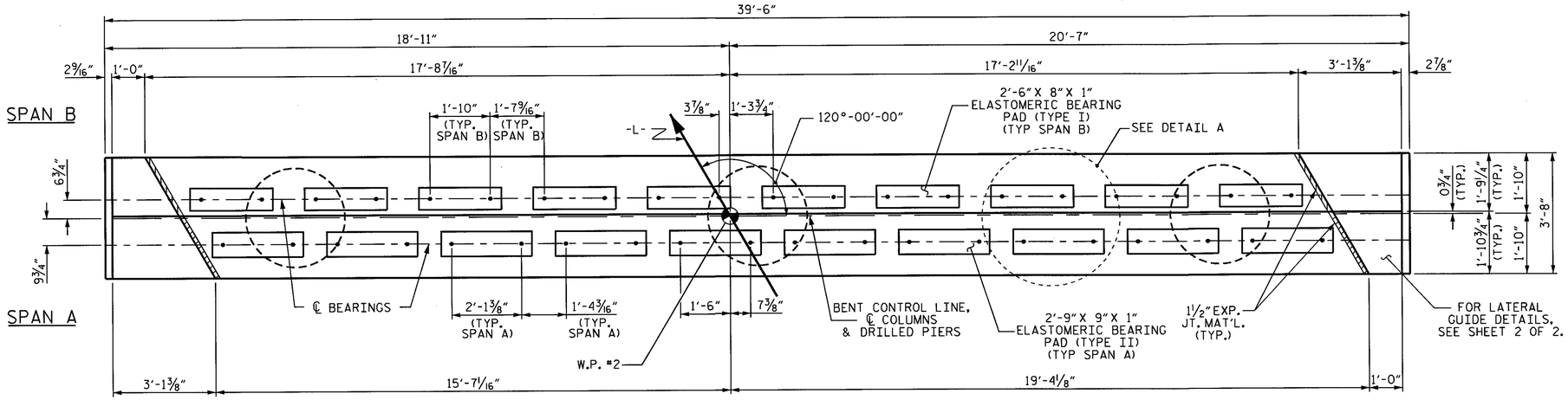

PLAN

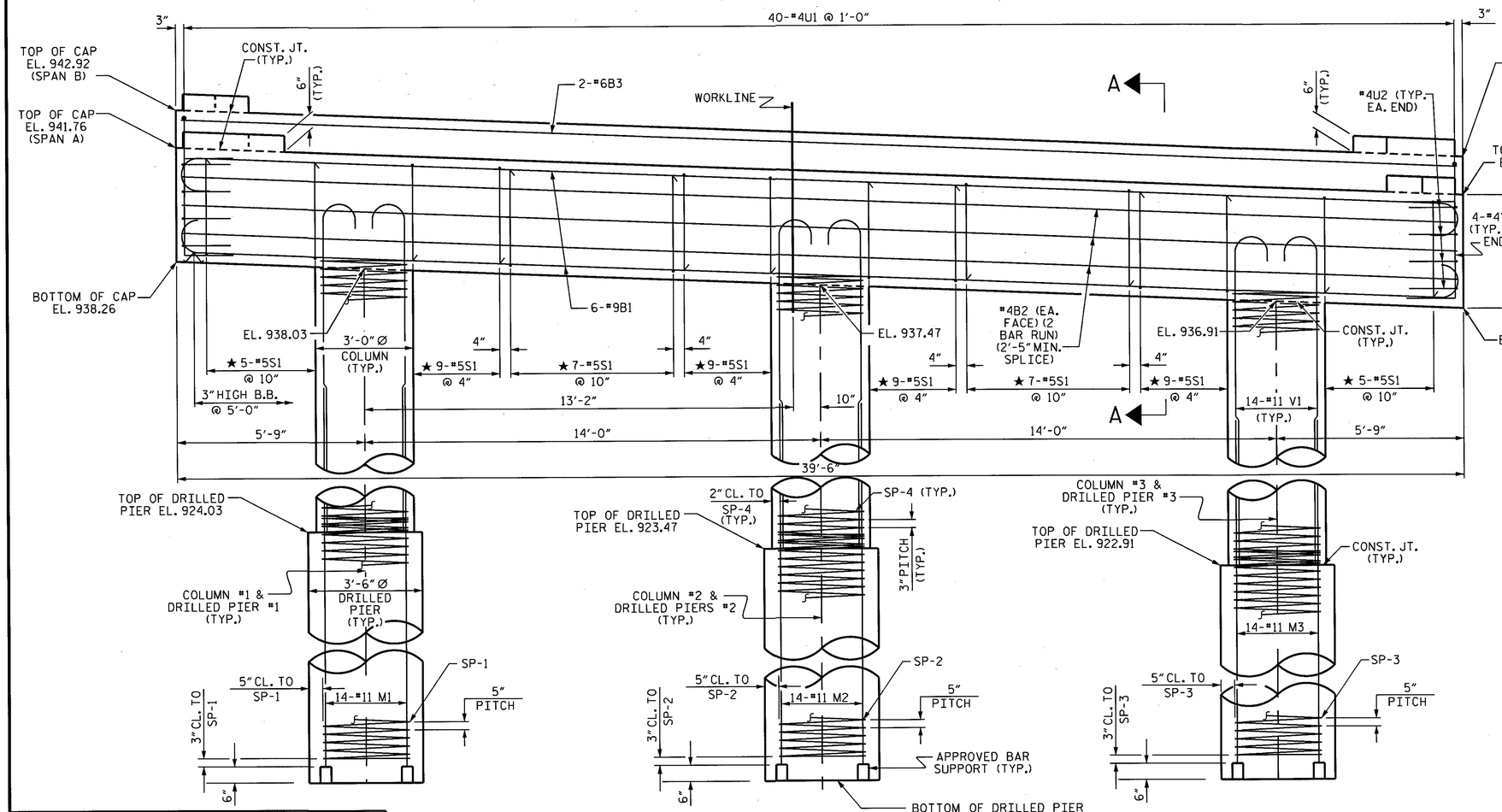

ELEVATION

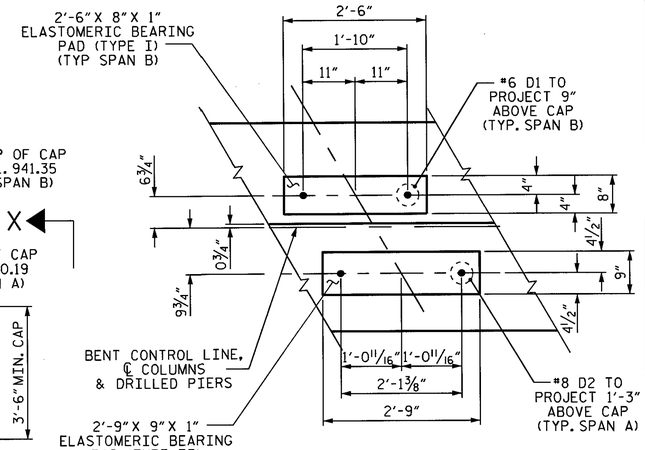

DETAIL A

(DIMENSIONS ARE TYPICAL EACH BEARING)

NOTES

STIRRUPS IN CAP MAY BE SHIFTED AS NECESSARY TO CLEAR DOWELS.

HOOKS ON "V" BARS MAY BE TURNED AS NECESSARY FOR PLACING REINFORCING STEEL.

ALL STEEL IN THE DRILLED PIERS IS INCLUDED IN THE PAY ITEMS FOR "REINFORCING STEEL" AND "SPIRAL COLUMN REINFORCING STEEL."

THE LATERAL GUIDES ARE NOT TO BE POURED UNTIL AFTER THE CORED SLAB UNITS ARE IN PLACE.

★ INVERT ALTERNATE STIRRUPS.

THE LOCATION OF THE CONSTRUCTION JOINT IN THE DRILLED PIERS IS BASED ON AN APPROXIMATE GROUND LINE ELEVATION. IF THE CONSTRUCTION JOINT IS ABOVE THE ACTUAL GROUND LINE ELEVATION, THE CONTRACTOR SHALL PLACE THE CONSTRUCTION JOINT ONE FOOT BELOW THE GROUND LINE.

THE CONTRACTOR'S ATTENTION IS CALLED TO THE FACT THAT THE LONGITUDINAL REINFORCEMENT FOR DRILLED PIERS IS DETAILED WITH 3 FEET OF EXTRA LENGTH.

PROJECT NO. W-5511

WILKES COUNTY

STATION: 20+40.50-L-

SHEET 1 OF 2

STATE OF NORTH CAROLINA
DEPARTMENT OF TRANSPORTATION
RALEIGH

SUBSTRUCTURE BENT NO. 1

NORTH CAROLINA PROFESSIONAL SEAL 15825 ENGINEER BRIAN K. KLAPPENBACH
3-21-2014

DRAWN BY : H. T. BARBOUR	DATE : 1-15-14
CHECKED BY : S. W. WILLIAMS	DATE : 2-25-14
DESIGN ENGINEER OF RECORD: S.T. CHAMPION	DATE : 2-25-14

REVISIONS						SHEET NO.
NO.	BY:	DATE:	NO.	BY:	DATE:	S-17
1			3			TOTAL SHEETS
2			4			23

21-MAR-2014 12:21
R:\Structures\Plans\tbarbour\Microstation\BD5111Y_SD_B*.dgn
bklappenbach

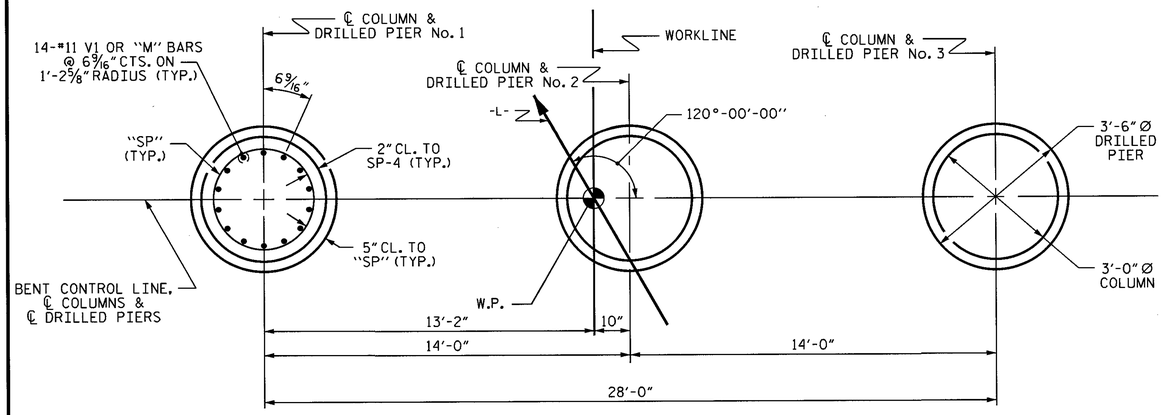

PLAN OF DRILLED PIERS & COLUMNS

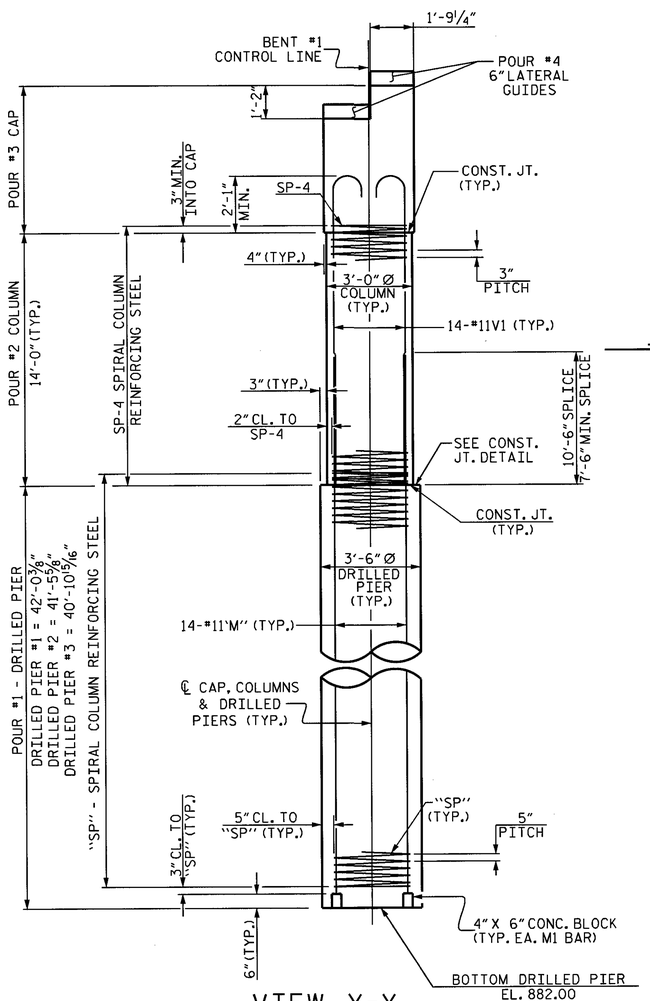

VIEW X-X

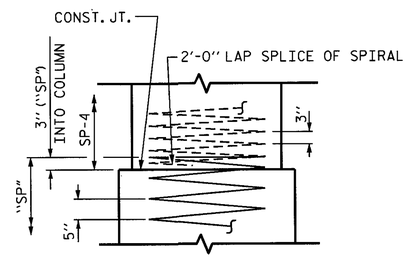

CONSTRUCTION JOINT DETAIL

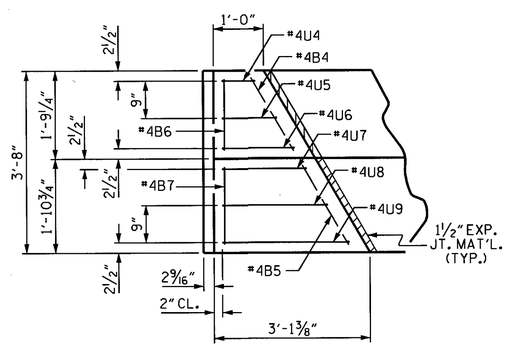

PLAN

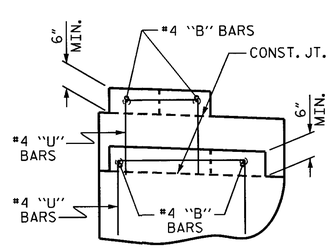

ELEVATION

LATERAL GUIDE DETAILS

(LEFT LATERAL GUIDE SHOWN, RIGHT SIDE SIMILAR)

BAR TYPES

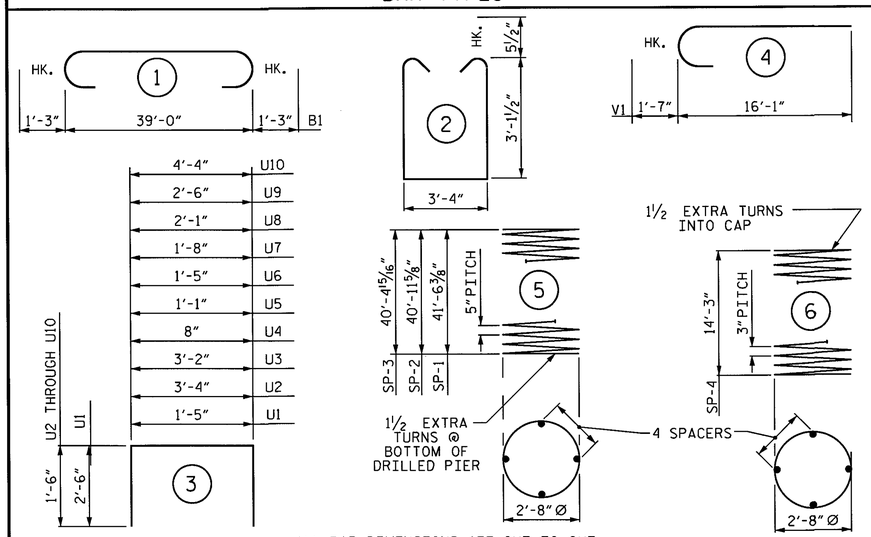

ALL BAR DIMENSIONS ARE OUT TO OUT

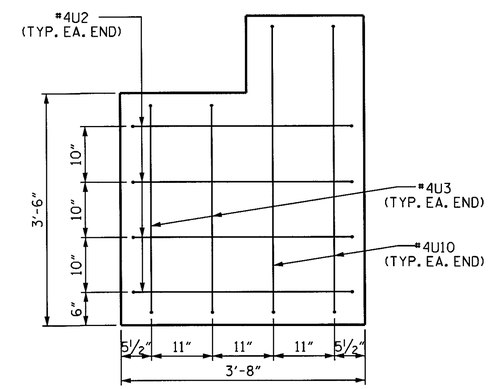

END OF CAP VIEW

(TYPICAL BOTH ENDS)

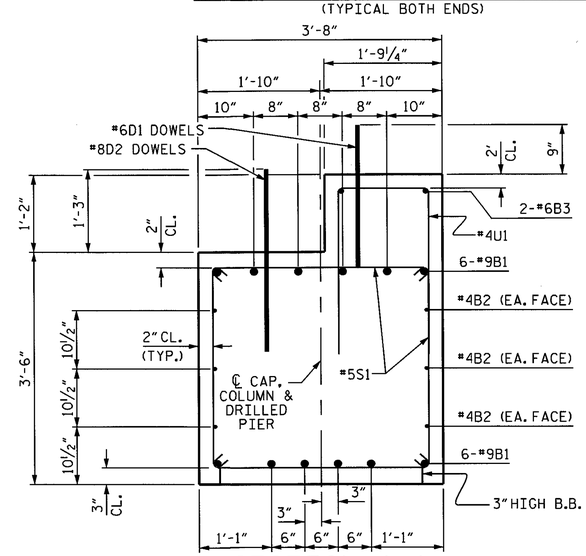

SECTION A-A

BILL OF MATERIAL

BAR	NO.	SIZE	TYPE	LENGTH	WEIGHT
B1	12	#9	1	41'-6"	1693
B2	12	#5	STR	20'-10"	167
B3	2	#6	STR	39'-2"	118
B4	2	#4	STR	1'-8"	2
B5	2	#4	STR	1'-10"	2
B6	2	#4	STR	1'-5"	2
B7	2	#4	STR	1'-6"	2
D1	20	#6	STR	1'-6"	45
D2	20	#8	STR	2'-3"	120
M1	14	#11	STR	52'-1"	3874
M2	14	#11	STR	51'-6"	3831
M3	14	#11	STR	50'-11"	3787
S1	60	#5	2	10'-6"	657
U1	40	#4	3	6'-5"	171
U2	8	#4	3	6'-4"	34
U3	4	#4	3	6'-2"	16
U4	2	#4	3	3'-8"	5
U5	2	#4	3	4'-1"	5
U6	2	#4	3	4'-5"	6
U7	2	#4	3	4'-8"	6
U8	2	#4	3	5'-1"	7
U9	2	#4	3	5'-6"	7
U10	4	#4	3	7'-4"	20
V1	42	#11	4	17'-8"	3942
REINFORCING STEEL					18519 LBS.
SP-1	1	*	5	830'-5"	866
SP-2	1	*	5	819'-5"	855
SP-3	1	*	5	808'-7"	843
SP-4	3	**	6	482'-8"	967
SPIRAL COLUMN REINFORCING STEEL					3531 LBS.

* THE SP-1, SP-2 & SP-3 SPIRAL REINFORCING STEEL SHALL BE W31 OR D-31 COLD DRAWN WIRE OR #5 PLAIN OR DEFORMED BAR

** THE SP-4 SPIRAL REINFORCING STEEL SHALL BE W20 OR D-20 COLD DRAWN WIRE OR #4 PLAIN OR DEFORMED BAR

CLASS A CONCRETE BREAKDOWN	
POUR #2 (COLUMNS)	11.0 C.Y.
POUR #3 (CAP)	21.8 C.Y.
POUR #4 (LATERAL GUIDE)	0.3 C.Y.
TOTAL CLASS A CONCRETE	33.1 C.Y.

DRILLED PIER CONCRETE	
POUR #1 (DRILLED PIERS)	44.3 C.Y.
3'-6" Ø DRILLED PIER NOT IN SOIL	45.0 LIN. FT.
3'-6" Ø DRILLED PIER IN SOIL	79.4 LIN. FT.
PERMANENT STEEL CASING FOR 3'-6" Ø DRILLED PIER	40.4 LIN. FT.
CSL TUBES	515.4 LIN. FT.

PROJECT NO. W-5511

WILKES COUNTY

STATION: 20+40.50-L-

SHEET 2 OF 2

STATE OF NORTH CAROLINA
DEPARTMENT OF TRANSPORTATION
RALEIGH

SUBSTRUCTURE

BENT No. 1

NORTH CAROLINA PROFESSIONAL SEAL 15825 ENGINEER D. KL APPENBACH
2-27-2014

REVISIONS								SHEET NO.
NO.	BY:	DATE:	NO.	BY:	DATE:			S-18
1			3					TOTAL SHEETS
2			4					23

DRAWN BY :	H. T. BARBOUR	DATE :	1-31-14
CHECKED BY :	S. W. WILLIAMS	DATE :	2-25-14
DESIGN ENGINEER OF RECORD:	S. T. CHAMPION	DATE :	2-25-14

27-FEB-2014 11:28
R:\Structures\Plans\tbarbour\Microstation\BD5111Y_SD_B*.dgn
bklappenbach

NOTES

STIRRUPS IN CAP MAY BE SHIFTED AS NECESSARY TO CLEAR DOWELS.

THE CONCRETE IN THE SHADED AREA OF THE WING SHALL BE POURED AFTER THE VERTICAL CONCRETE BARRIER RAIL IS CAST IF SLIP FORMING IS USED.

FOR PILE SPLICE DETAILS, SEE SHEET 4 OF 4.

FOR WING DETAILS, SEE SHEET 3 OF 4.

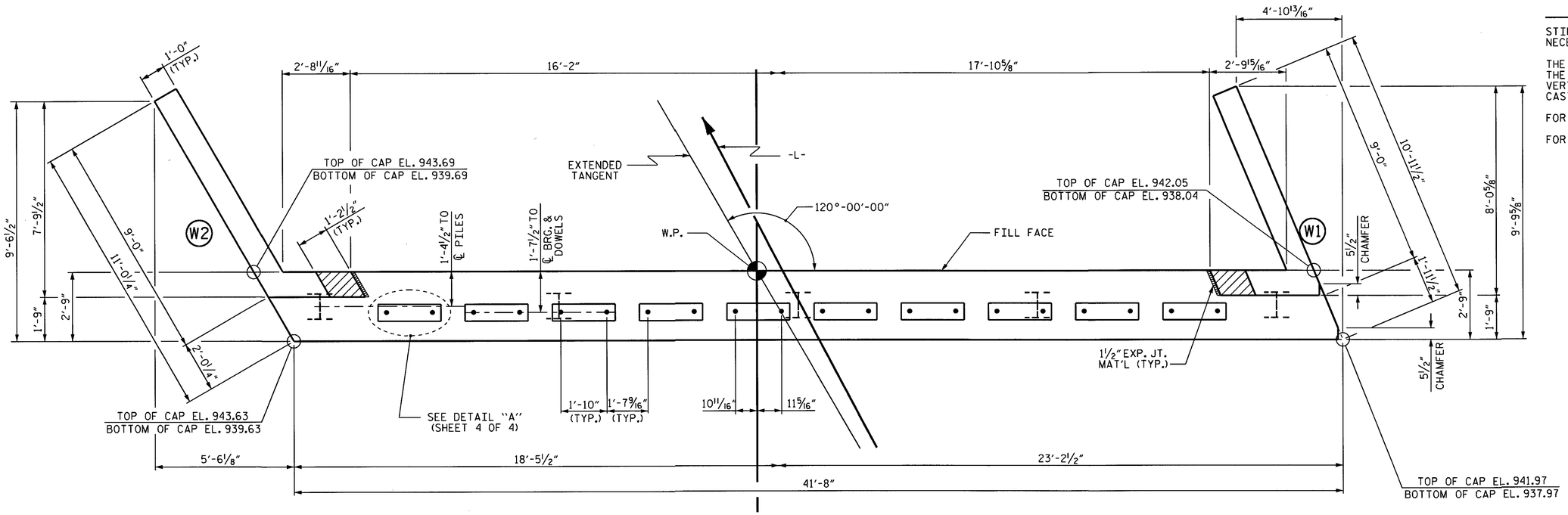

PLAN

TOP OF PILE ELEVATIONS	
1	941.59
2	941.21
3	940.83
4	940.45
5	940.07

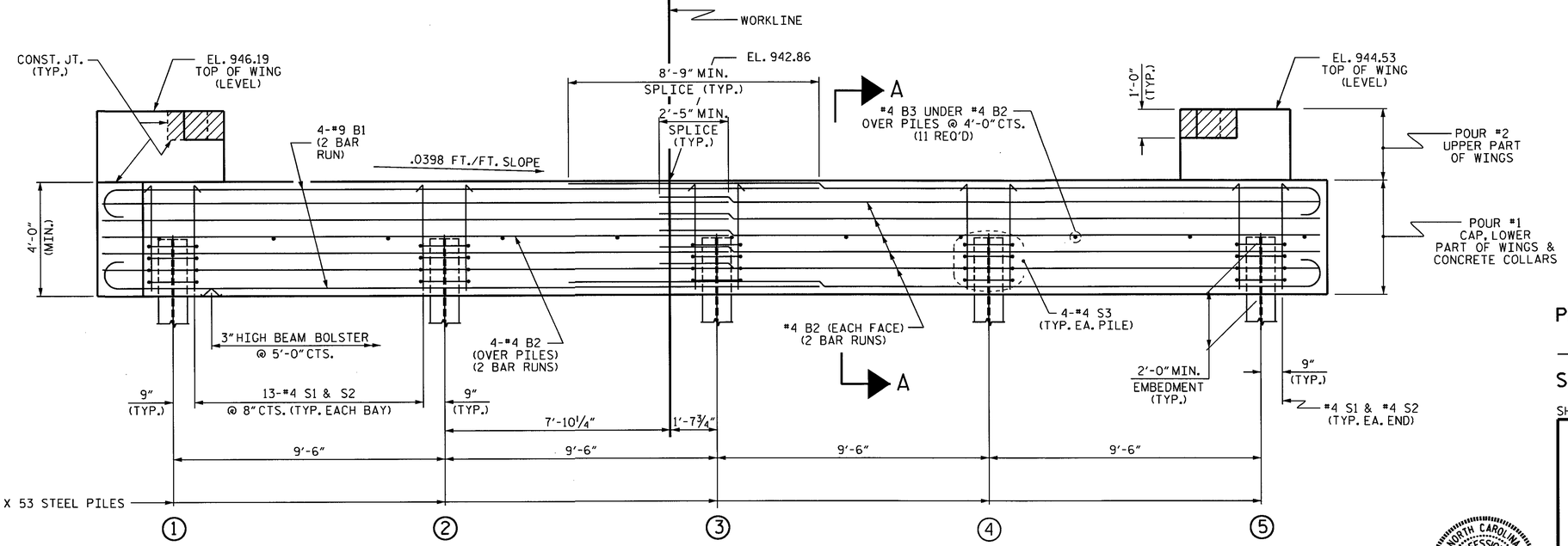

ELEVATION

WINGS NOT SHOWN FOR CLARITY.
FOR SECTION A-A, SEE SHEET 4 OF 4.
CONCRETE COLLARS FOR STEEL PILES NOT SHOWN IN PLAN AND ELEVATION VIEWS FOR CLARITY.
SEE "CORROSION PROTECTION FOR STEEL PILES DETAIL", SHEET 3 OF 3.

PROJECT NO. W-5511
WILKES COUNTY
STATION: 20+40.50-L-

SHEET 1 OF 3

STATE OF NORTH CAROLINA
DEPARTMENT OF TRANSPORTATION
RALEIGH

SUBSTRUCTURE

END BENT No. 2

NORTH CAROLINA PROFESSIONAL SEAL 15828 ENGINEER BRADLEY D. KLAPPENBACH
2-27-2014

ASSEMBLED BY :	H. T. BARBOUR	DATE :	1-15-14
CHECKED BY :	S. B. WILLIAMS	DATE :	2-19-14
DRAWN BY :	WJH	12/11	
CHECKED BY :	AAC	12/11	

REVISIONS								SHEET NO.
NO.	BY:	DATE:	NO.	BY:	DATE:			S-19
1			3					TOTAL SHEETS
2			4					23

27-FEB-2014 11:28
R:\Structures\Plans\tbarbour\Microstation\BD5111Y_SD_E*.dgn
bklappenbach

STD. NO. EB_30_120S4

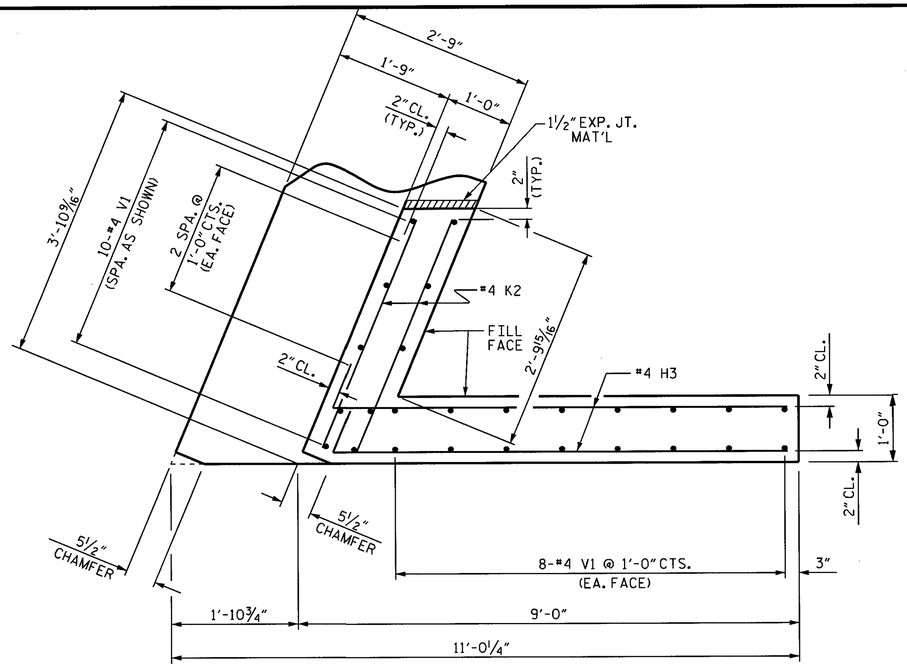

PLAN OF WING (W1)

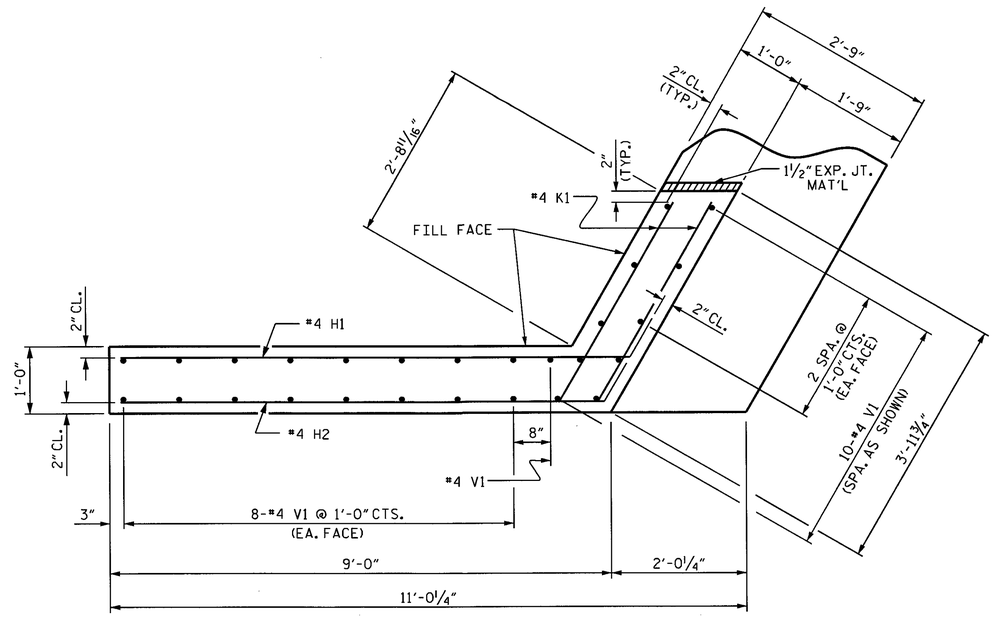

PLAN OF WING (W2)

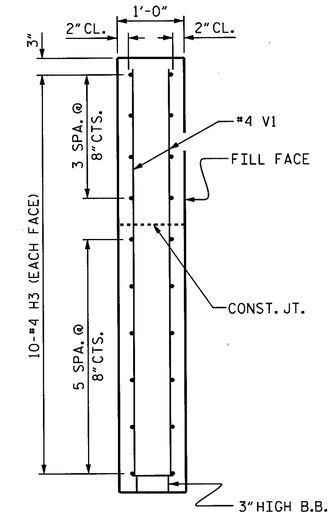

SECTION X-X

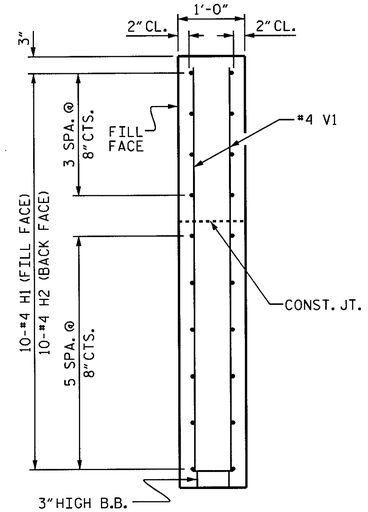

SECTION Y-Y

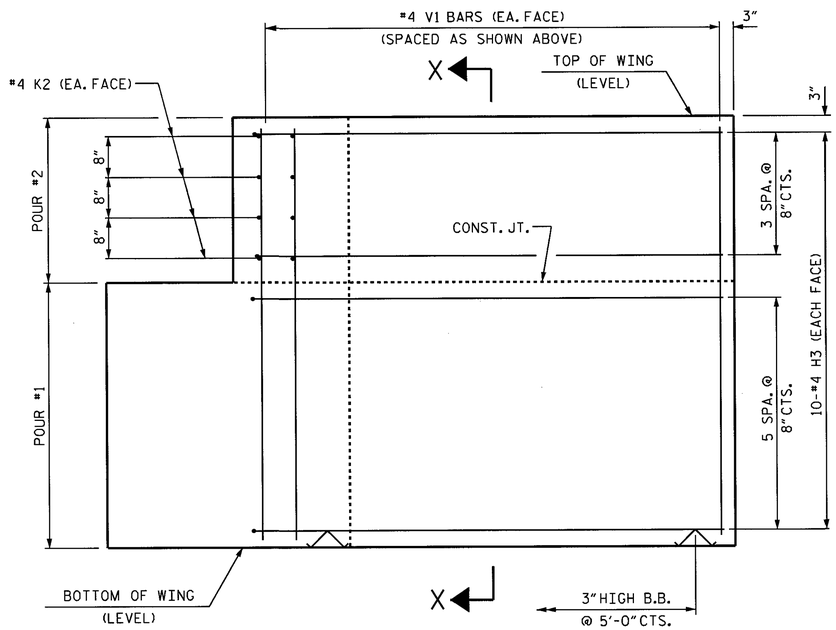

ELEVATION OF WING (W1)

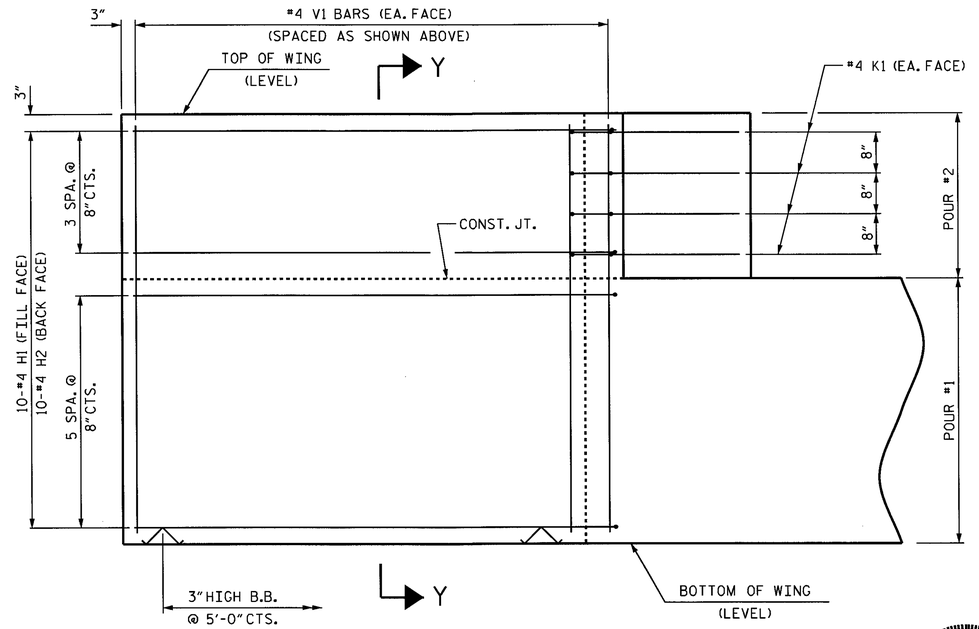

ELEVATION OF WING (W2)

WING DETAILS

PROJECT NO. W-5511

WILKES COUNTY

STATION: 20+40.50-L-

SHEET 2 OF 3

STATE OF NORTH CAROLINA
DEPARTMENT OF TRANSPORTATION
RALEIGH

SUBSTRUCTURE
END BENT NO. 2
WING DETAILS

ASSEMBLED BY : H. T. BARBOUR	DATE : 1-15-14		
CHECKED BY : S. B. WILLIAMS	DATE : 2-19-14		
DRAWN BY : WJH 12/11			
CHECKED BY : AAC 12/11			

REVISIONS						SHEET NO.
NO.	BY:	DATE:	NO.	BY:	DATE:	S-20
1			3			TOTAL SHEETS
2			4			23

27-FEB-2014 11:28
R:\Structures\Plans\tbarbour\Microstation\BD5111Y_SD_E*.dgn
bklappenbach

STD. NO. EB_30_120S4

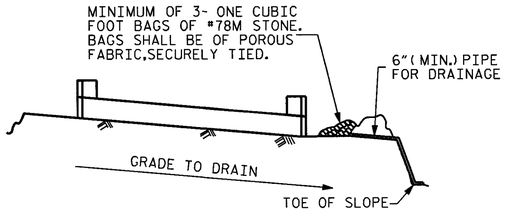

BAGGED STONE AND PIPE SHALL BE PLACED IMMEDIATELY AFTER COMPLETION OF END BENT EXCAVATION. PIPE MAY BE EITHER CONCRETE, CORRUGATED STEEL, CORRUGATED ALUMINUM ALLOY, OR CORRUGATED PLASTIC. PERFORATED PIPE WILL NOT BE ALLOWED.

BAGGED STONE SHALL REMAIN IN PLACE UNTIL THE ENGINEER DIRECTS THAT IT BE REMOVED. THE CONTRACTOR SHALL REMOVE AND DISPOSE OF SILT ACCUMULATIONS AT BAGGED STONE WHEN SO DIRECTED BY THE ENGINEER. BAGS SHALL BE REMOVED AND REPLACED WHENEVER THE ENGINEER DETERMINES THAT THEY HAVE DETERIORATED AND LOST THEIR EFFECTIVENESS.

NO SEPARATE PAYMENT WILL BE MADE FOR THIS WORK AND THE ENTIRE COST OF THIS WORK SHALL BE INCLUDED IN THE UNIT CONTRACT PRICE BID FOR THE SEVERAL PAY ITEMS.

TEMPORARY DRAINAGE AT END BENT

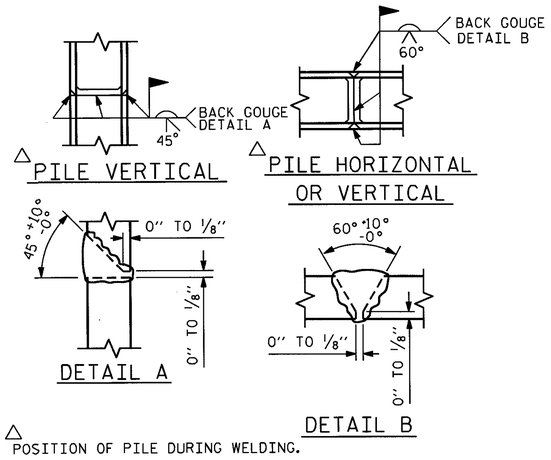

△ POSITION OF PILE DURING WELDING.

PILE SPLICE DETAILS

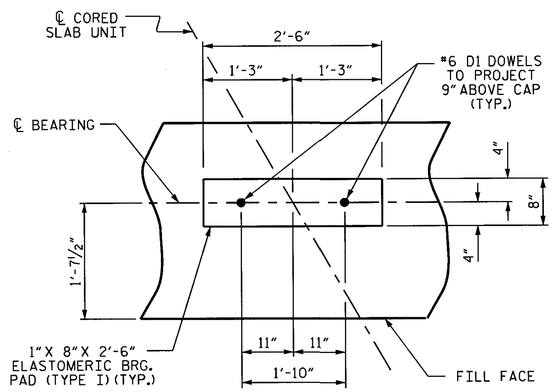

DETAIL "A"

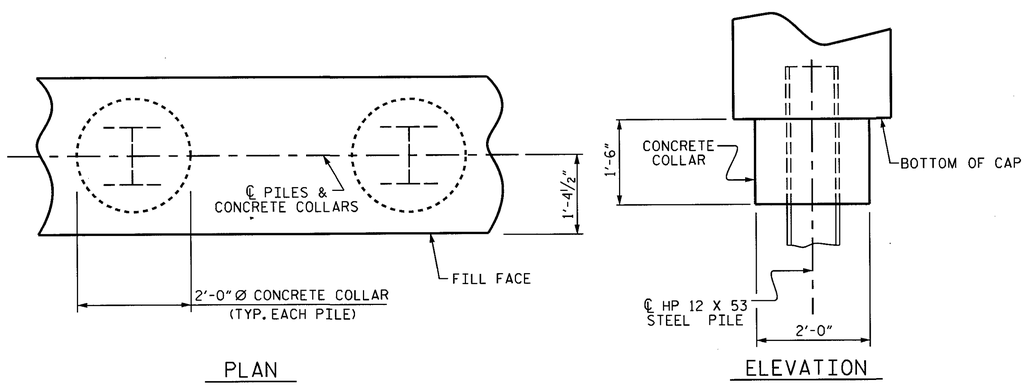

CORROSION PROTECTION FOR STEEL PILES DETAIL

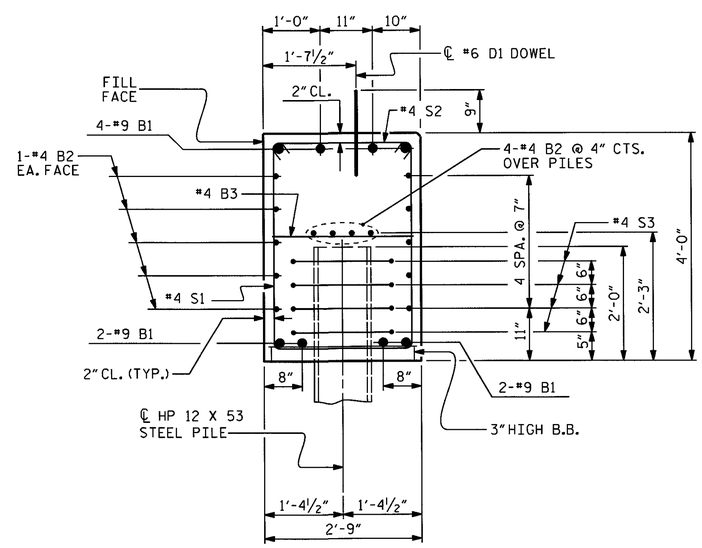

SECTION A-A

(CONCRETE COLLAR NOT SHOWN FOR CLARITY. SEE "CORROSION PROTECTION FOR STEEL PILES DETAIL.")

BAR TYPES

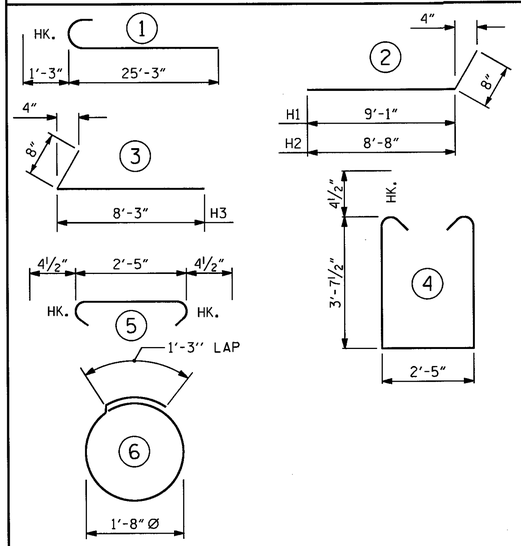

ALL BAR DIMENSIONS ARE OUT TO OUT.

END BENT No. 2
HP 12 X 53 STEEL PILES
NO: 5 LIN. FT.= 190

BILL OF MATERIAL

BAR	NO.	SIZE	TYPE	LENGTH	WEIGHT
B1	16	#9	1	26'-6"	1442
B2	28	#4	STR	22'-2"	415
B3	11	#4	STR	2'-5"	18
D1	20	#6	STR	1'-6"	45
H1	10	#4	2	9'-9"	65
H2	10	#4	2	9'-4"	62
H3	20	#4	3	8'-11"	119
K1	8	#4	STR	3'-3"	17
K2	8	#4	STR	3'-9"	20
S1	54	#4	4	10'-5"	376
S2	54	#4	5	3'-2"	114
S3	20	#4	6	6'-6"	87
V1	53	#4	STR	6'-2"	218

REINFORCING STEEL (FOR ONE END BENT) 2998 LBS.

CLASS A CONCRETE BREAKDOWN (FOR ONE END BENT)

POUR #1 CAP, LOWER PART OF WINGS & COLLARS 20.3 C.Y.

POUR #2 UPPER PART OF WINGS 2.2 C.Y.

TOTAL CLASS A CONCRETE 22.5 C.Y.

PROJECT NO. W-5511
WILKES COUNTY
STATION: 20+40.50-L-

SHEET 3 OF 3

STATE OF NORTH CAROLINA
DEPARTMENT OF TRANSPORTATION
RALEIGH

SUBSTRUCTURE

END BENT NO. 2 DETAILS

NORTH CAROLINA PROFESSIONAL SEAL 15825 ENGINEER BRUCE D. KLAPPENBACH
2-27-2014

REVISIONS						
NO.	BY:	DATE:	NO.	BY:	DATE:	
1			3			
2			4			

SHEET NO. S-21
TOTAL SHEETS 23

ASSEMBLED BY :	H. T. BARBOUR	DATE :	1-15-14
CHECKED BY :	S. B. WILLIAMS	DATE :	2-19-14
DRAWN BY :	WJH	12/11	
CHECKED BY :	AAC	12/11	

27-FEB-2014 11:28
R:\Structures\Plans\tbarbour\Microstation\BD5111Y_SD_E*.dgn
bklappenbach

STD. NO. EB_30_120S4

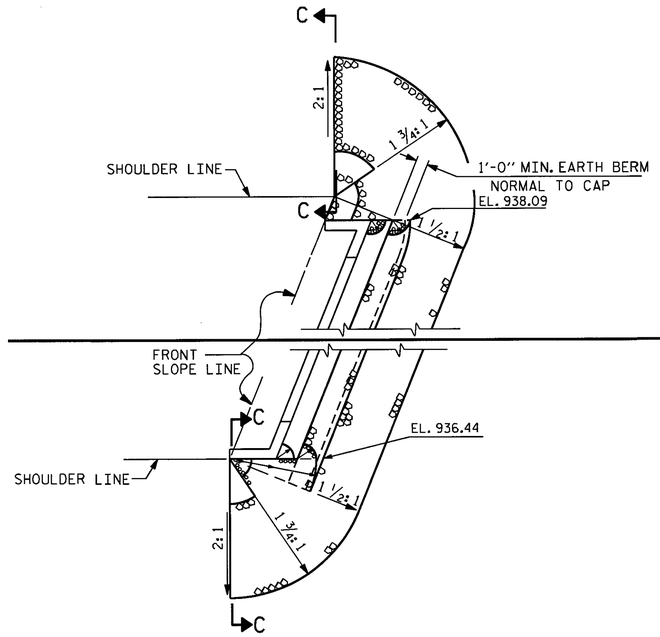

END BENT #1

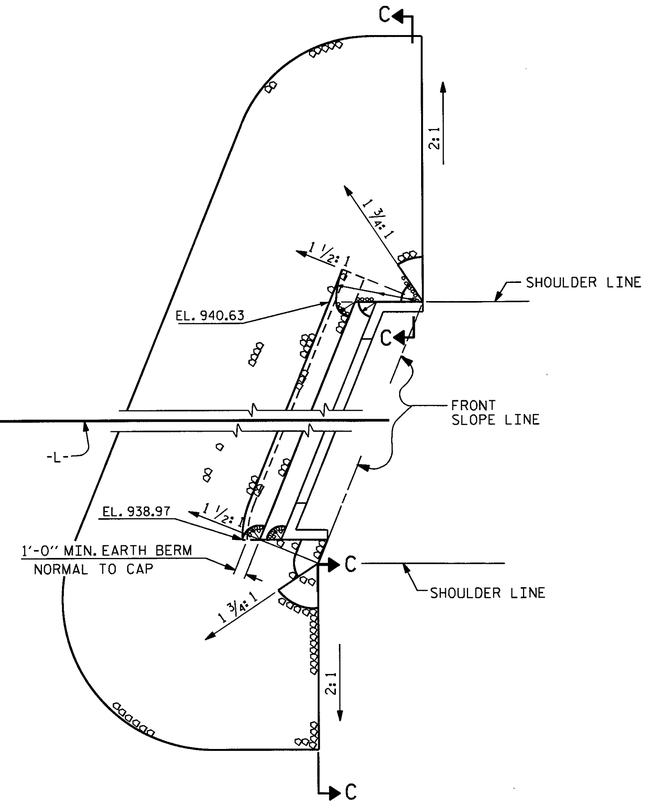

END BENT #2

PLAN

ESTIMATED QUANTITIES		
BRIDGE @ STA. 20+40.50-L-	RIP RAP CLASS II (2'-0" THICK)	GEOTEXTILE FOR DRAINAGE
	TONS	SQUARE YARDS
END BENT 1	100	110
END BENT 2	440	490
TOTAL	540	600

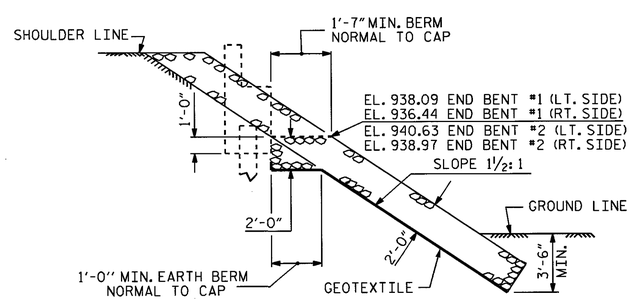

SECTION H-H

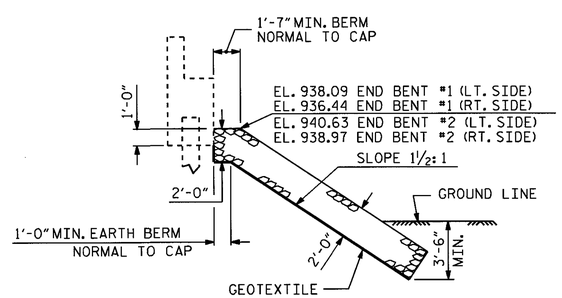

℄ SECTION

BERM RIP RAPPED

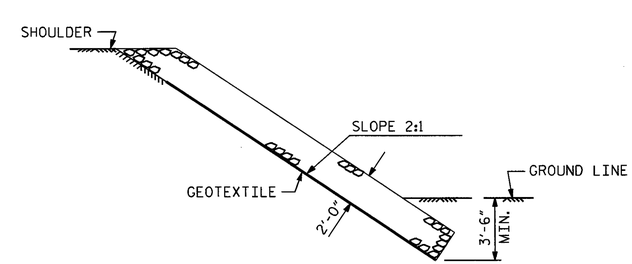

SECTION C-C

PROJECT NO. W-5511

WILKES COUNTY

STATION: 20+40.50-L-

STATE OF NORTH CAROLINA
DEPARTMENT OF TRANSPORTATION
RALEIGH

RIP RAP DETAILS

NORTH CAROLINA PROFESSIONAL SEAL 15825 ENGINEER BRUCE D. KLAPPENBACH
2-27-2014

REVISIONS						SHEET NO.
NO.	BY:	DATE:	NO.	BY:	DATE:	S-22
1			3			TOTAL SHEETS
2			4			23

ASSEMBLED BY : H. T. BARBOUR		DATE :	1-15-14
CHECKED BY : S. W. WILLIAMS		DATE :	2-19-14
DRAWN BY : REK 1/84	REV. 5/1/06R		TLA/GM
CHECKED BY : RDU 1/84	REV. 10/1/11		MAA/GM
	REV. 12/21/11		MAA/GM

27-FEB-2014 11:28
R:\Structures\Plans\tbarbour\Microstation\BD5111Y_SD_RR.dgn
bklappenbach

STD. NO. RR1 (Sht 3)

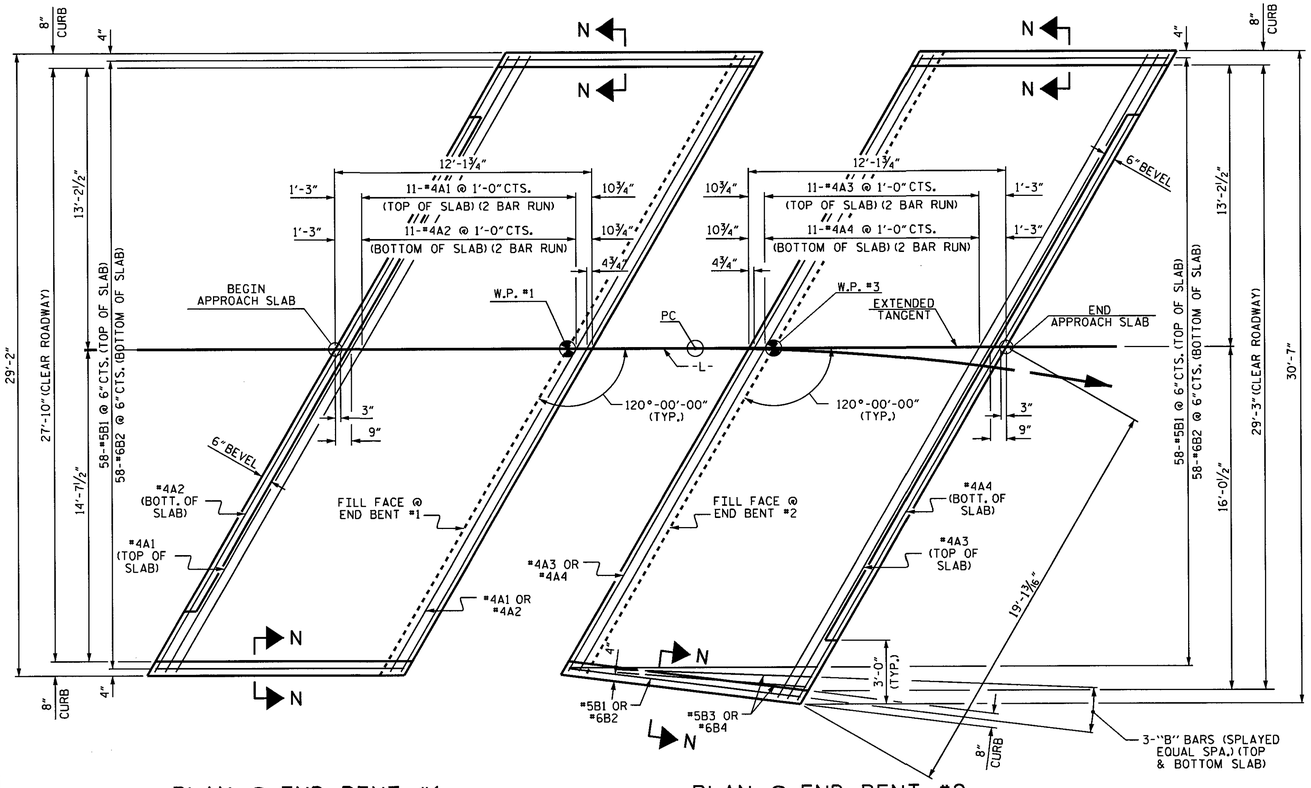

PLAN @ END BENT #1

PLAN @ END BENT #2

NOTES

FOR BRIDGE APPROACH FILL INCLUDING GEOTEXTILE, 4"Ø DRAINAGE PIPE, AND #78M STONE BACKFILL, SEE ROADWAY PLANS.

GEOTEXTILE SHALL BE TYPE 1 IN ACCORDANCE WITH THE STANDARD SPECIFICATIONS SECTION 1056.

#78M STONE BACKFILL (CLASS V SELECT MATERIAL) SHALL BE IN ACCORDANCE WITH STANDARD SPECIFICATIONS SECTION 1016.

#78M STONE BACKFILL IS TO BE CONTINUOUS ALONG FILL FACE OF BACKWALL FROM OUTSIDE EDGE TO OUTSIDE EDGE OF APPROACH SLAB.

FOR THE 4"Ø DRAINAGE PIPE OUTLET(S), SEE ROADWAY STANDARD DRAWINGS.

AREA BETWEEN THE WINGWALL AND APPROACH SLAB SHALL BE GRADED TO DRAIN THE WATER AWAY FROM THE FILL FACE OF THE BRIDGE AND SHALL BE PAVED. SEE ROADWAY PLANS.

APPROACH SLAB GROOVING IS NOT REQUIRED.

BILL OF MATERIAL

APPROACH SLAB AT EB #1

BAR	NO.	SIZE	TYPE	LENGTH	WEIGHT
* A1	26	#4	STR	17'-8"	307
A2	26	#4	STR	17'-7"	305
* B1	58	#5	STR	11'-1"	670
B2	58	#6	STR	11'-7"	1009
REINFORCING STEEL				LBS.	1314
* EPOXY COATED REINFORCING STEEL				LBS.	977
CLASS AA CONCRETE				C. Y.	15.6

APPROACH SLAB AT EB #2

BAR	NO.	SIZE	TYPE	LENGTH	WEIGHT
* A3	26	#4	STR	18'-6"	321
A4	26	#4	STR	18'-5"	320
* B1	59	#5	STR	11'-1"	682
B2	59	#6	STR	11'-7"	1026
* B3	2	#5	STR	9'-0"	19
B4	2	#6	STR	9'-0"	27
REINFORCING STEEL				LBS.	1373
* EPOXY COATED REINFORCING STEEL				LBS.	1022
CLASS AA CONCRETE				C. Y.	17.8

SPLICE LENGTHS

BAR SIZE	EPOXY COATED	UNCOATED
#4	2'-0"	1'-9"
#5	2'-6"	2'-2"
#6	3'-10"	2'-7"

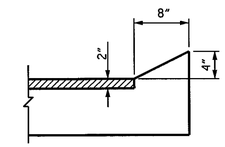

SECTION N-N

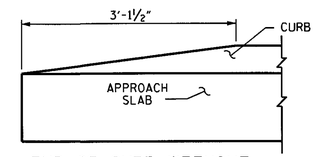

END OF CURB WITHOUT SHOULDER BERM GUTTER

CURB DETAILS

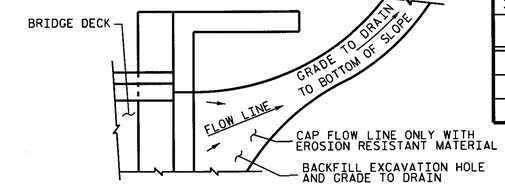

NOTE: IF THE APPROACH SLAB IS NOT CONSTRUCTED IMMEDIATELY AFTER THE BACKFILLING OF THE END BENT EXCAVATION, GRADE TO DRAIN TO THE BOTTOM OF THE SLOPE AND PROVIDE EROSION RESISTANT MATERIAL, SUCH AS FIBERGLASS ROVING OR AS DIRECTED BY THE ENGINEER TO PREVENT SOIL EROSION AND TO PROTECT THE AREA ADJACENT TO THE STRUCTURE. THE CONTRACTOR WILL BE REQUIRED TO REMOVE THESE MATERIALS PRIOR TO CONSTRUCTION OF THE APPROACH SLAB.

TEMPORARY DRAINAGE DETAIL

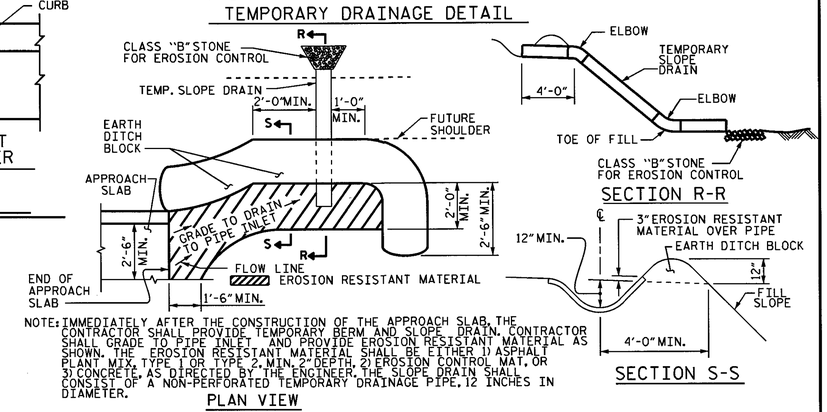

PLAN VIEW

SECTION R-R

SECTION S-S

NOTE: IMMEDIATELY AFTER THE CONSTRUCTION OF THE APPROACH SLAB, THE CONTRACTOR SHALL PROVIDE TEMPORARY BERM AND SLOPE DRAIN. CONTRACTOR SHALL GRADE TO PIPE INLET AND PROVIDE EROSION RESISTANT MATERIAL AS SHOWN. THE EROSION RESISTANT MATERIAL SHALL BE EITHER 1) ASPHALT PLANT MIX, TYPE 1 OR TYPE 2, MIN. 2" DEPTH, 2) EROSION CONTROL MAT, OR 3) CONCRETE AS DIRECTED BY THE ENGINEER. THE SLOPE DRAIN SHALL CONSIST OF A NON-PERFORATED TEMPORARY DRAINAGE PIPE, 12 INCHES IN DIAMETER.

TEMPORARY BERM AND SLOPE DRAIN DETAILS

(TO BE USED WHEN SHOULDER BERM GUTTER IS REQUIRED)

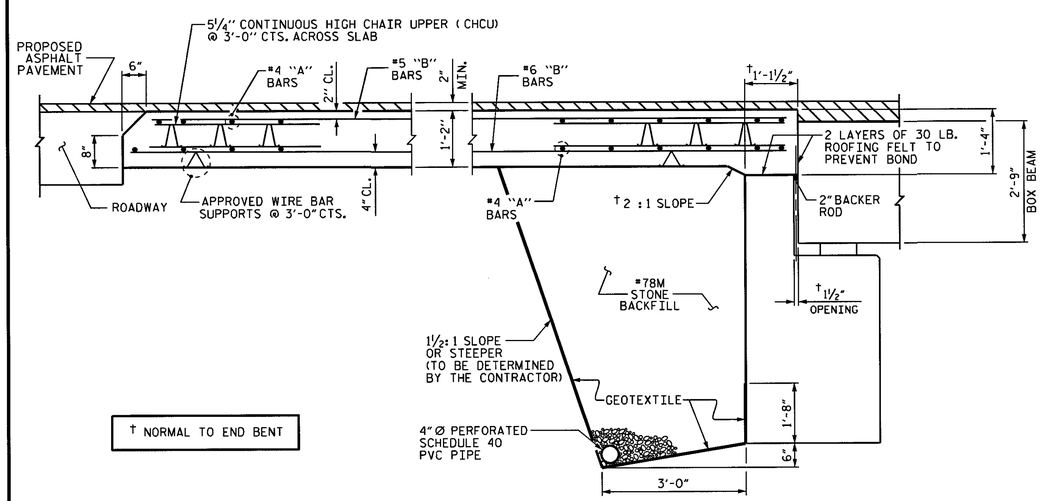

† NORMAL TO END BENT

SECTION THRU SLAB @ END BENT #1

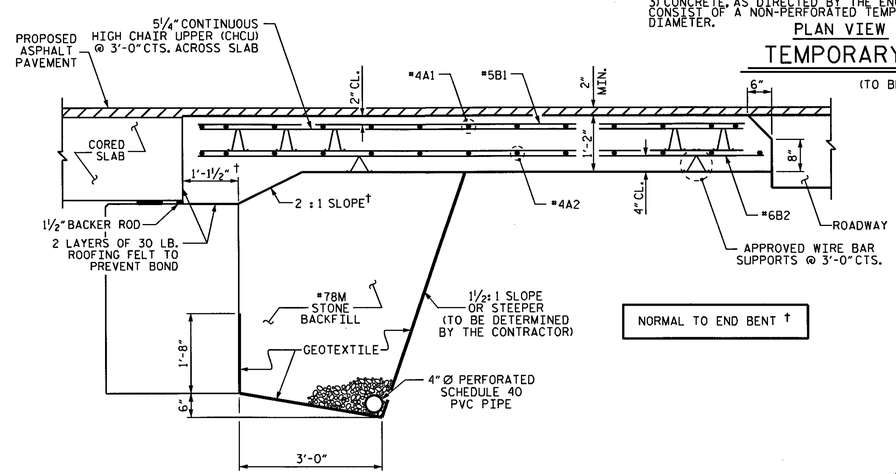

NORMAL TO END BENT †

SECTION THRU SLAB @ END BENT #2

PROJECT NO. W-5511

WILKES COUNTY

STATION: 20+40.50-L-

STATE OF NORTH CAROLINA
DEPARTMENT OF TRANSPORTATION
RALEIGH

BRIDGE APPROACH SLAB FOR PRESTRESSED CONCRETE BOX BEAM AND CORED SLAB UNITS (SUB-REGIONAL TIER) 120° SKEW

REVISIONS						SHEET NO.
NO.	BY:	DATE:	NO.	BY:	DATE:	S-23
1			3			TOTAL SHEETS
2			4			23

NORTH CAROLINA PROFESSIONAL SEAL 15825 ENGINEER BRIAN D. KLAPPENBACH
2-27-2014

ASSEMBLED BY : H. T. BARBOUR	DATE : 2-4-14
CHECKED BY : S. W. WILLIAMS	DATE : 2-19-14
DRAWN BY : MAA 11/11	
CHECKED BY : AAC 11/11	

27-FEB-2014 11:28
R:\Structures\Plans\tbarbour\Microstation\BD5111Y_SD_TS.dgn
bklappenbach

STD. NO. BAS_BB_30_120S

STANDARD NOTES

DESIGN DATA:

SPECIFICATIONS	A.A.S.H.T.O. (CURRENT)
LIVE LOAD	SEE PLANS
IMPACT ALLOWANCE	SEE A.A.S.H.T.O.
STRESS IN EXTREME FIBER OF	
STRUCTURAL STEEL - AASHTO M270 GRADE 36	20,000 LBS. PER SQ. IN.
- AASHTO M270 GRADE 50W	27,000 LBS. PER SQ. IN.
- AASHTO M270 GRADE 50	27,000 LBS. PER SQ. IN.
REINFORCING STEEL IN TENSION	
GRADE 60	24,000 LBS. PER SQ. IN.
CONCRETE IN COMPRESSION	1,200 LBS. PER SQ. IN.
CONCRETE IN SHEAR	SEE A.A.S.H.T.O.
STRUCTURAL TIMBER - TREATED OR	
UNTREATED - EXTREME FIBER STRESS	1,800 LBS. PER SQ. IN.
COMPRESSION PERPENDICULAR TO GRAIN OF TIMBER	375 LBS. PER SQ. IN.
EQUIVALENT FLUID PRESSURE OF EARTH	30 LBS. PER CU. FT. (MINIMUM)

MATERIAL AND WORKMANSHIP:

EXCEPT AS MAY OTHERWISE BE SPECIFIED ON PLANS OR IN THE SPECIAL PROVISIONS, ALL MATERIAL AND WORKMANSHIP SHALL BE IN ACCORDANCE WITH THE 2012 "STANDARD SPECIFICATIONS FOR ROADS AND STRUCTURES" OF THE N. C. DEPARTMENT OF TRANSPORTATION.

STEEL SHEET PILING FOR PERMANENT OR TEMPORARY APPLICATIONS SHALL BE HOT ROLLED.

CONCRETE:

UNLESS OTHERWISE REQUIRED ON PLANS, CLASS A CONCRETE SHALL BE USED FOR ALL PORTIONS OF ALL STRUCTURES WITH THE EXCEPTION THAT: CLASS AA CONCRETE SHALL BE USED IN BRIDGE SUPERSTRUCTURES, ABUTMENT BACKWALLS, AND APPROACH SLABS; AND CLASS B CONCRETE SHALL BE USED FOR SLOPE PROTECTION AND RIP RAP.

CONCRETE CHAMFERS:

UNLESS OTHERWISE NOTED ON THE PLANS, ALL EXPOSED CORNERS ON STRUCTURES SHALL BE CHAMFERED 3/4" WITH THE FOLLOWING EXCEPTIONS: TOP CORNERS OF CURBS MAY BE ROUNDED TO 1-1/2" RADIUS WHICH IS BUILT INTO CURB FORMS; CORNERS OF TRANSVERSE FLOOR EXPANSION JOINTS SHALL BE ROUNDED WITH A 1/4" FINISHING TOOL UNLESS OTHERWISE REQUIRED ON PLANS; AND CORNERS OF EXPANSION JOINTS IN THE ROADWAY FACES AND TOPS OF CURBS AND SIDEWALKS SHALL BE ROUNDED TO A 1/4" RADIUS WITH A FINISHING STONE OR TOOL UNLESS OTHERWISE REQUIRED ON PLANS.

DOWELS:

DOWELS WHEN INDICATED ON PLANS AS FOR CULVERT EXTENSIONS, SHALL BE EMBEDDED AT LEAST 12" INTO THE OLD CONCRETE AND GROUTED INTO PLACE WITH 1:2 CEMENT MORTAR.

ALLOWANCE FOR DEAD LOAD DEFLECTION, SETTLEMENT, ETC. IN CASTING SUPERSTRUCTURES:

BRIDGES SHALL BE BUILT ON THE GRADE OR VERTICAL CURVE SHOWN ON PLANS. SLABS, CURBS AND PARAPETS SHALL CONFORM TO THE GRADE OR CURVE.

ALL DIMENSIONS WHICH ARE GIVEN IN SECTION AND ARE AFFECTED BY DEAD LOAD DEFLECTIONS ARE DIMENSIONS AT CENTER LINE OF BEARING UNLESS OTHERWISE NOTED ON PLANS. IN SETTING FORMS FOR STEEL BEAM BRIDGES AND PRESTRESSED CONCRETE GIRDER BRIDGES, ADJUSTMENTS SHALL BE MADE DUE TO THE DEAD LOAD DEFLECTIONS FOR THE ELEVATIONS SHOWN. WHERE BLOCKS ARE SHOWN OVER BEAMS FOR BUILDING UP TO THE SLAB, THE VERTICAL DIMENSIONS OF THE BLOCKS SHALL BE ADJUSTED BETWEEN BEARINGS TO COMPENSATE FOR DEAD LOAD DEFLECTIONS, VERTICAL CURVE ORDINATE, AND ACTUAL BEAM CAMBER. WHERE BOTTOM OF SLAB IS IN LINE WITH BOTTOM OF TOP FLANGES, DEPTH OF SLAB BETWEEN BEARINGS SHALL BE ADJUSTED TO COMPENSATE FOR DEAD LOAD DEFLECTION, VERTICAL CURVE ORDINATE, AND ACTUAL BEAM CAMBER.

IN SETTING FALSEWORK AND FORMS FOR REINFORCED CONCRETE SPANS, AN ALLOWANCE SHALL BE MADE FOR DEAD LOAD DEFLECTIONS, SETTLEMENT OF FALSEWORK, AND PERMANENT CAMBER WHICH SHALL BE PROVIDED FOR IN ADDITION TO THE ELEVATIONS SHOWN. AFTER REMOVAL OF THE FALSEWORK, THE FINISHED STRUCTURES SHALL CONFORM TO THE PROFILE AND ELEVATIONS SHOWN ON THE PLANS AND CONSTRUCTION ELEVATIONS FURNISHED BY THE ENGINEER.

DETAILED DRAWINGS FOR FALSEWORK OR FORMS FOR BRIDGE SUPERSTRUCTURE AND ANY STRUCTURE OR PARTS OF A STRUCTURE AS NOTED ON THE PLANS SHALL BE SUBMITTED TO THE ENGINEER FOR APPROVAL BEFORE CONSTRUCTION OF THE FALSEWORK OR FORMS IS STARTED.

REINFORCING STEEL:

ALL REINFORCING STEEL SHALL BE DEFORMED. DIMENSIONS RELATIVE TO PLACEMENT OF REINFORCING ARE TO CENTERS OF BARS UNLESS OTHERWISE INDICATED IN THE PLANS. DIMENSIONS ON BAR DETAILS ARE TO CENTERS OF BARS OR ARE OUT TO OUT AS INDICATED ON PLANS.

WIRE BAR SUPPORTS SHALL BE PROVIDED FOR REINFORCING STEEL WHERE INDICATED ON THE PLANS. WHEN BAR SUPPORT PIECES ARE PLACED IN CONTINUOUS LINES, THEY SHALL BE SO PLACED THAT THE ENDS OF THE SUPPORTING WIRES SHALL BE LAPPED TO LOCK LEGS ON ADJOINING PIECES.

STRUCTURAL STEEL:

AT THE CONTRACTOR'S OPTION, HE MAY SUBSTITUTE 7/8" Ø SHEAR STUDS FOR THE 3/4" Ø STUDS SPECIFIED ON THE PLANS. THIS SUBSTITUTION SHALL BE MADE AT THE RATE OF 3 - 7/8" Ø STUDS FOR 4 - 3/4" Ø STUDS, AND STUD SPACING CHANGES SHALL BE MADE AS NECESSARY TO PROVIDE THE SAME EQUIVALENT NUMBER OF 7/8" Ø STUDS ALONG THE BEAM AS SHOWN FOR 3/4" Ø STUDS BASED ON THE RATIO OF 3 - 7/8" Ø STUDS FOR 4 - 3/4" Ø STUDS. STUDS OF THE LENGTH SPECIFIED ON THE PLANS MUST BE PROVIDED. THE MAXIMUM SPACING SHALL BE 2'-0".

EXCEPT AT THE INTERIOR SUPPORTS OF CONTINUOUS BEAMS WHERE THE COVER PLATE IS IN CONTACT WITH BEARING PLATE, THE CONTRACTOR MAY, AT HIS OPTION, SUBSTITUTE FOR THE COVER PLATES DESIGNATED ON THE PLANS COVER PLATES OF THE EQUIVALENT AREA PROVIDED THESE PLATES ARE AT LEAST 5/16" IN THICKNESS AND DO NOT EXCEED A WIDTH EQUAL TO THE FLANGE WIDTH LESS 2" OR A THICKNESS EQUAL TO 2 TIMES THE FLANGE THICKNESS. THE SIZE OF FILLET WELDS SHALL CONFORM TO THE REQUIREMENTS OF THE CURRENT ANSI/AASHTO/AWS "BRIDGE WELDING CODE". ELECTROSLAG WELDING WILL NOT BE PERMITTED.

WITH THE SOLE EXCEPTION OF EDGES AT SURFACES WHICH BEAR ON OTHER SURFACES, ALL SHARP EDGES AND ENDS OF SHAPES AND PLATES SHALL BE SLIGHTLY ROUNDED BY SUITABLE MEANS TO A RADIUS OF APPROXIMATELY 1/16 INCH OR EQUIVALENT FLAT SURFACE AT A SUITABLE ANGLE PRIOR TO PAINTING, GALVANIZING, OR METALLIZING.

HANDRAILS AND POSTS:

METAL STANDARDS AND FACES OF THE CONCRETE END POSTS FOR THE METAL RAIL SHALL BE SET NORMAL TO THE GRADE OF THE CURB, UNLESS OTHERWISE SHOWN ON PLANS. THE METAL RAIL AND TOPS OF CONCRETE POSTS USED WITH THE ALUMINUM RAIL SHALL BE BUILT PARALLEL TO THE GRADE OF THE CURB.

METAL HANDRAILS SHALL BE IN ACCORDANCE WITH THE PLANS. RAILS SHALL BE AS MANUFACTURED FOR BRIDGE RAILING. CASTINGS SHALL BE OF A UNIFORM APPEARANCE. FINS AND OTHER DEFORMATIONS RESULTING FROM CASTING OR OTHERWISE SHALL BE REMOVED IN A MANNER SO THAT A UNIFORM COLORING OF THE COMPLETED CASTING SHALL BE OBTAINED. CASTINGS WITH DISCOLORATIONS OR OF NON-UNIFORM COLORING WILL NOT BE ACCEPTED. CERTIFIED MILL REPORTS ARE REQUIRED FOR METAL RAILS AND POSTS.

SPECIAL NOTES:

GENERALLY, IN CASE OF DISCREPANCY, THIS STANDARD SHEET OF NOTES SHALL GOVERN OVER THE SPECIFICATIONS, BUT THE REMAINDER OF THE PLANS SHALL GOVERN OVER NOTES HEREON, AND SPECIAL PROVISIONS SHALL GOVERN OVER ALL. SEE SPECIFICATIONS ARTICLE 105-4.

ENGLISH

JANUARY, 1990