STATE	STATE PROJECT REFERENCE NO.	SHEET NO.	TOTAL SHEETS
N.C.	17BP.12.R.201	1	

STATE PROJ. NO.	F.A. PROJ. NO.	DESCRIPTION

STATE OF NORTH CAROLINA
DIVISION OF HIGHWAYS

DIVISION 12

LOCATION: **BRIDGE #92 OVER BOWENS CREEK ON SR 2220 (TRENT MCSWAIN ROAD);**
BRIDGE # 170 OVER COLEY CREEK ON SR 1802 (COLT THORNBURG ROAD);
BRIDGE # 136 LIPPARD CREEK ON SR 1861 (CALEB ROAD);
BRIDGE # 119 OVER MORRISON CREEK ON SR 1550 (STEVENSON FARM ROAD);
BRIDGE # 289 OVER LOWER LITTLE RIVER ON SR 1309 (BOONE GAP LANE)

TYPE OF WORK: ***GRADING, DRAINAGE, PAVING, STRUCTURES, AND PAVEMENT MARKINGS***

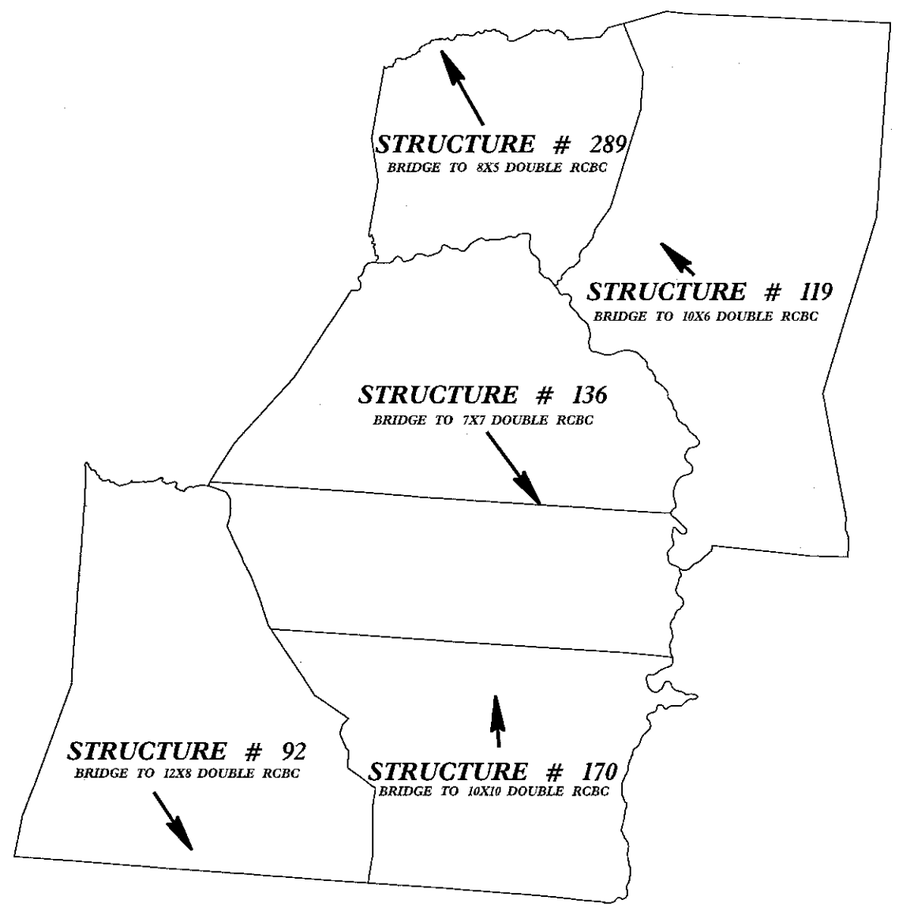

THIS CONTRACT IS MADE UP OF FIVE (5) INDIVIDUAL CONTRACTS, SEALED BY INDIVIDUAL ENGINEERING FIRMS AND NUMBERED SEPARATELY. ALL QUANTITIES ARE COMBINED TOGETHER FOR BIDDING PURPOSES.

Prepared In the Office of:
DIVISION OF HIGHWAYS
1000 Birch Ridge Dr., Raleigh NC, 27610

2012 STANDARD SPECIFICATIONS	PROJECT LENGTH
LETTING DATE: FEBRUARY 24, 2015	TOTAL LENGTH STATE PROJECT 17BP.12.R.201 = 0.341 MILES

REUBEN D. CHANDLER P.E.
DIVISION ENGINEER

PROJECT: 17BP.12.R.201

CONTRACT: DL00079

$$$$$$$SYSTIME$$$$$
$$$$$$$$$$USERNAME$$$$
$$$$$$$$$$$$$$$$$$DGN$$$$$$$$$$$$$$$$$$$$
09/08/09

STATE PROJECT: 17BP.12.R.201

CONTRACT: DL00079

See Sheet 1-A For Index of Sheets

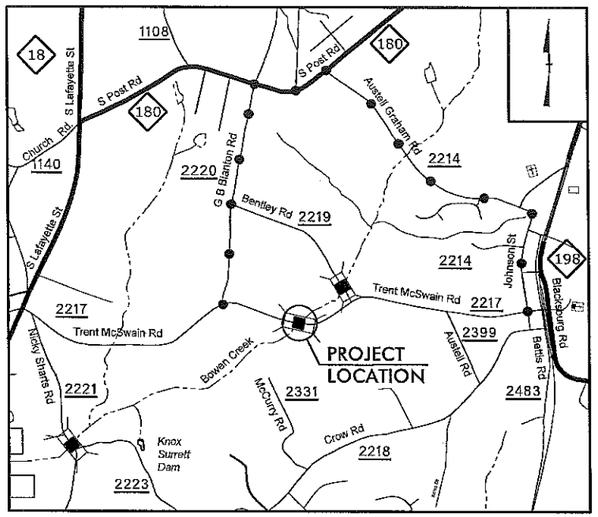

DETOUR ROUTE

VICINITY MAP
(NOT TO SCALE)

STATE OF NORTH CAROLINA
DIVISION OF HIGHWAYS

CLEVELAND COUNTY

STATE	STATE PROJECT REFERENCE NO.	SHEET NO.	TOTAL SHEETS
N.C.	17BP.12.R.201	1	

STATE PROJ. NO.	F.A. PROJ. NO.	DESCRIPTION
17BP.12.R.24		P.E., R/W
17BP.12.R.201		CONSTRUCTION

LOCATION: BRIDGE NO. 92 ON SR 2217 OVER BOWEN CREEK BETWEEN SR 2220 AND SR 2219

TYPE OF WORK: GRADING, DRAINAGE, PAVING, STRUCTURES AND PAVEMENT MARKINGS

NAD 83/
NSRS 2007

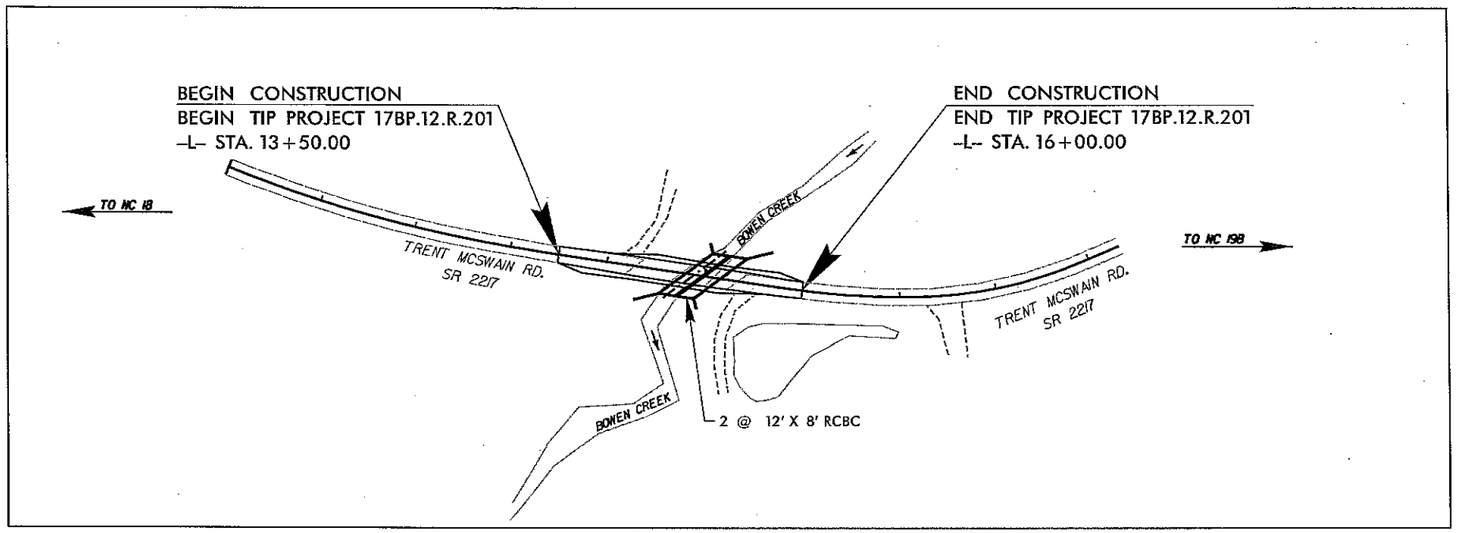

LOCATION SKETCH

HDR Engineering, Inc. of the Carolinas
3733 National Drive, Suite 207 Raleigh, N.C. 27612
N.C.B.E.L.S. License Number: F-0116

GRAPHIC SCALES

50 25 0 50 100
PLANS

50 20 0 50 100
PROFILE (HORIZONTAL)

10 5 0 10 20
PROFILE (VERTICAL)

DESIGN DATA

ADT 2009 = 210
ADT 2025 = 480
DHV = %
D = %
T = 6 %
V = 45 MPH

FUNC CLASS =
LOCAL RURAL
SUBREGIONAL TIER

PROJECT LENGTH

LENGTH ROADWAY STATE PROJECT 17BP.12.R.201 = 0.040 MILES
LENGTH STRUCTURES STATE PROJECT 17BP.12.R.201 = 0.007 MILES
TOTAL LENGTH STATE PROJECT 17BP.12.R.201 = 0.047 MILES

Prepared for the Office of:
DIVISION OF HIGHWAYS
1000 Birch Ridge Dr., Raleigh NC, 27610

2012 STANDARD SPECIFICATIONS

RIGHT OF WAY DATE:
JUNE 21, 2013

LETTING DATE:

DOMINIC M. WAINWRIGHT, P.E.
PROJECT ENGINEER

JAMES R. RICE, P.E.
PROJECT DESIGN ENGINEER

HYDRAULICS ENGINEER
Jan 20, 2015
James R. Rice (Jan 20, 2015) P.E.
SIGNATURE:
NORTH CAROLINA PROFESSIONAL SEAL 31986 ENGINEER JAMES R. RICE

ROADWAY DESIGN ENGINEER
Jan 20, 2015
R. Erskine Brooks (Jan 20, 2015) P.E.
SIGNATURE:
NORTH CAROLINA PROFESSIONAL SEAL 032584 ENGINEER R. ERSKINE BROOKS

DIVISION OF HIGHWAYS
STATE OF NORTH CAROLINA

REUBEN D. CHANDLER P.E.
DIVISION ENGINEER

1/19/2015
12:44:16 PM
pr220092_RDY_TSH.dgn

PROJECT REFERENCE NO.	SHEET NO.
17BP.12.R.201	1-A
REPLACES CLEVELAND COUNTY BRIDGE NO. 92	

ROADWAY DESIGN ENGINEER

Jan 20, 2015

NORTH CAROLINA PROFESSIONAL SEAL 032584 ENGINEER R. ERSKINE BROOKS

R. Erskine Brooks

R. Erskine Brooks (Jan 20, 2015)

HDR Engineering, Inc. of the Carolinas
3733 National Drive, Suite 207 Raleigh, N.C. 27612
N.C.B.E.L.S. License Number: F-0116

INDEX OF SHEETS

SHEET NUMBER	SHEET
1	TITLE SHEET
1-A	INDEX OF SHEETS, GENERAL NOTES, AND LIST OF STANDARD DRAWINGS
1-B	CONVENTIONAL SYMBOLS
2	PAVEMENT SCHEDULE, TYPICAL SECTIONS, FLOOD PLAIN DETAIL, AND CULVERT OUTLET DETAILS
3	RIGHT-OF-WAY AREA DATA, SUMMARY OF DRAINAGE QUANTITIES, SUMMARY OF GUARDRAIL
4	PLAN AND PROFILE SHEET
TMP-1 THRU TMP-2	TRAFFIC MANAGEMENT PLAN
SD-01	DETOUR SIGN DESIGN
EC-1 THRU EC-4	EROSION CONTROL PLANS
UC-1 THRU UC-4	UTILITY CONSTRUCTION PLANS
UO-1 THRU UO-3	UTILITES BY OTHERS PLANS
X-1 THRU X-4	CROSS-SECTIONS
S-1 THRU S-8	STRUCTURE PLANS
S-9	STRUCTURE STANDARD NOTES

2012 ROADWAY ENGLISH STANDARD DRAWINGS

The following Roadway Standards as appear in "Roadway Standard Drawings" Highway Design Branch - N. C. Department of Transportation - Raleigh, N. C., Dated January, 2012 are applicable to this project and by reference hereby are considered a part of these plans:

STD.NO.	TITLE
DIVISION 2 - EARTHWORK	
200.02	Method of Clearing - Method II
225.02	Guide for Grading Subgrade - Secondary and Local
225.04	Method of Obtaining Superelevation - Two Lane Pavement
DIVISION 5 - SUBGRADE, BASES AND SHOULDERS	
560.01	Method of Shoulder Construction - High Side of Superelevated Curve - Method I
DIVISION 8 - INCIDENTALS	
848.02	Driveway Turnout - Radius Type
862.01	Guardrail Placement
862.02	Guardrail Installation
876.01	Rip Rap in Channels
876.04	Drainage Ditches with Class 'B' Rip Rap

GENERAL NOTES:

2012 SPECIFICATIONS
EFFECTIVE: 01-17-12
REVISED: 11/01/11

GRADE LINE:
GRADING AND SURFACING:

THE GRADE LINES SHOWN DENOTE THE FINISHED ELEVATION OF THE PROPOSED SURFACING AT GRADE POINTS SHOWN ON THE TYPICAL SECTIONS. GRADE LINES MAY BE ADJUSTED AT THEIR BEGINNING AND ENDING AND AT STRUCTURES AS DIRECTED BY THE ENGINEER IN ORDER TO SECURE A PROPER TIE-IN.

CLEARING:

CLEARING ON THIS PROJECT SHALL BE PERFORMED TO THE LIMITS ESTABLISHED BY METHOD II.

SUPERELEVATION:

ALL CURVES ON THIS PROJECT SHALL BE SUPERELEVATED IN ACCORDANCE WITH STD. NO. 225.04 USING THE RATE OF SUPERELEVATION AND RUNOFF SHOWN ON THE PLANS. SUPERELEVATION IS TO BE REVOLVED ABOUT THE GRADE POINTS SHOWN ON THE TYPICAL SECTIONS.

SHOULDER CONSTRUCTION:

ASPHALT, EARTH, AND CONCRETE SHOULDER CONSTRUCTION ON THE HIGH SIDE OF SUPERELEVATED CURVES SHALL BE IN ACCORDANCE WITH STD. NO. 560.01.

SIDE ROADS:

THE CONTRACTOR WILL BE REQUIRED TO DO ALL NECESSARY WORK TO PROVIDE SUITABLE CONNECTIONS WITH ALL ROADS, STREETS, AND DRIVES ENTERING THIS PROJECT. THIS WORK WILL BE PAID FOR AT THE CONTRACT UNIT PRICE FOR THE PARTICULAR ITEMS INVOLVED.

DRIVEWAYS:

DRIVEWAYS SHALL BE CONSTRUCTED IN ACCORDANCE WITH STD. 848.02 USING 10' RADII OR RADII AS SHOWN ON THE PLANS. LOCATIONS OF DRIVES WILL BE AS SHOWN ON THE PLANS OR AS DIRECTED BY THE ENGINEER.

GUARDRAIL:

THE GUARDRAIL LOCATIONS SHOWN ON THE PLANS MAY BE ADJUSTED DURING CONSTRUCTION AS DIRECTED BY THE ENGINEER. THE CONTRACTOR SHOULD CONSULT WITH THE ENGINEER PRIOR TO ORDERING GUARDRAIL MATERIAL.

UTILITIES:

UTILITY OWNERS ON THIS PROJECT ARE AT&T COMMUNICATIONS, DUKE ENERGY, AND CLEVELAND COUNTY WATER.

ANY RELOCATION OF EXISTING UTILITIES WILL BE ACCOMPLISHED BY OTHERS, EXCEPT AS SHOWN ON THE PLANS.

8/17/99
1/9/2015 9:45:29 AM 220092_RDY_TSH.dgn

04/16/13

PROJECT REFERENCE NO.	SHEET NO.
17BP.12.R.201	1-B
REPLACES CLEVELAND COUNTY BRIDGE NO. 92	

Note: Not to Scale

**S.U.E. = Subsurface Utility Engineering*

STATE OF NORTH CAROLINA
DIVISION OF HIGHWAYS

CONVENTIONAL PLAN SHEET SYMBOLS

BOUNDARIES AND PROPERTY:

- State Line
- County Line
- Township Line
- City Line
- Reservation Line
- Property Line
- Existing Iron Pin — EIP
- Property Corner
- Property Monument — ECM
- Parcel/Sequence Number — 23
- Existing Fence Line
- Proposed Woven Wire Fence
- Proposed Chain Link Fence
- Proposed Barbed Wire Fence
- Existing Wetland Boundary — WLB
- Proposed Wetland Boundary — WLB
- Existing Endangered Animal Boundary — EAB
- Existing Endangered Plant Boundary — EPB
- Known Soil Contamination: Boundary or Site
- Potential Soil Contamination: Boundary or Site

BUILDINGS AND OTHER CULTURE:

- Gas Pump Vent or U/G Tank Cap
- Sign
- Well
- Small Mine
- Foundation
- Area Outline
- Cemetery
- Building
- School
- Church
- Dam

HYDROLOGY:

- Stream or Body of Water
- Hydro, Pool or Reservoir
- Jurisdictional Stream — JS
- Buffer Zone 1 — BZ 1
- Buffer Zone 2 — BZ 2
- Flow Arrow
- Disappearing Stream
- Spring
- Wetland
- Proposed Lateral, Tail, Head Ditch — FLOW
- False Sump

RAILROADS:

- Standard Gauge — CSX TRANSPORTATION
- RR Signal Milepost — MILEPOST 35
- Switch — SWITCH
- RR Abandoned
- RR Dismantled

RIGHT OF WAY:

- Baseline Control Point
- Existing Right of Way Marker
- Existing Right of Way Line
- Proposed Right of Way Line
- Proposed Right of Way Line with Iron Pin and Cap Marker
- Proposed Right of Way Line with Concrete or Granite Marker
- Existing Control of Access — CA
- Proposed Control of Access — CA
- Existing Easement Line — E
- Proposed Temporary Construction Easement — E
- Proposed Temporary Drainage Easement — TDE
- Proposed Permanent Drainage Easement — PDE
- Proposed Permanent Drainage / Utility Easement — DUE
- Proposed Permanent Utility Easement — PUE
- Proposed Temporary Utility Easement — TUE
- Proposed Aerial Utility Easement — AUE
- Proposed Permanent Easement with Iron Pin and Cap Marker

ROADS AND RELATED FEATURES:

- Existing Edge of Pavement
- Existing Curb
- Proposed Slope Stakes Cut — C
- Proposed Slope Stakes Fill — F
- Proposed Curb Ramp — CR
- Curb Cut Future Ramp — CCFR
- Existing Metal Guardrail
- Proposed Guardrail
- Existing Cable Guiderail
- Proposed Cable Guiderail
- Equality Symbol
- Pavement Removal

VEGETATION:

- Single Tree
- Single Shrub
- Hedge
- Woods Line
- Orchard
- Vineyard — Vineyard

EXISTING STRUCTURES:

MAJOR:

- Bridge, Tunnel or Box Culvert — CONC
- Bridge Wing Wall, Head Wall and End Wall — CONC WW

MINOR:

- Head and End Wall — CONC HW
- Pipe Culvert
- Footbridge
- Drainage Box: Catch Basin, DI or JB — CB
- Paved Ditch Gutter
- Storm Sewer Manhole — S
- Storm Sewer — S

UTILITIES:

POWER:

- Existing Power Pole
- Proposed Power Pole
- Existing Joint Use Pole
- Proposed Joint Use Pole
- Power Manhole — P
- Power Line Tower
- Power Transformer
- U/G Power Cable Hand Hole
- H-Frame Pole
- Recorded U/G Power Line — P
- Designated U/G Power Line (S.U.E.*) — P

TELEPHONE:

- Existing Telephone Pole
- Proposed Telephone Pole
- Telephone Manhole — T
- Telephone Booth
- Telephone Pedestal — T
- Telephone Cell Tower
- U/G Telephone Cable Hand Hole — HH
- Recorded U/G Telephone Cable — T
- Designated U/G Telephone Cable (S.U.E.*) — T
- Recorded U/G Telephone Conduit — TC
- Designated U/G Telephone Conduit (S.U.E.*) — TC
- Recorded U/G Fiber Optics Cable — T FO
- Designated U/G Fiber Optics Cable (S.U.E.*) — T FO

WATER:

- Water Manhole — W
- Water Meter
- Water Valve
- Water Hydrant
- Recorded U/G Water Line — W
- Designated U/G Water Line (S.U.E.*) — W
- Above Ground Water Line — A/G Water

TV:

- TV Satellite Dish
- TV Pedestal — C
- TV Tower
- U/G TV Cable Hand Hole — HH
- Recorded U/G TV Cable — TV
- Designated U/G TV Cable (S.U.E.*) — TV
- Recorded U/G Fiber Optic Cable — TV FO
- Designated U/G Fiber Optic Cable (S.U.E.*) — TV FO

GAS:

- Gas Valve
- Gas Meter
- Recorded U/G Gas Line — G
- Designated U/G Gas Line (S.U.E.*) — G
- Above Ground Gas Line — A/G Gas

SANITARY SEWER:

- Sanitary Sewer Manhole
- Sanitary Sewer Cleanout
- U/G Sanitary Sewer Line — SS
- Above Ground Sanitary Sewer — A/G Sanitary Sewer
- Recorded SS Forced Main Line — FSS
- Designated SS Forced Main Line (S.U.E.*) — FSS

MISCELLANEOUS:

- Utility Pole
- Utility Pole with Base
- Utility Located Object
- Utility Traffic Signal Box — S
- Utility Unknown U/G Line — ?UTL
- U/G Tank; Water, Gas, Oil
- Underground Storage Tank, Approx. Loc. — UST
- A/G Tank; Water, Gas, Oil
- Geoenvironmental Boring
- U/G Test Hole (S.U.E.*)
- Abandoned According to Utility Records — AATUR
- End of Information — E.O.I.

PROJECT REFERENCE NO.	SHEET NO.
17BP.12.R.201	2
REPLACES CLEVELAND COUNTY BRIDGE NO. 92	

ROADWAY DESIGN ENGINEER — Jan 20, 2015 — NORTH CAROLINA PROFESSIONAL SEAL 032584 ENGINEER R. ERSKINE BROOKS — R. Erskine Brooks — R. Erskine Brooks, Jr. Date: 01/20/2015

HYDRAULICS ENGINEER — Jan 20, 2015 — NORTH CAROLINA PROFESSIONAL SEAL 31986 ENGINEER JAMES H. RICE — James H. Rice — James H. Rice, Date: 01/20/2015

HDR Engineering, Inc. of the Carolinas
3733 National Drive, Suite 207 Raleigh, N.C. 27612
N.C.B.E.L.S. License Number: F-0116

PAVEMENT SCHEDULE

C1	PROP. APPROX. 3.0" ASPHALT CONCRETE SURFACE COURSE, TYPE S9.5B, AT AN AVERAGE RATE OF 168 Lbs PER SQUARE YARD IN EACH OF TWO LAYERS.
D1	PROP. APPROX. 2.5" ASPHALT CONCRETE INTERMEDIATE COURSE, TYPE I19.0B, AT AN AVERAGE RATE OF 285 Lbs PER SQUARE YARD.
E1	PROP. APPROX. 4.0" ASPHALT CONCRETE BASE COURSE, TYPE B25.0B, AT AN AVERAGE RATE OF 456 Lbs PER SQUARE YARD.
T	EARTH MATERIAL

NOTE: PAVEMENT EDGE SLOPES ARE 1:1 UNLESS OTHERWISE SHOWN.

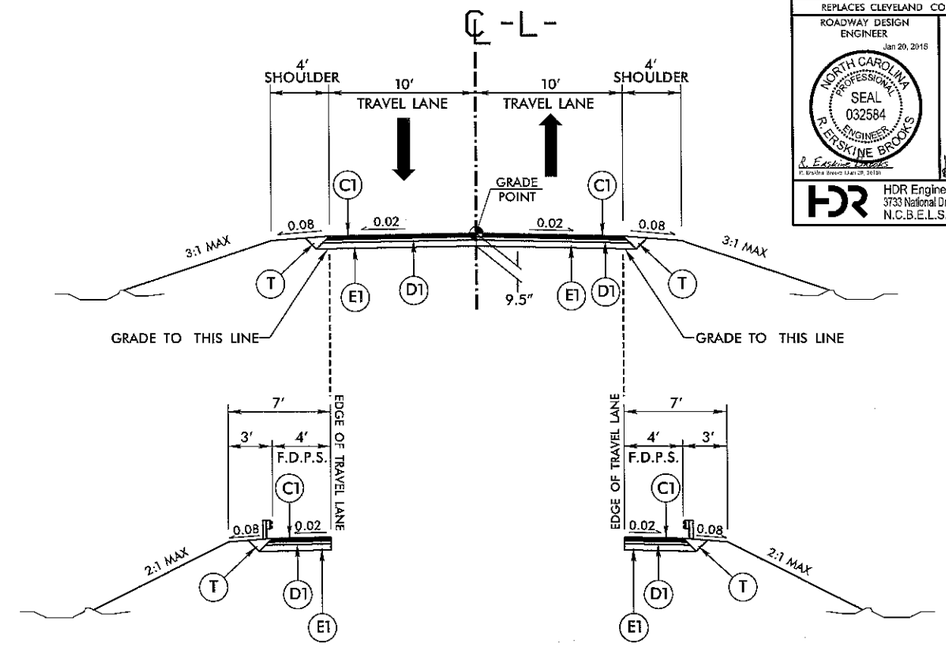

TYPICAL SECTION NO. 1

LINE	FROM STATION	TO STATION
-L-	13+50.00	16+00.00

DETAIL

*NOT TO SCALE

MULTI-BARREL – GENERAL DETAIL LOW FLOW CHANNEL AND FLOOD PLAIN SILL

*NOTES:

1) FLOOD PLAIN BENCH SHOULD BE CONSTRUCTED WITH FILL MATERIAL OR SALVAGED STREAM BED MATERIAL. CONSTRUCT BENCH TO THE TOP OF THE SILL AND LINE BENCH WITH COIR FIBER MATTING.
2) PLACE CLASS 'II' RIP RAP ON FACE OF FLOOD PLAIN BENCH AND CHANNEL SIDE SLOPES.
3) CLASS 'I' RIP RAP TO BE PLACED IN HIGH FLOW BARREL TO THE SILL ELEVATION DURING CULVERT INSTALLATION.

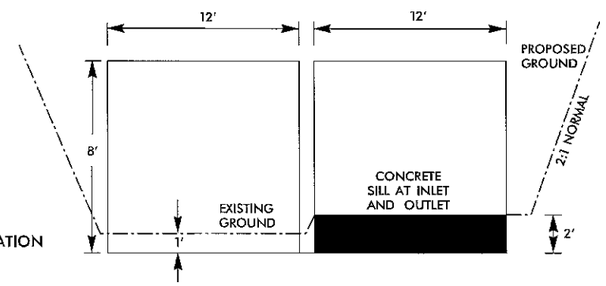

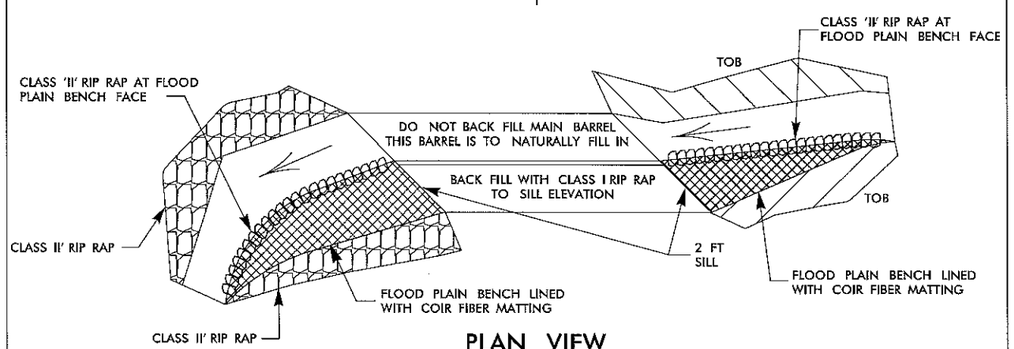

PLAN VIEW

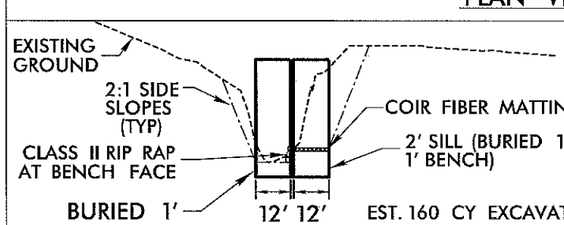

EST. 160 CY EXCAVATION
EST. 8 TONS CLASS II RIP RAP
EST. 10 SY GEOTEXTILE
EST. 42 SY COIR FIBER MATTING
NO RIP RAP IN BED OF STREAM

UPSTREAM AT CULVERT OUTLET (NTS)

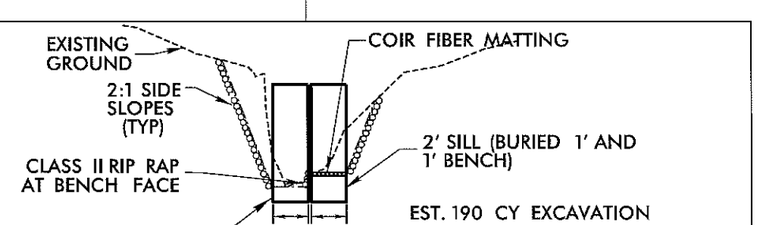

EST. 190 CY EXCAVATION
EST. 100 TONS CLASS II RIP RAP
EST. 135 SY GEOTEXTILE
EST. 70 SY COIR FIBER MATTING
NO RIP RAP IN BED OF STREAM

DOWNSTREAM AT CULVERT OUTLET (NTS)

REVISIONS

6/17/99

1/19/2015
9:14:29 AM
U:\17BP12_R201_20092_RDY_TYP.dgn

6/21/00

COMPUTED BY: T.N. BEDENBAUGH DATE: JULY 2013
CHECKED BY: R.E. BROOKS DATE: JANUARY 2015

STATE OF NORTH CAROLINA
DIVISION OF HIGHWAYS

PROJECT REFERENCE NO.	SHEET NO.
17BPJ2.R.24	3
REPLACES CLEVELAND COUNTY BRIDGE NO. 92	

REVISIONS

RIGHT OF WAY AREA DATA

PARCEL NO.	PROPERTY OWNERS NAMES	TOTAL ACREAGE	AREA TAKEN	AREA REMAINING RT.	AREA REMAINING LT.	CONST. EASE.	PERM. DRAIN. EASE.	TEMP. DRAIN. EASE.	PERM. DRAIN./UTILITY EASE.
1	TRACY HAMRICK & MICHELLE VESS	32.694	–	–	–	0.011	0.003	–	0.085
2	JAMES PATRICK DANIEL & DARLENE DANIEL, ET AL	14.240	–	–	–	–	0.066	–	–
3	DONALD HERMAN BLANTON & AILEEN BLANTON	22.000	–	–	–	–	0.058	–	0.035

*NOTE: ALL AREAS ARE IN ACRES

SUMMARY OF PAVEMENT REMOVAL

IN SQUARE YARDS

LOCATION	ASPHALT REMOVAL	ASHPALT BREAK UP	CONCRETE REMOVAL	CONCRETE BREAK UP
-L- STA. 13+50.00 TO EXIST BRIDGE	151			
EXIST BRIDGE TO -L- STA. 16+00.00	128			
PROJECT TOTALS	279			

SUMMARY OF EARTHWORK

IN CUBIC YARDS

LOCATION	UNCLASSIFIED EXCAVATION	UNDERCUT	EMBT+15%	BORROW	WASTE
-L- STA. 13+50.00 TO 16+00.00	173		982		
SUBTOTAL	173		982	809	
PROJECT TOTALS	173		982	809	
SAY	180				

Note: Approximate quantities only. Unclassified Excavation, Borrow Excavation, Shoulder Borrow, Fine Grading, Clearing and Grubbing, Breaking of Existing Pavement, and Removal of Existing Pavement will be paid for at the contract lump sum price for "Grading."

LIST OF PIPES, ENDWALLS, ETC. (FOR PIPES 48" & UNDER)

STATION / SIZE / THICKNESS OR GAUGE	LOCATION (LT,RT, OR CL)	STRUCTURE NO. FROM	STRUCTURE NO. TO	TOP ELEVATION	INVERT ELEVATION	INVERT ELEVATION	SLOPE CRITICAL	CLASS IV R.C.P. PIPE (UNLESS OTHERWISE NOTED) 12"	15"	18"	24"	30"	36"	42"	48"	C.S. PIPE (UNLESS NOTED OTHRWISE) 12" .064	15" .064	18" .064	24" .064	30" .079	36" .079	42" .109	48" .109	CLASS III R.C. PIPE (UNLESS OTHERWISE NOTED) 12"	15"	18"	24"	30"	36"	42"	48"	15" SIDE DRAIN PIPE	18" SIDE DRAIN PIPE	24" SIDE DRAIN PIPE	ENDWALLS STD. 838.01, STD. 838.11 OR STD. 838.80 (UNLESS NOTED OTHERWISE) CU. YDS. R.C.P.	C.S.P.	QUANTITIES FOR DRAINAGE STRUCTURES PER EACH (0' THRU 5.0')	* TOTAL L.F. FOR PAY QUANTITY SHALL BE COL. 'A' + (1.3 X COL.'B') LIN. *FT. A 5.0' THRU 10.0'	B 10.0' AND ABOVE	C.B. STD. 840.01 OR STD. 840.02	FRAME, GRATES AND HOOD STANDARD 840.03 TYPE OF GRATE E	F	G	D.I. STD. 840.14 OR STD. 840.15	D.I. FRAME & GRATE STD. 840.16	G.D.I. TYPE "A" STD. 840.17 OR 840.26	G.D.I. TYPE "B" STD. 840.18 OR 840.27	G.D.I. TYPE "D" STD. 840.19 OR 840.28	G.D.I. FRAME WITH GRATE STD. 840.22	G.D.I. FRAME WITH TWO GRATES STD. 840.22	G.D.I. (N.S.) FRAME WITH GRATE STD. 840.24	G.D.I. (N.S.) FRAME WITH TWO GRATES STD. 840.24	J.B. STD. 840.31 OR 840.32	G.D.I. (N.S.) FRAME WITH TWO GRATES STD. 840.29	T.B.D.I. STD. 840.35						CORR. STEEL ELBOWS NO. & SIZE	CONC. COLLARS CL. "B" C.Y. STD 840.72	CONC. & BRICK PIPE PLUG, C.Y. STD. 840.71	PIPE REMOVAL LIN.FT.	REMARKS

ABBREVIATIONS

- C.B. CATCH BASIN
- N.D.I. NARROW DROP INLET
- D.I. DROP INLET
- G.D.I. GRATED DROP INLET
- G.D.I. (N.S.) GRATED DROP INLET (NARROW SLOT)
- J.B. JUNCTION BOX
- M.H. MANHOLE
- T.B.D.I. TRAFFIC BEARING DROP INLET
- T.B.J.B. TRAFFIC BEARING JUNCTION BOX

NOTE: Invert Elevations are for Bid Purposes only and shall not be used for project construction stakeout. See "Standard Specifications For Roads and Structures, Section 300–5".

"N" = DISTANCE FROM EDGE OF LANE TO FACE OF GUARDRAIL.
TOTAL SHOULDER WIDTH = DISTANCE FROM EDGE OF TRAVEL LANE TO SHOULDER BREAK POINT.
FLARE LENGTH = DISTANCE FROM LAST SECTION OF PARALLEL GUARDRAIL TO END OF GUARDRAIL.
W = TOTAL WIDTH OF FLARE FROM BEGINNING OF TAPER TO END OF GUARDRAIL.
G = GATING IMPACT ATTENUATOR TYPE 350
NG = NON-GATING IMPACT ATTENUATOR TYPE 350

GUARDRAIL SUMMARY

SURVEY LINE	BEG. STA.	END STA.	LOCATION	LENGTH STRAIGHT	LENGTH SHOP CURVED	LENGTH DOUBLE FACED	WARRANT POINT APPROACH END	WARRANT POINT TRAILING END	"N" DIST. FROM E.O.L.	TOTAL SHOUL WIDTH	FLARE LENGTH APPROACH END	FLARE LENGTH TRAILING END	W APPROACH END	W TRAILING END	ANCHORS XI MOD	XI	GRAU 350	M-350	XIII	CAT-1	VI MOD	TYPE III	AT-1	IMPACT ATTENUATOR TYPE 350 EA	G	NG	SINGLE FACED GUARDRAIL	REMOVE EXISTING GUARDRAIL	REMOVE AND STOCKPILE EXISTING GUARDRAIL	REMARKS
-L-	14+50.00	15+75.00	LT	125.00			15+50.00	14+94.00	4	7	50.00	50.00	1	1			2													
-L-	13+76.50	15+14.00	RT	137.50			14+42.00	15+02.00	4	7	50.00	50.00	1	1			2													
		SUBTOTAL		262.50																										
		GRAU 350 @ 50'X4		-200.00																										
		TOTAL		62.50													4													

1/9/2015
...\220092_RDY_SUM.dgn
7:44:36 PM

CULVERT DETAILS LOCATED ON SHEET 2.

PROJECT REFERENCE NO.	SHEET NO.
17BP.12.R.201	4

REPLACES CLEVELAND COUNTY BRIDGE NO. 92

ROADWAY DESIGN ENGINEER — Jan 20, 2015 — NORTH CAROLINA PROFESSIONAL SEAL 032584 ENGINEER R. ERSKINE BROOKS

HYDRAULICS ENGINEER — Jan 20, 2015 — NORTH CAROLINA PROFESSIONAL SEAL 31986 ENGINEER JAMES A. RICE

HDR Engineering, Inc. of the Carolinas
3733 National Drive, Suite 207 Raleigh, N.C. 27612
N.C.B.E.L.S. License Number: F-0116

NAD 83/NSRS 2007

8/17/99

REVISIONS

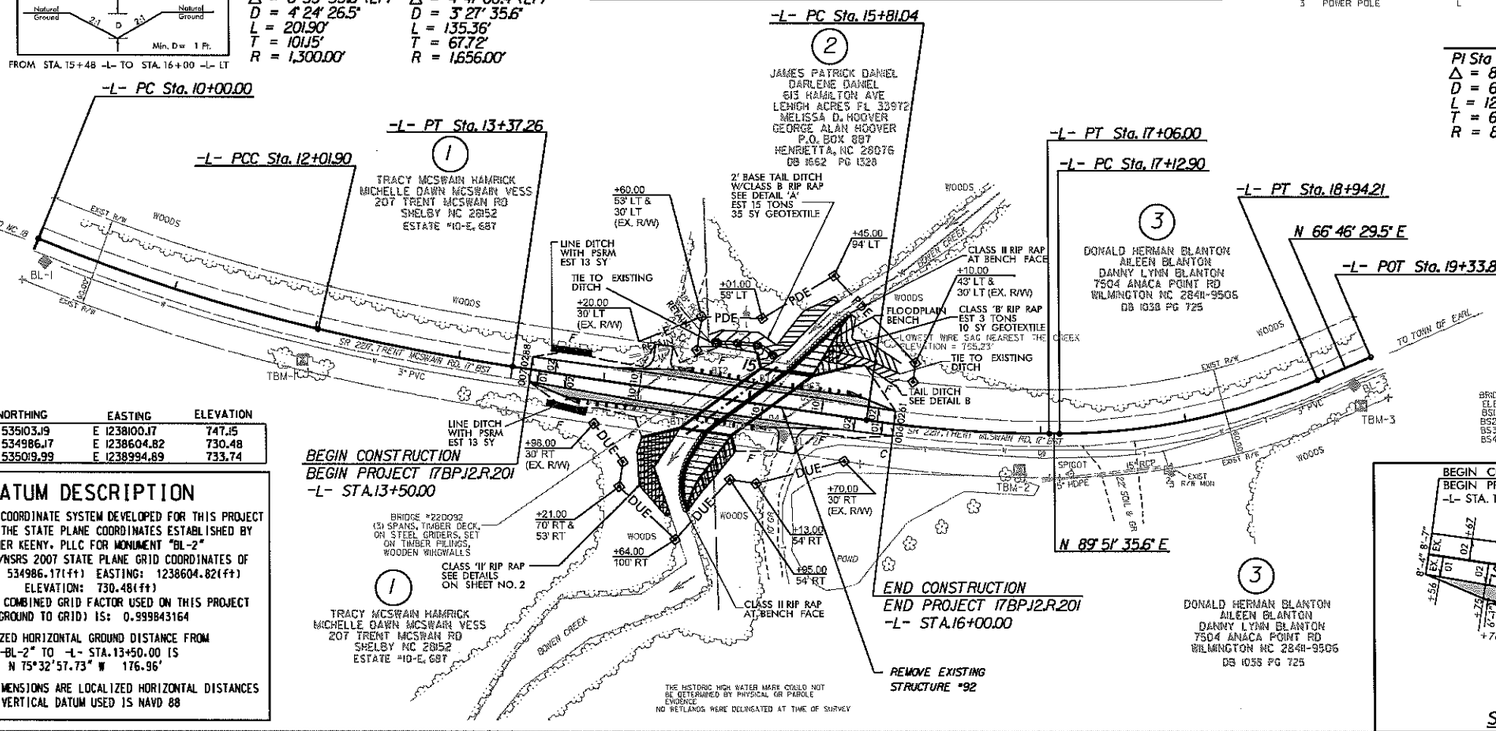

DETAIL B
TAIL DITCH
(Not to Scale)
Natural Ground — 2:1 — D — 2:1 — Natural Ground
Min. D= 1 Ft.
FROM STA. 15+48 -L- TO STA. 16+00 -L- LT

-L-

PI Sta 11+01.15	PI Sta 12+69.61
Δ = 8° 53' 53.8" (LT)	Δ = 4° 41' 00.4" (LT)
D = 4° 24' 26.5"	D = 3° 27' 35.6"
L = 201.90'	L = 135.36'
T = 101.15'	T = 67.72'
R = 1,300.00'	R = 1,656.00'

-L-

PI Sta 16+43.64	PI Sta 18+04.80
Δ = 8° 40' 42.2" (LT)	Δ = 23° 05' 06.1" (LT)
D = 6° 56' 41.8"	D = 12° 43' 56.5"
L = 124.96'	L = 181.31'
T = 62.60'	T = 91.90'
R = 825.00'	R = 450.00'

CLEVELAND COUNTY BRIDGE: # 92 POLE DATA

#	TYPE	ALIGNMENT	STATION	OFFSET	OWNER
1	POWER POLE	L	14+90	-69.4	DUKE ENERGY
2	TELEPHONE PEDESTAL	L	17+83	30.6	AT&T COMMUNICATIONS
3	POWER POLE	L	17+85	33.4	DUKE ENERGY

(1) TRACY MCSWAIN HAMRICK, MICHELLE DAWN MCSWAIN VESS, 207 TRENT MCSWAIN RD, SHELBY NC 28152, ESTATE #10-E, 687

(2) JAMES PATRICK DANIEL, DARLENE DANIEL, 613 HAMILTON AVE, LEHIGH ACRES FL 33972; MELISSA D. HOOVER, GEORGE ALAN HOOVER, P.O. BOX 897, HENRIETTA, NC 28076, DB 1662 PG 1328

(3) DONALD HERMAN BLANTON, AILEEN BLANTON, DANNY LYNN BLANTON, 7504 ANACA POINT RD, WILMINGTON NC 28411-9506, DB 1038 PG 725

DETAIL A
2' BASE TAIL DITCH WITH RIP-RAP
(Not to Scale)
Natural Ground — 2:1 — D — 2:1 — Natural Ground; Geotextile; B; Min. D= 1 Ft. Max. d= 1 Ft. B= 2 Ft.
*When B is < 6.0'
Type of Liner= Class B Rip-Rap
FROM STA. 14+69 -L- TO STA. 15+16 -L- LT

DECK ELEVATIONS
D1= 730.94
D2= 730.19
D3= 730.08
D4= 730.00

BRIDGE SEAT ELEVATIONS	BRIDGE BENT ELEVATIONS
BS1= 728.96	B1= 728.93
BS2= 728.97	B2= 729.04
BS3= 728.93	B3= 728.96
BS4= 728.75	B4= 728.99

TBM-1 ELEVATION = 742.00
N 535037 E 1238277
BL STATION 9+67.00 25' RIGHT
NAIL DRIVEN VERTICALLY IN ROOT OF 10" SWEET GUM

TBM-2 ELEVATION = 730.78
N 534962 E 1238766
BL STATION 14+77.00 38' RIGHT
RAILROAD SPIKE IN BASE OF 22" POPLAR

TBM-3 ELEVATION = 736.22
N 535006 E 1238999
BL STATION 14+48.00
S 18°01'40" E Dist 14.74
NAIL IN BASE OF 12" SYCAMORE

NAME	NORTHING	EASTING	ELEVATION
BL-1=	N 535103.19	E 1238100.17	747.15
BL-2 =	N 534986.17	E 1238604.82	730.48
BL-3 =	N 535019.99	E 1238994.89	733.74

DATUM DESCRIPTION

THE LOCALIZED COORDINATE SYSTEM DEVELOPED FOR THIS PROJECT IS BASED ON THE STATE PLANE COORDINATES ESTABLISHED BY JOYNER KEENY, PLLC FOR MONUMENT "BL-2" WITH NAD 83/NSRS 2007 STATE PLANE GRID COORDINATES OF NORTHING: 534986.17(ft) EASTING: 1238604.82(ft) ELEVATION: 730.48(ft)
THE AVERAGE COMBINED GRID FACTOR USED ON THIS PROJECT (GROUND TO GRID) IS: 0.999843164

LOCALIZED HORIZONTAL GROUND DISTANCE FROM "-BL-2" TO -L- STA.13+50.00 IS N 75°32'57.73" W 176.96'

ALL LINEAR DIMENSIONS ARE LOCALIZED HORIZONTAL DISTANCES
VERTICAL DATUM USED IS NAVD 88

BEGIN CONSTUCTION
BEGIN PROJECT 17BP.12.201
-L- STA. 13+50.00

END CONSTUCTION
END PROJECT 17BP.12.201
-L- STA. 16+00.00

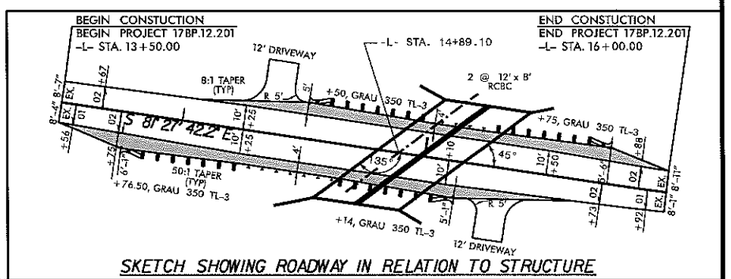

SKETCH SHOWING ROADWAY IN RELATION TO STRUCTURE

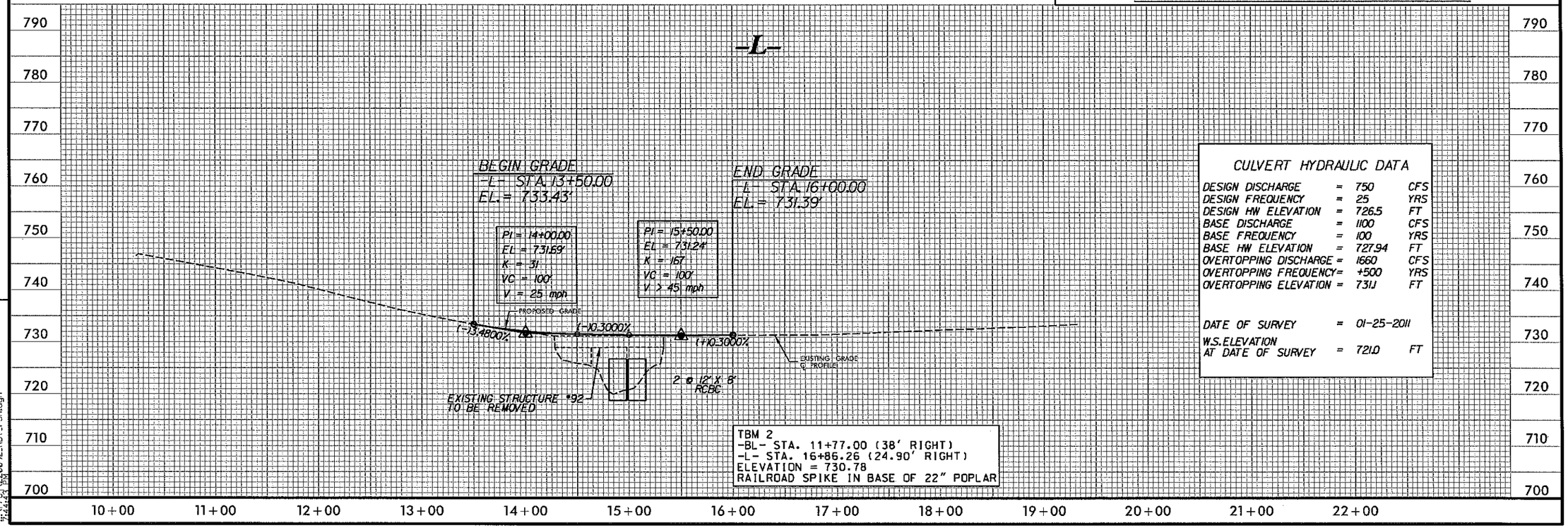

CULVERT HYDRAULIC DATA

DESIGN DISCHARGE	=	750	CFS
DESIGN FREQUENCY	=	25	YRS
DESIGN HW ELEVATION	=	726.5	FT
BASE DISCHARGE	=	1100	CFS
BASE FREQUENCY	=	100	YRS
BASE HW ELEVATION	=	727.94	FT
OVERTOPPING DISCHARGE	=	1660	CFS
OVERTOPPING FREQUENCY	=	+500	YRS
OVERTOPPING ELEVATION	=	731.1	FT
DATE OF SURVEY	=	01-25-2011	
W.S. ELEVATION AT DATE OF SURVEY	=	721.0	FT

1/19/2015
17BP.12.R.201_220092_RDY_PSH.dgn

STATE OF NORTH CAROLINA
DIVISION OF HIGHWAYS

TRANSPORTATION MANAGEMENT PLAN

CLEVELAND COUNTY

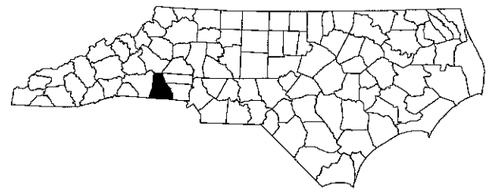

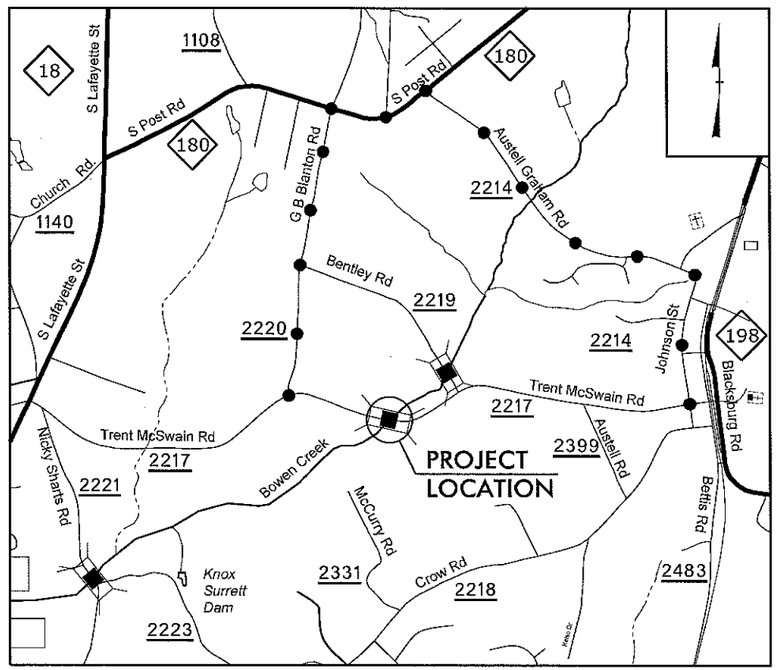

DETOUR ROUTE

VICINITY MAP
(NOT TO SCALE)

INDEX OF SHEETS

SHEET NO.	TITLE
TMP-1	TITLE SHEET AND INDEX OF SHEETS
TMP-1A	LIST OF APPLICABLE ROADWAY STANDARD DRAWINGS AND LEGEND
TMP-1B	GENERAL NOTES AND PHASING
TMP-2	OFFSITE DETOUR PLAN - TRENT MCSWAIN ROAD (SR 2217)
SD-01	SIGN DESIGN - TRENT MCSWAIN ROAD (SR 2217)

SHEET NO.
TMP-1

17BP.12.R.201

STATE PROJECT:

WORK ZONE SAFETY & MOBILITY
"from the MOUNTAINS to the COAST"

N.C.D.O.T. WORK ZONE TRAFFIC CONTROL
1561 MAIL SERVICE CENTER (MSC) RALEIGH, NC 27699-1561
750 N. GREENFIELD PARKWAY, GARNER, NC 27529 (DELIVERY)
PHONE: (919) 773-2800 FAX: (919) 771-2745

J. S. BOURNE, P.E. — STATE TRAFFIC MANAGEMENT ENGINEER
DOMINIC WAINWRIGHT, P.E. — PROJECT ENGINEER
R. ERSKINE BROOKS, P.E. — TRAFFIC CONTROL PROJECT DESIGN ENGINEER
T. N . BEDENBAUGH, E.I. — TRAFFIC CONTROL DESIGN ENGINEER

DIVISION OF HIGHWAYS · STATE OF NORTH CAROLINA · DEPARTMENT OF TRANSPORTATION · WORK ZONE TRAFFIC CONTROL

PLAN PREPARED BY:
HDR Engineering, Inc. of the Carolinas
3733 National Drive, Suite 207 Raleigh, N.C. 27612
N.C.B.E.L.S. License Number: F-0116

APPROVED: R. Erskine Brooks
R. Erskine Brooks (Jan 26, 2015)
DATE: Jan 26, 2015

NORTH CAROLINA PROFESSIONAL SEAL 032584 ENGINEER R. ERSKINE BROOKS

1/16/2015
17BP12R201_TCP-DSN.dgn
12:41:07 PM

PROJ. REFERENCE NO.	SHEET NO.
17BP.12.R.201	TMP-1A
REPLACES CLEVELAND COUNTY BRIDGE NO. 92	

HDR Engineering, Inc. of the Carolinas
3723 National Drive, Suite 207 Raleigh, N.C. 27612
N.C.B.E.L.S. License Number: F-0116

ROADWAY STANDARD DRAWINGS

THE FOLLOWING ROADWAY STANDARDS AS SHOWN IN "ROADWAY STANDARD DRAWINGS" - PROJECT SERVICES UNIT - N.C. DEPARTMENT OF TRANSPORTATION - RALEIGH, N.C., DATED JANUARY 2012 ARE APPLICABLE TO THIS PROJECT AND BY REFERENCE HEREBY ARE CONSIDERED A PART OF THESE PLANS:

STD. NO.	TITLE
1101.01	WORK ZONE WARNING SIGNS
1101.03	TEMPORARY ROAD CLOSURES
1101.05	WORK ZONE VEHICLE ACCESSES
1101.11	TRAFFIC CONTROL DESIGN TABLES
1110.01	STATIONARY WORK ZONE SIGNS
1145.01	BARRICADES
1205.01	PAVEMENT MARKINGS - LINE TYPES & OFFSETS
1205.02	PAVEMENT MARKINGS - 2 LANE & MULTILANE ROADWAYS
1205.12	PAVEMENT MARKINGS - BRIDGES
1261.01	GUARDRAIL AND BARRIER DELINEATORS - INSTALLATION SPACING
1261.02	GUARDRAIL AND BARRIER DELINEATORS - TYPES AND MOUNTING
1262.01	GUARDRAIL END DELINEATION

LEGEND

GENERAL

- DIRECTION OF TRAFFIC FLOW
- DIRECTION OF PEDESTRIAN TRAFFIC FLOW
- EXIST. PVMT.
- NORTH ARROW
- PROPOSED PVMT.
- WORK AREA
- REMOVAL

TRAFFIC CONTROL DEVICES

- BARRICADE (TYPE III)
- CONE
- DRUM — SKINNY DRUM — TUBULAR MARKER
- TEMPORARY CRASH CUSHION
- FLASHING ARROW PANEL (TYPE C)
- FLAGGER
- LAW ENFORCEMENT
- TRUCK MOUNTED IMPACT ATTENUATOR (TMIA)
- CHANGEABLE MESSAGE SIGN

TEMPORARY SIGNING

- PORTABLE SIGN
- STATIONARY SIGN
- STATIONARY OR PORTABLE SIGN

SIGNALS

EXISTING — PROPOSED — TEMPORARY (TEMP)

PAVEMENT MARKINGS

- EXISTING LINES
- TEMPORARY LINES

PAVEMENT MARKERS

- CRYSTAL/CRYSTAL
- CRYSTAL/RED
- YELLOW/YELLOW

PAVEMENT MARKING SYMBOLS

- PAVEMENT MARKING SYMBOLS

APPROVED: R. Erskine Brooks DATE: Jan 20, 2016

NORTH CAROLINA PROFESSIONAL SEAL 032584 ENGINEER R. ERSKINE BROOKS

DIVISION OF HIGHWAYS STATE OF NORTH CAROLINA DEPARTMENT OF TRANSPORTATION WORK ZONE TRAFFIC CONTROL

ROADWAY STANDARD DRAWINGS & LEGEND

1/18/2015
...\220092_TCP_DSN.dgn
12:41:08 PM

PROJ. REFERENCE NO.	SHEET NO.
17BP.12.R.201	TMP-1B
REPLACES CLEVELAND COUNTY BRIDGE NO. 92	

HDR Engineering, Inc. of the Carolinas
3733 National Drive, Suite 207 Raleigh, N.C. 27612
N.C.B.E.L.S. License Number: F-0116

GENERAL NOTES

CHANGES MAY BE REQUIRED WHEN PHYSICAL DIMENSIONS IN THE DETAIL DRAWINGS, STANDARD DETAILS, AND ROADWAY DETAILS ARE NOT ATTAINABLE TO MEET FIELD CONDITIONS, OR RESULT IN DUPLICATE, OR UNDESIRED OVERLAPPING OR DEVICES. MODIFICATION MAY INCLUDE: MOVING, SUPPLEMENTING, COVERING, OR REMOVAL OF DEVICES, AS DIRECTED BY THE ENGINEER.

THE FOLLOWING GENERAL NOTES APPLY AT ALL TIMES FOR THE DURATION OF THE CONSTRUCTION PROJECT, EXCEPT WHEN OTHERWISE NOTED IN THE PLAN, OR DIRECTED BY THE ENGINEER.

TRAFFIC PATTERN ALTERATIONS

A) NOTIFY THE ENGINEER TWENTY ONE (21) CALENDAR DAYS PRIOR TO ANY TRAFFIC PATTERN ALTERATION.

SIGNING

B) INSTALL ADVANCE WORK ZONE WARNING SIGNS WHEN WORK IS WITHIN 40 FT FROM THE EDGE OF TRAVEL LANE AND NO MORE THAN THREE (3) DAYS PRIOR TO THE BEGINNING OF CONSTRUCTION.

C) PROVIDE SIGNING AND DEVICES REQUIRED TO CLOSE THE ROAD ACCORDING TO THE ROADWAY STANDARD DRAWINGS AND TRAFFIC CONTROL PLANS.

PROVIDE SIGNING REQUIRED FOR THE OFFSITE DETOUR ROUTE AS SHOWN IN THE TRAFFIC CONTROL PLANS.

D) COVER OR REMOVE ALL SIGNS AND DEVICES REQUIRED TO CLOSE THE ROAD WHEN THE ROAD CLOSURE IS NOT IN OPERATION.

COVER OR REMOVE ALL SIGNS REQUIRED FOR THE OFFSITE DETOUR WHEN THE DETOUR IS NOT IN OPERATION.

E) ENSURE ALL NECESSARY SIGNING IS IN PLACE PRIOR TO ALTERING ANY TRAFFIC PATTERN.

TRAFFIC CONTROL DEVICES

F) PLACE TYPE III BARRICADES, WITH "ROAD CLOSED" SIGN R11-2 ATTACHED, OF SUFFICIENT LENGTH TO CLOSE ENTIRE ROADWAY.

PAVEMENT MARKINGS AND MARKERS

G) UPON COMPLETION OF ALL OTHER CONSTRUCTION OPERATIONS, INSTALL 2 APPLICATIONS OF PAINT PAVEMENT MARKINGS ON THE FINAL SURFACE, ACCORDING TO RSD 1205.1, 1205.2 AND 1205.12.

PHASING NOTES

TRAFFIC CONTROL PHASING

NOTE: COORDINATE WITH THE ENGINEER FOR INSTALLATION AND REMOVAL OF ALL SIGNING AND TRAFFIC CONTROL DEVICES.

NOTE: MAINTAIN ACCESS TO DRIVEWAYS WITHIN PROJECT LIMITS AT ALL TIMES.

STEP 1: USING RSD 1101.01, SHEET 3 OF 3, INSTALL ADVANCE WORK ZONE WARNING SIGNS ON TRENT MCSWAIN ROAD (SR 2217).

STEP 2: USING RSD 1101.03, SHEET 1 OF 9 AND SHEET TMP-2, INSTALL DETOUR SIGNS AND BARRICADES AND CLOSE TRENT MCSWAIN ROAD (SR 2217).

STEP 3: REMOVE EXISTING BRIDGE NO. 92 AND CONSTRUCT PROPOSED CULVERT AND ROADWAY, UP TO AND INCLUDING THE FINAL LAYER OF SURFACE COURSE. PLACE FINAL PAVEMENT MARKINGS ON TRENT MCSWAIN ROAD (SR 2217) FROM -L- STA. 13+50 +/- TO STA. 16+00 +/-.

STEP 4: REMOVE ALL ADVANCE WORK ZONE DETOUR SIGNS, AND TRAFFIC CONTROL DEVICES AND OPEN TRENT MCSWAIN ROAD (SR 2217) TO TRAFFIC.

APPROVED: R. Erskine Brooks DATE: Jan 20, 2015

NORTH CAROLINA PROFESSIONAL SEAL 032584 ENGINEER R. ERSKINE BROOKS

DIVISION OF HIGHWAYS STATE OF NORTH CAROLINA DEPARTMENT OF TRANSPORTATION WORK ZONE TRAFFIC CONTROL

GENERAL NOTES AND PHASING

PLOT DRIVER: NCDOT_pdf_color_eng_50.plt PENTABLE: NCDOT_pshp-fl.tbl
USER: dwalnwrl DATE: 1/20/2015 TIME: 5:09:33 PM SCALE: half=100:1 - full=50:1
FILE: North Carolina_Dept_of_Transportation\NCDOT_DDO_CEI_BM_LSC_MASTER\NCDOT_17BP.12_Task_Order_1.c\06.00_NCDOT_File_Structure\Bridge #092 Cleveland Co.-Trent McSwain Rd\Traffic\TrafficControl\TCP\220092_TCP_DSN.dgn

PROJ. REFERENCE NO.	SHEET NO.
17BP.12.R.201	TMP-2
REPLACES CLEVELAND COUNTY BRIDGE NO. 92	

HDR Engineering, Inc. of the Carolinas
3733 National Drive, Suite 207 Raleigh, N.C. 27612
N.C.B.E.L.S. License Number: F-0116

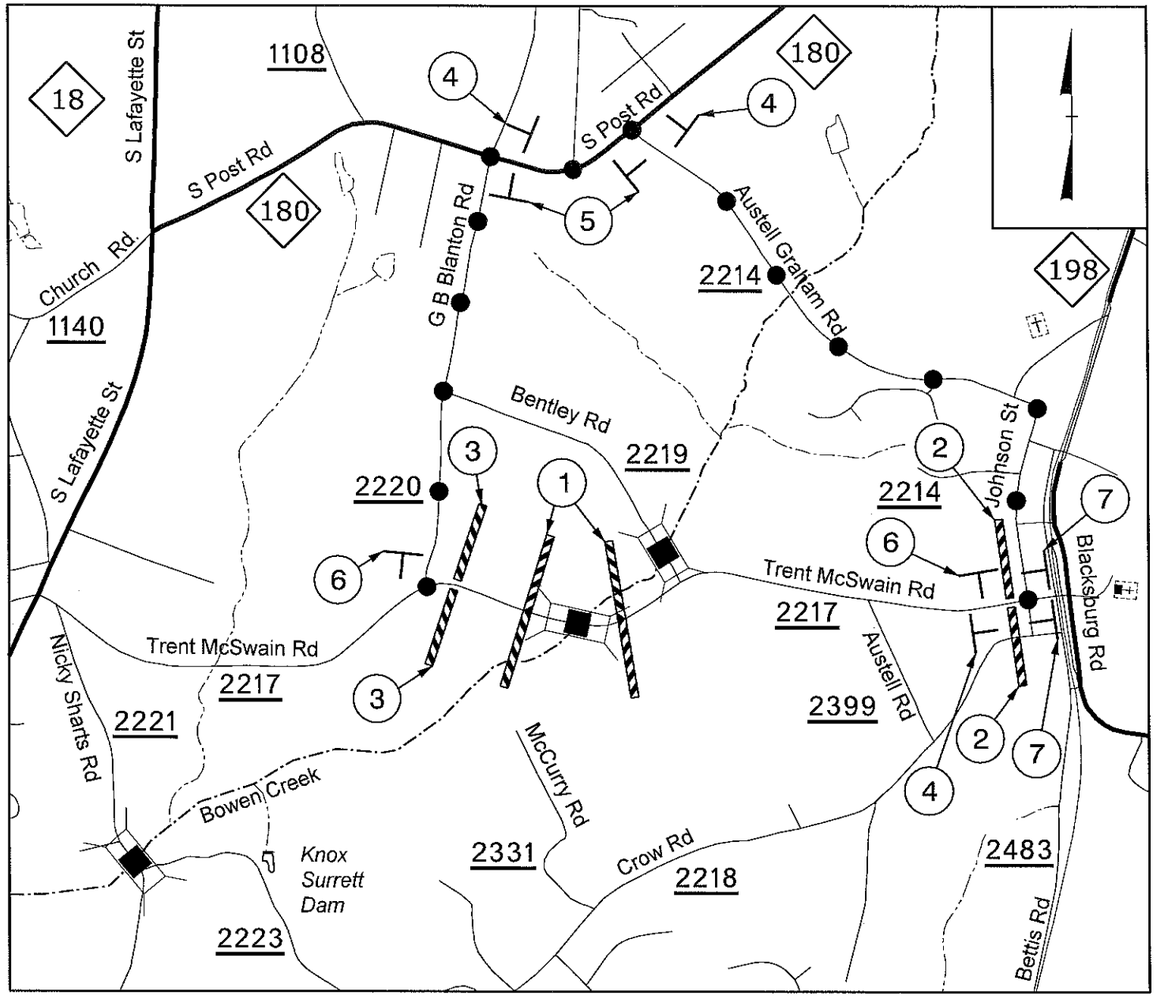

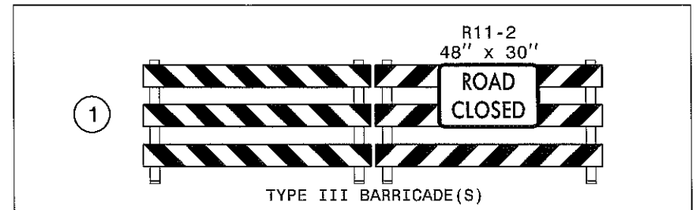

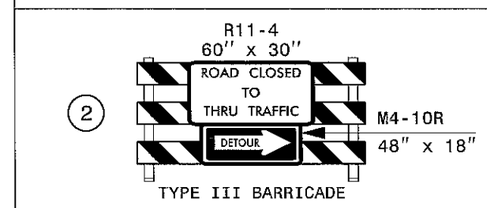

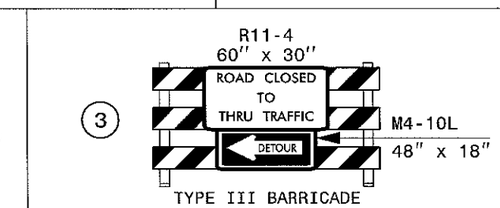

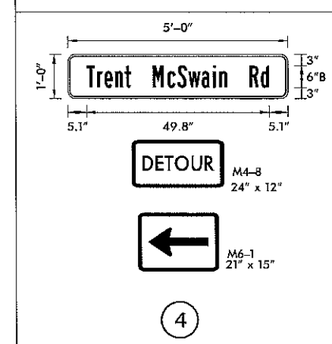

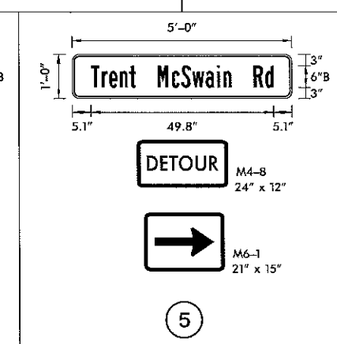

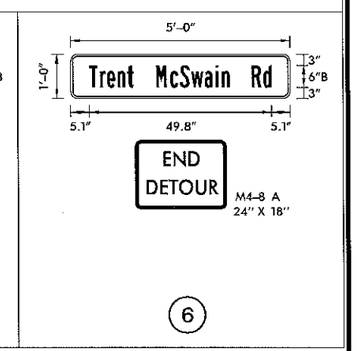

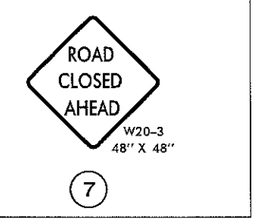

SEE SHEET SD-01 FOR SIGN DESIGN DETAILS

DETOUR ROUTE

REFER TO RSD 1101.03 SHEET 1 OF 9 FOR ADDITIONAL SIGN AND BARRICADE PLACEMENT

APPROVED: R. Erskine Brooks DATE: Jan 20, 2015

NORTH CAROLINA PROFESSIONAL SEAL 032584 ENGINEER R. ERSKINE BROOKS

DIVISION OF HIGHWAYS STATE OF NORTH CAROLINA DEPARTMENT OF TRANSPORTATION WORK ZONE TRAFFIC CONTROL

OFFSITE DETOUR PLAN
TRENT MCSWAIN ROAD
(SR 2217)

PLOT DRIVER: NCDOT_pdf_color_eng_50.plt PENTABLE: NCDOT_pshpfl.tbl
USER: dwolnwrl DATE: 1/20/2015 TIME: 5:03:38 PM SCALE: half=100: - full=50:
FILE: North Carolina Dept of Transportation\NCDOT_DDO_CEI_BM_LSC_MASTER\NCDOT_17BP.12_Task_Order_1_cV06.00_NCDOT_File_Structure\Bridge #092 Cleveland Co. Trent McSwain Rd\Traffic\TrafficControl\TCP\220092_TCP_DSN.dgn

PROJ. REFERENCE NO.	SHEET NO.
17BP.12.R.201	SD-01
REPLACES CLEVELAND COUNTY BRIDGE NO. 92	

HDR Engineering, Inc. of the Carolinas
3733 National Drive, Suite 207 Raleigh, N.C. 27612
N.C.B.E.L.S. License Number: F-0116

SIGN NUMBER:
TYPE: D
QUANTITY: 1

SIGN WIDTH: 5'-0"
HEIGHT: 1'-0"
TOTAL AREA: 5.0 Sq.Ft.

BORDER TYPE: FLUSH
RECESS: 0.38"
WIDTH: 0.38"
RADII: 1.5"

NO. Z BARS:
LENGTH:

BACKG COLOR: Orange
COPY COLOR: Black

SYMBOL	X	Y	WID	HT

MAT'L: 0.125" (3.2 mm) ALUMINUM

DESIGN BY: D KERNS
PROJECT ID: ID
CHECKED BY:
DIV: DIV
DATE: Jun 08, 2012

USE NOTES:

1. Legend and border shall be direct applied non-reflective sheeting.
2. Background shall be Grade B reflective sheeting.

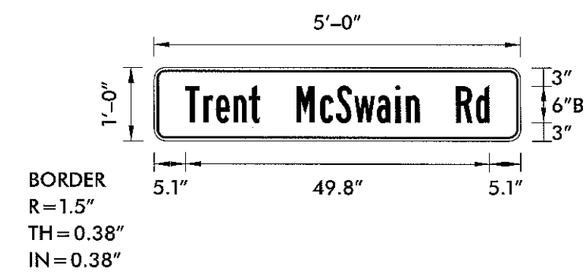

Spacing Factor is 1 unless specified otherwise

LETTER POSITIONS

Letter spacings are to start of next letter

	T	r	e	n	t		M	c	S	w	a	i	n		R	d											Series/Size Text Length
5.1	2.9	2	2.9	2.6	1.8	6	3.9	2.6	3	3.7	3.1	1.7	2.2	6	3.2	2.2	5.1										B 2000 49.8

FILENAME: DWSignDesigns

NORTH CAROLINA D.O.T. SIGN DETAIL

APPROVED: DATE: Jan 21, 2015

NORTH CAROLINA PROFESSIONAL SEAL 030881 ENGINEER DAVID H. KERNS

DIVISION OF HIGHWAYS STATE OF NORTH CAROLINA DEPARTMENT OF TRANSPORTATION WORK ZONE TRAFFIC CONTROL

SIGN DETAIL
TRENT MCSWAIN RD

PLOT DRIVER: NCDOT_pdf_color_eng.50.pit
USER: dwolnwri
DATE: 1/18/2015
FILE: ...\220092_TCP_DSN.dgn
PENTABLE: NCDOT_pshpfl.tbl
TIME: 3:40:13 PM
SCALE: hdf=100:1 - full=50:1

EROSION CONTROL PLANS

PROJECT REFERENCE NO.	SHEET NO.
17BP.12.R.201	EC-1
REPLACES CLEVELAND COUNTY BRIDGE NO. 92	

JOSHUA MASSROCK, P.E.
LEVEL III: DESIGNER OF EROSION AND SEDIMENT CONTROL PLANS.
CERTIFICATION NUMBER: 3573

HDR Engineering, Inc. of the Carolinas
3733 National Drive, Suite 297 Raleigh, N.C. 27612
N.C.B.E.L.S. License Number: F-0116

NAME	NORTHING	EASTING	ELEVATION
BL-1 =	N 535019.99	E 1238100.17	747.15
BL-2 =	N 534986.17	E 1238604.82	730.48
BL-3 =	N 674854.89	E 1238994.89	733.74

NAD 83/NSRS 2007

DETAIL B
TAIL DITCH
(Not to Scale)
Natural Ground, 2:1, D, 2:1, Natural Ground
Min. D= 1 Ft.
FROM STA. 15+48 -L- TO STA. 16+00 -L- LT

-L-

PI Sta 11+01.15
Δ = 8° 53' 53.8" (LT)
D = 4° 24' 26.5"
L = 201.90'
T = 101.15'
R = 1,300.00'

PI Sta 12+69.61
Δ = 4° 41' 00.4" (LT)
D = 3° 27' 35.6"
L = 135.36'
T = 67.72'
R = 1,656.00'

-L-

PI Sta 16+43.64
Δ = 8° 40' 42.2" (LT)
D = 6° 56' 41.8"
L = 124.96'
T = 62.60'
R = 825.00'

PI Sta 18+04.80
Δ = 23° 05' 06.1" (LT)
D = 12° 43' 56.6"
L = 181.31'
T = 91.90'
R = 450.00'

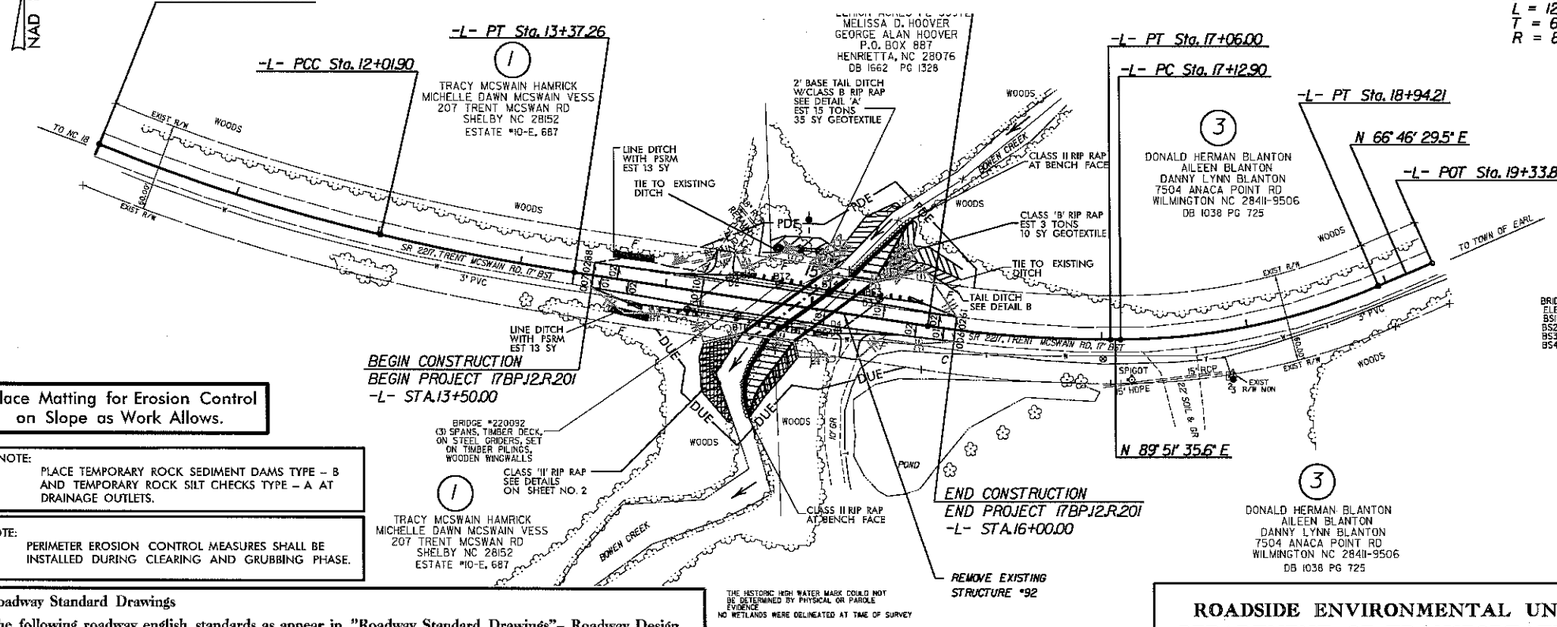

DECK ELEVATIONS
D1= 730.94
D2= 731.15
D3= 731.08
D4= 731.00

BRIDGE SEAT ELEVATIONS	BRIDGE BENT ELEVATIONS
BS1= 728.96	BT1= 728.93
BS2= 728.97	BT2= 729.01
BS3= 728.93	BT3= 728.96
BS4= 728.75	BT4= 728.99

DETAIL A
2' BASE TAIL DITCH WITH RIP-RAP
(Not to Scale)
Natural Ground, 2:1, d1, D, 2:1, Natural Ground, Geotextile, B
Min. D= 1 Ft.
Max. d= 1 Ft.
B= 2 Ft.
*When B is < 6.0'
Type of Liner= Class B Rip-Rap
FROM STA. 14+69 -L- TO STA. 15+16 -L- LT

INSTALL MATTING FOR EROSION CONTROL IN THE PROPOSED DITCH LINE.

NOTES: ANY DEVIATION FROM OPTIONS GIVEN WILL REQUIRE PRIOR APPROVAL BY ENGINEER.

ADDITIONAL EROSION CONTROL DEVICES MAY NEED TO BE INSTALLED AS DIRECTED BY THE ENGINEER.

THESE EROSION AND SEDIMENT CONTROL PLANS COMPLY WITH THE REGULATIONS SET FORTH BY THE NCG-010000 GENERAL CONSTRUCTION PERMIT EFFECTIVE AUGUST 3, 2011 ISSUED BY THE NORTH CAROLINA DEPARTMENT OF ENVIRONMENTAL AND NATURAL RESOURCES DIVISION OF WATER QUALITY.

Place Matting for Erosion Control on Slope as Work Allows.

NOTE:
PLACE TEMPORARY ROCK SEDIMENT DAMS TYPE – B AND TEMPORARY ROCK SILT CHECKS TYPE – A AT DRAINAGE OUTLETS.

NOTE:
PERIMETER EROSION CONTROL MEASURES SHALL BE INSTALLED DURING CLEARING AND GRUBBING PHASE.

Roadway Standard Drawings

The following roadway english standards as appear in "Roadway Standard Drawings"– Roadway Design Unit – N. C. Department of Transportation – Raleigh, N. C., dated January 2012 and the latest revison thereto are applicable to this project and by reference hereby are considered a part of these plans.

1605.01	Temporary Silt Fence	1631.01	Matting Installation
1622.01	Slope Drain	1633.02	Temporary Rock Silt Check Type B
1630.06	Special Stilling Basin	1633.01	Temporary Rock Silt Check Type A

ROADSIDE ENVIRONMENTAL UNIT
DEPARTMENT OF TRANSPORTATION
DIVISION OF HIGHWAYS
RALEIGH, N.C.

2012 STANDARD SPECIFICATIONS

Std. #	Description	Symbol
1605.01	Temporary Silt Fence	
1633.01	Temporary Rock Silt Check Type-A	
1633.02	Temporary Rock Silt Check Type-B	

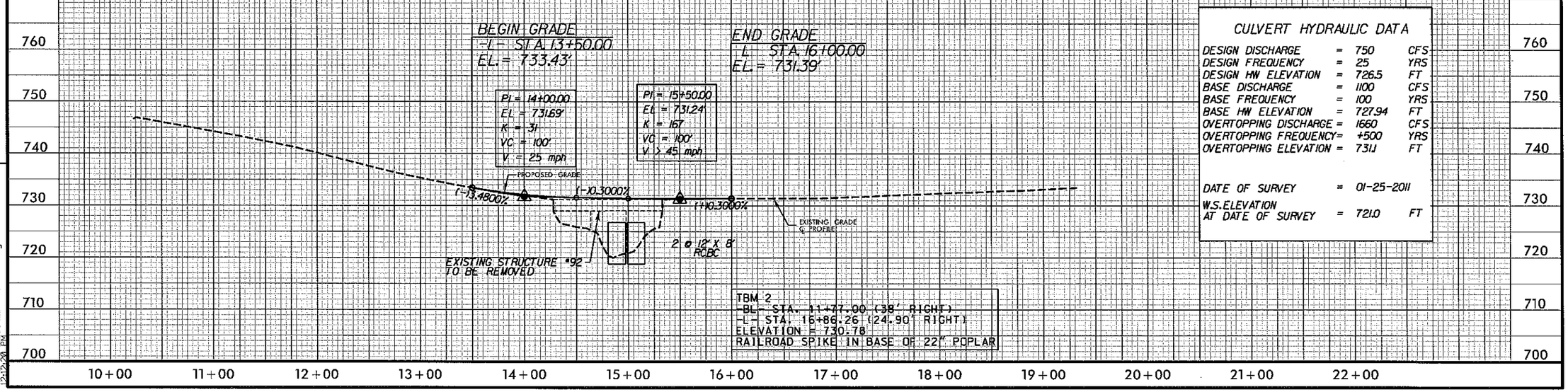

TBM 2
-BL- STA. 11+77.00 (38' RIGHT)
-L- STA. 16+86.26 (24.90' RIGHT)
ELEVATION = 730.78
RAILROAD SPIKE IN BASE OF 22" POPLAR

CULVERT HYDRAULIC DATA

DESIGN DISCHARGE	=	750	CFS
DESIGN FREQUENCY	=	25	YRS
DESIGN HW ELEVATION	=	726.5	FT
BASE DISCHARGE	=	1100	CFS
BASE FREQUENCY	=	100	YRS
BASE HW ELEVATION	=	727.94	FT
OVERTOPPING DISCHARGE	=	1660	CFS
OVERTOPPING FREQUENCY	=	+500	YRS
OVERTOPPING ELEVATION	=	731.1	FT
DATE OF SURVEY	=	01-25-2011	
W.S. ELEVATION AT DATE OF SURVEY	=	721.0	FT

REVISIONS

8/17/99

1/19/2015
1:60DC
12:15:58 PM
220092_HYD_EC_PSH.dgn

PROJECT REFERENCE NO.	SHEET NO.
17BP.12.R.201	EC-2
REPLACES CLEVELAND COUNTY BRIDGE NO. 92	

DIVISION OF HIGHWAYS
STATE OF NORTH CAROLINA

SOIL STABILIZATION SUMMARY SHEET

MATTING FOR EROSION CONTROL: FILL SLOPES 2:1 OR STEEPER

CONST SHEET NO.	LINE	FROM STATION	TO STATION	SIDE	ESTIMATE (SY)
4	-L-	14+00	14+50	RT	40
4	-L-	15+25	15+75	LT	200
				TOTAL	240
				SAY	250

PSRM FOR EROSION CONTROL: PROPOSED DITCH LINE

CONST SHEET NO.	LINE	FROM STATION	TO STATION	SIDE	ESTIMATE (SY)
4	-L-	14+69	15+16	LT	25
4	-L-	15+48	15+88	LT	10
				TOTAL	35
				SAY	40

PROJECT REFERENCE NO.	SHEET NO.
17BP.12.R.201	EC-3
REPLACES CLEVELAND COUNTY BRIDGE NO. 92	

DIVISION OF HIGHWAYS
STATE OF NORTH CAROLINA

SOIL STABILIZATION TIMEFRAMES

SITE DESCRIPTION	STABILIZATION TIME	TIMEFRAME EXCEPTIONS
PERIMETER DIKES, SWALES, DITCHES AND SLOPES	7 DAYS	NONE
HIGH QUALITY WATER (HQW) ZONES	7 DAYS	NONE
SLOPES STEEPER THAN 3:1	7 DAYS	IF SLOPES ARE 10' OR LESS IN LENGTH AND ARE NOT STEEPER THAN 2:1, 14 DAYS ARE ALLOWED.
SLOPES 3:1 OR FLATTER	14 DAYS	7 DAYS FOR SLOPES GREATER THAN 50' IN LENGTH.
ALL OTHER AREAS WITH SLOPES FLATTER THAN 4:1	14 DAYS	NONE, EXCEPT FOR PERIMETERS AND HQW ZONES.

DOUBLE 12' X 8' BOX BARREL CULVERT CONSTRUCTION SEQUENCE

PROJECT REFERENCE NO.	SHEET NO.
17BP.12.R.201	EC-4
REPLACES CLEVELAND COUNTY BRIDGE NO. 92	

HDR Engineering, Inc. of the Carolinas
3733 National Drive, Suite 207 Raleigh, N.C. 27612
N.C.B.E.L.S. License Number: F-0116

PHASE I

1. INSTALL IMPERVIOUS DIKES UPSTREAM AND DOWNSTREAM OF THE PROPOSED CULVERT.
2. PROVIDE PUMP AND SPECIAL STILLING BASIN FOR DEWATERING THE WORK ZONE.
3. UTILIZE PUMP AROUND DURING CONSTRUCTION OF 10' BASE DIVERSION CHANNEL WITH 2:1 SIDE SLOPES ALONG THE LEFT SIDE OF THE STREAM.
4. INSTALL IMPERVIOUS DIKES UPSTREAM, DOWNSTREAM, AND ALONG THE RIGHT SIDE OF THE DIVERSION DITCH TO ISOLATE WORK AREA.
5. CONSTRUCT 2' BASE TAIL DITCH ACCORDING TO DETAIL IN HYDRAULIC PLANS.

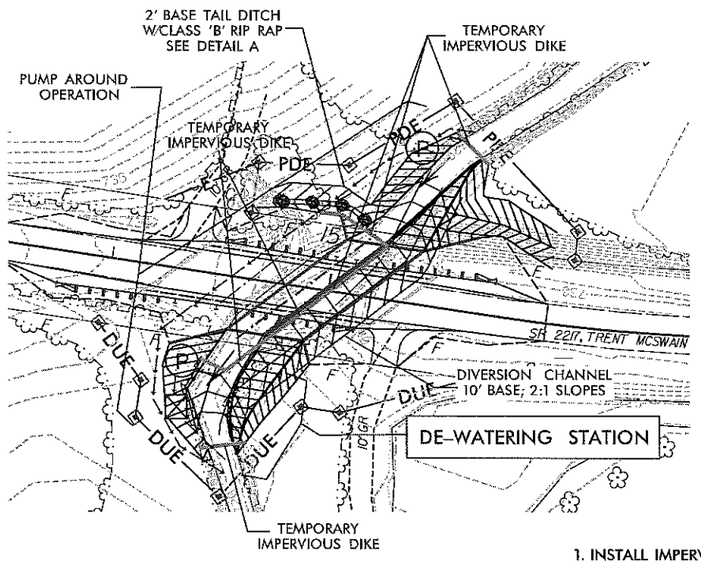

PHASE II

1. REMOVE THE IMPERVIOUS DIKES USED IN THE PUMP AROUND OPERATION AND ALLOW FLOW INTO THE DIVERSION CHANNEL.
2. PROVIDE PUMP AND SPECIAL STILLING BASIN FOR DEWATERING OF THE WORK ZONE.
3. EXCAVATE WORK ZONE.
4. CONSTRUCT THE MAIN CHANNEL BARREL ON THE RIGHT SIDE OF THE STREAM INCLUDING THE RELATED WINGWALLS.
5. ALLOW TIME FOR CONCRETE TO CURE.
6. REMOVE IMPERVIOUS DIKES.
7. DIVERT CHANNEL FLOW INTO MAIN CHANNEL

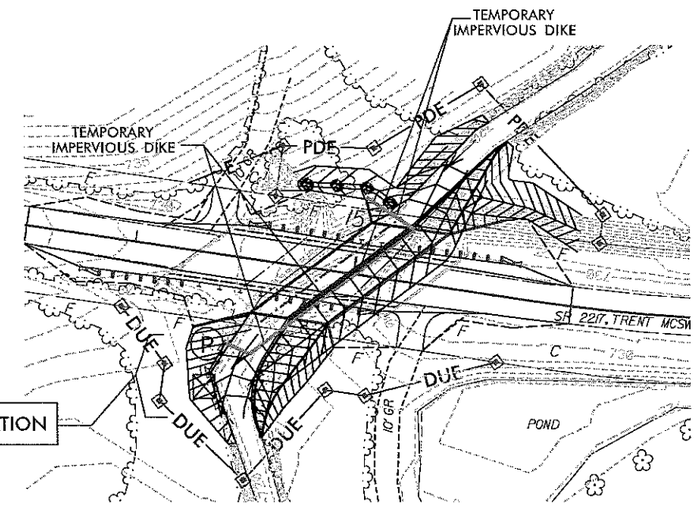

PHASE III

1. INSTALL IMPERVIOUS DIKES UPSTREAM AND DOWNSTREAM OF THE PROPOSED CULVERT.
2. PROVIDE PUMP AND SPECIAL STILLING BASIN FOR DEWATERING OF THE WORK ZONE.
3. EXCAVATE WORK ZONE.
4. CONSTRUCT THE SECOND CULVERT BARREL INCLUDING WINGWALLS, SILLS, AND ROCK BACKFILL.
5. COMPLETE UPSTREAM AND DOWNSTREAM CHANNEL IMPROVEMENTS.
6. ALLOW TIME FOR CONCRETE TO CURE.
7. REMOVE IMPERVIOUS DIKES.

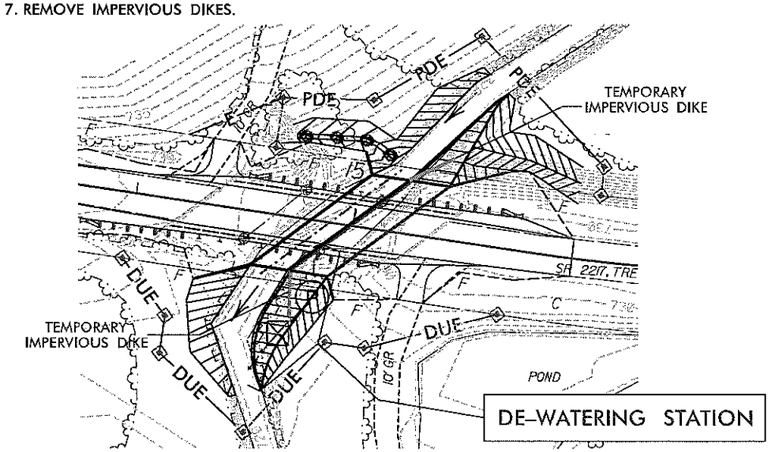

8/17/99
PENTABLE: NCDOT_CS.tbl
TIME: 12:34:10 PM SCALE: 1:50
PLOT DRIVER: NCDOT.pdf.color.eng.50.plt
USER: jmassroc DATE: 1/19/2015
FILE: North Carolina Dept. of Transportation\NCDOT_DDO_CET_BM_LSC_MASTER\NCDOT_17BP.12_Task_Order_1_cV06.00_NCDOT_File_Structure\Bridge #092 Cleveland Co.-Trent McSwain Rd\Hydraulics\CADD\220092_EC_Construction_Seq.dgn

STATE PROJECT: 17BP.12.R.24

CONTRACT:

T.I.P. NO.	SHEET NO.
17BP.12.R.24	UC-1

STATE OF NORTH CAROLINA
DIVISION OF HIGHWAYS

UTILITY CONSTRUCTION PLANS
CLEVELAND COUNTY

LOCATION: BRIDGE NO. 92 ON SR 2217 OVER BOWEN CREEK BETWEEN SR 2220 AND SR 2219
TYPE OF WORK: UTILITIES

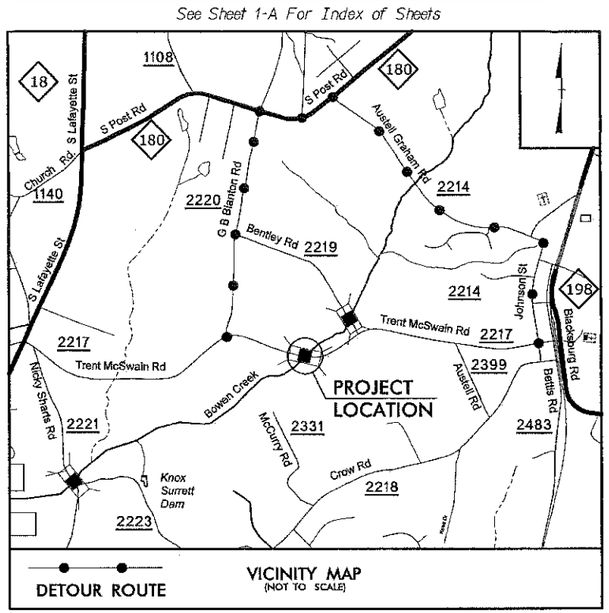

NAD 83/
NSRS 2007

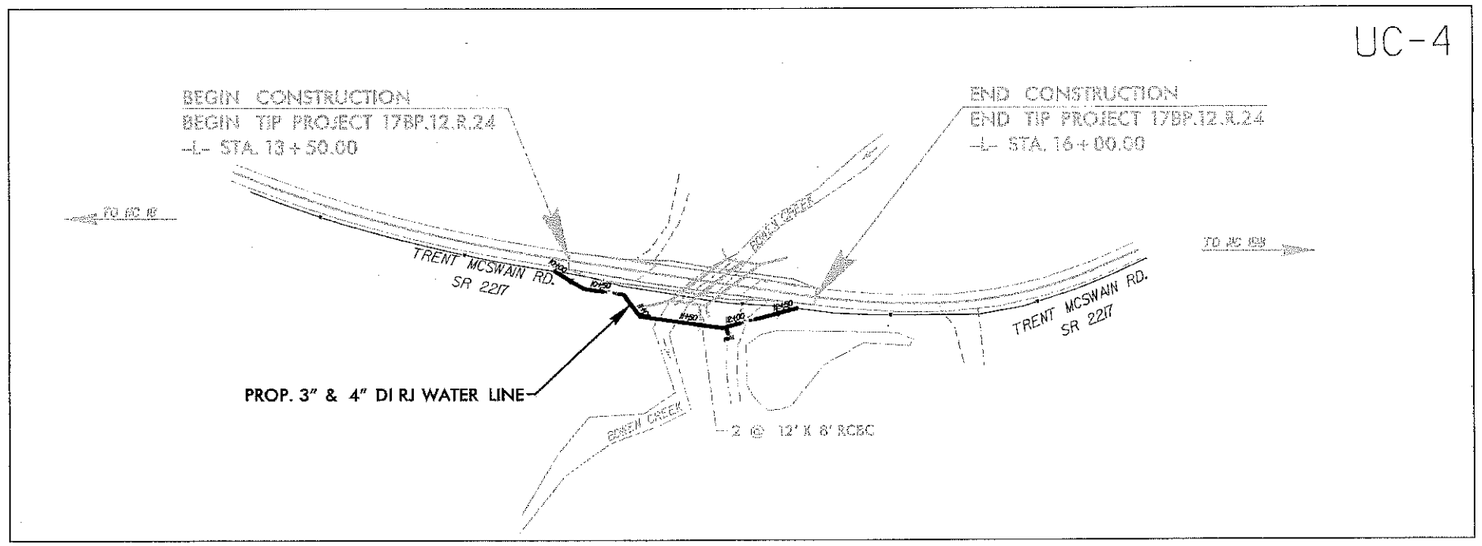

LOCATION SKETCH

GRAPHIC SCALES

50 25 0 50 100
PLANS

50 20 0 50 100
PROFILE (HORIZONTAL)

10 5 0 10 20
PROFILE (VERTICAL)

INDEX OF SHEETS

SHEET NO.	*DESCRIPTION*
UC-1	*TITLE SHEET*
UC-2	*UTILITY SYMBOLOGY SHEET*
UC-3	*GENERAL NOTES SHEET*
UC-4	*UTILITY CONSTRUCTION SHEET*

WATER AND SEWER OWNERS ON PROJECT

(1) WATER - CLEVELAND COUNTY WATER

NORTH CAROLINA PROFESSIONAL SEAL 029901 ENGINEER KEVIN S. HINDE 9/29/17

HINDE ENGINEERING
License No. C-2639
7520 E. Independence Blvd., Suite 230 Charlotte, NC 28227

DIVISION OF HIGHWAYS
STATE OF NORTH CAROLINA

MICHAEL L. HOLDER P.E.
DIVISION ENGINEER

$$$$$SYSTIME$$$$$
$$$$$$$$$$$$$$$$$DGN$$$$$$$$$$$$$$$$$
$$$$$USERNAME$$$$

PROJECT REFERENCE NO.	SHEET NO.
17BP.12.R.24	UC-2
DESIGNED BY: KSH	
DRAWN BY: KSH	
CHECKED BY: KSH	
APPROVED BY:	
REVISED:	
NORTH CAROLINA DEPARTMENT OF TRANSPORTATION	
UTILITIES ENGINEERING SEC. PHONE:(919)707-6690 FAX:(919)250-4151	UTILITY CONSTRUCTION PLANS ONLY

NORTH CAROLINA PROFESSIONAL SEAL 029901 ENGINEER KEVIN S. HINDE 5/29/13

UTILITY CONSTRUCTION

STATE OF NORTH CAROLINA
DIVISION OF HIGHWAYS

UTILITIES PLAN SHEET SYMBOLS

PROPOSED WATER SYMBOLS

- Water Line (Sized as Shown) — 12" W
- 11¼ Degree Bend
- 22½ Degree Bend
- 45 Degree Bend
- 90 Degree Bend
- Plug
- Tee
- Cross
- Reducer
- Gate Valve — GV
- Butterfly Valve — BV
- Tapping Valve — TGV
- Line Stop — LS
- Line Stop with Bypass — LS/BP
- Blow Off — BO
- Fire Hydrant — FH
- Relocate Fire Hydrant — RFH
- Remove Fire Hydrant — REM FH
- Water Meter — WM
- Relocate Water Meter — RWM
- Remove Water Meter — REM WM
- Water Pump Station — PS(W)
- RPZ Backflow Preventer — RPZ
- DCV Backflow Preventer — DCVP
- Relocate RPZ Backflow Preventer — RRPZ
- Relocate DCV Backflow Preventer — RDCVP

PROPOSED SEWER SYMBOLS

- Gravity Sewer Line (Sized as Shown) — 12" GS
- Force Main Sewer Line (Sized as Shown) — 12" FSS
- Manhole (Sized per Note)
- Sewer Pump Station — PS(SS)

PROPOSED MISCELLANOUS UTILITIES SYMBOLS

- Power Pole
- Telephone Pole
- Joint Use Pole
- Telephone Pedestal — TG-PED
- Utility Line by Others (Type as Shown) — 12" PCP O/H POW LINE
- Trenchless Installation — 12" TL INSTALL
- Encasement by Open Cut — 24" ENCAS BY OC
- Encasement — 24" ENCASEMENT
- Thrust Block
- Air Release Valve — AR
- Utility Vault — UV
- Concrete Pier — CP
- Steel Pier — SP
- Plan Note — NOTE
- Pay Item Note — PAY ITEM

EXISTING UTILITIES SYMBOLS

- Power Pole
- Telephone Pole
- Joint Use Pole
- Utility Pole
- Utility Pole with Base
- H-Frame Pole
- Power Transmission Line Tower
- Water Manhole
- Power Manhole
- Telephone Manhole
- Sanitary Sewer Manhole
- Hand Hole for Cable
- Power Transformer
- Telephone Pedestal
- CATV Pedestal
- Gas Valve
- Gas Meter
- Located Miscellaneous Utility Object
- Abandoned According to Utility Records — AATUR
- End of Information — E.O.I.

- *Underground Power Line — P
- *Underground Telephone Cable — T
- *Underground Telephone Conduit — TC
- *Underground Fiber Optics Telephone Cable — T FO
- *Underground TV Cable — TV
- *Underground Fiber Optics TV Cable — TV FO
- *Underground Gas Pipeline — G
- Aboveground Gas Pipeline — A/G Gas
- *Underground Water Line — W
- Aboveground Water Line — A/G Water
- *Underground Gravity Sanitary Sewer Line — SS
- Aboveground Gravity Sanitary Sewer Line — A/G Sanitary Sewer
- *Underground SS Forced Main Line — FSS
- Underground Unknown Utility Line — TUTL
- SUE Test Hole
- Water Meter
- Water Valve
- Fire Hydrant
- Sanitary Sewer Cleanout

*For Existing Utilities

- Utility Line Drawn from Record (Type as Shown)
- Designated Utility Line (Type as Shown)

NORTH CAROLINA
DEPT. OF TRANSPORTATION
ENGINEERING DIVISION
RALEIGH, NORTH CAROLINA

BRIDGE NO.92 ON SR 2217 OVER BOWEN CREEK BETWEEN SR 2220 AND SR 2219

Designed By:	Checked By:	Date:	Sheet:	Of:
KSH	KSH	5-29-13	UC-2	UC-4

HINDE ENGINEERING
License No. C-0839
7535 E. Independence Blvd., Suite 230 Charlotte, NC 28227

PROJECT REFERENCE NO.	SHEET NO.
17BP.12.R.24	UC-3
DESIGNED BY: KSH	
DRAWN BY: KSH	
CHECKED BY: KSH	
APPROVED BY:	
REVISED:	
NORTH CAROLINA DEPARTMENT OF TRANSPORTATION	
UTILITIES ENGINEERING SEC. PHONE:(919)707-6690 FAX:(919)250-4151	UTILITY CONSTRUCTION PLANS ONLY

NORTH CAROLINA PROFESSIONAL SEAL 029901 5/29/13 ENGINEER KEVIN S. HINDE

UTILITY CONSTRUCTION

UTILITY CONSTRUCTION

GENERAL NOTES:

1. THE PROPOSED UTILITY CONSTRUCTION SHALL MEET THE APPLICABLE REQUIREMENTS OF THE NC DEPARTMENT OF TRANSPORTATION'S "STANDARD SPECIFICATIONS FOR ROADS AND STRUCTURES" DATED JANUARY 2012.

2. THE EXISTING 3" WATER LINE TO BE RELOCATED BELONGS TO CLEVELAND COUNTY WATER.

3. ALL WATER LINES TO BE INSTALLED WITHIN COMPLIANCE OF THE RULES AND REGULATIONS OF THE NORTH CAROLINA DEPARTMENT OF ENVIRONMENTAL AND NATURAL RESOURCES, DIVISION OF ENVIRONMENTAL HEALTH. ALL SEWER LINES TO BE INSTALLED WITHIN COMPLIANCE OF THE RULES AND REGULATIONS OF THE NORTH CAROLINA DEPARTMENT OF ENVIRONMENT AND NATURAL RESOURCES, DIVISION OF WATER QUALITY. PERFORM ALL WORK IN ACCORDANCE WITH THE APPLICABLE PLUMBING CODES.

4. THE UTILITY OWNER OWNS THE EXISTING UTILITY FACILITIES AND WILL OWN THE NEW UTILITY FACILITIES AFTER ACCEPTANCE BY THE DEPARTMENT. THE DEPARTMENT OWNS THE CONSTRUCTION CONTRACT AND HAS ADMINISTRATIVE AUTHORITY. COMMUNICATIONS AND DECISIONS BETWEEN THE CONTRACTOR AND UTILITY OWNER ARE NOT BINDING UPON THE DEPARTMENT OR THIS CONTRACT UNLESS AUTHORIZED BY THE ENGINEER. AGREEMENTS BETWEEN THE UTILITY OWNER AND CONTRACTOR FOR THE WORK THAT IS NOT PART OF THIS CONTRACT OR IS SECONDARY TO THIS CONTRACT ARE ALLOWED, BUT ARE NOT BINDING UPON THE DEPARTMENT.

5. PROVIDE ACCESS FOR THE DEPARTMENT PERSONNEL AND THE OWNER'S REPRESENTATIVES TO ALL PHASES OF CONSTRUCTION. NOTIFY DEPARTMENT PERSONNEL AND THE UTILITY OWNER TWO WEEKS PRIOR TO COMMENCEMENT OF ANY WORK AND ONE WEEK PRIOR TO SERVICE INTERRUPTION. KEEP UTILITY OWNERS' REPRESENTATIVES INFORMED OF WORK PROGRESS AND PROVIDE OPPROTUNITY FOR INSPECTION OF CONSTRUCTION AND TESTING.

6. THE PLANS DEPICT THE BEST AVAILABLE INFORMATION FOR THE LOCATION, SIZE, AND TYPE OF MATERIAL FOR ALL EXISTING UTILITIES. MAKE INVESTIGATIONS FOR DETERMINING THE EXACT LOCATION, SIZE, AND TYPE MATERIAL OF THE EXISTING FACILITIES AS NECESSARY FOR THE CONSTRUCTION OF THE PROPOSED UTILITIES AND FOR AVOIDING DAMAGE TO EXISTING FACILITIES. REPAIR ANY DAMAGE INCURRED TO EXISTING FACILITIES TO THE ORIGINAL OR BETTER CONDITION AT NO ADDITONAL COST TO THE DEPARTMENT.

7. MAKE FINAL CONNECTIONS OF THE NEW WORK TO THE EXISTING SYSTEM WHERE INDICATED ON THE PLANS, AS REQUIRED TO FIT THE ACTUAL CONDITIONS, OR AS DIRECTED.

8. MAKE CONNECTIONS BETWEEN EXISTING AND PROPOSED UTILITIES AT TIMES MOST CONVENIENT TO THE PUBLIC, WITHOUT ENDANGERING THE UTILITY SERVICE, AND IN ACCORDANCE WITH THE UTILITY OWNER'S REQUIREMENTS. MAKE CONNECTIONS ON WEEKENDS, AT NIGHT, AND ON HOLIDAYS IF NECESSARY.

9. ALL UTILITY MATERIALS SHALL BE APPROVED PRIOR TO DELIVERY TO THE PROJECT. SEE 1500-7, " SUBMITTALS AND RECORDS" IN SECTION 1500 OF THE STANDARD SPECIFICATIONS.

PROJECT SPECIFIC NOTES:

1. THE EXISTING 3-INCH WATER LINE IS A ONE-WAY FEED. IT CANNOT BE BACKFED.

2. A 72-HOUR NOTICE IS REQUIRED FOR ANY SHUT DOWN. ALL BACTERIA TESTING AND PRESSURE TESTING SHALL BE COMPLETE PRIOR TO THE SHUT DOWN.

3. CONTRACTOR SHALL CONNECT ALL WATER LINES AND SERVICE CONNECTIONS USING NECESSARY FITTINGS.

LIST OF STANDARD DRAWINGS

1515.01 WATER METER

1515.02 FIRE HYDRANT

NORTH CAROLINA
DEPT. OF TRANSPORTATION
ENGINEERING DIVISION
RALEIGH, NORTH CAROLINA

BRIDGE NO.92 ON SR 2217 OVER BOWEN CREEK BETWEEN SR 2220 AND SR 2219

Designed By:	Checked By:	Date:	Sheet:	Of:
KSH	KSH	5-29-13	UC-3	UC-4

HINDE ENGINEERING
License No. C-2639
7529 E. Independence Blvd., Suite 230 Charlotte, NC 28227

PROJECT REFERENCE NO.	SHEET NO.
17BP.12.R.24	UC-4

DESIGNED BY: KSH
DRAWN BY: KSH
CHECKED BY: KSH
APPROVED BY:
REVISED:

NORTH CAROLINA DEPARTMENT OF TRANSPORTATION
UTILITIES ENGINEERING SEC.
PHONE:(919)707-6690
FAX:(919)250-4151

NORTH CAROLINA PROFESSIONAL SEAL 029801 ENGINEER KEVIN S. HINDE 5/29/13

UTILITY CONSTRUCTION PLANS ONLY

UTILITY CONSTRUCTION

NAD 83/2001

DETAIL B
TRAP DITCH

-L-
PI Sta 11+00.15
Δ = 8°53'53.5" (LT)
D = 4°24'28.5"
L = 201.90'
T = 101.15'
R = 1,300.00'

PI Sta 12+53.61
Δ = 4°49'00.4" (LT)
D = 3°27'35.6"
L = 139.36'
T = 69.72'
R = 1,656.00'

UPSTREAM AT CULVERT OUTLET (NTS)

EST. 160 CY EXCAVATION
EST. 15 TONS CLASS I RIP RAP
EST. 70 SY GEOTEXTILE
NO RIP RAP IN BED OF STREAM

DOWNSTREAM AT CULVERT OUTLET (NTS)

EST. 190 CY EXCAVATION
EST. 160 TONS CLASS I RIP RAP
EST. 240 SY GEOTEXTILE
NO RIP RAP IN BED OF STREAM

-L-
PI Sta 16+43.61
Δ = 8°40'42.2" (LT)
D = 6°38'41.8"
L = 124.60'
T = 62.60'
R = 825.00'

PI Sta 16+04.80
Δ = 23°05'08.4" (LT)
D = 12°43'56.6"
L = 181.31'
T = 91.90'
R = 450.00'

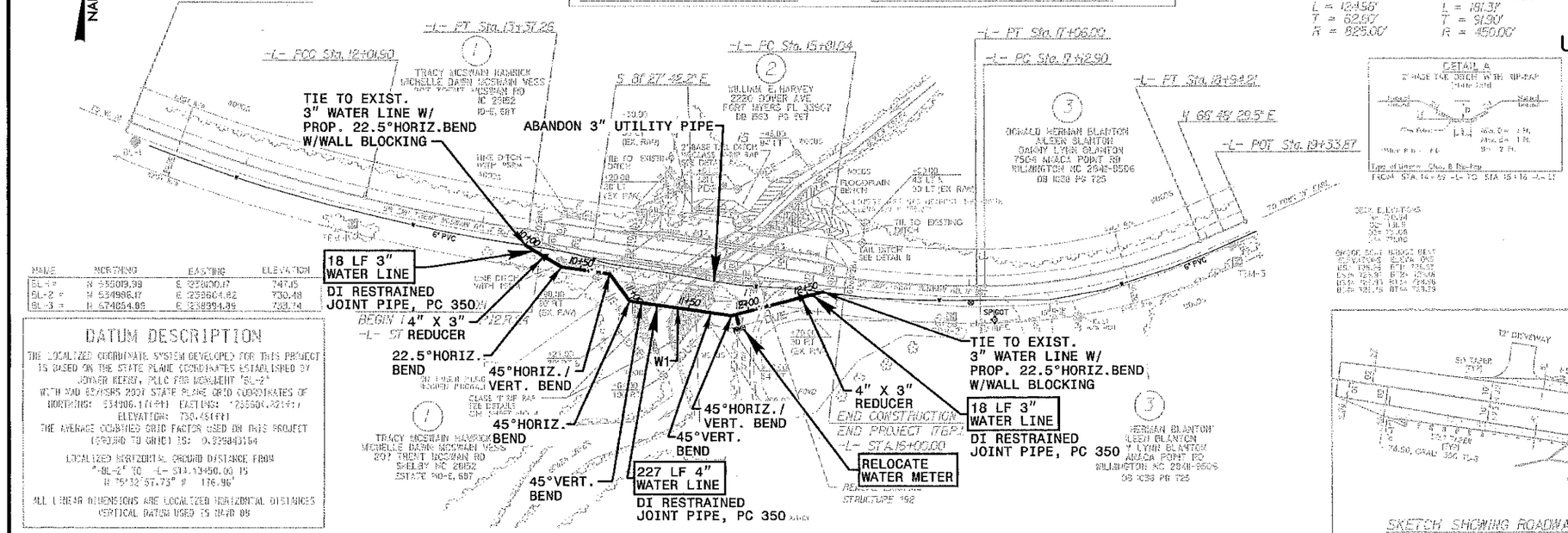

NAME	NORTHING	EASTING	ELEVATION
BL-1	N 535019.98	E 2238500.17	747.15
BL-2	N 534986.17	E 2238604.82	730.48
BL-3	N 534854.85	E 2238994.39	730.74

DATUM DESCRIPTION

THE LOCALIZED COORDINATE SYSTEM DEVELOPED FOR THIS PROJECT IS BASED ON THE STATE PLANE COORDINATES ESTABLISHED BY JOYNER KEENY, PLLC FOR MONUMENT "BL-2"
WITH NAD 83/NSRS 2007 STATE PLANE GRID COORDINATES OF
NORTHING: 534906.170(M) EASTING: 1238500.821(M)
ELEVATION: 730.484(M)
THE AVERAGE COMBINED GRID FACTOR USED ON THIS PROJECT (GROUND TO GRID) IS: 0.999843164

LOCALIZED HORIZONTAL GROUND DISTANCE FROM "BL-2" TO -L- STA.13+50.00 IS N 75°32'57.73" W 176.96'

ALL LINEAR DIMENSIONS ARE LOCALIZED HORIZONTAL DISTANCES
VERTICAL DATUM USED IS NAVD 88

DETAIL A
2" PAGE TIE DITCH WITH RIP-RAP
TRAP DITCH

SCALE:
0 50 100

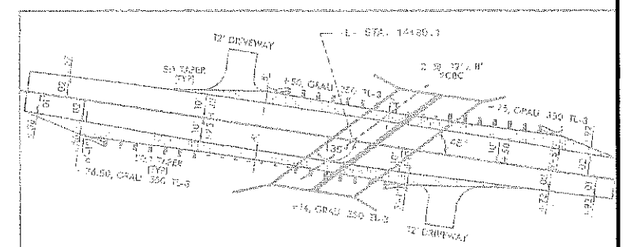

SKETCH SHOWING ROADWAY IN RELATION TO STRUCTURE

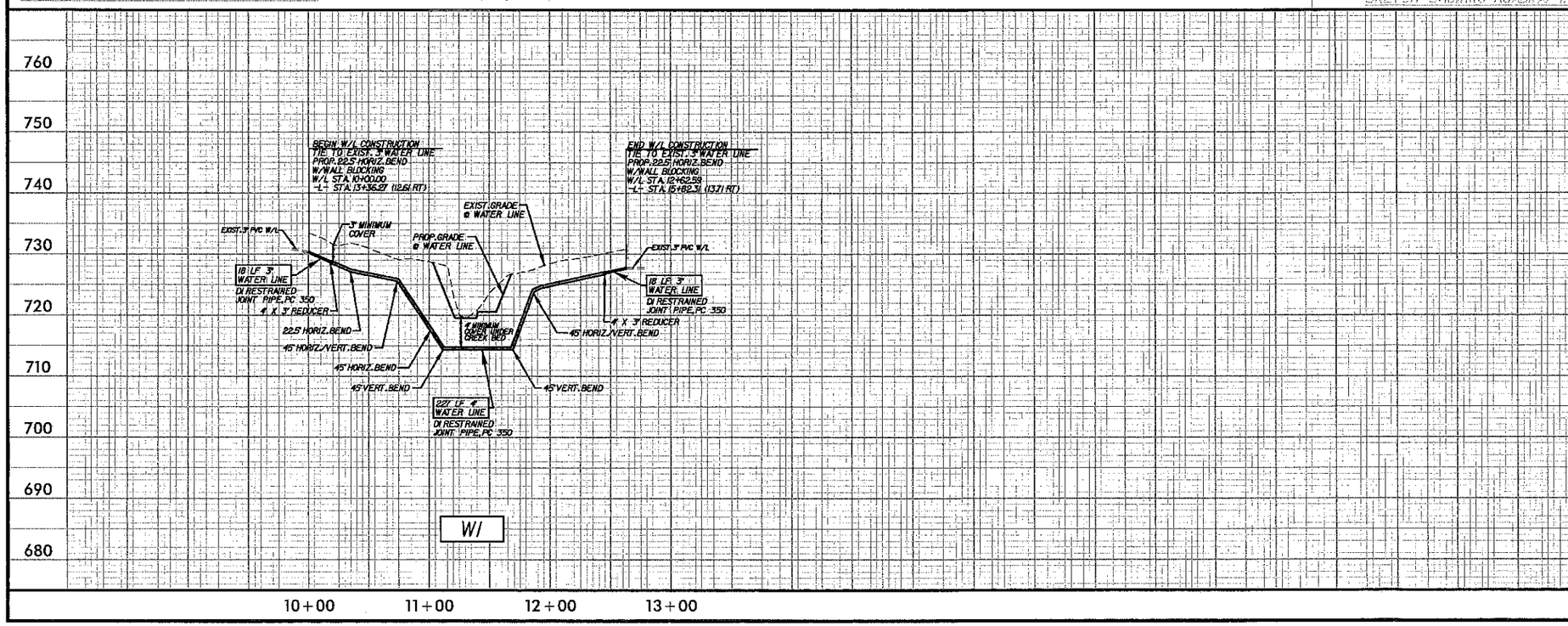

NORTH CAROLINA
DEPT. OF TRANSPORTATION
ENGINEERING DIVISION
RALEIGH, NORTH CAROLINA

BRIDGE NO.92 ON SR 2217 OVER BOWEN CREEK BETWEEN SR 2220 AND SR 2219

Designed By:	Checked By:	Dates:	Sheets:	Of:
KSH	KSH	5-29-13	UC-4	UC-4

HINDE ENGINEERING
License No. C-2539
7520 E. Independence Blvd., Suite 230 Charlotte, NC 28227

STATE PROJECT: 17BP.12.R.24

CONTRACT:

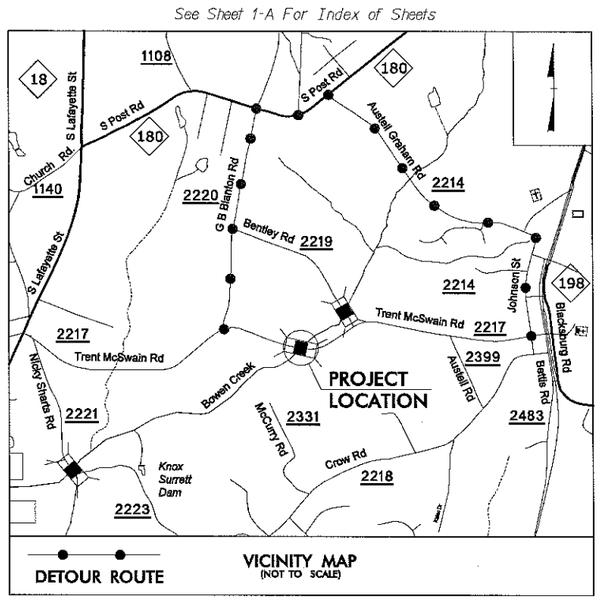

STATE OF NORTH CAROLINA
DIVISION OF HIGHWAYS

T.I.P. NO.	SHEET NO.
17BP.12.R.24	UO-1

UTILITIES BY OTHERS PLANS
CLEVELAND COUNTY

LOCATION: BRIDGE NO. 92 ON SR 2217 OVER BOWEN CREEK BETWEEN SR 2220 AND SR 2219
TYPE OF WORK: ELECTRIC POWER DISTRIBUTION

NAD 83/
NSRS 2007

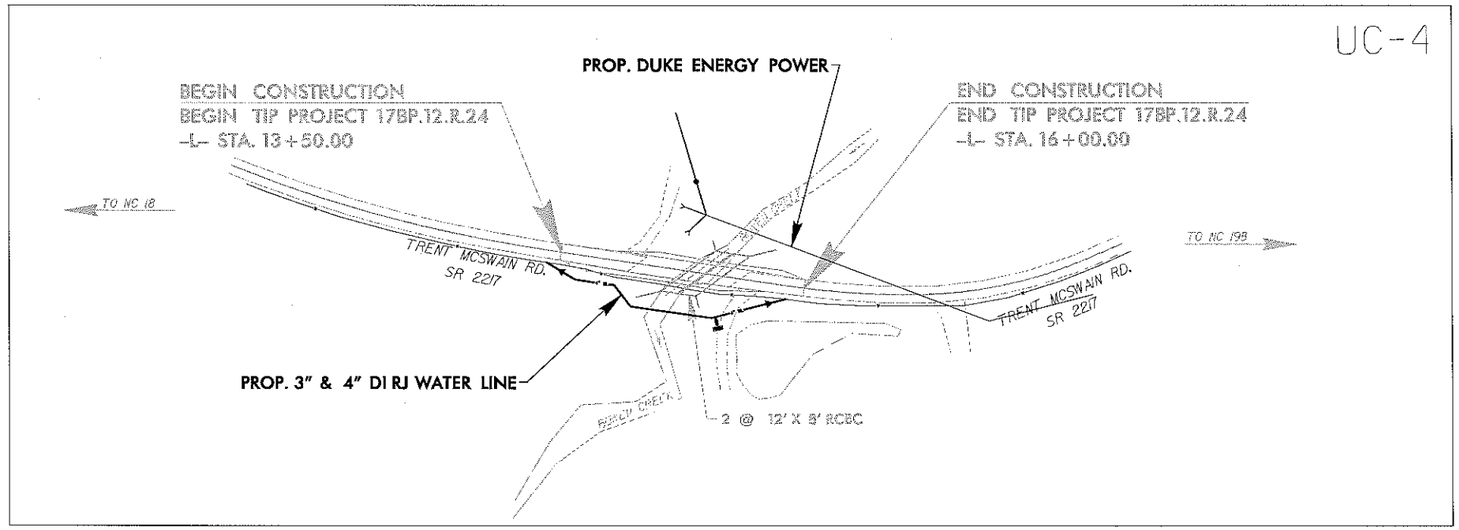

LOCATION SKETCH

GRAPHIC SCALES

50 25 0 50 100
PLANS

50 20 0 50 100
PROFILE (HORIZONTAL)

10 5 0 10 20
PROFILE (VERTICAL)

INDEX OF SHEETS

SHEET NO.	DESCRIPTION
UO-1	TITLE SHEET
UO-2	UTILITIES BY OTHERS SYMBOLOGY SHEET
UO-3	UTILITIES BY OTHERS CONSTRUCTION SHEET

PRIVATE UTILITY OWNERS ON PROJECT

(1) POWER – DUKE ENERGY

HINDE ENGINEERING
License No. C-2639
7520 E. Independence Blvd., Suite 230 Charlotte, NC 28227

DIVISION OF HIGHWAYS
STATE OF NORTH CAROLINA

MICHAEL L. HOLDER P.E.
DIVISION ENGINEER

03/08/99

$$$$SYSTIME$$$$
$$$$SYSDON$$$$
$$$$USERNAME$$$$

PROJECT REFERENCE NO.	SHEET NO.
17BP.12.R.24	UO-2

5/14/99

STATE OF NORTH CAROLINA
DIVISION OF HIGHWAYS

UTILITIES BY OTHERS

NOTE:
ALL PROPOSED UTILITY WORK SHOWN ON THIS SHEET WILL BE DONE BY OTHERS

UTILITIES BY OTHERS PLAN SHEET SYMBOLS

PROPOSED WATER SYMBOLS

- Water Line (Sized as Shown) — 12" W
- 11¼ Degree Bend
- 22½ Degree Bend
- 45 Degree Bend
- 90 Degree Bend
- Plug
- Tee
- Cross
- Reducer
- Gate Valve — GV
- Butterfly Valve — BV
- Tapping Valve — TGV
- Line Stop — LS
- Line Stop with Bypass — LS/BP
- Blow Off — BO
- Fire Hydrant — PFH
- Relocate Fire Hydrant — RFH
- Remove Fire Hydrant — REM FH
- Water Meter — PWM
- Relocate Water Meter — RWM
- Remove Water Meter — REM WM
- Water Pump Station — PS(W)
- RPZ Backflow Preventer — PRPZ
- DCV Backflow Preventer — PBFP
- Relocate RPZ Backflow Preventer — RRPZ
- Relocate DCV Backflow Preventer — RBFP

PROPOSED SEWER SYMBOLS

- Gravity Sewer Line (Sized as Shown) — 12" SS
- Force Main Sewer Line (Sized as Shown) — 12" FSS
- Manhole (Sized per Note)
- Sewer Pump Station — PS(SS)

PROPOSED MISCELLANEOUS UTILITIES SYMBOLS

- Power Pole
- Telephone Pole
- Joint Use Pole
- Telephone Pedestal — TEL PED
- Utility Line by Others (Type as Shown) — PROP O/H POW LINES
- Trenchless Installation — 12" TL INSTALL
- Encasement by Open Cut — 24" ENCAS BY OC
- Encasement — 24" ENCASEMENT
- Thrust Block
- Air Release Valve — AR
- Utility Vault — UV
- Concrete Pier — CP
- Steel Pier — SP
- Plan Note — NOTE
- Pay Item Note — PAY ITEM

EXISTING UTILITIES SYMBOLS

- Power Pole
- Telephone Pole
- Joint Use Pole
- Utility Pole
- Utility Pole with Base
- H-Frame Pole
- Power Transmission Line Tower
- Water Manhole
- Power Manhole
- Telephone Manhole
- Sanitary Sewer Manhole
- Hand Hole for Cable
- Power Transformer
- Telephone Pedestal
- CATV Pedestal
- Gas Valve
- Gas Meter
- Located Miscellaneous Utility Object
- Abandoned According to Utility Records — AATUR
- End of Information — E.O.I.
- *Underground Power Line — P
- *Underground Telephone Cable — T
- *Underground Telephone Conduit — TC
- *Underground Fiber Optics Telephone Cable — T FO
- *Underground TV Cable — TV
- *Underground Fiber Optics TV Cable — TV FO
- *Underground Gas Pipeline — G
- Aboveground Gas Pipeline — A/G Gas
- *Underground Water Line — W
- Aboveground Water Line — A/G Water
- *Underground Gravity Sanitary Sewer Line — SS
- Aboveground Gravity Sanitary Sewer Line — A/G Sanitary Sewer
- *Underground SS Forced Main Line — FSS
- Underground Unknown Utility Line — ?UTL
- SUE Test Hole
- Water Meter
- Water Valve
- Fire Hydrant
- Sanitary Sewer Cleanout

*For Existing Utilities

- Utility Line Drawn from Record (Type as Shown)
- Designated Utility Line (Type as Shown)

NORTH CAROLINA
DEPT. OF TRANSPORTATION
ENGINEERING DIVISION
RALEIGH, NORTH CAROLINA

BRIDGE NO. 92 ON SR 2217 OVER BOWEN CREEK BETWEEN SR 2220 AND SR 2219

Designed By:	Checked By:	Date:	Sheet:	Of:
OTHERS	OTHERS	11-20-13	UO-2	UO-3

HINDE ENGINEERING
License No. C-2539
7620 E. Independence Blvd., Suite 230 Charlotte, NC 28227

$$$$SYSTIME$$$$
$$$$USERNAME$$$$ $$$$$$$$$$DGN$$$$$$$$$$$$$$$$$$$$$$$$$$$$$$

UTILITIES BY OTHERS

NOTE:
ALL PROPOSED UTILITY WORK SHOWN ON THIS SHEET WILL BE DONE BY OTHERS

CLEVELAND COUNTY BRIDGE: # 92 POLE DATA

#	TYPE	ALIGNMENT	STATION	OFFSET	OWNER
1	POWER POLE	L	14+90	-59.4	DUKE ENERGY
2	TELEPHONE PEDESTAL	L	17+83	30.6	AT&T COMMUNICATIONS
3	POWER POLE	L	17+85	33.4	DUKE ENERGY

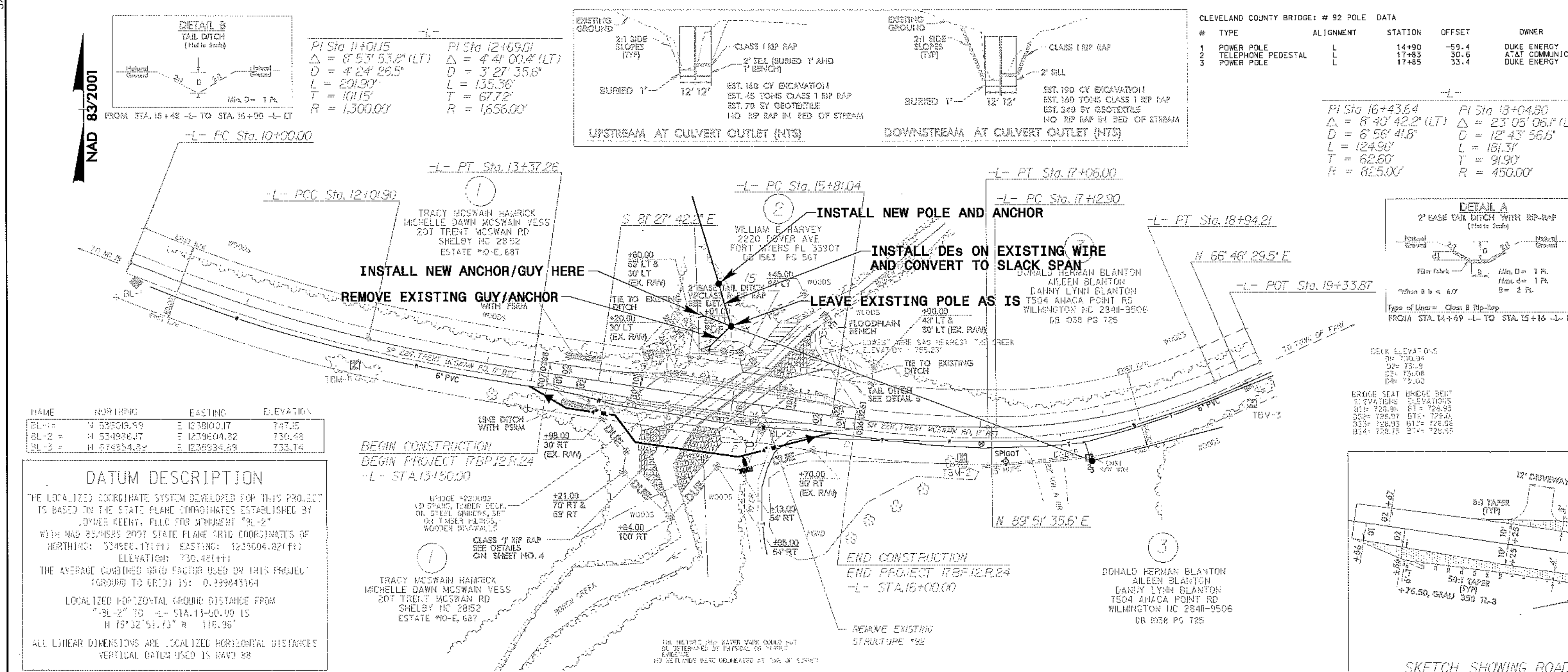

NAME	NORTHING	EASTING	ELEVATION
BL-1	N 575018.39	E 1238100.17	747.15
BL-2 =	N 574936.17	E 1239604.82	730.48
BL-3 =	N 574854.83	E 1239994.89	733.74

DATUM DESCRIPTION

THE LOCALIZED COORDINATE SYSTEM DEVELOPED FOR THIS PROJECT IS BASED ON THE STATE PLANE COORDINATES ESTABLISHED BY JOYNER KEENY, PLLC FOR MONUMENT "BL-2"
WITH NAD 83/NSRS 2007 STATE PLANE GRID COORDINATES OF NORTHING: 574936.17(ft) EASTING: 1239604.82(ft)
ELEVATION: 730.48(ft)
THE AVERAGE COMBINED GRID FACTOR USED ON THIS PROJECT (GROUND TO GRID) IS: 0.99984316
LOCALIZED HORIZONTAL GROUND DISTANCE FROM "BL-2" TO -L- STA.13+60.00 IS N 75°32'51.7" W 176.96'
ALL LINEAR DIMENSIONS ARE LOCALIZED HORIZONTAL DISTANCES
VERTICAL DATUM USED IS NAVD 88

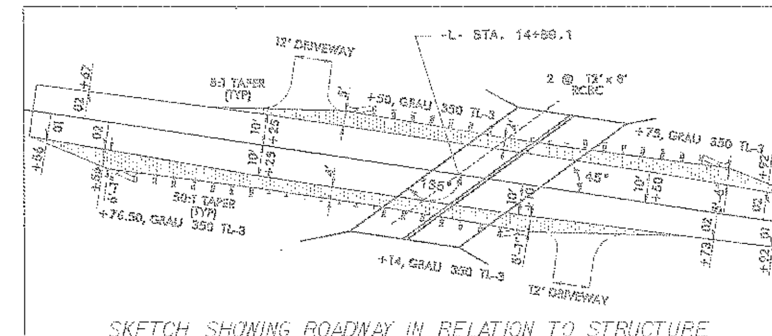

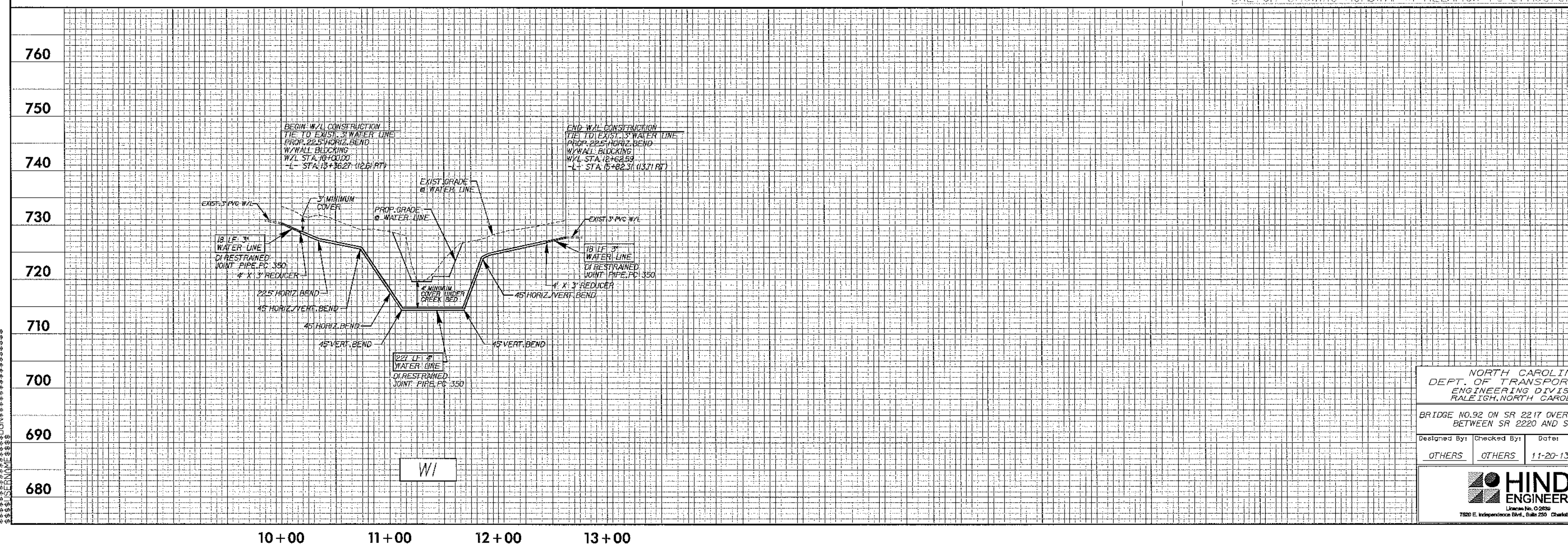

NORTH CAROLINA
DEPT. OF TRANSPORTATION
ENGINEERING DIVISION
RALEIGH, NORTH CAROLINA

BRIDGE NO.92 ON SR 2217 OVER BOWEN CREEK
BETWEEN SR 2220 AND SR 2219

Designed By:	Checked By:	Date:	Sheet:	Of:
OTHERS	OTHERS	11-20-13	U0-3	U0-3

HINDE ENGINEERING
License No. C-2839
7820 E. Independence Blvd., Suite 250 Charlotte, NC 28227

8/23/99

0 2.5 5	PROJ. REFERENCE NO.	SHEET NO.
	17BP.12.R.201	X-1

REPLACES CLEVELAND COUNTY BRIDGE NO. 92

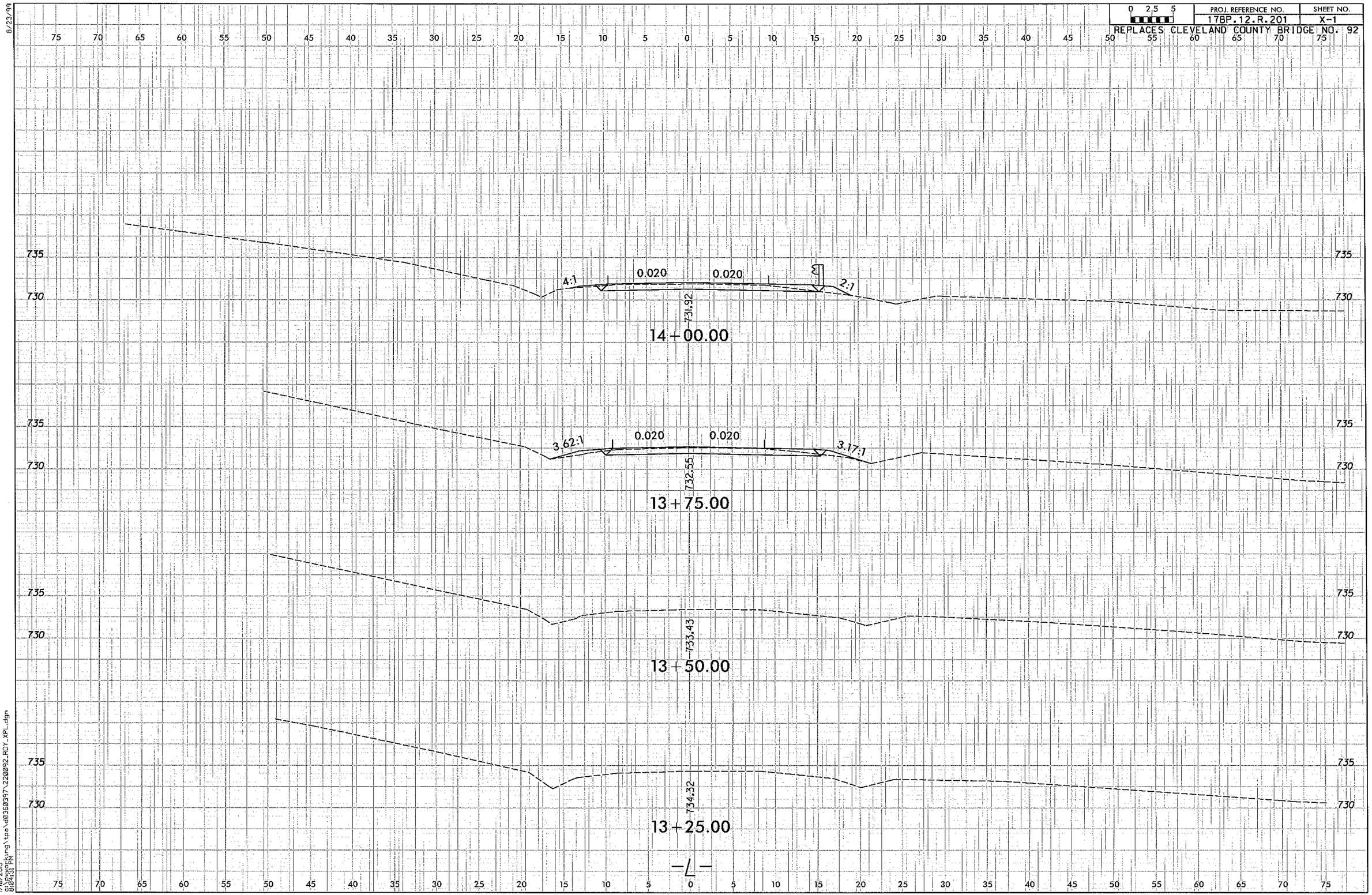

1/16/2015
8:04:30 PM
c:\pwworking\tpa\d0360397\220092_RDY_XPL.dgn

8/23/99

0 2.5 5	PROJ. REFERENCE NO.	SHEET NO.
	17BP.12.R.201	X-2

REPLACES CLEVELAND COUNTY BRIDGE NO. 92

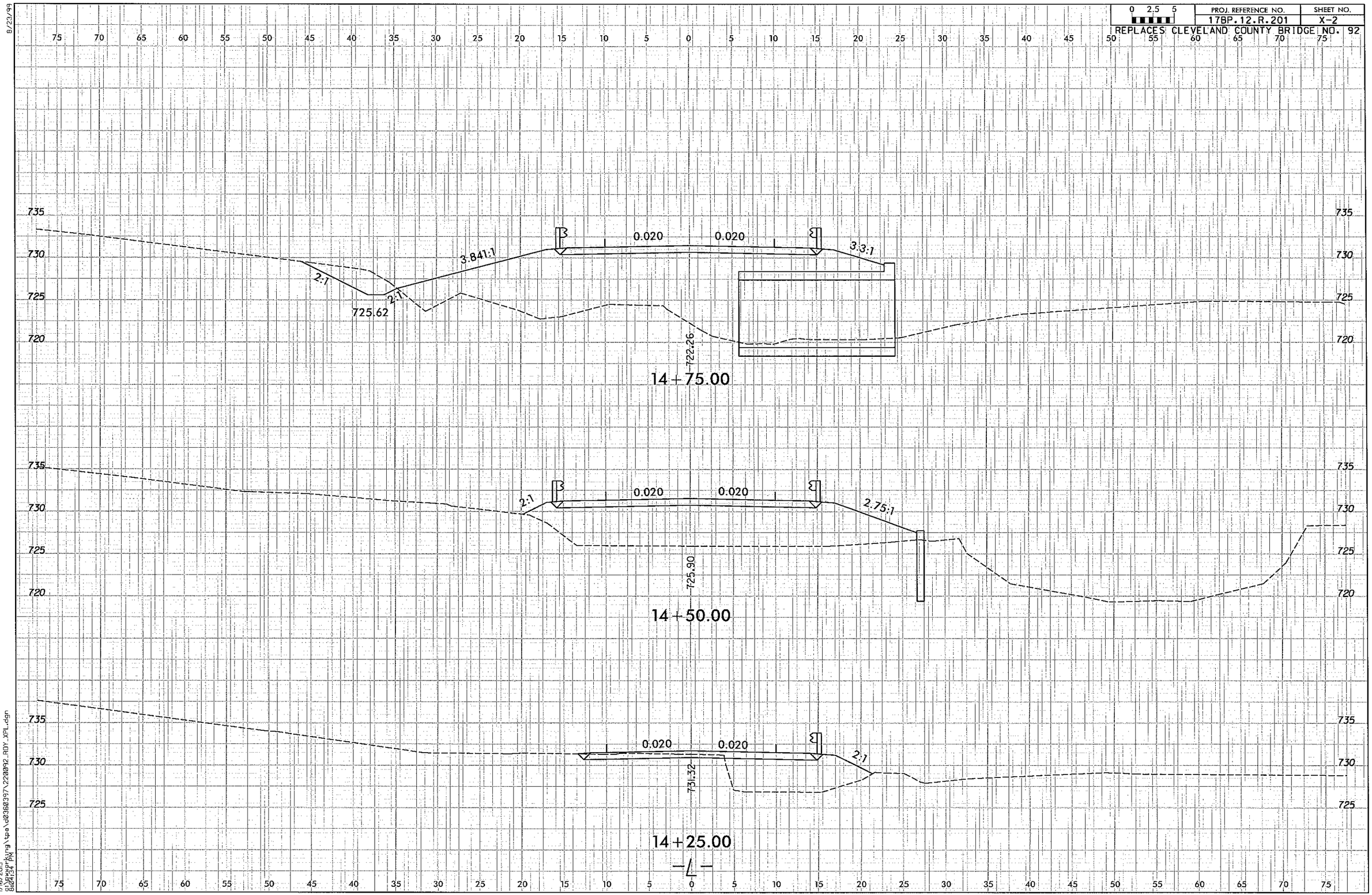

1/15/2015
01:04:34 PM
8:\pwworking\tpo\d0360397\220092_RDY_XPL.dgn

8/23/99

0 2.5 5	PROJ. REFERENCE NO.	SHEET NO.
	17BP.12.R.201	X-3

REPLACES CLEVELAND COUNTY BRIDGE NO. 92

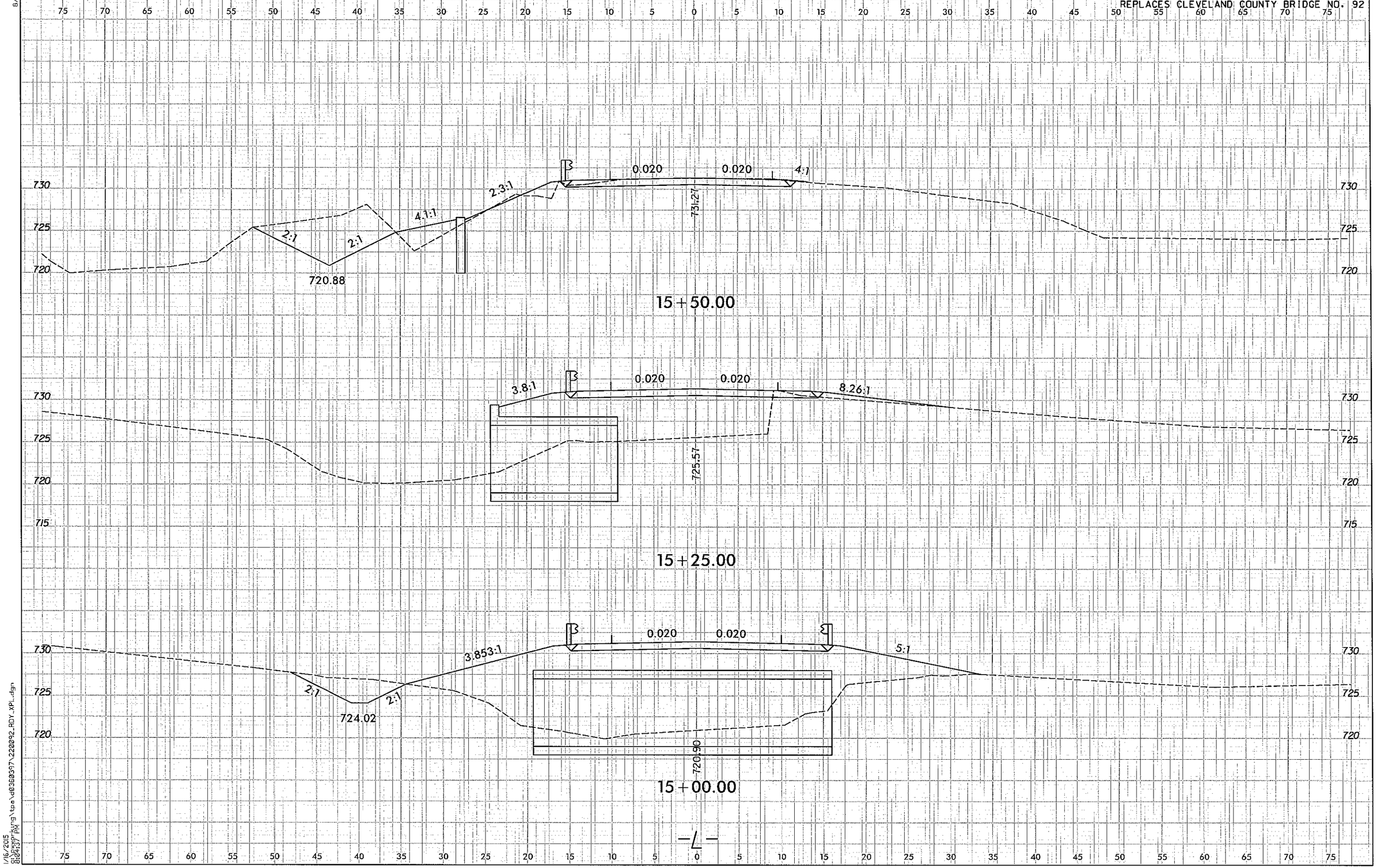

1/16/2015
8:04:39 PM
c:\pwworking\tpa\d0360397\220092_RDY_XPL.dgn

8/23/99

0 2.5 5	PROJ. REFERENCE NO.	SHEET NO.
	17BP.12.R.201	X-4

REPLACES CLEVELAND COUNTY BRIDGE NO. 92

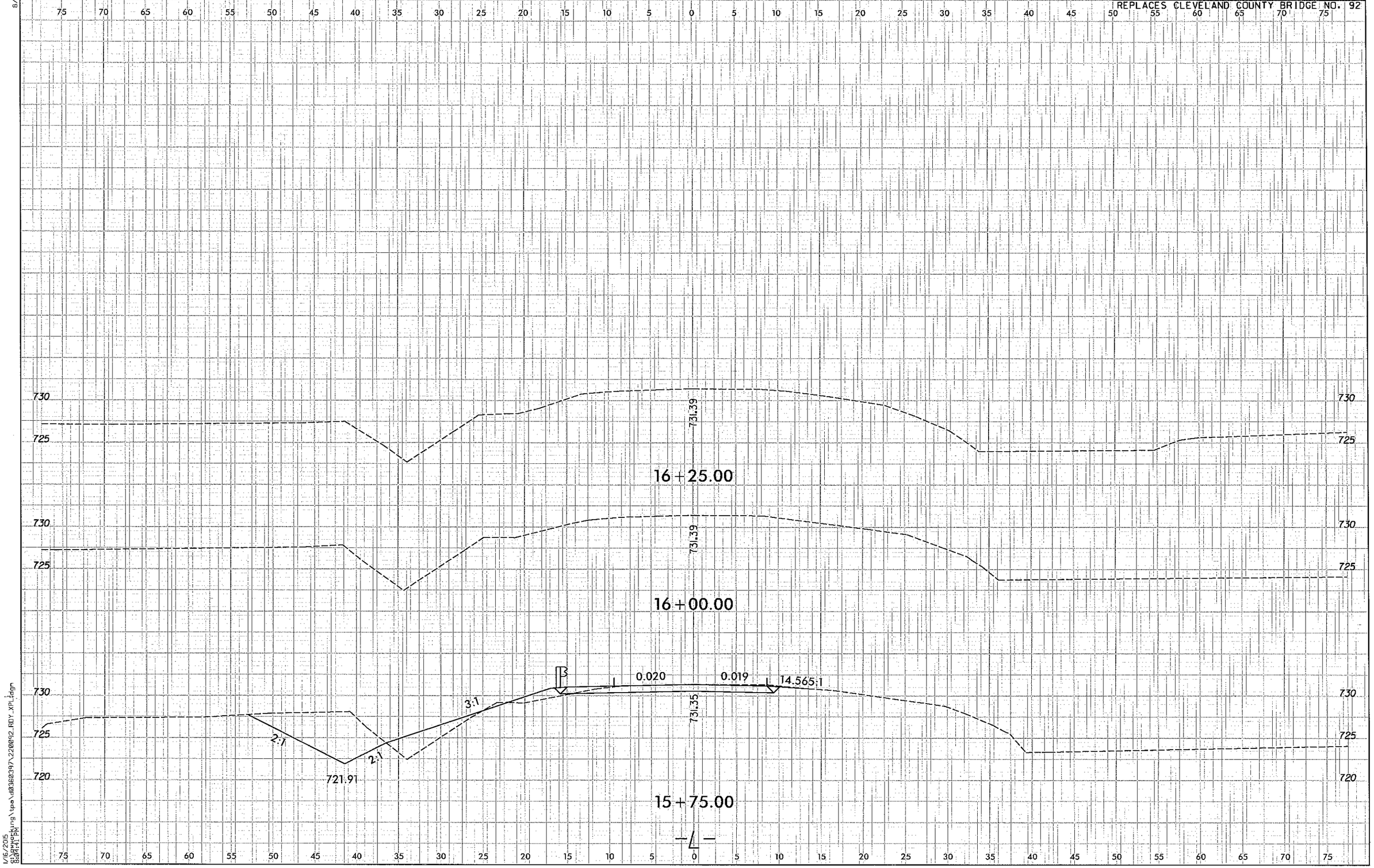

1/6/2015
8:24:41 PM
V:\0936397\220092_ROY_XPL.dgn

BENCHMARK TBM 2: RAILROAD SPIKE IN BASE OF 22" POPLAR, 24.90' RT. OF -L- STA. 16+86.26, EL. 730.78

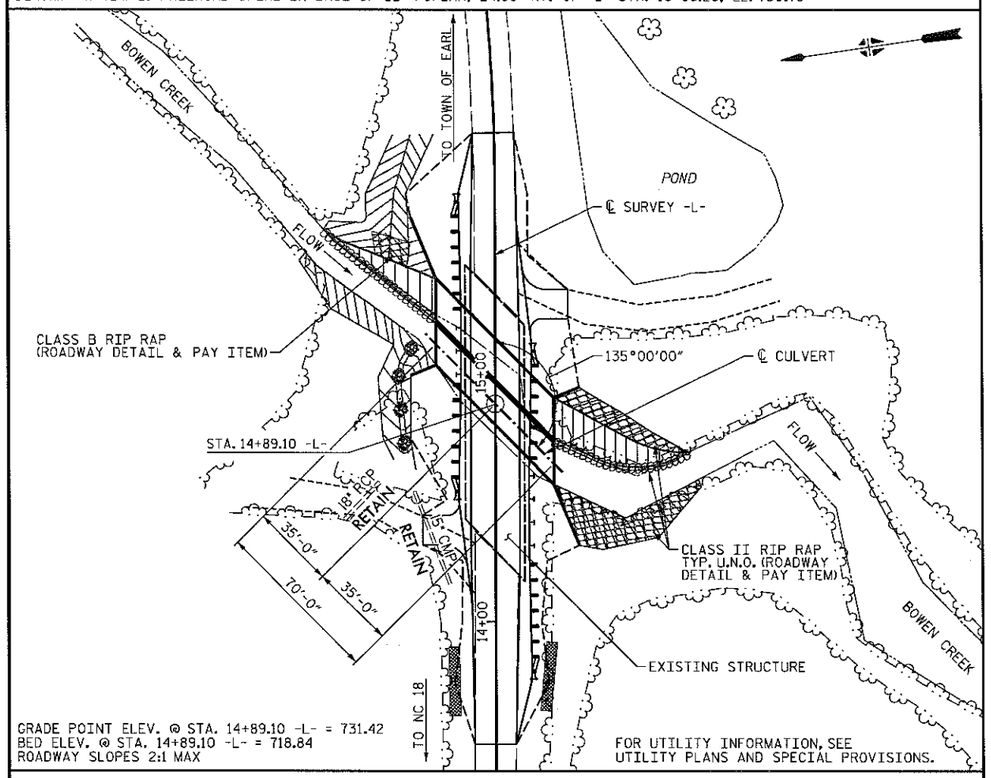

LOCATION SKETCH

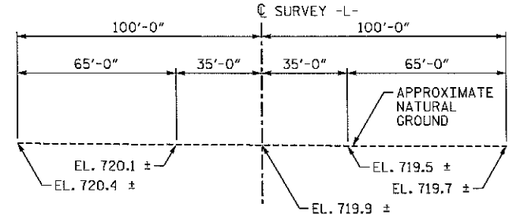

PROFILE ALONG ℄ CULVERT

OVERTOPPING FLOOD DATA

OVERTOPPING DISCHARGE	= 1660 CFS
FREQUENCY OF OVERTOPPING FLOOD	= >500 YR.
OVERTOPPING FLOOD ELEVATION	= 731.1

HYDRAULIC DATA

DESIGN DISCHARGE	= 750 CFS
FREQUENCY OF DESIGN FLOOD	= 25 YR.
DESIGN HIGH WATER ELEVATION	= 726.5
DRAINAGE AREA	= 1.7 SQ. MI.
BASIC DISCHARGE	= 1100 CFS
BASIC HIGH WATER ELEVATION	= 727.94

TOTAL STRUCTURE QUANTITIES		
CLASS A CONCRETE		
BARREL @ 3.169 C.Y./FT.	221.8	C.Y.
WINGS, SILLS, ETC.	52.1	C.Y.
TOTAL	273.9	C.Y.
REINFORCING STEEL		
BARREL & HEADWALLS	29,261	LBS.
WINGS	4,157	LBS.
TOTAL	33,418	LBS.
CULVERT EXCAVATION		LUMP SUM
RIP RAP CLASS I		90 TONS
FOUNDATION CONDITIONING MATERIAL		150 TONS
REMOVAL OF EXISTING STRUCTURE		LUMP SUM

NOTES

ASSUMED LIVE LOAD = HL-93 OR ALTERNATE LOADING.

DESIGN FILL = 4.59 FT.

3" Ø WEEP HOLES INDICATED TO BE IN ACCORDANCE WITH THE SPECIFICATIONS.

CONCRETE IN THE CULVERTS TO BE POURED IN THE FOLLOWING ORDER:

1. WING FOOTINGS AND FLOOR SLAB INCLUDING 4" OF ALL VERTICAL WALLS.
2. THE REMAINING PORTIONS OF THE WALLS AND WINGS FULL HEIGHT FOLLOWED BY ROOF SLAB AND HEADWALLS.

THE RESIDENT ENGINEER SHALL CHECK THE LENGTH OF CULVERT BEFORE STAKING IT OUT TO MAKE CERTAIN THAT IT WILL PROPERLY TAKE CARE OF THE FILL.

DIMENSIONS FOR WING LAYOUT AS WELL AS ADDITIONAL REINFORCING STEEL EMBEDDED IN BARREL ARE SHOWN ON THE WING SHEETS.

THE EXISTING STRUCTURE CONSISTING OF 3 SPANS (1 @ 35'-7", 1 @ 34'-6" & 1 @ 35'-7") WITH A TIMBER DECK ON I-BEAMS AND A CLEAR ROADWAY OF 24'-5" ON TIMBER CAPS AND PILES (CONCRETE ENCASED AT END BENT 1 AND BENT 1) AND LOCATED AT THE PROPOSED SITE SHALL BE REMOVED. THE EXISTING BRIDGE IS PRESENTLY POSTED BELOW THE LEGAL LOAD LIMIT. SHOULD THE STRUCTURAL INTEGRITY OF THE BRIDGE FURTHER DETERIORATE, THIS LOAD LIMITATION MAY BE REDUCED AS FOUND NECESSARY DURING THE LIFE OF THE PROJECT.

INASMUCH AS THE PAINT SYSTEM ON THE EXISTING STRUCTURAL STEEL CONTAINS LEAD, THE CONTRACTOR'S ATTENTION IS DIRECTED TO ARTICLE 107-1 OF THE STANDARD SPECIFICATIONS. ANY COSTS RESULTING FROM COMPLIANCE WITH APPLICABLE STATE OR FEDERAL REGULATIONS PERTAINING TO HANDLING OF MATERIALS CONTAINING LEAD BASED PAINT SHALL BE INCLUDED IN THE BID PRICE FOR "REMOVAL OF EXISTING STRUCTURE AT STATION 14+89.10".

THE SUBSTRUCTURE OF THE EXISTING BRIDGE INDICATED ON THE PLANS IS FROM THE BEST INFORMATION AVAILABLE. SINCE THIS INFORMATION IS SHOWN FOR THE CONVENIENCE OF THE CONTRACTOR, THE CONTRACTOR SHALL HAVE NO CLAIM WHATSOEVER AGAINST THE DEPARTMENT OF TRANSPORTATION FOR ANY DELAYS OR ADDITIONAL COST INCURRED BASED ON DIFFERENCES BETWEEN THE EXISTING BRIDGE SUBSTRUCTURE SHOWN ON THE PLANS AND THE ACTUAL CONDITIONS AT THE PROJECT SITE.

REMOVAL OF THE EXISTING BRIDGE SHALL BE PERFORMED SO AS NOT TO ALLOW DEBRIS TO FALL INTO THE WATER. THE CONTRACTOR SHALL REMOVE THE BRIDGE AND SUBMIT PLANS FOR DEMOLITION IN ACCORDANCE WITH ARTICLE 402-2 OF THE STANDARD SPECIFICATIONS.

STEEL IN THE BOTTOM SLAB MAY BE SPLICED AT THE PERMITTED CONSTRUCTION JOINT AT THE CONTRACTOR'S OPTION. EXTRA WEIGHT OF STEEL DUE TO THE SPLICES WILL BE PAID FOR BY THE CONTRACTOR.

AT THE CONTRACTOR'S OPTION HE MAY SUBMIT, TO THE ENGINEER FOR APPROVAL, DESIGN AND DETAIL DRAWINGS FOR A PRECAST REINFORCED CONCRETE BOX CULVERT IN LIEU OF THE CAST-IN-PLACE CULVERT SHOWN ON PLANS. THE DESIGN SHALL PROVIDE THE SAME SIZE AND NUMBER OF BARRELS AS USED ON THE CAST-IN-PLACE DESIGN. FOR OPTIONAL PRECAST REINFORCED CONCRETE BOX CULVERT, SEE SPECIAL PROVISIONS.

A 3 FOOT STRIP OF FILTER FABRIC SHALL BE ATTACHED TO THE FILL FACE OF THE WING COVERING THE ENTIRE LENGTH OF THE EXPANSION JOINT.

BED MATERIAL PLACED BETWEEN SILLS IN THE CULVERT SHALL PROVIDE A CONTINUOUS LOW FLOW CHANNEL BETWEEN THE SILLS. THE MATERIAL SHALL BE NATURAL STONE WITH A GRADATION SIZE SIMILAR TO THAT OF CLASS I RIP RAP. STONES LARGER THAN 17 INCHES SHALL NOT BE PLACED WITHIN THE LOW FLOW CHANNEL. BED MATERIAL IS SUBJECT TO APPROVAL BY THE ENGINEER.

EXCAVATE 1 FOOT BELOW CULVERT AND FOOTINGS AND REPLACE WITH FOUNDATION CONDITIONING MATERIAL IN ACCORDANCE WITH ARTICLE 414 OF THE STANDARD SPECIFICATIONS.

FOR CULVERT DIVERSION DETAILS AND PAY ITEM, SEE EROSION CONTROL PLANS.

FOR FALSEWORK AND FORMWORK, SEE SPECIAL PROVISIONS.

FOR CRANE SAFTEY, SEE SPECIAL PROVISIONS.

FOR GROUT FOR STRUCTURES, SEE SPECIAL PROVISIONS.

FOR SUBMITTAL OF WORKING DRAWINGS, SEE SPECIAL PROVISIONS.

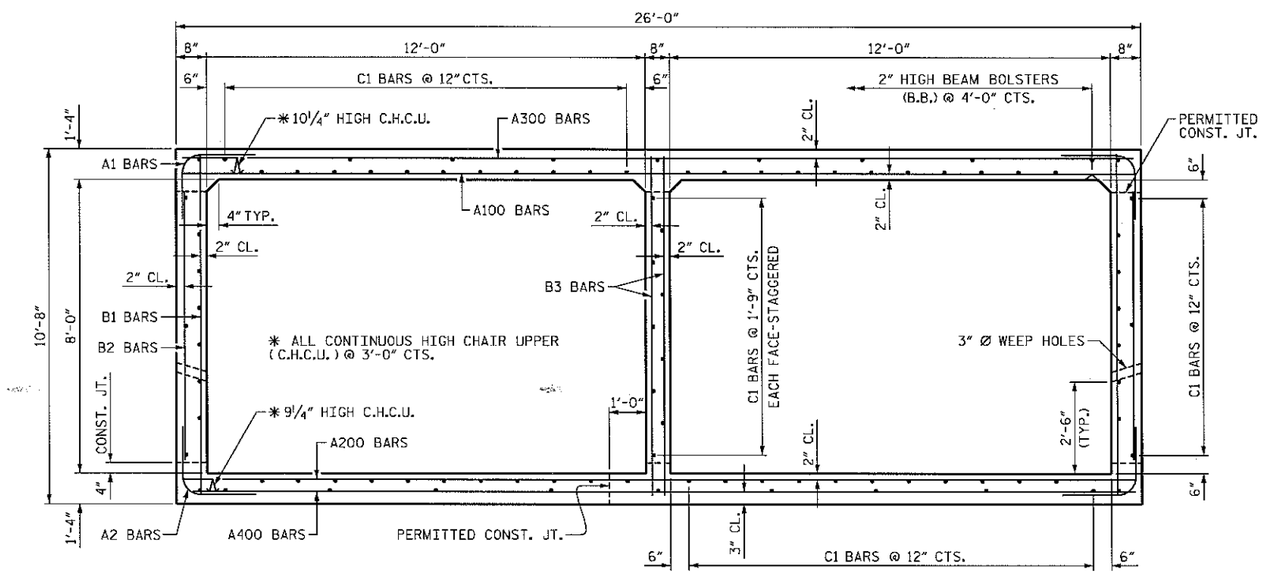

RIGHT ANGLE SECTION OF BARREL

(LOOKING DOWNSTREAM)
THERE ARE 93 "C" BARS IN SECTION OF BARREL

PROJECT NO. 17BP.12.R.201
CLEVELAND COUNTY
STATION: 14+89.10 -L-

SHEET 1 OF 8 REPLACES BRIDGE NO. 92

Jan 21, 2015

NORTH CAROLINA PROFESSIONAL SEAL 033730 ENGINEER ANNA C. TEAGUE

Anna C. Teague (Jan 21, 2015)

STATE OF NORTH CAROLINA
DEPARTMENT OF TRANSPORTATION
RALEIGH

DOUBLE BARREL
12 FT. X 8 FT.
CONCRETE BOX CULVERT
135° SKEW

HDR Engineering, Inc. of the Carolinas
3733 National Drive, Suite 207 Raleigh, N.C. 27612
N.C.B.E.L.S. License Number: F-0116

REVISIONS							SHEET NO. S-01
NO.	BY:	DATE:	NO.	BY:	DATE:		TOTAL SHEETS 9
1			3				
2			4				

DRAWN BY : W. TOWE DATE : 03/13
CHECKED BY : A. TEAGUE DATE : 03/13

PLOT DRIVER: NCDOT_pdf_mono_eng_50.plt
USER: msells DATE: 1/19/2015
FILE: ...\CAD\1.0 Final Plans\1
PENTABLE: Caborrus_pen.tbl
TIME: 4:06:30 PM

REINFORCING STEEL BAR SCHEDULE

BAR	NO.	SIZE	TYPE	LENGTH	WEIGHT
A100	88	#5	STR.	25'-8"	2356
A101	2	#5	STR.	25'-3"	53
A102	2	#5	STR.	24'-9"	52
A103	2	#5	STR.	24'-3"	51
A104	2	#5	STR.	23'-9"	50
A105	2	#5	STR.	23'-3"	48
A106	2	#5	STR.	22'-9"	47
A107	2	#5	STR.	22'-3"	46
A108	2	#5	STR.	21'-9"	45
A109	2	#5	STR.	21'-3"	44
A110	2	#5	STR.	20'-9"	43
A111	2	#5	STR.	20'-3"	42
A112	2	#5	STR.	19'-9"	41
A113	2	#5	STR.	19'-3"	40
A114	2	#5	STR.	18'-9"	39
A115	2	#5	STR.	18'-3"	38
A116	2	#5	STR.	17'-9"	37
A117	2	#5	STR.	17'-3"	36
A118	2	#5	STR.	16'-9"	35
A119	2	#5	STR.	16'-3"	34
A120	2	#5	STR.	15'-9"	33
A121	2	#5	STR.	15'-3"	32
A122	2	#5	STR.	14'-9"	31
A123	2	#5	STR.	14'-3"	30
A124	2	#5	STR.	13'-9"	29
A125	2	#5	STR.	13'-3"	28
A126	2	#5	STR.	12'-9"	27
A127	2	#5	STR.	12'-3"	26
A128	2	#5	STR.	11'-9"	25
A129	2	#5	STR.	11'-3"	23
A130	2	#5	STR.	10'-9"	22
A131	2	#5	STR.	10'-3"	21
A132	2	#5	STR.	9'-9"	20
A133	2	#5	STR.	9'-3"	19
A134	2	#5	STR.	8'-9"	18
A135	2	#5	STR.	8'-3"	17
A136	2	#5	STR.	7'-9"	16
A137	2	#5	STR.	7'-3"	15
A138	2	#5	STR.	6'-9"	14
A139	2	#5	STR.	6'-3"	13
A140	2	#5	STR.	5'-9"	12
A141	2	#5	STR.	5'-3"	11
A142	2	#5	STR.	4'-9"	10
A143	2	#5	STR.	4'-3"	9
A144	2	#5	STR.	3'-9"	8
A145	2	#5	STR.	3'-3"	7
A146	2	#5	STR.	2'-9"	6
A147	2	#5	STR.	2'-3"	5
A148	2	#5	STR.	1'-9"	4
A149	2	#5	STR.	1'-3"	3

REINFORCING STEEL BAR SCHEDULE

BAR	NO.	SIZE	TYPE	LENGTH	WEIGHT
A200	88	#5	STR.	25'-8"	2356
A201	2	#5	STR.	25'-3"	53
A202	2	#5	STR.	24'-9"	52
A203	2	#5	STR.	24'-3"	51
A204	2	#5	STR.	23'-9"	50
A205	2	#5	STR.	23'-3"	48
A206	2	#5	STR.	22'-9"	47
A207	2	#5	STR.	22'-3"	46
A208	2	#5	STR.	21'-9"	45
A209	2	#5	STR.	21'-3"	44
A210	2	#5	STR.	20'-9"	43
A211	2	#5	STR.	20'-3"	42
A212	2	#5	STR.	19'-9"	41
A213	2	#5	STR.	19'-3"	40
A214	2	#5	STR.	18'-9"	39
A215	2	#5	STR.	18'-3"	38
A216	2	#5	STR.	17'-9"	37
A217	2	#5	STR.	17'-3"	36
A218	2	#5	STR.	16'-9"	35
A219	2	#5	STR.	16'-3"	34
A220	2	#5	STR.	15'-9"	33
A221	2	#5	STR.	15'-3"	32
A222	2	#5	STR.	14'-9"	31
A223	2	#5	STR.	14'-3"	30
A224	2	#5	STR.	13'-9"	29
A225	2	#5	STR.	13'-3"	28
A226	2	#5	STR.	12'-9"	27
A227	2	#5	STR.	12'-3"	26
A228	2	#5	STR.	11'-9"	25
A229	2	#5	STR.	11'-3"	23
A230	2	#5	STR.	10'-9"	22
A231	2	#5	STR.	10'-3"	21
A232	2	#5	STR.	9'-9"	20
A233	2	#5	STR.	9'-3"	19
A234	2	#5	STR.	8'-9"	18
A235	2	#5	STR.	8'-3"	17
A236	2	#5	STR.	7'-9"	16
A237	2	#5	STR.	7'-3"	15
A238	2	#5	STR.	6'-9"	14
A239	2	#5	STR.	6'-3"	13
A240	2	#5	STR.	5'-9"	12
A241	2	#5	STR.	5'-3"	11
A242	2	#5	STR.	4'-9"	10
A243	2	#5	STR.	4'-3"	9
A244	2	#5	STR.	3'-9"	8
A245	2	#5	STR.	3'-3"	7
A246	2	#5	STR.	2'-9"	6
A247	2	#5	STR.	2'-3"	5
A248	2	#5	STR.	1'-9"	4
A249	2	#5	STR.	1'-3"	3

REINFORCING STEEL BAR SCHEDULE

BAR	NO.	SIZE	TYPE	LENGTH	WEIGHT
A300	88	#6	STR.	25'-8"	3393
A301	2	#6	STR.	25'-3"	76
A302	2	#6	STR.	24'-9"	74
A303	2	#6	STR.	24'-3"	73
A304	2	#6	STR.	23'-9"	71
A305	2	#6	STR.	23'-3"	70
A306	2	#6	STR.	22'-9"	68
A307	2	#6	STR.	22'-3"	67
A308	2	#6	STR.	21'-9"	65
A309	2	#6	STR.	21'-3"	64
A310	2	#6	STR.	20'-9"	62
A311	2	#6	STR.	20'-3"	61
A312	2	#6	STR.	19'-9"	59
A313	2	#6	STR.	19'-3"	58
A314	2	#6	STR.	18'-9"	56
A315	2	#6	STR.	18'-3"	55
A316	2	#6	STR.	17'-9"	53
A317	2	#6	STR.	17'-3"	52
A318	2	#6	STR.	16'-9"	50
A319	2	#6	STR.	16'-3"	49
A320	2	#6	STR.	15'-9"	47
A321	2	#6	STR.	15'-3"	46
A322	2	#6	STR.	14'-9"	44
A323	2	#6	STR.	14'-3"	43
A324	2	#6	STR.	13'-9"	41
A325	2	#6	STR.	13'-3"	40
A326	2	#6	STR.	12'-9"	38
A327	2	#6	STR.	12'-3"	37
A328	2	#6	STR.	11'-9"	35
A329	2	#6	STR.	11'-3"	34
A330	2	#6	STR.	10'-9"	32
A331	2	#6	STR.	10'-3"	31
A332	2	#6	STR.	9'-9"	29
A333	2	#6	STR.	9'-3"	28
A334	2	#6	STR.	8'-9"	26
A335	2	#6	STR.	8'-3"	25
A336	2	#6	STR.	7'-9"	23
A337	2	#6	STR.	7'-3"	22
A338	2	#6	STR.	6'-9"	20
A339	2	#6	STR.	6'-3"	19
A340	2	#6	STR.	5'-9"	17
A341	2	#6	STR.	5'-3"	16
A342	2	#6	STR.	4'-9"	14
A343	2	#6	STR.	4'-3"	13
A344	2	#6	STR.	3'-9"	11
A345	2	#6	STR.	3'-3"	10
A346	2	#6	STR.	2'-9"	8
A347	2	#6	STR.	2'-3"	7
A348	2	#6	STR.	1'-9"	5
A349	2	#6	STR.	1'-3"	4

REINFORCING STEEL BAR SCHEDULE

BAR	NO.	SIZE	TYPE	LENGTH	WEIGHT
A400	88	#6	STR.	25'-8"	3393
A401	2	#6	STR.	25'-3"	76
A402	2	#6	STR.	24'-9"	74
A403	2	#6	STR.	24'-3"	73
A404	2	#6	STR.	23'-9"	71
A405	2	#6	STR.	23'-3"	70
A406	2	#6	STR.	22'-9"	68
A407	2	#6	STR.	22'-3"	67
A408	2	#6	STR.	21'-9"	65
A409	2	#6	STR.	21'-3"	64
A410	2	#6	STR.	20'-9"	62
A411	2	#6	STR.	20'-3"	61
A412	2	#6	STR.	19'-9"	59
A413	2	#6	STR.	19'-3"	58
A414	2	#6	STR.	18'-9"	56
A415	2	#6	STR.	18'-3"	55
A416	2	#6	STR.	17'-9"	53
A417	2	#6	STR.	17'-3"	52
A418	2	#6	STR.	16'-9"	50
A419	2	#6	STR.	16'-3"	49
A420	2	#6	STR.	15'-9"	47
A421	2	#6	STR.	15'-3"	46
A422	2	#6	STR.	14'-9"	44
A423	2	#6	STR.	14'-3"	43
A424	2	#6	STR.	13'-9"	41
A425	2	#6	STR.	13'-3"	40
A426	2	#6	STR.	12'-9"	38
A427	2	#6	STR.	12'-3"	37
A428	2	#6	STR.	11'-9"	35
A429	2	#6	STR.	11'-3"	34
A430	2	#6	STR.	10'-9"	32
A431	2	#6	STR.	10'-3"	31
A432	2	#6	STR.	9'-9"	29
A433	2	#6	STR.	9'-3"	28
A434	2	#6	STR.	8'-9"	26
A435	2	#6	STR.	8'-3"	25
A436	2	#6	STR.	7'-9"	23
A437	2	#6	STR.	7'-3"	22
A438	2	#6	STR.	6'-9"	20
A439	2	#6	STR.	6'-3"	19
A440	2	#6	STR.	5'-9"	17
A441	2	#6	STR.	5'-3"	16
A442	2	#6	STR.	4'-9"	14
A443	2	#6	STR.	4'-3"	13
A444	2	#6	STR.	3'-9"	11
A445	2	#6	STR.	3'-3"	10
A446	2	#6	STR.	2'-9"	8
A447	2	#6	STR.	2'-3"	7
A448	2	#6	STR.	1'-9"	5
A449	2	#6	STR.	1'-3"	4

REINFORCING STEEL BAR SCHEDULE

BAR	NO.	SIZE	TYPE	LENGTH	WEIGHT
A1	280	#4	1	6'-3"	1169
A2	280	#4	1	5'-3"	982
B1	142	#4	STR.	10'-3"	972
B2	142	#4	STR.	7'-2"	680
B3	188	#4	STR.	10'-3"	1287
C1	279	#4	STR.	24'-5"	4551
D1	12	#6	STR.	2'-11"	53
G1	8	#5	STR.	36'-3"	302
S2	12	#8	STR.	36'-3"	1161
REINFORCING STEEL				LBS.	29,261

BAR TYPES

DIMENSIONS ARE OUT TO OUT

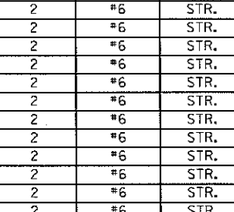

SPLICE LENGTH CHART

BAR	SIZE	SPLICE LENGTH
A1XX	5	2'-2"
A2XX	5	3'-0"
A3XX	6	3'-10"
A4XX	6	2'-9"
C1	4	1'-9"

PROJECT NO. 17BP.12.R.201

CLEVELAND COUNTY

STATION: 14+89.10 -L-

SHEET 2 OF 8 REPLACES BRIDGE NO. 92

Jan 21, 2015

NORTH CAROLINA PROFESSIONAL SEAL 033730 ENGINEER ANNA C. TEAGUE

Anna C. Teague (Jan 21, 2015)

STATE OF NORTH CAROLINA
DEPARTMENT OF TRANSPORTATION
RALEIGH

DOUBLE BARREL 12 FT. X 8 FT. CONCRETE BOX CULVERT 135° SKEW

HDR Engineering, Inc. of the Carolinas
3733 National Drive, Suite 207 Raleigh, N.C. 27612
N.C.B.E.L.S. License Number: F-0116

REVISIONS								SHEET NO. S-02
NO.	BY:	DATE:	NO.	BY:	DATE:			TOTAL SHEETS 9
1			3					
2			4					

DRAWN BY : W. TOWE DATE : 03/13
CHECKED BY : A. TEAGUE DATE : 03/13

PLOT DRIVER: NCDOT1.pdf.mono.eng_50.plt
USER: msellis DATE: 1/19/2015
FILE: ...\CAD\1.0 Final Plans\2
PENTABLE: Cabarrus.pen.tbl
TIME: 4:08:18 PM

LOAD AND RESISTANCE FACTOR RATING (LRFR) SUMMARY FOR REINFORCED CONCRETE BOX CULVERTS

LEVEL		VEHICLE	WEIGHT (W) (TONS)	CONTROLLING LOAD RATING (#)	MINIMUM RATING FACTORS (RF)	TONS = W x RF	STRENGTH I LIMIT STATE									COMMENT NUMBER
							LIVE-LOAD FACTORS (γ_{LL})	MOMENT				SHEAR				
								RATING FACTOR	BOX NO.	ELEMENT TYPE	DISTANCE FROM LEFT END OF ELEMENT (ft)	RATING FACTOR	BOX NO.	ELEMENT TYPE	DISTANCE FROM LEFT END OF ELEMENT (ft)	
DESIGN LOAD RATING		HL-93 (INVENTORY)	N/A	(1)	1.08	--	1.75	1.08	1	TOP SLAB	6.67	1.21	1	TOP SLAB	11.65	-
		HL-93 (OPERATING)	N/A		1.40	--	1.35	1.40	1	TOP SLAB	6.67	1.57	1	TOP SLAB	11.65	-
		HS-20 (INVENTORY)	36.000	(2)	1.08	38.8	1.75	1.08	1	TOP SLAB	6.67	1.21	1	TOP SLAB	11.65	-
		HS-20 (OPERATING)	36.000		1.40	50.4	1.35	1.40	1	TOP SLAB	6.67	1.57	1	TOP SLAB	11.65	-
LEGAL LOAD RATING	SINGLE VEHICLE (SV)	SNSH	13.500		1.97	26.5	1.40	1.97	1	TOP SLAB	6.67	2.19	1	TOP SLAB	11.65	-
		SNGARBS2	20.000		1.85	37.0	1.40	1.85	1	TOP SLAB	6.67	2.05	1	TOP SLAB	11.65	-
		SNAGRIS2	22.000		1.97	43.3	1.40	1.97	1	TOP SLAB	6.67	2.19	1	TOP SLAB	11.65	-
		SNCOTTS3	27.250	(3)	1.74	47.4	1.40	1.74	1	TOP SLAB	6.67	1.93	1	TOP SLAB	11.65	-
		SNAGGRS4	34.925		2.28	79.6	1.40	2.28	1	TOP SLAB	6.67	2.54	1	TOP SLAB	11.65	-
		SNS5A	35.550		2.07	73.5	1.40	2.07	1	TOP SLAB	6.67	2.30	1	TOP SLAB	11.65	-
		SNS6A	39.950		2.07	82.6	1.40	2.07	1	TOP SLAB	6.67	2.30	1	TOP SLAB	11.65	-
		SNS7B	42.000		2.07	86.9	1.40	2.07	1	TOP SLAB	6.67	2.30	1	TOP SLAB	11.65	-
	TRUCK TRACTOR SEMI-TRAILER (TTST)	TNAGRIT3	33.000		1.97	65.0	1.40	1.97	1	TOP SLAB	6.67	2.19	1	TOP SLAB	11.65	-
		TNT4A	33.075		2.07	68.4	1.40	2.07	1	TOP SLAB	6.67	2.30	1	TOP SLAB	11.65	-
		TNT6A	41.600		2.07	86.1	1.40	2.07	1	TOP SLAB	6.67	2.30	1	TOP SLAB	11.65	-
		TNT7A	42.000		2.07	86.9	1.40	2.07	1	TOP SLAB	6.67	2.30	1	TOP SLAB	11.65	-
		TNT7B	42.000		2.07	86.9	1.40	2.07	1	TOP SLAB	6.67	2.30	1	TOP SLAB	11.65	-
		TNAGRIT4	43.000		1.97	84.7	1.40	1.97	1	TOP SLAB	6.67	2.19	1	TOP SLAB	11.65	-
		TNAGT5A	45.000		1.97	88.6	1.40	1.97	1	TOP SLAB	6.67	2.19	1	TOP SLAB	11.65	-
		TNAGT5B	45.000		2.07	93.1	1.40	2.07	1	TOP SLAB	6.67	2.30	1	TOP SLAB	11.65	-

LOAD FACTORS:

DESIGN LOAD RATING FACTORS

LOAD TYPE	MAX FACTOR	MIN FACTOR
DC	1.25	0.90
DW	1.50	0.65
EV	1.30	0.90
EH	1.35	0.90
ES	1.35	0.90
LS	1.75	--
WA	1.00	--

NOTE:

RATING FACTORS ARE BASED ON THE STRENGTH I LIMIT STATE.

COMMENTS:

1.
2.
3.
4.

(#) CONTROLLING LOAD RATING

(1) DESIGN LOAD RATING (HL-93)

(2) DESIGN LOAD RATING (HS-20)

(3) LEGAL LOAD RATING **

** SEE CHART FOR VEHICLE TYPE

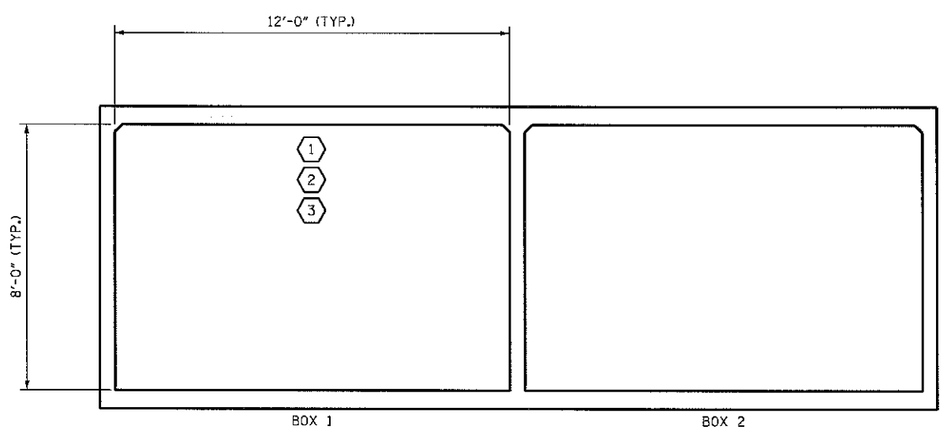

LRFR SUMMARY
(LOOKING DOWNSTREAM)

PROJECT NO. 17BP.12.R.201
CLEVELAND COUNTY
STATION: 14+89.10 -L-

SHEET 3 OF 8 REPLACES BRIDGE NO. 92

Jan 21, 2015

NORTH CAROLINA PROFESSIONAL SEAL 033730 ENGINEER ANNA C. TEAGUE

Anna C. Teague (Jan 21, 2015)

HDR Engineering, Inc. of the Carolinas
3733 National Drive, Suite 207 Raleigh, N.C. 27612
N.C.B.E.L.S. License Number: F-0116

STATE OF NORTH CAROLINA
DEPARTMENT OF TRANSPORTATION
RALEIGH

DOUBLE BARREL
12 FT. X 8 FT.
CONCRETE BOX CULVERT
135° SKEW

REVISIONS								SHEET NO.
NO.	BY:	DATE:	NO.	BY:	DATE:			S-03
1			3					TOTAL SHEETS
2			4					9

DRAWN BY : W. TOWE DATE : 03/13
CHECKED BY : A. TEAGUE DATE : 03/13

PLOT DRIVER: NCDOT_pdf_mono_eng_50.pltt
USER: msells DATE: 1/19/2015
FILE: ...\CAD\1.0 Final Plans\3
PENTABLE: Cobarrus_pen.tbl
TIME: 4:09:23 PM

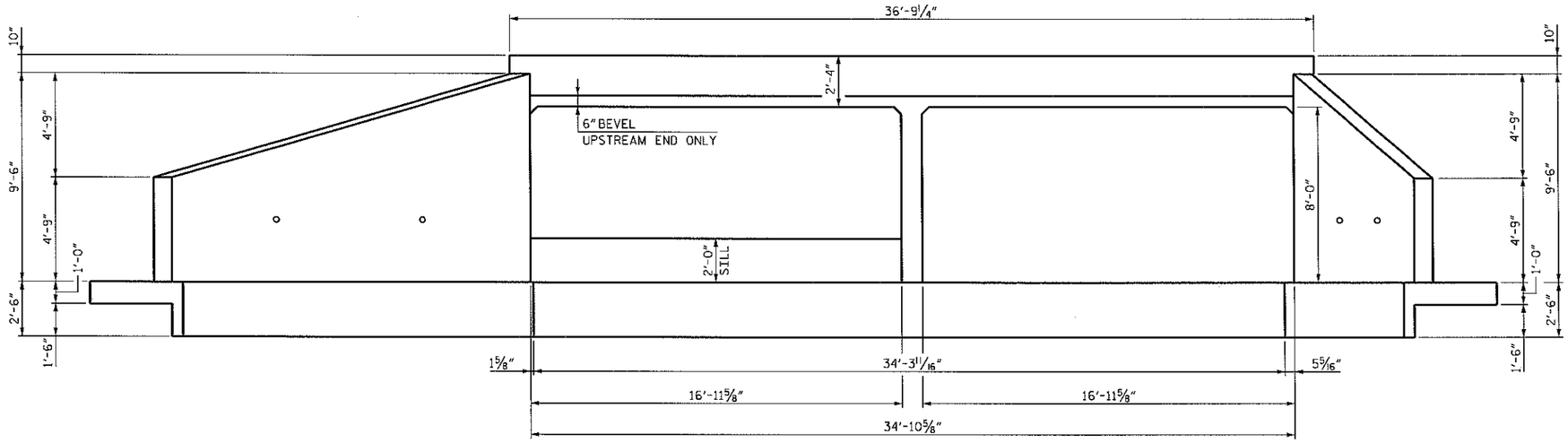

INLET END ELEVATION NORMAL TO SKEW

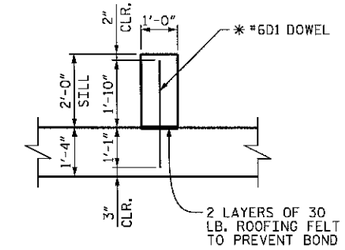

* DOWELS MAY BE PUSHED INTO GREEN CONCRETE AFTER SLAB HAS BEEN FLOAT FINISHED.

SECTION THRU SILL

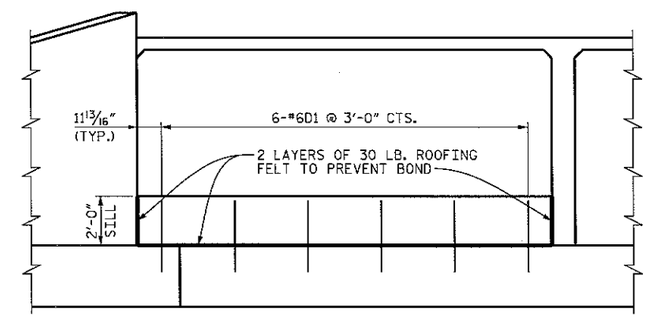

END ELEVATION
(LOOKING DOWNSTREAM)

CULVERT SILL DETAILS

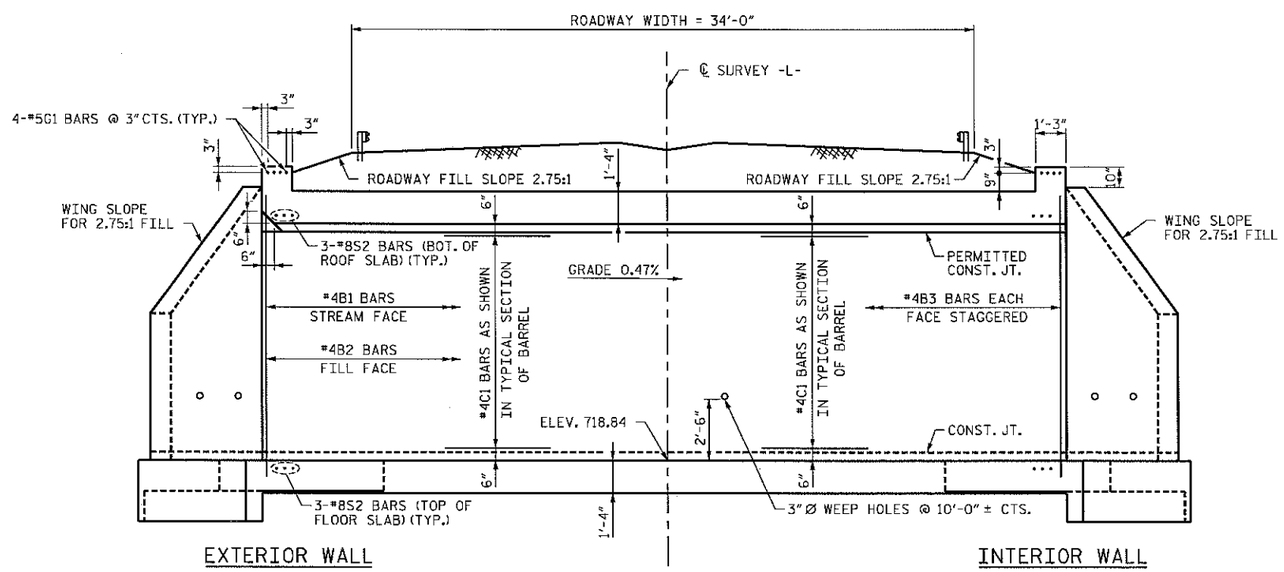

CULVERT SECTION NORMAL TO ROADWAY

PROJECT NO. 17BP.12.R.201

CLEVELAND COUNTY

STATION: 14+89.10 -L-

SHEET 4 OF 8 REPLACES BRIDGE NO. 92

Jan 21, 2015

NORTH CAROLINA PROFESSIONAL SEAL 033730 ENGINEER ANNA C. TEAGUE

Anna C. Teague (Jan 21, 2015)

HDR Engineering, Inc. of the Carolinas
3733 National Drive, Suite 207 Raleigh, N.C. 27612
N.C.B.E.L.S. License Number: F-0116

STATE OF NORTH CAROLINA
DEPARTMENT OF TRANSPORTATION
RALEIGH

DOUBLE BARREL
12 FT. X 8 FT.
CONCRETE BOX CULVERT
135° SKEW

REVISIONS							SHEET NO. S-04
NO.	BY:	DATE:	NO.	BY:	DATE:		
1			3				TOTAL SHEETS 9
2			4				

DRAWN BY : S. KIGHT DATE : 03/13
CHECKED BY : A. TEAGUE DATE : 03/13

PLOT DRIVER: NCDOT_pdf_mono.eng.50.plt PENTABLE: Cabarrus_pen.tbl
USER: maells DATE: 1/19/2015 TIME: 4:10:36 PM
FILE: ...\CADD\10 Final Plans\4

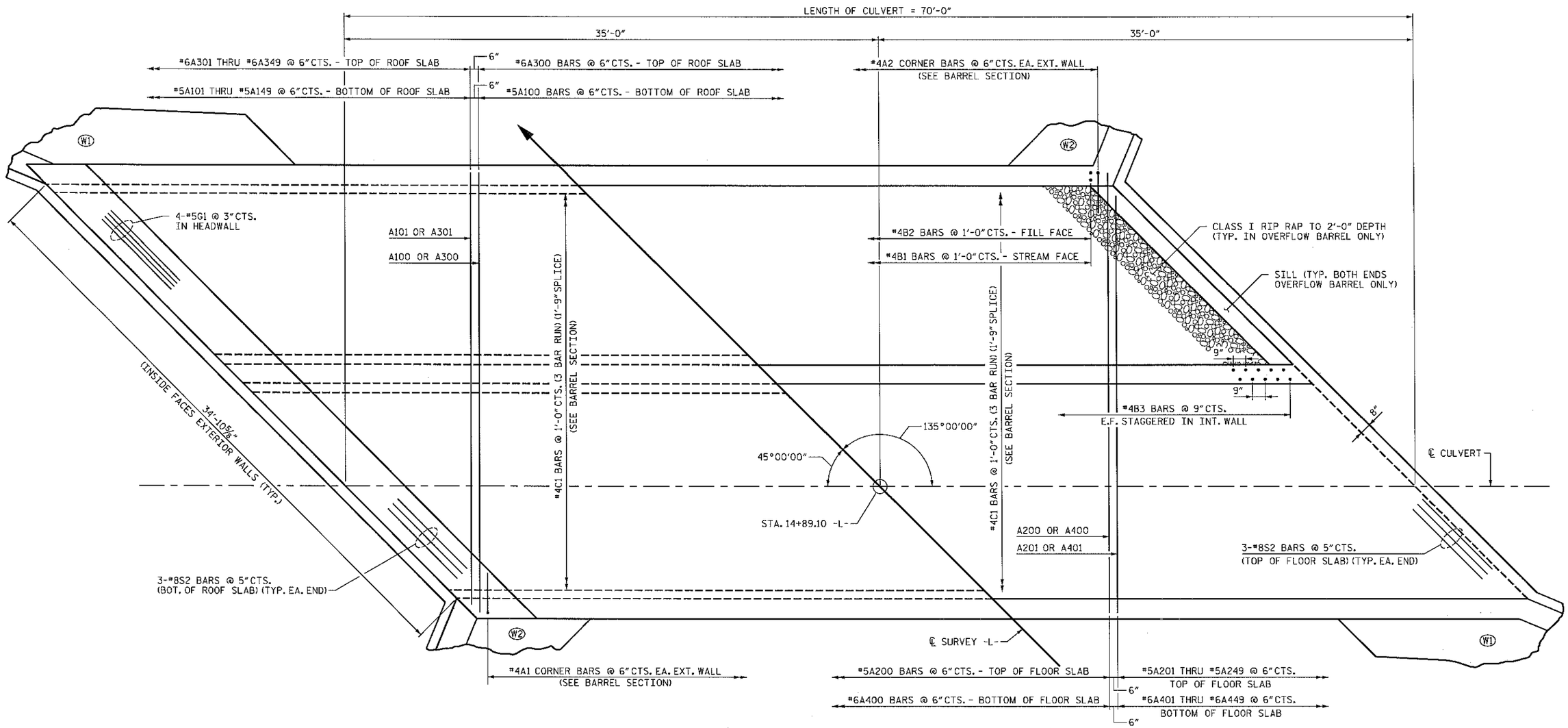

PART PLAN ROOF SLAB

PART PLAN FLOOR SLAB

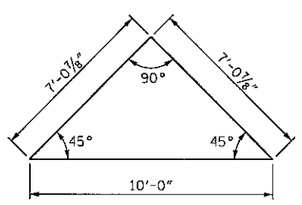

SKEW TRIANGLE

PROJECT NO. 17BP.12.R.201

CLEVELAND COUNTY

STATION: 14+89.10 -L-

SHEET 5 OF 8 REPLACES BRIDGE NO. 92

Jan 21, 2015

NORTH CAROLINA PROFESSIONAL SEAL 033730 ENGINEER ANNA C. TEAGUE

Anna C. Teague (Jan 21, 2015)

HDR Engineering, Inc. of the Carolinas
3733 National Drive, Suite 207 Raleigh, N.C. 27612
N.C.B.E.L.S. License Number: F-0116

STATE OF NORTH CAROLINA
DEPARTMENT OF TRANSPORTATION
RALEIGH

DOUBLE BARREL
12 FT. X 8 FT.
CONCRETE BOX CULVERT
135° SKEW

REVISIONS						SHEET NO. S-05
NO.	BY:	DATE:	NO.	BY:	DATE:	TOTAL SHEETS 9
1			3			
2			4			

DRAWN BY : S. KIGHT DATE : 03/13
CHECKED BY : A. TEAGUE DATE : 03/13

PLOT DRIVER: NCDOT.pdf.mono.eng.50.plt
USER: msells DATE: 1/19/2015
FILE: ...\CADV1.0 Final Plans\5

PENTABLE: Caborrus_pen.tbl
TIME: 4:11:32 PM

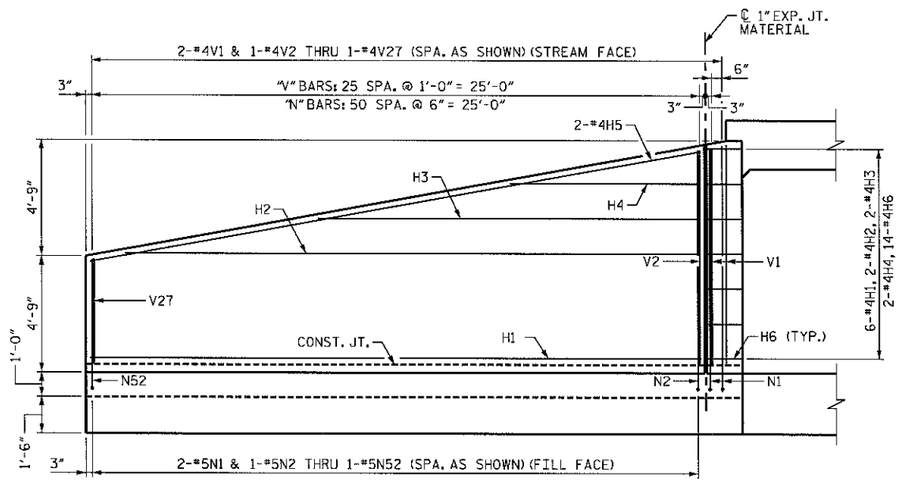

ELEVATION-W1

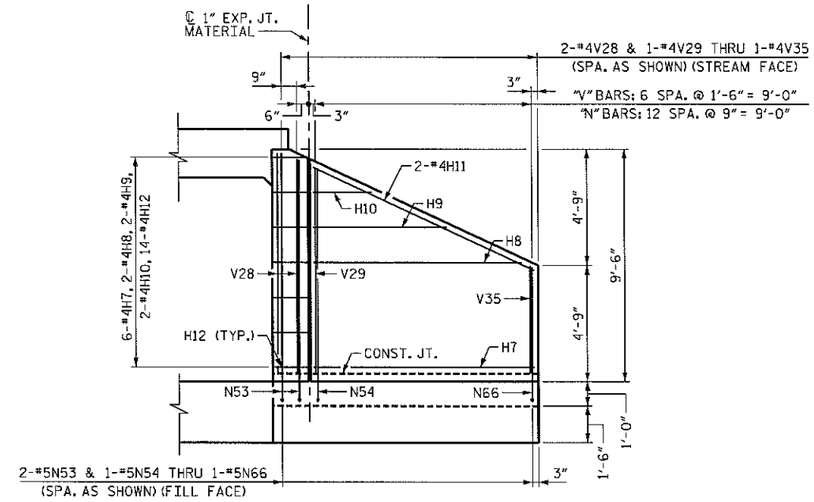

ELEVATION-W2

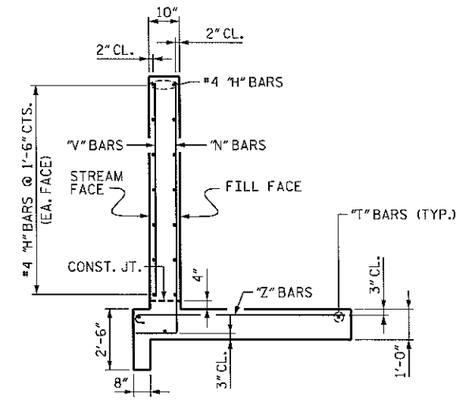

TYPICAL WING SECTION

NOTES

A 3 FOOT STRIP OF FILTER FABRIC SHALL BE ATTACHED TO THE FULL FACE OF THE WING COVERING THE ENTIRE LENGTH OF THE EXPANSION JOINT.

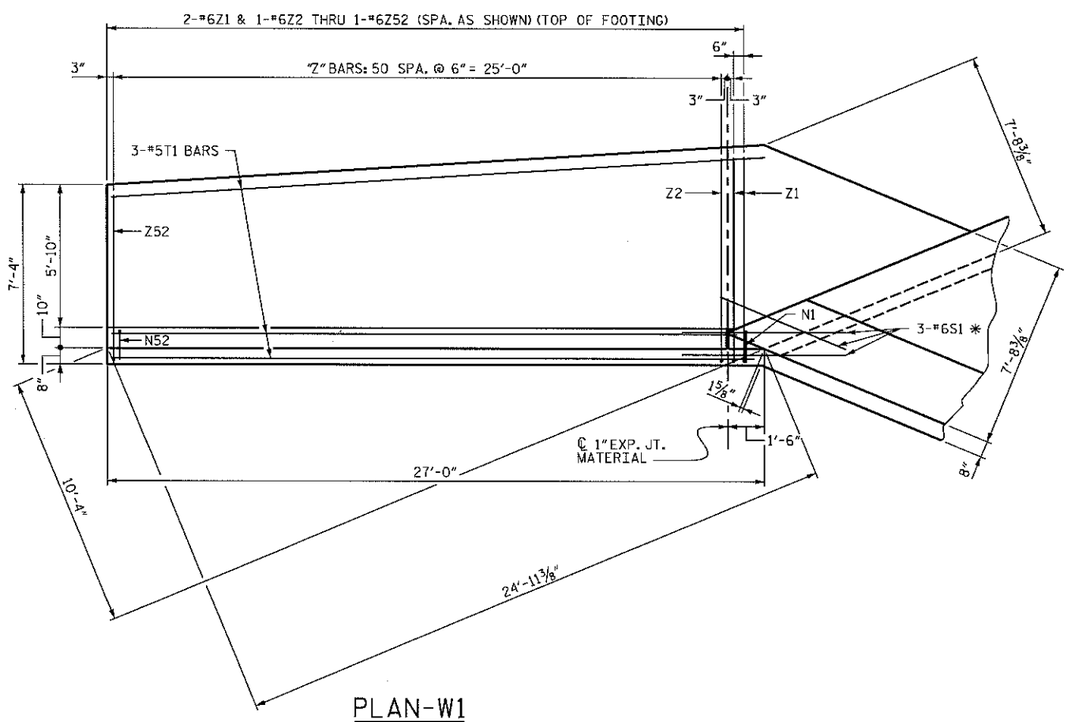

PLAN-W1

✱ BOTTOM OF FLOOR SLAB & FOOTING

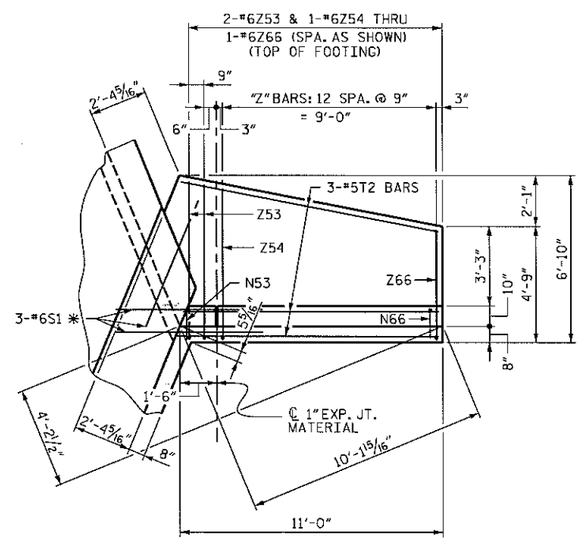

PLAN-W2

PROJECT NO. 17BP.12.R.201

CLEVELAND COUNTY

STATION: 14+89.10 -L-

SHEET 6 OF 8 REPLACES BRIDGE NO. 92

Jan 21, 2015

NORTH CAROLINA PROFESSIONAL SEAL 033730 ENGINEER ANNA C. TEAGUE

Anna C. Teague (Jan 21, 2015)

HDR Engineering, Inc. of the Carolinas
3733 National Drive, Suite 207 Raleigh, N.C. 27612
N.C.B.E.L.S. License Number: F-0116

STATE OF NORTH CAROLINA
DEPARTMENT OF TRANSPORTATION
RALEIGH

DOUBLE BARREL 12 FT. X 8 FT. CONCRETE BOX CULVERT 135° SKEW

REVISIONS						SHEET NO.
NO.	BY:	DATE:	NO.	BY:	DATE:	S-06
1			3			TOTAL SHEETS
2			4			9

DRAWN BY : S. KIGHT DATE : 03/13

CHECKED BY : A. TEAGUE DATE : 03/13

PLOT DRIVER: NCDOT_pdf_mono_eng_50.plt
USER: msells DATE: 1/19/2015
FILE: ...\CAD\1.0 Final Plans\6
PENTABLE: Coborrus_pen.tbl
TIME: 4:12:24 PM

BILL OF MATERIAL

BAR	NO.	SIZE	TYPE	LENGTH	DIM "A"	WEIGHT
H1	12	#4	STR.	25'-2"	-	202
H2	4	#4	STR.	22'-9"	-	61
H3	4	#4	STR.	14'-3"	-	38
H4	4	#4	STR.	5'-9"	-	15
H5	4	#4	STR.	25'-6"	-	68
H6	28	#4	2	3'-3"	-	61
H7	12	#4	STR.	9'-2"	-	73
H8	4	#4	STR.	8'-3"	-	22
H9	4	#4	STR.	4'-9"	-	13
H10	4	#4	STR.	1'-4"	-	4
H11	4	#4	STR.	10'-0"	-	27
H12	28	#4	1	3'-3"	-	61
N1	4	#5	3	10'-9"	9'-3 1/2"	45
N2	2	#5	3	10'-8"	9'-2 1/2"	22
N3	2	#5	3	10'-7"	9'-1 1/2"	22
N4	2	#5	3	10'-6"	9'-0 1/2"	22
N5	2	#5	3	10'-5"	8'-11 1/2"	22
N6	2	#5	3	10'-4"	8'-10 1/2"	22
N7	2	#5	3	10'-3"	8'-9 1/2"	21
N8	2	#5	3	10'-2"	8'-8 1/2"	21
N9	2	#5	3	10'-1"	8'-7 1/2"	21
N10	2	#5	3	10'-0"	8'-6 1/2"	21
N11	2	#5	3	9'-11"	8'-5 1/2"	21
N12	2	#5	3	9'-10"	8'-4 1/2"	21
N13	2	#5	3	9'-9"	8'-3 1/2"	20
N14	2	#5	3	9'-8"	8'-2 1/2"	20
N15	2	#5	3	9'-7"	8'-1 1/2"	20
N16	2	#5	3	9'-5"	7'-11 1/2"	20
N17	2	#5	3	9'-4"	7'-10 1/2"	19
N18	2	#5	3	9'-3"	7'-9 1/2"	19
N19	2	#5	3	9'-2"	7'-8 1/2"	19
N20	2	#5	3	9'-1"	7'-7 1/2"	19
N21	2	#5	3	9'-0"	7'-6 1/2"	19
N22	2	#5	3	8'-11"	7'-5 1/2"	19
N23	2	#5	3	8'-10"	7'-4 1/2"	18
N24	2	#5	3	8'-9"	7'-3 1/2"	18
N25	2	#5	3	8'-8"	7'-2 1/2"	18
N26	2	#5	3	8'-7"	7'-1 1/2"	18
N27	2	#5	3	8'-6"	7'-0 1/2"	18
N28	2	#5	3	8'-5"	6'-11 1/2"	18
N29	2	#5	3	8'-4"	6'-10 1/2"	17
N30	2	#5	3	8'-3"	6'-9 1/2"	17
N31	2	#5	3	8'-2"	6'-8 1/2"	17
N32	2	#5	3	8'-1"	6'-7 1/2"	17
N33	2	#5	3	7'-11"	6'-5 1/2"	17
N34	2	#5	3	7'-10"	6'-4 1/2"	16
N35	2	#5	3	7'-9"	6'-3 1/2"	16
N36	2	#5	3	7'-8"	6'-2 1/2"	16
N37	2	#5	3	7'-7"	6'-1 1/2"	16
N38	2	#5	3	7'-6"	6'-0 1/2"	16
N39	2	#5	3	7'-5"	5'-11 1/2"	15
N40	2	#5	3	7'-4"	5'-10 1/2"	15
N41	2	#5	3	7'-3"	5'-9 1/2"	15
N42	2	#5	3	7'-2"	5'-8 1/2"	15
N43	2	#5	3	7'-1"	5'-7 1/2"	15
N44	2	#5	3	7'-0"	5'-6 1/2"	15
N45	2	#5	3	6'-11"	5'-5 1/2"	14
N46	2	#5	3	6'-10"	5'-4 1/2"	14
N47	2	#5	3	6'-9"	5'-3 1/2"	14
N48	2	#5	3	6'-8"	5'-2 1/2"	14
N49	2	#5	3	6'-7"	5'-1 1/2"	14
N50	2	#5	3	6'-6"	5'-0 1/2"	14
N51	2	#5	3	6'-4"	4'-10 1/2"	13
N52	2	#5	3	6'-3"	4'-9 1/2"	13
N53	4	#5	3	10'-5"	8'-11 1/2"	43
N54	2	#5	3	10'-3"	8'-9 1/2"	21
N55	2	#5	3	9'-11"	8'-5 1/2"	21
N56	2	#5	3	9'-7"	8'-1 1/2"	20
N57	2	#5	3	9'-3"	7'-9 1/2"	19
N58	2	#5	3	8'-11"	7'-5 1/2"	19
N59	2	#5	3	8'-7"	7'-1 1/2"	18
N60	2	#5	3	8'-3"	6'-9 1/2"	17
N61	2	#5	3	7'-11"	6'-5 1/2"	17
N62	2	#5	3	7'-8"	6'-2 1/2"	16
N63	2	#5	3	7'-4"	5'-10 1/2"	15

BILL OF MATERIAL

BAR	NO.	SIZE	TYPE	LENGTH	DIM "A"	WEIGHT
N64	2	#5	3	7'-0"	5'-6 1/2"	15
N65	2	#5	3	6'-8"	5'-2 1/2"	14
N66	2	#5	3	6'-4"	4'-10 1/2"	13
S1	12	#6	STR.	6'-0"	-	108
T1	6	#5	STR.	27'-0"	-	169
T2	6	#5	STR.	11'-0"	-	69
V1	4	#4	STR.	8'-9"	-	23
V2	2	#4	STR.	8'-8"	-	12
V3	2	#4	STR.	8'-6"	-	11
V4	2	#4	STR.	8'-4"	-	11
V5	2	#4	STR.	8'-1"	-	11
V6	2	#4	STR.	7'-11"	-	11
V7	2	#4	STR.	7'-9"	-	10
V8	2	#4	STR.	7'-7"	-	10
V9	2	#4	STR.	7'-5"	-	10
V10	2	#4	STR.	7'-3"	-	10
V11	2	#4	STR.	7'-1"	-	9
V12	2	#4	STR.	6'-11"	-	9
V13	2	#4	STR.	6'-9"	-	9
V14	2	#4	STR.	6'-6"	-	9
V15	2	#4	STR.	6'-4"	-	8
V16	2	#4	STR.	6'-2"	-	8
V17	2	#4	STR.	6'-0"	-	8
V18	2	#4	STR.	5'-10"	-	8
V19	2	#4	STR.	5'-8"	-	8
V20	2	#4	STR.	5'-6"	-	7
V21	2	#4	STR.	5'-4"	-	7
V22	2	#4	STR.	5'-2"	-	7
V23	2	#4	STR.	4'-11"	-	7
V24	2	#4	STR.	4'-9"	-	6
V25	2	#4	STR.	4'-7"	-	6
V26	2	#4	STR.	4'-5"	-	6
V27	2	#4	STR.	4'-3"	-	6
V28	4	#4	STR.	8'-5"	-	22
V29	2	#4	STR.	8'-2"	-	11
V30	2	#4	STR.	7'-6"	-	10
V31	2	#4	STR.	6'-11"	-	9
V32	2	#4	STR.	6'-3"	-	8
V33	2	#4	STR.	5'-7"	-	7
V34	2	#4	STR.	4'-11"	-	7
V35	2	#4	STR.	4'-4"	-	6
Z1	4	#6	4	9'-3"	8'-7"	56
Z2	2	#6	4	9'-2"	8'-6"	28
Z3	2	#6	4	9'-2"	8'-6"	28
Z4	2	#6	4	9'-1"	8'-5"	27
Z5	2	#6	4	9'-1"	8'-5"	27
Z6	2	#6	4	9'-1"	8'-5"	27
Z7	2	#6	4	9'-0"	8'-4"	27
Z8	2	#6	4	9'-0"	8'-4"	27
Z9	2	#6	4	9'-0"	8'-4"	27
Z10	2	#6	4	8'-11"	8'-3"	27
Z11	2	#6	4	8'-11"	8'-3"	27
Z12	2	#6	4	8'-10"	8'-2"	27
Z13	2	#6	4	8'-10"	8'-2"	27
Z14	2	#6	4	8'-10"	8'-2"	27
Z15	2	#6	4	8'-9"	8'-1"	26
Z16	2	#6	4	8'-9"	8'-1"	26
Z17	2	#6	4	8'-9"	8'-1"	26
Z18	2	#6	4	8'-8"	8'-0"	26
Z19	2	#6	4	8'-8"	8'-0"	26
Z20	2	#6	4	8'-8"	8'-0"	26
Z21	2	#6	4	8'-7"	7'-11"	26
Z22	2	#6	4	8'-7"	7'-11"	26
Z23	2	#6	4	8'-6"	7'-10"	26
Z24	2	#6	4	8'-6"	7'-10"	26
Z25	2	#6	4	8'-6"	7'-10"	26
Z26	2	#6	4	8'-5"	7'-9"	25
Z27	2	#6	4	8'-5"	7'-9"	25
Z28	2	#6	4	8'-5"	7'-9"	25
Z29	2	#6	4	8'-4"	7'-8"	25
Z30	2	#6	4	8'-4"	7'-8"	25
Z31	2	#6	4	8'-3"	7'-7"	25

BILL OF MATERIAL

BAR	NO.	SIZE	TYPE	LENGTH	DIM "A"	WEIGHT
Z32	2	#6	4	8'-3"	7'-7"	25
Z33	2	#6	4	8'-3"	7'-7"	25
Z34	2	#6	4	8'-2"	7'-6"	25
Z35	2	#6	4	8'-2"	7'-6"	25
Z36	2	#6	4	8'-2"	7'-6"	25
Z37	2	#6	4	8'-1"	7'-5"	24
Z38	2	#6	4	8'-1"	7'-5"	24
Z39	2	#6	4	8'-0"	7'-4"	24
Z40	2	#6	4	8'-0"	7'-4"	24
Z41	2	#6	4	8'-0"	7'-4"	24
Z42	2	#6	4	7'-11"	7'-3"	24
Z43	2	#6	4	7'-11"	7'-3"	24
Z44	2	#6	4	7'-11"	7'-3"	24
Z45	2	#6	4	7'-10"	7'-2"	24
Z46	2	#6	4	7'-10"	7'-2"	24
Z47	2	#6	4	7'-10"	7'-2"	24
Z48	2	#6	4	7'-9"	7'-1"	23
Z49	2	#6	4	7'-9"	7'-1"	23
Z50	2	#6	4	7'-8"	7'-0"	23
Z51	2	#6	4	7'-8"	7'-0"	23
Z52	2	#6	4	7'-8"	7'-0"	23
Z53	4	#6	4	6'-11"	6'-3"	42
Z54	2	#6	4	6'-9"	6'-1"	20
Z55	2	#6	4	6'-8"	6'-0"	20
Z56	2	#6	4	6'-6"	5'-10"	20
Z57	2	#6	4	6'-4"	5'-8"	19
Z58	2	#6	4	6'-3"	5'-7"	19
Z59	2	#6	4	6'-1"	5'-5"	18
Z60	2	#6	4	5'-11"	5'-3"	18
Z61	2	#6	4	5'-9"	5'-1"	17
Z62	2	#6	4	5'-8"	5'-0"	17
Z63	2	#6	4	5'-6"	4'-10"	17
Z64	2	#6	4	5'-4"	4'-8"	16
Z65	2	#6	4	5'-3"	4'-7"	16
Z66	2	#6	4	5'-1"	4'-5"	15

REINFORCING STEEL FOR 4 WINGS	4,157 LBS.
CLASS A CONCRETE	
4 WINGS	41.7 CY
2 HEADWALLS	3.4 CY
2 END CURTAIN WALLS	4.5 CY
	TOTAL 49.6 CY

BAR TYPES

(DIMENSIONS ARE OUT TO OUT)

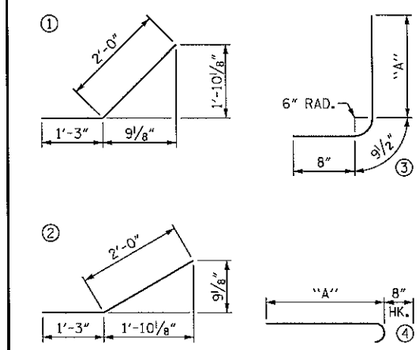

PROJECT NO. 17BP.12.R.201

CLEVELAND COUNTY

STATION: 14+89.10 -L-

SHEET 7 OF 8 REPLACES BRIDGE NO. 92

Jan 21, 2015

NORTH CAROLINA PROFESSIONAL SEAL 033730 ENGINEER ANNA C. TEAGUE

Anna C. Teague (Jan 21, 2015)

HDR Engineering, Inc. of the Carolinas
3733 National Drive, Suite 207 Raleigh, N.C. 27612
N.C.B.E.L.S. License Number: F-0116

STATE OF NORTH CAROLINA
DEPARTMENT OF TRANSPORTATION
RALEIGH

DOUBLE BARREL 12 FT. X 8 FT. CONCRETE BOX CULVERT 135° SKEW

REVISIONS							SHEET NO.
NO.	BY:	DATE:	NO.	BY:	DATE:		S-07
1			3				TOTAL SHEETS
2			4				9

DRAWN BY : W. TOWE DATE : 03/13
CHECKED BY : A. TEAGUE DATE : 03/13

PLOT DRIVER: NCDOT_pdf_mono_eng_50.plt PENTABLE: Ceborrus_pen.tbl
USER: msellis DATE: 1/19/2015 TIME: 4:13:07 PM
FILE: ...\CAD\1.0 Final Plans\7

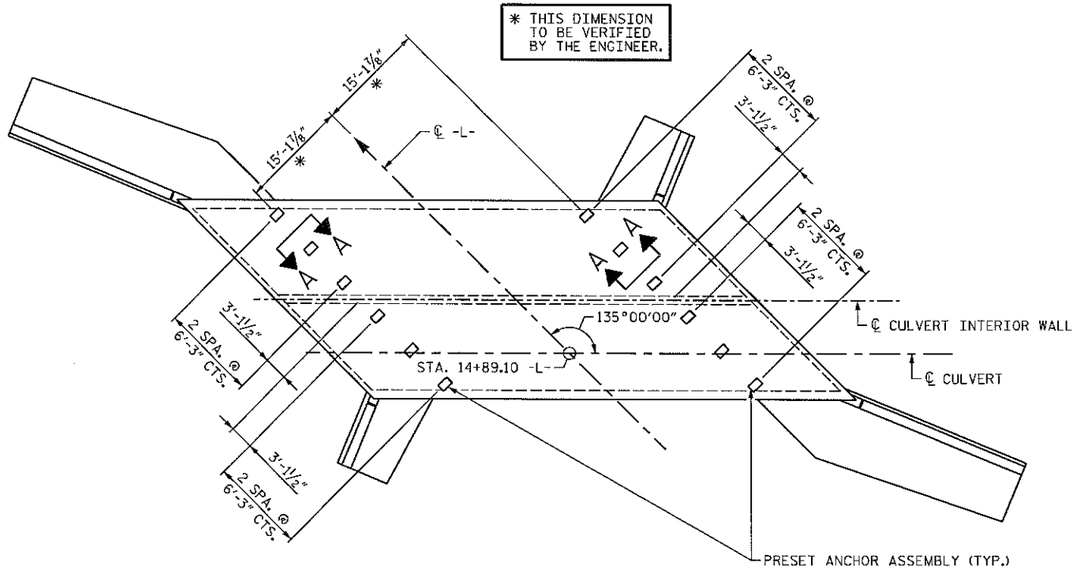

PLAN

SHOWING: GUARDRAIL ANCHOR ASSEMBLY SPACING.

NOTES

THE GUARDRAIL ANCHOR ASSEMBLY FOR CULVERTS SHALL CONSIST OF THE FOLLOWING COMPONENTS :

A. FERRULES SHALL BE MADE FROM STEEL MEETING THE REQUIREMENTS OF AASHTO M169, GRADE 12L14 AND SHALL HAVE A MINIMUM LENGTH OF THREADS OF 2½".

B. 4 - 1" Ø X 2 ¼" BOLTS WITH WASHERS, BOLTS SHALL CONFORM TO THE REQUIREMENTS OF ASTM A307. BOLTS AND WASHERS SHALL BE GALVANIZED. (AT THE CONTRACTOR'S OPTION, STAINLESS STEEL BOLTS AND WASHERS MAY BE USED AS AN ALTERNATE FOR THE 1" Ø X 2¼" GALVANIZED BOLTS AND WASHERS. THEY SHALL CONFORM TO OR EXCEED THE MECHANICAL REQUIREMENTS OF ASTM A307. THE USE OF THIS ALTERNATE SHALL BE APPROVED BY THE ENGINEER.)

C. WIRE STRUTS SHOWN IN THE GUARDRAIL ANCHOR ASSEMBLY FOR CULVERTS DETAIL ARE MINIMUM ALLOWABLE SIZE AND SHALL HAVE A MINIMUM TENSILE STRENGTH OF 100,000 PSI AS AN OPTION, A 7/16" Ø WIRE STRUT WITH A MINIMUM TENSILE STRENGTH OF 90,000 PSI IS ACCEPTABLE.

GUARDRAIL ANCHOR ASSEMBLY WITH BOLTS SHALL BE ASSEMBLED IN THE SHOP. BOLT THREADS MAY BE RECUT AS NECESSARY TO INSURE FIT.

THE COST OF THE GUARDRAIL ANCHOR ASSEMBLY, FOR CULVERTS COMPLETE IN PLACE, SHALL BE INCLUDED IN THE UNIT CONTRACT PRICE BID FOR CLASS "A" CONCRETE.

FERRULES TO BE PLUGGED DURING POURING OF SLAB AS RECOMMENDED BY THE MANUFACTURER.

AT THE CONTRACTOR'S OPTION, FERRULES WITH OPEN OR CLOSED ENDS MAY BE USED.

PAYMENT FOR GUARDRAIL, POSTS, AND POST BASE PLATES IS INCLUDED IN ROADWAY PAY ITEMS.

SLAB REINFORCING STEEL MAY BE SHIFTED AS NECESSARY TO CLEAR GUARDRAIL ANCHOR ASSEMBLY. CARE SHOULD BE TAKEN TO KEEP THE SHIFTING OF REINFORCING STEEL TO A MINIMUM.

THE CONTRACTOR MAY USE ADHESIVELY ANCHORED ANCHOR BOLTS IN PLACE OF GUARDRAIL ANCHOR ASSEMBLY. LEVEL TWO FIELD TESTING IS REQUIRED, AND THE YIELD LOAD OF THE 1" Ø BOLT IS 21.8 KIPS. FOR ADHESIVELY ANCHORED ANCHOR BOLTS OR DOWELS, SEE STANDARD SPECIFICATIONS.

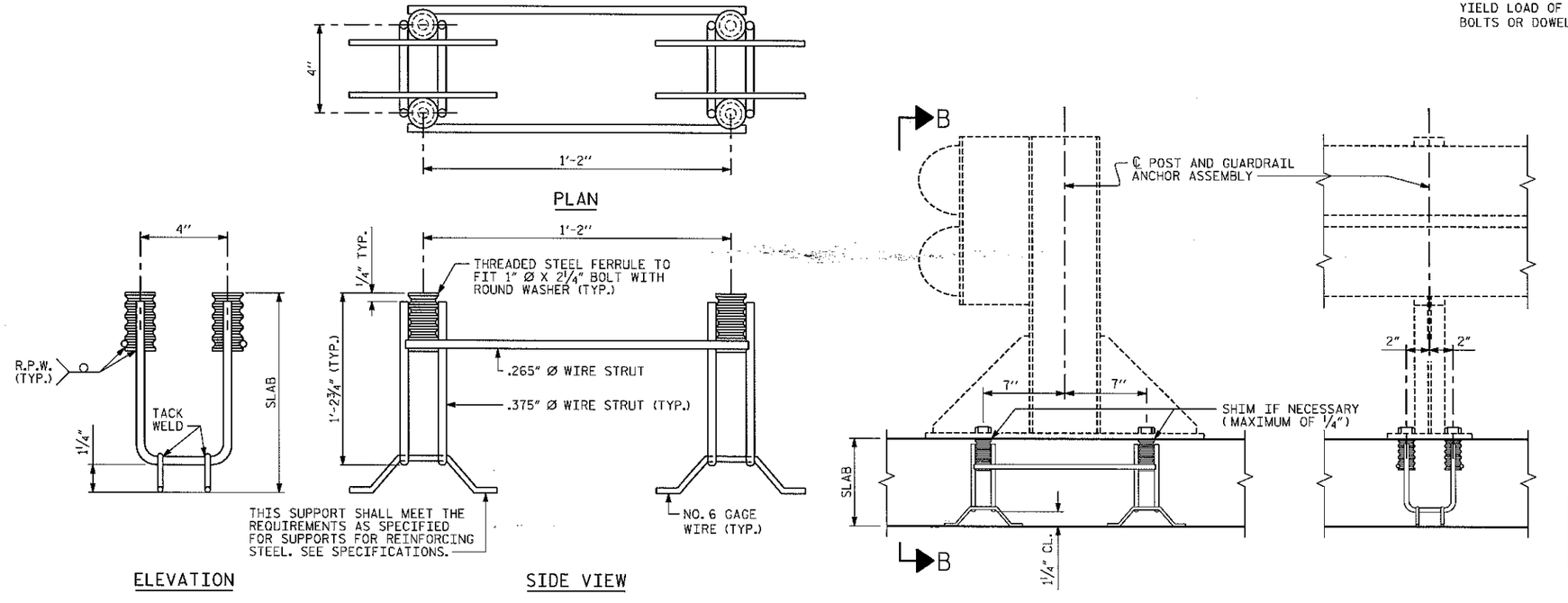

GUARDRAIL ANCHOR ASSEMBLY FOR CULVERTS

PROJECT NO. 17BP.12.R.201

CLEVELAND COUNTY

STATION: 14+89.10 -L-

SHEET 8 OF 8 REPLACES BRIDGE NO. 92

Jan 21, 2015

NORTH CAROLINA PROFESSIONAL SEAL 033730 ENGINEER ANNA C. TEAGUE

Anna C. Teague (Jan 21, 2015)

HDR Engineering, Inc. of the Carolinas
3733 National Drive, Suite 207 Raleigh, N.C. 27612
N.C.B.E.L.S. License Number: F-0116

STATE OF NORTH CAROLINA
DEPARTMENT OF TRANSPORTATION
RALEIGH

DOUBLE BARREL
12 FT. X 8 FT.
CONCRETE BOX CULVERT
135° SKEW

REVISIONS							SHEET NO. S-08
NO.	BY:	DATE:	NO.	BY:	DATE:		TOTAL SHEETS 9
1			3				
2			4				

DRAWN BY : W. TOWE DATE : 03/13
CHECKED BY : A. TEAGUE DATE : 03/13

PLOT DRIVER: NCDOT_pdf_mono_eng_SG.plt
USER: msells DATE: 1/19/2015
FILE: ...\CAD\10 Final Plans\B
PENTABLE: Cabarrus_pen.tbl
TIME: 4:13:53 PM

STANDARD NOTES

DESIGN DATA:

SPECIFICATIONS	A.A.S.H.T.O. (CURRENT)
LIVE LOAD	HL 93
IMPACT ALLOWANCE	SEE A.A.S.H.T.O.
STRESS IN EXTREME FIBER OF	
STRUCTURAL STEEL - AASHTO M270 GRADE 36	20,000 LBS. PER SQ. IN.
- AASHTO M270 GRADE 50W	27,000 LBS. PER SQ. IN.
- AASHTO M270 GRADE 50	27,000 LBS. PER SQ. IN.
REINFORCING STEEL IN TENSION	
GRADE 60	24,000 LBS. PER SQ. IN.
CONCRETE IN COMPRESSION	1,200 LBS. PER SQ. IN.
CONCRETE IN SHEAR	SEE A.A.S.H.T.O.
STRUCTURAL TIMBER - TREATED OR UNTREATED - EXTREME FIBER STRESS	1,800 LBS. PER SQ. IN.
COMPRESSION PERPENDICULAR TO GRAIN OF TIMBER	375 LBS. PER SQ. IN.
EQUIVALENT FLUID PRESSURE OF EARTH	30 LBS. PER CU. FT. (MINIMUM)

MATERIAL AND WORKMANSHIP:

EXCEPT AS MAY OTHERWISE BE SPECIFIED ON PLANS OR IN THE SPECIAL PROVISIONS, ALL MATERIAL AND WORKMANSHIP SHALL BE IN ACCORDANCE WITH THE 2012 "STANDARD SPECIFICATIONS FOR ROADS AND STRUCTURES" OF THE N. C. DEPARTMENT OF TRANSPORTATION.

STEEL SHEET PILING FOR PERMANENT OR TEMPORARY APPLICATIONS SHALL BE HOT ROLLED.

CONCRETE:

UNLESS OTHERWISE REQUIRED ON PLANS, CLASS A CONCRETE SHALL BE USED FOR ALL PORTIONS OF ALL STRUCTURES WITH THE EXCEPTION THAT: CLASS AA CONCRETE SHALL BE USED IN BRIDGE SUPERSTRUCTURES, ABUTMENT BACKWALLS, AND APPROACH SLABS; AND CLASS B CONCRETE SHALL BE USED FOR SLOPE PROTECTION AND RIP RAP.

CONCRETE CHAMFERS:

UNLESS OTHERWISE NOTED ON THE PLANS, ALL EXPOSED CORNERS ON STRUCTURES SHALL BE CHAMFERED 3/4" WITH THE FOLLOWING EXCEPTIONS: TOP CORNERS OF CURBS MAY BE ROUNDED TO 1 1/2" RADIUS WHICH IS BUILT INTO CURB FORMS; CORNERS OF TRANSVERSE FLOOR EXPANSION JOINTS SHALL BE ROUNDED WITH A 1/4" FINISHING TOOL UNLESS OTHERWISE REQUIRED ON PLANS; AND CORNERS OF EXPANSION JOINTS IN THE ROADWAY FACES AND TOPS OF CURBS AND SIDEWALKS SHALL BE ROUNDED TO A 1/4" RADIUS WITH A FINISHING STONE OR TOOL UNLESS OTHERWISE REQUIRED ON PLANS.

DOWELS:

DOWELS WHEN INDICATED ON PLANS AS FOR CULVERT EXTENSIONS, SHALL BE EMBEDDED AT LEAST 12" INTO THE OLD CONCRETE AND GROUTED INTO PLACE WITH 1:2 CEMENT MORTAR.

ALLOWANCE FOR DEAD LOAD DEFLECTION, SETTLEMENT, ETC. IN CASTING SUPERSTRUCTURES:

BRIDGES SHALL BE BUILT ON THE GRADE OR VERTICAL CURVE SHOWN ON PLANS. SLABS, CURBS AND PARAPETS SHALL CONFORM TO THE GRADE OR CURVE.

ALL DIMENSIONS WHICH ARE GIVEN IN SECTION AND ARE AFFECTED BY DEAD LOAD DEFLECTIONS ARE DIMENSIONS AT CENTER LINE OF BEARING UNLESS OTHERWISE NOTED ON PLANS. IN SETTING FORMS FOR STEEL BEAM BRIDGES AND PRESTRESSED CONCRETE GIRDER BRIDGES, ADJUSTMENTS SHALL BE MADE DUE TO THE DEAD LOAD DEFLECTIONS FOR THE ELEVATIONS SHOWN. WHERE BLOCKS ARE SHOWN OVER BEAMS FOR BUILDING UP TO THE SLAB, THE VERTICAL DIMENSIONS OF THE BLOCKS SHALL BE ADJUSTED BETWEEN BEARINGS TO COMPENSATE FOR DEAD LOAD DEFLECTIONS, VERTICAL CURVE ORDINATE, AND ACTUAL BEAM CAMBER. WHERE BOTTOM OF SLAB IS IN LINE WITH BOTTOM OF TOP FLANGES, DEPTH OF SLAB BETWEEN BEARINGS SHALL BE ADJUSTED TO COMPENSATE FOR DEAD LOAD DEFLECTION, VERTICAL CURVE ORDINATE, AND ACTUAL BEAM CAMBER.

IN SETTING FALSEWORK AND FORMS FOR REINFORCED CONCRETE SPANS, AN ALLOWANCE SHALL BE MADE FOR DEAD LOAD DEFLECTIONS, SETTLEMENT OF FALSEWORK, AND PERMANENT CAMBER WHICH SHALL BE PROVIDED FOR IN ADDITION TO THE ELEVATIONS SHOWN. AFTER REMOVAL OF THE FALSEWORK, THE FINISHED STRUCTURES SHALL CONFORM TO THE PROFILE AND ELEVATIONS SHOWN ON THE PLANS AND CONSTRUCTION ELEVATIONS FURNISHED BY THE ENGINEER.

DETAILED DRAWINGS FOR FALSEWORK OR FORMS FOR BRIDGE SUPERSTRUCTURE AND ANY STRUCTURE OR PARTS OF A STRUCTURE AS NOTED ON THE PLANS SHALL BE SUBMITTED TO THE ENGINEER FOR APPROVAL BEFORE CONSTRUCTION OF THE FALSEWORK OR FORMS IS STARTED.

REINFORCING STEEL:

ALL REINFORCING STEEL SHALL BE DEFORMED. DIMENSIONS RELATIVE TO PLACEMENT OF REINFORCING ARE TO CENTERS OF BARS UNLESS OTHERWISE INDICATED IN THE PLANS. DIMENSIONS ON BAR DETAILS ARE TO CENTERS OF BARS OR ARE OUT TO OUT AS INDICATED ON PLANS.

WIRE BAR SUPPORTS SHALL BE PROVIDED FOR REINFORCING STEEL WHERE INDICATED ON THE PLANS. WHEN BAR SUPPORT PIECES ARE PLACED IN CONTINUOUS LINES, THEY SHALL BE SO PLACED THAT THE ENDS OF THE SUPPORTING WIRES SHALL BE LAPPED TO LOCK LEGS ON ADJOINING PIECES.

STRUCTURAL STEEL:

AT THE CONTRACTOR'S OPTION, HE MAY SUBSTITUTE 7/8" Ø SHEAR STUDS FOR THE 3/4" Ø STUDS SPECIFIED ON THE PLANS. THIS SUBSTITUTION SHALL BE MADE AT THE RATE OF 3 - 7/8" Ø STUDS FOR 4 - 3/4" Ø STUDS, AND STUD SPACING CHANGES SHALL BE MADE AS NECESSARY TO PROVIDE THE SAME EQUIVALENT NUMBER OF 7/8" Ø STUDS ALONG THE BEAM AS SHOWN FOR 3/4" Ø STUDS BASED ON THE RATIO OF 3 - 7/8" Ø STUDS FOR 4 - 3/4" Ø STUDS. STUDS OF THE LENGTH SPECIFIED ON THE PLANS MUST BE PROVIDED. THE MAXIMUM SPACING SHALL BE 2'-0".

EXCEPT AT THE INTERIOR SUPPORTS OF CONTINUOUS BEAMS WHERE THE COVER PLATE IS IN CONTACT WITH BEARING PLATE, THE CONTRACTOR MAY, AT HIS OPTION, SUBSTITUTE FOR THE COVER PLATES DESIGNATED ON THE PLANS COVER PLATES OF THE EQUIVALENT AREA PROVIDED THESE PLATES ARE AT LEAST 5/16" IN THICKNESS AND DO NOT EXCEED A WIDTH EQUAL TO THE FLANGE WIDTH LESS 2" OR A THICKNESS EQUAL TO 2 TIMES THE FLANGE THICKNESS. THE SIZE OF FILLET WELDS SHALL CONFORM TO THE REQUIREMENTS OF THE CURRENT ANSI/AASHTO/AWS "BRIDGE WELDING CODE". ELECTROSLAG WELDING WILL NOT BE PERMITTED.

WITH THE SOLE EXCEPTION OF EDGES AT SURFACES WHICH BEAR ON OTHER SURFACES, ALL SHARP EDGES AND ENDS OF SHAPES AND PLATES SHALL BE SLIGHTLY ROUNDED BY SUITABLE MEANS TO A RADIUS OF APPROXIMATELY 1/16" OR EQUIVALENT FLAT SURFACE AT A SUITABLE ANGLE PRIOR TO PAINTING, GALVANIZING, OR METALLIZING.

HANDRAILS AND POSTS:

METAL STANDARDS AND FACES OF THE CONCRETE END POSTS FOR THE METAL RAIL SHALL BE SET NORMAL TO THE GRADE OF THE CURB, UNLESS OTHERWISE SHOWN ON PLANS. THE METAL RAIL AND TOPS OF CONCRETE POSTS USED WITH THE ALUMINUM RAIL SHALL BE BUILT PARALLEL TO THE GRADE OF THE CURB.

METAL HANDRAILS SHALL BE IN ACCORDANCE WITH THE PLANS. RAILS SHALL BE AS MANUFACTURED FOR BRIDGE RAILING. CASTINGS SHALL BE OF A UNIFORM APPEARANCE. FINS AND OTHER DEFORMATIONS RESULTING FROM CASTING OR OTHERWISE SHALL BE REMOVED IN A MANNER SO THAT A UNIFORM COLORING OF THE COMPLETED CASTING SHALL BE OBTAINED. CASTINGS WITH DISCOLORATIONS OR OF NON-UNIFORM COLORING WILL NOT BE ACCEPTED. CERTIFIED MILL REPORTS ARE REQUIRED FOR METAL RAILS AND POSTS.

SPECIAL NOTES:

GENERALLY, IN CASE OF DISCREPANCY, THIS STANDARD SHEET OF NOTES SHALL GOVERN OVER THE SPECIFICATIONS, BUT THE REMAINDER OF THE PLANS SHALL GOVERN OVER NOTES HEREON, AND SPECIAL PROVISIONS SHALL GOVERN OVER ALL. SEE SPECIFICATIONS ARTICLE 105-4.

PROJECT NO. 17BP.12.R.201
CLEVELAND COUNTY
STATION: 14+89.10 -L-

REPLACES BRIDGE NO. 92

DRAWN BY : W. TOWE DATE : 03/13
CHECKED BY : A. TEAGUE DATE : 03/13

Jan 21, 2015

NORTH CAROLINA PROFESSIONAL SEAL 033730 ENGINEER ANNA C. TEAGUE

Anna C. Teague (Jan 21, 2015)

HDR Engineering, Inc. of the Carolinas
3703 National Drive, Suite 227 Raleigh, N.C. 27612
N.C.B.E.L.S. License Number: F-0116

STATE OF NORTH CAROLINA
DEPARTMENT OF TRANSPORTATION
RALEIGH

STANDARD NOTES

REVISIONS								
NO.	BY:	DATE:	NO.	BY:	DATE:			
1			3					
2			4					

SHEET NO. S-09
TOTAL SHEETS 9

PLOT DRIVER: NCDOT_pdf_mono_eng_50.plt PENTABLE: Cabarrus.pen.tbl
USER: maells DATE: 1/19/2015 TIME: 4:14:58 PM
FILE: ...\CAD\1.0 Final Plans\9

09/08/99

TIP PROJECT: 17BP.12.R.201

STATE	STATE PROJECT REFERENCE NO.	SHEET NO.	TOTAL SHEETS
N.C.	17BP.12.R.201	1	

STATE PROJ. NO.	F. A. PROJ. NO.	DESCRIPTION
17BP.12.R.36	N/A	P.E.
17BP.12.R.36	N/A	R/W & UTIL.
17BP.12.R.201	N/A	CONST.

See Sheet 1-A For Index of Sheets

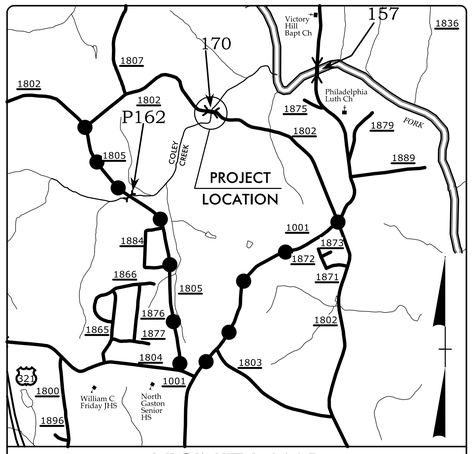

VICINITY MAP
OFFSITE DETOUR

STATE OF NORTH CAROLINA
DIVISION OF HIGHWAYS

GASTON COUNTY

LOCATION: BRIDGE NO. 350170 OVER COLEY CREEK ON SR 1802 (COLT THORNBURG RD)

TYPE OF WORK: GRADING, DRAINAGE, PAVING, AND STRUCTURE

NAD 83/95

4

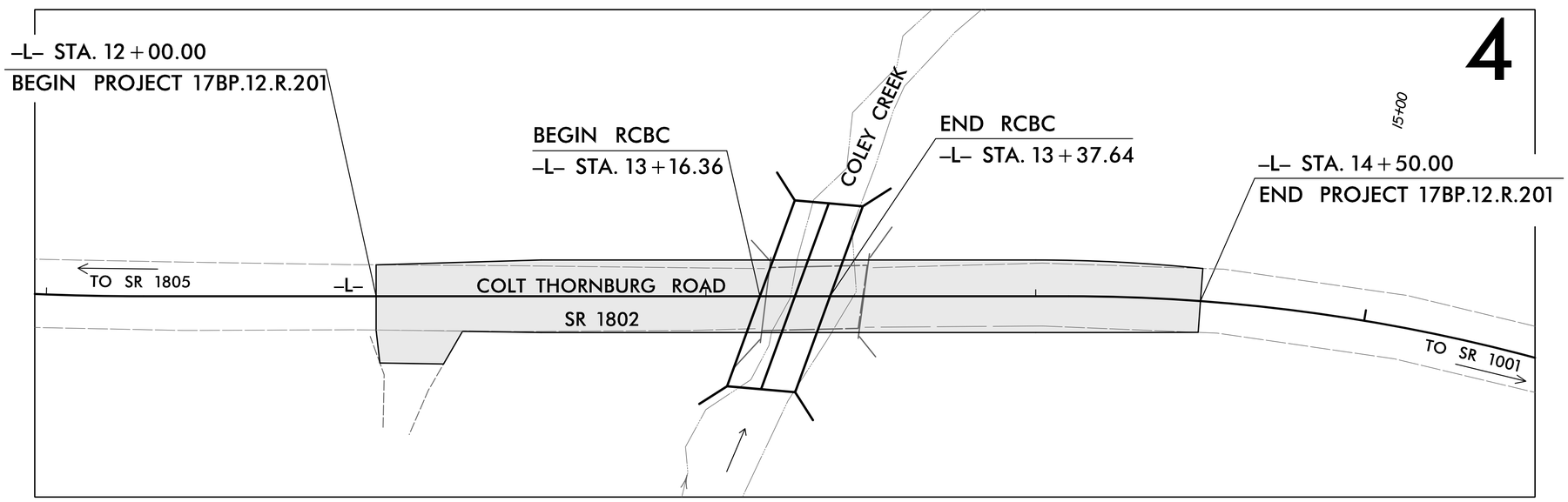

DESIGN EXCEPTION REQUIRED FOR VERTICAL CURVATURE AND VERTICAL STOPPING SIGHT DISTANCE.

CONTRACT:

$$$$$$$SYSTIME$$$$$
$$$$$$$$$$$$$$$$$$DGN$$$$$$$$$$$$$$$$$
$$$$$$USERNAME$$$$

GRAPHIC SCALES

20 10 0 20 40
PLANS

20 10 0 20 40
PROFILE (HORIZONTAL)

4 2 0 4 8
PROFILE (VERTICAL)

DESIGN DATA

ADT (2010) = 3,800
ADT (2034) = 8,900
V = 60 MPH
T = 6%
(TTSt = 3% & DUALS = 3%)
FUNC CLASS =
RURAL LOCAL
SUB REGIONAL TIER

PROJECT LENGTH

TOTAL LENGTH PROJECT 17BP.12.R.201 #350170 = 0.047 MILES

NCDOT CONTACT: STEVE RACKLEY, P.E.

PLANS PREPARED BY:

TGS ENGINEERS
TGS ENGINEERS
804-C N. LAFAYETTE ST
SHELBY, NC 28150
PH (704) 476-0003
CORP. LICENSE NO.: C-0275

2012 STANDARD SPECIFICATIONS

PLANS PREPARED FOR:

DIVISION 12
1710 EAST MARION ST.
SHELBY, NC 28152

JIMMY TERRY, P.E.
PROJECT ENGINEER

TRAVIS COOK, E.I.
PROJECT DESIGN ENGINEER

HYDRAULICS ENGINEER

NORTH CAROLINA PROFESSIONAL SEAL 035169 ENGINEER JAMES L. FLETCHER 12/4/2014

SIGNATURE:

ROADWAY DESIGN ENGINEER

NORTH CAROLINA PROFESSIONAL SEAL 35018 ENGINEER JIMMY L. TERRY, JR. 12/4/2014

SIGNATURE:

JUNE 9, 2014
RIGHT OF WAY DATE:

LETTING DATE:

8/17/99

PROJECT REFERENCE NO.	SHEET NO.
17BP.12.R.201	1-A

ROADWAY DESIGN ENGINEER

NORTH CAROLINA PROFESSIONAL SEAL 35018 ENGINEER JIMMY L. TERRY 12/17/2012

INDEX OF SHEETS

SHEET NUMBER	SHEET
1	TITLE SHEET
1-A	INDEX OF SHEETS, GENERAL NOTES, AND LIST OF STANDARD DRAWINGS
1-B	CONVENTIONAL SYMBOLS
1-C	SURVEY CONTROL SHEET
2	PAVEMENT SCHEDULE, TYPICAL SECTION, AND WEDGING DETAIL
3	SUMMARY OF EARTHWORK AND GUARDRAIL SUMMARY
4	PLAN AND PROFILE SHEET
TMP-1 THRU TMP- 3	TRAFFIC MANAGEMENT PLANS
PMP-1	PAVEMENT MARKING PLAN
EC-1 THRU EC-6	EROSION CONTROL PLANS
X-1 THRU X-2	CROSS-SECTIONS
C-1 THRU C-5	CULVERT PLANS

GENERAL NOTES

GENERAL NOTES:

2012 SPECIFICATIONS
EFFECTIVE: 01-17-2012
REVISED: 07-30-2012

GRADE LINE:
GRADING AND SURFACING:

THE GRADE LINES SHOWN DENOTE THE FINISHED ELEVATION OF THE PROPOSED SURFACING AT GRADE POINTS SHOWN ON THE TYPICAL SECTIONS. GRADE LINES MAY BE ADJUSTED AT THEIR BEGINNING AND ENDING AND AT STRUCTURES AS DIRECTED BY THE ENGINEER IN ORDER TO SECURE A PROPER TIE-IN.

CLEARING:

CLEARING ON THIS PROJECT SHALL BE PERFORMED TO THE LIMITS ESTABLISHED BY MODIFIED METHOD II.

SUPERELEVATION:

ALL CURVES ON THIS PROJECT SHALL BE SUPERELEVATED IN ACCORDANCE WITH STD. NO. 225.04 AND/OR STD. NO. 225.05 USING THE RATE OF SUPERELEVATION AND RUNOFF SHOWN ON THE PLANS. SUPERELEVATION IS TO BE REVOLVED ABOUT THE GRADE POINTS SHOWN ON THE TYPICAL SECTIONS.

SHOULDER CONSTRUCTION:

ASPHALT, EARTH, AND CONCRETE SHOULDER CONSTRUCTION ON THE HIGH SIDE OF SUPERELEVATED CURVES SHALL BE IN ACCORDANCE WITH STD. NO. 560.01 AND/OR STD. NO. 560.02

SIDE ROADS:

THE CONTRACTOR WILL BE REQUIRED TO DO ALL NECESSARY WORK TO PROVIDE SUITABLE CONNECTIONS WITH ALL ROADS, STREETS, AND DRIVES ENTERING THIS PROJECT. THIS WORK WILL BE PAID FOR AT THE CONTRACT UNIT PRICE FOR THE PARTICULAR ITEMS INVOLVED.

GUARDRAIL:

THE GUARDRAIL LOCATIONS SHOWN ON THE PLANS MAY BE ADJUSTED DURING CONSTRUCTION AS DIRECTED BY THE ENGINEER. THE CONTRACTOR SHOULD CONSULT WITH THE ENGINEER PRIOR TO ORDERING GUARDRAIL MATERIAL.

SUBSURFACE PLANS:

NO SUBSURFACE PLANS ARE AVAILABLE ON THIS PROJECT. THE CONTRACTOR SHOULD MAKE HIS OWN INVESTIGATION AS TO THE SUBSURFACE CONDITIONS.

STANDARD DRAWINGS

EFF. 01-17-2012
REV. 10-30-2012

2012 ROADWAY ENGLISH STANDARD DRAWINGS

The following Roadway Standards as appear in "Roadway Standard Drawings" Highway Design Branch - N. C. Department of Transportation - Raleigh, N. C., Dated January, 2012 are applicable to this project and by reference hereby are considered a part of these plans:

STD.NO.	TITLE
DIVISION 2 - EARTHWORK	
200.02	Method of Clearing - Method II
225.02	Guide for Grading Subgrade - Secondary and Local
225.04	Method of Obtaining Superelevation - Two Lane Pavement
DIVISION 5 - SUBGRADE, BASES AND SHOULDERS	
560.01	Method of Shoulder Construction - High Side of Superelevated Curve - Method I
DIVISION 8 - INCIDENTALS	
862.01	Guardrail Placement
862.02	Guardrail Installation
876.04	Drainage Ditches with Class 'B' Rip Rap

$$$$SYSTIME$$$$
$$$$DGN$$$$
$$$$ENGFORM$$$$

12/05/11

PROJECT REFERENCE NO.	SHEET NO.
17BP.12.R.201	1-B

Note: Not to Scale

S.U.E. = Subsurface Utility Engineering

STATE OF NORTH CAROLINA
DIVISION OF HIGHWAYS

CONVENTIONAL PLAN SHEET SYMBOLS

BOUNDARIES AND PROPERTY:

- State Line
- County Line
- Township Line
- City Line
- Reservation Line
- Property Line
- Existing Iron Pin — EIP
- Property Corner
- Property Monument — ECM
- Parcel/Sequence Number — 123
- Existing Fence Line
- Proposed Woven Wire Fence
- Proposed Chain Link Fence
- Proposed Barbed Wire Fence
- Existing Wetland Boundary — WLB
- Proposed Wetland Boundary — WLB
- Existing Endangered Animal Boundary — EAB
- Existing Endangered Plant Boundary — EPB
- Known Soil Contamination: Area or Site
- Potential Soil Contamination: Area or Site

BUILDINGS AND OTHER CULTURE:

- Gas Pump Vent or U/G Tank Cap
- Sign — S
- Well — W
- Small Mine
- Foundation
- Area Outline
- Cemetery
- Building
- School
- Church
- Dam

HYDROLOGY:

- Stream or Body of Water
- Hydro, Pool or Reservoir
- Jurisdictional Stream — JS
- Buffer Zone 1 — BZ 1
- Buffer Zone 2 — BZ 2
- Flow Arrow
- Disappearing Stream
- Spring
- Wetland
- Proposed Lateral, Tail, Head Ditch — FLOW
- False Sump

RAILROADS:

- Standard Gauge — CSX TRANSPORTATION
- RR Signal Milepost — MILEPOST 35
- Switch — SWITCH
- RR Abandoned
- RR Dismantled

RIGHT OF WAY:

- Baseline Control Point
- Existing Right of Way Marker
- Existing Right of Way Line
- Proposed Right of Way Line — RW
- Proposed Right of Way Line with Iron Pin and Cap Marker — RW
- Proposed Right of Way Line with Concrete or Granite R/W Marker — RW
- Proposed Control of Access Line with Concrete C/A Marker — CA
- Existing Control of Access — CA
- Proposed Control of Access — CA
- Existing Easement Line — E
- Proposed Temporary Construction Easement — E
- Proposed Temporary Drainage Easement — TDE
- Proposed Permanent Drainage Easement — PDE
- Proposed Permanent Drainage / Utility Easement — DUE
- Proposed Permanent Utility Easement — PUE
- Proposed Temporary Utility Easement — TUE
- Proposed Aerial Utility Easement — AUE
- Proposed Permanent Easement with Iron Pin and Cap Marker

ROADS AND RELATED FEATURES:

- Existing Edge of Pavement
- Existing Curb
- Proposed Slope Stakes Cut — C
- Proposed Slope Stakes Fill — F
- Proposed Curb Ramp — CR
- Existing Metal Guardrail
- Proposed Guardrail
- Existing Cable Guiderail
- Proposed Cable Guiderail
- Equality Symbol
- Pavement Removal

VEGETATION:

- Single Tree
- Single Shrub
- Hedge
- Woods Line
- Orchard
- Vineyard — Vineyard

EXISTING STRUCTURES:

MAJOR:

- Bridge, Tunnel or Box Culvert — CONC
- Bridge Wing Wall, Head Wall and End Wall — CONC WW

MINOR:

- Head and End Wall — CONC HW
- Pipe Culvert
- Footbridge
- Drainage Box: Catch Basin, DI or JB — CB
- Paved Ditch Gutter
- Storm Sewer Manhole — S
- Storm Sewer — S

UTILITIES:

POWER:

- Existing Power Pole
- Proposed Power Pole
- Existing Joint Use Pole
- Proposed Joint Use Pole
- Power Manhole — P
- Power Line Tower
- Power Transformer
- U/G Power Cable Hand Hole
- H-Frame Pole
- Recorded U/G Power Line — P
- Designated U/G Power Line (S.U.E.*) — P

TELEPHONE:

- Existing Telephone Pole
- Proposed Telephone Pole
- Telephone Manhole — T
- Telephone Booth
- Telephone Pedestal — T
- Telephone Cell Tower
- U/G Telephone Cable Hand Hole — HH
- Recorded U/G Telephone Cable — T
- Designated U/G Telephone Cable (S.U.E.*) — T
- Recorded U/G Telephone Conduit — TC
- Designated U/G Telephone Conduit (S.U.E.*) — TC
- Recorded U/G Fiber Optics Cable — T FO
- Designated U/G Fiber Optics Cable (S.U.E.*) — T FO

WATER:

- Water Manhole — W
- Water Meter
- Water Valve
- Water Hydrant
- Recorded U/G Water Line — W
- Designated U/G Water Line (S.U.E.*) — W
- Above Ground Water Line — A/G Water

TV:

- TV Satellite Dish
- TV Pedestal — C
- TV Tower
- U/G TV Cable Hand Hole — HH
- Recorded U/G TV Cable — TV
- Designated U/G TV Cable (S.U.E.*) — TV
- Recorded U/G Fiber Optic Cable — TV FO
- Designated U/G Fiber Optic Cable (S.U.E.*) — TV FO

GAS:

- Gas Valve
- Gas Meter
- Recorded U/G Gas Line — G
- Designated U/G Gas Line (S.U.E.*) — G
- Above Ground Gas Line — A/G Gas

SANITARY SEWER:

- Sanitary Sewer Manhole
- Sanitary Sewer Cleanout
- U/G Sanitary Sewer Line — SS
- Above Ground Sanitary Sewer — A/G Sanitary Sewer
- Recorded SS Forced Main Line — FSS
- Designated SS Forced Main Line (S.U.E.*) — FSS

MISCELLANEOUS:

- Utility Pole
- Utility Pole with Base
- Utility Located Object
- Utility Traffic Signal Box — S
- Utility Unknown U/G Line — ?UTL
- U/G Tank; Water, Gas, Oil
- Underground Storage Tank, Approx. Loc. — UST
- A/G Tank; Water, Gas, Oil
- Geoenvironmental Boring
- U/G Test Hole (S.U.E.*)
- Abandoned According to Utility Records — AATUR
- End of Information — E.O.I.

PROJECT REFERENCE NO.	SHEET NO.
17BP.12.R.201	1-C
Location and Surveys	

SURVEY CONTROL SHEET 17BP.12.R.201

DATUM DESCRIPTION

THE LOCALIZED COORDINATE SYSTEM DEVELOPED FOR THIS PROJECT
IS BASED ON THE STATE PLANE COORDINATES ESTABLISHED BY
TGS ENGINEERS FOR MONUMENT GPS "MA12066B-2"
WITH NAD 83/95 STATE PLANE GRID COORDINATES OF
NORTHING: 591686.4413(ft) EASTING: 1351746.3287(ft)
ELEVATION: 679.02(ft)
THE AVERAGE COMBINED GRID FACTOR USED ON THIS PROJECT
(GROUND TO GRID) IS: 0.999845593
THE N.C. LAMBERT GRID BEARING AND
LOCALIZED HORIZONTAL GROUND DISTANCE FROM
"MA12066B-2" TO -L- STATION 12+00.00 IS
S 62°53'17.0" E 418.04'
ALL LINEAR DIMENSIONS ARE LOCALIZED HORIZONTAL DISTANCES
VERTICAL DATUM USED IS NAVD 88

NC GRID
NAD 83

BL

POINT	DESC.	NORTH	EAST	ELEVATION	L STATION	OFFSET
1	GPS-1	592422.0697	1351002.5211	737.36	OUTSIDE PROJECT LIMITS	
2	GPS-2	591686.4413	1351746.3287	679.02	OUTSIDE PROJECT LIMITS	
3	BL-3	591487.2581	1352225.2277	661.35	13+06.01	15.52' LT
4	BL-5	591366.6351	1352435.6679	674.83	OUTSIDE PROJECT LIMITS	
5	BL-4	591227.4341	1352851.0564	673.03	OUTSIDE PROJECT LIMITS	

BM1 ELEVATION - 677.32
N 591640 E 1351903
OUTSIDE PROJECT LIMITS
RR SPIKE IN BASE OF 17' PINE

BM2 ELEVATION - 667.09
N 591521 E 1352396
OUTSIDE PROJECT LIMITS
RR SPIKE IN BASE OF 24' SWEET GUM

BM3 ELEVATION - 670.32
N 591217 E 1352721
OUTSIDE PROJECT LIMITS
RR SPIKE IN BASE OF 30' OAK

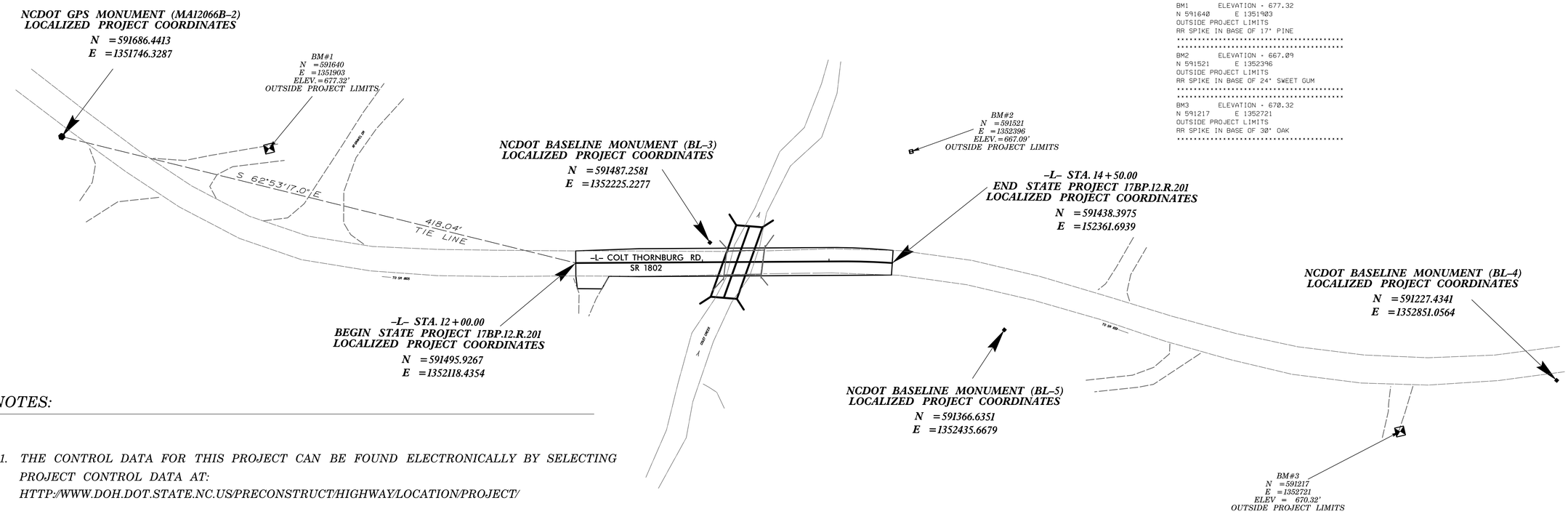

NOTES:

1. THE CONTROL DATA FOR THIS PROJECT CAN BE FOUND ELECTRONICALLY BY SELECTING PROJECT CONTROL DATA AT:
HTTP:/WWW.DOH.DOT.STATE.NC.US/PRECONSTRUCT/HIGHWAY/LOCATION/PROJECT/

THE FILES TO BE FOUND ARE AS FOLLOWS:
BK5120_ls_baseline_090217.TXT

SITE CALIBRATION INFORMATION HAS NOT BEEN PROVIDED FOR THIS PROJECT. IF FURTHER INFORMATION IS NEEDED, PLEASE CONTACT THE LOCATION AND SURVEYS UNIT.

● INDICATES GEODETIC CONTROL MONUMENTS USED OR SET FOR HORIZONTAL PROJECT CONTROL BY THE NCDOT LOCATION AND SURVEYS UNIT.
PROJECT CONTROL ESTABLISHED USING GLOBAL POSITIONING SYSTEM.
NETWORK ESTABLISHED FROM NGS ONLINE POSITIONING SERVICE (OPUS)

NOTE: DRAWING NOT TO SCALE

6/2/99

PROJECT REFERENCE NO.	SHEET NO.
17BP.12.R.201	2
ROADWAY DESIGN ENGINEER	PAVEMENT DESIGN ENGINEER

NORTH CAROLINA PROFESSIONAL SEAL 35018 ENGINEER JIMMY L. TERRY 12/12/2018

PAVEMENT SCHEDULE	
C1	PROP. APPROX. 3" ASPHALT CONCRETE SURFACE COURSE TYPE S9.5B, AT AN AVERAGE RATE OF 168 LBS. PER SQ.YD. IN EACH OF TWO LAYERS.
C2	PROP. VAR. DEPTH ASPHALT CONCRETE SURFACE COURSE, TYPE S9.5B, AT AN AVERAGE RATE OF 112 LBS. PER SQ. YD. PER 1" DEPTH. TO BE PLACED IN LAYERS NOT LESS THAN 1½" IN DEPTH OR GREATER THAN 2" IN DEPTH.
E1	PROP. APPROX. 4" ASPHALT CONCRETE BASE COURSE TYPE B25.0B, AT AN AVERAGE RATE OF 456 LBS. PER SQ.YD.
E2	PROP. VAR. DEPTH ASPHALT CONCRETE BASE COURSE, TYPE B25.0B, AT AN AVERAGE RATE OF 114 LBS. PER SQ. YD. PER 1" DEPTH. TO BE PLACED IN LAYERS NOT LESS THAN 3" IN DEPTH OR GREATER THAN 5½" IN DEPTH
T	EARTH MATERIAL
U	EXISTING PAVEMENT
V	MILLING EXISTING PAVEMENT (SEE MILLING DETAILS THIS SHEET)
W	VARIABLE DEPTH ASPHALT PAVEMENT (SEE WEDGING DETAIL THIS SHEET)

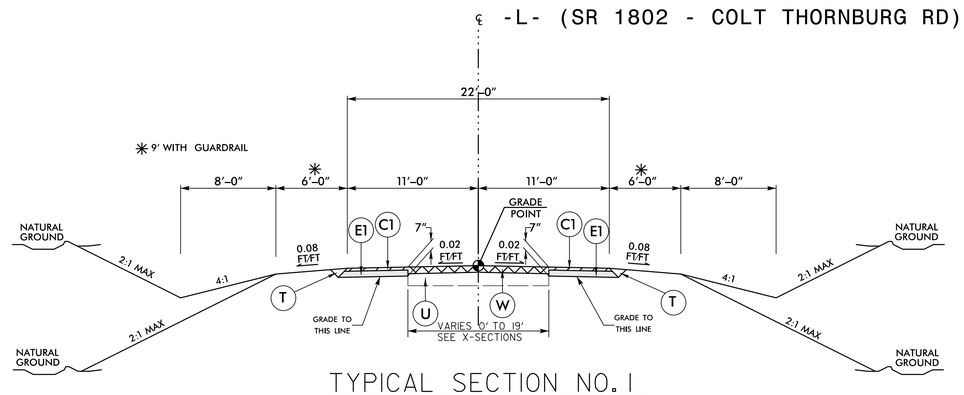

TYPICAL SECTION NO. 1

USE TYPICAL SECTION NO. 1
-L- STA. 12+50.00 TO -L- STA. 14+00.00

NOTE: TRANSITION BETWEEN EXISTING AND TYP. SECT. NO. 1 AS FOLLOWS:
-L- STA. 12+00.00 (BEGIN PROJECT) TO -L- STA. 12+50.00
-L- STA. 14+00.00 TO -L- STA. 14+50.00 (END PROJECT)

NOTE: USE FULL DEPTH PAVEMENT FROM -L- STA. 13+05.00 TO -L- STA. 13+60.00

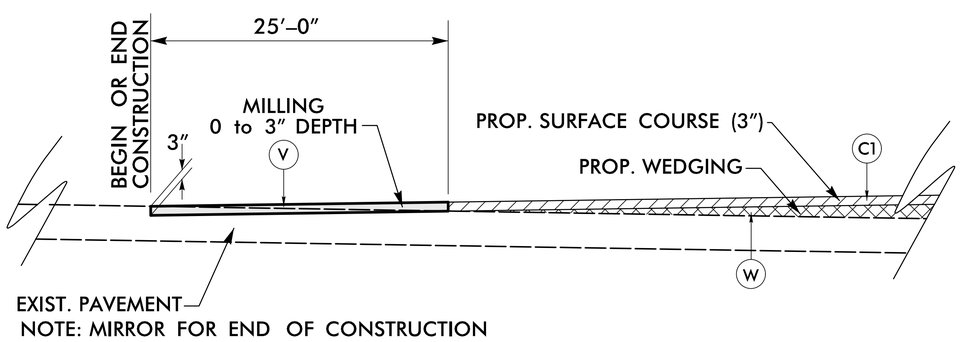

NOTE: MIRROR FOR END OF CONSTRUCTION

MILLING DETAIL

USE MILLING DETAIL AS FOLLOWS:

MILLING AND RESURFACING: -L- STA. 12+00.00 TO -L- STA. 12+25.00
-L- STA. 14+25.00 TO -L- STA. 14+50.00

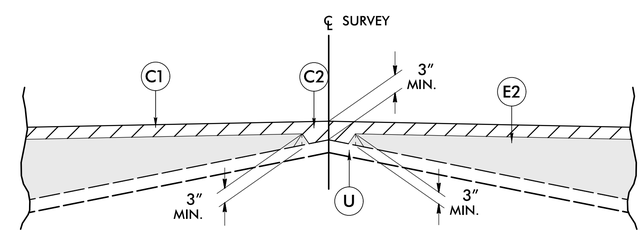

Detail Showing Method of Wedging

6/2/99

DGN: SINE_DON

COMPUTED BY: SGM DATE: 05/19/2014
CHECKED BY: JLT DATE: 9/2/2014

PROJECT NO.	SHEET NO.
17BP.12.R.36	3

STATE OF NORTH CAROLINA
DIVISION OF HIGHWAYS

SUMMARY OF EARTHWORK

Station	Station	Uncl. Excav.	Embank. +%	Borrow	Waste
-L-12+00.00	-L- 14+50.00	28	252	224	
PROJECT TOTALS:		28	252	224	
EST. 5% TO REPLACE TOP SOIL ON BORROW PITS				11	
GRAND TOTALS:		28	252	235	
SAY		50		260	

Approximate quantities only. Unclassified excavation, borrow excavation, shoulder borrow, fine grading, clearing and grubbing, breaking of existing pavement and removal of existing pavement will be paid for at the lump sum price for "Grading".

SUMMARY OF REMOVAL OF ASPHALT PAVEMENT

IN SQUARE YARDS

SURVEY LINE	Station	Station	LOCATION	ASPHALT REMOVAL
-L-	13+05	13+18	CL	26.88
-L-	13+48	13+60	CL	24.61
		TOTAL:		51.49
		SAY:		60

"N" = DISTANCE FROM EDGE OF LANE TO FACE OF GUARDRAIL

TOTAL SHOULDER WIDTH = DISTANCE FROM EDGE OF TRAVEL LANE TO SHOULDER BREAK POINT.

FLARE LENGTH = DISTANCE FROM LAST SECTION OF PARALLEL GUARDRAIL TO END OF GUARDRAIL.

W = TOTAL WIDTH OF FLARE FROM BEGINNING OF TAPER TO END OF GUARDRAIL.
G = GATING IMPACT ATTENUATOR TYPE 350

NG = NON-GATING IMPACT ATTENUATOR TYPE 350

GUARDRAIL SUMMARY

SURVEYLINE	BEG. STA.	END STA.	LOCATION	LENGTH			WARRANT POINT		"N" DIST. FROM E.O.L.	TOTAL SHOUL WIDTH	FLARE LENGTH		W		ANCHORS								IMPACT ATTENUATOR TYPE 350		SINGLE FACED CONCRETE BARRIER	REMOVE EXISTING GUARDRAIL	REMOVE & STOCKPILE EXISTING GUARDRAIL	REMARKS
				STRAIGHT	SHOP CURVED	DOUBLE FACED	APPROACH END	TRAILING END			APPROACH END	TRAILING END	APPROACH END	TRAILING END			GRAU 350 (TL-3)						G	NG				
-L-	12+37.50	14+12.50	RT	175			13+06.43		6'	9'	50'	50'	1'	1'			2											
-L-	12+56.50	14+31.50	LT	175				13+47.58	6'	9'	50'	50'	1'	1'			2											
SUB-TOTALS:				350													4											
	LESS ANCHOR DEDUCTIONS:																											
	GRAU-350 (TL-3)	4 @ 50.00FT		200																								
	ANCHOR TOTALS:			200																								
GRAND-TOTALS:				150													4											
SAY				150																								

ADDITIONAL GUARDRAIL POSTS = 5 EA

PROJECT REFERENCE NO.	SHEET NO.
17BP.12.R.201	4
R/W SHEET NO.	

ROADWAY DESIGN ENGINEER — NORTH CAROLINA PROFESSIONAL SEAL 35016 ENGINEER JIMMY L. TERRY JR. 12/17/2014

HYDRAULICS ENGINEER — NORTH CAROLINA PROFESSIONAL SEAL 030110 ENGINEER THOMAS L. FLETCHER 12/17/2014

TGS ENGINEERS
804-C N. LAFAYETTE ST
SHELBY, NC 28150
PH (704) 476-0003
CORP. LICENSE NO.: C-0275

8/17/99

REVISIONS

DETAIL A
SPECIAL LATERAL 'V' DITCH
(Not to Scale)

FROM STA. 13+57 TO STA. 14+50 LT
EST PSRM = 35 SY
FROM STA. 13+73 TO STA. 14+50 RT
EST PSRM = 30 SY

USE NCDOT RDY STD. 862.01, SHEET 10 OF 12 FOR GUARDRAIL PLACEMENT AT STRUCTURE.

CLASS II RIPRAP AT THE EDGE OF THE PROPOSED CHANNEL. EMBED THE ROCK INTO THE STREAMBED. SLOPE BANKS TO TIE INTO EXISTING CONTOURS. LINE WITH COIR FIBER MATTING.
EST CL II RIPRAP = 80 TONS
EST CFM = 100 SY
EST DDE = 150 CY

-L- CURVE DATA

PI Sta 10+64.88	PI Sta 14+91.31
Δ = 9° 30' 37.7" (LT)	Δ = 16° 57' 40.1" (RT)
D = 7° 20' 44.2"	D = 10° 30' 46.8"
L = 129.47'	L = 161.34'
T = 64.88'	T = 81.26'
R = 780.00'	R = 545.00'

NAD 83/95

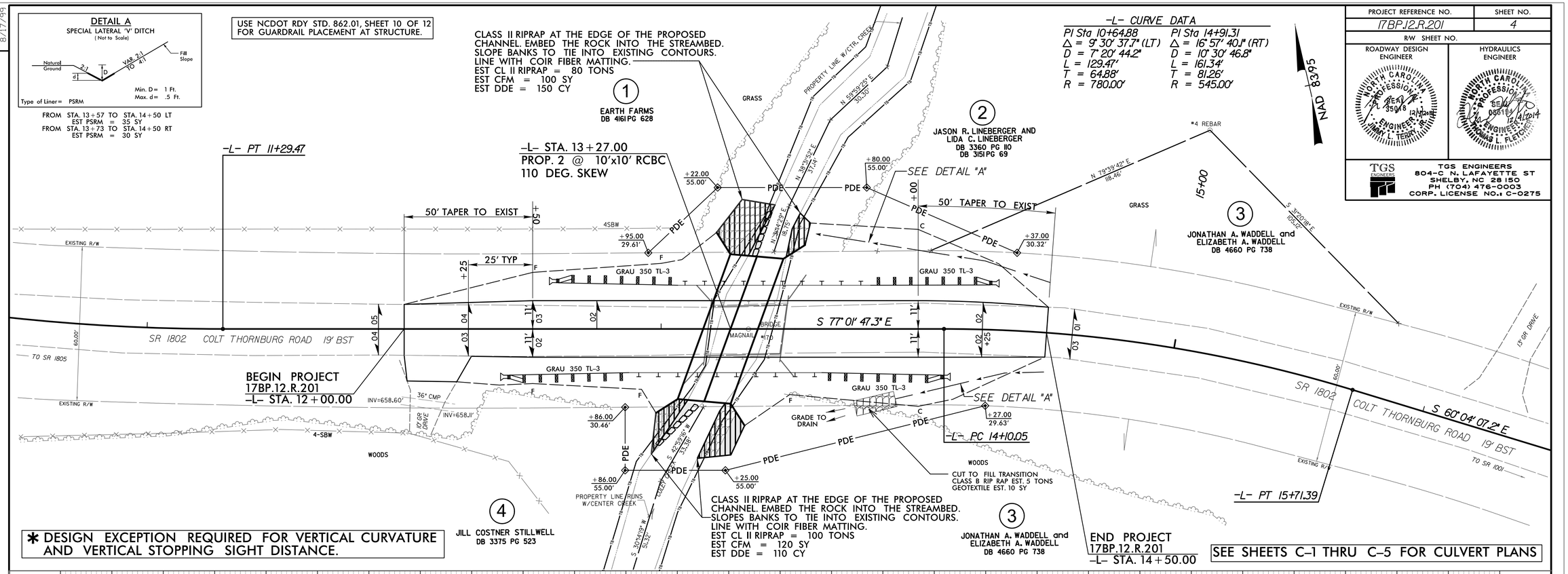

✱ DESIGN EXCEPTION REQUIRED FOR VERTICAL CURVATURE AND VERTICAL STOPPING SIGHT DISTANCE.

SEE SHEETS C-1 THRU C-5 FOR CULVERT PLANS

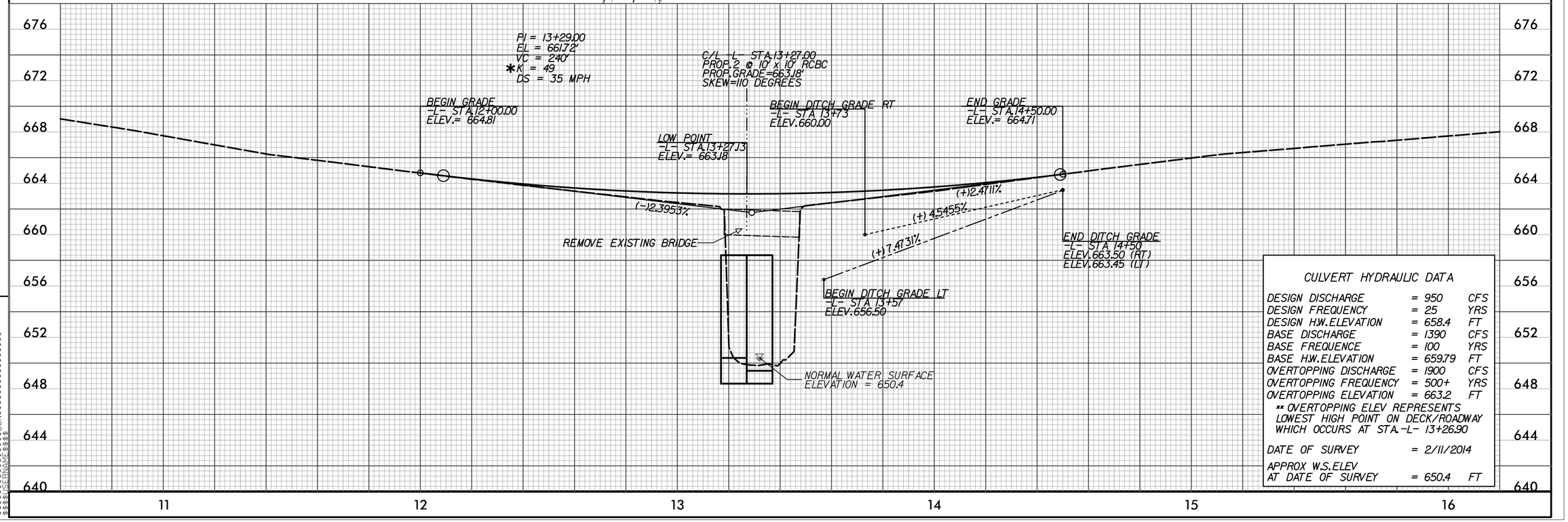

CULVERT HYDRAULIC DATA

DESIGN DISCHARGE	= 950	CFS
DESIGN FREQUENCY	= 25	YRS
DESIGN H.W.ELEVATION	= 658.4	FT
BASE DISCHARGE	= 1390	CFS
BASE FREQUENCE	= 100	YRS
BASE H.W.ELEVATION	= 659.79	FT
OVERTOPPING DISCHARGE	= 1900	CFS
OVERTOPPING FREQUENCY	= 500+	YRS
OVERTOPPING ELEVATION	= 663.2	FT

** OVERTOPPING ELEV REPRESENTS LOWEST HIGH POINT ON DECK/ROADWAY WHICH OCCURS AT STA.-L- 13+26.90

DATE OF SURVEY = 2/11/2014

APPROX W.S.ELEV AT DATE OF SURVEY = 650.4 FT

SYSTIME$$$$
SYSLEN$$$$
SYSDRIVE$$$$
SYSNAME$$$$

STATE OF NORTH CAROLINA
DIVISION OF HIGHWAYS

TRANSPORTATION MANAGEMENT PLAN

GASTON COUNTY

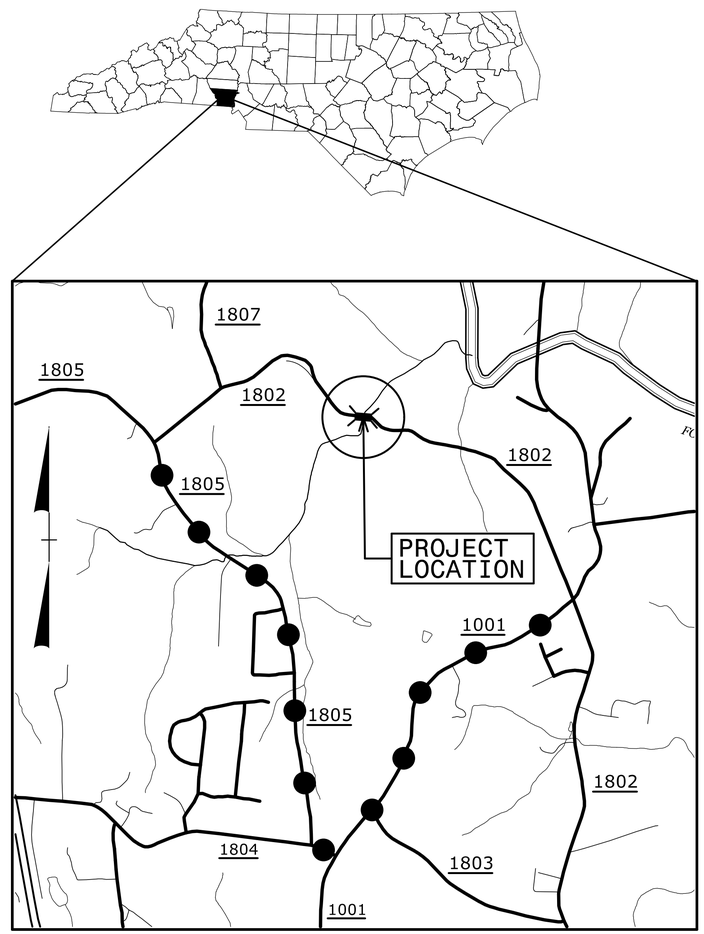

VICINITY MAP

OFFSITE DETOUR

INDEX OF SHEETS

SHEET NO.	TITLE
TMP-1	TITLE SHEET, AND INDEX OF SHEETS
TMP-1A	LIST OF APPLICABLE ROADWAY STANDARD DRAWINGS AND LEGEND
TMP-1B	TRANSPORTATION OPERATIONS PLAN: (MANAGEMENT STRATEGIES AND GENERAL NOTES)
TMP-1C	SPECIAL SIGN DESIGN
TMP-2	OVERVIEW AND PHASING
TMP-3	OFFSITE DETOUR LOCATION AND BARRICADE PLACEMENT
PMP-1	FINAL PAVEMENT MARKING PLAN AND SCHEDULE

SHEET NO.
TMP-1

PROJECT: 17BP.12.R.201

CONTRACT:

WORK ZONE SAFETY & MOBILITY
"from the MOUNTAINS to the COAST"

PLAN PREPARED FOR N.C.D.O.T. BY:

TGS ENGINEERS
TGS ENGINEERS
804-C N. LAFAYETTE ST.
SHELBY, NC 28150
PH (704) 476-0003
CORP. LICENSE NO.: C-0275

JIMMY L. TERRY, PE — PROJECT ENGINEER
TUCKER B. ENNIS — DESIGN TECHNICIAN

DIVISION OF HIGHWAYS
STATE OF NORTH CAROLINA
DEPARTMENT OF TRANSPORTATION
WORK ZONE TRAFFIC CONTROL

APPROVED: _____
DATE: _____

SEAL

NORTH CAROLINA PROFESSIONAL SEAL 35016 ENGINEER JIMMY L. TERRY, JR. 12/7/2018

$$$$$SYSTIME$$$$$
$$$$$$$$$$$$$$DGN$$$$$$$$$$$$$$
$$$$$USERNAME$$$$

PROJ. REFERENCE NO.	SHEET NO.
17BP.12.R.201	TMP-1A

ROADWAY STANDARD DRAWINGS

THE FOLLOWING ROADWAY STANDARDS AS SHOWN IN "ROADWAY STANDARD DRAWINGS" - PROJECT SERVICES UNIT - N.C. DEPARTMENT OF TRANSPORTATION - RALEIGH, N.C., DATED JANUARY 2012 ARE APPLICABLE TO THIS PROJECT AND BY REFERENCE HEREBY ARE CONSIDERED A PART OF THESE PLANS:

STD. NO.	TITLE
1101.01	WORK ZONE ADVANCE WARNING SIGNS
1101.03	TEMPORARY ROAD CLOSURES
1101.11	TRAFFIC CONTROL DESIGN TABLES
1110.01	STATIONARY WORK ZONE SIGNS
1130.01	DRUM
1145.01	BARRICADES
1205.01	PAVEMENT MARKINGS - LINE TYPES AND OFFSETS
1205.02	PAVEMENT MARKINGS - TWO-LANE AND MULTI-LANE ROADWAYS
1261.01	GUARDRAIL AND BARRIER DELINEATORS - INSTALLATION SPACING
1261.02	GUARDRAIL AND BARRIER DELINEATORS - TYPES AND MOUNTING
1262.01	GUARDRAIL END DELINEATION
1264.01	OBJECT MARKERS - TYPES
1264.02	OBJECT MARKERS - INSTALLATION

LEGEND

GENERAL

- DIRECTION OF TRAFFIC FLOW
- DIRECTION OF PEDESTRIAN TRAFFIC FLOW
- EXIST. PVMT.
- NORTH ARROW
- PROPOSED PVMT.
- TEMP. SHORING (LOCATION PURPOSES ONLY)
- WORK AREA
- REMOVAL
- USER DEFINED (IF NEEDED)
- USER DEFINED (IF NEEDED)

SIGNALS

- EXISTING
- PROPOSED
- TEMPORARY

PAVEMENT MARKINGS

- EXISTING LINES
- TEMPORARY LINES

TRAFFIC CONTROL DEVICES

- BARRICADE (TYPE III)
- CONE
- DRUM
- SKINNY DRUM
- TUBULAR MARKER
- TEMPORARY CRASH CUSHION
- FLASHING ARROW BOARD
- FLAGGER
- LAW ENFORCEMENT
- TRUCK MOUNTED ATTENUATOR (TMA)
- CHANGEABLE MESSAGE SIGN

TEMPORARY SIGNING

- PORTABLE SIGN
- STATIONARY SIGN
- STATIONARY OR PORTABLE SIGN

PAVEMENT MARKERS

- CRYSTAL/CRYSTAL
- CRYSTAL/RED
- YELLOW/YELLOW

PAVEMENT MARKING SYMBOLS

- PAVEMENT MARKING SYMBOLS

TGS ENGINEERS
804-C N.LAFAYETTE ST.
SHELBY,NC 28150
PH (704) 476 0003
CORP.LICENSE NO.:C-0275

APPROVED:_____ DATE:_____

SEAL

NORTH CAROLINA PROFESSIONAL SEAL 35018 ENGINEER JIMMY L. TERRY JR. 12/7/2018

DIVISION OF HIGHWAYS * STATE OF NORTH CAROLINA * DEPARTMENT OF TRANSPORTATION * WORK ZONE TRAFFIC CONTROL

ROADWAY STANDARD DRAWINGS & LEGEND

$$$$SYSTIME$$$$
$$$$DGN$$$$
$$$$DATE$$$$
$$$$USERNAME$$$$

GENERAL NOTES

CHANGES MAY BE REQUIRED WHEN PHYSICAL DIMENSIONS IN THE DETAIL DRAWINGS, STANDARD DETAILS, AND ROADWAY DETAILS ARE NOT ATTAINABLE TO MEET FIELD CONDITIONS OR RESULT IN DUPLICATE OR UNDESIRED OVERLAPPING OF DEVICES. MODIFICATION MAY INCLUDE: MOVING, SUPPLEMENTING, COVERING, OR REMOVAL OF DEVICES AS DIRECTED BY THE ENGINEER.

THE FOLLOWING GENERAL NOTES APPLY AT ALL TIMES FOR THE DURATION OF THE CONSTRUCTION PROJECT EXCEPT WHEN OTHERWISE NOTED IN THE PLAN OR DIRECTED BY THE ENGINEER.

TRAFFIC PATTERN ALTERATIONS

A) NOTIFY THE ENGINEER TWENTY ONE (21) CALENDAR DAYS PRIOR TO ANY TRAFFIC PATTERN ALTERATION.

SIGNING

B) INSTALL ADVANCE WORK ZONE WARNING SIGNS WHEN WORK IS WITHIN 40 FT FROM THE EDGE OF TRAVEL LANE AND NO MORE THAN THREE (3) DAYS PRIOR TO THE BEGINNING OF CONSTRUCTION.

C) PROVIDE PERMANENT SIGNING.

D) PROVIDE SIGNING AND DEVICES REQUIRED TO CLOSE THE ROAD ACCORDING TO THE ROADWAY STANDARD DRAWINGS AND TRAFFIC CONTROL PLANS.

PROVIDE SIGNING REQUIRED FOR THE OFF-SITE DETOUR ROUTE AS SHOWN IN THE TRAFFIC CONTROL PLANS.

E) COVER OR REMOVE ALL SIGNS AND DEVICES REQUIRED TO CLOSE THE ROAD WHEN ROAD CLOSURE IS NOT IN OPERATION.

COVER OR REMOVE ALL SIGNS REQUIRED FOR THE OFF-SITE DETOUR WHEN THE DETOUR IS NOT IN OPERATION.

F) ENSURE ALL NECESSARY SIGNING IS IN PLACE PRIOR TO ALTERING ANY TRAFFIC PATTERN.

TRAFFIC CONTROL DEVICES

G) PLACE TYPE III BARRICADES, WITH "ROAD CLOSED" SIGN R11-2 ATTACHED, OF SUFFICIENT LENGTH TO CLOSE ENTIRE ROADWAY.

PAVEMENT MARKINGS AND MARKERS

H) INSTALL PAVEMENT MARKINGS ON THE FINAL SURFACE AS SHOWN IN THE PAVEMENT MARKING PLAN.

I) TIE PROPOSED PAVEMENT MARKING LINES TO EXISTING PAVEMENT MARKING LINES.

J) PASSING ZONE WILL BE DETERMINED IN THE FIELD AND MUST BE APPROVED BY THE ENGINEER.

MANAGEMENT STRATEGIES

DURING CONSTRUCTION OF PROPOSED STRUCTURE, SR 1802 (COLT THORNBURG ROAD) WILL BE CLOSED TO THROUGH TRAFFIC. COLT THORNBURG ROAD TRAFFIC WILL BE MAINTAINED ON THE FOLLOWING OFFSITE DETOUR: FROM SR 1805(CLONINGER ROAD) TO SR 1804 (RATCHFORD ROAD) TO SR 1001 (PHILADELPHIA CHURCH ROAD) AND BACK TO SR 1802 (COLT THORNBURG ROAD).

ACCESS TO ALL DRIVEWAYS MUST BE PROVIDED AT ALL TIMES WITHIN THE PROJECT LIMITS.

TGS ENGINEERS
TGS ENGINEERS
804-C N.LAFAYETTE ST.
SHELBY,NC 28150
PH (704) 476 0003
CORP.LICENSE NO.:C-0275

APPROVED:________________ DATE:________

SEAL

NORTH CAROLINA PROFESSIONAL ENGINEER SEAL 35918 JIMMY L. TERRY

DIVISION OF HIGHWAYS STATE OF NORTH CAROLINA DEPARTMENT OF TRANSPORTATION WORK ZONE TRAFFIC CONTROL

TRANSPORTATION OPERATIONS PLAN

$$$$$SYSTIME$$$$$
$$$$$$$$$$$$$$$$DGN$$$$$$$$$$$$$$$$$$
$$$$USERNAME$$$$$

PROJ. REFERENCE NO.	SHEET NO.
17BP.12.R.201	TMP-1C

SIGN NUMBER: DET-1
TYPE: D
QUANTITY: 1

SIGN WIDTH: 3′-6″
HEIGHT: 3′-6″
TOTAL AREA: 12.3 Sq.Ft.

BORDER TYPE: FLUSH
RECESS: 0.75″
WIDTH: 0.75″
RADII: 3″

NO. Z BARS:
LENGTH:

BACKG COLOR: Orange
COPY COLOR: Black

SYMBOL	X	Y	WID	HT

MAT′L: 0.125″ (3.2 mm) ALUMINUM

DESIGN BY: SGM
PROJECT ID:17BP.12.R.201

CHECKED BY:
DIV: 12

DATE: May 21, 2014

USE NOTES: 1,2

1. Legend and border(except those that are colored black) shall be direct applied Grade C sheeting.
2. Background shall be Grade C reflective sheeting.

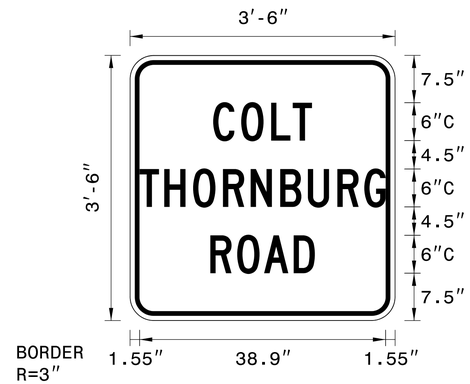

BORDER
R=3″
TH=0.75″
IN=0.75″

Panel Style: Traffic Control.ssi
M.U.T.C.D.: 2009 Edition

Spacing Factor is 1 unless specified otherwise

LETTER POSITIONS

Letter locations are panel edge to lower left corner

																										Series/Size Text Length
C	O	L	T																							C 2000
13.2	17.6	22.3	25.8																							15.7
T	H	O	R	N	B	U	R	G																		C 2000
1.5	5.4	10	14.7	19.1	23.8	28.2	32.8	37.1																		38.9
R	O	A	D																							C 2000
12.7	17	21.2	25.9																							16.6

FILENAME: BK-5120_TC_SD_01

NORTH CAROLINA D.O.T. SIGN DETAIL

TGS ENGINEERS
804-C N. LAFAYETTE ST
SHELBY, NC 28150
PH (704) 476-0003
CORP. LICENSE NO.: C-0275

APPROVED:_____ DATE:_____

SEAL

NORTH CAROLINA PROFESSIONAL SEAL 35018 ENGINEER MAY T. TERRY JR. 12/17/2014

DIVISION OF HIGHWAYS
STATE OF NORTH CAROLINA
DEPARTMENT OF TRANSPORTATION
WORK ZONE TRAFFIC CONTROL

SPECIAL
SIGN DESIGN

$$$$SYSTIME$$$$
$$$$DGN$$$$
$$$$SEINWE$$$$

PROJ. REFERENCE NO.	SHEET NO.
17BP.12.R.201	TMP-2

NOTE: SEE SHEETS TMP-3 AND TMP-1C FOR DETOUR LOCATION AND SIGNING.

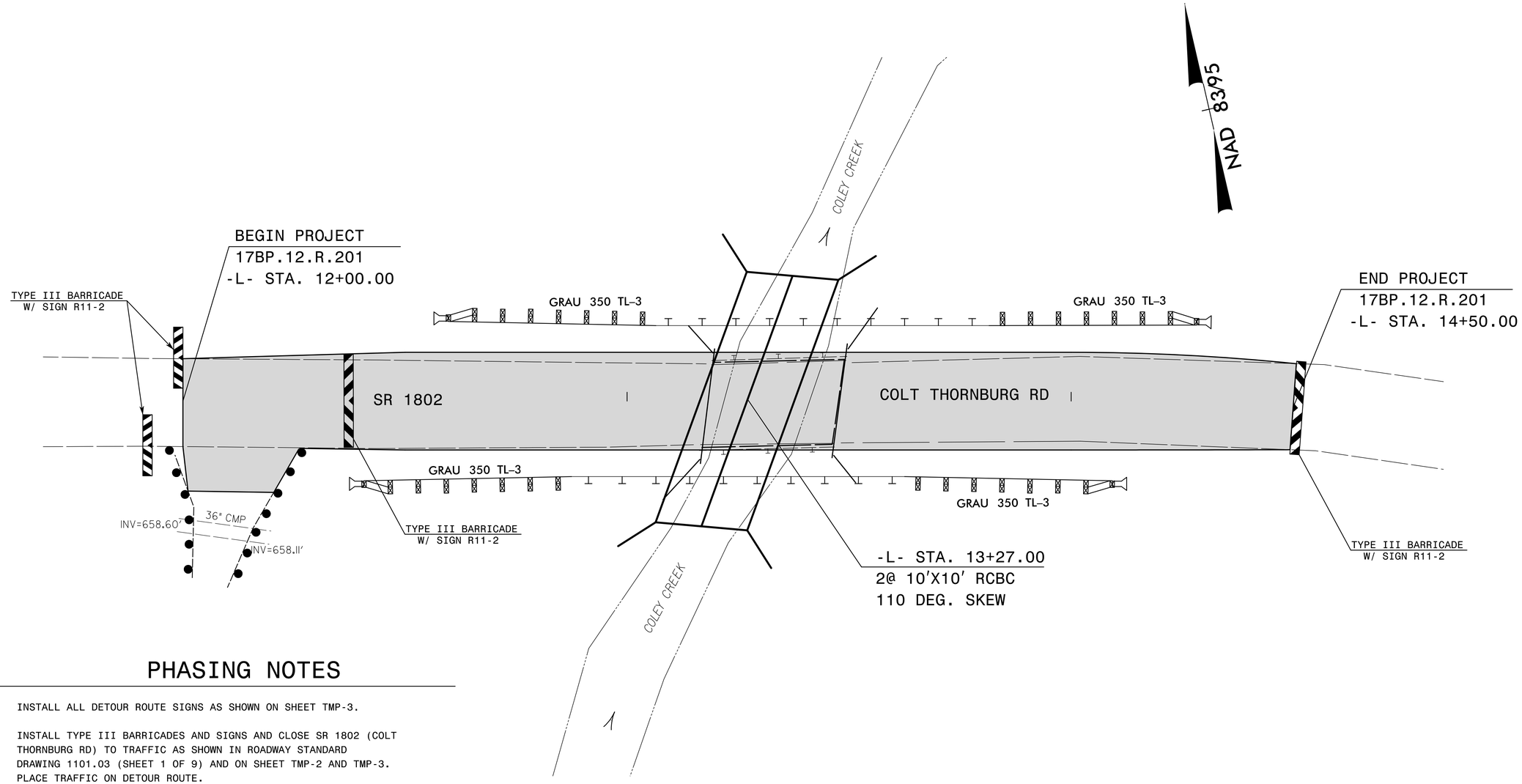

PHASING NOTES

STEP 1: INSTALL ALL DETOUR ROUTE SIGNS AS SHOWN ON SHEET TMP-3.

STEP 2: INSTALL TYPE III BARRICADES AND SIGNS AND CLOSE SR 1802 (COLT THORNBURG RD) TO TRAFFIC AS SHOWN IN ROADWAY STANDARD DRAWING 1101.03 (SHEET 1 OF 9) AND ON SHEET TMP-2 AND TMP-3. PLACE TRAFFIC ON DETOUR ROUTE.

STEP 3: DEMOLISH AND REMOVE THE EXISTING BRIDGE AND CONSTRUCT THE NEW CULVERT OVER COLEY CREEK AT -L- STA. 13+27.00. CONSTRUCT SR 1802 (COLT THORNBURG RD) FROM -L- STA. 12+00.00 TO 14+50.00, INCLUDING THE FINAL LAYER OF SURFACE COURSE.

STEP 4: PLACE FINAL PAVEMENT MARKINGS FROM -L- STA. 12+00.00 TO 14+50.00 (SEE SHEET PM-1).

STEP 5: REMOVE BARRICADES, SIGNS, AND ALL OTHER TRAFFIC CONTROL DEVICES AND OPEN SR 1802 (COLT THORNBURG RD) TO TRAFFIC IN FINAL PATTERN.

TGS ENGINEERS
TGS ENGINEERS
804-C N.LAFAYETTE ST.
SHELBY,NC 28150
PH (704) 476 0003
CORP.LICENSE NO.:C-0275

APPROVED:_____ DATE:_____

SEAL

DIVISION OF HIGHWAYS
STATE OF NORTH CAROLINA
DEPARTMENT OF TRANSPORTATION
WORK ZONE TRAFFIC CONTROL

OVERVIEW AND PHASING

$$$$$$SYSTIME$$$$$$
$$$$$$SYSDATE$$$$$$
$$$$$$USERNAME$$$$$$

PROJ. REFERENCE NO.	SHEET NO.
17BP.12.R.201	TMP-3

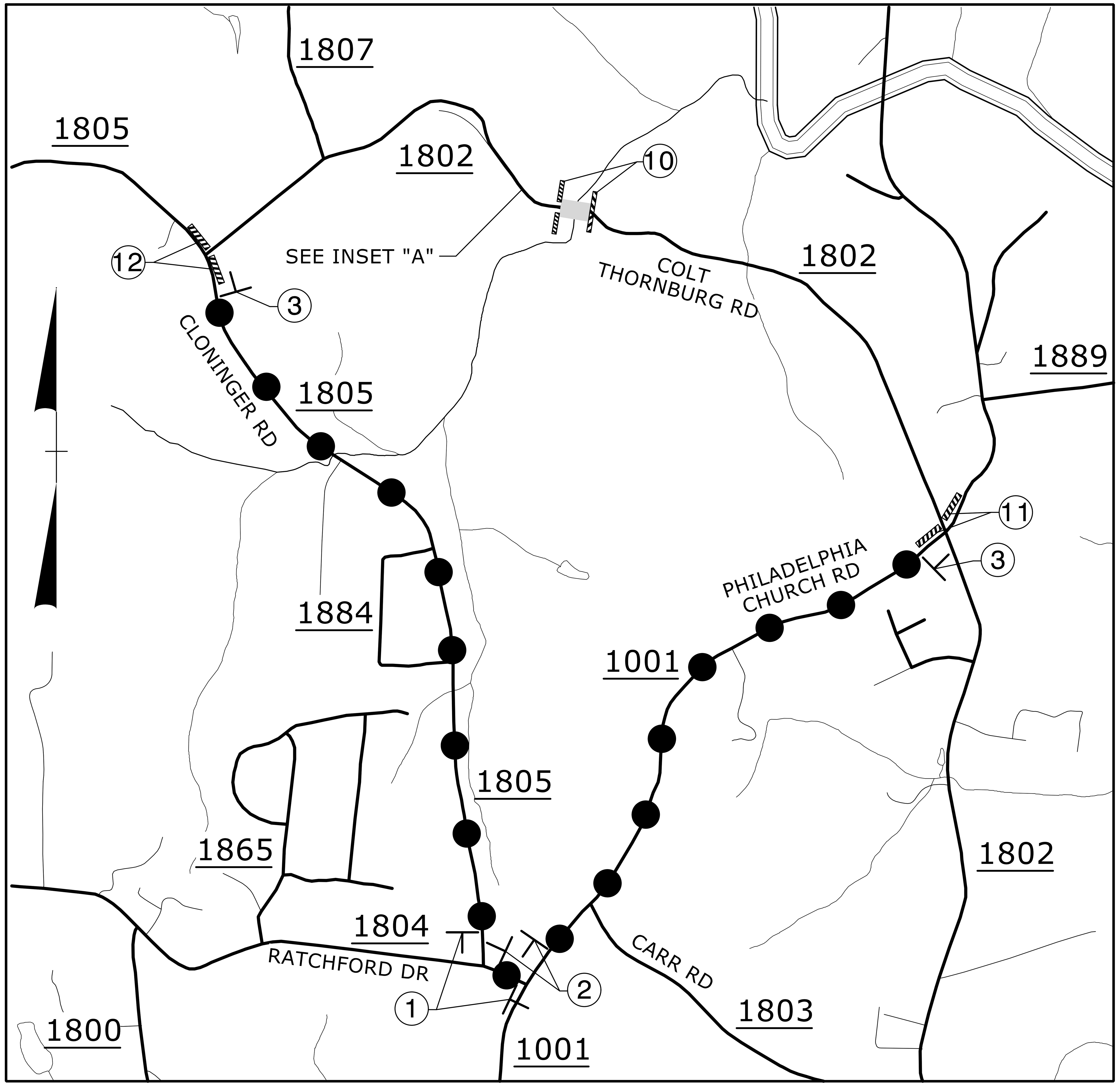

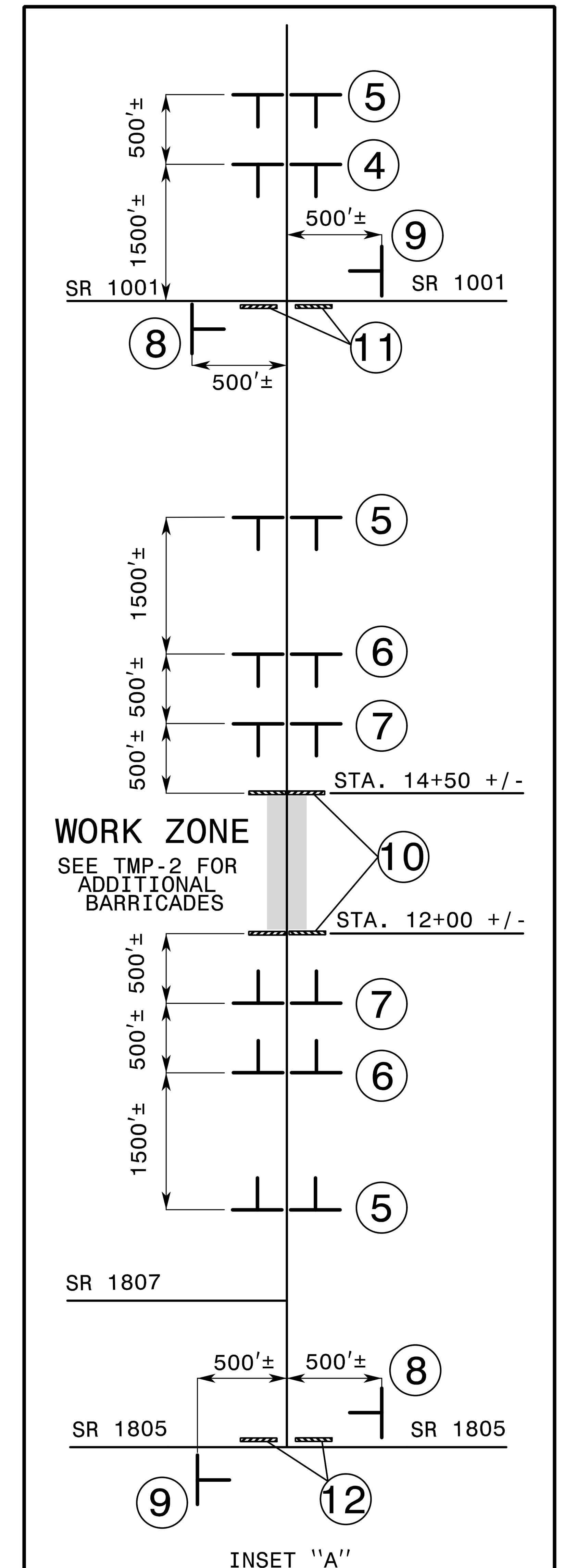

REFER TO ROADWAY STANDARD DRAWING 1101.03, SHEETS 1 OF 9 FOR APPLICABLE NOTES.

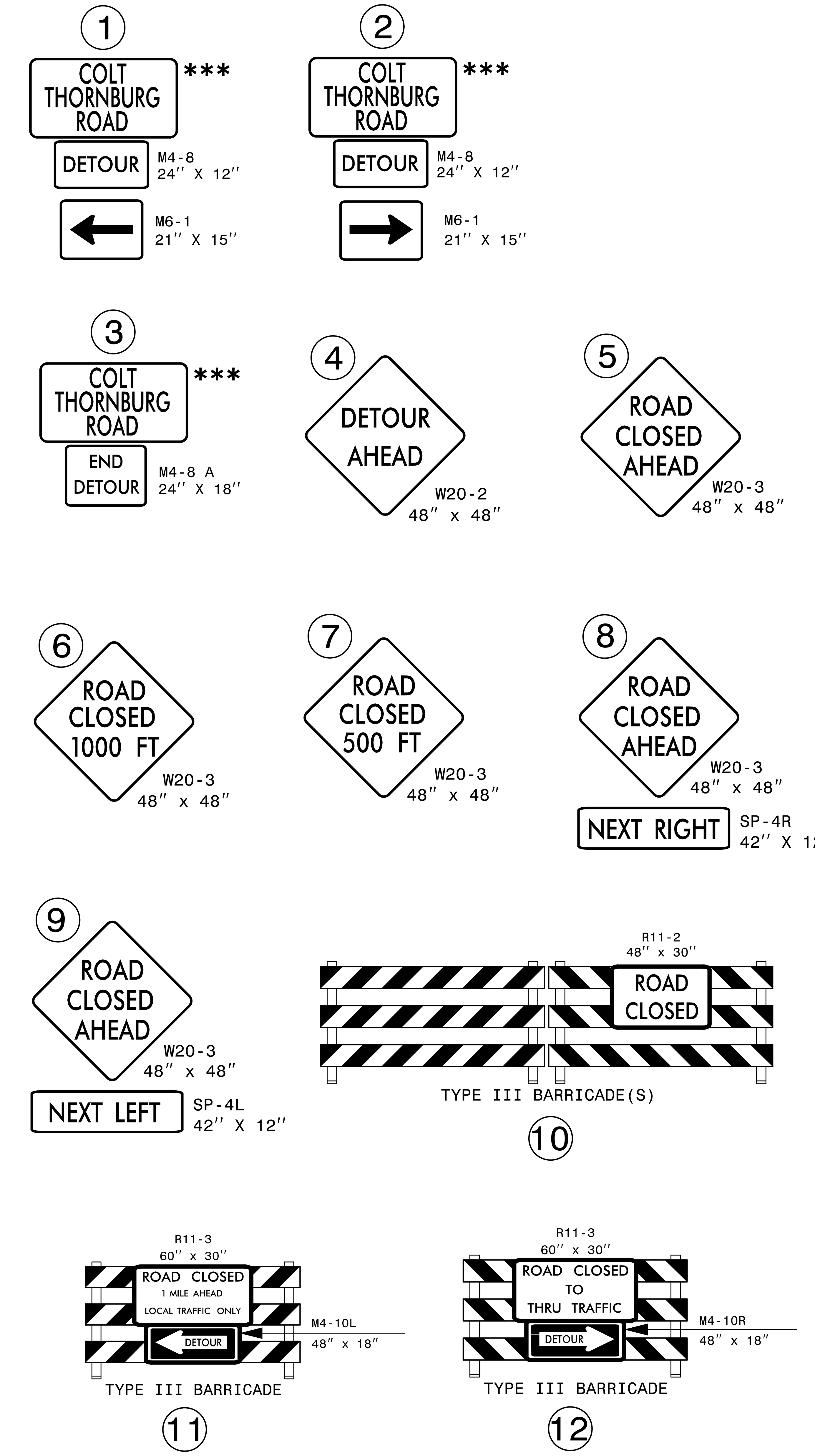

CONSTRUCTION AREA

DETOUR ROUTE

*** SEE SHEET TMP-1C FOR SIGN DESIGN

TGS ENGINEERS
804-C N.LAFAYETTE ST.
SHELBY,NC 28150
PH (704) 476 0003
CORP.LICENSE NO.:C-0275

APPROVED: ________ DATE: ________

SEAL

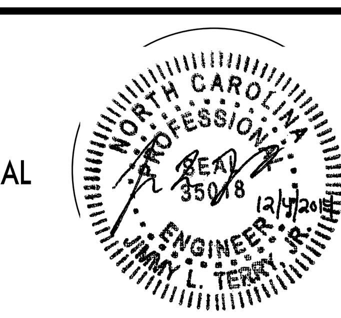

DIVISION OF HIGHWAYS
STATE OF NORTH CAROLINA
DEPARTMENT OF TRANSPORTATION
WORK ZONE TRAFFIC CONTROL

OFFSITE DETOUR ROUTE AND BARRICADE PLACEMENT

$$$$SYSTIME$$$$
$$$$DGN$$$$
$$$$USERNAME$$$$

PROJ. REFERENCE NO.	SHEET NO.
17BP.12.R.201	PMP-1

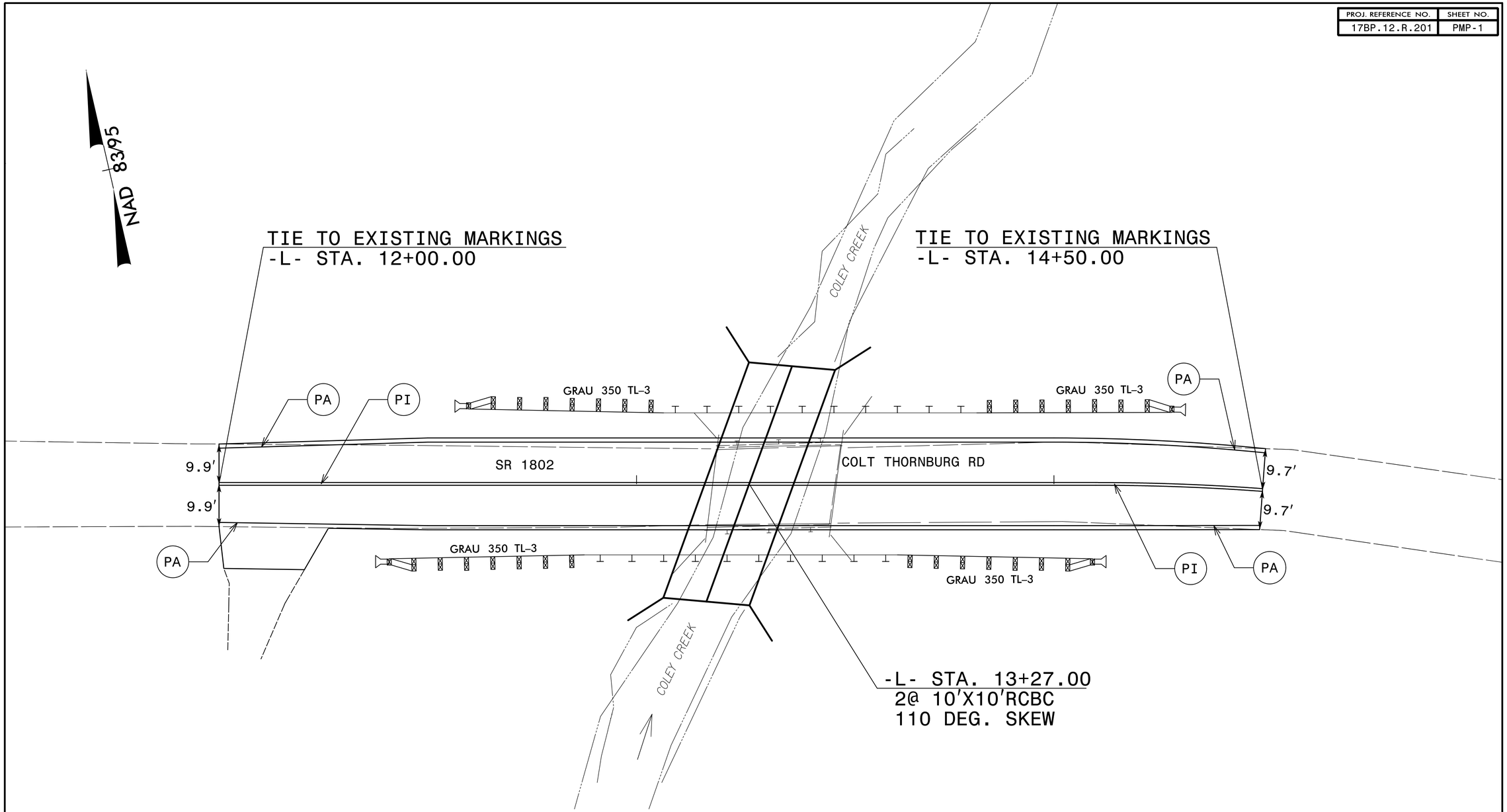

FINAL PAVEMENT MARKING SCHEDULE

PAVEMENT MARKINGS

	PAY ITEM QUANTITY	TOTAL
PAINT (4")		
PA WHITE EDGELINE (2X)	1000 LF	
PI YELLOW DOUBLE CENTER (2X)	1000 LF	
TOTAL		2000 LF

NOTE: FOR EACH PAINT PAVEMENT MARKING ITEM, 1X IMPLIES A SINGLE APPLICATION, 2X IMPLIES TWO APPLICATIONS, AND 3X IMPLIES THREE APPLICATIONS.

TGS ENGINEERS
804-C N.LAFAYETTE ST.
SHELBY,NC 28150
PH (704) 476 0003
CORP.LICENSE NO.:C-0275

APPROVED:_____ DATE:_____

SEAL

NORTH CAROLINA PROFESSIONAL SEAL 35018 ENGINEER JIMMY L. TERRY 12/17/2018

DIVISION OF HIGHWAYS * STATE OF NORTH CAROLINA * DEPARTMENT OF TRANSPORTATION * WORK ZONE TRAFFIC CONTROL

PAVEMENT MARKING PLAN

$$$$$SYSTIME$$$$$
$$$$$SYSTIME$$$$$
$$$$$DGN$$$$$
$$$$$DGN$$$$$
$$$$$DGN$$$$$
$$$$$DGN$$$$$
$$$$$DGN$$$$$
$$$$$DGN$$$$$
$$$$$DGN$$$$$

PROJECT: 17BP.12.R.201

STATE	STATE PROJECT REFERENCE NO.	SHEET NO.	TOTAL SHEETS
N.C.	17BP.12.R.201	EC-1	

STATE PROJ. NO.	F. A. PROJ. NO.	DESCRIPTION
17BP.12.R.201		CONST.

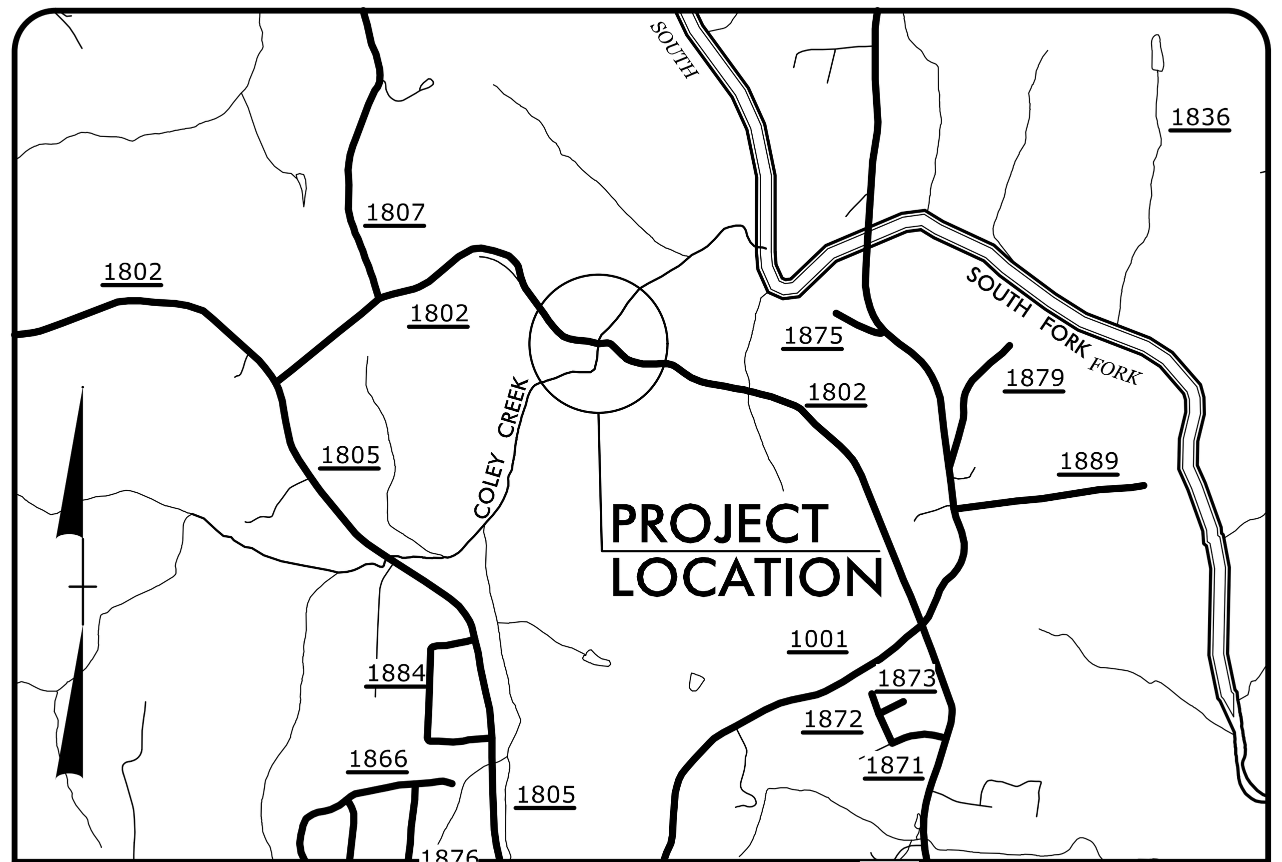

VICINITY MAP

STATE OF NORTH CAROLINA

DIVISION OF HIGHWAYS

PLAN FOR PROPOSED
HIGHWAY EROSION CONTROL

GASTON COUNTY

LOCATION: BRIDGE NO. 350170 OVER COLEY CREEK ON SR 1802 (COLT THORNBURG RD)

TYPE OF WORK: GRADING, DRAINAGE, PAVING, AND STRUCTURE

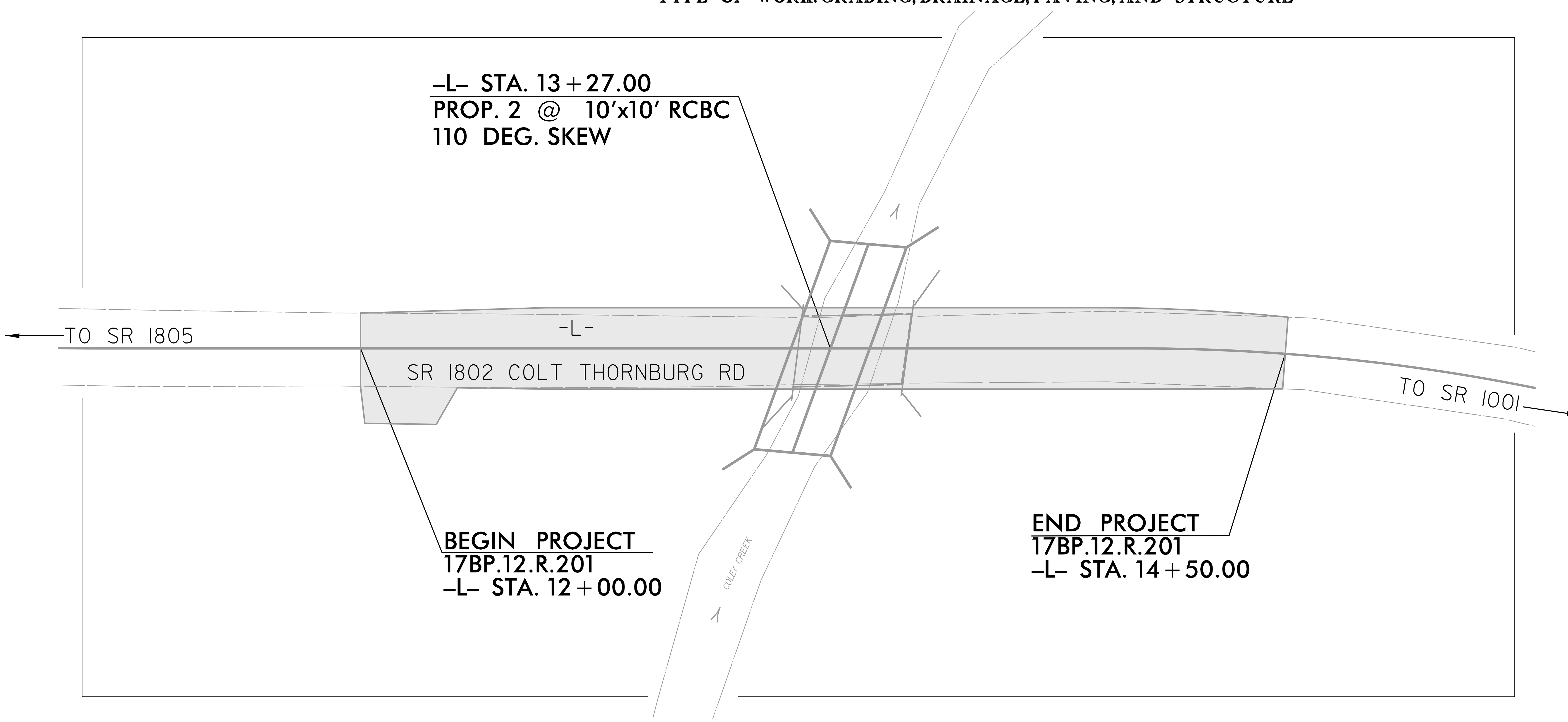

EROSION AND SEDIMENT CONTROL MEASURES

Std. #	Description	Symbol
1630.03	Temporary Silt Ditch	TSD
1630.05	Temporary Diversion	TD
1605.01	Temporary Silt Fence	
1606.01	Special Sediment Control Fence	
1622.01	Temporary Berms and Slope Drains	
1630.02	Silt Basin Type B	
1633.01	Temporary Rock Silt Check Type-A	
	Temporary Rock Silt Check Type-A with Matting and Polyacrylamide (PAM)	
1633.02	Temporary Rock Silt Check Type-B	
	Wattle/Coir Fiber Wattle	EW / CFW
	Wattle/Coir Fiber Wattle with Polyacrylamide (PAM)	
1634.01	Temporary Rock Sediment Dam Type-A	
1634.02	Temporary Rock Sediment Dam Type-B	
1635.01	Rock Pipe Inlet Sediment Trap Type-A	
1635.02	Rock Pipe Inlet Sediment Trap Type-B	
1630.04	Stilling Basin	
1630.06	Special Stilling Basin	
	Rock Inlet Sediment Trap:	
1632.01	Type A	A
1632.02	Type B	B
1632.03	Type C	C
	Skimmer Basin	
	Tiered Skimmer Basin	
	Infiltration Basin	

THIS PROJECT CONTAINS EROSION CONTROL PLANS FOR CLEARING AND GRUBBING PHASE OF CONSTRUCTION.

GRAPHIC SCALE

10 0 20

PLANS

ROADSIDE ENVIRONMENTAL UNIT
DIVISION OF HIGHWAYS
STATE OF NORTH CAROLINA

THESE EROSION AND SEDIMENT CONTROL PLANS COMPLY WITH THE REGULATIONS SET FORTH BY THE NCG-010000 GENERAL CONSTRUCTION PERMIT EFFECTIVE AUGUST 3, 2011 ISSUED BY THE NORTH CAROLINA DEPARTMENT OF ENVIRONMENT AND NATURAL RESOURCES DIVISION OF WATER QUALITY.

TGS ENGINEERS

Plans Prepared By:
TGS ENGINEERS
804-C N. LAFAYETTE ST.
SHELBY, NC 28150
PH (704) 476-0003

2012 STANDARD SPECIFICATIONS

LETTING DATE:

NCDOT DIVISION 12
NCDOT Contact:
STEVE RACKLEY, PE
DIVISION BRIDGE
PROGRAM MANAGER

JIMMY L. TERRY, PE
PROJECT ENGINEER
LEVEL III CERTIFICATION
NUMBER 3145

Roadway Standard Drawings

The following roadway english standards as appear in "Roadway Standard Drawings"- Roadway Design Unit - N. C. Department of Transportation - Raleigh, N. C., dated January 2012 and the latest revison thereto are applicable to this project and by reference hereby are considered a part of these plans.

1604.01 Railroad Erosion Control Detail
1605.01 Temporary Silt Fence
1606.01 Special Sediment Control Fence
1607.01 Gravel Construction Entrance
1622.01 Temporary Berms and Slope Drains
1630.01 Riser Basin
1630.02 Silt Basin Type B
1630.03 Temporary Silt Ditch
1630.04 Stilling Basin
1630.05 Temporary Diversion
1630.06 Special Stilling Basin
1631.01 Matting Installation
1632.01 Rock Inlet Sediment Trap Type A
1632.02 Rock Inlet Sediment Trap Type B
1632.03 Rock Inlet Sediment Trap Type C
1633.01 Temporary Rock Silt Check Type A
1633.02 Temporary Rock Silt Check Type B
1634.01 Temporary Rock Sediment Dam Type A
1634.02 Temporary Rock Sediment Dam Type B
1635.01 Rock Pipe Inlet Sediment Trap Type A
1635.02 Rock Pipe Inlet Sediment Trap Type B
1640.01 Coir Fiber Baffle
1645.01 Temporary Stream Crossing

PROJECT REFERENCE NO.	SHEET NO.
17BP.12.R.201	EC-2
R/W SHEET NO.	
ROADWAY DESIGN ENGINEER	HYDRAULICS ENGINEER

TEMPORARY ROCK SILT CHECK TYPE 'A' WITH EXCELSIOR MATTING AND POLYACRYLAMIDE (PAM)

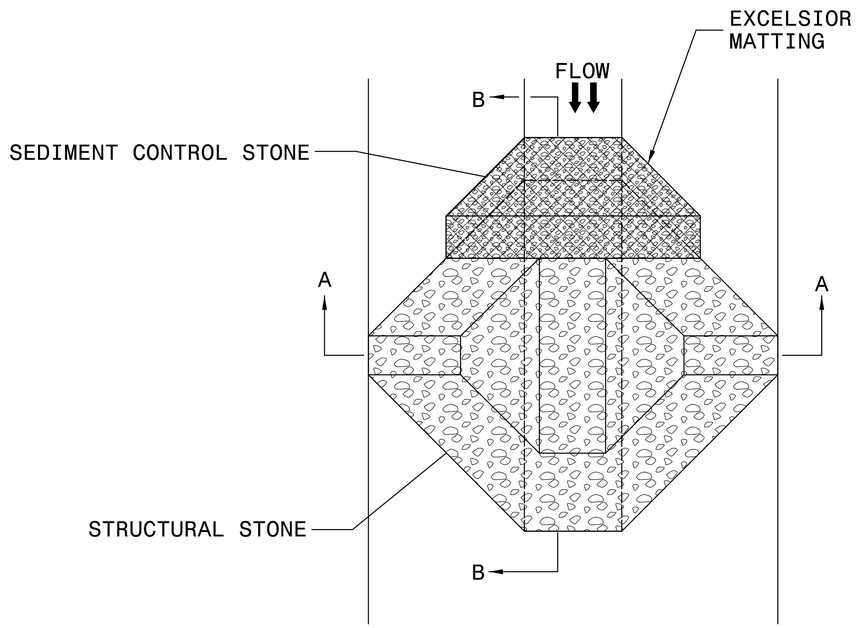

PLAN

NOTES:

INSTALL TEMPORARY ROCK SILT CHECK TYPE A IN ACCORDANCE WITH ROADWAY STANDARD DRAWING NO. 1633.01.

USE EXCELSIOR FOR MATTING MATERIAL AND ANCHOR MATTING SECTION AT TOP AND BOTTOM WITH CLASS B STONE.

PRIOR TO POLYACRYLAMIDE (PAM) APPLICATION, OBTAIN A SOIL SAMPLE FROM PROJECT LOCATION, AND FROM OFFSITE MATERIAL, AND ANALYZE FOR APPROPRIATE PAM FLOCCULANT TO BE APPLIED TO EACH ROCK SILT CHECK.

INITIALLY APPLY 4 OUNCES OF POLYACRYLAMIDE (PAM) TO TOP OF MATTING SECTION AND AFTER EVERY RAINFALL EVENT THAT EQUALS OR EXCEEDS 0.50 INCHES.

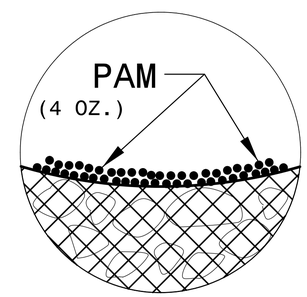

INSET A

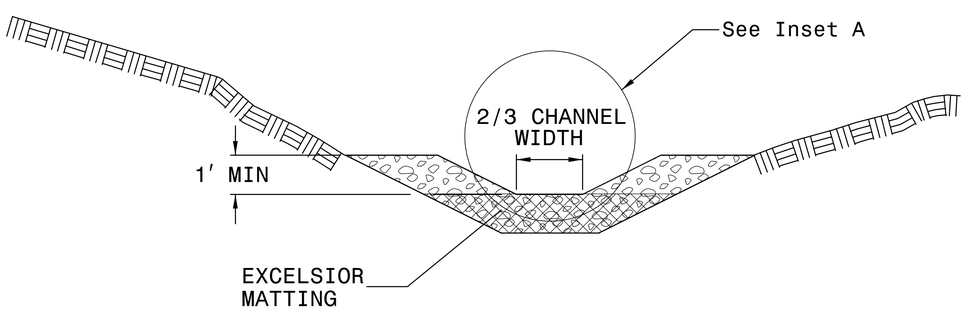

SECTION A-A

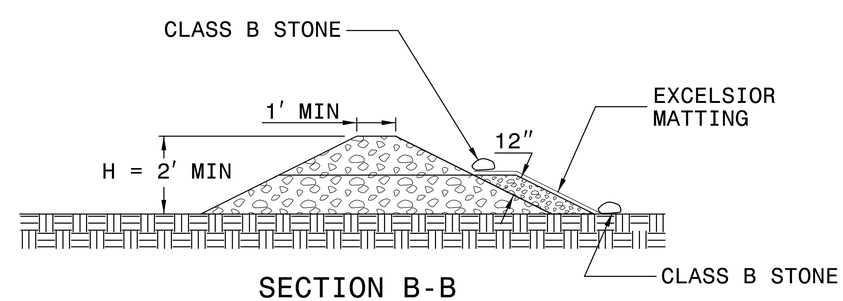

SECTION B-B

NOT TO SCALE

PROJECT REFERENCE NO.	SHEET NO.
17BP.12.R.201	EC-3
ROADWAY DESIGN ENGINEER	HYDRAULICS ENGINEER

DIVISION OF HIGHWAYS
STATE OF NORTH CAROLINA

SOIL STABILIZATION TIMEFRAMES

SITE DESCRIPTION	STABILIZATION TIME	TIMEFRAME EXCEPTIONS
PERIMETER DIKES, SWALES, DITCHES AND SLOPES	7 DAYS	NONE
HIGH QUALITY WATER (HQW) ZONES	7 DAYS	NONE
SLOPES STEEPER THAN 3:1	7 DAYS	IF SLOPES ARE 10' OR LESS IN LENGTH AND ARE NOT STEEPER THAN 2:1, 14 DAYS ARE ALLOWED.
SLOPES 3:1 OR FLATTER	14 DAYS	7 DAYS FOR SLOPES GREATER THAN 50' IN LENGTH.
ALL OTHER AREAS WITH SLOPES FLATTER THAN 4:1	14 DAYS	NONE, EXCEPT FOR PERIMETERS AND HQW ZONES.

PROJECT REFERENCE NO.	SHEET NO.
17BP.12.R.201	EC-4/CONST.4
R/W SHEET NO.	
ROADWAY DESIGN ENGINEER	HYDRAULICS ENGINEER

GASTON COUNTY
BRIDGE #350170

NAD 83/95

DETAIL A
SPECIAL LATERAL 'V' DITCH
(Not to Scale)

FROM STA. 13+57 TO STA. 14+50 LT
EST PSRM = 35 SY
FROM STA. 13+73 TO STA. 14+50 RT
EST PSRM = 30 SY

CLASS II RIPRAP AT THE EDGE OF THE PROPOSED CHANNEL. EMBED THE ROCK INTO THE STREAMBED. SLOPE BANKS TO TIE INTO EXISTING CONTOURS. LINE WITH COIR FIBER MATTING.
EST CL II RIPRAP = 80 TONS
EST CFM = 100 SY
EST DDE = 150 CY

-L- CURVE DATA

PI Sta 10+64.88	PI Sta 14+91.31
△ = 9° 30' 37.7" (LT)	△ = 16° 57' 40.1" (RT)
D = 7° 20' 44.2"	D = 10° 30' 46.8"
L = 129.47'	L = 161.34'
T = 64.88'	T = 81.26'
R = 780.00'	R = 545.00'

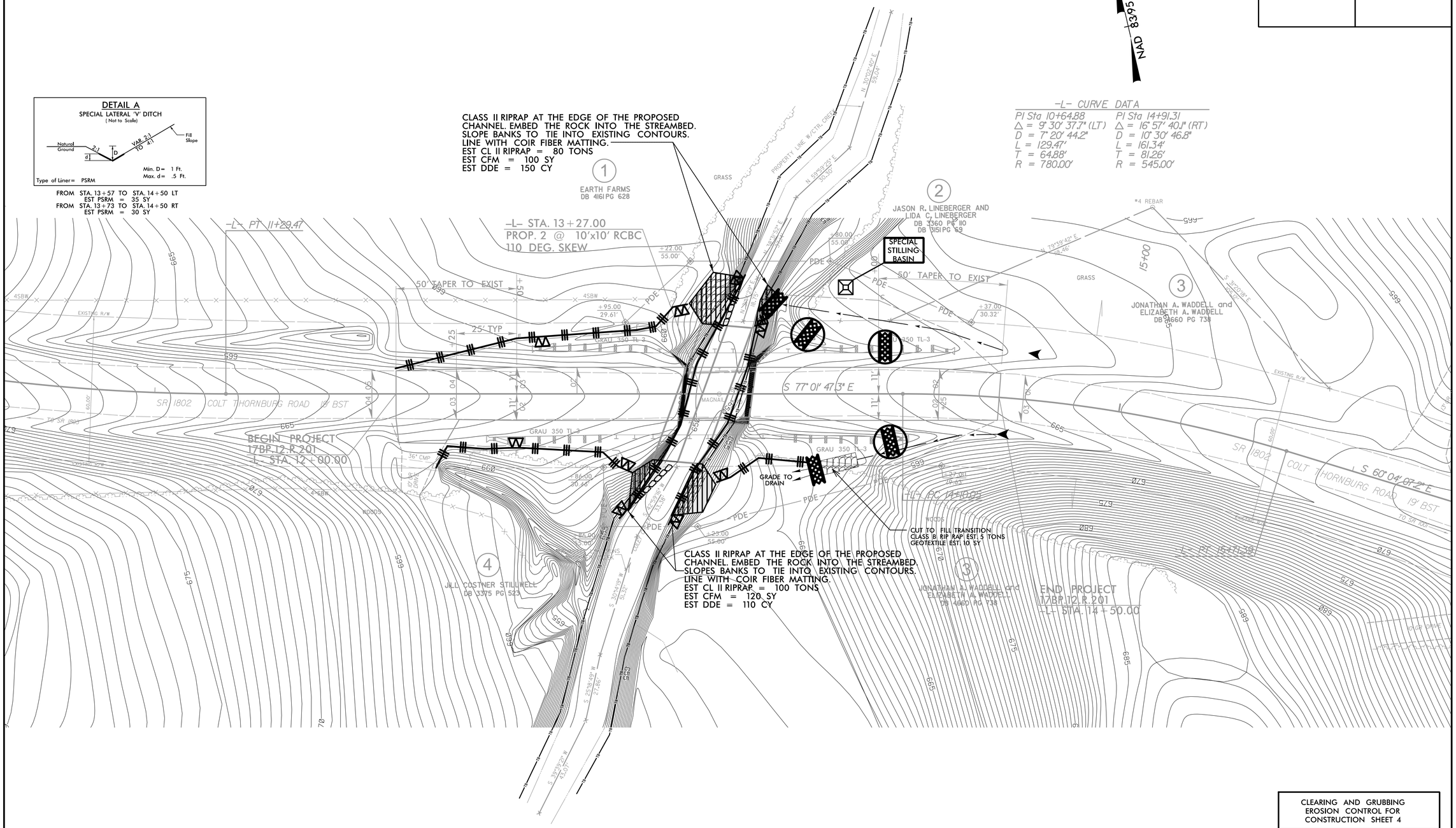

CLEARING AND GRUBBING
EROSION CONTROL FOR
CONSTRUCTION SHEET 4

NOTE:
PLACE TEMPORARY ROCK SEDIMENT DAMS TYPE – B AND TEMPORARY ROCK SILT CHECKS TYPE – A AT DRAINAGE OUTLETS.

CULVERT CONSTRUCTION SEQUENCE STA. 13 + 27 –L–

PROJECT REFERENCE NO.	SHEET NO.
17BP.12.R.201	EC-5/CONST.4
R/W SHEET NO.	
ROADWAY DESIGN ENGINEER	HYDRAULICS ENGINEER

PHASING

1. Close SR 1802 (Colt Thornburg Rd) to traffic as shown in traffic management plans.
2. Install perimeter erosion control devices as shown on EC–4.
3. Construct impervious dikes to restrain stream and begin pump around operations.
4. Remove existing bridge over Coley Creek.
5. Install proposed reinforced concrete box culvert.
6. Remove impervious dikes and divert water into new culvert.
7. Complete any necessary Inlet/Outlet channel improvements.
8. Complete roadway construction.

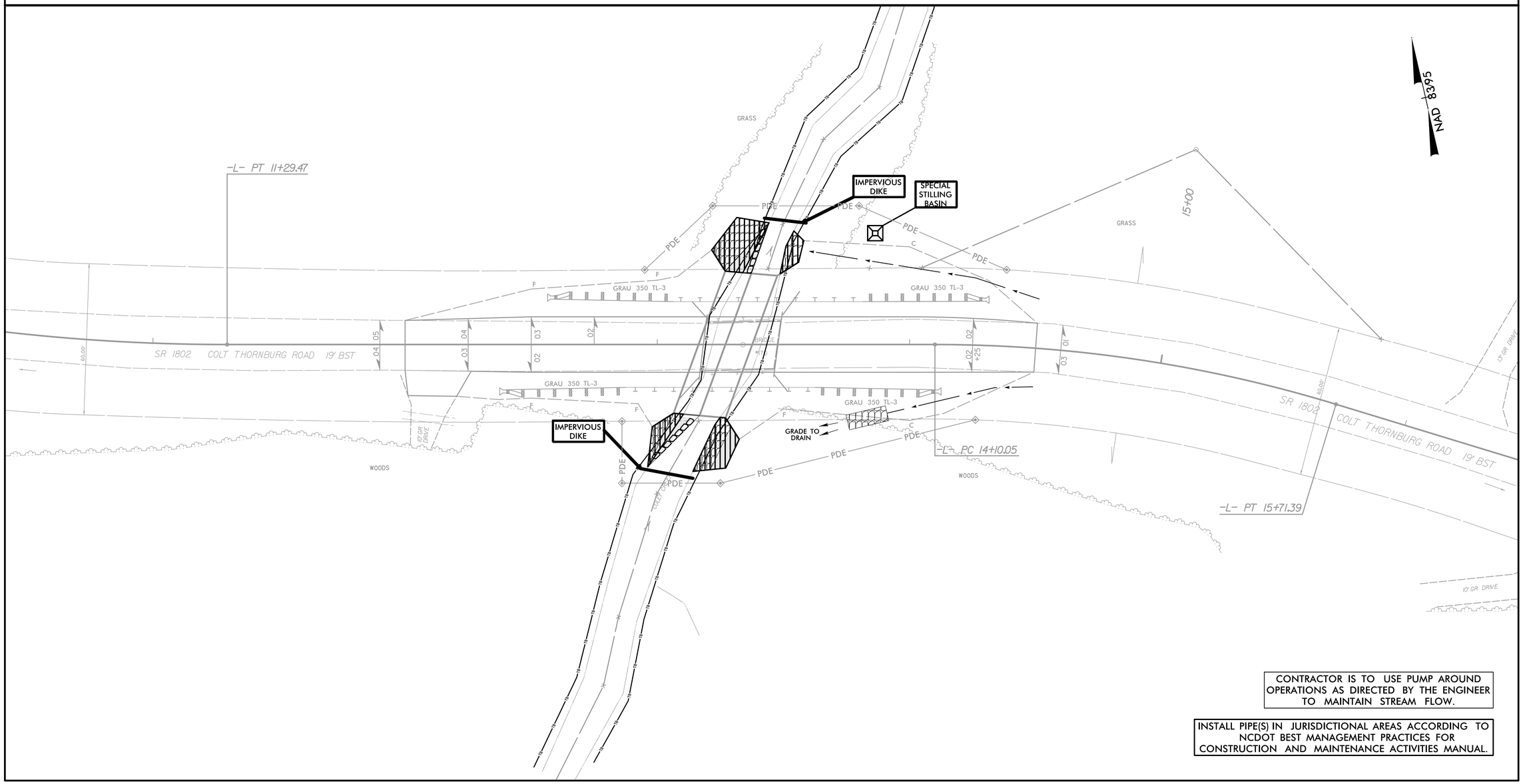

CONTRACTOR IS TO USE PUMP AROUND OPERATIONS AS DIRECTED BY THE ENGINEER TO MAINTAIN STREAM FLOW.

INSTALL PIPE(S) IN JURISDICTIONAL AREAS ACCORDING TO NCDOT BEST MANAGEMENT PRACTICES FOR CONSTRUCTION AND MAINTENANCE ACTIVITIES MANUAL.

GASTON COUNTY
BRIDGE #350170

PROJECT REFERENCE NO.	SHEET NO.
17BP.12.R.201	EC-6/CONST.4
R/W SHEET NO.	
ROADWAY DESIGN ENGINEER	HYDRAULICS ENGINEER

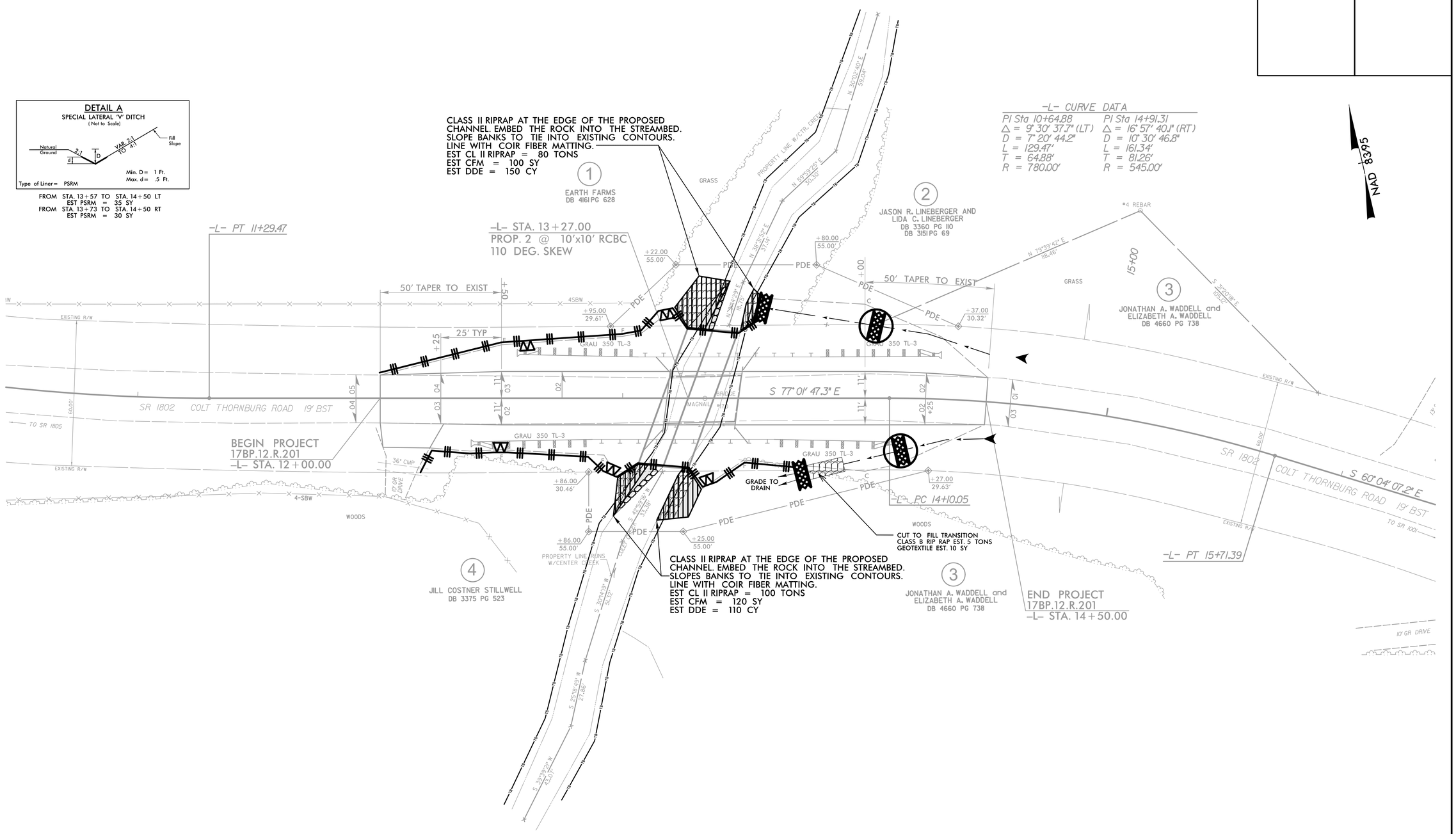

0 2.5 5	PROJ. REFERENCE NO.	SHEET NO.
	17BP.12.R.201	X-1

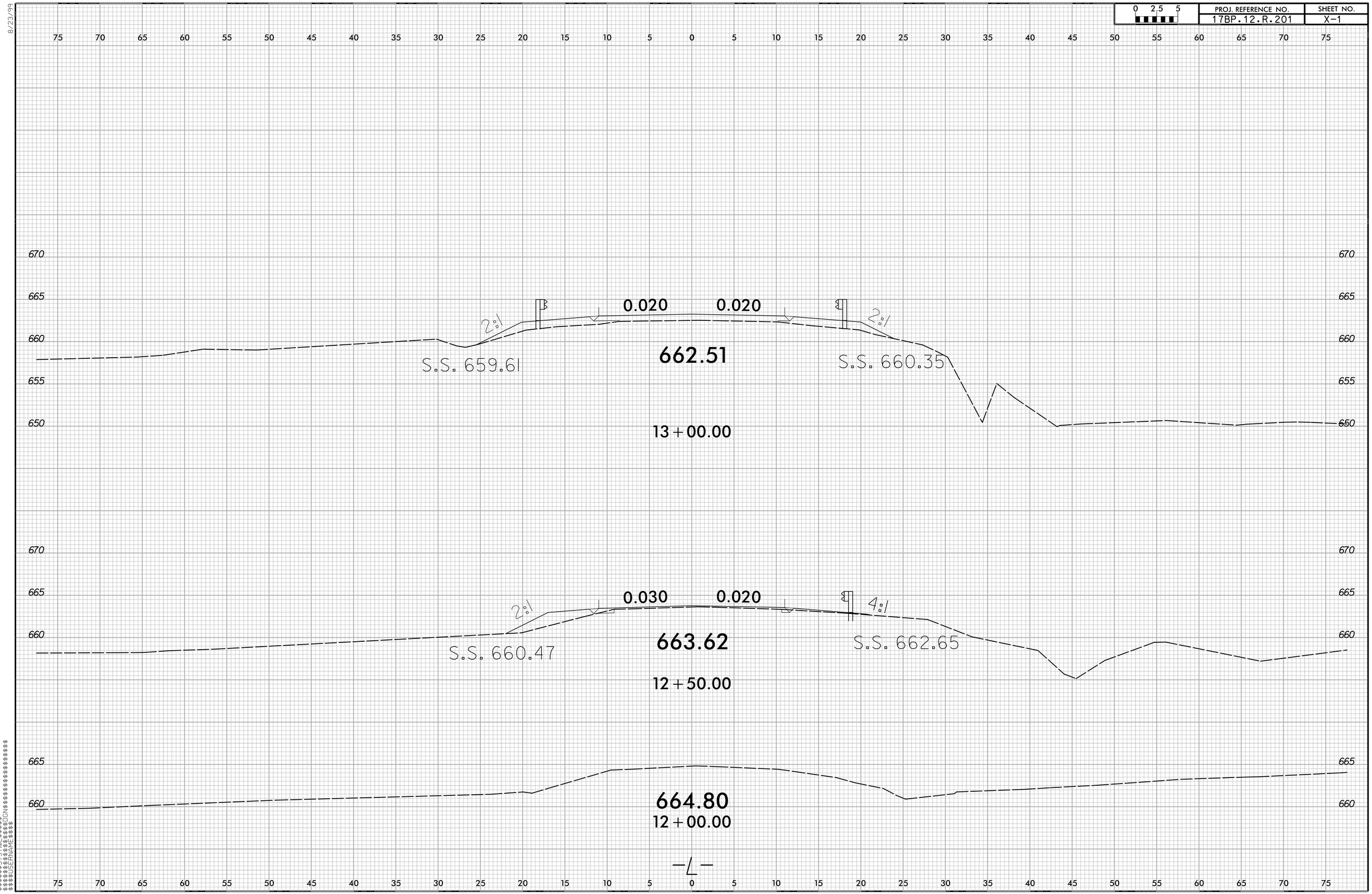

8/23/99

$$$$SYSTIME$$$$
$$$$SUN$$$$
$$$$DATE$$$$
$$$$MON$$$$
$$$$DATE$$$$
$$$$TIME$$$$

PROJ. REFERENCE NO.
17BP.12.R.201
SHEET NO.
X-2
0 2.5 5
664.71
14+50.00
S.S. 662.90
S.S. 662.94
0.020
0.020
4:1
2:1
659.70
661.23
663.39
14+00.00
S.S. 659.16
S.S. 659.52
PROPOSED
RCBC
662.25
13+50.00
-L-

BENCHMARK: BM#1: RAILROAD SPIKE AT BASE OF 24" SWEET GUM. (N 591521, E 1352396) 89' LEFT STA 14+57.00 EL.667.09' NAVD 88

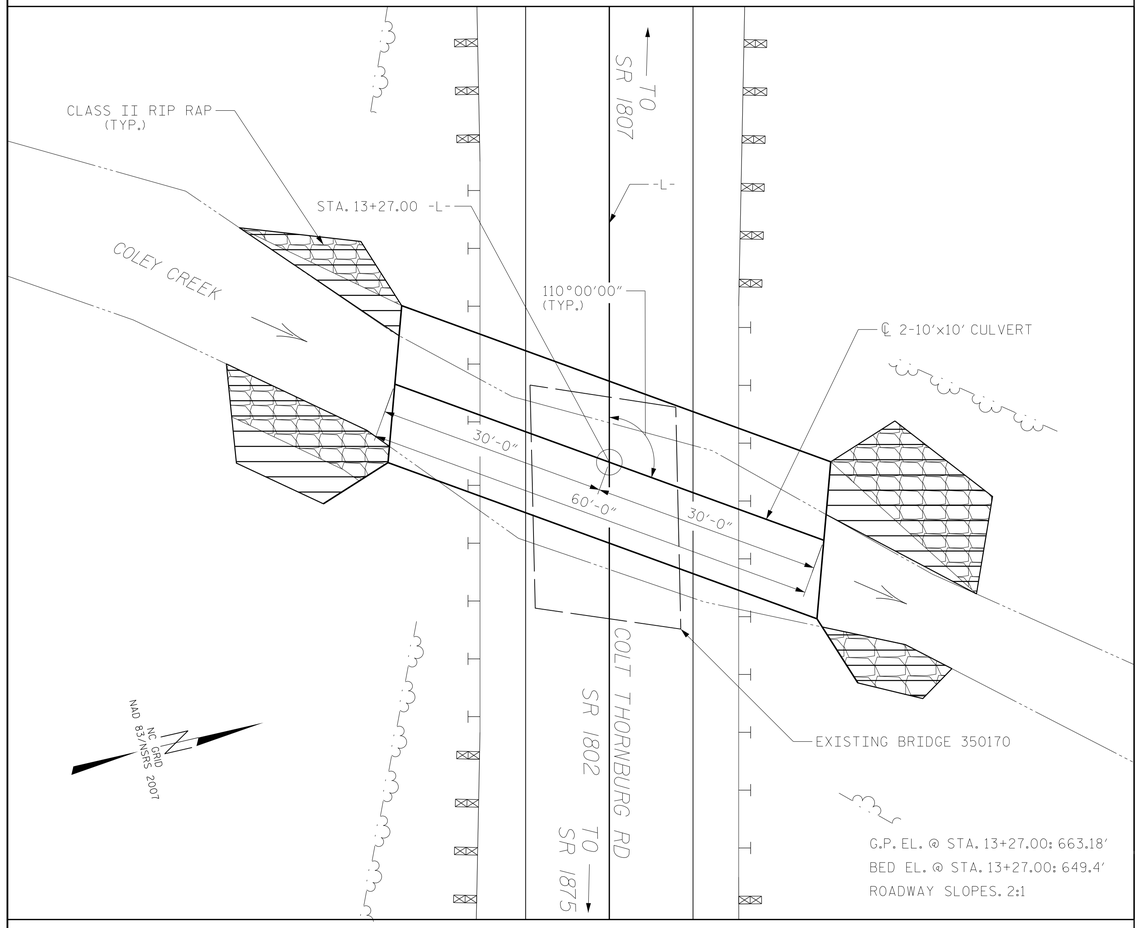

LOCATION SKETCH

FOR UTILITY INFORMATION, SEE UTILITY PLANS AND SPECIAL PROVISIONS.

NOTES

ASSUMED LIVE LOAD ----------HL-93 OR ALTERNATE LOADING.

DESIGN FILL----------5'-0"

FOR OTHER DESIGN DATA AND NOTES SEE STANDARD NOTE SHEET.

3" Ø WEEP HOLES INDICATED TO BE IN ACCORDANCE WITH THE SPECIFICATIONS.

CONCRETE IN CULVERTS TO BE POURED IN THE FOLLOWING ORDER:

1. WING FOOTINGS AND FLOOR SLAB INCLUDING 4" OF ALL VERTICAL WALLS.
2. THE REMAINING PORTIONS OF THE WALLS AND WINGS FULL HEIGHT FOLLOWED BY ROOF SLAB AND HEADWALLS.

THE RESIDENT ENGINEER SHALL CHECK THE LENGTH OF CULVERT BEFORE STAKING IT OUT TO MAKE CERTAIN THAT IT WILL PROPERLY TAKE CARE OF THE FILL.

THIS BARREL STANDARD TO BE USED ONLY ON CULVERT ON 105° SKEW AND TO BE USED WITH STANDARD WING SHEET WITH THE SAME SKEW AND VERTICAL CLEARANCE.

DIMENSIONS FOR WING LAYOUT AS WELL AS ADDITIONAL REINFORCING STEEL EMBEDDED IN BARREL ARE SHOWN ON WING SHEET.

EXCAVATE 1' BELOW THE CULVERT AND FOOTING AND REPLACE WITH FOUNDATION CONDITIONING MATERIAL IN ACCORDANCE WITH ARTICLE 414 OF THE STANDARD SPECIFICATIONS.

PLACE SILLS AT THE INLET AND OUTLET OF THE LOW FLOW BARREL ONLY. BACKFILL THE FLOODPLAIN BARREL WITH NATIVE BED MATERIAL. SUBSIDIZE WITH CLASS B RIP RAP IF NEEDED.

STEEL IN THE BOTTOM SLAB MAY BE SPLICED AT THE PERMITTED CONSTRUCTION JOINT AT THE CONTRACTOR'S OPTION. EXTRA WEIGHT OF STEEL DUE TO THE SPLICES SHALL BE PAID FOR BY THE CONTRACTOR.

AT THE CONTRACTOR'S OPTION, HE MAY SPLICE THE VERTICAL REINFORCING STEEL IN THE INTERIOR FACE OF EXTERIOR WALL AND BOTH FACES OF INTERIOR WALLS ABOVE LOWER WALL CONSTRUCTION JOINT. THE SPLICE LENGTH SHALL BE AS PROVIDED IN THE SPLICE LENGTH CHART SHOWN ON THE PLANS. EXTRA WEIGHT OF STEEL DUE TO THE SPLICES SHALL BE PAID FOR BY THE CONTRACTOR.

FOR SUBMITTAL OF WORKING DRAWINGS, SEE SPECIAL PROVISIONS.

FOR FALSEWORK AND FORMWORK, SEE SPECIAL PROVISIONS.

FOR CRANE SAFETY, SEE SPECIAL PROVISIONS.

FOR GROUT FOR STRUCTURES, SEE SPECIAL PROVISIONS.

FOR EROSION CONTROL PLANS, SEE ROADWAY PLANS.

THE EXISTING STRUCTURE CONSISTING OF 2 @ 15' TIMBER DECK ON I-BEAMS, END BENTS TIMBER CAPS AND BULKHEADS AND LOCATED AT THE PROPOSED STRUCTURE SHALL BE REMOVED.

INASMUCH AS THE PAINT SYSTEM ON THE EXISTING STRUCTURAL STEEL CONTAINS LEAD, THE CONTRACTOR'S ATTENTION IS DIRECTED TO ARTICLE 107-1 OF THE STANDARD SPECIFICATIONS. ANY COSTS RESULTING FROM COMPLIANCE WITH APPLICABLE STATE OR FEDERAL REGULATIONS PERTAINING TO HANDLING OF MATERIALS CONTAINING LEAD BASED PAINT SHALL BE INCLUDED IN THE BID PRICE FOR "REMOVAL OF EXISTING STRUCTURE AT STATION 13+27.00-L-"

THE SUBSTRUCTURE OF THE EXISTING BRIDGE INDICATED ON THE PLANS IS FROM THE BEST INFORMATION AVAILABLE. SINCE THIS INFORMATION IS SHOWN FOR THE CONVENIENCE OF THE CONTRACTOR, THE CONTRACTOR SHALL HAVE NO CLAIM WHATSOEVER AGAINST THE DEPARTMENT OF TRANSPORTATION FOR ANY DELAYS OR ADDITIONAL COSTS INCURRED BASED ON DIFFERENCES BETWEEN THE EXISTING BRIDGE SUBSTRUCTURE SHOWN ON THE PLANS AND THE ACTUAL CONDITIONS AT THE PROJECT SITE.

REMOVAL OF THE EXISTING BRIDGE SHALL BE PERFORMED SO AS NOT TO ALLOW DEBRIS TO FALL INTO THE WATER. THE CONTRACTOR SHALL REMOVE THE BRIDGE AND SUBMIT PLANS FOR DEMOLITION IN ACCORDANCE TO ARTICLE 402-2 OF THE STANDARD SPECIFICATION.

AT THE CONTRACTOR'S OPTION HE MAY SUBMIT, TO THE ENGINEER FOR APPROVAL, DESIGN AND DETAIL DRAWINGS FOR A PRECAST REINFORCED CONCRETE BOX CULVERT IN LIEU OF THE CAST-IN-PLACE CULVERT SHOWN ON THE PLANS. THE DESIGN SHALL PROVIDE THE SAME SIZE AND NUMBER OF BARRELS AS USED ON THE CAST-IN-PLACE DESIGN. FOR OPTIONAL PRECAST REINFORCED CONCRETE BOX CULVERT, SEE SPECIAL PROVISIONS.

FOR CULVERT DIVERSION CHANNEL DETAILS AND PAY ITEM, SEE EROSION CONTROL PLANS.

HYDRAULIC DATA:

DESIGN DISCHARGE	950 CFS
FREQUENCY OF DESIGN DISCHARGE	25 YRS.
DESIGN HIGH WATER ELEVATION	658.4'
DRAINAGE AREA	2.6 SQ. MI.
BASE DISCHARGE	1390 CFS
FREQUENCY OF BASE DISCHARGE	100 YRS.
BASE HIGH WATER ELEVATION	659.79'

OVERTOPPING FLOOD DATA:

OVERTOPPING DISCHARGE	1900 CFS+
FREQUENCY OF OVERTOPPING FLOOD	500 YR+
OVERTOPPING FLOOD ELEVATION	*663.2'

*OVERTOPPING ELEVATION REPRESENTS ℄ SAG ELEVATION AT -L- 13+26.9'

I HEREBY CERTIFY THESE PLANS ARE THE AS-BUILT PLANS.

SEAL

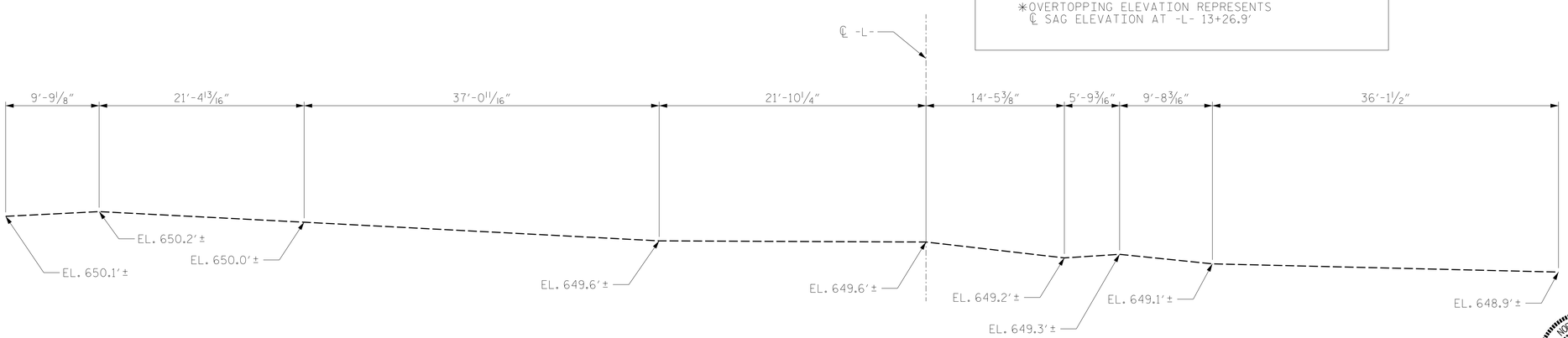

PROFILE ALONG ℄ CULVERT

PROJECT NO. 17BP.12.R.201

GASTON COUNTY

STATION: 13+27.00-L-

SHEET 1 OF 6 REPLACES BR. NO. 350170

STATE OF NORTH CAROLINA
DEPARTMENT OF TRANSPORTATION
RALEIGH

BARREL STANDARD

DOUBLE 10 FT.X 10 FT. CONCRETE BOX CULVERT 105° SKEW

1971

NORTH CAROLINA PROFESSIONAL SEAL 28885 ENGINEER JOSHUA B. WHITE
9/11/14

PREPARED BY
TGS ENGINEERS
804 N LAFAYETTE ST
SHELBY, NC 28150

REVISIONS						SHEET NO.
NO.	BY:	DATE:	NO.	BY:	DATE:	C-1
1			3			TOTAL SHEETS
2			4			6

ASSEMBLED BY : CCC	DATE : 8/14	SPECIAL	
CHECKED BY : JBW	DATE : 8/14		
DRAWN BY : R.W.WRIGHT	DATE : OCT. 1989	STANDARD	
CHECKED BY : A.R.BISSETTE	DATE : OCT. 1989		

STD. NO. CB22A

ADDED 11-1-90

BAR TYPES

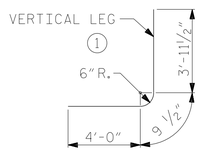

ALL BAR DIMENSIONS ARE OUT TO OUT.

SPLICE LENGTHS CHART

BAR	SIZE	SPLICE LENGTH
A1	#8	3'-7"
B1	#5	2'-7"
B3	#4	2'-0"
C1	#4	2'-0"

REINFORCING STEEL BAR SCHEDULE

BAR	NO.	SIZE	TYPE	LENGTH	WEIGHT
A1	122	#8	1	8'-9"	2850
A2	122	#8	1	8'-9"	2850
A100	108	#6	STR	22'-2"	3596
A101	2	#6	STR	20'-8"	62
A102	2	#6	STR	18'-10"	57
A103	2	#6	STR	16'-11"	51
A104	2	#6	STR	15'-1"	45
A105	2	#6	STR	13'-2"	40
A106	2	#6	STR	11'-4"	34
A107	2	#6	STR	9'-6"	29
A108	2	#6	STR	7'-7"	23
A109	2	#6	STR	5'-9"	17
A110	2	#6	STR	3'-10"	12
A111	2	#6	STR	2'-0"	6
A200	108	#4	STR	22'-2"	1599
A201	2	#4	STR	20'-8"	28
A202	2	#4	STR	18'-10"	25
A203	2	#4	STR	16'-11"	23
A204	2	#4	STR	15'-1"	20
A205	2	#4	STR	13'-2"	18
A206	2	#4	STR	11'-4"	15
A207	2	#4	STR	9'-6"	13
A208	2	#4	STR	7'-7"	10
A209	2	#4	STR	5'-9"	8
A210	2	#4	STR	3'-10"	5
A211	2	#4	STR	2'-0"	3
A300	108	#7	STR	22'-2"	4893
A301	2	#7	STR	20'-8"	84
A302	2	#7	STR	18'-10"	77
A303	2	#7	STR	16'-11"	69
A304	2	#7	STR	15'-1"	62
A305	2	#7	STR	13'-2"	54
A306	2	#7	STR	11'-4"	46
A307	2	#7	STR	9'-6"	39
A308	2	#7	STR	7'-7"	31
A309	2	#7	STR	5'-9"	24
A310	2	#7	STR	3'-10"	16
A311	2	#7	STR	2'-0"	8
A400	108	#6	STR	22'-2"	3596
A401	2	#6	STR	20'-8"	62
A402	2	#6	STR	18'-10"	57
A403	2	#6	STR	16'-11"	51
A404	2	#6	STR	15'-1"	45
A405	2	#6	STR	13'-2"	40
A406	2	#6	STR	11'-4"	34
A407	2	#6	STR	9'-6"	29
A408	2	#6	STR	7'-7"	23
A409	2	#6	STR	5'-9"	17
A410	2	#6	STR	3'-10"	12
A411	2	#6	STR	2'-0"	6
B1	122	#6	STR	11'-10"	2168
B2	122	#4	STR	9'-4"	760
B3	122	#5	STR	11'-10"	1506
C1	231	#4	STR	21'-10"	3369
D1	6	#6	STR	1'-8"	15
D2	6	#6	STR	2'-8"	24
G1	8	#5	STR	22'-11"	191
S2	12	#8	STR	22'-11"	734
REINFORCING STEEL					29581 LBS.

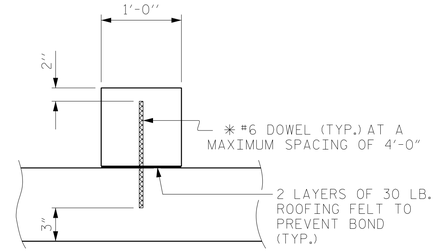

SECTION THROUGH SILL

* DOWELS MAY BE PUSHED INTO GREEN CONCRETE AFTER SLAB HAS BEEN FLOAT FINISHED.

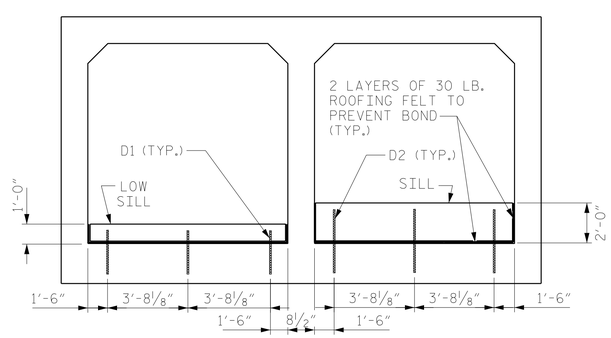

ELEVATION ON SKEW

(LOOKING DOWNSTREAM)

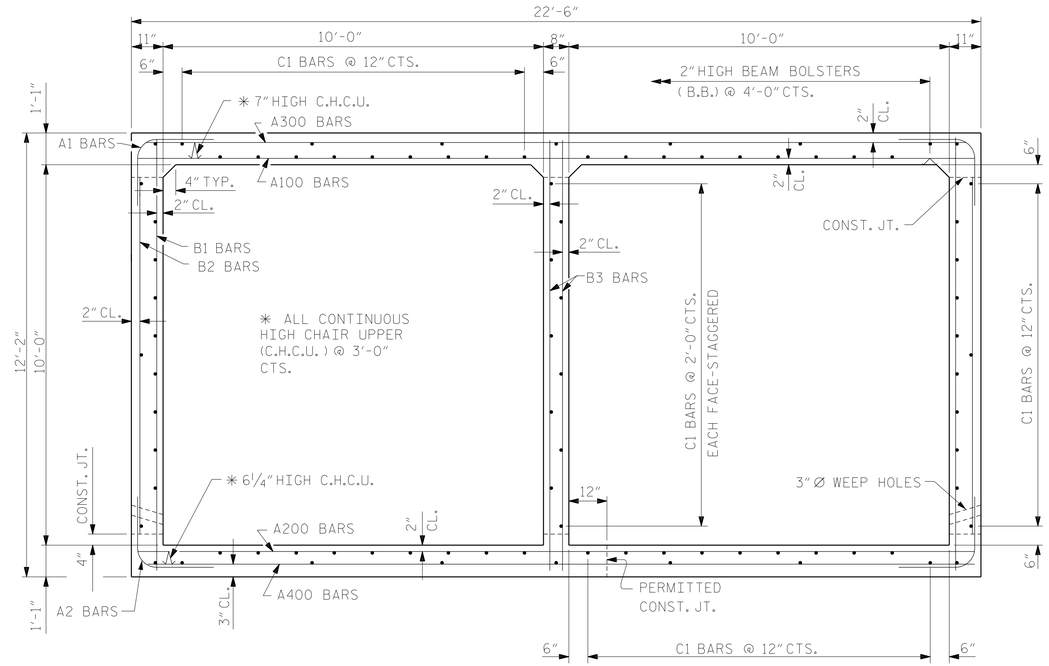

RIGHT ANGLE SECTION OF BARREL

THERE ARE 77 "C" BARS IN SECTION OF BARREL.

TOTAL STRUCTURE QUANTITIES

CLASS A CONCRETE				
BARREL @	2.51	CY/FT	150.6	C.Y.
WING, SILLS ETC.			39.6	C.Y.
TOTAL			192.7	C.Y.
REINFORCING STEEL				
BARREL			29581	LBS.
WINGS ETC.			2459	LBS.
TOTAL			32040	LBS.
CULVERT EXCAVATION, STA. 13+27.00-L-				L.S.
FOUNDATION CONDITIONING MATERIAL			95	TONS
CLASS II RIP RAP			180	TONS
REMOVAL OF EXISTING STRUCTURE @ STA. 13+27.00-L-				L.S.

PROJECT NO. 17BP.12.R.201

GASTON COUNTY

STATION: 13+27.00-L-

SHEET 2 OF 6

NORTH CAROLINA PROFESSIONAL SEAL 28885 ENGINEER JOSHUA B. WHITE

9/11/14

PREPARED BY
TGS ENGINEERS
804 N. LAFAYETTE ST
SHELBY, NC 28150

STATE OF NORTH CAROLINA
DEPARTMENT OF TRANSPORTATION
RALEIGH

BARREL STANDARD

DOUBLE 10 FT.X 10 FT. CONCRETE BOX CULVERT 105° SKEW

1971

REVISIONS						SHEET NO.
NO.	BY:	DATE:	NO.	BY:	DATE:	C-2
1			3			TOTAL SHEETS
2			4			6

ASSEMBLED BY : CCC DATE : 8/14
CHECKED BY : JBW DATE : 8/14

DRAWN BY : R.W.WRIGHT DATE : OCT. 1989
CHECKED BY : A.R.BISSETTE DATE : OCT. 1989

SPECIAL STANDARD

ADDED 11-1-90

STD. NO. CB22A

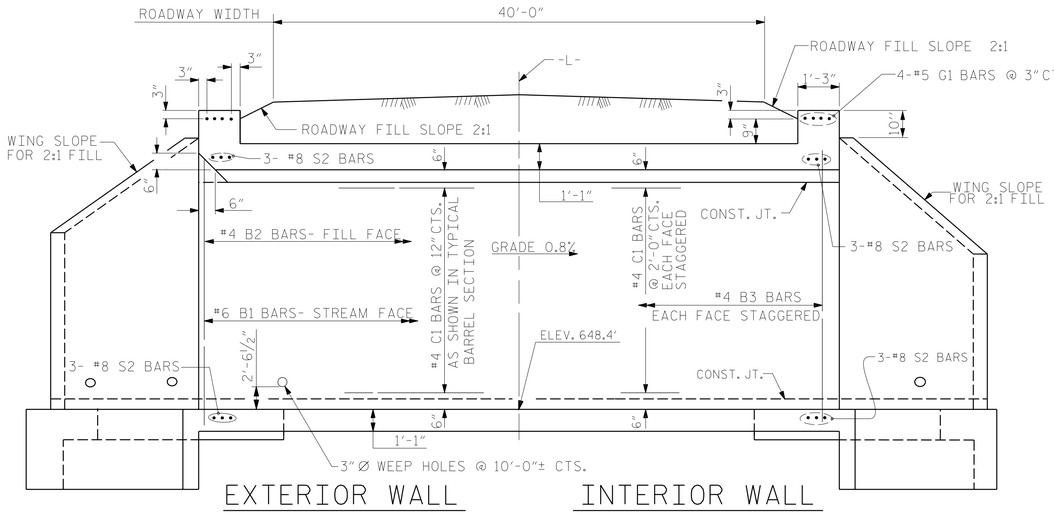

CULVERT SECTION NORMAL TO ROADWAY

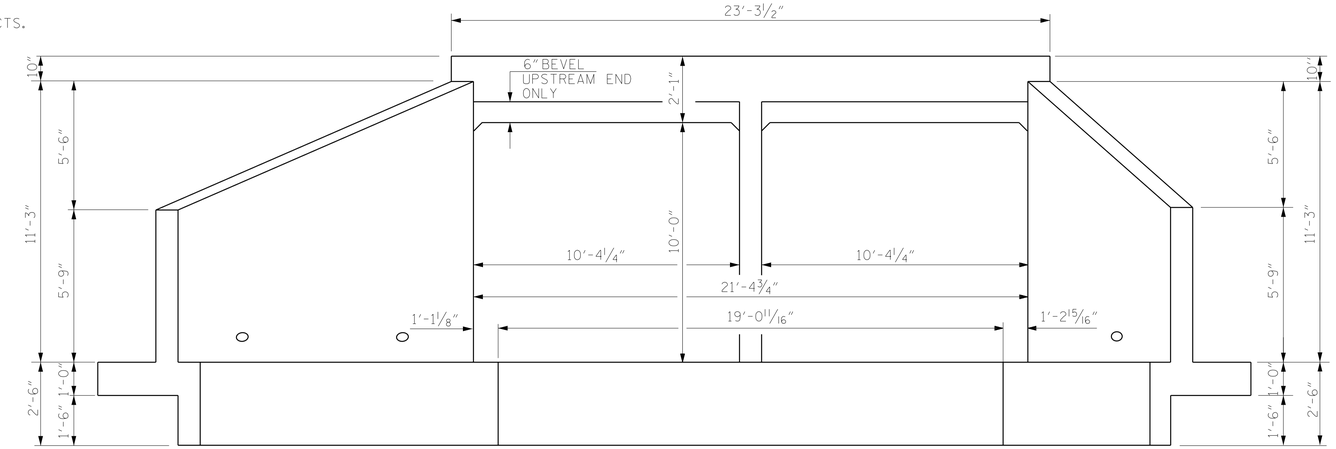

END ELEVATION NORMAL TO SKEW

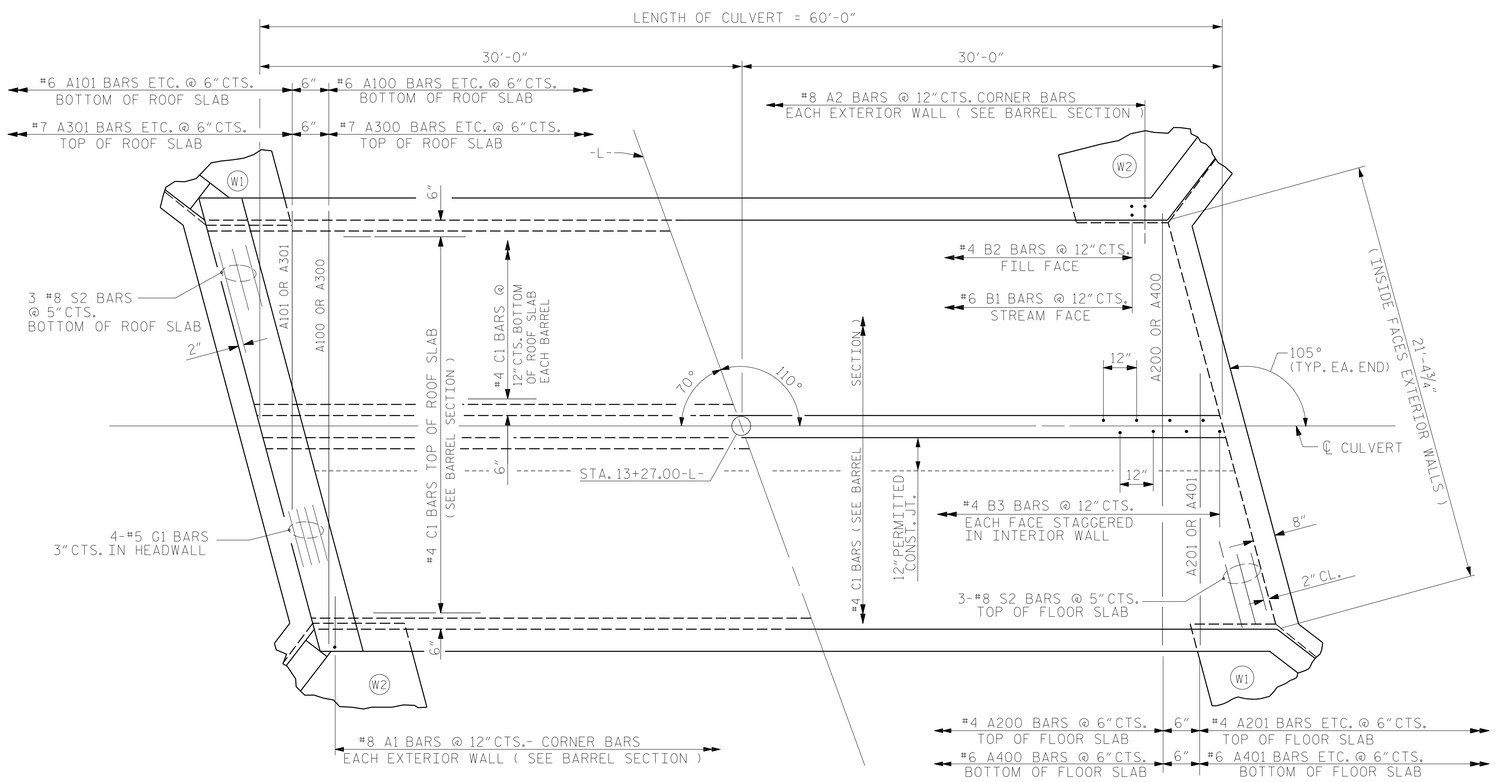

PART PLAN - ROOF SLAB

PART PLAN - FLOOR SLAB

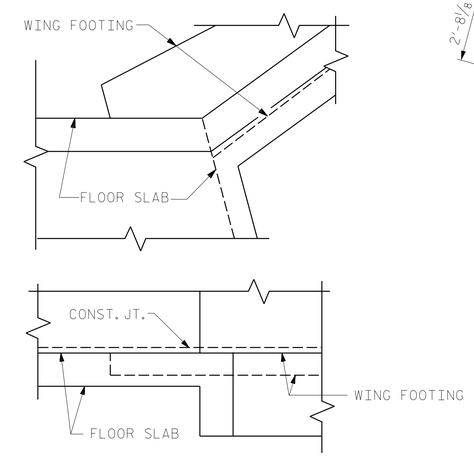

DETAIL

CONNECTION OF WING FOOTING AND FLOOR SLAB WHEN SLAB IS THICKER THAN FOOTING

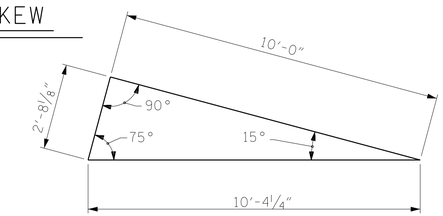

SKEW TRIANGLE

PROJECT NO. 17BP.12.R.201

GASTON COUNTY

STATION: 13+27.00-L-

SHEET 3 OF 6

STATE OF NORTH CAROLINA
DEPARTMENT OF TRANSPORTATION
RALEIGH

BARREL STANDARD

DOUBLE 10 FT. X 10 FT. CONCRETE BOX CULVERT 105° SKEW

1971

NORTH CAROLINA PROFESSIONAL SEAL 28885 ENGINEER JOSHUA B. WHITE 9/11/14

PREPARED BY TCS ENGINEERS 804 N. LAFAYETTE ST SHELBY, NC 28150

REVISIONS								SHEET NO.
NO.	BY:	DATE:	NO.	BY:	DATE:			C-3
1			3					TOTAL SHEETS
2			4					6

ASSEMBLED BY : CCC	DATE : 8/14	SPECIAL	
CHECKED BY : JBW	DATE : 8/14		
DRAWN BY : W. BRYAN STANLEY II	DATE : NOV.1971	STANDARD	
CHECKED BY : JOEL A. JOHNSON	DATE : DEC.1971		

REVISED 11-19-99 BY M.M. CHECKED BY R.W.W.
REVISED 8-28-92 BY E.L.R. CHECKED BY G.R.P.
REDRAWN 11-90 BY A.R.B. CHECKED BY C.R.K.

STD. NO. CB222

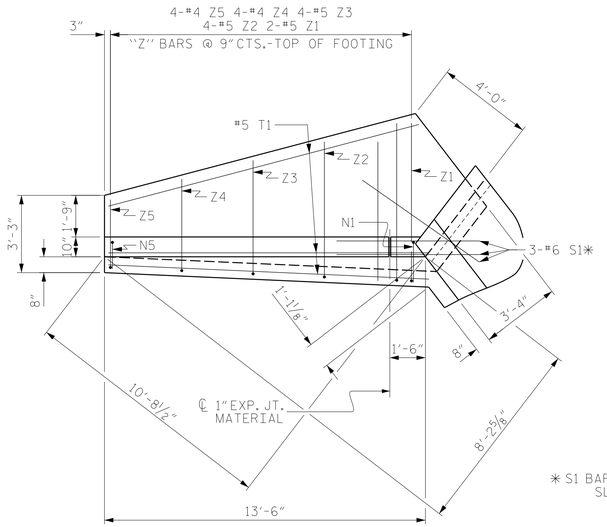

PLAN W2

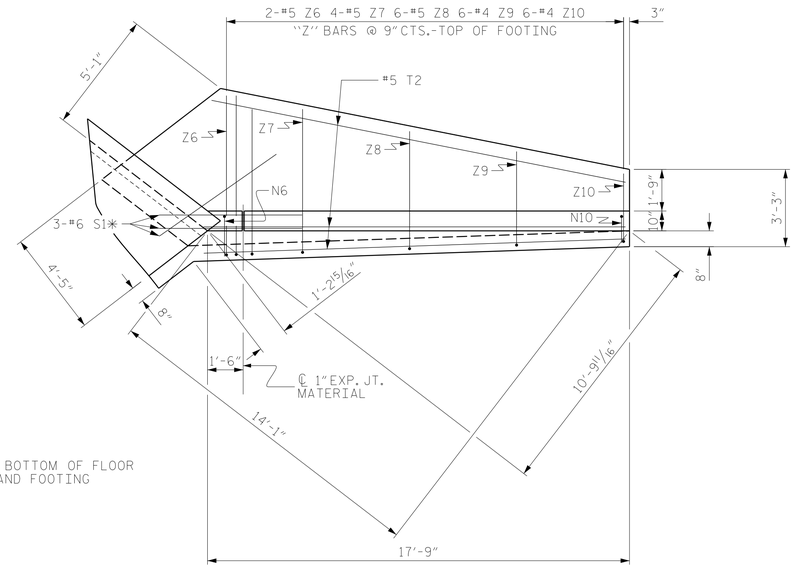

PLAN W1

* S1 BARS @ BOTTOM OF FLOOR SLAB AND FOOTING

NOTES

A 3 FOOT STRIP OF FILTER FABRIC SHALL BE ATTACHED TO THE FILL FACE OF THE WING COVERING THE ENTIRE LENGTH OF THE EXPANSION JOINT

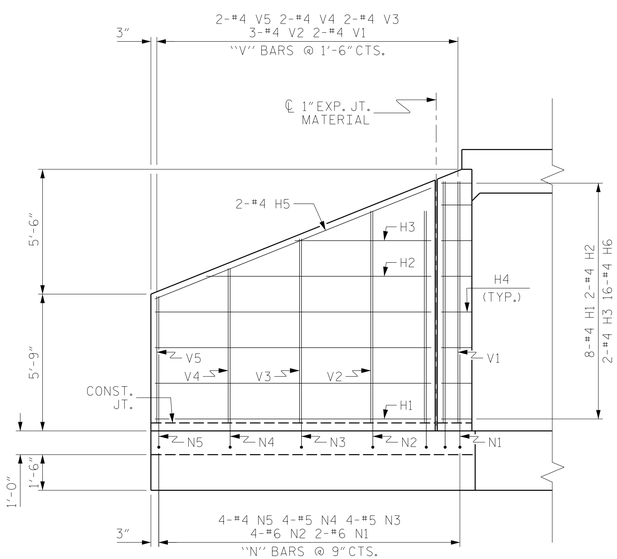

ELEVATION W2

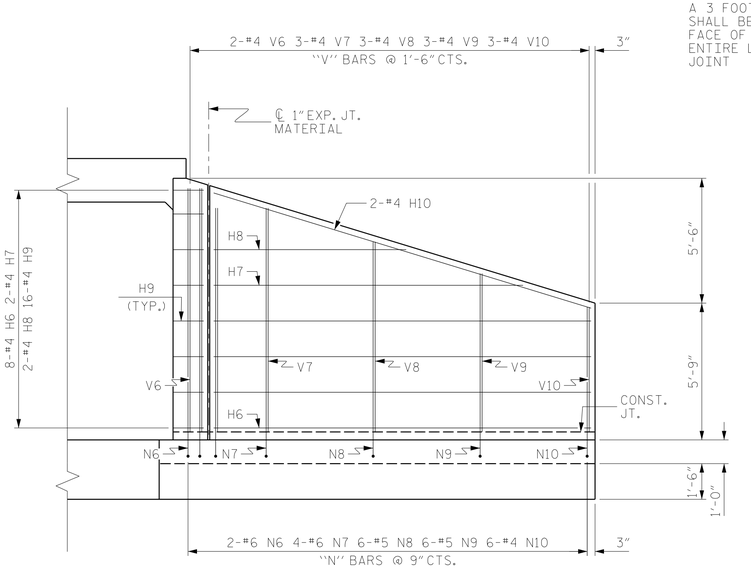

ELEVATION W1

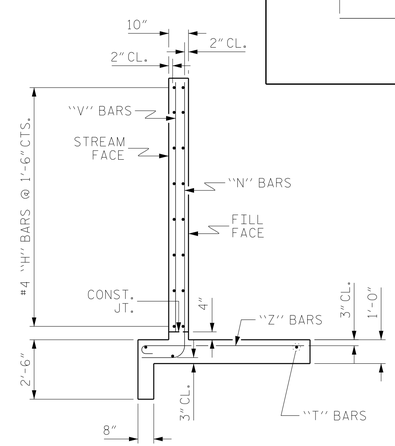

TYPICAL WING SECTION

BAR TYPES

ALL BAR DIMENSIONS ARE OUT TO OUT.

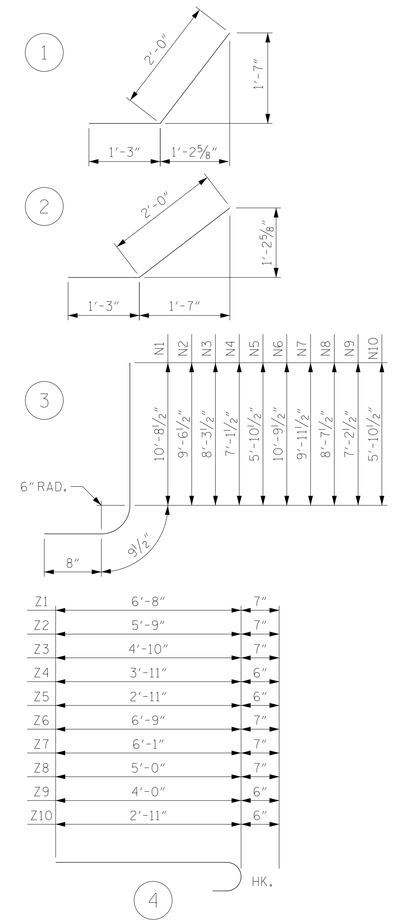

BILL OF MATERIAL

BAR	NO.	SIZE	TYPE	LENGTH	WEIGHT
H1	16	#4	STR	11'-7"	124
H2	4	#4	STR	9'-5"	25
H3	4	#4	STR	5'-8"	15
H4	32	#4	1	3'-3"	69
H5	4	#4	STR	12'-6"	33
H6	16	#4	STR	15'-10"	169
H7	4	#4	STR	13'-0"	35
H8	4	#4	STR	8'-1"	22
H9	32	#4	2	3'-3"	69
H10	4	#4	STR	16'-7"	44
N1	4	#6	3	12'-2"	73
N2	8	#6	3	11'-0"	132
N3	8	#5	3	9'-9"	81
N4	8	#5	3	8'-7"	72
N5	8	#4	3	7'-4"	39
N6	4	#6	3	12'-3"	74
N7	8	#6	3	11'-5"	137
N8	12	#5	3	10'-1"	126
N9	12	#5	3	8'-8"	108
N10	12	#4	3	7'-4"	59
S1	12	#6	STR	6'-0"	108
T1	6	#5	STR	13'-6"	84
T2	6	#5	STR	17'-9"	111
V1	4	#4	STR	10'-2"	27
V2	6	#4	STR	8'-11"	36
V3	4	#4	STR	7'-9"	21
V4	4	#4	STR	6'-6"	17
V5	4	#4	STR	5'-4"	14
V6	4	#4	STR	10'-3"	27
V7	6	#4	STR	9'-5"	38
V8	6	#4	STR	8'-0"	32
V9	6	#4	STR	6'-8"	27
V10	6	#4	STR	5'-3"	21
Z1	4	#5	4	7'-3"	30
Z2	8	#5	4	6'-4"	53
Z3	8	#5	4	5'-5"	45
Z4	8	#4	4	4'-5"	24
Z5	8	#4	4	3'-5"	18
Z6	4	#5	4	7'-4"	31
Z7	8	#5	4	6'-8"	56
Z8	12	#5	4	5'-7"	70
Z9	12	#4	4	4'-6"	36
Z10	12	#4	4	3'-5"	27

REINFORCING STEEL FOR 4 WINGS 2459 LBS

CLASS A CONCRETE		
4 WINGS	32.8	CY
2 HEADWALLS	2.1	CY
2 END CURTAIN WALLS	2.4	CY
4 SILLS	2.3	CY
TOTAL	39.6	CY

PROJECT NO. 17BP.12.R.201

GASTON COUNTY

STATION: 13+27.00-L-

SHEET 4 OF 6

NORTH CAROLINA PROFESSIONAL SEAL 28885 ENGINEER JOSHUA B. WHITE 9/11/14

STATE OF NORTH CAROLINA
DEPARTMENT OF TRANSPORTATION
RALEIGH

STANDARD WINGS FOR CONCRETE BOX CULVERT

H = 10'-0" SLOPE = 2:1

105° SKEW

PREPARED BY
TGS ENGINEERS
804 N LAFAYETTE ST
SHELBY, NC 28150

ASSEMBLED BY :	CCC	DATE :	8/14
CHECKED BY :	JBW	DATE :	8/14
DRAWN BY : CCJ	01/00		
CHECKED BY : RWW	03/00		

REVISIONS						SHEET NO.
NO.	BY:	DATE:	NO.	BY:	DATE:	C-4
1			3			TOTAL SHEETS
2			4			6

STD. NO. CW7510.STD

LOAD AND RESISTANCE FACTOR RATING (LRFR) SUMMARY FOR REINFORCED CONCRETE BOX CULVERTS

LEVEL		VEHICLE	WEIGHT (W) (TONS)	CONTROLLING LOAD RATING (#)	MINIMUM RATING FACTORS (RF)	TONS = W × RF	STRENGTH I LIMIT STATE									COMMENT NUMBER
							LIVE-LOAD FACTORS (γ_L)	MOMENT				SHEAR				
								RATING FACTOR	BOX NO.	ELEMENT TYPE	DISTANCE FROM LEFT END OF ELEMENT (ft)	RATING FACTOR	BOX NO.	ELEMENT TYPE	DISTANCE FROM LEFT END OF ELEMENT (ft)	
DESIGN LOAD RATING		HL-93 (INVENTORY)	N/A	1	1.24	--	1.75	1.59	2	BOTTOM SLAB	0	1.24	1	EXT. WALL	0	
		HL-93 (OPERATING)	N/A	--	1.6	--	1.35	2.06	2	BOTTOM SLAB	0	1.6	1	EXT. WALL	0	
		HS-20 (INVENTORY)	36.000	2	1.24	44.6	1.75	1.59	2	BOTTOM SLAB	0	1.24	1	EXT. WALL	0	
		HS-20 (OPERATING)	36.000	--	1.6	57.6	1.35	2.06	2	BOTTOM SLAB	0	1.6	1	EXT. WALL	0	
LEGAL LOAD RATING	SINGLE VEHICLE (SV)	SNSH	13.500	--	2.65	35.8	1.40	3	2	BOTTOM SLAB	0	2.65	1	EXT. WALL	0	
		SNGARBS2	20.000	--	2.58	51.6	1.40	2.89	2	BOTTOM SLAB	0	2.58	1	EXT. WALL	0	
		SNAGRIS2	22.000	--	2.51	55.22	1.40	3.02	2	BOTTOM SLAB	0	2.51	1	EXT. WALL	0	
		SNCOTTS3	27.250	--	1.29	35.15	1.40	1.43	2	BOTTOM SLAB	0	1.29	1	EXT. WALL	0	
		SNAGGRS4	34.925	--	1.28	44.7	1.40	1.45	2	BOTTOM SLAB	0	1.28	1	EXT. WALL	0	
		SNS5A	35.550	--	1.21	43.02	1.40	1.35	2	BOTTOM SLAB	0	1.21	1	EXT. WALL	0	
		SNS6A	39.950	--	1.16	46.34	1.40	1.32	2	BOTTOM SLAB	0	1.16	1	EXT. WALL	0	
		SNS7B	42.000	3	1.15	48.3	1.40	1.3	2	BOTTOM SLAB	0	1.15	1	EXT. WALL	0	
	TRUCK TRACTOR SEMI-TRAILER (TTST)	TNAGRIT3	33.000	--	1.78	58.74	1.40	2.07	2	BOTTOM SLAB	0	1.78	1	EXT. WALL	0	
		TNT4A	33.075	--	1.44	47.63	1.40	1.67	2	BOTTOM SLAB	0	1.44	1	EXT. WALL	0	
		TNT6A	41.600	--	1.33	55.33	1.40	1.51	2	BOTTOM SLAB	0	1.33	1	EXT. WALL	0	
		TNT7A	42.000	--	1.39	58.38	1.40	1.59	2	BOTTOM SLAB	0	1.39	1	EXT. WALL	0	
		TNT7B	42.000	--	1.25	52.5	1.40	1.43	2	BOTTOM SLAB	0	1.25	1	EXT. WALL	0	
		TNAGRIT4	43.000	--	1.33	57.19	1.40	1.59	2	BOTTOM SLAB	0	1.33	1	EXT. WALL	0	
		TNAGT5A	45.000	--	1.33	59.85	1.40	1.59	2	BOTTOM SLAB	0	1.33	1	EXT. WALL	0	
		TNAGT5B	45.000	--	1.33	59.85	1.40	1.6	2	BOTTOM SLAB	0	1.33	1	EXT. WALL	0	

LOAD FACTORS:

DESIGN LOAD RATING FACTORS

LOAD TYPE	MAX FACTOR	MIN FACTOR
DC	1.25	0.90
DW	1.50	0.65
EV	1.30	0.90
EH	1.35	0.90
ES	1.35	0.90
LS	1.75	--
WA	1.00	--

NOTE:

RATING FACTORS ARE BASED ON THE STRENGTH I LIMIT STATE.

COMMENTS:

1.
2.
3.
4.

(#) CONTROLLING LOAD RATING

(1) DESIGN LOAD RATING (HL-93)

(2) DESIGN LOAD RATING (HS-20)

(3) LEGAL LOAD RATING **

** SEE CHART FOR VEHICLE TYPE

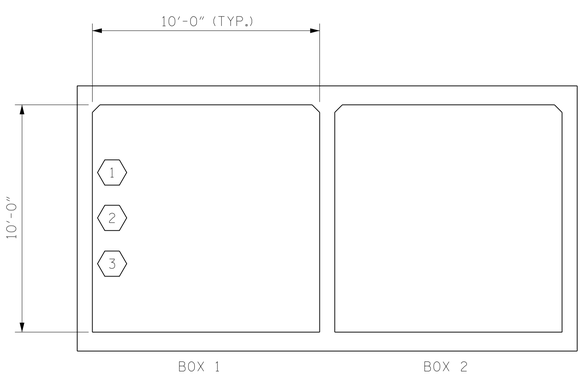

LRFR SUMMARY

(LOOKING DOWNSTREAM)

PROJECT NO. 17BP.12.R.201

GASTON COUNTY

STATION: 13+27.00-L-

SHEET 5 OF 6

NORTH CAROLINA PROFESSIONAL SEAL 28885 ENGINEER JOSHUA B WHITE

9/11/14

STATE OF NORTH CAROLINA
DEPARTMENT OF TRANSPORTATION
RALEIGH

STANDARD

LRFR SUMMARY FOR REINFORCED CONCRETE BOX CULVERTS (NON-INTERSTATE TRAFFIC)

REVISIONS						SHEET NO.
NO.	BY:	DATE:	NO.	BY:	DATE:	C-5
1			3			TOTAL SHEETS
2			4			6

PREPARED BY
TGS ENGINEERS
804 N LAFAYETTE ST
SHELBY, NC 28150

ASSEMBLED BY :	CCC	DATE :	9/14
CHECKED BY :	JBW	DATE :	9/14
DRAWN BY : WMC	7/11	REV. 10/1/11	MAA/GM
CHECKED BY : GM	7/11		

STD. NO. LRFR5

STANDARD NOTES

DESIGN DATA:

SPECIFICATIONS	A.A.S.H.T.O. (CURRENT)
LIVE LOAD	SEE PLANS
IMPACT ALLOWANCE	SEE A.A.S.H.T.O.
STRESS IN EXTREME FIBER OF	
STRUCTURAL STEEL - AASHTO M270 GRADE 36	20,000 LBS. PER SQ. IN.
- AASHTO M270 GRADE 50W	27,000 LBS. PER SQ. IN.
- AASHTO M270 GRADE 50	27,000 LBS. PER SQ. IN.
REINFORCING STEEL IN TENSION	
GRADE 60	24,000 LBS. PER SQ. IN.
CONCRETE IN COMPRESSION	1,200 LBS. PER SQ. IN.
CONCRETE IN SHEAR	SEE A.A.S.H.T.O.
STRUCTURAL TIMBER - TREATED OR	
UNTREATED - EXTREME FIBER STRESS	1,800 LBS. PER SQ. IN.
COMPRESSION PERPENDICULAR TO GRAIN OF TIMBER	375 LBS. PER SQ. IN.
EQUIVALENT FLUID PRESSURE OF EARTH	30 LBS. PER CU. FT. (MINIMUM)

MATERIAL AND WORKMANSHIP:

EXCEPT AS MAY OTHERWISE BE SPECIFIED ON PLANS OR IN THE SPECIAL PROVISIONS, ALL MATERIAL AND WORKMANSHIP SHALL BE IN ACCORDANCE WITH THE 2012 "STANDARD SPECIFICATIONS FOR ROADS AND STRUCTURES" OF THE N. C. DEPARTMENT OF TRANSPORTATION.

STEEL SHEET PILING FOR PERMANENT OR TEMPORARY APPLICATIONS SHALL BE HOT ROLLED.

CONCRETE:

UNLESS OTHERWISE REQUIRED ON PLANS, CLASS A CONCRETE SHALL BE USED FOR ALL PORTIONS OF ALL STRUCTURES WITH THE EXCEPTION THAT: CLASS AA CONCRETE SHALL BE USED IN BRIDGE SUPERSTRUCTURES, ABUTMENT BACKWALLS, AND APPROACH SLABS; AND CLASS B CONCRETE SHALL BE USED FOR SLOPE PROTECTION AND RIP RAP.

CONCRETE CHAMFERS:

UNLESS OTHERWISE NOTED ON THE PLANS, ALL EXPOSED CORNERS ON STRUCTURES SHALL BE CHAMFERED 3/4" WITH THE FOLLOWING EXCEPTIONS: TOP CORNERS OF CURBS MAY BE ROUNDED TO 1-1/2" RADIUS WHICH IS BUILT INTO CURB FORMS; CORNERS OF TRANSVERSE FLOOR EXPANSION JOINTS SHALL BE ROUNDED WITH A 1/4" FINISHING TOOL UNLESS OTHERWISE REQUIRED ON PLANS; AND CORNERS OF EXPANSION JOINTS IN THE ROADWAY FACES AND TOPS OF CURBS AND SIDEWALKS SHALL BE ROUNDED TO A 1/4" RADIUS WITH A FINISHING STONE OR TOOL UNLESS OTHERWISE REQUIRED ON PLANS.

DOWELS:

DOWELS WHEN INDICATED ON PLANS AS FOR CULVERT EXTENSIONS, SHALL BE EMBEDDED AT LEAST 12" INTO THE OLD CONCRETE AND GROUTED INTO PLACE WITH 1:2 CEMENT MORTAR.

ALLOWANCE FOR DEAD LOAD DEFLECTION, SETTLEMENT, ETC. IN CASTING SUPERSTRUCTURES:

BRIDGES SHALL BE BUILT ON THE GRADE OR VERTICAL CURVE SHOWN ON PLANS. SLABS, CURBS AND PARAPETS SHALL CONFORM TO THE GRADE OR CURVE.

ALL DIMENSIONS WHICH ARE GIVEN IN SECTION AND ARE AFFECTED BY DEAD LOAD DEFLECTIONS ARE DIMENSIONS AT CENTER LINE OF BEARING UNLESS OTHERWISE NOTED ON PLANS. IN SETTING FORMS FOR STEEL BEAM BRIDGES AND PRESTRESSED CONCRETE GIRDER BRIDGES, ADJUSTMENTS SHALL BE MADE DUE TO THE DEAD LOAD DEFLECTIONS FOR THE ELEVATIONS SHOWN. WHERE BLOCKS ARE SHOWN OVER BEAMS FOR BUILDING UP TO THE SLAB, THE VERTICAL DIMENSIONS OF THE BLOCKS SHALL BE ADJUSTED BETWEEN BEARINGS TO COMPENSATE FOR DEAD LOAD DEFLECTIONS, VERTICAL CURVE ORDINATE, AND ACTUAL BEAM CAMBER. WHERE BOTTOM OF SLAB IS IN LINE WITH BOTTOM OF TOP FLANGES, DEPTH OF SLAB BETWEEN BEARINGS SHALL BE ADJUSTED TO COMPENSATE FOR DEAD LOAD DEFLECTION, VERTICAL CURVE ORDINATE, AND ACTUAL BEAM CAMBER.

IN SETTING FALSEWORK AND FORMS FOR REINFORCED CONCRETE SPANS, AN ALLOWANCE SHALL BE MADE FOR DEAD LOAD DEFLECTIONS, SETTLEMENT OF FALSEWORK, AND PERMANENT CAMBER WHICH SHALL BE PROVIDED FOR IN ADDITION TO THE ELEVATIONS SHOWN. AFTER REMOVAL OF THE FALSEWORK, THE FINISHED STRUCTURES SHALL CONFORM TO THE PROFILE AND ELEVATIONS SHOWN ON THE PLANS AND CONSTRUCTION ELEVATIONS FURNISHED BY THE ENGINEER.

DETAILED DRAWINGS FOR FALSEWORK OR FORMS FOR BRIDGE SUPERSTRUCTURE AND ANY STRUCTURE OR PARTS OF A STRUCTURE AS NOTED ON THE PLANS SHALL BE SUBMITTED TO THE ENGINEER FOR APPROVAL BEFORE CONSTRUCTION OF THE FALSEWORK OR FORMS IS STARTED.

REINFORCING STEEL:

ALL REINFORCING STEEL SHALL BE DEFORMED. DIMENSIONS RELATIVE TO PLACEMENT OF REINFORCING ARE TO CENTERS OF BARS UNLESS OTHERWISE INDICATED IN THE PLANS. DIMENSIONS ON BAR DETAILS ARE TO CENTERS OF BARS OR ARE OUT TO OUT AS INDICATED ON PLANS.

WIRE BAR SUPPORTS SHALL BE PROVIDED FOR REINFORCING STEEL WHERE INDICATED ON THE PLANS. WHEN BAR SUPPORT PIECES ARE PLACED IN CONTINUOUS LINES, THEY SHALL BE SO PLACED THAT THE ENDS OF THE SUPPORTING WIRES SHALL BE LAPPED TO LOCK LEGS ON ADJOINING PIECES.

STRUCTURAL STEEL:

AT THE CONTRACTOR'S OPTION, HE MAY SUBSTITUTE 7/8" Ø SHEAR STUDS FOR THE 3/4" Ø STUDS SPECIFIED ON THE PLANS. THIS SUBSTITUTION SHALL BE MADE AT THE RATE OF 3 - 7/8" Ø STUDS FOR 4 - 3/4" Ø STUDS, AND STUD SPACING CHANGES SHALL BE MADE AS NECESSARY TO PROVIDE THE SAME EQUIVALENT NUMBER OF 7/8" Ø STUDS ALONG THE BEAM AS SHOWN FOR 3/4" Ø STUDS BASED ON THE RATIO OF 3 - 7/8" Ø STUDS FOR 4 - 3/4" Ø STUDS. STUDS OF THE LENGTH SPECIFIED ON THE PLANS MUST BE PROVIDED. THE MAXIMUM SPACING SHALL BE 2'-0".

EXCEPT AT THE INTERIOR SUPPORTS OF CONTINUOUS BEAMS WHERE THE COVER PLATE IS IN CONTACT WITH BEARING PLATE, THE CONTRACTOR MAY, AT HIS OPTION, SUBSTITUTE FOR THE COVER PLATES DESIGNATED ON THE PLANS COVER PLATES OF THE EQUIVALENT AREA PROVIDED THESE PLATES ARE AT LEAST 5/16" IN THICKNESS AND DO NOT EXCEED A WIDTH EQUAL TO THE FLANGE WIDTH LESS 2" OR A THICKNESS EQUAL TO 2 TIMES THE FLANGE THICKNESS. THE SIZE OF FILLET WELDS SHALL CONFORM TO THE REQUIREMENTS OF THE CURRENT ANSI/AASHTO/AWS "BRIDGE WELDING CODE". ELECTROSLAG WELDING WILL NOT BE PERMITTED.

WITH THE SOLE EXCEPTION OF EDGES AT SURFACES WHICH BEAR ON OTHER SURFACES, ALL SHARP EDGES AND ENDS OF SHAPES AND PLATES SHALL BE SLIGHTLY ROUNDED BY SUITABLE MEANS TO A RADIUS OF APPROXIMATELY 1/16 INCH OR EQUIVALENT FLAT SURFACE AT A SUITABLE ANGLE PRIOR TO PAINTING, GALVANIZING, OR METALLIZING.

HANDRAILS AND POSTS:

METAL STANDARDS AND FACES OF THE CONCRETE END POSTS FOR THE METAL RAIL SHALL BE SET NORMAL TO THE GRADE OF THE CURB, UNLESS OTHERWISE SHOWN ON PLANS. THE METAL RAIL AND TOPS OF CONCRETE POSTS USED WITH THE ALUMINUM RAIL SHALL BE BUILT PARALLEL TO THE GRADE OF THE CURB.

METAL HANDRAILS SHALL BE IN ACCORDANCE WITH THE PLANS. RAILS SHALL BE AS MANUFACTURED FOR BRIDGE RAILING. CASTINGS SHALL BE OF A UNIFORM APPEARANCE. FINS AND OTHER DEFORMATIONS RESULTING FROM CASTING OR OTHERWISE SHALL BE REMOVED IN A MANNER SO THAT A UNIFORM COLORING OF THE COMPLETED CASTING SHALL BE OBTAINED. CASTINGS WITH DISCOLORATIONS OR OF NON-UNIFORM COLORING WILL NOT BE ACCEPTED. CERTIFIED MILL REPORTS ARE REQUIRED FOR METAL RAILS AND POSTS.

SPECIAL NOTES:

GENERALLY, IN CASE OF DISCREPANCY, THIS STANDARD SHEET OF NOTES SHALL GOVERN OVER THE SPECIFICATIONS, BUT THE REMAINDER OF THE PLANS SHALL GOVERN OVER NOTES HEREON, AND SPECIAL PROVISIONS SHALL GOVERN OVER ALL. SEE SPECIFICATIONS ARTICLE 105-4.

PROJECT NO. 17BP.12.R.201

GASTON COUNTY

STATION: 13+27.00-L-

SHEET 6 OF 6

NORTH CAROLINA PROFESSIONAL SEAL 28885 ENGINEER JOSHUA B. WHITE

9/11/14

STATE OF NORTH CAROLINA
DEPARTMENT OF TRANSPORTATION
RALEIGH

STANDARD NOTES

REVISIONS						SHEET NO.
NO.	BY:	DATE:	NO.	BY:	DATE:	C-6
1			3			TOTAL SHEETS
2			4			6

PREPARED BY
TGS ENGINEERS
804 N LAFAYETTE ST
SHELBY, NC 28150

DRAWN BY :	CCC	DATE :	8/14
CHECKED BY :	JBW	DATE :	8/14

REV. 6-16-95 EEM ()RGW REV. 5-7-03 RWW ()JTE REV. 10-1-11 MAA ()GM
REV. 8-16-99 RWW ()LES REV. 5-1-06 TLA ()GM

STD. NO. SN

09/08/99

TIP PROJECT:17BP.12.R.201

STATE	STATE PROJECT REFERENCE NO.	SHEET NO.	TOTAL SHEETS
N.C.	17BP.12.R.201	1	

STATE PROJ. NO.	F.A. PROJ. NO.	DESCRIPTION
17BP.12.R.7		PE
17BP.12.R.7		R/W, UTIL
17BP.12.R.201		CONST.

See Sheet 1-A For Index of Sheets

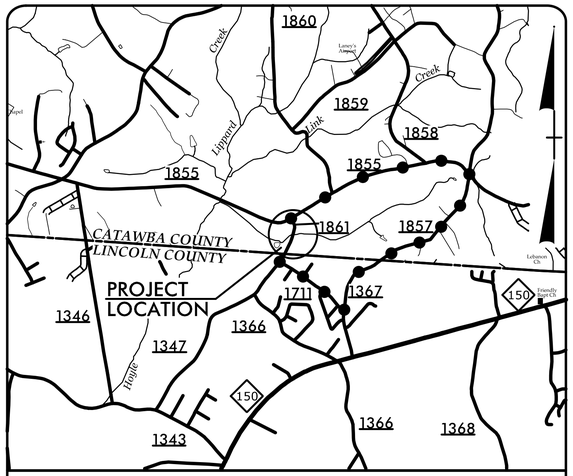

VICINITY MAP

OFFSITE DETOUR

STATE OF NORTH CAROLINA
DIVISION OF HIGHWAYS

CATAWBA COUNTY

LOCATION: BRIDGE NO. 170136 OVER LIPPARD CREEK ON SR 1861 (CALEB ROAD)

TYPE OF WORK: GRADING, DRAINAGE, PAVING, AND STRUCTURE

NAD 83/
NSRS 2007

4

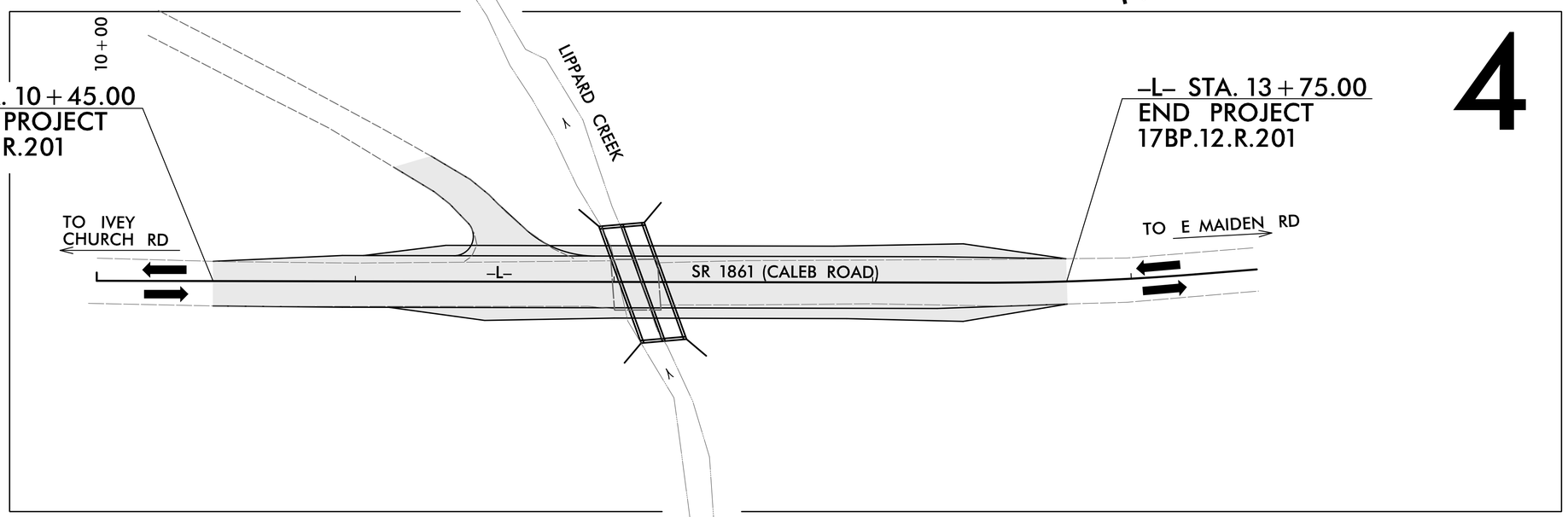

DESIGN EXCEPTION REQUIRED FOR VERTICAL CURVATURE
AND VERTICAL STOPPING SIGHT DISTANCE

CONTRACT:

$$$$SYSTIME$$$$
$$$$USERNAME$$$$
$$$$DGN$$$$

GRAPHIC SCALES

20 10 0 20 40
PLANS

20 10 0 20 40
PROFILE (HORIZONTAL)

4 2 0 4 8
PROFILE (VERTICAL)

DESIGN DATA

ADT 2012 = 1,000

V = 55 MPH

TTST = 6 %

FUNC CLASS =
RURAL LOCAL
SUB REGIONAL TIER

PROJECT LENGTH

LENGTH TOTAL PROJECT 17BP.12.R.201, #170136 = 0.063 MILES

NCDOT CONTACT: STEVE RACKLEY, PE

PLANS PREPARED BY:

TGS ENGINEERS
804-C N. LAFAYETTE ST
SHELBY, NC 28150
PH (704) 476-0003
CORP. LICENSE NO.: C-0275

PLANS PREPARED FOR:

NORTH CAROLINA
DEPARTMENT OF
TRANSPORATION
DIVISION 12
1710 East Marion Street
Shelby, NC 28151

LETTING DATE:

2012 STANDARD SPECIFICATIONS

LEONARD G. FLETCHER, PE
PROJECT ENGINEER

B. CHAD HOUSER, PE
PROJECT DESIGN ENGINEER

HYDRAULICS ENGINEER

NORTH CAROLINA PROFESSIONAL SEAL 030189 ENGINEER THOMAS L. FLETCHER 12/4/2014

SIGNATURE:

ROADWAY DESIGN ENGINEER

NORTH CAROLINA PROFESSIONAL SEAL 30459 ENGINEER BOBBY C. HOUSER 12/4/2014

SIGNATURE:

STATE OF NORTH CAROLINA • DEPARTMENT OF TRANSPORTATION

8/17/99

Catawba County
Bridge # 170136

PROJECT REFERENCE NO.	SHEET NO.
17BP.12.R.201	1-A

ROADWAY DESIGN ENGINEER

NORTH CAROLINA PROFESSIONAL SEAL 30499 ENGINEER BOBBY C. HOUSER 12/4/2012

INDEX OF SHEETS

INDEX OF SHEETS

SHEET NUMBER	SHEET
1	TITLE SHEET
1-A	INDEX OF SHEETS, GENERAL NOTES, AND LIST OF STANDARD DRAWINGS
1-B	CONVENTIONAL SYMBOLS
1-C	SURVEY CONTROL SHEET
2	PAVEMENT SCHEDULE AND TYPICAL SECTIONS
3	SUMMARY OF GUARDRAIL AND EARTHWORK SUMMARY
3-A	SUMMARY OF DRAINAGE QUANTITIES
4	PLAN AND PROFILE SHEET
TMP-1 THRU TMP-3	TRAFFIC MANAGEMENT PLANS
SD-1	SPECIAL SIGN DESIGN
PM-1	PAVEMENT MARKING PLAN
EC-1 THRU EC-5	EROSION CONTROL PLANS
X-1 THRU X-3	CROSS-SECTIONS
C-1 THRU C-5	CULVERT PLANS

GENERAL NOTES

GENERAL NOTES:

2012 SPECIFICATIONS
EFFECTIVE: 01-17-2012
REVISED: 07-30-2012

GRADE LINE:
GRADING AND SURFACING:

THE GRADE LINES SHOWN DENOTE THE FINISHED ELEVATION OF THE PROPOSED SURFACING AT GRADE POINTS SHOWN ON THE TYPICAL SECTIONS. GRADE LINES MAY BE ADJUSTED AT THEIR BEGINNING AND ENDING AND AT STRUCTURES AS DIRECTED BY THE ENGINEER IN ORDER TO SECURE A PROPER TIE-IN.

CLEARING:

CLEARING ON THIS PROJECT SHALL BE PERFORMED TO THE LIMITS ESTABLISHED BY METHOD II.

SUPERELEVATION:

ALL CURVES ON THIS PROJECT SHALL BE SUPERELEVATED IN ACCORDANCE WITH STD. NO. 225.04 USING THE RATE OF SUPERELEVATION AND RUNOFF SHOWN ON THE PLANS. SUPERELEVATION IS TO BE REVOLVED ABOUT THE GRADE POINTS SHOWN ON THE TYPICAL SECTIONS.

SHOULDER CONSTRUCTION:

ASPHALT, EARTH, AND CONCRETE SHOULDER CONSTRUCTION ON THE HIGH SIDE OF SUPERELEVATED CURVES SHALL BE IN ACCORDANCE WITH STD. NO. 560.01.

SIDE ROADS:

THE CONTRACTOR WILL BE REQUIRED TO DO ALL NECESSARY WORK TO PROVIDE SUITABLE CONNECTIONS WITH ALL ROADS, STREETS, AND DRIVES ENTERING THIS PROJECT. THIS WORK WILL BE PAID FOR AT THE CONTRACT UNIT PRICE FOR THE PARTICULAR ITEMS INVOLVED.

GUARDRAIL:

THE GUARDRAIL LOCATIONS SHOWN ON THE PLANS MAY BE ADJUSTED DURING CONSTRUCTION AS DIRECTED BY THE ENGINEER. THE CONTRACTOR SHOULD CONSULT WITH THE ENGINEER PRIOR TO ORDERING GUARDRAIL MATERIAL.

SUBSURFACE PLANS:

NO SUBSURFACE PLANS ARE AVAILABLE ON THIS PROJECT. THE CONTRACTOR SHOULD MAKE HIS OWN INVESTIGATION AS TO THE SUBSURFACE CONDITIONS.

UTILITIES:

UTILITY OWNERS ON THIS PROJECT ARE AT&T.

ANY RELOCATION OF EXISTING UTILITIES WILL BE ACCOMPLISHED BY OTHERS.

RIGHT-OF-WAY MARKERS:

ALL RIGHT-OF-WAY MARKERS ON THIS PROJECT SHALL BE PLACED BY CONTRACT.

STANDARD DRAWINGS

EFF. 01-17-2012
REV. 10-30-2012

2012 ROADWAY ENGLISH STANDARD DRAWINGS

The following Roadway Standards as appear in "Roadway Standard Drawings" Highway Design Branch - N. C. Department of Transportation - Raleigh, N. C., Dated January, 2012 are applicable to this project and by reference hereby are considered a part of these plans:

STD.NO.	TITLE
DIVISION 2 - EARTHWORK	
200.02	Method of Clearing - Method II
225.02	Guide for Grading Subgrade - Secondary and Local
225.04	Method of Obtaining Superelevation - Two Lane Pavement
DIVISION 3 - PIPE CULVERTS	
300.01	Method of Pipe Installation
310.10	Driveway Pipe Construction
DIVISION 5 - SUBGRADE, BASES AND SHOULDERS	
560.01	Method of Shoulder Construction - High Side of Superelevated Curve - Method I
DIVISION 8 - INCIDENTALS	
862.01	Guardrail Placement
862.02	Guardrail Installation
876.02	Guide for Rip Rap at Pipe Outlets

CYNTHIA GRAHAM

04/16/11

PROJECT REFERENCE NO.	SHEET NO.
17BPJ2.R.201	1-B

Note: Not to Scale

S.U.E. = Subsurface Utility Engineering

STATE OF NORTH CAROLINA
DIVISION OF HIGHWAYS

CONVENTIONAL PLAN SHEET SYMBOLS

BOUNDARIES AND PROPERTY:

- State Line
- County Line
- Township Line
- City Line
- Reservation Line
- Property Line
- Existing Iron Pin — EIP
- Property Corner
- Property Monument — ECM
- Parcel/Sequence Number — 123
- Existing Fence Line
- Proposed Woven Wire Fence
- Proposed Chain Link Fence
- Proposed Barbed Wire Fence
- Existing Wetland Boundary — WLB
- Proposed Wetland Boundary — WLB
- Existing Endangered Animal Boundary — EAB
- Existing Endangered Plant Boundary — EPB
- Known Soil Contamination: Area or Site
- Potential Soil Contamination: Area or Site

BUILDINGS AND OTHER CULTURE:

- Gas Pump Vent or U/G Tank Cap
- Sign — S
- Well — W
- Small Mine
- Foundation
- Area Outline
- Cemetery
- Building
- School
- Church
- Dam

HYDROLOGY:

- Stream or Body of Water
- Hydro, Pool or Reservoir
- Jurisdictional Stream — JS
- Buffer Zone 1 — BZ 1
- Buffer Zone 2 — BZ 2
- Flow Arrow
- Disappearing Stream
- Spring
- Wetland
- Proposed Lateral, Tail, Head Ditch — FLOW
- False Sump

RAILROADS:

- Standard Gauge — CSX TRANSPORTATION
- RR Signal Milepost — MILEPOST 35
- Switch — SWITCH
- RR Abandoned
- RR Dismantled

RIGHT OF WAY:

- Baseline Control Point
- Existing Right of Way Marker
- Existing Right of Way Line
- Proposed Right of Way Line — RW
- Proposed Right of Way Line with Iron Pin and Cap Marker — RW
- Proposed Right of Way Line with Concrete or Granite R/W Marker — RW
- Proposed Control of Access Line with Concrete C/A Marker — CA
- Existing Control of Access — CA
- Proposed Control of Access — CA
- Existing Easement Line — E
- Proposed Temporary Construction Easement — E
- Proposed Temporary Drainage Easement — TDE
- Proposed Permanent Drainage Easement — PDE
- Proposed Permanent Drainage / Utility Easement — DUE
- Proposed Permanent Utility Easement — PUE
- Proposed Temporary Utility Easement — TUE
- Proposed Aerial Utility Easement — AUE
- Proposed Permanent Easement with Iron Pin and Cap Marker

ROADS AND RELATED FEATURES:

- Existing Edge of Pavement
- Existing Curb
- Proposed Slope Stakes Cut — C
- Proposed Slope Stakes Fill — F
- Proposed Curb Ramp — CR
- Existing Metal Guardrail
- Proposed Guardrail
- Existing Cable Guiderail
- Proposed Cable Guiderail
- Equality Symbol
- Pavement Removal

VEGETATION:

- Single Tree
- Single Shrub
- Hedge
- Woods Line
- Orchard
- Vineyard — Vineyard

EXISTING STRUCTURES:

MAJOR:

- Bridge, Tunnel or Box Culvert — CONC
- Bridge Wing Wall, Head Wall and End Wall — CONC WW

MINOR:

- Head and End Wall — CONC HW
- Pipe Culvert
- Footbridge
- Drainage Box: Catch Basin, DI or JB — CB
- Paved Ditch Gutter
- Storm Sewer Manhole — S
- Storm Sewer — S

UTILITIES:

POWER:

- Existing Power Pole
- Proposed Power Pole
- Existing Joint Use Pole
- Proposed Joint Use Pole
- Power Manhole — P
- Power Line Tower
- Power Transformer
- U/G Power Cable Hand Hole
- H-Frame Pole
- Recorded U/G Power Line — P
- Designated U/G Power Line (S.U.E.*) — P

TELEPHONE:

- Existing Telephone Pole
- Proposed Telephone Pole
- Telephone Manhole — T
- Telephone Booth
- Telephone Pedestal — T
- Telephone Cell Tower
- U/G Telephone Cable Hand Hole — HH
- Recorded U/G Telephone Cable — T
- Designated U/G Telephone Cable (S.U.E.*) — T
- Recorded U/G Telephone Conduit — TC
- Designated U/G Telephone Conduit (S.U.E.*) — TC
- Recorded U/G Fiber Optics Cable — T FO
- Designated U/G Fiber Optics Cable (S.U.E.*) — T FO

WATER:

- Water Manhole — W
- Water Meter
- Water Valve
- Water Hydrant
- Recorded U/G Water Line — W
- Designated U/G Water Line (S.U.E.*) — W
- Above Ground Water Line — A/G Water

TV:

- TV Satellite Dish
- TV Pedestal — C
- TV Tower
- U/G TV Cable Hand Hole — HH
- Recorded U/G TV Cable — TV
- Designated U/G TV Cable (S.U.E.*) — TV
- Recorded U/G Fiber Optic Cable — TV FO
- Designated U/G Fiber Optic Cable (S.U.E.*) — TV FO

GAS:

- Gas Valve
- Gas Meter
- Recorded U/G Gas Line — G
- Designated U/G Gas Line (S.U.E.*) — G
- Above Ground Gas Line — A/G Gas

SANITARY SEWER:

- Sanitary Sewer Manhole
- Sanitary Sewer Cleanout
- U/G Sanitary Sewer Line — SS
- Above Ground Sanitary Sewer — A/G Sanitary Sewer
- Recorded SS Forced Main Line — FSS
- Designated SS Forced Main Line (S.U.E.*) — FSS

MISCELLANEOUS:

- Utility Pole
- Utility Pole with Base
- Utility Located Object
- Utility Traffic Signal Box — S
- Utility Unknown U/G Line — ?UTL
- U/G Tank; Water, Gas, Oil
- Underground Storage Tank, Approx. Loc. — UST
- A/G Tank; Water, Gas, Oil
- Geoenvironmental Boring
- U/G Test Hole (S.U.E.*)
- Abandoned According to Utility Records — AATUR
- End of Information — E.O.I.

PROJECT REFERENCE NO.	SHEET NO.
17BP.12.R.201	1-C

8/17/99

REVISIONS

CATAWBA COUNTY
LOW IMPACT BRIDGE

STRUCTURE 170136
LS 12-11-027
WBS 17BP.12.R.201
TIP 17-0136

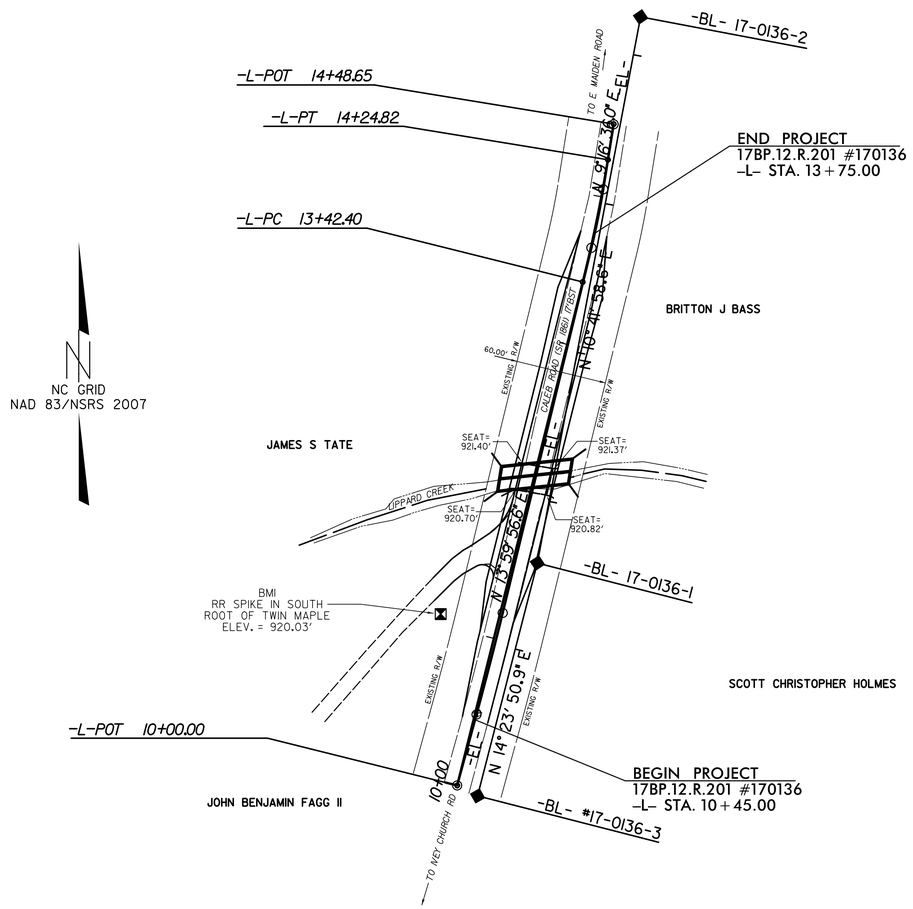

NC GRID
NAD 83/NSRS 2007

BL

POINT	DESC.	NORTH	EAST	ELEVATION	EL STATION	OFFSET
3	17-0136-3	663503.1331	1368346.0132	927.60	OUTSIDE PROJECT LIMITS	
1	17-0136-1	663656.7770	1368385.4550	922.32	11+55.14	14.48 RT
2	17-0136-2	664017.1704	1368453.5495	947.26	OUTSIDE PROJECT LIMITS	

BM1 ELEVATION = 920.03
N 663623 E 1368322
EL STATION 11+07.00 40 LEFT
RR SPIKE IN SOUTH ROOT OF TWIN MAPLE

1 ELEVATION = 922.32
N 663657 E 1368385
EL STATION 11+55.00 14 RIGHT
17-0136-1

Scale 1" = 50'
50' 0 50' 100'

DATUM DESCRIPTION

THE LOCALIZED COORDINATE SYSTEM DEVELOPED FOR THIS PROJECT IS BASED ON THE STATE PLANE COORDINATES ESTABLISHED BY NCGS FOR MONUMENT "17-0136-1"
WITH NAD 83/NSRS 2007 STATE PLANE GRID COORDINATES OF
NORTHING: 663656.777(ft) EASTING: 1368385.455(ft)
ELEVATION: 922.32(ft)
THE AVERAGE COMBINED GRID FACTOR USED ON THIS PROJECT (GROUND TO GRID) IS: 0.9998474776
THE N.C. LAMBERT GRID BEARING AND LOCALIZED HORIZONTAL GROUND DISTANCE FROM "17-0136-1" TO -L- STATION 10+00.00 IS
S19°49'55.2"W 156.02'
ALL LINEAR DIMENSIONS ARE LOCALIZED HORIZONTAL DISTANCES
VERTICAL DATUM USED IS NAVD 88

SYSTEM=$$$$
SYSTEM_ENGINEER=$$$$

6/2/99

Catawba County
Bridge # 170136

PROJECT REFERENCE NO.	SHEET NO.
17BPJ2.R.201	2
ROADWAY DESIGN ENGINEER	PAVEMENT DESIGN ENGINEER

NORTH CAROLINA PROFESSIONAL SEAL 30459 ENGINEER BOBBY C. HOUSER 12/14/2011

TGS ENGINEERS
TGS ENGINEERS
804-C N. LAFAYETTE ST
SHELBY, NC 28150
PH (704) 476-0003
CORP. LICENSE NO.: C-0275

PAVEMENT SCHEDULE	
C1	PROP. APPROX. 3″ ASPHALT CONCRETE SURFACE COURSE, TYPE SF9.5A, AT AN AVERAGE RATE OF 165 LBS. PER SQ. YD. IN EACH OF TWO LAYERS.
C2	PROP. VAR. DEPTH ASPHALT CONCRETE SURFACE COURSE, TYPE SF9.5A, AT AN AVERAGE RATE OF 110 LBS. PER SQ. YD. PER 1″ DEPTH. TO BE PLACED IN LAYERS NOT LESS THAN 1″ IN DEPTH OR GREATER THAN 1½″ IN DEPTH.
E1	PROP. APPROX. 4″ ASPHALT CONCRETE BASE COURSE, TYPE B25.0B, AT AN AVERAGE RATE OF 456 LBS. PER SQ. YD.
E2	PROP. VAR. DEPTH ASPHALT CONCRETE BASE COURSE, TYPE B25.0B, AT AN AVERAGE RATE OF 114 LBS. PER SQ. YD. PER 1″ DEPTH. TO BE PLACED IN LAYERS NOT LESS THAN 3″ IN DEPTH OR GREATER THAN 5½″ IN DEPTH.
T	EARTH MATERIAL
U	EXISTING PAVEMENT
V	MILLING EXISTING PAVEMENT (SEE MILLING DETAILS THIS SHEET)
W	VARIABLE DEPTH ASPHALT PAVEMENT (SEE WEDGING DETAILS THIS SHEET)

NOTE: PAVEMENT EDGE SLOPES ARE 1:1 UNLESS SHOWN OTHERWISE.

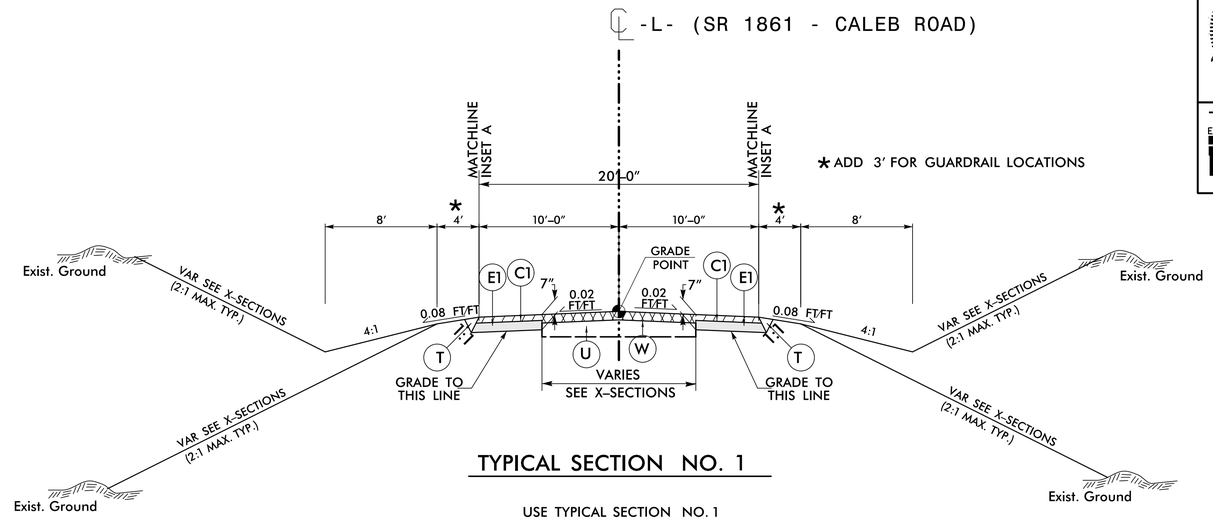

TYPICAL SECTION NO. 1

USE TYPICAL SECTION NO. 1
-L- STA. 10+95.00 TO -L- STA. 13+25.00

NOTE: TRANSITION BETWEEN EXISTING AND TYP. SECT. NO. 1 AS FOLLOWS:
-L- STA. 10+45.00 TO -L- STA. 10+95.00
-L- STA. 13+25.00 TO -L- STA. 13+75.00

NOTE: USE FULL DEPTH PAVEMENT FROM -L- STA. 11+85 +/- TO -L- STA. 13+00 +/-

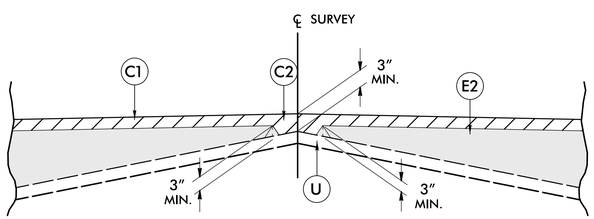

Detail Showing Method of Wedging

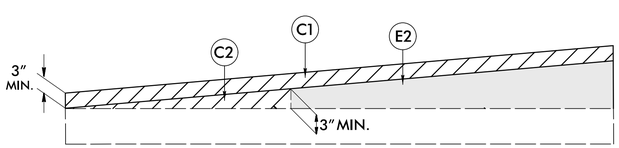

Wedging Detail For Resurfacing

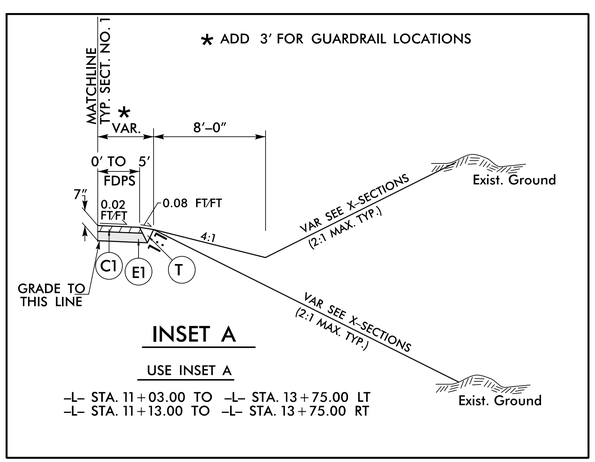

INSET A

USE INSET A
-L- STA. 11+03.00 TO -L- STA. 13+75.00 LT
-L- STA. 11+13.00 TO -L- STA. 13+75.00 RT

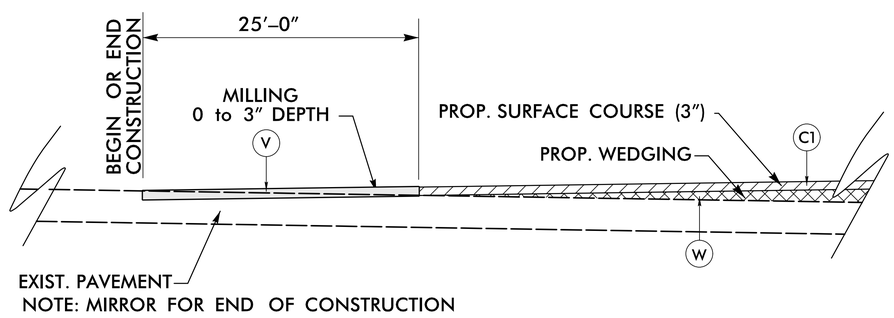

NOTE: MIRROR FOR END OF CONSTRUCTION

MILLING DETAIL

USE MILLING DETAIL AS FOLLOWS:

MILLING AND RESURFACING: -L- STA. 10+45.00 TO -L- STA. 10+70.00
-L- STA. 13+50.00 TO -L- STA. 13+75.00

COMPUTED BY: SGM	DATE: 8/7/2013
CHECKED BY: JLT	DATE: 8/15/2013

Catawba County	PROJECT NO.	SHEET NO.
Bridge # 170136	17BP.12.R.201	3

RD261649

STATE OF NORTH CAROLINA
DIVISION OF HIGHWAYS

SUMMARY OF EARTHWORK

IN CUBIC YARDS

Station	Station	Uncl. Excav.	Embank. +%	Borrow	Waste
-L- 10+45.00	-L- 13+75.00	1	506	505	
PROJECT TOTALS:		1	506	505	
EST. 5% TO REPLACE TOP SOIL ON BORROW PITS				25	
GRAND TOTALS:		1	506	530	
SAY:		10		590	

Approximate quantities only. Unclassified excavation, borrow excavation, fine grading, clearing and grubbing, and removal of existing pavement will be paid for at the lump sum price for "Grading".

PAVEMENT REMOVAL SUMMARY

IN SQUARE YARDS

SURVEY LINE	Station	Station	LOC LT/RT/CL	ASPHALT REMOVAL	ASPHALT BREAKUP
-L-	11+85	11+99	CL	28.61	
-L-	12+17	13+00	CL	155.09	
TOTAL:				183.7	
SAY:				190	

"N" = DISTANCE FROM EDGE OF LANE TO FACE OF GUARDRAIL
TOTAL SHOULDER WIDTH = DISTANCE FROM EDGE OF TRAVEL LANE TO SHOULDER BREAK POINT.
FLARE LENGTH = DISTANCE FROM LAST SECTION OF PARALLEL GUARDRAIL TO END OF GUARDRAIL.
W = TOTAL WIDTH OF FLARE FROM BEGINNING OF TAPER TO END OF GUARDRAIL.
G = GATING IMPACT ATTENUATOR TYPE 350
NG = NON-GATING IMPACT ATTENUATOR TYPE 350

GUARDRAIL SUMMARY

LINE	BEG. STA.	END STA.	LOC.	LENGTH STRAIGHT	LENGTH SHOP CURVED	LENGTH DOUBLE FACED	WARRANT POINT APPR. END	WARRANT POINT TRAIL. END	"N" DIST. FROM E.O.L.	TOTAL SHLDR WIDTH	FLAIR LENGTH APPR. END	FLAIR LENGTH TRAIL. END	W APPR. END	W TRAIL. END	ANCHORS		GRAU 350 (TL3)	AT-1				IMP. ATTEN. TYPE 350 EA	G	NG	REMOVE EXISTING GUARDRAIL		REMARKS
-L-	11+50.00	13+37.50	RT	187.50			12+10.53	12+27.92	4'	7'	50'	50'	1'	1'			2										
-L-	11+70	13+35.00	LT	143.75	31.25		12+11.64	11+94.11	4'	7'	50'		1'				1	1									
SUB-TOTALS:				331.25	31.25												3	1									
	LESS ANCHOR DEDUCTIONS																										
	GRAU-350 (TL-3)	3@50.00ft		150																							
	AT-1	1@6.25ft			6.25																						
	ANCHOR TOTALS			150	6.25																						
GRAND TOTALS				181.25	25.00												3	1									
SAY				187.5	37.5																						

ADDITIONAL GUARDRAIL POSTS = 5 EA

COMPUTED BY:	SGM	DATE:	8/7/2013
CHECKED BY:	JLT	DATE:	8/15/2013

PROJECT NO.	SHEET NO.
17BP.12.R.201	3-A

Catawba County
Bridge # 170136

RD248821

NORTH CAROLINA DEPARTMENT OF TRANSPORTATION
DIVISION OF HIGHWAYS

Note: Invert Elevations indicated are for Bid Purposes only and shall not be used for project construction stakeout.
See "Standard Specifications For Roads and Structures, Section 300-5".

LIST OF PIPES, ENDWALLS, ETC. (FOR PIPES 48 INCHES & UNDER)

STATION / SIZE / THICKNESS OR GAUGE	LOCATION (LT, RT, OR CL)'	STRUCTURE NO. FROM	STRUCTURE NO. TO	TOP ELEVATION	INVERT ELEVATION	INVERT ELEVATION	SLOPE CRITICAL	DRAINAGE PIPE (RCP, CSP, CAAP, HDPE, or PVC) 12"	15"	18"	24"	30"	36"	42"	48"	DO NOT USE RCP	DO NOT USE CSP	DO NOT USE CAAP	DO NOT USE HDPE
-L- 11+46	LT	0401							36										
TOTALS									36										

STATION	C.S. PIPE 12" .064	15" .064	18" .064	24" .064	30" .079	36" .079	42" .109	48" .109	R.C. PIPE CLASS III 12"	15"	18"	24"	30"	36"	42"	48"	R.C. PIPE CLASS IV 12"	15"	18"	24"	30"	36"	42"	48"
-L- 11+46																								
TOTALS																								

STATION	** R.C. PIPE (CLASS V)	*** RC PIPE CULVERTS, CONTRACTOR DESIGN	**** RC PIPE CULVERTS, CONTRACTOR DESIGN	15" SIDE DRAIN PIPE	18" SIDE DRAIN PIPE	ENDWALLS STD. 838.01 838.11 OR STD. 838.80 (UNLESS NOTED OTHERWISE) CU. YARDS R.C.P.	C.S.P.	QUANTITIES FOR DRAINAGE STRUCTURES *TOTAL L.F. FOR PAY QUANTITY SHALL BE COL. "A" + (1.3 X COL."B") PER EACH (0' THRU 5.0')	LIN. FT. A 5.0' THRU 10.0'	LIN. FT. B 10.0' AND ABOVE	C.B. STD. 840.01 OR STD. 840.02	FRAME, GRATES, AND HOOD STANDARD 840.03 TYPE OF GRATE E	F	G	CONCRETE TRANSITIONAL SECTION DROP INLET	CATCH BASIN	D.I. STD. 840.14 OR STD. 840.15	D.I. FRAME AND GRATE STD. 840.16	G.D.I. TYPE "A" STD. 840.17 OR 840.26	G.D.I. TYPE "B" STD. 840.18 OR 840.27	G.D.I. TYPE "D" STD. 840.19 OR 840.28	G.D.I. FRAME WITH GRATE STD. 840.20	G.D.I. FRAME WITH TWO GRATES STD. 840.22	G.D.I. (N.S.) FRAME WITH GRATE STD. 840.24	G.D.I. (N.S.) FRAME WITH TWO GRATES STD. 840.24	J.B. STD. 840.31 OR 840.32					DRAINAGE PIPE ELBOWS NO. & SIZE	CONC. & BRICK PIPE PLUG, C.Y. STD. 840.71	CONC. COLLARS CL. "B" C.Y. STD. 840.72	PIPE REMOVAL LIN. FT.	REMARKS
-L- 11+46																																						45	
TOTALS																																						45	

ABBREVIATIONS

C.B.	CATCH BASIN
N.D.I.	NARROW DROP INLET
D.I.	DROP INLET
G.D.I.	GRATED DROP INLET
G.D.I.(N.S.)	(NARROW SLOT)
J.B.	JUNCTION BOX
M.H.	MANHOLE
T.B.D.I.	TRAFFIC BEARING DROP INLET
T.B.J.B.	TRAFFIC BEARING JUNCTION BOX

PROJECT REFERENCE NO.	SHEET NO.
17BP.12.R.201	4
R/W SHEET NO.	
ROADWAY DESIGN ENGINEER	HYDRAULICS ENGINEER

NORTH CAROLINA PROFESSIONAL SEAL 30499 ENGINEER 12/4/2014 BOBBY C. HOUSER

NORTH CAROLINA PROFESSIONAL SEAL 025116 ENGINEER 12/4/2014 THOMAS L. FLETCHER

TGS ENGINEERS
TGS ENGINEERS
804-C N. LAFAYETTE ST
SHELBY, NC 28150
PH (704) 476-0003
CORP. LICENSE NO.: C-0275

Catawba County
Bridge # 170136

NAD 83/2007

USE NCDOT RDY STD. 862.01, SHEET 10 OF 12 FOR GUARDRAIL PLACEMENT AT STRUCTURE.

NOTE: UNKNOWN UTILITY ON WEST SIDE OF BRIDGE

-L- CURVE DATA
PI Sta 13+83.64
Δ = 4° 43' 20.7" (LT)
D = 5° 43' 46.5"
L = 82.42'
T = 41.23'
R = 1,000.00'
SE= 0.08
DS = 55 MPH

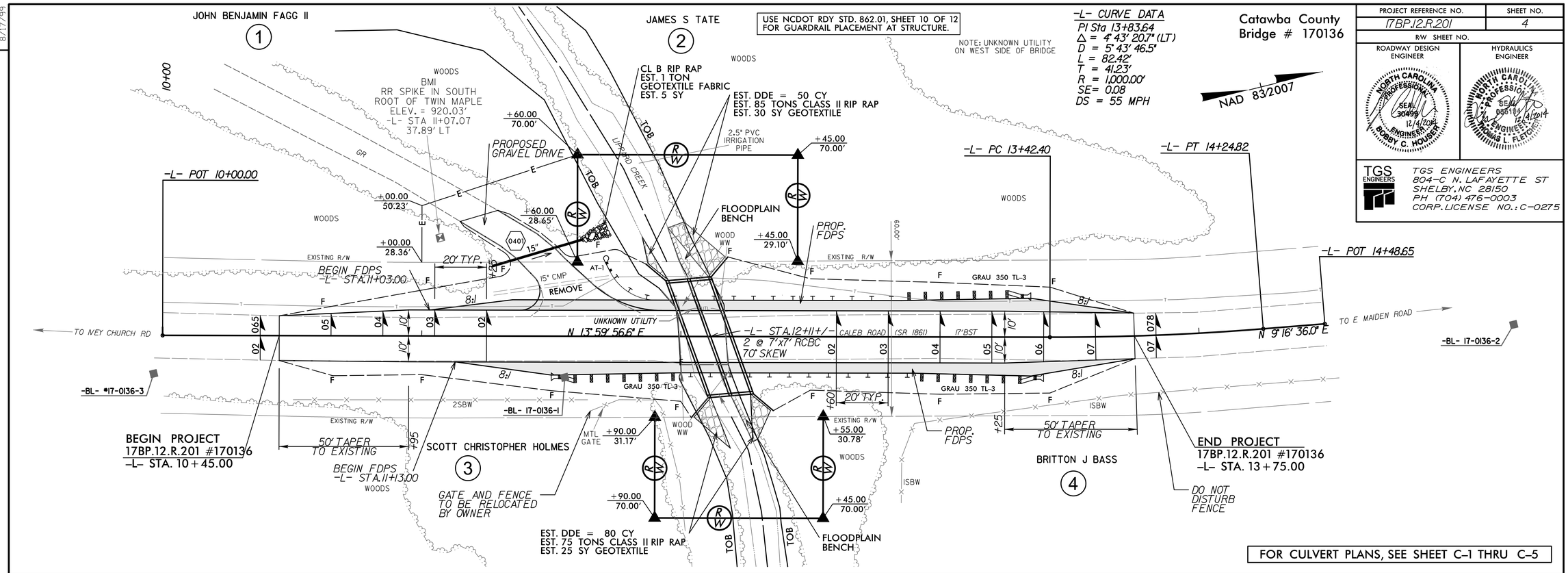

FOR CULVERT PLANS, SEE SHEET C-1 THRU C-5

BM#1 RR SPIKE IN SOUTH ROOT OF TWIN MAPLE
LT 37.89 ' OF -L- STA 11+07.07
ELEV. = 920.03'

*DESIGN EXCEPTION REQUIRED FOR VERTICAL CURVATURE AND VERTICAL STOPPING SIGHT DISTANCE

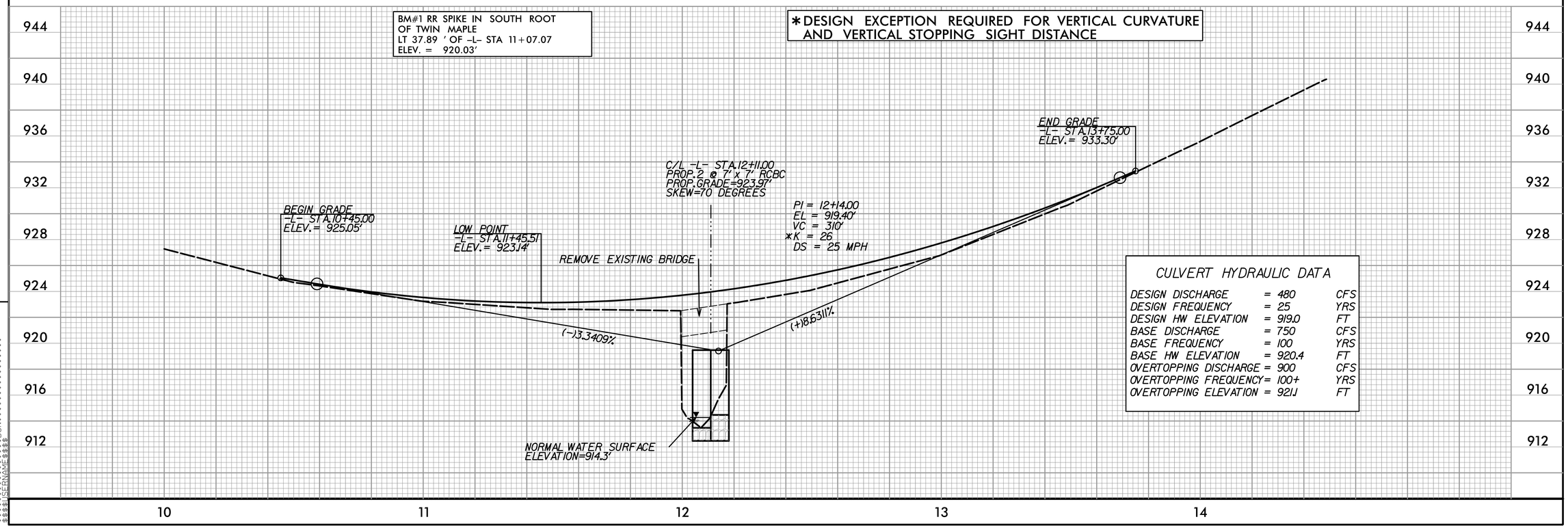

CULVERT HYDRAULIC DATA

DESIGN DISCHARGE	= 480	CFS
DESIGN FREQUENCY	= 25	YRS
DESIGN HW ELEVATION	= 919.0	FT
BASE DISCHARGE	= 750	CFS
BASE FREQUENCY	= 100	YRS
BASE HW ELEVATION	= 920.4	FT
OVERTOPPING DISCHARGE	= 900	CFS
OVERTOPPING FREQUENCY	= 100+	YRS
OVERTOPPING ELEVATION	= 921.1	FT

8/17/99

REVISIONS

SYSTEM ENGINEER

STATE OF NORTH CAROLINA
DIVISION OF HIGHWAYS

TRANSPORTATION MANAGEMENT PLAN

CATAWBA COUNTY

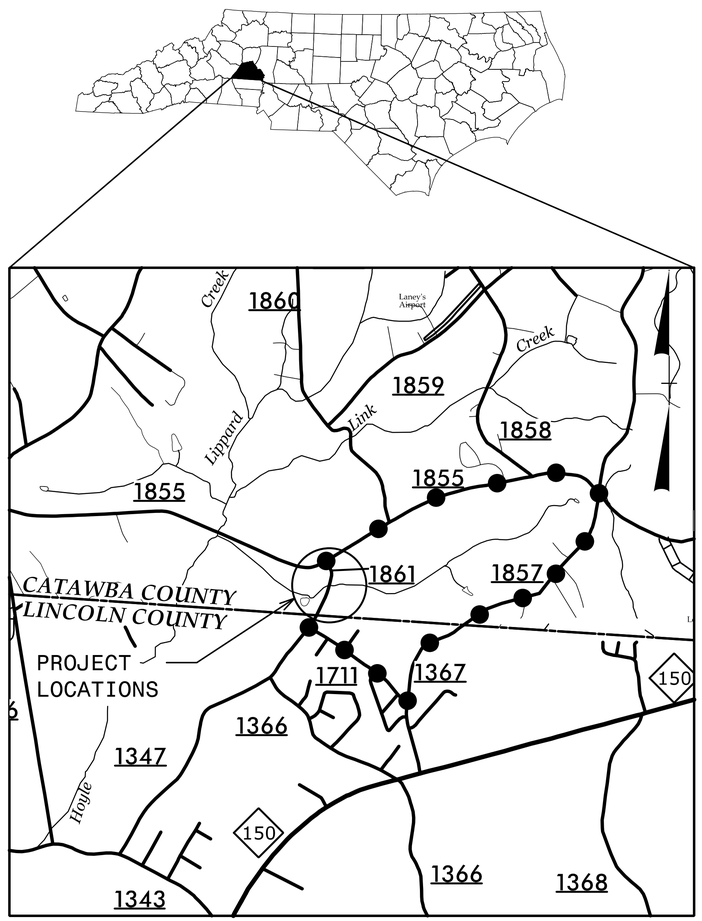

VICINITY MAP

OFFSITE DETOUR

INDEX OF SHEETS

SHEET NO.	TITLE
TMP-1	TITLE SHEET, VICINITY MAP AND INDEX OF SHEETS
TMP-1A	LIST OF APPLICABLE ROADWAY STANDARD DRAWINGS, AND LEGEND
TMP-1B	TRANSPORTATION OPERATIONS PLAN: (MANAGEMENT STRATEGIES, GENERAL NOTES AND LOCAL NOTES)
TMP-2	OVERVIEW AND PHASING
TMP-3	OFFSITE DETOUR ROUTE AND BARRICADE PLACEMENT
SD-1	SPECIAL SIGN DESIGN
PMP-1	FINAL PAVEMENT MARKING PLAN AND SCHEDULE

SHEET NO.
TMP-1

PROJECT: 17BP.12.R.201 #170136

WORK ZONE SAFETY & MOBILITY
"from the MOUNTAINS to the COAST"

PLAN PREPARED FOR N.C.D.O.T. BY:

TGS ENGINEERS
TGS ENGINEERS
804-C N. LAFAYETTE ST
SHELBY, NC 28150
PH (704) 476-0003
CORP. LICENSE NO.: C-0275

JIMMY L. TERRY, PE — PROJECT ENGINEER
SANDRA G. MELVIN — DESIGN TECHNICIAN

DIVISION OF HIGHWAYS
STATE OF NORTH CAROLINA
DEPARTMENT OF TRANSPORTATION
WORK ZONE TRAFFIC CONTROL

APPROVED: _____
DATE: _____

SEAL

NORTH CAROLINA PROFESSIONAL ENGINEER SEAL 35018 12/17/2018 JIMMY L. TERRY, JR.

$$$$$$SYSTIME$$$$$$
$$$$$$$$$$$$$$DGN$$$$$$$$$$$$$$
$$$$$$USERNAME$$$$$$

ROADWAY STANDARD DRAWINGS

THE FOLLOWING ROADWAY STANDARDS AS SHOWN IN "ROADWAY STANDARD DRAWINGS" - PROJECT SERVICES UNIT - N.C. DEPARTMENT OF TRANSPORTATION - RALEIGH, N.C., DATED JANUARY 2012 ARE APPLICABLE TO THIS PROJECT AND BY REFERENCE HEREBY ARE CONSIDERED A PART OF THESE PLANS:

STD. NO.	TITLE
1101.01	WORK ZONE WARNING SIGNS
1101.03	TEMPORARY ROAD CLOSURES
1101.11	TRAFFIC CONTROL DESIGN TABLES
1110.01	STATIONARY WORK ZONE SIGNS
1130.01	DRUMS
1145.01	BARRICADES
1205.01	PAVEMENT MARKINGS - LINE TYPES AND OFFSETS
1205.02	PAVEMENT MARKINGS - TWO LANE AND MULTILANE ROADWAYS
1261.01	GUARDRAIL AND BARRIER DELINEATORS - INSTALLATION SPACING
1261.02	GUARDRAIL AND BARRIER DELINEATORS - TYPES AND MOUNTING
1262.01	GUARDRAIL END DELINEATION

LEGEND

GENERAL

- DIRECTION OF TRAFFIC FLOW
- DIRECTION OF PEDESTRIAN TRAFFIC FLOW
- EXIST. PVMT.
- NORTH ARROW
- PROPOSED PVMT.
- TEMP. SHORING (LOCATION PURPOSES ONLY)
- WORK AREA
- REMOVAL
- USER DEFINED (IF NEEDED)
- USER DEFINED (IF NEEDED)

SIGNALS

- EXISTING
- PROPOSED
- TEMPORARY

PAVEMENT MARKINGS

- EXISTING LINES
- TEMPORARY LINES

TRAFFIC CONTROL DEVICES

- BARRICADE (TYPE III)
- CONE
- DRUM
- SKINNY DRUM
- TUBULAR MARKER
- TEMPORARY CRASH CUSHION
- FLASHING ARROW BOARD
- FLAGGER
- LAW ENFORCEMENT
- TRUCK MOUNTED ATTENUATOR (TMA)
- CHANGEABLE MESSAGE SIGN

TEMPORARY SIGNING

- PORTABLE SIGN
- STATIONARY SIGN
- STATIONARY OR PORTABLE SIGN

PAVEMENT MARKERS

- CRYSTAL/CRYSTAL
- CRYSTAL/RED
- YELLOW/YELLOW

PAVEMENT MARKING SYMBOLS

- PAVEMENT MARKING SYMBOLS

TGS ENGINEERS
804-C N. LAFAYETTE ST
SHELBY, NC 28150
PH (704) 476-0003
CORP. LICENSE NO.: C-0275

APPROVED:_____ DATE:_____

SEAL

NORTH CAROLINA PROFESSIONAL SEAL 35048 ENGINEER JIMMY L. TERRELL 12/12/2016

DIVISION OF HIGHWAYS
STATE OF NORTH CAROLINA
DEPARTMENT OF TRANSPORTATION
WORK ZONE TRAFFIC CONTROL

ROADWAY STANDARD DRAWINGS & LEGEND

$$$$$SYSTIME$$$$$
$$$$$$$$$$$$$$$$$$DGN$$$$$$$$$$$$$$$$$$
$$$USERNAME$$$

MANAGEMENT STRATEGIES

WHILE EXISTING CALEB ROAD (SR 1861) IS CLOSED DURING THE CONSTRUCTION OF THE PROPOSED CULVERT ON LIPPARD CREEK, TRAFFIC WILL BE MAINTAINED ON THE FOLLOWING OFFSITE DETOUR: FROM SR 1861 TO SR 1855 (E. MAIDEN RD) TO SR 1857/SR 1367 (ANDERSON MOUNTAIN RD) TO SR 1711 (COUNTRY ACRES DR) BACK TO SR 1861

LOCAL NOTES

PROVIDE ACCESS TO THE DRIVEWAY LOCATED SOUTH OF THE PROPOSED CULVERT AT ALL TIMES.

GENERAL NOTES

CHANGES MAY BE REQUIRED WHEN PHYSICAL DIMENSIONS IN THE DETAIL DRAWINGS, STANDARD DETAILS, AND ROADWAY DETAILS ARE NOT ATTAINABLE TO MEET FIELD CONDITIONS OR RESULT IN DUPLICATE OR UNDESIRED OVERLAPPING OF DEVICES. MODIFICATION MAY INCLUDE: MOVING, SUPPLEMENTING, COVERING, OR REMOVAL OF DEVICES AS DIRECTED BY THE ENGINEER.

THE FOLLOWING GENERAL NOTES APPLY AT ALL TIMES FOR THE DURATION OF THE CONSTRUCTION PROJECT EXCEPT WHEN OTHERWISE NOTED IN THE PLAN OR DIRECTED BY THE ENGINEER.

TRAFFIC PATTERN ALTERATIONS

A) NOTIFY THE ENGINEER TWENTY ONE (21) CALENDAR DAYS PRIOR TO ANY TRAFFIC PATTERN ALTERATION.

SIGNING

B) INSTALL ADVANCE WORK ZONE WARNING SIGNS WHEN WORK IS WITHIN 40 FT FROM THE EDGE OF TRAVEL LANE AND NO MORE THAN THREE (3) DAYS PRIOR TO THE BEGINNING OF CONSTRUCTION.

C) PROVIDE PERMANENT SIGNING

D) PROVIDE SIGNING AND DEVICES REQUIRED TO CLOSE THE ROAD ACCORDING TO THE ROADWAY STANDARD DRAWINGS AND TRAFFIC CONTROL PLANS.

PROVIDE SIGNING REQUIRED FOR THE OFF-SITE DETOUR ROUTE AS SHOWN IN THE TRAFFIC CONTROL PLANS.

E) COVER OR REMOVE ALL SIGNS AND DEVICES REQUIRED TO CLOSE THE ROAD WHEN ROAD CLOSURE IS NOT IN OPERATION.

COVER OR REMOVE ALL SIGNS REQUIRED FOR THE OFF-SITE DETOUR WHEN THE DETOUR IS NOT IN OPERATION.

F) ENSURE ALL NECESSARY SIGNING IS IN PLACE PRIOR TO ALTERING ANY TRAFFIC PATTERN.

TRAFFIC CONTROL DEVICES

G) PLACE TYPE III BARRICADES, WITH "ROAD CLOSED" SIGN R11-2 ATTACHED, OF SUFFICIENT LENGTH TO CLOSE ENTIRE ROADWAY.

PAVEMENT MARKINGS AND MARKERS

H) INSTALL PAVEMENT MARKINGS ON THE FINAL SURFACE.

I) TIE PROPOSED PAVEMENT MARKING LINES TO EXISTING PAVEMENT MARKING LINES.

J) PASSING ZONE WILL BE DETERMINED IN THE FIELD AND MUST BE APPROVED BY THE ENGINEER.

TGS ENGINEERS
804-C N. LAFAYETTE ST
SHELBY, NC 28150
PH (704) 476-0003
CORP. LICENSE NO.: C-0275

APPROVED: ________ DATE: ________

SEAL

DIVISION OF HIGHWAYS · STATE OF NORTH CAROLINA · DEPARTMENT OF TRANSPORTATION · WORK ZONE TRAFFIC CONTROL

TRANSPORTATION OPERATIONS PLAN

$$$$SYSTIME$$$$ $$$$$$$$$$$$DGN$$$$$$$$$$$$$$$$$$ $$$$USERNAME$$$$

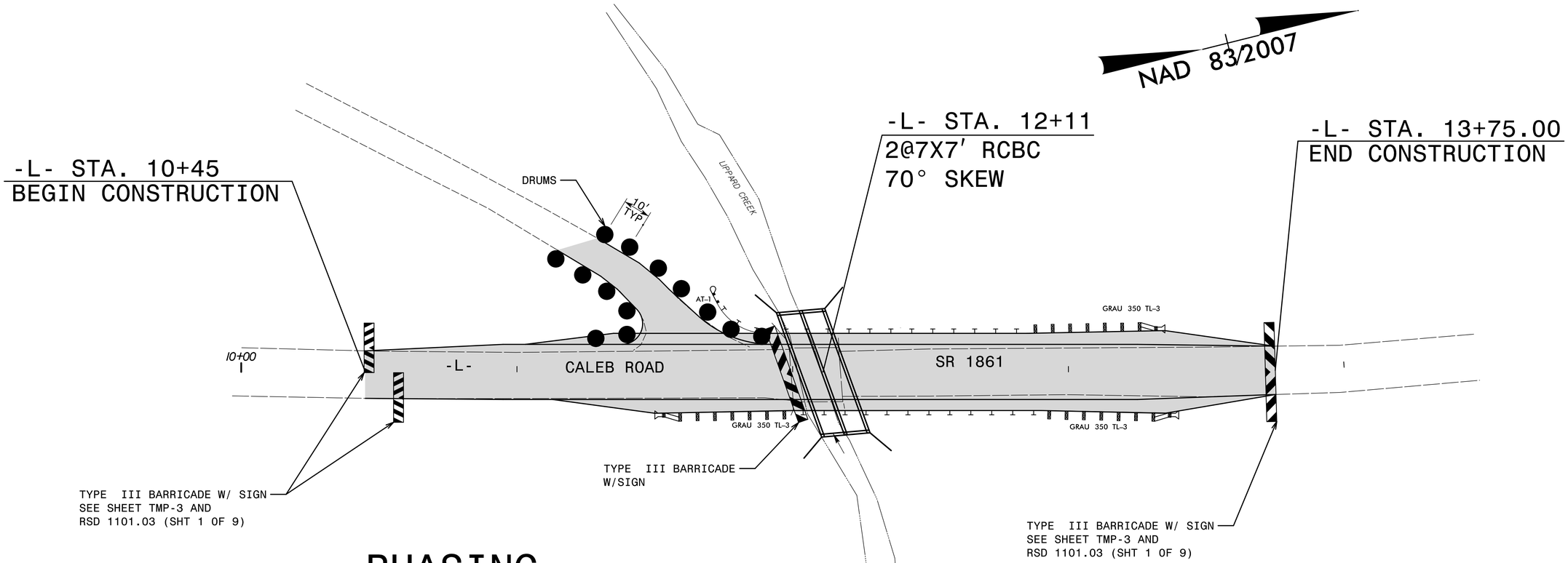

PHASING

STEP 1: INSTALL ALL DETOUR ROUTE SIGNS AS SHOWN ON SHEET TMP-3.

STEP 2: INSTALL TYPE III BARRICADES AND SIGNS AND CLOSE CALEB RD. (SR 1861) TO TRAFFIC AS SHOWN IN ROADWAY STANDARD DRAWING 1101.03 (SHEET 1 OF 9) AND ON SHEET TMP-2 AND TMP-3. PLACE TRAFFIC ON DETOUR ROUTE.

STEP 3: DEMOLISH AND REMOVE THE EXISTING BRIDGE OVER LIPPARD CREEK. CONSTRUCT THE NEW CULVERT ON LIPPARD CREEK AT -L- STA. 12+11. CONSTRUCT CALEB RD (SR 1861) FROM -L- STA. 10+45.00 TO 13+75.00, INCLUDING THE FINAL LAYER OF SURFACE COURSE.

STEP 4: PLACE FINAL PAVEMENT MARKINGS FROM -L- STA. 10+45.00 TO 13+75.00. SEE SHEET PM-1.

STEP 5: REMOVE BARRICADES, SIGNS, AND ALL OTHER TRAFFIC CONTROL DEVICES AND OPEN CALEB RD (SR 1861) TO TRAFFIC IN FINAL PATTERN.

TGS ENGINEERS
804-C N. LAFAYETTE ST
SHELBY, NC 28150
PH (704) 476-0003
CORP. LICENSE NO. C-0275

APPROVED: _____ DATE: _____

SEAL

NORTH CAROLINA PROFESSIONAL SEAL 35018 ENGINEER JIMMY L. TERRY, JR.

DIVISION OF HIGHWAYS
STATE OF NORTH CAROLINA
DEPARTMENT OF TRANSPORTATION
WORK ZONE TRAFFIC CONTROL

OVERVIEW AND PHASING

$$$$SYSTIME$$$$
$$$$DGNFILENAME$$$$

Catawba County
Bridge # 170136

PROJ. REFERENCE NO.	SHEET NO.
17.BP.12.R.201	TMP-3

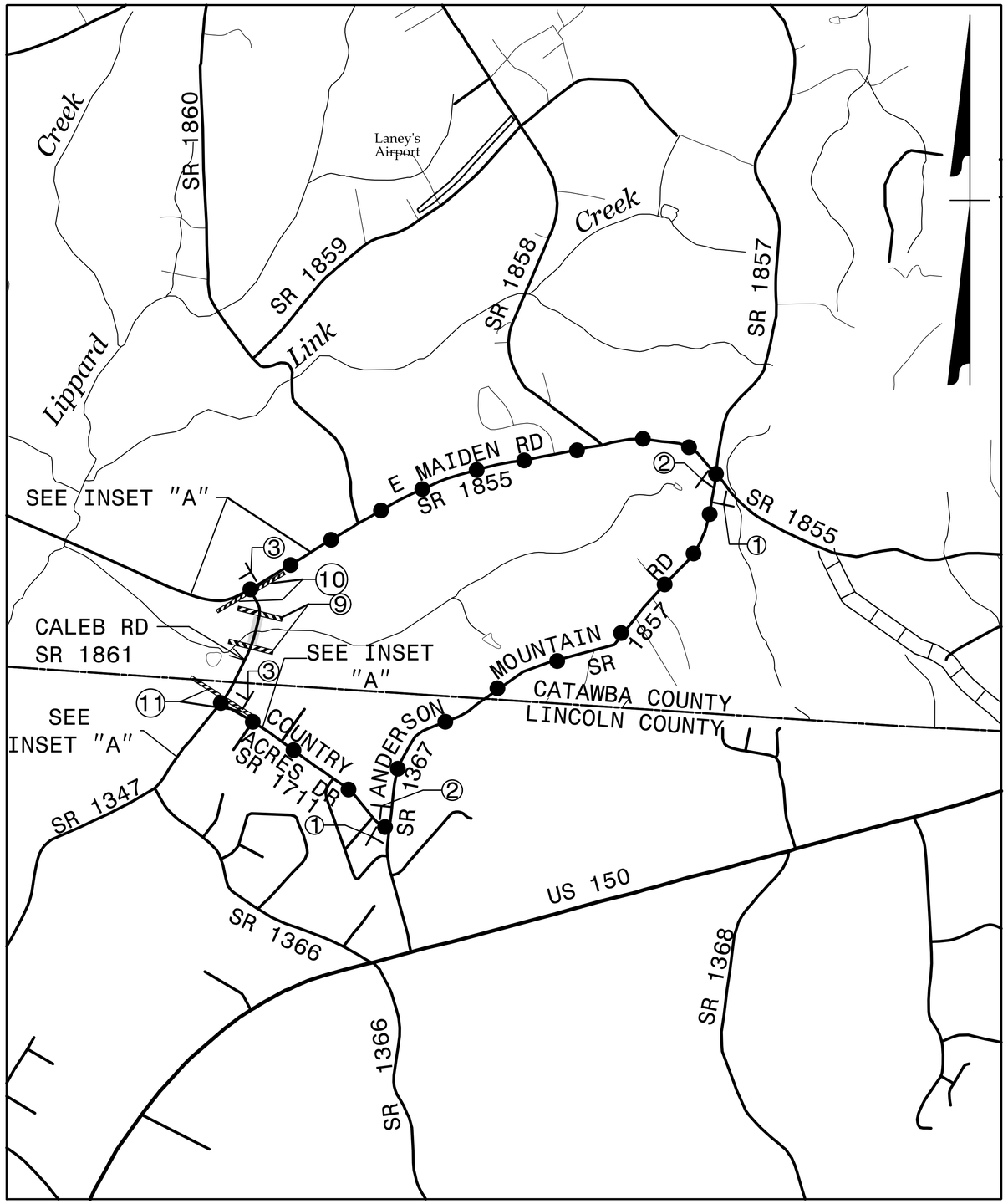

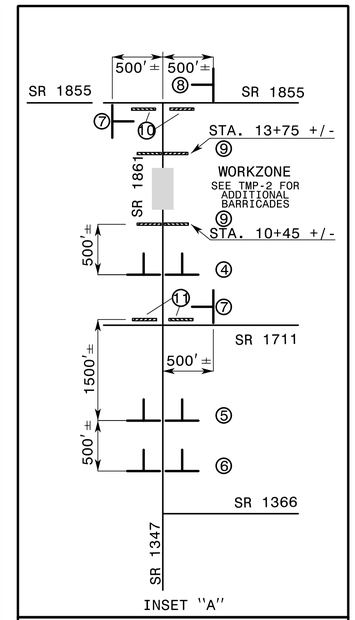

REFER TO ROADWAY STANDARD DRAWING 1101.03, SHEET 1 OF 9 FOR APPLICABLE NOTES.

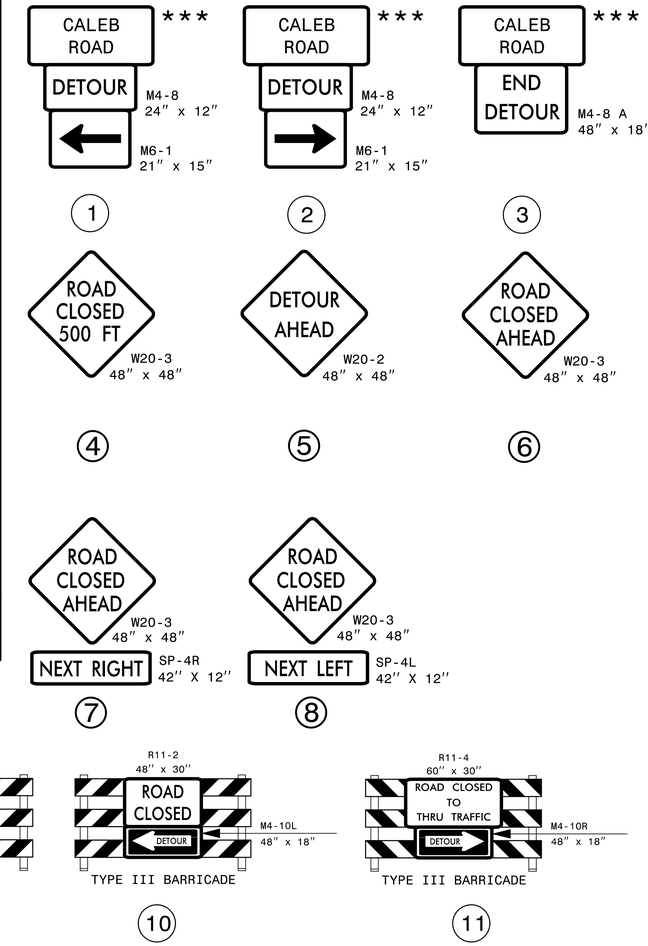

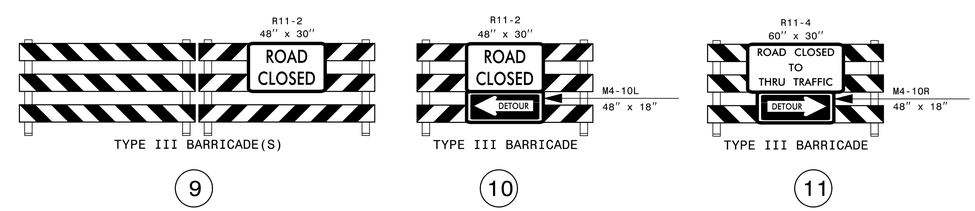

*** SEE SHEET SD-1 FOR SPECIAL SIGN DESIGN
CONSTRUCTION AREA
DETOUR ROUTE

TGS ENGINEERS
804-C N. LAFAYETTE ST
SHELBY, NC 28150
PH (704) 476-0003
CORP. LICENSE NO.: C-0275

APPROVED:_____ DATE:_____

SEAL

NORTH CAROLINA PROFESSIONAL ENGINEER SEAL 35016 JIMMY L. TERRY, JR. 12/7/2018

DIVISION OF HIGHWAYS
STATE OF NORTH CAROLINA
DEPARTMENT OF TRANSPORTATION
WORK ZONE TRAFFIC CONTROL

OFFSITE DETOUR ROUTE AND BARRICADE PLACEMENT

$$$$$$SYSTIME$$$$$
$$$$$$$$$$$$$$$$DGN$$$$$$$$$$$$$$$$$$$$
$$$$USERNAME$$$$

Catawba County
Bridge #170136

PROJ. REFERENCE NO.	SHEET NO.
17BP.12.R.201	SD-1

SIGN NUMBER: **DET-1**
TYPE: **STATIONARY**
QUANTITY: **SEE PLANS**

BACKG COLOR: **Fluorescent Orange**
COPY COLOR: **Black**

SYMBOL	X	Y	WID	HT

SIGN WIDTH: **2′-6″**
HEIGHT: **2′-0″**
TOTAL AREA: **5.0 Sq. Ft**

BORDER TYPE: **RECESSED**
RECESS: **0.38″**
WIDTH: **0.63″**
RADII: **1.5″**

NO. Z BARS:
LENGTH:

MAT′L: **0.080″ (2.0mm) ALUMINUM or COMPOSITE**

DESIGN BY: **SGM**
PROJECT ID: **17BP.12.R.201**
CHECKED BY: **JLT**
DIV: **12**
DATE: **04/05/2013**

USE NOTES: 1,2

1. Legend and border shall be direct applied black non-reflective sheeting.
2. Background shall be Type VIII, VIII, or IX (prismatic) fluorescent orange retroreflective sheeting.

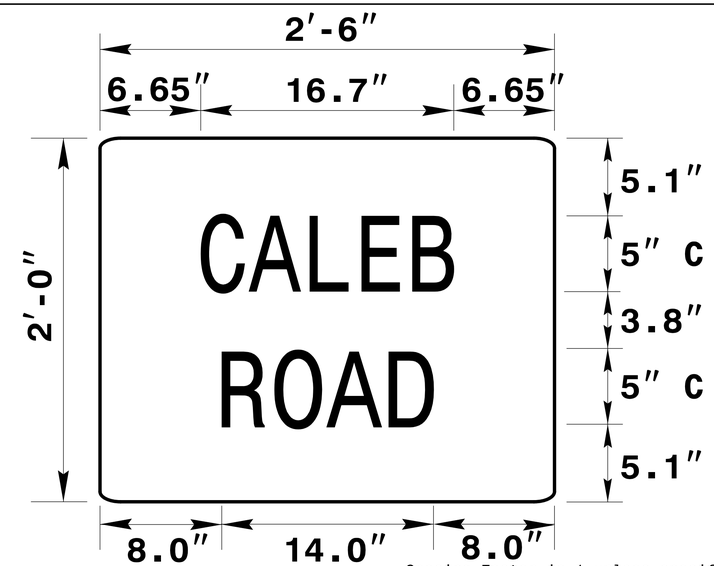

Spacing Factor is 1 unless specified otherwise

LETTER POSITIONS

Letter spacings are to start of next letter

																										Series/Size Text Length
		C	A	L	E	B																				C 2000
	6.7	3.3	4.0	3.3	3.3	2.7	6.7																			16.6
		R	O	A	D																					C 2000
	8.0	3.6	3.7	4.0	2.7	8.0																				14.0

TGS ENGINEERS
804-C N. LAFAYETTE ST
SHELBY, NC 28150
PH (704) 476-0003
CORP. LICENSE NO.: C-0275

APPROVED:_____ DATE:_____

SEAL

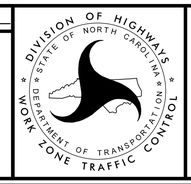

SPECIAL SIGN DESIGN

$$$$$$SYSTIME$$$$$$
$$$$$$$$$$$$$$$$$$DGN$$$$$$$$$$$$$$$$$$$$
$$$$USERNAME$$$$

Catawba County
Bridge # 170136

PROJ. REFERENCE NO.	SHEET NO.
17BP.12.R.201	PMP-1

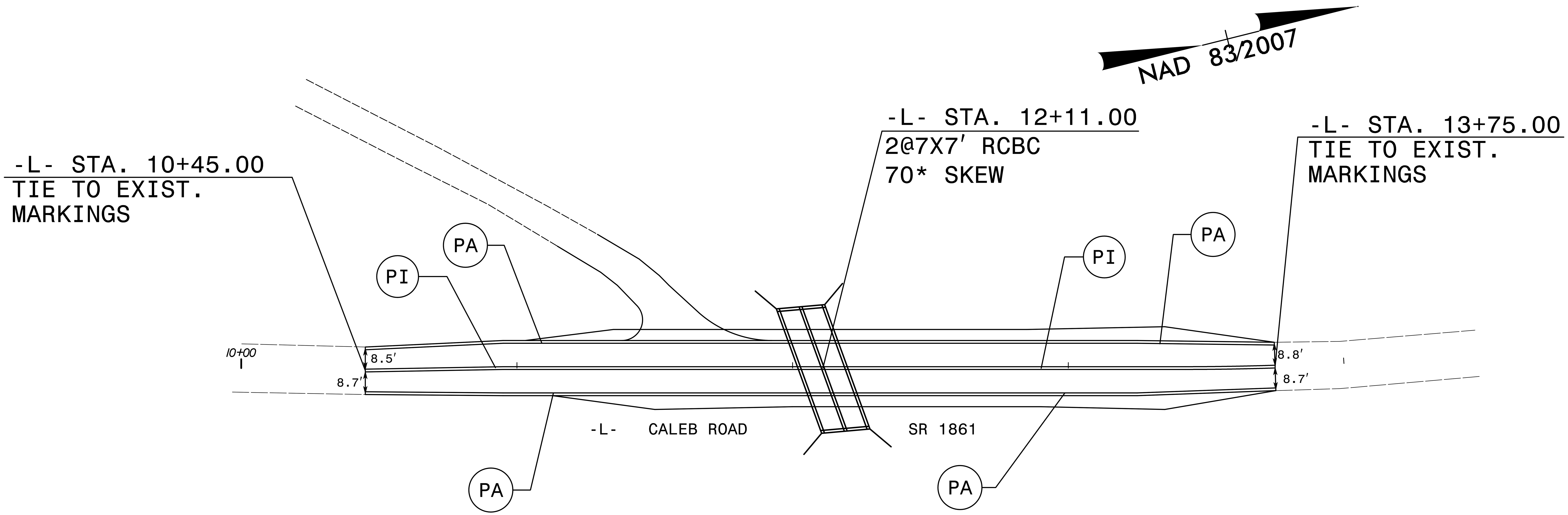

Pavement Marking Schedule

TIP Project # 17BP.12.R.201

SYMB	DESCRIPTION	PAY ITEM QUANTITY	TOTAL
	FINAL PAVEMENT MARKINGS		
	PAINT(4")		
PA	WHITE EDGELINE (2X)	1320 LF	
PI	YELLOW DOUBLE CENTER (2X)	1320 LF	
		TOTAL	2640 LF

NOTE: FOR EACH PAINT PAVEMENT MARKING ITEM, 1X IMPLIES A SINGLE APPLICATION, 2X IMPLIES TWO APPLICATIONS, AND 3X IMPLIES THREE APPLICATIONS.

TGS ENGINEERS
804-C N. LAFAYETTE ST
SHELBY, NC 28150
PH (704) 476-0003
CORP. LICENSE NO.: C-0275

APPROVED:________ DATE:________

SEAL

DIVISION OF HIGHWAYS
STATE OF NORTH CAROLINA
DEPARTMENT OF TRANSPORTATION
WORK ZONE TRAFFIC CONTROL

FINAL PAVEMENT MARKING PLAN AND SCHEDULE

$$$$SYSTIME$$$$
$$$$DGN$$$$
$$$$USERNAME$$$$

PROJECT: 17BP.12.R.201

STATE OF NORTH CAROLINA
DIVISION OF HIGHWAYS

PLAN FOR PROPOSED
HIGHWAY EROSION CONTROL

CATAWBA COUNTY

STATE	STATE PROJECT REFERENCE NO.	SHEET NO.	TOTAL SHEETS
N.C.	17BP.12.R.201	EC-1	

STATE PROJ. NO.	F. A. PROJ. NO.	DESCRIPTION

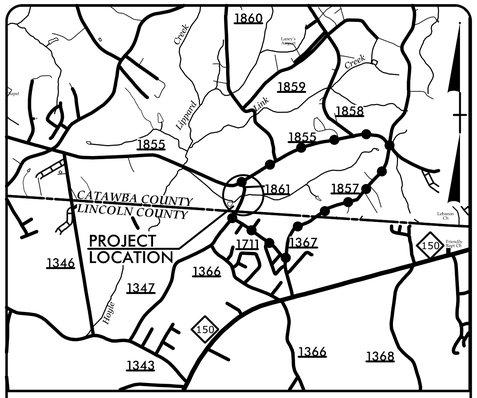

VICINITY MAP

NAD 83/
NSRS 2007

LOCATION: BRIDGE NO. 170136 OVER TRIB. TO LIPPARD CREEK ON SR 1861 (CALEB RD)

TYPE OF WORK: GRADING, DRAINAGE, PAVING, AND STRUCTURE

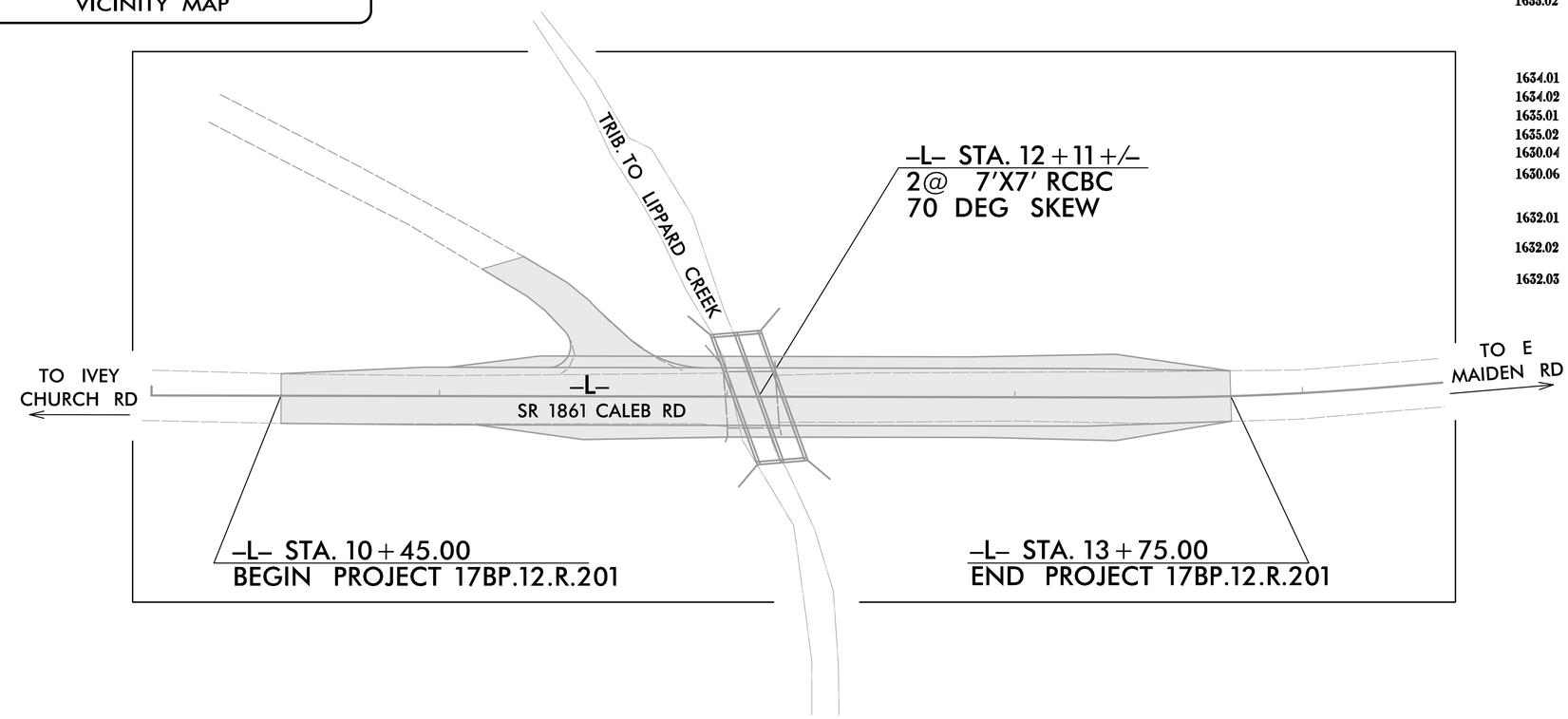

EROSION AND SEDIMENT CONTROL MEASURES

Std. #	Description	Symbol
1630.03	Temporary Silt Ditch	TSD
1630.05	Temporary Diversion	TD
1605.01	Temporary Silt Fence	
1606.01	Special Sediment Control Fence	
1622.01	Temporary Berms and Slope Drains	
1630.02	Silt Basin Type B	
1633.01	Temporary Rock Silt Check Type-A	
	Temporary Rock Silt Check Type-A with Matting and Polyacrylamide (PAM)	
1633.02	Temporary Rock Silt Check Type-B	
	Wattle/ Coir Fiber Wattle	WW CFW
	Wattle/ Coir Fiber Wattle with Polyacrylamide (PAM)	
1634.01	Temporary Rock Sediment Dam Type-A	
1634.02	Temporary Rock Sediment Dam Type-B	
1635.01	Rock Pipe Inlet Sediment Trap Type-A	
1635.02	Rock Pipe Inlet Sediment Trap Type-B	
1630.04	Stilling Basin	
1630.06	Special Stilling Basin	
	Rock Inlet Sediment Trap:	
1632.01	Type A	A
1632.02	Type B	B
1632.03	Type C	C
	Skimmer Basin	
	Tiered Skimmer Basin	
	Infiltration Basin	

THIS PROJECT CONTAINS EROSION CONTROL PLANS FOR CLEARING AND GRUBBING PHASE OF CONSTRUCTION.

GRAPHIC SCALE

10 0 20

PLANS

ROADSIDE ENVIRONMENTAL UNIT
DIVISION OF HIGHWAYS
STATE OF NORTH CAROLINA

THESE EROSION AND SEDIMENT CONTROL PLANS COMPLY WITH THE REGULATIONS SET FORTH BY THE NCG–010000 GENERAL CONSTRUCTION PERMIT EFFECTIVE AUGUST 3, 2011 ISSUED BY THE NORTH CAROLINA DEPARTMENT OF ENVIRONMENT AND NATURAL RESOURCES DIVISION OF WATER QUALITY.

TGS ENGINEERS

Plans Prepared By:
TGS ENGINEERS
804–C N. LAFAYETTE ST.
SHELBY, NC 28150
PH (704) 476–0003

NCDOT DIVISION 12
NCDOT Contact:
STEVE RACKLEY, PE
DIVISION BRIDGE PROGRAM MANAGER

2012 STANDARD SPECIFICATIONS

LETTING DATE:

ANDREW COCHRANE
PROJECT ENGINEER
LEVEL III CERTIFICATION NUMBER 3015

Roadway Standard Drawings

The following roadway english standards as appear in "Roadway Standard Drawings"– Roadway Design Unit – N. C. Department of Transportation – Raleigh, N. C., dated January 2012 and the latest revison thereto are applicable to this project and by reference hereby are considered a part of these plans.

1604.01	Railroad Erosion Control Detail	1632.01	Rock Inlet Sediment Trap Type A
1605.01	Temporary Silt Fence	1632.02	Rock Inlet Sediment Trap Type B
1606.01	Special Sediment Control Fence	1632.03	Rock Inlet Sediment Trap Type C
1607.01	Gravel Construction Entrance	1633.01	Temporary Rock Silt Check Type A
1622.01	Temporary Berms and Slope Drains	1633.02	Temporary Rock Silt Check Type B
1630.01	Riser Basin	1634.01	Temporary Rock Sediment Dam Type A
1630.02	Silt Basin Type B	1634.02	Temporary Rock Sediment Dam Type B
1630.03	Temporary Silt Ditch	1635.01	Rock Pipe Inlet Sediment Trap Type A
1630.04	Stilling Basin	1635.02	Rock Pipe Inlet Sediment Trap Type B
1630.05	Temporary Diversion	1640.01	Coir Fiber Baffle
1630.06	Special Stilling Basin	1645.01	Temporary Stream Crossing
1631.01	Matting Installation		

$$$$$$SYSTIME$$$$$$
$$$$$$USERNAME$$$$$$

PROJECT REFERENCE NO.	SHEET NO.
17BP.12.R.201	EC-2
R/W SHEET NO.	
ROADWAY DESIGN ENGINEER	HYDRAULICS ENGINEER

WATTLE WITH POLYACRYLAMIDE (PAM) DETAIL

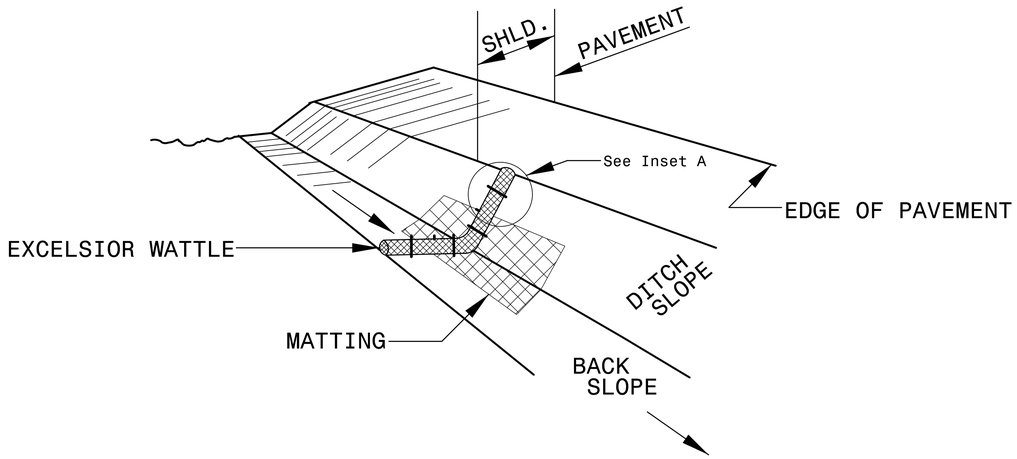

ISOMETRIC VIEW

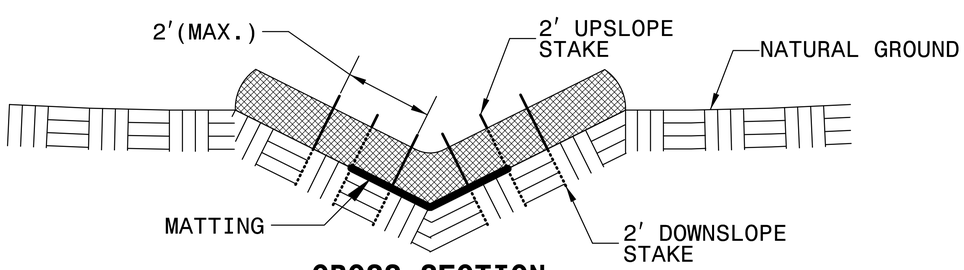

CROSS SECTION VEE DITCH

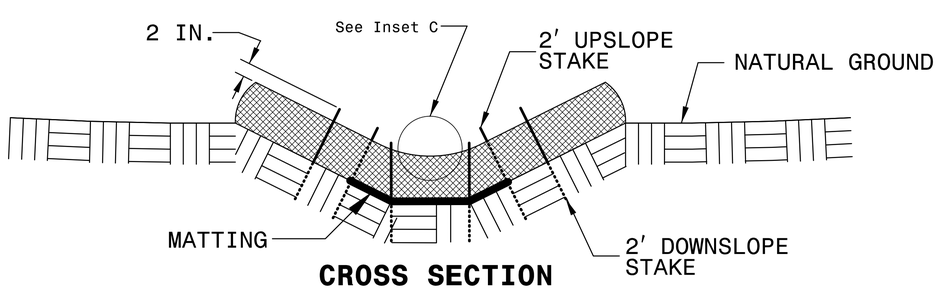

CROSS SECTION TRAPEZOIDAL DITCH

NOTES:

USE MINIMUM 12 IN. DIAMETER EXCELSIOR WATTLE.

USE 2 FT. WOODEN STAKES WITH A 2 IN. BY 2 IN. NOMINAL CROSS SECTION.

ONLY INSTALL WATTLE(S) TO A HEIGHT IN DITCH SO FLOW WILL NOT WASH AROUND WATTLE AND SCOUR DITCH SLOPES AND AS DIRECTED.

INSTALL A MINIMUM OF 2 UPSLOPE STAKES AND 4 DOWNSLOPE STAKES AT AN ANGLE TO WEDGE WATTLE TO BOTTOM OF DITCH.

PROVIDE STAPLES MADE OF 0.125 IN. DIAMETER STEEL WIRE FORMED INTO A U SHAPE NOT LESS THAN 12″ IN LENGTH.

INSTALL STAPLES APPROXIMATELY EVERY 1 LINEAR FOOT ON BOTH SIDES OF WATTLE AND AT EACH END TO SECURE IT TO THE SOIL.

INSTALL MATTING IN ACCORDANCE WITH SECTION 1631 OF THE STANDARD SPECIFICATIONS.

PRIOR TO POLYACRYLAMIDE (PAM) APPLICATION, OBTAIN A SOIL SAMPLE FROM PROJECT LOCATION, AND FROM OFFSITE MATERIAL, AND ANALYZE FOR APPROPRIATE PAM FLOCCULANT TO BE APPLIED TO EACH WATTLE.

INITIALLY APPLY 2 OUNCES OF ANIONIC OR NEUTRALLY CHARGED PAM OVER WATTLE WHERE WATER WILL FLOW AND 1 OUNCE OF PAM ON MATTING ON EACH SIDE OF WATTLE. REAPPLY PAM AFTER EVERY RAINFALL EVENT THAT IS EQUAL TO OR EXCEEDS 0.50 IN.

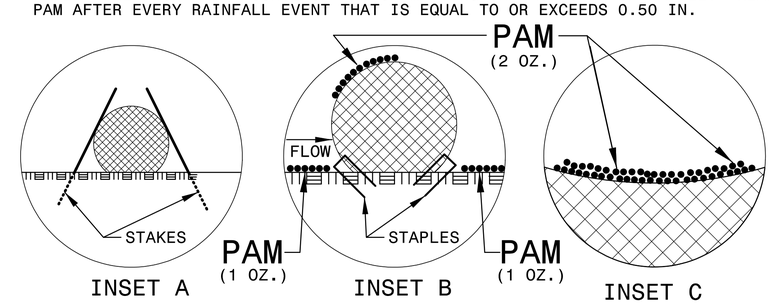

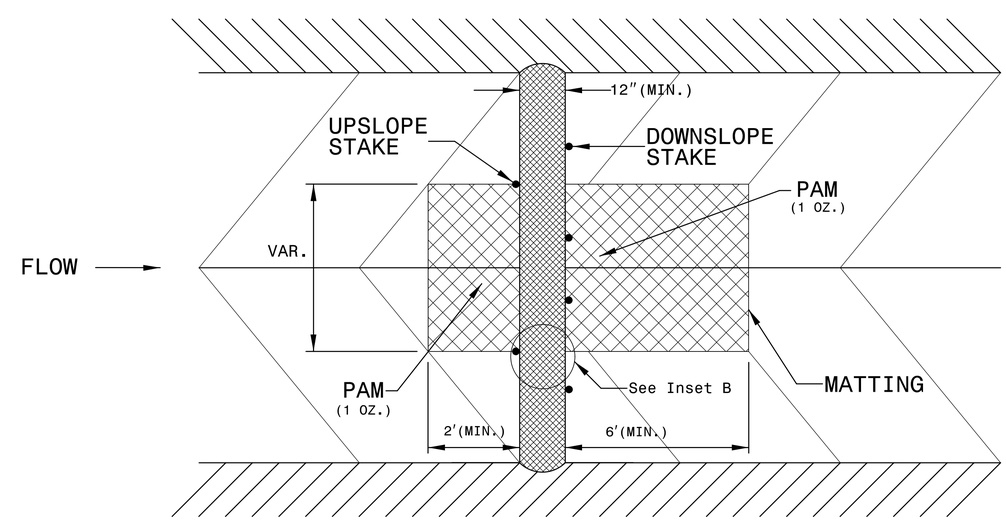

TOP VIEW

PROJECT REFERENCE NO.	SHEET NO.
17BP.12.R.201	EC-3
ROADWAY DESIGN ENGINEER	HYDRAULICS ENGINEER

DIVISION OF HIGHWAYS
STATE OF NORTH CAROLINA

SOIL STABILIZATION TIMEFRAMES

SITE DESCRIPTION	STABILIZATION TIME	TIMEFRAME EXCEPTIONS
PERIMETER DIKES, SWALES, DITCHES AND SLOPES	7 DAYS	NONE
HIGH QUALITY WATER (HQW) ZONES	7 DAYS	NONE
SLOPES STEEPER THAN 3:1	7 DAYS	IF SLOPES ARE 10' OR LESS IN LENGTH AND ARE NOT STEEPER THAN 2:1, 14 DAYS ARE ALLOWED.
SLOPES 3:1 OR FLATTER	14 DAYS	7 DAYS FOR SLOPES GREATER THAN 50' IN LENGTH.
ALL OTHER AREAS WITH SLOPES FLATTER THAN 4:1	14 DAYS	NONE, EXCEPT FOR PERIMETERS AND HQW ZONES.

PROJECT REFERENCE NO.	SHEET NO.
17BP.12.R.201	EC-4/CONST.4
R/W SHEET NO.	
ROADWAY DESIGN ENGINEER	HYDRAULICS ENGINEER

CATAWBA COUNTY
BRIDGE #170136

NAD 83/2007

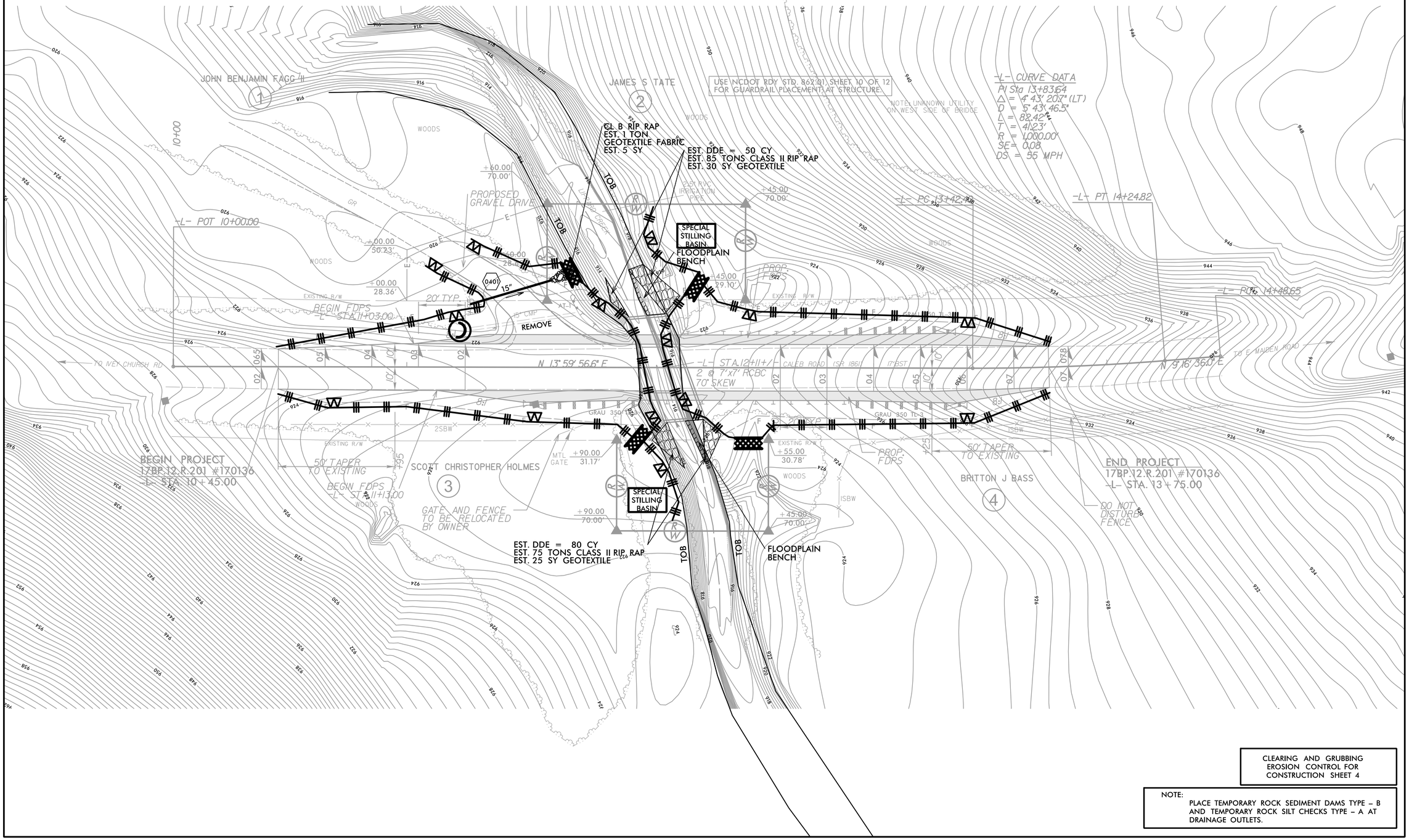

CLEARING AND GRUBBING
EROSION CONTROL FOR
CONSTRUCTION SHEET 4

NOTE:
PLACE TEMPORARY ROCK SEDIMENT DAMS TYPE – B AND TEMPORARY ROCK SILT CHECKS TYPE – A AT DRAINAGE OUTLETS.

CULVERT CONSTRUCTION SEQUENCE STA. 12 + 11 –L–

PROJECT REFERENCE NO.	SHEET NO.
17BP.12.R.201	EC-4A/CONST.4
R/W SHEET NO.	
ROADWAY DESIGN ENGINEER	HYDRAULICS ENGINEER

PHASING

1. Close SR 1861 (Caleb Road) to traffic as shown in the traffic management plans.
2. Install perimeter erosion control devices as shown on EC–4. Place special stilling basins as directed by the Engineer.
3. Remove existing bridge #170136 over Lippard Creek.
4. Construct impervious dikes to restrain stream and begin pump around operations.
5. Install proposed reinforced concrete box culvert.
6. Remove impervious dikes and return flow back to creek channel.
7. Complete any necessary Inlet/Outlet channel improvements.
8. Remove special stilling basins.
9. Complete roadway construction.

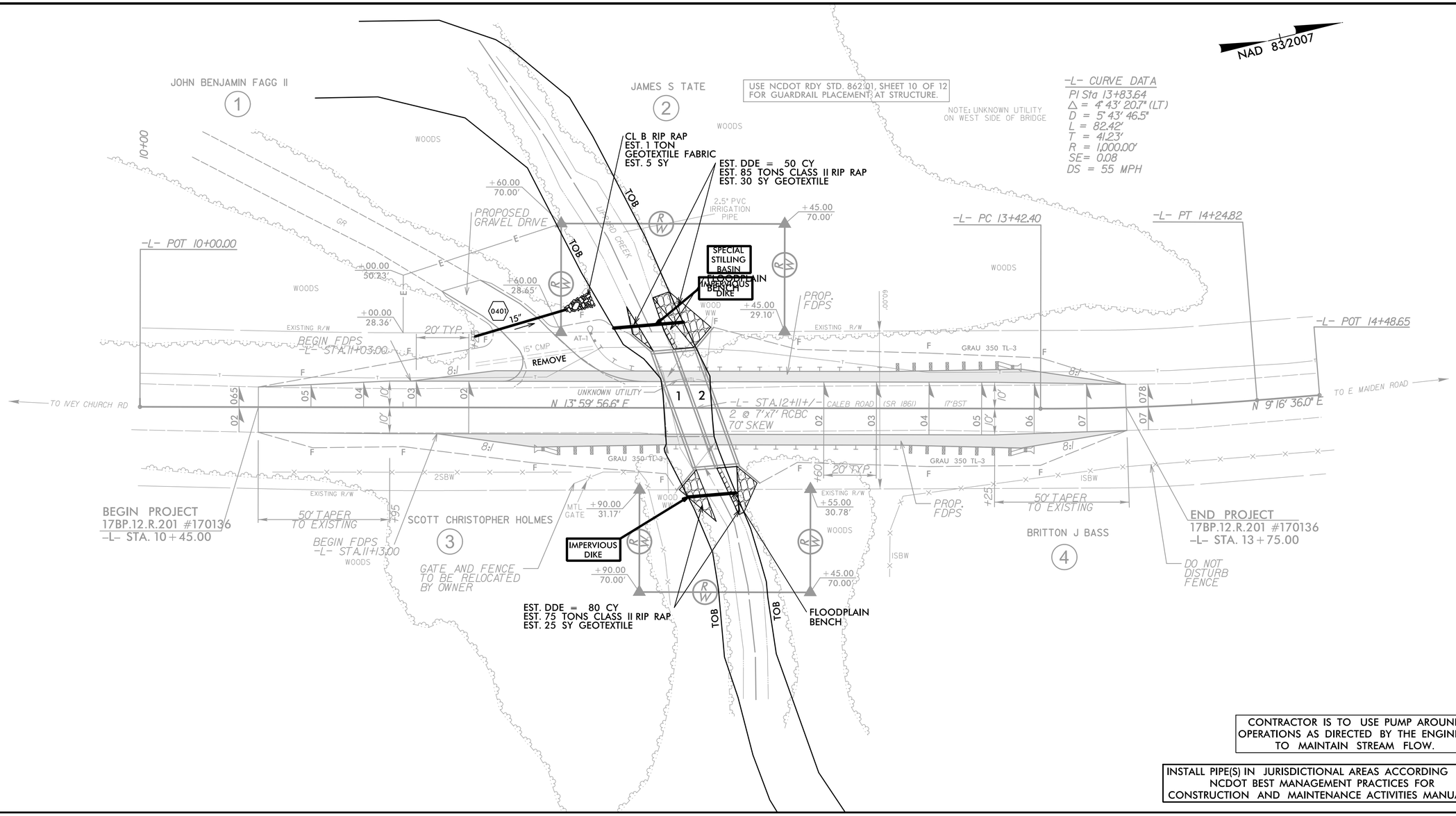

CONTRACTOR IS TO USE PUMP AROUND OPERATIONS AS DIRECTED BY THE ENGINEER TO MAINTAIN STREAM FLOW.

INSTALL PIPE(S) IN JURISDICTIONAL AREAS ACCORDING TO NCDOT BEST MANAGEMENT PRACTICES FOR CONSTRUCTION AND MAINTENANCE ACTIVITIES MANUAL.

PROJECT REFERENCE NO.	SHEET NO.
17BP.12.R.201	EC-5/CONST.4
R/W SHEET NO.	
ROADWAY DESIGN ENGINEER	HYDRAULICS ENGINEER

CATAWBA COUNTY
BRIDGE #170136

NAD 83/2007

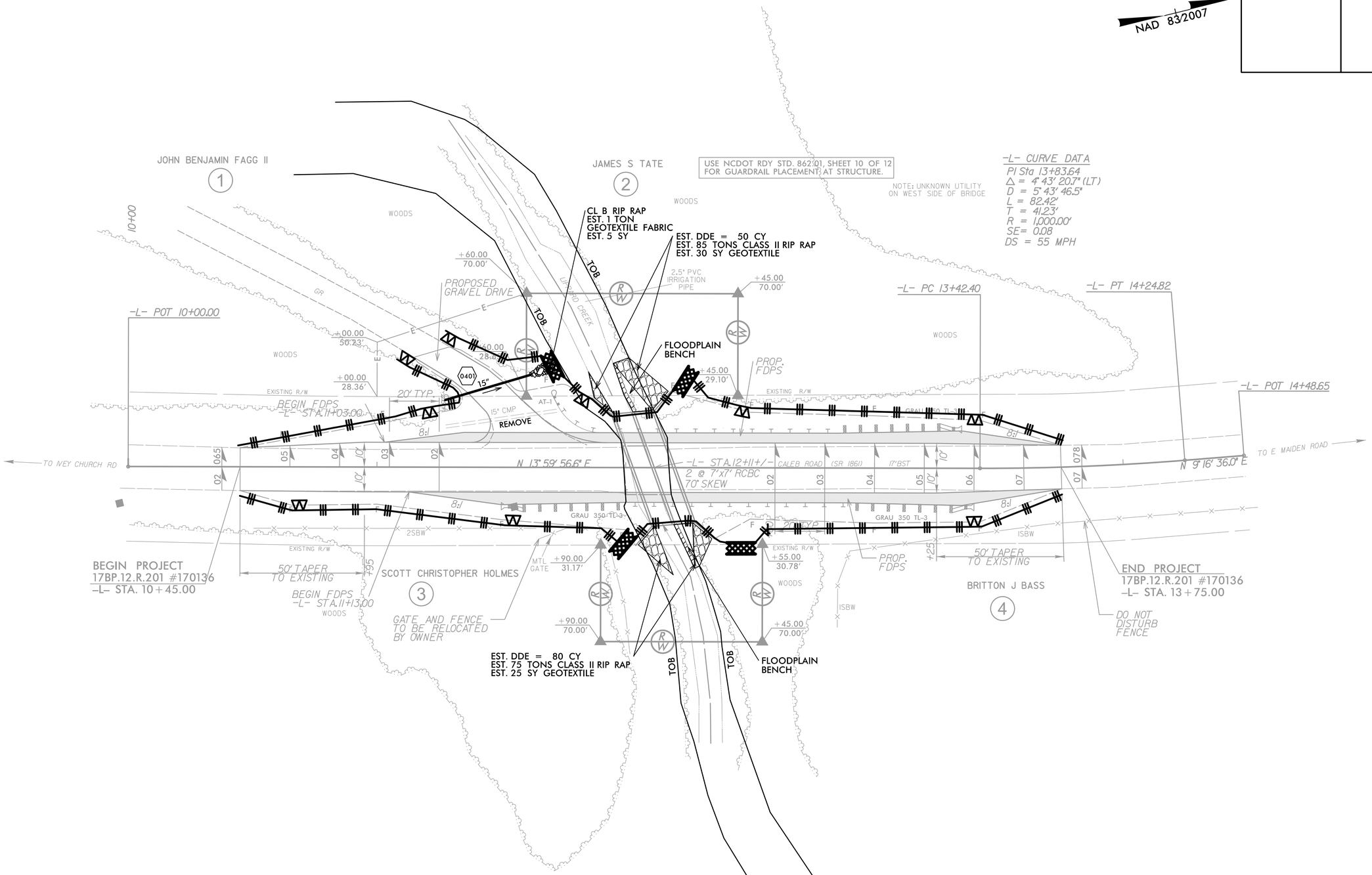

PROJ. REFERENCE NO.	SHEET NO.
17BP.12.R.201	X-1

Catawba County
Bridge #170136

PROJ. REFERENCE NO.
17BP.12.R.201
SHEET NO.
X-2
0 2.5 5
Catawba County
Bridge #170136
8/23/99
0.061 0.061
2:1 2:1
S.S. 928.28
930.17
13+42.40
S.S. 928.89
0.040 0.040
S.S. 925.07
926.82
13+00.00
S.S. 925.86
0.020 0.020
S.S. 922.06
924.12
12+50.00
S.S. 923.60
0.020 0.020
2-7'x7' RCBC
914.38
12+11.00
-L-
$$$$$$SYSTIME$$$$$
$$$$$$$$$$$$$DGN$$$$$$$$$$$$$$$$$$$$$
$$$$$USERNAME$$$$

8/23/99

0 2.5 5	PROJ. REFERENCE NO.	SHEET NO.
	17BP.12.R.201	X-3

Catawba County
Bridge #170136

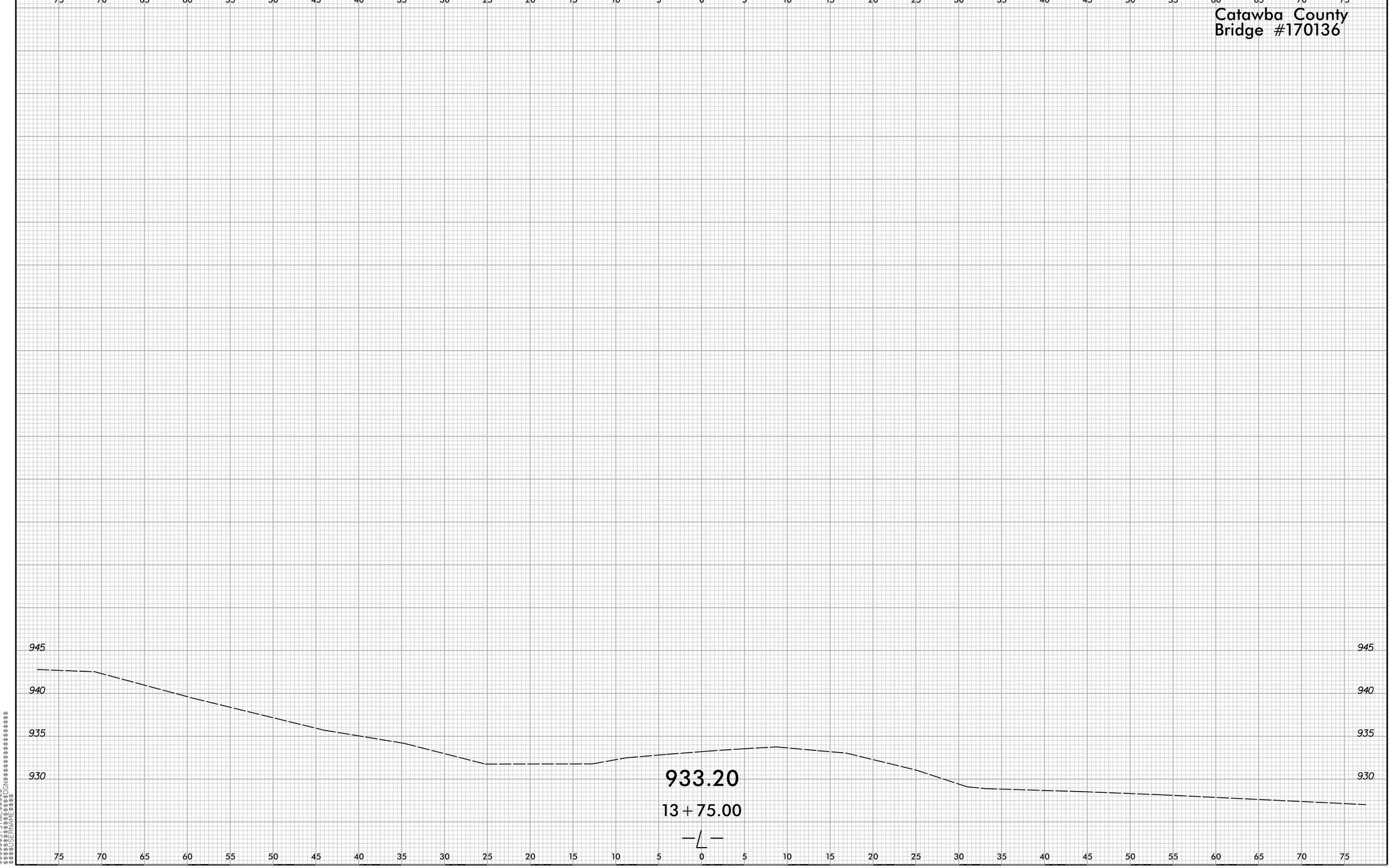

$$$$SYSTIME$$$$
$$$$SAVE$$$$DGN$$$$$$$$$$$$$$$$$$$$
$$$$USERNAME$$$$

BENCHMARK: BM#1: RAILROAD SPIKE IN SOUTH ROOT OF TWIN MAPLE. (N 663623, E 1368322) 40' LEFT STA 11+07.00 EL.920.03' NAD83/NSRS 2007

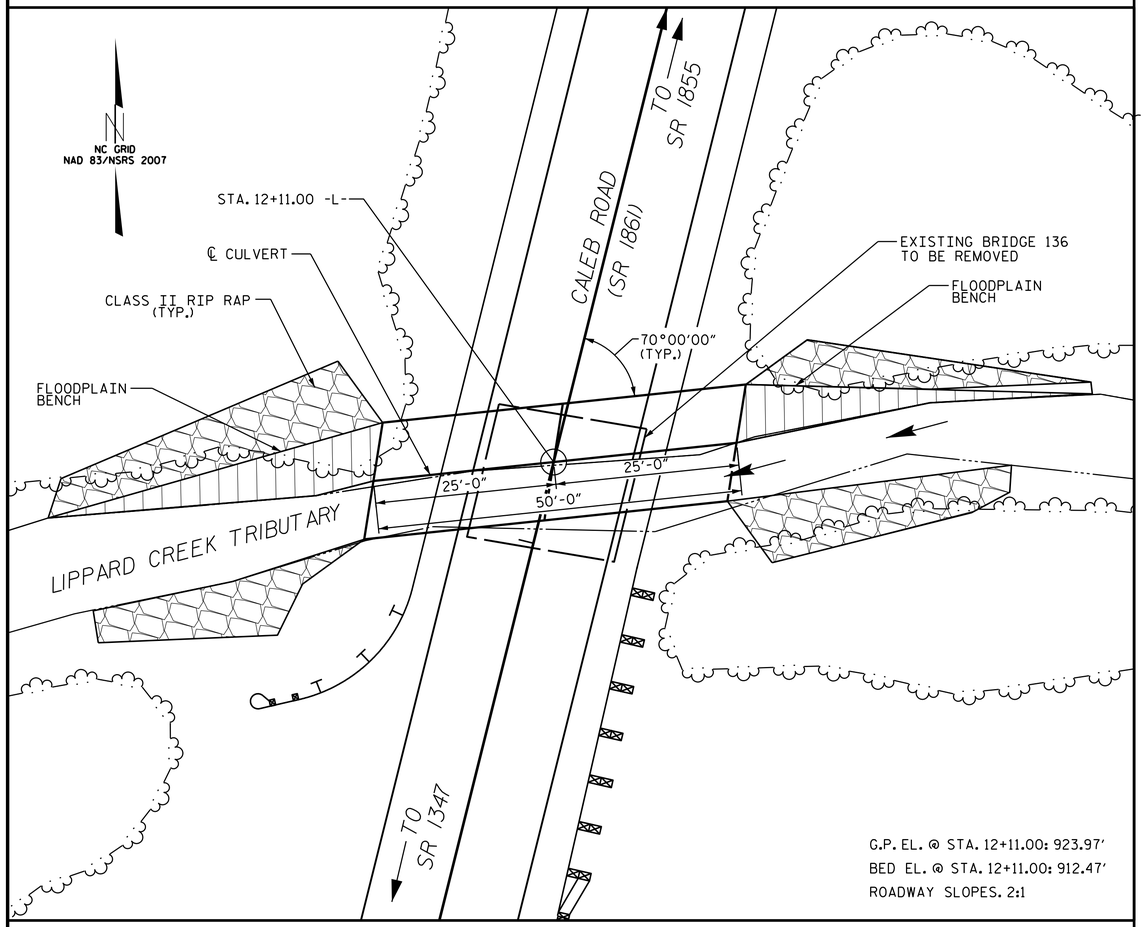

LOCATION SKETCH

FOR UTILITY INFORMATION, SEE UTILITY PLANS AND SPECIAL PROVISIONS.

NOTES

ASSUMED LIVE LOAD ----------HL-93 OR ALTERNATE LOADING.

DESIGN FILL----------3'-0"

FOR OTHER DESIGN DATA AND NOTES SEE STANDARD NOTE SHEET.

3"Ø WEEP HOLES INDICATED TO BE IN ACCORDANCE WITH THE SPECIFICATIONS.

CONCRETE IN CULVERTS TO BE POURED IN THE FOLLOWING ORDER:

1. WING FOOTINGS AND FLOOR SLAB INCLUDING 4" OF ALL VERTICAL WALLS.
2. THE REMAINING PORTIONS OF THE WALLS AND WINGS FULL HEIGHT FOLLOWED BY ROOF SLAB AND HEADWALLS.

THE RESIDENT ENGINEER SHALL CHECK THE LENGTH OF CULVERT BEFORE STAKING IT OUT TO MAKE CERTAIN THAT IT WILL PROPERLY TAKE CARE OF THE FILL.

THIS BARREL STANDARD TO BE USED ONLY ON CULVERT ON 75° SKEW AND TO BE USED WITH STANDARD WING SHEET WITH THE SAME SKEW AND VERTICAL CLEARANCE.

DIMENSIONS FOR WING LAYOUT AS WELL AS ADDITIONAL REINFORCING STEEL EMBEDDED IN BARREL ARE SHOWN ON WING SHEET.

EXCAVATE 1' BELOW THE CULVERT AND FOOTING AND REPLACE WITH FOUNDATION CONDITIONING MATERIAL IN ACCORDANCE WITH ARTICLE 414 OF THE STANDARD SPECIFICATIONS.

PLACE SILLS AT THE INLET AND OUTLET OF THE LOW FLOW BARREL ONLY. BACKFILL THE FLOODPLAIN BARREL WITH NATIVE BED MATERIAL. SUBSIDIZE WITH CLASS B RIP RAP IF NEEDED.

STEEL IN THE BOTTOM SLAB MAY BE SPLICED AT THE PERMITTED CONSTRUCTION JOINT AT THE CONTRACTOR'S OPTION. EXTRA WEIGHT OF STEEL DUE TO THE SPLICES SHALL BE PAID FOR BY THE CONTRACTOR.

AT THE CONTRACTOR'S OPTION, HE MAY SPLICE THE VERTICAL REINFORCING STEEL IN THE INTERIOR FACE OF EXTERIOR WALL AND BOTH FACES OF INTERIOR WALLS ABOVE LOWER WALL CONSTRUCTION JOINT. THE SPLICE LENGTH SHALL BE AS PROVIDED IN THE SPLICE LENGTH CHART SHOWN ON THE PLANS. EXTRA WEIGHT OF STEEL DUE TO THE SPLICES SHALL BE PAID FOR BY THE CONTRACTOR.

AT THE CONTRACTOR'S OPTION HE MAY SUBMIT, TO THE ENGINEER FOR APPROVAL, DESIGN AND DETAIL DRAWINGS FOR A PRECAST REINFORCED CONCRETE BOX CULVERT IN LIEU OF THE CAST-IN-PLACE CULVERT SHOWN ON THE PLANS. THE DESIGN SHALL PROVIDE THE SAME SIZE AND NUMBER OF BARRELS AS USED ON THE CAST-IN-PLACE DESIGN. FOR OPTIONAL PRECAST REINFORCED CONCRETE BOX CULVERT, SEE SPECIAL PROVISIONS.

FOR CULVERT DIVERSION CHANNEL DETAILS AND PAY ITEM, SEE EROSION CONTROL PLANS.

FOR SUBMITTAL OF WORKING DRAWINGS, SEE SPECIAL PROVISIONS.

FOR FALSEWORK AND FORMWORK, SEE SPECIAL PROVISIONS.

FOR CRANE SAFETY, SEE SPECIAL PROVISIONS.

FOR GROUT FOR STRUCTURES, SEE SPECIAL PROVISIONS.

FOR EROSION CONTROL PLANS, SEE ROADWAY PLANS.

THE EXISTING STRUCTURE CONSISTING OF 1 @ 18'-5" TIMBER DECK ON STEEL I-BEAMS, SPANS WITH A CLEAR ROADWAY WIDTH OF 19'-0" ON TIMBER CAPS POSTS AND SILLS, TIMBER BULKHEADS AND LOCATED AT THE PROPOSED STRUCTURE SHALL BE REMOVED.

INASMUCH AS THE PAINT SYSTEM ON THE EXISTING STRUCTURAL STEEL CONTAINS LEAD, THE CONTRACTOR'S ATTENTION IS DIRECTED TO ARTICLE 107-1 OF THE STANDARD SPECIFICATIONS. ANY COSTS RESULTING FROM COMPLIANCE WITH APPLICABLE STATE OR FEDERAL REGULATIONS PERTAINING TO HANDLING OF MATERIALS CONTAINING LEAD BASED PAINT SHALL BE INCLUDED IN THE BID PRICE FOR "REMOVAL OF EXISTING STRUCTURE AT STATION 12+11.00-L-"

THE SUBSTRUCTURE OF THE EXISTING BRIDGE INDICATED ON THE PLANS IS FROM THE BEST INFORMATION AVAILABLE. SINCE THIS INFORMATION IS SHOWN FOR THE CONVENIENCE OF THE CONTRACTOR, THE CONTRACTOR SHALL HAVE NO CLAIM WHATSOEVER AGAINST THE DEPARTMENT OF TRANSPORTATION FOR ANY DELAYS OR ADDITIONAL COSTS INCURRED BASED ON DIFFERENCES BETWEEN THE EXISTING BRIDGE SUBSTRUCTURE SHOWN ON THE PLANS AND THE ACTUAL CONDITIONS AT THE PROJECT SITE.

REMOVAL OF THE EXISTING BRIDGE SHALL BE PERFORMED SO AS NOT TO ALLOW DEBRIS TO FALL INTO THE WATER. THE CONTRACTOR SHALL REMOVE THE BRIDGE AND SUBMIT PLANS FOR DEMOLITION IN ACCORDANCE TO ARTICLE 402-2 OF THE STANDARD SPECIFICATION.

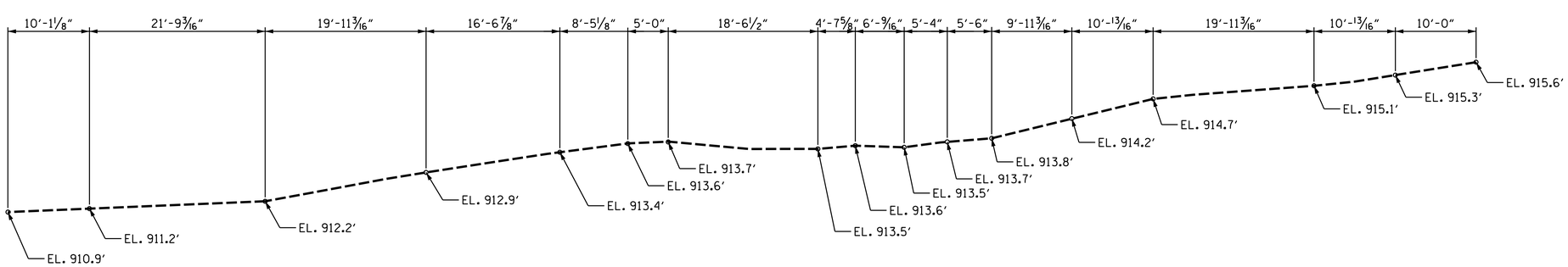

PROFILE ALONG ℄ CULVERT

PROJECT NO. 17BP.12.R.201

CATAWBA COUNTY

STATION: 12+11.00-L-

SHEET 1 OF 5 REPLACES BR. NO. 136

STATE OF NORTH CAROLINA
DEPARTMENT OF TRANSPORTATION
RALEIGH

BARREL STANDARD

DOUBLE 7 FT.X 7 FT. CONCRETE BOX CULVERT 75° SKEW

1971

REVISIONS						SHEET NO.
NO.	BY:	DATE:	NO.	BY:	DATE:	C-1
1			3			TOTAL SHEETS
2			4			5

PREPARED BY
TGS ENGINEERS
804 N. LAFAYETTE ST
SHELBY, NC 28150

NORTH CAROLINA PROFESSIONAL SEAL 011279 ENGINEER EDWARD G. FLETCHER
January 3, 2014

ASSEMBLED BY : CCC	DATE : 9/13	SPECIAL	
CHECKED BY : MTC	DATE : 9/13		
DRAWN BY : R.W.WRIGHT	DATE : OCT. 1989	STANDARD	
CHECKED BY : A.R.BISSETTE	DATE : OCT. 1989		

ADDED 11-90

STD. NO. CB22A

BAR TYPES

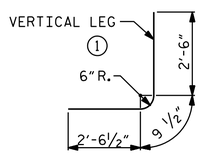

ALL BAR DIMENSIONS ARE OUT TO OUT.

SPLICE LENGTHS CHART

BAR	SIZE	SPLICE LENGTH
B1	#5	2'-7"
B3	#4	2'-0"
C1	#4	2'-0"

REINFORCING STEEL BAR SCHEDULE

BAR	NO.	SIZE	TYPE	LENGTH	WEIGHT
A1	102	#8	1	5'-10"	1,589
A2	102	#8	1	5'-10"	1,589
A100	89	#6	STR	15'-8"	2,095
A101	2	#6	STR	14'-0"	41
A102	2	#6	STR	12'-7"	38
A103	2	#6	STR	11'-3"	34
A104	2	#6	STR	9'-10"	30
A105	2	#6	STR	8'-6"	26
A106	2	#6	STR	7'-1"	22
A107	2	#6	STR	5'-9"	18
A108	2	#6	STR	4'-4"	14
A109	2	#6	STR	3'-0"	10
A110	2	#6	STR	1'-7"	5
A200	89	#4	STR	15'-8"	932
A201	2	#4	STR	14'-0"	19
A202	2	#4	STR	12'-7"	17
A203	2	#4	STR	11'-3"	16
A204	2	#4	STR	9'-10"	14
A205	2	#4	STR	8'-6"	12
A206	2	#4	STR	7'-1"	10
A207	2	#4	STR	5'-9"	8
A208	2	#4	STR	4'-4"	6
A209	2	#4	STR	3'-0"	5
A210	2	#4	STR	1'-7"	3
A300	89	#7	STR	15'-8"	2,851
A301	2	#7	STR	14'-0"	58
A302	2	#7	STR	12'-7"	52
A303	2	#7	STR	11'-3"	46
A304	2	#7	STR	9'-10"	41
A305	2	#7	STR	8'-6"	35
A306	2	#7	STR	7'-1"	29
A307	2	#7	STR	5'-9"	24
A308	2	#7	STR	4'-4"	18
A309	2	#7	STR	3'-0"	13
A310	2	#7	STR	1'-7"	7
A400	45	#8	STR	15'-8"	1,883
A401	2	#8	STR	12'-7"	68
A402	2	#8	STR	9'-10"	53
A403	2	#8	STR	7'-1"	38
A404	2	#8	STR	4'-4"	24
A405	2	#8	STR	1'-7"	9
B1	102	#6	STR	8'-6"	1,303
B2	102	#4	STR	6'-4"	432
B3	102	#4	STR	8'-6"	580
C1	122	#4	STR	26'-10"	2,187
D1	6	#6	STR	1'-6"	14
D2	6	#6	STR	2'-6"	23
G1	8	#5	STR	16'-8"	140
S2	12	#8	STR	16'-8"	534
REINFORCING STEEL					17,004 LBS.

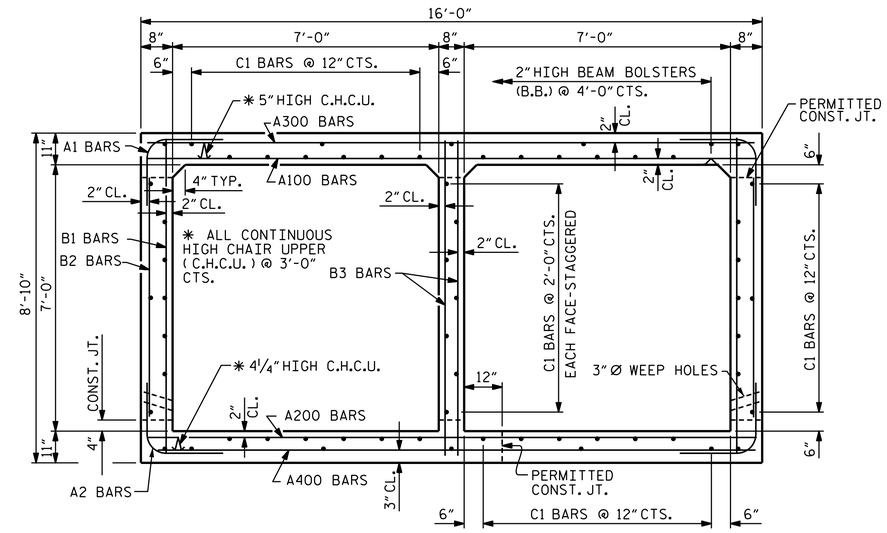

RIGHT ANGLE SECTION OF BARREL

THERE ARE 61 "C" BARS IN SECTION OF BARREL.

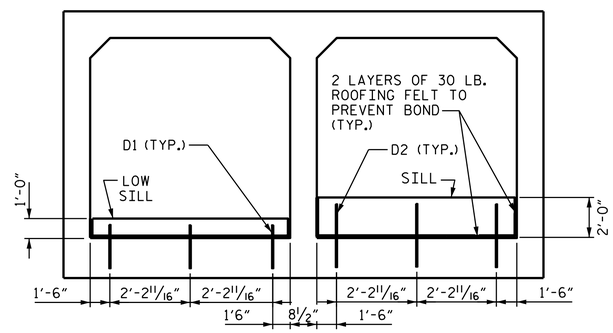

ELEVATION ON SKEW

(LOOKING DOWNSTREAM)

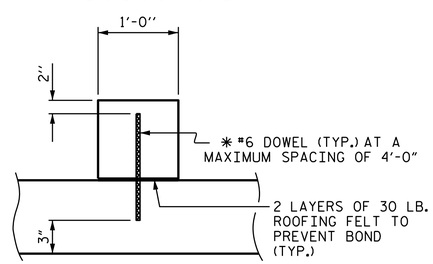

SECTION THROUGH SILL

✱ DOWELS MAY BE PUSHED INTO GREEN CONCRETE AFTER SLAB HAS BEEN FLOAT FINISHED.

HYDRAULIC DATA:

DESIGN DISCHARGE	480 CFS
FREQUENCY OF DESIGN DISCHARGE	25 YRS.
DESIGN HIGH WATER ELEVATION	919.0'
DRAINAGE AREA	0.78 SQ. MI.
BASE DISCHARGE	750 CFS
FREQUENCY OF BASE DISCHARGE	100 YRS.
BASE HIGH WATER ELEVATION	920.40'

OVERTOPPING FLOOD DATA:

OVERTOPPING DISCHARGE	900 CFS+
FREQUENCY OF OVERTOPPING FLOOD	100 YR+
OVERTOPPING FLOOD ELEVATION	921.1'

TOTAL STRUCTURE QUANTITIES

CLASS A CONCRETE				
BARREL @	1.61	CY/FT	80.5	C.Y.
WING, SILLS ETC.			23.0	C.Y.
TOTAL			103.5	C.Y.
REINFORCING STEEL				
BARREL			16,993	LBS.
WINGS ETC.			1,277	LBS.
TOTAL			18,270	LBS.
CULVERT EXCAVATION, STA. 12+11.00-L-				L.S.
FOUNDATION CONDITIONING MATERIAL			78	TONS
REMOVAL OF EXISTING STRUCTURE @ STA. 12+11.00-L-				L.S.

PROJECT NO. 17BP.12.R.201

CATAWBA COUNTY

STATION: 12+11.00-L-

SHEET 2 OF 5

STATE OF NORTH CAROLINA
DEPARTMENT OF TRANSPORTATION
RALEIGH

BARREL STANDARD

DOUBLE 7 FT.X 7 FT. CONCRETE BOX CULVERT 75° SKEW

1971

PREPARED BY
TGS ENGINEERS
804 N LAFAYETTE ST
SHELBY, NC 28150

NORTH CAROLINA PROFESSIONAL SEAL 11279 ENGINEER LEONARD G. FLETCHER
January 3, 2014

REVISIONS						SHEET NO.
NO.	BY:	DATE:	NO.	BY:	DATE:	C-2
1			3			TOTAL SHEETS
2			4			5

STD. NO. CB22A

ASSEMBLED BY : CCC	DATE : 9/13	SPECIAL	
CHECKED BY : MTC	DATE : 9/13		
DRAWN BY : R.W.WRIGHT	DATE : OCT. 1989	STANDARD	
CHECKED BY : A.R.BISSETTE	DATE : OCT. 1989		

ADDED 11-1-90

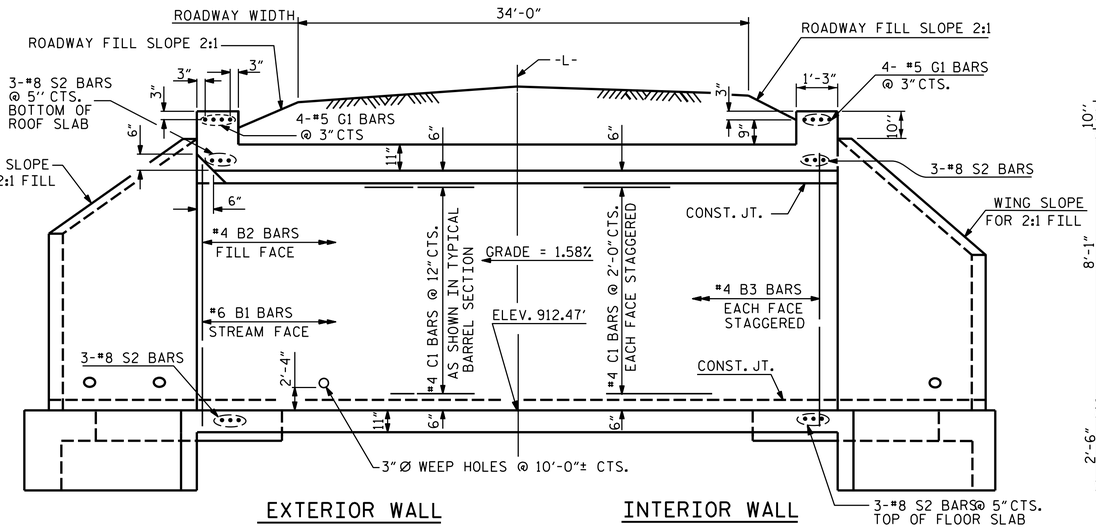

EXTERIOR WALL INTERIOR WALL

CULVERT SECTION NORMAL TO ROADWAY

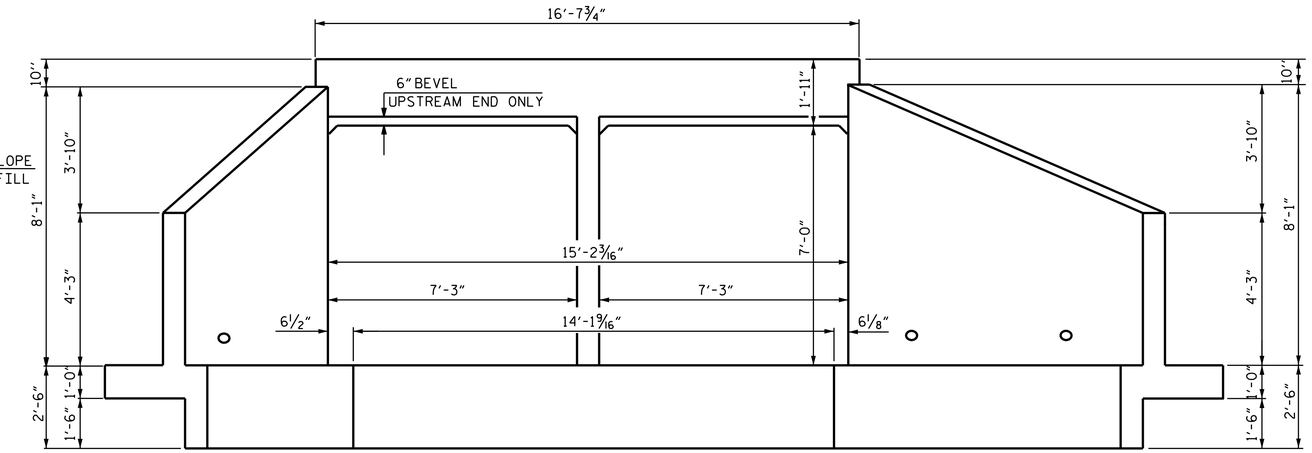

END ELEVATION NORMAL TO SKEW

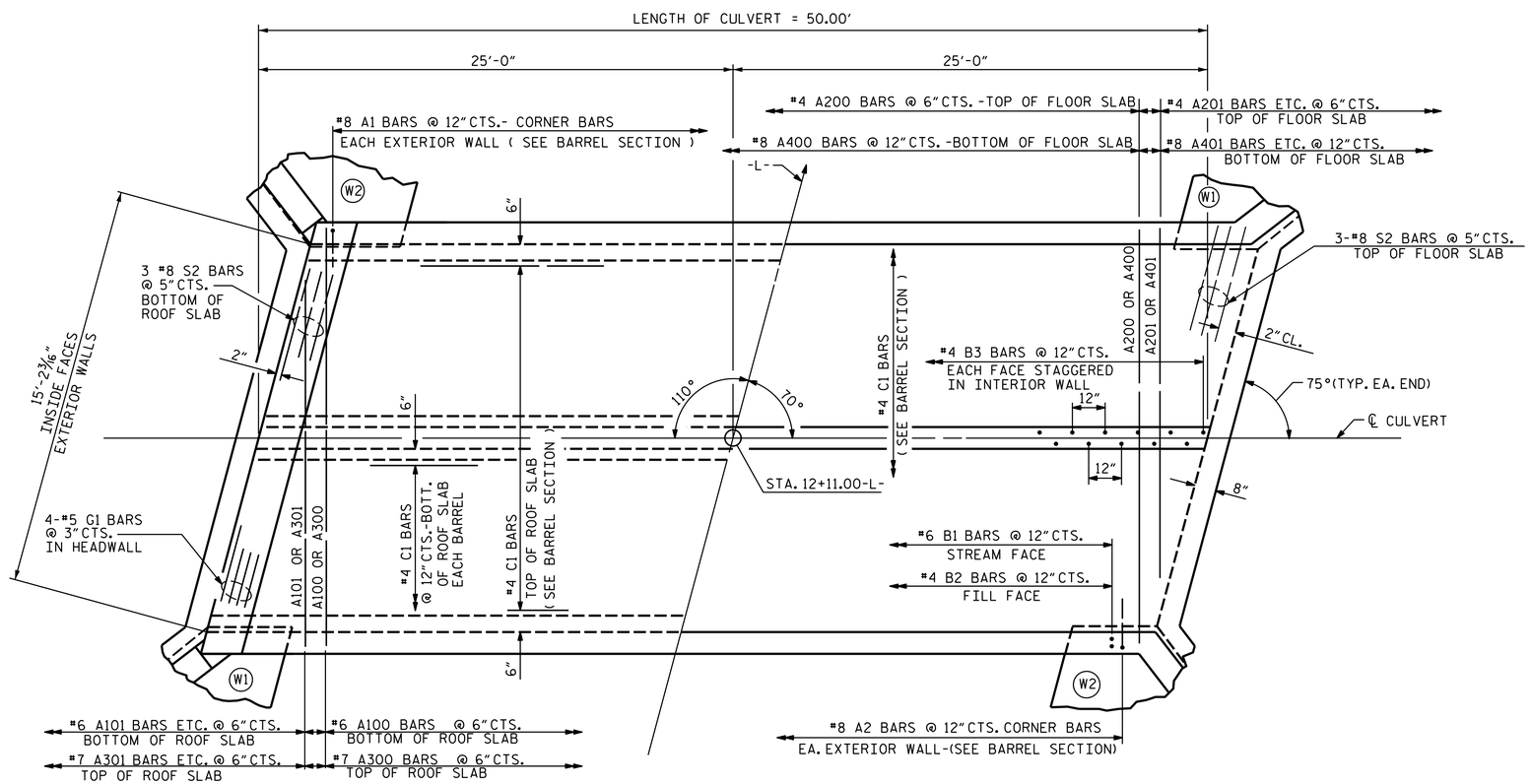

PART PLAN - ROOF SLAB PART PLAN - FLOOR SLAB

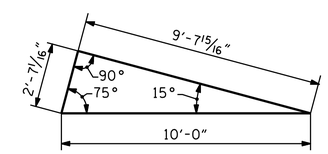

SKEW TRIANGLE

PROJECT NO. 17BP.12.R.201

CATAWBA COUNTY

STATION: 12+11.00-L-

SHEET 3 OF 5

STATE OF NORTH CAROLINA
DEPARTMENT OF TRANSPORTATION
RALEIGH

BARREL STANDARD

DOUBLE 7 FT. X 7 FT. CONCRETE BOX CULVERT 75° SKEW

1971

REVISIONS							SHEET NO.
NO.	BY:	DATE:	NO.	BY:	DATE:		C-3
1			3				TOTAL SHEETS
2			4				5

STD. NO. CB22

PREPARED BY
TGS ENGINEERS
804 N LAFAYETTE ST
SHELBY, NC 28150

NORTH CAROLINA PROFESSIONAL SEAL 11279 ENGINEER RICHARD G. FLETCHER
January 3, 2014

ASSEMBLED BY : CCC	DATE : 9/13	SPECIAL	
CHECKED BY : MTC	DATE : 9/13		
DRAWN BY : W.BRYAN STALEY II	DATE : SEPT. 21,1971	STANDARD	
CHECKED BY : JOEL A. JOHNSON	DATE : NOV. 12,1971		

REVISED 11-19-99 BY M.M. CHECKED BY R.W.W.
REDRAWN NOV.1990 BY TSS CHECKED BY ARB

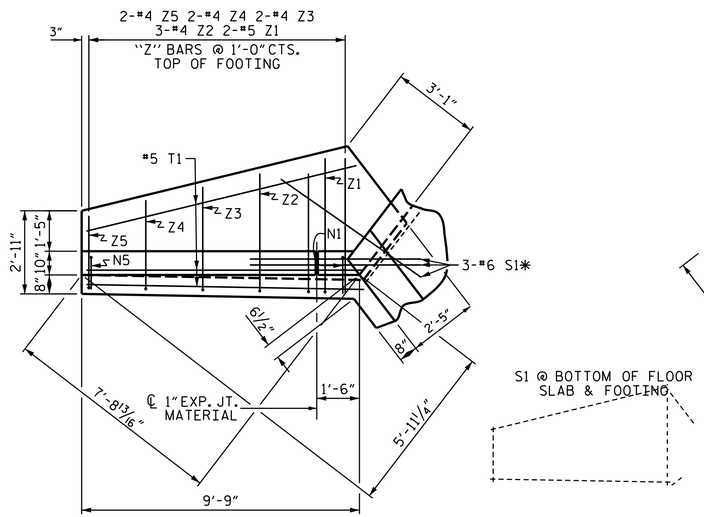

PLAN W2

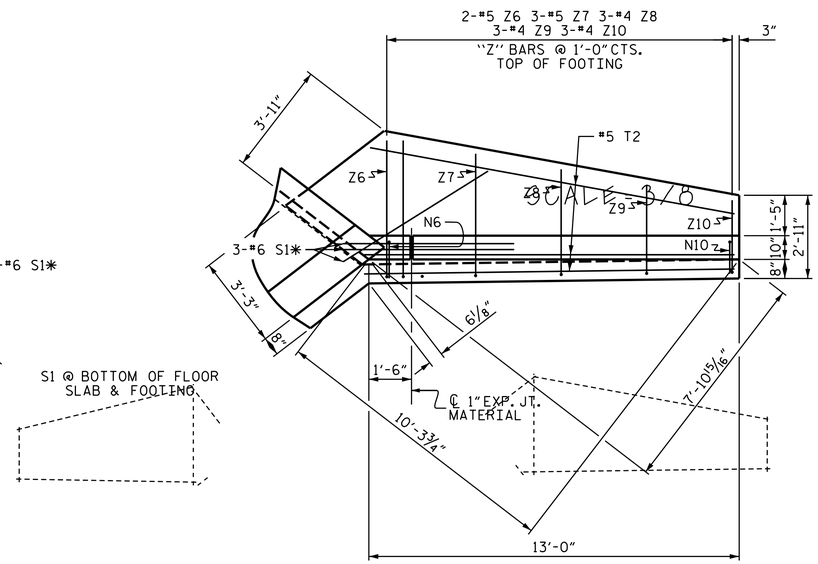

PLAN W1

NOTES

A 3 FOOT STRIP OF FILTER FABRIC SHALL BE ATTACHED TO THE FILL FACE OF THE WING COVERING THE ENTIRE LENGTH OF THE EXPANSION JOINT

BAR TYPES

ALL BAR DIMENSIONS ARE OUT TO OUT.

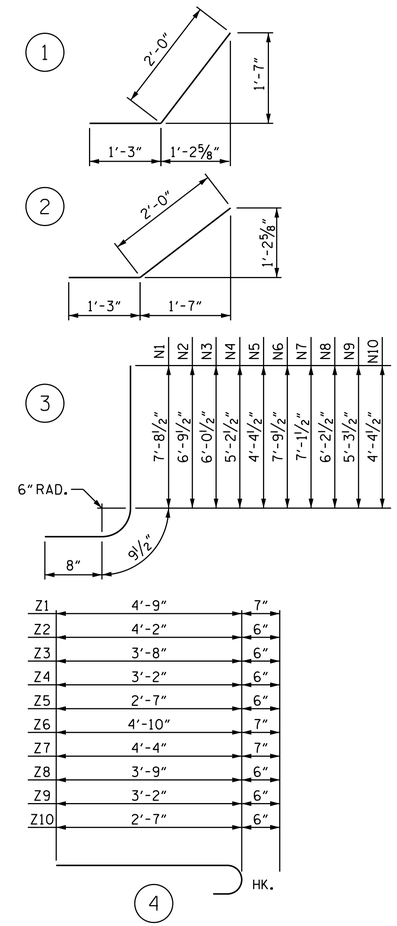

BILL OF MATERIAL

BAR	NO.	SIZE	TYPE	LENGTH	WEIGHT
H1	12	#4	STR	7'-10"	63
H2	4	#4	STR	5'-8"	15
H3	4	#4	STR	2'-0"	5
H4	24	#4	1	3'-3"	52
H5	4	#4	STR	8'-5"	22
H6	12	#4	STR	11'-1"	89
H7	4	#4	STR	8'-2"	22
H8	4	#4	STR	3'-3"	9
H9	24	#4	2	3'-3"	52
H10	4	#4	STR	11'-7"	31
N1	4	#5	3	9'-2"	38
N2	6	#5	3	8'-3"	52
N3	4	#4	3	7'-6"	20
N4	4	#4	3	6'-8"	18
N5	4	#4	3	5'-10"	16
N6	4	#5	3	9'-3"	39
N7	6	#5	3	8'-7"	54
N8	6	#4	3	7'-8"	31
N9	6	#4	3	6'-9"	27
N10	6	#4	3	5'-10"	23
S1	12	#6	STR	6'-0"	108
T1	6	#5	STR	9'-9"	61
T2	6	#5	STR	13'-0"	81
V1	4	#4	STR	7'-1"	19
V2	6	#4	STR	6'-3"	25
V3	4	#4	STR	5'-5"	14
V4	4	#4	STR	4'-7"	12
V5	4	#4	STR	3'-10"	10
V6	4	#4	STR	7'-3"	19
V7	6	#4	STR	6'-6"	26
V8	6	#4	STR	5'-7"	22
V9	6	#4	STR	4'-8"	19
V10	6	#4	STR	3'-10"	15
Z1	4	#5	4	5'-4"	22
Z2	6	#4	4	4'-8"	19
Z3	4	#4	4	4'-2"	11
Z4	4	#4	4	3'-8"	10
Z5	4	#4	4	3'-1"	8
Z6	4	#5	4	5'-5"	23
Z7	6	#5	4	4'-11"	31
Z8	6	#4	4	4'-3"	17
Z9	6	#4	4	3'-8"	15
Z10	6	#4	4	3'-1"	12

REINFORCING STEEL FOR 4 WINGS		1277 LBS
CLASS A CONCRETE		
4 WINGS	18.2	CY
2 HEADWALLS	1.5	CY
2 END CURTAIN WALLS	1.7	CY
4 SILLS	1.6	CY
TOTAL	23.0	CY

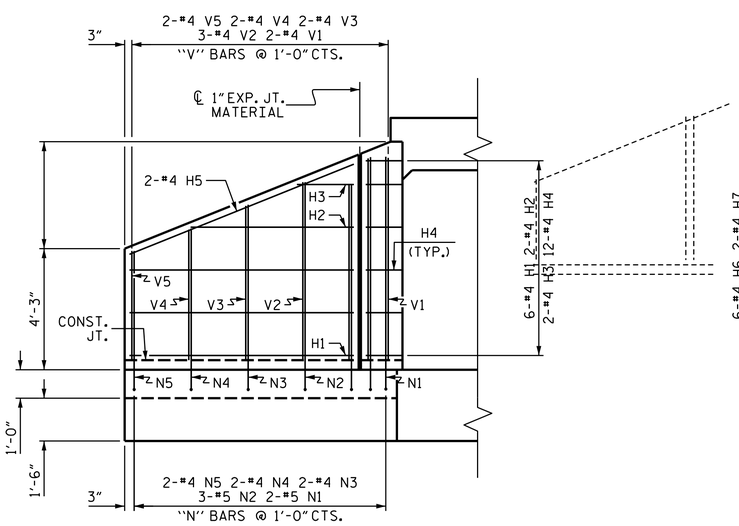

ELEVATION W2

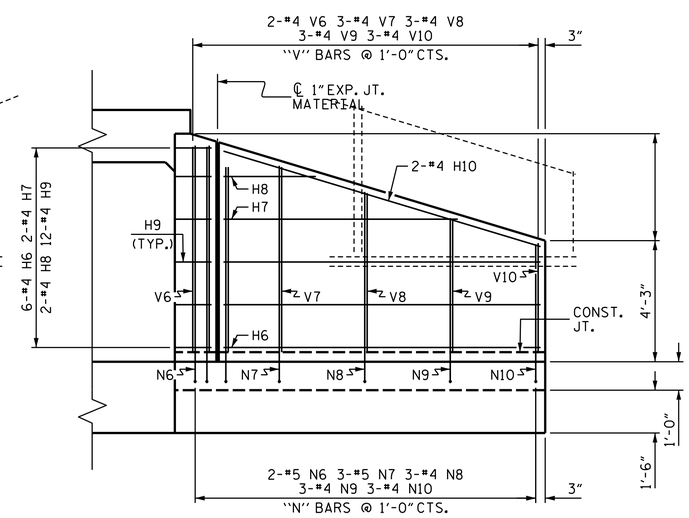

ELEVATION W1

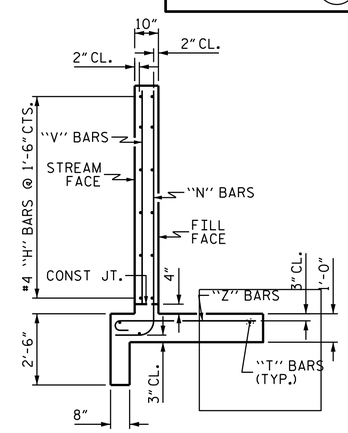

TYPICAL WING SECTION

PROJECT NO. 17BP.12.R.201

CATAWBA COUNTY

STATION: 12+11.00-L-

SHEET 4 OF 5

STATE OF NORTH CAROLINA
DEPARTMENT OF TRANSPORTATION
RALEIGH

STANDARD WINGS FOR CONCRETE BOX CULVERT

H = 7'-0" SLOPE = 2:1

75° SKEW

NORTH CAROLINA PROFESSIONAL SEAL 31279 ENGINEER RICHARD G. FLETCHER

January 3, 2014

REVISIONS								SHEET NO.
NO.	BY:	DATE:	NO.	BY:	DATE:			C-4
1			3					TOTAL SHEETS
2			4					5

ASSEMBLED BY :	CCC	DATE :	9/13
CHECKED BY :	MTC	DATE :	9/13
DRAWN BY :	CCJ	12/99	
CHECKED BY :	RWW	03/00	

PREPARED BY
TGS ENGINEERS
804 N LAFAYETTE ST
SHELBY, NC 28150

STANDARD NOTES

DESIGN DATA:

SPECIFICATIONS	A.A.S.H.T.O. (CURRENT)
LIVE LOAD	SEE PLANS
IMPACT ALLOWANCE	SEE A.A.S.H.T.O.
STRESS IN EXTREME FIBER OF	
STRUCTURAL STEEL - AASHTO M270 GRADE 36	20,000 LBS. PER SQ. IN.
- AASHTO M270 GRADE 50W	27,000 LBS. PER SQ. IN.
- AASHTO M270 GRADE 50	27,000 LBS. PER SQ. IN.
REINFORCING STEEL IN TENSION	
GRADE 60	24,000 LBS. PER SQ. IN.
CONCRETE IN COMPRESSION	1,200 LBS. PER SQ. IN.
CONCRETE IN SHEAR	SEE A.A.S.H.T.O.
STRUCTURAL TIMBER - TREATED OR	
UNTREATED - EXTREME FIBER STRESS	1,800 LBS. PER SQ. IN.
COMPRESSION PERPENDICULAR TO GRAIN OF TIMBER	375 LBS. PER SQ. IN.
EQUIVALENT FLUID PRESSURE OF EARTH	30 LBS. PER CU. FT. (MINIMUM)

MATERIAL AND WORKMANSHIP:

EXCEPT AS MAY OTHERWISE BE SPECIFIED ON PLANS OR IN THE SPECIAL PROVISIONS, ALL MATERIAL AND WORKMANSHIP SHALL BE IN ACCORDANCE WITH THE 2012 "STANDARD SPECIFICATIONS FOR ROADS AND STRUCTURES" OF THE N. C. DEPARTMENT OF TRANSPORTATION.

STEEL SHEET PILING FOR PERMANENT OR TEMPORARY APPLICATIONS SHALL BE HOT ROLLED.

CONCRETE:

UNLESS OTHERWISE REQUIRED ON PLANS, CLASS A CONCRETE SHALL BE USED FOR ALL PORTIONS OF ALL STRUCTURES WITH THE EXCEPTION THAT: CLASS AA CONCRETE SHALL BE USED IN BRIDGE SUPERSTRUCTURES, ABUTMENT BACKWALLS, AND APPROACH SLABS; AND CLASS B CONCRETE SHALL BE USED FOR SLOPE PROTECTION AND RIP RAP.

CONCRETE CHAMFERS:

UNLESS OTHERWISE NOTED ON THE PLANS, ALL EXPOSED CORNERS ON STRUCTURES SHALL BE CHAMFERED 3/4" WITH THE FOLLOWING EXCEPTIONS: TOP CORNERS OF CURBS MAY BE ROUNDED TO 1-1/2" RADIUS WHICH IS BUILT INTO CURB FORMS; CORNERS OF TRANSVERSE FLOOR EXPANSION JOINTS SHALL BE ROUNDED WITH A 1/4" FINISHING TOOL UNLESS OTHERWISE REQUIRED ON PLANS; AND CORNERS OF EXPANSION JOINTS IN THE ROADWAY FACES AND TOPS OF CURBS AND SIDEWALKS SHALL BE ROUNDED TO A 1/4" RADIUS WITH A FINISHING STONE OR TOOL UNLESS OTHERWISE REQUIRED ON PLANS.

DOWELS:

DOWELS WHEN INDICATED ON PLANS AS FOR CULVERT EXTENSIONS, SHALL BE EMBEDDED AT LEAST 12" INTO THE OLD CONCRETE AND GROUTED INTO PLACE WITH 1:2 CEMENT MORTAR.

ALLOWANCE FOR DEAD LOAD DEFLECTION, SETTLEMENT, ETC. IN CASTING SUPERSTRUCTURES:

BRIDGES SHALL BE BUILT ON THE GRADE OR VERTICAL CURVE SHOWN ON PLANS. SLABS, CURBS AND PARAPETS SHALL CONFORM TO THE GRADE OR CURVE.

ALL DIMENSIONS WHICH ARE GIVEN IN SECTION AND ARE AFFECTED BY DEAD LOAD DEFLECTIONS ARE DIMENSIONS AT CENTER LINE OF BEARING UNLESS OTHERWISE NOTED ON PLANS. IN SETTING FORMS FOR STEEL BEAM BRIDGES AND PRESTRESSED CONCRETE GIRDER BRIDGES, ADJUSTMENTS SHALL BE MADE DUE TO THE DEAD LOAD DEFLECTIONS FOR THE ELEVATIONS SHOWN. WHERE BLOCKS ARE SHOWN OVER BEAMS FOR BUILDING UP TO THE SLAB, THE VERTICAL DIMENSIONS OF THE BLOCKS SHALL BE ADJUSTED BETWEEN BEARINGS TO COMPENSATE FOR DEAD LOAD DEFLECTIONS, VERTICAL CURVE ORDINATE, AND ACTUAL BEAM CAMBER. WHERE BOTTOM OF SLAB IS IN LINE WITH BOTTOM OF TOP FLANGES, DEPTH OF SLAB BETWEEN BEARINGS SHALL BE ADJUSTED TO COMPENSATE FOR DEAD LOAD DEFLECTION, VERTICAL CURVE ORDINATE, AND ACTUAL BEAM CAMBER.

IN SETTING FALSEWORK AND FORMS FOR REINFORCED CONCRETE SPANS, AN ALLOWANCE SHALL BE MADE FOR DEAD LOAD DEFLECTIONS, SETTLEMENT OF FALSEWORK, AND PERMANENT CAMBER WHICH SHALL BE PROVIDED FOR IN ADDITION TO THE ELEVATIONS SHOWN. AFTER REMOVAL OF THE FALSEWORK, THE FINISHED STRUCTURES SHALL CONFORM TO THE PROFILE AND ELEVATIONS SHOWN ON THE PLANS AND CONSTRUCTION ELEVATIONS FURNISHED BY THE ENGINEER.

DETAILED DRAWINGS FOR FALSEWORK OR FORMS FOR BRIDGE SUPERSTRUCTURE AND ANY STRUCTURE OR PARTS OF A STRUCTURE AS NOTED ON THE PLANS SHALL BE SUBMITTED TO THE ENGINEER FOR APPROVAL BEFORE CONSTRUCTION OF THE FALSEWORK OR FORMS IS STARTED.

REINFORCING STEEL:

ALL REINFORCING STEEL SHALL BE DEFORMED. DIMENSIONS RELATIVE TO PLACEMENT OF REINFORCING ARE TO CENTERS OF BARS UNLESS OTHERWISE INDICATED IN THE PLANS. DIMENSIONS ON BAR DETAILS ARE TO CENTERS OF BARS OR ARE OUT TO OUT AS INDICATED ON PLANS.

WIRE BAR SUPPORTS SHALL BE PROVIDED FOR REINFORCING STEEL WHERE INDICATED ON THE PLANS. WHEN BAR SUPPORT PIECES ARE PLACED IN CONTINUOUS LINES, THEY SHALL BE SO PLACED THAT THE ENDS OF THE SUPPORTING WIRES SHALL BE LAPPED TO LOCK LEGS ON ADJOINING PIECES.

STRUCTURAL STEEL:

AT THE CONTRACTOR'S OPTION, HE MAY SUBSTITUTE 7/8" Ø SHEAR STUDS FOR THE ¾" Ø STUDS SPECIFIED ON THE PLANS. THIS SUBSTITUTION SHALL BE MADE AT THE RATE OF 3 - 7/8" Ø STUDS FOR 4 - 3/4" Ø STUDS, AND STUD SPACING CHANGES SHALL BE MADE AS NECESSARY TO PROVIDE THE SAME EQUIVALENT NUMBER OF 7/8" Ø STUDS ALONG THE BEAM AS SHOWN FOR 3/4" Ø STUDS BASED ON THE RATIO OF 3 - 7/8" Ø STUDS FOR 4 - 3/4" Ø STUDS. STUDS OF THE LENGTH SPECIFIED ON THE PLANS MUST BE PROVIDED. THE MAXIMUM SPACING SHALL BE 2'-0".

EXCEPT AT THE INTERIOR SUPPORTS OF CONTINUOUS BEAMS WHERE THE COVER PLATE IS IN CONTACT WITH BEARING PLATE, THE CONTRACTOR MAY, AT HIS OPTION, SUBSTITUTE FOR THE COVER PLATES DESIGNATED ON THE PLANS COVER PLATES OF THE EQUIVALENT AREA PROVIDED THESE PLATES ARE AT LEAST 5/16" IN THICKNESS AND DO NOT EXCEED A WIDTH EQUAL TO THE FLANGE WIDTH LESS 2" OR A THICKNESS EQUAL TO 2 TIMES THE FLANGE THICKNESS. THE SIZE OF FILLET WELDS SHALL CONFORM TO THE REQUIREMENTS OF THE CURRENT ANSI/AASHTO/AWS "BRIDGE WELDING CODE". ELECTROSLAG WELDING WILL NOT BE PERMITTED.

WITH THE SOLE EXCEPTION OF EDGES AT SURFACES WHICH BEAR ON OTHER SURFACES, ALL SHARP EDGES AND ENDS OF SHAPES AND PLATES SHALL BE SLIGHTLY ROUNDED BY SUITABLE MEANS TO A RADIUS OF APPROXIMATELY 1/16 INCH OR EQUIVALENT FLAT SURFACE AT A SUITABLE ANGLE PRIOR TO PAINTING, GALVANIZING, OR METALLIZING.

HANDRAILS AND POSTS:

METAL STANDARDS AND FACES OF THE CONCRETE END POSTS FOR THE METAL RAIL SHALL BE SET NORMAL TO THE GRADE OF THE CURB, UNLESS OTHERWISE SHOWN ON PLANS. THE METAL RAIL AND TOPS OF CONCRETE POSTS USED WITH THE ALUMINUM RAIL SHALL BE BUILT PARALLEL TO THE GRADE OF THE CURB.

METAL HANDRAILS SHALL BE IN ACCORDANCE WITH THE PLANS. RAILS SHALL BE AS MANUFACTURED FOR BRIDGE RAILING. CASTINGS SHALL BE OF A UNIFORM APPEARANCE. FINS AND OTHER DEFORMATIONS RESULTING FROM CASTING OR OTHERWISE SHALL BE REMOVED IN A MANNER SO THAT A UNIFORM COLORING OF THE COMPLETED CASTING SHALL BE OBTAINED. CASTINGS WITH DISCOLORATIONS OR OF NON-UNIFORM COLORING WILL NOT BE ACCEPTED. CERTIFIED MILL REPORTS ARE REQUIRED FOR METAL RAILS AND POSTS.

SPECIAL NOTES:

GENERALLY, IN CASE OF DISCREPANCY, THIS STANDARD SHEET OF NOTES SHALL GOVERN OVER THE SPECIFICATIONS, BUT THE REMAINDER OF THE PLANS SHALL GOVERN OVER NOTES HEREON, AND SPECIAL PROVISIONS SHALL GOVERN OVER ALL. SEE SPECIFICATIONS ARTICLE 105-4.

PROJECT NO. 17BP.12.R.201

CATAWBA COUNTY

STATION: 12+11.00-L-

SHEET 5 OF 5

STATE OF NORTH CAROLINA
DEPARTMENT OF TRANSPORTATION
RALEIGH

STANDARD NOTES

NORTH CAROLINA PROFESSIONAL SEAL 011279 ENGINEER RICHARD G. FLETCHER

January 3, 2014

PREPARED BY
TGS ENGINEERS
804 N LAFAYETTE ST
SHELBY, NC 28150

REVISIONS						SHEET NO.
NO.	BY:	DATE:	NO.	BY:	DATE:	C-5
1			3			TOTAL SHEETS
2			4			5

DRAWN BY :	CCC	DATE :	8/13
CHECKED BY :	MTC	DATE :	8/13

REV. 6-16-95 EEM ()RGW REV. 5-7-03 RWW ()JTE REV. 10-1-11 MAA ()GM
REV. 8-16-99 RWW ()LES REV. 5-1-06 TLA ()GM

STD. NO. SN

09/08/99

PROJECT: 17BP.12.R.201

CONTRACT:

$$$$$$$$SYSTIME$$$$$
$$$$$$$$$$$$$$$$$$DGN$$$$$$$$$$$$$$$$$$
$$$$$$USERNAME$$$$$

See Sheet 1-A For Index of Sheets

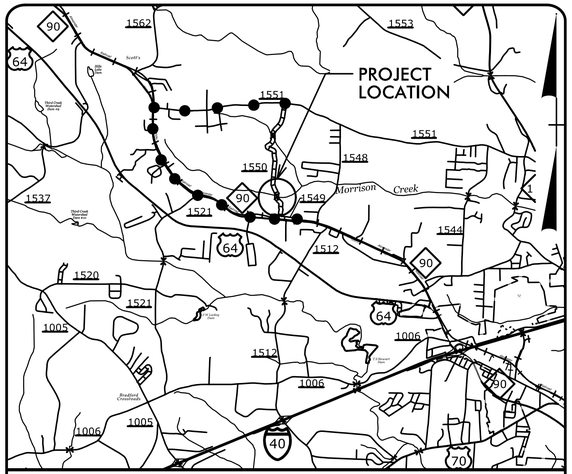

VICINITY MAP

OFFSITE DETOUR

STATE OF NORTH CAROLINA
DIVISION OF HIGHWAYS

IREDELL COUNTY

STATE	STATE PROJECT REFERENCE NO.	SHEET NO.	TOTAL SHEETS
N.C.	17BP.12.R.201	1	

STATE PROJ. NO.	F. A. PROJ. NO.	DESCRIPTION
17BP.12.R.2		PE
17BP.12.R.2		R/W, UTIL.
17BP.12.R.201		CONST.

LOCATION: BRIDGE #480119 OVER MORRISON CREEK ON SR 1550 (STEVENSON FARM ROAD)

TYPE OF WORK: GRADING, DRAINAGE, PAVING, AND STRUCTURE

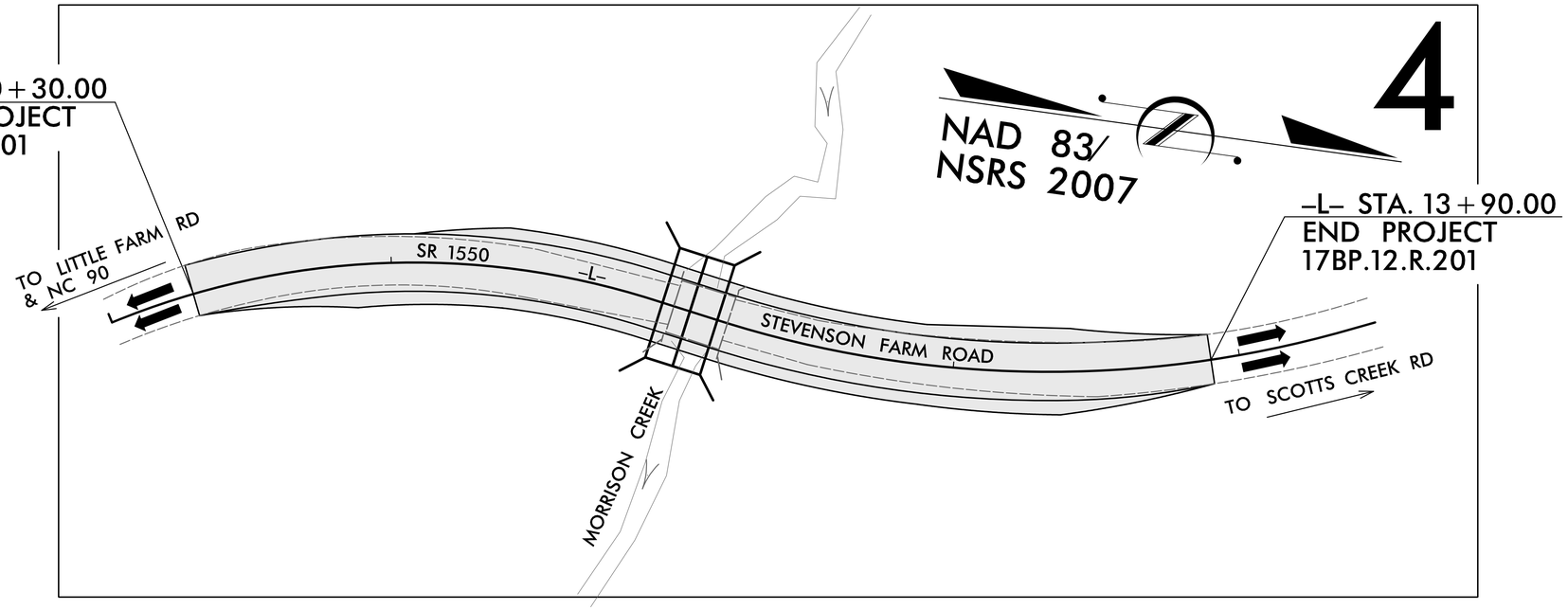

DESIGN EXCEPTION REQUIRED FOR HORIZONTAL AND VERTICAL CURVATURE AND VERTICAL STOPPING SIGHT DISTANCE

GRAPHIC SCALES

20 10 0 20 40
PLANS

20 10 0 20 40
PROFILE (HORIZONTAL)

4 2 0 4 8
PROFILE (VERTICAL)

DESIGN DATA

ADT 2013 = 240

V = 55 MPH

TTST = 6 %

FUNC CLASS =
RURAL LOCAL
SUB REGIONAL TIER

PROJECT LENGTH

LENGTH TOTAL PROJECT 17BP.12.R.201, #480119 = 0.068 MILES

NCDOT CONTACT: STEVE RACKLEY, PE

PLANS PREPARED BY:

TGS ENGINEERS
804-C N. LAFAYETTE ST
SHELBY, NC 28150
PH (704) 476-0003
CORP. LICENSE NO.: C-0275

PLANS PREPARED FOR:

NORTH CAROLINA
DEPARTMENT OF
TRANSPORATION
DIVISION 12
1710 East Marion Street
Shelby, NC 28151

RIGHT OF WAY DATE:
JUNE 1, 2013

LETTING DATE:

2012 STANDARD SPECIFICATIONS

LEONARD G. FLETCHER, PE
PROJECT ENGINEER

B. CHAD HOUSER, PE
PROJECT DESIGN ENGINEER

HYDRAULICS ENGINEER

SIGNATURE:

NORTH CAROLINA PROFESSIONAL SEAL 030119 ENGINEER THOMAS L. FLETCHER 12/4/2014

ROADWAY DESIGN ENGINEER

SIGNATURE:

NORTH CAROLINA PROFESSIONAL SEAL 30499 ENGINEER BOBBY C. HOUSER 12/4/2014

STATE OF NORTH CAROLINA • DEPARTMENT OF TRANSPORTATION

Iredell County
Bridge # 480119

PROJECT REFERENCE NO.	SHEET NO.
17BP.12.R.201	1-A

ROADWAY DESIGN ENGINEER

NORTH CAROLINA PROFESSIONAL SEAL 30499 ENGINEER BOBBY C. HOUSER 12/4/2017

INDEX OF SHEETS

INDEX OF SHEETS

SHEET NUMBER	SHEET
1	TITLE SHEET
1-A	INDEX OF SHEETS, GENERAL NOTES, AND LIST OF STANDARD DRAWINGS
1-B	CONVENTIONAL SYMBOLS
1-C	SURVEY CONTROL SHEET
2	PAVEMENT SCHEDULE AND TYPICAL SECTIONS
3	SUMMARY OF GUARDRAIL AND EARTHWORK SUMMARY
3-A	SUMMARY OF DRAINAGE QUANTITIES
4	PLAN AND PROFILE SHEET
TMP-1 THRU TMP-3	TRAFFIC MANAGEMENT PLANS
SD-1	SPECIAL SIGN DESIGN
PMP-1	PAVEMENT MARKING PLAN
EC-1 THRU EC-5	EROSION CONTROL PLANS
X-1 THRU X-3	CROSS-SECTIONS
C-1 THRU C-5	CULVERT PLANS

GENERAL NOTES

GENERAL NOTES:

2012 SPECIFICATIONS
EFFECTIVE: 01-17-2012
REVISED: 07-30-2012

GRADE LINE:
GRADING AND SURFACING:

THE GRADE LINES SHOWN DENOTE THE FINISHED ELEVATION OF THE PROPOSED SURFACING AT GRADE POINTS SHOWN ON THE TYPICAL SECTIONS. GRADE LINES MAY BE ADJUSTED AT THEIR BEGINNING AND ENDING AND AT STRUCTURES AS DIRECTED BY THE ENGINEER IN ORDER TO SECURE A PROPER TIE-IN.

CLEARING:

CLEARING ON THIS PROJECT SHALL BE PERFORMED TO THE LIMITS ESTABLISHED BY METHOD II.

SUPERELEVATION:

ALL CURVES ON THIS PROJECT SHALL BE SUPERELEVATED IN ACCORDANCE WITH STD. NO. 225.04 USING THE RATE OF SUPERELEVATION AND RUNOFF SHOWN ON THE PLANS. SUPERELEVATION IS TO BE REVOLVED ABOUT THE GRADE POINTS SHOWN ON THE TYPICAL SECTIONS.

SHOULDER CONSTRUCTION:

ASPHALT, EARTH, AND CONCRETE SHOULDER CONSTRUCTION ON THE HIGH SIDE OF SUPERELEVATED CURVES SHALL BE IN ACCORDANCE WITH STD. NO. 560.01.

GUARDRAIL:

THE GUARDRAIL LOCATIONS SHOWN ON THE PLANS MAY BE ADJUSTED DURING CONSTRUCTION AS DIRECTED BY THE ENGINEER. THE CONTRACTOR SHOULD CONSULT WITH THE ENGINEER PRIOR TO ORDERING GUARDRAIL MATERIAL.

SUBSURFACE PLANS:

NO SUBSURFACE PLANS ARE AVAILABLE ON THIS PROJECT. THE CONTRACTOR SHOULD MAKE HIS OWN INVESTIGATION AS TO THE SUBSURFACE CONDITIONS.

UTILITIES

NO KNOWN UTILITIES ARE IN CONFLICT WITH THIS PROJECT.

RIGHT-OF-WAY MARKERS:

ALL RIGHT-OF-WAY MARKERS ON THIS PROJECT SHALL BE PLACED BY CONTRACT.

STANDARD DRAWINGS

EFF. 01-17-2012
REV. 10-30-2012

2012 ROADWAY ENGLISH STANDARD DRAWINGS

The following Roadway Standards as appear in "Roadway Standard Drawings" Highway Design Branch - N. C. Department of Transportation - Raleigh, N. C., Dated January, 2012 are applicable to this project and by reference hereby are considered a part of these plans:

STD.NO.	TITLE
200.02	Method of Clearing - Method II
225.02	Guide for Grading Subgrade - Secondary and Local
225.04	Method of Obtaining Superelevation - Two Lane Pavement
DIVISION 3 - PIPE CULVERTS	
300.01	Method of Pipe Installation
310.10	Driveway Pipe Construction
DIVISION 5 - SUBGRADE, BASES AND SHOULDERS	
560.01	Method of Shoulder Construction - High Side of Superelevated Curve - Method I
DIVISION 8 - INCIDENTALS	
862.01	Guardrail Placement
862.02	Guardrail Installation
876.01	Rip Rap in Channels
876.02	Guide for Rip Rap at Pipe Outlets
876.04	Drainage Ditches with Class 'B' Rip Rap

8/17/99

$$$$$$SYSTIME$$$$
$$$$$$STRDATE$$$$
$$$$$$JOBNO$$$$$$$$$$$$$$$$$$$$
$$$$$$ENCODE$$$$

04/16/11

PROJECT REFERENCE NO.	SHEET NO.
17BPJ2.R.201	1-B

Note: Not to Scale

S.U.E. = Subsurface Utility Engineering

STATE OF NORTH CAROLINA
DIVISION OF HIGHWAYS

CONVENTIONAL PLAN SHEET SYMBOLS

BOUNDARIES AND PROPERTY:

- State Line
- County Line
- Township Line
- City Line
- Reservation Line
- Property Line
- Existing Iron Pin — EIP
- Property Corner
- Property Monument — ECM
- Parcel/Sequence Number — 123
- Existing Fence Line
- Proposed Woven Wire Fence
- Proposed Chain Link Fence
- Proposed Barbed Wire Fence
- Existing Wetland Boundary — WLB
- Proposed Wetland Boundary — WLB
- Existing Endangered Animal Boundary — EAB
- Existing Endangered Plant Boundary — EPB
- Known Soil Contamination: Area or Site
- Potential Soil Contamination: Area or Site

BUILDINGS AND OTHER CULTURE:

- Gas Pump Vent or U/G Tank Cap
- Sign — S
- Well — W
- Small Mine
- Foundation
- Area Outline
- Cemetery
- Building
- School
- Church
- Dam

HYDROLOGY:

- Stream or Body of Water
- Hydro, Pool or Reservoir
- Jurisdictional Stream — JS
- Buffer Zone 1 — BZ 1
- Buffer Zone 2 — BZ 2
- Flow Arrow
- Disappearing Stream
- Spring
- Wetland
- Proposed Lateral, Tail, Head Ditch — FLOW
- False Sump

RAILROADS:

- Standard Gauge — CSX TRANSPORTATION
- RR Signal Milepost — MILEPOST 35
- Switch — SWITCH
- RR Abandoned
- RR Dismantled

RIGHT OF WAY:

- Baseline Control Point
- Existing Right of Way Marker
- Existing Right of Way Line
- Proposed Right of Way Line — RW
- Proposed Right of Way Line with Iron Pin and Cap Marker — RW
- Proposed Right of Way Line with Concrete or Granite R/W Marker — RW
- Proposed Control of Access Line with Concrete C/A Marker — CA
- Existing Control of Access — CA
- Proposed Control of Access — CA
- Existing Easement Line — E
- Proposed Temporary Construction Easement — E
- Proposed Temporary Drainage Easement — TDE
- Proposed Permanent Drainage Easement — PDE
- Proposed Permanent Drainage / Utility Easement — DUE
- Proposed Permanent Utility Easement — PUE
- Proposed Temporary Utility Easement — TUE
- Proposed Aerial Utility Easement — AUE
- Proposed Permanent Easement with Iron Pin and Cap Marker

ROADS AND RELATED FEATURES:

- Existing Edge of Pavement
- Existing Curb
- Proposed Slope Stakes Cut — C
- Proposed Slope Stakes Fill — F
- Proposed Curb Ramp — CR
- Existing Metal Guardrail
- Proposed Guardrail
- Existing Cable Guiderail
- Proposed Cable Guiderail
- Equality Symbol
- Pavement Removal

VEGETATION:

- Single Tree
- Single Shrub
- Hedge
- Woods Line
- Orchard
- Vineyard — Vineyard

EXISTING STRUCTURES:

MAJOR:

- Bridge, Tunnel or Box Culvert — CONC
- Bridge Wing Wall, Head Wall and End Wall — CONC WW

MINOR:

- Head and End Wall — CONC HW
- Pipe Culvert
- Footbridge
- Drainage Box: Catch Basin, DI or JB — CB
- Paved Ditch Gutter
- Storm Sewer Manhole — S
- Storm Sewer — S

UTILITIES:

POWER:

- Existing Power Pole
- Proposed Power Pole
- Existing Joint Use Pole
- Proposed Joint Use Pole
- Power Manhole — P
- Power Line Tower
- Power Transformer
- U/G Power Cable Hand Hole
- H-Frame Pole
- Recorded U/G Power Line — P
- Designated U/G Power Line (S.U.E.*) — P

TELEPHONE:

- Existing Telephone Pole
- Proposed Telephone Pole
- Telephone Manhole — T
- Telephone Booth
- Telephone Pedestal — T
- Telephone Cell Tower
- U/G Telephone Cable Hand Hole
- Recorded U/G Telephone Cable — T
- Designated U/G Telephone Cable (S.U.E.*) — T
- Recorded U/G Telephone Conduit — TC
- Designated U/G Telephone Conduit (S.U.E.*) — TC
- Recorded U/G Fiber Optics Cable — T FO
- Designated U/G Fiber Optics Cable (S.U.E.*) — T FO

WATER:

- Water Manhole — W
- Water Meter
- Water Valve
- Water Hydrant
- Recorded U/G Water Line — W
- Designated U/G Water Line (S.U.E.*) — W
- Above Ground Water Line — A/G Water

TV:

- TV Satellite Dish
- TV Pedestal — C
- TV Tower
- U/G TV Cable Hand Hole — HH
- Recorded U/G TV Cable — TV
- Designated U/G TV Cable (S.U.E.*) — TV
- Recorded U/G Fiber Optic Cable — TV FO
- Designated U/G Fiber Optic Cable (S.U.E.*) — TV FO

GAS:

- Gas Valve
- Gas Meter
- Recorded U/G Gas Line — G
- Designated U/G Gas Line (S.U.E.*) — G
- Above Ground Gas Line — A/G Gas

SANITARY SEWER:

- Sanitary Sewer Manhole
- Sanitary Sewer Cleanout
- U/G Sanitary Sewer Line — SS
- Above Ground Sanitary Sewer — A/G Sanitary Sewer
- Recorded SS Forced Main Line — FSS
- Designated SS Forced Main Line (S.U.E.*) — FSS

MISCELLANEOUS:

- Utility Pole
- Utility Pole with Base
- Utility Located Object
- Utility Traffic Signal Box — S
- Utility Unknown U/G Line — ?UTL
- U/G Tank; Water, Gas, Oil
- Underground Storage Tank, Approx. Loc. — UST
- A/G Tank; Water, Gas, Oil
- Geoenvironmental Boring
- U/G Test Hole (S.U.E.*)
- Abandoned According to Utility Records — AATUR
- End of Information — E.O.I.

PROJECT REFERENCE NO.	SHEET NO.
17BP.12.R.201	1-C

8/17/99

REVISIONS

IREDELL COUNTY
LOW IMPACT BRIDGE

STRUCTURE #480119
LS 12-11-022
WBS 17BP.12.R.201
TIP #48-0119

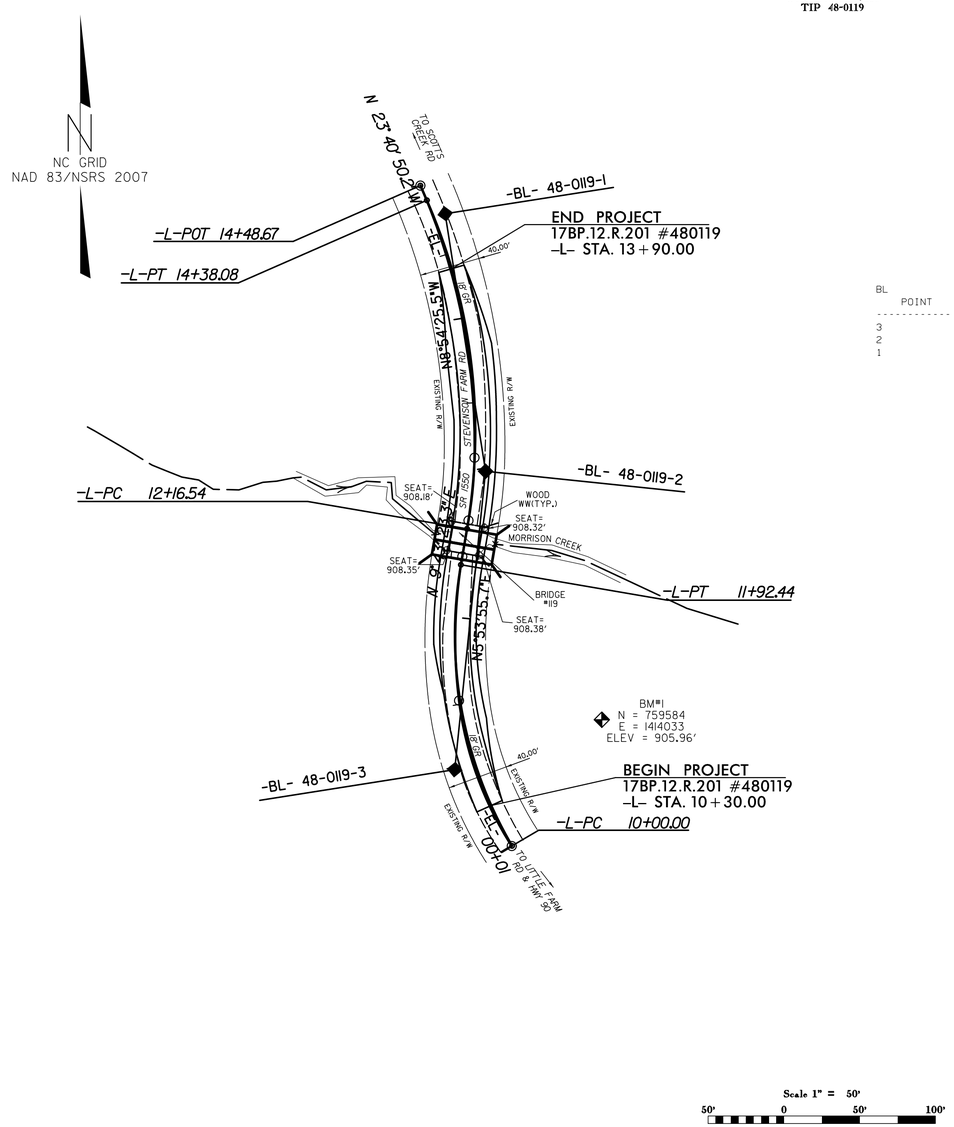

BL

POINT	DESC.	NORTH	EAST	ELEVATION	EL STATION	OFFSET
3	48-0119-3	759550.8849	1413935.9804	914.83	10+60.23	12.65 LT
2	48-0119-2	759747.7392	1413956.3192	910.47	12+55.62	7.60 RT
1	48-0119-1	759917.6650	1413929.6880	920.11	14+25.55	8.13 RT

BENCHMARKS (NAVD 88)
****
BM#1 ELEVATION = 905.96'
N 759584 E 1414033
BL STATION 5+43.00 93 RIGHT
RR SPIKE IN 18" MAPLE WEST ROOT
****
****
BM#2 ELEVATION = 920.11'
N 759918 E 1413930
BL STATION 8+70.00 0 RIGHT
REBAR WITH ALUMINUM CAP STAMPED
'48-0119-1' (FLUSH WITH GROUND).
POINT LIES NEAR EASTERN EDGE
OF STEVENSON FARM ROAD
****

Scale 1" = 50'
50' 0 50' 100'

DATUM DESCRIPTION

THE LOCALIZED COORDINATE SYSTEM DEVELOPED FOR THIS PROJECT
IS BASED ON THE STATE PLANE COORDINATES ESTABLISHED BY
NCDOT FOR MONUMENT "48-0119-1"
WITH NAD 83/NSRS 2007 STATE PLANE GRID COORDINATES OF
NORTHING: 759917.665(ft) EASTING: 1413929.688(ft)
ELEVATION: 920.113(ft)
THE AVERAGE COMBINED GRID FACTOR USED ON THIS PROJECT
(GROUND TO GRID) IS: 0.9998831306
THE N.C. LAMBERT GRID BEARING AND
LOCALIZED HORIZONTAL GROUND DISTANCE FROM
"48-0119-1" TO -L- STATION 10+00 IS
S6°02'40.8"E 419.44
ALL LINEAR DIMENSIONS ARE LOCALIZED HORIZONTAL DISTANCES
VERTICAL DATUM USED IS NAVD 88

6/2/99

Iredell County
Bridge # 480119

PROJECT REFERENCE NO.	SHEET NO.
17BPJ2.R.201	2
ROADWAY DESIGN ENGINEER	PAVEMENT DESIGN ENGINEER

NORTH CAROLINA PROFESSIONAL SEAL 30499 ENGINEER BOBBY C. HOUBER 12/4/2018

TGS ENGINEERS
TGS ENGINEERS
804-C N. LAFAYETTE ST
SHELBY, NC 28150
PH (704) 476-0003
CORP. LICENSE NO.: C-0275

PAVEMENT SCHEDULE	
C1	PROP. APPROX. 3" ASPHALT CONCRETE SURFACE COURSE, TYPE SF9.5A, AT AN AVERAGE RATE OF 165 LBS. PER SQ. YD. IN EACH OF TWO LAYERS.
E1	PROP. APPROX. 4" ASPHALT CONCRETE BASE COURSE, TYPE B25.0B, AT AN AVERAGE RATE OF 456 LBS. PER SQ. YD.
T	EARTH MATERIAL

NOTE: PAVEMENT EDGE SLOPES ARE 1:1 UNLESS SHOWN OTHERWISE.

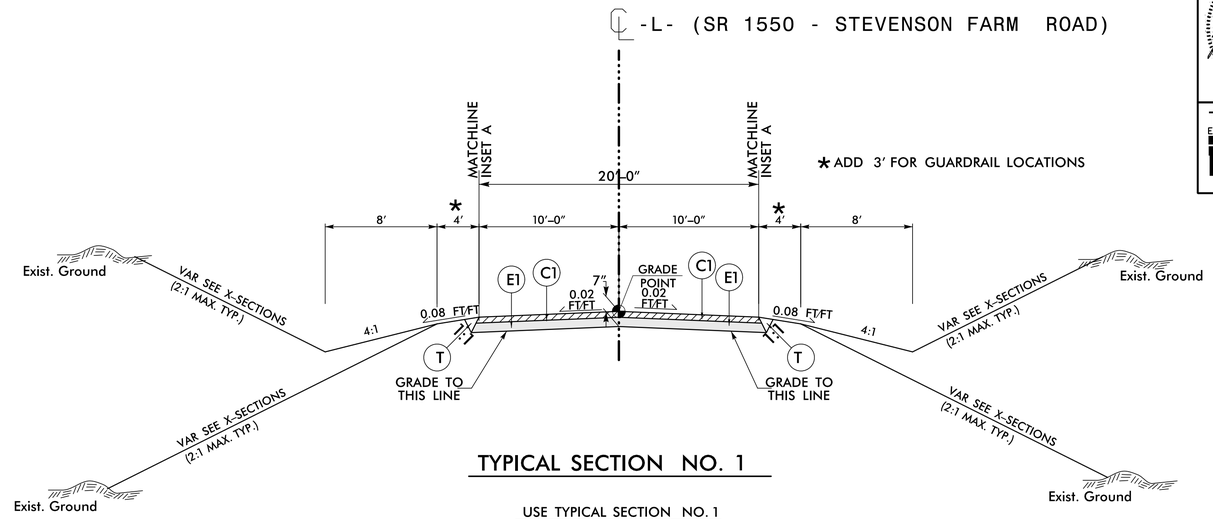

TYPICAL SECTION NO. 1

USE TYPICAL SECTION NO. 1
-L- STA. 10+30.00 TO -L- STA. 13+90.00

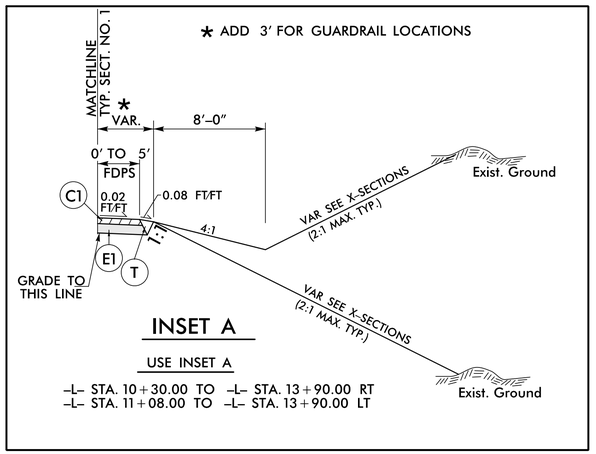

INSET A

USE INSET A
-L- STA. 10+30.00 TO -L- STA. 13+90.00 RT
-L- STA. 11+08.00 TO -L- STA. 13+90.00 LT

RD261649

STATE OF NORTH CAROLINA
DIVISION OF HIGHWAYS

SUMMARY OF EARTHWORK

IN CUBIC YARDS

Station	Station	Uncl. Excav.	Embank. +%	Borrow	Waste
-L- 10+30.00	-L- 13+90.00	280	422	142	
PROJECT TOTALS:		280	422	142	
EST. 5% TO REPLACE TOP SOIL ON BORROW PITS				7	
GRAND TOTALS:		280	422	149	
SAY:		**300**		**160**	

Approximate quantities only. Unclassified excavation, borrow excavation, fine grading, and clearing and grubbing will be paid for at the lump sum price for "Grading".

"N" = DISTANCE FROM EDGE OF LANE TO FACE OF GUARDRAIL
TOTAL SHOULDER WIDTH = DISTANCE FROM EDGE OF TRAVEL LANE TO SHOULDER BREAK POINT.
FLARE LENGTH = DISTANCE FROM LAST SECTION OF PARALLEL GUARDRAIL TO END OF GUARDRAIL.
W = TOTAL WIDTH OF FLARE FROM BEGINNING OF TAPER TO END OF GUARDRAIL.
G = GATING IMPACT ATTENUATOR TYPE 350
NG = NON-GATING IMPACT ATTENUATOR TYPE 350

GUARDRAIL SUMMARY

LINE	BEG. STA.	END STA.	LOC.	LENGTH			WARRANT POINT		"N" DIST. FROM E.O.L.	TOTAL SHLDR WIDTH	FLAIR LENGTH		W		ANCHORS							IMP. ATTEN. TYPE 350			REMOVE EXISTING GUARDRAIL		REMARKS
				STRAIGHT	SHOP CURVED	DOUBLE FACED	APPR. END	TRAIL. END			APPR. END	TRAIL. END	APPR. END	TRAIL. END			GRAU 350 (TL3)	AT-1				EA	G	NG			
-L-	10+87.20	13+37.20	RT	250.00			11+95.98	12+15.98	4'	7'	50'	50'	1'	1'			2										
-L-	11+69.95	13+41.35	LT	156.25	31.25		12+15.98	11+95.98	4'	7'	50'		1'				1	1									
SUB-TOTALS:				406.25	31.25												3	1									
	LESS ANCHOR DEDUCTIONS																										
	GRAU-350 (TL-3)	3 @ 50.00ft		150																							
	AT-1	1@6.25ft			6.25																						
	ANCHOR TOTALS			150	6.25																						
GRAND TOTALS				256.25	25.00												**3**	**1**									
SAY				**262.5**	**37.5**																						

ADDITIONAL GUARDRAIL POSTS = 5 EA

RD248621

COMPUTED BY: SGM DATE: 8/6/2013

CHECKED BY: JLT DATE: 8/21/2013

NORTH CAROLINA DEPARTMENT OF TRANSPORTATION
DIVISION OF HIGHWAYS

PROJECT NO.	SHEET NO.
17BP.12.R.201	3-A

Iredell County
Bridge #480119

Note: Invert Elevations indicated are for Bid Purposes only and shall not be used for project construction stakeout. See "Standard Specifications For Roads and Structures, Section 300-5".

LIST OF PIPES, ENDWALLS, ETC. (FOR PIPES 48 INCHES & UNDER)

STATION / SIZE / THICKNESS OR GAUGE	LOCATION (LT, RT, OR CL)'	STRUCTURE NO. FROM	STRUCTURE NO. TO	TOP ELEVATION	INVERT ELEVATION	INVERT ELEVATION	SLOPE CRITICAL	DRAINAGE PIPE (RCP, CSP, CAAP, HDPE, or PVC) 12"	15"	18"	24"	30"	36"	42"	48"	DO NOT USE RCP	DO NOT USE CSP	DO NOT USE CAAP	DO NOT USE HDPE	C.S. PIPE 12" .064	15" .064	18" .064	24" .064	30" .079	36" .079	42" .109	48" .109	R.C. PIPE CLASS III 12"	15"	18"	24"	30"	36"	42"	48"	R.C. PIPE CLASS IV 12"	15"	18"	24"	30"	36"	42"	48"	** R.C. PIPE (CLASS V)	**** RC PIPE CULVERTS, CONTRACTOR DESIGN	**** RC PIPE CULVERTS, CONTRACTOR DESIGN	15" SIDE DRAIN PIPE	18" SIDE DRAIN PIPE	ENDWALLS STD. 838.01 838.11 OR STD. 838.80 (UNLESS NOTED OTHERWISE) CU. YARDS R.C.P.	C.S.P.	QUANTITIES FOR DRAINAGE STRUCTURES *TOTAL L.F. FOR PAY QUANTITY SHALL BE COL. 'A' + (1.3 X COL 'B') PER EACH (0' THRU 5.0')	LIN. FT. A 5.0' THRU 10.0'	LIN. FT. B 10.0' AND ABOVE	C.B. STD. 840.01 OR STD. 840.02	FRAME, GRATES, AND HOOD STANDARD 840.03 TYPE OF GRATE E	F	G	CONCRETE TRANSITIONAL SECTION DROP INLET	CATCH BASIN	D.I. STD. 840.14 OR STD. 840.15	D.I. FRAME AND GRATE STD. 840.16	G.D.I. TYPE "A" STD. 840.17 OR 840.26	G.D.I. TYPE "B" STD. 840.18 OR 840.27	G.D.I. TYPE "D" STD. 840.19 OR 840.28	G.D.I. FRAME WITH GRATE STD. 840.20	G.D.I. FRAME WITH TWO GRATES STD. 840.22	G.D.I. (N.S.) FRAME WITH GRATE STD. 840.24	G.D.I. (N.S.) FRAME WITH TWO GRATES STD. 840.24	J.B. STD. 840.31 OR 840.32					DRAINAGE PIPE ELBOWS NO. & SIZE	CONC. & BRICK PIPE PLUG, C.Y. STD. 840.71	CONC. COLLARS CL. "B" C.Y. STD. 840.72	PIPE REMOVAL LIN. FT.	REMARKS
-L- 11+68	LT	0401							44																																																																				16	
TOTALS									44																																																																				16	

ABBREVIATIONS

C.B.	CATCH BASIN
N.D.I.	NARROW DROP INLET
D.I.	DROP INLET
G.D.I.	GRATED DROP INLET
G.D.I.(N.S.)	(NARROW SLOT)
J.B.	JUNCTION BOX
M.H.	MANHOLE
T.B.D.I.	TRAFFIC BEARING DROP INLET
T.B.J.B.	TRAFFIC BEARING JUNCTION BOX

PROJECT REFERENCE NO.	SHEET NO.
17BP.12.R.201	4
R/W SHEET NO.	

ROADWAY DESIGN ENGINEER: NORTH CAROLINA PROFESSIONAL SEAL 30499 ENGINEER BOBBY C. HOUSER 12/4/2014

HYDRAULICS ENGINEER: NORTH CAROLINA PROFESSIONAL SEAL 03110 ENGINEER THOMAS L. FLETCHER 12/4/2014

TGS ENGINEERS
TGS ENGINEERS
804-C N. LAFAYETTE ST
SHELBY, NC 28150
PH (704) 476-0003
CORP. LICENSE NO.: C-0275

Iredell County
Bridge # 480119

NAD 83/NSRS 2007

USE NCDOT RDY STD. 862.01, SHEET 10 OF 12 FOR GUARDRAIL PLACEMENT AT STRUCTURE.

-L- CURVE DATA

PI Sta 11+00.35	PI Sta 13+30.56
Δ = 40° 05' 43.1" (RT)	Δ = 33° 24' 13.5" (LT)
D = 20° 50' 05.4"	D = 15° 04' 40.2"
L = 192.44'	L = 221.54'
T = 100.35'	T = 114.02'
*R = 275.00'	*R = 380.00'
SE = 0.04	SE = 0.04
DS = 30 MPH	DS = 35 MPH

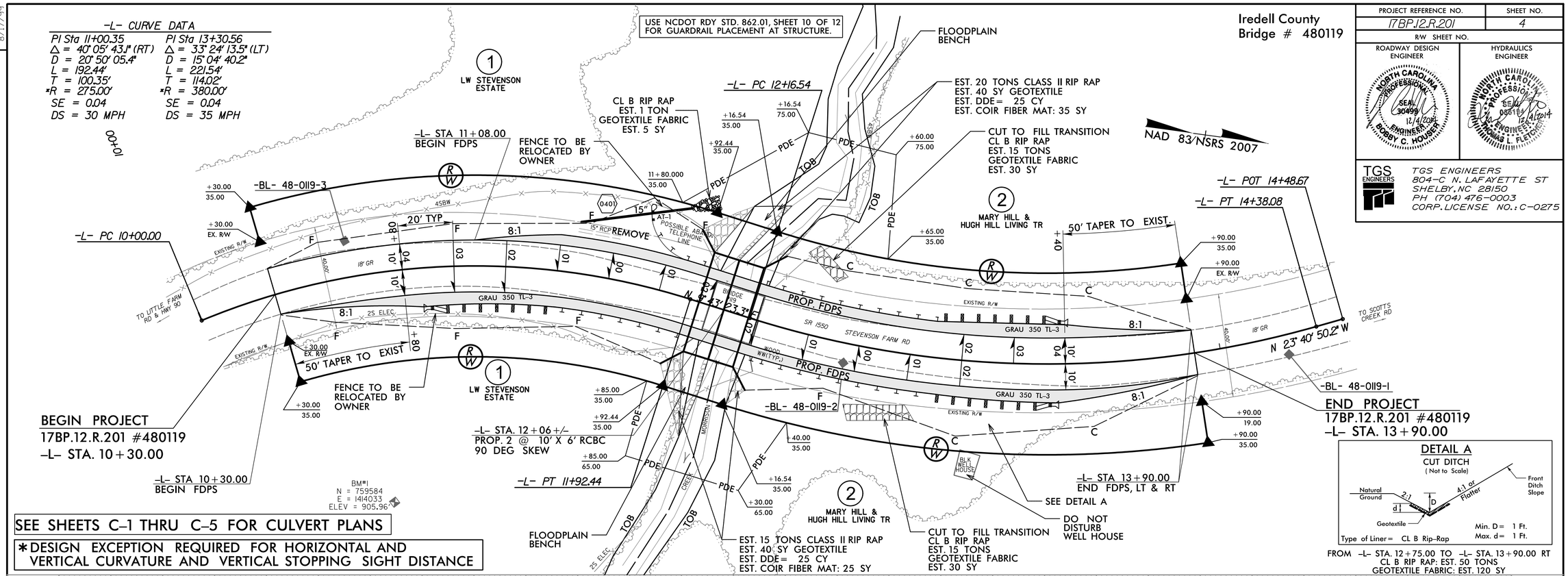

SEE SHEETS C-1 THRU C-5 FOR CULVERT PLANS

*DESIGN EXCEPTION REQUIRED FOR HORIZONTAL AND VERTICAL CURVATURE AND VERTICAL STOPPING SIGHT DISTANCE

BM#1 RR SPIKE IN 18" MAPLE WEST ROOT
RT 88.45' OF -L- STA 91062.25
ELEV. = 905.96'

CULVERT HYDRAULIC DATA

DESIGN DISCHARGE	= 600	CFS
DESIGN FREQUENCY	= 25	YRS
DESIGN HW ELEVATION	= 908.8	FT
BASE DISCHARGE	= 850	CFS
BASE FREQUENCY	= 100	YRS
BASE HW ELEVATION	= 910.40	FT
OVERTOPPING DISCHARGE	= 850+	CFS
OVERTOPPING FREQUENCY	= 100+	YRS
OVERTOPPING ELEVATION	= 910.4*	FT

* OVERTOPPING ELEVATION REPRESENTS C/L SAG ELEVATION AT -L- STA 11+77.77

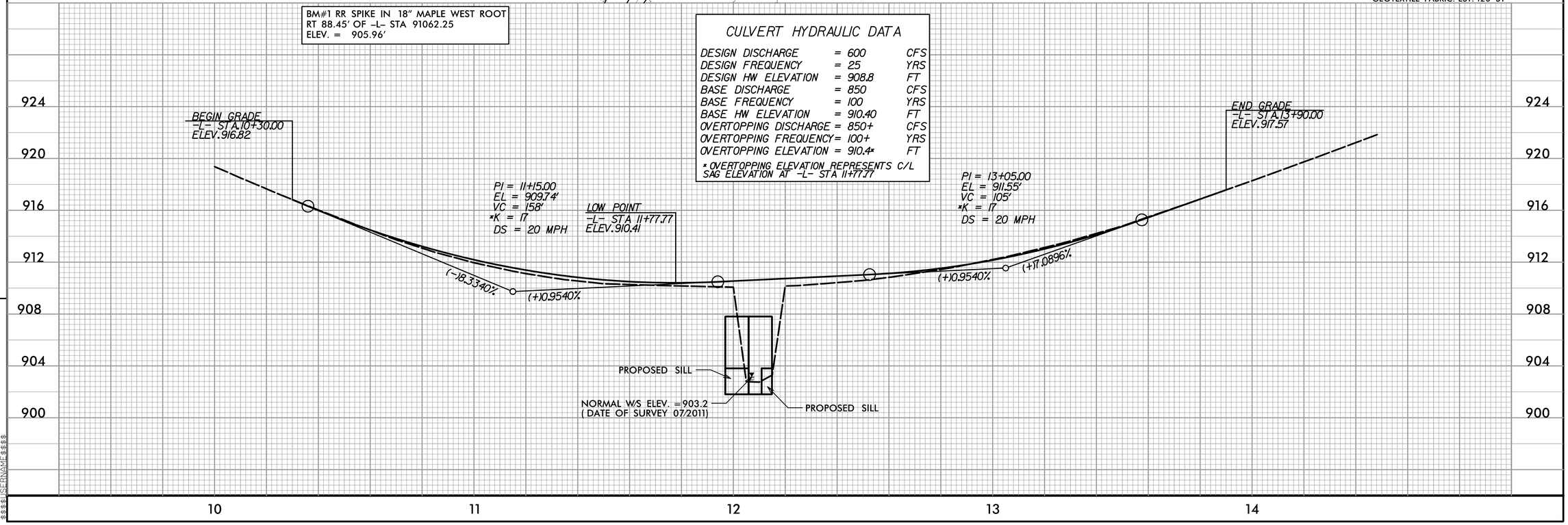

REVISIONS

8/17/99

STATE OF NORTH CAROLINA
DIVISION OF HIGHWAYS

TRANSPORTATION MANAGEMENT PLAN

IREDELL COUNTY

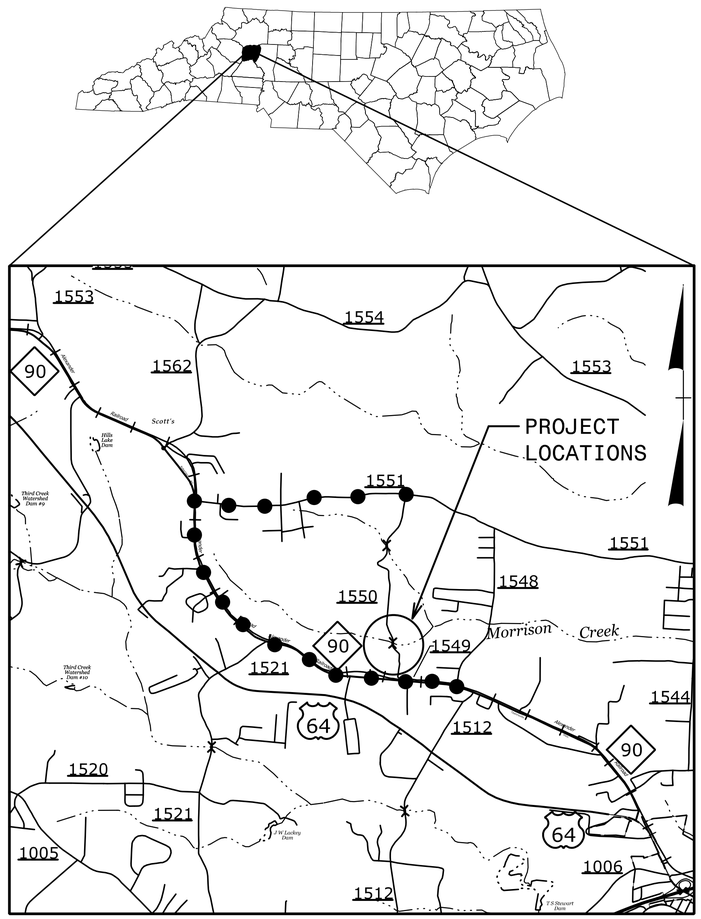

VICINITY MAP

OFFSITE DETOUR

INDEX OF SHEETS

SHEET NO.	TITLE
TMP-1	TITLE SHEET, VICINITY MAP AND INDEX OF SHEETS
TMP-1A	LIST OF APPLICABLE ROADWAY STANDARD DRAWINGS, AND LEGEND
TMP-1B	TRANSPORTATION OPERATIONS PLAN: (MANAGEMENT STRATEGIES, GENERAL NOTES AND LOCAL NOTES)
TMP-2	OVERVIEW AND PHASING
TMP-3	OFFSITE DETOUR ROUTE AND BARRICADE PLACEMENT
SD-1	SPECIAL SIGN DESIGN
PMP-1	FINAL PAVEMENT MARKING PLAN AND SCHEDULE

SHEET NO.
TMP-1

PROJECT: 17BP.12.R.201 #480119

WORK ZONE SAFETY & MOBILITY
"from the MOUNTAINS to the COAST"

PLAN PREPARED FOR N.C.D.O.T. BY:

TGS ENGINEERS
804-C N. LAFAYETTE ST
SHELBY, NC 28150
PH (704) 476-0003
CORP. LICENSE NO.: C-0275

JIMMY L. TERRY, PE — PROJECT ENGINEER
SANDRA G. MELVIN — DESIGN TECHNICIAN

DIVISION OF HIGHWAYS
STATE OF NORTH CAROLINA
DEPARTMENT OF TRANSPORTATION
WORK ZONE TRAFFIC CONTROL

APPROVED: _____
DATE: _____

SEAL

NORTH CAROLINA PROFESSIONAL ENGINEER SEAL 35018 JIMMY L. TERRY, JR.

$$$$$$SYSTIME$$$$$$
$$$$$$$$$$$$DGN$$$$$$$$$$$$
$$$$$$USERNAME$$$$$$

ROADWAY STANDARD DRAWINGS

THE FOLLOWING ROADWAY STANDARDS AS SHOWN IN "ROADWAY STANDARD DRAWINGS" - PROJECT SERVICES UNIT - N.C. DEPARTMENT OF TRANSPORTATION - RALEIGH, N.C., DATED JANUARY 2012 ARE APPLICABLE TO THIS PROJECT AND BY REFERENCE HEREBY ARE CONSIDERED A PART OF THESE PLANS:

STD. NO.	TITLE
1101.01	WORK ZONE WARNING SIGNS
1101.03	TEMPORARY ROAD CLOSURES
1101.11	TRAFFIC CONTROL DESIGN TABLES
1110.01	STATIONARY WORK ZONE SIGNS
1130.01	DRUMS
1145.01	BARRICADES
1205.01	PAVEMENT MARKINGS - LINE TYPES AND OFFSETS
1205.02	PAVEMENT MARKINGS - TWO LANE AND MULTILANE ROADWAYS
1261.01	GUARDRAIL AND BARRIER DELINEATORS - INSTALLATION SPACING
1261.02	GUARDRAIL AND BARRIER DELINEATORS - TYPES AND MOUNTING
1262.01	GUARDRAIL END DELINEATION
1264.01	OBJECT MARKERS - TYPES
1264.02	OBJECT MARKERS - INSTALLATION

LEGEND

GENERAL

- DIRECTION OF TRAFFIC FLOW
- DIRECTION OF PEDESTRIAN TRAFFIC FLOW
- EXIST. PVMT.
- NORTH ARROW
- PROPOSED PVMT.
- TEMP. SHORING (LOCATION PURPOSES ONLY)
- WORK AREA
- REMOVAL
- USER DEFINED (IF NEEDED)
- USER DEFINED (IF NEEDED)

SIGNALS

- EXISTING
- PROPOSED
- TEMPORARY

PAVEMENT MARKINGS

- EXISTING LINES
- TEMPORARY LINES

TRAFFIC CONTROL DEVICES

- BARRICADE (TYPE III)
- CONE
- DRUM
- SKINNY DRUM
- TUBULAR MARKER
- TEMPORARY CRASH CUSHION
- FLASHING ARROW BOARD
- FLAGGER
- LAW ENFORCEMENT
- TRUCK MOUNTED ATTENUATOR (TMA)
- CHANGEABLE MESSAGE SIGN

TEMPORARY SIGNING

- PORTABLE SIGN
- STATIONARY SIGN
- STATIONARY OR PORTABLE SIGN

PAVEMENT MARKERS

- CRYSTAL/CRYSTAL
- CRYSTAL/RED
- YELLOW/YELLOW

PAVEMENT MARKING SYMBOLS

- PAVEMENT MARKING SYMBOLS

TGS ENGINEERS
804-C N. LAFAYETTE ST
SHELBY, NC 28150
PH (704) 476-0003
CORP. LICENSE NO.: C-0275

APPROVED:_____ DATE:_____

SEAL

NORTH CAROLINA PROFESSIONAL ENGINEER SEAL 35048 JIMMY L. TERRY, JR.

DIVISION OF HIGHWAYS STATE OF NORTH CAROLINA DEPARTMENT OF TRANSPORTATION WORK ZONE TRAFFIC CONTROL

ROADWAY STANDARD DRAWINGS & LEGEND

$$$$SYSTIME$$$$
$$$$USERNAME$$$$

MANAGEMENT STRATEGIES

WHILE EXISTING STEVENSON FARM ROAD (SR 1550/SR 1549) IS CLOSED DURING THE CONSTRUCTION OF THE PROPOSED CULVERT ON MORRISON CREEK, TRAFFIC WILL BE MAINTAINED ON THE FOLLOWING OFFSITE DETOUR: FROM SR 1550/1549 TO SR 1548 (LITTLE FARM RD) TO NC 90 TO SR 1551 (SCOTTS CREEK ROAD) BACK TO SR 1550.

GENERAL NOTES

CHANGES MAY BE REQUIRED WHEN PHYSICAL DIMENSIONS IN THE DETAIL DRAWINGS, STANDARD DETAILS, AND ROADWAY DETAILS ARE NOT ATTAINABLE TO MEET FIELD CONDITIONS OR RESULT IN DUPLICATE OR UNDESIRED OVERLAPPING OF DEVICES. MODIFICATION MAY INCLUDE: MOVING, SUPPLEMENTING, COVERING, OR REMOVAL OF DEVICES AS DIRECTED BY THE ENGINEER.

THE FOLLOWING GENERAL NOTES APPLY AT ALL TIMES FOR THE DURATION OF THE CONSTRUCTION PROJECT EXCEPT WHEN OTHERWISE NOTED IN THE PLAN OR DIRECTED BY THE ENGINEER.

TRAFFIC PATTERN ALTERATIONS

A) NOTIFY THE ENGINEER TWENTY ONE (21) CALENDAR DAYS PRIOR TO ANY TRAFFIC PATTERN ALTERATION.

SIGNING

B) INSTALL ADVANCE WORK ZONE WARNING SIGNS WHEN WORK IS WITHIN 40 FT FROM THE EDGE OF TRAVEL LANE AND NO MORE THAN THREE (3) DAYS PRIOR TO THE BEGINNING OF CONSTRUCTION.

C) PROVIDE PERMANENT SIGNING

D) PROVIDE SIGNING AND DEVICES REQUIRED TO CLOSE THE ROAD ACCORDING TO THE ROADWAY STANDARD DRAWINGS AND TRAFFIC CONTROL PLANS.

PROVIDE SIGNING REQUIRED FOR THE OFF-SITE DETOUR ROUTE AS SHOWN IN THE TRAFFIC CONTROL PLANS.

E) COVER OR REMOVE ALL SIGNS AND DEVICES REQUIRED TO CLOSE THE ROAD WHEN ROAD CLOSURE IS NOT IN OPERATION.

COVER OR REMOVE ALL SIGNS REQUIRED FOR THE OFF-SITE DETOUR WHEN THE DETOUR IS NOT IN OPERATION.

F) ENSURE ALL NECESSARY SIGNING IS IN PLACE PRIOR TO ALTERING ANY TRAFFIC PATTERN.

TRAFFIC CONTROL DEVICES

G) PLACE TYPE III BARRICADES, WITH "ROAD CLOSED" SIGN R11-2 ATTACHED, OF SUFFICIENT LENGTH TO CLOSE ENTIRE ROADWAY.

PAVEMENT MARKINGS AND MARKERS

H) INSTALL PAVEMENT MARKINGS ON THE FINAL SURFACE.

I) TIE PROPOSED PAVEMENT MARKING LINES TO EXISTING PAVEMENT MARKING LINES.

J) PASSING ZONE WILL BE DETERMINED IN THE FIELD AND MUST BE APPROVED BY THE ENGINEER.

TGS ENGINEERS
804-C N. LAFAYETTE ST
SHELBY, NC 28150
PH (704) 476-0003
CORP. LICENSE NO.: C-0275

APPROVED:________ DATE:________

SEAL

NORTH CAROLINA PROFESSIONAL ENGINEER SEAL 35018 JIMMY L. TERRY, JR. 12/4/2014

DIVISION OF HIGHWAYS · STATE OF NORTH CAROLINA · DEPARTMENT OF TRANSPORTATION · WORK ZONE TRAFFIC CONTROL

TRANSPORTATION OPERATIONS PLAN

Iredell County Bridge # 480119	PROJ. REFERENCE NO.	SHEET NO.
	17BP.12.R.201	TMP-2

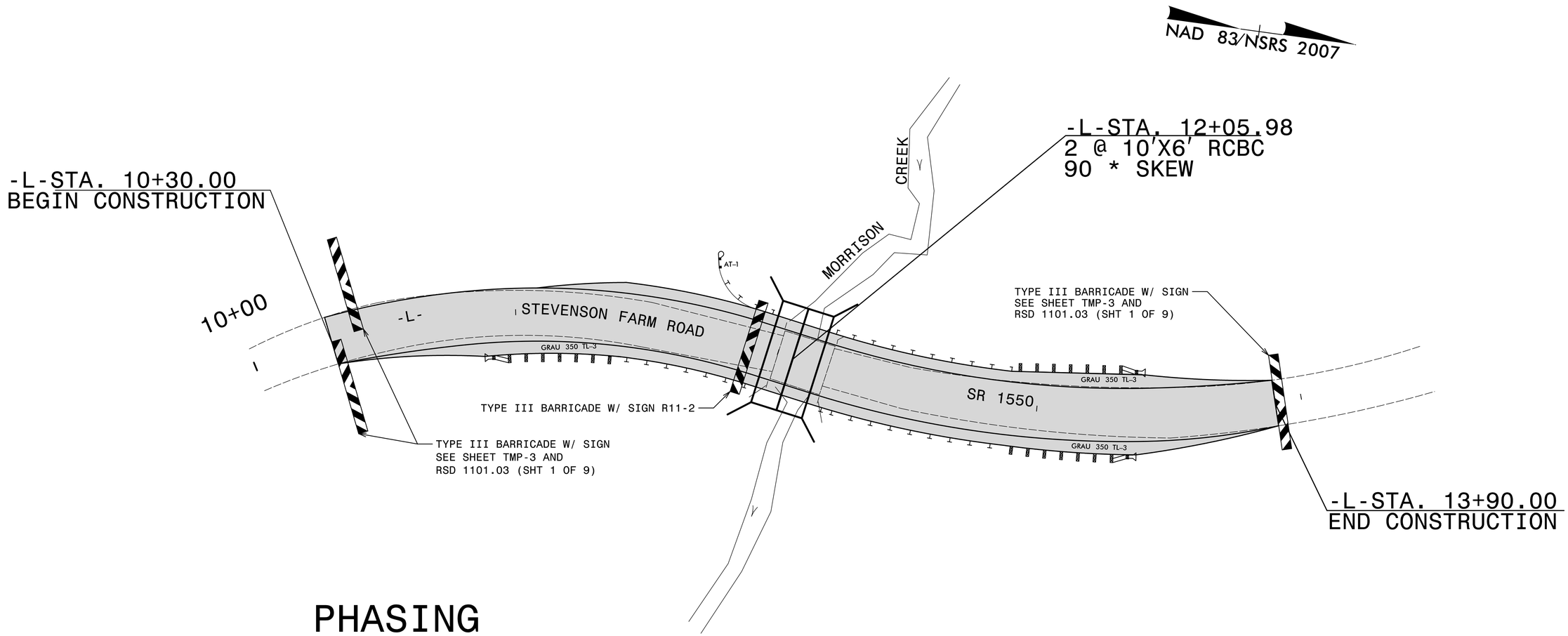

PHASING

STEP 1: INSTALL ALL DETOUR ROUTE SIGNS AS SHOWN ON SHEET TMP-3.

STEP 2: INSTALL TYPE III BARRICADES AND SIGNS AND CLOSE STEVENSON FARM RD. (SR 1550/ SR 1549) TO TRAFFIC AS SHOWN IN ROADWAY STANDARD DRAWING 1101.03 (SHEET 1 OF 9) AND ON SHEETS TMP-2 AND TMP-3. PLACE TRAFFIC ON DETOUR ROUTE.

STEP 3: DEMOLISH AND REMOVE THE EXISTING BRIDGE AND CONSTRUCT THE NEW CULVERT ON MORRISON CREEK AT -L- STA. 12+05.98. CONSTRUCT STEVENSON FARM RD (SR 1550/ SR 1549) FROM -L- STA. 10+30.00 TO 13+90.00, INCLUDING THE FINAL LAYER OF SURFACE COURSE.

STEP 4: PLACE FINAL PAVEMENT MARKINGS FROM -L- STA. 10+30.00 TO 13+90.00. SEE SHEET PMP-1.

STEP 5: REMOVE BARRICADES, SIGNS, AND ALL OTHER TRAFFIC CONTROL DEVICES AND OPEN STEVENSON FRARM RD (SR 1550/ SR 1549) TO TRAFFIC IN FINAL PATTERN.

TGS ENGINEERS
804-C N. LAFAYETTE ST
SHELBY, NC 28150
PH (704) 476-0003
CORP. LICENSE NO.: C-0275

APPROVED: _____ DATE: _____

SEAL

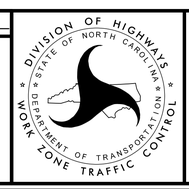

OVERVIEW AND PHASING

$$$$SYSTIME$$$$
$$$$DGN$$$$
$$$$USERNAME$$$$

Iredell County
Bridge #480119

PROJ. REFERENCE NO.	SHEET NO.
17.BP.12.R.201	TMP-3

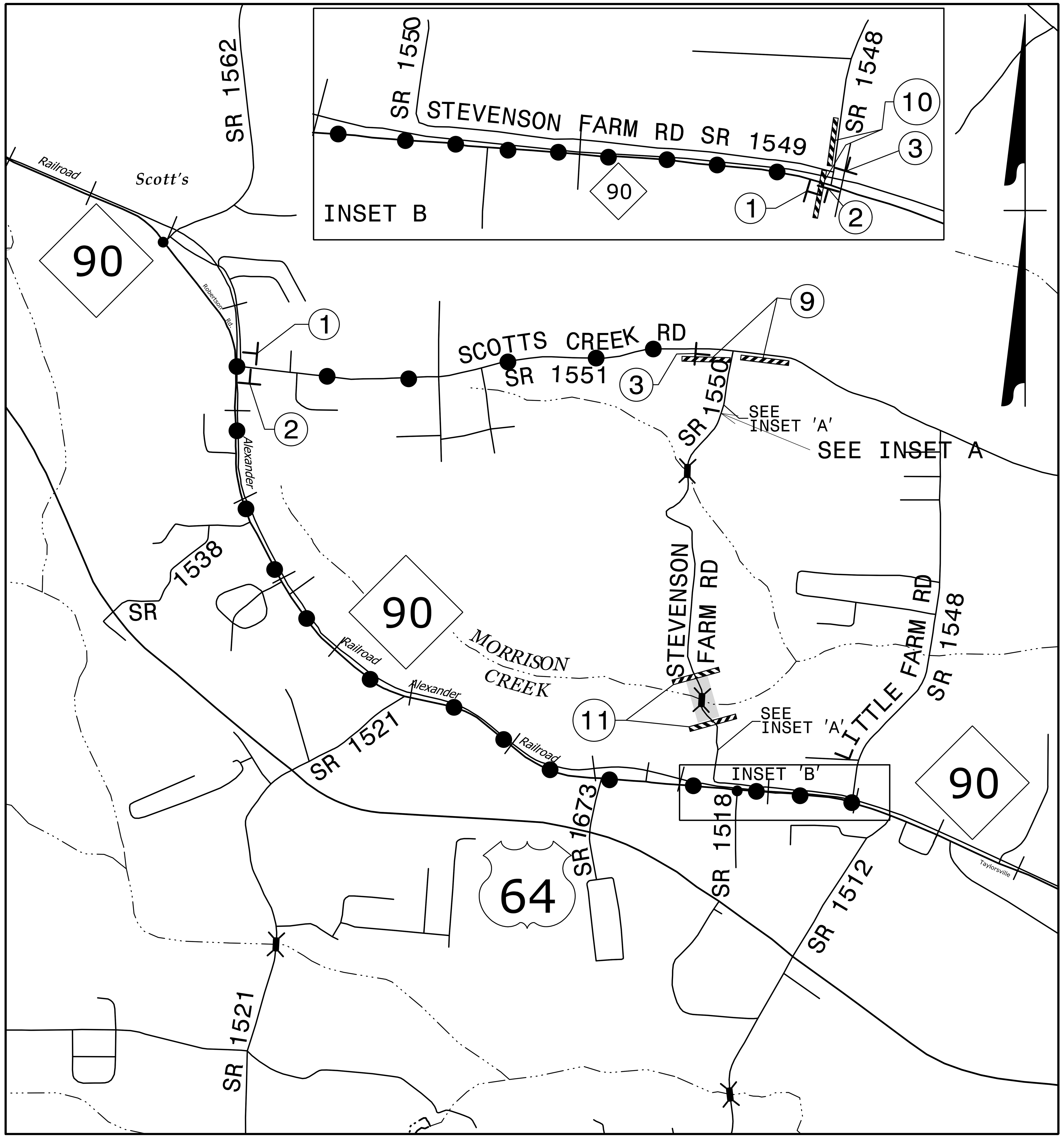

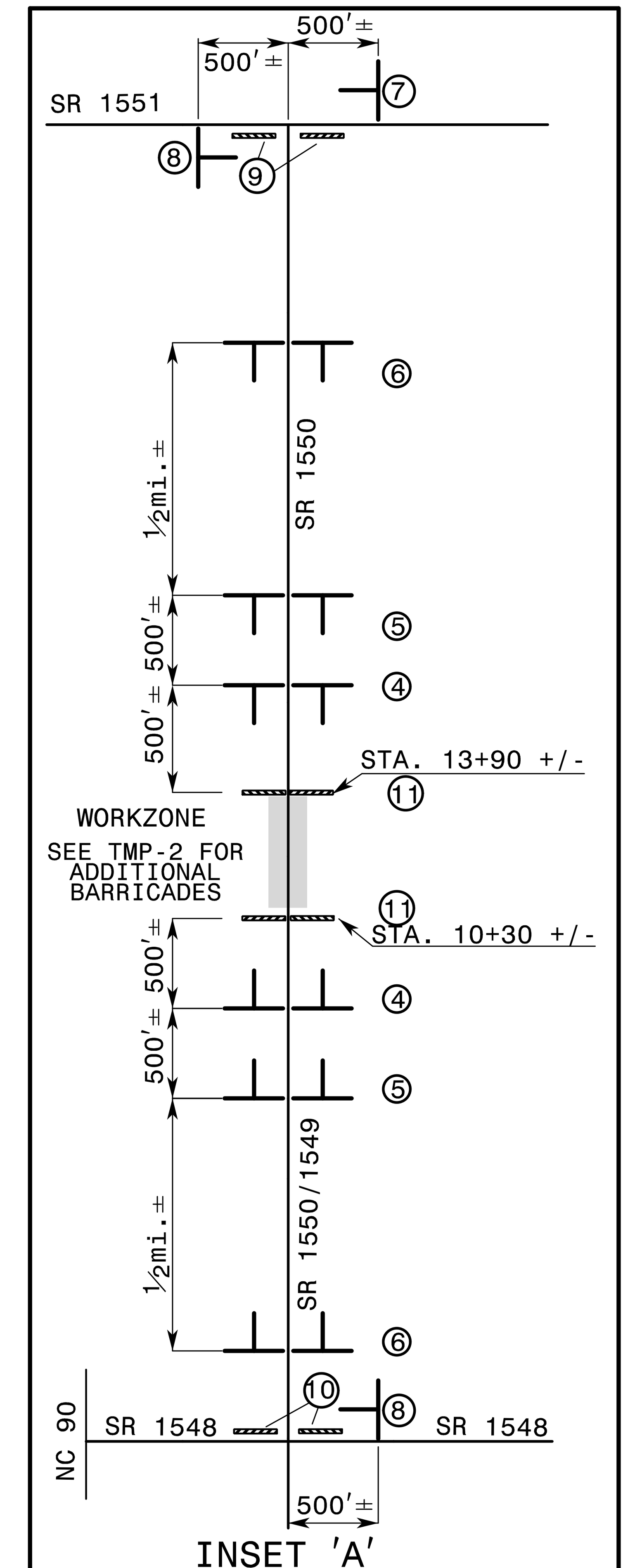

REFER TO ROADWAY STANDARD DRAWING 1101.03, SHEET 1 OF 9 FOR APPLICABLE NOTES.

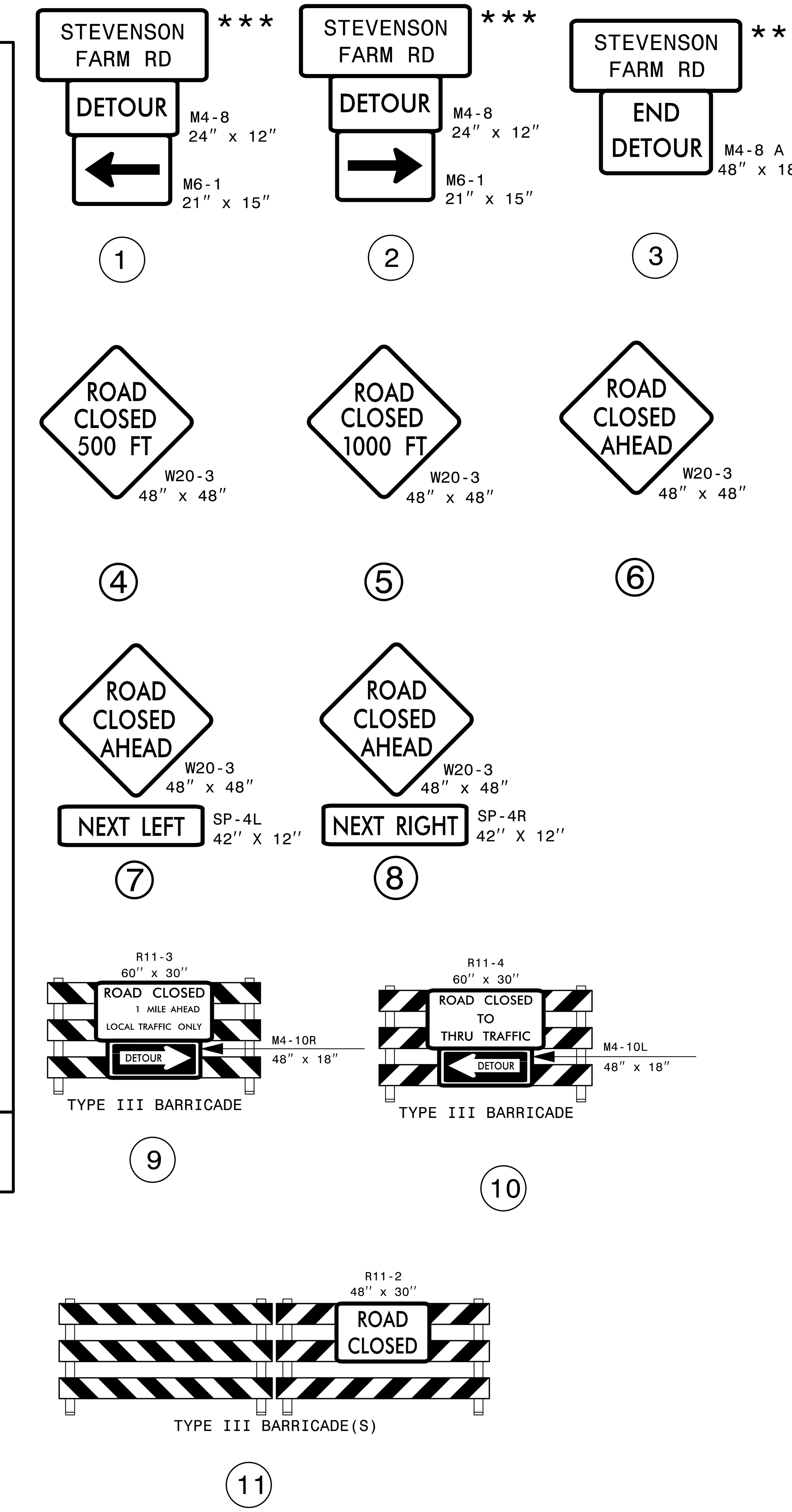

*** SEE SHEET SD-1 FOR SPECIAL SIGN DESIGN
CONSTRUCTION AREA
DETOUR ROUTE

TGS ENGINEERS
804-C N. LAFAYETTE ST
SHELBY, NC 28150
PH (704) 476-0003
CORP. LICENSE NO.: C-0275

APPROVED: ________ DATE: ________

SEAL

NORTH CAROLINA PROFESSIONAL ENGINEER SEAL 35018 JIMMY L. TEAGUE, JR.

DIVISION OF HIGHWAYS STATE OF NORTH CAROLINA DEPARTMENT OF TRANSPORTATION

OFFSITE DETOUR ROUTE AND BARRICADE PLACEMENT

$$$$$$SYSTIME$$$$$$
$$$$$$DGN$$$$$$
$$$$$$USERNAME$$$$$$

Iredell County
Bridge #480119

PROJ. REFERENCE NO.	SHEET NO.
17BP.12.R.201	SD-1

SIGN NUMBER: **DET-1**
TYPE: **STATIONARY**
QUANTITY: **SEE PLANS**

SIGN WIDTH: **3′-6″**
HEIGHT: **2′-0″**
TOTAL AREA: **7.0 Sq. Ft**

BORDER TYPE: **RECESSED**
RECESS: **0.38″**
WIDTH: **0.63″**
RADII: **1.5″**

NO. Z BARS:
LENGTH:

BACKG COLOR: **Fluorescent Orange**
COPY COLOR: **Black**

SYMBOL	X	Y	WID	HT

MAT′L: **0.080″ (2.0mm) ALUMINUM or COMPOSITE**

USE NOTES: 1,2

1. Legend and border shall be direct applied black non-reflective sheeting.
2. Background shall be Type VIII, VIII, or IX (prismatic) fluorescent orange retroreflective sheeting.

DESIGN BY: **SGM**
PROJECT ID: **17BP.12.R.201**
CHECKED BY: **JLT**
DIV: **12**
DATE: **06/11/2013**

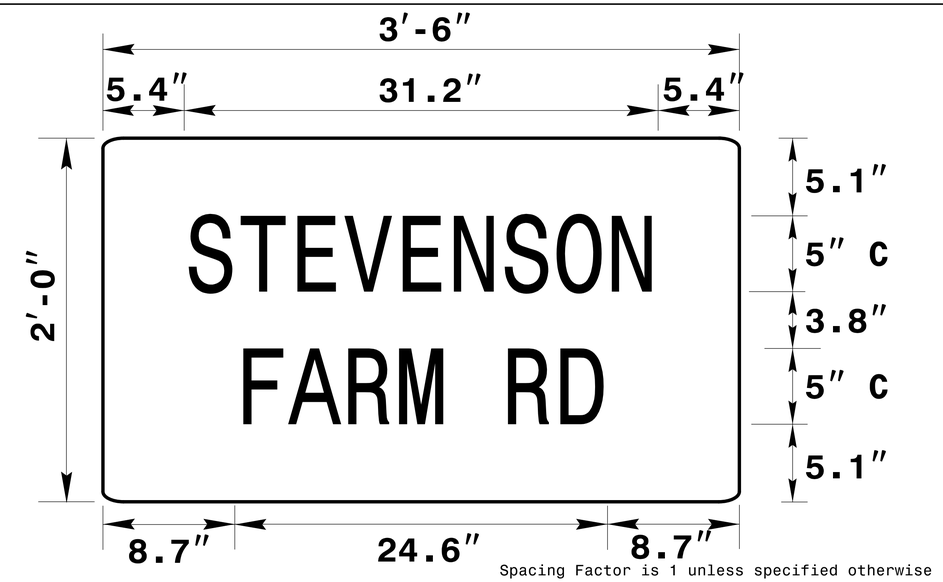

Spacing Factor is 1 unless specified otherwise

LETTER POSITIONS

Letter spacings are to start of next letter

																										Series/Size Text Length
		S	T	E	V	E	N	S	O	N																C 2000
	5.4	3.6	3.3	3.1	3.9	3.3	3.8	3.6	3.9	2.7																31.2
		F	A	R	M		R	D																		C 2000
	8.7	3.1	4.0	3.8	3.2	4.1	3.8	2.7																		31.6

TGS ENGINEERS
804-C N. LAFAYETTE ST
SHELBY, NC 28150
PH (704) 476-0003
CORP. LICENSE NO.: C-0275

APPROVED:_____ DATE:_____

SEAL

NORTH CAROLINA PROFESSIONAL ENGINEER SEAL 35018 JIMMY L. TERRY

DIVISION OF HIGHWAYS STATE OF NORTH CAROLINA DEPARTMENT OF TRANSPORTATION WORK ZONE TRAFFIC CONTROL

SPECIAL SIGN DESIGN

$$$$$SYSTIME$$$$$
$$$$$DGN$$$$$
$$$$$SENAME$$$$$

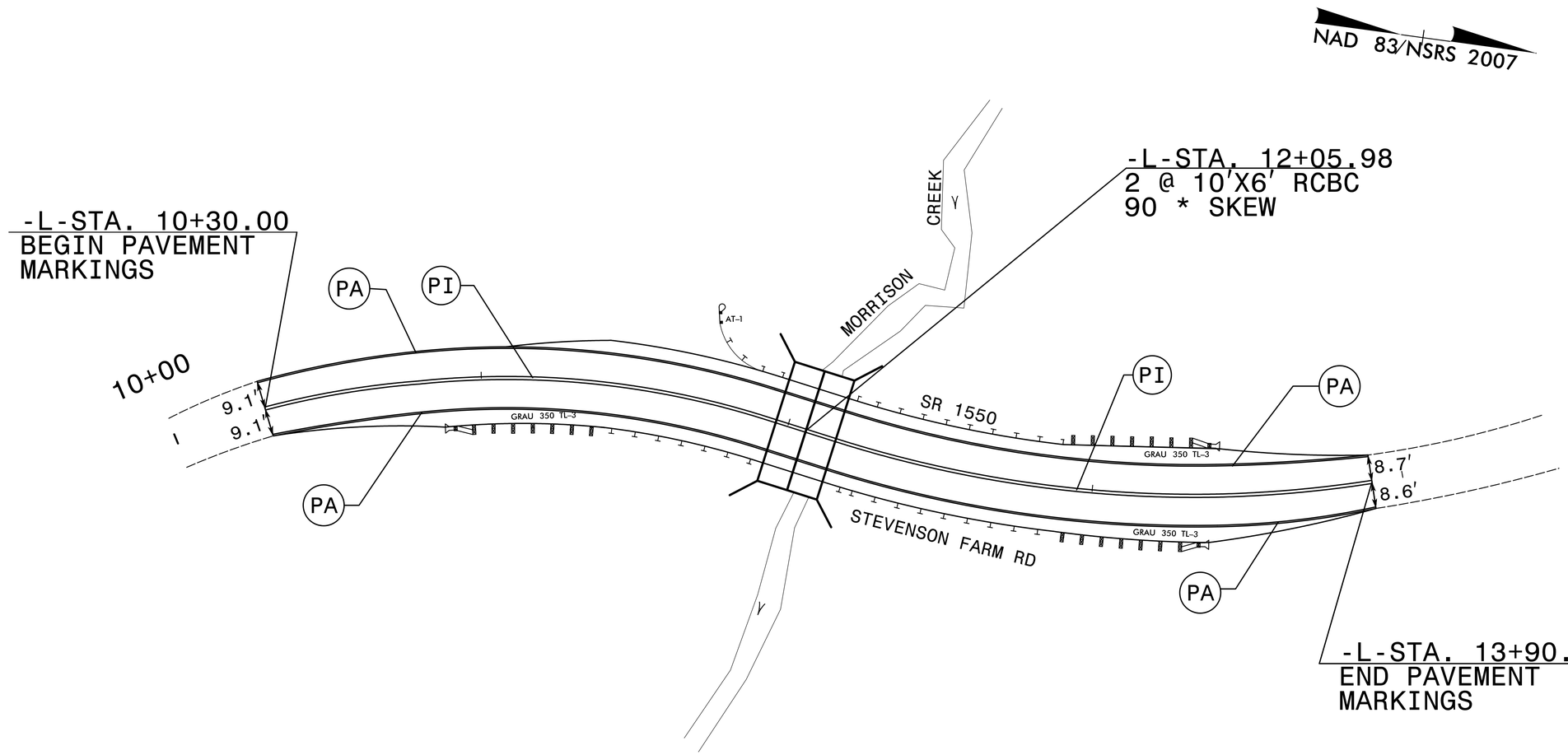

Pavement Marking Schedule

TIP Project # 17BP.12.R.201

SYMB	DESCRIPTION	PAY ITEM QUANTITY		TOTAL
	FINAL			
	PAVEMENT MARKINGS			
	PAINT(4")			
PA	WHITE EDGELINE (2X)	1440	LF	
PI	YELLOW DOUBLE CENTER (2X)	1440	LF	
		TOTAL		2880 LF

NOTE: FOR EACH PAINT PAVEMENT MARKING ITEM, 1X IMPLIES A SINGLE APPLICATION, 2X IMPLIES TWO APPLICATIONS, AND 3X IMPLIES THREE APPLICATIONS.

TGS ENGINEERS
804-C N. LAFAYETTE ST
SHELBY, NC 28150
PH (704) 476-0003
CORP. LICENSE NO.: C-0275

APPROVED:_____ DATE:_____

SEAL

NORTH CAROLINA PROFESSIONAL SEAL 35018 ENGINEER JIMMY L. TERRY, JR. 12/17/2018

DIVISION OF HIGHWAYS * STATE OF NORTH CAROLINA * DEPARTMENT OF TRANSPORTATION * WORK ZONE TRAFFIC CONTROL

FINAL PAVEMENT MARKING PLAN AND SCHEDULE

$$$$$$SYSTIME$$$$$$
$$$$$$$$$$$$$$$$$$
$$$$$$USERNAME$$$$$$

PROJECT: 17BP.12.R.201

STATE OF NORTH CAROLINA
DIVISION OF HIGHWAYS

PLAN FOR PROPOSED
HIGHWAY EROSION CONTROL

IREDELL COUNTY

LOCATION: BRIDGE NO. 480119 OVER MORRISON CREEK ON SR 1550 (STEVENSON FARM RD)

TYPE OF WORK: GRADING, DRAINAGE, PAVING, AND STRUCTURE

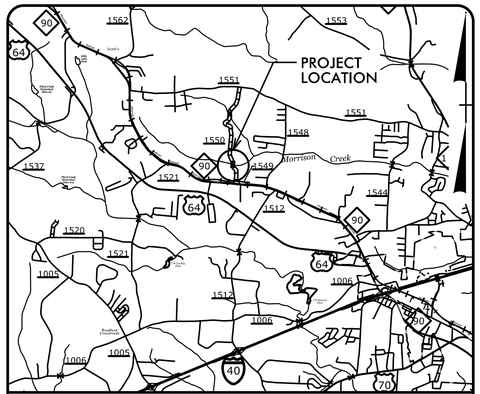

VICINITY MAP

STATE	STATE PROJECT REFERENCE NO.	SHEET NO.	TOTAL SHEETS
N.C.	17BP.12.R.201	EC-1	

STATE PROJ. NO.	F. A. PROJ. NO.	DESCRIPTION

EROSION AND SEDIMENT CONTROL MEASURES

Std. #	Description	Symbol
1630.03	Temporary Silt Ditch	TSD
1630.05	Temporary Diversion	TD
1605.01	Temporary Silt Fence	
1606.01	Special Sediment Control Fence	
1622.01	Temporary Berms and Slope Drains	
1630.02	Silt Basin Type B	
1633.01	Temporary Rock Silt Check Type-A	
	Temporary Rock Silt Check Type-A with Matting and Polyacrylamide (PAM)	
1633.02	Temporary Rock Silt Check Type-B	
	Wattle / Coir Fiber Wattle	SW CFW
	Wattle / Coir Fiber Wattle with Polyacrylamide (PAM)	
1634.01	Temporary Rock Sediment Dam Type-A	
1634.02	Temporary Rock Sediment Dam Type-B	
1635.01	Rock Pipe Inlet Sediment Trap Type-A	
1635.02	Rock Pipe Inlet Sediment Trap Type-B	
1630.04	Stilling Basin	
1630.06	Special Stilling Basin	
	Rock Inlet Sediment Trap:	
1632.01	Type A	A
1632.02	Type B	B
1632.03	Type C	C
	Skimmer Basin	SK
	Tiered Skimmer Basin	SK
	Infiltration Basin	

THIS PROJECT CONTAINS EROSION CONTROL PLANS FOR CLEARING AND GRUBBING PHASE OF CONSTRUCTION.

GRAPHIC SCALE

10 0 20

PLANS

ROADSIDE ENVIRONMENTAL UNIT
DIVISION OF HIGHWAYS
STATE OF NORTH CAROLINA

THESE EROSION AND SEDIMENT CONTROL PLANS COMPLY WITH THE REGULATIONS SET FORTH BY THE NCG–010000 GENERAL CONSTRUCTION PERMIT EFFECTIVE AUGUST 3, 2011 ISSUED BY THE NORTH CAROLINA DEPARTMENT OF ENVIRONMENT AND NATURAL RESOURCES DIVISION OF WATER QUALITY.

TGS ENGINEERS

Plans Prepared By:
TGS ENGINEERS
804–C N. LAFAYETTE ST.
SHELBY, NC 28150
PH (704) 476–0003

NCDOT DIVISION 12
NCDOT Contact:
STEVE RACKLEY, PE
DIVISION BRIDGE PROGRAM MANAGER

2012 STANDARD SPECIFICATIONS

LETTING DATE:

ANDREW COCHRANE
PROJECT ENGINEER
LEVEL III CERTIFICATION NUMBER 3015

Roadway Standard Drawings

The following roadway english standards as appear in "Roadway Standard Drawings"– Roadway Design Unit – N. C. Department of Transportation – Raleigh, N. C., dated January 2012 and the latest revison thereto are applicable to this project and by reference hereby are considered a part of these plans.

1604.01	Railroad Erosion Control Detail	1632.01	Rock Inlet Sediment Trap Type A
1605.01	Temporary Silt Fence	1632.02	Rock Inlet Sediment Trap Type B
1606.01	Special Sediment Control Fence	1632.03	Rock Inlet Sediment Trap Type C
1607.01	Gravel Construction Entrance	1633.01	Temporary Rock Silt Check Type A
1622.01	Temporary Berms and Slope Drains	1633.02	Temporary Rock Silt Check Type B
1630.01	Riser Basin	1634.01	Temporary Rock Sediment Dam Type A
1630.02	Silt Basin Type B	1634.02	Temporary Rock Sediment Dam Type B
1630.03	Temporary Silt Ditch	1635.01	Rock Pipe Inlet Sediment Trap Type A
1630.04	Stilling Basin	1635.02	Rock Pipe Inlet Sediment Trap Type B
1630.05	Temporary Diversion	1640.01	Coir Fiber Baffle
1630.06	Special Stilling Basin	1645.01	Temporary Stream Crossing
1631.01	Matting Installation		

PROJECT REFERENCE NO.	SHEET NO.
17BP.12.R.201	EC-2
R/W SHEET NO.	
ROADWAY DESIGN ENGINEER	HYDRAULICS ENGINEER

TEMPORARY ROCK SILT CHECK TYPE 'A' WITH EXCELSIOR MATTING AND POLYACRYLAMIDE (PAM)

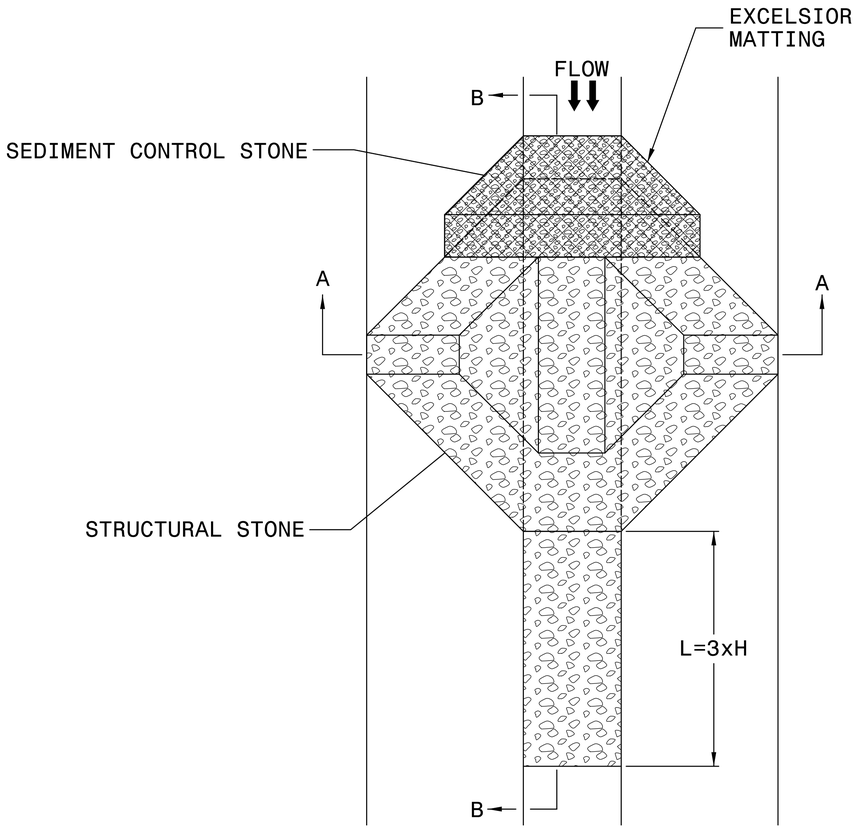

PLAN

NOTES

USE EXCELSIOR FOR MATTING MATERIAL AND ANCHOR MATTING SECTION AT TOP AND BOTTOM WITH CLASS B STONE.

PRIOR TO POLYACRYLAMIDE (PAM) APPLICATION, OBTAIN A SOIL SAMPLE FROM PROJECT LOCATION, AND FROM OFFSITE MATERIAL, AND ANALYZE FOR APPROPRIATE PAM FLOCCULANT TO BE APPLIED TO EACH ROCK SILT CHECK.

INITIALLY APPLY 4 OUNCES OF POLYACRYLAMIDE (PAM) TO TOP OF MATTING SECTION AND AFTER EVERY RAINFALL EVENT THAT EQUALS OR EXCEEDS 0.50 INCHES.

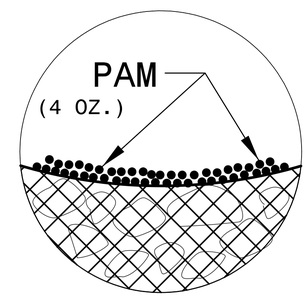

INSET A

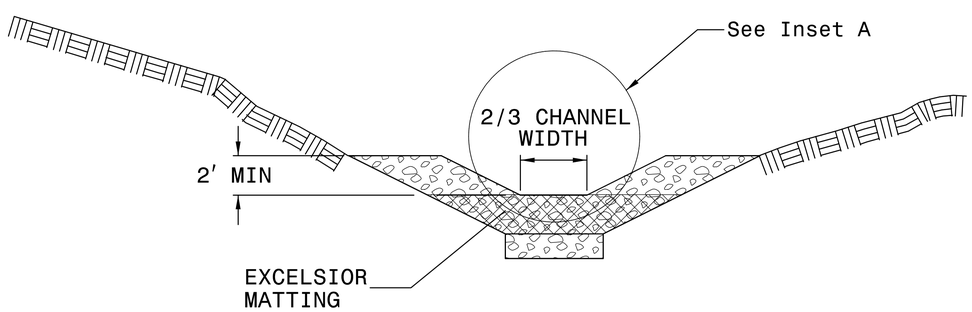

SECTION A-A

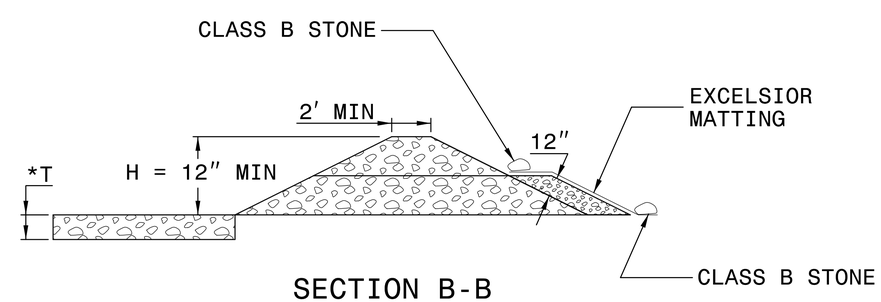

SECTION B-B

*T = 12" MIN., 18" MAX.

NOT TO SCALE

PROJECT REFERENCE NO.	SHEET NO.
17BP.12.R.201	EC-3
ROADWAY DESIGN ENGINEER	HYDRAULICS ENGINEER

DIVISION OF HIGHWAYS
STATE OF NORTH CAROLINA

SOIL STABILIZATION SUMMARY SHEET

PSRM FOR EROSION CONTROL

CONST SHEET NO.	LINE	FROM STATION	TO STATION	SIDE	ESTIMATE (SY)
4	-L-	10+50	11+47	LT	215
4	-L-	12+50	13+80	LT	175
				SUBTOTAL	390
MISCELLANEOUS MATTING TO BE INSTALLED AS DIRECTED BY THE ENGINEER					0
				TOTAL	390
				SAY	410

PSRM FOR EROSION CONTROL

CONST SHEET NO.	LINE	FROM STATION	TO STATION	SIDE	ESTIMATE (SY)

PROJECT REFERENCE NO.	SHEET NO.
17BP.12.R.201	EC-3A
ROADWAY DESIGN ENGINEER	HYDRAULICS ENGINEER

DIVISION OF HIGHWAYS
STATE OF NORTH CAROLINA

SOIL STABILIZATION TIMEFRAMES

SITE DESCRIPTION	STABILIZATION TIME	TIMEFRAME EXCEPTIONS
PERIMETER DIKES, SWALES, DITCHES AND SLOPES	7 DAYS	NONE
HIGH QUALITY WATER (HQW) ZONES	7 DAYS	NONE
SLOPES STEEPER THAN 3:1	7 DAYS	IF SLOPES ARE 10' OR LESS IN LENGTH AND ARE NOT STEEPER THAN 2:1, 14 DAYS ARE ALLOWED.
SLOPES 3:1 OR FLATTER	14 DAYS	7 DAYS FOR SLOPES GREATER THAN 50' IN LENGTH.
ALL OTHER AREAS WITH SLOPES FLATTER THAN 4:1	14 DAYS	NONE, EXCEPT FOR PERIMETERS AND HQW ZONES.

PROJECT REFERENCE NO.	SHEET NO.
17BP.12.R.201	EC-4/CONST.4
R/W SHEET NO.	
ROADWAY DESIGN ENGINEER	HYDRAULICS ENGINEER

Iredell County
Bridge #480119

NAD 83/NSRS 2007

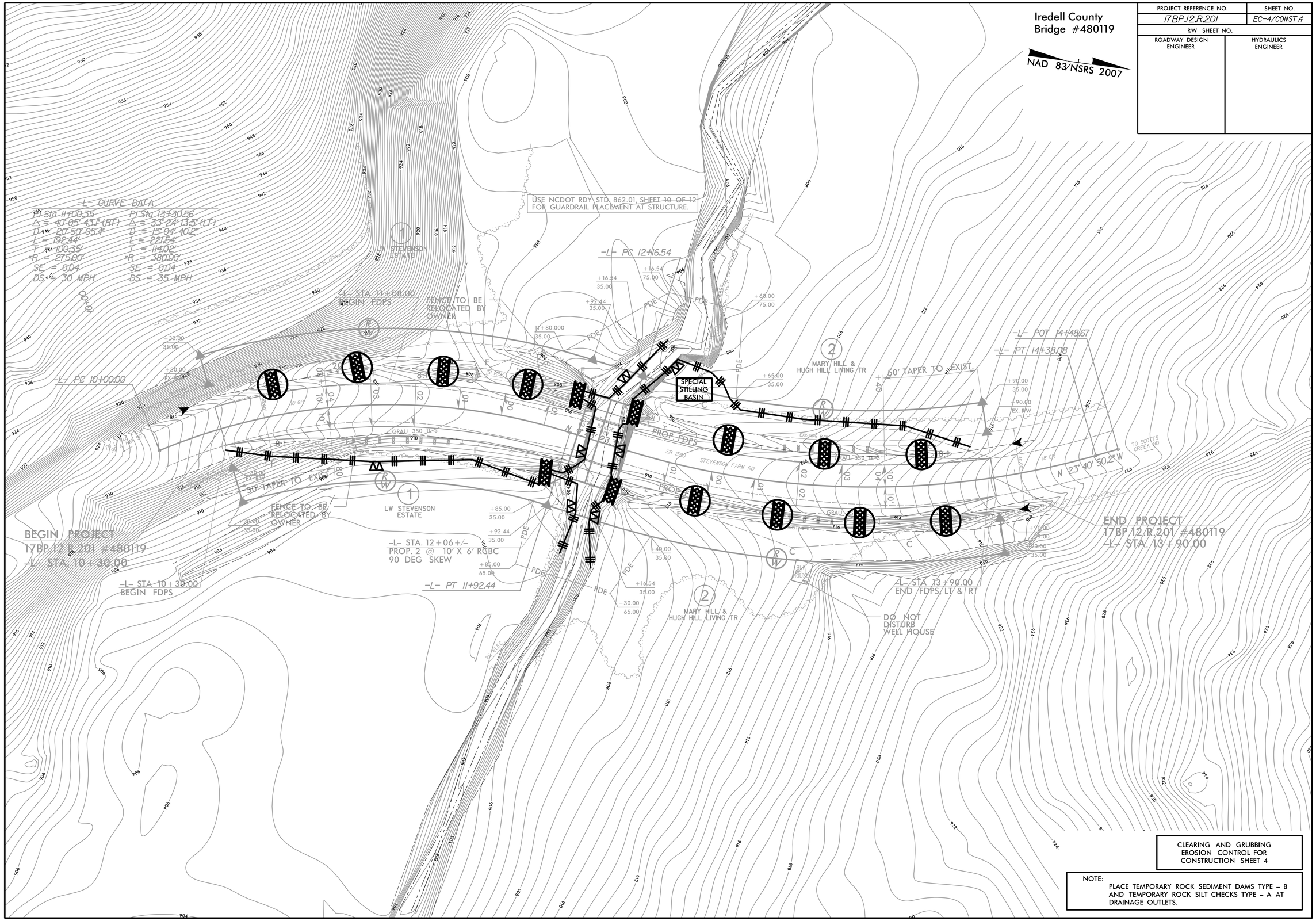

CLEARING AND GRUBBING
EROSION CONTROL FOR
CONSTRUCTION SHEET 4

NOTE:
PLACE TEMPORARY ROCK SEDIMENT DAMS TYPE – B AND TEMPORARY ROCK SILT CHECKS TYPE – A AT DRAINAGE OUTLETS.

PROJECT REFERENCE NO.	SHEET NO.
17BP.12.R.201	EC-4A/CONST.4
R/W SHEET NO.	
ROADWAY DESIGN ENGINEER	HYDRAULICS ENGINEER

CULVERT CONSTRUCTION SEQUENCE STA. 12 + 06 –L–

PHASING

1. Close SR 1550 (Stevenson Farm Rd) to traffic as shown in the traffic management plans.
2. Install perimeter erosion control devices as shown on EC–4 & EC–5. Place special stilling basins as directed by the Engineer.
3. Remove existing bridge #480119 over Morrison Creek.
4. Construct impervious dikes to restrain stream and begin pump around operations.
5. Install proposed reinforced concrete box culvert.
6. Remove impervious dikes and return flow back to creek channel.
7. Complete any necessary inlet/outlet channel improvements.
8. Remove special stilling basins.
9. Complete roadway construction.

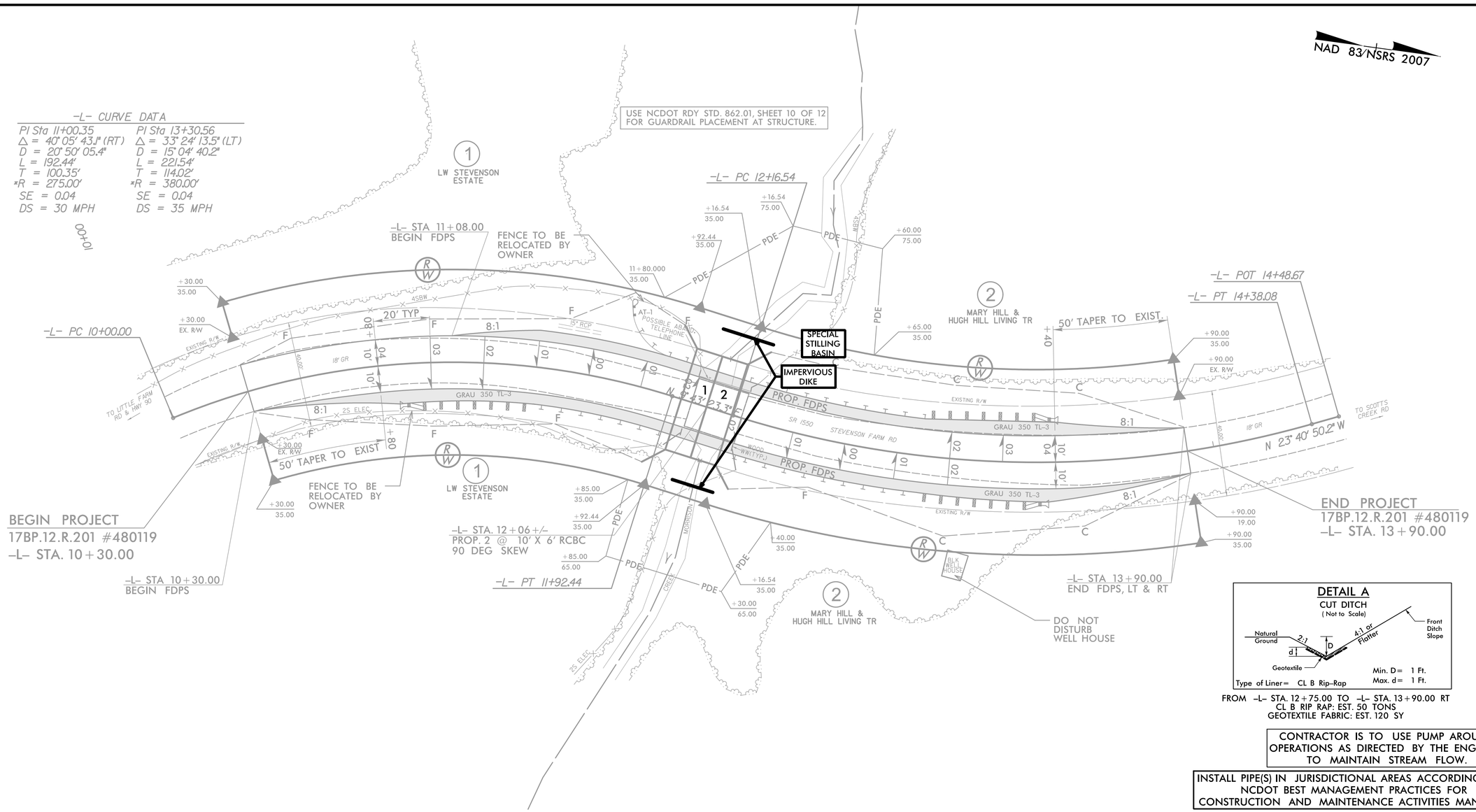

FROM –L– STA. 12+75.00 TO –L– STA. 13+90.00 RT
CL B RIP RAP: EST. 50 TONS
GEOTEXTILE FABRIC: EST. 120 SY

CONTRACTOR IS TO USE PUMP AROUND OPERATIONS AS DIRECTED BY THE ENGINEER TO MAINTAIN STREAM FLOW.

INSTALL PIPE(S) IN JURISDICTIONAL AREAS ACCORDING TO NCDOT BEST MANAGEMENT PRACTICES FOR CONSTRUCTION AND MAINTENANCE ACTIVITIES MANUAL.

PROJECT REFERENCE NO.	SHEET NO.
17BP.12.R.201	EC-5/CONST.4
R/W SHEET NO.	
ROADWAY DESIGN ENGINEER	HYDRAULICS ENGINEER

Iredell County
Bridge #480119

NAD 83/NSRS 2007

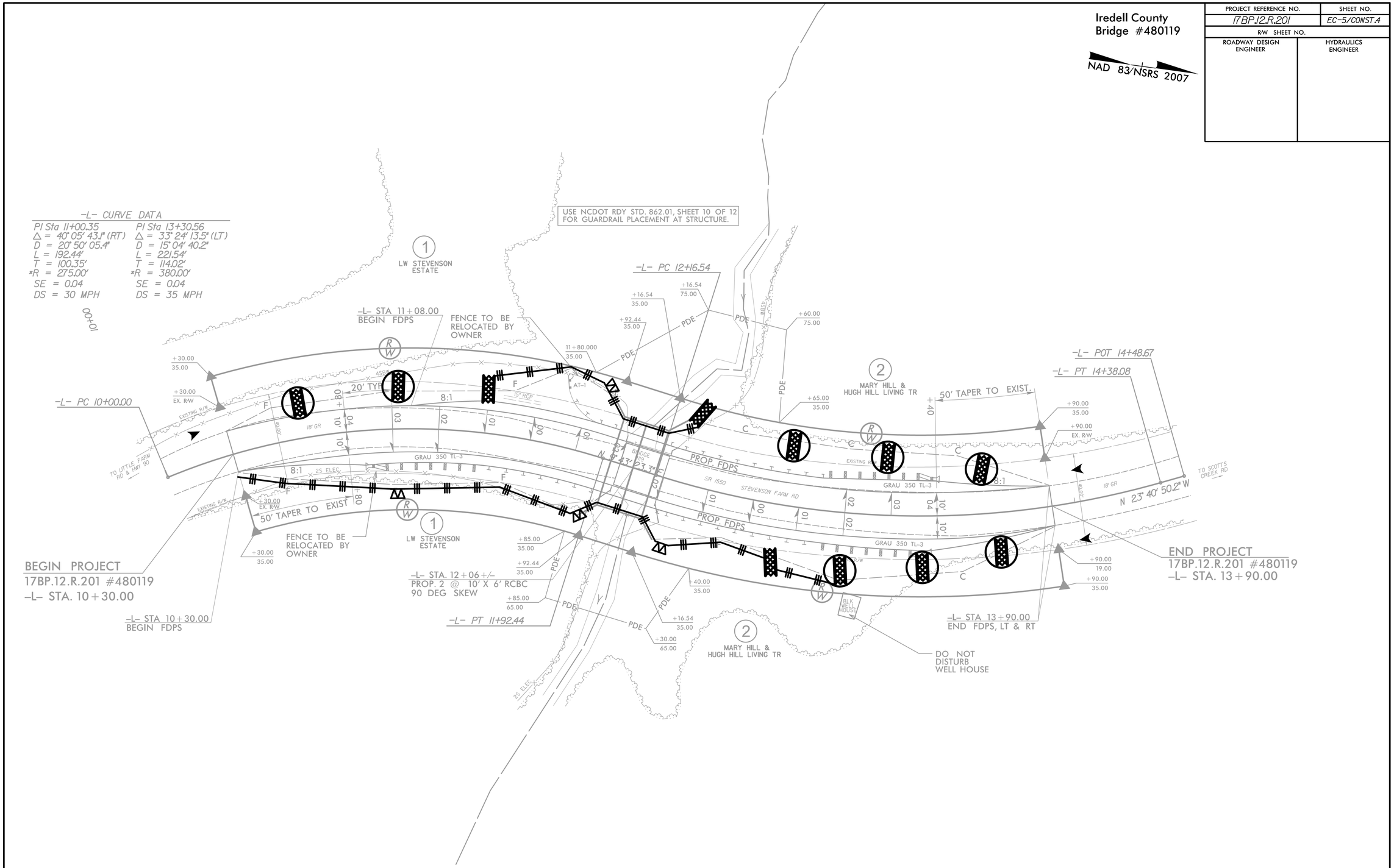

INSTALL PSRM FOR EROSION CONTROL IN THE PROPOSED DITCH LINE.
-L- STA. 10+50 TO 11+47 LT
-L- STA. 12+50 TO 13+80 LT

8/23/99

0 2.5 5	PROJ. REFERENCE NO.	SHEET NO.
	17BP.12.R.201	X-1

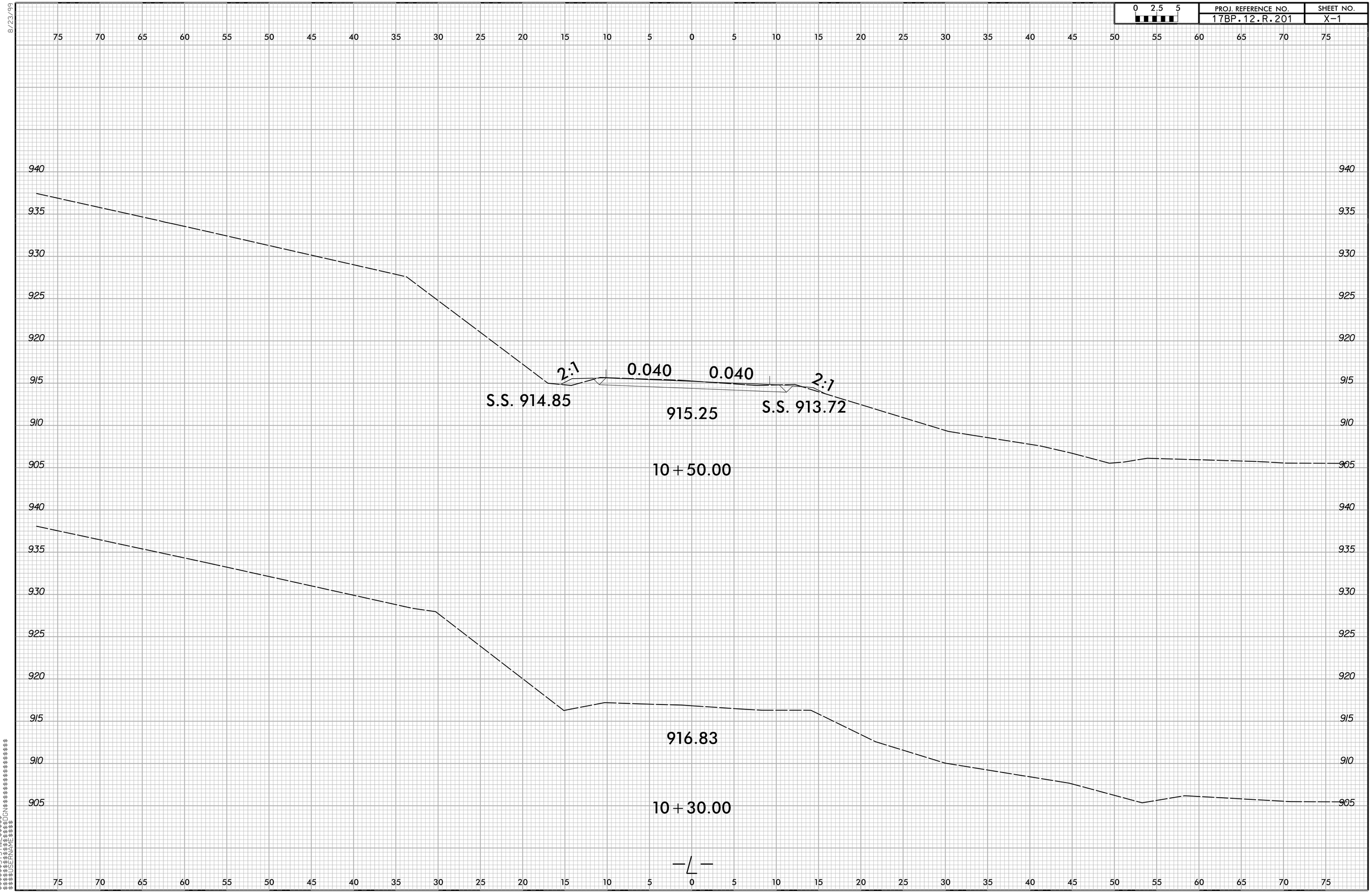

$$$$$$$$SYSTIME$$$$$$$$
$$$$$$$$SDLIN$$$$$$$$
$$$$$$$$SDRAME$$$$$$$$

8/23/99
$$$$SYSTIME$$$$
$$$$$$$$$$$$$$$$DGN$$$$$$$$$$$$$$$$$$$$$
$$$$USERNAME$$$$

8/23/99

0 2.5 5	PROJ. REFERENCE NO.	SHEET NO.
	17BP.12.R.201	X-3

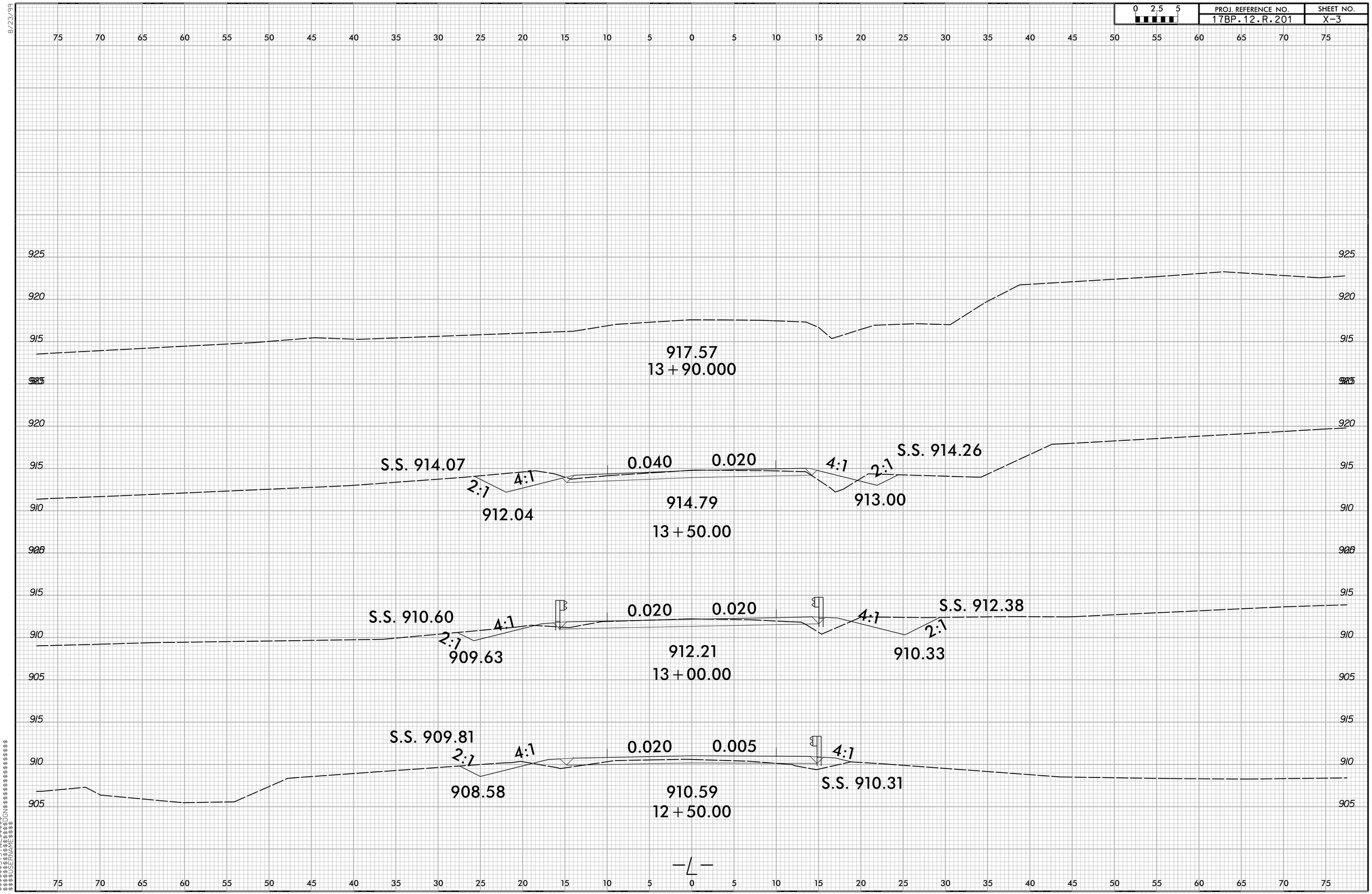

$$$$SYSTIME$$$$
$$$$DGN$$$$
$$$$CELL$$$$
$$$$DGNNAME$$$$

BENCHMARK - BM#1: RR SPIKE IN 18" MAPLE WEST ROOT. BL 5+43.00 93'RT, ELEV. 905.96, DATUM: NAVD 88

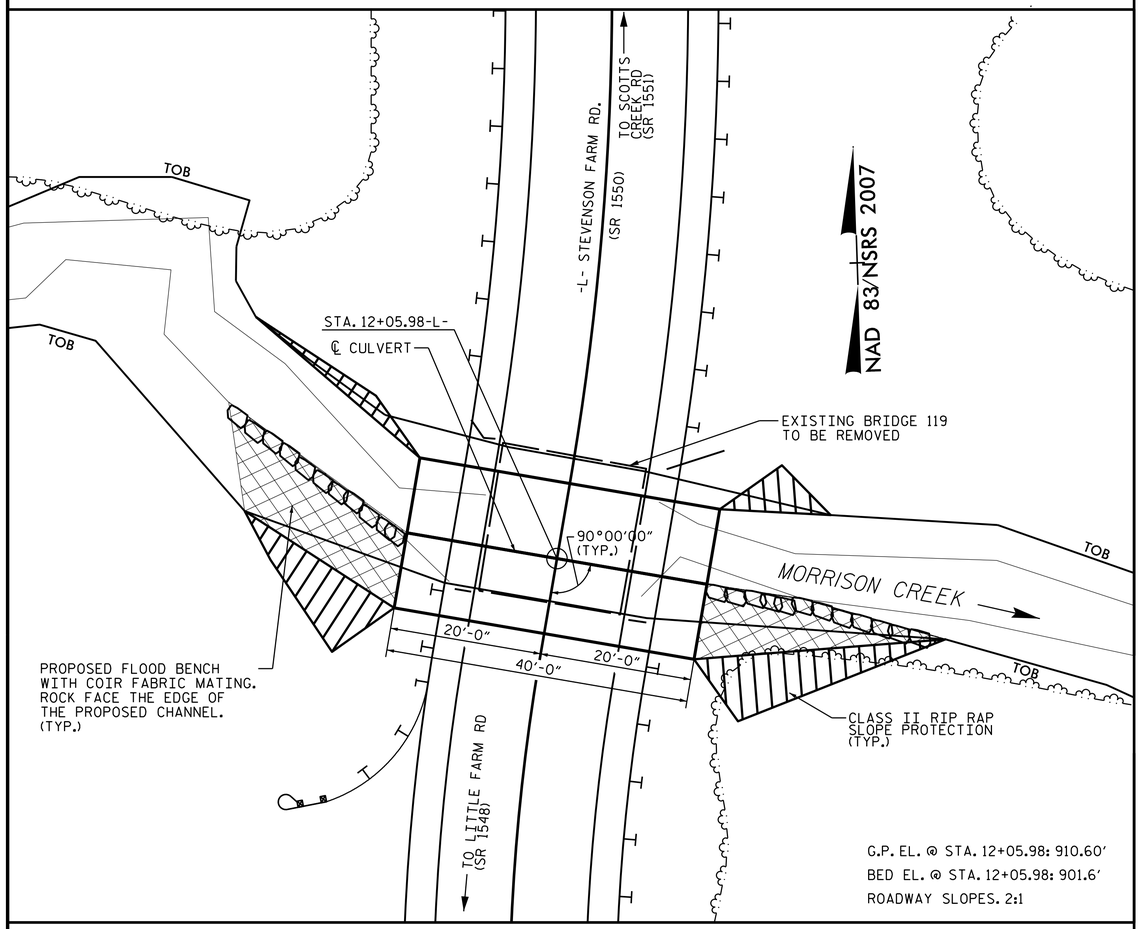

G.P. EL. @ STA. 12+05.98: 910.60'
BED EL. @ STA. 12+05.98: 901.6'
ROADWAY SLOPES. 2:1

LOCATION SKETCH

FOR UTILITY INFORMATION, SEE UTILITY PLANS AND SPECIAL PROVISIONS.

NOTES

ASSUMED LIVE LOAD ----------HL-93 OR ALTERNATE LOADING.

DESIGN FILL----------3'-0"

FOR OTHER DESIGN DATA AND NOTES SEE STANDARD NOTE SHEET.

3" Ø WEEP HOLES INDICATED TO BE IN ACCORDANCE WITH THE SPECIFICATIONS.

CONCRETE IN CULVERTS TO BE POURED IN THE FOLLOWING ORDER:

1. WING FOOTINGS AND FLOOR SLAB INCLUDING 4" OF ALL VERTICAL WALLS.
2. THE REMAINING PORTIONS OF THE WALLS AND WINGS FULL HEIGHT FOLLOWED BY ROOF SLAB AND HEADWALLS.

THE RESIDENT ENGINEER SHALL CHECK THE LENGTH OF CULVERT BEFORE STAKING IT OUT TO MAKE CERTAIN THAT IT WILL PROPERLY TAKE CARE OF THE FILL.

THIS BARREL STANDARD TO BE USED ONLY ON CULVERT ON 90° SKEW AND TO BE USED WITH STANDARD WING SHEET WITH THE SAME SKEW AND VERTICAL CLEARANCE.

DIMENSIONS FOR WING LAYOUT AS WELL AS ADDITIONAL REINFORCING STEEL EMBEDDED IN BARREL ARE SHOWN ON WING SHEET.

EXCAVATE 1' BELOW THE CULVERT AND FOOTING AND REPLACE WITH FOUNDATION CONDITIONING MATERIAL IN ACCORDANCE WITH ARTICLE 414 OF THE STANDARD SPECIFICATIONS.

PLACE SILLS AT THE INLET AND OUTLET OF THE LOW FLOW BARREL ONLY. BACKFILL THE FLOODPLAIN BARREL WITH NATIVE BED MATERIAL. SUBSIDIZE WITH CLASS B RIP RAP IF NEEDED.

STEEL IN THE BOTTOM SLAB MAY BE SPLICED AT THE PERMITTED CONSTRUCTION JOINT AT THE CONTRACTOR'S OPTION. EXTRA WEIGHT OF STEEL DUE TO THE SPLICES SHALL BE PAID FOR BY THE CONTRACTOR.

AT THE CONTRACTOR'S OPTION, HE MAY SPLICE THE VERTICAL REINFORCING STEEL IN THE INTERIOR FACE OF EXTERIOR WALL AND BOTH FACES OF INTERIOR WALLS ABOVE LOWER WALL CONSTRUCTION JOINT. THE SPLICE LENGTH SHALL BE AS PROVIDED IN THE SPLICE LENGTH CHART SHOWN ON THE PLANS. EXTRA WEIGHT OF STEEL DUE TO THE SPLICES SHALL BE PAID FOR BY THE CONTRACTOR.

AT THE CONTRACTOR'S OPTION HE MAY SUBMIT, TO THE ENGINEER FOR APPROVAL, DESIGN AND DETAIL DRAWINGS FOR A PRECAST REINFORCED CONCRETE BOX CULVERT IN LIEU OF THE CAST-IN-PLACE CULVERT SHOWN ON THE PLANS. THE DESIGN SHALL PROVIDE THE SAME SIZE AND NUMBER OF BARRELS AS USED ON THE CAST-IN-PLACE DESIGN. FOR OPTIONAL PRECAST REINFORCED CONCRETE BOX CULVERT, SEE SPECIAL PROVISIONS.

FOR CULVERT DIVERSION CHANNEL DETAILS AND PAY ITEM, SEE EROSION CONTROL PLANS.

FOR SUBMITTAL OF WORKING DRAWINGS, SEE SPECIAL PROVISIONS.

FOR FALSEWORK AND FORMWORK, SEE SPECIAL PROVISIONS.

FOR CRANE SAFETY, SEE SPECIAL PROVISIONS.

FOR GROUT FOR STRUCTURES, SEE SPECIAL PROVISIONS.

FOR EROSION CONTROL PLANS, SEE ROADWAY PLANS.

THE EXISTING STRUCTURE CONSISTING OF 1 SPAN AT 20'-7", 19'-2" CLEAR ROADWAY, TIMBER DECK ON I-BEAMS, END BENTS: TIMBER CAPS ON TIMBER PILES, AND TIMBER BULKHEADS SHALL BE REMOVED. THE EXISTING BRIDGE IS PRESENTLY POSTED FOR LOAD LIMIT.

INASMUCH AS THE PAINT SYSTEM ON THE EXISTING STRUCTURAL STEEL CONTAINS LEAD, THE CONTRACTOR'S ATTENTION IS DIRECTED TO ARTICLE 107-1 OF THE STANDARD SPECIFICATIONS. ANY COSTS RESULTING FROM COMPLIANCE WITH APPLICABLE STATE OR FEDERAL REGULATIONS PERTAINING TO HANDLING OF MATERIALS CONTAINING LEAD BASED PAINT SHALL BE INCLUDED IN THE BID PRICE FOR "REMOVAL OF EXISTING STRUCTURE AT STATION 12+05.98-L-"

THE SUBSTRUCTURE OF THE EXISTING BRIDGE INDICATED ON THE PLANS IS FROM THE BEST INFORMATION AVAILABLE. SINCE THIS INFORMATION IS SHOWN FOR THE CONVENIENCE OF THE CONTRACTOR, THE CONTRACTOR SHALL HAVE NO CLAIM WHATSOEVER AGAINST THE DEPARTMENT OF TRANSPORTATION FOR ANY DELAYS OR ADDITIONAL COSTS INCURRED BASED ON DIFFERENCES BETWEEN THE EXISTING BRIDGE SUBSTRUCTURE SHOWN ON THE PLANS AND THE ACTUAL CONDITIONS AT THE PROJECT SITE.

REMOVAL OF THE EXISTING BRIDGE SHALL BE PERFORMED SO AS NOT TO ALLOW DEBRIS TO FALL INTO THE WATER. THE CONTRACTOR SHALL REMOVE THE BRIDGE AND SUBMIT PLANS FOR DEMOLITION IN ACCORDANCE TO ARTICLE 402-2 OF THE STANDARD SPECIFICATION.

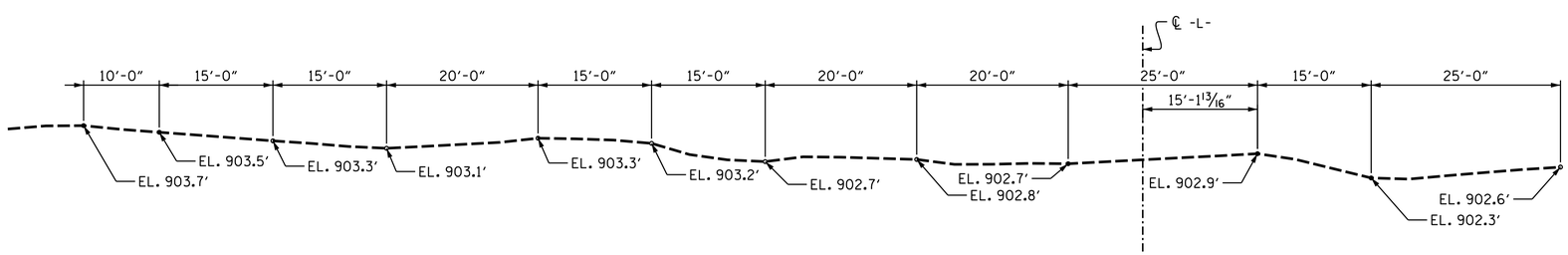

PROFILE ALONG ℄ CULVERT

PROJECT NO. 17BP.12.R.201
IREDELL COUNTY
STATION: 12+05.98-L-
SHEET 1 OF 5 REPLACES BR. NO. 119

STATE OF NORTH CAROLINA
DEPARTMENT OF TRANSPORTATION
RALEIGH

BARREL STANDARD

DOUBLE 10 FT.X 6 FT. CONCRETE BOX CULVERT 90° SKEW

1971

ASSEMBLED BY : CCC	DATE : 9/13	SPECIAL			
CHECKED BY : MTC	DATE : 9/13				
DRAWN BY : R.W.WRIGHT	DATE : OCT. 1989	STANDARD			
CHECKED BY : A.R.BISSETTE	DATE : OCT. 1989				

PREPARED BY
TGS ENGINEERS
804 N. LAFAYETTE ST
SHELBY, NC 28150

NORTH CAROLINA PROFESSIONAL SEAL 014279 ENGINEER RICHARD G. FLETCHER
January 3, 2014

REVISIONS						SHEET NO.
NO.	BY:	DATE:	NO.	BY:	DATE:	C-1
1			3			TOTAL SHEETS
2			4			5

ADDED 11-1-90

BAR TYPES

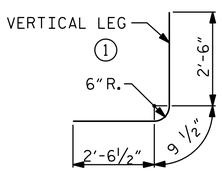

ALL BAR DIMENSIONS ARE OUT TO OUT.

SPLICE LENGTHS CHART

BAR	SIZE	SPLICE LENGTH
B1	#5	2'-7"
B3	#4	2'-0"
C1	#4	2'-0"

REINFORCING STEEL BAR SCHEDULE

BAR	NO.	SIZE	TYPE	LENGTH	WEIGHT
A1	82	#8	1	5'-10"	1,277
A2	82	#8	1	5'-10"	1,277
A100	81	#6	STR	21'-8"	2,636
A200	81	#5	STR	21'-8"	1,831
A300	81	#7	STR	21'-8"	3,588
A400	81	#6	STR	21'-8"	2,636
B1	82	#5	STR	7'-9"	663
B2	82	#4	STR	5'-4"	293
B3	82	#4	STR	7'-9"	425
C1	148	#4	STR	22'-0"	2,176
D1	10	#6	STR	2'-8"	41
G1	8	#5	STR	21'-8"	181
REINFORCING STEEL					17,024 LBS.

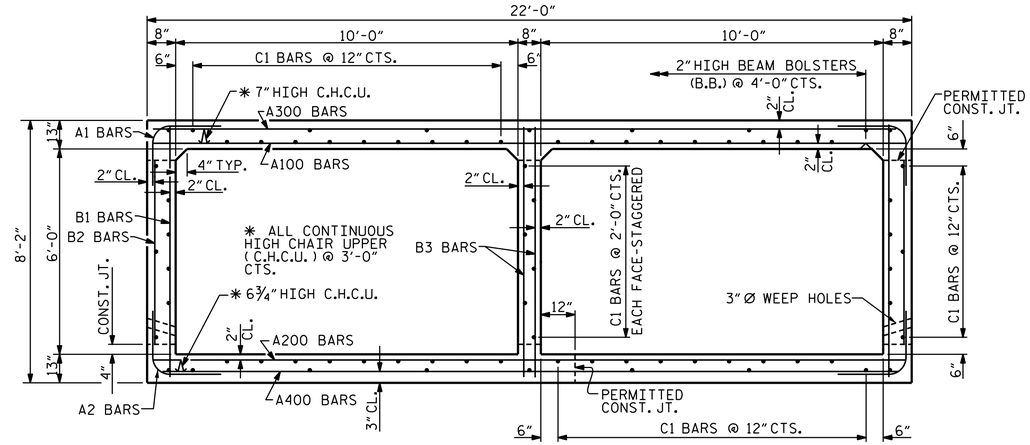

RIGHT ANGLE SECTION OF BARREL

THERE ARE 74 "C" BARS IN SECTION OF BARREL.

TOTAL STRUCTURE QUANTITIES

CLASS A CONCRETE			
BARREL @	2.218 CY/FT	88.8	C.Y.
WING, SILLS ETC.		20.5	C.Y.
TOTAL		109.3	C.Y.
REINFORCING STEEL			
BARREL		17,024	LBS.
WINGS ETC.		793	LBS.
TOTAL		17,817	LBS.
CULVERT EXCAVATION, STA. 12+05.98-L-			L.S.
FOUNDATION CONDITIONING MATERIAL		62	TONS
REMOVAL OF EXISTING STRUCTURE @ STA. 12+05.98-L-			L.S.

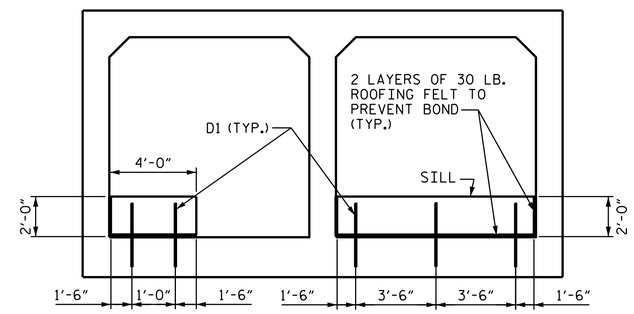

ELEVATION

(LOOKING DOWNSTREAM)

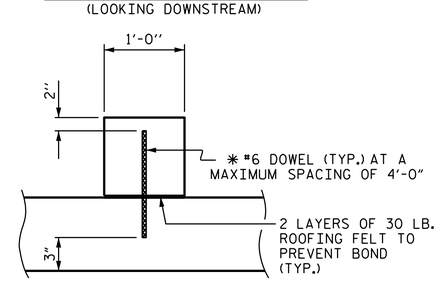

SECTION THROUGH SILL

* DOWELS MAY BE PUSHED INTO GREEN CONCRETE AFTER SLAB HAS BEEN FLOAT FINISHED.

HYDRAULIC DATA:

DESIGN DISCHARGE	600 CFS
FREQUENCY OF DESIGN DISCHARGE	25 YRS.
DESIGN HIGH WATER ELEVATION	908.8'
DRAINAGE AREA	1.20 SQ. MI.
BASE DISCHARGE	850 CFS
FREQUENCY OF BASE DISCHARGE	100 YRS.
BASE HIGH WATER ELEVATION	910.4'

OVERTOPPING FLOOD DATA:

OVERTOPPING DISCHARGE	850 CFS+
FREQUENCY OF OVERTOPPING FLOOD	100 YR+
OVERTOPPING FLOOD ELEVATION	910.4' *

* OVERTOPPING ELEVATION REPRESENTS ℄ SAG ELEVATION @ -L- STA. 11+77.77

PROJECT NO. 17BP.12.R.201

IREDELL COUNTY

STATION: 12+05.98-L-

SHEET 2 OF 5

STATE OF NORTH CAROLINA
DEPARTMENT OF TRANSPORTATION
RALEIGH

BARREL STANDARD

DOUBLE 10 FT. X 6 FT. CONCRETE BOX CULVERT 90° SKEW

1971

PREPARED BY
TGS ENGINEERS
804 N. LAFAYETTE ST
SHELBY, NC 28150

NORTH CAROLINA PROFESSIONAL SEAL 011279 ENGINEER LEONARD G. FLETCHER
January 3, 2014

REVISIONS						SHEET NO.
NO.	BY:	DATE:	NO.	BY:	DATE:	C-2
1			3			TOTAL SHEETS
2			4			5

ASSEMBLED BY : CCC	DATE : 9/13	SPECIAL	
CHECKED BY : MTC	DATE : 9/13		
DRAWN BY : R.W.WRIGHT	DATE : OCT. 1989	STANDARD	
CHECKED BY : A.R.BISSETTE	DATE : OCT. 1989		

ADDED 11-1-90

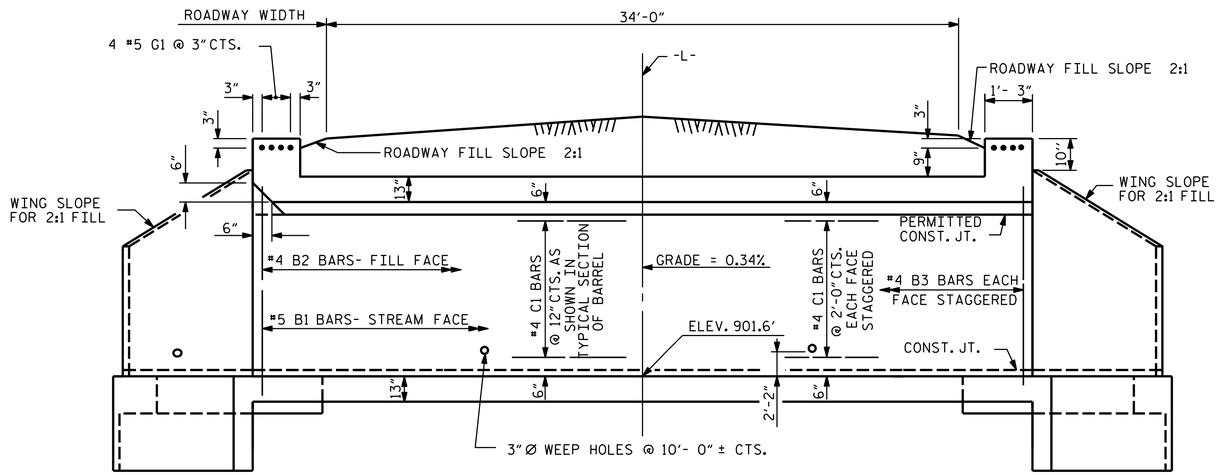

CULVERT SECTION NORMAL TO ROADWAY

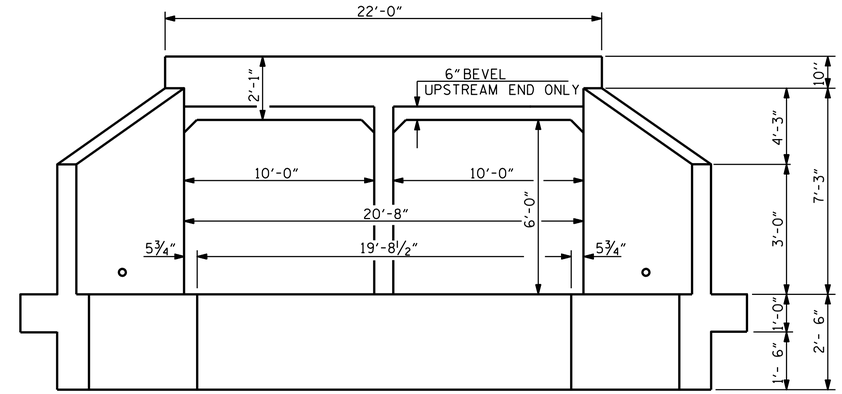

END ELEVATION

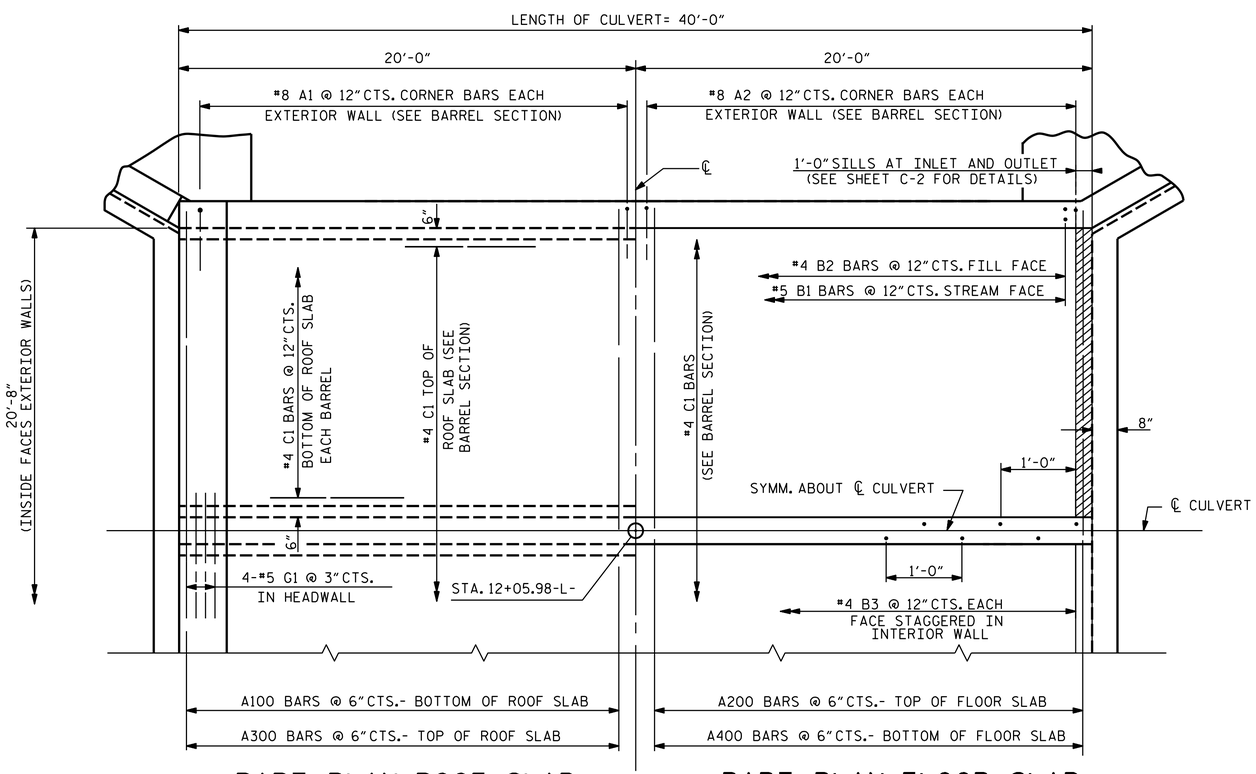

PART PLAN-ROOF SLAB

PART PLAN-FLOOR SLAB

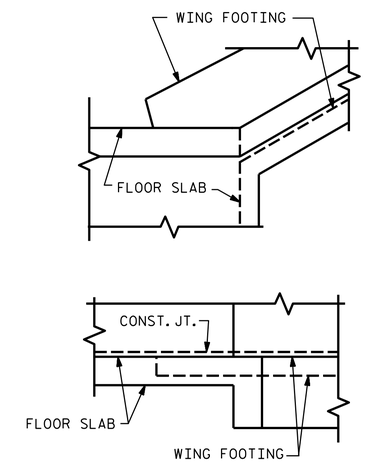

DETAIL

CONNECTION OF WING FOOTING AND FLOOR SLAB WHEN SLAB IS THICKER THAN FOOTING

PROJECT NO. 17BP.12.R.201

IREDELL COUNTY

STATION: 12+05.98-L-

SHEET 3 OF 5

STATE OF NORTH CAROLINA
DEPARTMENT OF TRANSPORTATION
RALEIGH

BARREL STANDARD DOUBLE 10 FT. X 6 FT. CONCRETE BOX CULVERT 90° SKEW

1971

ASSEMBLED BY : CCC	DATE : 9/13	SPECIAL
CHECKED BY : MTC	DATE : 9/13	
DRAWN BY : RALPH D. UNDERWOOD	DATE : MAY 1971	STANDARD
CHECKED BY : JOEL A. JOHNSON	DATE : JULY 1971	

PREPARED BY
TGS ENGINEERS
804 N LAFAYETTE ST
SHELBY, NC 28150

NORTH CAROLINA PROFESSIONAL SEAL 011279 ENGINEER EDWARD G. FLETCHER
January 3, 2014

REVISIONS						SHEET NO.
NO.	BY:	DATE:	NO.	BY:	DATE:	C-3
1			3			TOTAL SHEETS
2			4			5

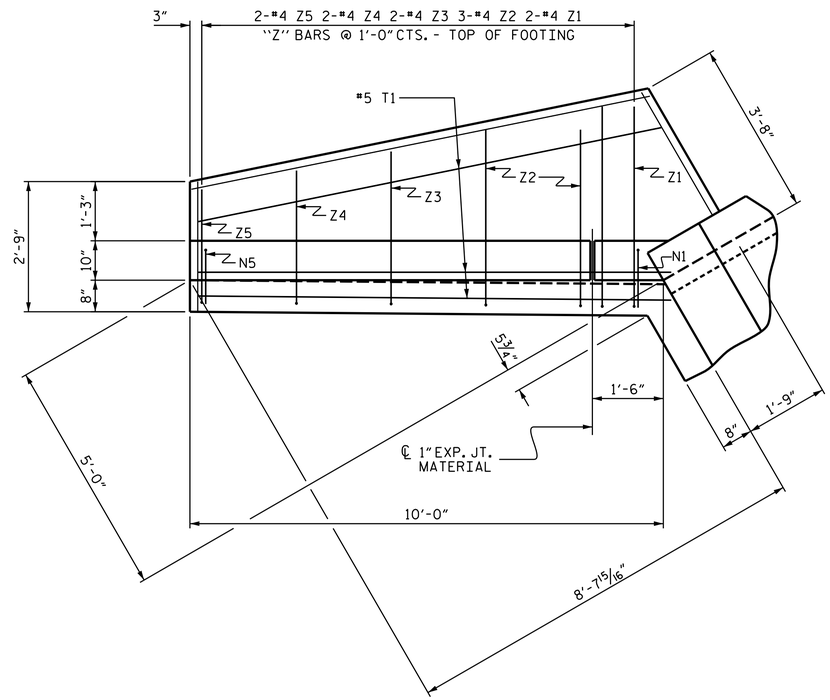

PLAN

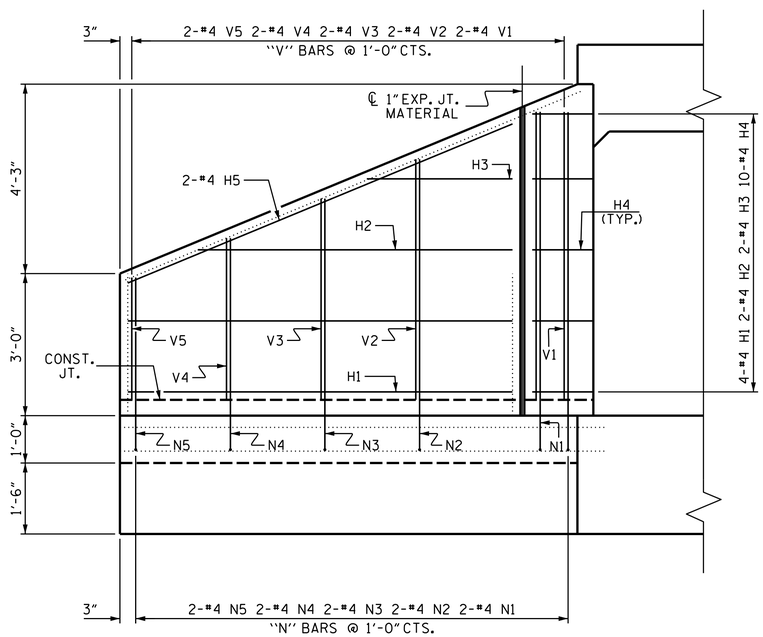

ELEVATION

NOTES

A 3 FOOT STRIP OF FILTER FABRIC SHALL BE ATTACHED TO THE FILL FACE OF THE WING COVERING THE ENTIRE LENGTH OF THE EXPANSION JOINT

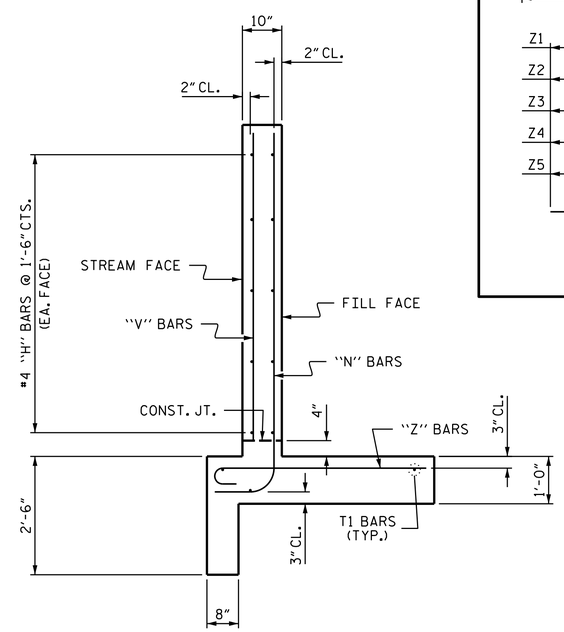

TYPICAL WING SECTION

BAR TYPES

ALL BAR DIMENSIONS ARE OUT TO OUT.

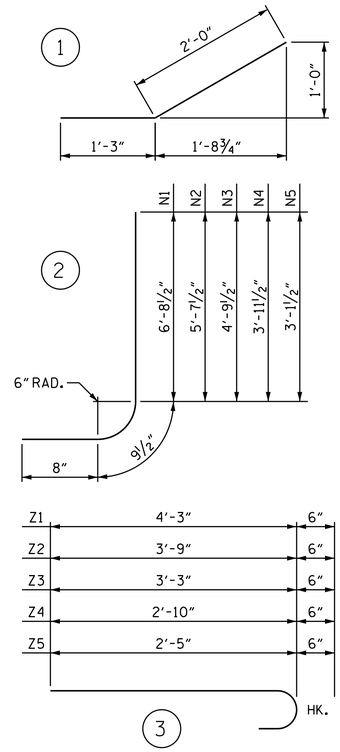

BILL OF MATERIAL

BAR	NO.	SIZE	TYPE	LENGTH	WEIGHT
H1	16	#4	STR	8'-1"	86
H2	8	#4	STR	6'-8"	36
H3	8	#4	STR	3'-1"	16
H4	40	#4	1	3'-3"	87
H5	8	#4	STR	8'-9"	47
N1	8	#4	2	8'-2"	44
N2	8	#4	2	7'-1"	38
N3	8	#4	2	6'-3"	33
N4	8	#4	2	5'-5"	29
N5	8	#4	2	4'-7"	24
T1	12	#5	STR	10'-0"	125
V1	8	#4	STR	6'-1"	33
V2	8	#4	STR	5'-1"	27
V3	8	#4	STR	4'-3"	23
V4	8	#4	STR	3'-5"	18
V5	8	#4	STR	2'-7"	14
Z1	8	#4	3	4'-9"	25
Z2	12	#4	3	4'-3"	34
Z3	8	#4	3	3'-9"	20
Z4	8	#4	3	3'-4"	18
Z5	8	#4	3	2'-11"	16

REINFORCING STEEL FOR 4 WINGS 793 LBS

CLASS A CONCRETE

4 WINGS	13.8	CY
2 HEADWALLS	2.1	CY
END CURTAIN WALLS	2.5	CY
SILLS	2.1	CY
TOTAL	20.5	CY

PROJECT NO. 17BP.12.R.201

IREDELL COUNTY

STATION: 12+05.98-L-

SHEET 4 OF 5

STATE OF NORTH CAROLINA
DEPARTMENT OF TRANSPORTATION
RALEIGH

STANDARD WINGS FOR CONCRETE BOX CULVERT

H = 6'-0" SLOPE = 2:1

90° SKEW

PREPARED BY
TGS ENGINEERS
804 N LAFAYETTE ST
SHELBY, NC 28150

NORTH CAROLINA PROFESSIONAL SEAL 011279 ENGINEER LEONARD G. FLETCHER
January 3, 2014

ASSEMBLED BY :	CCC	DATE :	9/13
CHECKED BY :	MTC	DATE :	9/13
DRAWN BY :	CCJ		10/99
CHECKED BY :	RWW		03/00

REVISIONS

NO.	BY:	DATE:	NO.	BY:	DATE:
1			3		
2			4		

SHEET NO. C-4

TOTAL SHEETS 5

STANDARD NOTES

DESIGN DATA:

SPECIFICATIONS	A.A.S.H.T.O. (CURRENT)
LIVE LOAD	SEE PLANS
IMPACT ALLOWANCE	SEE A.A.S.H.T.O.
STRESS IN EXTREME FIBER OF	
STRUCTURAL STEEL - AASHTO M270 GRADE 36	20,000 LBS. PER SQ. IN.
- AASHTO M270 GRADE 50W	27,000 LBS. PER SQ. IN.
- AASHTO M270 GRADE 50	27,000 LBS. PER SQ. IN.
REINFORCING STEEL IN TENSION	
GRADE 60	24,000 LBS. PER SQ. IN.
CONCRETE IN COMPRESSION	1,200 LBS. PER SQ. IN.
CONCRETE IN SHEAR	SEE A.A.S.H.T.O.
STRUCTURAL TIMBER - TREATED OR	
UNTREATED - EXTREME FIBER STRESS	1,800 LBS. PER SQ. IN.
COMPRESSION PERPENDICULAR TO GRAIN OF TIMBER	375 LBS. PER SQ. IN.
EQUIVALENT FLUID PRESSURE OF EARTH	30 LBS. PER CU. FT. (MINIMUM)

MATERIAL AND WORKMANSHIP:

EXCEPT AS MAY OTHERWISE BE SPECIFIED ON PLANS OR IN THE SPECIAL PROVISIONS, ALL MATERIAL AND WORKMANSHIP SHALL BE IN ACCORDANCE WITH THE 2012 "STANDARD SPECIFICATIONS FOR ROADS AND STRUCTURES" OF THE N. C. DEPARTMENT OF TRANSPORTATION.

STEEL SHEET PILING FOR PERMANENT OR TEMPORARY APPLICATIONS SHALL BE HOT ROLLED.

CONCRETE:

UNLESS OTHERWISE REQUIRED ON PLANS, CLASS A CONCRETE SHALL BE USED FOR ALL PORTIONS OF ALL STRUCTURES WITH THE EXCEPTION THAT: CLASS AA CONCRETE SHALL BE USED IN BRIDGE SUPERSTRUCTURES, ABUTMENT BACKWALLS, AND APPROACH SLABS; AND CLASS B CONCRETE SHALL BE USED FOR SLOPE PROTECTION AND RIP RAP.

CONCRETE CHAMFERS:

UNLESS OTHERWISE NOTED ON THE PLANS, ALL EXPOSED CORNERS ON STRUCTURES SHALL BE CHAMFERED 3/4" WITH THE FOLLOWING EXCEPTIONS: TOP CORNERS OF CURBS MAY BE ROUNDED TO 1-1/2" RADIUS WHICH IS BUILT INTO CURB FORMS; CORNERS OF TRANSVERSE FLOOR EXPANSION JOINTS SHALL BE ROUNDED WITH A 1/4" FINISHING TOOL UNLESS OTHERWISE REQUIRED ON PLANS; AND CORNERS OF EXPANSION JOINTS IN THE ROADWAY FACES AND TOPS OF CURBS AND SIDEWALKS SHALL BE ROUNDED TO A 1/4" RADIUS WITH A FINISHING STONE OR TOOL UNLESS OTHERWISE REQUIRED ON PLANS.

DOWELS:

DOWELS WHEN INDICATED ON PLANS AS FOR CULVERT EXTENSIONS, SHALL BE EMBEDDED AT LEAST 12" INTO THE OLD CONCRETE AND GROUTED INTO PLACE WITH 1:2 CEMENT MORTAR.

ALLOWANCE FOR DEAD LOAD DEFLECTION, SETTLEMENT, ETC. IN CASTING SUPERSTRUCTURES:

BRIDGES SHALL BE BUILT ON THE GRADE OR VERTICAL CURVE SHOWN ON PLANS. SLABS, CURBS AND PARAPETS SHALL CONFORM TO THE GRADE OR CURVE.

ALL DIMENSIONS WHICH ARE GIVEN IN SECTION AND ARE AFFECTED BY DEAD LOAD DEFLECTIONS ARE DIMENSIONS AT CENTER LINE OF BEARING UNLESS OTHERWISE NOTED ON PLANS. IN SETTING FORMS FOR STEEL BEAM BRIDGES AND PRESTRESSED CONCRETE GIRDER BRIDGES, ADJUSTMENTS SHALL BE MADE DUE TO THE DEAD LOAD DEFLECTIONS FOR THE ELEVATIONS SHOWN. WHERE BLOCKS ARE SHOWN OVER BEAMS FOR BUILDING UP TO THE SLAB, THE VERTICAL DIMENSIONS OF THE BLOCKS SHALL BE ADJUSTED BETWEEN BEARINGS TO COMPENSATE FOR DEAD LOAD DEFLECTIONS, VERTICAL CURVE ORDINATE, AND ACTUAL BEAM CAMBER. WHERE BOTTOM OF SLAB IS IN LINE WITH BOTTOM OF TOP FLANGES, DEPTH OF SLAB BETWEEN BEARINGS SHALL BE ADJUSTED TO COMPENSATE FOR DEAD LOAD DEFLECTION, VERTICAL CURVE ORDINATE, AND ACTUAL BEAM CAMBER.

IN SETTING FALSEWORK AND FORMS FOR REINFORCED CONCRETE SPANS, AN ALLOWANCE SHALL BE MADE FOR DEAD LOAD DEFLECTIONS, SETTLEMENT OF FALSEWORK, AND PERMANENT CAMBER WHICH SHALL BE PROVIDED FOR IN ADDITION TO THE ELEVATIONS SHOWN. AFTER REMOVAL OF THE FALSEWORK, THE FINISHED STRUCTURES SHALL CONFORM TO THE PROFILE AND ELEVATIONS SHOWN ON THE PLANS AND CONSTRUCTION ELEVATIONS FURNISHED BY THE ENGINEER.

DETAILED DRAWINGS FOR FALSEWORK OR FORMS FOR BRIDGE SUPERSTRUCTURE AND ANY STRUCTURE OR PARTS OF A STRUCTURE AS NOTED ON THE PLANS SHALL BE SUBMITTED TO THE ENGINEER FOR APPROVAL BEFORE CONSTRUCTION OF THE FALSEWORK OR FORMS IS STARTED.

REINFORCING STEEL:

ALL REINFORCING STEEL SHALL BE DEFORMED. DIMENSIONS RELATIVE TO PLACEMENT OF REINFORCING ARE TO CENTERS OF BARS UNLESS OTHERWISE INDICATED IN THE PLANS. DIMENSIONS ON BAR DETAILS ARE TO CENTERS OF BARS OR ARE OUT TO OUT AS INDICATED ON PLANS.

WIRE BAR SUPPORTS SHALL BE PROVIDED FOR REINFORCING STEEL WHERE INDICATED ON THE PLANS. WHEN BAR SUPPORT PIECES ARE PLACED IN CONTINUOUS LINES, THEY SHALL BE SO PLACED THAT THE ENDS OF THE SUPPORTING WIRES SHALL BE LAPPED TO LOCK LEGS ON ADJOINING PIECES.

STRUCTURAL STEEL:

AT THE CONTRACTOR'S OPTION, HE MAY SUBSTITUTE 7/8" Ø SHEAR STUDS FOR THE ¾" Ø STUDS SPECIFIED ON THE PLANS. THIS SUBSTITUTION SHALL BE MADE AT THE RATE OF 3 - 7/8" Ø STUDS FOR 4 - 3/4" Ø STUDS, AND STUD SPACING CHANGES SHALL BE MADE AS NECESSARY TO PROVIDE THE SAME EQUIVALENT NUMBER OF 7/8" Ø STUDS ALONG THE BEAM AS SHOWN FOR 3/4" Ø STUDS BASED ON THE RATIO OF 3 - 7/8" Ø STUDS FOR 4 - 3/4" Ø STUDS. STUDS OF THE LENGTH SPECIFIED ON THE PLANS MUST BE PROVIDED. THE MAXIMUM SPACING SHALL BE 2'-0".

EXCEPT AT THE INTERIOR SUPPORTS OF CONTINUOUS BEAMS WHERE THE COVER PLATE IS IN CONTACT WITH BEARING PLATE, THE CONTRACTOR MAY, AT HIS OPTION, SUBSTITUTE FOR THE COVER PLATES DESIGNATED ON THE PLANS COVER PLATES OF THE EQUIVALENT AREA PROVIDED THESE PLATES ARE AT LEAST 5/16" IN THICKNESS AND DO NOT EXCEED A WIDTH EQUAL TO THE FLANGE WIDTH LESS 2" OR A THICKNESS EQUAL TO 2 TIMES THE FLANGE THICKNESS. THE SIZE OF FILLET WELDS SHALL CONFORM TO THE REQUIREMENTS OF THE CURRENT ANSI/AASHTO/AWS "BRIDGE WELDING CODE". ELECTROSLAG WELDING WILL NOT BE PERMITTED.

WITH THE SOLE EXCEPTION OF EDGES AT SURFACES WHICH BEAR ON OTHER SURFACES, ALL SHARP EDGES AND ENDS OF SHAPES AND PLATES SHALL BE SLIGHTLY ROUNDED BY SUITABLE MEANS TO A RADIUS OF APPROXIMATELY 1/16 INCH OR EQUIVALENT FLAT SURFACE AT A SUITABLE ANGLE PRIOR TO PAINTING, GALVANIZING, OR METALLIZING.

HANDRAILS AND POSTS:

METAL STANDARDS AND FACES OF THE CONCRETE END POSTS FOR THE METAL RAIL SHALL BE SET NORMAL TO THE GRADE OF THE CURB, UNLESS OTHERWISE SHOWN ON PLANS. THE METAL RAIL AND TOPS OF CONCRETE POSTS USED WITH THE ALUMINUM RAIL SHALL BE BUILT PARALLEL TO THE GRADE OF THE CURB.

METAL HANDRAILS SHALL BE IN ACCORDANCE WITH THE PLANS. RAILS SHALL BE AS MANUFACTURED FOR BRIDGE RAILING. CASTINGS SHALL BE OF A UNIFORM APPEARANCE. FINS AND OTHER DEFORMATIONS RESULTING FROM CASTING OR OTHERWISE SHALL BE REMOVED IN A MANNER SO THAT A UNIFORM COLORING OF THE COMPLETED CASTING SHALL BE OBTAINED. CASTINGS WITH DISCOLORATIONS OR OF NON-UNIFORM COLORING WILL NOT BE ACCEPTED. CERTIFIED MILL REPORTS ARE REQUIRED FOR METAL RAILS AND POSTS.

SPECIAL NOTES:

GENERALLY, IN CASE OF DISCREPANCY, THIS STANDARD SHEET OF NOTES SHALL GOVERN OVER THE SPECIFICATIONS, BUT THE REMAINDER OF THE PLANS SHALL GOVERN OVER NOTES HEREON, AND SPECIAL PROVISIONS SHALL GOVERN OVER ALL. SEE SPECIFICATIONS ARTICLE 105-4.

PROJECT NO. 17BP.12.R.201

IREDELL COUNTY

STATION: 12+05.98-L-

SHEET 5 OF 5

STATE OF NORTH CAROLINA
DEPARTMENT OF TRANSPORTATION
RALEIGH

STANDARD NOTES

NORTH CAROLINA PROFESSIONAL SEAL 011279 ENGINEER RICHARD G. FLETCHER
January 3, 2014

PREPARED BY
TGS ENGINEERS
804 N LAFAYETTE ST
SHELBY, NC 28150

REVISIONS						SHEET NO.
NO.	BY:	DATE:	NO.	BY:	DATE:	C-5
1			3			TOTAL SHEETS
2			4			5

DRAWN BY :	CCC	DATE :	9/13
CHECKED BY :	MTC	DATE :	9/13

REV. 6-16-95 EEM ()RGW REV. 5-7-03 RWW ()JTE REV. 10-1-11 MAA ()GM
REV. 8-16-99 RWW ()LES REV. 5-1-06 TLA ()GM

STD. NO. SN

09/08/99

PROJECT: 17BP.12.R.201

CONTRACT:

STATE	STATE PROJECT REFERENCE NO.	SHEET NO.	TOTAL SHEETS
N.C.	17BP.12.R.201	1	

STATE PROJ. NO.	F. A. PROJ. NO.	DESCRIPTION
17BP.12.R.3		PE
17BP.12.R.3		R/W & UTIL
17BP.12.R.201		CONST.

STATE OF NORTH CAROLINA
DIVISION OF HIGHWAYS

ALEXANDER COUNTY

LOCATION: BRIDGE NO. 010289 OVER FORK LOWER LITTLE RIVER ON SR 1309 (BOONE GAP LN)

TYPE OF WORK: GRADING, DRAINAGE, PAVING, AND STRUCTURE

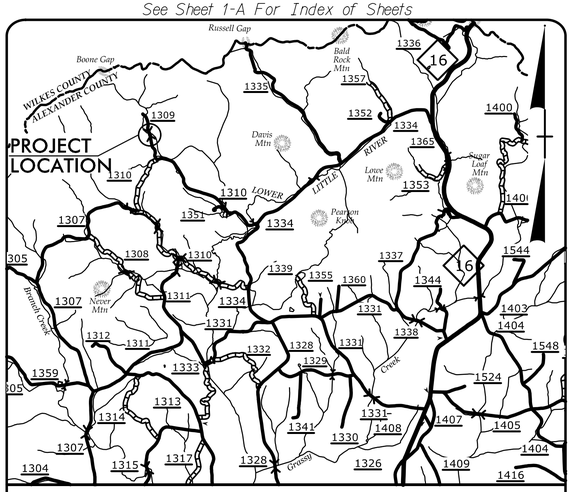

VICINITY MAP

NAD 83/
NSRS 2007

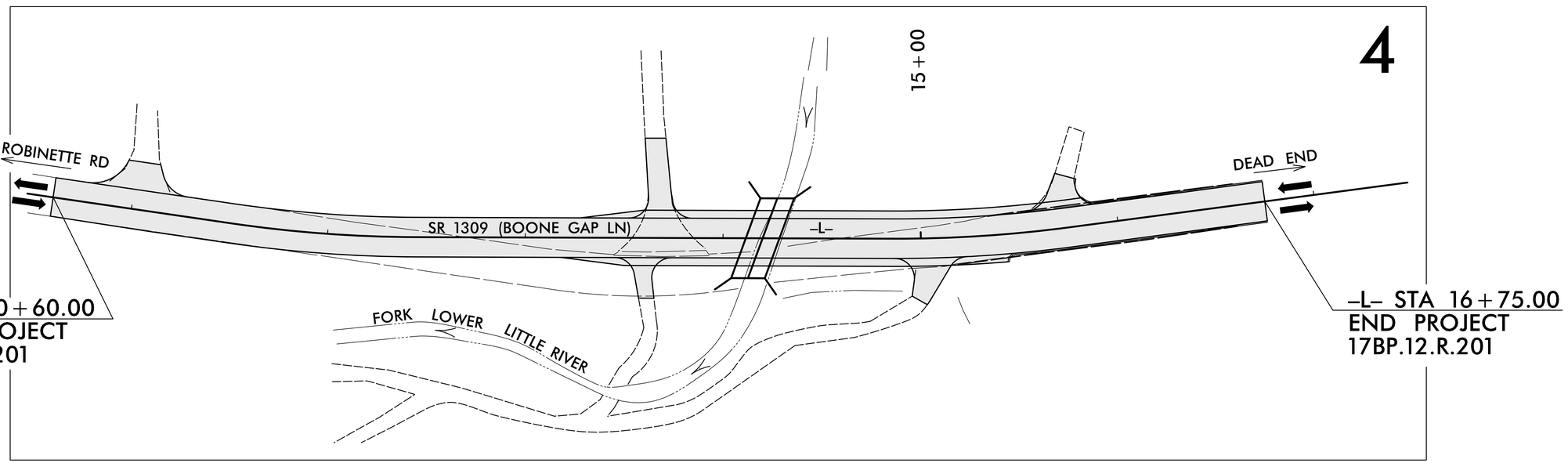

GRAPHIC SCALES

20 10 0 20 40
PLANS

20 10 0 20 40
PROFILE (HORIZONTAL)

4 2 0 4 8
PROFILE (VERTICAL)

DESIGN DATA

ADT 2013 = 40

V = 60 MPH

FUNC CLASS =
RURAL LOCAL
SUB REGIONAL TIER

PROJECT LENGTH

LENGTH TOTAL PROJECT 17BP.12.R.201 #010289 = 0.116 MILES

NCDOT CONTACT: STEVE RACKLEY, PE

PLANS PREPARED BY:

TGS ENGINEERS
804-C N. LAFAYETTE ST
SHELBY, NC 28150
PH (704) 476-0003
CORP. LICENSE NO.: C-0275

PLANS PREPARED FOR:

NORTH CAROLINA
DEPARTMENT OF
TRANSPORATION
DIVISION 12
1710 East Marion Street
Shelby, NC 28151

RIGHT OF WAY DATE:
JUNE 1, 2013

LETTING DATE:

2012 STANDARD SPECIFICATIONS

LEONARD G. FLETCHER, PE
PROJECT ENGINEER

B. CHAD HOUSER, PE
PROJECT DESIGN ENGINEER

HYDRAULICS ENGINEER

NORTH CAROLINA PROFESSIONAL SEAL 030189 ENGINEER THOMAS L. FLETCHER 12/4/2014

SIGNATURE:

ROADWAY DESIGN ENGINEER

NORTH CAROLINA PROFESSIONAL SEAL 30499 ENGINEER BOBBY C. HOUSER 12/4/2014

SIGNATURE:

STATE OF NORTH CAROLINA DEPARTMENT OF TRANSPORTATION

$$$$$$SYSTIME$$$$$
$$$$$$$$$$$$$$$$DGN$$$$$$$$$$$$$$$$
$$$$$$USERNAME$$$$$

NORTH CAROLINA PROFESSIONAL SEAL 30499 ENGINEER BOBBY C. HOUSER 12/4/2012

INDEX OF SHEETS

INDEX OF SHEETS

SHEET NUMBER	SHEET
1	TITLE SHEET
1-A	INDEX OF SHEETS, GENERAL NOTES, AND LIST OF STANDARD DRAWINGS
1-B	CONVENTIONAL SYMBOLS
1-C	SURVEY CONTROL SHEET
2	PAVEMENT SCHEDULE AND TYPICAL SECTIONS
3	SUMMARY OF GUARDRAIL AND EARTHWORK SUMMARY
3-A	SUMMARY OF DRAINAGE QUANTITIES
4	PLAN AND PROFILE SHEET
TMP-1 THRU TMP-6	TRAFFIC MANAGEMENT PLANS
SD-1	SPECIAL SIGN DESIGN
PMP-1	PAVEMENT MARKING PLAN
EC-1 THRU EC-5	EROSION CONTROL PLANS
X-1 THRU X-5	CROSS-SECTIONS
C-1 THRU C-5	CULVERT PLANS

GENERAL NOTES

GENERAL NOTES:

2012 SPECIFICATIONS
EFFECTIVE: 01-17-2012
REVISED: 07-30-2012

GRADE LINE:
GRADING AND SURFACING:

THE GRADE LINES SHOWN DENOTE THE FINISHED ELEVATION OF THE PROPOSED SURFACING AT GRADE POINTS SHOWN ON THE TYPICAL SECTIONS. GRADE LINES MAY BE ADJUSTED AT THEIR BEGINNING AND ENDING AND AT STRUCTURES AS DIRECTED BY THE ENGINEER IN ORDER TO SECURE A PROPER TIE-IN.

CLEARING:

CLEARING ON THIS PROJECT SHALL BE PERFORMED TO THE LIMITS ESTABLISHED BY METHOD II.

SUPERELEVATION:

ALL CURVES ON THIS PROJECT SHALL BE SUPERELEVATED IN ACCORDANCE WITH STD. NO. 225.04 USING THE RATE OF SUPERELEVATION AND RUNOFF SHOWN ON THE PLANS. SUPERELEVATION IS TO BE REVOLVED ABOUT THE GRADE POINTS SHOWN ON THE TYPICAL SECTIONS.

SHOULDER CONSTRUCTION:

ASPHALT, EARTH, AND CONCRETE SHOULDER CONSTRUCTION ON THE HIGH SIDE OF SUPERELEVATED CURVES SHALL BE IN ACCORDANCE WITH STD. NO. 560.01.

SIDE ROADS:

THE CONTRACTOR WILL BE REQUIRED TO DO ALL NECESSARY WORK TO PROVIDE SUITABLE CONNECTIONS WITH ALL ROADS, STREETS, AND DRIVES ENTERING THIS PROJECT. THIS WORK WILL BE PAID FOR AT THE CONTRACT UNIT PRICE FOR THE PARTICULAR ITEMS INVOLVED.

GUARDRAIL:

THE GUARDRAIL LOCATIONS SHOWN ON THE PLANS MAY BE ADJUSTED DURING CONSTRUCTION AS DIRECTED BY THE ENGINEER. THE CONTRACTOR SHOULD CONSULT WITH THE ENGINEER PRIOR TO ORDERING GUARDRAIL MATERIAL.

SUBSURFACE PLANS:

NO SUBSURFACE PLANS ARE AVAILABLE ON THIS PROJECT. THE CONTRACTOR SHOULD MAKE HIS OWN INVESTIGATION AS TO THE SUBSURFACE CONDITIONS.

UTILITIES:

NO UTILITIES ARE KNOWN TO BE IN CONFLICT WITH THIS PROJECT.

RIGHT-OF-WAY MARKERS:

ALL RIGHT-OF-WAY MARKERS ON THIS PROJECT SHALL BE PLACED BY CONTRACT.

STANDARD DRAWINGS

EFF. 01-17-2012
REV. 10-30-2012

2012 ROADWAY ENGLISH STANDARD DRAWINGS

The following Roadway Standards as appear in "Roadway Standard Drawings" Highway Design Branch - N. C. Department of Transportation - Raleigh, N. C., Dated January, 2012 are applicable to this project and by reference hereby are considered a part of these plans:

STD.NO.	TITLE
DIVISION 2 - EARTHWORK	
200.02	Method of Clearing - Method II
225.02	Guide for Grading Subgrade - Secondary and Local
225.04	Method of Obtaining Superelevation - Two Lane Pavement
DIVISION 3 - PIPE CULVERTS	
300.01	Method of Pipe Installation
310.10	Driveway Pipe Construction
DIVISION 5 - SUBGRADE, BASES AND SHOULDERS	
560.01	Method of Shoulder Construction - High Side of Superelevated Curve - Method I
DIVISION 6 - ASPHALT BASES AND PAVEMENTS	
654.01	Pavement Repairs
DIVISION 8 - INCIDENTALS	
862.01	Guardrail Placement
862.02	Guardrail Installation
876.01	Rip Rap in Channels
876.02	Guide for Rip Rap at Pipe Outlets

8/17/99
$$$$$$SYSTIME$$$$$$ $$$$$$DGN$$$$$$ $$$$$$USERNAME$$$$$$

12/05/11

PROJECT REFERENCE NO.	SHEET NO.
17BP.12.R.201	1-B

Note: Not to Scale

S.U.E. = Subsurface Utility Engineering

STATE OF NORTH CAROLINA
DIVISION OF HIGHWAYS

CONVENTIONAL PLAN SHEET SYMBOLS

BOUNDARIES AND PROPERTY:

- State Line
- County Line
- Township Line
- City Line
- Reservation Line
- Property Line
- Existing Iron Pin — EIP
- Property Corner
- Property Monument — ECM
- Parcel/Sequence Number — 123
- Existing Fence Line
- Proposed Woven Wire Fence
- Proposed Chain Link Fence
- Proposed Barbed Wire Fence
- Existing Wetland Boundary — WLB
- Proposed Wetland Boundary — WLB
- Existing Endangered Animal Boundary — EAB
- Existing Endangered Plant Boundary — EPB
- Known Soil Contamination: Area or Site
- Potential Soil Contamination: Area or Site

BUILDINGS AND OTHER CULTURE:

- Gas Pump Vent or U/G Tank Cap
- Sign — S
- Well — W
- Small Mine
- Foundation
- Area Outline
- Cemetery
- Building
- School
- Church
- Dam

HYDROLOGY:

- Stream or Body of Water
- Hydro, Pool or Reservoir
- Jurisdictional Stream — JS
- Buffer Zone 1 — BZ 1
- Buffer Zone 2 — BZ 2
- Flow Arrow
- Disappearing Stream
- Spring
- Wetland
- Proposed Lateral, Tail, Head Ditch — FLOW
- False Sump

RAILROADS:

- Standard Gauge — CSX TRANSPORTATION
- RR Signal Milepost — MILEPOST 35
- Switch — SWITCH
- RR Abandoned
- RR Dismantled

RIGHT OF WAY:

- Baseline Control Point
- Existing Right of Way Marker
- Existing Right of Way Line
- Proposed Right of Way Line — RW
- Proposed Right of Way Line with Iron Pin and Cap Marker — RW
- Proposed Right of Way Line with Concrete or Granite R/W Marker — RW
- Proposed Control of Access Line with Concrete C/A Marker — CA
- Existing Control of Access — CA
- Proposed Control of Access — CA
- Existing Easement Line — E
- Proposed Temporary Construction Easement — E
- Proposed Temporary Drainage Easement — TDE
- Proposed Permanent Drainage Easement — PDE
- Proposed Permanent Drainage / Utility Easement — DUE
- Proposed Permanent Utility Easement — PUE
- Proposed Temporary Utility Easement — TUE
- Proposed Aerial Utility Easement — AUE
- Proposed Permanent Easement with Iron Pin and Cap Marker

ROADS AND RELATED FEATURES:

- Existing Edge of Pavement
- Existing Curb
- Proposed Slope Stakes Cut — C
- Proposed Slope Stakes Fill — F
- Proposed Curb Ramp — CR
- Existing Metal Guardrail
- Proposed Guardrail
- Existing Cable Guiderail
- Proposed Cable Guiderail
- Equality Symbol
- Pavement Removal

VEGETATION:

- Single Tree
- Single Shrub
- Hedge
- Woods Line
- Orchard
- Vineyard — Vineyard

EXISTING STRUCTURES:

MAJOR:

- Bridge, Tunnel or Box Culvert — CONC
- Bridge Wing Wall, Head Wall and End Wall — CONC WW

MINOR:

- Head and End Wall — CONC HW
- Pipe Culvert
- Footbridge
- Drainage Box: Catch Basin, DI or JB — CB
- Paved Ditch Gutter
- Storm Sewer Manhole — S
- Storm Sewer — S

UTILITIES:

POWER:

- Existing Power Pole
- Proposed Power Pole
- Existing Joint Use Pole
- Proposed Joint Use Pole
- Power Manhole — P
- Power Line Tower
- Power Transformer
- U/G Power Cable Hand Hole
- H-Frame Pole
- Recorded U/G Power Line — P
- Designated U/G Power Line (S.U.E.*) — P

TELEPHONE:

- Existing Telephone Pole
- Proposed Telephone Pole
- Telephone Manhole — T
- Telephone Booth
- Telephone Pedestal — T
- Telephone Cell Tower
- U/G Telephone Cable Hand Hole
- Recorded U/G Telephone Cable — T
- Designated U/G Telephone Cable (S.U.E.*) — T
- Recorded U/G Telephone Conduit — TC
- Designated U/G Telephone Conduit (S.U.E.*) — TC
- Recorded U/G Fiber Optics Cable — T FO
- Designated U/G Fiber Optics Cable (S.U.E.*) — T FO

WATER:

- Water Manhole — W
- Water Meter
- Water Valve
- Water Hydrant
- Recorded U/G Water Line — W
- Designated U/G Water Line (S.U.E.*) — W
- Above Ground Water Line — A/G Water

TV:

- TV Satellite Dish
- TV Pedestal — C
- TV Tower
- U/G TV Cable Hand Hole — HH
- Recorded U/G TV Cable — TV
- Designated U/G TV Cable (S.U.E.*) — TV
- Recorded U/G Fiber Optic Cable — TV FO
- Designated U/G Fiber Optic Cable (S.U.E.*) — TV FO

GAS:

- Gas Valve
- Gas Meter
- Recorded U/G Gas Line — G
- Designated U/G Gas Line (S.U.E.*) — G
- Above Ground Gas Line — A/G Gas

SANITARY SEWER:

- Sanitary Sewer Manhole
- Sanitary Sewer Cleanout
- U/G Sanitary Sewer Line — SS
- Above Ground Sanitary Sewer — A/G Sanitary Sewer
- Recorded SS Forced Main Line — FSS
- Designated SS Forced Main Line (S.U.E.*) — FSS

MISCELLANEOUS:

- Utility Pole
- Utility Pole with Base
- Utility Located Object
- Utility Traffic Signal Box — S
- Utility Unknown U/G Line — ?UTL
- U/G Tank; Water, Gas, Oil
- Underground Storage Tank, Approx. Loc. — UST
- A/G Tank; Water, Gas, Oil
- Geoenvironmental Boring
- U/G Test Hole (S.U.E.*)
- Abandoned According to Utility Records — AATUR
- End of Information — E.O.I.

PROJECT REFERENCE NO.	SHEET NO.
17BP.12.R.201	1-C

8/17/99

REVISIONS

ALEXANDER COUNTY
LOW IMPACT BRIDGE

STRUCTURE 010289
LS 12-11-023
WBS 17BP.12.R.201
TIP 01-0289

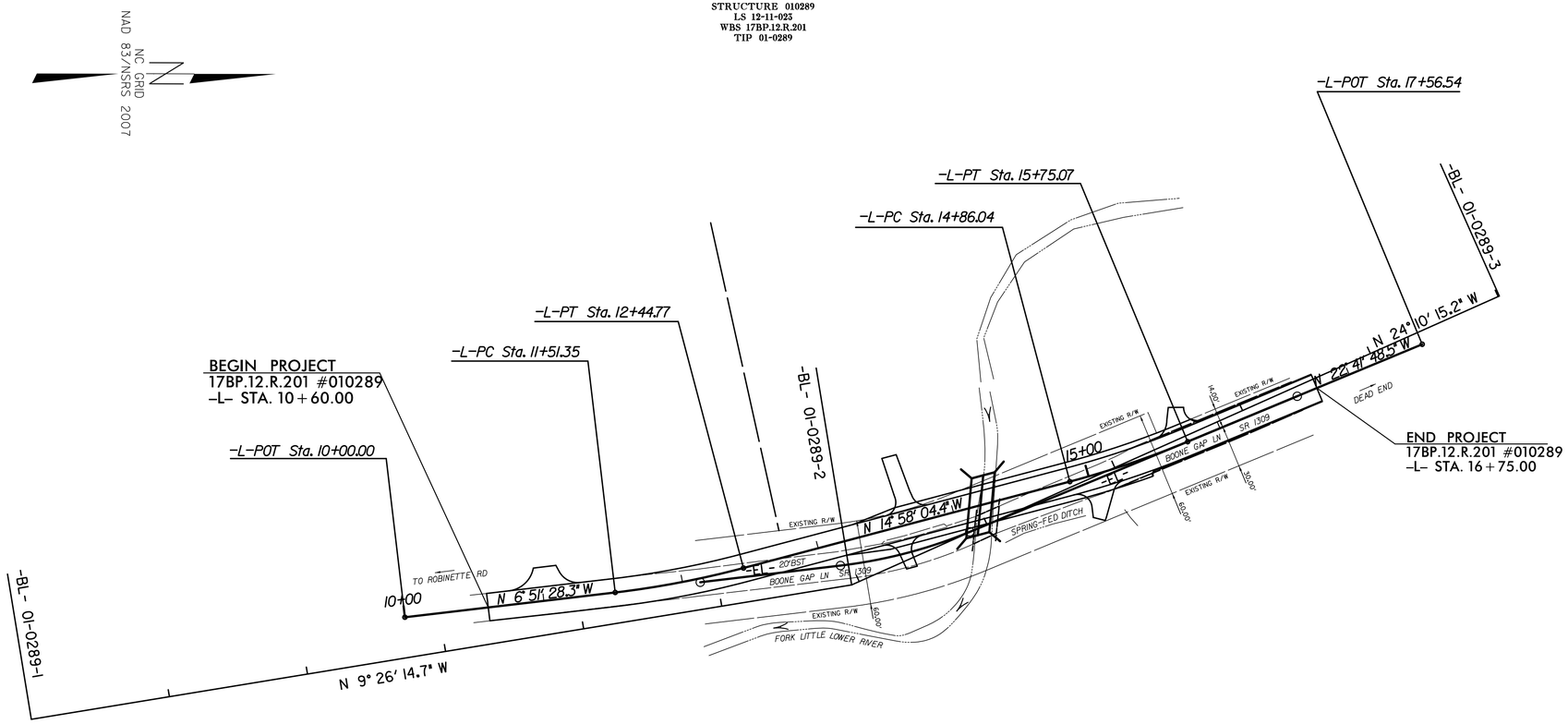

BL

POINT	DESC.	NORTH	EAST	ELEVATION	EL STATION	OFFSET
1	01-0289-1	830724.2240	1332805.2740	1317.26	OUTSIDE PROJECT LIMITS	
2	01-0289-1	831310.3200	1332707.8530	1322.43	11+07.00	14.73 RT
3	01-0289-1	831772.7115	1332500.3282	1337.99	OUTSIDE PROJECT LIMITS	

DATUM DESCRIPTION

THE LOCALIZED COORDINATE SYSTEM DEVELOPED FOR THIS PROJECT IS BASED ON THE STATE PLANE COORDINATES ESTABLISHED BY NCDOT FOR MONUMENT "01-0289-1"
WITH NAD 83/NSRS 2007 STATE PLANE GRID COORDINATES OF
NORTHING: 830724.224(ft) EASTING: 1332805.274(ft)
ELEVATION: 1317.26(ft)
THE AVERAGE COMBINED GRID FACTOR USED ON THIS PROJECT (GROUND TO GRID) IS: 0.9999027021
THE N.C. LAMBERT GRID BEARING AND LOCALIZED HORIZONTAL GROUND DISTANCE FROM "01-0289-1" TO -L- STATION 10+00 IS
N 15°24'49.2" W 276.77'
ALL LINEAR DIMENSIONS ARE LOCALIZED HORIZONTAL DISTANCES
VERTICAL DATUM USED IS NAVD 88

Scale 1" = 50'
50' 0 50' 100'

BENCHMARKS (NAVD 88)
****
BM#1 ELEVATION - 1317.26'
N 830724 E 1332805
BL STATION 5+00 0' RIGHT
REBAR WITH ALUMINUM CAP STAMPED
'01-0289-1' (SET FLUSH WITH GROUND).
POINT LIES 7' EAST OF EDGE OF
BOONE GAP LANE
****
****
BM#2 ELEVATION - 1337.99'
N 831773 E 1332500
BL STATION 16+01 0' RIGHT
REBAR WITH ALUMINUM CAP STAMPED
'01-0289-3' (SET FLUSH WITH GROUND).
POINT LIES 5' WEST OF EDGE OF
BOONE GAP LANE
****

$$$

6/2/99

Alexander County
Bridge # 010289

PROJECT REFERENCE NO.	SHEET NO.
17BPJ2.R.201	2
ROADWAY DESIGN ENGINEER	PAVEMENT DESIGN ENGINEER

NORTH CAROLINA PROFESSIONAL SEAL 30499 ENGINEER BOBBY C. HOUSER 12/4/2014

TGS ENGINEERS
TGS ENGINEERS
804-C N. LAFAYETTE ST
SHELBY, NC 28150
PH (704) 476-0003
CORP. LICENSE NO.: C-0275

PAVEMENT SCHEDULE

C1	PROP. APPROX. 3″ ASPHALT CONCRETE SURFACE COURSE, TYPE SF9.5A, AT AN AVERAGE RATE OF 165 LBS. PER SQ. YD. IN EACH OF TWO LAYERS.
C2	PROP. VAR. DEPTH ASPHALT CONCRETE SURFACE COURSE, TYPE SF9.5A, AT AN AVERAGE RATE OF 110 LBS. PER SQ. YD. PER 1″ DEPTH. TO BE PLACED IN LAYERS NOT LESS THAN 1″ IN DEPTH OR GREATER THAN 1½″ IN DEPTH.
E1	PROP. APPROX. 4″ ASPHALT CONCRETE BASE COURSE, TYPE B25.0B, AT AN AVERAGE RATE OF 456 LBS. PER SQ. YD.
E2	PROP. VAR. DEPTH ASPHALT CONCRETE BASE COURSE, TYPE B25.0B, AT AN AVERAGE RATE OF 114 LBS. PER SQ. YD. PER 1″ DEPTH. TO BE PLACED IN LAYERS NOT LESS THAN 3″ IN DEPTH OR GREATER THAN 5½″ IN DEPTH.
R	SPECIAL SHOULDER BERM CURB (SEE DETAIL THIS SHEET)
T	EARTH MATERIAL
U	EXISTING PAVEMENT
V	MILLING EXISTING PAVEMENT (SEE MILLING DETAILS THIS SHEET)
W	VARIABLE DEPTH ASPHALT PAVEMENT (SEE WEDGING DETAILS THIS SHEET)

NOTE: PAVEMENT EDGE SLOPES ARE 1:1 UNLESS SHOWN OTHERWISE.

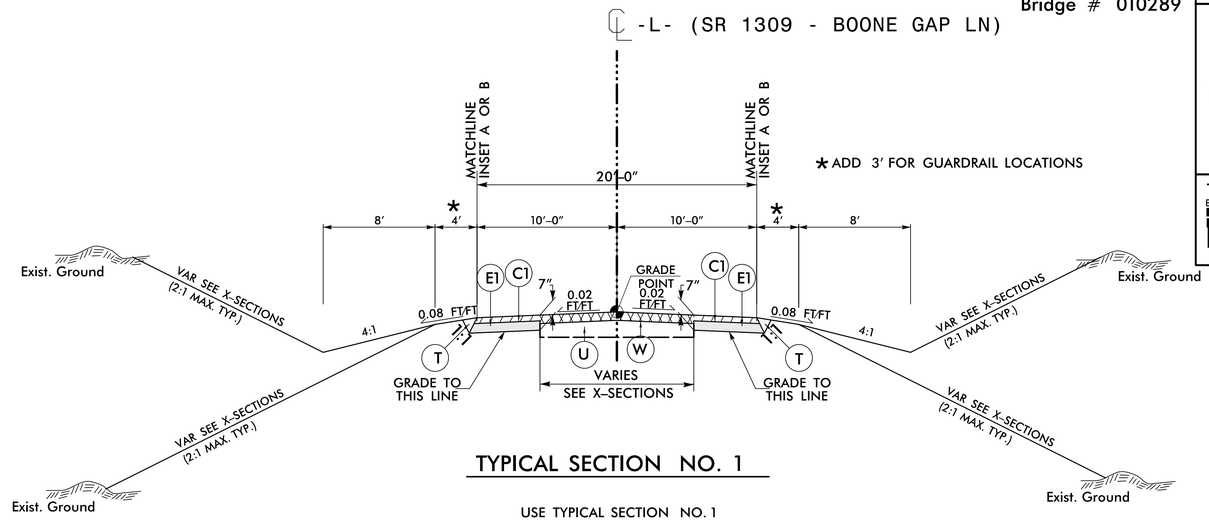

TYPICAL SECTION NO. 1

USE TYPICAL SECTION NO. 1
-L- STA. 11+10.00 TO -L- STA. 16+25.00

NOTE: TRANSITION BETWEEN EXISTING AND TYP. SECT. NO. 1 AS FOLLOWS:
-L- STA. 10+60.00 TO -L- STA. 11+10.00
-L- STA. 16+25.00 TO -L- STA. 16+75.00

NOTE: USE FULL DEPTH PAVEMENT FROM -L- STA. 13+00.00 TO -L- STA. 15+50.00

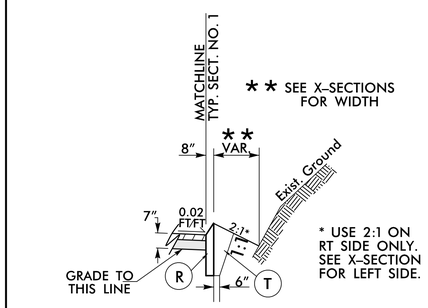

INSET B

USE INSET B
-L- STA. 15+43.00 TO -L- STA. 16+75.00 RT
-L- STA. 15+83.54 TO -L- STA. 16+75.00 LT

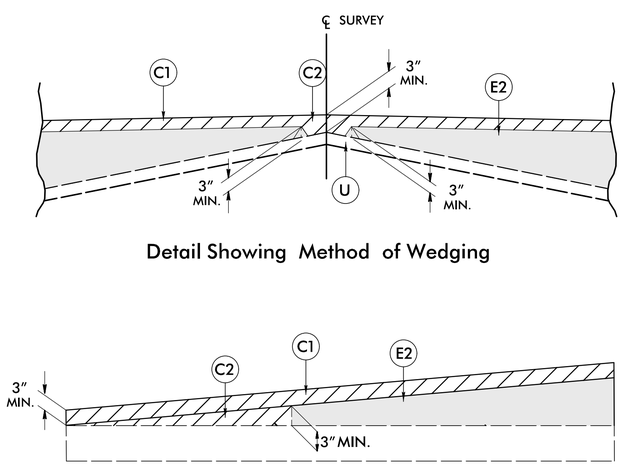

Detail Showing Method of Wedging

Wedging Detail For Resurfacing

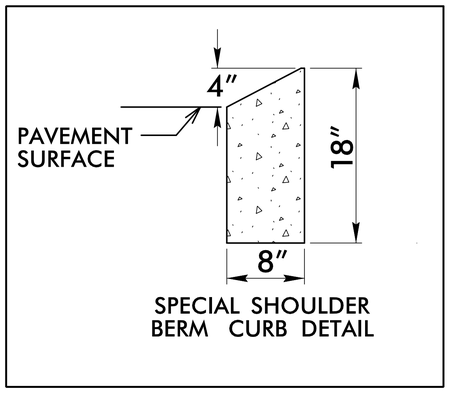

SPECIAL SHOULDER BERM CURB DETAIL

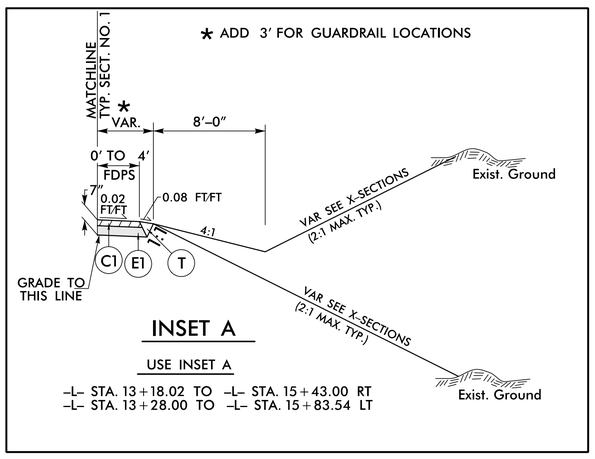

INSET A

USE INSET A
-L- STA. 13+18.02 TO -L- STA. 15+43.00 RT
-L- STA. 13+28.00 TO -L- STA. 15+83.54 LT

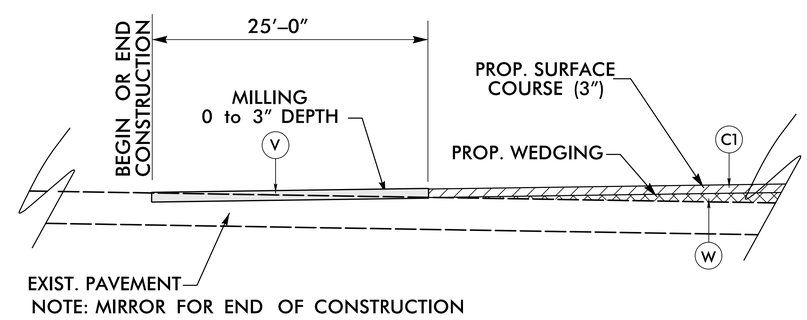

NOTE: MIRROR FOR END OF CONSTRUCTION

MILLING DETAIL

USE MILLING DETAIL AS FOLLOWS:

MILLING AND RESURFACING: -L- STA. 10+60.00 TO -L- STA. 10+85.00
-L- STA. 16+50.00 TO -L- STA. 16+75.00

RD261649

STATE OF NORTH CAROLINA
DIVISION OF HIGHWAYS

SUMMARY OF EARTHWORK

IN CUBIC YARDS

Station	Station	Uncl. Excav.	Embank. +%	Borrow	Waste
-L- 10+60.00	-L- 16+75.00	518	356		162
PROJECT TOTALS:		518	356		162
SAY:		**570**			

DDE= 105 CuYd

Approximate quantities only. Unclassified excavation, fine grading, clearing and grubbing, breaking of existing pavement and removal of existing pavement will be paid for at the lump sum price for "Grading".

PAVEMENT REMOVAL SUMMARY

IN SQUARE YARDS

SURVEY LINE	Station	Station	LOC LT/RT/CL	ASPHALT REMOVAL	ASPHALT BREAKUP
-L-	11+73	13+00	RT	83.84	
-L-	13+00	14+12	RT	258.42	
-L-	14+26	14+62	RT	4.43	
-L-	15+00	15+50	CL	51.91	
-L-	15+50	16+75	LT	4.17	
-L-	15+50	16+75	RT	8.86	
-L-	14+30	15+50	CL		210
		TOTAL:		411.63	210
		SAY:		**420**	**210**

"N" = DISTANCE FROM EDGE OF LANE TO FACE OF GUARDRAIL
TOTAL SHOULDER WIDTH = DISTANCE FROM EDGE OF TRAVEL LANE TO SHOULDER BREAK POINT.
FLARE LENGTH = DISTANCE FROM LAST SECTION OF PARALLEL GUARDRAIL TO END OF GUARDRAIL.
W = TOTAL WIDTH OF FLARE FROM BEGINNING OF TAPER TO END OF GUARDRAIL.
G = GATING IMPACT ATTENUATOR TYPE 350
NG = NON-GATING IMPACT ATTENUATOR TYPE 350

GUARDRAIL SUMMARY

LINE	BEG. STA.	END STA.	LOC.	LENGTH			WARRANT POINT		"N" DIST. FROM E.O.L.	TOTAL SHLDR WIDTH	FLAIR LENGTH		W		ANCHORS							IMP. ATTEN. TYPE 350			REMOVE EXISTING GUARDRAIL		REMARKS
				STRAIGHT	SHOP CURVED	DOUBLE FACED	APPR. END	TRAIL. END			APPR. END	TRAIL. END	APPR. END	TRAIL. END				AT-1				EA	G	NG			
-L-	13+70.00	14+89.36	RT	87.50	56.25		14+04.13	14+21.16	4'	7'								2									
-L-	13+76.33	15+69.54	LT	150.00	87.50		14+35.87	14+18.84	4'	7'								2									
SUB-TOTALS:				237.50	143.75													4									
	LESS ANCHOR DEDUCTIONS																										
	AT-1	4@6.25ft			25																						
	ANCHOR TOTALS				25																						
GRAND TOTALS				237.50	118.75													**4**									
SAY				**250**	**125**																						

ADDITIONAL GUARDRAIL POSTS = 5 EA

RD248821

COMPUTED BY: SGM DATE: 8/26/2013

CHECKED BY: JLT DATE: 8/29/2013

NORTH CAROLINA DEPARTMENT OF TRANSPORTATION
DIVISION OF HIGHWAYS

PROJECT NO.	SHEET NO.
17BP.12.R.201	3-A

Alexander County
Bridge # 010289

Note: Invert Elevations indicated are for Bid Purposes only and shall not be used for project construction stakeout.
See "Standard Specifications For Roads and Structures, Section 300-5".

LIST OF PIPES, ENDWALLS, ETC. (FOR PIPES 48 INCHES & UNDER)

STATION / SIZE / THICKNESS OR GAUGE	LOCATION (LT, RT, OR CL)'	STRUCTURE NO. FROM	STRUCTURE NO. TO	TOP ELEVATION	INVERT ELEVATION	INVERT ELEVATION	SLOPE CRITICAL	DRAINAGE PIPE (RCP, CSP, CAAP, HDPE, or PVC) 12"	15"	18"	24"	30"	36"	42"	48"	DO NOT USE RCP	DO NOT USE CSP	DO NOT USE CAAP	DO NOT USE HDPE
-L- 11+03	LT	0401								36									
-L-12+01	CL	O402			1315.90	1315.50													
-L-13+66	LT	0403							40										
-L-14+98	RT	0404							40										
TOTALS									80	36									

STATION	C.S. PIPE 12" (.064)	15" (.064)	18" (.064)	24" (.064)	30" (.079)	36" (.079)	42" (.109)	48" (.109)	R.C. PIPE CLASS III 12"	15"	18"	24"	30"	36"	42"	48"	R.C. PIPE CLASS IV 12"	15"	18"	24"	30"	36"	42"	48"
-L- 11+03																								
-L-12+01																			48					
-L-13+66																								
-L-14+98																								
TOTALS																			48					

STATION	** " R.C. PIPE (CLASS V)	***" RC PIPE CULVERTS, CONTRACTOR DESIGN	***" RC PIPE CULVERTS, CONTRACTOR DESIGN	15" SIDE DRAIN PIPE	18" SIDE DRAIN PIPE	ENDWALLS STD. 838.01 838.11 OR STD. 838.80 (UNLESS NOTED OTHERWISE) CU. YARDS R.C.P.	C.S.P.	QUANTITIES FOR DRAINAGE STRUCTURES *TOTAL L.F. FOR PAY QUANTITY SHALL BE COL. "A" + (1.3 X COL."B") PER EACH (0' THRU 5.0')	LIN. FT. A 5.0' THRU 10.0'	LIN. FT. B 10.0' AND ABOVE	C.B. STD. 840.01 OR STD. 840.02	FRAME, GRATES, AND HOOD STANDARD 840.03 TYPE OF GRATE E	F	G	CONCRETE TRANSITIONAL SECTION DROP INLET	CATCH BASIN	D.I. STD. 840.14 OR STD. 840.15	D.I. FRAME AND GRATE STD. 840.16	G.D.I. TYPE "A" STD. 840.17 OR 840.26	G.D.I. TYPE "B" STD. 840.18 OR 840.27	G.D.I. TYPE "D" STD. 840.19 OR 840.28	G.D.I. FRAME WITH GRATE STD. 840.20	G.D.I. FRAME WITH TWO GRATES STD. 840.22	G.D.I. (N.S.) FRAME WITH GRATE STD. 840.24	G.D.I. (N.S.) FRAME WITH TWO GRATES STD. 840.24	J.B. STD. 840.31 OR 840.32	DRAINAGE PIPE ELBOWS NO. & SIZE	CONC. & BRICK PIPE PLUG, C.Y. STD. 840.71	CONC. COLLARS CL. "B" C.Y. STD. 840.72	PIPE REMOVAL LIN. FT.	REMARKS
-L- 11+03																															33	
-L-12+01																															37	
-L-13+66																																
-L-14+98																															26	
TOTALS																															96	

ABBREVIATIONS

C.B.	CATCH BASIN
N.D.I.	NARROW DROP INLET
D.I.	DROP INLET
G.D.I.	GRATED DROP INLET
G.D.I.(N.S.)	(NARROW SLOT)
J.B.	JUNCTION BOX
M.H.	MANHOLE
T.B.D.I.	TRAFFIC BEARING DROP INLET
T.B.J.B.	TRAFFIC BEARING JUNCTION BOX

PROJECT REFERENCE NO.	SHEET NO.
17BP.12.R.201	4
R/W SHEET NO.	

ROADWAY DESIGN ENGINEER — NORTH CAROLINA PROFESSIONAL SEAL 30499 ENGINEER BOBBY C. HOUSER 12/4/2014

HYDRAULICS ENGINEER — NORTH CAROLINA PROFESSIONAL SEAL 030181 ENGINEER THOMAS L. FLETCHER 12/4/2014

Alexander County
Bridge # 010289

NAD 83/NSRS 2007

REVISIONS 8/17/99

-L- CURVE DATA

PI Sta 11+98.14	PI Sta 15+30.62
Δ = 8° 06' 36.1" (LT)	Δ = 7° 43' 44.1" (LT)
D = 8° 40' 52.2"	D = 8° 40' 52.2"
L = 93.42'	L = 89.03'
T = 46.79'	T = 44.58'
R = 660.00'	R = 660.00'
SE = 0.03	SE = 0.03

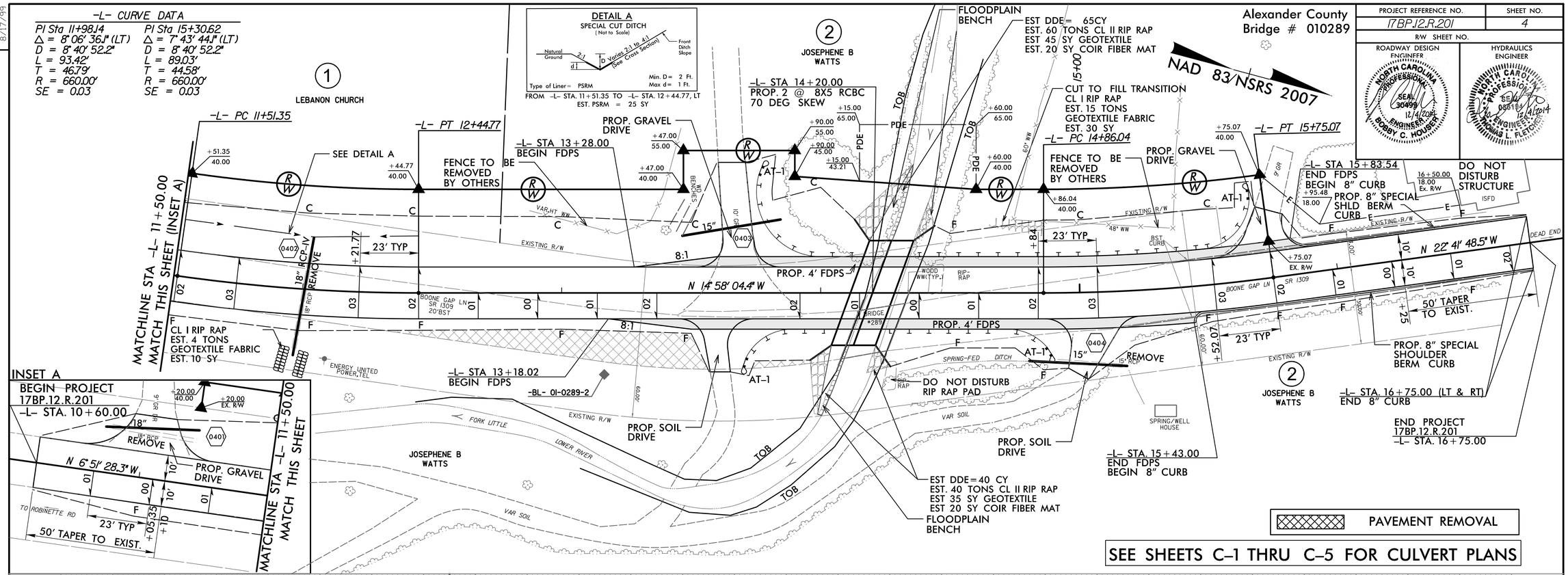

PAVEMENT REMOVAL

SEE SHEETS C-1 THRU C-5 FOR CULVERT PLANS

PIPE HYDRAULIC DATA

18" RCP-IV Sta. 12+00.75

DRAINAGE AREA	= 7	AC
DESIGN FREQUENCY	= 25	YRS
DESIGN DISCHARGE	= 11	CFS
DESIGN HW ELEVATION	= 1317.85	FT
100 YEAR DISCHARGE	= 17	CFS
100 YEAR HW ELEVATION	= 1320.25	FT
OVERTOPPING FREQUENCY	= 50+	YRS
OVERTOPPING DISCHARGE	= 16	CFS
OVERTOPPING ELEVATION	= 1319.70	FT

CULVERT HYDRAULIC DATA

DESIGN DISCHARGE	= 380	CFS
DESIGN FREQUENCY	= 25	YRS
DESIGN HW ELEVATION	= 1324.4	FT
BASE DISCHARGE	= 600	CFS
BASE FREQUENCY	= 100	YRS
BASE HW ELEVATION	= 1326.24	FT
OVERTOPPING DISCHARGE	= 500	CFS
OVERTOPPING FREQUENCY	= 50	YRS
OVERTOPPING ELEVATION	= 1325.4	FT

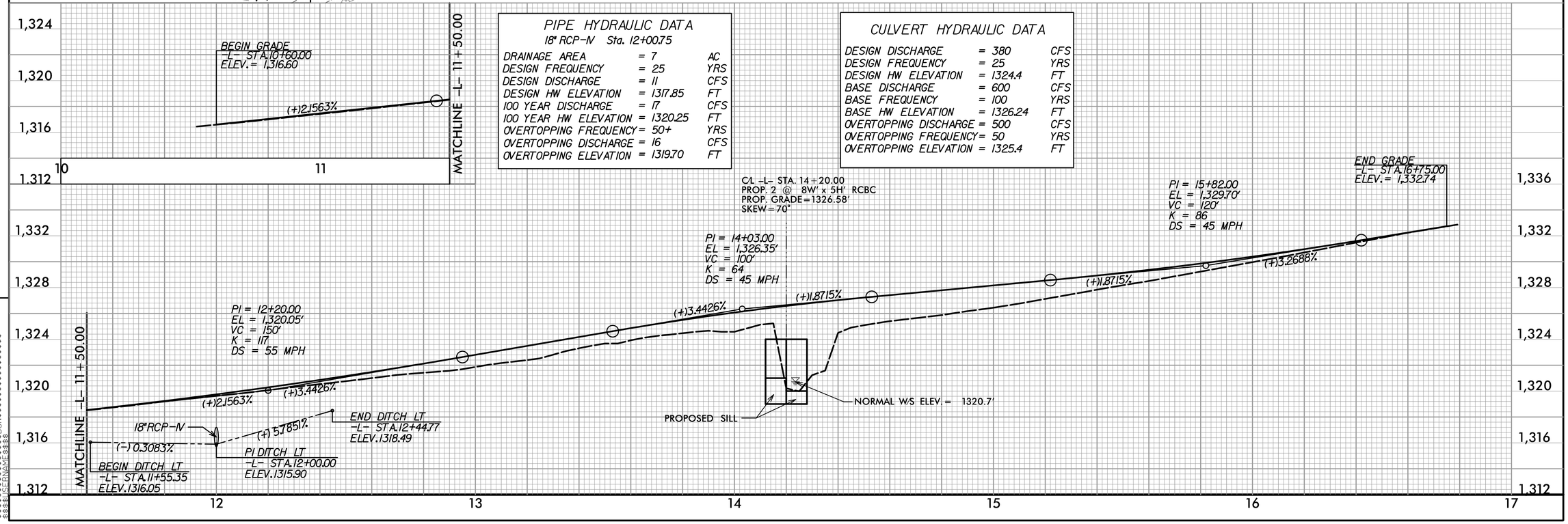

STATE OF NORTH CAROLINA
DIVISION OF HIGHWAYS

TRANSPORTATION MANAGEMENT PLAN

ALEXANDER COUNTY

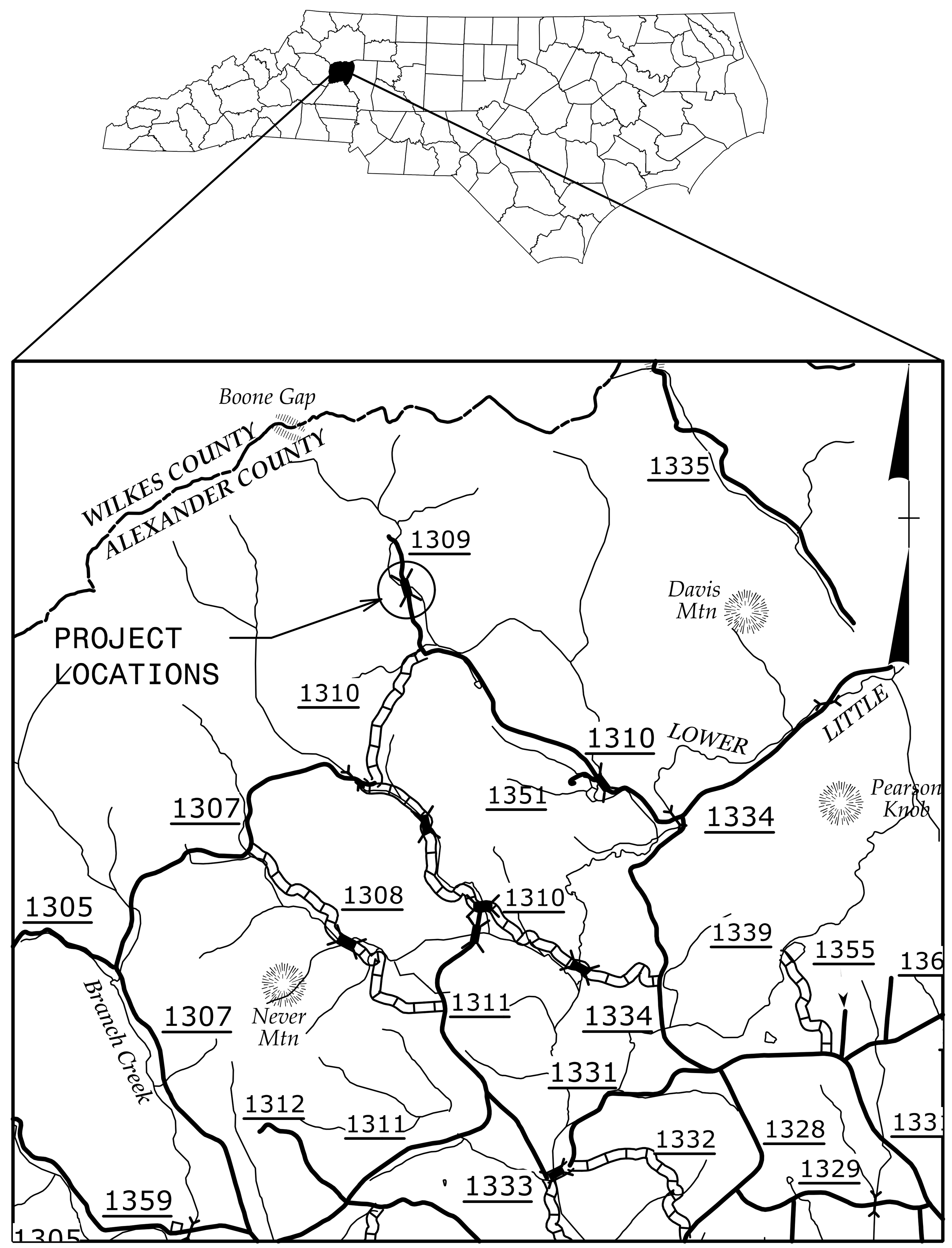

VICINITY MAP

INDEX OF SHEETS

SHEET NO.	TITLE
TMP-1	TITLE SHEET, VICINITY MAP AND INDEX OF SHEETS
TMP-1A	LIST OF APPLICABLE ROADWAY STANDARD DRAWINGS, AND LEGEND
TMP-1B	TRANSPORTATION OPERATIONS PLAN: (MANAGEMENT STRATEGIES, GENERAL NOTES, AND LOCAL NOTES)
TMP-2	PHASING
TMP-3	PHASE I
TMP-4	PHASE I- TEMP. PAVEMENT MARKINGS AND SIGN LAYOUT
TMP-5	PHASE II AND III
TMP-6	PHASE III
PMP-1	FINAL PAVEMENT MARKING PLAN AND SCHEDULE

SHEET NO.
TMP-1

PROJECT: 17BP.12.R.201 #0010289

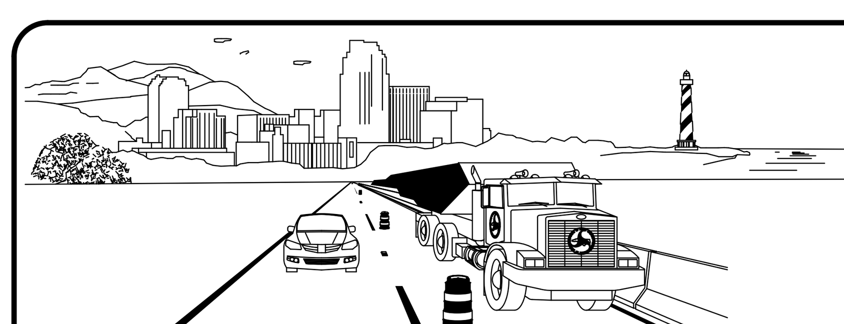

WORK ZONE SAFETY & MOBILITY
"from the MOUNTAINS to the COAST"

PLAN PREPARED FOR N.C.D.O.T. BY:

TGS ENGINEERS
TGS ENGINEERS
804-C N. LAFAYETTE ST
SHELBY, NC 28150
PH (704) 476-0003
CORP. LICENSE NO.: C-0275

JIMMY L. TERRY, PE — PROJECT ENGINEER
SANDRA G. MELVIN — DESIGN TECHNICIAN

DIVISION OF HIGHWAYS · STATE OF NORTH CAROLINA · DEPARTMENT OF TRANSPORTATION · WORK ZONE TRAFFIC CONTROL

APPROVED: ____________
DATE: ____________

SEAL

NORTH CAROLINA PROFESSIONAL ENGINEER SEAL 35018 JIMMY L. TERRY

PROJ. REFERENCE NO.	SHEET NO.
17BP.12.R.201	TMP-1A

ROADWAY STANDARD DRAWINGS

THE FOLLOWING ROADWAY STANDARDS AS SHOWN IN "ROADWAY STANDARD DRAWINGS" - PROJECT SERVICES UNIT - N.C. DEPARTMENT OF TRANSPORTATION - RALEIGH, N.C., DATED JANUARY 2012 ARE APPLICABLE TO THIS PROJECT AND BY REFERENCE HEREBY ARE CONSIDERED A PART OF THESE PLANS:

STD. NO.	TITLE
1101.01	WORK ZONE WARNING SIGNS
1101.02	TEMPORARY LANE CLOSURES
1101.04	TEMPORARY SHOULDER CLOSURES
1101.11	TRAFFIC CONTROL DESIGN TABLES
1110.01	STATIONARY WORK ZONE SIGNS
1110.02	PORTABLE WORK ZONE SIGNS
1130.01	DRUMS
1135.01	CONES
1145.01	BARRICADES
1150.01	FLAGGING DEVICES
1160.01	TEMPORARY CRASH CUSHION
1170.01	PORTABLE CONCRETE BARRIER
1180.01	SKINNY - DRUM
1205.01	PAVEMENT MARKINGS - LINE TYPES AND OFFSETS
1205.02	PAVEMENT MARKINGS - TWO LANE AND MULTILANE ROADWAYS
1261.01	GUARDRAIL AND BARRIER DELINEATORS - INSTALLATION SPACING
1261.02	GUARDRAIL AND BARRIER DELINEATORS - TYPES AND MOUNTING
1262.01	GUARDRAIL END DELINEATION
1264.01	OBJECT MARKERS - TYPES
1264.02	OBJECT MARKERS - INSTALLATION

LEGEND

GENERAL

- DIRECTION OF TRAFFIC FLOW
- DIRECTION OF PEDESTRIAN TRAFFIC FLOW
- EXIST. PVMT.
- NORTH ARROW
- PROPOSED PVMT.
- TEMP. SHORING (LOCATION PURPOSES ONLY)
- WORK AREA
- REMOVAL
- USER DEFINED (IF NEEDED)
- USER DEFINED (IF NEEDED)

SIGNALS

EXISTING PROPOSED TEMPORARY

PAVEMENT MARKINGS

- EXISTING LINES
- TEMPORARY LINES

TRAFFIC CONTROL DEVICES

- BARRICADE (TYPE III)
- CONE
- DRUM SKINNY DRUM TUBULAR MARKER
- TEMPORARY CRASH CUSHION
- FLASHING ARROW BOARD
- FLAGGER
- LAW ENFORCEMENT
- TRUCK MOUNTED ATTENUATOR (TMA)
- CHANGEABLE MESSAGE SIGN

TEMPORARY SIGNING

- PORTABLE SIGN
- STATIONARY SIGN
- STATIONARY OR PORTABLE SIGN

PAVEMENT MARKERS

- CRYSTAL/CRYSTAL
- CRYSTAL/RED
- YELLOW/YELLOW

PAVEMENT MARKING SYMBOLS

PAVEMENT MARKING SYMBOLS

TEMPORARY PAVEMENT MARKING

SYMBOL	DESCRIPTION
PA	PAINT (4") WHITE EDGELINE
P2	PAINT (24") WHITE STOPBAR

TGS ENGINEERS
804-C N. LAFAYETTE ST
SHELBY, NC 28150
PH (704) 476-0003
CORP. LICENSE NO.: C-0275

APPROVED:_____ DATE:_____

SEAL

NORTH CAROLINA PROFESSIONAL ENGINEER SEAL 35018 12/7/2018 JIMMY L. TERRY, JR.

DIVISION OF HIGHWAYS STATE OF NORTH CAROLINA DEPARTMENT OF TRANSPORTATION WORK ZONE TRAFFIC CONTROL

ROADWAY STANDARD DRAWINGS & LEGEND

$$$$SYSTIME$$$$
$$$$USERNAME$$$$

GENERAL NOTES

CHANGES MAY BE REQUIRED WHEN PHYSICAL DIMENSIONS IN THE DETAIL DRAWINGS, STANDARD DETAILS, AND ROADWAY DETAILS ARE NOT ATTAINABLE TO MEET FIELD CONDITIONS OR RESULT IN DUPLICATE OR UNDESIRED OVERLAPPING OF DEVICES. MODIFICATION MAY INCLUDE: MOVING, SUPPLEMENTING, COVERING, OR REMOVAL OF DEVICES AS DIRECTED BY THE ENGINEER.

THE FOLLOWING GENERAL NOTES APPLY AT ALL TIMES FOR THE DURATION OF THE CONSTRUCTION PROJECT EXCEPT WHEN OTHERWISE NOTED IN THE PLAN OR DIRECTED BY THE ENGINEER.

LANE AND SHOULDER CLOSURE REQUIREMENTS

A) REMOVE LANE CLOSURE DEVICES FROM THE LANE WHEN WORK IS NOT BEING PERFORMED BEHIND THE LANE CLOSURE OR WHEN A LANE CLOSURE IS NO LONGER NEEDED OR AS DIRECTED BY THE ENGINEER.

B) WHEN PERSONNEL AND/OR EQUIPMENT ARE WORKING WITHIN 15 FT OF AN OPEN TRAVEL LANE, CLOSE THE NEAREST OPEN SHOULDER USING ROADWAY STANDARD DRAWING NO. 1101.04 UNLESS THE WORK AREA IS PROTECTED BY BARRIER OR GUARDRAIL OR A LANE CLOSURE IS INSTALLED.

C) WHEN PERSONNEL AND/OR EQUIPMENT ARE WORKING WITHIN A LANE OF TRAVEL OF AN UNDIVIDED OR DIVIDED FACILITY, CLOSE THE LANE ACCORDING TO THE TRAFFIC CONTROL PLANS, ROADWAY STANDARD DRAWINGS, OR AS DIRECTED BY THE ENGINEER. CONDUCT THE WORK SO THAT ALL PERSONNEL AND/OR EQUIPMENT REMAIN WITHIN THE CLOSED TRAVEL LANE.

PAVEMENT EDGE DROP OFF REQUIREMENTS

D) BACKFILL AT A 6:1 SLOPE UP TO THE EDGE AND ELEVATION OF EXISTING PAVEMENT IN AREAS ADJACENT TO AN OPENED TRAVEL LANE THAT HAS AN EDGE OF PAVEMENT DROP-OFF AS FOLLOWS:

BACKFILL DROP-OFFS THAT EXCEED 2 INCHES ON ROADWAYS WITH POSTED SPEED LIMITS OF 45 MPH OR GREATER.

BACKFILL DROP-OFFS THAT EXCEED 3 INCHES ON ROADWAYS WITH POSTED SPEED LIMITS LESS THAN 45 MPH.

BACKFILL WITH SUITABLE COMPACTED MATERIAL, AS APPROVED BY THE ENGINEER, AT NO EXPENSE TO THE DEPARTMENT.

TRAFFIC PATTERN ALTERATIONS

E) NOTIFY THE ENGINEER TWENTY ONE (21) CALENDAR DAYS PRIOR TO ANY TRAFFIC PATTERN ALTERATION.

SIGNING

F) INSTALL ADVANCE WORK ZONE WARNING SIGNS WHEN WORK IS WITHIN 40 FT FROM THE EDGE OF TRAVEL LANE AND NO MORE THAN THREE (3) DAYS PRIOR TO THE BEGINNING OF CONSTRUCTION.

G) ENSURE ALL NECESSARY SIGNING IS IN PLACE PRIOR TO ALTERING ANY TRAFFIC PATTERN.

TRAFFIC BARRIER

H) INSTALL TEMPORARY BARRIER ACCORDING TO THE TRANSPORTATION MANAGEMENT PLANS A MAXIMUM OF TWO (2) WEEKS PRIOR TO BEGINNING WORK IN ANY LOCATION. ONCE TEMPORARY BARRIER IS INSTALLED AT ANY LOCATION PROCEED IN A CONTINUOUS MANNER TO COMPLETE THE PROPOSED WORK IN THAT LOCATION UNLESS OTHERWISE STATED IN THE TRANSPORTATION MANAGEMENT PLANS OR AS DIRECTED BY THE ENGINEER.

DO NOT PLACE BARRIER DIRECTLY ON ANY SURFACE OTHER THAN ASPHALT OR CONCRETE.

ONCE TEMPORARY BARRIER IS INSTALLED AT ANY LOCATION AND NO WORK IS PERFORMED BEHIND THE TEMPORARY BARRIER FOR A PERIOD LONGER THAN TWO (2) MONTHS, REMOVE / RESET TEMPORARY BARRIER AT NO COST TO THE DEPARTMENT UNLESS OTHERWISE STATED IN THE TRANSPORTATION MANAGEMENT PLANS, TEMPORARY BARRIER IS PROTECTING A HAZARD, OR AS DIRECTED BY THE ENGINEER.

INSTALL TEMPORARY BARRIER WITH THE TRAFFIC FLOW BEGINNING WITH THE UPSTREAM SIDE OF TRAFFIC. REMOVE TEMPORARY BARRIER AGAINST THE TRAFFIC FLOW BEGINNING WITH THE DOWNSTREAM SIDE OF TRAFFIC.

INSTALL AND SPACE DRUMS NO GREATER THAN TWICE THE POSTED SPEED LIMIT (MPH) TO CLOSE OR KEEP THE SECTION OF THE ROADWAY CLOSED UNTIL THE TEMPORARY BARRIER CAN BE PLACED OR AFTER THE TEMPORARY BARRIER IS REMOVED.

I) PROTECT THE APPROACH END OF MOVABLE/PORTABLE CONCRETE BARRIER AT ALL TIMES DURING THE INSTALLATION AND REMOVAL OF THE BARRIER BY EITHER A TRUCK MOUNTED ATTENUATOR (MAXIMUM 72 HOURS) OR A TEMPORARY CRASH CUSHION.

PROTECT THE APPROACH END OF MOVABLE/PORTABLE CONCRETE BARRIER FROM ONCOMING TRAFFIC AT ALL TIMES BY A TEMPORARY CRASH CUSHION UNLESS THE APPROACH END OF MOVABLE/PORTABLE CONCRETE BARRIER IS OFFSET FROM ONCOMING TRAFFIC AS FOLLOWS OR AS SHOWN IN THE PLANS: (SEE ALSO 1101.05)

POSTED SPEED LIMIT	MINIMUM OFFSET
40 OR LESS	15 FT
45 - 50	20 FT
55	25 FT
60 MPH or HIGHER	30 FT

TRAFFIC CONTROL DEVICES

J) PLACE TYPE III BARRICADES, WITH "ROAD CLOSED" SIGN R11-2 ATTACHED, OF SUFFICIENT LENGTH TO CLOSE ENTIRE ROADWAY.

PAVEMENT MARKINGS AND MARKERS

K) INSTALL TEMPORARY PAVEMENT MARKINGS AND TEMPORARY PAVEMENT MARKERS ON INTERIM LAYERS OF PAVEMENT AS FOLLOWS:

ROAD NAME	MARKING	MARKER
SR 1309	PAINT	NONE

L) INSTALL PAVEMENT MARKINGS ON THE FINAL SURFACE.

M) PLACE ONE APPLICATION OF PAINT FOR TEMPORARY TRAFFIC PATTERNS. PLACE A SECOND APPLICATION OF PAINT SIX (6) MONTHS AFTER THE INITIAL APPLICATION AND EVERY SIX MONTHS AS DIRECTED BY THE ENGINEER.

N) TIE PROPOSED PAVEMENT MARKING LINES TO EXISTING PAVEMENT MARKING LINES.

MISCELLANEOUS

O) IN THE EVENT A TIE-IN CANNOT BE MADE IN ONE DAY'S TIME, BRING THE TIE-IN AREA TO AN APPROPRIATE ROADWAY ELEVATION AS DETERMINED BY THE ENGINEER. PLACE BLACK ON ORANGE "LOOSE GRAVEL" SIGNS (W8-7) AND BLACK ON ORANGE "PAVEMENT ENDS" SIGNS (W8-3) IN ADVANCE OF THE UNEVEN AREAS. USE DRUMS TO DELINEATE THE EDGE OF ROADWAY ALONG UNPAVED AREAS.

P) PASSING ZONE WILL BE DETERMINED IN THE FIELD AND MUST BE APPROVED BY THE ENGINEER.

MANAGEMENT STRATEGIES

PROPOSED SR 1309 (BOONE GAP LN) WILL BE CONSTRUCTED USING A COMBINATION OF LANE CLOSURES UTILIZING FLAGGERS AS NEEDED, A TEMPORARY LANE SHIFT USING A PORTABLE TRAFFIC SIGNAL SYSTEM, TEMPORARY PORTABLE BARRIER, AND STAGED CULVERT CONSTUCTION.

LOCAL NOTES

UNLESS OTHERWISE NOTED ACCESS TO ALL DRIVEWAYS MUST BE PROVIDED AT ALL TIMES WITHIN THE PROJECT LIMITS.

TGS ENGINEERS
804-C N. LAFAYETTE ST
SHELBY, NC 28150
PH (704) 476-0003
CORP. LICENSE NO.: C-0275

APPROVED:_____ DATE:_____

SEAL

NORTH CAROLINA PROFESSIONAL SEAL 35048 ENGINEER JIMMY L. TERRY JR. 12/12/2018

DIVISION OF HIGHWAYS STATE OF NORTH CAROLINA DEPARTMENT OF TRANSPORTATION WORK ZONE TRAFFIC CONTROL

TRANSPORTATION OPERATIONS PLAN

$$$$$$$$$$SYSTIME$$$$$$$$$$
$$$$$$$$$$DGN$$$$$$$$$$
$$$$$$$$$$CELLNAME$$$$$$$$$$

PHASING

NOTE: UNLESS OTHERWISE STATED ACCESS TO LOCAL DRIVES MUST BE MAINTAINED AT ALL TIMES.

PHASE I:

STEP 1:
PLACE ALL ADVANCED WORK WARNING SIGNS IN ACCORDANCE TO NCDOT RDWY. STD. 1101.01, SHT. 3 OF 3.

STEP 2:
WITHOUT DISTURBING EXISTING TRAFFIC PATTERNS CONSTRUCT THE FOLLOWING, UP TO BUT NOT INCLUDING THE FINAL LAYER OF SURFACE COURSE: -L- STA 11+62 TO 15+91 AS SHOWN ON PLANS (SEE SHEET TMP-3 AND NCDOT RDWY. STD. 1101.04). CONSTRUCT CULVERT AS PER CULVERT PHASING PLANS.

STEP 3:
USING TEMPORARY LANE CLOSURES AND FLAGGERS COMPLETE THE ON-SITE DETOUR BY CONSTRUCTING THE TIE-INS BETWEEN EXISTING AND NEW PAVEMENT FROM -L- STA. 11+51 TO 12+92, AND FROM -L- STA. 14+66 TO 16+00 AS SHOWN ON PLANS. MILL EXISTING PAVEMENT IF NECESSARY. (SEE SHEET TMP-3 AND NCDOT RDWY. STD. 1101.02, SHT 1 OF 15).
INSTALL TEMPORARY PORTABLE TRAFFIC SIGNAL SYSTEM; PLACE TEMPORARY PAVEMENT MARKINGS AND THE APPROPRIATE SIGNAGE (SEE TMP-4 AND NCDOT RDWY. STD. 1101.02, SHT 1 OF 15).
PLACE TEMPORARY PORTABLE CONCRETE BARRIER FROM -L- STA. 13+48 TO 14+83 AND TEMPORARY CRASH CUSHIONS AS SHOWN ON PLANS (SEE SHEET TMP-3 AND NCDOT RDWY. STD. 1101.02, SHT 1 OF 15)
NOTE: TO ASSURE CONTINUOUS ACCESS TO THE DRIVE AT -L- STA. 13+70 LT PLACE PORTABLE BARRIER JUST PRIOR TO OPENING THE ONSITE DETOUR.

PHASE II:

AFTER ACTIVATING THE TEMPORARY TRAFFIC SIGNALS AND OPENING THE ONE-LANE ONE- WAY ON-SITE DETOUR TO TRAFFIC, CONSTRUCT THE FOLLOWING UP BUT NOT INCLUDING THE FINAL LAYER OF SURFACE COURSE: -L- STA. 11+51 TO 16+00 AS SHOWN ON PLANS (SEE SHEET TMP-5). REMOVE EXISTING PAVEMENT AS SHOWN ON PLANS (SEE SHEET TMP-5). CONSTRUCT CULVERT AS PER CULVERT PHASING PLANS.
NOTE: DURING THIS PHASE THE DRIVE AT -L- STA. 13+61 RT IS TEMPORARILY CLOSED, USE DRIVE AT -L- STA 15+07 RT.

PHASE III:

STEP 1:
SHIFT TRAFFIC ONTO THE NEWLY CONSTRUCTED PAVEMENT, REMOVE TEMPORARY PORTABLE CONCRETE BARRIER, REMOVE THE TEMPORARY PORTABLE TRAFFIC SIGNAL SYSTEM AND ALL SIGNAGE PLACED IN PHASE 1, STEP 3. USING FLAGGERS AND TEMPORARY LANE CLOSURES CONSTRUCT THE FOLLOWING UP TO BUT NOT INCLUDING THE FINAL LAYER OF SURFACE COURSE: -L- STA. 10+60 TO 11+51, AND -L- STA. 15+75 TO 16+75 AS SHOWN ON PLANS (SEE SHEET TMP-5 AND NCDOT RDWY. STD. 1101.02, SHT 1 OF 15).

STEP 2:
WITH TRAFFIC IN ITS FINAL PATTERN CONSTRUCT THE FINAL LAYER OF SURFACE COURSE USING TEMPORARY LANE CLOSURES AND FLAGGERS FROM -L- STA 10+60 TO 16+75 AS SHOWN ON PLANS (SEE SHEET TMP-6 AND NCDOT RDWY. STD. 1101.02, SHT 1 OF 15).

STEP 3:
USING TEMPORARY LANE CLOSURES AND FLAGGERS INSTALL FINAL PAVEMENT MARKINGS AS SHOWN ON THE PAVEMENT MARKING PLANS (SEE SHEET PMP-1 AND NCDOT RDWY. STD. 1101.02, SHT 1 OF 15). REMOVE ALL TRAFFIC CONTROL DEVICES.

TGS ENGINEERS
804-C N. LAFAYETTE ST
SHELBY, NC 28150
PH (704) 476-0003
CORP. LICENSE NO.: C-0275

APPROVED:________________ DATE:________

SEAL

DIVISION OF HIGHWAYS · STATE OF NORTH CAROLINA · DEPARTMENT OF TRANSPORTATION · WORK ZONE TRAFFIC CONTROL

PHASING

Alexander County
Bridge #010289

PROJ. REFERENCE NO.	SHEET NO.
17BP.12.R.201	TMP-3

PHASE I, STEP 2:

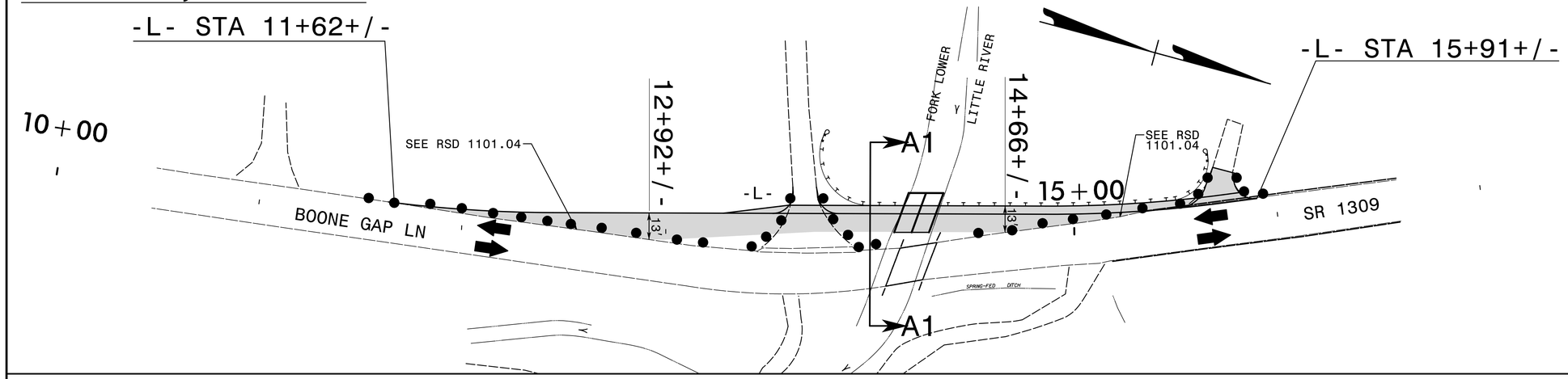

PHASE I, STEP 3:

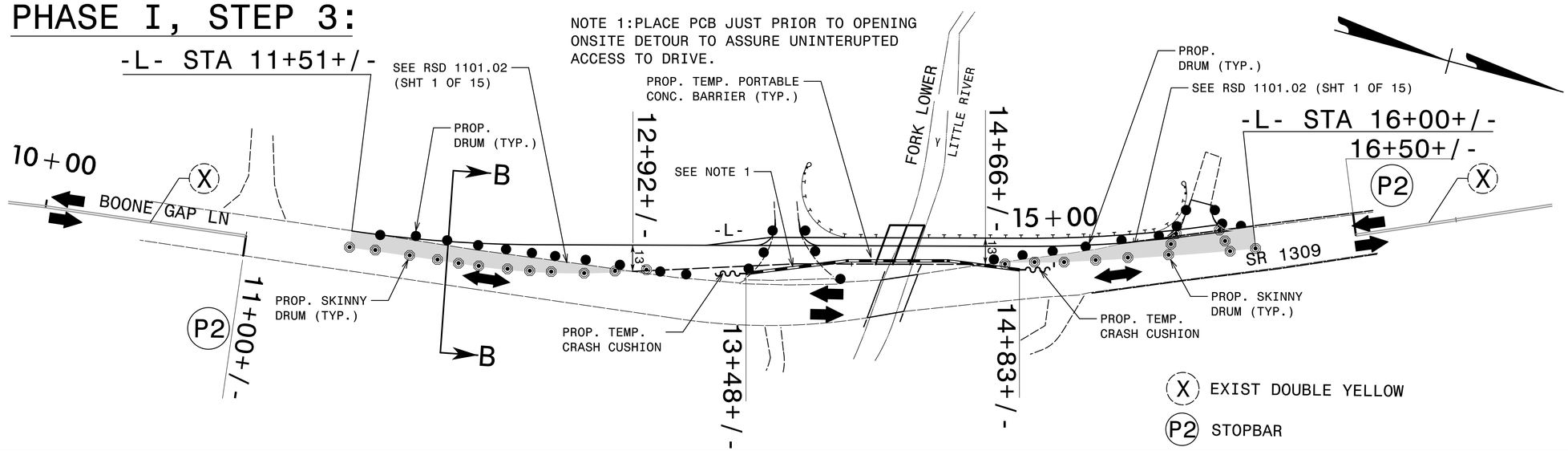

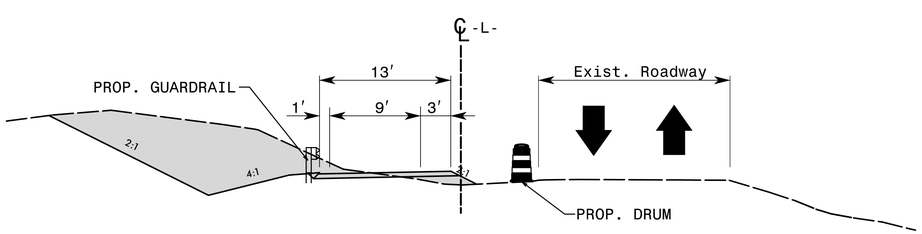

SECTION A1-A1

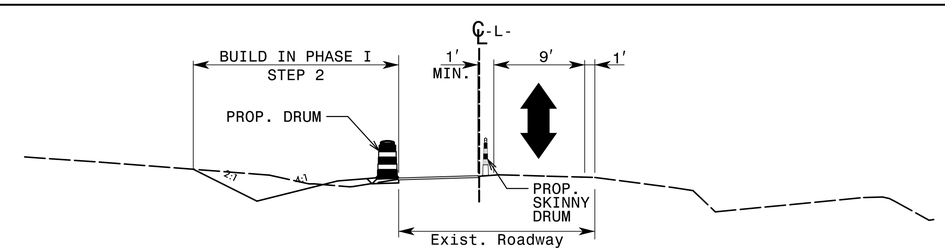

SECTION B-B

TGS ENGINEERS
804-C N. LAFAYETTE ST
SHELBY, NC 28150
PH (704) 476-0003
CORP. LICENSE NO.: C-0275

APPROVED:_____ DATE:_____

SEAL

NORTH CAROLINA PROFESSIONAL SEAL 35048 ENGINEER JIMMY L. TERRY JR. 12/12/2011

DIVISION OF HIGHWAYS · STATE OF NORTH CAROLINA · DEPARTMENT OF TRANSPORTATION · WORK ZONE TRAFFIC CONTROL

PHASE I

$$$$$$$$SYSTIME$$$$$$$$
$$$$$$$$$$$$$$$$$$$$$$$$$$$$$$$$
$$$$$$$$USERNAME$$$$$$$$

PHASE I -TEMPORARY PAVEMENT MARKINGS AND SIGN LAYOUT :

Alexander County
Bridge #010289

PROJ. REFERENCE NO.	SHEET NO.
17BP.12.R.201	TMP-4

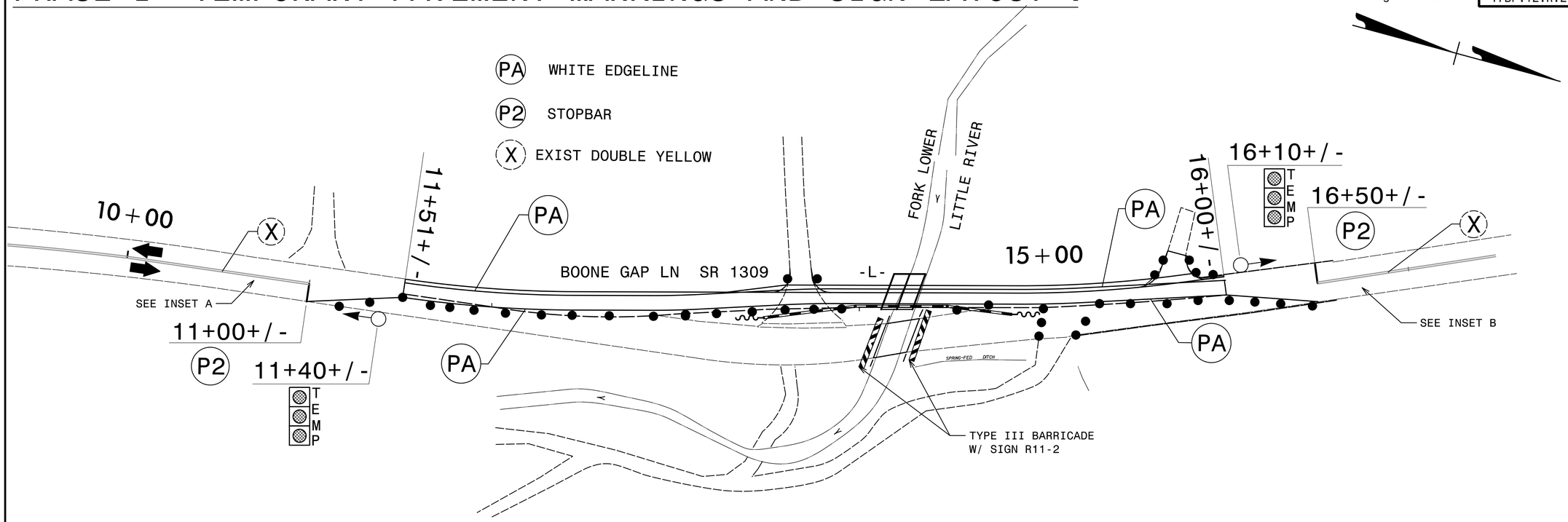

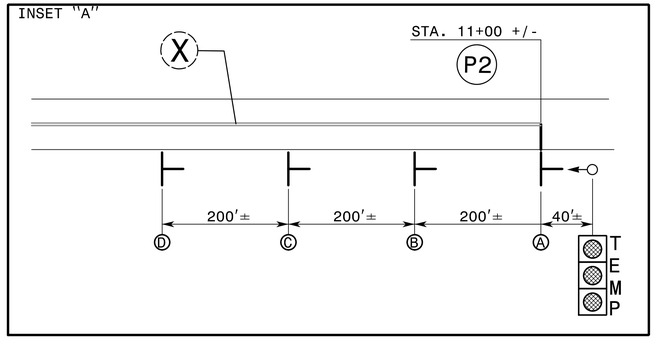

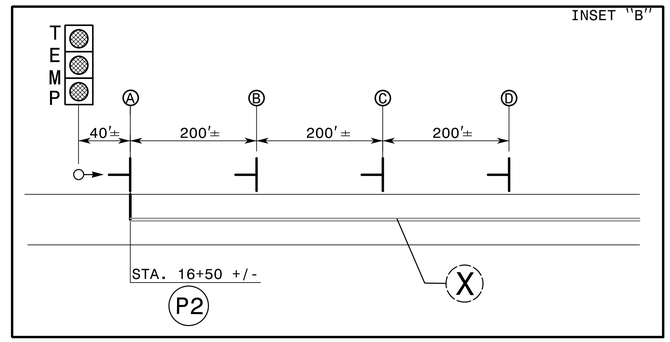

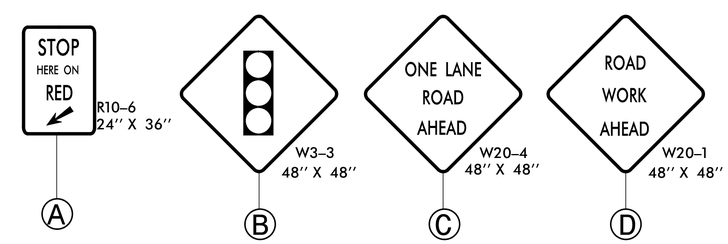

Pavement Marking Schedule
TIP Project # 17BP.12.R.201

SYMB	DESCRIPTION	PAY ITEM QUANTITY		TOTAL	
	TEMPORARY				
	PAVEMENT MARKINGS				
	PAINT(24")				
P2	WHITE STOPBAR (1X)	20	LF		
			TOTAL	20	
	PAINT(4")				
PA	WHITE EDGELINE (1X)	999	LF		
			TOTAL	999	LF

NOTE: FOR EACH PAINT PAVEMENT MARKING ITEM, 1X IMPLIES A SINGLE APPLICATION, 2X IMPLIES TWO APPLICATIONS, AND 3X IMPLIES THREE APPLICATIONS.

TGS ENGINEERS
804-C N. LAFAYETTE ST
SHELBY, NC 28150
PH (704) 476-0003
CORP. LICENSE NO.: C-0275

APPROVED:_____ DATE:_____

SEAL

NORTH CAROLINA PROFESSIONAL SEAL 35048 ENGINEER JIMMY L. TERRY, JR. 12/20/18

DIVISION OF HIGHWAYS STATE OF NORTH CAROLINA DEPARTMENT OF TRANSPORTATION WORK ZONE TRAFFIC CONTROL

PHASE I

$$$$SYSTIME$$$$
$$$$SYSDATE$$$$
$$$$DGN$$$$
$$$$USERNAME$$$$

Alexander County
Bridge #010289

PROJ. REFERENCE NO.	SHEET NO.
17BP.12.R.201	TMP-5

PHASE II :

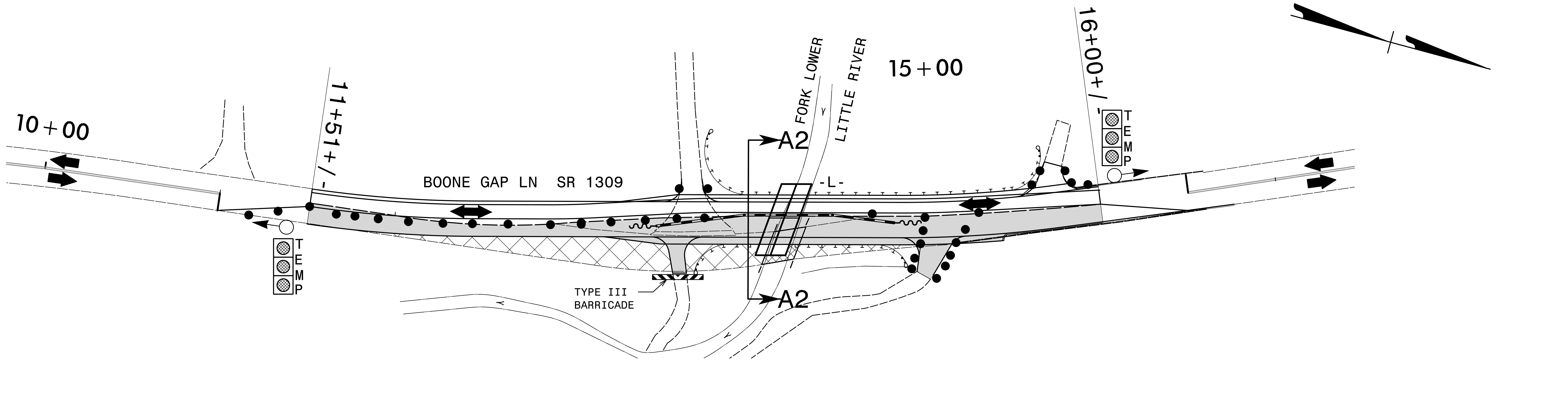

PHASE III, STEP 1:

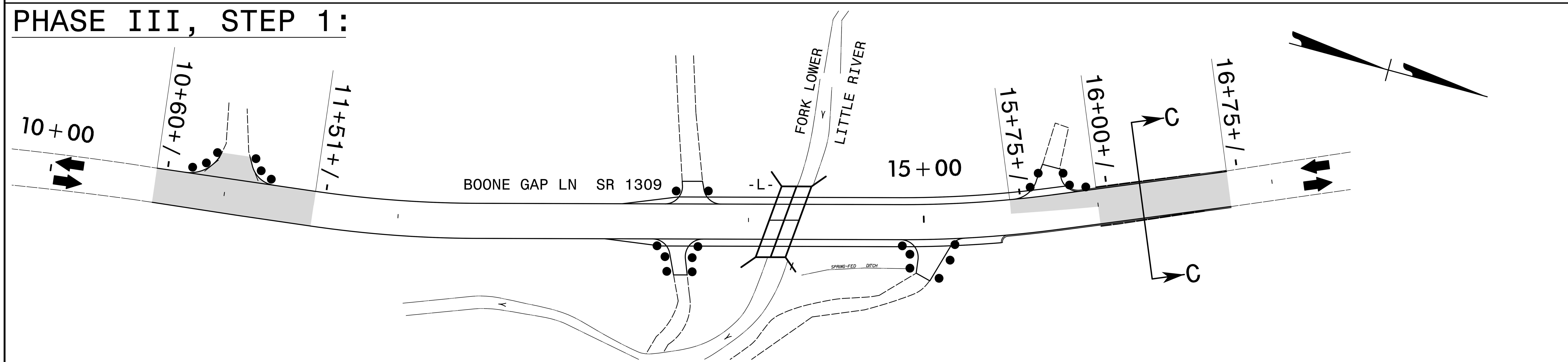

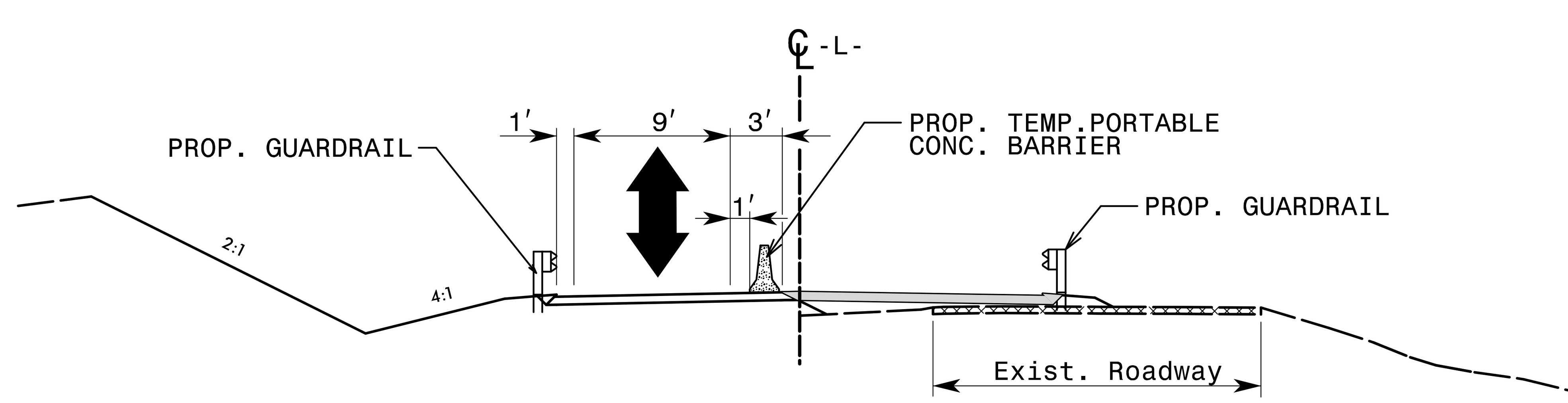

SECTION A2-A2

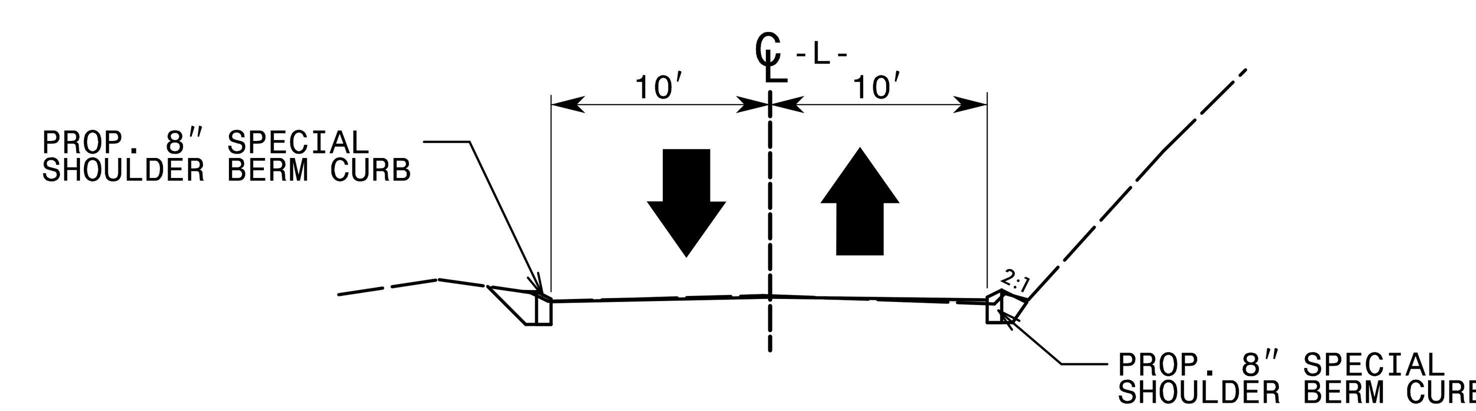

SECTION C-C

TGS ENGINEERS
804-C N. LAFAYETTE ST
SHELBY, NC 28150
PH (704) 476-0003
CORP. LICENSE NO.: C-0275

APPROVED: DATE:

SEAL

DIVISION OF HIGHWAYS
STATE OF NORTH CAROLINA
DEPARTMENT OF TRANSPORTATION
WORK ZONE TRAFFIC CONTROL

PHASE II AND PHASE III

Alexander County
Bridge #010289

PROJ. REFERENCE NO.	SHEET NO.
17BP.12.R.201	TMP-6

PHASE III , STEP 2:

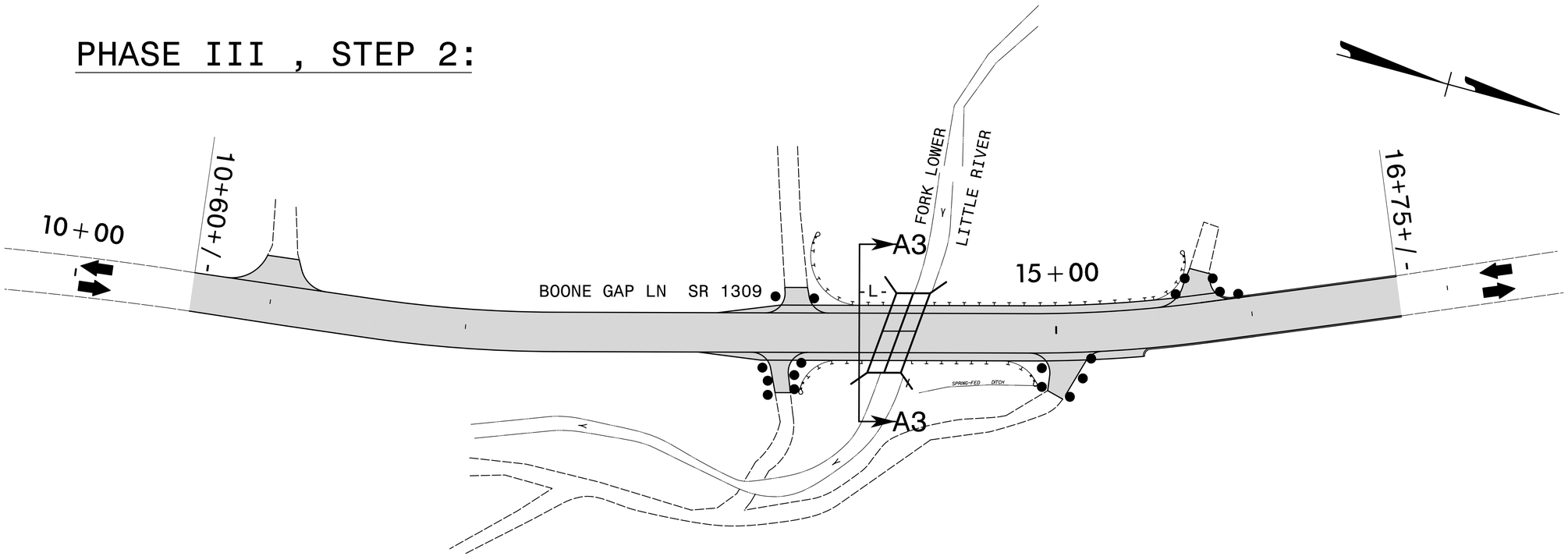

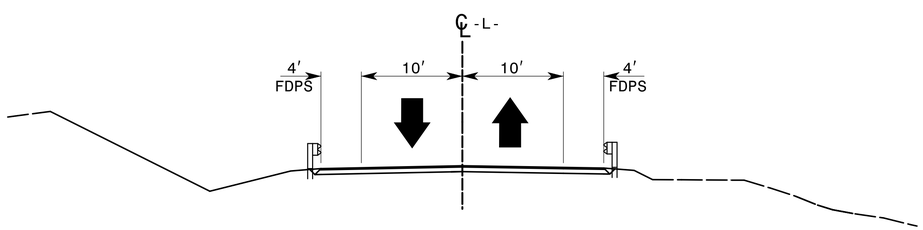

SECTION A3-A3

TGS ENGINEERS
804-C N. LAFAYETTE ST
SHELBY, NC 28150
PH (704) 476-0003
CORP. LICENSE NO.: C-0275

APPROVED: _____ DATE: _____

SEAL

NORTH CAROLINA PROFESSIONAL ENGINEER SEAL 35018 JIMMY L. TERRY

DIVISION OF HIGHWAYS
STATE OF NORTH CAROLINA
DEPARTMENT OF TRANSPORTATION
WORK ZONE TRAFFIC CONTROL

PHASE III

$$$$SYSTIME$$$$
$$$$DGN$$$$
$$$$USERNAME$$$$

Alexander County
Bridge #010289

PROJ. REFERENCE NO.	SHEET NO.
17BP.12.R.201	PMP-1

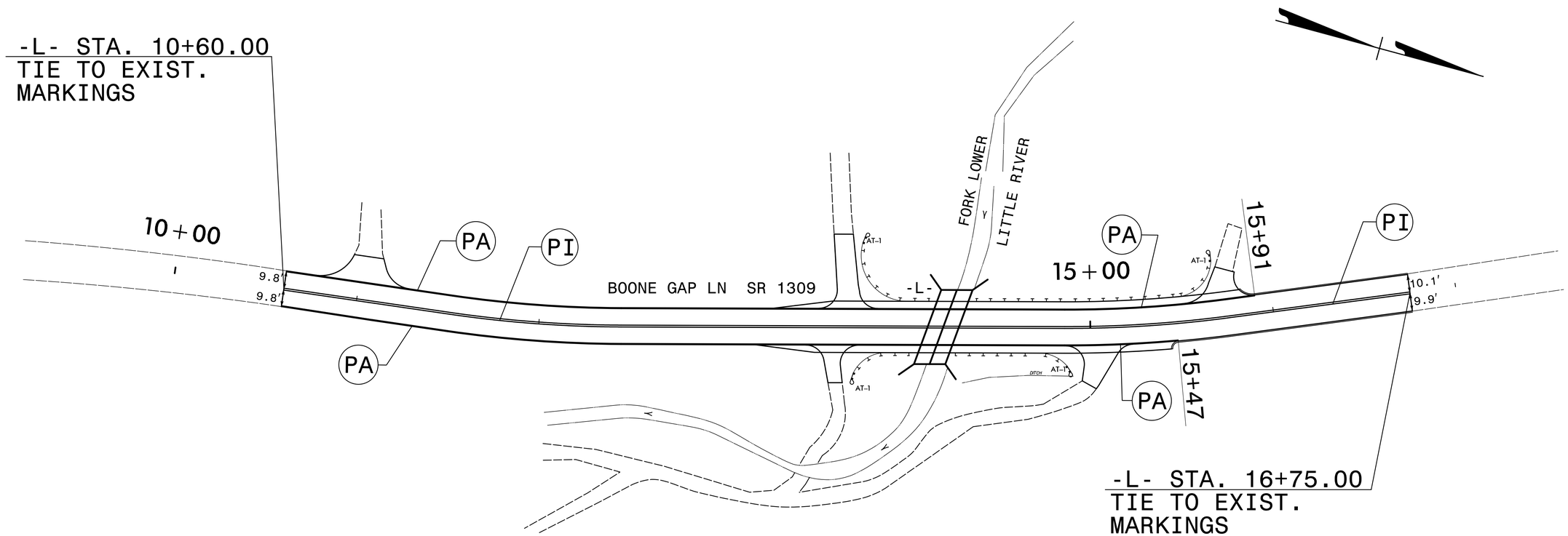

Pavement Marking Schedule

TIP Project # 17BP.12.R.201

SYMB	DESCRIPTION	PAY ITEM QUANTITY		TOTAL
	FINAL			
	PAVEMENT MARKINGS			
	PAINT(4")			
PA	WHITE EDGELINE (2X)	2036	LF	
PI	YELLOW DOUBLE CENTER (2X)	2460	LF	
		TOTAL	4496	LF

NOTE: FOR EACH PAINT PAVEMENT MARKING ITEM, 1X IMPLIES A SINGLE APPLICATION, 2X IMPLIES TWO APPLICATIONS, AND 3X IMPLIES THREE APPLICATIONS.

TGS ENGINEERS
804-C N. LAFAYETTE ST
SHELBY, NC 28150
PH (704) 476-0003
CORP. LICENSE NO.: C-0275

APPROVED:_____ DATE:_____

SEAL

NORTH CAROLINA PROFESSIONAL SEAL 35048 ENGINEER JIMMY L. TERRY JR.

DIVISION OF HIGHWAYS STATE OF NORTH CAROLINA DEPARTMENT OF TRANSPORTATION WORK ZONE TRAFFIC CONTROL

FINAL PAVEMENT MARKING PLAN AND SCHEDULE

$$$$$$SYSTIME$$$$$$
$$$$$$$$$$$$$$$$$$$$DGN$$$$$$$$$$$$$$$$$$$$
$$$$USERNAME$$$$

PROJECT: 17BP.12.R.201

STATE OF NORTH CAROLINA
DIVISION OF HIGHWAYS

PLAN FOR PROPOSED
HIGHWAY EROSION CONTROL

ALEXANDER COUNTY

LOCATION: BRIDGE NO. 010289 OVER FORK LOWER LITTLE RIVER ON SR 1309 (BOONE GAP RD)

TYPE OF WORK: GRADING, DRAINAGE, PAVING, AND STRUCTURE

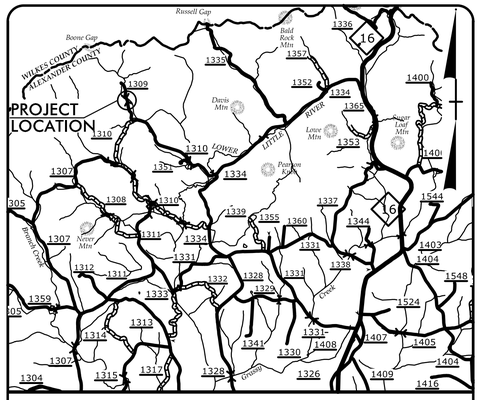

VICINITY MAP

STATE	STATE PROJECT REFERENCE NO.	SHEET NO.	TOTAL SHEETS
N.C.	17BP.12.R.201	EC-1	

STATE PROJ. NO.	F. A. PROJ. NO.	DESCRIPTION

EROSION AND SEDIMENT CONTROL MEASURES

Std.#	Description	Symbol
1630.03	Temporary Silt Ditch	TSD
1630.05	Temporary Diversion	TD
1605.01	Temporary Silt Fence	
1606.01	Special Sediment Control Fence	
1622.01	Temporary Berms and Slope Drains	
1630.02	Silt Basin Type B	
1633.01	Temporary Rock Silt Check Type-A	
	Temporary Rock Silt Check Type-A with Matting and Polyacrylamide (PAM)	
1633.02	Temporary Rock Silt Check Type-B	
	Wattle / Coir Fiber Wattle	EW CFW
	Wattle / Coir Fiber Wattle with Polyacrylamide (PAM)	
1634.01	Temporary Rock Sediment Dam Type-A	
1634.02	Temporary Rock Sediment Dam Type-B	
1635.01	Rock Pipe Inlet Sediment Trap Type-A	
1635.02	Rock Pipe Inlet Sediment Trap Type-B	
1630.04	Stilling Basin	
1630.06	Special Stilling Basin	
	Rock Inlet Sediment Trap:	
1632.01	Type A	A
1632.02	Type B	B
1632.03	Type C	C
	Skimmer Basin	SK
	Tiered Skimmer Basin	SK
	Infiltration Basin	

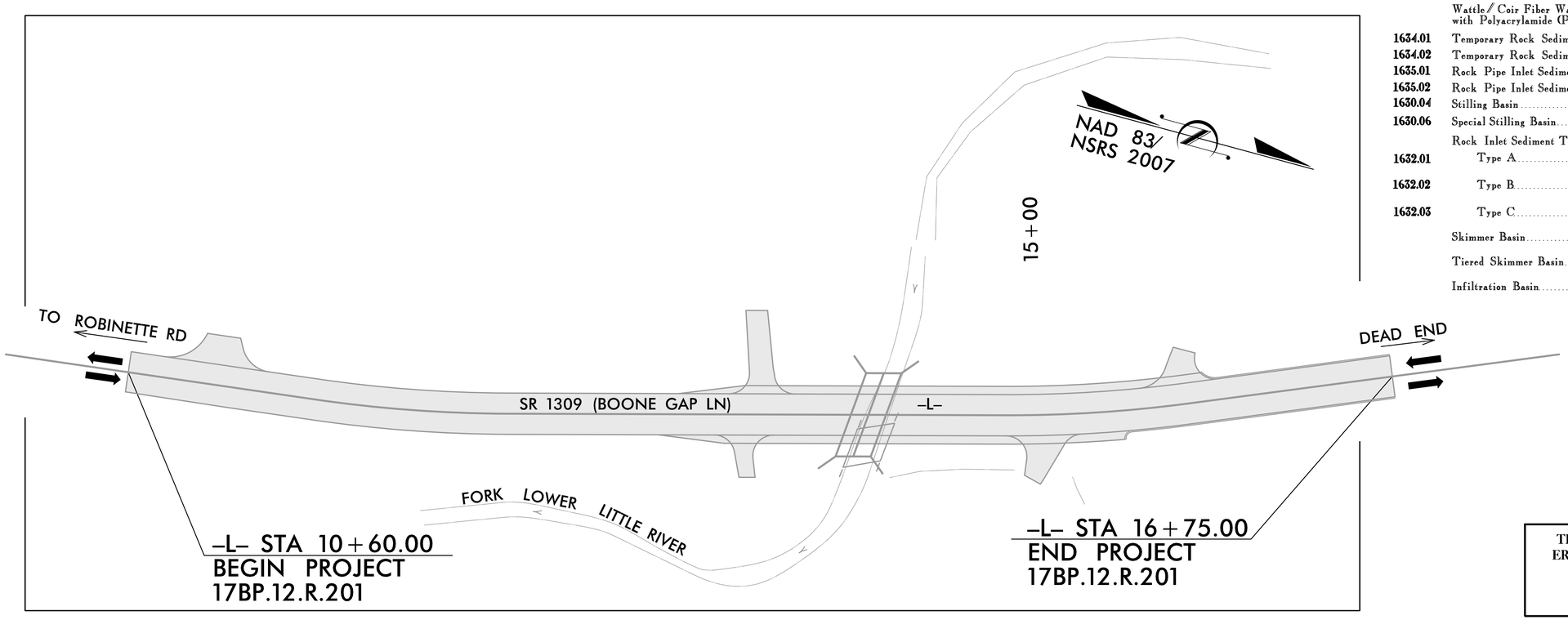

THIS PROJECT CONTAINS EROSION CONTROL PLANS FOR CLEARING AND GRUBBING PHASE OF CONSTRUCTION.

GRAPHIC SCALE

10 0 20

PLANS

ROADSIDE ENVIRONMENTAL UNIT
DIVISION OF HIGHWAYS
STATE OF NORTH CAROLINA

THESE EROSION AND SEDIMENT CONTROL PLANS COMPLY WITH THE REGULATIONS SET FORTH BY THE NCG-010000 GENERAL CONSTRUCTION PERMIT EFFECTIVE AUGUST 3, 2011 ISSUED BY THE NORTH CAROLINA DEPARTMENT OF ENVIRONMENT AND NATURAL RESOURCES DIVISION OF WATER QUALITY.

TGS ENGINEERS

Plans Prepared By:
TGS ENGINEERS
804-C N. LAFAYETTE ST.
SHELBY, NC 28150
PH (704) 476-0003

2012 STANDARD SPECIFICATIONS

LETTING DATE:

NCDOT DIVISION 12
NCDOT Contact:
STEVE RACKLEY, PE
DIVISION BRIDGE
PROGRAM MANAGER

ANDREW COCHRANE
PROJECT ENGINEER
LEVEL III CERTIFICATION
NUMBER 3015

Roadway Standard Drawings

The following roadway english standards as appear in "Roadway Standard Drawings"– Roadway Design Unit – N. C. Department of Transportation – Raleigh, N. C., dated January 2012 and the latest revison thereto are applicable to this project and by reference hereby are considered a part of these plans.

1604.01	Railroad Erosion Control Detail	1632.01	Rock Inlet Sediment Trap Type A
1605.01	Temporary Silt Fence	1632.02	Rock Inlet Sediment Trap Type B
1606.01	Special Sediment Control Fence	1632.03	Rock Inlet Sediment Trap Type C
1607.01	Gravel Construction Entrance	1633.01	Temporary Rock Silt Check Type A
1622.01	Temporary Berms and Slope Drains	1633.02	Temporary Rock Silt Check Type B
1630.01	Riser Basin	1634.01	Temporary Rock Sediment Dam Type A
1630.02	Silt Basin Type B	1634.02	Temporary Rock Sediment Dam Type B
1630.03	Temporary Silt Ditch	1635.01	Rock Pipe Inlet Sediment Trap Type A
1630.04	Stilling Basin	1635.02	Rock Pipe Inlet Sediment Trap Type B
1630.05	Temporary Diversion	1640.01	Coir Fiber Baffle
1630.06	Special Stilling Basin	1645.01	Temporary Stream Crossing
1631.01	Matting Installation		

SYSTIME
DGN

PROJECT REFERENCE NO.	SHEET NO.
17BP.12.R.201	EC-2
R/W SHEET NO.	
ROADWAY DESIGN ENGINEER	HYDRAULICS ENGINEER

TEMPORARY ROCK SILT CHECK TYPE 'A' WITH EXCELSIOR MATTING AND POLYACRYLAMIDE (PAM)

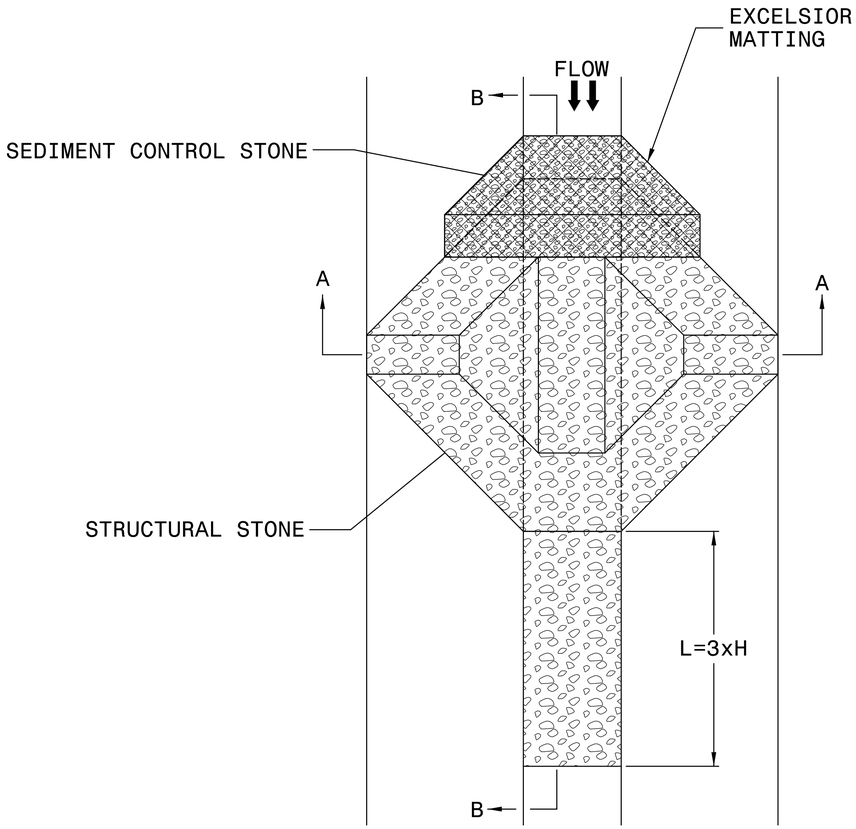

PLAN

NOTES

USE EXCELSIOR FOR MATTING MATERIAL AND ANCHOR MATTING SECTION AT TOP AND BOTTOM WITH CLASS B STONE.

PRIOR TO POLYACRYLAMIDE (PAM) APPLICATION, OBTAIN A SOIL SAMPLE FROM PROJECT LOCATION, AND FROM OFFSITE MATERIAL, AND ANALYZE FOR APPROPRIATE PAM FLOCCULANT TO BE APPLIED TO EACH ROCK SILT CHECK.

INITIALLY APPLY 4 OUNCES OF POLYACRYLAMIDE (PAM) TO TOP OF MATTING SECTION AND AFTER EVERY RAINFALL EVENT THAT EQUALS OR EXCEEDS 0.50 INCHES.

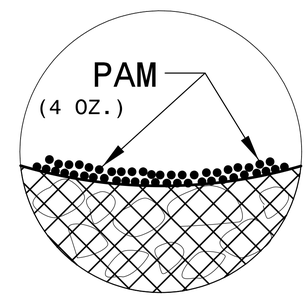

INSET A

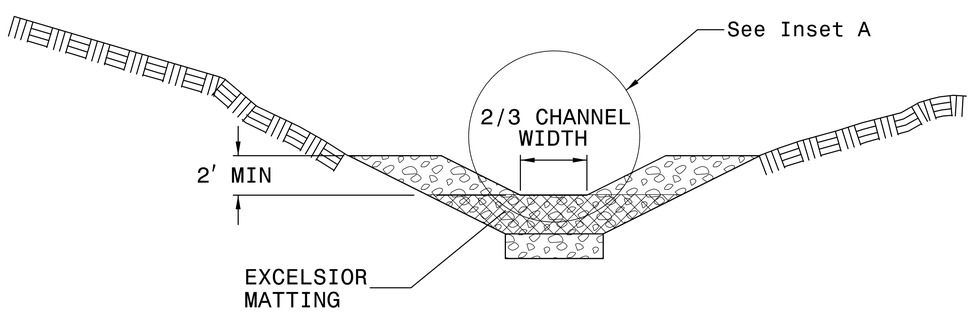

SECTION A-A

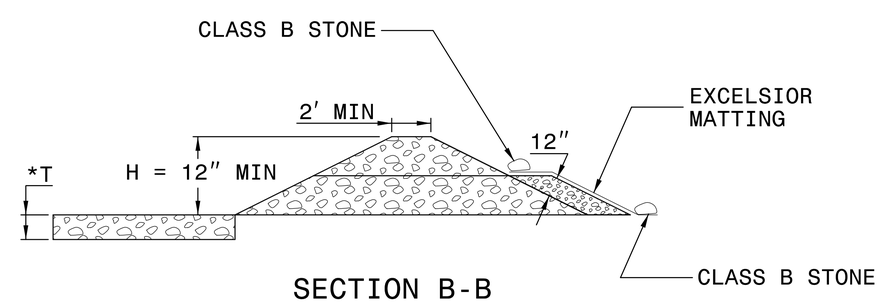

SECTION B-B

*T = 12" MIN., 18" MAX.

NOT TO SCALE

PROJECT REFERENCE NO.	SHEET NO.
17BP.12.R.201	EC-2A
R/W SHEET NO.	
ROADWAY DESIGN ENGINEER	HYDRAULICS ENGINEER

WATTLE WITH POLYACRYLAMIDE (PAM) DETAIL

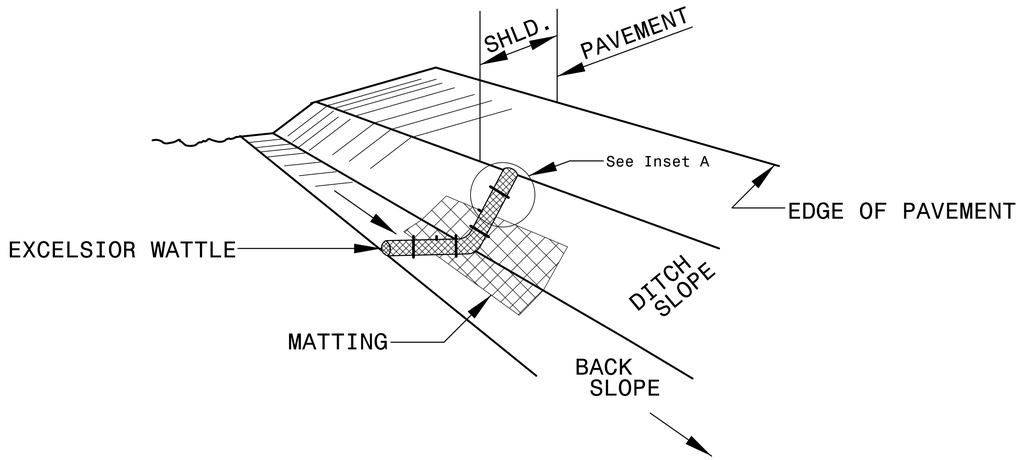

ISOMETRIC VIEW

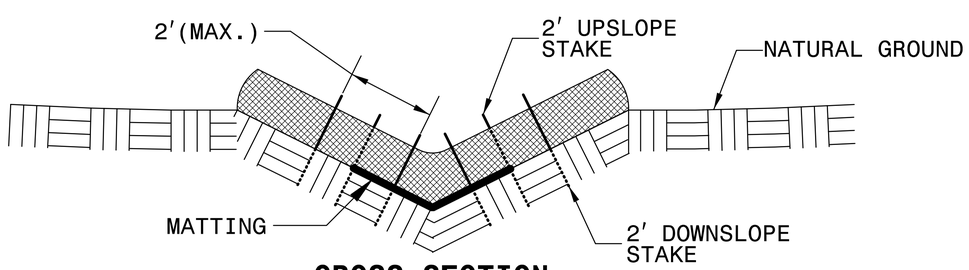

CROSS SECTION VEE DITCH

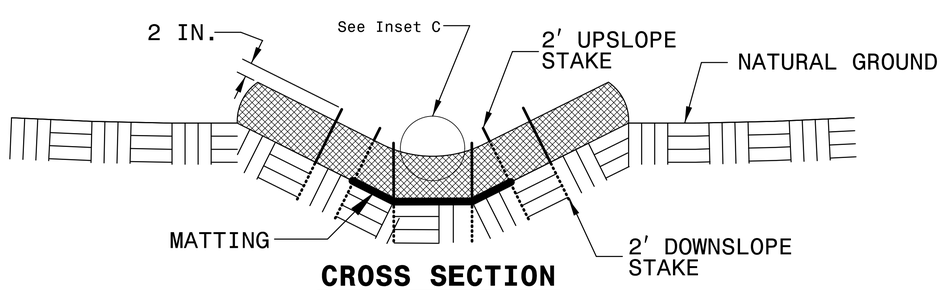

CROSS SECTION TRAPEZOIDAL DITCH

NOTES:

USE MINIMUM 12 IN. DIAMETER EXCELSIOR WATTLE.

USE 2 FT. WOODEN STAKES WITH A 2 IN. BY 2 IN. NOMINAL CROSS SECTION.

ONLY INSTALL WATTLE(S) TO A HEIGHT IN DITCH SO FLOW WILL NOT WASH AROUND WATTLE AND SCOUR DITCH SLOPES AND AS DIRECTED.

INSTALL A MINIMUM OF 2 UPSLOPE STAKES AND 4 DOWNSLOPE STAKES AT AN ANGLE TO WEDGE WATTLE TO BOTTOM OF DITCH.

PROVIDE STAPLES MADE OF 0.125 IN. DIAMETER STEEL WIRE FORMED INTO A U SHAPE NOT LESS THAN 12″ IN LENGTH.

INSTALL STAPLES APPROXIMATELY EVERY 1 LINEAR FOOT ON BOTH SIDES OF WATTLE AND AT EACH END TO SECURE IT TO THE SOIL.

INSTALL MATTING IN ACCORDANCE WITH SECTION 1631 OF THE STANDARD SPECIFICATIONS.

PRIOR TO POLYACRYLAMIDE (PAM) APPLICATION, OBTAIN A SOIL SAMPLE FROM PROJECT LOCATION, AND FROM OFFSITE MATERIAL, AND ANALYZE FOR APPROPRIATE PAM FLOCCULANT TO BE APPLIED TO EACH WATTLE.

INITIALLY APPLY 2 OUNCES OF ANIONIC OR NEUTRALLY CHARGED PAM OVER WATTLE WHERE WATER WILL FLOW AND 1 OUNCE OF PAM ON MATTING ON EACH SIDE OF WATTLE. REAPPLY PAM AFTER EVERY RAINFALL EVENT THAT IS EQUAL TO OR EXCEEDS 0.50 IN.

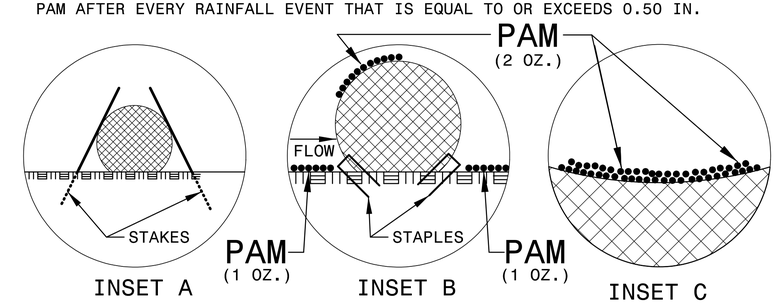

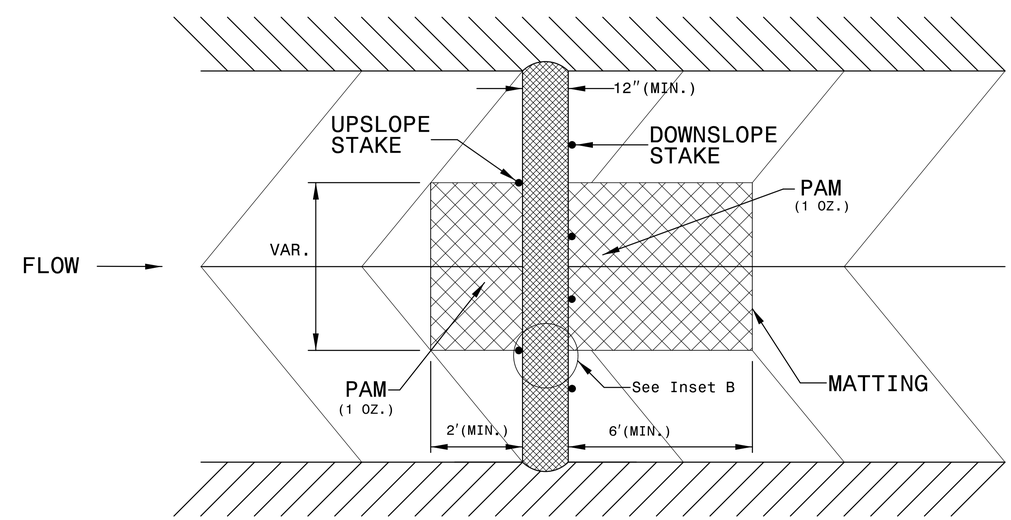

TOP VIEW

PROJECT REFERENCE NO.	SHEET NO.
17BP.12.R.201	EC-3
ROADWAY DESIGN ENGINEER	HYDRAULICS ENGINEER

DIVISION OF HIGHWAYS
STATE OF NORTH CAROLINA

SOIL STABILIZATION SUMMARY SHEET

MATTING FOR EROSION CONTROL

CONST SHEET NO.	LINE	FROM STATION	TO STATION	SIDE	ESTIMATE (SY)
4	-L-	11+21	13+50	LT	320
4	-L-	14+86	15+50	LT	90
4	-L-	15+50	16+75	RT	60
				SUBTOTAL	470
MISCELLANEOUS MATTING TO BE INSTALLED AS DIRECTED BY THE ENGINEER					0
				TOTAL	470
				SAY	500

MATTING FOR EROSION CONTROL

CONST SHEET NO.	LINE	FROM STATION	TO STATION	SIDE	ESTIMATE (SY)

PROJECT REFERENCE NO.	SHEET NO.
17BP.12.R.201	EC-3A
ROADWAY DESIGN ENGINEER	HYDRAULICS ENGINEER

DIVISION OF HIGHWAYS
STATE OF NORTH CAROLINA

SOIL STABILIZATION TIMEFRAMES

SITE DESCRIPTION	STABILIZATION TIME	TIMEFRAME EXCEPTIONS
PERIMETER DIKES, SWALES, DITCHES AND SLOPES	7 DAYS	NONE
HIGH QUALITY WATER (HQW) ZONES	7 DAYS	NONE
SLOPES STEEPER THAN 3:1	7 DAYS	IF SLOPES ARE 10' OR LESS IN LENGTH AND ARE NOT STEEPER THAN 2:1, 14 DAYS ARE ALLOWED.
SLOPES 3:1 OR FLATTER	14 DAYS	7 DAYS FOR SLOPES GREATER THAN 50' IN LENGTH.
ALL OTHER AREAS WITH SLOPES FLATTER THAN 4:1	14 DAYS	NONE, EXCEPT FOR PERIMETERS AND HQW ZONES.

PROJECT REFERENCE NO.	SHEET NO.
17BP.12.R.201	EC-4/CONST.4
R/W SHEET NO.	
ROADWAY DESIGN ENGINEER	HYDRAULICS ENGINEER

Alexander County
Bridge # 010289

NAD 83/NSRS 2007

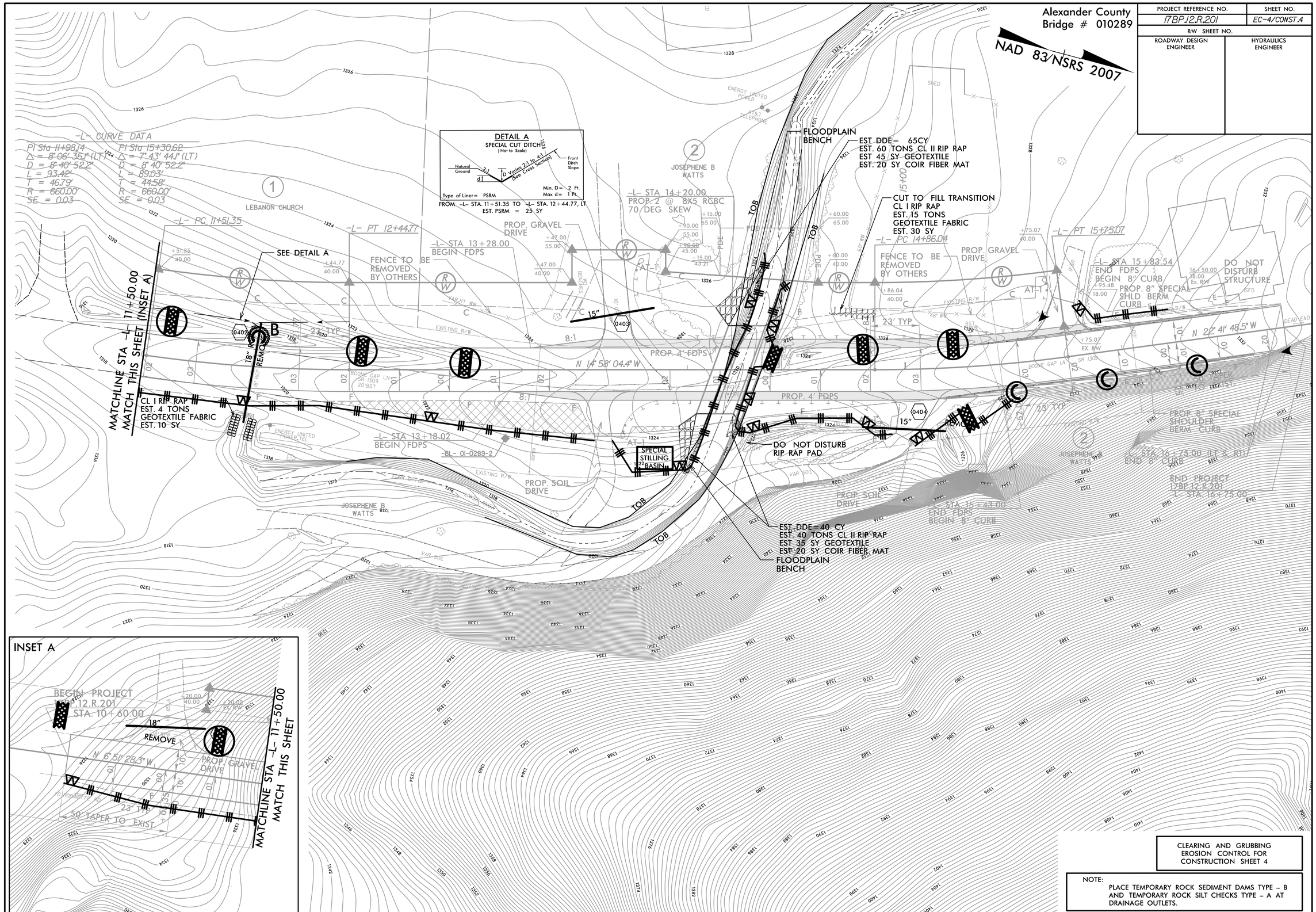

CLEARING AND GRUBBING
EROSION CONTROL FOR
CONSTRUCTION SHEET 4

NOTE:
PLACE TEMPORARY ROCK SEDIMENT DAMS TYPE – B AND TEMPORARY ROCK SILT CHECKS TYPE – A AT DRAINAGE OUTLETS.

CULVERT CONSTRUCTION SEQUENCE STA. 14+20 –L–

PROJECT REFERENCE NO.	SHEET NO.
17BP.12.R.201	EC-4A/CONST.4
R/W SHEET NO.	
ROADWAY DESIGN ENGINEER	HYDRAULICS ENGINEER

PHASING

1. Traffic is to be maintained on SR 1309 (Boone Gap Ln) as shown in the traffic management plans.
2. Install perimeter erosion control devices as shown on EC–4. Place special stilling basins as directed by the Engineer.
3. Construct impervious dikes to restrain stream and begin pump around operations.
5. Construct section of proposed reinforced concrete box culvert as shown in Phase 1 of the traffic management plans.
6. Shift traffic and remove existing bridge #010289 over Fork Lower Little River as shown in the traffic management plans.
7. Shift traffic and construct remaining reinforced concrete box culvert as shown in Phase 2 of the traffic management plans.
8. Remove impervious dikes and return flow back to creek channel.
9. Complete any necessary inlet/outlet channel improvements.
10. Remove special stilling basins.
11. Complete roadway construction.

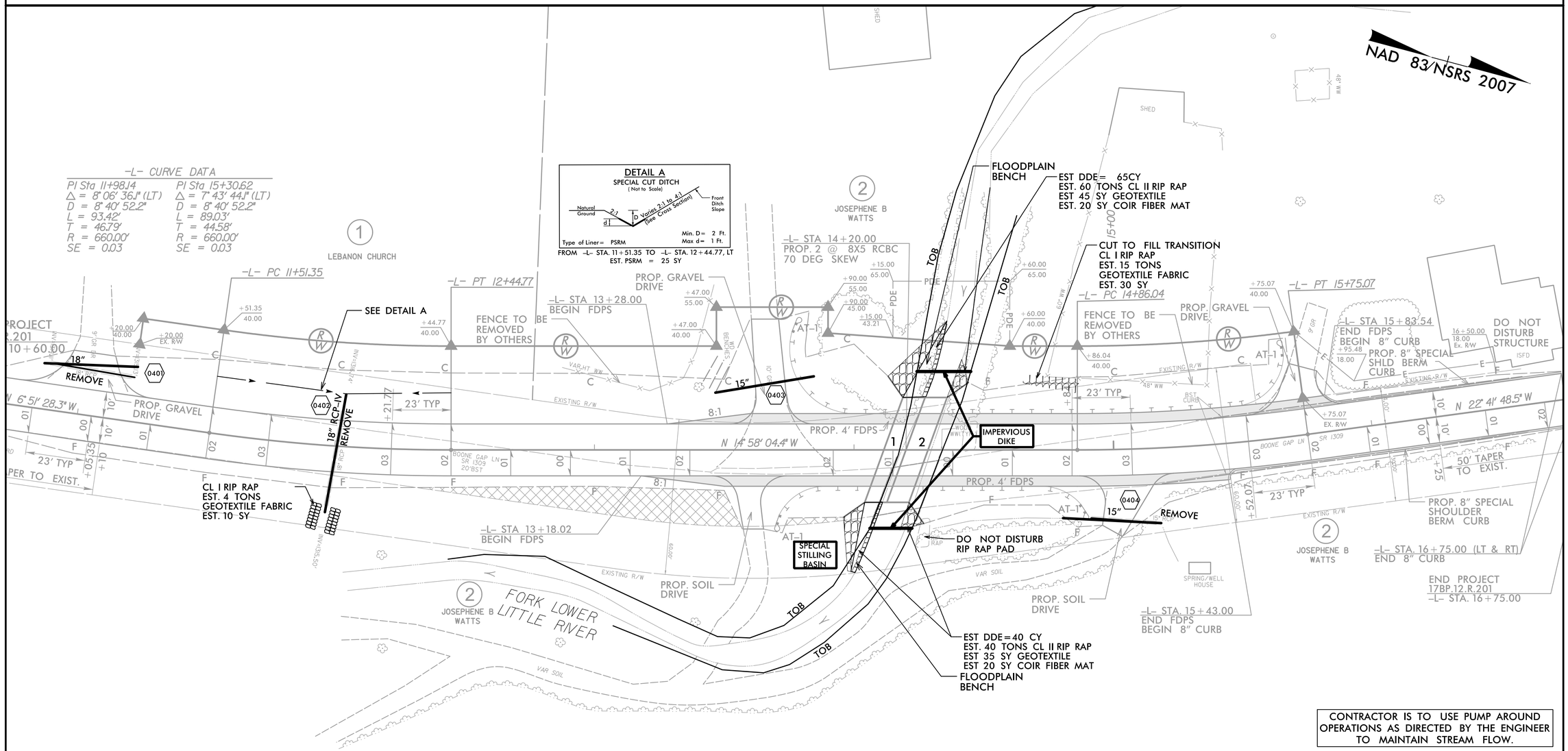

CONTRACTOR IS TO USE PUMP AROUND OPERATIONS AS DIRECTED BY THE ENGINEER TO MAINTAIN STREAM FLOW.

INSTALL PIPE(S) IN JURISDICTIONAL AREAS ACCORDING TO NCDOT BEST MANAGEMENT PRACTICES FOR CONSTRUCTION AND MAINTENANCE ACTIVITIES MANUAL.

PROJECT REFERENCE NO.	SHEET NO.
17BP.12.R.201	EC-5/CONST.4
R/W SHEET NO.	
ROADWAY DESIGN ENGINEER	HYDRAULICS ENGINEER

Alexander County
Bridge # 010289

NAD 83/NSRS 2007

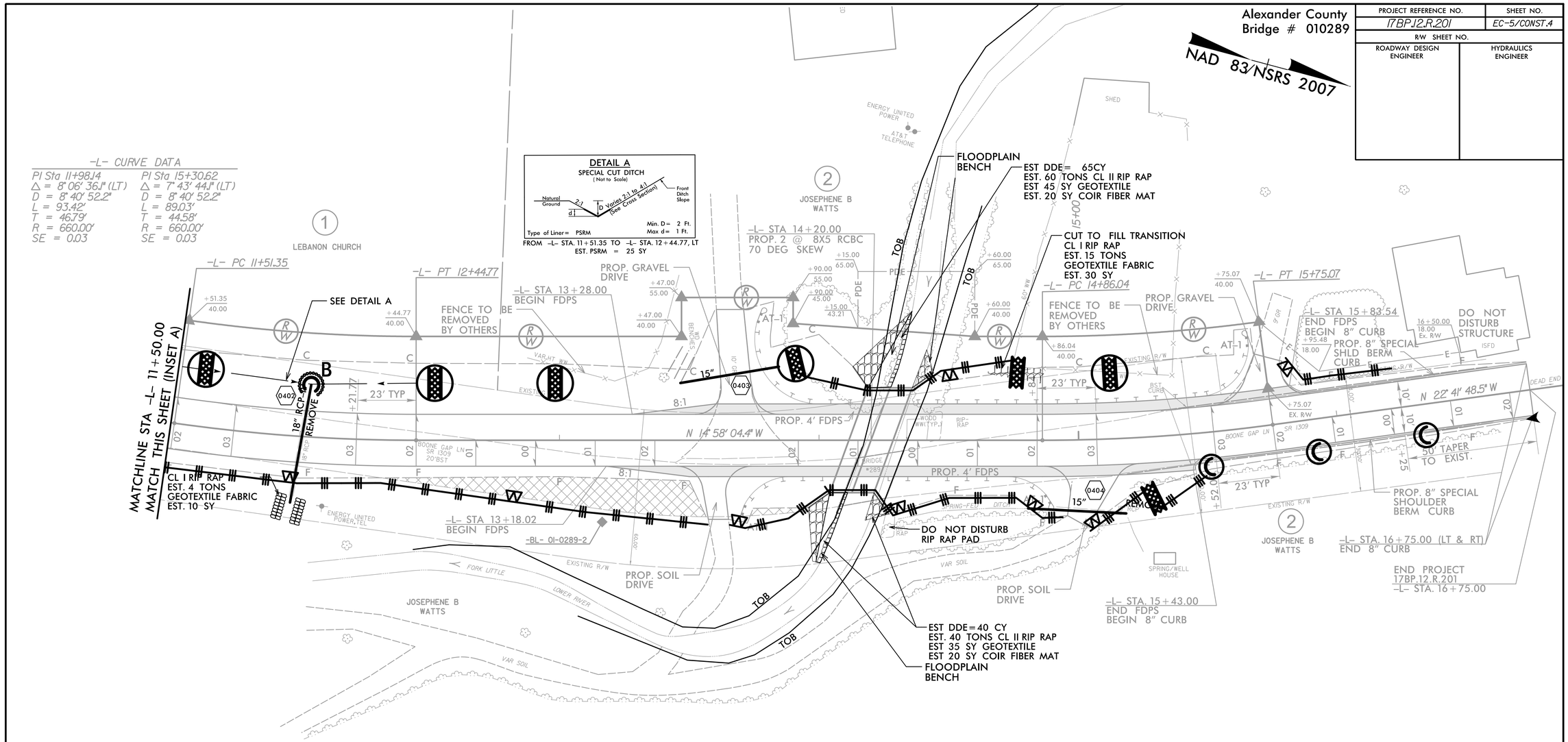

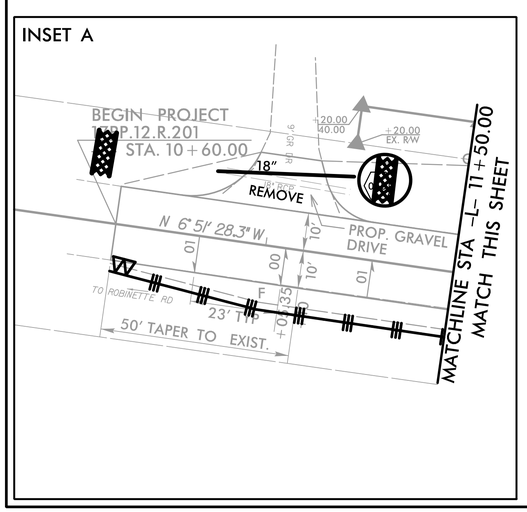

INSTALL MATTING FOR EROSION CONTROL IN THE PROPOSED DITCH LINE.
-L- STA. 11+21 TO 13+50 LT
-L- STA. 14+86 TO 15+50 LT
-L- STA. 15+50 TO 16+75 RT

8/23/99

0 2.5 5	PROJ. REFERENCE NO.	SHEET NO.
	17BP.12.R.201	X-1

Alexander County Bridge #010289

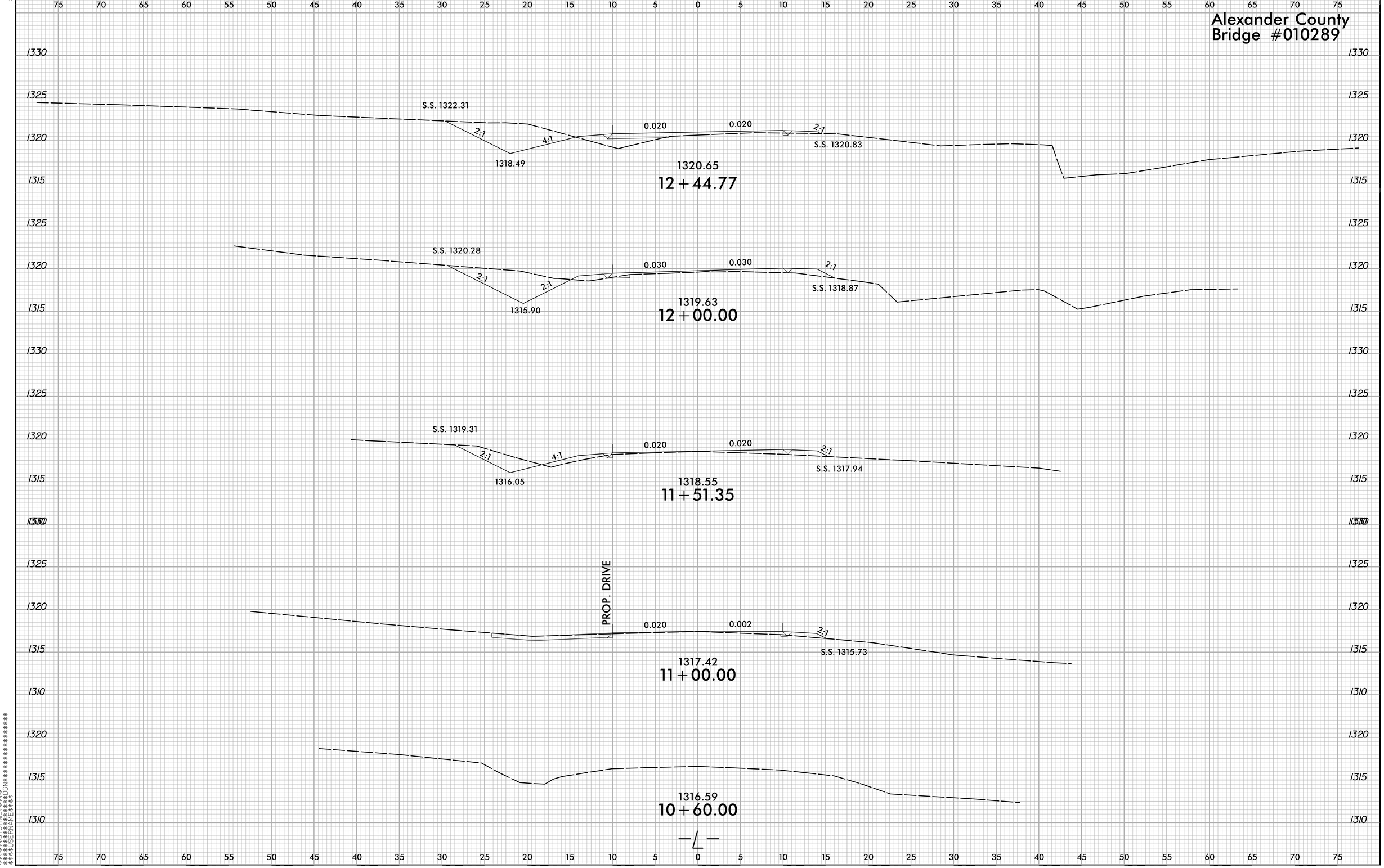

8/23/99

0 2.5 5	PROJ. REFERENCE NO.	SHEET NO.
	17BP.12.R.201	X-2

Alexander County Bridge #010289

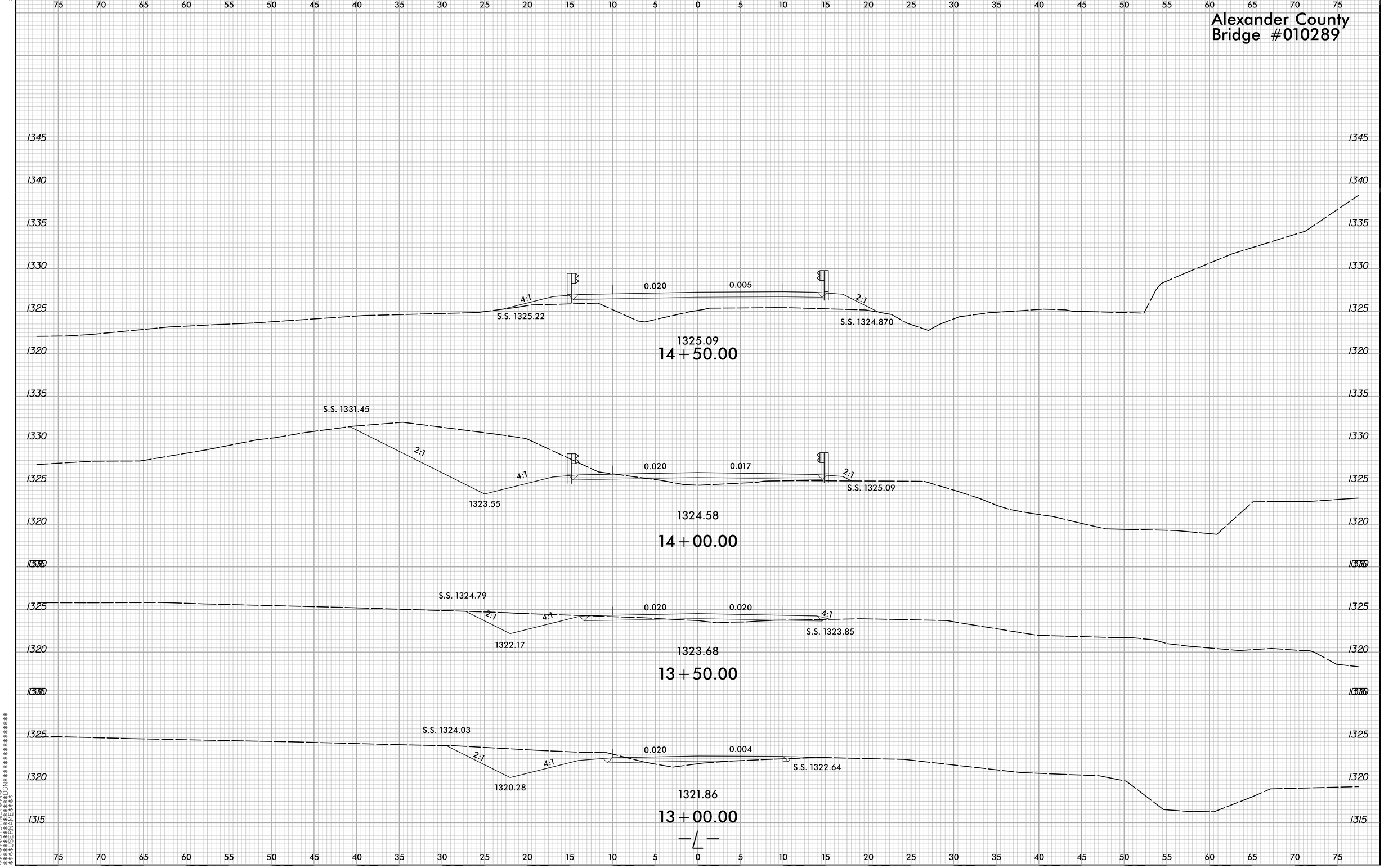

0 2.5 5	PROJ. REFERENCE NO.	SHEET NO.
	17BP.12.R.201	X-3

Alexander County Bridge #010289

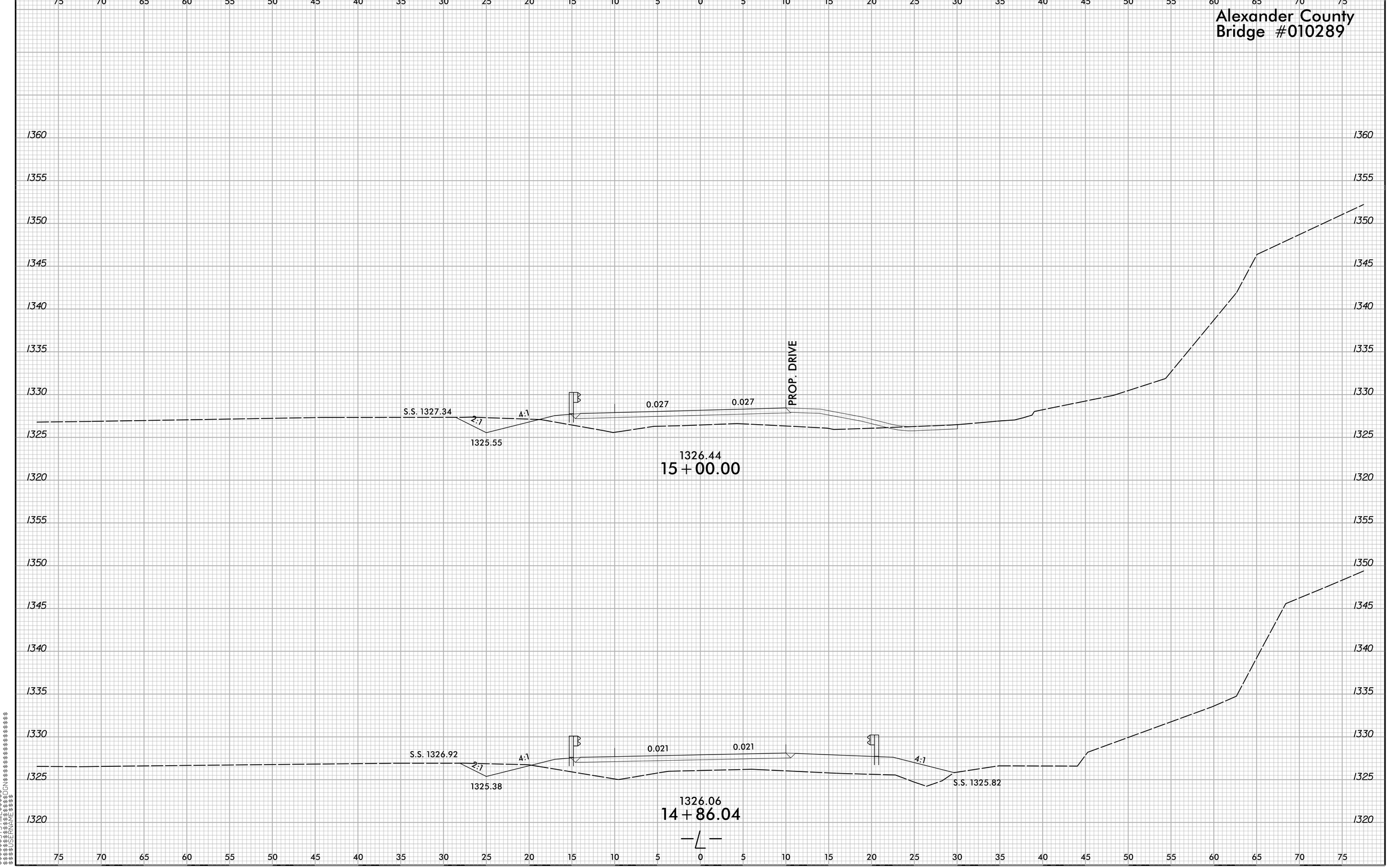

8/23/99

$$$$SYSTIME$$$$
$$$$USERNAME$$$$

8/23/99

0 2.5 5	PROJ. REFERENCE NO.	SHEET NO.
	17BP.12.R.201	X-4

Alexander County Bridge #010289

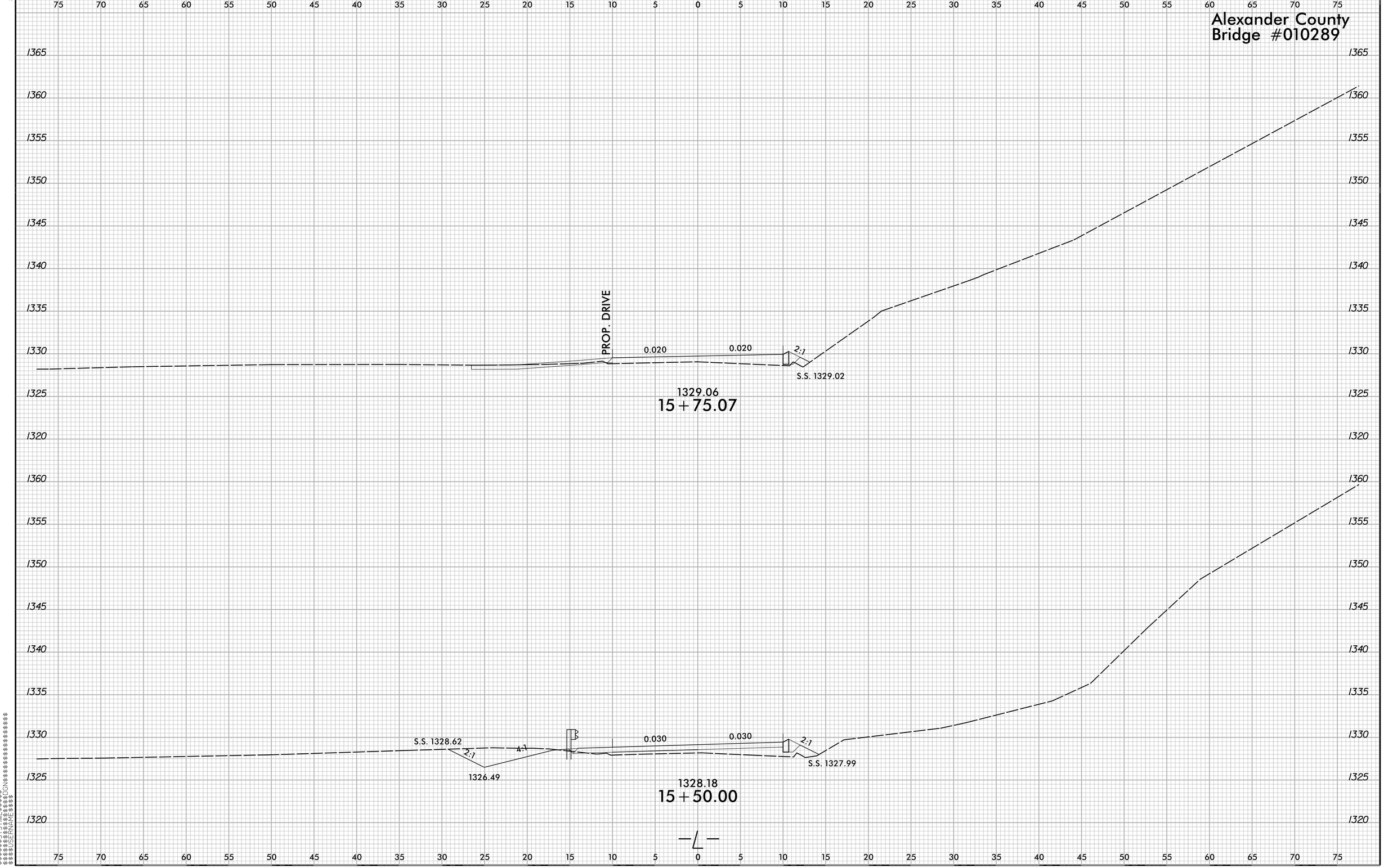

$$SYSTEM$$
$$SUBSYSTEM$$
$$DGN$$

0 2.5 5	PROJ. REFERENCE NO.	SHEET NO.
	17BP.12.R.201	X-5

Alexander County Bridge #010289

BENCH MARK: REBAR WITH ALUMINUM CAP STAMPED "01-0289-3" (FLUSH WITH GROUND) -L-16+01.00 RT. EL. 1337.99' NAVD 88

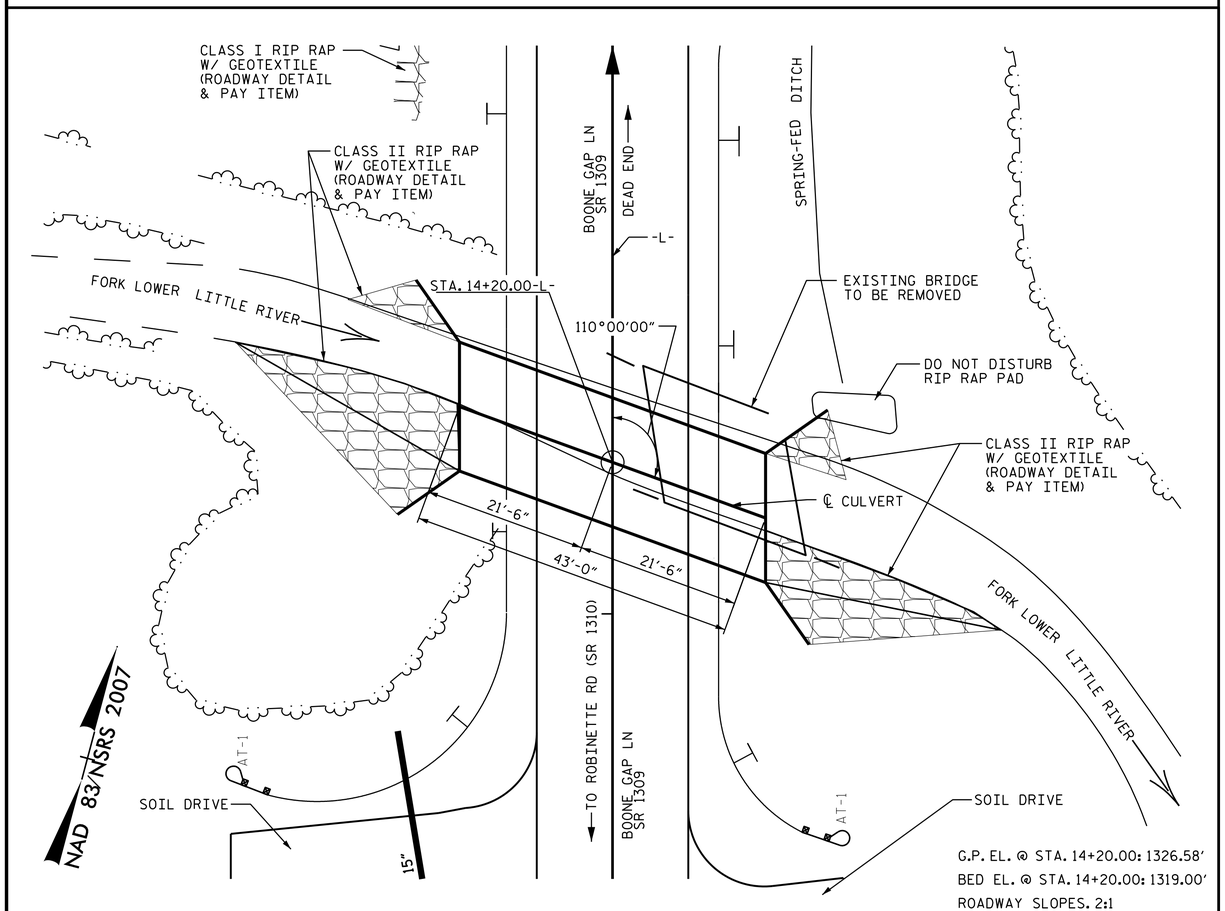

LOCATION SKETCH

FOR UTILITY INFORMATION, SEE UTILITY PLANS AND SPECIAL PROVISIONS.

NOTES

ASSUMED LIVE LOAD ----------HL-93 OR ALTERNATE LOADING.

DESIGN FILL----------3'-0"

FOR OTHER DESIGN DATA AND NOTES SEE STANDARD NOTE SHEET.

3" Ø WEEP HOLES INDICATED TO BE IN ACCORDANCE WITH THE SPECIFICATIONS.

CONCRETE IN CULVERTS TO BE POURED IN THE FOLLOWING ORDER:

1. WING FOOTINGS AND FLOOR SLAB INCLUDING 4" OF ALL VERTICAL WALLS.
2. THE REMAINING PORTIONS OF THE WALLS AND WINGS FULL HEIGHT FOLLOWED BY ROOF SLAB AND HEADWALLS.

THE RESIDENT ENGINEER SHALL CHECK THE LENGTH OF CULVERT BEFORE STAKING IT OUT TO MAKE CERTAIN THAT IT WILL PROPERLY TAKE CARE OF THE FILL.

THIS BARREL STANDARD TO BE USED ONLY ON CULVERT ON 105° SKEW AND TO BE USED WITH STANDARD WING SHEET WITH THE SAME SKEW AND VERTICAL CLEARANCE.

DIMENSIONS FOR WING LAYOUT AS WELL AS ADDITIONAL REINFORCING STEEL EMBEDDED IN BARREL ARE SHOWN ON WING SHEET.

EXCAVATE 1' BELOW THE CULVERT AND FOOTING AND REPLACE WITH FOUNDATION CONDITIONING MATERIAL IN ACCORDANCE WITH ARTICLE 414 OF THE STANDARD SPECIFICATIONS.

THIS STRUCTURE SHALL BE STAGE CONSTRUCTED TO ALLOW UNINTERRUPTED TRAFFIC FLOW. THE EXISTING BRIDGE IS TO REMAIN IN PLACE UNTIL THE WESTERN HALF OF THE STRUCTURE HAS BEEN CONSTRUCTED. ONCE THE WESTERN HALF IS COMPLETED, TRAFFIC SHALL BE DIVERTED TO THE NEW STRUCTURE WITH TEMPORARY BARRIERS AT THE EASTERN PORTION. SHORING MAY BE REQUIRED DURING BOTH STAGES AT THE EXISTING AND NEW STRUCTURE. SEE TRAFFIC CONTROL PLANS FOR DETAILS.

PLACE SILLS AT THE INLET AND OUTLET OF THE BARRELS ONLY. BACKFILL BARRELS WITH NATIVE BED MATERIAL. SUBSIDIZE WITH CLASS B RIP RAP IF NEEDED.

STEEL IN THE BOTTOM SLAB MAY BE SPLICED AT THE PERMITTED CONSTRUCTION JOINT AT THE CONTRACTOR'S OPTION. EXTRA WEIGHT OF STEEL DUE TO THE SPLICES SHALL BE PAID FOR BY THE CONTRACTOR.

AT THE CONTRACTOR'S OPTION, HE MAY SPLICE THE VERTICAL REINFORCING STEEL IN THE INTERIOR FACE OF EXTERIOR WALL AND BOTH FACES OF INTERIOR WALLS ABOVE LOWER WALL CONSTRUCTION JOINT. THE SPLICE LENGTH SHALL BE AS PROVIDED IN THE SPLICE LENGTH CHART SHOWN ON THE PLANS. EXTRA WEIGHT OF STEEL DUE TO THE SPLICES SHALL BE PAID FOR BY THE CONTRACTOR.

FOR CULVERT DIVERSION CHANNEL DETAILS AND PAY ITEM, SEE EROSION CONTROL PLANS.

FOR SUBMITTAL OF WORKING DRAWINGS, SEE SPECIAL PROVISIONS.

FOR FALSEWORK AND FORMWORK, SEE SPECIAL PROVISIONS.

FOR CRANE SAFETY, SEE SPECIAL PROVISIONS.

FOR GROUT FOR STRUCTURES, SEE SPECIAL PROVISIONS.

FOR EROSION CONTROL PLANS, SEE ROADWAY PLANS.

THE EXISTING STRUCTURE CONSISTING OF 1 @ 19'-0" TIMBER DECK ON TIMBER JOISTS SPAN WITH A CLEAR ROADWAY WIDTH OF 19'-11" ON TIMBER CAPS POST AND SILLS TIMBER BULKHEADS AND LOCATED AT THE PROPOSED STRUCTURE SHALL BE REMOVED.

THE SUBSTRUCTURE OF THE EXISTING BRIDGE INDICATED ON THE PLANS IS FROM THE BEST INFORMATION AVAILABLE. SINCE THIS INFORMATION IS SHOWN FOR THE CONVENIENCE OF THE CONTRACTOR, THE CONTRACTOR SHALL HAVE NO CLAIM WHATSOEVER AGAINST THE DEPARTMENT OF TRANSPORTATION FOR ANY DELAYS OR ADDITIONAL COSTS INCURRED BASED ON DIFFERENCES BETWEEN THE EXISTING BRIDGE SUBSTRUCTURE SHOWN ON THE PLANS AND THE ACTUAL CONDITIONS AT THE PROJECT SITE.

REMOVAL OF THE EXISTING BRIDGE SHALL BE PERFORMED SO AS NOT TO ALLOW DEBRIS TO FALL INTO THE WATER. THE CONTRACTOR SHALL REMOVE THE BRIDGE AND SUBMIT PLANS FOR DEMOLITION IN ACCORDANCE TO ARTICLE 402-2 OF THE STANDARD SPECIFICATION.

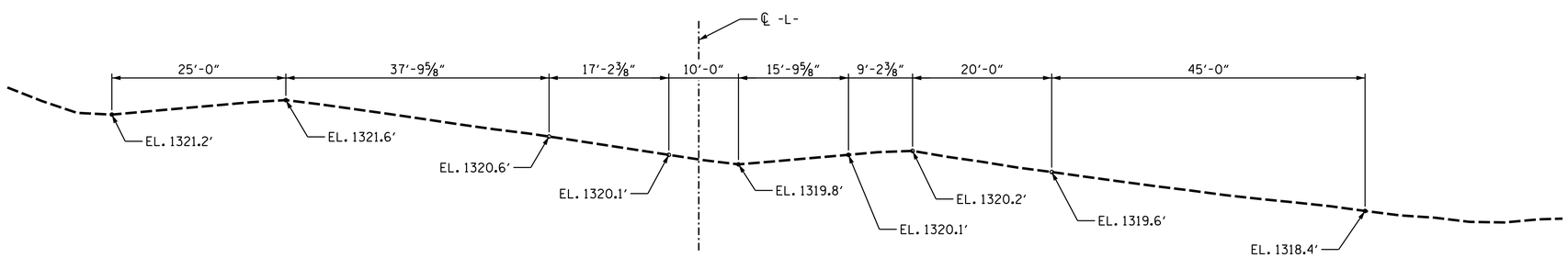

PROFILE ALONG ℄ CULVERT

PROJECT NO. 17BP.12.R.201

ALEXANDER COUNTY

STATION: 14+20.00-L-

SHEET 1 OF 5 REPLACES BR. NO. 289

STATE OF NORTH CAROLINA
DEPARTMENT OF TRANSPORTATION
RALEIGH

BARREL STANDARD

DOUBLE 8 FT. X 5 FT. CONCRETE BOX CULVERT 105° SKEW

1971

REVISIONS						SHEET NO.
NO.	BY:	DATE:	NO.	BY:	DATE:	C-1
1			3			TOTAL SHEETS
2			4			5

NORTH CAROLINA PROFESSIONAL SEAL 11279 ENGINEER LEONARD G. FLETCHER
January 3, 2014

PREPARED BY
TGS ENGINEERS
107-A MICA AVENUE
MORGANTON, NC 28655

ASSEMBLED BY : CCC	DATE : 9/13	SPECIAL	
CHECKED BY : MTC	DATE : 9/13		
DRAWN BY : R.W.WRIGHT	DATE : OCT. 1989	STANDARD	
CHECKED BY : A.R.BISSETTE	DATE : OCT. 1989		

STD. NO. CB22A

ADDED 11-1-90

BAR TYPES

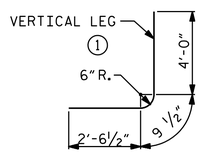

ALL BAR DIMENSIONS ARE OUT TO OUT.

SPLICE LENGTHS CHART

BAR	SIZE	SPLICE LENGTH
B1	#5	2'-7"
B3	#4	2'-0"
C1	#4	2'-0"

REINFORCING STEEL BAR SCHEDULE

BAR	NO.	SIZE	TYPE	LENGTH	WEIGHT
A1	88	#8	1	7'-4"	1,723
A2	88	#8	1	7'-4"	1,723
A100	73	#6	STR	17'-8"	1,938
A101	2	#6	STR	16'-0"	49
A102	2	#6	STR	14'-7"	44
A103	2	#6	STR	13'-3"	40
A104	2	#6	STR	11'-10"	36
A105	2	#6	STR	10'-6"	32
A106	2	#6	STR	9'-1"	28
A107	2	#6	STR	7'-9"	24
A108	2	#6	STR	6'-4"	20
A109	2	#6	STR	5'-0"	16
A110	2	#6	STR	3'-7"	11
A111	2	#6	STR	2'-3"	7
A200	73	#4	STR	17'-8"	862
A201	2	#4	STR	16'-0"	22
A202	2	#4	STR	14'-7"	20
A203	2	#4	STR	13'-3"	18
A204	2	#4	STR	11'-10"	16
A205	2	#4	STR	10'-6"	15
A206	2	#4	STR	9'-1"	13
A207	2	#4	STR	7'-9"	11
A208	2	#4	STR	6'-4"	9
A209	2	#4	STR	5'-0"	7
A210	2	#4	STR	3'-7"	5
A211	2	#4	STR	2'-3"	4
A300	73	#7	STR	17'-8"	2,637
A301	2	#7	STR	16'-0"	66
A302	2	#7	STR	14'-7"	60
A303	2	#7	STR	13'-3"	55
A304	2	#7	STR	11'-10"	49
A305	2	#7	STR	10'-6"	43
A306	2	#7	STR	9'-1"	38
A307	2	#7	STR	7'-9"	32
A308	2	#7	STR	6'-4"	26
A309	2	#7	STR	5'-0"	21
A310	2	#7	STR	3'-7"	15
A311	2	#7	STR	2'-3"	10
A400	37	#8	STR	17'-8"	1,746
A401	2	#8	STR	14'-7"	78
A402	2	#8	STR	11'-10"	64
A403	2	#8	STR	9'-1"	49
A404	2	#8	STR	6'-4"	34
A405	2	#8	STR	3'-7"	20
B1	88	#4	STR	6'-5"	378
B3	88	#5	STR	6'-5"	589
C1	126	#4	STR	23'-4"	1,964
D1	6	#6	STR	1'-6"	14
D2	6	#6	STR	2'-6"	23
G1	8	#5	STR	18'-9"	157
S2	12	#8	STR	18'-9"	601
REINFORCING STEEL					15,453 LBS.

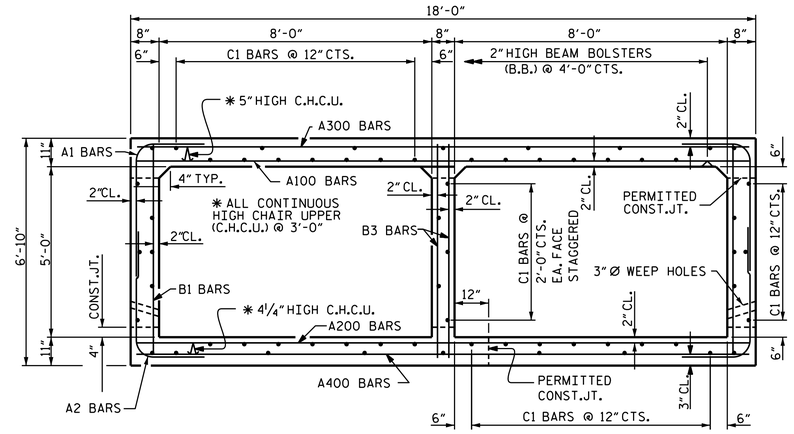

RIGHT ANGLE SECTION OF BARREL

THERE ARE 63 "C" BARS IN SECTION OF BARREL.

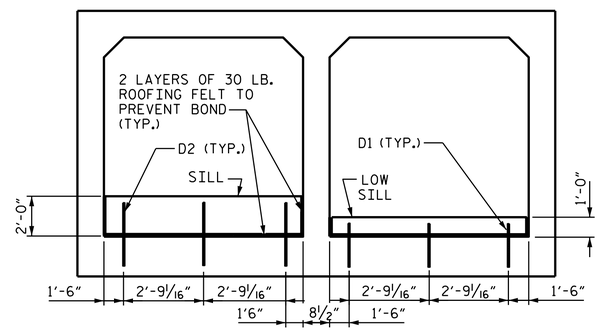

ELEVATION - LOOKING UPSTREAM

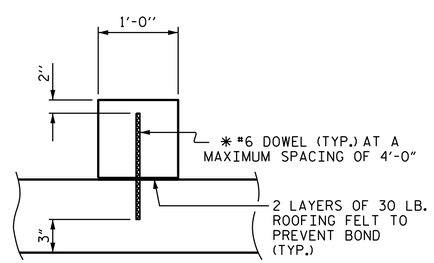

SECTION THROUGH SILL

✱ DOWELS MAY BE PUSHED INTO GREEN CONCRETE AFTER SLAB HAS BEEN FLOAT FINISHED.

HYDRAULIC DATA:

DESIGN DISCHARGE	380 CFS
FREQUENCY OF DESIGN DISCHARGE	25 YRS.
DESIGN HIGH WATER ELEVATION	1324.4'
DRAINAGE AREA	0.86 SQ. MI.
BASE DISCHARGE	600 CFS
FREQUENCY OF BASE DISCHARGE	100 YRS.
BASE HIGH WATER ELEVATION	1326.24'

OVERTOPPING FLOOD DATA:

OVERTOPPING DISCHARGE	500 CFS+
FREQUENCY OF OVERTOPPING FLOOD	50 YR+
OVERTOPPING FLOOD ELEVATION	1325.4'

TOTAL STRUCTURE QUANTITIES

CLASS A CONCRETE

BARREL @	1.60	CY/FT	68.8	C.Y.
WING, SILLS, ETC.			16.8	C.Y.
TOTAL			85.6	C.Y.

REINFORCING STEEL

BARREL	15,453	LBS.
WINGS ETC.	744	LBS.
TOTAL	16,197	LBS.

CULVERT EXCAVATION, STA. 14+20.00-L-	L.S.
FOUNDATION CONDITIONING MATERIAL	67 TONS
REMOVAL OF EXISTING STRUCTURE @ STA. 14+20.00-L-	L.S.

PROJECT NO. 17BP.12.R.201

ALEXANDER COUNTY

STATION: 14+20.00-L-

SHEET 2 OF 5

STATE OF NORTH CAROLINA
DEPARTMENT OF TRANSPORTATION
RALEIGH

BARREL STANDARD

DOUBLE 8 FT.X 5 FT. CONCRETE BOX CULVERT 105° SKEW

1971

NORTH CAROLINA PROFESSIONAL SEAL 031279 ENGINEER RICHARD G. FLETCHER
January 3, 2014

PREPARED BY
TGS ENGINEERS
107-A MICA AVENUE
MORGANTON, NC 28655

REVISIONS						
NO.	BY:	DATE:	NO.	BY:	DATE:	SHEET NO. C-2
1			3			TOTAL SHEETS 5
2			4			

ASSEMBLED BY : CCC DATE : 9/13
CHECKED BY : MTC DATE : 9/13
DRAWN BY : R.W.WRIGHT DATE : OCT. 1989
CHECKED BY : A.R.BISSETTE DATE : OCT. 1989

SPECIAL STANDARD

ADDED 11-1-90

STD. NO. CB22A

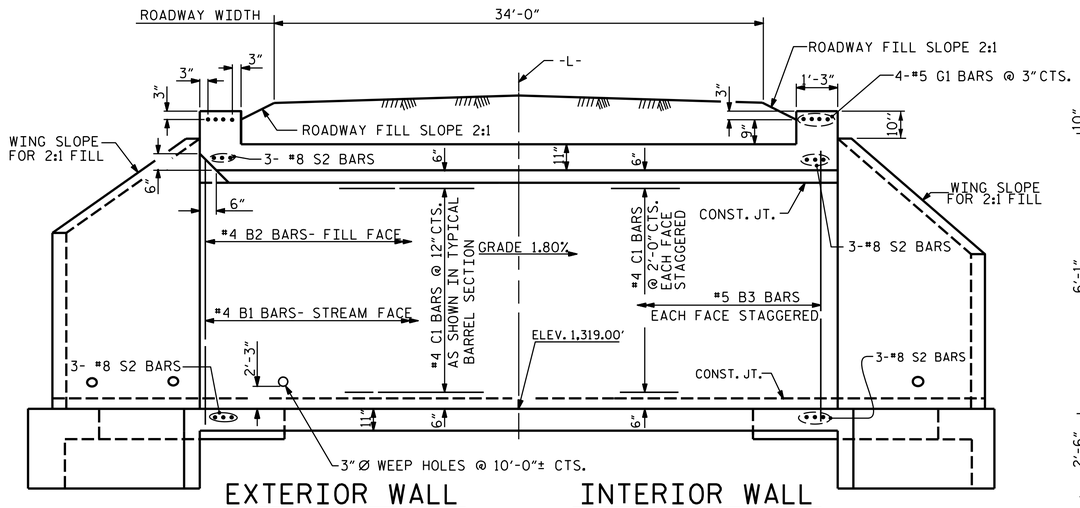

EXTERIOR WALL INTERIOR WALL

CULVERT SECTION NORMAL TO ROADWAY

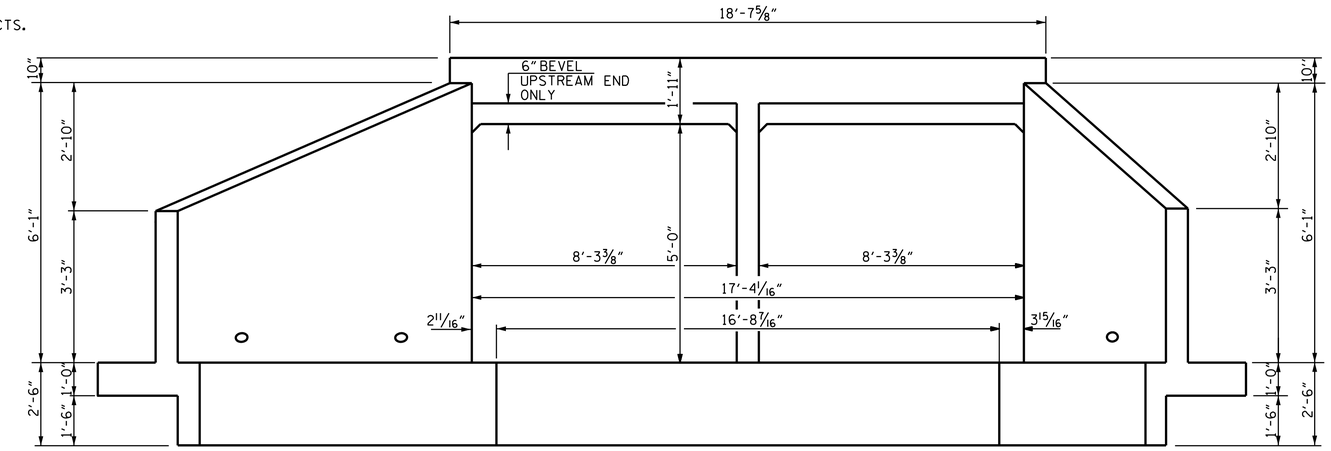

END ELEVATION NORMAL TO SKEW

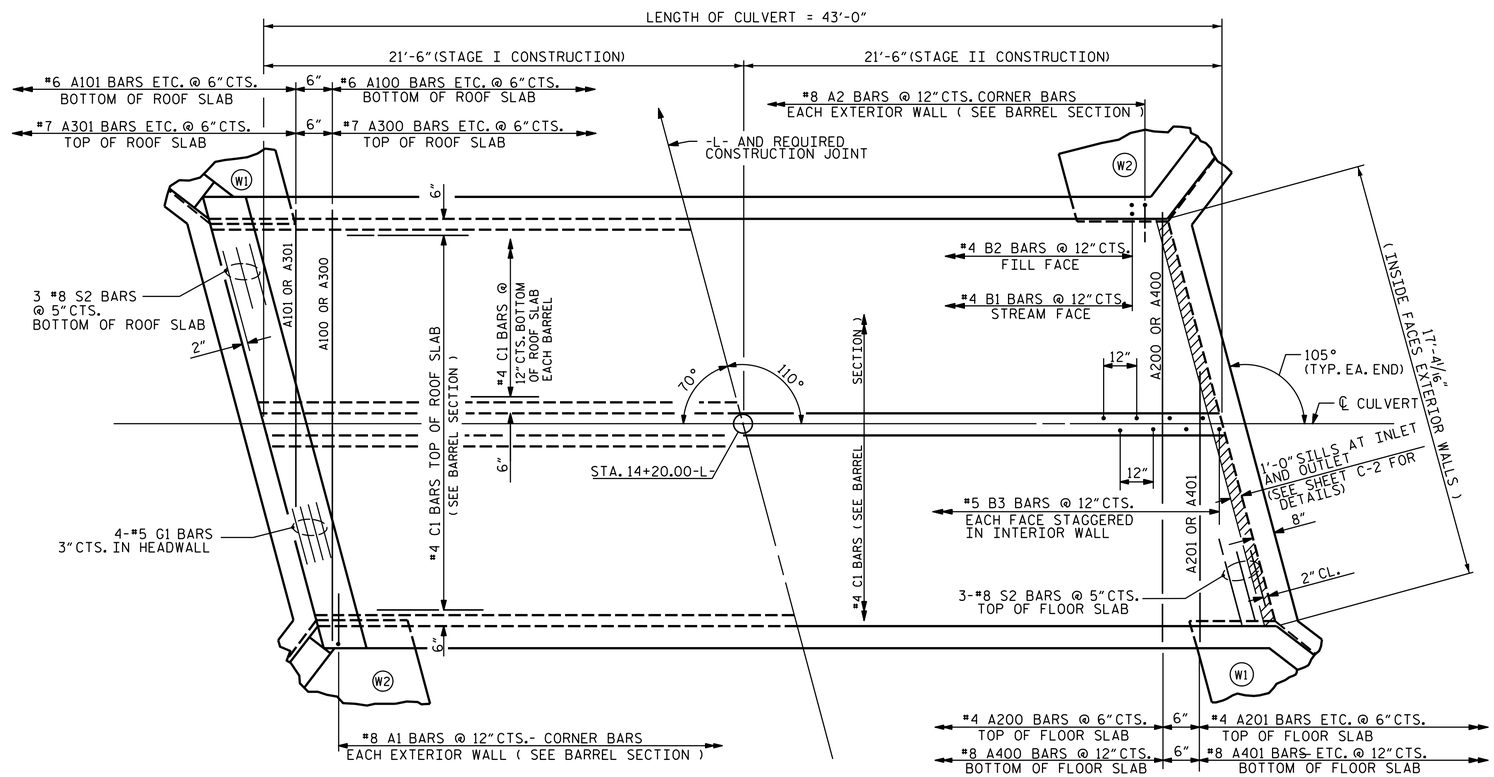

PART PLAN - ROOF SLAB PART PLAN - FLOOR SLAB

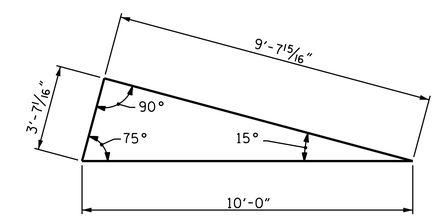

SKEW TRIANGLE

PROJECT NO. 17BP.12.R.201

ALEXANDER COUNTY

STATION: 14+20.00-L-

SHEET 3 OF 5

STATE OF NORTH CAROLINA
DEPARTMENT OF TRANSPORTATION
RALEIGH

BARREL STANDARD

DOUBLE 8 FT. X 5 FT. CONCRETE BOX CULVERT 105° SKEW

1971

REVISIONS								SHEET NO.
NO.	BY:	DATE:	NO.	BY:	DATE:			C-3
1			3					TOTAL SHEETS
2			4					5

ASSEMBLED BY : CCC	DATE : 9/13	SPECIAL	
CHECKED BY : MTC	DATE : 9/13		
DRAWN BY : W. BRYAN STANLEY II	DATE : NOV.1971	STANDARD	
CHECKED BY : JOEL A. JOHNSON	DATE : DEC.1971		

PREPARED BY
TGS ENGINEERS
107-A MICA AVENUE
MORGANTON, NC 28655

NORTH CAROLINA PROFESSIONAL SEAL 11279 ENGINEER RICHARD G. FLETCHER
January 3, 2014

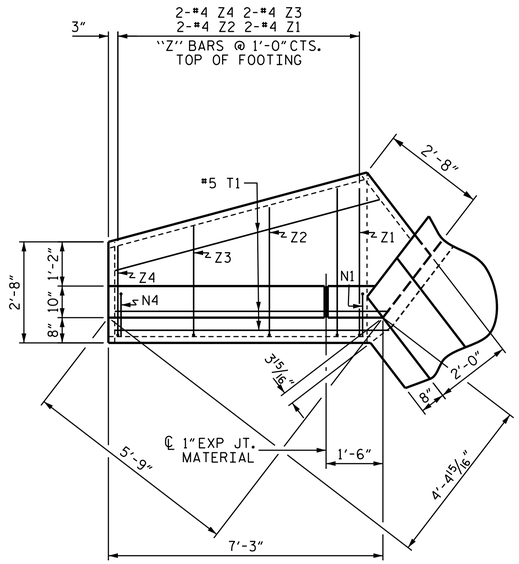

PLAN W2

NOTES

A 3 FOOT STRIP OF FILTER FABRIC SHALL BE ATTACHED TO THE FILL FACE OF THE WING COVERING THE ENTIRE LENGTH OF THE EXPANSION JOINT

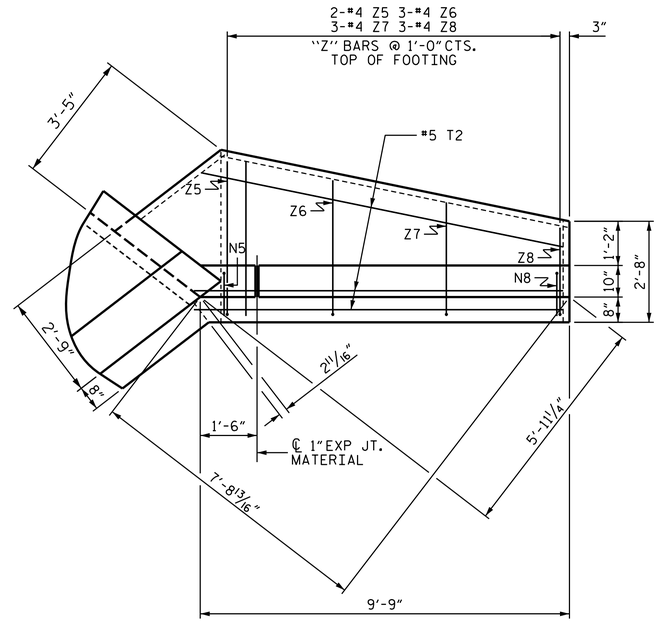

PLAN W1

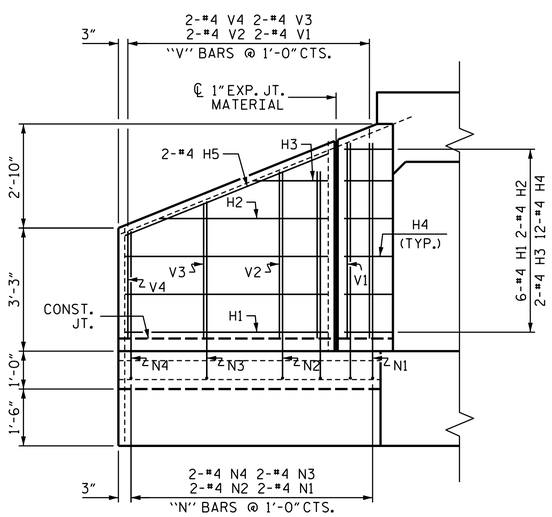

ELEVATION W2

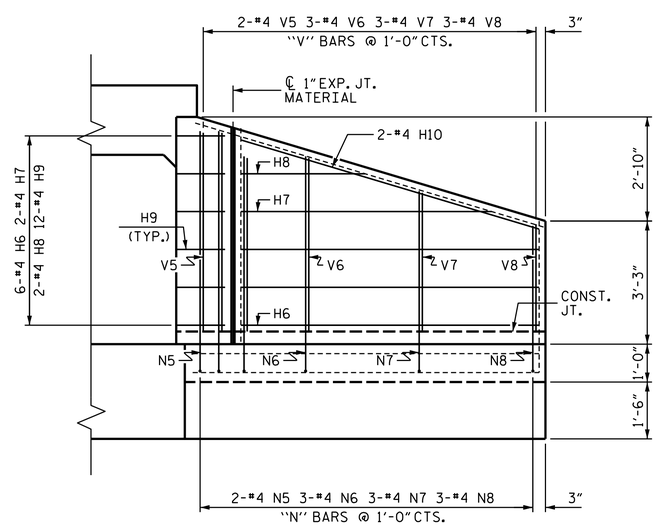

ELEVATION W1

BAR TYPES

ALL BAR DIMENSIONS ARE OUT TO OUT.

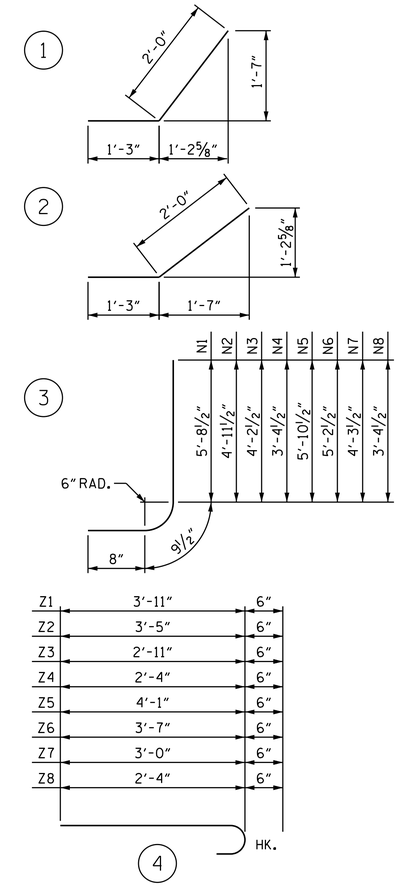

BILL OF MATERIAL

BAR	NO.	SIZE	TYPE	LENGTH	WEIGHT
H1	12	#4	STR	5'-4"	43
H2	4	#4	STR	4'-5"	12
H3	4	#4	STR	2'-0"	5
H4	24	#4	1	3'-3"	52
H5	4	#4	STR	5'-9"	15
H6	12	#4	STR	7'-10"	63
H7	4	#4	STR	6'-7"	18
H8	4	#4	STR	3'-3"	9
H9	24	#4	2	3'-3"	52
H10	4	#4	STR	8'-2"	22
N1	4	#4	3	7'-2"	19
N2	4	#4	3	6'-5"	17
N3	4	#4	3	5'-8"	15
N4	4	#4	3	4'-10"	13
N5	4	#4	3	7'-4"	20
N6	6	#4	3	6'-8"	27
N7	6	#4	3	5'-9"	23
N8	6	#4	3	4'-10"	19
T1	6	#5	STR	7'-3"	45
T2	6	#5	STR	9'-9"	61
V1	4	#4	STR	5'-2"	14
V2	4	#4	STR	4'-5"	12
V3	4	#4	STR	3'-7"	10
V4	4	#4	STR	2'-10"	8
V5	4	#4	STR	5'-3"	14
V6	6	#4	STR	4'-7"	18
V7	6	#4	STR	3'-8"	15
V8	6	#4	STR	2'-10"	11
Z1	4	#4	4	4'-5"	12
Z2	4	#4	4	3'-11"	10
Z3	4	#4	4	3'-5"	9
Z4	4	#4	4	2'-10"	8
Z5	4	#4	4	4'-7"	12
Z6	6	#4	4	4'-1"	16
Z7	6	#4	4	3'-6"	14
Z8	6	#4	4	2'-10"	11

REINFORCING STEEL FOR 4 WINGS 744 LBS

CLASS A CONCRETE

4 WINGS	11.2	CY
2 HEADWALLS	1.7	CY
2 END CURTAIN WALLS	2.1	CY
SILLS	1.8	CY
TOTAL	16.8	CY

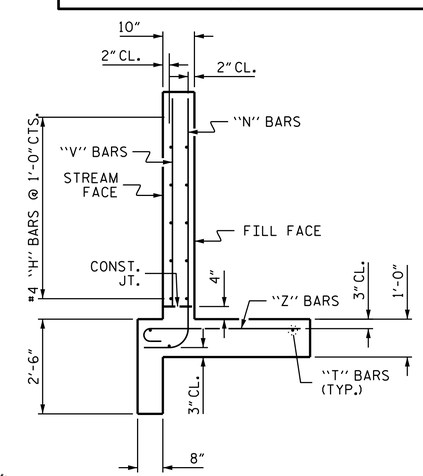

TYPICAL WING SECTION

PROJECT NO. 17BP.12.R.201

ALEXANDER COUNTY

STATION: 14+20.00-L-

SHEET 4 OF 5

STATE OF NORTH CAROLINA
DEPARTMENT OF TRANSPORTATION
RALEIGH

STANDARD WINGS FOR CONCRETE BOX CULVERT

H = 5'-0" SLOPE = 2:1

105° SKEW

NORTH CAROLINA PROFESSIONAL SEAL 11279 ENGINEER RICHARD G. FLETCHER

January 3, 2014

PREPARED BY
TGS ENGINEERS
107-A MICA AVENUE
MORGANTON, NC 28655

REVISIONS						
NO.	BY:	DATE:	NO.	BY:	DATE:	
1			3			
2			4			

SHEET NO. C-4

TOTAL SHEETS 5

ASSEMBLED BY :	CCC	DATE :	9/13
CHECKED BY :	MTC	DATE :	9/13
DRAWN BY :	CCJ	12/99	
CHECKED BY :	RWW	03/00	

STANDARD NOTES

DESIGN DATA:

SPECIFICATIONS	A.A.S.H.T.O. (CURRENT)
LIVE LOAD	SEE PLANS
IMPACT ALLOWANCE	SEE A.A.S.H.T.O.
STRESS IN EXTREME FIBER OF	
STRUCTURAL STEEL - AASHTO M270 GRADE 36	20,000 LBS. PER SQ. IN.
- AASHTO M270 GRADE 50W	27,000 LBS. PER SQ. IN.
- AASHTO M270 GRADE 50	27,000 LBS. PER SQ. IN.
REINFORCING STEEL IN TENSION	
GRADE 60	24,000 LBS. PER SQ. IN.
CONCRETE IN COMPRESSION	1,200 LBS. PER SQ. IN.
CONCRETE IN SHEAR	SEE A.A.S.H.T.O.
STRUCTURAL TIMBER - TREATED OR	
UNTREATED - EXTREME FIBER STRESS	1,800 LBS. PER SQ. IN.
COMPRESSION PERPENDICULAR TO GRAIN OF TIMBER	375 LBS. PER SQ. IN.
EQUIVALENT FLUID PRESSURE OF EARTH	30 LBS. PER CU. FT. (MINIMUM)

MATERIAL AND WORKMANSHIP:

EXCEPT AS MAY OTHERWISE BE SPECIFIED ON PLANS OR IN THE SPECIAL PROVISIONS, ALL MATERIAL AND WORKMANSHIP SHALL BE IN ACCORDANCE WITH THE 2012 "STANDARD SPECIFICATIONS FOR ROADS AND STRUCTURES" OF THE N. C. DEPARTMENT OF TRANSPORTATION.

STEEL SHEET PILING FOR PERMANENT OR TEMPORARY APPLICATIONS SHALL BE HOT ROLLED.

CONCRETE:

UNLESS OTHERWISE REQUIRED ON PLANS, CLASS A CONCRETE SHALL BE USED FOR ALL PORTIONS OF ALL STRUCTURES WITH THE EXCEPTION THAT: CLASS AA CONCRETE SHALL BE USED IN BRIDGE SUPERSTRUCTURES, ABUTMENT BACKWALLS, AND APPROACH SLABS; AND CLASS B CONCRETE SHALL BE USED FOR SLOPE PROTECTION AND RIP RAP.

CONCRETE CHAMFERS:

UNLESS OTHERWISE NOTED ON THE PLANS, ALL EXPOSED CORNERS ON STRUCTURES SHALL BE CHAMFERED 3/4" WITH THE FOLLOWING EXCEPTIONS: TOP CORNERS OF CURBS MAY BE ROUNDED TO 1-1/2" RADIUS WHICH IS BUILT INTO CURB FORMS; CORNERS OF TRANSVERSE FLOOR EXPANSION JOINTS SHALL BE ROUNDED WITH A 1/4" FINISHING TOOL UNLESS OTHERWISE REQUIRED ON PLANS; AND CORNERS OF EXPANSION JOINTS IN THE ROADWAY FACES AND TOPS OF CURBS AND SIDEWALKS SHALL BE ROUNDED TO A 1/4" RADIUS WITH A FINISHING STONE OR TOOL UNLESS OTHERWISE REQUIRED ON PLANS.

DOWELS:

DOWELS WHEN INDICATED ON PLANS AS FOR CULVERT EXTENSIONS, SHALL BE EMBEDDED AT LEAST 12" INTO THE OLD CONCRETE AND GROUTED INTO PLACE WITH 1:2 CEMENT MORTAR.

ALLOWANCE FOR DEAD LOAD DEFLECTION, SETTLEMENT, ETC. IN CASTING SUPERSTRUCTURES:

BRIDGES SHALL BE BUILT ON THE GRADE OR VERTICAL CURVE SHOWN ON PLANS. SLABS, CURBS AND PARAPETS SHALL CONFORM TO THE GRADE OR CURVE.

ALL DIMENSIONS WHICH ARE GIVEN IN SECTION AND ARE AFFECTED BY DEAD LOAD DEFLECTIONS ARE DIMENSIONS AT CENTER LINE OF BEARING UNLESS OTHERWISE NOTED ON PLANS. IN SETTING FORMS FOR STEEL BEAM BRIDGES AND PRESTRESSED CONCRETE GIRDER BRIDGES, ADJUSTMENTS SHALL BE MADE DUE TO THE DEAD LOAD DEFLECTIONS FOR THE ELEVATIONS SHOWN. WHERE BLOCKS ARE SHOWN OVER BEAMS FOR BUILDING UP TO THE SLAB, THE VERTICAL DIMENSIONS OF THE BLOCKS SHALL BE ADJUSTED BETWEEN BEARINGS TO COMPENSATE FOR DEAD LOAD DEFLECTIONS, VERTICAL CURVE ORDINATE, AND ACTUAL BEAM CAMBER. WHERE BOTTOM OF SLAB IS IN LINE WITH BOTTOM OF TOP FLANGES, DEPTH OF SLAB BETWEEN BEARINGS SHALL BE ADJUSTED TO COMPENSATE FOR DEAD LOAD DEFLECTION, VERTICAL CURVE ORDINATE, AND ACTUAL BEAM CAMBER.

IN SETTING FALSEWORK AND FORMS FOR REINFORCED CONCRETE SPANS, AN ALLOWANCE SHALL BE MADE FOR DEAD LOAD DEFLECTIONS, SETTLEMENT OF FALSEWORK, AND PERMANENT CAMBER WHICH SHALL BE PROVIDED FOR IN ADDITION TO THE ELEVATIONS SHOWN. AFTER REMOVAL OF THE FALSEWORK, THE FINISHED STRUCTURES SHALL CONFORM TO THE PROFILE AND ELEVATIONS SHOWN ON THE PLANS AND CONSTRUCTION ELEVATIONS FURNISHED BY THE ENGINEER.

DETAILED DRAWINGS FOR FALSEWORK OR FORMS FOR BRIDGE SUPERSTRUCTURE AND ANY STRUCTURE OR PARTS OF A STRUCTURE AS NOTED ON THE PLANS SHALL BE SUBMITTED TO THE ENGINEER FOR APPROVAL BEFORE CONSTRUCTION OF THE FALSEWORK OR FORMS IS STARTED.

REINFORCING STEEL:

ALL REINFORCING STEEL SHALL BE DEFORMED. DIMENSIONS RELATIVE TO PLACEMENT OF REINFORCING ARE TO CENTERS OF BARS UNLESS OTHERWISE INDICATED IN THE PLANS. DIMENSIONS ON BAR DETAILS ARE TO CENTERS OF BARS OR ARE OUT TO OUT AS INDICATED ON PLANS.

WIRE BAR SUPPORTS SHALL BE PROVIDED FOR REINFORCING STEEL WHERE INDICATED ON THE PLANS. WHEN BAR SUPPORT PIECES ARE PLACED IN CONTINUOUS LINES, THEY SHALL BE SO PLACED THAT THE ENDS OF THE SUPPORTING WIRES SHALL BE LAPPED TO LOCK LEGS ON ADJOINING PIECES.

STRUCTURAL STEEL:

AT THE CONTRACTOR'S OPTION, HE MAY SUBSTITUTE 7/8" Ø SHEAR STUDS FOR THE ¾" Ø STUDS SPECIFIED ON THE PLANS. THIS SUBSTITUTION SHALL BE MADE AT THE RATE OF 3 - 7/8" Ø STUDS FOR 4 - 3/4" Ø STUDS, AND STUD SPACING CHANGES SHALL BE MADE AS NECESSARY TO PROVIDE THE SAME EQUIVALENT NUMBER OF 7/8" Ø STUDS ALONG THE BEAM AS SHOWN FOR 3/4" Ø STUDS BASED ON THE RATIO OF 3 - 7/8" Ø STUDS FOR 4 - 3/4" Ø STUDS. STUDS OF THE LENGTH SPECIFIED ON THE PLANS MUST BE PROVIDED. THE MAXIMUM SPACING SHALL BE 2'-0".

EXCEPT AT THE INTERIOR SUPPORTS OF CONTINUOUS BEAMS WHERE THE COVER PLATE IS IN CONTACT WITH BEARING PLATE, THE CONTRACTOR MAY, AT HIS OPTION, SUBSTITUTE FOR THE COVER PLATES DESIGNATED ON THE PLANS COVER PLATES OF THE EQUIVALENT AREA PROVIDED THESE PLATES ARE AT LEAST 5/16" IN THICKNESS AND DO NOT EXCEED A WIDTH EQUAL TO THE FLANGE WIDTH LESS 2" OR A THICKNESS EQUAL TO 2 TIMES THE FLANGE THICKNESS. THE SIZE OF FILLET WELDS SHALL CONFORM TO THE REQUIREMENTS OF THE CURRENT ANSI/AASHTO/AWS "BRIDGE WELDING CODE". ELECTROSLAG WELDING WILL NOT BE PERMITTED.

WITH THE SOLE EXCEPTION OF EDGES AT SURFACES WHICH BEAR ON OTHER SURFACES, ALL SHARP EDGES AND ENDS OF SHAPES AND PLATES SHALL BE SLIGHTLY ROUNDED BY SUITABLE MEANS TO A RADIUS OF APPROXIMATELY 1/16 INCH OR EQUIVALENT FLAT SURFACE AT A SUITABLE ANGLE PRIOR TO PAINTING, GALVANIZING, OR METALLIZING.

HANDRAILS AND POSTS:

METAL STANDARDS AND FACES OF THE CONCRETE END POSTS FOR THE METAL RAIL SHALL BE SET NORMAL TO THE GRADE OF THE CURB, UNLESS OTHERWISE SHOWN ON PLANS. THE METAL RAIL AND TOPS OF CONCRETE POSTS USED WITH THE ALUMINUM RAIL SHALL BE BUILT PARALLEL TO THE GRADE OF THE CURB.

METAL HANDRAILS SHALL BE IN ACCORDANCE WITH THE PLANS. RAILS SHALL BE AS MANUFACTURED FOR BRIDGE RAILING. CASTINGS SHALL BE OF A UNIFORM APPEARANCE. FINS AND OTHER DEFORMATIONS RESULTING FROM CASTING OR OTHERWISE SHALL BE REMOVED IN A MANNER SO THAT A UNIFORM COLORING OF THE COMPLETED CASTING SHALL BE OBTAINED. CASTINGS WITH DISCOLORATIONS OR OF NON-UNIFORM COLORING WILL NOT BE ACCEPTED. CERTIFIED MILL REPORTS ARE REQUIRED FOR METAL RAILS AND POSTS.

SPECIAL NOTES:

GENERALLY, IN CASE OF DISCREPANCY, THIS STANDARD SHEET OF NOTES SHALL GOVERN OVER THE SPECIFICATIONS, BUT THE REMAINDER OF THE PLANS SHALL GOVERN OVER NOTES HEREON, AND SPECIAL PROVISIONS SHALL GOVERN OVER ALL. SEE SPECIFICATIONS ARTICLE 105-4.

PROJECT NO. 17BP.12.R.201

ALEXANDER COUNTY

STATION: 14+20.00-L-

SHEET 5 OF 5

STATE OF NORTH CAROLINA
DEPARTMENT OF TRANSPORTATION
RALEIGH

STANDARD NOTES

NORTH CAROLINA PROFESSIONAL SEAL 11279 ENGINEER RICHARD G. PETCHER

January 3, 2014

PREPARED BY
TGS ENGINEERS
804 N LAFAYETTE ST
SHELBY, NC 28150

REVISIONS						SHEET NO.
NO.	BY:	DATE:	NO.	BY:	DATE:	C-5
1			3			TOTAL SHEETS
2			4			5

DRAWN BY :	CCC	DATE :	9/13
CHECKED BY :	MTC	DATE :	9/13

REV. 6-16-95 EEM ()RGW REV. 5-7-03 RWW ()JTE REV. 10-1-11 MAA ()GM
REV. 8-16-99 RWW ()LES REV. 5-1-06 TLA ()GM

STD. NO. SN