09/08/99

TIP PROJECT: W-5212G

CONTRACT: DL00083

See Sheet 1-A For Index of Sheets

STATE OF NORTH CAROLINA
DIVISION OF HIGHWAYS

LINCOLN COUNTY

STATE	STATE PROJECT REFERENCE NO.	SHEET NO.	TOTAL SHEETS
N.C.	W-5212G	1	

STATE PROJ. NO.	F. A. PROJ. NO.	DESCRIPTION
45342.1.7	HSIP-0150(31)	PE
45342.2.7	HSIP-0150(31)	R/W
45342.3.FR7	HSIP-0150(31)	CONST.

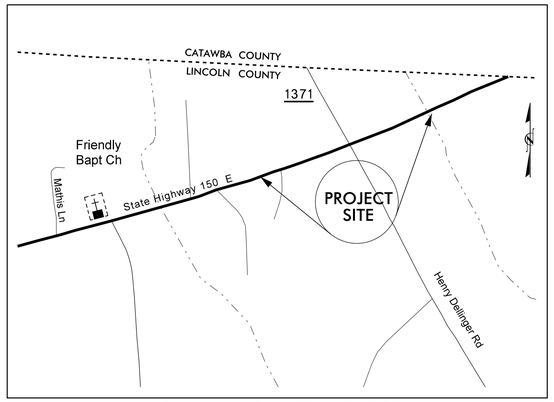

VICINITY MAP NOT TO SCALE

LOCATION: NC 150 AT THE INTERSECTION OF SR 1371 (LEBANON RD./HENRY DELLINGER RD.)

TYPE OF WORK: GRADING, PAVING, DRAINAGE, PAVEMENT MARKINGS AND PAVEMENT MARKERS.

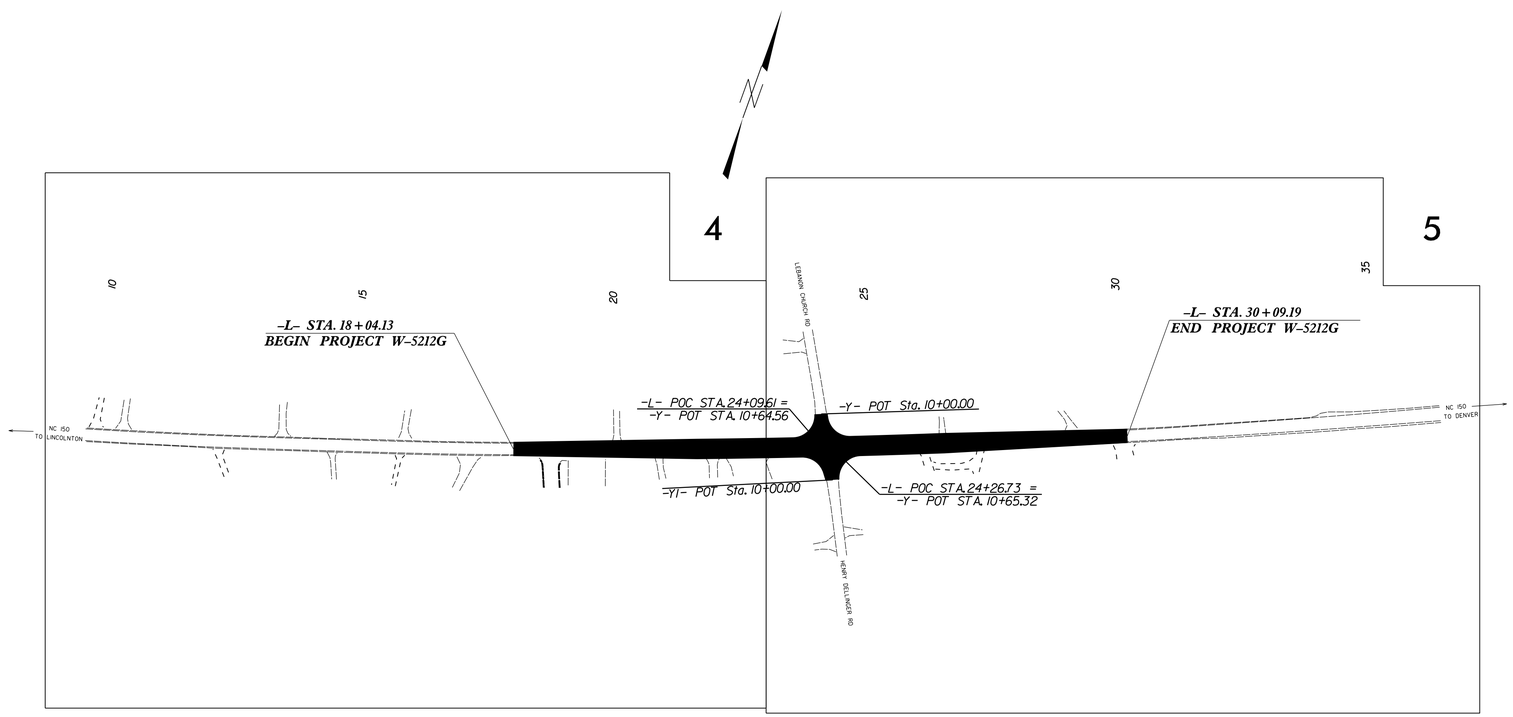

GRAPHIC SCALES

50 25 0 50 100
PLANS

50 25 0 50 100
PROFILE (HORIZONTAL)

10 5 0 10 20
PROFILE (VERTICAL)

DESIGN DATA

ADT 2010 = 9100
ADT =
DHV = %
D = %
T = % *
V = 45 MPH
* TTST = DUAL
FUNC CLASS =
MINOR ARTERIAL
STATEWIDE TIER

PROJECT LENGTH

LENGTH OF ROADWAY PROJECT W-5212G = 0.253 MI
TOTAL LENGTH OF ROADWAY PROJECT W-5212G = 0.253 MI

Prepared in the Office of:

DIVISION OF HIGHWAYS

1000 Birch Ridge Dr., Raleigh NC, 27610

2012 STANDARD SPECIFICATIONS

RIGHT OF WAY DATE:
July 15, 2013

LETTING DATE:
MARCH 24, 2015

J.B. McSWAIN
PROJECT MANAGER

B.K. SOWELL
PROJECT DESIGN ENGINEER

HYDRAULICS ENGINEER

SIGNATURE: P.E.

ROADWAY DESIGN ENGINEER

SIGNATURE: P.E.

STATE OF NORTH CAROLINA · DEPARTMENT OF TRANSPORTATION

02-MAR-2015 19:39
S:\DDC\District 3\Lincoln\W-5212G Lebanon_NC150\Plansheets\NC150_SR1371_Rdy_tsh_1.dgn
$$$$USERNAME$$$$

PROJECT REFERENCE NO.	SHEET NO.
W-5212G	1-A

ROADWAY DESIGN ENGINEER

INDEX OF SHEETS

SHEET NUMBER	SHEET
1	TITLE SHEET
1-A	INDEX OF SHEETS, GENERAL NOTES, AND LIST OF STANDARD DRAWINGS
1-B	CONVENTIONAL SYMBOLS
1-C	SURVEY CONTROL
2	PAVEMENT SCHEDULE, TYPICAL SECTIONS, AND WEDGING DETAILS
3A THRU 3C	SUMMARY OF DRAINAGE QUANTITIES, EARTHWORK SUMMARY, PARCEL INDEX
4 THRU 5	PLAN SHEET
TMP-1 THRU TMP-5	TRAFFIC CONTROL PLANS
PM-1	PAVEMENT MARKING PLANS
EC-1 THRU EC-7	EROSION CONTROL PLANS
UC-1 THRU UC-4	UTILITY CONSTRUCTION PLANS
SIG-1 THRU SIG-3	SIGNAL PLANS
X-1 THRU X-7	CROSS-SECTIONS

GENERAL NOTES:

2012 SPECIFICATIONS
EFFECTIVE: 01-17-12
REVISED: 07/30/12

GRADING AND SURFACING OR RESURFACING AND WIDENING:

THE GRADE LINES SHOWN DENOTE THE FINISHED ELEVATION OF THE PROPOSED SURFACING AT GRADE POINTS SHOWN ON THE TYPICAL SECTIONS. WHERE NO GRADE LINES ARE SHOWN, THE PROFILES SHOWN DENOTE THE TOP ELEVATION OF THE EXISTING PAVEMENT ALONG THE CENTER LINE OF SURVEY ON WHICH THE PROPOSED RESURFACING WILL BE PLACED. GRADE LINES MAY BE ADJUSTED BY THE ENGINEER IN ORDER TO SECURE A PROPER TIE-IN.

CLEARING:

CLEARING ON THIS PROJECT SHALL BE PERFORMED TO THE LIMITS ESTABLISHED BY METHOD II.

SUPERELEVATION:

ALL CURVES ON THIS PROJECT SHALL BE SUPERELEVATED IN ACCORDANCE WITH STD. NO. 225.04 USING THE RATE OF SUPERELEVATION AND RUNOFF SHOWN ON THE PLANS. SUPERELEVATION IS TO BE REVOLVED ABOUT THE GRADE POINTS SHOWN ON THE TYPICAL SECTIONS.

SHOULDER CONSTRUCTION:

ASPHALT, EARTH, AND CONCRETE SHOULDER CONSTRUCTION ON THE HIGH SIDE OF SUPERELEVATED CURVES SHALL BE IN ACCORDANCE WITH STD. NO. 560.01.

SIDE ROADS:

THE CONTRACTOR WILL BE REQUIRED TO DO ALL NECESSARY WORK TO PROVIDE SUITABLE CONNECTIONS WITH ALL ROADS, STREETS, AND DRIVES ENTERING THIS PROJECT. THIS WORK WILL BE PAID FOR AT THE CONTRACT UNIT PRICE FOR THE PARTICULAR ITEMS INVOLVED.

DRIVEWAYS:

DRIVEWAYS SHALL BE CONSTRUCTED IN ACCORDANCE WITH STD. 848.02 USING 3' RADII OR RADII AS SHOWN ON THE PLANS. LOCATIONS OF DRIVES WILL BE AS SHOWN ON THE PLANS OR AS DIRECTED BY THE ENGINEER.

TEMPORARY SHORING:

SHORING REQUIRED FOR THE MAINTENANCE OF TRAFFIC WILL BE PAID FOR AS "EXTRA WORK" IN ACCORDANCE WITH SECTION 104-7.

SUBSURFACE PLANS:

NO SUBSURFACE PLANS ARE AVAILABLE ON THIS PROJECT. THE CONTRACTOR SHOULD MAKE HIS OWN INVESTIGATION AS TO THE SUBSURFACE CONDITIONS.

UTILITIES:

UTILITY OWNERS ON THIS PROJECT ARE AT&T, LINCOLN COUNTY PUBLIC WORKS.

PIEDMONT NATURAL GAS, RUTHERFORD ELECTRIC.

ANY RELOCATION OF EXISTING UTILITIES WILL BE ACCOMPLISHED BY OTHERS, EXCEPT AS SHOWN ON THE PLANS.

RIGHT-OF-WAY MARKERS:

ALL RIGHT-OF-WAY MARKERS ON THIS PROJECT SHALL BE PLACED BY OTHERS.

2012 ROADWAY ENGLISH STANDARD DRAWINGS

The following Roadway Standards as appear in "Roadway Standard Drawings" Highway Design Branch - N. C. Department of Transportation - Raleigh, N. C., Dated January, 2012 are applicable to this project and by reference hereby are considered a part of these plans:

STD.NO.	TITLE
DIVISION 2 - EARTHWORK	
200.02	Method of Clearing - Method II
225.02	Guide for Grading Subgrade - Secondary and Local
225.04	Method of Obtaining Superelevation - Two Lane Pavement
225.06	Method of Grading Sight Distance at Intersections
DIVISION 3 - PIPE CULVERTS	
300.01	Method of Pipe Installation
310.10	Driveway Pipe Construction
DIVISION 5 - SUBGRADE, BASES AND SHOULDERS	
560.01	Method of Shoulder Construction - High Side of Superelevated Curve - Method I
DIVISION 6 - ASPHALT BASES AND PAVEMENTS	
654.01	Pavement Repairs
DIVISION 8 - INCIDENTALS	
840.00	Concrete Base Pad for Drainage Structures
840.01	Brick Catch Basin - 12" thru 54" Pipe
840.02	Concrete Catch Basin - 12" thru 54" Pipe
840.03	Frame, Grates and Hood - for Use on Standard Catch Basin
840.14	Concrete Drop Inlet - 12" thru 30" Pipe
840.15	Brick Drop Inlet - 12" thru 30" Pipe
840.16	Drop Inlet Frame and Grates - for use with Std. Dwg 840.14 and 840.15
840.22	Frames and Wide Slot Sag Grates
840.25	Anchorage for Frames - Brick or Concrete or Precast
840.31	Concrete Junction Box - 12" thru 66" Pipe
840.32	Brick Junction Box - 12" thru 66" Pipe
840.45	Precast Drainage Structure
840.66	Drainage Structure Steps
840.71	Concrete and Brick Pipe Plug
840.72	Pipe Collar
846.01	Concrete Curb, Gutter and Curb & Gutter
848.02	Driveway Turnout - Radius Type
876.04	Drainage Ditches with Class 'B' Rip Rap

13-NOV-2014 08:11
S:\Contracts\proj_S\Lincoln\W-5212G Lebanon_NC150\Plansheets\NC150_SR1371_Rdy_psh_1A.dgn
$$$$USERNAME$$$$

04/16/11

PROJECT REFERENCE NO.	SHEET NO.
W-5212G	1-B

Note: Not to Scale

****S.U.E. = Subsurface Utility Engineering***

STATE OF NORTH CAROLINA
DIVISION OF HIGHWAYS

CONVENTIONAL PLAN SHEET SYMBOLS

BOUNDARIES AND PROPERTY:

- State Line
- County Line
- Township Line
- City Line
- Reservation Line
- Property Line
- Existing Iron Pin — EIP
- Property Corner
- Property Monument — ECM
- Parcel/Sequence Number — 123
- Existing Fence Line
- Proposed Woven Wire Fence
- Proposed Chain Link Fence
- Proposed Barbed Wire Fence
- Existing Wetland Boundary — WLB
- Proposed Wetland Boundary — WLB
- Existing Endangered Animal Boundary — EAB
- Existing Endangered Plant Boundary — EPB
- Known Soil Contamination: Area or Site
- Potential Soil Contamination: Area or Site

BUILDINGS AND OTHER CULTURE:

- Gas Pump Vent or U/G Tank Cap
- Sign — S
- Well — W
- Small Mine
- Foundation
- Area Outline
- Cemetery
- Building
- School
- Church
- Dam

HYDROLOGY:

- Stream or Body of Water
- Hydro, Pool or Reservoir
- Jurisdictional Stream — JS
- Buffer Zone 1 — BZ 1
- Buffer Zone 2 — BZ 2
- Flow Arrow
- Disappearing Stream
- Spring
- Wetland
- Proposed Lateral, Tail, Head Ditch — FLOW
- False Sump

RAILROADS:

- Standard Gauge — CSX TRANSPORTATION
- RR Signal Milepost — MILEPOST 35
- Switch — SWITCH
- RR Abandoned
- RR Dismantled

RIGHT OF WAY:

- Baseline Control Point
- Existing Right of Way Marker
- Existing Right of Way Line
- Proposed Right of Way Line — RW
- Proposed Right of Way Line with Iron Pin and Cap Marker — RW
- Proposed Right of Way Line with Concrete or Granite R/W Marker — RW
- Proposed Control of Access Line with Concrete C/A Marker — CA
- Existing Control of Access — CA
- Proposed Control of Access — CA
- Existing Easement Line — E
- Proposed Temporary Construction Easement — E
- Proposed Temporary Drainage Easement — TDE
- Proposed Permanent Drainage Easement — PDE
- Proposed Permanent Drainage / Utility Easement — DUE
- Proposed Permanent Utility Easement — PUE
- Proposed Temporary Utility Easement — TUE
- Proposed Aerial Utility Easement — AUE
- Proposed Permanent Easement with Iron Pin and Cap Marker

ROADS AND RELATED FEATURES:

- Existing Edge of Pavement
- Existing Curb
- Proposed Slope Stakes Cut — C
- Proposed Slope Stakes Fill — F
- Proposed Curb Ramp — CR
- Existing Metal Guardrail
- Proposed Guardrail
- Existing Cable Guiderail
- Proposed Cable Guiderail
- Equality Symbol
- Pavement Removal

VEGETATION:

- Single Tree
- Single Shrub
- Hedge
- Woods Line
- Orchard
- Vineyard — Vineyard

EXISTING STRUCTURES:

MAJOR:

- Bridge, Tunnel or Box Culvert — CONC
- Bridge Wing Wall, Head Wall and End Wall — CONC WW

MINOR:

- Head and End Wall — CONC HW
- Pipe Culvert
- Footbridge
- Drainage Box: Catch Basin, DI or JB — CB
- Paved Ditch Gutter
- Storm Sewer Manhole — S
- Storm Sewer — S

UTILITIES:

POWER:

- Existing Power Pole
- Proposed Power Pole
- Existing Joint Use Pole
- Proposed Joint Use Pole
- Power Manhole — P
- Power Line Tower
- Power Transformer
- U/G Power Cable Hand Hole
- H-Frame Pole
- Recorded U/G Power Line — P
- Designated U/G Power Line (S.U.E.*) — P

TELEPHONE:

- Existing Telephone Pole
- Proposed Telephone Pole
- Telephone Manhole — T
- Telephone Booth
- Telephone Pedestal — T
- Telephone Cell Tower
- U/G Telephone Cable Hand Hole — HH
- Recorded U/G Telephone Cable — T
- Designated U/G Telephone Cable (S.U.E.*) — T
- Recorded U/G Telephone Conduit — TC
- Designated U/G Telephone Conduit (S.U.E.*) — TC
- Recorded U/G Fiber Optics Cable — T FO
- Designated U/G Fiber Optics Cable (S.U.E.*) — T FO

WATER:

- Water Manhole — W
- Water Meter
- Water Valve
- Water Hydrant
- Recorded U/G Water Line — W
- Designated U/G Water Line (S.U.E.*) — W
- Above Ground Water Line — A/G Water

TV:

- TV Satellite Dish
- TV Pedestal — C
- TV Tower
- U/G TV Cable Hand Hole — HH
- Recorded U/G TV Cable — TV
- Designated U/G TV Cable (S.U.E.*) — TV
- Recorded U/G Fiber Optic Cable — TV FO
- Designated U/G Fiber Optic Cable (S.U.E.*) — TV FO

GAS:

- Gas Valve
- Gas Meter
- Recorded U/G Gas Line — G
- Designated U/G Gas Line (S.U.E.*) — G
- Above Ground Gas Line — A/G Gas

SANITARY SEWER:

- Sanitary Sewer Manhole
- Sanitary Sewer Cleanout
- U/G Sanitary Sewer Line — SS
- Above Ground Sanitary Sewer — A/G Sanitary Sewer
- Recorded SS Forced Main Line — FSS
- Designated SS Forced Main Line (S.U.E.*) — FSS

MISCELLANEOUS:

- Utility Pole
- Utility Pole with Base
- Utility Located Object
- Utility Traffic Signal Box — S
- Utility Unknown U/G Line — ?UTL
- U/G Tank; Water, Gas, Oil
- Underground Storage Tank, Approx. Loc. — UST
- A/G Tank; Water, Gas, Oil
- Geoenvironmental Boring
- U/G Test Hole (S.U.E.*)
- Abandoned According to Utility Records — AATUR
- End of Information — E.O.I.

PROJECT REFERENCE NO.	SHEET NO.
W52126	1-C
R/W SHEET NO.	
ROADWAY DESIGN ENGINEER	HYDRAULICS ENGINEER

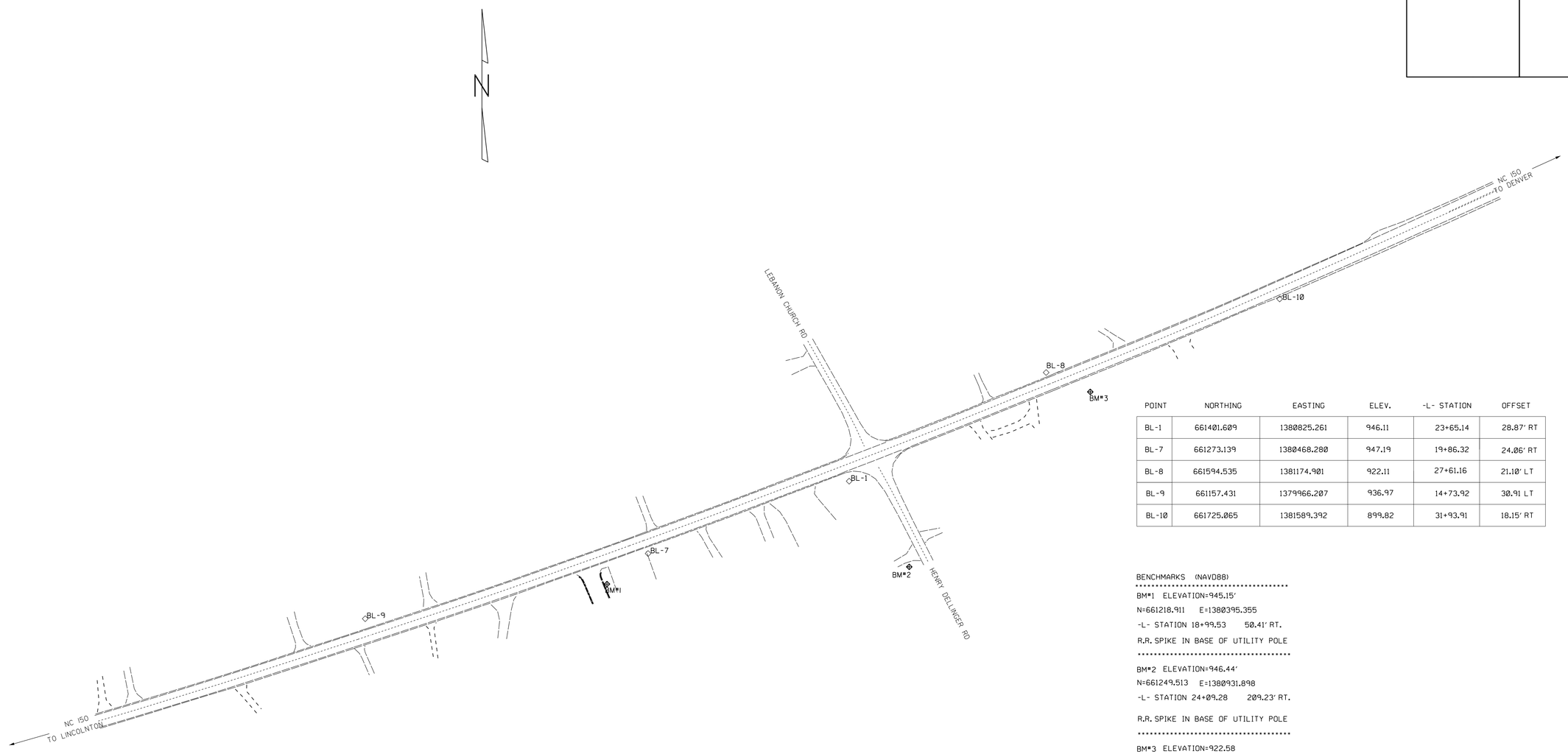

POINT	NORTHING	EASTING	ELEV.	-L- STATION	OFFSET
BL-1	661401.609	1380825.261	946.11	23+65.14	28.87' RT
BL-7	661273.139	1380468.280	947.19	19+86.32	24.06' RT
BL-8	661594.535	1381174.901	922.11	27+61.16	21.10' LT
BL-9	661157.431	1379966.207	936.97	14+73.92	30.91 LT
BL-10	661725.065	1381589.392	899.82	31+93.91	18.15' RT

BENCHMARKS (NAVD88)

BM#1 ELEVATION=945.15'

N=661218.911 E=1380395.355

-L- STATION 18+99.53 50.41' RT.

R.R. SPIKE IN BASE OF UTILITY POLE

BM#2 ELEVATION=946.44'

N=661249.513 E=1380931.898

-L- STATION 24+09.28 209.23' RT.

R.R. SPIKE IN BASE OF UTILITY POLE

BM#3 ELEVATION=922.58

N=661560.127 E=1381253.286

-L- STATION 28+20.93 40.18 RT.

R.R. SPIKE IN TWIN TRUNK HARDWOOD TREE

DATUM DESCRIPTION

THE LOCALIZED COORDINATE SYSTEM DEVELOPED FOR THIS PROJECT IS BASED ON THE STATE PLANE COORDINATES ESTABLISHED BY NCDOT FOR "BL-1"
WITH NAD 83/2011 STATE PLANE GRID COORDINATES OF
NORTHING: 541018.203(ft) EASTING: 1288695.751(ft)
ELEVATION: 1039.48(ft)
THE AVERAGE COMBINED GRID FACTOR USED ON THIS PROJECT (GROUND TO GRID) IS: 0.99984583
THE N.C. LAMBERT GRID BEARING AND LOCALIZED HORIZONTAL GROUND DISTANCE FROM "BL-1" TO -L- STATION 10+00.00 IS
S 72°15'35" W 1366.21'
ALL LINEAR DIMENSIONS ARE LOCALIZED HORIZONTAL DISTANCES
VERTICAL DATUM USED IS NAVD 88

8/17/99

30-SEP-2014 08:30
R:\Roadway\Proj\Lincoln\W-52126 Lebanon_NC150\Plansheets\NC150_SR1371_LS_1C.dgn
$$$$USERNAME$$$$

PROJECT REFERENCE NO.	SHEET NO.
W-5212G	2
R/W SHEET NO.	
ROADWAY DESIGN ENGINEER	HYDRAULICS ENGINEER

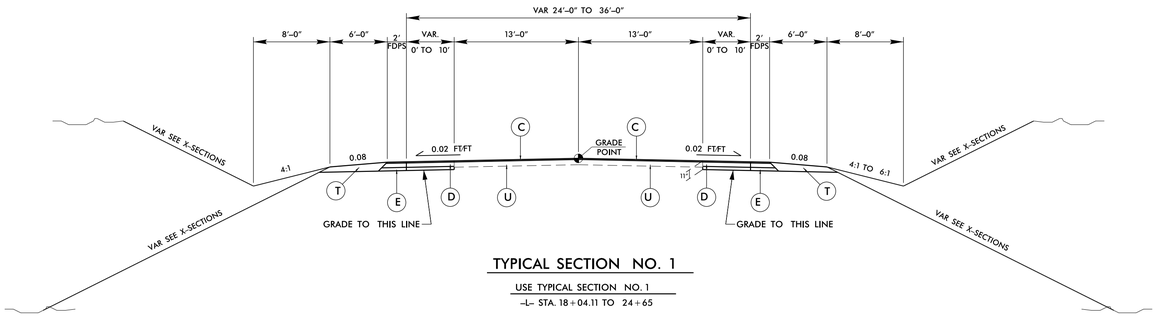

TYPICAL SECTION NO. 1

USE TYPICAL SECTION NO. 1

-L- STA. 18+04.11 TO 24+65

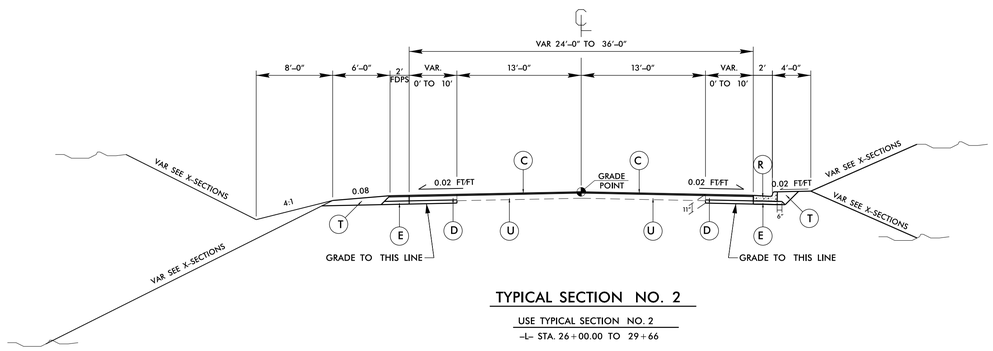

TYPICAL SECTION NO. 2

USE TYPICAL SECTION NO. 2

-L- STA. 26+00.00 TO 29+66

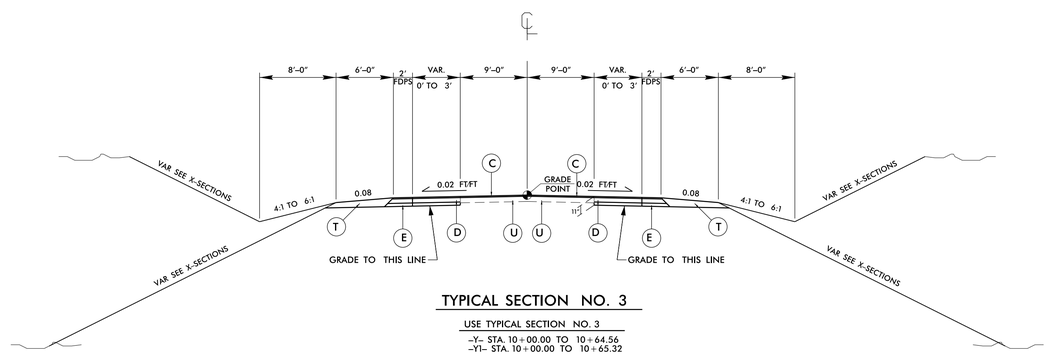

TYPICAL SECTION NO. 3

USE TYPICAL SECTION NO. 3

-Y- STA. 10+00.00 TO 10+64.56

-Y1- STA. 10+00.00 TO 10+65.32

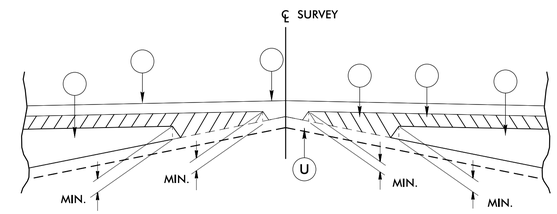

Detail Showing Method of Wedging

PAVEMENT SCHEDULE

FINAL PAVEMENT DESIGN

C	PROP. APPROX. 1 1/2" ASPHALT CONCRETE SURFACE COURSE TYPE S9.5B, AT AN AVERAGE RATE OF 168 LBS. PER SQ.YD.
D	PROP. APPROX. 5 1/2" ASPHALT CONCRETE INTERMEDIATE COURSE TYPE I19.0B, AT AN AVERAGE RATE OF 313.5 LBS. PER SQ.YD. FOR EACH OF 2 LIFTS
E	PROP. APPROX. 4" ASPHALT CONCRETE BASE COURSE TYPE B25.0B, AT AN AVERAGE RATE OF 456 LBS. PER SQ.YD.
R	2'-6" CONCRETE CURB AND GUTTER
T	EARTH MATERIAL
U	EXISTING PAVEMENT

NOTE: PAVEMENT EDGE SLOPES ARE 1:1 UNLESS SHOWN OTHERWISE.

8/17/99
30-SEP-2014 07:48
S:\DOC\Distrct 3\Lincoln\W-5212G Lebanon_NC150\Plansheets\NC150_SR1371_Rdy_typ_2.dgn
$$$$USERNAME$$$$

COMPUTED BY: ____BAL_____ DATE: 09/17/14___
CHECKED BY: BKS_____ DATE: 9-17-14___

PROJECT NO.	SHEET NO.
W-5212G	3A

STATE OF NORTH CAROLINA
DIVISION OF HIGHWAYS

SUMMARY OF EARTHWORK

Station	Station	Uncl. Excav.	Embank. +%	Borrow	Waste
18+04	23+53	803	44		759
24+66	30+09	871	960	89	
SUBTOTALS:		1674	1004	89	759
Loss Due to C&G		-84			-84
Waste in leau of Borrow				-89	-89
SUBTOTALS:		1590	1004	0	586
PROJECT TOTALS:		1590	1004		586
PROJECT TOTALS:		1590	1004		586
GRAND TOTALS:		1590	1004		586
SAY:		**1600**			600

Note: Earthwork quantities are calculated by the Roadway Design Unit. These earthwork quantities are based in part on subsurface data provided by the Geotechnical Engineering Unit.

SHOULDER BORROW = 200 CUBIC YARDS

RD261649

COMPUTED BY: BKS DATE: 3/17/2014

CHECKED BY: DATE:

NORTH CAROLINA DEPARTMENT OF TRANSPORTATION
DIVISION OF HIGHWAYS

PROJECT NO.	SHEET NO.
W-5212G	3-B

Note: Invert Elevations indicated are for Bid Purposes only and shall not be used for project construction stakeout. See "Standard Specifications For Roads and Structures, Section 300-5".

LIST OF PIPES, ENDWALLS, ETC. (FOR PIPES 48 INCHES & UNDER)

| STATION | LOCATION (LT, RT, OR CL) | STRUCTURE NO. FROM | STRUCTURE NO. TO | TOP ELEVATION | INVERT ELEVATION | INVERT ELEVATION | SLOPE CRITICAL | SIDE DRAIN PIPE (RCP, CSP, CAAP, HDPE, or PVC) 12" | 15" | 18" | 24" | 30" | 36" | 42" | 48" | DO NOT USE RCP | DO NOT USE CSP | DO NOT USE CAAP | DO NOT USE HDPE | C.S.P. 12" | 15" | 18" | 24" | 30" | 36" | 42" | 48" | R.C. PIPE CLASS III 12" | 15" | 18" | 24" | 30" | 36" | 42" | 48" | R.C. PIPE CLASS IV 12" | 15" | 18" | 24" | 30" | 36" | 42" | 48" | *** R.C. PIPE (CLASS V) | **** RC PIPE CULVERTS, CONTRACTOR DESIGN | **** RC PIPE CULVERTS, CONTRACTOR DESIGN | 15" SIDE DRAIN PIPE | 18" SIDE DRAIN PIPE | ENDWALLS STD. 838.01 838.11 OR STD. 838.80 (UNLESS NOTED OTHERWISE) CU. YARDS | QUANTITIES FOR DRAINAGE STRUCTURES "TOTAL L.F. FOR PAY QUANTITY SHALL BE COL. A + (1.3 X COL. B)" PER EACH (0' THRU 5.0') | LIN. FT. A 5.0' THRU 10.0' | LIN. FT. B 10.0' AND ABOVE | C.B. STD. 840.01 OR STD. 840.02 | FRAME, GRATES, AND HOOD STANDARD 840.03 TYPE OF GRATE E | F | G | CONCRETE TRANSITIONAL SECTION DROP INLET | CATCH BASIN | D.I. STD. 840.14 OR STD. 840.15 | D.I. FRAME AND GRATE STD. 840.16 | G.D.I. TYPE "A" STD. 840.17 OR 840.26 | G.D.I. TYPE "B" STD. 840.18 OR 840.27 | G.D.I. TYPE "D" STD. 840.19 OR 840.28 | G.D.I. FRAME WITH GRATE STD. 840.20 | G.D.I. FRAME WITH TWO GRATES STD. 840.22 | G.D.I. IN S.) FRAME WITH GRATE STD. 840.24 | G.D.I. IN S.) FRAME WITH TWO GRATES STD. 840.24 | J.B. STD. 840.31 OR 840.32 | | | | | SIDE DRAIN PIPE ELBOWS NO. & SIZE | CONC. & BRICK PIPE PLUG, C.Y. STD. 840.71 | CONC. COLLARS CL. "B" C.Y. STD. 840.72 | PIPE REMOVAL LIN. FT. | REMARKS |
|---|---|---

STATE OF NORTH CAROLINA
DIVISION OF HIGHWAYS

PROPERTY OWNER INDEX

PARCEL NO.	PROPERTY OWNERS NAMES	PLANSHEET
1	JERRY R. & WINNIFRED LAWING	4
2	RODNEY & CREATHA WALKER	4
3	JERRY R. & WINNIFRED LAWING	4
4	AVONEAL BALLARD	4, 5
5	DARRELL & FLORA LAWING	5
6	CRYSTAL & PAUL NEAL	5
7	KENNETH & COLLEEN REINHARDT	5
8	DARRELL & JEWEL BEAL	5
9	RESTORNATION LLC	4
10	GERALD HENLEY	4
11	GILES HENLEY	4
12	GERALD HENLEY	4
13	AVONEAL BALLARD	5
14	DARRELL & FLORA LAWING	5
15	STEVE & CATHY MOORE	5

5/28/99
30-SEP-2014 08:22
S:\UNITS\Districts\Lincoln\W-5212G Lebanon_NC150\Plansheets\NC150_Rdy_sum_3C.dgn
$$$$USERNAME$$$$

PROJECT REFERENCE NO.	SHEET NO.
W-5212G	4
R/W SHEET NO.	
ROADWAY DESIGN ENGINEER	HYDRAULICS ENGINEER

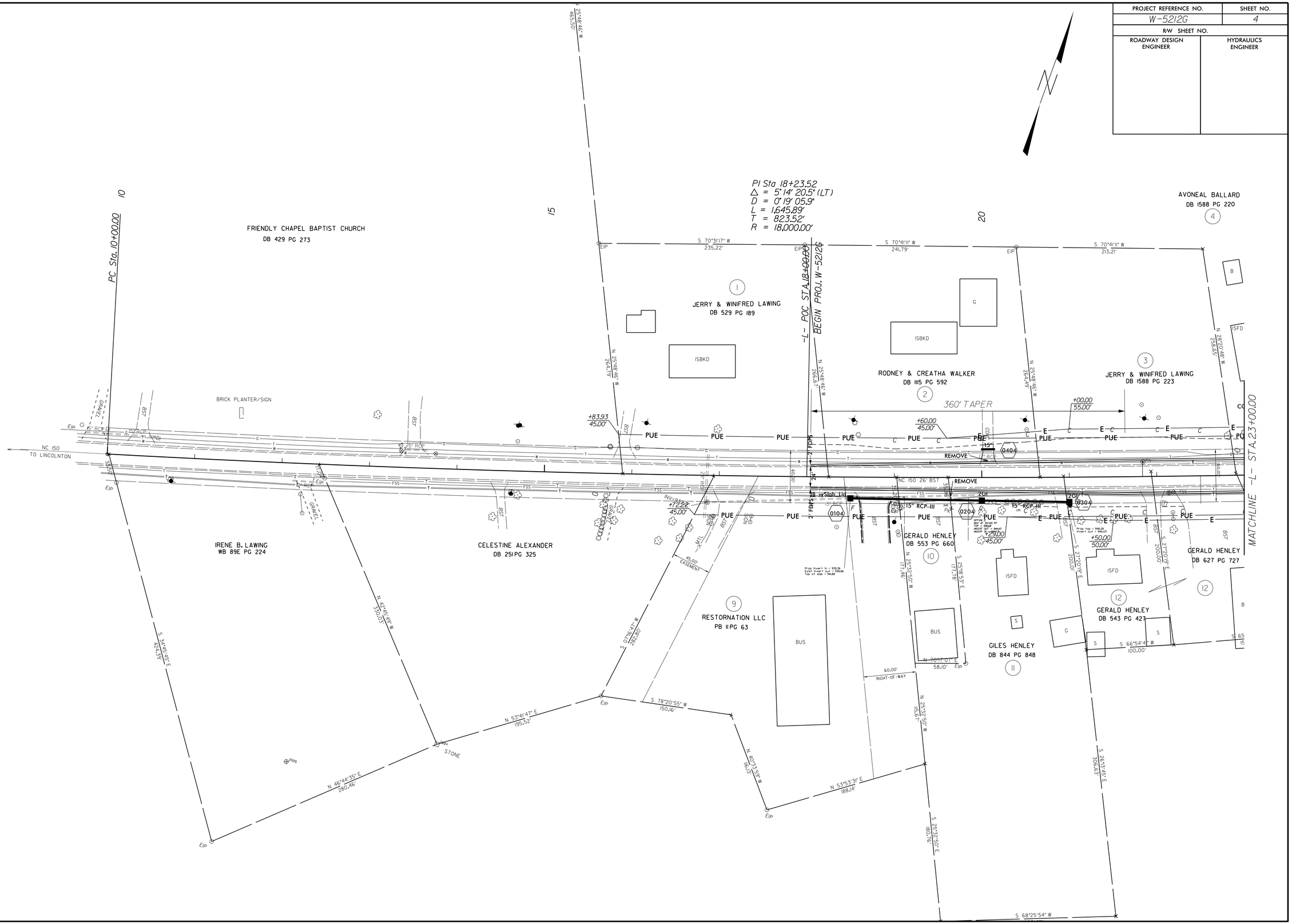

8/17/99

14-NOV-2014 14:03
S:\DDC\Distrib\Lincoln\W-5212G Lebanon_NC150\Plansheets\NC150_SR1371_Rdy_psh_4.dgn
$$$$USERNAME$$$$

PROJECT REFERENCE NO.	SHEET NO.
W-5212G	5
R/W SHEET NO.	
ROADWAY DESIGN ENGINEER	HYDRAULICS ENGINEER

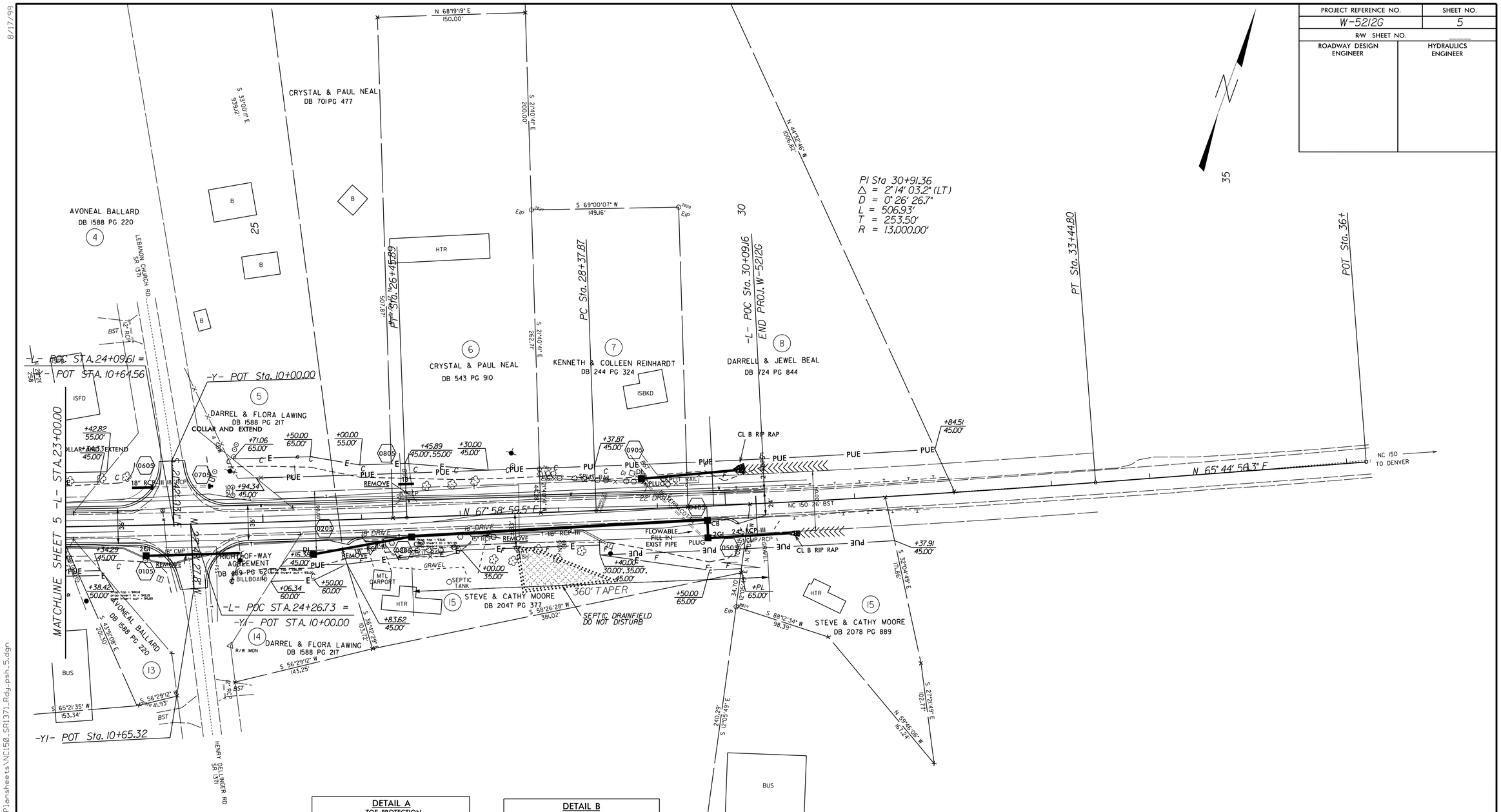

DETAIL A
TOE PROTECTION
(Not to Scale)

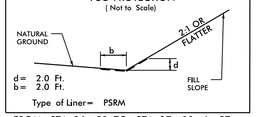

d = 2.0 Ft.
b = 2.0 Ft.

Type of Liner = PSRM

FROM STA. 26+50 TO STA. 27+00 -L- RT

DETAIL B
STANDARD 'V' DITCH
(Not to Scale)

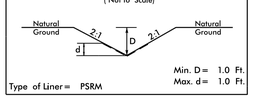

Min. D = 1.0 Ft.
Max. d = 1.0 Ft.

Type of Liner = PSRM

FROM STA. 30+30 TO STA. 30+75 -L- RT
FROM STA. 29+80 TO STA. 30+75 -L- RT

DETAIL C
CUT DITCH
(Not to Scale)

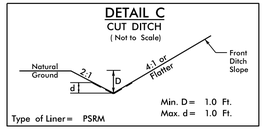

Min. D = 1.0 Ft.
Max. d = 1.0 Ft.

Type of Liner = PSRM

FROM STA. 26+50 TO STA. 28+75 -L- LT

14-NOV-2014 14:08
S:\UDC\District 3\Lincoln\W-5212G Lebanon_NC150\Plansheets\NC150_SR1371_Rdy_psh_5.dgn
(Scaled)

STATE OF NORTH CAROLINA
DIVISION OF HIGHWAYS

TRANSPORTATION MANAGEMENT PLAN

LINCOLN COUNTY

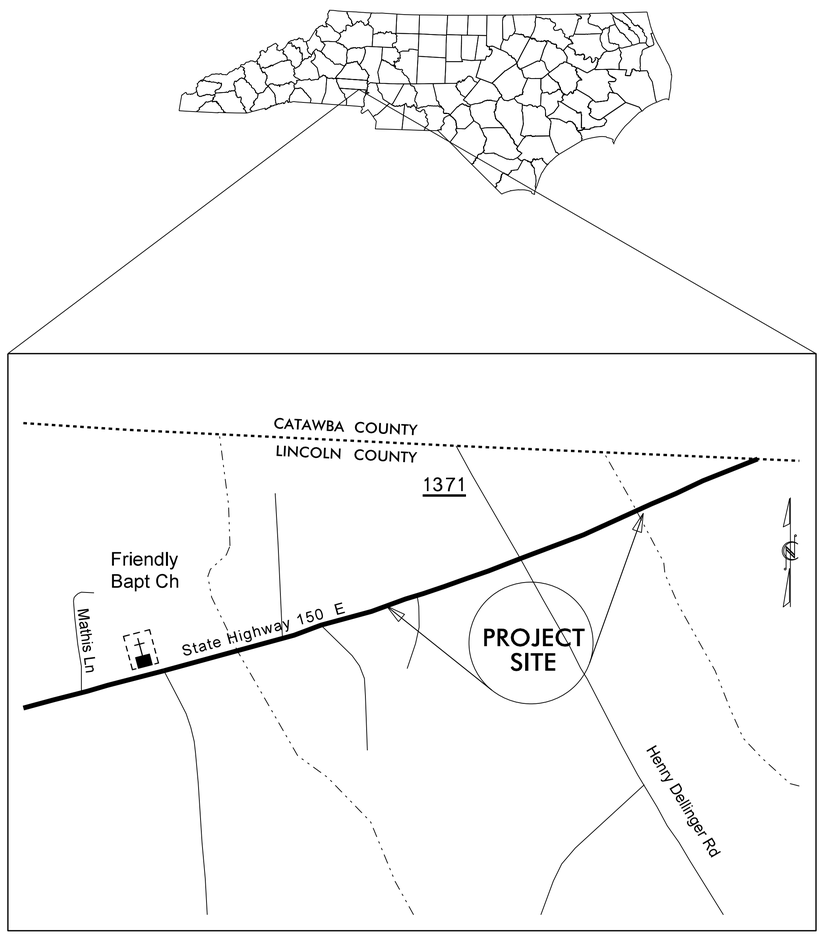

INDEX OF SHEETS

SHEET NO.	TITLE
TMP-1	TITLE SHEET, VICINITY MAP AND INDEX OF SHEETS
TMP-1A	LIST OF APPLICABLE ROADWAY STANDARD DRAWINGS, AND LEGEND
TMP-1B	TRANSPORTATION OPERATIONS PLAN: (MANAGEMENT STRATEGIES, GENERAL NOTES AND LOCAL NOTES)
TMP-2	PHASING NOTES
TMP-3	PHASING II DETAIL
TMP-4	PHASING III DETAIL
TMP-5	PHASING III DETAIL CONTINUED
PMP-1	PAVEMENT MARKING SCHEDULE & PLAN

SHEET NO.
TMP-1

W-5212G

TIP PROJECT:

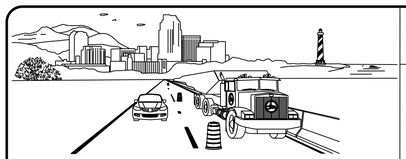

WORK ZONE SAFETY & MOBILITY
"from the MOUNTAINS to the COAST"

N.C.D.O.T. WORK ZONE TRAFFIC CONTROL
1561 MAIL SERVICE CENTER (MSC) RALEIGH, NC 27699-1561
750 N. GREENFIELD PARKWAY, GARNER, NC 27529 (DELIVERY)
PHONE: (919) 773-2800 FAX: (919) 771-2745

PLAN PREPARED BY DIVISION 12 DDC UNIT

DIVISION OF HIGHWAYS · STATE OF NORTH CAROLINA · DEPARTMENT OF TRANSPORTATION · WORK ZONE TRAFFIC CONTROL

APPROVED:
DATE:
SEAL

13-NOV-2014 07:45
\\DOT\DFSROOT01\GROUPS-Div12CC\DDC\District 3\Lincoln\W-5212G Lebanon_NC150\Plansheets\Traffic Control Plan\W5212G_TC_TMP_1.dgn
bksowell AT D12CAD2TO832

PROJ. REFERENCE NO.	SHEET NO.
W-5212G	TMP-1A

ROADWAY STANDARD DRAWINGS

THE FOLLOWING ROADWAY STANDARDS AS SHOWN IN "ROADWAY STANDARD DRAWINGS" - PROJECT SERVICES UNIT - N.C. DEPARTMENT OF TRANSPORTATION - RALEIGH, N.C., DATED JANUARY 2012 ARE APPLICABLE TO THIS PROJECT AND BY REFERENCE HEREBY ARE CONSIDERED A PART OF THESE PLANS:

STD. NO.	TITLE
1101.01	WORK ZONE ADVANCE WARNING SIGNS
1101.02	TEMPORARY LANE CLOSURES
1101.03	TEMPORARY ROAD CLOSURES
1101.04	TEMPORARY SHOULDER CLOSURES
1101.05	WORK ZONE VEHICLE ACCESSES
1101.06	WARNING SIGNS FOR BLASTING ZONES
1101.11	TRAFFIC CONTROL DESIGN TABLES
1110.01	STATIONARY WORK ZONE SIGNS
1110.02	PORTABLE WORK ZONE SIGNS
1115.01	FLASHING ARROW BOARDS
1130.01	DRUM
1135.01	CONES
1145.01	BARRICADES
1150.01	FLAGGING DEVICES
1160.01	TEMPORARY CRASH CUSHION
1165.01	WORK VEHICLE LIGHTING SYSTEMS AND TMA DELINEATION
1170.01	POSITIVE PROTECTION
1180.01	SKINNY-DRUM
1205.01	PAVEMENT MARKINGS - LINE TYPES AND OFFSETS
1205.02	PAVEMENT MARKINGS - TWO-LANE AND MULTI-LANE ROADWAYS
1205.03	PAVEMENT MARKINGS - EXITS AND ENTRANCE RAMPS
1205.04	PAVEMENT MARKINGS - INTERSECTIONS
1205.05	PAVEMENT MARKINGS - TURN LANES
1205.06	PAVEMENT MARKINGS - LANE DROPS
1205.07	PAVEMENT MARKINGS - PEDESTRIAN CROSSWALKS
1205.08	PAVEMENT MARKINGS - SYMBOLS AND WORD MESSAGES
1205.09	PAVEMENT MARKINGS - PAINTED ISLANDS
1205.10	PAVEMENT MARKINGS - SCHOOL AREAS
1205.11	PAVEMENT MARKINGS - RAILROAD CROSSINGS
1205.12	PAVEMENT MARKINGS - BRIDGES
1205.13	PAVEMENT MARKINGS - LANE REDUCTIONS
1250.01	RAISED PAVEMENT MARKERS - INSTALLATION SPACING
1251.01	RAISED PAVEMENT MARKERS - PERMANENT AND TEMPORARY
1261.01	GUARDRAIL AND BARRIER DELINEATORS - INSTALLATION SPACING
1261.02	GUARDRAIL AND BARRIER DELINEATORS - TYPES AND MOUNTING
1262.01	GUARDRAIL END DELINEATION
1264.01	OBJECT MARKERS - TYPES
1264.02	OBJECT MARKERS - INSTALLATION

LEGEND

GENERAL

DIRECTION OF TRAFFIC FLOW

EXIST. PVMT.

NORTH ARROW

PROPOSED PVMT.

WORK AREA

REMOVAL

PAVEMENT MARKINGS

EXISTING LINES

TEMPORARY LINES

TRAFFIC CONTROL DEVICES

BARRICADE (TYPE III)

CONE

DRUM SKINNY DRUM TUBULAR MARKER

TEMPORARY CRASH CUSHION

FLASHING ARROW BOARD

FLAGGER

LAW ENFORCEMENT

TRUCK MOUNTED ATTENUATOR (TMA)

CHANGEABLE MESSAGE SIGN

TEMPORARY SIGNING

PORTABLE SIGN

STATIONARY SIGN

STATIONARY OR PORTABLE SIGN

PAVEMENT MARKERS

CRYSTAL/CRYSTAL

CRYSTAL/RED

YELLOW/YELLOW

PAVEMENT MARKING SYMBOLS

PAVEMENT MARKING SYMBOLS

APPROVED: _____ DATE: _____

SEAL

DIVISION OF HIGHWAYS · STATE OF NORTH CAROLINA · DEPARTMENT OF TRANSPORTATION · WORK ZONE TRAFFIC CONTROL

ROADWAY STANDARD DRAWINGS & LEGEND

13-NOV-2014 07:49
\\DOT\DFSROOT01\GROUPS-Divi2CC\DDC\District 3\Lincoln\W-5212G Lebanon_NC150\Plansheets\Traffic ControlPlan\W5212G_TC_TMP_1-A.dgn
bksowell AT DI2CAD270892

PROJ. REFERENCE NO.	SHEET NO.
W-5212G	TMP-1B

GENERAL NOTES

CHANGES MAY BE REQUIRED WHEN PHYSICAL DIMENSIONS IN THE DETAIL DRAWINGS, STANDARD DETAILS, AND ROADWAY DETAILS ARE NOT ATTAINABLE TO MEET FIELD CONDITIONS OR RESULT IN DUPLICATE OR UNDESIRED OVERLAPPING OF DEVICES. MODIFICATION MAY INCLUDE: MOVING, SUPPLEMENTING, COVERING, OR REMOVAL OF DEVICES AS DIRECTED BY THE ENGINEER.

THE FOLLOWING GENERAL NOTES APPLY AT ALL TIMES FOR THE DURATION OF THE CONSTRUCTION PROJECT EXCEPT WHEN OTHERWISE NOTED IN THE PLAN OR DIRECTED BY THE ENGINEER.

TIME RESTRICTIONS

A) DO NOT CLOSE OR NARROW TRAVEL LANES DURING HOLIDAYS AND SPECIAL EVENTS AS FOLLOWS:

ROAD NAME

NC 150 or SR 1371

HOLIDAY

1. FOR ANY UNEXPECTED OCCURRENCE THAT CREATES UNUSUALLY HIGH TRAFFIC VOLUMES, AS DIRECTED BY THE ENGINEER.

2. FOR NEW YEAR'S, BETWEEN THE HOURS OF 5:00 P.M. DECEMBER 31st TO 6:00 A.M. JANUARY 2ND. IF NEW YEAR'S DAY IS ON A FRIDAY, SATURDAY, SUNDAY, OR MONDAY THEN UNTIL 6:00 A.M. THE FOLLOWING TUESDAY.

3. FOR EASTER, BETWEEN THE HOURS OF 5:00 P.M. THURSDAY AND 6:00 A.M. MONDAY.

4. FOR MEMORIAL DAY, BETWEEN THE HOURS OF 5:00 P.M. FRIDAY TO 6:00 A.M. TUESDAY.

5. FOR INDEPENDENCE DAY, BETWEEN THE HOURS OF 5:00 P.M. THE DAY BEFORE INDEPENDENCE DAY AND 6:00 A.M. THE DAY AFTER INDEPENDENCE DAY.

   IF INDEPENDENCE DAY IS ON A FRIDAY, SATURDAY, SUNDAY OR MONDAY THEN BETWEEN THE HOURS OF 5:00 P.M. THE THURSDAY BEFORE INDEPENDENCE DAY AND 6:00 A.M. THE TUESDAY AFTER INDEPENDENCE DAY.

6. FOR LABOR DAY, BETWEEN THE HOURS OF 5:00 P.M. FRIDAY AND 6:00 A.M. TUESDAY.

7. FOR THANKSGIVING DAY, BETWEEN THE HOURS OF 5:00 P.M. TUESDAY TO 6:00 A.M. MONDAY.

8. FOR CHRISTMAS, BETWEEN THE HOURS OF 5:00 P.M. THE FRIDAY BEFORE THE WEEK OF CHRISTMAS DAY AND 6:00 A.M. THE FOLLOWING TUESDAY AFTER THE WEEK OF CHRISTMAS.

B) DO NOT CONDUCT ANY HAULING OPERATIONS AGAINST THE FLOW OF TRAFFIC OF AN OPEN TRAVELWAY UNLESS THE HAULING OPERATION IS PROTECTED BY BARRIER OR GUARDRAIL OR AS DIRECTED BY THE ENGINEER.

LANE AND SHOULDER CLOSURE REQUIREMENTS

C) REMOVE LANE CLOSURE DEVICES FROM THE LANE WHEN WORK IS NOT BEING PERFORMED BEHIND THE LANE CLOSURE OR WHEN A LANE CLOSURE IS NO LONGER NEEDED OR AS DIRECTED BY THE ENGINEER.

D) WHEN PERSONNEL AND/OR EQUIPMENT ARE WORKING WITHIN 15 FT OF AN OPEN TRAVEL LANE, CLOSE THE NEAREST OPEN SHOULDER USING ROADWAY STANDARD DRAWING NO. 1101.04 UNLESS THE WORK AREA IS PROTECTED BY BARRIER OR GUARDRAIL OR A LANE CLOSURE IS INSTALLED.

E) WHEN PERSONNEL AND/OR EQUIPMENT ARE WORKING ON THE SHOULDER ADJACENT TO AN UNDIVIDED FACILITY AND WITHIN 5 FT OF AN OPEN TRAVEL LANE, CLOSE THE NEAREST OPEN TRAVEL LANE USING ROADWAY STANDARD DRAWING NO. 1101.02 UNLESS THE WORK AREA IS PROTECTED BY BARRIER OR GUARDRAIL.

WHEN PERSONNEL AND/OR EQUIPMENT ARE WORKING ON THE SHOULDER ADJACENT TO A DIVIDED FACILITY AND WITHIN 10 FT OF AN OPEN TRAVEL LANE, CLOSE THE NEAREST OPEN TRAVEL LANE USING ROADWAY STANDARD DRAWING NO. 1101.02 UNLESS THE WORK AREA IS PROTECTED BY BARRIER OR GUARDRAIL.

F) WHEN PERSONNEL AND/OR EQUIPMENT ARE WORKING WITHIN A LANE OF TRAVEL OF AN UNDIVIDED OR DIVIDED FACILITY, CLOSE THE LANE ACCORDING TO THE TRAFFIC CONTROL PLANS, ROADWAY STANDARD DRAWINGS, OR AS DIRECTED BY THE ENGINEER. CONDUCT THE WORK SO THAT ALL PERSONNEL AND/OR EQUIPMENT REMAIN WITHIN THE CLOSED TRAVEL LANE.

G) DO NOT WORK SIMULTANEOUSLY WITHIN 15 FT ON BOTH SIDES OF AN OPEN TRAVELWAY, RAMP, OR LOOP WITHIN THE SAME LOCATION UNLESS PROTECTED WITH GUARDRAIL OR BARRIER.

H) DO NOT INSTALL MORE THAN ONE LANE CLOSURE IN ANY ONE DIRECTION ON NC 150.

PAVEMENT EDGE DROP OFF REQUIREMENTS

I) BACKFILL AT A 6:1 SLOPE UP TO THE EDGE AND ELEVATION OF EXISTING PAVEMENT IN AREAS ADJACENT TO AN OPENED TRAVEL LANE THAT HAS AN EDGE OF PAVEMENT DROP-OFF AS FOLLOWS:

BACKFILL DROP-OFFS THAT EXCEED 2 INCHES ON ROADWAYS WITH POSTED SPEED LIMITS OF 45 MPH OR GREATER.

BACKFILL DROP-OFFS THAT EXCEED 3 INCHES ON ROADWAYS WITH POSTED SPEED LIMITS LESS THAN 45 MPH.

BACKFILL WITH SUITABLE COMPACTED MATERIAL, AS APPROVED BY THE ENGINEER, AT NO EXPENSE TO THE DEPARTMENT.

TRAFFIC PATTERN ALTERATIONS

J) NOTIFY THE ENGINEER TWENTY ONE (21) CALENDAR DAYS PRIOR TO ANY TRAFFIC PATTERN ALTERATION.

SIGNING

K) INSTALL ADVANCE WORK ZONE WARNING SIGNS WHEN WORK IS WITHIN 40 FT FROM THE EDGE OF TRAVEL LANE AND NO MORE THAN THREE (3) DAYS PRIOR TO THE BEGINNING OF CONSTRUCTION.

L) ENSURE ALL NECESSARY SIGNING IS IN PLACE PRIOR TO ALTERING ANY TRAFFIC PATTERN.

TRAFFIC CONTROL DEVICES

M) WHEN LANE CLOSURES ARE NOT IN EFFECT SPACE CHANNELIZING DEVICES IN WORK AREAS NO GREATER IN FEET THAN TWICE THE POSTED SPEED LIMIT (MPH) EXCEPT, 10 FT ON-CENTER IN RADII, AND 3 FT OFF THE EDGE OF AN OPEN TRAVELWAY. REFER TO STANDARD SPECIFICATIONS FOR ROADS AND STRUCTURES SECTIONS 1130 (DRUMS), 1135 (CONES) AND 1180 (SKINNY DRUMS) FOR ADDITIONAL REQUIREMENTS.

PAVEMENT MARKINGS AND MARKERS

N) TIE PROPOSED PAVEMENT MARKING LINES TO EXISTING PAVEMENT MARKING LINES.

O) REMOVE/REPLACE ANY CONFLICTING/DAMAGED PAVEMENT MARKINGS AND MARKERS BY THE END OF EACH DAY'S OPERATION.

LOCAL NOTES

MAINTAIN DRIVEWAY ACCESS TO ALL PARCELS DURING CONSTRUCTION.

TRAFFIC SHALL BE MAINTAINED DURING OPEN CUTTING OPERATIONS FOR UTILITY CONSTRUCTION. ONLY ONE LANE MAY BE CLOSED AT ANY GIVEN TIME.

MANAGEMENT STRATEGIES

NC 150 (-L-) WILL BE CONSTRUCTED USING TEMPORARY LANE CLOSURES AS NEEDED.

APPROVED:_____ DATE:_____

SEAL

DIVISION OF HIGHWAYS · STATE OF NORTH CAROLINA · DEPARTMENT OF TRANSPORTATION · WORK ZONE TRAFFIC CONTROL

TRANSPORTATION OPERATIONS PLAN

13-NOV-2014 08:22
S:\DOC\District 3\Lincoln\W-5212G Lebanon_NC150\Plansheets\Traffic ControlPlan\W5212G_TC_TMP_1B.dgn
$$$$USERNAME$$$$

PROJ. REFERENCE NO.	SHEET NO.
W-5212G	TMP-2

NOTE: THIS PROJECT IS DIVIDED INTO FOUR (4) PHASES. IN PHASE I THE CONTRACTOR WILL RELOCATE EXISTING UTILITIES AS SHOWN ON THE UTILITY CONSTRUCTION PLANS. DURING THIS PHASE THERE WILL BE OPEN CUTTING OF THE EXITSTING ROADWAY. THE CONTRACTOR SHALL MAINTAIN TRAFFIC DURING OPEN CUTTING THROUGH THE USE OF LANE CLOSURES AND FLAGGERS.

IN PHASE II THE CONTRACTOR WILL GRADE FOR WIDENING, INSTALL DRAINAGE STRUCTURES, AND PAVE ON -L- LT. ONLY

IN PHASE III THE CONTRACTOR WILL GRADE FOR WIDENING ON -L- RT., INSTALL DRAINAGE STRUCTURES, AND PAVE. UPON COMPLETION OF WORK ON THIS SIDE, THE CONTRACTOR SHALL PLACE THE FINAL SURFACE LAYER AND INSTALL PAVEMENT MARKINGS.

IN PHASE IV THE CONTRACTOR WILL INSTALL THE FLASHING SIGNAL AND DETECTOR LOOPS IN THE INTERSECTION.

DURING ALL PHASES OF CONSTRUCTION MAINTAIN INGRESS AND EGRESS TO ALL RESIDENTIAL DRIVES LOCATED WITHIN THE PROJECT LIMITS.

PHASE I

STEP 1: PRIOR TO BEGINNING ANY CONSTRUCTION ACTIVITY, INSTALL WORK ZONE ADVANCED WARNING SIGNS AS SHOWN IN NCDOT STANDARD DRAWING 1101.01 SHEET 3 OF 3.

STEP 2: AS REQUIRED USE NCDOT STANDARD DRAWING STD. 1101.02 SHEET 1 OF 15 FOR TRAFFIC CONTROL DURING THE FOLLOWING OPERATIONS.

STEP 3: USING UTILITY RELOCATION PLANS MOVE EXISTING UTILITIES TO LOCATIONS AS SHOWN.

STEP 4: SEED AND MULCH DISTURBED AREAS AS SHOWN IN UTILITY RELOCATION PLANS.

PHASE II

USING NCDOT STANDARD DRAWING 1101.02 SHEET 1 OF 15 AND ADHERING TO THE DAY AND TIME RESTRICTIONS IN THE CONTRACT AND THE TRAFFIC CONTROL PLAN GENERAL NOTES, CONSTRUCT -L- AND -Y- UP TO BUT NOT INCLUDING THE FINAL LAYER OF SURFACE COURSE AT THE FOLLOWING LOCATIONS:

-L- LT. FROM STA. 18+00.00 TO STA. 30+09.15
-Y- FROM STA. 10+00.00 TO STA. 10+64.56

PHASE III

STEP 1: USING NCDOT STANDARD DRAWING 1101.02 SHEET 1 OF 15 AND ADHERING TO THE DAY AND TIME RESTRICTIONS IN THE CONTRACT AND THE TRAFFIC CONTROL PLAN GENERAL NOTES, CONSTRUCT -L- AND -Y- UP TO BUT NOT INCLUDING THE FINAL LAYER OF SURFACE COURSE AT THE FOLLOWING LOCATIONS:

-L- RT. FROM STA. 18+00.00 TO STA. 30+09.15
-Y1- FROM STA. 10+00.00 TO STA. 10+65.32

STEP 2: USING NCDOT STANDARD DRAWING 1101.02 SHEET 1 OF 15 AND ADHERING TO THE DAY AND TIME RESTRICTIONS IN THE CONTRACT AND THE TRAFFIC CONTROL PLAN GENERAL NOTES, PLACE THE FINAL LAYER OF SURFACE COURSE THROUGHOUT THE PROJECT LIMITS ON ALL PROPOSED ROADWAYS.

STEP 3: PLACE THE FINAL PAVEMENT MARKINGS AND MARKERS ON -L-, -Y-, AND -Y1- AS SHOWN ON THE PAVEMENT MARKING PLANS. REFER TO SIGNAL PLANS FOR FINAL STOP BAR LOCATION.

PHASE IV

USING NCDOT STANDARD DRAWING 1101.02 SHEET 1 OF 15 AND ADHERING TO THE DAY AND TIME RESTRICTIONS IN THE CONTRACT AND THE TRAFFIC CONTROL PLAN GENERAL NOTES, INSTALL FLASHING SIGNAL AND DETECTION LOOPS ACCORDING TO SIGNAL PLANS.

APPROVED:_____ DATE:_____

SEAL

DIVISION OF HIGHWAYS • STATE OF NORTH CAROLINA • DEPARTMENT OF TRANSPORTATION • WORK ZONE TRAFFIC CONTROL

PHASING NOTES

18-NOV-2014 15:03
\\DOT\DFSROOT\GROUPS-Div12CC\DDC\District 3\Lincoln\W-5212G Lebanon_NC150\Plansheets\Traffic ControlPlan\W5212G_TC_TMP_2.dgn
bkSowell AT DZCAD270892

PROJ. REFERENCE NO.	SHEET NO.
W-5212G	TMP-3

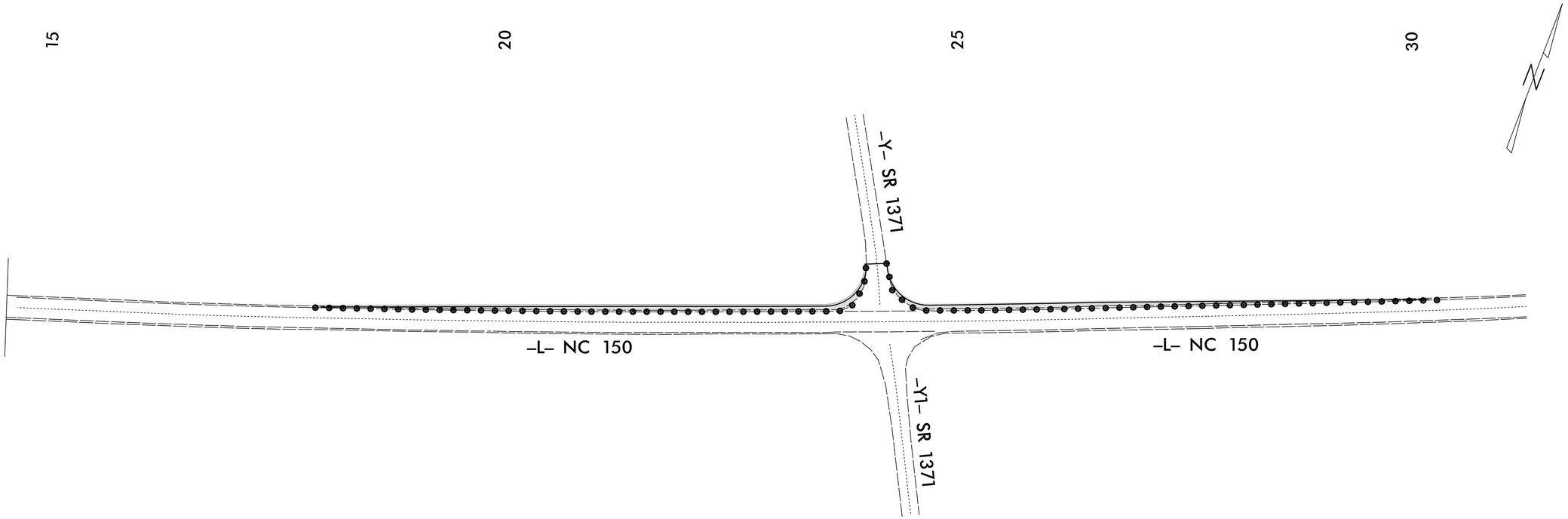

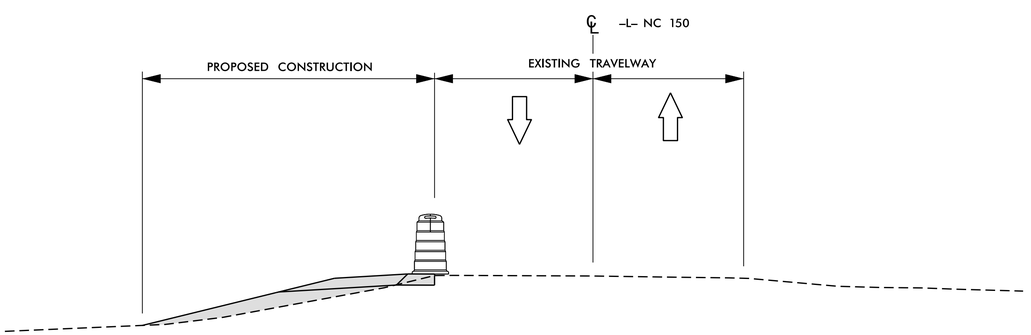

-L- STA. 18+00 ± TO 19+00 ±

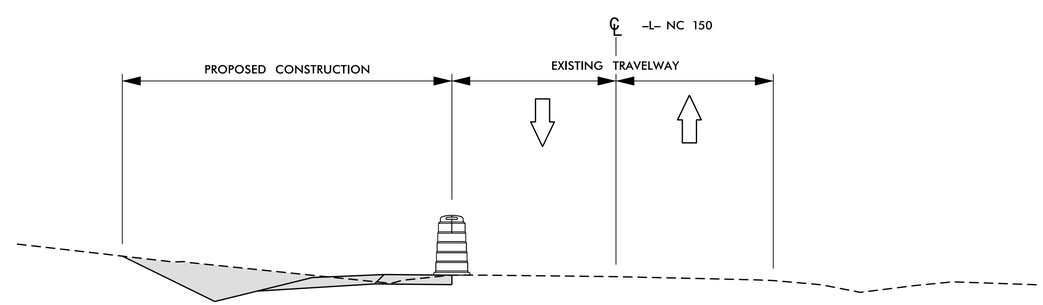

-L- STA. 19+00 ± TO 30+10 ±

PROPOSED CONSTRUCTION

APPROVED:_____ DATE:_____

SEAL

DIVISION OF HIGHWAYS
STATE OF NORTH CAROLINA
DEPARTMENT OF TRANSPORTATION
WORK ZONE TRAFFIC CONTROL

PHASE II DETAIL

13-NOV-2014 08:06
\\DOT\DFSROOTGROUPS-Div12CC\DDC\District 3\Lincoln\W-5212G Lebanon_NC150\Plansheets\Traffic ControlPlan\W5212G_TC_TMP_3.dgn
bksowell AT D12CAD270892

PROJ. REFERENCE NO.	SHEET NO.
W-5212G	TMP-4

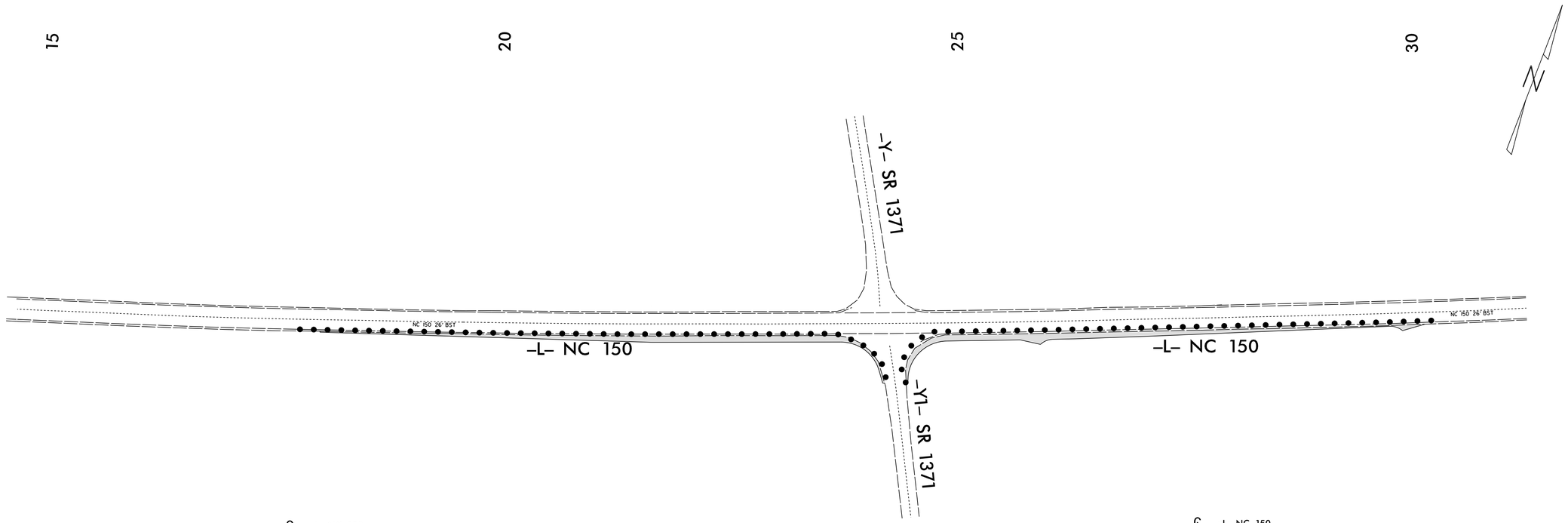

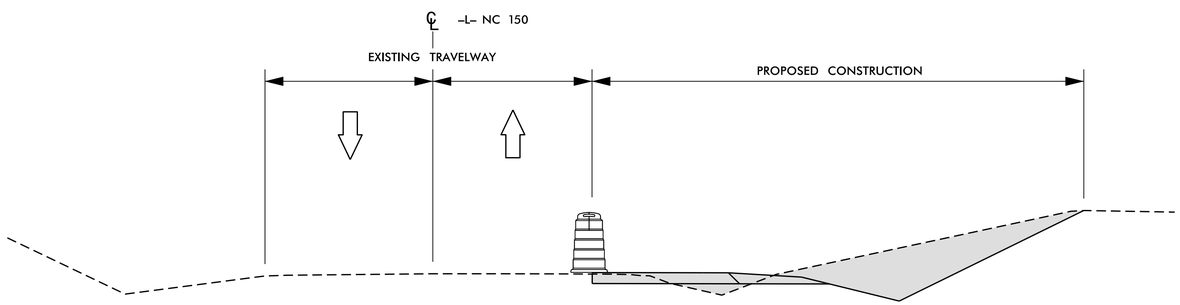

-L- STA. 18+00 ± TO 26+00 ±
-L- STA. 26+69 ± TO 30+10 ±

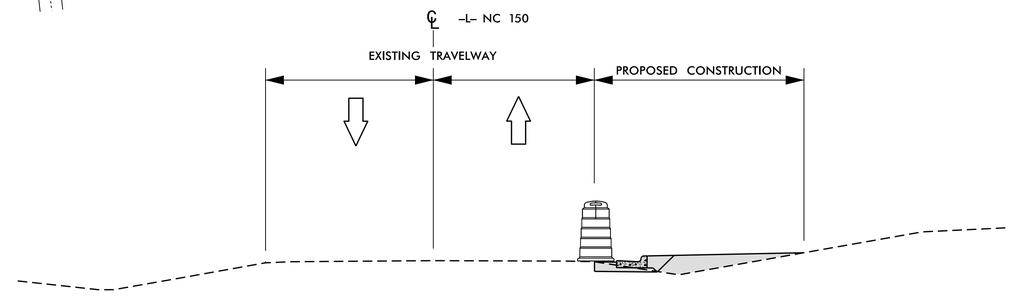

-L- STA. 26+00 ± TO 29+69 ±

PROPOSED CONSTRUCTION

APPROVED:_____ DATE:_____

SEAL

DIVISION OF HIGHWAYS
STATE OF NORTH CAROLINA
DEPARTMENT OF TRANSPORTATION
WORK ZONE TRAFFIC CONTROL

PHASE III DETAIL

13-NOV-2014 07:07
\\DOT\DFS\ROOT01\GROUPS-Divi2CC\DDC\District 3\Lincoln\W-5212G Lebanon_NC150\Plansheets\Traffic ControlPlan\W5212G_TC_TMP_4.dgn
bkgowell AT DI2CAD270692

PROJ. REFERENCE NO.	SHEET NO.
W-5212G	TMP-5

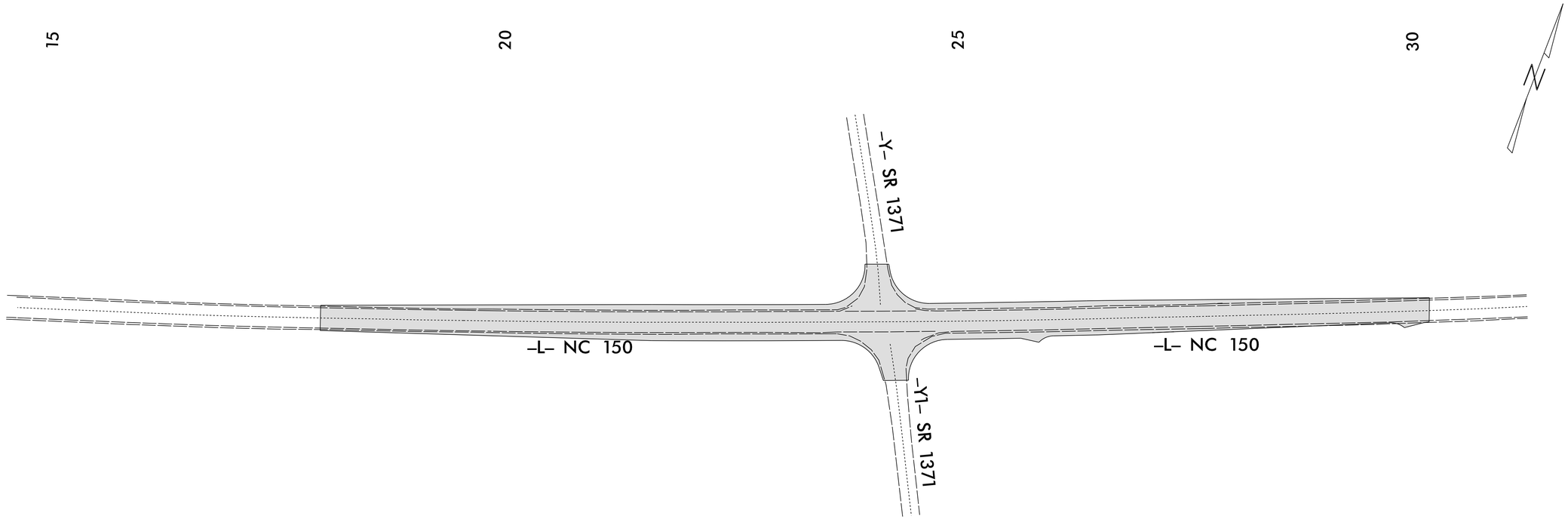

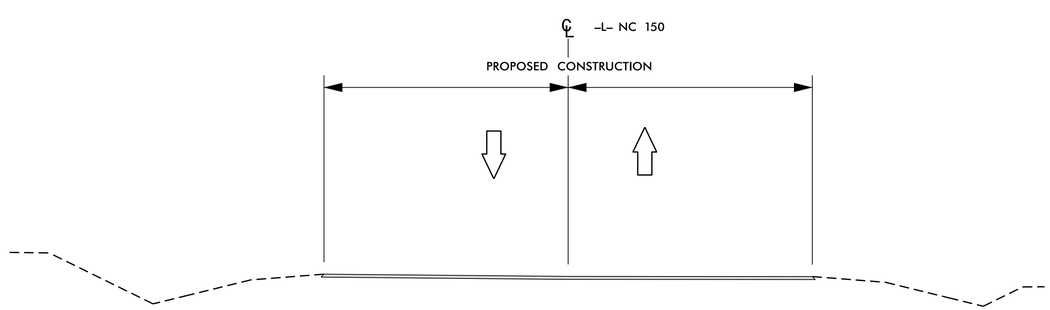

-L- STA. 18+00 ± TO 26+00 ±
-L- STA. 26+69 ± TO 30+10 ±
-Y- STA. 10+00 ± TO 10+64 ±
-Y1- STA. 10+00 ± TO 10+65 ±

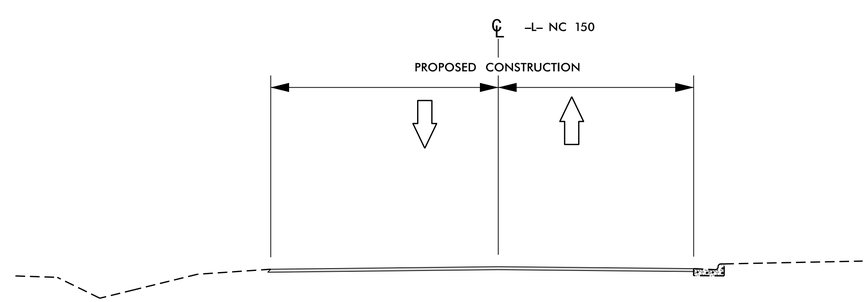

-L- STA. 26+00 ± TO 29+69 ±

PROPOSED CONSTRUCTION

APPROVED:_____ DATE:_____

SEAL

DIVISION OF HIGHWAYS
STATE OF NORTH CAROLINA
DEPARTMENT OF TRANSPORTATION
WORK ZONE TRAFFIC CONTROL

PHASE III DETAIL CONTINUED

13-NOV-2014 07:40
\\DOT\DFS\ROOT\GROUPS-Divi2CC\DDC\District 3\Lincoln\W-5212G Lebanon_NC150\Plansheets\Traffic ControlPlan\W5212G_TC_TMP_5.dgn
bksowell AT DI2CAD270892

PROJ. REFERENCE NO.	SHEET NO.
W-5212G	PM-1

Pavement Marking Schedule

TIP Project # W5212G

SYMBOL	DESCRIPTION
	FINAL
	PAVEMENT MARKINGS
	THERMOPLASTIC(24″, 120 MILS)
T2	WHITE STOPBAR
	POLYUREA (4″) Highly Reflective Elements
V8	2 FT. - 6 FT./SP WHITE MINISKIP
VA	WHITE EDGELINE
VD	3 FT. - 9 FT./SP WHITE MINISKIP
VE	WHITE SOLID LANE LINE
VI	YELLOW DOUBLE CENTER

SYMBOL	DESCRIPTION
	THERMOPLASTIC(8″, 90 MILS)
TP	YELLOW DIAGONAL
	THERMOPLASTICPAVEMENT MARKING SYMBOLS (90 MILS)
UA	LEFT TURN ARROW
	MARKERS
	SNOWPLOWABLE RAISED PAVEMENT MARKERS
ME	YELLOW & YELLOW
MF	CRYSTAL & RED

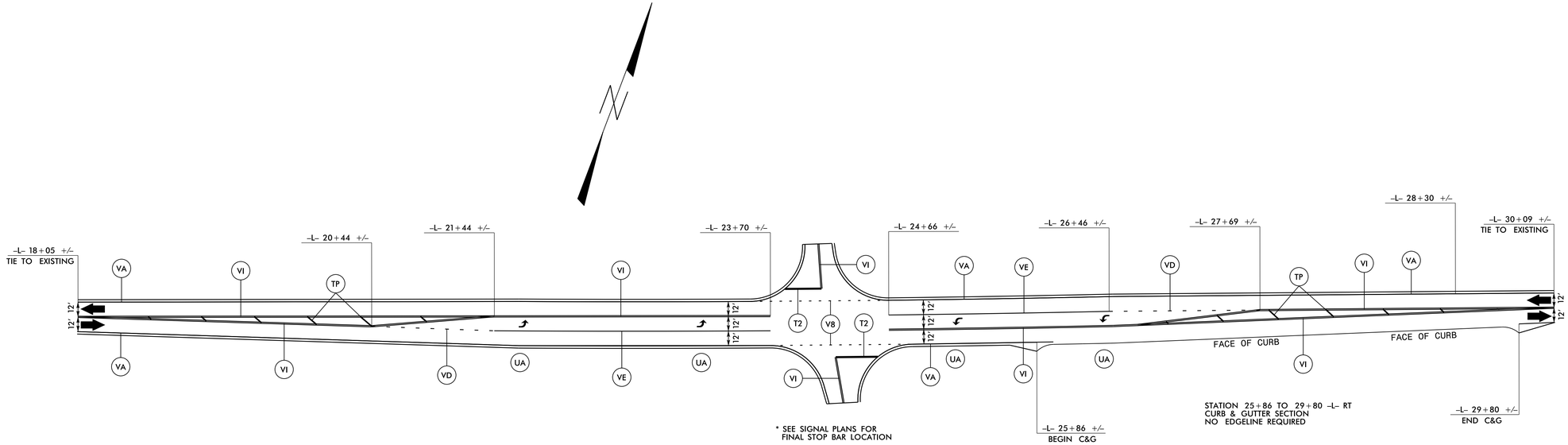

APPROVED:_____ DATE:_____

SEAL

DIVISION OF HIGHWAYS
STATE OF NORTH CAROLINA
DEPARTMENT OF TRANSPORTATION
WORK ZONE TRAFFIC CONTROL

PAVEMENT MARKING SCHEDULE AND PAVEMENT MARKING PLAN

14-NOV-2014 11:29
S:\DDC\District 3\Lincoln\W-5212G Lebanon_NC150\Plansheets\Traffic ControlPlan\W5212G_TC_TMP_PM-1.dgn
$$$$USERNAME$$$$

TIP PROJECT: W-5212G

STATE	STATE PROJECT REFERENCE NO.	SHEET NO.	TOTAL SHEETS
N.C.	W-5212G	EC-1	

STATE PROJ. NO.	F.A. PROJ. NO.	DESCRIPTION

STATE OF NORTH CAROLINA
DIVISION OF HIGHWAYS

PLAN FOR PROPOSED
HIGHWAY EROSION CONTROL

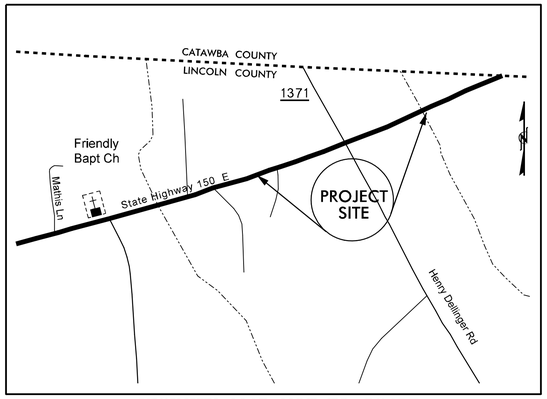

VICINITY MAP NOT TO SCALE

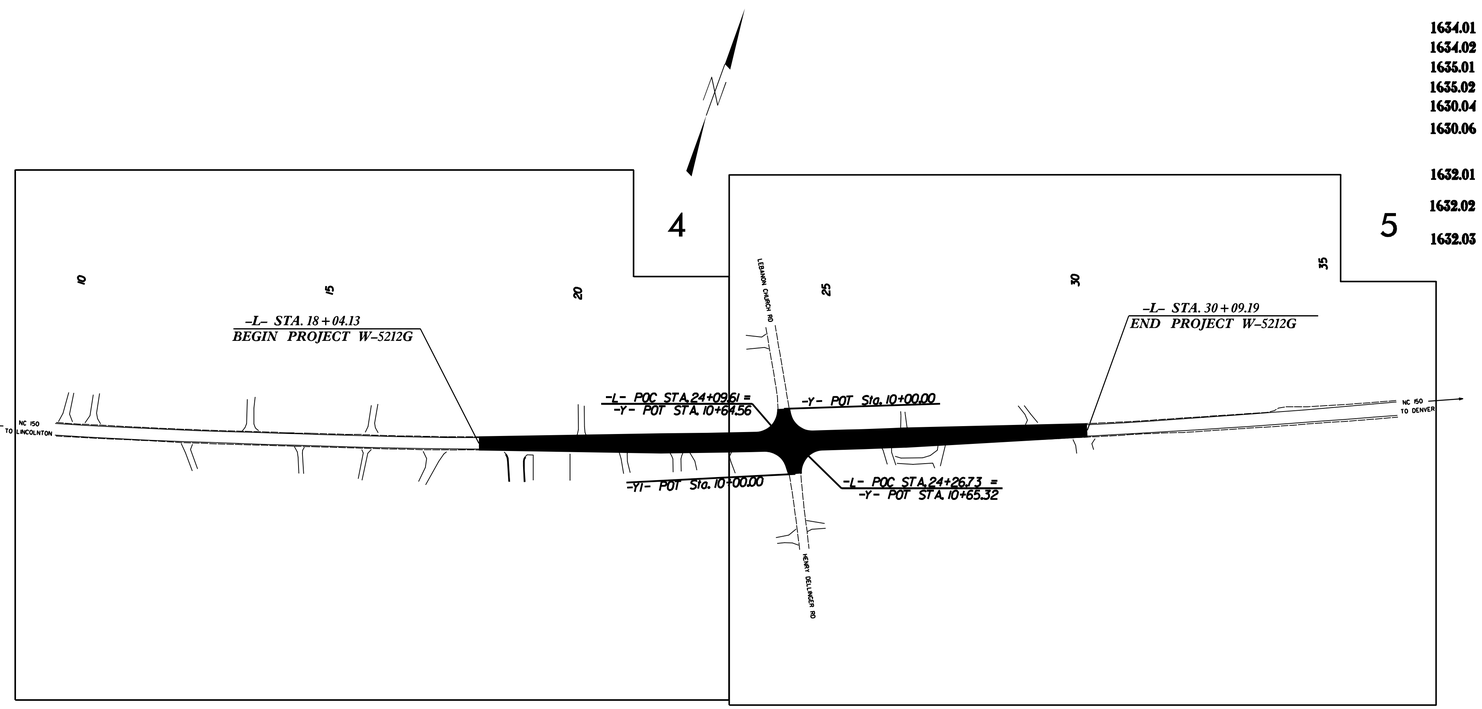

EROSION AND SEDIMENT CONTROL MEASURES

Std. #	Description	Symbol
1630.03	Temporary Silt Ditch	TSD
1630.05	Temporary Diversion	TD
1605.01	Temporary Silt Fence	
1606.01	Special Sediment Control Fence	
1622.01	Temporary Berms and Slope Drains	
1630.02	Silt Basin Type B	
1633.01	Temporary Rock Silt Check Type-A	
	Temporary Rock Silt Check Type-A with Matting and Polyacrylamide (PAM)	
1633.02	Temporary Rock Silt Check Type-B	
	Wattle/ Coir Fiber Wattle	SW CFW
	Wattle/ Coir Fiber Wattle with Polyacrylamide (PAM)	
1634.01	Temporary Rock Sediment Dam Type-A	
1634.02	Temporary Rock Sediment Dam Type-B	
1635.01	Rock Pipe Inlet Sediment Trap Type-A	
1635.02	Rock Pipe Inlet Sediment Trap Type-B	
1630.04	Stilling Basin	
1630.06	Special Stilling Basin	
	Rock Inlet Sediment Trap:	
1632.01	Type A	A
1632.02	Type B	B
1632.03	Type C	C
	Skimmer Basin	
	Tiered Skimmer Basin	
	Infiltration Basin	

THIS PROJECT CONTAINS EROSION CONTROL PLANS FOR CLEARING AND GRUBBING PHASE OF CONSTRUCTION.

EC DESIGN: B.K. SOWELL #332

GRAPHIC SCALE

0
PLANS

0
PROFILE (HORIZONTAL)

0
PROFILE (VERTICAL)

ROADSIDE ENVIRONMENTAL UNIT
DIVISION OF HIGHWAYS
STATE OF NORTH CAROLINA

THESE EROSION AND SEDIMENT CONTROL PLANS COMPLY WITH THE REGULATIONS SET FORTH BY THE NCG-010000 GENERAL CONSTRUCTION PERMIT EFFECTIVE AUGUST 3, 2011 ISSUED BY THE NORTH CAROLINA DEPARTMENT OF ENVIRONMENT AND NATURAL RESOURCES DIVISION OF WATER QUALITY.

Prepared In the Office of:

DIVISION 12 DDC UNIT

1710 East Marion St.
Shelby, NC 28150

2012 STANDARD SPECIFICATIONS

Roadway Standard Drawings

The following roadway english standards as appear in "Roadway Standard Drawings"– Roadway Design Unit – N. C. Department of Transportation – Raleigh, N. C., dated January 2012 and the latest revison thereto are applicable to this project and by reference hereby are considered a part of these plans.

1604.01	Railroad Erosion Control Detail	1632.01	Rock Inlet Sediment Trap Type A
1605.01	Temporary Silt Fence	1632.02	Rock Inlet Sediment Trap Type B
1606.01	Special Sediment Control Fence	1632.03	Rock Inlet Sediment Trap Type C
1607.01	Gravel Construction Entrance	1633.01	Temporary Rock Silt Check Type A
1622.01	Temporary Berms and Slope Drains	1633.02	Temporary Rock Silt Check Type B
1630.01	Riser Basin	1634.01	Temporary Rock Sediment Dam Type A
1630.02	Silt Basin Type B	1634.02	Temporary Rock Sediment Dam Type B
1630.03	Temporary Silt Ditch	1635.01	Rock Pipe Inlet Sediment Trap Type A
1630.04	Stilling Basin	1635.02	Rock Pipe Inlet Sediment Trap Type B
1630.05	Temporary Diversion	1640.01	Coir Fiber Baffle
1630.06	Special Stilling Basin	1645.01	Temporary Stream Crossing
1631.01	Matting Installation		

$$$

PROJECT REFERENCE NO.	SHEET NO.
W-5212G	EC-1A

EROSION CONTROL & PIPE INSTALLATION SCHEDULE
GENERAL E&SC NOTES
GROUND STABILIZATION CHART

Erosion Control Schedule and Notes

1. Generally, the order of installation of the erosion control measures will be as follows:

   A. Temporary silt basins shall be installed before clearing and grubbing begins.

   B. Silt fences and temporary silt ditches shall be installed after clearing and before grading.

   C. Temporary stone ditch checks with PAM or wattles with PAM shall be installed in all disturbed areas as soon as the disturbance begins.

   D. Final stone ditch checks or wattles shall be installed as soon as ditch line is established.

   E. Pipe outlet and inlet protection will be done as soon as the pipe is installed.

   F. Other permanent erosion control measures are to be implemented as soon as practical.

2. Temporary rock silt checks, type B will be spaced by percent grade as shown in the erosion control plan.

3. No. 5 stone, or equivalent, will be used in conjunction with the temporary rock silt checks in locations where water is leaving the project or entering a pipe.

4. All devices are to be cleaned out when half full.

5. Establish permanent vegetation per ground stabilization chart.

Notes:

For silt basin size see the attached erosion control plans.

PAM is to be placed on all Type A checks and wattles in the erosion control chain except for the final device in HWQ and Trout projects.

GROUND STABILIZATION CHART

Site Area Description	Stabilization Time Frame	Stabilization Time Frame Exceptions
Perimeter dikes, swales, ditches and slopes	7 days	None
High Quality Water Zones	7 days	None
Slopes steeper than 3:1	7 days	If slopes are 10 ft. or less in length and are not steeper than 2:1, 14 days are allowed
Slopes 3:1 or flatter	14 days	7 days for slopes greater than 50' in lenght
All other areas flatter than 4:1	14 days	None (except for perimeters and HQW zones)

PROJECT REFERENCE NO.	SHEET NO.
W-5212G	EC-1B
ROADWAY DESIGN ENGINEER	HYDRAULICS ENGINEER

DIVISION OF HIGHWAYS
STATE OF NORTH CAROLINA

SOIL STABILIZATION TIMEFRAMES

SITE DESCRIPTION	STABILIZATION TIME	TIMEFRAME EXCEPTIONS
PERIMETER DIKES, SWALES, DITCHES AND SLOPES	7 DAYS	NONE
HIGH QUALITY WATER (HQW) ZONES	7 DAYS	NONE
SLOPES STEEPER THAN 3:1	7 DAYS	IF SLOPES ARE 10' OR LESS IN LENGTH AND ARE NOT STEEPER THAN 2:1, 14 DAYS ARE ALLOWED.
SLOPES 3:1 OR FLATTER	14 DAYS	7 DAYS FOR SLOPES GREATER THAN 50' IN LENGTH.
ALL OTHER AREAS WITH SLOPES FLATTER THAN 4:1	14 DAYS	NONE, EXCEPT FOR PERIMETERS AND HQW ZONES.

PROJECT REFERENCE NO.	SHEET NO.
W-5212G	EC-2
R/W SHEET NO.	
ROADWAY DESIGN ENGINEER	HYDRAULICS ENGINEER

INFILTRATION BASIN WITH BAFFLES DETAIL

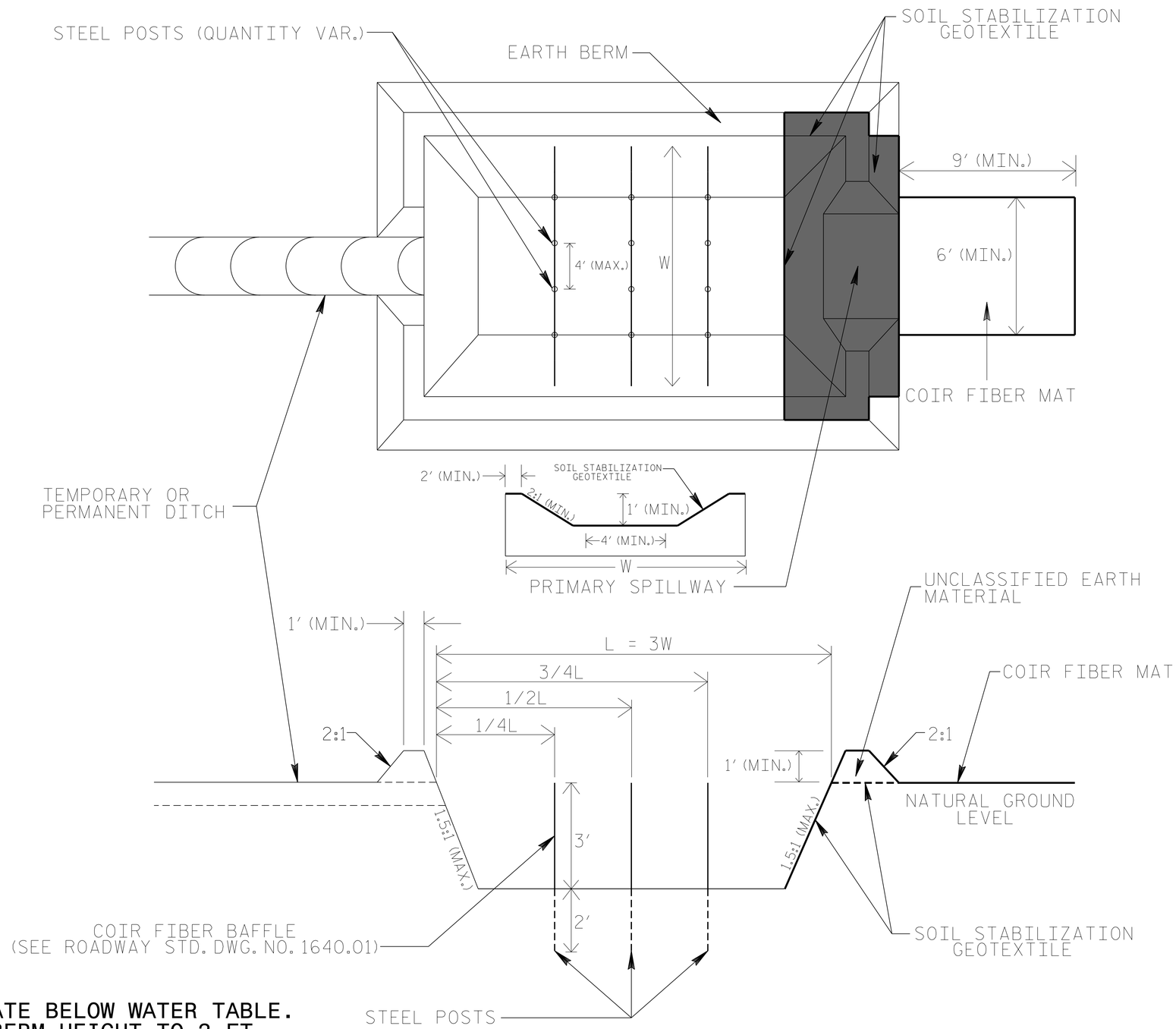

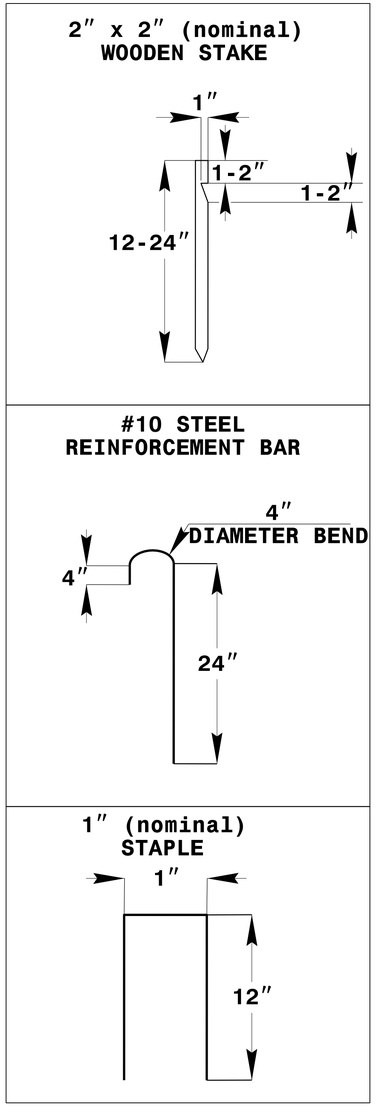

COIR FIBER MAT ANCHOR OPTIONS

NOTES

1. DO NOT EXCAVATE BELOW WATER TABLE.
2. LIMIT EARTH BERM HEIGHT TO 3 FT.
3. AVOID COMPACTING BOTTOM OF BASIN.
4. FOR BASIN DEPTH OF 3 FT., THE MINIMUM BASIN WIDTH SHALL BE 9 FT.
5. DETERMINE PRIMARY SPILLWAY LENGTH (FT.) USING Q/0.4, WHERE Q IS FLOW RATE (CFS) INTO BASIN.

NOT TO SCALE

PROJECT REFERENCE NO.	SHEET NO.
W-5212G	EC-2A
R/W SHEET NO.	
ROADWAY DESIGN ENGINEER	HYDRAULICS ENGINEER

WATTLE WITH POLYACRYLAMIDE (PAM) DETAIL

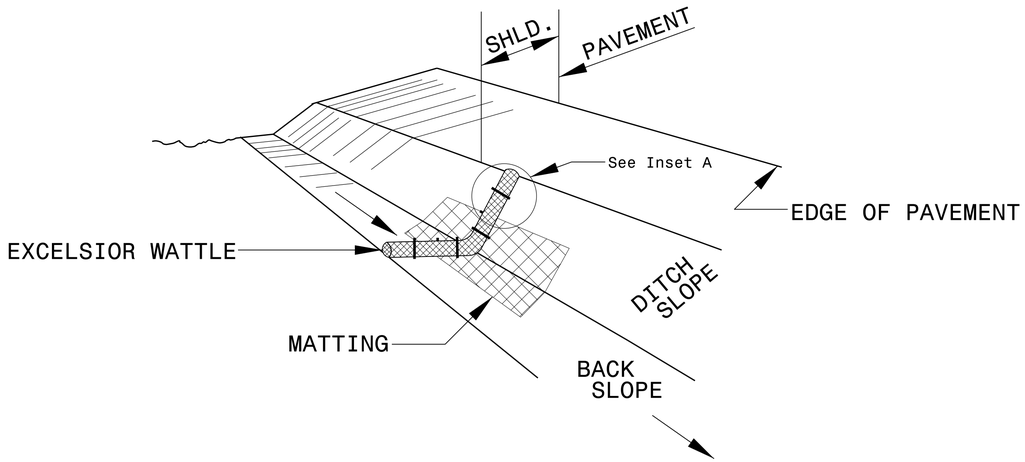

ISOMETRIC VIEW

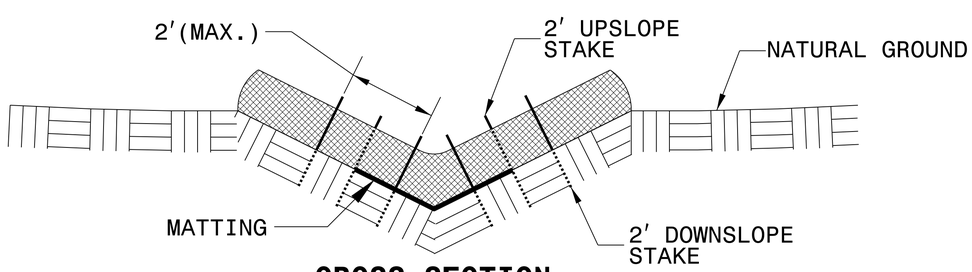

CROSS SECTION VEE DITCH

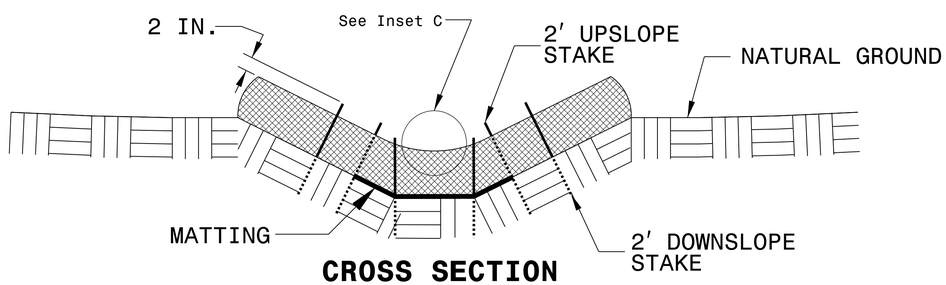

CROSS SECTION TRAPEZOIDAL DITCH

NOTES:

USE MINIMUM 12 IN. DIAMETER EXCELSIOR WATTLE.

USE 2 FT. WOODEN STAKES WITH A 2 IN. BY 2 IN. NOMINAL CROSS SECTION.

ONLY INSTALL WATTLE(S) TO A HEIGHT IN DITCH SO FLOW WILL NOT WASH AROUND WATTLE AND SCOUR DITCH SLOPES AND AS DIRECTED.

INSTALL A MINIMUM OF 2 UPSLOPE STAKES AND 4 DOWNSLOPE STAKES AT AN ANGLE TO WEDGE WATTLE TO BOTTOM OF DITCH.

PROVIDE STAPLES MADE OF 0.125 IN. DIAMETER STEEL WIRE FORMED INTO A U SHAPE NOT LESS THAN 12″ IN LENGTH.

INSTALL STAPLES APPROXIMATELY EVERY 1 LINEAR FOOT ON BOTH SIDES OF WATTLE AND AT EACH END TO SECURE IT TO THE SOIL.

INSTALL MATTING IN ACCORDANCE WITH SECTION 1631 OF THE STANDARD SPECIFICATIONS.

PRIOR TO POLYACRYLAMIDE (PAM) APPLICATION, OBTAIN A SOIL SAMPLE FROM PROJECT LOCATION, AND FROM OFFSITE MATERIAL, AND ANALYZE FOR APPROPRIATE PAM FLOCCULANT TO BE APPLIED TO EACH WATTLE.

INITIALLY APPLY 2 OUNCES OF ANIONIC OR NEUTRALLY CHARGED PAM OVER WATTLE WHERE WATER WILL FLOW AND 1 OUNCE OF PAM ON MATTING ON EACH SIDE OF WATTLE. REAPPLY PAM AFTER EVERY RAINFALL EVENT THAT IS EQUAL TO OR EXCEEDS 0.50 IN.

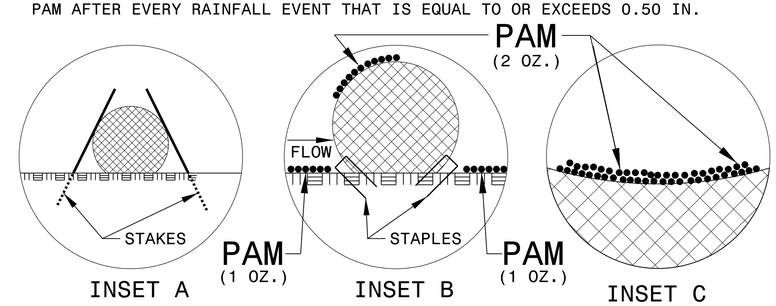

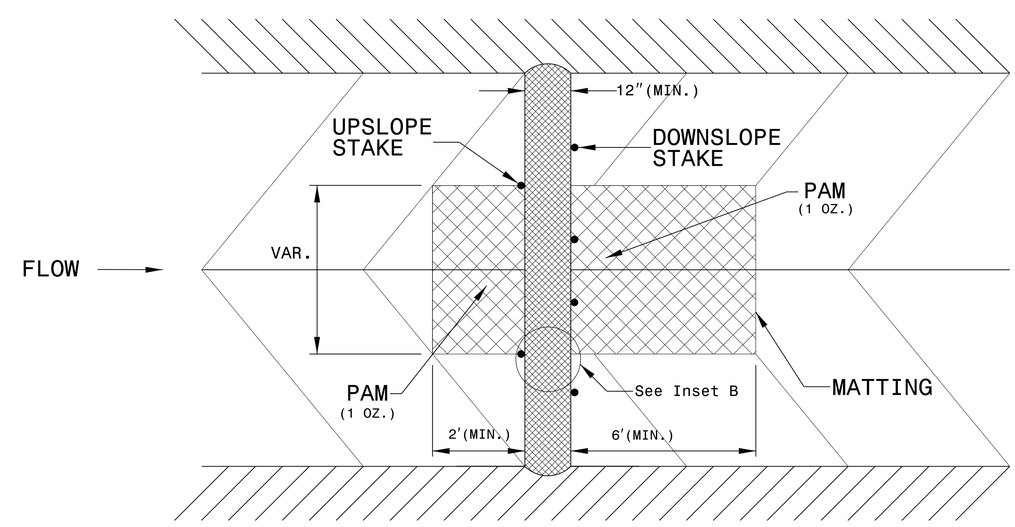

TOP VIEW

PROJECT REFERENCE NO.	SHEET NO.
W-5212G	EC-3
ROADWAY DESIGN ENGINEER	HYDRAULICS ENGINEER

DIVISION OF HIGHWAYS
STATE OF NORTH CAROLINA

SOIL STABILIZATION SUMMARY SHEET

MATTING FOR EROSION CONTROL

CONST SHEET NO.	LINE	FROM STATION	TO STATION	SIDE	ESTIMATE (SY)
4	-L-	19+00	20+00	LT	70
4	-L-	20+50	23+50	LT	210
4	-L-	20+00	21+00	RT	70
4	-L-	21+00	23+50	RT	175
				SUBTOTAL	525
MISCELLANEOUS MATTING TO BE INSTALLED AS DIRECTED BY THE ENGINEER					100
				TOTAL	625
				SAY	750

PERMANENT SOIL REINFORCEMENT MAT

CONST SHEET NO.	LINE	FROM STATION	TO STATION	SIDE	ESTIMATE (SY)
5	-L-	24+66	25+50	RT	105
5	-L-	26+50	27+00	RT	55
5	-L-	24+66	26+00	LT	160
5	-L-	27+00	28+50	RT	160
				SUBTOTAL	480
		ADDITIONAL PSRM TO BE INSTALLED			250
				TOTAL	730
				SAY	1000

PROJECT REFERENCE NO.	SHEET NO.
W-5212G	EC-4/CONST.4
R/W SHEET NO.	
ROADWAY DESIGN ENGINEER	HYDRAULICS ENGINEER

CLEARING AND GRUBBING
EROSION CONTROL FOR
CONSTRUCTION SHEET 4

NOTE:
PERIMETER EROSION CONTROL MEASURES SHALL BE INSTALLED DURING CLEARING AND GRUBBING PHASE.

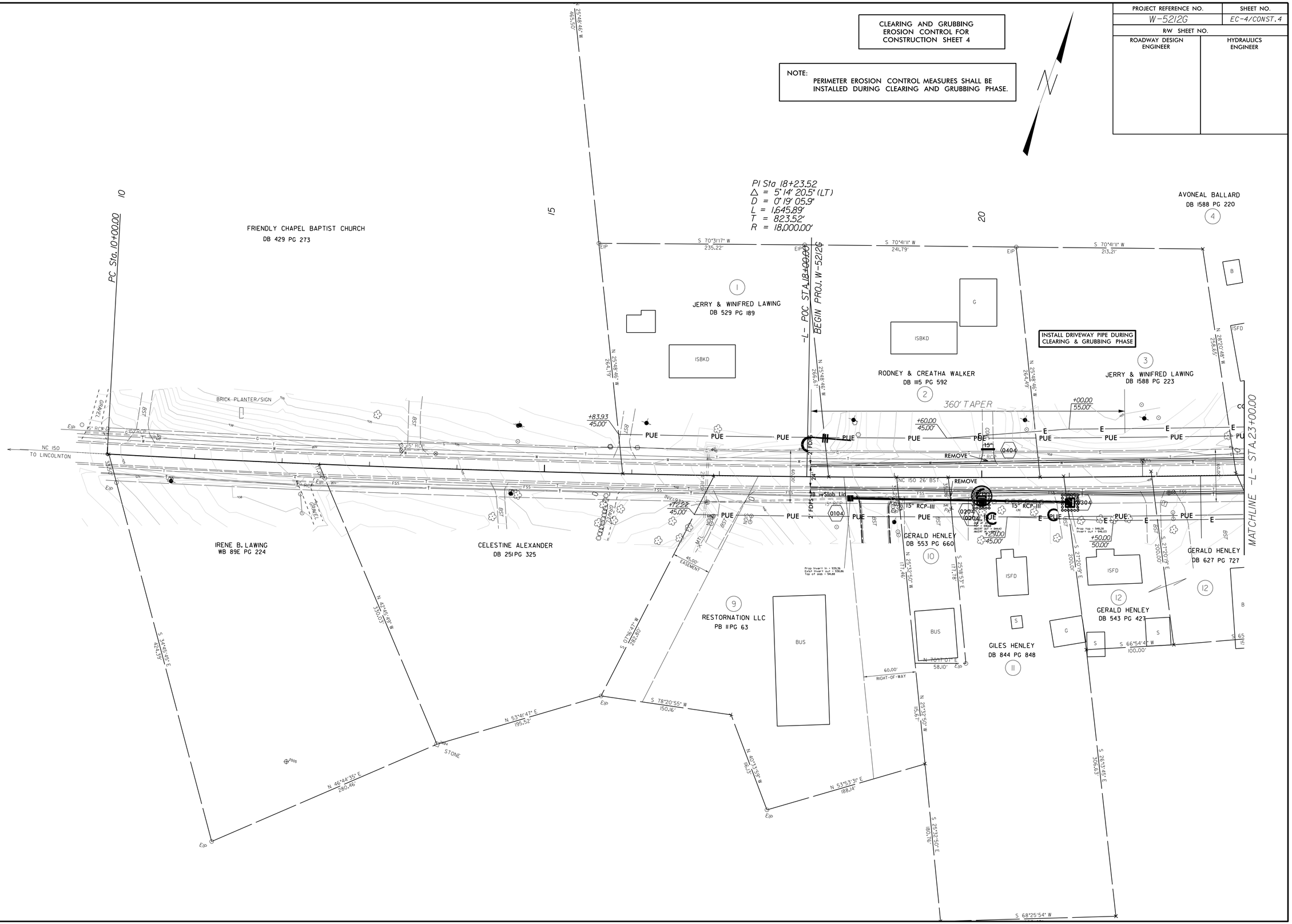

8/17/99

14-NOV-2014 14:14
S:\DOC\Distrct_3\Lincoln\W-5212G Lebanon_NC150\Plansheets\W5212G_EC_dsn_EC4.dgn
$$$$USERNAME$$$$

PROJECT REFERENCE NO.	SHEET NO.
W-5212G	EC-5/CONST.5
R/W SHEET NO.	
ROADWAY DESIGN ENGINEER	HYDRAULICS ENGINEER

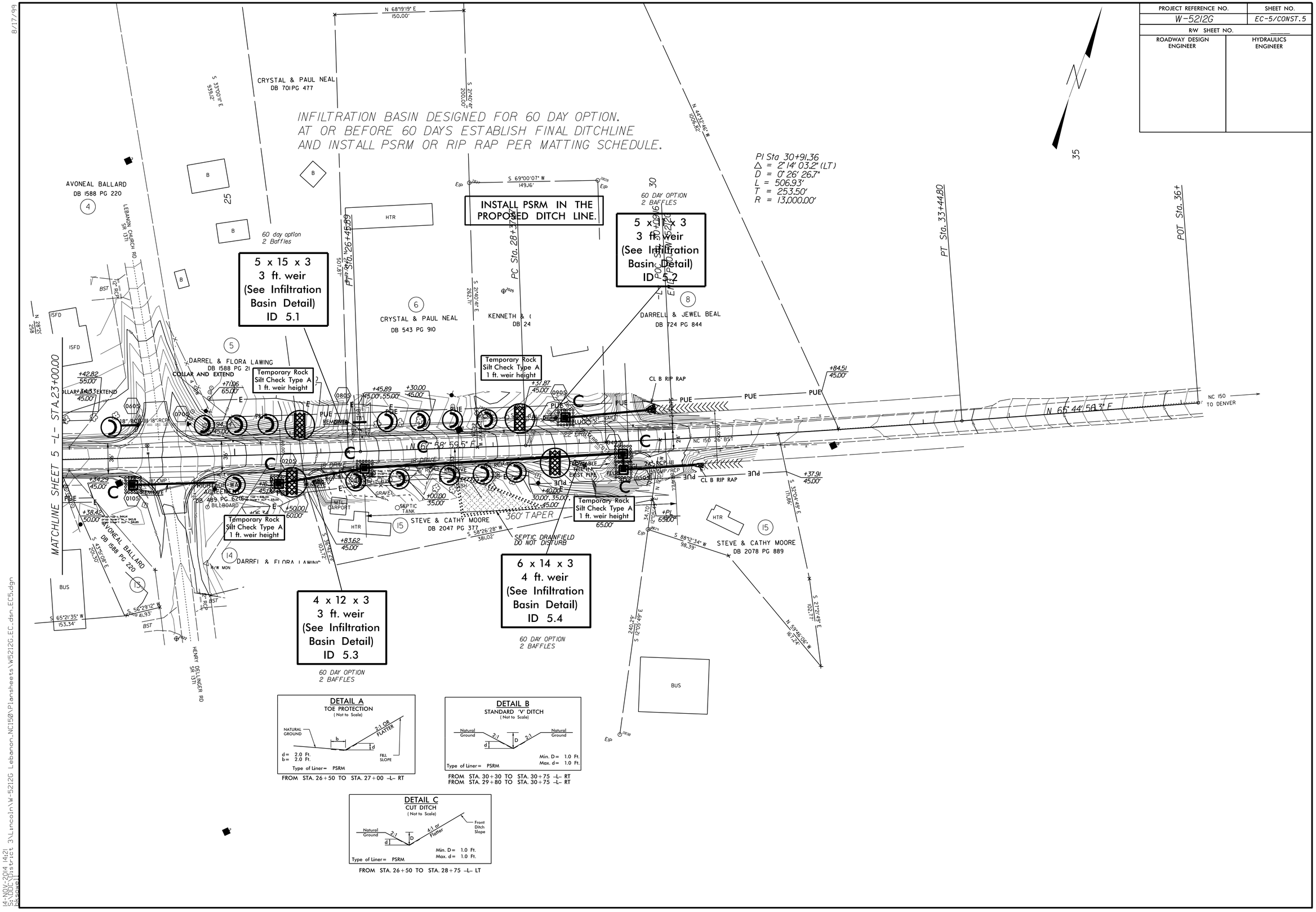

8/17/99

14-NOV-2014 14:21
S:\DOC\Division 3\Lincoln\W-5212G Lebanon_NC150\Plansheets\W5212G_EC_dsn_EC5.dgn

PROJECT REFERENCE NO.	SHEET NO.
W-5212G	EC-6/CONST.4
R/W SHEET NO.	
ROADWAY DESIGN ENGINEER	HYDRAULICS ENGINEER

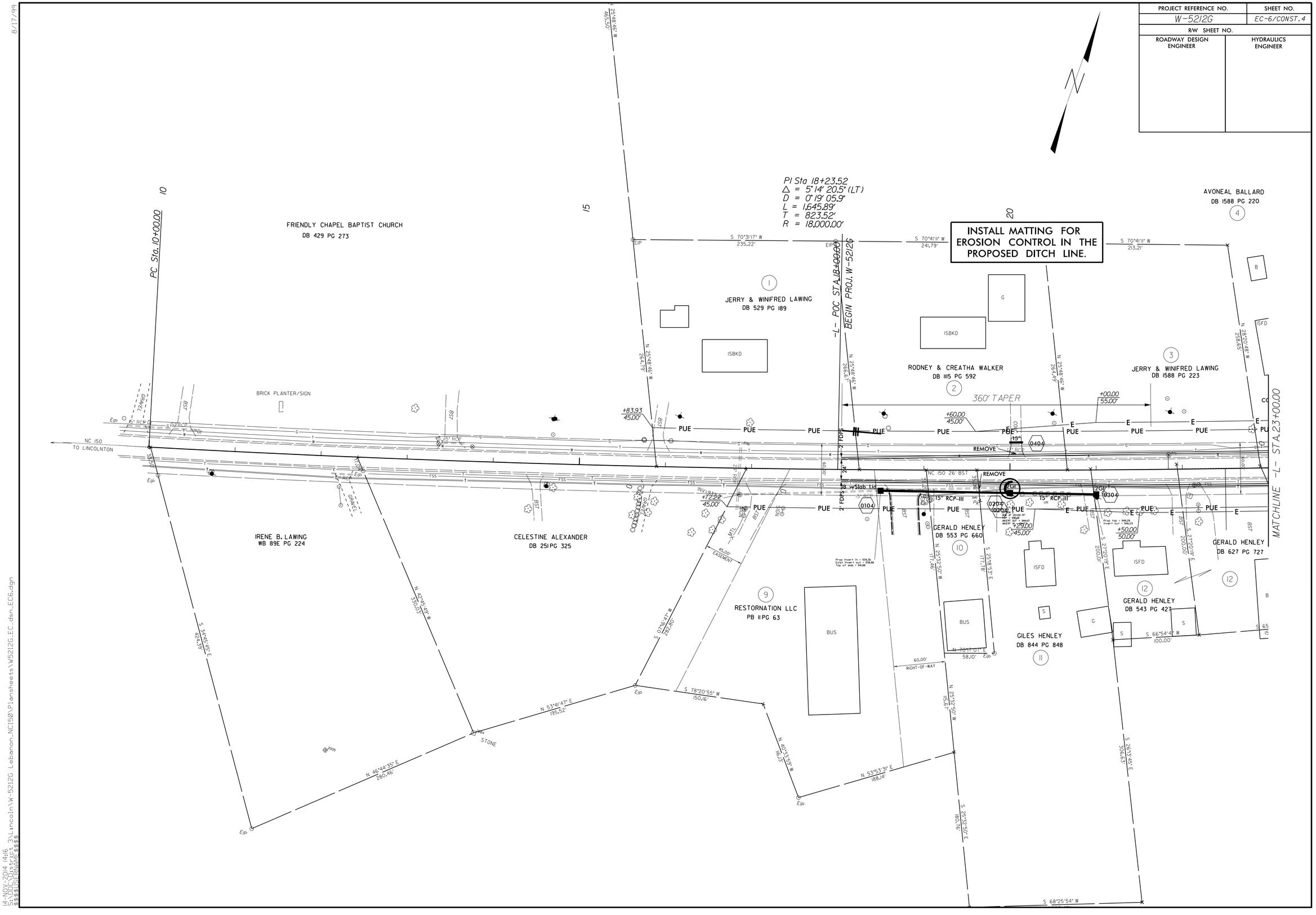

8/17/99

14-NOV-2014 14:16
S:\DDC\Distrib\Lincoln\W-5212G Lebanon_NC150\Plansheets\W5212G_EC_dsn_EC6.dgn
$$$$USERNAME$$$$

PROJECT REFERENCE NO.	SHEET NO.
W-5212G	EC-7/CONST.5
R/W SHEET NO.	
ROADWAY DESIGN ENGINEER	HYDRAULICS ENGINEER

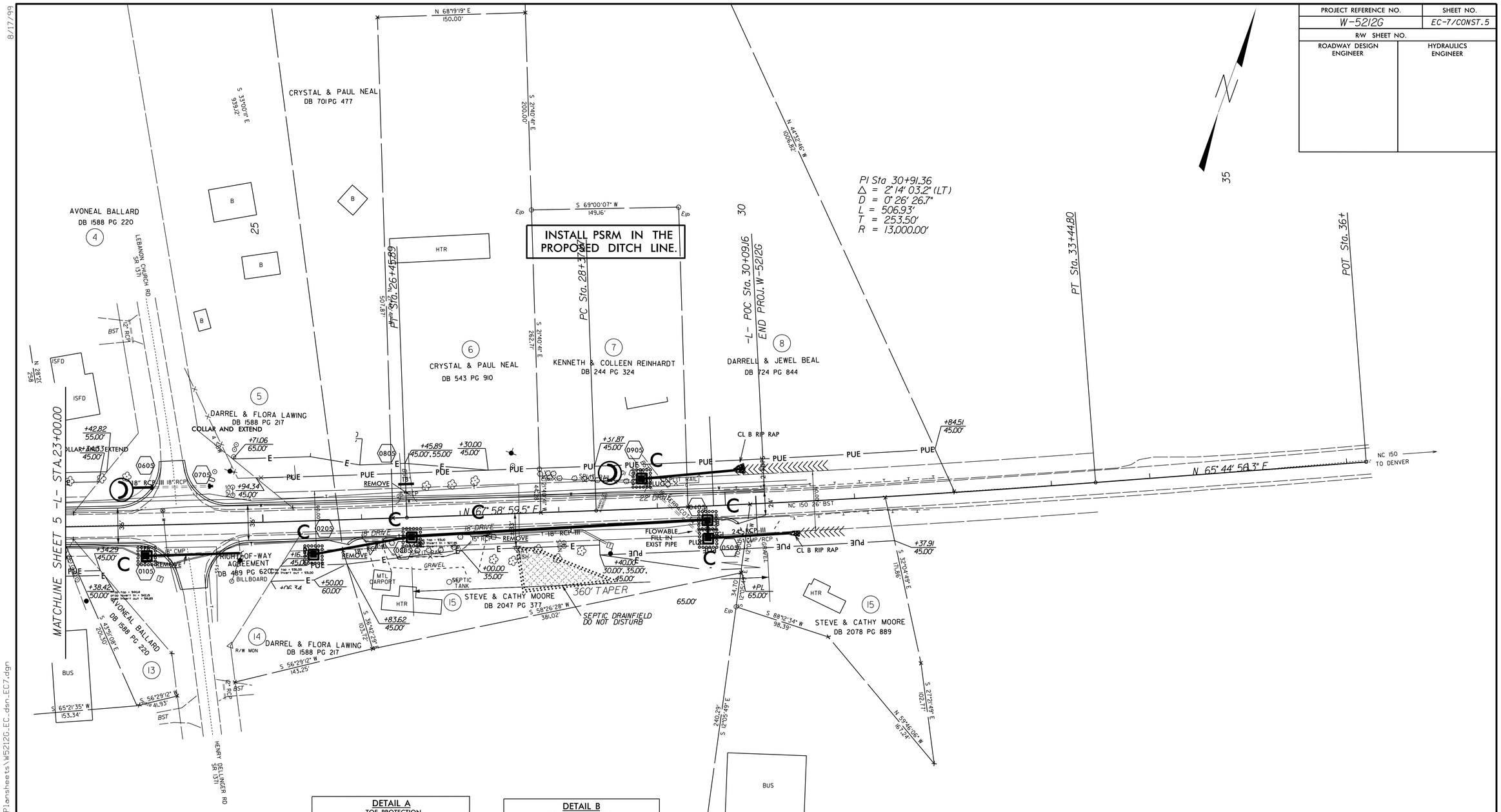

DETAIL A
TOE PROTECTION
(Not to Scale)

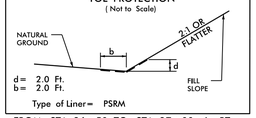

d = 2.0 Ft.
b = 2.0 Ft.

Type of Liner = PSRM

FROM STA. 26+50 TO STA. 27+00 -L- RT

DETAIL B
STANDARD 'V' DITCH
(Not to Scale)

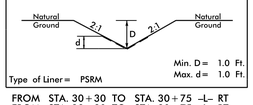

Min. D = 1.0 Ft.
Max. d = 1.0 Ft.

Type of Liner = PSRM

FROM STA. 30+30 TO STA. 30+75 -L- RT
FROM STA. 29+80 TO STA. 30+75 -L- RT

DETAIL C
CUT DITCH
(Not to Scale)

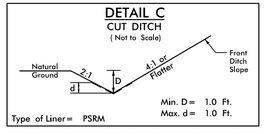

Min. D = 1.0 Ft.
Max. d = 1.0 Ft.

Type of Liner = PSRM

FROM STA. 26+50 TO STA. 28+75 -L- LT

8/17/99

14-NOV-2014 14:20
S:\UDC\District 3\Lincoln\W-5212G Lebanon_NC150\Plansheets\W5212G_EC_dsn_EC7.dgn

09/08/99

W-5212G

UC TITLE SHEET 34_9102

T.I.P. NO.	SHEET NO.
W-5212G	UC-1

STATE OF NORTH CAROLINA
DIVISION OF HIGHWAYS

UTILITY CONSTRUCTION PLANS
LINCOLN COUNTY

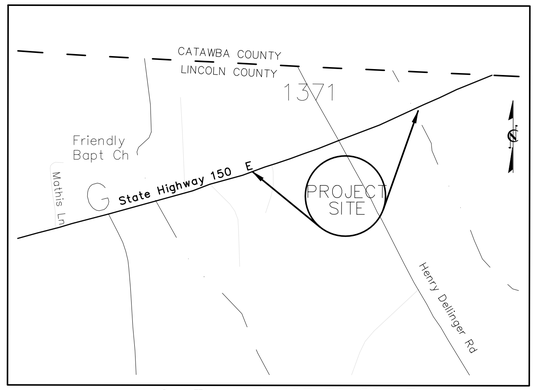

VICINITY MAP NOT TO SCALE

LOCATION: INTERSECTION OF NC 150 AND SR 1371

TYPE OF WORK: WATER LINE AND FORCE MAIN SEWER RELOCATION

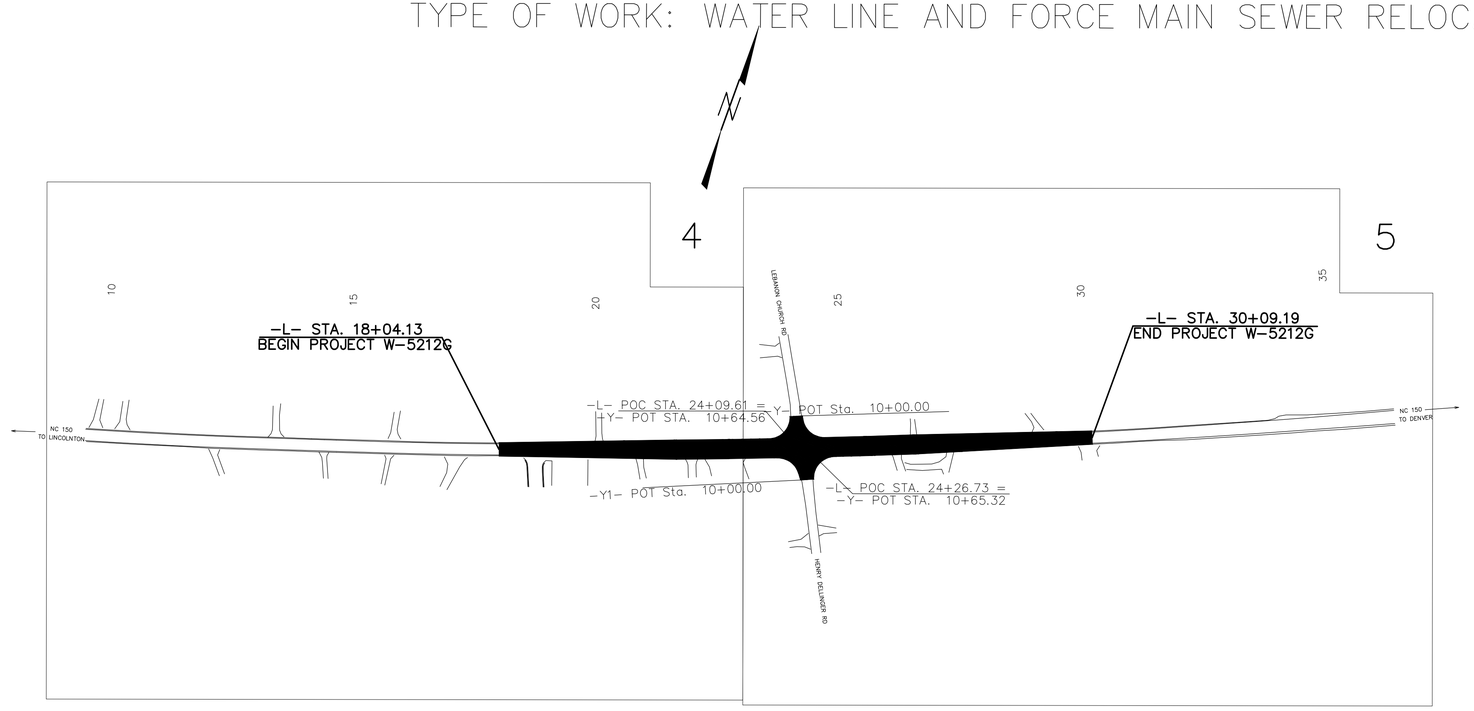

GRAPHIC SCALES

40 20 0 40 80

PLANS

INDEX OF SHEETS

SHEET NO.	DESCRIPTION
UC-1	TITLE SHEET
UC-2	UTILITY PLAN
UC-3	DETAILS
UC-4	DETAILS

WATER AND SEWER OWNERS ON PROJECT

(1) WATER – LINCOLN COUNTY
(2) SANITARY SEWER – LINCOLN COUNTY
(3) GAS – PIEDMONT NATURAL GAS
(4) POWER – RUTHERFORD ELECTRIC
(5) PHONE – AT&T

SEAL

NORTH CAROLINA PROFESSIONAL SEAL 032866 ENGINEER DAVID LUTTRELL

CES GROUP
ENGINEERS, LLP
274 N. Hwy. 16, SUITE 300
DENVER, NC 28037

UTILITY LEGEND

PROPOSED UTILTIES

- 8W — 8" WATER LINE
- 12W — 12" WATER LINE
- FM — FORCE MAIN
- STORM SEWER
- SS — SANITARY SEWER MANHOLE (SSMH)
- D — STORM SEWER MANHOLE (MH)
- WATER METER
- REDUCER
- BACKFLOW PREVENTOR
- FIRE HYDRANT
- GATE VALVE
- 11.25°, 22.5°, 45° OR 90° BEND
- TEE WITH THRUST BLOCK

EXISTING UTILITIES

- 790 — 10' CONTOURS
- 2' CONTOURS
- STORM SEWER
- SS — SANITARY SEWER
- FM — FORCE MAIN
- G — GAS LINE
- UP — UNDERGROUND POWER
- OHP — OVERHEAD POWER
- UT — UNDERGROUND PHONE
- OHT — OVERHEAD TELEPHONE
- T — TELEPHONE COMMUNICATIONS
- 2W — 2" WATER LINE
- 3W — 3" WATER LINE
- 4W — 4" WATER LINE
- 6W — 6" WATER LINE
- 8W — 8" WATER LINE
- 10W — 10" WATER LINE
- 12W — 12" WATER LINE
- 16W — 16" WATER LINE
- W — WATER LINE
- EXISTING FENCE
- FIRE HYDRANT (FH)
- GATE VALVE (GV)
- SANITARY SEWER MANHOLE (SSMH)
- STORM SEWER MANHOLE (MH)
- GRATE INLET/YARD INLET (GI/YI)
- SIGN
- UTILITY POLE LIGHT POLE
- EOP — EDGE OF PAVEMENT
- R/W — RIGHT-OF-WAY
- N/F — NOW OR FORMERLY

STANDARD PLAN NOTES

5.1 GENERAL

A. All work shall conform to latest revision of the Lincoln County Public Works Operational Manual which is on file at the Division of Lincoln County Public Works office (115 W Main Street, Lincolnton, North Carolina 28092).

B. Any quantities shown on plans are not verified by LCPW.

C. At the site keep and maintain one record copy of all Contract Documents, reference documents and all technical documents submitted in good order. As the work progresses the Engineer or his designated representative shall record on one set of reproducible drawings all changes and deviations from the original Plans. Contractor shall record the exact northing and easting on all bends, valves, changes in vertical and horizontal alignment; a maximum of every 250 feet along pipe for horizontal location; sewer, water, electric, gas, communication and other services by off-set distance to permanent improvements such as building and curbs.
These Record Drawings must be certified by the North Carolina Registered Professional Engineer, who prepared the plans and signs and seals these plans. The Record Drawings shall include vertical and horizontal alignment of all water, sewer, and effluent reuse lines, valves, tees, bends, reducers, hydrants, pump stations, service connections, meter boxes and/or pads, and other pertinent structures.
In addition, Parcel ID numbers and street names shall be shown on the plan.
County shall withhold final acceptance of the project until the requirement for record drawings and related records has been met. Record Drawings without detailed field verified horizontal and vertical locations of all facilities shown will be rejected.

D. A pre-construction meeting is required before work may begin. Lincoln County Public Works shall be notified 48 hours prior to project mobilization.

E. All work and materials, which do not conform to LCPW specifications, are subject to removal and replacement at the Contractor's expense.

F. Any work performed without the knowledge of LCPW is subject to re-excavation, removal and replacement of same to be done at the Contractor's expense.

G. The Contractor shall provide sufficient personnel and equipment on the job at all times during construction to satisfy the specifications and to complete work.

H. LCPW inspection staff may observe project construction.

I. The Contractor is to uncover all existing lines being tied into and verify grades before beginning construction.

J. It is the Contractor's responsibility to locate and take all possible precautions to avoid any damage to all underground pipelines, telephone, cable TV, electric lines/conduits and structures in advance of any construction. LCPW will not guarantee any locations as shown on these plans or those omitted from these plans. The Contractor shall be fully responsible for any and all damages which may occur by his failure to exactly locate and protect existing utilities and structures.

K. Contractor shall verify all quantities shown on the plans. If any discrepancies in quantities are found, the Contractor shall notify the Project Engineer and LCPW.

L. All Regulatory and Permitting Agencies' requirements shall be complied with.

M. Appropriate turbidity control devices (e.g. silt fences, hay bails) will be utilized during all phases of installation and grading. Contractor is responsible for contacting Lincoln County Soil and Conservation Department to determine the requirements for permitting, developing and maintaining an effective Storm Water Pollution Prevention Plan.

N. Locations, elevations, and dimensions of existing utilities, structures and other features are shown according to the best information available at the time of preparation of these plans, but do not purport to be absolutely correct. Prior to construction, the Contractor shall verify and be fully responsible for any and all damages which might be occasioned by his failure to exactly locate and preserve any and all existing utilities, structures, and other features affecting his work. Anything not shown on these drawings should be brought to the attention of the Engineer and shall not constitute an extra, unless approved by the Engineer.

O. The Contractor shall contact the Engineer and LCPW immediately concerning any conflicts with LCPW utilities/structures arising during construction of any facilities shown on these drawings.

P. Traffic must be maintained at all times as per North Carolina County Department of Transportation (NCDOT).

Q. The Contractor shall notify utilities utilizing the 811 service prior to starting construction.

R. The Contractor shall replace all pavement, curbs, driveways, sidewalks, fences, etc., with the same type of material that was removed during construction or as directed by the Engineer. The Contractor shall restore all areas affected by the construction to its original condition, or better.

S. Within the NCDOT Right-of-Way, all disturbed areas shall receive grassing (seeding) or sodding materials in accordance with NCDOT specifications.

T. The information provided in these plans is solely to assist the Contractor in assessing the nature and extent of conditions which may be encountered during the course of work. All Contractors are directed, prior to bidding, to conduct whatever investigations they may deem necessary to arrive at their own conclusion regarding the actual conditions that will be encountered, and upon which their bids will be based.

U. All frames, covers valve boxes, meter boxes and manholes shall be adjusted to finished grade upon completion of paving or related construction.

LCPW Standards 2013

OPEN CUT TRENCH NOTES

1. CONTACT LINCOLN COUNTY PUBLIC WORKS AT LEAST 24 HOURS PRIOR TO CONSTRUCTION. THE ENGINEERING DEPARTMENT MUST BE NOTIFIED IN WRITING UPON COMPLETION SO AN INSPECTION CAN BE MADE.
2. THE POLICE AND FIRE DEPARTMENTS SHALL BE NOTIFIED 24-HOURS IN ADVANCE OF OPEN CUTTING BY THE CONTRACTOR.
3. TRAFFIC SHALL BE MAINTAINED THROUGH THE WORK AREA AT ALL TIMES. ONLY ONE LANE MAY BE CLOSED AT ANY GIVEN TIME UNLESS OTHERWISE APPROVED.
4. PROPER TRAFFIC CONTROL DEVICES, SIGNS, ETC. IN ACCORDANCE WITH THE MANUAL ON UNIFORM TRAFFIC CONTROL DEVICES "MUTCD" SHALL BE INSTALLED TO INSURE PUBLIC SAFETY.
5. ALL MATERIALS AND WORKMANSHIP SHALL CONFORM TO THE LINCOLN COUNTY STANDARDS SPECS AND DETAILS MANUAL. TRENCH BACKFILL MATERIAL SHALL MEET NCDOT MATERIAL REQUIREMENTS.
6. THE AREA DISTURBED AT EACH SITE SHALL BE LEFT IN A NEAT AND SATISFACTORY CONDITION.
7. NO TRENCHES ARE TO BE OPEN OVER NIGHT.
8. CONTRACTOR IS RESPONSIBLE FOR PROVIDING ADEQUATE SHORING IN ALL TRENCHES TO PREVENT COLLAPSE DURING CONSTRUCTION.
9. OPEN CUT IS TO BE PATCHED WITH PER NCDOT 2012 ROADWAY STANDARD DRAWING 654.01.
10. PATCHING IS TO BE PERFORMED THE SAME DAY THE CUT IS MADE.
11. PAVEMENT IS TO BE SAW CUT. CUTS SHALL BE PERPENDICULAR TO EDGE OF PAVEMENT.
12. PAVEMENT REPAIR SHALL MATCH EXISTING ROADWAY WITH NO DIPS OR RAISES.
13. BACKFILL OF TRENCHES WITHIN THE ROAD RIGHT-OF-WAY SHALL BE BACKFILLED IN LAYERS NOT TO EXCEED SIX (6) INCHES AND THOROUGHLY TAMPED (EACH SUCCESSIVE LAYER)
14. UNLESS OTHERWISE DIRECTED BY LINCOLN COUNTY ENGINEERING DEPARTMENT, ALL MATERIAL FROM THE BOTTOM OF THE TRENCH TO WITHIN (12) TWELVE INCHES OF THE SUBGRADE SHALL BE 95% MAXIMUM DENSITY OF STANDARD PROCTOR. (B) ALL MATERIAL WITHIN (12) TWELVE INCHES OF THE SUBGRADE LEVEL SHALL BE 100% MAXIMUM DENSITY OF STANDARD PROCTOR.

NOTES

1. PIPE DEFLECTION FOR WATER LINES AT EACH JOINT IS NOT TO EXCEED PIPE MANUFACTURE'S RECOMMENDATIONS. WHERE REQUIRED DEFLECTION EXCEEDS THE RECOMMENDATIONS, MAKE THE DEFLECTION OVER MULTIPLE JOINTS.
2. EXISTING FORCE MAIN ELEVATIONS TO BE FIELD VERIFIED BEFORE COMMENCING CONSTRUCTION.
3. STONE BEDDING IS REQUIRED FOR ALL SDR35 PVC FORCE MAIN PIPE.
4. PROPOSED 12" & 8" WATER LINE SHALL BE PVC.
5. EXISTING LINE TO REMAIN IN SERVICE UNTIL NEW LINE TESTED AND CHLORINATED.
6. TEMPORARY CONNECTION TO EXISTING AS NEEDED TO MAINTAIN EXISTING SERVICES. PRIOR TO ANY CONNECTIONS TO NEW PIPE, COORDINATE WITH COUNTY. NEW LINE SHALL BE TESTED AND CHLORINATED PRIOR TO BEING PUT IN USE.
7. CONTRACTOR SHALL FIELD LOCATE ALL EXISTING DOMESTIC WATER SERVICES AND RECONNECT TO NEW 12" WATER MAIN AS NEEDED.
8. CONTRACTOR SHALL CAP AND ABANDON EXISTING 12" WATER MAIN AS NEEDED PER NCDOT STANDARD SPECIFICATION SECTION 1530.
9. CONTRACTOR SHALL MAINTAIN TRAFFIC CONTROL MEASURES IN ACCORDANCE WITH MUTCD

NOTE:
PROPOSED INSERTION VALVES SHALL BE TEAM INDUSTRIAL SERVICES INSERT VALVE..

SCHEDULING NOTES:
1) TEMPORARY AND PERMANENT EROSION CONTROL MEASURES SHALL BE PROVIDED FOR ALL LAND DISTURBING WORK IN ACCORDANCE WITH AN EROSION CONTROL PLAN REVIEWED AND APPROVED BY THE NCDENR.

2) EROSION CONTROL MEASURES SHALL BE INSTALLED BY THE CONTRACTOR AND INSPECTED BY NCDENR FOR COMPLIANCE PRIOR TO ANY LAND DISTURBING ACTIVITY.

3) ALL PERMANENT EROSION CONTROL SHALL BE INCORPORATED INTO THE WORK AT THE EARLIEST PRACTICAL TIME.

4) ALL TEMPORARY MEASURES SHALL BE MAINTAINED UNTIL THE PERMANENT MEASURES HAVE TAKEN EFFECT OR ARE APPROVED FOR REMOVAL BY NCDENR.

5) TEMPORARY AND PERMANENT MEASURES SHALL BE COORDINATED TO PROVIDE EFFECTIVE AND CONTINUOUS EROSION CONTROL THROUGHOUT THE CONSTRUCTION AND POST-CONSTRUCTION PERIOD TO MINIMIZE SILTATION OF STREAMS, LAKES, RESERVOIRS AND OTHER IMPOUNDMENTS, GROUND SURFACES AND OTHER PROPERTY.

CONSTRUCTION NOTES:
1) EROSION CONTROL MEASURES SHALL BE INSTALLED PRIOR TO CLEARING OPERATIONS. NO LAND DISTURBING ACTIVITY, EXCEPT THAT WHICH IS REQUIRED TO INSTALL EROSION CONTROL MEASURES, MAY COMMENCE PRIOR TO APPROVAL.

2) ANY FAILURE TO MAINTAIN EROSION CONTROL MEASURES WILL RESULT IN APPROPRIATE ENFORCEMENT ACTIONS IN ACCORDANCE WITH THE NORTH CAROLINA SEDIMENTATION POLLUTION ACT OF 1973 (NCGS CHAPTER 113A, ARTICLE 4) AND THE NORTH CAROLINA ADMINISTRATIVE CODE TITLE 15A, DEPARTMENT OF ENVIRONMENTAL AND NATURAL RESOURCES CHAPTER 4.

3) IF FAILURES TO MAINTAIN EROSION CONTROL MEASURES ARE NOT CORRECTED, NCDENR MAY INITIATE ENFORCEMENT ACTION AS AUTHORIZED.

4) ANY EXISTING STREETS THAT ARE AFFECTED BY MUD, DEBRIS OR SEDIMENT SHALL BE CLEANED WITHIN 24-HRS OF NOTICE.

5) SITES DISTURBING ONE ACRE OR MORE ARE SUBJECT TO REQUIREMENTS OF NPDES GENERAL PERMIT NCG-00.10.000. NON COMPLIANCE OF THIS PERMIT WILL BE SUBJECT TO ENFORCEMENT BY THE DIVISION OF WATER QUALITY FOR ANY VIOLATIONS.

FORCE MAINS
PVC PIPE (4-INCH THROUGH 12-INCH)
PIPE: AWWA C900 "POLYVINYL CHLORIDE (PVC) PRESSURE PIPE. PIPE PROVIDED SHALL BE CAST IRON
PIPE EQUIVALENT O.D. PIPE SHALL BE PRESSURE CLASS 200 (DR=14)

FITTINGS: CEMENT LINED, CAST OR DUCTILE IRON FITTINGS CONFORMING TO AWWA C110, OR COMPACT DUCTILE
IRON CONFORMING TO AWWA C153
JOINTS: PIPE, ELASTOMERIC GASKET, PUSH-ON JOINTS, CONFORMING TO AWWA C900. JOINTS MAY BE EITHER INTEGRAL BELL AND SPIGOT OR COUPLINGS.
FITTINGS; AWWA C111, PUSH-ON

WATER MAINS
PVC PIPE, 4 INCH THROUGH 12 INCH
PIPE: AWWA C900 "POLYVINYL CHLORIDE (PVC)
PRESSURE PIPE FOR WATER." PIPE PROVIDED SHALL BE CAST IRON PIPE EQUIVALENT O.D. PIPE SHALL BE WORKING PRESSURE RATED CLASS 200 (DR 14)
UNLESS SHOWN OTHERWISE ON THE DRAWINGS. ALL PVC PRESSURE PIPE SHALL BEAR THE NATIONAL SANITATION FOUNDATION SEAL (NFS).
FITTINGS: CEMENT LINED, CAST OR DUCTILE IRON FITTINGS CONFORMING TO AWWA C110, OR COMPACT DUCTILE IRON FITTINGS CONFORMING TO AWWA C153
JOINTS: PIPE; ELASTOMERIC GASKET, PUSH-ON JOINTS, CONFORMING TO AWWA C900 AND C111. JOINTS MAY BE EITHER INTEGRAL BELL AND SPIGOT OR COUPLINGS.

NOTE:
SEEDING AND STABILIZATION PER NCDOT SPECIAL PROVISIONS.

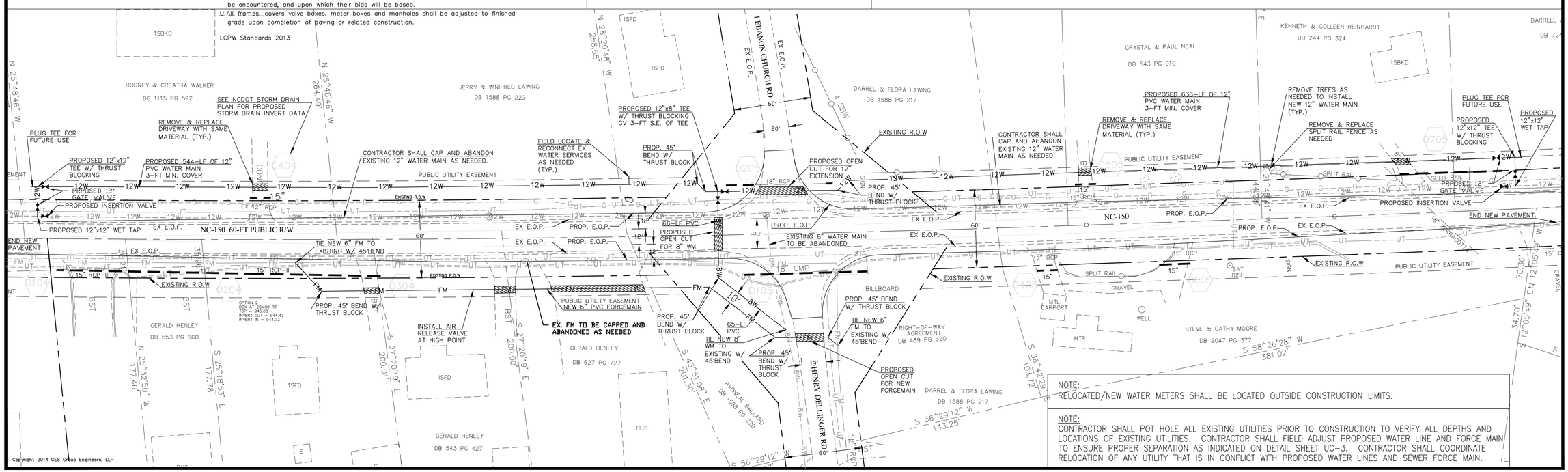

NOTE:
RELOCATED/NEW WATER METERS SHALL BE LOCATED OUTSIDE CONSTRUCTION LIMITS.

NOTE:
CONTRACTOR SHALL POT HOLE ALL EXISTING UTILITIES PRIOR TO CONSTRUCTION TO VERIFY ALL DEPTHS AND LOCATIONS OF EXISTING UTILITIES. CONTRACTOR SHALL FIELD ADJUST PROPOSED WATER LINE AND FORCE MAIN TO ENSURE PROPER SEPARATION AS INDICATED ON DETAIL SHEET UC-3. CONTRACTOR SHALL COORDINATE RELOCATION OF ANY UTILITY THAT IS IN CONFLICT WITH PROPOSED WATER LINES AND SEWER FORCE MAIN.

Copyright 2014 CES Group Engineers, LLP

0 20 40 80
Graphic Scale 1" = 40 ft.

811
Know what's below.
Call before you dig.
NORTH CAROLINA ONE-CALL CENTER INC.
DIAL 811 or 1-800-632-4949
2 BUSINESS DAYS BEFORE DIGGING
www.ncocc.org

SEAL:
NORTH CAROLINA PROFESSIONAL SEAL 032866 ENGINEER DAVID LUZA

REVISIONS		
NO:	ISSUE:	DATE:

CES GROUP ENGINEERS, LLP
274 N. Hwy. 16, SUITE 300
DENVER, NC 28037

PROJECT DESCRIPTION:
NC-150 & HENRY DELLINGER RD.
WATER MAIN RELOCATION
LINCOLN COUNTY, NC

DRAWN BY: PW
CHECKED BY: DL
PROJECT NO: 2013-01
COMMENTS:
DATE APPROVED:
SCALE: 1" = 40'
DRAWING TITLE: UTILITY PLAN

DRAWING NUMBER: UC-2

X:\LCPW STANDARD DETAIL AND SPECIFICATIONS\2013 DRAFT\04_STANDARD DETAILS\LCPW_SS-04.DWG

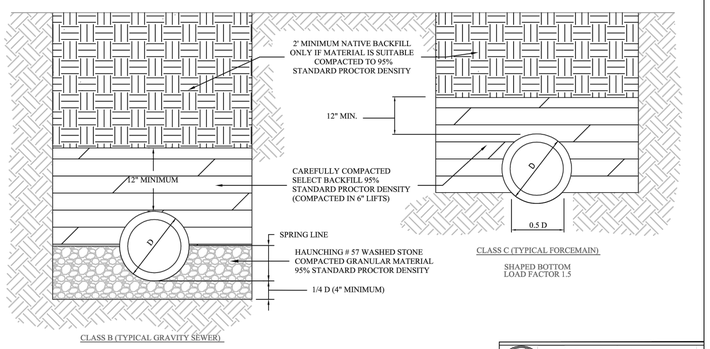

CLASS B (TYPICAL GRAVITY SEWER)

COMPACTED GRANULAR BEDDING
LOAD FACTOR 1.9

CLASS C (TYPICAL FORCEMAIN)

SHAPED BOTTOM
LOAD FACTOR 1.5

LINCOLN COUNTY PUBLIC WORKS
115 W. MAIN STREET
LINCOLNTON, NC 28092
Phone (704) 736-8497 Fax (704) 736-8499

STANDARD BEDDING FOR SEWER PIPE

APPROVED:	MCN	12/31/2013	DRAWN BY:	JDH
SCALE:	N.T.S.	FIGURE :	SS-04	

X:\LCPW STANDARD DETAIL AND SPECIFICATIONS\2013 DRAFT\04_STANDARD DETAILS\LCPW_WL-02.DWG

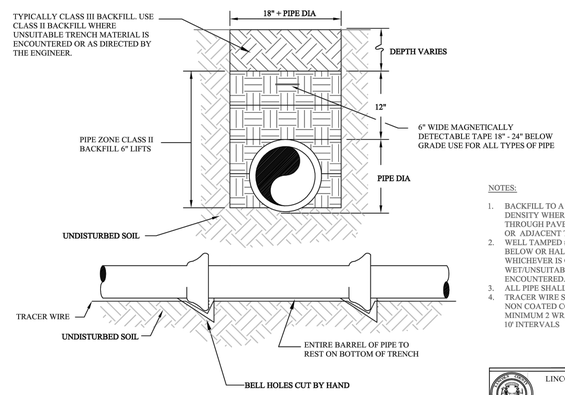

NOTES:

1. BACKFILL TO A MINIMUM 95% OF MAXIMUM DENSITY WHERE EXCAVATIONS CUT THROUGH PAVEMENT, CURBS, AND UNDER OR ADJACENT TO STRUCTURES.
2. WELL TAMPED #57 STONE IS REQUIRED TO 6" BELOW OR HALF THE PIPE DIAMETER WHICHEVER IS GREATER WHERE ROCK OR WET/UNSUITABLE MATERIAL IS ENCOUNTERED.
3. ALL PIPE SHALL HAVE 36" MINIMUM COVER
4. TRACER WIRE SHALL BE MINIMUM 14 GAUGE NON COATED COPPER SECURED WITH MINIMUM 2 WRAPS OF TAPE TO THE MAIN AT 10' INTERVALS

LINCOLN COUNTY PUBLIC WORKS
115 W. MAIN STREET
LINCOLNTON, NC 28092
Phone (704) 736-8497 Fax (704) 736-8499

STANDARD WATER MAIN TRENCH

APPROVED:	MCN	12/31/2013	DRAWN BY:	JDH
SCALE:	N.T.S.	FIGURE :	WL-02	

X:\LCPW STANDARD DETAIL AND SPECIFICATIONS\2013 DRAFT\04_STANDARD DETAILS\LCPW_WS-02.DWG

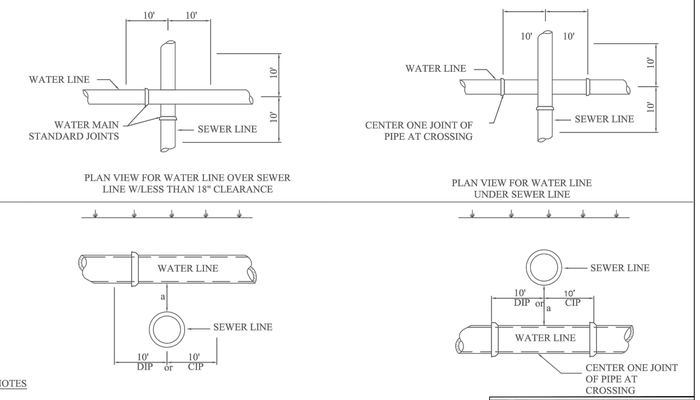

NOTES

1. IF DIMENSION "a" IS LESS THAN 18" BOTH WATER AND SEWER LINE SHALL BE DUCTILE IRON PIPE, FOR 10' EACH SIDE OF CROSSING
2. WHERE WATER MUST CROSS UNDER SEWER ONE JOINT OF DIP WATER MAIN PIPE SHALL BE CENTERED AT THE POINT OF CROSSING
3. ALL WATER AND SEWER CROSSINGS MUST MEET NCDENR MINIMUM SEPARATION REQUIREMENTS

LINCOLN COUNTY PUBLIC WORKS
115 W. MAIN STREET
LINCOLNTON, NC 28092
Phone (704) 736-8497 Fax (704) 736-8499

WATER AND SEWER CROSSING REQUIREMENTS

APPROVED:	MCN	12/31/2013	DRAWN BY:	JDH
SCALE:	N.T.S.	FIGURE :	WS-02	

X:\LCPW STANDARD DETAIL AND SPECIFICATIONS\2013 DRAFT\04_STANDARD DETAILS\LCPW_WL-06.DWG

NOTES:

1. **STAINLESS TAPPING SADDLES ARE NOT PERMITTED FOR SIZE-ON-SIZE TAPS. UNLESS APPROVED IN WRITING BY LCPW.**
2. **USE MUELLER OR EQUIVENT DUCTILE IRON OR 316 STAINLESS STEEL TAPPING SLEEVES FOR TAP SIZES 3" - 24".**
3. **USE THRUST BLOCKING FOR WET TAPS UNLESS OTHERWISE APPROVED BY LCPW.**
4. **DEPTH FROM GROUND SURFACE TO TOP OF BLOCKING SHALL BE GREATER THAN HEIGHT OF BLOCKING.**
5. **THE END OF THE TAPPING SLEEVE SHALL BE NO CLOSER THAN 5 FEET TO A JOINT.**
6. **ALL PRESSURE TESTING SHALL BE WATER TESTING ONLY. NO AIR TESTING PERMITTED. TEST DURATION WILL BE 2HRS AT 1.5 TIMES STATIC PRESSURE OF THE LINE BEING TAPPED (200 PSI MINIMUM) .**

TAP SIZE	DIMENSIONS IN FEET		
	W	H	D
3" & 4"	1.6	1.2	1.0
6"	2.0	1.4	1.0
8"	3.5	2.0	1.4
10"	4.0	2.5	1.8
12"	5.0	3.0	2.5

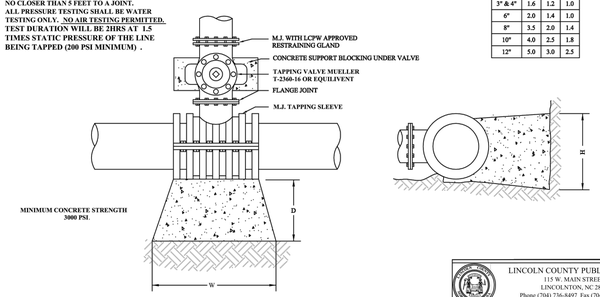

TYPICAL TAPPING SLEEVE

LINCOLN COUNTY PUBLIC WORKS
115 W. MAIN STREET
LINCOLNTON, NC 28092
Phone (704) 736-8497 Fax (704) 736-8499

TYPICAL TAPPING SLEEVE INSTALLATION

APPROVED:	MCN	12/31/2013	DRAWN BY:	JDH
SCALE:	N.T.S.	FIGURE :	WL-06	

X:\LCPW STANDARD DETAIL AND SPECIFICATIONS\2013 DRAFT\04_STANDARD DETAILS\LCPW_WL-04.DWG

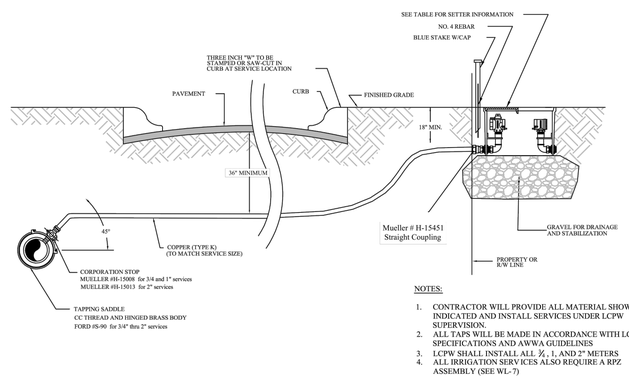

NOTES:

1. CONTRACTOR WILL PROVIDE ALL MATERIAL SHOWN OR INDICATED AND INSTALL SERVICES UNDER LCPW SUPERVISION.
2. ALL TAPS WILL BE MADE IN ACCORDANCE WITH LCPW SPECIFICATIONS AND AWWA GUIDELINES
3. LCPW SHALL INSTALL ALL ¾ , 1, AND 2" METERS
4. ALL IRRIGATION SERVICES ALSO REQUIRE A RPZ ASSEMBLY (SEE WL- 7)

SERVICE SPECIFICATIONS

SERVICE SIZE	MUELLER SETTER MODEL	MUELLER LID AND FRAME
¾	203-RS-15-18-F-S-A-N	282920
1	330-RS-18-24-F-S-A-N	282921
2	550-VB-27-30-F-B-A	700098/282921

LINCOLN COUNTY PUBLIC WORKS
115 W. MAIN STREET
LINCOLNTON, NC 28092
Phone (704) 736-8497 Fax (704) 736-8499

3/4", 1", and 2" WATER SERVICES

APPROVED:	MCN	12/31/2013	DRAWN BY:	JDH
SCALE:	N.T.S.	FIGURE :	WL-04	

X:\LCPW STANDARD DETAIL AND SPECIFICATIONS\2013 DRAFT\04_STANDARD DETAILS\LCPW_WS-07.DWG

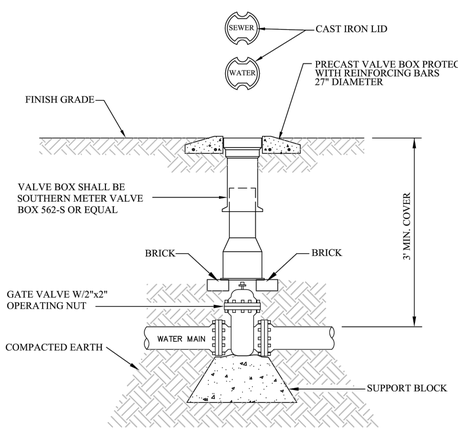

NOTES

1. ALL POTABLE WATER VALVES SHALL BE RESILIENT SEAT GATE VALVES CONFORMING TO AWWA C509-01 OR CURRENT
2. ALL SEWER FORCE MAIN VALVES SHALL BE ECCENTRIC PLUG VALVES UNLESS APPROVED IN WRITING BY LCPW
3. ANY VALVE WITH AN OPERATING NUT DEEPER THAN 6' BELOW GRADE SHALL BE EQUIPED WITH A RISER STEM TO WITHIN 12" OF GRADE
4. SUPPORT BLOCK SHALL BE SIZED TO EVENLY DISTRIBUTE THE WEIGHT OF THE VALVE,VALVE BOX ASSEMBLY, AND ANY OTHER APPLICABLE LOADS AS DETERMINED BY THE DESIGN ENGINEER

LINCOLN COUNTY PUBLIC WORKS
115 W. MAIN STREET
LINCOLNTON, NC 28092
Phone (704) 736-8497 Fax (704) 736-8499

VALVE BOX AND VALVE

APPROVED:	MCN	12/31/2013	DRAWN BY:	JDH
SCALE:	N.T.S.	FIGURE :	WS-07	

Copyright 2014 CES Group Engineers, LLP

SEAL:

NORTH CAROLINA PROFESSIONAL SEAL 032866 ENGINEER DAVID LUTZ

REVISIONS

NO:	ISSUE:	DATE:

CES GROUP
ENGINEERS, LLP
274 N. HWY. 16, SUITE 300
DENVER, NC 28037

NC-150 & HENRY
DELLINGER RD.
WATER MAIN RELOCATION
LINCOLN COUNTY. NC

DRAWN BY: PW
CHECKED BY: DL
PROJECT NO: 2013-01
COMMENTS:
DATE APPROVED:
SCALE: 1" = 40'
DRAWING TITLE: UTILITY DETAILS

DRAWING NUMBER: UC-3

X:\LCPW STANDARD DETAIL AND SPECIFICATIONS\2013 DRAFT\04_STANDARD DETAILS\LCPW_SS-01.DWG

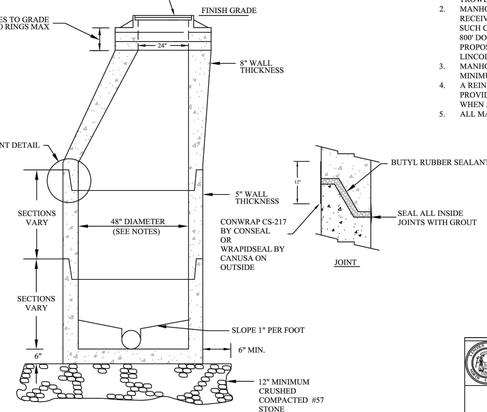

NOTES:
1. BENCH CAN BE PRECAST, OR BRICK AND MORTAR TROWELED SMOOTH.
2. MANHOLE SHALL BE UNLINED UNLESS IT IS THE RECEIVING MANHOLE FOR A FORCE MAIN. IN SUCH CASE ALL MANHOLES FOR A DISTANCE OF 800' DOWN STREAM SHALL BE LINED. ALL PROPOSED LINERS MUST BE SUBMITTED TO LINCOLN COUNTY PUBLIC WORKS FOR APPROVAL.
3. MANHOLES OVER 14 FT. DEEP SHALL HAVE A 60" MINIMUM INSIDE DIAMETER
4. A REINFORCED CONCRETE SLAB SHALL BE PROVIDED ON MANHOLE OVER 12' IN DEPTH OR WHEN A POOR SOIL IS ENCOUNTERED
5. ALL MAN HOLES SHALL MEET AASHTO M199

LINCOLN COUNTY PUBLIC WORKS
115 W. MAIN STREET
LINCOLNTON, NC 28092
Phone (704) 736-8497 Fax (704) 736-8499

PRECAST CONCRETE MANHOLE

APPROVED:	MCN	12/31/2013	DRAWN BY:	JDH
SCALE:	N.T.S.	FIGURE :	SS-01	

X:\LCPW STANDARD DETAIL AND SPECIFICATIONS\2013 DRAFT\04_STANDARD DETAILS\LCPW_WS-05.DWG

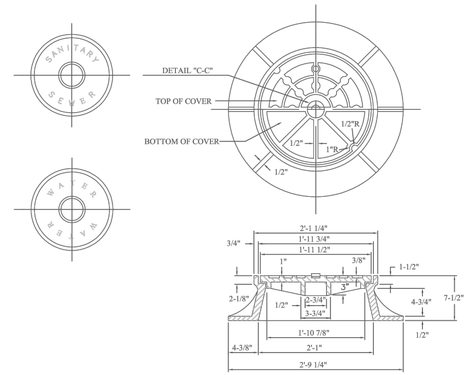

NOTES:
1. ALL CASTINGS TO BE FREE FROM SAND HOLES AND NO PLUGGING WILL BE ALLOWED.
2. CAST WITH THE USE OF ALUMINUM PATTERNS.
3. CASTING TO BE PAINTED WHILE HOT WITH COAL TAR.
4. SLIGHT DRAFT ALLOWED ON STRAIGHT FACES.
5. COVERS SHALL HAVE TWO - 1" DIAMETER HOLES. WATERTIGHT COVERS SHALL BE SOLID WITH RUBBER GASKET SEAL AND LIFTING BARS.
6. STANDARD LETTERS UNLESS OTHERWISE SPECIFIED.
7. APPROXIMATE WEIGHTS
   FRAME - 190 LBS.
   COVER - 120 LBS.
   TOTAL - 310 LBS.
8. COVERS SHALL BE USF669 RING AND KL COVER OR EQUAL. WATERTIGHT COVERS SHALL BE USF710 RING AND DPSSG COVER OR EQUAL.
9. WHEN THE MANHOLE IS EXPOSED TO ROAD TRAFFIC, THE TOP OF THE FRAME IS TO BE FLUSH WITH THE GROUND. AT THE OTHER LOCATIONS IT SHALL BE 9" ABOVE THE GROUND.
10. RIMS AND COVERS TO BE GRAY CAST IRON COMPLYING TO ASTM A48, CLASS 30 IRON.
11. MANHOLES COVERS SHALL BE HEAVY DUTY AND RATED FOR H-20 TRAFFIC LOADS.

LINCOLN COUNTY PUBLIC WORKS
115 W. MAIN STREET
LINCOLNTON, NC 28092
Phone (704) 736-8497 Fax (704) 736-8499

CAST IRON FRAME AND COVER FOR MANHOLES

APPROVED:	MCN	12/31/2013	DRAWN BY:	JDH
SCALE:	N.T.S.	FIGURE :	WS-05	

X:\LCPW STANDARD DETAIL AND SPECIFICATIONS\2013 DRAFT\04_STANDARD DETAILS\LCPW_WS-06.DWG

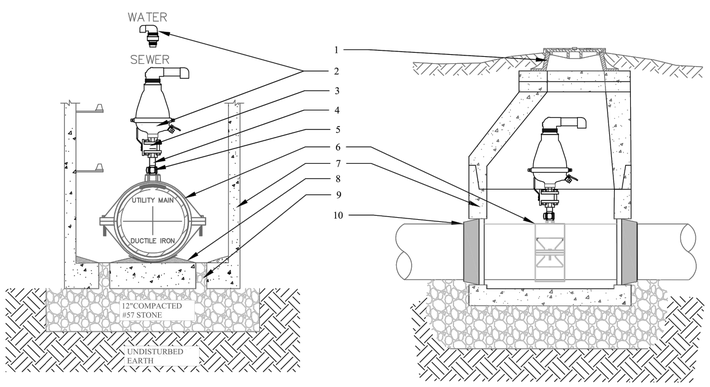

1. MANHOLE RING AND COVER (SEE LCPW WS-5)
2. **SEWER** : A.R.I. FLOW CONTROL ACCESSORIES MODEL D-025 COMBINATION AIR VALVE
   WATER : A.R.I. FLOW CONTROL ACCESSORIES MODEL D-040 COMBINATION AIR VALVE
3. 2" BALL VALVE
4. 2" BRASS NIPPLE
5. FORD S-90 TAPPING SADDLE
6. 5' DIA. PRECAST MANHOLE
7. GROUT TO DRAINS ¼" PER FOOT
8. 6" DIA. DRAIN
9. NEOPRENE BOOT

NOTE:
1. A MINIMUM OF 18" CLEARANCE MUST BE MAINTAINED BETWEEN THE ARV AND RIM OF MANHOLE
2. INSTALL SEWER MAIN AT THE DEPTH TO SUIT MANHOLE
3. AIR RELEASE IS TO BE CENTERED ON 1 FULL JOINT OF DUCTILE IRON PIPE

LINCOLN COUNTY PUBLIC WORKS
115 W. MAIN STREET
LINCOLNTON, NC 28092
Phone (704) 736-8497 Fax (704) 736-8499

AIR RELIEF VALVE

APPROVED:	MCN	12/31/2013	DRAWN BY:	JDH
SCALE:	N.T.S.	FIGURE :	WS-06	

X:\LCPW STANDARD DETAIL AND SPECIFICATIONS\2013 DRAFT\04_STANDARD DETAILS\LCPW_WS-01.DWG

THRUST BLOCK SPECIFICATIONS AND DIMENSIONS

FITTING	AREA (IN^2)	TEES		AREA OF THRUST BLOCK (FT^2)	90° BENDS AND DEAD MAN (FT)		AREA OF THRUST BLOCK (FT^2)	45° BENDS AND "Y"'S (FT)		AREA OF THRUST BLOCK (FT^2)	22.5° BENDS (FT)		AREA OF THRUST BLOCK (FT^2)	11.25° BENDS (FT)		AREA OF THRUST BLOCK (FT^2)
SIZES (IN)		A (FT)	B (FT)		A (FT)	B (FT)		A (FT)	B (FT)		A (FT)	B (FT)		A (FT)	B (FT)	
6	28.3	2.1	1.0	2.1	2.4	1.2	3.0	1.8	0.9	1.6	1.3	0.6	0.8	1.3	0.6	0.8
8	50.3	2.7	1.4	3.8	3.3	1.6	5.3	2.4	1.2	2.9	1.7	0.9	1.5	1.7	0.9	1.5
10	78.5	3.4	1.7	5.9	4.1	2.0	8.3	3.0	1.5	4.5	2.1	1.1	2.3	2.1	1.1	2.3
12	113.1	4.1	2.1	8.5	4.9	2.4	12.0	3.6	1.8	6.5	2.6	1.3	3.3	2.6	1.3	3.3
14	153.9	4.8	2.4	11.5	5.7	2.9	16.3	4.2	2.1	8.8	3.0	1.5	4.5	3.0	1.5	4.5
16	201.1	5.5	2.7	15.1	7.1	3.0	21.3	4.8	2.4	11.5	3.4	1.7	5.9	3.4	1.7	5.9
18	254.5	6.4	3.0	19.1	18.0	CY	27.0	5.4	2.7	14.6	3.9	1.9	7.4	3.9	1.9	7.4
20	314.2	7.9	3.0	23.6	22.2	CY	33.3	6.0	3.0	18.0	4.3	2.1	9.2	4.3	2.1	9.2
24	452.4	22	CY	33.9	32.0	CY	48.0	17.3	CY	26.0	5.1	2.6	13.2	5.1	2.6	13.2

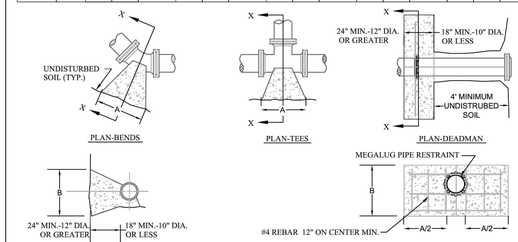

NOTES:
1. BASED ON 200 PSI STATIC PRESSURE PLUS AWWA WATER HAMMER ALLOWANCE ASSUMING 4000 PSF BEARING CAPACITY OF SOIL.
2. ALL BEARING SURFACES TO BE CARRIED TO UNDISTURBED GROUND.
3. THRUST BLOCKS TO BE USED AT ALL LINES OPERATING UNDER PRESSURE.
4. THESE DETAILS IN NO WAY LIMIT THE SIZE OR LOCATION OF ADDITIONAL BLOCKING WHEN REQUESTED BY THE COUNTY ENGINEER.
5. DEPTH FROM GROUND SURFACE TO TOP OF BLOCKING SHALL BE GREATER THAN HEIGHT OF BLOCKING
6. ALL FITTINGS, VALVES, ETC. SHALL BE WRAPPED WITH VISQUEEN OR POLYWRAP BEFORE CONCRETE IS PLACED, TO PREVENT CORROSION OR BONDING OF THE CONCRETE TO THE BOLTS, FITTINGS, OR PIPE.
7. WIDTH OF THE THRUST BLOCK SHOULD BE AT LEAST TWO TIMES THE HEIGHT OF THE THRUST BLOCK.
8. CUBIC YARDS OF CONCRETE IS SPECIFIED TO OPPOSE THE THRUST FORCE WHEN DIMENSION "A" EXCEEDS 8 FEET
9. ALTHOUGH THE BEARING STRENGTHS USED IN THIS TABLE HAVE BEEN USED SUCCESSFULLY IN THE DESIGN OF THRUST BLOCKS AND ARE CONSIDERED TO BE CONSERVATIVE, THEIR ACCURACY IS TOTALLY DEPENDANT ON ACCURATE SOIL IDENTIFICATION AND EVALUATION. THE ULTIMATE RESPONSIBILITY FOR SELECTING THE PROPER BEARING STRENGTH OF A PARTICULAR SOIL TYPE RESTS WITH THE DESIGN ENGINEER.

LINCOLN COUNTY PUBLIC WORKS
115 W. MAIN STREET
LINCOLNTON, NC 28092
Phone (704) 736-8497 Fax (704) 736-8499

THRUST BLOCKING DETAIL

APPROVED:	MCN	12/31/2013	DRAWN BY:	JDH
SCALE:	N.T.S.	FIGURE :	WS-01	

STATE OF NORTH CAROLINA
DEPT. OF TRANSPORTATION
DIVISION OF HIGHWAYS
RALEIGH, N.C.

1-12

ENGLISH STANDARD DRAWING FOR
PAVEMENT REPAIRS
FOR SUPERPAVE MIX TYPES

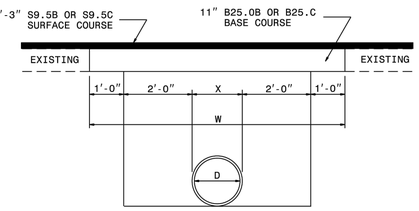

PAVEMENT REPAIRS ON ROADS TO BE RESURFACED (PIPE IS PLACED UNDER EXISTING PAVEMENT)

D	X	W
12"	1'-4"	7'-4"
15"	1'-7"	7'-7"
18"	1'-10"	7'-10"
24"	2'-6"	8'-6"
30"	3'-1"	9'-1"
36"	3'-8"	9'-8"
42"	4'-5"	10'-5"
48"	5'-0"	11'-0"

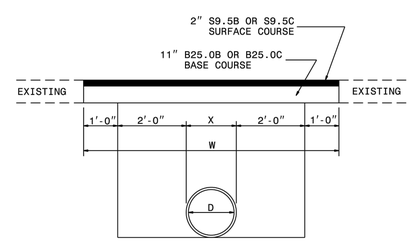

PAVEMENT REPAIRS ON ROADS NOT TO BE RESURFACED (PIPE IS TO BE PLACED UNDER EXISTING PAVEMENT)

SHEET 1 OF 1
654.01

STATE OF NORTH CAROLINA
DEPT. OF TRANSPORTATION
DIVISION OF HIGHWAYS
RALEIGH, N.C.

1-12

ENGLISH STANDARD DRAWING FOR
PAVEMENT REPAIRS
FOR SUPERPAVE MIX TYPES

SHEET 1 OF 1
654.01

SEAL:

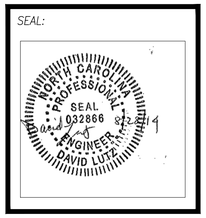

REVISIONS		
NO:	ISSUE:	DATE:

CES GROUP
ENGINEERS, LLP
274 N. HWY. 16, SUITE 300
DENVER, NC 28037

NC-150 & HENRY
DELLINGER RD.
WATER MAIN RELOCATION
LINCOLN COUNTY. NC

DRAWN BY: PW
CHECKED BY: DL
PROJECT NO: 2013-01
COMMENTS:
DATE APPROVED:
SCALE: 1" = 40'
DRAWING TITLE: UTILITY PLAN

DRAWING NUMBER: UC-4

Copyright 2014 CES Group Engineers, LLP

Project: W-5212G

STATE OF NORTH CAROLINA
DIVISION OF HIGHWAYS

Project No.	Sheet No.
W-5212G	Sig. 1

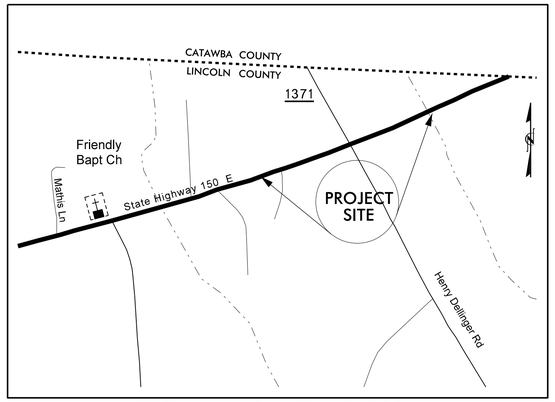

VICINITY MAP NOT TO SCALE

LOCATION: NC 150 AT SR 1371 (HENRY DELLINGER ROAD / LEBANON CHURCH ROAD)

TYPE OF WORK: TRAFFIC SIGNAL FLASHER

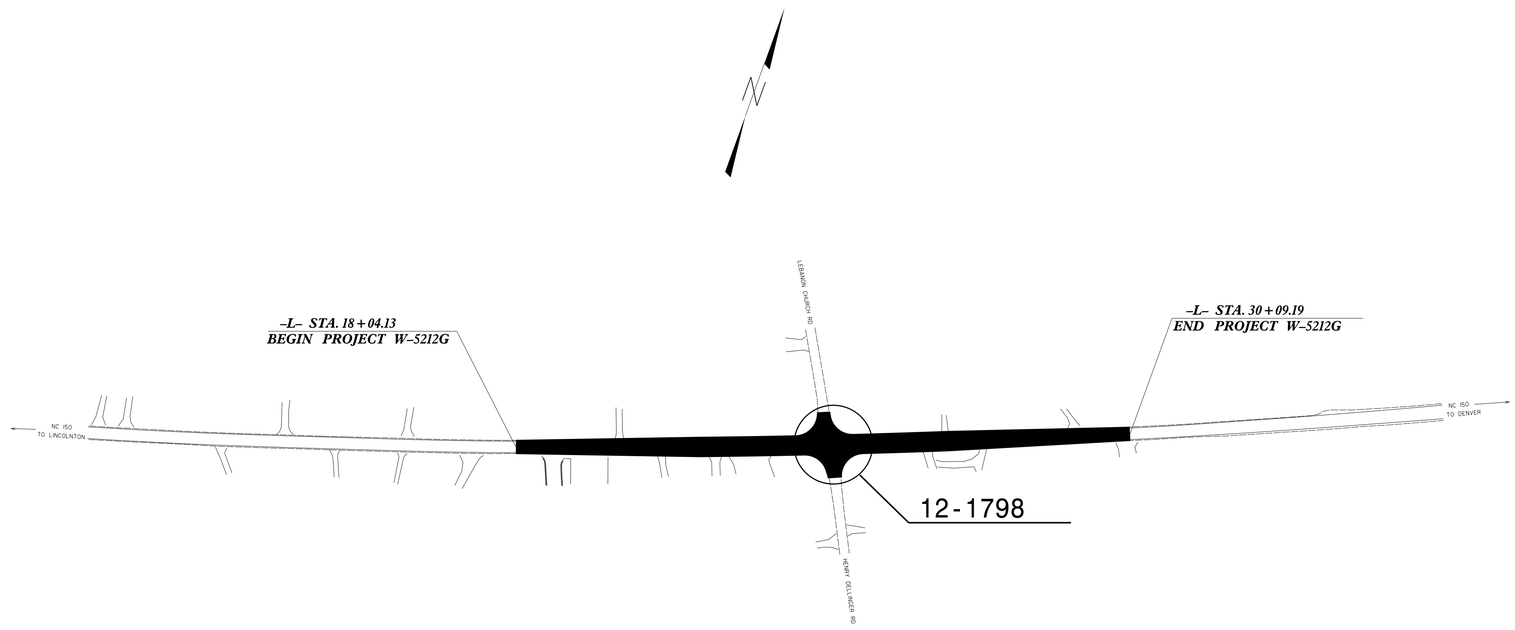

Refer to "Roadway Standard Drawings NCDOT" dated January 2012 and "Standard Specifications for Roads and Structures" dated January 2012.

Index of Plans

Sheet #	Reference #	Location/Description
Sig. 1	--------	Title Sheet
Sig. 2–3	12–1798	NC 150 at SR 1371 (Henry Dellinger Road/Lebanon Church Road)

INTELLIGENT TRANSPORTATION AND SIGNALS UNIT

Contacts:

Timothy J. Williams, PE – Western Region Signals Engineer
George C. Brown, PE – Signal Equipment Design Engineer

Prepared in the Office of:
DIVISION OF HIGHWAYS
TRANSPORTATION MOBILITY AND SAFETY DIVISION

Intelligent Transportation Systems & Signals Unit
STATE OF NORTH CAROLINA · DEPARTMENT OF TRANSPORTATION

750 N. Greenfield Parkway, Garner, NC 27529

31-JUL-2014 14:46
S:\TMS&SU\ITS Signals\Signal Design Section\Western Region\Div-12\0-ACTIVE projects\12-1798\Signals\121798_sig_dsn_20140724.dgn
mmelbooke

PROJECT REFERENCE NO.	SHEET NO.
W-5212G	Sig.2

TABLE OF OPERATION

SIGNAL FACE	INTERVAL 1	INTERVAL 2
11, 12	ON	OFF
13,14	OFF	ON
21, 22	ON	OFF
23, 24	OFF	ON

FIGURE 1

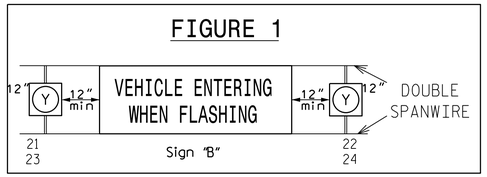

FIGURE 2

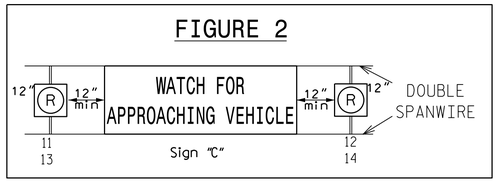

SIGNAL FACE I.D.

All Heads L.E.D.

21, 22
23, 24

11, 12
13, 14

LOOP & DETECTOR UNIT INSTALLATION CHART

INDUCTIVE LOOPS						DETECTOR UNITS							
LOOP NO.	SIZE (ft)	DIST. FROM STOPBAR (ft)	TURNS	NEW	EXISTING	UNIT NO.	NEW	EXISTING CHANNEL	NEMA PHASE	TIMING FEATURE	TIMING TIME	PLACE CALL DURING PHASE	INHIBIT DELAY DURING GREEN?
1A	6X40	0	2-4-2	X	-	1	X	- 1	-	EXTEND	5 Sec.	-	-
1B	6X15	+5	3	X	-			- 2	-	EXTEND	5 Sec.	-	-
1C	6X40	0	2-4-2	X	-	2	X	- 1	-	EXTEND	5 Sec.	-	-
1D	6X15	+5	3	X	-			- 2	-	EXTEND	5 Sec.	-	-
2A	6X6	400*	5	X	-	3	X	- 1	-	EXTEND	7 Sec.	-	-
2B	6X6	400*	4	X	-			- 2	-	EXTEND	7 Sec.	-	-

*Measured from center of intersection.

Fully Actuated Flasher

NOTES

1. Refer to "Roadway Standard Drawings NCDOT" dated January 2012 and "Standard Specifications for Roads and Structures" dated January 2012.
2. Set all detector units to presence mode.
3. Locate new cabinet so as not to obstruct sight distance of vehicles turning right on red.
4. Flash beacons 11, 12, 13 & 14 when actuated by loop 2A or 2B.
5. Flash beacons 21, 22, 23 & 24 when actuated by loops 1A, 1B, 1C or 1D.
6. Signal faces mounted horizontally shall flash concurrently.

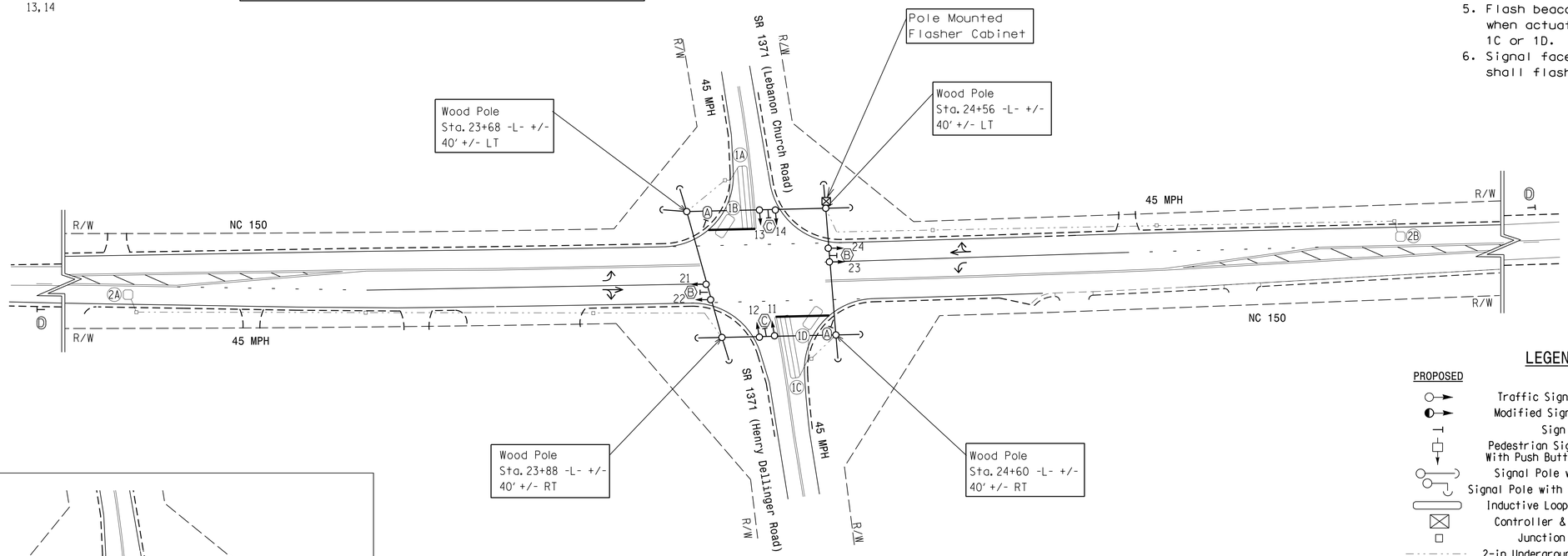

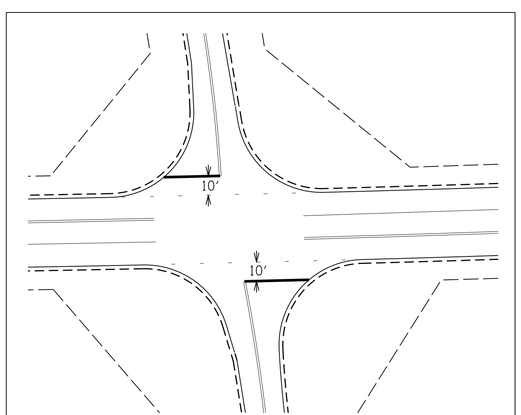

Proposed Stopbar Locations

LEGEND

PROPOSED		EXISTING
	Traffic Signal Head	
	Modified Signal Head	N/A
	Sign	
	Pedestrian Signal Head With Push Button & Sign	
	Signal Pole with Guy	
	Signal Pole with Sidewalk Guy	
	Inductive Loop Detector	
	Controller & Cabinet	
	Junction Box	
	2-in Underground Conduit	
N/A	Right of Way	
	Directional Arrow	
A	"STOP" Sign (R1-1)	A
B	"VEHICLE ENTERING WHEN FLASHING" Sign (See Figure 1)	B
C	"WATCH FOR APPROACHING VEHICLE" Sign (See Figure 2)	C
D	Cross Road Symbol Sign (W2-1)	D

New Installation

Prepared in the Offices of:
Transportation Mobility and Safety Division
Signal Design Section
750 N.Greenfield Pkwy,Garner,NC 27529

NC 150 at SR 1371 (Henry Dellinger Road/ Lebanon Church Road)

Division 12 Lincoln County Denver

PLAN DATE:	June 2014	REVIEWED BY:	T. Williams
PREPARED BY:	M. Mahbooba	REVIEWED BY:	

SCALE 0 40 1"=40'

REVISIONS	INIT.	DATE

SEAL
NORTH CAROLINA PROFESSIONAL SEAL 24393 ENGINEER TIMOTHY J. WILLIAMS

DocuSigned by: T. J. Williams 97AD792E8E934CA... 7/24/2014 DATE

SIG. INVENTORY NO. 12-1798

24-JUL-2014 13:50
S:\TIS\5AG\TIS Signals\Signal Design Section\Western Region\Div-1240-ACTIVE projects\12-1798\Signals\12198_sig_dsn_20140724.dgn
mmahbooba

PROJECT REFERENCE NO.	SHEET NO.
W-5212G	Sig. 3

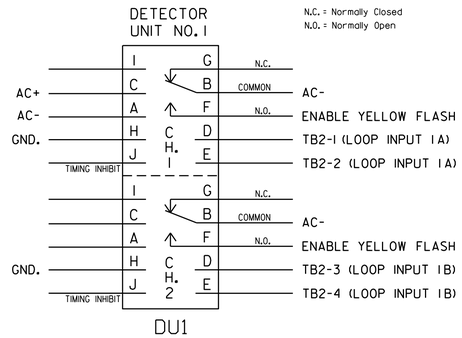

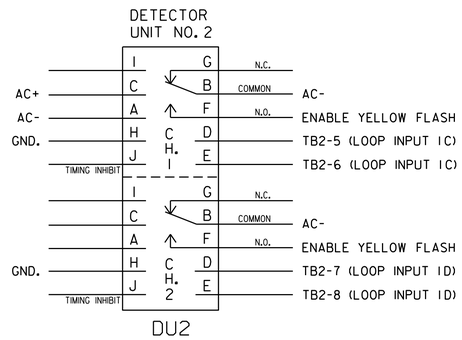

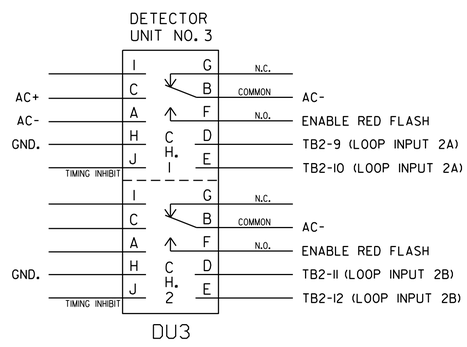

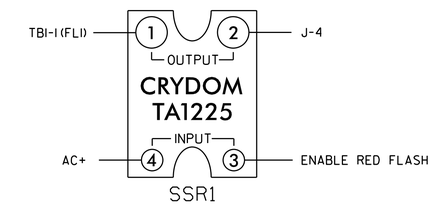

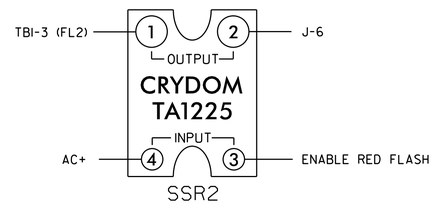

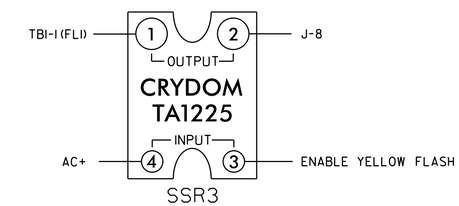

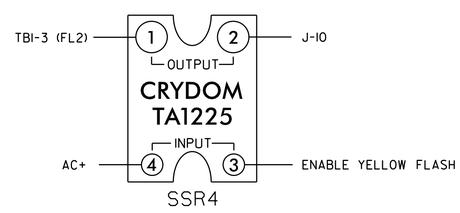

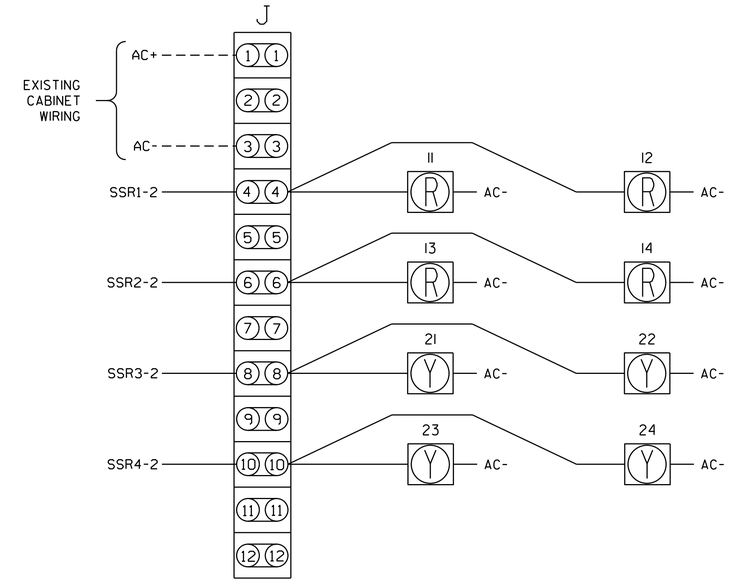

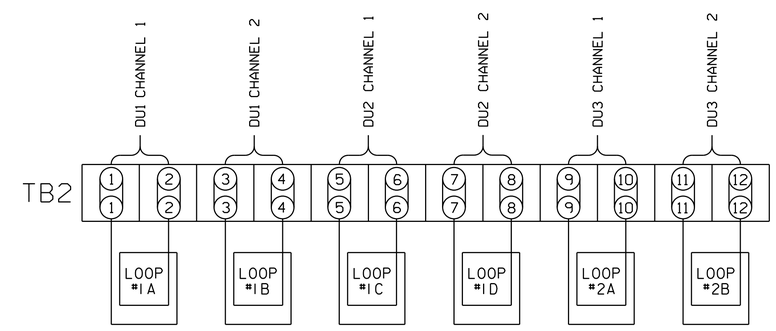

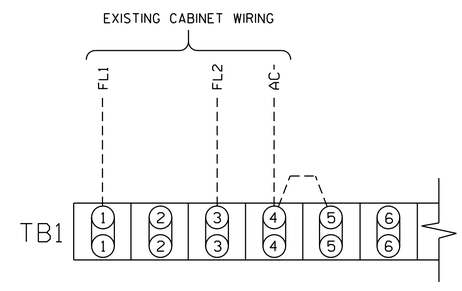

NOTES

1. RELAYS 'SSR1' - 'SSR4' ARE SPST SOLID STATE RELAYS WITH AC INPUT, AC OUTPUT. (CRYDOM #TA1225) (DOT NO. 625028740)
2. DETECTORS 1, 2 & 3 ARE U.S.TRAFFIC NO. 921-2T 2-CHANNEL, DIGITAL, WITH NO. 801A-6 'MS' CONNECTOR HARNESS. (DOT NO. 617031530)
3. TERMINAL BLOCK DESIGNATIONS SHOWN ARE FOR AN RGA, INC. DUAL CIRCUIT NEMA FLASHER CABINET, RGA DWG. NO. FC-NCF3-TYPICAL. (DOT NO. 609024300)
4. MOV'S AND TERMINAL BLOCKS 'TB1' AND 'J' ARE FURNISHED WITH THE FLASHER CABINET. TERMINAL BLOCK 'TB2' TO BE SUPPLIED BY INSTALLER.
5. ! REMOVE BONDING JUMPER BETWEEN AC NEUTRAL AND EQUIPMENT GROUND IN FLASHER CABINET IF A SIMILAR JUMPER IS INSTALLED IN EITHER METER BASE OR DISCONNECT ENCLOSURES.

NOTE!

1. SET EXTEND TIME ON DETECTOR UNITS NO. 1 & 2, BOTH CHANNELS, FOR 5 SEC.
2. SET EXTEND TIME ON DETECTOR UNIT NO. 3, BOTH CHANNELS, FOR 7 SECONDS.
3. SET ALL DETECTOR UNIT CHANNELS TO 'PRESENCE' MODE.

THIS ELECTRICAL DETAIL IS FOR
THE SIGNAL DESIGN: 12-1798
DESIGNED: June 2014
SEALED: 7/24/2014
REVISED: N/A

Electrical Detail

ELECTRICAL AND PROGRAMMING DETAILS FOR:

Prepared in the Offices of:
Transportation Mobility and Safety Division
STATE OF NORTH CAROLINA
DEPARTMENT OF TRANSPORTATION
Signals Management Section
750 N.Greenfield Pkwy, Garner, NC 27529

NC 150
at
SR 1371 (Henry Dellinger Road/
Lebanon Church Road)

Division 12 Lincoln County Denver

PLAN DATE: June 2014 REVIEWED BY: T. Joyce
PREPARED BY: C. Strickland REVIEWED BY:

REVISIONS	INIT.	DATE

SEAL
NORTH CAROLINA PROFESSIONAL SEAL 022013 ENGINEER GEORGE C. BROWN

DocuSigned by: George C. Brown 7/29/2014
F12601ED0BEB434... DATE

SIG. INVENTORY NO. 12-1798

29-JUL-2014 07:36
S:\TSG\Signals\Workgroups\Sig Man\Strickland\121798_smu_ele_xxx.dgn
castrickland

PROJ. REFERENCE NO.	SHEET NO.
W-5212G	X-1

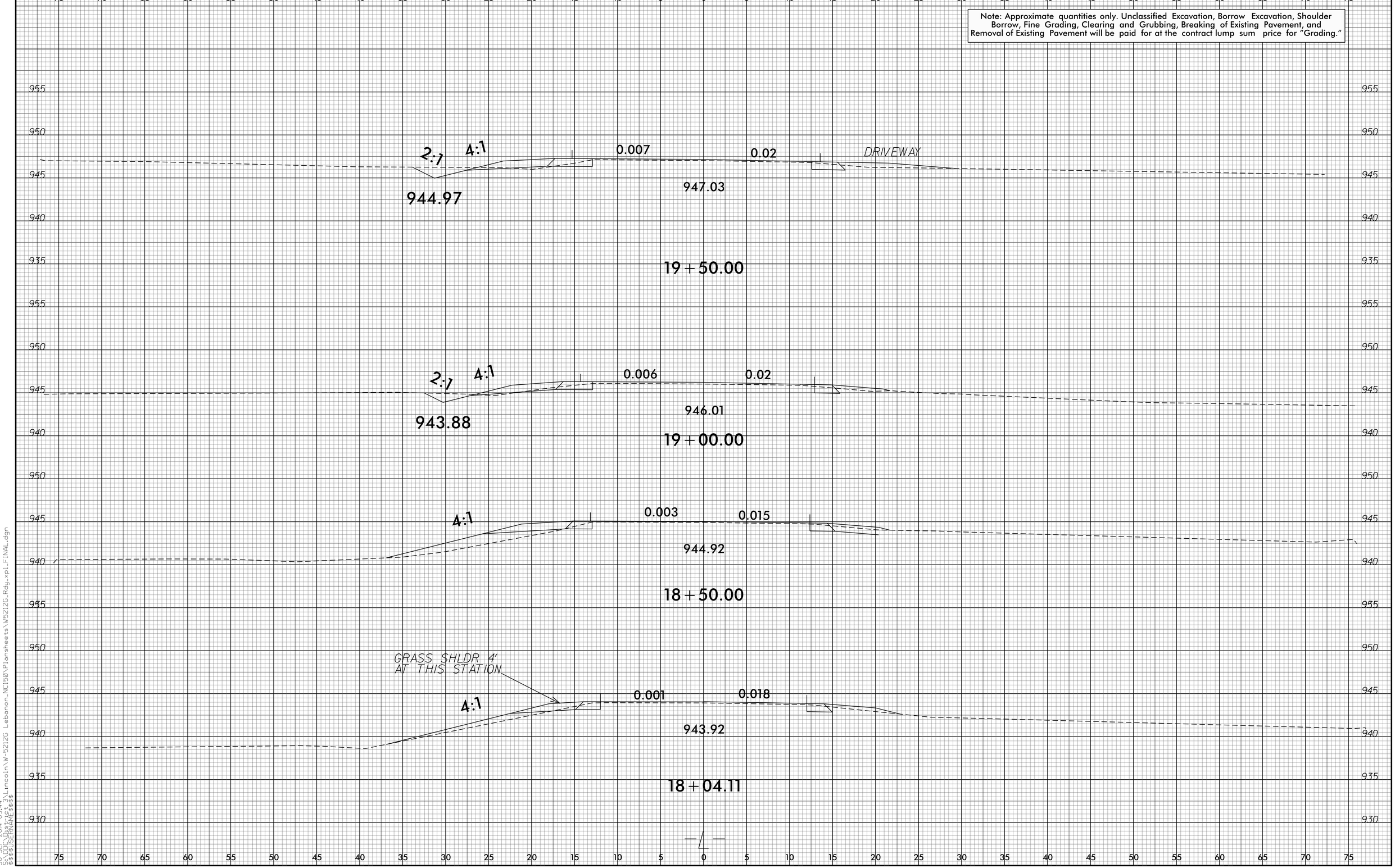

8/23/99

30-SEP-2014 09:44
S:\DDC\District 3\Lincoln\W-5212G Lebanon_NC150\Plansheets\W5212G_Rdy_xpl_FINAL.dgn
$$$$USERNAME$$$$

0 2.5 5	PROJ. REFERENCE NO.	SHEET NO.
	W-5212G	X-2

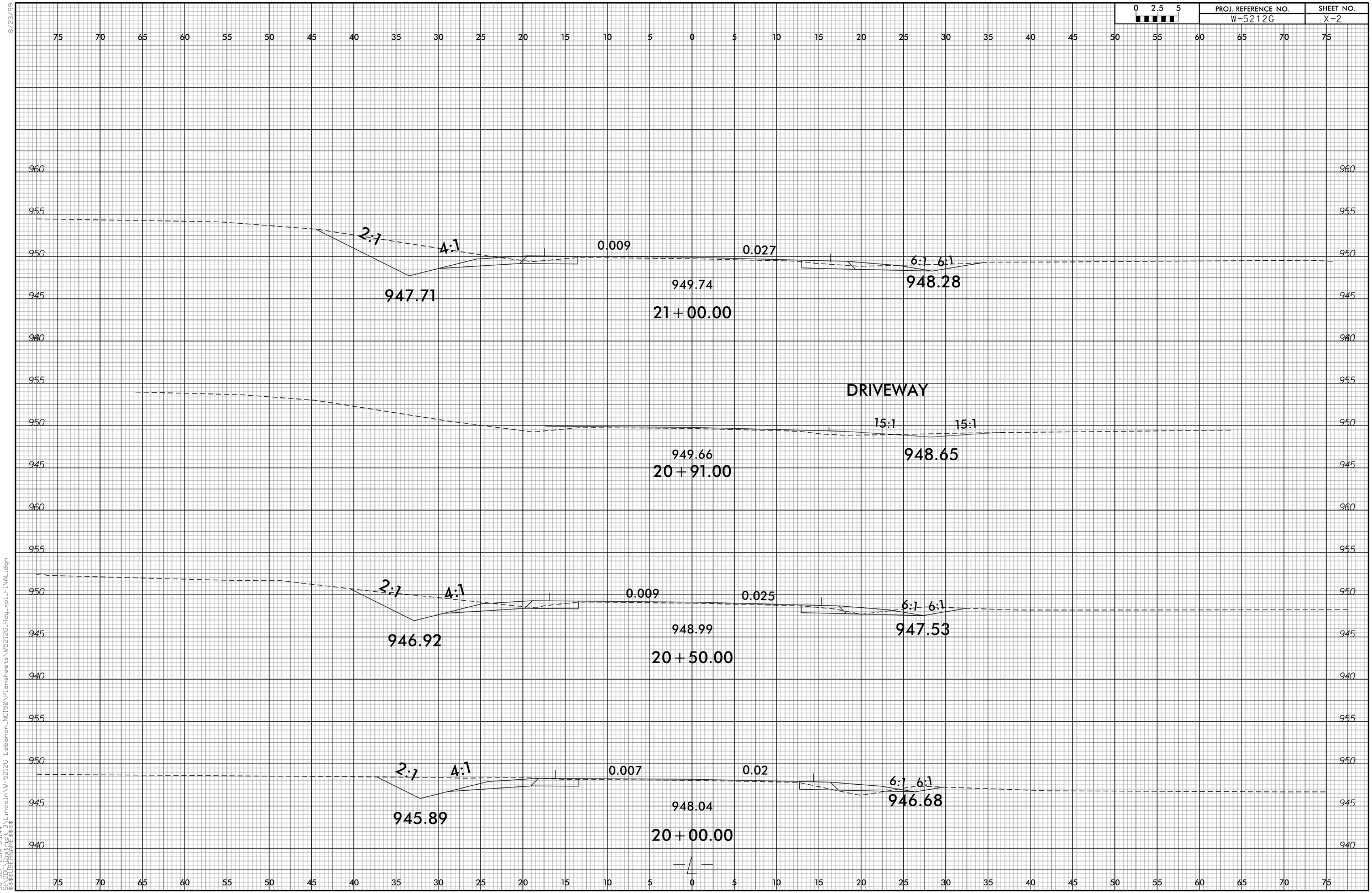

8/23/99

30-SEP-2014 09:44
$$$$USERNAME$$$$ L:\Lincoln\W-5212G Lebanon_NC150\Plansheets\W5212G_Rdy_xpl_FINAL.dgn

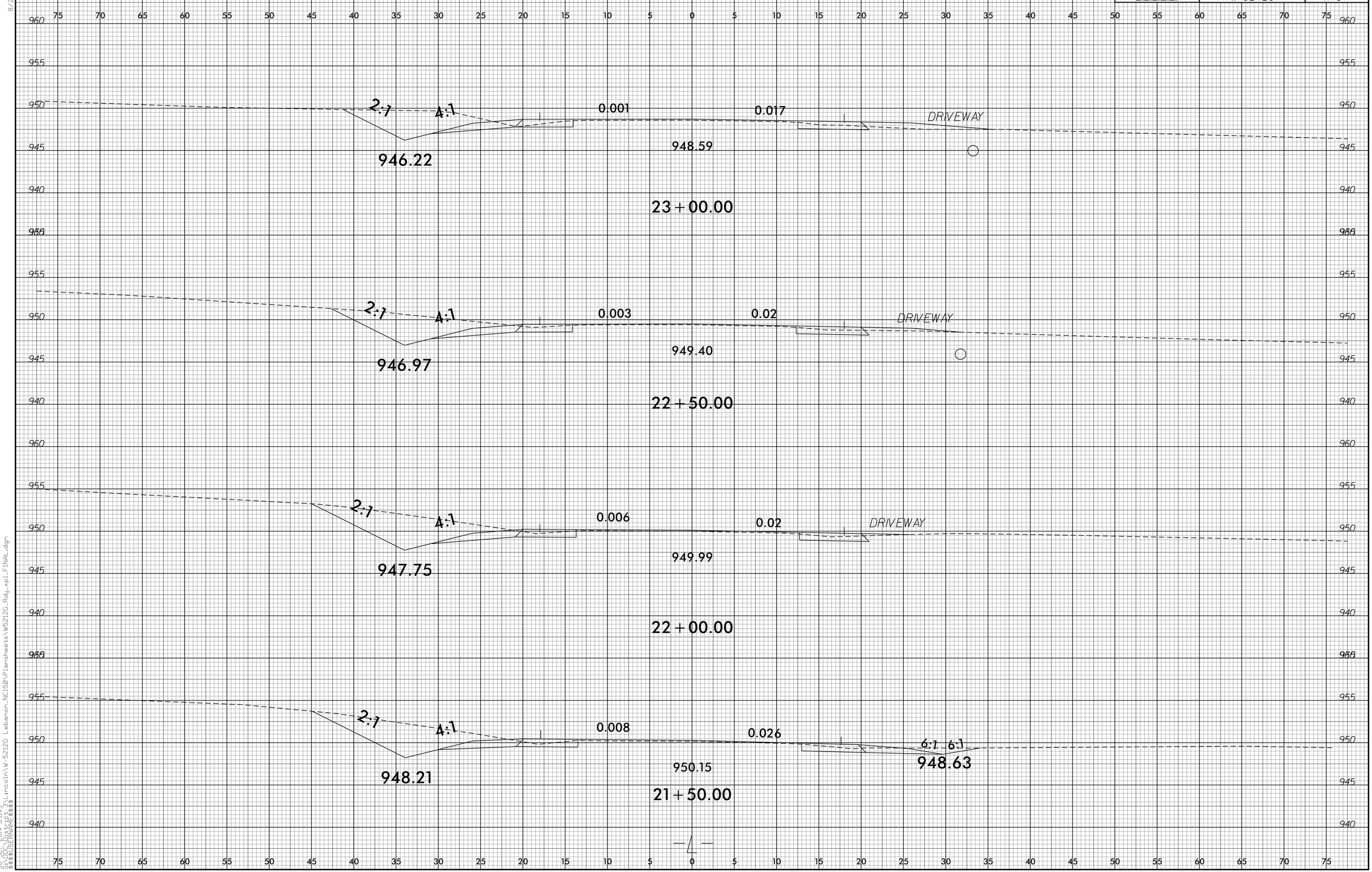

8/23/99

30-SEP-2014 09:45
S:\DDC\District 3\Lincoln\W-5212G Lebanon_NC150\Plansheets\W5212G_Rdy_xpl_FINAL.dgn
$$$$USERNAME$$$$

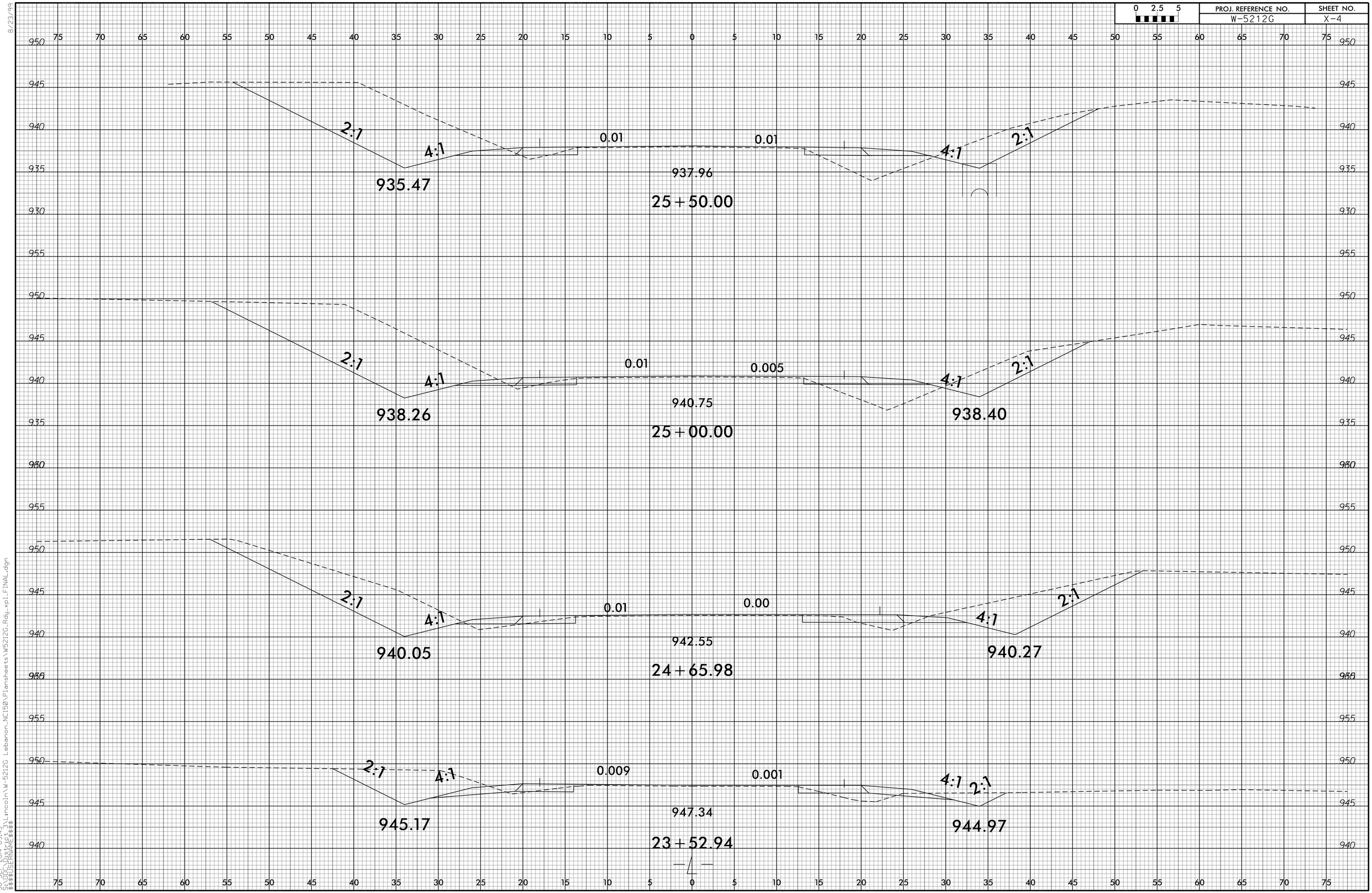

8/23/99

30-SEP-2014 09:45
S:\DDC\District 3\Lincoln\W-5212G Lebanon_NC150\Plansheets\W5212G_Rdy_xpl_FINAL.dgn
$$$$USERNAME$$$$

0 2.5 5	PROJ. REFERENCE NO.	SHEET NO.
	W-5212G	X-5

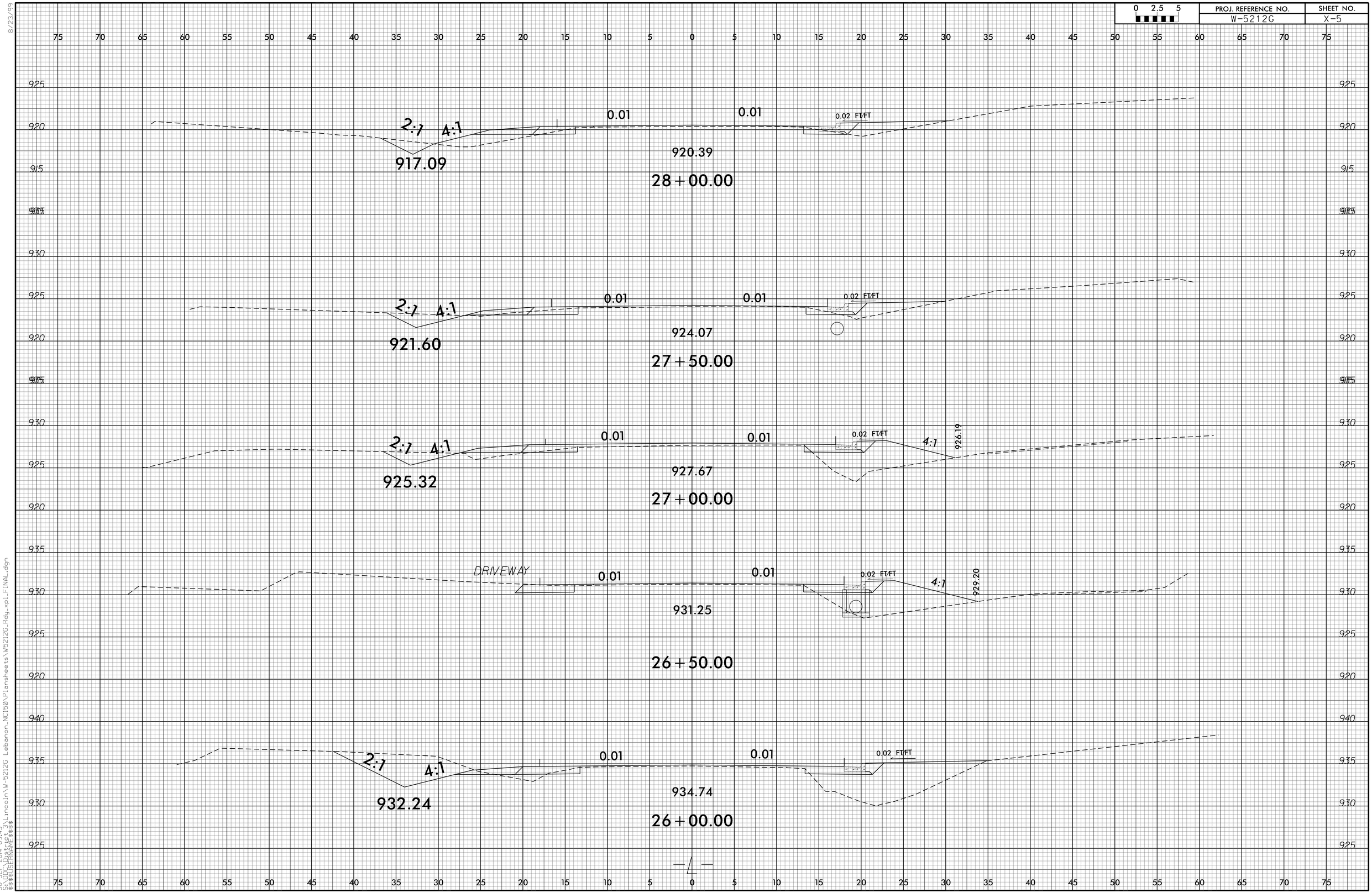

8/23/99

30-SEP-2014 09:45
$$$$USERNAME$$$$ C:\Lincoln\W-5212G Lebanon-NC150\Plansheets\W5212G_Rdy_xpl_FINAL.dgn

0 2.5 5	PROJ. REFERENCE NO.	SHEET NO.
	W-5212G	X-6

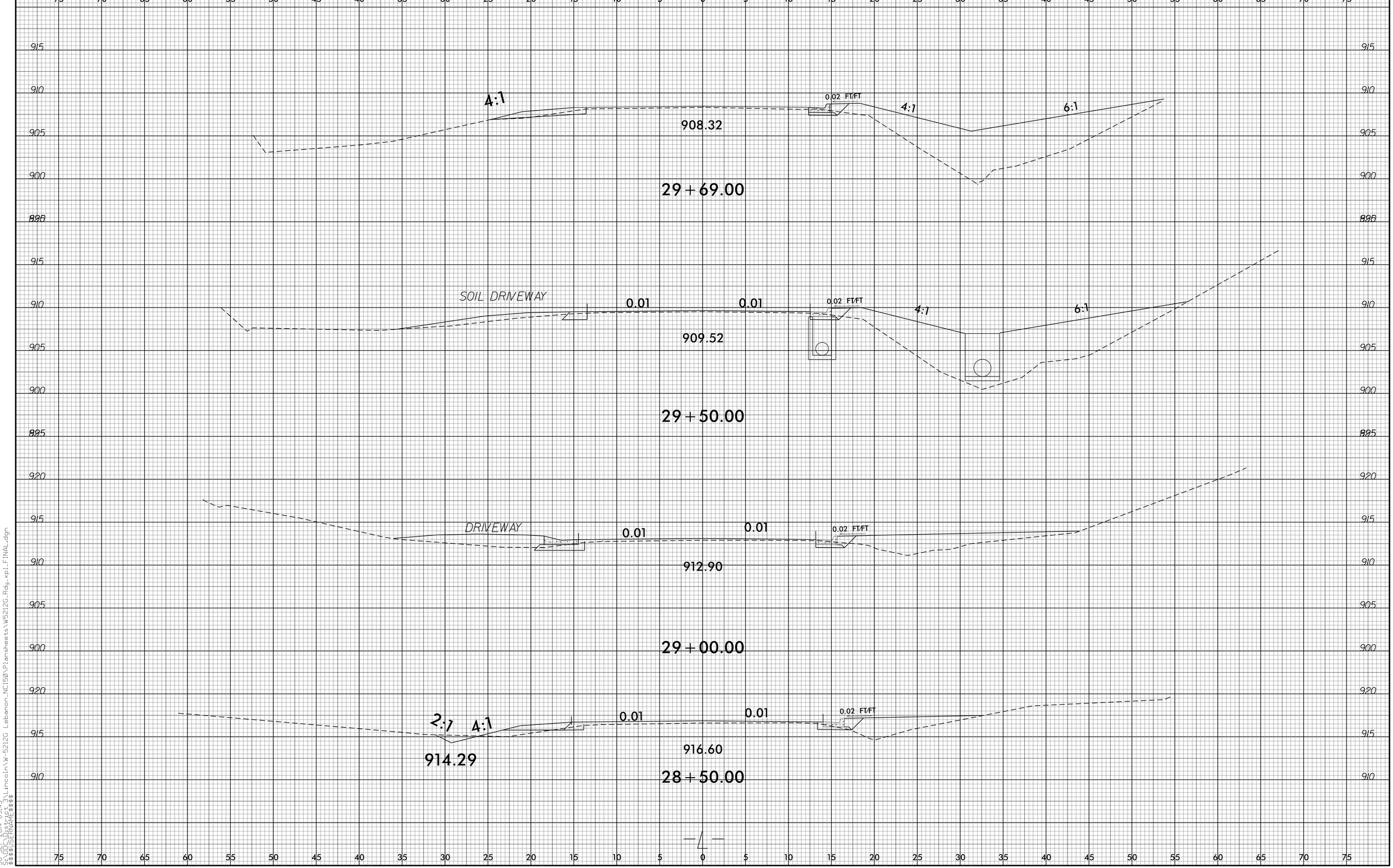

8/23/99

30-SEP-2014 09:45
C:\PROJECTS\Lincoln\W-5212G Lebanon_NC150\Plansheets\W5212G_Rdy_xpl_FINAL.dgn
$$$$USERNAME$$$$

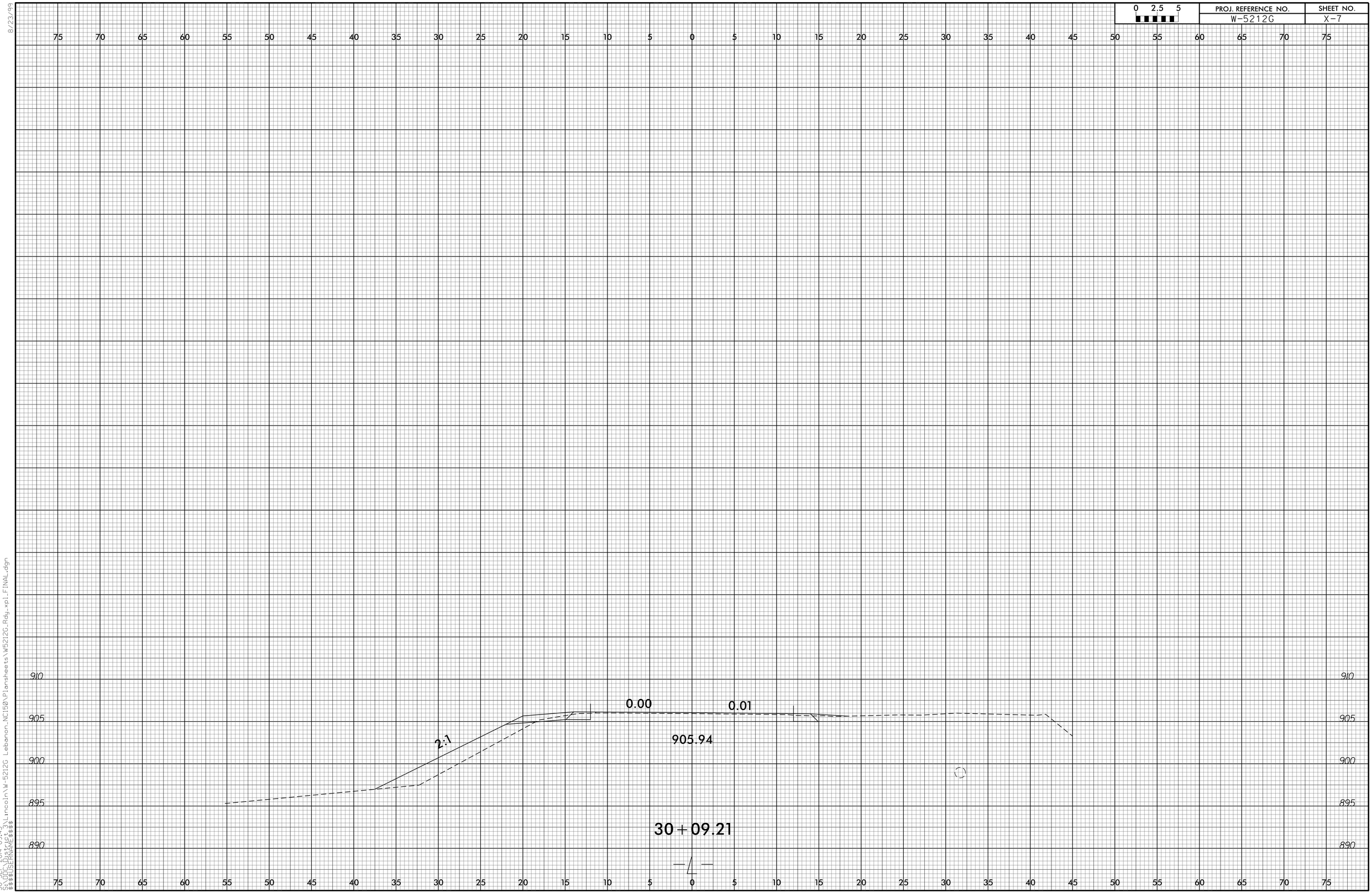

8/23/99

30-SEP-2014 09:45
S:\DDC\District 3\Lincoln\W-5212G Lebanon_NC150\Plansheets\W5212G_Rdy_xpl_FINAL.dgn
$$$$USERNAME$$$$