This electronic collection of documents is provided for the convenience of the user and is Not a Certified Document –

The documents contained herein were originally issued and sealed by the individuals whose names and license numbers appear on each page, on the dates appearing with their signature on that page.
This file or an individual page shall not be considered a certified document.

DocuSign Envelope ID: E54D6ECF-B6B8-4ACA-B6C9-B8A1F9807409

09/08/99

STATE PROJECT: 17BP.12.R.26

CONTRACT: DL00091

See Sheet 1-A For Index of Sheets

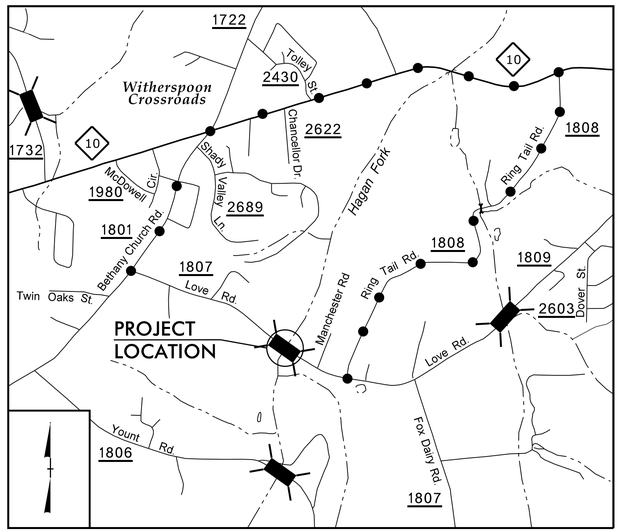

DETOUR ROUTE

VICINITY MAP
(NOT TO SCALE)

STATE OF NORTH CAROLINA
DIVISION OF HIGHWAYS

CATAWBA COUNTY

STATE	STATE PROJECT REFERENCE NO.	SHEET NO.	TOTAL SHEETS
N.C.	17BP.12.R.26	1	

STATE PROJ. NO.	F.A. PROJ. NO.	DESCRIPTION
17BP.12.R.26		P.E., R/W, CONSTR.

LOCATION: BRIDGE NO. 122 ON SR 1807 OVER HAGAN FORK BETWEEN SR 1801 AND SR 1808

TYPE OF WORK: GRADING, DRAINAGE, PAVING, STRUCTURES, AND PAVEMENT MARKING

NAD 83/ NSRS 2007

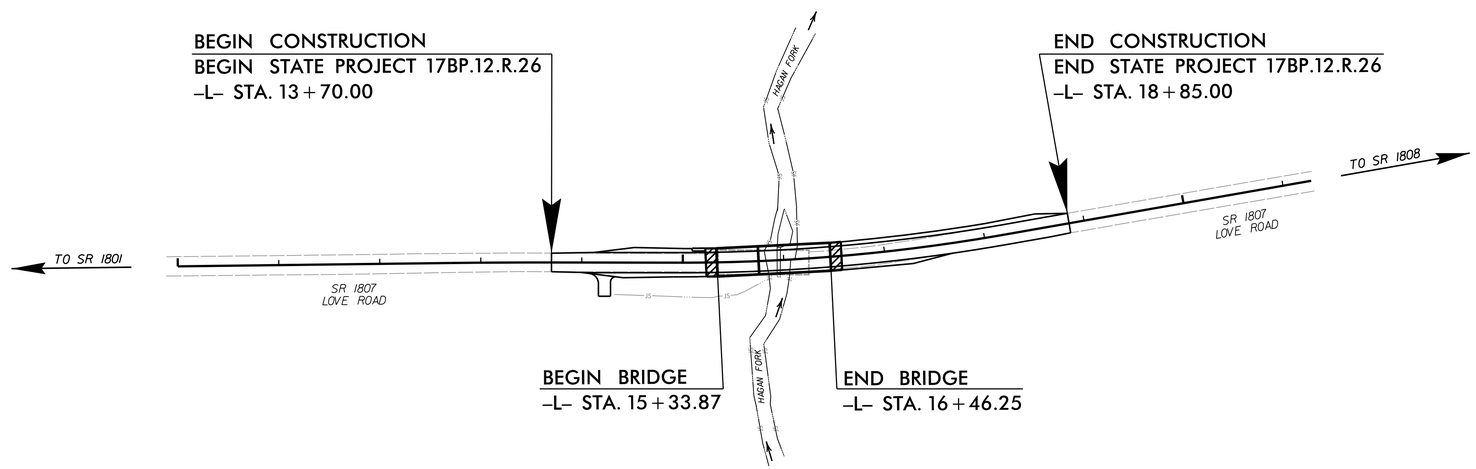

LOCATION SKETCH

HDR Engineering, Inc. of the Carolinas
555 Fayetteville St, Suite 900 Raleigh, N.C. 27601
N.C.B.E.L.S. License Number: F-0116

DOCUMENT NOT CONSIDERED FINAL UNLESS ALL SIGNATURES COMPLETED

GRAPHIC SCALES

50 25 0 50 100
PLANS

50 20 0 50 100
PROFILE (HORIZONTAL)

10 5 0 10 20
PROFILE (VERTICAL)

DESIGN DATA

ADT 2009 = 800
ADT =
DHV = %
D = %
T = 6 %
V = 45 MPH

FUNC CLASS =
LOCAL RURAL
SUBREGIONAL TIER

PROJECT LENGTH

LENGTH ROADWAY STATE PROJECT 17BP.12.R.26 = 0.077 MILES
LENGTH STRUCTURES STATE PROJECT TIP 17BP.12.R.26 = 0.021 MILES
TOTAL LENGTH STATE PROJECT 17BP.12.R.26 = 0.098 MILES

Prepared for the Office of:
DIVISION OF HIGHWAYS
1000 Birch Ridge Dr., Raleigh NC, 27610

2012 STANDARD SPECIFICATIONS

RIGHT OF WAY DATE:
MARCH 24, 2014

LETTING DATE:
APRIL 26, 2016

DOMINIC M. WAINWRIGHT, P.E.
PROJECT ENGINEER

JAMES R. RICE, P.E.
PROJECT DESIGN ENGINEER

HYDRAULICS ENGINEER
3/14/2016
DocuSigned by: James R. Rice
SIGNATURE: P.E.
NORTH CAROLINA PROFESSIONAL SEAL 31986 ENGINEER JAMES R. RICE

ROADWAY DESIGN ENGINEER
3/14/2016
DocuSigned by: Dominic M. Wainwright
SIGNATURE: P.E.
NORTH CAROLINA PROFESSIONAL SEAL 026441 ENGINEER DOMINIC M. WAINWRIGHT

DIVISION OF HIGHWAYS
STATE OF NORTH CAROLINA

STATE OF NORTH CAROLINA DEPARTMENT OF TRANSPORTATION

MARK STAFFORD P.E.
DIVISION ENGINEER

3/1/2016
4:16:09 PM
...\Proj\170122_RDY_TSH.dgn

DocuSign Envelope ID: E54D6ECF-B6B8-4ACA-B6C9-B8A1F9807409

8/17/99

PROJECT REFERENCE NO.	SHEET NO.
I7BPJ2.R.26	1-A

ROADWAY DESIGN ENGINEER

NORTH CAROLINA PROFESSIONAL SEAL 026441 ENGINEER DOMINIC M. WAINWRIGHT

Docusigned by: Dominic Wainwright
Certificate of Authority: F-0116

3/14/2016

DOCUMENT NOT CONSIDERED FINAL UNLESS ALL SIGNATURES COMPLETED

HDR Engineering, Inc. of the Carolinas
555 Fayetteville St, Suite 900 Raleigh, N.C. 27601
N.C.B.E.L.S. License Number: F-0116

INDEX OF SHEETS

SHEET NUMBER	SHEET
1	TITLE SHEET
1-A	INDEX OF SHEETS, GENERAL NOTES, AND LIST OF STANDARD DRAWINGS
1-B	CONVENTIONAL SYMBOLS
2	PAVEMENT SCHEDULE AND TYPICAL SECTIONS
2-A THRU 2-B	STANDARD REINFORCED SOIL SLOPE (RSS)
2-C	STRUCTURE ANCHOR UNITS DETAIL
3	RIGHT-OF-WAY AREA DATA, SUMMARY OF DRAINAGE QUANTITIES, SUMMARY OF GUARDRAIL
4	PLAN AND PROFILE SHEET
TMP-1 THRU TMP-2	TRAFFIC MANAGEMENT PLAN
SD-01	DETOUR SIGN DESIGN
EC-1 THRU EC-3	EROSION CONTROL PLANS
UO-1 THRU UO-3	UTILITIES BY OTHERS PLANS
X-1 THRU X-11	CROSS-SECTIONS
S-1 THRU S-18	STRUCTURE PLANS
	STRUCTURE STANDARD NOTES

EFF. 01-17-2012
REV. 10-30-2012

2012 ROADWAY ENGLISH STANDARD DRAWINGS

The following Roadway Standards as appear in "Roadway Standard Drawings" Highway Design Branch - N. C. Department of Transportation - Raleigh, N. C., Dated January, 2012 are applicable to this project and by reference hereby are considered a part of these plans:

STD.NO.	TITLE
DIVISION 2 - EARTHWORK	
200.02	Method of Clearing - Method II
225.02	Guide for Grading Subgrade - Secondary and Local
225.04	Method of Obtaining Superelevation - Two Lane Pavement
DIVISION 3 - PIPE CULVERTS	
300.01	Method of Pipe Installation
DIVISION 4 - MAJOR STRUCTURES	
422.11	Reinforced Bridge Approach Fills - Sub Regional Tier
DIVISION 5 - SUBGRADE, BASES AND SHOULDERS	
560.01	Method of Shoulder Construction - High Side of Superelevated Curve - Method I
DIVISION 8 - INCIDENTALS	
840.25	Anchorage for Frames - Brick or Concrete or Precast
840.29	Frames and Narrow Slot Flat Grates
840.35	Traffic Bearing Grated Drop Inlet - for Cast Iron Double Frame and Grates
846.04	Drop Inlet Installation in Shoulder Berm Gutter
848.02	Driveway Turnout - Radius Type
862.01	Guardrail Placement
862.02	Guardrail Installation
876.01	Rip Rap in Channels
876.02	Guide for Rip Rap at Pipe Outlets

GENERAL NOTES:

2012 SPECIFICATIONS
EFFECTIVE: 01-17-2012
REVISED: 10-31-2014

GRADE LINE:
GRADING AND SURFACING:

THE GRADE LINES SHOWN DENOTE THE FINISHED ELEVATION OF THE PROPOSED SURFACING AT GRADE POINTS SHOWN ON THE TYPICAL SECTIONS. GRADE LINES MAY BE ADJUSTED AT THEIR BEGINNING AND ENDING AND AT STRUCTURES AS DIRECTED BY THE ENGINEER IN ORDER TO SECURE A PROPER TIE-IN.

CLEARING:

CLEARING ON THIS PROJECT SHALL BE PERFORMED TO THE LIMITS ESTABLISHED BY METHOD II.

SUPERELEVATION:

ALL CURVES ON THIS PROJECT SHALL BE SUPERELEVATED IN ACCORDANCE WITH STD. NO. 225.04 USING THE RATE OF SUPERELEVATION AND RUNOFF SHOWN ON THE PLANS. SUPERELEVATION IS TO BE REVOLVED ABOUT THE GRADE POINTS SHOWN ON THE TYPICAL SECTIONS.

SHOULDER CONSTRUCTION:

ASPHALT, EARTH, AND CONCRETE SHOULDER CONSTRUCTION ON THE HIGH SIDE OF SUPERELEVATED CURVES SHALL BE IN ACCORDANCE WITH STD. NO. 560.01

DRIVEWAYS:

DRIVEWAYS SHALL BE CONSTRUCTED IN ACCORDANCE WITH STD. 848.02 USING 10' RADII OR RADII AS SHOWN ON THE PLANS. LOCATIONS OF DRIVES WILL BE AS SHOWN ON THE PLANS OR AS DIRECTED BY THE ENGINEER.

GUARDRAIL:

THE GUARDRAIL LOCATIONS SHOWN ON THE PLANS MAY BE ADJUSTED DURING CONSTRUCTION AS DIRECTED BY THE ENGINEER. THE CONTRACTOR SHOULD CONSULT WITH THE ENGINEER PRIOR TO ORDERING GUARDRAIL MATERIAL.

END BENTS:

THE ENGINEER SHALL CHECK THE STRUCTURE END BENT PLANS, DETAILS, AND CROSS-SECTION PRIOR TO SETTING OF THE SLOPE STAKES FOR THE EMBANKMENT OR EXCAVATION APPROACHING A BRIDGE.

UTILITIES:

UTILITY OWNERS ON THIS PROJECT ARE CHARTER COMMUNICATIONS, AT&T, AND DUKE ENERGY.

RIGHT-OF-WAY MARKERS:

ALL RIGHT-OF-WAY MARKERS ON THIS PROJECT SHALL BE PLACED BY CONTRACT.

2/24/2016
:\Proj\70122_RDY_TSH.dgn
2:48:06 PM

04/16/11

PROJECT REFERENCE NO.	SHEET NO.
17BP.12.R.26	1-B

Note: Not to Scale

****S.U.E. = Subsurface Utility Engineering***

STATE OF NORTH CAROLINA
DIVISION OF HIGHWAYS

CONVENTIONAL PLAN SHEET SYMBOLS

BOUNDARIES AND PROPERTY:

- State Line
- County Line
- Township Line
- City Line
- Reservation Line
- Property Line
- Existing Iron Pin — EIP
- Property Corner
- Property Monument — ECM
- Parcel/Sequence Number — 123
- Existing Fence Line
- Proposed Woven Wire Fence
- Proposed Chain Link Fence
- Proposed Barbed Wire Fence
- Existing Wetland Boundary — WLB
- Proposed Wetland Boundary — WLB
- Existing Endangered Animal Boundary — EAB
- Existing Endangered Plant Boundary — EPB
- Known Soil Contamination: Boundary or Site
- Potential Soil Contamination: Boundary or Site

BUILDINGS AND OTHER CULTURE:

- Gas Pump Vent or U/G Tank Cap
- Sign — S
- Well — W
- Small Mine
- Foundation
- Area Outline
- Cemetery
- Building
- School
- Church
- Dam

HYDROLOGY:

- Stream or Body of Water
- Hydro, Pool or Reservoir
- Jurisdictional Stream — JS
- Buffer Zone 1 — BZ 1
- Buffer Zone 2 — BZ 2
- Flow Arrow
- Disappearing Stream
- Spring
- Wetland
- Proposed Lateral, Tail, Head Ditch — FLOW
- False Sump

RAILROADS:

- Standard Gauge — CSX TRANSPORTATION
- RR Signal Milepost — MILEPOST 35
- Switch — SWITCH
- RR Abandoned
- RR Dismantled

RIGHT OF WAY:

- Baseline Control Point
- Existing Right of Way Marker
- Existing Right of Way Line
- Proposed Right of Way Line — RW
- Proposed Right of Way Line with Iron Pin and Cap Marker — RW
- Proposed Right of Way Line with Concrete or Granite Marker — RW
- Existing Control of Access — CA
- Proposed Control of Access — CA
- Existing Easement Line — E
- Proposed Temporary Construction Easement — E
- Proposed Temporary Drainage Easement — TDE
- Proposed Permanent Drainage Easement — PDE
- Proposed Permanent Drainage / Utility Easement — DUE
- Proposed Permanent Utility Easement — PUE
- Proposed Temporary Utility Easement — TUE
- Proposed Aerial Utility Easement — AUE
- Proposed Permanent Easement with Iron Pin and Cap Marker

ROADS AND RELATED FEATURES:

- Existing Edge of Pavement
- Existing Curb
- Proposed Slope Stakes Cut — C
- Proposed Slope Stakes Fill — F
- Proposed Curb Ramp — CR
- Curb Cut Future Ramp — CCFR
- Existing Metal Guardrail
- Proposed Guardrail
- Existing Cable Guiderail
- Proposed Cable Guiderail
- Equality Symbol
- Pavement Removal

VEGETATION:

- Single Tree
- Single Shrub
- Hedge
- Woods Line
- Orchard
- Vineyard — Vineyard

EXISTING STRUCTURES:

MAJOR:

- Bridge, Tunnel or Box Culvert — CONC
- Bridge Wing Wall, Head Wall and End Wall — CONC WW

MINOR:

- Head and End Wall — CONC HW
- Pipe Culvert
- Footbridge
- Drainage Box: Catch Basin, DI or JB — CB
- Paved Ditch Gutter
- Storm Sewer Manhole — S
- Storm Sewer — S

UTILITIES:

POWER:

- Existing Power Pole
- Proposed Power Pole
- Existing Joint Use Pole
- Proposed Joint Use Pole
- Power Manhole — P
- Power Line Tower
- Power Transformer
- U/G Power Cable Hand Hole
- H-Frame Pole
- Recorded U/G Power Line — P
- Designated U/G Power Line (S.U.E.*) — P

TELEPHONE:

- Existing Telephone Pole
- Proposed Telephone Pole
- Telephone Manhole — T
- Telephone Booth
- Telephone Pedestal — T
- Telephone Cell Tower
- U/G Telephone Cable Hand Hole — HH
- Recorded U/G Telephone Cable — T
- Designated U/G Telephone Cable (S.U.E.*) — T
- Recorded U/G Telephone Conduit — TC
- Designated U/G Telephone Conduit (S.U.E.*) — TC
- Recorded U/G Fiber Optics Cable — T FO
- Designated U/G Fiber Optics Cable (S.U.E.*) — T FO

WATER:

- Water Manhole — W
- Water Meter
- Water Valve
- Water Hydrant
- Recorded U/G Water Line — W
- Designated U/G Water Line (S.U.E.*) — W
- Above Ground Water Line — A/G Water

TV:

- TV Satellite Dish
- TV Pedestal — C
- TV Tower
- U/G TV Cable Hand Hole — HH
- Recorded U/G TV Cable — TV
- Designated U/G TV Cable (S.U.E.*) — TV
- Recorded U/G Fiber Optic Cable — TV FO
- Designated U/G Fiber Optic Cable (S.U.E.*) — TV FO

GAS:

- Gas Valve
- Gas Meter
- Recorded U/G Gas Line — G
- Designated U/G Gas Line (S.U.E.*) — G
- Above Ground Gas Line — A/G Gas

SANITARY SEWER:

- Sanitary Sewer Manhole
- Sanitary Sewer Cleanout
- U/G Sanitary Sewer Line — SS
- Above Ground Sanitary Sewer — A/G Sanitary Sewer
- Recorded SS Forced Main Line — FSS
- Designated SS Forced Main Line (S.U.E.*) — FSS

MISCELLANEOUS:

- Utility Pole
- Utility Pole with Base
- Utility Located Object
- Utility Traffic Signal Box — S
- Utility Unknown U/G Line — ?UTL
- U/G Tank; Water, Gas, Oil
- Underground Storage Tank, Approx. Loc. — UST
- A/G Tank; Water, Gas, Oil
- Geoenvironmental Boring
- U/G Test Hole (S.U.E.*)
- Abandoned According to Utility Records — AATUR
- End of Information — E.O.I.

DocuSign Envelope ID: E54D6ECF-B6B8-4ACA-B6C9-B8A1F9807409

8/17/99

REVISIONS

PAVEMENT SCHEDULE

C1	PROP. APPROX. 3.0″ ASPHALT CONCRETE SURFACE COURSE, TYPE S9.5B, AT AN AVERAGE RATE OF 168 Lbs PER SQUARE YARD IN EACH OF TWO LAYERS.
C2	PROP. VAR. DEPTH ASPHALT CONCRETE SURFACE COURSE, TYPE S9.5B, AT AN AVERAGE RATE OF 112 LBS. PER SQ. YD. PER 1″ DEPTH TO BE PLACED IN LAYERS NOT TO EXCEED 2.0″ IN DEPTH.
D1	PROP. APPROX. 2.5″ ASPHALT CONCRETE INTERMEDIATE COURSE, TYPE I19.0B, AT AN AVERAGE RATE OF 285 Lbs PER SQUARE YARD.
E1	PROP. APPROX. 4.0″ ASPHALT CONCRETE BASE COURSE, TYPE B25.0B, AT AN AVERAGE RATE OF 456 Lbs PER SQUARE YARD.
T	EARTH MATERIAL

NOTE: PAVEMENT EDGE SLOPES ARE 1:1 UNLESS OTHERWISE SHOWN.

PROJECT REFERENCE NO.	SHEET NO.
17BP.12.R.26	2
R/W SHEET NO.	

ROADWAY DESIGN ENGINEER

NORTH CAROLINA PROFESSIONAL SEAL 026441 ENGINEER DOMINIC M. WAINWRIGHT

Dominic M. Wainwright

3/14/2016

DOCUMENT NOT CONSIDERED FINAL UNLESS ALL SIGNATURES COMPLETED

HDR Engineering, Inc. of the Carolinas
555 Fayetteville St, Suite 900 Raleigh, N.C. 27601
N.C.B.E.L.S. License Number: F-0116

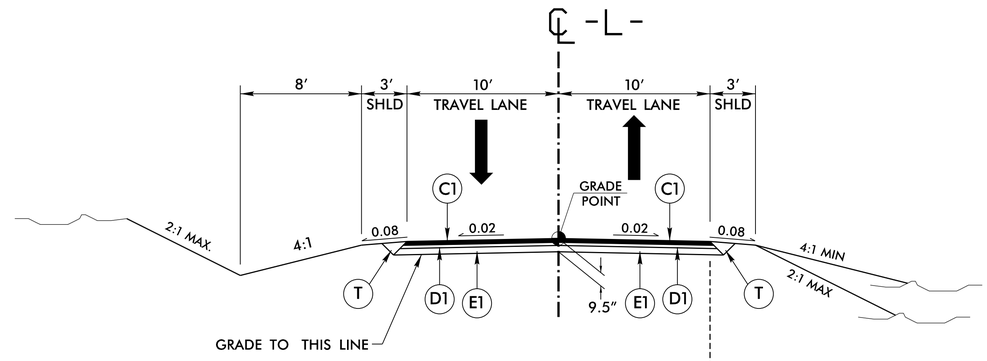

TYPICAL SECTION NO. 1

LINE	FROM STATION	TO STATION
–L–	13+70.00	15+33.87
–L–	16+46.25	18+85.00

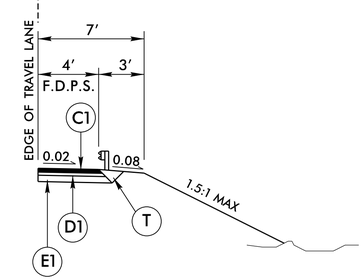

NOTE: USE STANDARD REINFORCED SOIL SLOPES FOR FILL SLOPES STEEPER THAN 2:1 FROM –L– STA 14+50 RIGHT TO BEGIN BRIDGE. USE ONLY SECONDARY GEOGRID WITH BENCH WIDTH A MINIMUM OF 4 FEET. PRIMARY GEOGRID IS NOT REQUIRED. SEE SHEET 2–A AND 2–B FOR DETAILS.

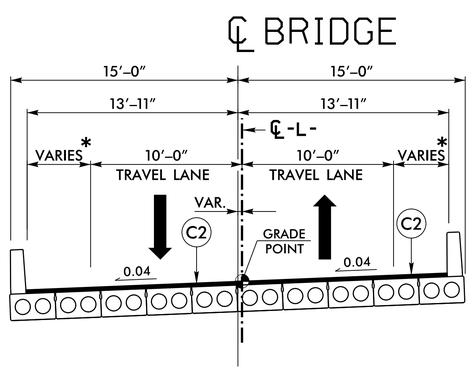

TYPICAL SECTION NO. 2

CORED SLAB BRIDGE

LINE	FROM STATION	TO STATION
–L–	15+33.87	16+46.25

* NOTE:
RT SHOULDER WIDTH ON BRIDGE VARIES FROM 3′–1″ +/– TO 3′–11″ +/–
LT SHOULDER WIDTH ON BRIDGE VARIES FROM 3′–11″ +/– TO 4′–9″ +/–

2/24/2016
10:31 PM
Proj\17BP12_RDY_TYP.dgn

DocuSign Envelope ID: E54D6ECF-B6B8-4ACA-B6C9-B8A1F9807409

PROJECT REFERENCE NO.	SHEET
17BP.12.R.26	2-A

GEOTECHNICAL ENGINEER

NORTH CAROLINA PROFESSIONAL SEAL 20175 ENGINEER ELIZABETH C. HOWEY

DocuSigned by: Elizabeth Howey 3/15/2016
F80E6000C4C4A1... SIGNATURE DATE

ROADWAY DESIGN ENGINEER

NORTH CAROLINA PROFESSIONAL SEAL 026441 ENGINEER DOMINIC M. WAINWRIGHT

DocuSigned by: Dominic M. Wainwright 2016
7EC83DF0B9A34D... SIGNATURE DATE

DOCUMENT NOT CONSIDERED FINAL UNLESS ALL SIGNATURES COMPLETED

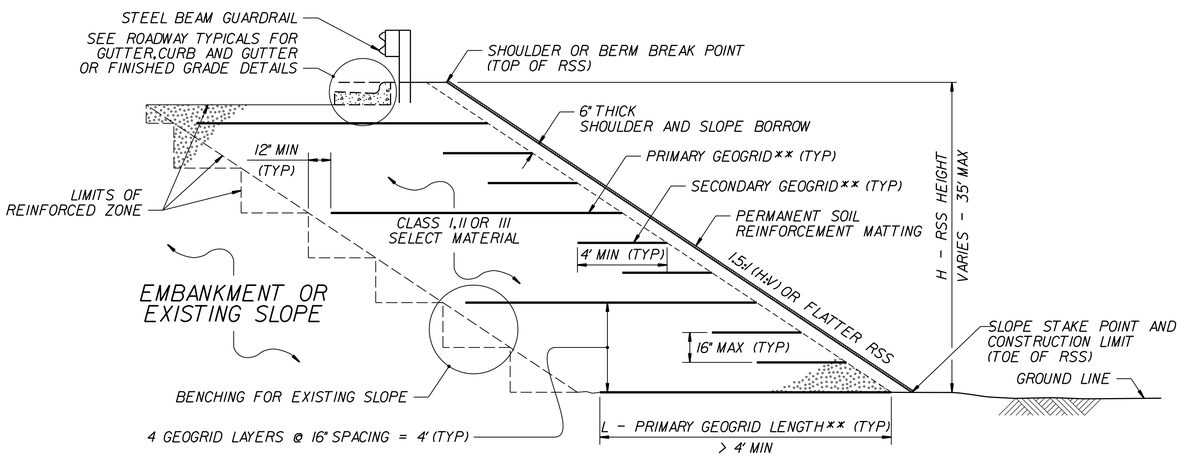

STANDARD RSS WITH SELECT MATERIAL THAT DOES NOT MEET ARTICLE 1019-2 OF THE STANDARD SPECIFICATIONS

**SEE TABLES ON SHEET 2 AND GEOGRID PLACEMENT DETAILS.

NOTE:
USE ONLY SECONDARY GEOGRID WITH BENCH WIDTH A MINIMUM OF 4 FEET. PRIMARY GEOGRID IS NOT REQUIRED.

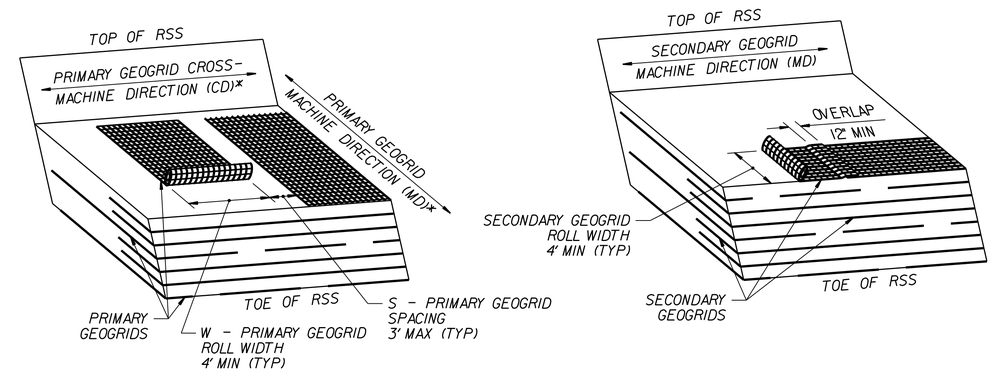

GEOGRID PLACEMENT DETAILS

(% COVERAGE = $\frac{W}{W+S}$ x 100 $\geq$ 75%)

*SEE NOTES 8 AND 9 ON SHEET 2.

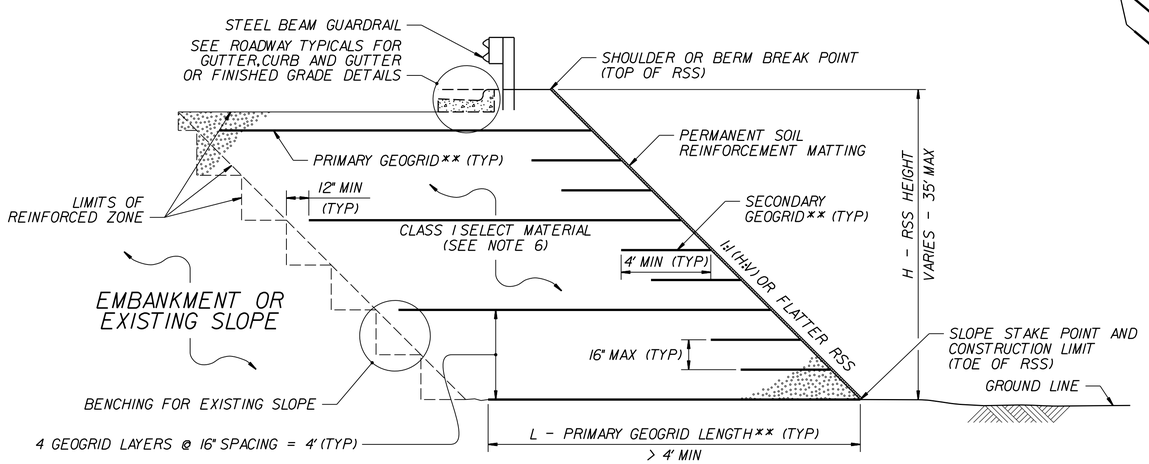

STANDARD RSS WITH SELECT MATERIAL THAT MEETS ARTICLE 1019-2 OF THE STANDARD SPECIFICATIONS

**SEE TABLES ON SHEET 2 OF 2 AND GEOGRID PLACEMENT DETAILS.

GEOTECHNICAL ENGINEERING UNIT

STATE OF NORTH CAROLINA DEPARTMENT OF TRANSPORTATION RALEIGH

STANDARD DRAWING NO. 1803.01

STANDARD
REINFORCED SOIL SLOPE (RSS)
SHEET 1 OF 2

DATE: 11-19-13

DocuSign Envelope ID: E54D6ECF-B6B8-4ACA-B6C9-B8A1F9807409

PROJECT REFERENCE NO.	SHEET
17BP.12.R.26	2-B

GEOTECHNICAL ENGINEER

NORTH CAROLINA PROFESSIONAL SEAL 20175 ENGINEER ELIZABETH C. HOWEY

DocuSigned by: Elizabeth Howey 3/15/2016
F8DE69082F8D4A7 SIGNATURE DATE

ROADWAY DESIGN ENGINEER

NORTH CAROLINA PROFESSIONAL SEAL 026441 ENGINEER DOMINIC M. WAINWRIGHT

DocuSigned by: Dominic M. Wainwright 2016
7EC833DF0F9E4AD SIGNATURE DATE

DOCUMENT NOT CONSIDERED FINAL UNLESS ALL SIGNATURES COMPLETED

GEOGRID TYPE, DIRECTION	H (FT)	0 - < 10		10 - 20		> 20 - 35	
	SELECT MATERIAL CLASS	I	II OR III	I	II OR III	I	II OR III
PRIMARY GEOGRID, MD (SUBSTITUTE SECONDARY GEOGRID FOR PRIMARY GEOGRID FOR 2:1 (H:V) OR FLATTER RSS)	1:1 TO < 1.5:1 (H:V) RSS	600	SEE NOTE 6	1200	SEE NOTE 6	2100	SEE NOTE 6
	1.5:1 TO 1.75:1 (H:V) RSS	500	500	800	500	1100	700
	> 1.75:1 TO < 2:1 (H:V) RSS	500	500	600	500	800	500
SECONDARY GEOGRID, CD	1:1 (H:V) OR FLATTER RSS	185					

LTDS – MINIMUM REQUIRED LONG-TERM DESIGN STRENGTH (LB/FT)

(LTDS IS BASED ON 100% COVERAGE FOR PRIMARY GEOGRID. SEE NOTE 9 FOR LESS THAN 100% COVERAGE.)

NOTES:

1. SEE ROADWAY PLANS AND SUMMARY SHEETS FOR REINFORCED SOIL SLOPE (RSS) LOCATIONS.

2. FOR STANDARD REINFORCED SOIL SLOPES, SEE REINFORCED SOIL SLOPES PROVISION. FOR PERMANENT SOIL REINFORCEMENT MATTING, SEE PERMANENT SOIL REINFORCEMENT MAT PROVISION. FOR STEEL BEAM GUARDRAIL, SEE SECTION 862 OF THE STANDARD SPECIFICATIONS.

3. STANDARD RSS ARE BASED ON THE FOLLOWING IN-SITU ASSUMED SOIL PARAMETERS:
   UNIT WEIGHT, γ = 120 LB/CF
   FRICTION ANGLE, ϕ = 30 DEGREES
   COHESION, c = 0 LB/SF

4. DO NOT USE STANDARD RSS IF ASSUMED SOIL PARAMETERS ARE NOT APPLICABLE OR GROUNDWATER IS ABOVE TOE OF RSS.

5. DO NOT USE STANDARD RSS WHEN VERY LOOSE OR SOFT SOIL OR MUCK IS BELOW RSS.

6. FOR 1:1 TO < 1.5:1 (H:V) RSS, USE CLASS I SELECT MATERIAL IN THE REINFORCED ZONE THAT MEETS ARTICLE 1019-2 OF THE STANDARD SPECIFICATIONS EXCEPT FOR SELECT MATERIAL THAT MEETS AASHTO M 145 FOR SOIL CLASSIFICATIONS A-4 AND A-5. DO NOT USE A-4 OR A-5 SOIL OR CLASS II OR III SELECT MATERIAL FOR 1:1 TO < 1.5:1 (H:V) RSS.

7. GEOGRIDS ARE TYPICALLY APPROVED FOR ULTIMATE TENSILE STRENGTHS IN THE MACHINE DIRECTION (MD) AND CROSS-MACHINE DIRECTION (CD) OR LONG-TERM DESIGN STRENGTHS FOR A 75-YEAR DESIGN LIFE IN THE MD BASED ON MATERIAL TYPE. THE LIST OF APPROVED GEOGRIDS WITH DESIGN STRENGTHS IS AVAILABLE FROM:
   connect.ncdot.gov/resources/Materials/Pages/SoilsLaboratory.aspx
   DEFINE MATERIAL TYPE FROM THE WEBSITE ABOVE FOR SELECT MATERIAL AS FOLLOWS:

MATERIAL TYPE	SELECT MATERIAL
BORROW	CLASS I SELECT MATERIAL
FINE AGGREGATE	CLASS II OR III SELECT MATERIAL

   IF THE WEBSITE DOES NOT LIST A LONG-TERM DESIGN STRENGTH FOR AN APPROVED GEOGRID IN THE MD, DO NOT USE THE GEOGRID FOR PRIMARY GEOGRID. IF THE WEBSITE DOES NOT LIST A LONG-TERM DESIGN STRENGTH FOR AN APPROVED GEOGRID IN THE CD, USE A LONG-TERM DESIGN STRENGTH EQUAL TO THE ULTIMATE TENSILE STRENGTH DIVIDED BY 7 FOR THE SECONDARY GEOGRID.

8. DO NOT OVERLAP PRIMARY GEOGRIDS IN THE MD SO OVERLAPS ARE PARALLEL TO THE TOE OF RSS. POLYOLEFIN (e.g., HDPE OR PP) GEOGRIDS MAY BE SPLICED ONCE PER PRIMARY GEOGRID LENGTH IN ACCORDANCE WITH THE GEOGRID MANUFACTURER'S INSTRUCTIONS. USE POLYOLEFIN GEOGRID PIECES AT LEAST 4' LONG. DO NOT SPLICE POLYESTER TYPE (PET) GEOGRIDS.

9. FOR PRIMARY GEOGRIDS WITH 100% COVERAGE, PLACE PRIMARY GEOGRIDS SO GEOGRIDS ARE ADJACENT TO EACH OTHER IN THE CD. FOR PRIMARY GEOGRIDS WITH 75% TO LESS THAN 100% COVERAGE,

   MINIMUM REQUIRED LONG-TERM DESIGN STRENGTH = LTDS BASED ON 100% COVERAGE x (W + S) / W

   SEE TABLE FOR LTDS BASED ON 100% COVERAGE AND GEOGRID PLACEMENT DETAILS FOR PRIMARY GEOGRID ROLL WIDTH (W) AND SPACING (S). FOR PRIMARY GEOGRIDS WITH LESS THAN 100% COVERAGE, STAGGER PRIMARY GEOGRIDS SO GEOGRIDS ARE CENTERED OVER GAPS IN THE PRIMARY GEOGRID LAYER BELOW. DO NOT USE LESS THAN 75% COVERAGE FOR PRIMARY GEOGRIDS.

10. DO NOT PLACE PRIMARY GEOGRIDS UNTIL EXCAVATION DIMENSIONS AND IN-SITU MATERIAL ARE APPROVED.

H (FT)	0 - < 10		10 - 20		> 20 - 35	
SELECT MATERIAL CLASS	I	II OR III	I	II OR III	I	II OR III
1:1 TO < 1.5:1 (H:V) RSS	1.25	SEE NOTE 6	1.15	SEE NOTE 6	1.05	SEE NOTE 6
1.5:1 TO 1.75:1 (H:V) RSS	1.20	1.05	1.10	1.00	1.00	0.95
> 1.75:1 TO < 2:1 (H:V) RSS	1.15	0.80	1.05	0.75	0.95	0.70

L/H RATIO (L > 4' MIN)

(IF L ≤ 4', USE SECONDARY GEOGRID INSTEAD OF PRIMARY GEOGRID.)

GEOTECHNICAL ENGINEERING UNIT

STATE OF NORTH CAROLINA DEPARTMENT OF TRANSPORTATION RALEIGH

STANDARD DRAWING NO. 1803.01

STANDARD
REINFORCED SOIL SLOPE (RSS)
SHEET 2 OF 2

DATE: 11-19-13

$$$$$$SYSTIME$$$$$
$$$$$$$$$$$$$$$$$$DGN$$$$$$$$$$$$$$$$
$$$USERNAME$$$$

STATE OF
NORTH CAROLINA
DEPT. OF TRANSPORTATION
DIVISION OF HIGHWAYS
RALEIGH, N.C.

ENGLISH DETAIL DRAWING FOR
STRUCTURE ANCHOR UNITS
GUARDRAIL ANCHOR UNIT, TYPE III FOR ATTACHMENT TO
RAIL ON BRIDGE - SUB REGIONAL TIER

SHEET 2 OF 7
862d03

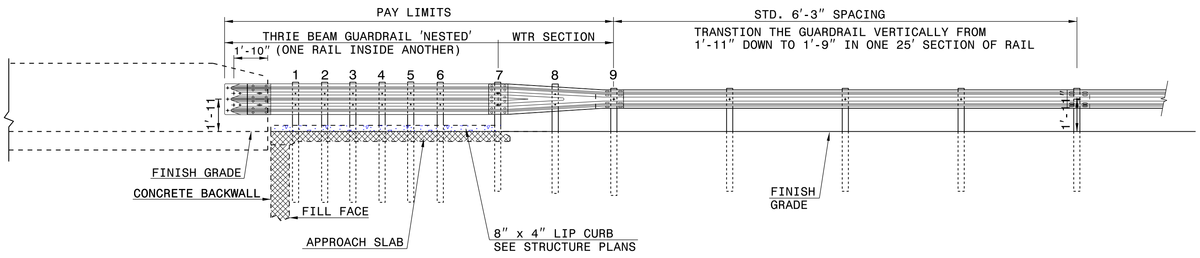

ELEVATION

NOTE:
**POST NOT REQUIRED FOR SKEW ANGLES GREATER THAN 150° OR LESS THAN 30° UNLESS OTHERWISE DIRECTED BY THE ENGINEER.
*THE DISTANCE FROM END OF BRIDGE RAIL TO CENTER LINE OF THE FIRST POST SHOULD BE 11½" IF CONCRETE BACKWALL IS NOT PRESENT.
-SHOULDER BERM GUTTER MUST BE INSTALLED TO THE LIMITS 8" x 4" LIP CURB IS SHOWN IF ANCHOR UNIT IS NOT ADJACENT TO AN APPROACH SLAB.
-MEASURE GUARDRAIL HEIGHT FROM THE TOP OF ADJACENT SURFACE (SHOULDER, BERM, OR GUTTER).
-LAP JOINTS IN THE DIRECTION OF TRAFFIC FLOW.
-SEE SHEET 5 FOR POST SECTIONS 1 THRU 9.

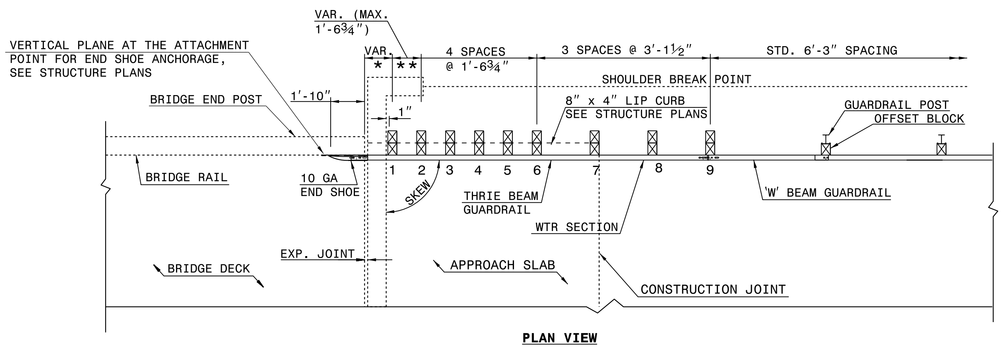

PLAN VIEW

GUARDRAIL ANCHOR UNIT, TYPE III FOR ATTACHMENT TO RAIL ON BRIDGE - SUB REGIONAL TIER

STATE OF
NORTH CAROLINA
DEPT. OF TRANSPORTATION
DIVISION OF HIGHWAYS
RALEIGH, N.C.

ENGLISH DETAIL DRAWING FOR
STRUCTURE ANCHOR UNITS
GUARDRAIL ANCHOR UNIT, TYPE III FOR ATTACHMENT TO
RAIL ON BRIDGE - SUB REGIONAL TIER

SHEET 2 OF 7
862d03

STATE OF
NORTH CAROLINA
DEPT. OF TRANSPORTATION
DIVISION OF HIGHWAYS
RALEIGH, N.C.

ENGLISH DETAIL DRAWING FOR
STRUCTURE ANCHOR UNITS
GUARDRAIL ANCHOR UNIT, TYPE III

SHEET 3 OF 7
862d03

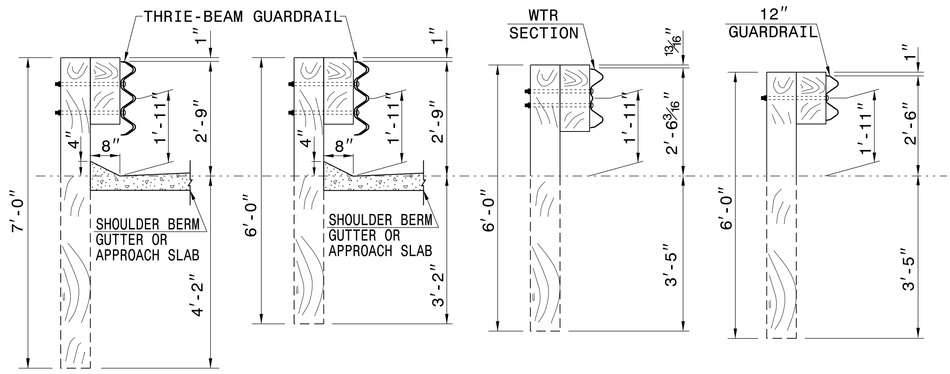

SECTION OF THRIE BEAM POSTS 1 THRU 6

SECTION OF THRIE BEAM POST 7

SECTION OF WTR BEAM POST 8

SECTION OF 'W' BEAM POST 9

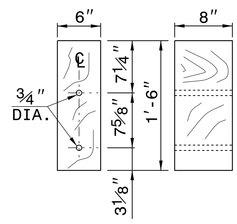

THRIE BEAM OFFSET BLOCK

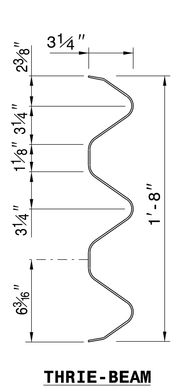

THRIE-BEAM SECTION

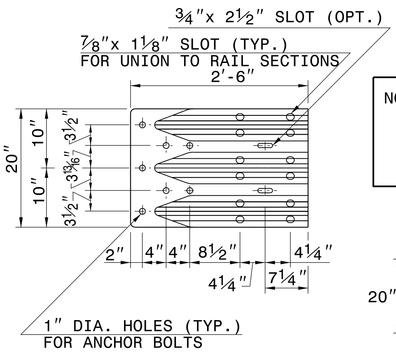

END SHOE

NOTE: THE MID POST AND OFFSET BLOCK OF THE WTR SECTION WILL REQUIRE SPECIAL BOLT HOLE DRILLING IN THE THRIE BEAM OFFSET BLOCK AND LINE POST.

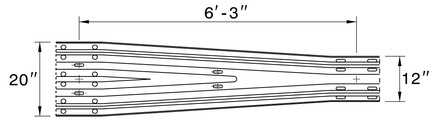

WTR SECTION
ELEVATION VIEW

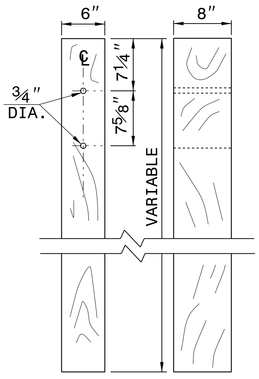

THRIE BEAM LINE POST

STATE OF
NORTH CAROLINA
DEPT. OF TRANSPORTATION
DIVISION OF HIGHWAYS
RALEIGH, N.C.

ENGLISH DETAIL DRAWING FOR
STRUCTURE ANCHOR UNITS
GUARDRAIL ANCHOR UNIT, TYPE III

SHEET 3 OF 7
862d03

CONTRACT STANDARDS AND DEVELOPMENT UNIT
Office 919-707-6950 FAX 919-250-4119

SEE TITLE BLOCK

ORIGINAL BY: J. HOWERTON DATE: 06-22-12
MODIFIED BY: DATE:
CHECKED BY: DATE:
FILE SPEC.:

PROJECT REFERENCE NO. 17BP.12.R.26
SHEET NO. 2-C

6/21/00

COMPUTED BY: T.N. BEDENBAUGH DATE: AUGUST 2013
CHECKED BY: D.M. WAINWRIGHT DATE: MARCH 2014

STATE OF NORTH CAROLINA
DIVISION OF HIGHWAYS

PROJECT REFERENCE NO.	SHEET NO.
17BP.12.R.26	3

RIGHT OF WAY AREA DATA

PARCEL NO.	PROPERTY OWNERS NAMES	TOTAL ACREAGE	AREA TAKEN	AREA REMAINING RT.	AREA REMAINING LT.	CONST. EASE.	PERM. DRAIN. EASE.	TEMP. DRAIN. EASE.	PERM. UTILITY EASE.	PERM. DRAINAGE / UTILITY EASE.
1	LYERLY PEELER CLINE	5.730		5.730					0.016	0.085
2	TONY DALE HEFNER	10.320		10.294	0.026		0.010		0.080	

*NOTE: ALL AREAS ARE IN ACRES

SUMMARY OF PAVEMENT REMOVAL

IN SQUARE YARDS

LOCATION	ASPHALT REMOVAL	ASHPALT BREAK UP	CONCRETE REMOVAL	CONCRETE BREAK UP
–L– STA. 13+70.00 TO EXIST. BRIDGE	333			
EXIST. BRIDGE TO –L– STA. 18+85.00	556			
PROJECT TOTALS	889			

SUMMARY OF EARTHWORK

IN CUBIC YARDS

LOCATION	UNCLASSIFIED EXCAVATION	UNDERCUT	EMBT+15%	BORROW	WASTE
–L– STA. 13+70.00 TO BRIDGE	120		89		31
SUBTOTAL					
BRIDGE TO –L– STA. 18+85.00	84		135	51	
SUBTOTAL					
PROJECT TOTALS	204		224	20	
SAY	210		230		

Note: Approximate quantities only. Unclassified Excavation, Borrow Excavation, Shoulder Borrow, Fine Grading, Clearing and Grubbing, Breaking of Existing Pavement, and Removal of Existing Pavement will be paid for at the contract lump sum price for "Grading."

LIST OF PIPES, ENDWALLS, ETC. (FOR PIPES 48" & UNDER)

| STATION | LOCATION (LT,RT, OR CL) | STRUCTURE NO. FROM | STRUCTURE NO. TO | TOP ELEVATION | INVERT ELEVATION | INVERT ELEVATION | SLOPE CRITICAL | CLASS IV R.C. PIPE (UNLESS OTHERWISE NOTED) 12" | 15" | 18" | 24" | 30" | 36" | 42" | 48" | C.S. PIPE (UNLESS NOTED OTHRWISE) 12" | 15" | 18" | 24" | 30" | 36" | 42" | 48" | CLASS III R.C. PIPE (UNLESS OTHERWISE NOTED) 12" | 15" | 18" | 24" | 30" | 36" | 42" | 48" | 15" SIDE DRAIN PIPE | 18" SIDE DRAIN PIPE | 24" SIDE DRAIN PIPE | ENDWALLS STD. 838.01, STD. 838.11 OR STD. 838.80 (UNLESS NOTED OTHERWISE) CU. YDS. R.C.P. | C.S.P. | QUANTITIES FOR DRAINAGE STRUCTURES * TOTAL L.F. FOR PAY QUANTITY SHALL BE COL. 'A' + (1.3 X COL. 'B') LIN. *FT. PER EACH (0' THRU 5.0') | A 5.0' THRU 10.0' | B 10.0' AND ABOVE | C.B. STD. 840.01 OR STD. 840.02 | FRAME, GRATES AND HOOD STANDARD 840.03 TYPE OF GRATE E | F | G | D.I. STD. 840.14 OR STD. 840.15 | D.I. FRAME & GRATE STD. 840.16 | G.D.I. TYPE "A" STD. 840.17 OR 840.26 | G.D.I. TYPE "B" STD. 840.18 OR 840.27 | G.D.I. TYPE "D" STD. 840.19 OR 840.28 | G.D.I. FRAME WITH GRATE STD. 840.22 | G.D.I. FRAME WITH TWO GRATES STD. 840.22 | G.D.I. FRAME WITH GRATE STD. 840.24 | G.D.I. (N.S.) FRAME WITH TWO GRATES STD. 840.24 | G.D.I. (N.S.) FRAME WITH GRATE STD. 840.29 | J.B. STD. 840.31 OR 840.32 | G.D.I. (N.S.) FRAME WITH TWO GRATES STD. 840.29 | T.B.D.I. STD. 840.35 | CORR. STEEL ELBOWS NO. & SIZE | CONC. COLLARS CL. "B" C.Y. STD. 840.72 | CONC. & BRICK PIPE PLUG, C.Y. STD. 840.71 | PIPE REMOVAL LIN.FT. | REMARKS |
|---|---|---|---|---|---|---|---|---|---|---

DocuSign Envelope ID: E54D6ECF-B6B8-4ACA-B6C9-B8A1F9807409

8/17/99

REVISIONS

PROJECT REFERENCE NO.	SHEET NO.
17BP.12.R.26	4
R/W SHEET NO.	

ROADWAY DESIGN ENGINEER: NORTH CAROLINA PROFESSIONAL SEAL 022461 ENGINEER MARC M. WAINWRIGHT — 3/14/2016

HYDRAULICS ENGINEER: NORTH CAROLINA PROFESSIONAL SEAL 030786 ENGINEER JAMES R. RICE — 3/14/2016

DOCUMENT NOT CONSIDERED FINAL UNLESS ALL SIGNATURES COMPLETED

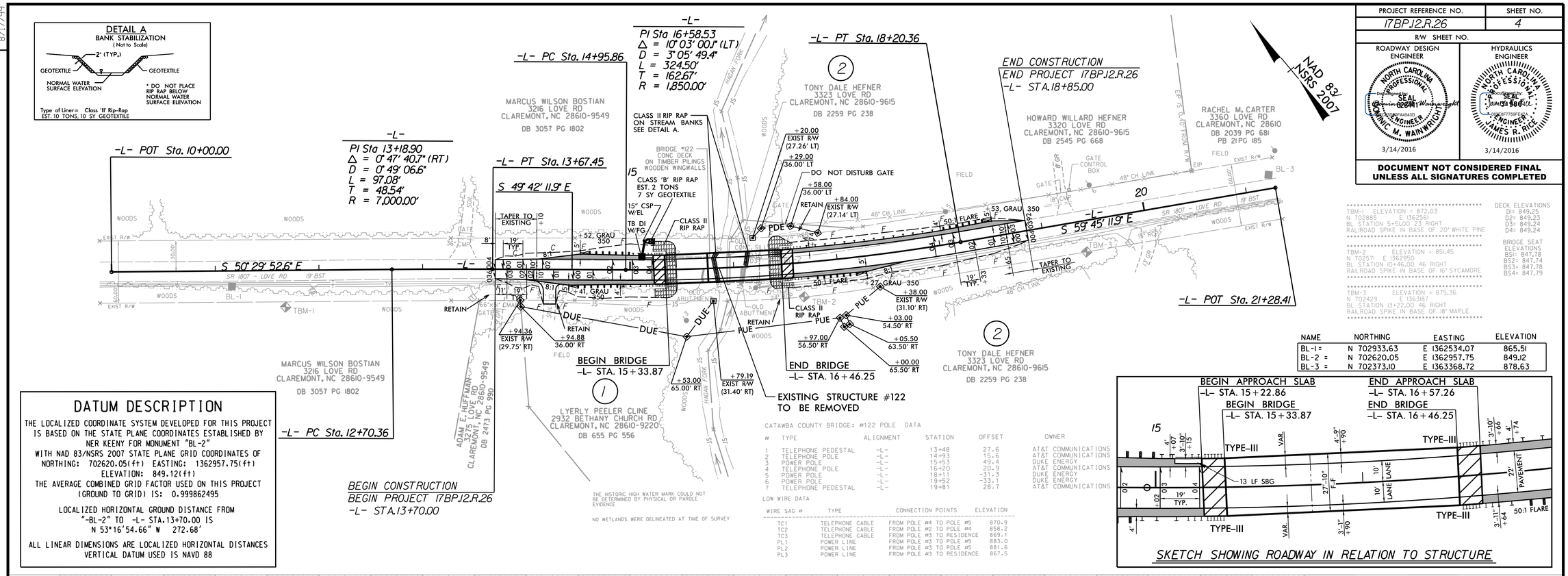

NAME	NORTHING	EASTING	ELEVATION
BL-1 =	N 702933.63	E 1362534.07	865.51
BL-2 =	N 702620.05	E 1362957.75	849.12
BL-3 =	N 702373.10	E 1363368.72	878.63

DATUM DESCRIPTION

THE LOCALIZED COORDINATE SYSTEM DEVELOPED FOR THIS PROJECT IS BASED ON THE STATE PLANE COORDINATES ESTABLISHED BY NER KEENY FOR MONUMENT "BL-2"
WITH NAD 83/NSRS 2007 STATE PLANE GRID COORDINATES OF
NORTHING: 702620.05(ft) EASTING: 1362957.75(ft)
ELEVATION: 849.12(ft)
THE AVERAGE COMBINED GRID FACTOR USED ON THIS PROJECT (GROUND TO GRID) IS: 0.999862495

LOCALIZED HORIZONTAL GROUND DISTANCE FROM "-BL-2" TO -L- STA.13+70.00 IS N 53°16'54.66" W 272.68'

ALL LINEAR DIMENSIONS ARE LOCALIZED HORIZONTAL DISTANCES VERTICAL DATUM USED IS NAVD 88

CATAWBA COUNTY BRIDGE: #122 POLE DATA

#	TYPE	ALIGNMENT	STATION	OFFSET	OWNER
1	TELEPHONE PEDESTAL	-L-	13+48	27.6	AT&T COMMUNICATIONS
2	TELEPHONE POLE	-L-	14+93	15.6	AT&T COMMUNICATIONS
3	POWER POLE	-L-	15+53	49.4	DUKE ENERGY
4	TELEPHONE POLE	-L-	16+20	20.9	AT&T COMMUNICATIONS
5	POWER POLE	-L-	18+11	-31.3	DUKE ENERGY
6	POWER POLE	-L-	19+52	-33.1	DUKE ENERGY
7	TELEPHONE PEDESTAL	-L-	19+81	28.7	AT&T COMMUNICATIONS

LOW WIRE DATA

WIRE SAG #	TYPE	CONNECTION POINTS	ELEVATION
TC1	TELEPHONE CABLE	FROM POLE #4 TO POLE #5	870.9
TC2	TELEPHONE CABLE	FROM POLE #2 TO POLE #4	858.2
TC3	TELEPHONE CABLE	FROM POLE #3 TO RESIDENCE	869.1
PL1	POWER LINE	FROM POLE #3 TO POLE #5	883.0
PL2	POWER LINE	FROM POLE #3 TO POLE #5	881.6
PL3	POWER LINE	FROM POLE #3 TO RESIDENCE	867.5

SKETCH SHOWING ROADWAY IN RELATION TO STRUCTURE

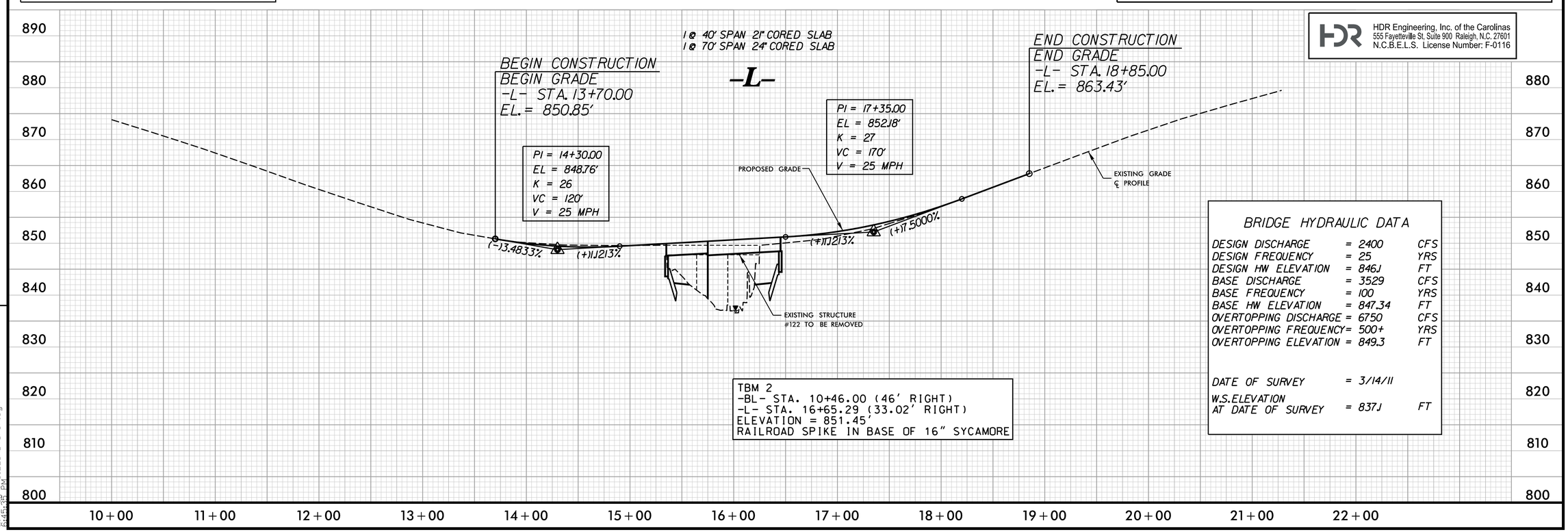

TBM 2
-BL- STA. 10+46.00 (46' RIGHT)
-L- STA. 16+65.29 (33.02' RIGHT)
ELEVATION = 851.45'
RAILROAD SPIKE IN BASE OF 16" SYCAMORE

BRIDGE HYDRAULIC DATA

DESIGN DISCHARGE	= 2400	CFS
DESIGN FREQUENCY	= 25	YRS
DESIGN HW ELEVATION	= 846.1	FT
BASE DISCHARGE	= 3529	CFS
BASE FREQUENCY	= 100	YRS
BASE HW ELEVATION	= 847.34	FT
OVERTOPPING DISCHARGE	= 6750	CFS
OVERTOPPING FREQUENCY	= 500+	YRS
OVERTOPPING ELEVATION	= 849.3	FT
DATE OF SURVEY	= 3/14/11	
W.S.ELEVATION AT DATE OF SURVEY	= 837.1	FT

HDR Engineering, Inc. of the Carolinas
555 Fayetteville St, Suite 900 Raleigh, N.C. 27601
N.C.B.E.L.S. License Number: F-0116

2/24/2016
\\P-gu\170122_RDY_PSH.dgn
8:45:16 PM

DocuSign Envelope ID: E54D6ECF-B6B8-4ACA-B6C9-B8A1F9807409

STATE OF NORTH CAROLINA
DIVISION OF HIGHWAYS

TRANSPORTATION MANAGEMENT PLAN

CATAWBA COUNTY

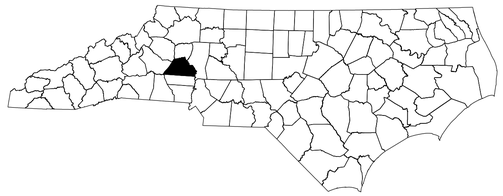

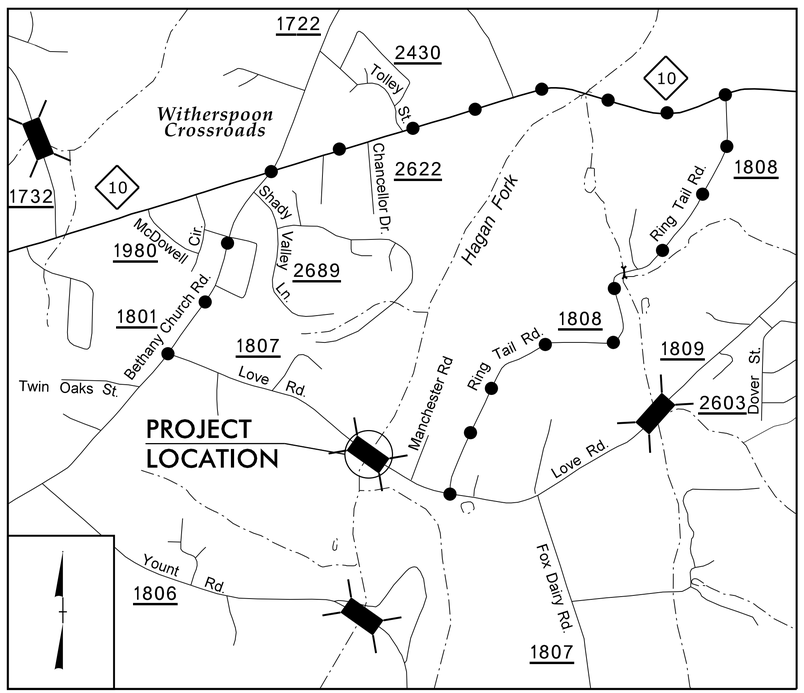

DETOUR ROUTE

VICINITY MAP
(NOT TO SCALE)

INDEX OF SHEETS

SHEET NO.	TITLE
TMP-1	TITLE SHEET AND INDEX OF SHEETS
TMP-1A	LIST OF APPLICABLE ROADWAY STANDARD DRAWINGS AND LEGEND
TMP-1B	GENERAL NOTES AND PHASING
TMP-2	OFFSITE DETOUR PLAN - LOVE ROAD (SR 1807)
SD-01	SIGN DESIGN - LOVE ROAD (SR 1807)

SHEET NO.
TMP-1

17BP.12.R.26

STATE PROJECT:

DOCUMENT NOT CONSIDERED FINAL UNLESS ALL SIGNATURES COMPLETED

WORK ZONE SAFETY & MOBILITY
"from the MOUNTAINS to the COAST"

N.C.D.O.T. WORK ZONE TRAFFIC CONTROL
1561 MAIL SERVICE CENTER (MSC) RALEIGH, NC 27699-1561
750 N. GREENFIELD PARKWAY, GARNER, NC 27529 (DELIVERY)
PHONE: (919) 773-2800 FAX: (919) 771-2745

J. S. BOURNE, P.E. — *STATE TRAFFIC MANAGEMENT ENGINEER*
DOMINIC WAINWRIGHT, P.E. — *PROJECT ENGINEER*
R. ERSKINE BROOKS, P.E. — *TRAFFIC CONTROL PROJECT DESIGN ENGINEER*
T. N. BEDENBAUGH, E.I. — *TRAFFIC CONTROL DESIGN ENGINEER*

DIVISION OF HIGHWAYS · STATE OF NORTH CAROLINA · DEPARTMENT OF TRANSPORTATION · WORK ZONE TRAFFIC CONTROL

APPROVED: DocuSigned by: R. Erskine Brooks F05BC5F748464EE...

DATE: 3/14/2016

HDR Engineering, Inc. of the Carolinas
555 Fayetteville St, Suite 900 Raleigh, N.C. 27601
N.C.B.E.L.S. License Number: F-0116

SEAL

NORTH CAROLINA PROFESSIONAL SEAL 032584 ENGINEER R. ERSKINE BROOKS

2/24/2016
c:\pwworking\tpo\d0360704\TO122_TCP_DSN.dgn
12:39:23 PM

DocuSign Envelope ID: E54D6ECF-B6B8-4ACA-B6C9-B8A1F9807409

PROJ. REFERENCE NO.	SHEET NO.
17BP.12.R.26	TMP-1A

HDR Engineering, Inc. of the Carolinas
555 Fayetteville St, Suite 900 Raleigh, N.C. 27601
N.C.B.E.L.S. License Number: F-0116

ROADWAY STANDARD DRAWINGS

THE FOLLOWING ROADWAY STANDARDS AS SHOWN IN "ROADWAY STANDARD DRAWINGS" - PROJECT SERVICES UNIT - N.C. DEPARTMENT OF TRANSPORTATION - RALEIGH, N.C., DATED JANUARY 2012 ARE APPLICABLE TO THIS PROJECT AND BY REFERENCE HEREBY ARE CONSIDERED A PART OF THESE PLANS:

STD. NO.	TITLE
1101.01	WORK ZONE WARNING SIGNS
1101.03	TEMPORARY ROAD CLOSURES
1101.11	TRAFFIC CONTROL DESIGN TABLES
1110.01	STATIONARY WORK ZONE SIGNS
1145.01	BARRICADES
1205.01	PAVEMENT MARKINGS - LINE TYPES & OFFSETS
1205.02	PAVEMENT MARKINGS - 2 LANE & MULTILANE ROADWAYS
1205.12	PAVEMENT MARKINGS - BRIDGES
1261.01	GUARDRAIL AND BARRIER DELINEATORS - INSTALLATION SPACING
1261.02	GUARDRAIL AND BARRIER DELINEATORS - TYPES AND MOUNTING
1262.01	GUARDRAIL END DELINEATION

LEGEND

GENERAL

DIRECTION OF TRAFFIC FLOW
DIRECTION OF PEDESTRIAN TRAFFIC FLOW
EXIST. PVMT.
NORTH ARROW
PROPOSED PVMT.
WORK AREA
REMOVAL

TRAFFIC CONTROL DEVICES

BARRICADE (TYPE III)
CONE
DRUM SKINNY DRUM TUBULAR MARKER
TEMPORARY CRASH CUSHION
FLASHING ARROW PANEL (TYPE C)
FLAGGER
LAW ENFORCEMENT
TRUCK MOUNTED IMPACT ATTENUATOR (TMIA)
CHANGEABLE MESSAGE SIGN

TEMPORARY SIGNING

PORTABLE SIGN
STATIONARY SIGN
STATIONARY OR PORTABLE SIGN

SIGNALS

EXISTING PROPOSED TEMP TEMPORARY

PAVEMENT MARKINGS

EXISTING LINES
TEMPORARY LINES

PAVEMENT MARKERS

CRYSTAL/CRYSTAL
CRYSTAL/RED
YELLOW/YELLOW

PAVEMENT MARKING SYMBOLS

PAVEMENT MARKING SYMBOLS

APPROVED: R. Erskine Brooks
F058C5F748464EE...
DATE: 3/14/2016

NORTH CAROLINA PROFESSIONAL SEAL 032584 ENGINEER R. ERSKINE BROOKS

DOCUMENT NOT CONSIDERED FINAL UNLESS ALL SIGNATURES COMPLETED

DIVISION OF HIGHWAYS · STATE OF NORTH CAROLINA · DEPARTMENT OF TRANSPORTATION · WORK ZONE TRAFFIC CONTROL

ROADWAY STANDARD DRAWINGS & LEGEND

2/24/2016
c:\pwworking\tpa\d0360704\i70i22_TCP_DSN.dgn
2:39:58 PM

DocuSign Envelope ID: E54D6ECF-B6B8-4ACA-B6C9-B8A1F9807409

PROJ. REFERENCE NO.	SHEET NO.
17BP.12.R.26	TMP-1B

HDR Engineering, Inc. of the Carolinas
555 Fayetteville St, Suite 900 Raleigh, N.C. 27601
N.C.B.E.L.S. License Number: F-0116

GENERAL NOTES

CHANGES MAY BE REQUIRED WHEN PHYSICAL DIMENSIONS IN THE DETAIL DRAWINGS, STANDARD DETAILS, AND ROADWAY DETAILS ARE NOT ATTAINABLE TO MEET FIELD CONDITIONS, OR RESULT IN DUPLICATE, OR UNDESIRED OVERLAPPING OR DEVICES. MODIFICATION MAY INCLUDE: MOVING, SUPPLEMENTING, COVERING, OR REMOVAL OF DEVICES, AS DIRECTED BY THE ENGINEER.

THE FOLLOWING GENERAL NOTES APPLY AT ALL TIMES FOR THE DURATION OF THE CONSTRUCTION PROJECT, EXCEPT WHEN OTHERWISE NOTED IN THE PLAN, OR DIRECTED BY THE ENGINEER.

TRAFFIC PATTERN ALTERATIONS

A) NOTIFY THE ENGINEER TWENTY ONE (21) CALENDAR DAYS PRIOR TO ANY TRAFFIC PATTERN ALTERATION.

SIGNING

B) INSTALL ADVANCE WORK ZONE WARNING SIGNS WHEN WORK IS WITHIN 40 FT FROM THE EDGE OF TRAVEL LANE AND NO MORE THAN THREE (3) DAYS PRIOR TO THE BEGINNING OF CONSTRUCTION.

C) PROVIDE SIGNING AND DEVICES REQUIRED TO CLOSE THE ROAD ACCORDING TO THE ROADWAY STANDARD DRAWINGS AND TRAFFIC CONTROL PLANS.

PROVIDE SIGNING REQUIRED FOR THE OFFSITE DETOUR ROUTE AS SHOWN IN THE TRAFFIC CONTROL PLANS.

D) COVER OR REMOVE ALL SIGNS AND DEVICES REQUIRED TO CLOSE THE ROAD WHEN THE ROAD CLOSURE IS NOT IN OPERATION.

COVER OR REMOVE ALL SIGNS REQUIRED FOR THE OFFSITE DETOUR WHEN THE DETOUR IS NOT IN OPERATION.

E) ENSURE ALL NECESSARY SIGNING IS IN PLACE PRIOR TO ALTERING ANY TRAFFIC PATTERN.

TRAFFIC CONTROL DEVICES

F) PLACE TYPE III BARRICADES, WITH "ROAD CLOSED" SIGN R11-2 ATTACHED, OF SUFFICIENT LENGTH TO CLOSE ENTIRE ROADWAY.

PAVEMENT MARKINGS AND MARKERS

G) UPON COMPLETION OF ALL OTHER CONSTRUCTION OPERATIONS, INSTALL 2 APPLICATIONS OF PAINT PAVEMENT MARKINGS ON THE FINAL SURFACE, ACCORDING TO RSD 1205.1, 1205.2 AND 1205.12.

PHASING NOTES

TRAFFIC CONTROL PHASING

NOTE: COORDINATE WITH THE ENGINEER FOR INSTALLATION AND REMOVAL OF ALL SIGNING AND TRAFFIC CONTROL DEVICES.

NOTE: MAINTAIN ACCESS TO DRIVEWAYS WITHIN PROJECT LIMITS AT ALL TIMES.

STEP 1: USING RSD 1101.01, SHEET 3 OF 3, INSTALL ADVANCE WORK ZONE WARNING SIGNS ON LOVE ROAD (SR 1807).

STEP 2: USING RSD 1101.03, SHEET 1 OF 9 AND SHEET TMP-2, INSTALL DETOUR SIGNS AND BARRICADES AND CLOSE LOVE RD (SR 1807).

STEP 3: REMOVE EXISTING BRIDGE NO. 122 AND CONSTRUCT PROPOSED BRIDGE AND ROADWAY, UP TO AND INCLUDING THE FINAL LAYER OF SURFACE COURSE. PLACE FINAL PAVEMENT MARKINGS ON LOVE ROAD (SR 1807) FROM -L- STA. 13+70 +/- TO STA. 18+85 +/-.

STEP 4: REMOVE ALL ADVANCE WORK ZONE DETOUR SIGNS, AND TRAFFIC CONTROL DEVICES AND OPEN LOVE ROAD (SR 1807) TO TRAFFIC.

APPROVED: DocuSigned by: R. Erskine Brooks F058C5F748464EE...

DATE: 3/14/2016

NORTH CAROLINA PROFESSIONAL SEAL 032584 ENGINEER R. ERSKINE BROOKS

DOCUMENT NOT CONSIDERED FINAL UNLESS ALL SIGNATURES COMPLETED

DIVISION OF HIGHWAYS STATE OF NORTH CAROLINA DEPARTMENT OF TRANSPORTATION WORK ZONE TRAFFIC CONTROL

GENERAL NOTES AND PHASING

PLOT DRIVER: NCDOT_pdf_color_eng_50.plt PENTABLE: NCDOT_tcp.tbl
USER: DWAINWRI DATE: 2/24/2016 TIME: 7:40:21 PM SCALE: half=1:100, full=1:50
FILE: pw:\\PWAPPTPA01:SouthEast_Tampa\Documents\000166\CON00060564\00000000018076 2\06.00_NCDOT_File_Structure\17BP.12.R.26\Traffic\TrafficControl\TCP\170122_TCP_DSN.dgn

DocuSign Envelope ID: E54D6ECF-B6B8-4ACA-B6C9-B8A1F9807409

PROJ. REFERENCE NO.	SHEET NO.
17BP.12.R.26	TMP-2

HDR Engineering, Inc. of the Carolinas
555 Fayetteville St, Suite 900 Raleigh, N.C. 27601
N.C.B.E.L.S. License Number: F-0116

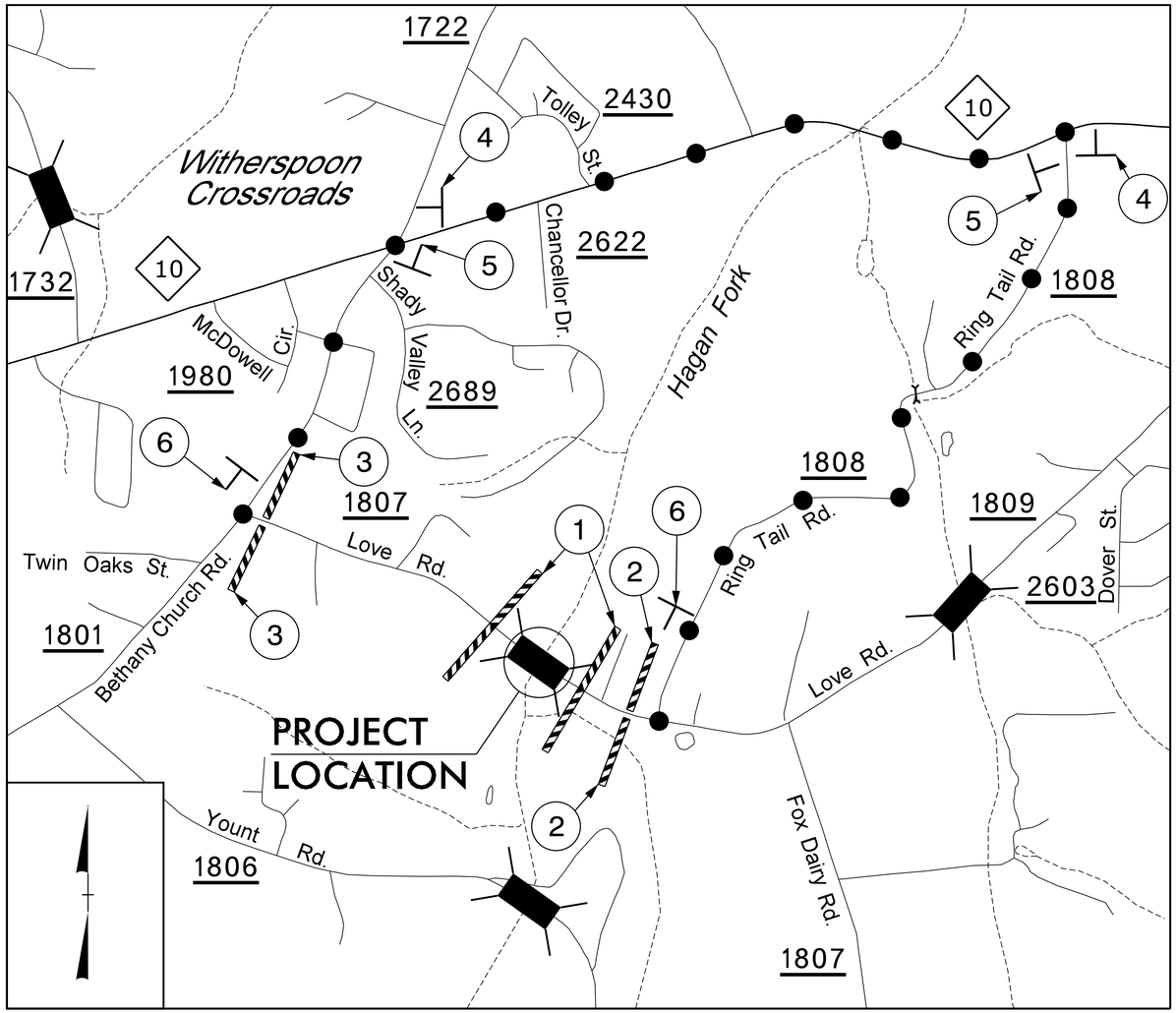

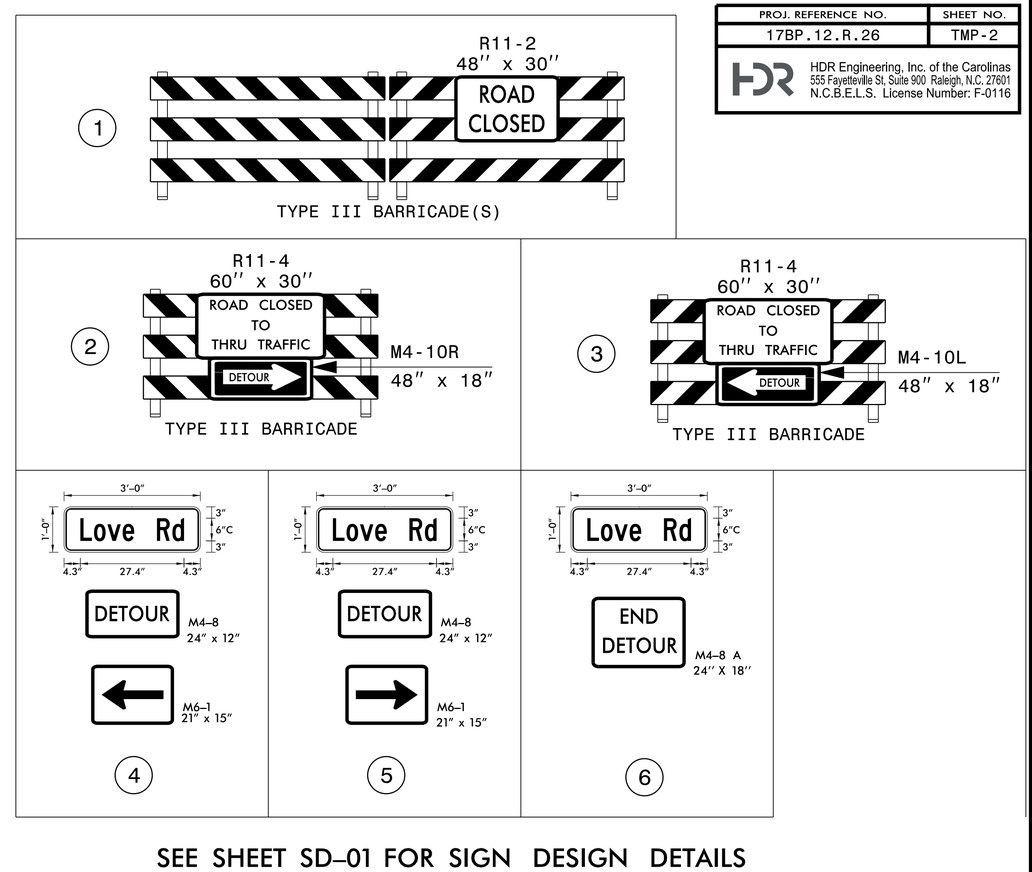

SEE SHEET SD-01 FOR SIGN DESIGN DETAILS

DETOUR ROUTE

REFER TO RSD 1101.03 SHEET 1 OF 9 FOR ADDITIONAL SIGN AND BARRICADE PLACEMENT

APPROVED: R. Erskine Brooks
F058C5F748464EE...

DATE: 3/14/2016

NORTH CAROLINA PROFESSIONAL SEAL 032584 ENGINEER R ERSKINE BROOKS

DOCUMENT NOT CONSIDERED FINAL UNLESS ALL SIGNATURES COMPLETED

DIVISION OF HIGHWAYS · STATE OF NORTH CAROLINA · DEPARTMENT OF TRANSPORTATION · WORK ZONE TRAFFIC CONTROL

OFFSITE DETOUR PLAN
LOVE ROAD (SR 1807)

2/24/2016
C:\pwworking\tpa\d0360704\I70122_TCP_DSN.dgn
7:40:37 PM

DocuSign Envelope ID: E54D6ECF-B6B8-4ACA-B6C9-B8A1F9807409

PROJ. REFERENCE NO.	SHEET NO.
17BP.12.R.26	SD-01

HDR Engineering, Inc. of the Carolinas
555 Fayetteville St, Suite 900 Raleigh, N.C. 27601
N.C.B.E.L.S. License Number: F-0116

SIGN NUMBER:
TYPE: D
QUANTITY: 1

SIGN WIDTH: 3′-0″
HEIGHT: 1′-0″
TOTAL AREA: 3.0 Sq.Ft.

BORDER TYPE: FLUSH
RECESS: 0.38″
WIDTH: 0.38″
RADII: 1.5″

NO. Z BARS:
LENGTH:

BACKG COLOR: Orange
COPY COLOR: Black

SYMBOL	X	Y	WID	HT

MAT′L: 0.125″ (3.2 mm) ALUMINUM

USE NOTES:

1. Legend and border shall be direct applied non-reflective sheeting.
2. Background shall be Grade B reflective sheeting.

DESIGN BY: D KERNS
PROJECT ID: ID

CHECKED BY:
DIV: DIV

DATE: Oct 25, 2011

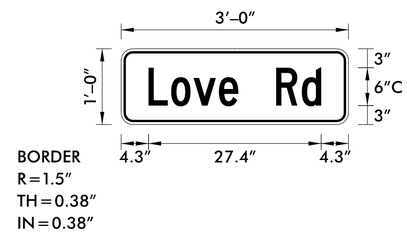

Spacing Factor is 1 unless specified otherwise

LETTER POSITIONS

Letter spacings are to start of next letter

																											Series/Size Text Length
		L	o	v	e		R	d																			C 2000
	4.3	3.6	3.5	4	3.1	6	4.1	3.1	4.3																		27.4

FILENAME: DWSignDesigns

NORTH CAROLINA D.O.T. SIGN DETAIL

APPROVED: DocuSigned by: David H Kerns 051F0FE9CE4447A...
DATE: 3/15/2016

NORTH CAROLINA PROFESSIONAL SEAL 030881 ENGINEER DAVID H. KERNS

DOCUMENT NOT CONSIDERED FINAL UNLESS ALL SIGNATURES COMPLETED

DIVISION OF HIGHWAYS · STATE OF NORTH CAROLINA · DEPARTMENT OF TRANSPORTATION · WORK ZONE TRAFFIC CONTROL

SIGN DETAIL
LOVE RD

PLOT DRIVER: NCDOT_pdf_color_eng_50.plt PENTABLE: NCDOT_tcp.tbl
USER: DWAINWRI DATE: 2/24/2016 TIME: 7:41:09 PM SCALE: half=1:100, full=1:50
FILE: pw:\\PWAPPTPA01:SouthEast_Tampa\Documents\000166\CON00605640\0000000001807162\06.00_NCDOT_File_Structure\17BP.12.R.26\Traffic\TrafficControl\TCP\170122_TCP_DSN.dgn

EROSION CONTROL PLANS

PROJECT REFERENCE NO.	SHEET NO.
17BP.12.R.26	EC-1
R/W SHEET NO.	

JOSHUA MASSROCK, P.E.
LEVEL III: DESIGNER OF EROSION AND SEDIMENT CONTROL PLANS.
CERTIFICATION NUMBER: 3573

HDR Engineering, Inc. of the Carolinas
555 Fayetteville St, Suite 900 Raleigh, N.C. 27601
N.C.B.E.L.S. License Number: F-0116

NAD 83/ NSRS 2007

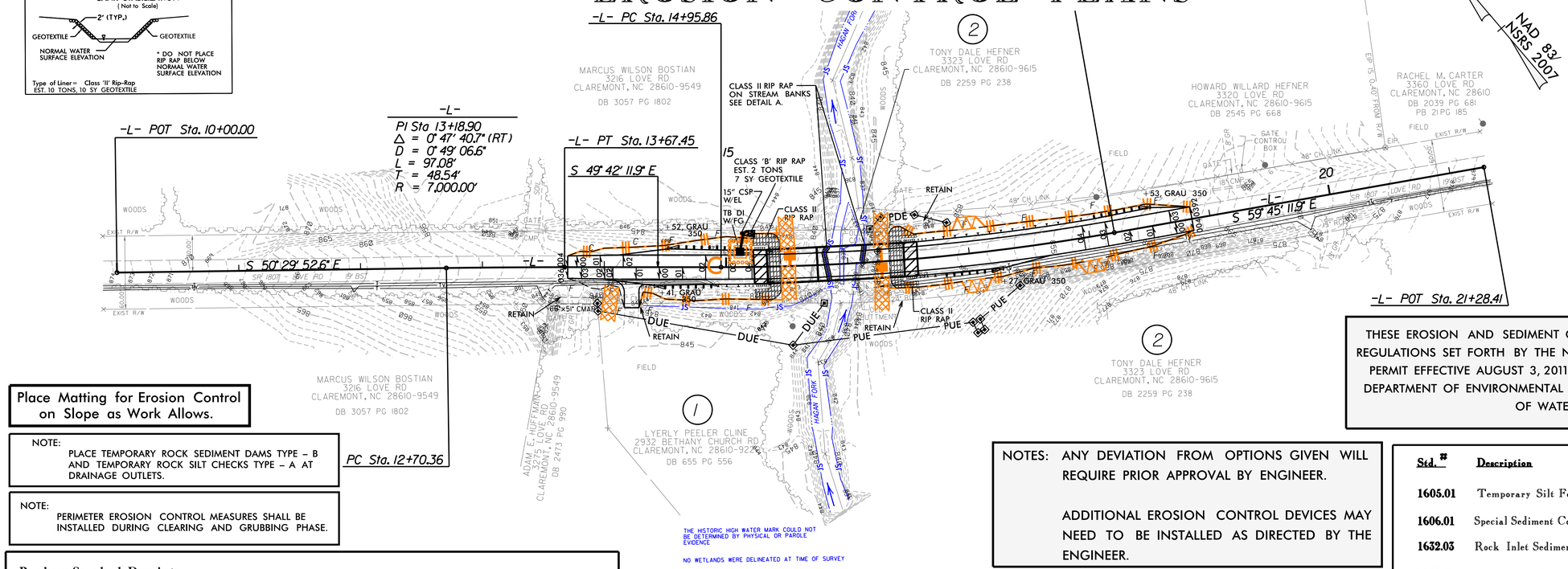

THESE EROSION AND SEDIMENT CONTROL PLANS COMPLY WITH THE REGULATIONS SET FORTH BY THE NCG-010000 GENERAL CONSTRUCTION PERMIT EFFECTIVE AUGUST 3, 2011 ISSUED BY THE NORTH CAROLINA DEPARTMENT OF ENVIRONMENTAL AND NATURAL RESOURCES DIVISION OF WATER QUALITY.

Place Matting for Erosion Control on Slope as Work Allows.

NOTE:
PLACE TEMPORARY ROCK SEDIMENT DAMS TYPE - B AND TEMPORARY ROCK SILT CHECKS TYPE - A AT DRAINAGE OUTLETS.

NOTE:
PERIMETER EROSION CONTROL MEASURES SHALL BE INSTALLED DURING CLEARING AND GRUBBING PHASE.

NOTES: ANY DEVIATION FROM OPTIONS GIVEN WILL REQUIRE PRIOR APPROVAL BY ENGINEER.

ADDITIONAL EROSION CONTROL DEVICES MAY NEED TO BE INSTALLED AS DIRECTED BY THE ENGINEER.

Std. #	Description	Symbol
1605.01	Temporary Silt Fence	
1606.01	Special Sediment Control Fence	
1632.03	Rock Inlet Sediment Trap: Type C	C
1633.01	Temporary Rock Silt Check Type-A	

Roadway Standard Drawings

The following roadway english standards as appear in "Roadway Standard Drawings"- Roadway Design Unit - N. C. Department of Transportation - Raleigh, N. C., dated January 2012 and the latest revison thereto are applicable to this project and by reference hereby are considered a part of these plans.

1605.01	Temporary Silt Fence		
1606.01	Special Sediment Control Fence	1631.01	Matting Installation
1622.01	Temporary Berms and Slope Drains	1632.03	Rock Inlet Sediment Trap Type C
1630.06	Special Stilling Basin	1633.01	Temporary Rock Silt Check Type A

ROADSIDE ENVIRONMENTAL UNIT
DEPARTMENT OF TRANSPORTATION
DIVISION OF HIGHWAYS
RALEIGH, N.C.

2012 STANDARD SPECIFICATIONS

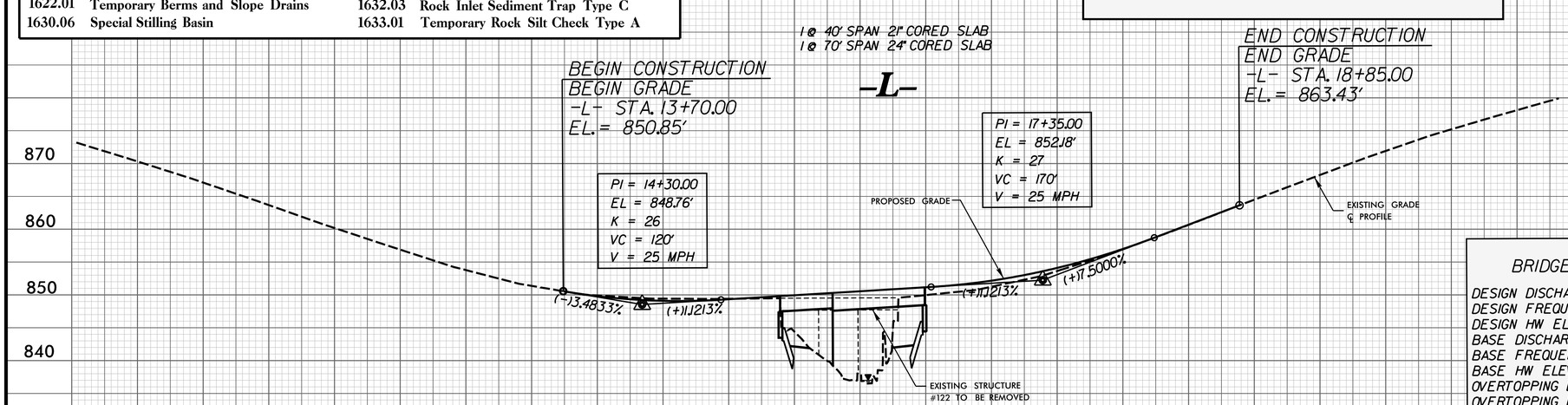

TBM 2
-BL- STA. 10+46.00 (46' RIGHT)
-L- STA. 16+65.29 (33.02' RIGHT)
ELEVATION = 851.45'
RAILROAD SPIKE IN BASE OF 16" SYCAMORE

BRIDGE HYDRAULIC DATA

DESIGN DISCHARGE	= 2400	CFS
DESIGN FREQUENCY	= 25	YRS
DESIGN HW ELEVATION	= 846.1	FT
BASE DISCHARGE	= 3529	CFS
BASE FREQUENCY	= 100	YRS
BASE HW ELEVATION	= 847.34	FT
OVERTOPPING DISCHARGE	= 6750	CFS
OVERTOPPING FREQUENCY	= 500+	YRS
OVERTOPPING ELEVATION	= 849.3	FT
DATE OF SURVEY	= 3/14/11	
W.S.ELEVATION AT DATE OF SURVEY	= 837.1	FT

8/17/99

2/24/2016
c:\CADD\70122_HYD_EC_PSH.dgn
6:07:10 PM

PROJECT REFERENCE NO.	SHEET NO.
17BP.12.R.26	EC-2

DIVISION OF HIGHWAYS
STATE OF NORTH CAROLINA

SOIL STABILIZATION SUMMARY SHEET

MATTING FOR EROSION CONTROL: FILL SLOPES 2:1 OR STEEPER

CONST SHEET NO.	LINE	FROM STATION	TO STATION	SIDE	ESTIMATE (SY)
4	-L-	14+50	15+35	RT	150
4	-L-	14+75	15+35	LT	50
4	-L-	16+45	17+50	RT	70
4	-L-	16+45	17+50	LT	65
				SUBTOTAL	335
				SAY	335

MATTING FOR EROSION CONTROL: FILL SLOPES 2:1 OR STEEPER

CONST SHEET NO.	LINE	FROM STATION	TO STATION	SIDE	ESTIMATE (SY)

PROJECT REFERENCE NO.	SHEET NO.
17BP.12.R.26	EC-3

DIVISION OF HIGHWAYS
STATE OF NORTH CAROLINA

SOIL STABILIZATION TIMEFRAMES

SITE DESCRIPTION	STABILIZATION TIME	TIMEFRAME EXCEPTIONS
PERIMETER DIKES, SWALES, DITCHES AND SLOPES	7 DAYS	NONE
HIGH QUALITY WATER (HQW) ZONES	7 DAYS	NONE
SLOPES STEEPER THAN 3:1	7 DAYS	IF SLOPES ARE 10' OR LESS IN LENGTH AND ARE NOT STEEPER THAN 2:1, 14 DAYS ARE ALLOWED.
SLOPES 3:1 OR FLATTER	14 DAYS	7 DAYS FOR SLOPES GREATER THAN 50' IN LENGTH.
ALL OTHER AREAS WITH SLOPES FLATTER THAN 4:1	14 DAYS	NONE, EXCEPT FOR PERIMETERS AND HQW ZONES.

TIP PROJECT: 17BP.12.R.26

T.I.P. NO.	SHEET NO.
17BP.12.R.26	UO–1

STATE OF NORTH CAROLINA
DIVISION OF HIGHWAYS

UTILITIES BY OTHERS PLANS
CATAWBA COUNTY

LOCATION: BRIDGE NO. 122 ON SR 1807 OVER HAGAN FORK BETWEEN SR 1804 AND SR 1808

TYPE OF WORK: UTILITIES

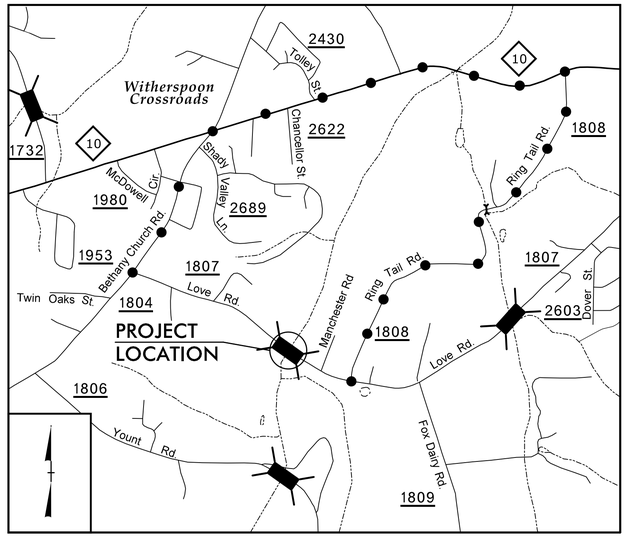

DETOUR ROUTE

VICINITY MAP
(NOT TO SCALE)

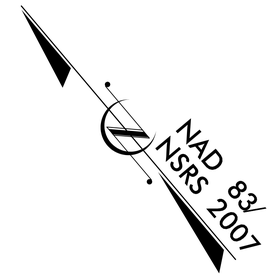

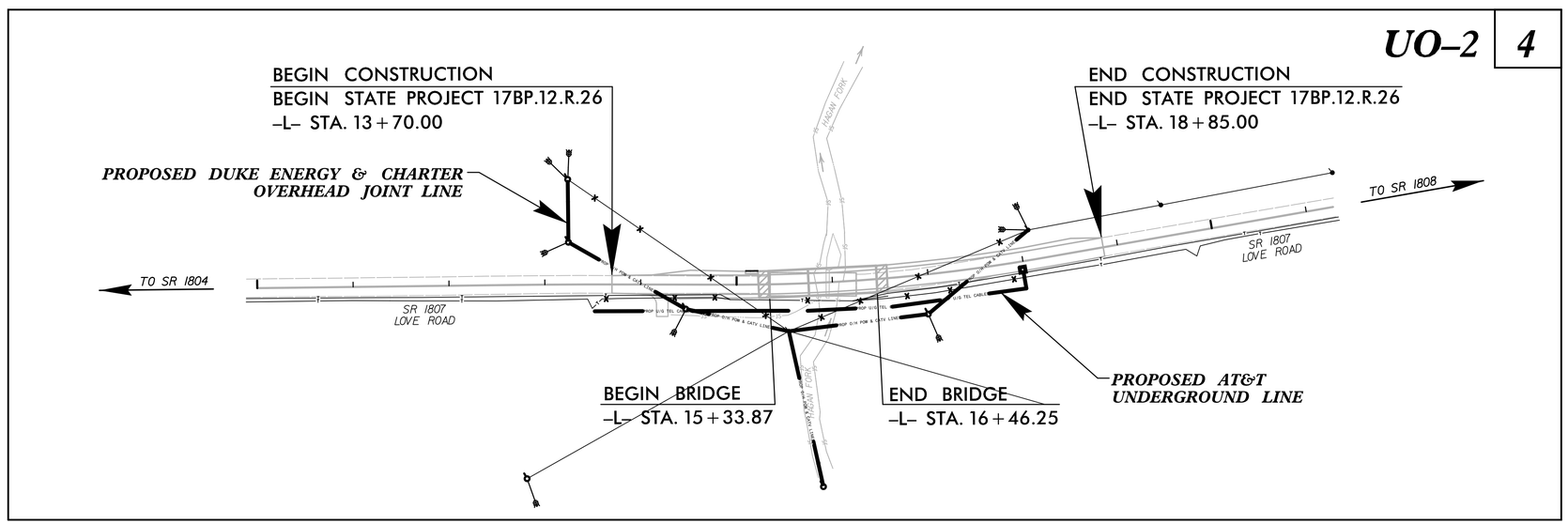

LOCATION SKETCH

CLEARING ON THIS PROJECT SHALL BE PERFORMED TO THE LIMITS ESTABLISHED BY METHOD II

INCOMPLETE PLANS
DO NOT USE FOR R/W ACQUISITION

PRELIMINARY PLANS
DO NOT USE FOR CONSTRUCTION

GRAPHIC SCALES

50 25 0 50 100
PLANS

50 25 0 50 100
PROFILE (HORIZONTAL)

10 5 0 10 20
PROFILE (VERTICAL)

INDEX OF SHEETS

SHEET NO.	DESCRIPTION
UO–1	TITLE SHEET
UO–2	UBO PLAN SHEET

PRIVATE UTILITY OWNERS ON PROJECT

(1) POWER – DUKE ENERGY

(2) TELEPHONE – AT&T

(3) TV – CHARTER COMMUNICATIONS

HINDE ENGINEERING
License No. C-2639
7520 E. Independence Blvd., Suite 230 Charlotte, NC 28227

STATE OF NORTH CAROLINA DEPARTMENT OF TRANSPORTATION

PROJECT REFERENCE NO.	SHEET NO.
17BP.12.R.26	UO-2

UTILITIES BY OTHERS

NOTE:
ALL PROPOSED UTILITY WORK SHOWN ON THIS SHEET WILL BE DONE BY OTHERS. NO PAYMENT WILL BE MADE TO THE CONTRACTOR FOR PROPOSED UTILITY WORK SHOWN ON THIS SHEET.

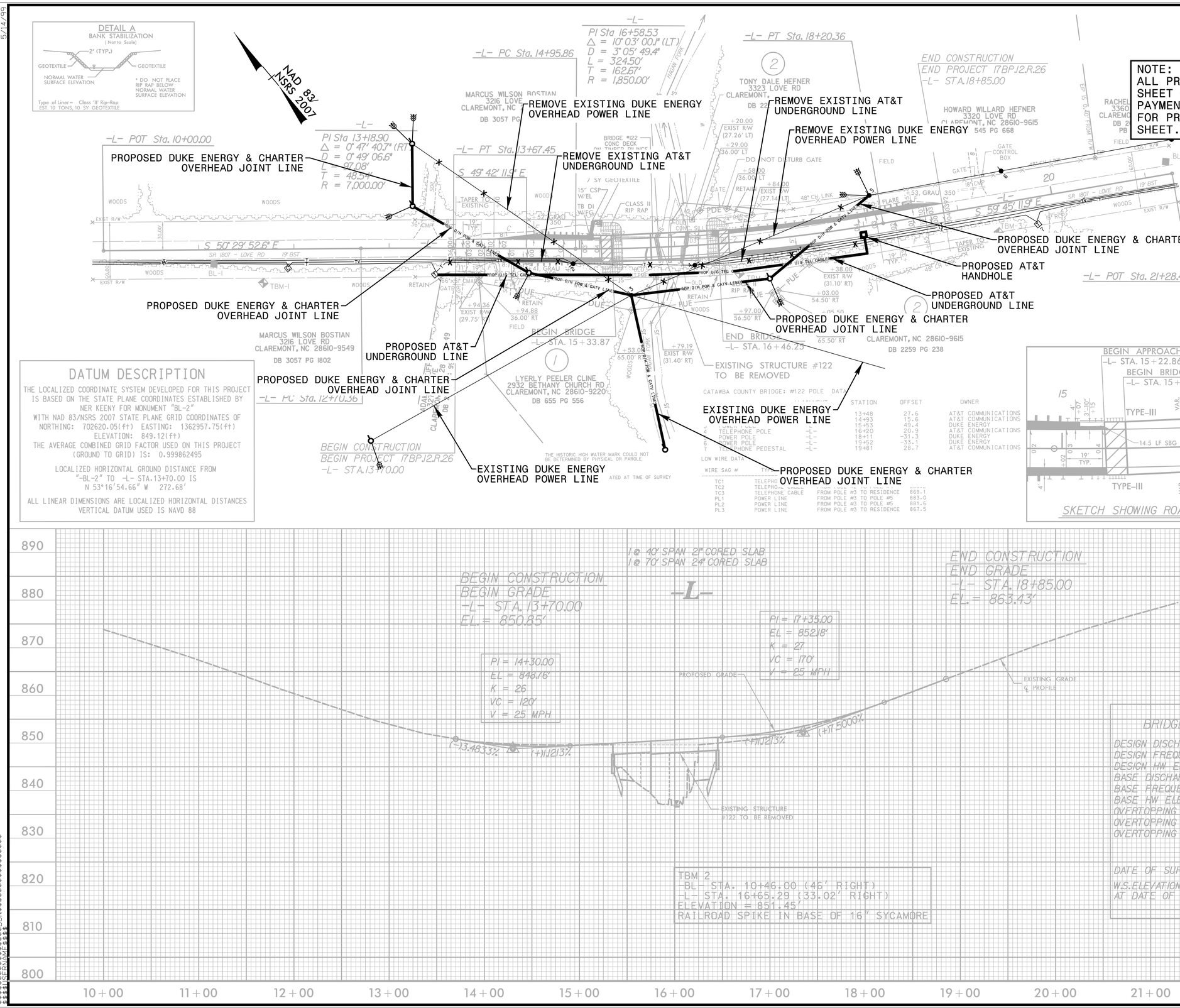

NAME	NORTHING	EASTING	ELEVATION
BL-1=	N 702933.63	E 1362534.07	865.51
BL-2 =	N 702620.05	E 1362957.75	849.12
BL-3 =	N 702373.10	E 1363368.72	878.63

4	TELEPHONE POLE	-L-	16+20	-20.9
5	POWER POLE	-L-	18+11	-31.3
6	POWER POLE	-L-	19+52	-33.1
7	TELEPHONE PEDESTAL	-L-	19+81	28.7

STATION	OFFSET	OWNER
13+48	27.6	AT&T COMMUNICATIONS
14+93	15.6	AT&T COMMUNICATIONS
15+53	49.4	DUKE ENERGY
		AT&T COMMUNICATIONS
		DUKE ENERGY
		DUKE ENERGY
		AT&T COMMUNICATIONS

WIRE SAG #	TYPE	FROM POLE	ELEVATION
TC1	TELEPHONE CABLE	FROM POLE #3 TO RESIDENCE	869.1
TC2	TELEPHONE CABLE	FROM POLE #3 TO RESIDENCE	883.0
TC3	TELEPHONE CABLE	FROM POLE #3 TO RESIDENCE	881.6
PL1	POWER LINE	FROM POLE #3 TO POLE #5	867.5
PL2	POWER LINE		
PL3	POWER LINE		

HINDE ENGINEERING
License No. C-2639
7520 E. Independence Blvd., Suite 230 Charlotte, NC 28227

5/14/99

8/23/99

0 2.5 5	PROJ. REFERENCE NO.	SHEET NO.
	17BP.12.R.26	X-1

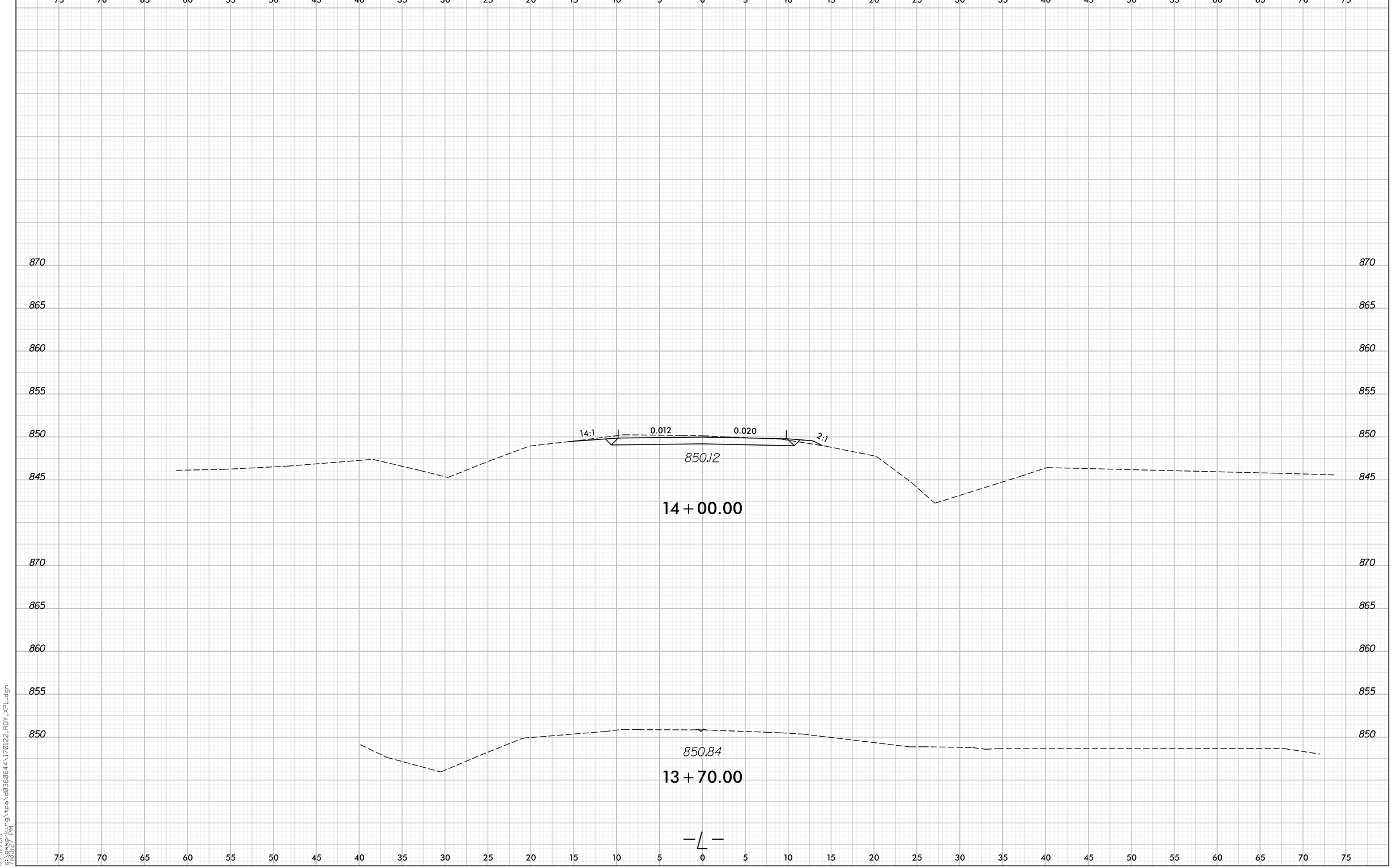

1/23/2015
9:03:27 PM
c:\pwworking\tpa\d0360644\170122_RDY_XPL.dgn

8/23/99

0 2.5 5	PROJ. REFERENCE NO.	SHEET NO.
	17BP.12.R.26	X-2

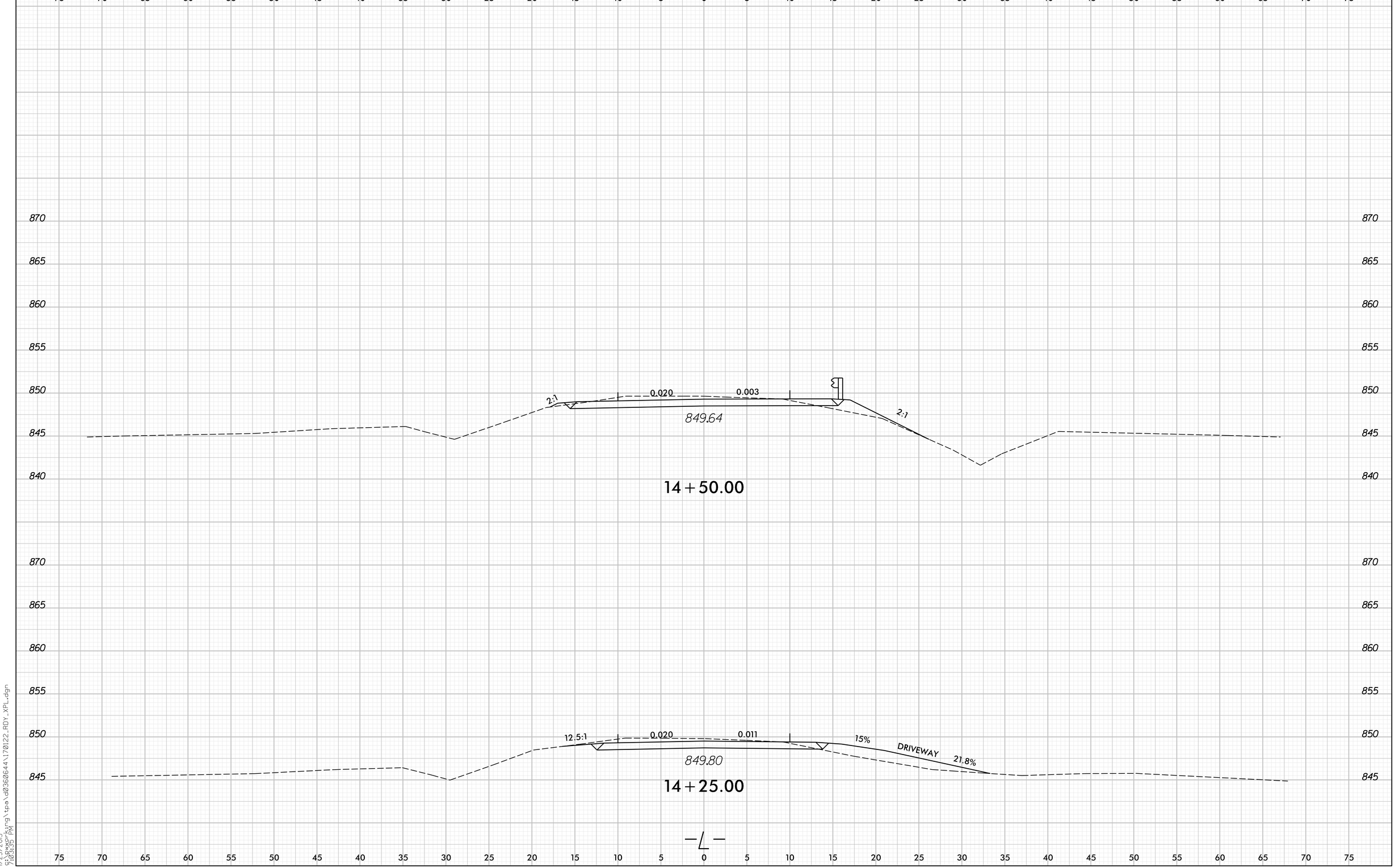

1/23/2015
9:03:35 PM
c:\pwworking\tpa\d0360644\170122_RDY_XPL.dgn

8/23/99

0 2.5 5	PROJ. REFERENCE NO.	SHEET NO.
	17BP.12.R.26	X-3

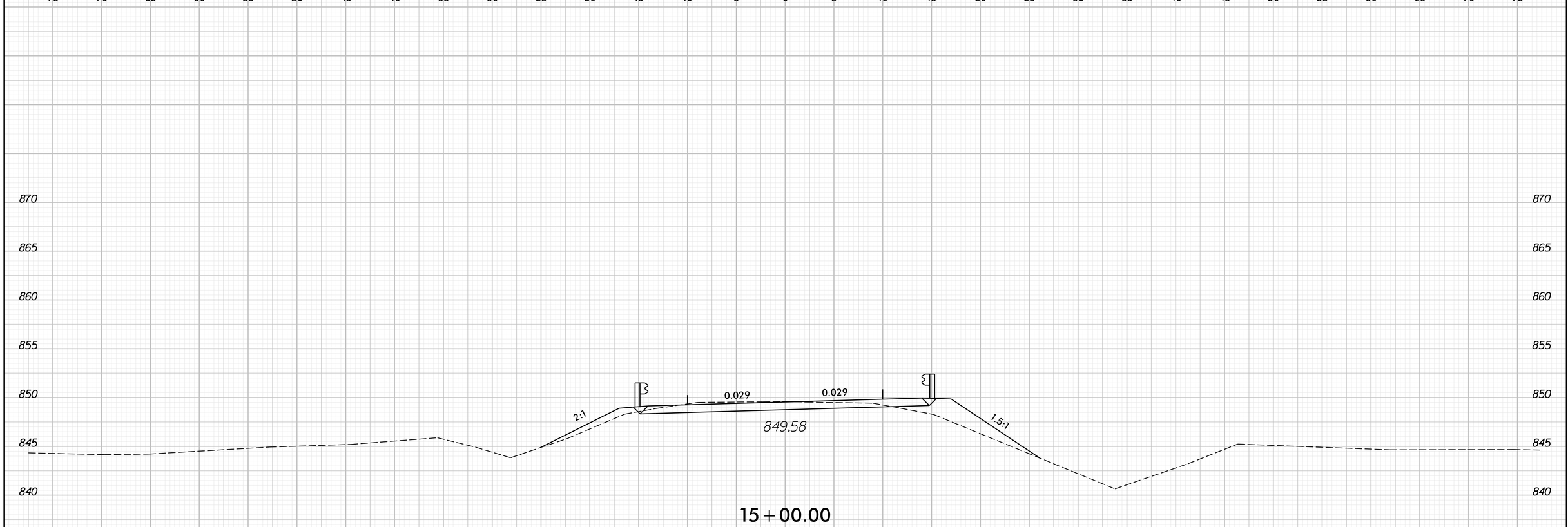

15 + 00.00

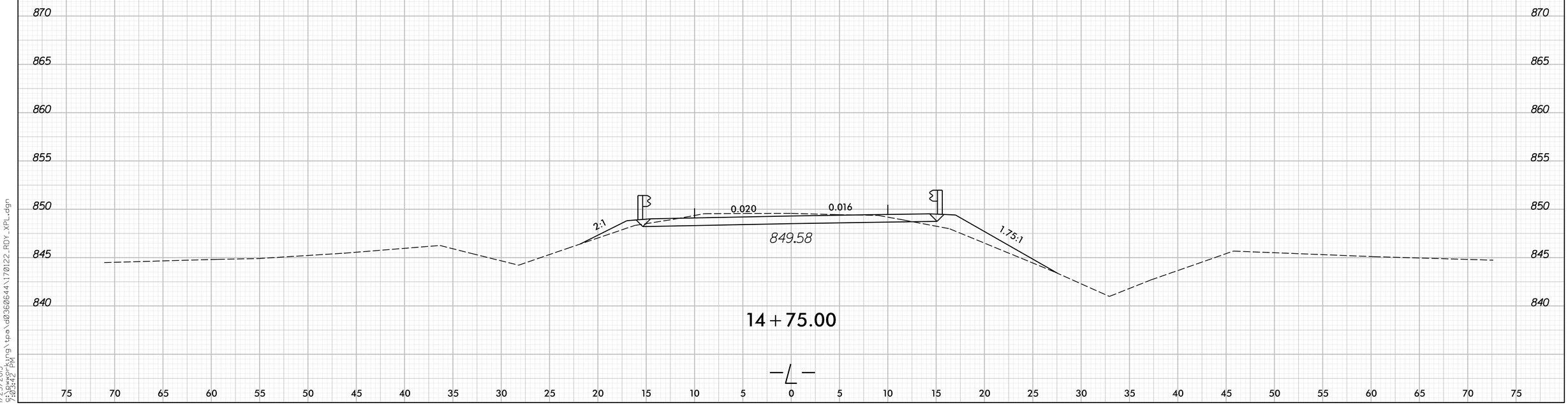

14 + 75.00

-L-

1/23/2015
9:03:42 PM
c:\pwworking\tpo\d0360644\170122_RDY_XPL.dgn

0 2.5 5	PROJ. REFERENCE NO.	SHEET NO.
	17BP.12.R.26	X-4

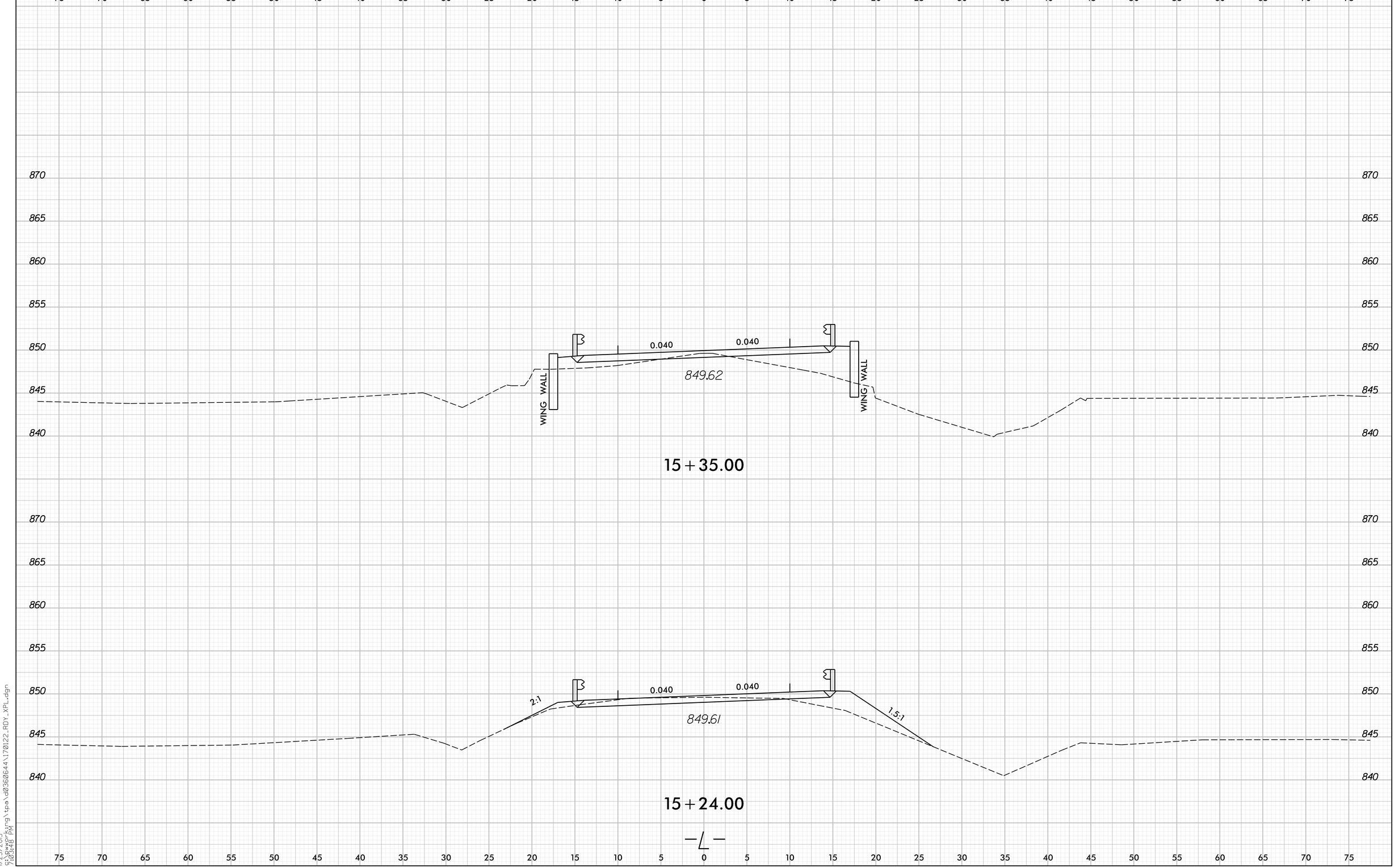

8/23/99

1/23/2015
9:03:48 PM
c:\pwworking\tpo\d0360644\170122_RDY_XPL.dgn

8/23/99

0 2.5 5	PROJ. REFERENCE NO.	SHEET NO.
	17BP.12.R.26	X-5

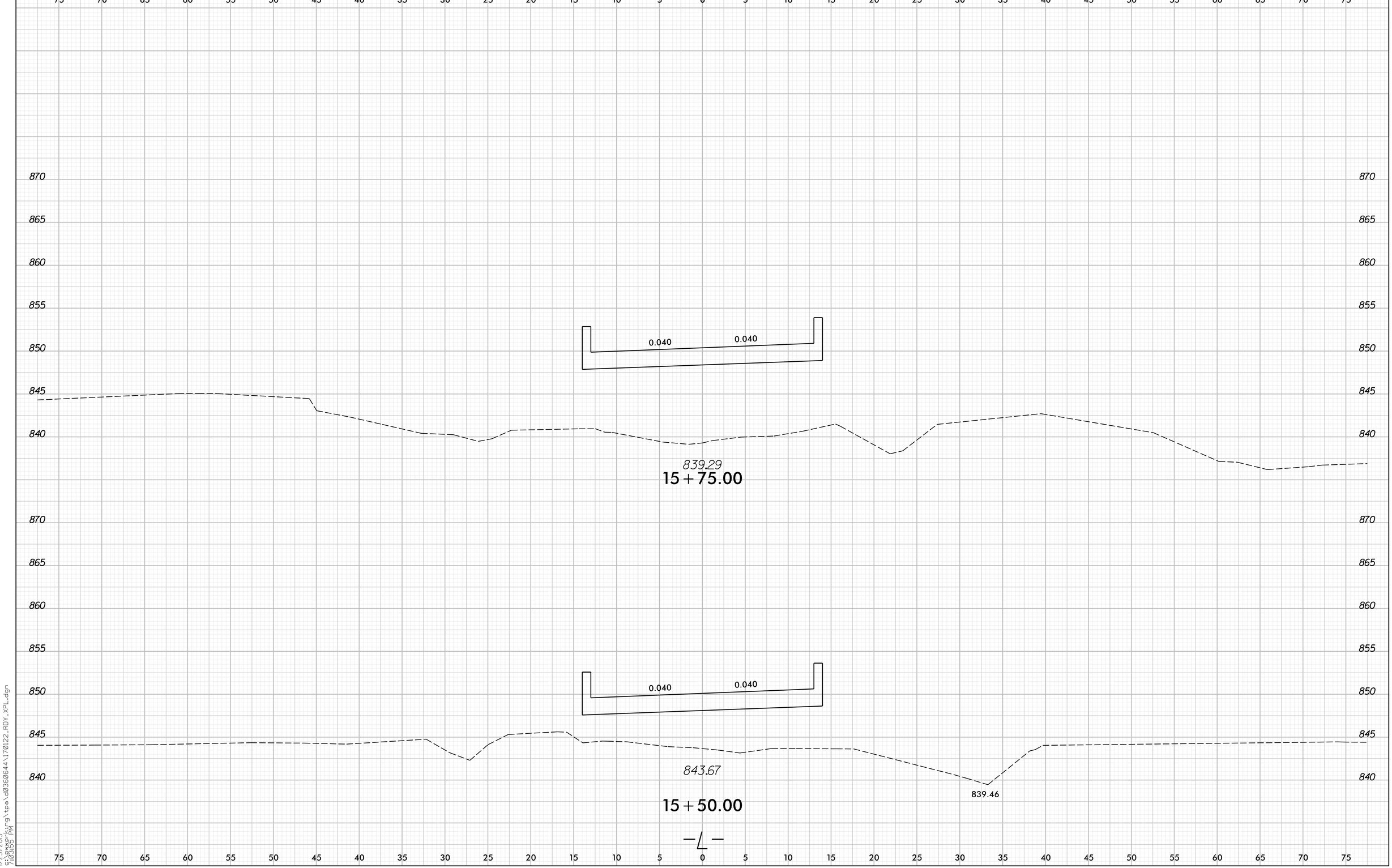

1/23/2015
C:\Users\kng\tpa\d0360644\170122_RDY_XPL.dgn
7:03:55 PM

0 2.5 5	PROJ. REFERENCE NO.	SHEET NO.
	17BP.12.R.26	X-6

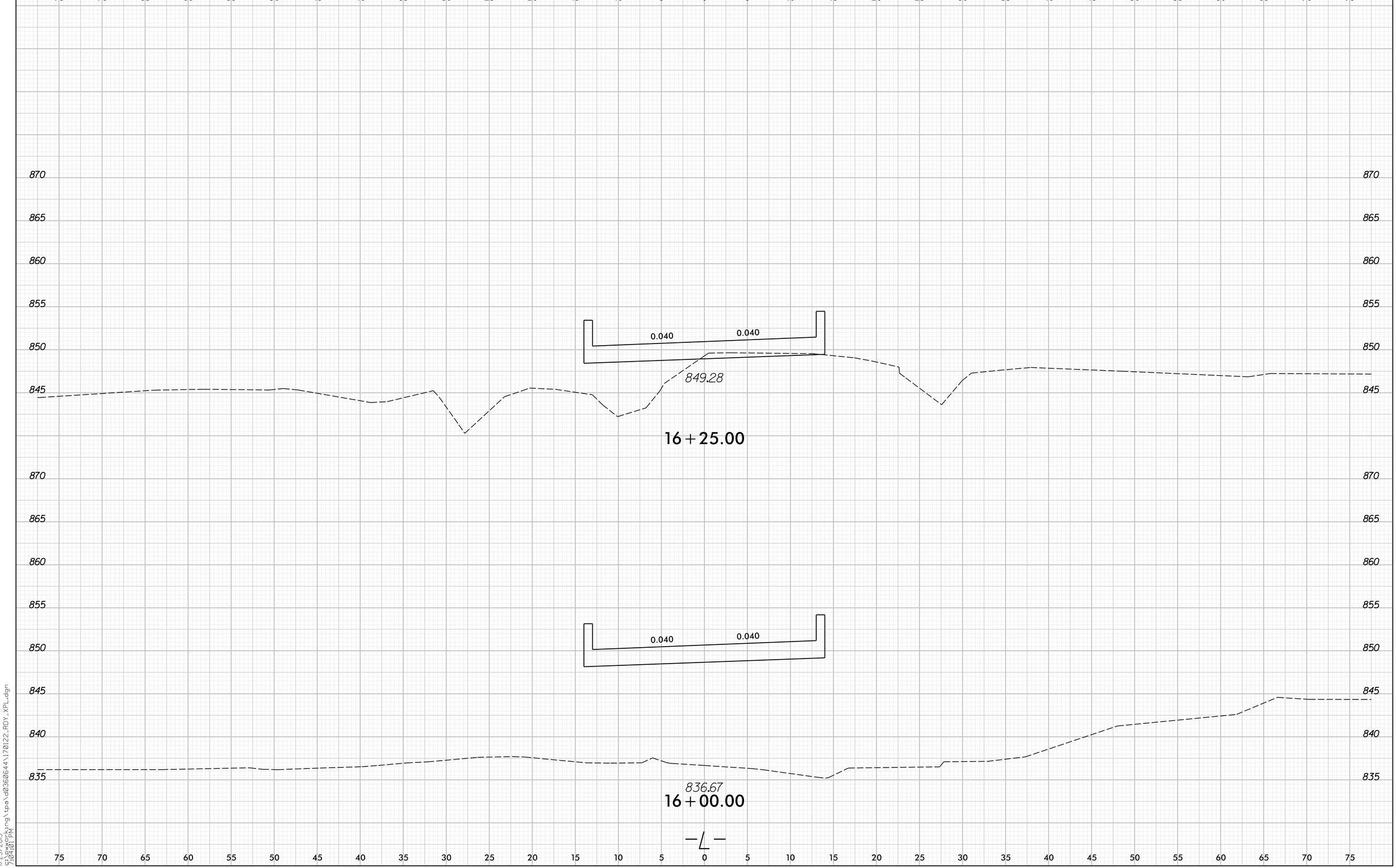

8/23/99

1/23/2015
9:04:01 PM
Working\tpo\d0360644\170122_RDY_XPL.dgn

8/23/99

0 2.5 5	PROJ. REFERENCE NO.	SHEET NO.
	17BP.12.R.26	X-7

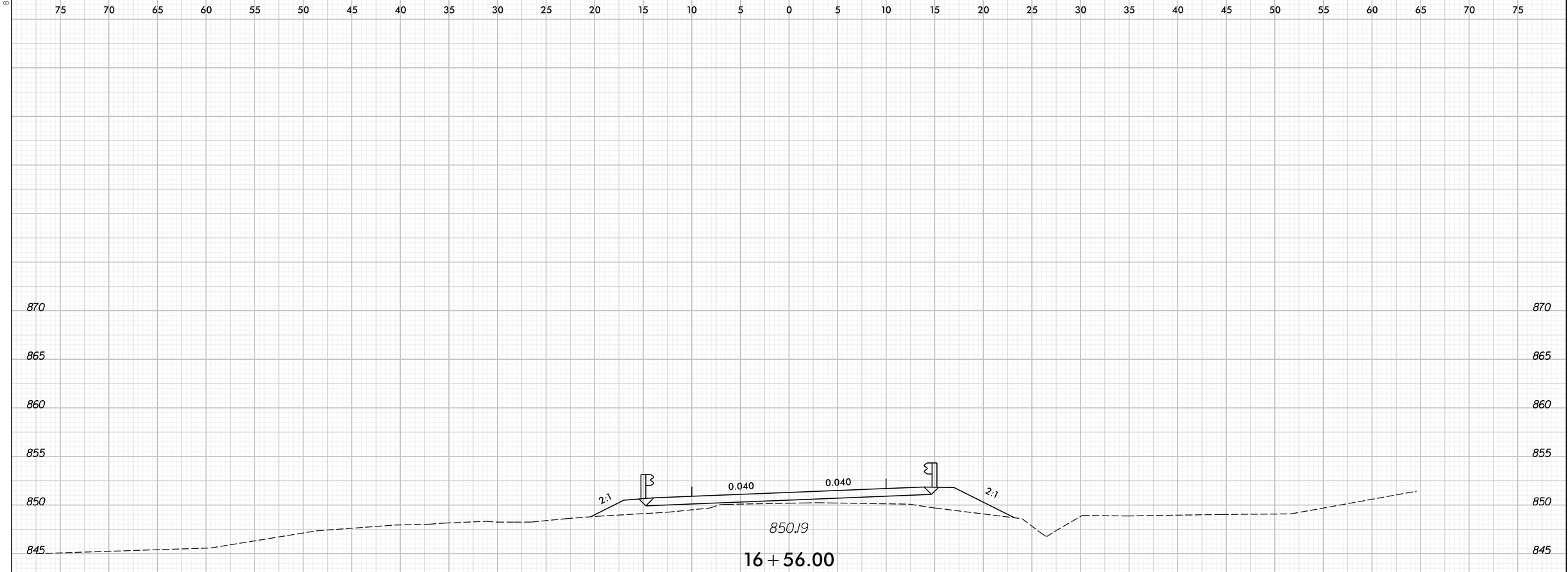

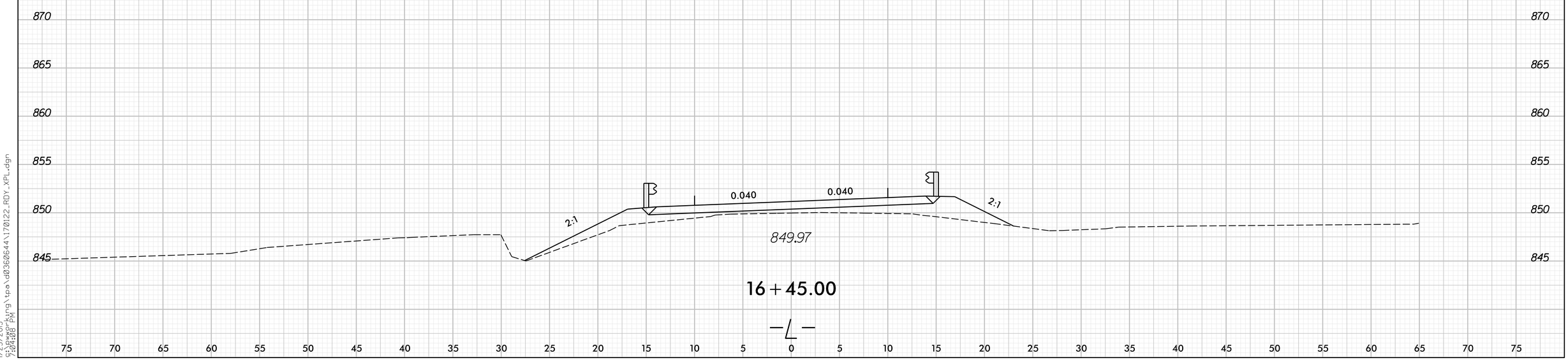

1/23/2015
9:04:08 PM
C:\pwworking\tpa\d0360644\170122_RDY_XPL.dgn

8/23/99

0 2.5 5	PROJ. REFERENCE NO.	SHEET NO.
	17BP.12.R.26	X-8

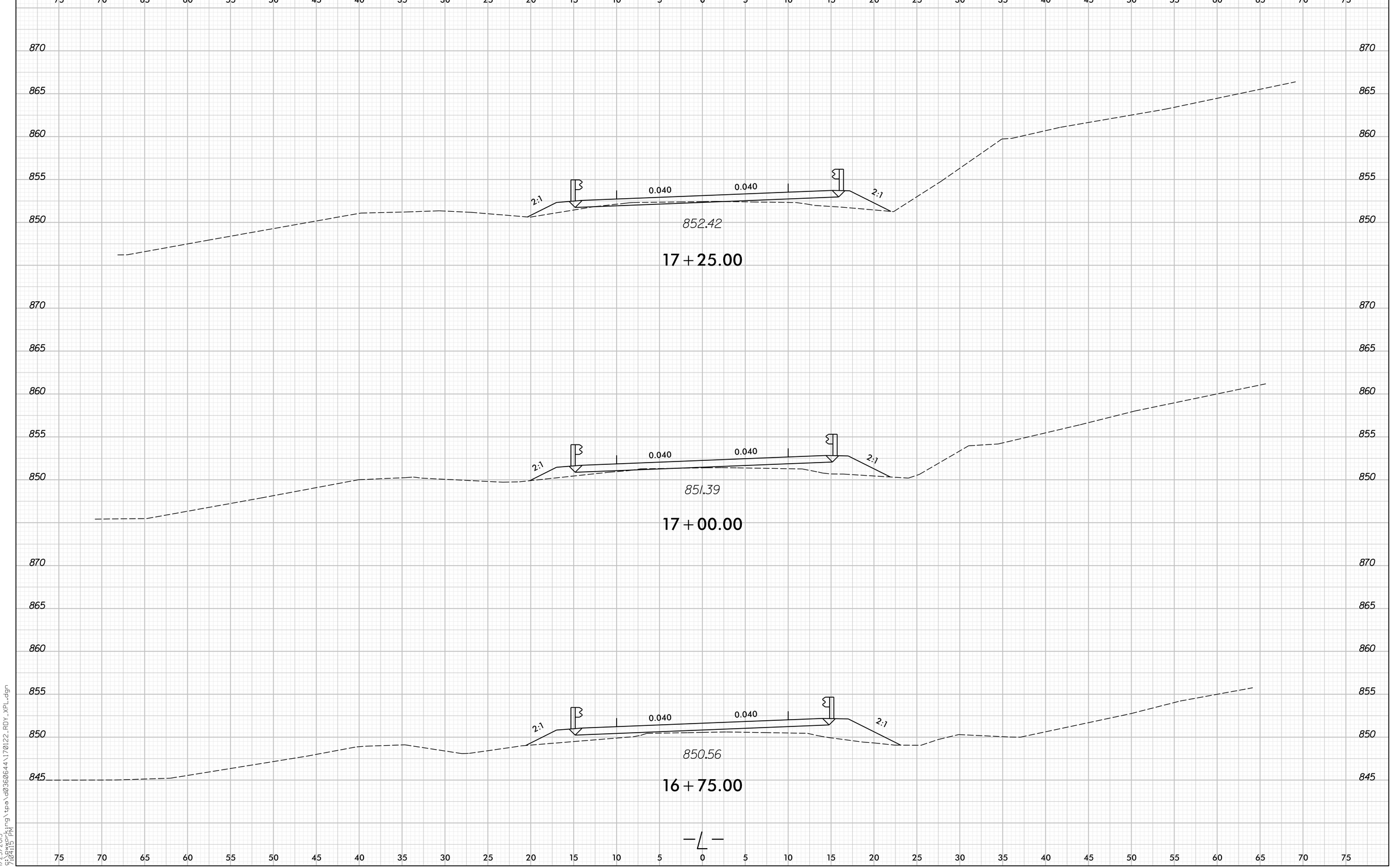

1/23/2015
9:04:15 PM
c:\pwworking\tpa\d0360644\170122_RDY_XPL.dgn

8/23/99

0 2.5 5	PROJ. REFERENCE NO.	SHEET NO.
	17BP.12.R.26	X-9

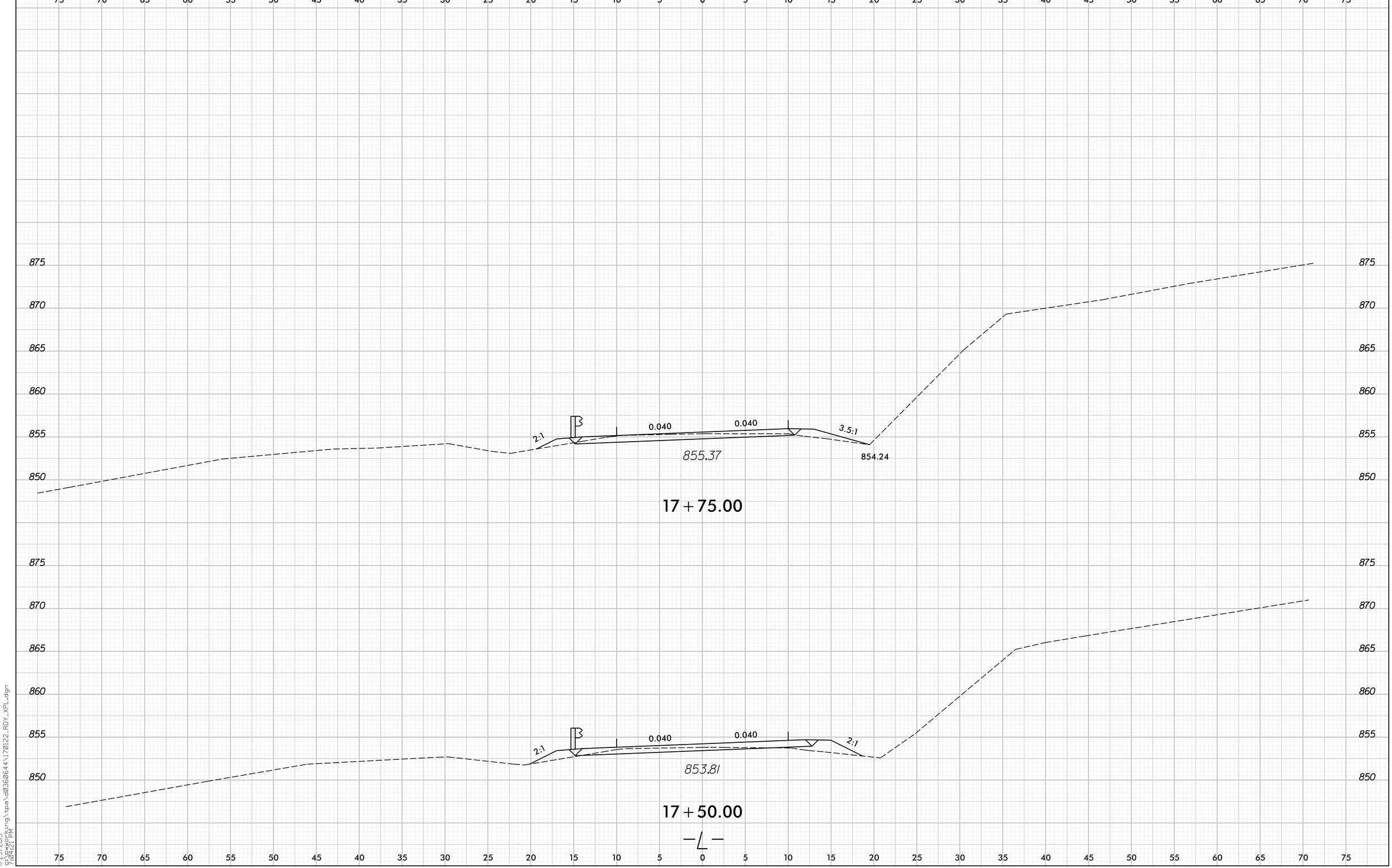

1/23/2015
9:04:21 PM
c:\pwworking\tpa\d0360644\170122_RDY_XPL.dgn

8/23/99

0 2.5 5	PROJ. REFERENCE NO.	SHEET NO.
	17BP.12.R.26	X-10

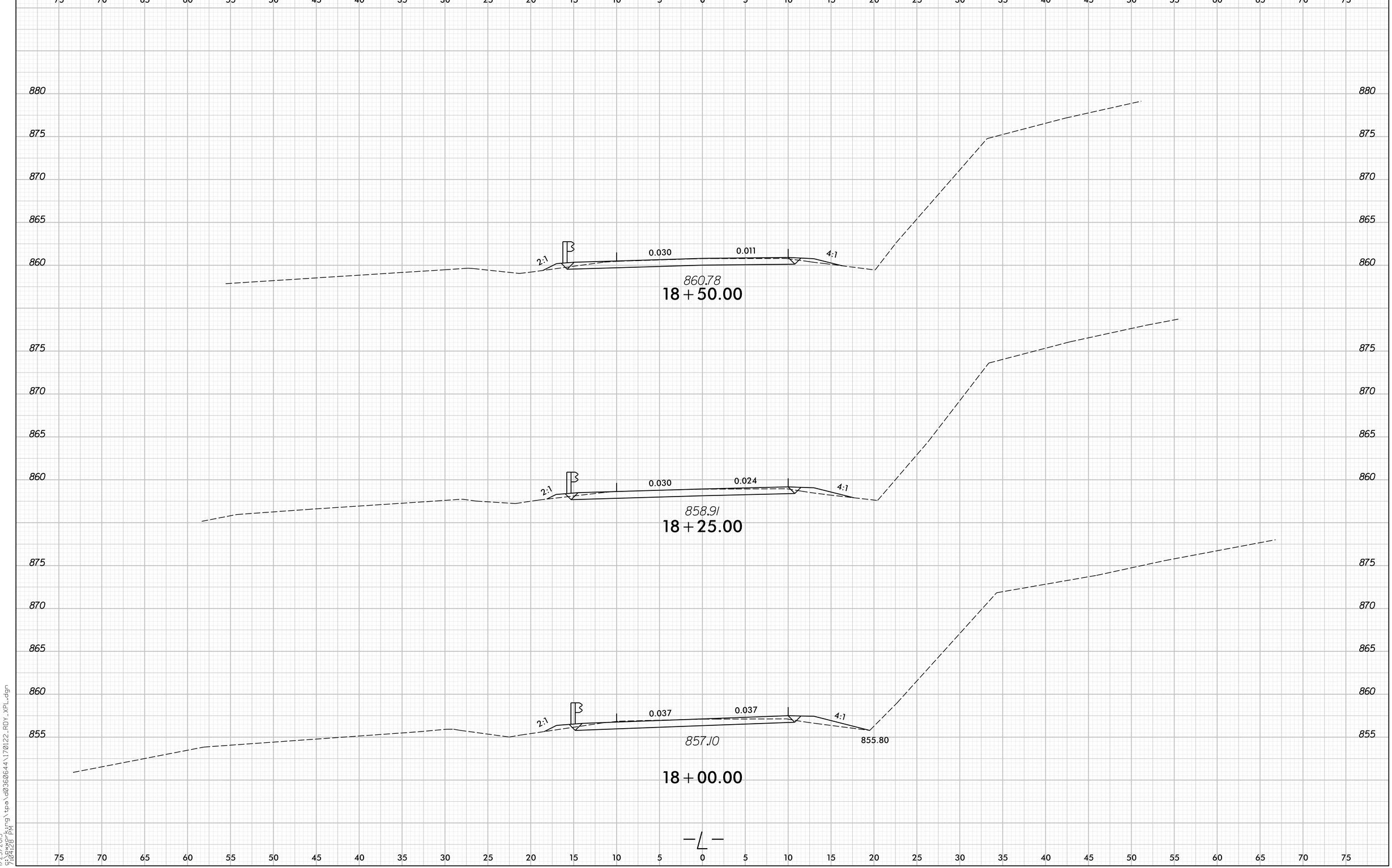

1/23/2015
9:04:28 PM
c:\pwworking\tpa\d0360644\170122_RDY_XPL.dgn

8/23/99

0 2.5 5	PROJ. REFERENCE NO.	SHEET NO.
	17BP.12.R.26	X-11

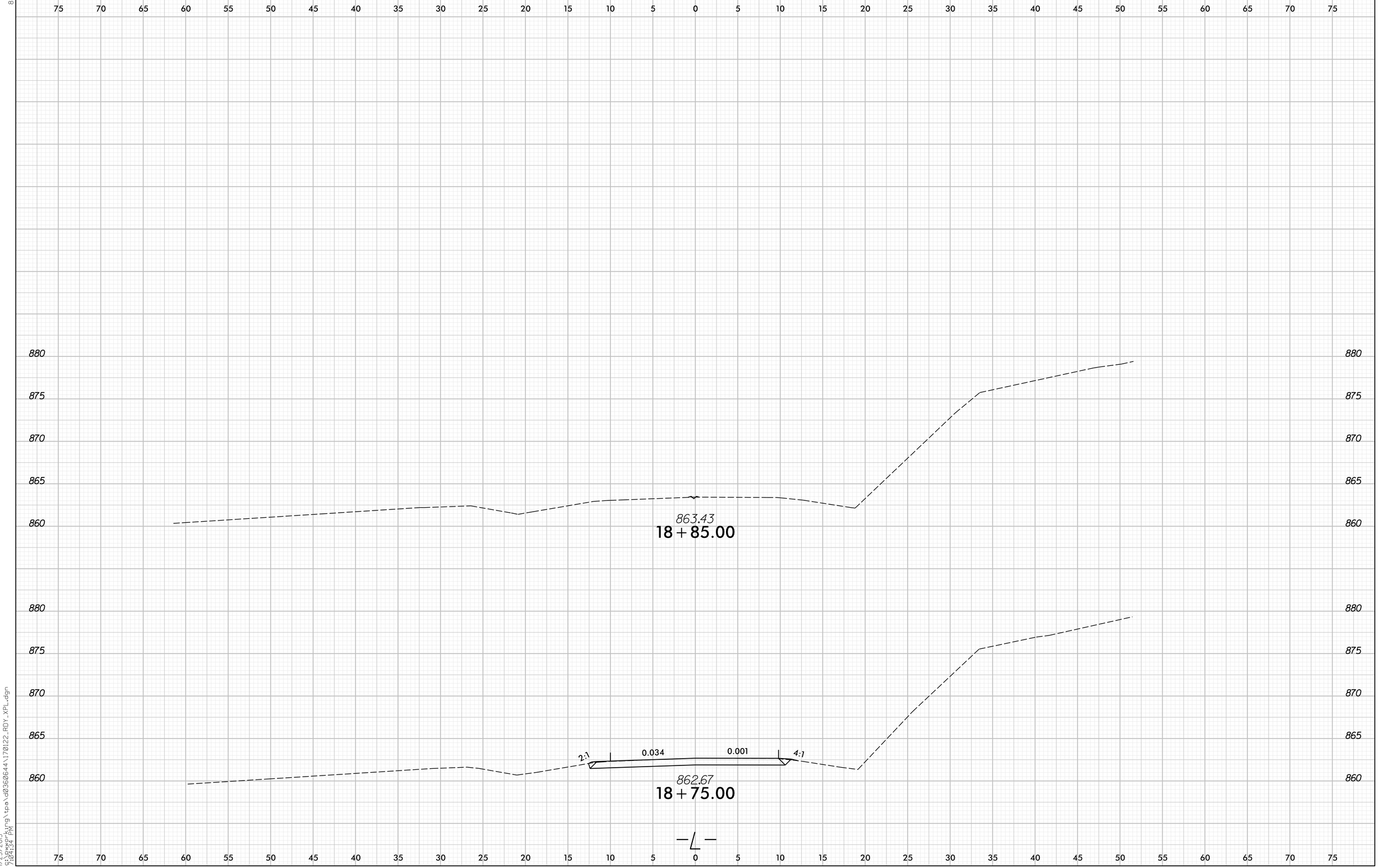

1/23/2015
9:04:34 PM
c:\pwworking\tpa\d0360644\170122_RDY_XPL.dgn

DocuSign Envelope ID: 71CF0B8F-957E-432D-B1F7-C4E6627EDAAF

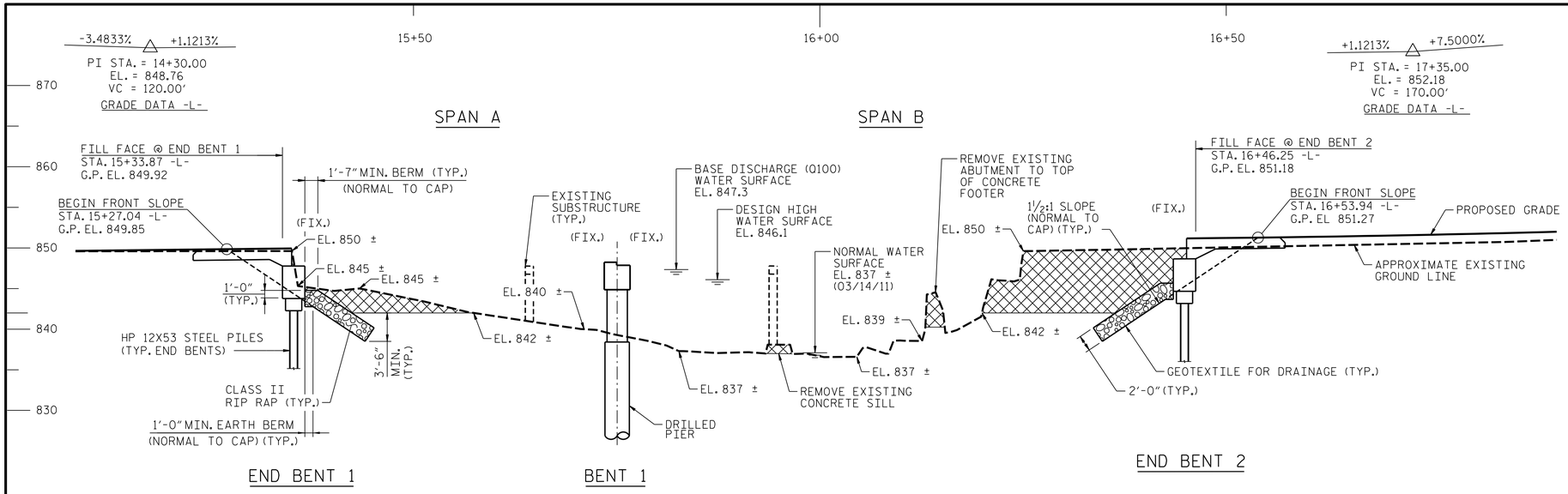

SECTION ALONG -L-

SECTION TAKEN AT RIGHT ANGLE TO -L-

UNCLASSIFIED STRUCTURE EXCAVATION

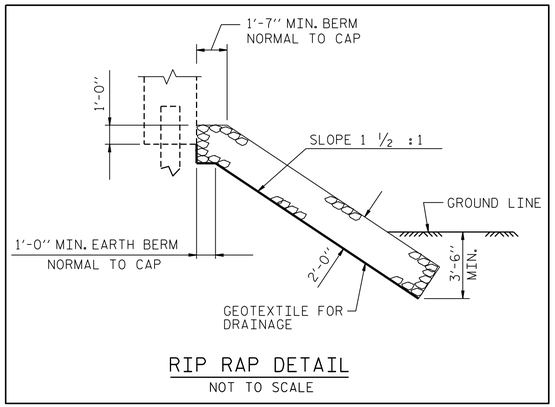

RIP RAP DETAIL

NOT TO SCALE

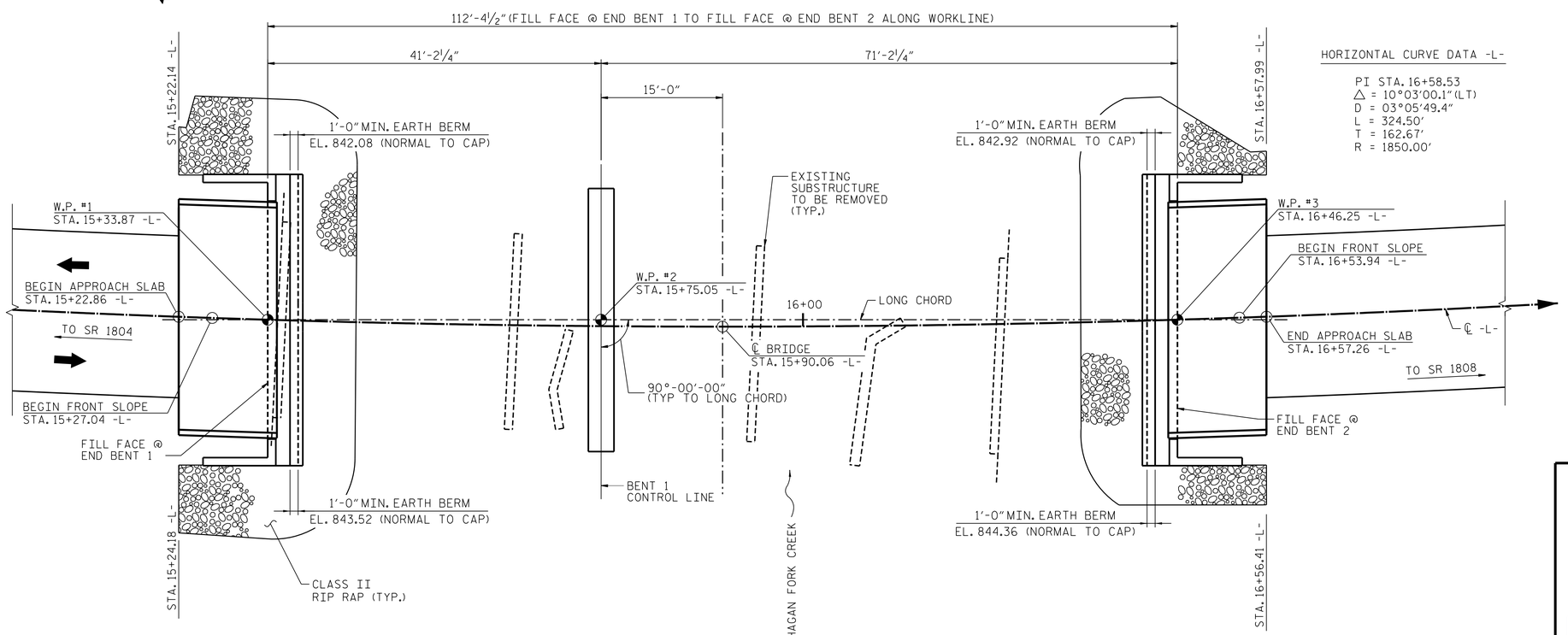

PLAN

HORIZONTAL CURVE DATA -L-

PI STA. 16+58.53
△ = 10°03'00.1" (LT)
D = 03°05'49.4"
L = 324.50'
T = 162.67'
R = 1850.00'

I HEREBY CERTIFY THESE PLANS
ARE THE AS-BUILT PLANS

PROJECT NO. 17BP.12.R.26

CATAWBA COUNTY

STATION: 15+90.06 -L-

SHEET 1 OF 2 REPLACES BRIDGE NO. 122

NORTH CAROLINA PROFESSIONAL SEAL 033730 ENGINEER ANNA C. TEAGUE

DocuSigned by: Anna C. Teague 3/11/2016
B2308947A6B415...

DOCUMENT NOT CONSIDERED FINAL UNLESS ALL SIGNATURES COMPLETED

HDR Engineering, Inc. of the Carolinas
555 Fayetteville St., Suite 900 Raleigh, N.C. 27601
N.C.B.E.L.S. License Number: F-0116

STATE OF NORTH CAROLINA
DEPARTMENT OF TRANSPORTATION
RALEIGH

GENERAL DRAWING

BRIDGE ON SR 1807
OVER HAGAN FORK CREEK

REVISIONS						SHEET NO. S-1
NO.	BY:	DATE:	NO.	BY:	DATE:	TOTAL SHEETS 18
1			3			
2			4			

DRAWN BY :	E. NOLTING	DATE :	10/13
CHECKED BY :	A. TEAGUE	DATE :	10/13

PLOT DRIVER: NCDOT_pdf_mono_eng_50.pit
USER: MSELLS DATE: 3/9/2016
FILE: North_Carolina_Dept_of_Transportation\NCDOT_DDO_CEI_BM_LSC_MASTER\NCDOT_17BP_12_Task_Order_1_c\06.00_NCDOT_File_Structure\Bridge #122 Catawba Co_Love Rd\Structures\CAD\17BP.12.R.26_SD_GD_01.dgn
PENTABLE: Div12LIBR.tbl
TIME: 12:13:00 PM

DocuSign Envelope ID: 40FAFF6C-F111-43FF-A4CC-B2F443E86DE4

BENCHMARK: TBM 2, RAILROAD SPIKE IN BASE OF 16" SYCAMORE, 32.02' RT. OF STA. 16+65.29 -L-, EL. = 851.45'

HYDRAULIC DATA

DESIGN DISCHARGE	= 2400 CFS
FREQUENCY OF DESIGN FLOOD	= 25 YR
DESIGN HIGH WATER ELEVATION	= 846.1
DRAINAGE AREA	= 4.3 SQ. MI.
BASE DISCHARGE (Q100)	= 3529 CFS
BASE HIGH WATER ELEVATION	= 847.34

OVERTOPPING FLOOD DATA

OVERTOPPING DISCHARGE	= 6750 CFS
FREQUENCY OF OVERTOPPING FLOOD	= > 500 YR
OVERTOPPING FLOOD ELEVATION	= 849.3

ANGLES

① 90°00'00"

② 88°53'51"

③ 90°38'17"

④ 89°32'08" (TAN. TO CURVE)

⑤ 01°44'26"

OFFSET

D1 = 0.792

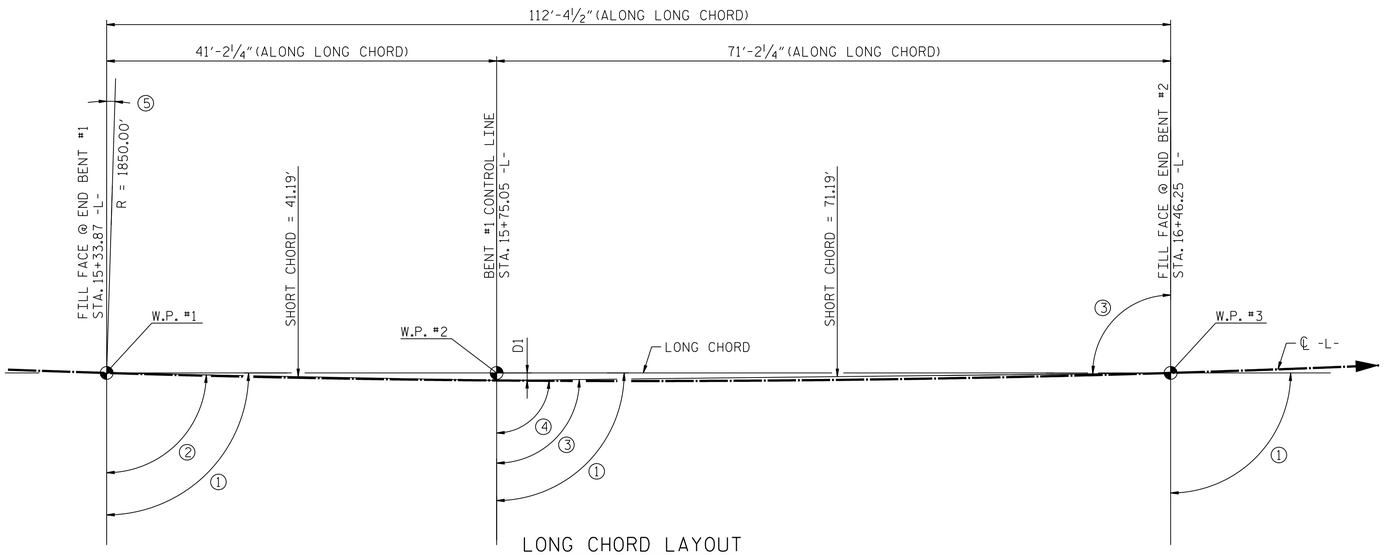

LONG CHORD LAYOUT

(ALL BENTS ARE PARALLEL)
(SEE GENERAL DRAWING SHEET 1
FOR HORIZONTAL CURVE DATA)

TOTAL BILL OF MATERIAL

	REMOVAL OF EXISTING STRUCTURE AT STA. 15+90.06 -L-	3'-0" DIA. DRILLED PIERS IN SOIL	3'-0" DIA. DRILLED PIERS NOT IN SOIL	PDA TESTING	SID INSPECTIONS	SPT TESTING	CSL TESTING	UNCLASSIFIED STRUCTURE EXCAVATION AT STA. 15+90.06 -L-	CLASS A CONCRETE	BRIDGE APPROACH SLABS STA. 15+90.06 -L-	REINFORCING STEEL
	LUMP SUM	LIN. FT.	LIN. FT.	EACH	EACH	EACH	EACH	LUMP SUM	CU. YDS.	LUMP SUM	LBS.
SUPERSTRUCTURE											
END BENT NO. 1									20.0		2449
BENT NO. 1		46.0	26.0		1	3	1		15.8		8799
END BENT NO. 2									20.2		2449
TOTAL	LUMP SUM	46.0	26.0	1	1	3	1	LUMP SUM	56.0	LUMP SUM	13697

	SPIRAL COLUMN REINFORCING STEEL	HP 12 x 53 STEEL PILES		STEEL PILE POINTS	VERTICAL CONCRETE BARRIER RAIL	RIP RAP CLASS II (2'-0" THICK)	GEOTEXTILE FOR DRAINAGE	ELASTOMERIC BEARINGS	3'-0" X 1'-9" PRESTRESSED CONCRETE CORED SLABS		3'-0" X 2'-0" PRESTRESSED CONCRETE CORED SLABS		ASBESTOS ASSESSMENT
	LBS.	NO.	LIN. FT.	EACH	LIN. FT.	TONS	SQ. YDS.	LUMP SUM	NO.	LIN. FT.	NO.	LIN. FT.	LUMP SUM
SUPERSTRUCTURE					220.25				10	400.0	10	700.0	
END BENT NO. 1		5	155	5		113	125						
BENT NO. 1	1613												
END BENT NO. 2		5	100	5		104	115						
TOTAL	1613	10	255	10	220.25	217	240	LUMP SUM	10	400.0	10	700.0	LUMP SUM

NOTES:

ASSUMED LIVE LOAD = HL-93 OR ALTERNATE LOADING.

FOR OTHER DESIGN DATA AND GENERAL NOTES, SEE SHEET SN.

THIS BRIDGE HAS BEEN DESIGNED IN ACCORDANCE WITH THE AASHTO LRFD BRIDGE DESIGN SPECIFICATIONS.

THIS BRIDGE IS LOCATED IN SEISMIC ZONE 1.

FOR SUBMITTAL OF WORKING DRAWINGS, SEE SPECIAL PROVISIONS.

FOR FALSEWORK AND FORMWORK, SEE SPECIAL PROVISIONS.

FOR CRANE SAFETY, SEE SPECIAL PROVISIONS.

FOR GROUT FOR STRUCTURES, SEE SPECIAL PROVISIONS.

FOR ASBESTOS ASSESSMENT FOR BRIDGE DEMOLITION AND RENOVATION ACTIVITIES, SEE SPECIAL PROVISIONS.

REMOVAL OF THE EXISTING BRIDGE SHALL BE PERFORMED IN A MANNER THAT PREVENTS DEBRIS FROM FALLING INTO THE WATER. THE CONTRACTOR SHALL SUBMIT DEMOLITION PLANS FOR REVIEW AND REMOVE THE BRIDGE IN ACCORDANCE WITH ARTICLE 402-2 OF THE STANDARD SPECIFICATIONS.

THE MATERIAL SHOWN IN THE CROSS-HATCHED AREA SHALL BE EXCAVATED FOR A DISTANCE OF 20 FT. EACH SIDE OF CENTERLINE ROADWAY AS DIRECTED BY THE ENGINEER. THIS WORK WILL BE PAID FOR AT THE CONTRACT LUMP SUM PRICE FOR UNCLASSIFIED STRUCTURE EXCAVATION. SEE SECTION 412 OF THE STANDARD SPECIFICATIONS.

THE SUBSTRUCTURE OF THE EXISTING BRIDGE INDICATED ON THE PLANS IS FROM THE BEST INFORMATION AVAILABLE. THIS INFORMATION IS SHOWN FOR THE CONVENIENCE OF THE CONTRACTOR. THE CONTRACTOR SHALL HAVE NO CLAIM WHATSOEVER AGAINST THE DEPARTMENT OF TRANSPORTATION FOR ANY DELAYS OR ADDITIONAL COST INCURRED BASED ON DIFFERENCES BETWEEN THE EXISTING BRIDGE SUBSTRUCTURE SHOWN ON THE PLANS AND THE ACTUAL CONDITIONS AT THE PROJECT SITE.

THE EXISTING STRUCTURE CONSISTING OF 3 SPANS (1 @ 30'-5", 1 @ 30'-0", 1 @ 30'-5") WITH A PRESTRESSED CONCRETE CHANNEL SUPERSTRUCTURE AND A CLEAR ROADWAY OF 24'-5" ON PRESTRESSED CONCRETE CAPS AND TIMBER PILES, AND LOCATED AT THE PROPOSED SITE SHALL BE REMOVED. THE EXISTING BRIDGE IS PRESENTLY POSTED FOR LOAD LIMIT. SHOULD THE STRUCTURAL INTEGRITY OF THE BRIDGE DETERIORATE DURING CONSTRUCTION OF THE PROPOSED BRIDGE, A LOAD LIMIT MAY BE POSTED AND MAY BE REDUCED AS FOUND NECESSARY DURING THE LIFE OF THE PROJECT.

FOR PILES, SEE SECTION 450 OF THE STANDARD SPECIFICATIONS.

PILES AT END BENT NO. 1 ARE DESIGNED FOR A FACTORED RESISTANCE OF 70 TONS PER PILE.

DRIVE PILES AT END BENT NO. 1 TO A REQUIRED DRIVING RESISTANCE OF 120 TONS PER PILE.

STEEL H-PILE POINTS ARE REQUIRED FOR STEEL H-PILES AT END BENT 1 AND END BENT 2. FOR STEEL PILE POINTS, SEE SECTION 450 OF THE STANDARD SPECIFICATIONS.

TESTING PILES WITH THE PDA DURING DRIVING, RESTRIKING OR REDRIVING MAY BE REQUIRED. THE ENGINEER WILL DETERMINE THE NEED FOR PDA TESTING. FOR PDA TESTING, SEE SECTION 450 OF THE STANDARD SPECIFICATIONS (AND FOR PILE DRIVING CRITERIA, SEE PILE DRIVING CRITERIA PROVISION).

FOR DRILLED PIERS, SEE SECTION 411 OF THE STANDARD SPECIFICATIONS.

DRILLED PIERS AT BENT NO. 1 ARE DESIGNED FOR A FACTORED RESISTANCE OF 350 TONS PER PIER. CHECK FIELD CONDITIONS FOR THE REQUIRED TIP RESISTANCE OF 10 TSF.

INSTALL DRILLED PIERS AT BENT NO. 1 THAT EXTEND TO A TIP ELEVATION NO HIGHER THAN 814.0 FT. AND WITH THE REQUIRED TIP RESISTANCE.

THE SCOUR CRITICAL ELEVATION FOR BENT NO. 1 IS 830 FT. SCOUR CRITICAL ELEVATIONS ARE USED TO MONITOR POSSIBLE SCOUR PROBLEMS DURING THE LIFE OF THE STRUCTURE.

SID INSPECTIONS MAY BE REQUIRED FOR DRILLED PIERS. THE ENGINEER WILL DETERMINE THE NEED FOR SID INSPECTIONS. FOR SID INSPECTIONS, SEE SECTION 411 OF THE STANDARD SPECIFICATIONS.

CSL TUBES ARE REQUIRED AND CSL TESTING MAY BE REQUIRED FOR THE DRILLED PIERS. THE ENGINEER WILL DETERMINE THE NEED FOR CSL TESTING. FOR CSL TESTING, SEE SECTION 411 OF THE STANDARD SPECIFICATIONS.

SPT IS REQUIRED FOR DRILLED PIERS AT BENT NO. 1. FOR SPT TESTING, SEE SECTION 411 OF THE STANDARD SPECIFICATIONS.

PILES AT END BENT NO. 2 ARE DESIGNED FOR A FACTORED RESISTANCE OF 100 TONS PER PILE.

DRIVE PILES AT END BENT NO. 2 TO A REQUIRED DRIVING RESISTANCE OF 170 TONS PER PILE.

FOR EROSION CONTROL MEASURES, SEE EROSION CONTROL PLANS.

ASPHALT WEARING SURFACE IS INCLUDED IN ROADWAY QUANTITY ON ROADWAY PLANS.

THIS STRUCTURE HAS BEEN DESIGNED IN ACCORDANCE WITH HEC 18, "EVALUATING SCOUR AT BRIDGES", MAY, 2001.

FOR UTILITY INFORMATION, SEE ROADWAY PLANS.

PROJECT NO. 17BP.12.R.26

CATAWBA COUNTY

STATION: 15+90.06 -L-

SHEET 2 OF 2

DRAWN BY : E. NOLTING DATE : 10/13

CHECKED BY : A. TEAGUE DATE : 10/13

NORTH CAROLINA PROFESSIONAL SEAL 033730 ENGINEER ANNA C. TEAGUE

DocuSigned by: Anna C. Teague 3/22/2016
B2508B9174A8415...

DOCUMENT NOT CONSIDERED FINAL UNLESS ALL SIGNATURES COMPLETED

HDR Engineering, Inc. of the Carolinas
555 Fayetteville St., Suite 900 Raleigh, N.C. 27601
N.C.B.E.L.S. License Number: F-0116

STATE OF NORTH CAROLINA
DEPARTMENT OF TRANSPORTATION
RALEIGH

GENERAL DRAWING

BRIDGE ON SR 1807
OVER HAGAN FORK CREEK

REVISIONS						SHEET NO. S-2
NO.	BY:	DATE:	NO.	BY:	DATE:	
1			3			TOTAL SHEETS 18
2			4			

PLOT DRIVER: NCDOT_pdf_mono_eng.50.plt + PENTABLE: Div12LIBR.tbl
USER: PPETERSO DATE: 3/22/2016 TIME: 4:07:54 PM
FILE: North_Carolina_Dept_of_Transportation\NCDOT_DOO_CEI_BM_LSC_MASTER\NCDOT_17BP_12_Task_Order_1_c\06.00_NCDOT_File_Structure\Bridge #122 Catawba Co.-Love Rd\Structures\CAD\17BP.12.R.26_SD_GD_02.dgn

LOAD AND RESISTANCE FACTOR RATING (LRFD) SUMMARY FOR PRESTRESSED CONCRETE GIRDERS

LEVEL		VEHICLE	WEIGHT (W) (TONS)	CONTROLLING LOAD RATING	MINIMUM RATING FACTORS (RF)	TONS = W X RF	STRENGTH I LIMIT STATE											SERVICE III LIMIT STATE						COMMENT NUMBER
								MOMENT					SHEAR						MOMENT					
							LIVELOAD FACTORS	DISTRIBUTION FACTORS (DF)	RATING FACTOR	SPAN	GIRDER LOCATION	DISTANCE FROM LEFT END OF SPAN (ft)	DISTRIBUTION FACTORS (DF)	RATING FACTOR	SPAN	GIRDER LOCATION	DISTANCE FROM LEFT END OF SPAN (ft)	LIVELOAD FACTORS	DISTRIBUTION FACTORS (DF)	RATING FACTOR	SPAN	GIRDER LOCATION	DISTANCE FROM LEFT END OF SPAN (ft)	
DESIGN LOAD RATING		HL-93(Inv)	N/A	1	1.319	--	1.75	0.278	1.76	40'	EL	19.5	0.549	**1.32**	40'	EL	**1.95**	0.80	0.278	1.55	40'	EL	19.5	
		HL-93(Opr)	N/A	--	1.709	--	1.35	0.278	2.28	40'	EL	19.5	0.549	1.71	40'	EL	1.95	N/A	--	--	--	--	--	
		HS-20(Inv)	36.000	2	1.540	55.449	1.75	0.278	2.21	40'	EL	19.5	0.549	**1.54**	40'	EL	**1.95**	0.80	0.278	1.94	40'	EL	19.5	
		HS-20(Opr)	36.000	--	1.997	71.878	1.35	0.278	2.86	40'	EL	19.5	0.549	2	40'	EL	1.95	N/A	--	--	--	--	--	
LEGAL LOAD RATING	SV	SNSH	13.500	--	3.606	48.687	1.4	0.278	5.1	40'	EL	19.5	0.549	4.13	40'	EL	1.95	0.80	0.278	3.61	40'	EL	19.5	
		SNGARBS2	20.000	--	2.964	59.289	1.4	0.278	4.19	40'	EL	15.6	0.549	3.07	40'	EL	1.95	0.80	0.278	2.96	40'	EL	19.5	
		SNAGRIS2	22.000	--	2.906	63.929	1.4	0.278	4.09	40'	EL	15.6	0.549	2.91	40'	EL	1.95	0.80	0.278	2.92	40'	EL	15.6	
		SNCOTTS3	27.250	--	1.803	49.125	1.4	0.278	2.55	40'	EL	19.5	0.549	2.07	40'	EL	1.95	0.80	0.278	1.80	40'	EL	19.5	
		SNAGGRS4	34.925	--	1.623	56.667	1.4	0.278	2.29	40'	EL	19.5	0.549	1.82	40'	EL	1.95	0.80	0.278	1.62	40'	EL	19.5	
		SNS5A	35.550	--	1.578	56.107	1.4	0.278	2.23	40'	EL	19.5	0.549	1.9	40'	EL	1.95	0.80	0.278	1.58	40'	EL	19.5	
		SNS6A	39.950	--	1.502	59.992	1.4	0.278	2.12	40'	EL	19.5	0.549	1.77	40'	EL	1.95	0.80	0.278	1.50	40'	EL	19.5	
		SNS7B	42.000	3	1.432	60.149	1.4	0.278	2.02	40'	EL	19.5	0.549	1.81	40'	EL	1.95	0.80	0.278	**1.43**	40'	EL	**19.5**	
	TTST	TNAGRIT3	33.000	--	1.848	60.976	1.4	0.278	2.61	40'	EL	19.5	0.549	2.08	40'	EL	1.95	0.80	0.278	1.85	40'	EL	19.5	
		TNT4A	33.075	--	1.872	61.901	1.4	0.278	2.65	40'	EL	19.5	0.549	1.98	40'	EL	1.95	0.80	0.278	1.87	40'	EL	19.5	
		TNT6A	41.600	--	1.587	66.032	1.4	0.278	2.24	40'	EL	19.5	0.549	1.94	40'	EL	1.95	0.80	0.278	1.59	40'	EL	19.5	
		TNT7A	42.000	--	1.627	68.354	1.4	0.278	2.3	40'	EL	19.5	0.549	1.79	40'	EL	1.95	0.80	0.278	1.63	40'	EL	19.5	
		TNT7B	42.000	--	1.664	69.888	1.4	0.278	2.35	40'	EL	19.5	0.549	1.72	40'	EL	1.95	0.80	0.278	1.66	40'	EL	19.5	
		TNAGRIT4	43.000	--	1.619	69.61	1.4	0.278	2.28	40'	EL	15.6	0.549	1.65	40'	EL	1.95	0.80	0.278	1.62	40'	EL	19.5	
		TNAGT5A	45.000	--	1.498	67.412	1.4	0.278	2.12	40'	EL	19.5	0.549	1.71	40'	EL	1.95	0.80	0.278	1.50	40'	EL	19.5	
		TNAGT5B	45.000	--	1.455	65.486	1.4	0.278	2.06	40'	EL	19.5	0.549	1.56	40'	EL	1.95	0.80	0.278	1.46	40'	EL	19.5	

LOAD FACTORS:

DESIGN LOAD RATING FACTORS	LIMIT STATE	γ_{DC}	γ_{DW}
	STRENGTH I	1.25	1.50
	SERVICE III	1.00	1.00

NOTES:

MINIMUM RATING FACTORS ARE BASED ON THE STRENGTH I AND SERVICE III LIMIT STATES.

ALLOWABLE STRESSES FOR SERVICE III LIMIT STATE ARE AS REQUIRED FOR DESIGN.

CONTROLLING LOAD RATING

1 DESIGN LOAD RATING (HL-93)

2 DESIGN LOAD RATING (HS-20)

3 LEGAL LOAD RATING **

** SEE CHART FOR VEHICLE TYPE

GIRDER LOCATION

I - INTERIOR GIRDER
EL - EXTERIOR LEFT GIRDER
ER - EXTERIOR RIGHT GIRDER

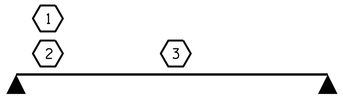

LRFR SUMMARY

SPAN A

PROJECT NO. 17BP.12.R.26

CATAWBA COUNTY

STATION: 15+90.06 -L-

NORTH CAROLINA PROFESSIONAL SEAL 031480 ENGINEER DONALD R. SMITH, JR.

DocuSigned by: Donald R. Smith, Jr
EDC877061748490...
3/8/2016

STATE OF NORTH CAROLINA
DEPARTMENT OF TRANSPORTATION
RALEIGH

STANDARD
LRFR SUMMARY FOR 40' CORED SLAB UNIT 90° SKEW
(NON-INTERSTATE TRAFFIC)

REVISIONS						SHEET NO.
NO.	BY:	DATE:	NO.	BY:	DATE:	S-3
1			3			TOTAL SHEETS
2			4			18

DOCUMENT NOT CONSIDERED FINAL UNLESS ALL SIGNATURES COMPLETED

ASSEMBLED BY : R.P.PATEL DATE : 1/31/14
CHECKED BY : M.E.GILES DATE : 1/31/14
DRAWN BY : CVC 6/10
CHECKED BY : DNS 6/10

08-MAR-2016 11:21
S:\DPG3\DivisionLets\Div12\17BP12R26\Plans\17BP12R26_SD_LR_01.dgn
jdhawk

STD. NO. 21LRFR1_90S_40L

LOAD AND RESISTANCE FACTOR RATING (LRFD) SUMMARY FOR PRESTRESSED CONCRETE GIRDERS

LEVEL		VEHICLE	WEIGHT (W) (TONS)	CONTROLLING LOAD RATING	MINIMUM RATING FACTORS (RF)	TONS = W X RF	STRENGTH I LIMIT STATE											SERVICE III LIMIT STATE						COMMENT NUMBER
							LIVELOAD FACTORS	MOMENT					SHEAR					LIVELOAD FACTORS	MOMENT					
								DISTRIBUTION FACTORS (DF)	RATING FACTOR	SPAN	GIRDER LOCATION	DISTANCE FROM LEFT END OF SPAN (ft)	DISTRIBUTION FACTORS (DF)	RATING FACTOR	SPAN	GIRDER LOCATION	DISTANCE FROM LEFT END OF SPAN (ft)		DISTRIBUTION FACTORS (DF)	RATING FACTOR	SPAN	GIRDER LOCATION	DISTANCE FROM LEFT END OF SPAN (ft)	
DESIGN LOAD RATING		HL-93(Inv)	N/A	1	1.006	--	1.75	0.273	1.03	70'	EL	34.5	0.507	1.32	70'	EL	6.9	0.80	0.273	**1.01**	70'	EL	**34.5**	
		HL-93(Opr)	N/A	--	1.341	--	1.35	0.273	1.34	70'	EL	34.5	0.507	1.72	70'	EL	6.9	N/A	--	--	--	--	--	
		HS-20(Inv)	36.000	2	1.306	47.02	1.75	0.273	1.34	70'	EL	34.5	0.507	1.65	70'	EL	6.9	0.80	0.273	**1.31**	70'	EL	**34.5**	
		HS-20(Opr)	36.000	--	1.74	62.64	1.35	0.273	1.74	70'	EL	34.5	0.507	2.14	70'	EL	6.9	N/A	--	--	--	--	--	
LEGAL LOAD RATING	SV	SNSH	13.500	--	2.917	39.379	1.4	0.273	3.75	70'	EL	34.5	0.507	4.87	70'	EL	6.9	0.80	0.273	2.92	70'	EL	34.5	
		SNGARBS2	20.000	--	2.187	43.741	1.4	0.273	2.81	70'	EL	34.5	0.507	3.47	70'	EL	6.9	0.80	0.273	2.19	70'	EL	34.5	
		SNAGRIS2	22.000	--	2.077	45.69	1.4	0.273	2.67	70'	EL	34.5	0.507	3.23	70'	EL	6.9	0.80	0.273	2.08	70'	EL	34.5	
		SNCOTTS3	27.250	--	1.452	39.565	1.4	0.273	1.87	70'	EL	34.5	0.507	2.43	70'	EL	6.9	0.80	0.273	1.45	70'	EL	34.5	
		SNAGGRS4	34.925	--	1.218	42.554	1.4	0.273	1.57	70'	EL	34.5	0.507	2.03	70'	EL	6.9	0.80	0.273	1.22	70'	EL	34.5	
		SNS5A	35.550	--	1.191	42.346	1.4	0.273	1.53	70'	EL	34.5	0.507	2.06	70'	EL	6.9	0.80	0.273	1.19	70'	EL	34.5	
		SNS6A	39.950	--	1.095	43.747	1.4	0.273	1.41	70'	EL	34.5	0.507	1.88	70'	EL	6.9	0.80	0.273	1.10	70'	EL	34.5	
		SNS7B	42.000	--	1.043	43.801	1.4	0.273	1.34	70'	EL	34.5	0.507	1.85	70'	EL	6.9	0.80	0.273	1.04	70'	EL	34.5	
	TTST	TNAGRIT3	33.000	--	1.336	44.087	1.4	0.273	1.72	70'	EL	34.5	0.507	2.23	70'	EL	6.9	0.80	0.273	1.34	70'	EL	34.5	
		TNT4A	33.075	--	1.342	44.401	1.4	0.273	1.72	70'	EL	34.5	0.507	2.17	70'	EL	6.9	0.80	0.273	1.34	70'	EL	34.5	
		TNT6A	41.600	--	1.1	45.746	1.4	0.273	1.41	70'	EL	34.5	0.507	1.98	70'	EL	6.9	0.80	0.273	1.10	70'	EL	34.5	
		TNT7A	42.000	--	1.106	46.462	1.4	0.273	1.42	70'	EL	34.5	0.507	1.94	70'	EL	6.9	0.80	0.273	1.11	70'	EL	34.5	
		TNT7B	42.000	--	1.147	48.18	1.4	0.273	1.47	70'	EL	34.5	0.507	1.8	70'	EL	6.9	0.80	0.273	1.15	70'	EL	34.5	
		TNAGRIT4	43.000	--	1.089	46.838	1.4	0.273	1.4	70'	EL	34.5	0.507	1.74	70'	EL	6.9	0.80	0.273	1.09	70'	EL	34.5	
		TNAGT5A	45.000	--	1.026	46.175	1.4	0.273	1.32	70'	EL	34.5	0.507	1.74	70'	EL	6.9	0.80	0.273	1.03	70'	EL	34.5	
		TNAGT5B	45.000	3	1.013	45.579	1.4	0.273	1.3	70'	EL	34.5	0.507	1.66	70'	EL	6.9	0.80	0.273	**1.01**	70'	EL	**34.5**	

LOAD FACTORS:

DESIGN LOAD RATING FACTORS	LIMIT STATE	γ_{DC}	γ_{DW}
	STRENGTH I	1.25	1.50
	SERVICE III	1.00	1.00

NOTES:

MINIMUM RATING FACTORS ARE BASED ON THE STRENGTH I AND SERVICE III LIMIT STATES.

ALLOWABLE STRESSES FOR SERVICE III LIMIT STATE ARE AS REQUIRED FOR DESIGN.

(#) CONTROLLING LOAD RATING

(1) DESIGN LOAD RATING (HL-93)

(2) DESIGN LOAD RATING (HS-20)

(3) LEGAL LOAD RATING **

** SEE CHART FOR VEHICLE TYPE

GIRDER LOCATION

I - INTERIOR GIRDER
EL - EXTERIOR LEFT GIRDER
ER - EXTERIOR RIGHT GIRDER

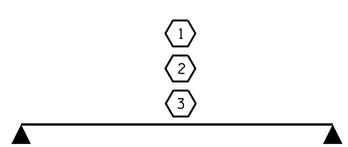

LRFR SUMMARY

SPAN B

PROJECT NO. 17BP.12.R.26

CATAWBA COUNTY

STATION: 15+90.06 -L-

NORTH CAROLINA PROFESSIONAL SEAL 031480 ENGINEER DONALD R. SMITH, JR.

DocuSigned by: Donald R. Smith, Jr
EDC877061748400
3/8/2016

STATE OF NORTH CAROLINA
DEPARTMENT OF TRANSPORTATION
RALEIGH

STANDARD
LRFR SUMMARY FOR 70' CORED SLAB UNIT 90° SKEW
(NON-INTERSTATE TRAFFIC)

REVISIONS						SHEET NO.
NO.	BY:	DATE:	NO.	BY:	DATE:	S-4
1			3			TOTAL SHEETS
2			4			18

DOCUMENT NOT CONSIDERED FINAL UNLESS ALL SIGNATURES COMPLETED

STD. NO. 24LRFR1_90S_70L

ASSEMBLED BY : R.P.PATEL DATE : 1/31/14
CHECKED BY : M.E.GILES DATE : 1/31/14
DRAWN BY : CVC 6/10
CHECKED BY : DNS 6/10

08-MAR-2016 11:21
S:\DPG3\DivisionLets\Div12\17BP12R26\Plans\17BP12R26_SD_LR_01.dgn
jdhawk

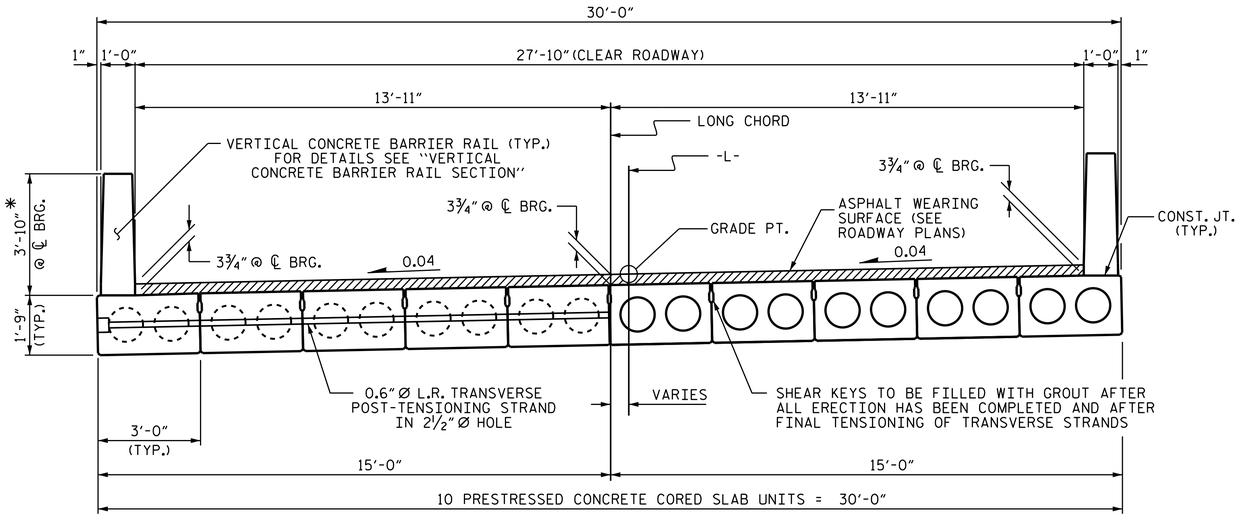

HALF SECTION
AT INTERMEDIATE DIAPHRAGMS

HALF SECTION
THROUGH VOIDS

TYPICAL SECTION

* - THE MAXIMUM BARRIER RAIL HEIGHT AND ASPHALT THICKNESS IS SHOWN. THE HEIGHT OF THE BARRIER RAIL AND ASPHALT THICKNESS VARIES WHILE THE TOP OF THE BARRIER RAIL FOLLOWS THE PROFILE OF THE GUTTERLINE. FOR RAIL HEIGHT DETAILS AND ASPHALT THICKNESS SEE THE "VERTICAL CONCRETE BARRIER RAIL SECTION" DETAIL.

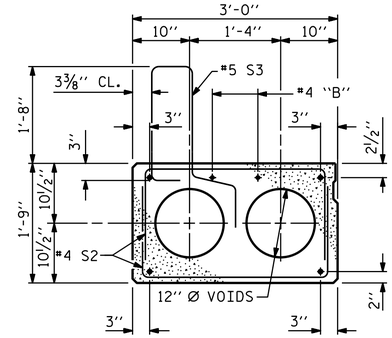

EXT. SLAB SECTION

(FOR PRESTRESSED STRAND LAYOUT, SEE INTERIOR SLAB SECTION.)

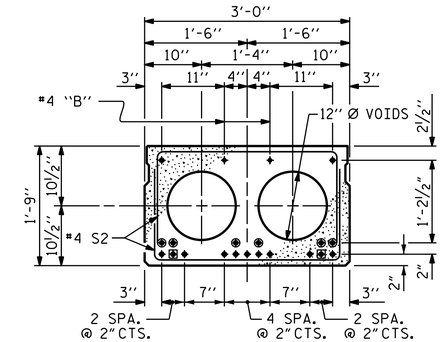

INTERIOR SLAB SECTION (40' UNIT)

(13 STRANDS REQUIRED)

0.6" Ø LOW RELAXATION STRAND LAYOUT

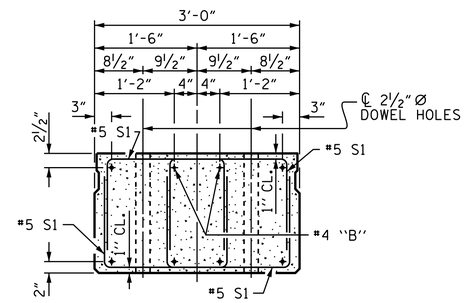

END ELEVATION

SHOWING PLACEMENT OF DOUBLE STIRRUPS AND LOCATION OF DOWEL HOLES. (STRAND LAYOUT NOT SHOWN.) INTERIOR SLAB UNIT SHOWN-EXTERIOR SLAB UNIT SIMILAR EXCEPT SHEAR KEY LOCATION.

◉ BOND SHALL BE BROKEN ON THESE STRANDS FOR A DISTANCE OF 2'-0" FROM END OF CORED SLAB UNIT. SEE STANDARD SPECIFICATIONS, ARTICLE 1078-7.

◉ OPTIONAL FULL LENGTH DEBONDED STRANDS. THESE STRANDS ARE NOT REQUIRED. IF THE FABRICATOR CHOOSES TO INCLUDE THESE STRANDS IN THE CORED SLAB UNIT, THE STRANDS SHALL BE DEBONDED FOR THE FULL LENGTH OF THE UNIT AT NO ADDITIONAL COST. SEE STANDARD SPECIFICATIONS, ARTICLE 1078-7.

DEBONDING LEGEND

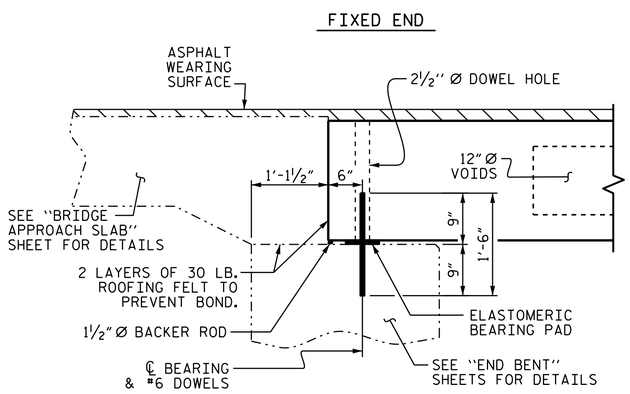

SECTION AT END BENT 1

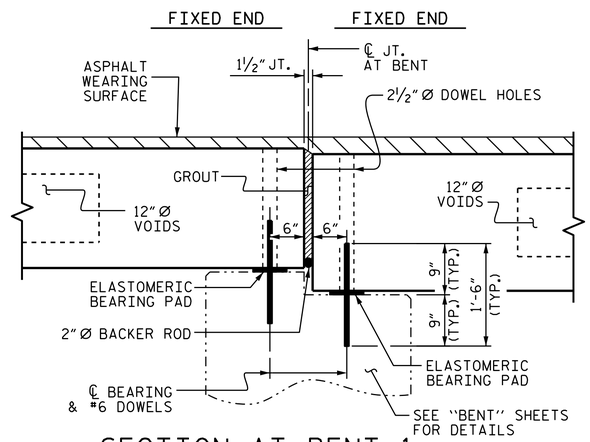

SECTION AT BENT 1

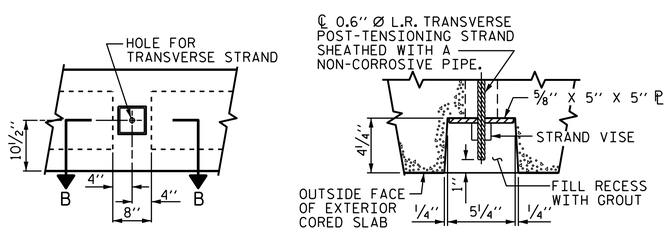

ELEVATION VIEW

SECTION B-B

GROUTED RECESS AT END OF POST-TENSIONED STRAND OF CORED SLABS

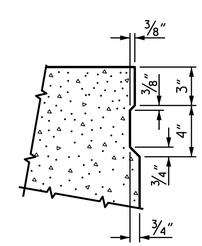

SHEAR KEY DETAIL

NOTE: OMIT SHEAR KEY ON OUTSIDE FACE OF EXTERIOR CORED SLABS.

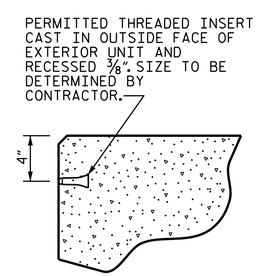

THREADED INSERT DETAIL

PROJECT NO. 17BP.12.R.26
CATAWBA COUNTY
STATION: 15+90.06 -L-

SHEET 1 OF 3

STATE OF NORTH CAROLINA
DEPARTMENT OF TRANSPORTATION
RALEIGH

STANDARD
3'-0" X 1'-9"
PRESTRESSED CONCRETE CORED SLAB UNIT
90° SKEW

NORTH CAROLINA PROFESSIONAL SEAL 031480 ENGINEER DONALD R. SMITH, JR.
DocuSigned by: Donald R. Smith, Jr
EDC877061749490...
3/8/2016

DOCUMENT NOT CONSIDERED FINAL UNLESS ALL SIGNATURES COMPLETED

REVISIONS						
NO.	BY:	DATE:	NO.	BY:	DATE:	
1			3			
2			4			

SHEET NO. S-5
TOTAL SHEETS 18

ASSEMBLED BY :	M.E.GILES	DATE :	11/25/13
CHECKED BY :	R.P.PATEL	DATE :	12/6/13
DRAWN BY :	DGE 5/09	REV. 12/11	MAA/AAC
CHECKED BY :	BCH 6/09		

08-MAR-2016 11:21
S:\DPG3\DivisionLets\Div12\17BP12R26\Plans\17BP12R26_SD_CS_01.dgn
jdhawk

STD. NO. 21"PCS2_30_90S

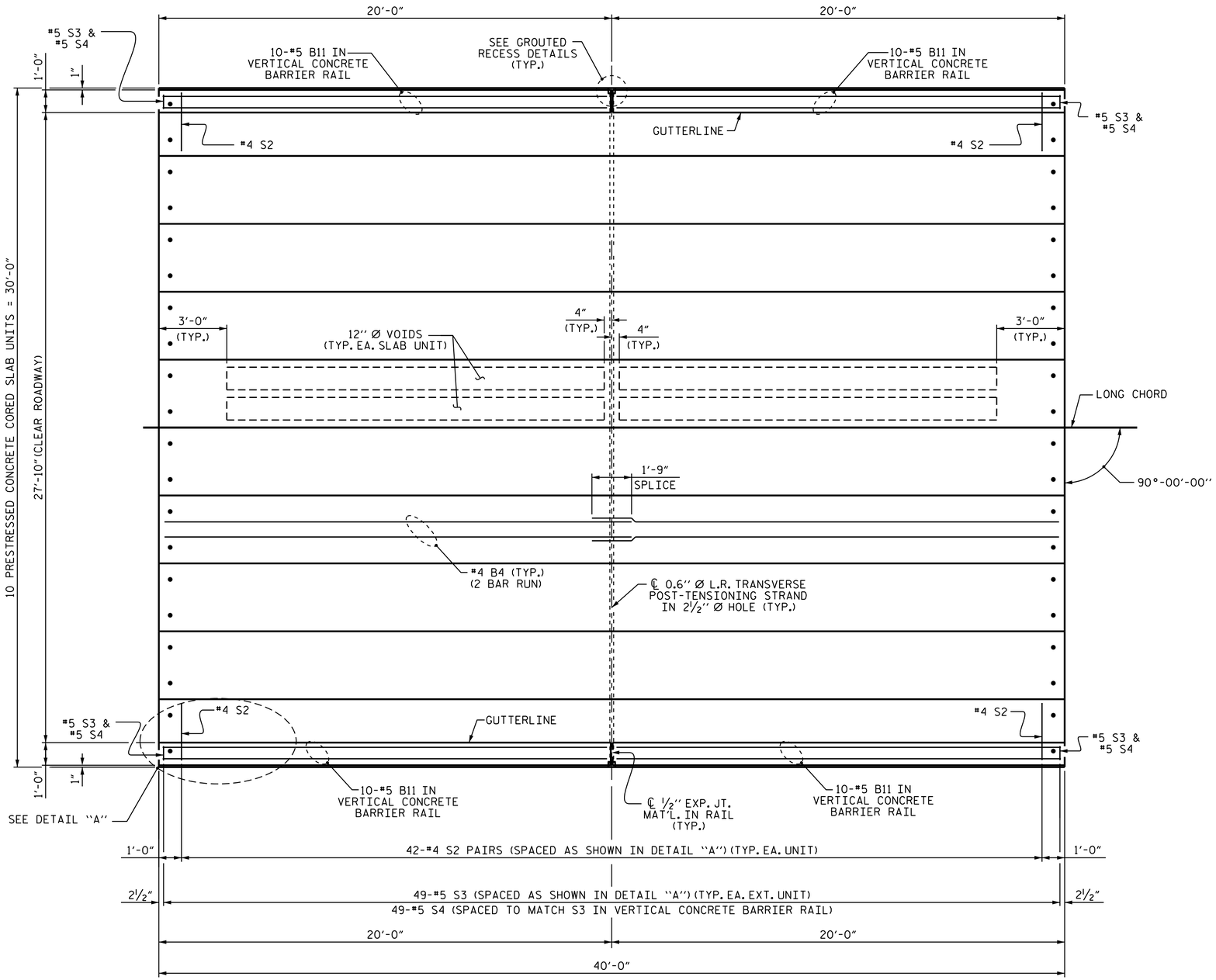

PLAN OF UNIT

SPAN A

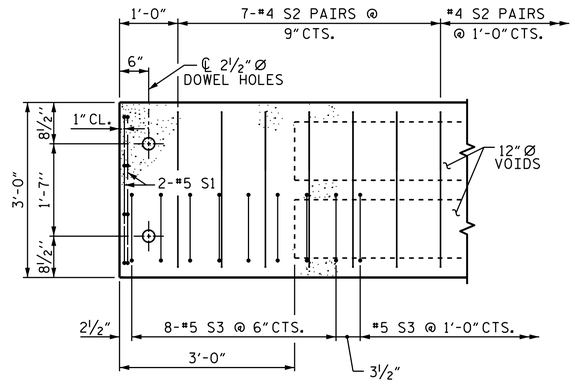

DETAIL "A"

NOTE: EXTERIOR UNIT SHOWN - INTERIOR UNIT SIMILAR EXCEPT OMIT #5 S3 BARS.

PROJECT NO. 17BP.12.R.26

CATAWBA COUNTY

STATION: 15+90.06 -L-

SHEET 2 OF 3

STATE OF NORTH CAROLINA
DEPARTMENT OF TRANSPORTATION
RALEIGH

PLAN OF 40' UNIT 27'-10" CLEAR ROADWAY 90° SKEW

SPAN A

NORTH CAROLINA PROFESSIONAL SEAL 031480 ENGINEER DONALD R. SMITH, JR.

DocuSigned by: Donald R. Smith, Jr
EDC877061748490...
3/8/2016

DOCUMENT NOT CONSIDERED FINAL UNLESS ALL SIGNATURES COMPLETED

REVISIONS						
NO.	BY:	DATE:	NO.	BY:	DATE:	
1			3			
2			4			

SHEET NO. S-6

TOTAL SHEETS 18

STD. NO. 21" PCS_30_90S_40L

ASSEMBLED BY :	M.E.GILES	DATE :	11/25/13
CHECKED BY :	R.P.PATEL	DATE :	12/6/13
DRAWN BY :	DGE 3/09	REV.	12/5/11 MAA/AAC
CHECKED BY :	BCH 3/09		

08-MAR-2016 11:21
S:\DPG3\DivisionLets\Div12\17BP12R26\Plans\17BP12R26_SD_CS_01.dgn
jdhawk

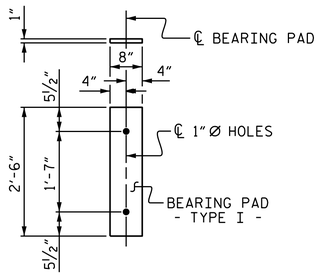

FIXED END
(TYPE I - 20 REQ'D)

ELASTOMERIC BEARING DETAILS

ELASTOMER IN ALL BEARINGS SHALL BE 60 DUROMETER HARDNESS.

GUTTERLINE ASPHALT THICKNESS & RAIL HEIGHT

27'-10" CLEAR ROADWAY	ASPHALT OVERLAY THICKNESS @ MID-SPAN	RAIL HEIGHT @ MID-SPAN
40' UNITS	2⅝"	3'-8⅞"

BILL OF MATERIAL FOR ONE 40' CORED SLAB UNIT

				EXTERIOR UNIT		INTERIOR UNIT	
BAR	NUMBER	SIZE	TYPE	LENGTH	WEIGHT	LENGTH	WEIGHT
B4	4	#4	STR	20'-9"	55	20'-9"	55
S1	8	#5	3	4'-3"	35	4'-3"	35
S2	84	#4	3	5'-4"	299	5'-4"	299
✳ S3	49	#5	1	6'-2"	315		
REINFORCING STEEL			LBS.		389		389
✳ EPOXY COATED REINFORCING STEEL			LBS.		315		
6,500 P.S.I. CONCRETE			CU. YDS.		5.8		5.8
0.6" Ø L.R. STRANDS			No.		13		13

BAR TYPES

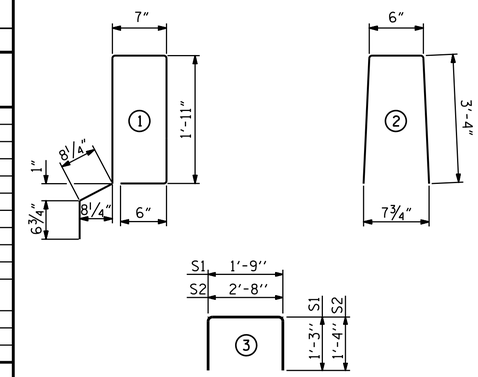

ALL BAR DIMENSIONS ARE OUT TO OUT

NOTES

ALL PRESTRESSING STRANDS SHALL BE 7-WIRE LOW RELAXATION GRADE 270 STRANDS AND SHALL CONFORM TO AASHTO M203 EXCEPT FOR SAMPLING REQUIREMENTS WHICH SHALL BE IN ACCORDANCE WITH THE STANDARD SPECIFICATIONS.

ALL REINFORCING STEEL CAST WITH THE CORED SLAB SECTIONS SHALL BE GRADE 60 AND SHALL BE INCLUDED IN THE UNIT PRICE BID FOR PRESTRESSED CONCRETE CORED SLABS.

RECESSES FOR TRANSVERSE STRANDS SHALL BE GROUTED AFTER THE TENSIONING OF THE STRANDS.

THE 2½" Ø DOWEL HOLES AT FIXED ENDS OF SLAB SECTIONS SHALL BE FILLED WITH NON-SHRINK GROUT.

THE BACKER RODS SHALL CONFORM TO THE REQUIREMENTS OF TYPE M BOND BREAKER. SEE SECTION 1028 OF THE STANDARD SPECIFICATIONS.

WHEN CORED SLABS ARE CAST, AN INTERNAL HOLD-DOWN SYSTEM SHALL BE EMPLOYED TO PREVENT VOIDS FROM RISING OR MOVING SIDEWAYS. AT LEAST SIX WEEKS PRIOR TO CASTING CORED SLABS, THE CONTRACTOR SHALL SUBMIT TO THE ENGINEER FOR REVIEW AND COMMENT, DETAILED DRAWINGS OF THE PROPOSED HOLD-DOWN SYSTEM. IN ADDITION TO STRUCTURAL DETAILS, LOCATION AND SPACING OF THE HOLD-DOWNS SHALL BE INDICATED.

ALL REINFORCING STEEL IN THE VERTICAL CONCRETE BARRIER RAIL SHALL BE EPOXY COATED.

PRESTRESSING STRANDS SHALL BE CUT FLUSH WITH THE CORED SLAB UNIT ENDS.

APPLY EPOXY PROTECTIVE COATING TO CORED SLAB UNIT ENDS.

GROOVED CONTRACTION JOINTS, ½" IN DEPTH, SHALL BE TOOLED IN ALL EXPOSED FACES OF THE BARRIER RAIL AND IN ACCORDANCE WITH ARTICLE 825-10(B) OF THE STANDARD SPECIFICATIONS. A CONTRACTION JOINT SHALL BE LOCATED AT EACH THIRD POINT BETWEEN BARRIER RAIL EXPANSION JOINTS. ONLY ONE CONTRACTION JOINT IS REQUIRED AT MIDPOINT OF BARRIER RAIL SEGMENTS LESS THAN 20 FEET IN LENGTH AND NO CONTRACTION JOINTS ARE REQUIRED FOR THOSE SEGMENTS LESS THAN 10 FEET IN LENGTH.

FLAME CUTTING OF THE TRANSVERSE POST-TENSIONING STRAND IS NOT ALLOWED.

THE TRANSFER OF LOAD FROM THE ANCHORAGES TO THE CORED SLAB UNIT SHALL BE DONE WHEN THE CONCRETE HAS REACHED A COMPRESSIVE STRENGTH OF NOT LESS THAN 4,000 PSI.

FOR GROUT FOR STRUCTURES, SEE SPECIAL PROVISIONS.

THE PERMITTED THREADED INSERTS ARE DETAILED AS AN OPTION FOR THE CONTRACTOR TO ATTACH FALSEWORK AND FORMWORK DURING CONSTRUCTION.

THE PERMITTED THREADED INSERTS IN THE EXTERIOR UNITS SHALL BE SIZED BY THE CONTRACTOR, SPACED AT 4'-0" CENTERS AND GALVANIZED IN ACCORDANCE WITH SECTION 1076 OF THE STANDARD SPECIFICATIONS. STAINLESS STEEL THREADED INSERTS MAY BE USED AS AN ALTERNATE.

THE PERMITTED THREADED INSERTS SHALL BE GROUTED BY THE CONTRACTOR IMMEDIATELY FOLLOWING REMOVAL OF THE FALSEWORK.

THE COST OF THE PERMITTED THREADED INSERTS SHALL BE INCLUDED IN THE PRICE BID FOR THE PRECAST UNITS.

BILL OF MATERIAL FOR VERTICAL CONCRETE BARRIER RAIL

BAR	BARS PER PAIR OF EXTERIOR UNITS	TOTAL NO.	SIZE	TYPE	LENGTH	WEIGHT
	40' UNIT					
✳ B11	40	40	#5	STR	19'-7"	817
✳ S4	98	98	#5	2	7'-2"	733
✳ EPOXY COATED REINFORCING STEEL				LBS.		1,550
CLASS AA CONCRETE				CU.YDS.		10.5
TOTAL VERTICAL CONCRETE BARRIER RAIL				LIN. FT.		80.125

CORED SLABS REQUIRED

	NUMBER	LENGTH	TOTAL LENGTH
40' UNIT			
EXTERIOR C.S.	2	40'-0"	80'-0"
INTERIOR C.S.	8	40'-0"	320'-0"
TOTAL	10		400'-0"

DEAD LOAD DEFLECTION AND CAMBER

	3'-0" x 1'-9"
40' CORED SLAB UNIT	0.6" Ø L.R. STRAND
CAMBER (SLAB ALONE IN PLACE)	1¼" ↑
DEFLECTION DUE TO SUPERIMPOSED DEAD LOAD ✳✳	⅛" ↓
FINAL CAMBER	1⅛" ↑

✳✳ INCLUDES FUTURE WEARING SURFACE

GRADE 270 STRANDS

	0.6" Ø L.R.
AREA (SQUARE INCHES)	0.217
ULTIMATE STRENGTH (LBS. PER STRAND)	58,600
APPLIED PRESTRESS (LBS. PER STRAND)	43,950

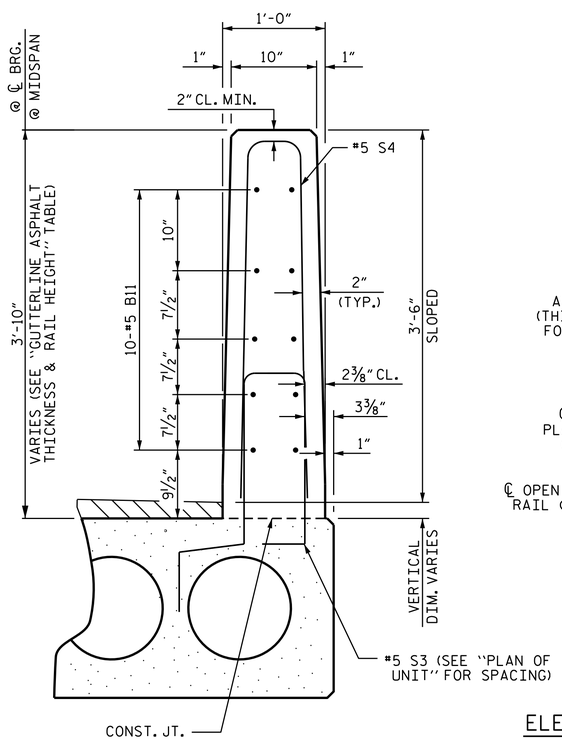

VERTICAL CONCRETE BARRIER RAIL SECTION

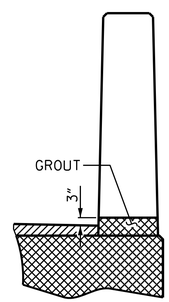

SECTION T-T
AT OPEN JOINT AT BENT
(THIS IS TO BE USED WHERE FOAM JOINT IS NOT USED)

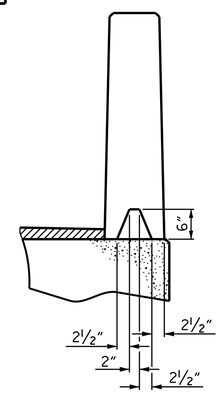

SECTION S-S
AT DAM IN OPEN JOINT
(THIS IS TO BE USED ONLY WHEN SLIP FORM IS USED)

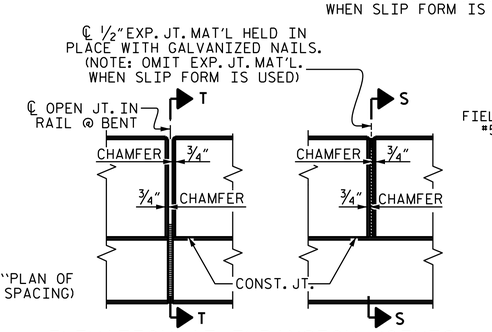

ELEVATION AT EXPANSION JOINTS

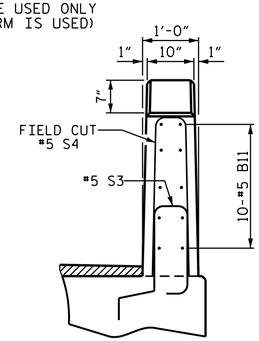

END VIEW

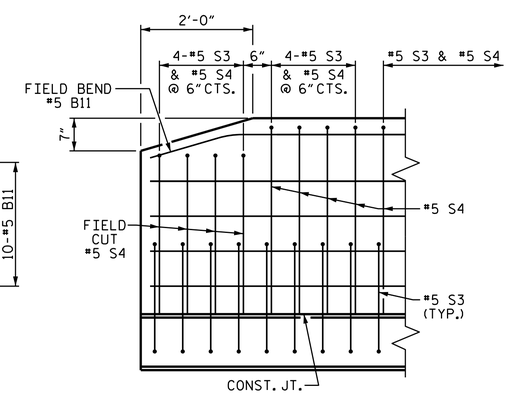

SIDE VIEW

END OF RAIL DETAILS

PROJECT NO. 17BP.12.R.26
CATAWBA COUNTY
STATION: 15+90.06 -L-

SHEET 3 OF 3

STATE OF NORTH CAROLINA
DEPARTMENT OF TRANSPORTATION
RALEIGH

STANDARD
3'-0" X 1'-9"
PRESTRESSED CONCRETE
CORED SLAB UNIT
90° SKEW

NORTH CAROLINA PROFESSIONAL SEAL 031480 ENGINEER DONALD R. SMITH, JR.
DocuSigned by: Donald R. Smith, Jr
EDC877061748490
3/8/2016

REVISIONS							SHEET NO.
NO.	BY:	DATE:	NO.	BY:	DATE:		S-7
1			3				TOTAL SHEETS
2			4				18

DOCUMENT NOT CONSIDERED FINAL UNLESS ALL SIGNATURES COMPLETED

ASSEMBLED BY :	M.E.GILES	DATE :	11/25/13
CHECKED BY :	R.P.PATEL	DATE :	12/6/13
DRAWN BY : DGE 5/09	REV. 12/11	MAA/AAC	
CHECKED BY : BCH 6/09			

08-MAR-2016 11:21
S:\DPG3\DivisionLets\Div12\17BP12R26\Plans\17BP12R26_SD_CS_01.dgn
jdhawk

STD. NO. 21" PCS3_30_90S

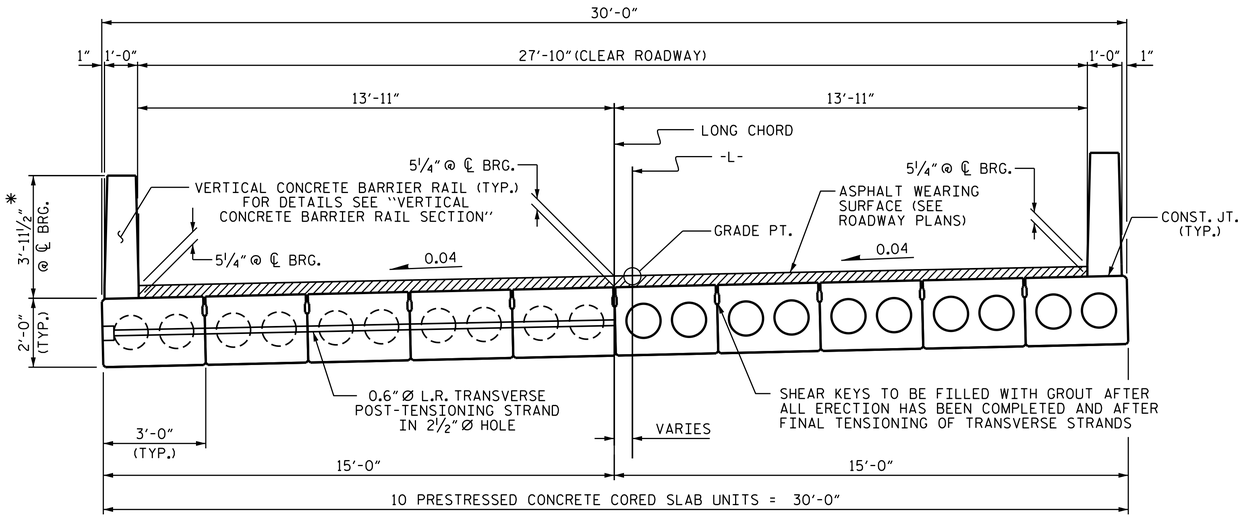

HALF SECTION
AT INTERMEDIATE DIAPHRAGMS

TYPICAL SECTION

HALF SECTION
THROUGH VOIDS

* - THE MAXIMUM BARRIER RAIL HEIGHT AND ASPHALT THICKNESS IS SHOWN. THE HEIGHT OF THE BARRIER RAIL AND ASPHALT THICKNESS VARIES WHILE THE TOP OF THE BARRIER RAIL FOLLOWS THE PROFILE OF THE GUTTERLINE. FOR RAIL HEIGHT DETAILS AND ASPHALT THICKNESS, SEE THE "VERTICAL CONCRETE BARRIER RAIL SECTION" DETAIL.

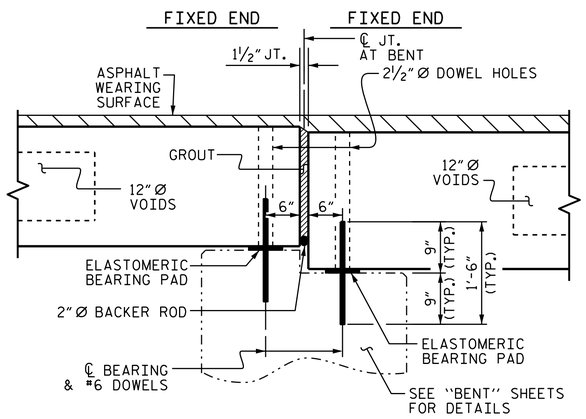

SECTION AT BENT 1

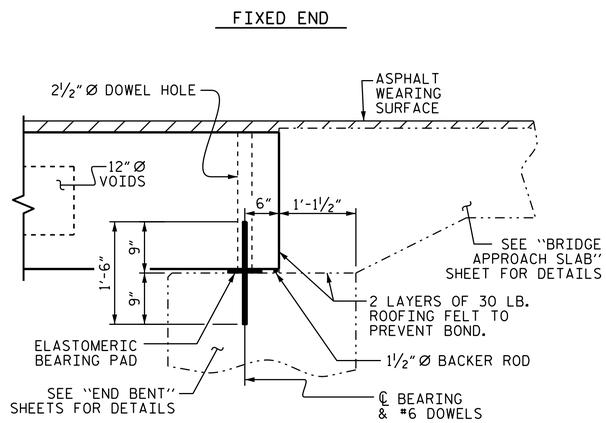

SECTION AT END BENT 2

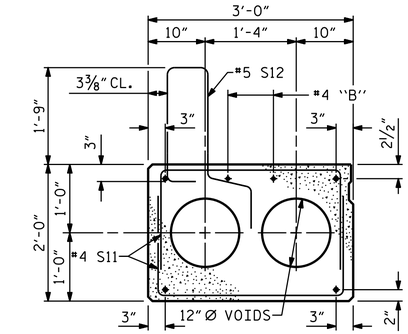

EXTERIOR SLAB SECTION

(FOR PRESTRESSED STRAND LAYOUT, SEE INTERIOR SLAB SECTION.)

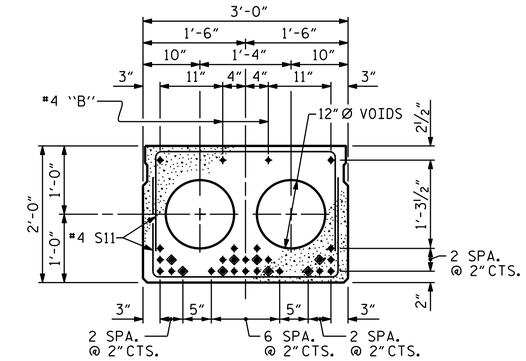

INTERIOR SLAB SECTION
(70' UNIT)
(28 STRANDS REQUIRED)

0.6" Ø LOW RELAXATION STRAND LAYOUT

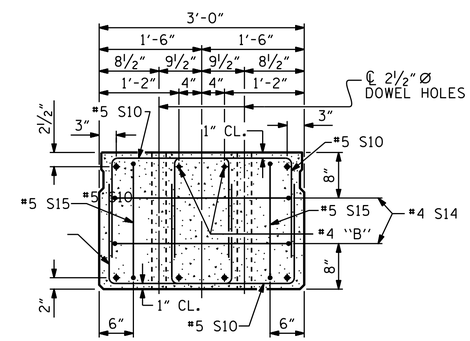

END ELEVATION

SHOWING PLACEMENT OF DOUBLE STIRRUPS AND LOCATION OF DOWEL HOLES. (STRAND LAYOUT NOT SHOWN.) INTERIOR SLAB UNIT SHOWN-EXTERIOR SLAB UNIT SIMILAR EXCEPT SHEAR KEY LOCATION.

◆ BOND SHALL BE BROKEN ON THESE STRANDS FOR A DISTANCE OF 12'-0" FROM END OF CORED SLAB UNIT. SEE STANDARD SPECIFICATIONS, ARTICLE 1078-7.

DEBONDING LEGEND

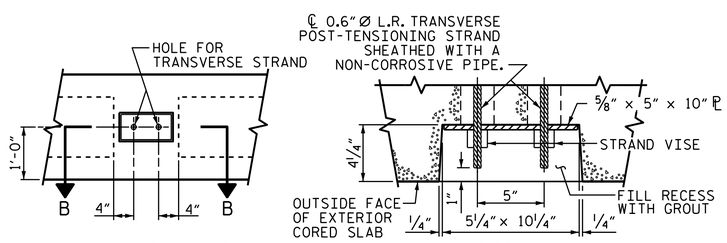

GROUTED RECESS AT END OF POST-TENSIONED STRAND CORED SLABS

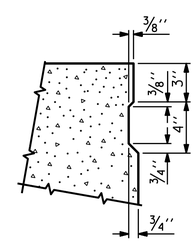

SHEAR KEY DETAIL

NOTE: OMIT SHEAR KEY ON OUTSIDE FACE OF EXTERIOR CORED SLABS.

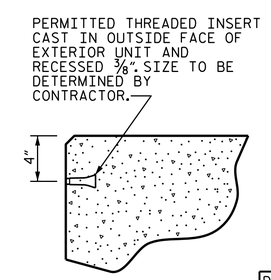

THREADED INSERT DETAIL

NORTH CAROLINA PROFESSIONAL SEAL 031480 ENGINEER DONALD R. SMITH, JR.
DocuSigned by: Donald R. Smith, Jr
EDC8770617484B96...
3/8/2016

DOCUMENT NOT CONSIDERED FINAL UNLESS ALL SIGNATURES COMPLETED

PROJECT NO. 17BP.12.R.26
CATAWBA COUNTY
STATION: 15+90.06 -L-

SHEET 1 OF 3

STATE OF NORTH CAROLINA
DEPARTMENT OF TRANSPORTATION
RALEIGH

STANDARD
3'-0" X 2'-0"
PRESTRESSED CONCRETE CORED SLAB UNIT
90° SKEW

REVISIONS						SHEET NO.
NO.	BY:	DATE:	NO.	BY:	DATE:	S-8
1			3			TOTAL SHEETS
2			4			18

ASSEMBLED BY :	M.E.GILES	DATE :	11/25/13
CHECKED BY :	R.P.PATEL	DATE :	12/6/13
DRAWN BY : MAA 6/10	REV. 12/11	MAA/AAC	
CHECKED BY : MKT 7/10			

08-MAR-2016 11:21
S:\DPG3\DivisionLets\Div12\17BP12R26\Plans\17BP12R26_SD_CS_01.dgn
jdhawk

STD. NO. 24PCS4_30_90S

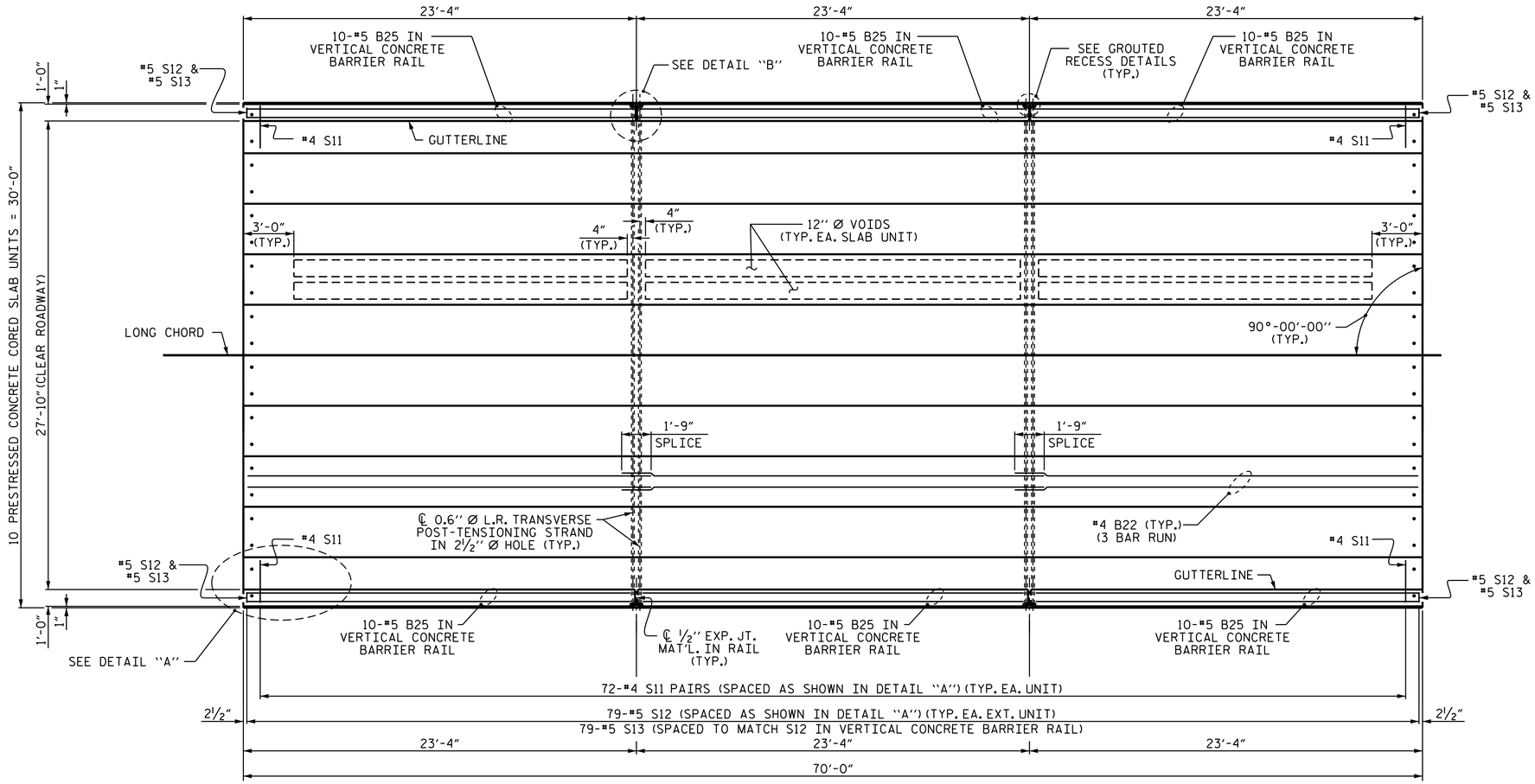

PLAN OF UNIT

SPAN B

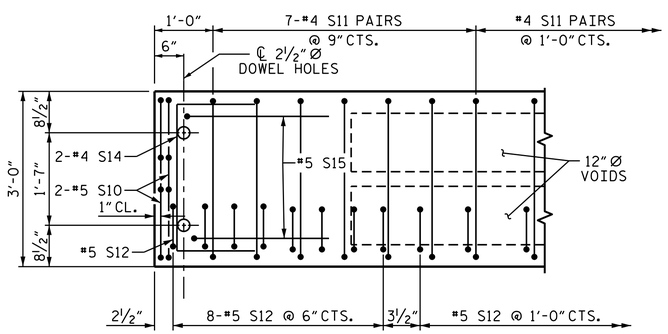

DETAIL "A"

NOTE: EXTERIOR UNIT SHOWN - INTERIOR UNIT SIMILAR EXCEPT OMIT #5 S12 BARS.

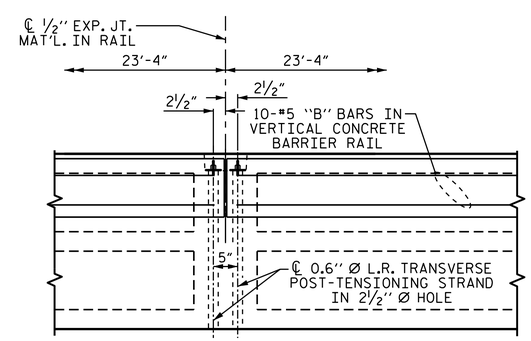

DETAIL "B"

#4 S11 BARS MAY BE SHIFTED AS NECESSARY TO MAINTAIN 1" CLEAR TO GROUTED RECESS AND 2½" Ø TRANSVERSE POST-TENSIONING STRAND HOLES

PROJECT NO. 17BP.12.R.26

CATAWBA COUNTY

STATION: 15+90.06 -L-

SHEET 2 OF 3

STATE OF NORTH CAROLINA
DEPARTMENT OF TRANSPORTATION
RALEIGH

PLAN OF 70' UNIT 27'-10" CLEAR ROADWAY 90° SKEW

SPAN B

NORTH CAROLINA PROFESSIONAL SEAL 031480 ENGINEER DONALD R. SMITH, JR.

DocuSigned by: Donald R. Smith, Jr
EDC877061748490...
3/8/2016

DOCUMENT NOT CONSIDERED FINAL UNLESS ALL SIGNATURES COMPLETED

REVISIONS						
NO.	BY:	DATE:	NO.	BY:	DATE:	
1			3			
2			4			

SHEET NO. S-9

TOTAL SHEETS 18

ASSEMBLED BY :	M.E.GILES	DATE :	11/25/13
CHECKED BY :	R.P.PATEL	DATE :	12/6/13
DRAWN BY : MAA	6/10	REV. 12/5/11	MAA/AAC
CHECKED BY : MKT	7/10		

08-MAR-2016 11:21
S:\DPG3\DivisionLets\Div12\17BP12R26\Plans\17BP12R26_SD_CS_01.dgn
jdhawk

STD. NO. 24PCS_30_90S_70L

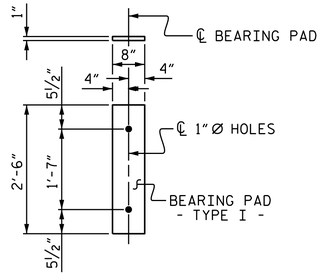

FIXED END
(TYPE I - 20 REQ'D)

ELASTOMERIC BEARING DETAILS

ELASTOMER IN ALL BEARINGS SHALL BE 60 DUROMETER HARDNESS.

GUTTERLINE ASPHALT THICKNESS & RAIL HEIGHT

27'-10" CLEAR ROADWAY	ASPHALT OVERLAY THICKNESS @ MID-SPAN	RAIL HEIGHT @ MID-SPAN
70' UNITS	1¾"	3'-8"

BILL OF MATERIAL FOR ONE 70' CORED SLAB UNIT

				EXTERIOR UNIT		INTERIOR UNIT	
BAR	NUMBER	SIZE	TYPE	LENGTH	WEIGHT	LENGTH	WEIGHT
B22	6	#4	STR	24'-5"	98	24'-5"	98
S10	8	#5	3	4'-9"	40	4'-9"	40
S11	144	#4	3	5'-10"	561	5'-10"	561
✱S12	79	#5	1	6'-4"	522		
S14	4	#4	3	5'-7"	15	5'-7"	15
S15	4	#5	3	7'-1"	30	7'-1"	30
REINFORCING STEEL			LBS.		744		744
✱EPOXY COATED REINFORCING STEEL			LBS.		522		
7000 P.S.I. CONCRETE			CU. YDS.		11.9		11.8
0.6"Ø L.R. STRANDS			No.		28		28

BAR TYPES

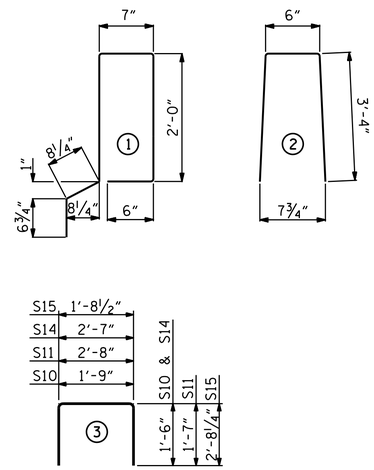

ALL BAR DIMENSIONS ARE OUT TO OUT

NOTES

ALL PRESTRESSING STRANDS SHALL BE 7-WIRE LOW RELAXATION GRADE 270 STRANDS AND SHALL CONFORM TO AASHTO M203 EXCEPT FOR SAMPLING REQUIREMENTS WHICH SHALL BE IN ACCORDANCE WITH THE STANDARD SPECIFICATIONS.

ALL REINFORCING STEEL CAST WITH THE CORED SLAB SECTIONS SHALL BE GRADE 60 AND SHALL BE INCLUDED IN THE UNIT PRICE BID FOR PRESTRESSED CONCRETE CORED SLABS.

RECESSES FOR TRANSVERSE STRANDS SHALL BE GROUTED AFTER THE TENSIONING OF THE STRANDS.

THE 2½"Ø DOWEL HOLES AT FIXED ENDS OF SLAB SECTIONS SHALL BE FILLED WITH NON-SHRINK GROUT.

THE BACKER RODS SHALL CONFORM TO THE REQUIREMENTS OF TYPE M BOND BREAKER. SEE SECTION 1028 OF THE STANDARD SPECIFICATIONS.

WHEN CORED SLABS ARE CAST, AN INTERNAL HOLD-DOWN SYSTEM SHALL BE EMPLOYED TO PREVENT VOIDS FROM RISING OR MOVING SIDEWAYS. AT LEAST SIX WEEKS PRIOR TO CASTING CORED SLABS, THE CONTRACTOR SHALL SUBMIT TO THE ENGINEER FOR REVIEW AND COMMENT, DETAILED DRAWINGS OF THE PROPOSED HOLD-DOWN SYSTEM. IN ADDITION TO STRUCTURAL DETAILS, LOCATION AND SPACING OF THE HOLD-DOWNS SHALL BE INDICATED.

ALL REINFORCING STEEL IN THE VERTICAL CONCRETE BARRIER RAIL SHALL BE EPOXY COATED.

PRESTRESSING STRANDS SHALL BE CUT FLUSH WITH THE CORED SLAB UNIT ENDS.

APPLY EPOXY PROTECTIVE COATING TO CORED SLAB UNIT ENDS.

GROOVED CONTRACTION JOINTS, ½" IN DEPTH, SHALL BE TOOLED IN ALL EXPOSED FACES OF THE BARRIER RAIL AND IN ACCORDANCE WITH ARTICLE 825-10(B) OF THE STANDARD SPECIFICATIONS. A CONTRACTION JOINT SHALL BE LOCATED AT EACH THIRD POINT BETWEEN BARRIER RAIL EXPANSION JOINTS. ONLY ONE CONTRACTION JOINT IS REQUIRED AT MIDPOINT OF BARRIER RAIL SEGMENTS LESS THAN 20 FEET IN LENGTH AND NO CONTRACTION JOINTS ARE REQUIRED FOR THOSE SEGMENTS LESS THAN 10 FEET IN LENGTH.

FLAME CUTTING OF THE TRANSVERSE POST-TENSIONING STRAND IS NOT ALLOWED.

THE TRANSFER OF LOAD FROM THE ANCHORAGES TO THE CORED SLAB UNIT SHALL BE DONE WHEN THE CONCRETE HAS REACHED A COMPRESSIVE STRENGTH OF NOT LESS THAN 5,500 PSI.

MAINTAIN A SYMMETRIC TENSION FORCE BETWEEN EACH PAIR OF TRANSVERSE POST TENSIONING STRANDS IN THE DIAPHRAGM.

THE #4 S11 STIRRUPS MAY BE SHIFTED AS NECESSARY TO MAINTAIN 1" CLEAR TO THE GROUTED RECESS.

FOR GROUT FOR STRUCTURES, SEE SPECIAL PROVISIONS.

THE PERMITTED THREADED INSERTS ARE DETAILED AS AN OPTION FOR THE CONTRACTOR TO ATTACH FALSEWORK AND FORMWORK DURING CONSTRUCTION.

THE PERMITTED THREADED INSERTS IN THE EXTERIOR UNITS SHALL BE SIZED BY THE CONTRACTOR, SPACED AT 4'-0" CENTERS AND GALVANIZED IN ACCORDANCE WITH SECTION 1076 OF THE STANDARD SPECIFICATIONS. STAINLESS STEEL THREADED INSERTS MAY BE USED AS AN ALTERNATE.

THE PERMITTED THREADED INSERTS SHALL BE GROUTED BY THE CONTRACTOR IMMEDIATELY FOLLOWING REMOVAL OF THE FALSEWORK.

THE COST OF THE PERMITTED THREADED INSERTS SHALL BE INCLUDED IN THE PRICE BID FOR THE PRECAST UNITS.

BILL OF MATERIAL FOR VERTICAL CONCRETE BARRIER RAIL

BAR	BARS PER PAIR OF EXTERIOR UNITS	TOTAL NO.	SIZE	TYPE	LENGTH	WEIGHT
	70' UNIT					
✱B25	60	60	#5	STR	22'-11"	1434
✱S13	158	158	#5	2	7'-2"	1181
✱EPOXY COATED REINFORCING STEEL				LBS.		2,615
CLASS AA CONCRETE				CU.YDS.		19.0
TOTAL VERTICAL CONCRETE BARRIER RAIL				LIN. FT.		140.125

CORED SLABS REQUIRED

	NUMBER	LENGTH	TOTAL LENGTH
70' UNIT			
EXTERIOR C.S.	2	70'-0"	140'-0"
INTERIOR C.S.	8	70'-0"	560'-0"
TOTAL	10		700'-0"

DEAD LOAD DEFLECTION AND CAMBER

	3'-0" x 2'-0"
70' CORED SLAB UNIT	0.6"Ø L.R. STRAND
CAMBER (SLAB ALONE IN PLACE)	4 5/16" ↑
DEFLECTION DUE TO SUPERIMPOSED DEAD LOAD✱✱	13/16" ↓
FINAL CAMBER	3½" ↑

✱✱ INCLUDES FUTURE WEARING SURFACE

GRADE 270 STRANDS

	0.6"Ø L.R.
AREA (SQUARE INCHES)	0.217
ULTIMATE STRENGTH (LBS. PER STRAND)	58,600
APPLIED PRESTRESS (LBS. PER STRAND)	43,950

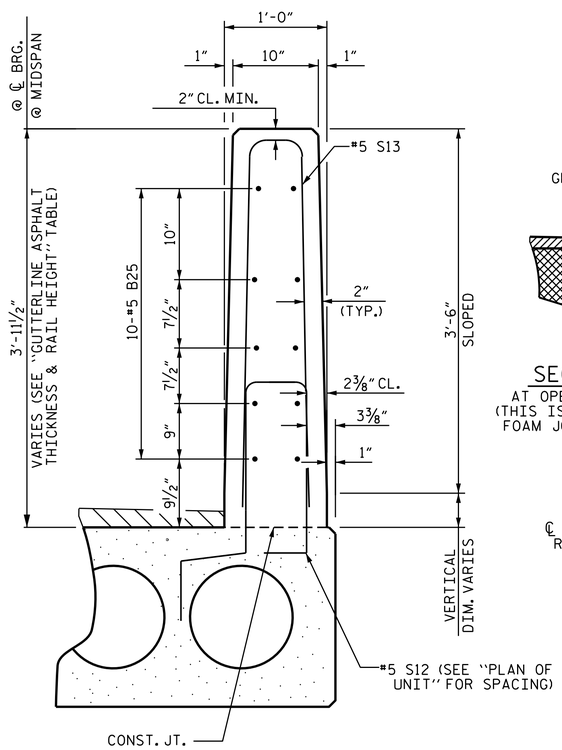

SECTION THRU RAIL

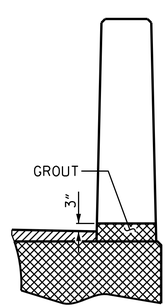

SECTION T-T
AT OPEN JOINT AT BENT
(THIS IS TO BE USED WHERE FOAM JOINT IS NOT USED)

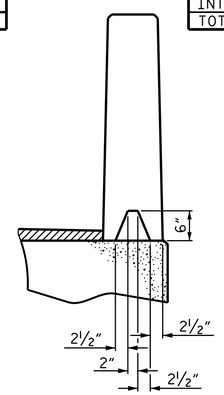

SECTION S-S
AT DAM IN OPEN JOINT
(THIS IS TO BE USED ONLY WHEN SLIP FORM IS USED)

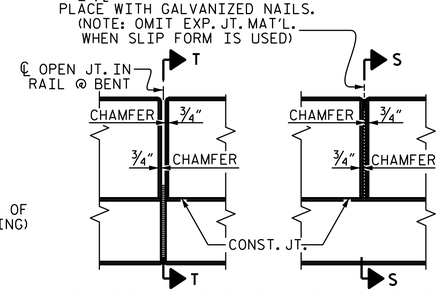

ELEVATION AT EXPANSION JOINTS

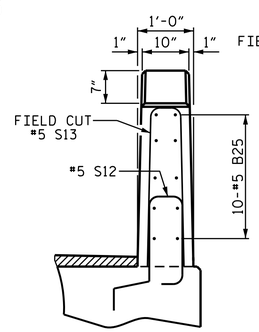

END VIEW

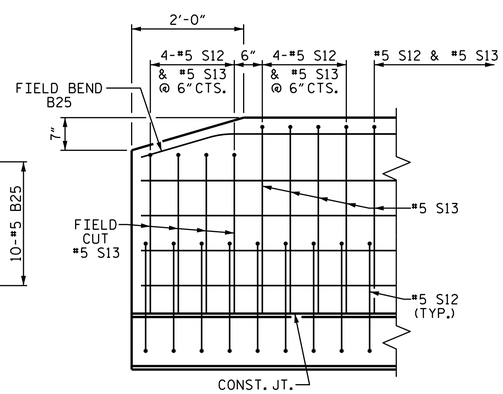

SIDE VIEW

VERTICAL CONCRETE BARRIER RAIL DETAILS

END OF RAIL DETAILS

PROJECT NO. 17BP.12.R.26
CATAWBA COUNTY
STATION: 15+90.06 -L-

SHEET 3 OF 3

STATE OF NORTH CAROLINA
DEPARTMENT OF TRANSPORTATION
RALEIGH

STANDARD
3'-0" X 2'-0"
PRESTRESSED CONCRETE
CORED SLAB UNIT
90° SKEW

NORTH CAROLINA PROFESSIONAL SEAL 031480 ENGINEER DONALD R. SMITH, JR.

DocuSigned by: Donald R. Smith, Jr
EDC87706174840...
3/8/2016

DOCUMENT NOT CONSIDERED FINAL UNLESS ALL SIGNATURES COMPLETED

REVISIONS							
NO.	BY:	DATE:	NO.	BY:	DATE:	SHEET NO.	S-10
1			3			TOTAL SHEETS	18
2			4				

ASSEMBLED BY :	M.E.GILES	DATE :	11/25/13
CHECKED BY :	R.P.PATEL	DATE :	12/6/13
DRAWN BY : MAA 6/10	REV. 12/11	MAA/AAC	
CHECKED BY : MKT 7/10			

08-MAR-2016 11:21
S:\DPG3\DivisionLets\Div12\17BP12R26\Plans\17BP12R26_SD_CS_01.dgn
jdhawk

STD. NO. 24PCS3_30_90S

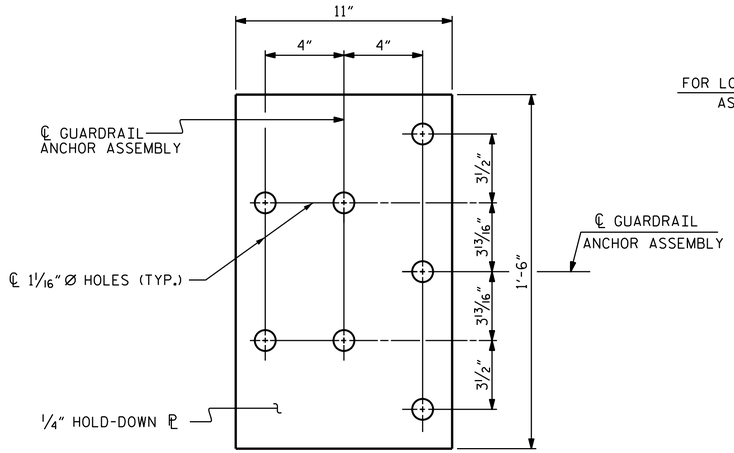

PLAN

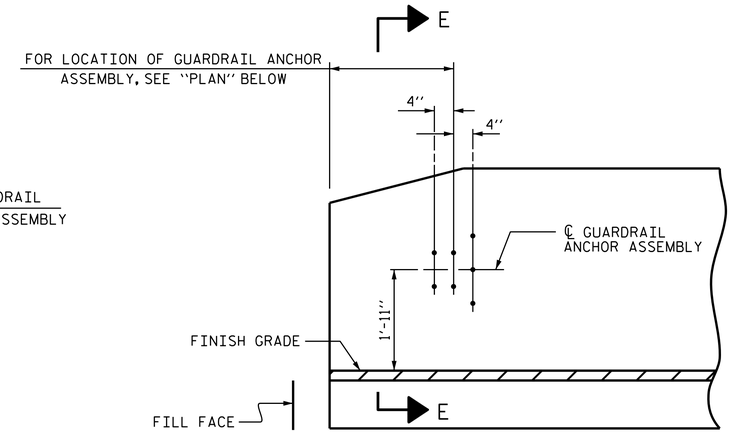

ELEVATION

NOTES

THE GUARDRAIL ANCHOR ASSEMBLY SHALL CONSIST OF A 1/4" HOLD DOWN PLATE AND 7 - 7/8" Ø BOLTS WITH NUTS AND WASHERS.

THE HOLD-DOWN PLATE SHALL CONFORM TO AASHTO M270 GRADE 36. AFTER FABRICATION, THE HOLD-DOWN PLATE SHALL BE HOT-DIP GALVANIZED IN ACCORDANCE WITH AASHTO M111.

BOLTS SHALL CONFORM TO THE REQUIREMENTS OF ASTM A307 AND NUTS SHALL CONFORM TO THE REQUIREMENTS OF AASHTO M291. BOLTS, NUTS AND WASHERS SHALL BE GALVANIZED. (AT THE CONTRACTOR'S OPTION, STAINLESS STEEL BOLTS, NUTS AND WASHERS MAY BE USED AS AN ALTERNATE FOR THE 7/8" Ø GALVANIZED BOLTS, NUTS AND WASHERS. THEY SHALL CONFORM TO OR EXCEED THE MECHANICAL REQUIREMENTS OF ASTM A307. THE USE OF THIS ALTERNATE SHALL BE APPROVED BY THE ENGINEER.)

THE GUARDRAIL ANCHOR ASSEMBLY IS REQUIRED AT ALL POINTS WHERE APPROACH GUARDRAIL IS TO BE ATTACHED TO THE END OF BARRIER RAIL. FOR POINTS OF ATTACHMENT, SEE SKETCH.

AFTER INSTALLATION, THE EXPOSED THREAD OF THE BOLT SHALL BE BURRED WITH A SHARP POINTED TOOL.

THE COST OF THE GUARDRAIL ANCHOR ASSEMBLY SHALL BE INCLUDED IN THE UNIT CONTRACT PRICE BID FOR VERTICAL CONCRETE BARRIER RAIL.

THE VERTICAL REINFORCING BARS MAY BE SHIFTED SLIGHTLY IN THE VERTICAL CONCRETE BARRIER RAIL TO CLEAR ASSEMBLY BOLTS.

THE 1 1/4" Ø HOLES SHALL BE FORMED OR DRILLED WITH A CORE BIT. IMPACT TOOLS WILL NOT BE PERMITTED. ANY CONCRETE DAMAGED BY THIS WORK SHALL BE REPAIRED TO THE SATISFACTION OF THE ENGINEER.

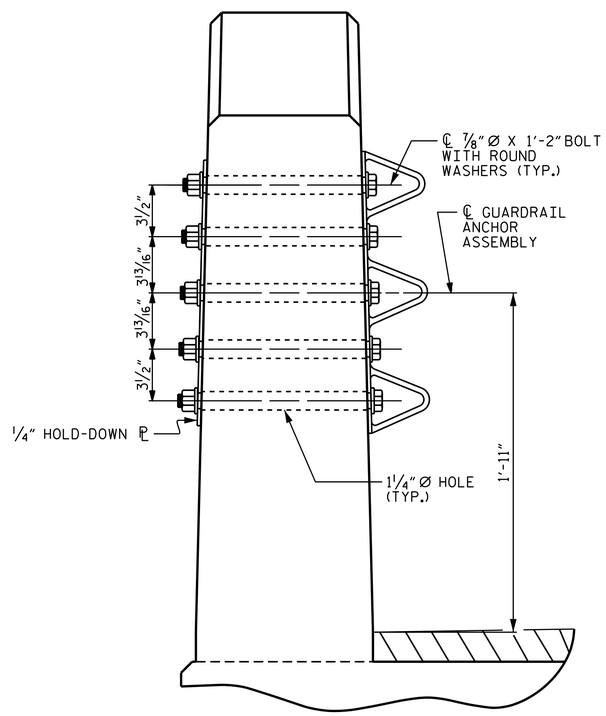

SECTION E-E

GUARDRAIL ANCHOR ASSEMBLY DETAILS

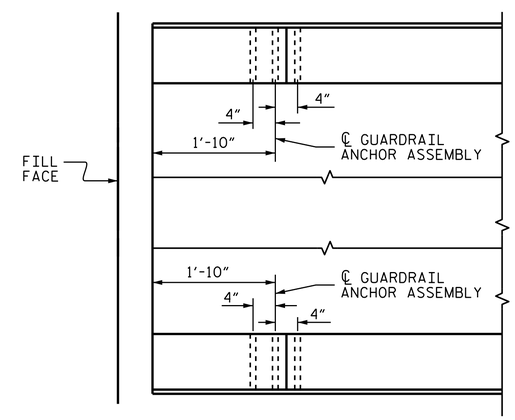

PLAN

LOCATION OF ANCHORS FOR GUARDRAIL

END BENT 1 SHOWN, END BENT 2 SIMILAR

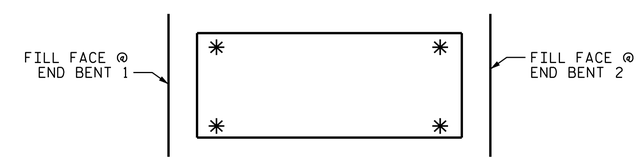

SKETCH SHOWING POINTS OF ATTACHMENT

✳ DENOTES GUARDRAIL ANCHOR ASSEMBLY

PROJECT NO. 17BP.12.R.26

CATAWBA COUNTY

STATION: 15+90.06 -L-

NORTH CAROLINA PROFESSIONAL SEAL 031480 ENGINEER DONALD R. SMITH, JR.

DocuSigned by: Donald R. Smith, Jr
EDC8770617489490...
3/8/2016

STATE OF NORTH CAROLINA
DEPARTMENT OF TRANSPORTATION
RALEIGH

STANDARD
GUARDRAIL ANCHORAGE FOR VERTICAL CONCRETE BARRIER RAIL

ASSEMBLED BY : R. P. PATEL	DATE : 2/4/14		
CHECKED BY : M.E.GILES	DATE : 2/4/14		
DRAWN BY : MAA 5/10	REV. 10/1/11 MAA/GM		
CHECKED BY : GM 5/10	REV. 12/5/11 MAA/GM		
	REV. 6/13 MAA/GM		

DOCUMENT NOT CONSIDERED FINAL UNLESS ALL SIGNATURES COMPLETED

REVISIONS						SHEET NO.
NO.	BY:	DATE:	NO.	BY:	DATE:	S-11
1			3			TOTAL SHEETS
2			4			18

STD. NO. GRA3

08-MAR-2016 11:21
S:\DPG3\DivisionLets\Div12\17BP12R26\Plans\17BP12R26_SD_GR_01.dgn
jdhawk

NOTES

STIRRUPS IN CAP MAY BE SHIFTED AS NECESSARY TO CLEAR DOWELS.

THE CONCRETE IN THE SHADED AREA OF THE WING SHALL BE POURED AFTER THE VERTICAL CONCRETE BARRIER RAIL IS CAST IF SLIP FORMING IS USED.

FOR PILE SPLICE DETAILS, SEE SHEET 4 OF 4.

FOR WING DETAILS, SEE SHEET 3 OF 4.

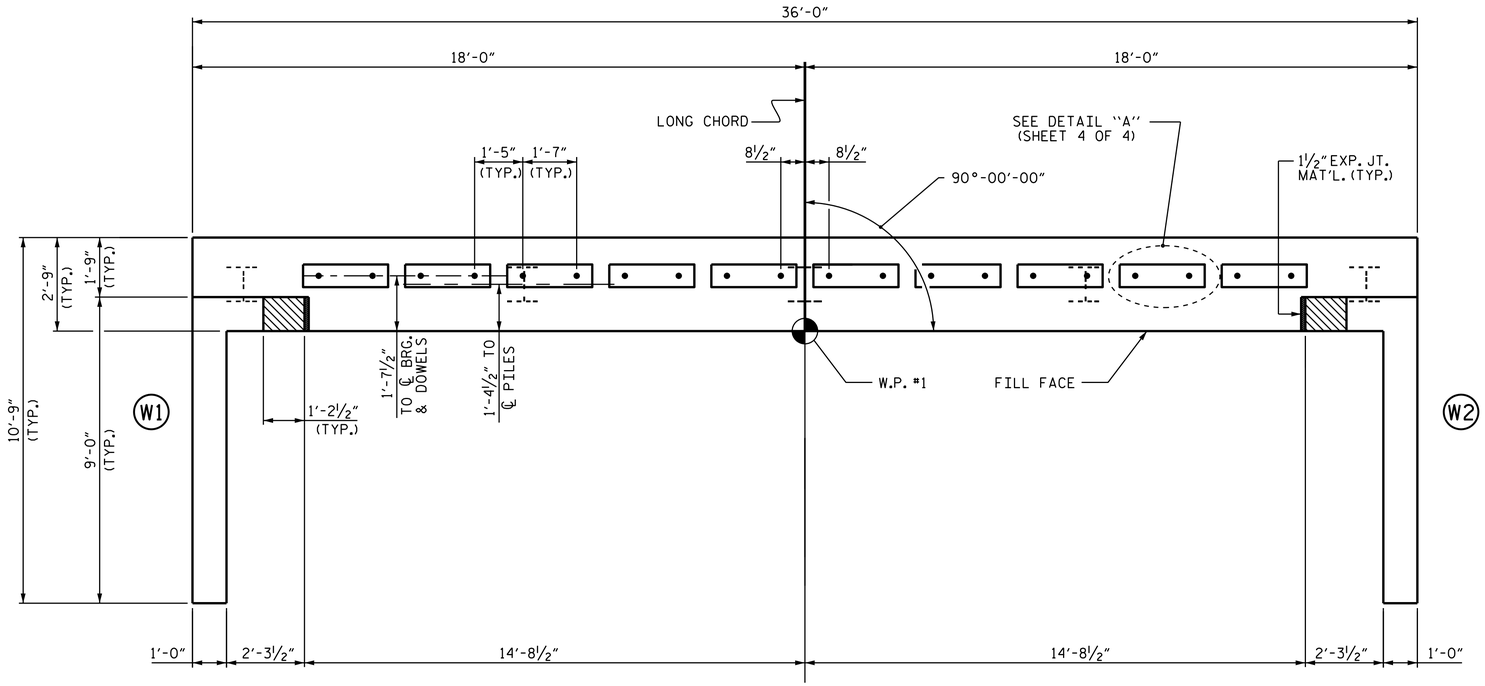

PLAN

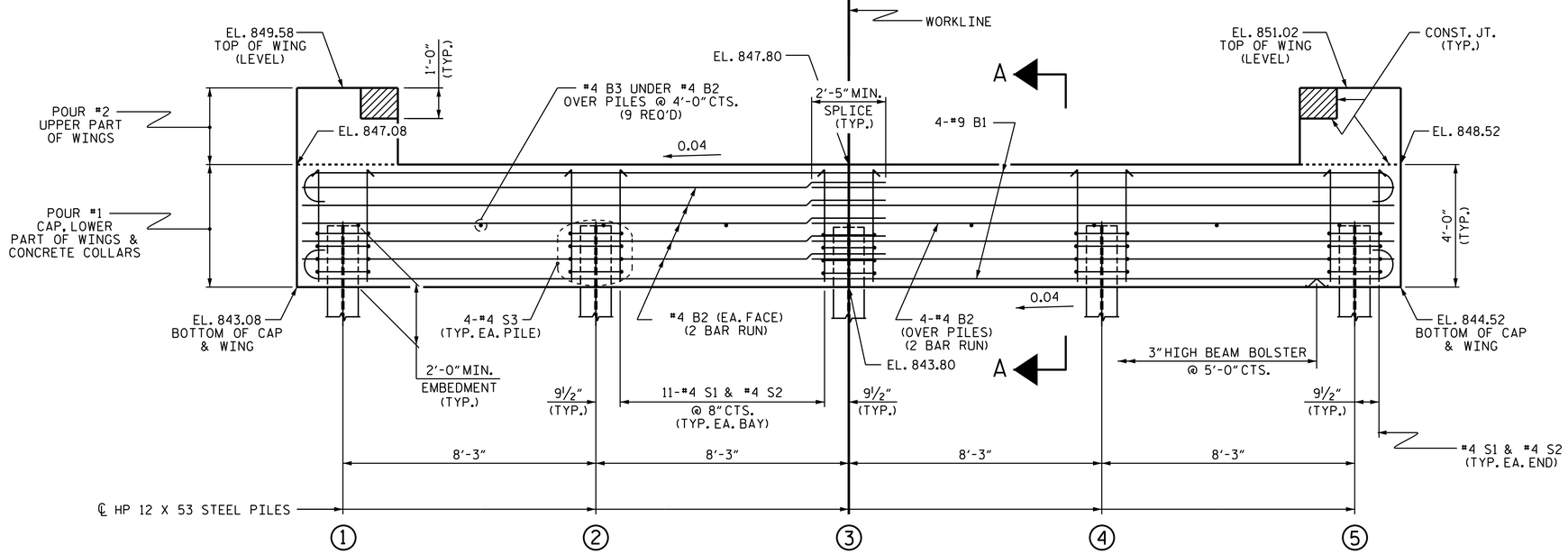

ELEVATION

WINGS NOT SHOWN FOR CLARITY.
FOR SECTION A-A, SEE SHEET 4 OF 4.
CONCRETE COLLARS FOR STEEL PILES NOT SHOWN IN PLAN AND ELEVATION VIEWS FOR CLARITY.
SEE "CORROSION PROTECTION FOR STEEL PILES DETAIL", SHEET 4 OF 4.

TOP OF PILE ELEVATIONS	
1	845.16
2	845.49
3	845.82
4	846.15
5	846.48

PROJECT NO. 17BP.12.R.26
CATAWBA COUNTY
STATION: 15+90.06 -L-

SHEET 1 OF 4

STATE OF NORTH CAROLINA
DEPARTMENT OF TRANSPORTATION
RALEIGH

SUBSTRUCTURE

END BENT 1

NORTH CAROLINA PROFESSIONAL SEAL 031480 ENGINEER DONALD R. SMITH, JR.

DocuSigned by: Donald R. Smith, Jr
EDC877061748490...
3/8/2016

DOCUMENT NOT CONSIDERED FINAL UNLESS ALL SIGNATURES COMPLETED

REVISIONS						
NO.	BY:	DATE:	NO.	BY:	DATE:	
1			3			
2			4			

SHEET NO. S-12
TOTAL SHEETS 18

STD. NO. EB_30_90S4

ASSEMBLED BY : R. P. PATEL	DATE : 12-5-13	
CHECKED BY : M. E. GILES	DATE : 1-17-14	
DRAWN BY : WJH 12/11		
CHECKED BY : AAC 12/11		

08-MAR-2016 11:22
S:\DPG3\DivisionLets\Div12\17BP12R26\Plans\17BP12R26_SD_EB_01.dgn
jdhawk

NOTES

STIRRUPS IN CAP MAY BE SHIFTED AS NECESSARY TO CLEAR DOWELS.

THE CONCRETE IN THE SHADED AREA OF THE WING SHALL BE POURED AFTER THE VERTICAL CONCRETE BARRIER RAIL IS CAST IF SLIP FORMING IS USED.

FOR PILE SPLICE DETAILS, SEE SHEET 4 OF 4.

FOR WING DETAILS, SEE SHEET 3 OF 4.

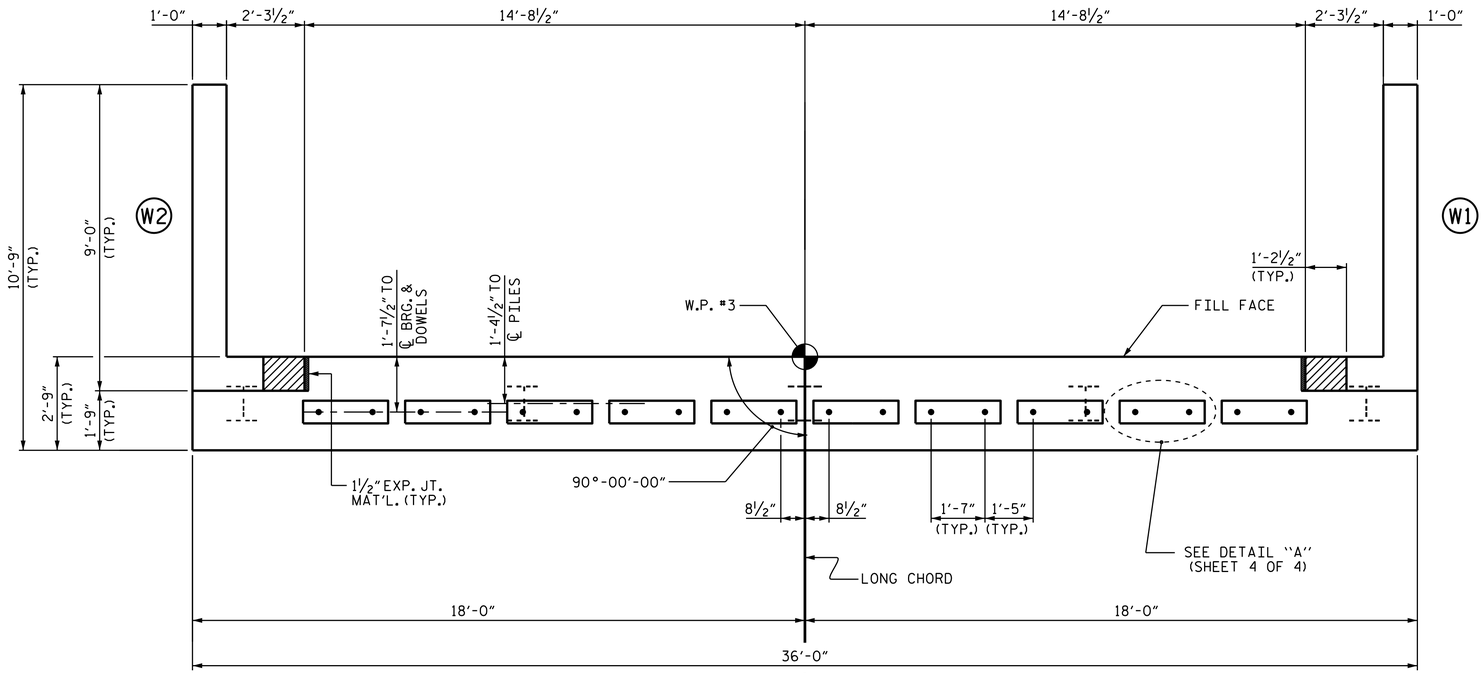

PLAN

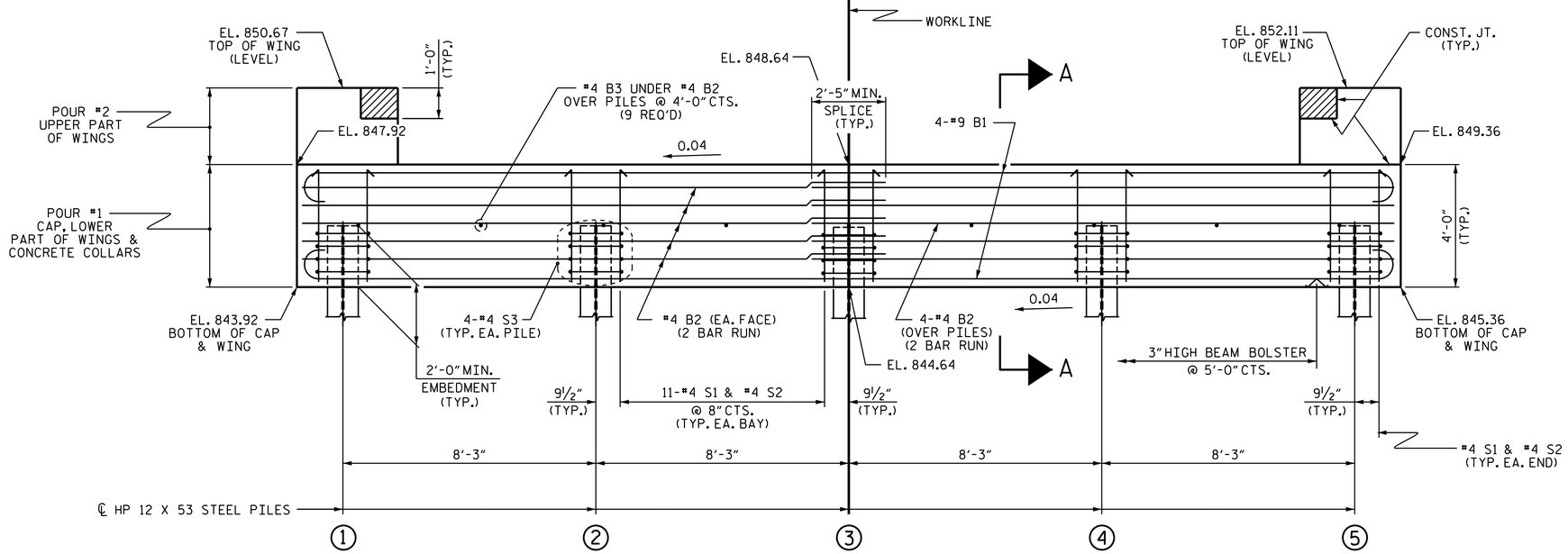

ELEVATION

WINGS NOT SHOWN FOR CLARITY.
FOR SECTION A-A, SEE SHEET 4 OF 4.
CONCRETE COLLARS FOR STEEL PILES NOT SHOWN IN PLAN AND ELEVATION VIEWS FOR CLARITY.
SEE "CORROSION PROTECTION FOR STEEL PILES DETAIL", SHEET 4 OF 4.

TOP OF PILE ELEVATIONS	
1	846.00
2	846.33
3	846.66
4	846.99
5	847.32

PROJECT NO. 17BP.12.R.26
CATAWBA COUNTY
STATION: 15+90.06 -L-

SHEET 2 OF 4

STATE OF NORTH CAROLINA
DEPARTMENT OF TRANSPORTATION
RALEIGH

SUBSTRUCTURE

END BENT 2

NORTH CAROLINA PROFESSIONAL SEAL 031480 ENGINEER DONALD R. SMITH, JR.

DocuSigned by: Donald R. Smith, Jr
EDC877061748490...
3/8/2016

DOCUMENT NOT CONSIDERED FINAL UNLESS ALL SIGNATURES COMPLETED

REVISIONS						
NO.	BY:	DATE:	NO.	BY:	DATE:	
1			3			
2			4			

SHEET NO. S-13
TOTAL SHEETS 18

STD. NO. EB_30_90S4

ASSEMBLED BY :	R. P. PATEL	DATE :	12-5-13
CHECKED BY :	M. E. GILES	DATE :	1-17-14
DRAWN BY :	WJH	12/11	
CHECKED BY :	AAC	12/11	

08-MAR-2016 11:22
S:\DPG3\DivisionLets\Div12\17BP12R26\Plans\17BP12R26_SD_EB_01.dgn
jdhawk

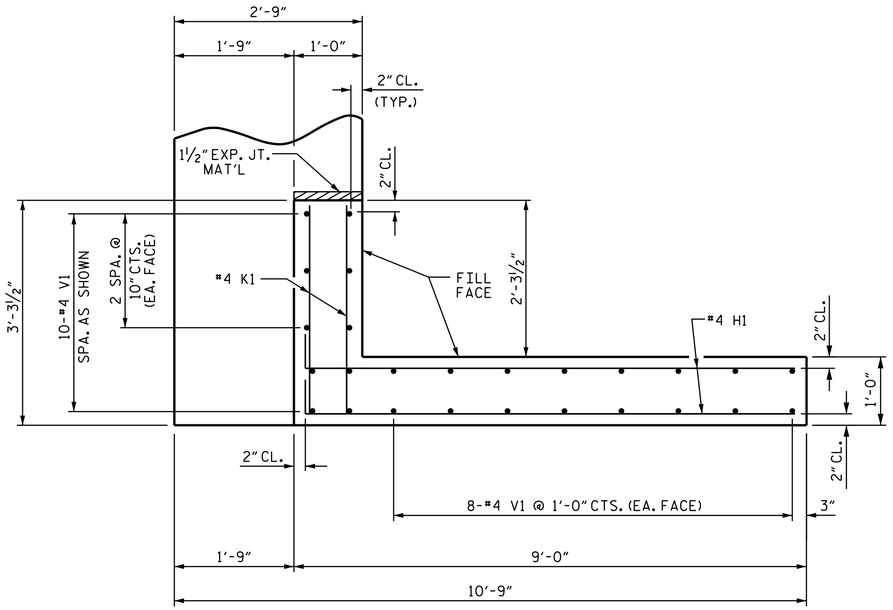

PLAN OF WING (W1)

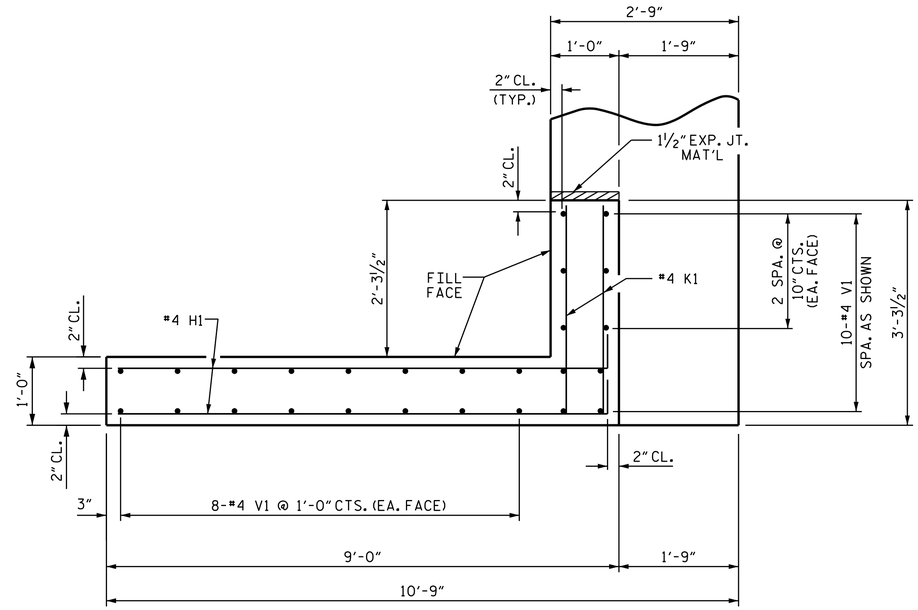

PLAN OF WING (W2)

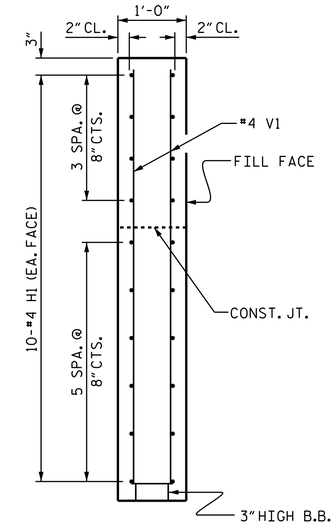

SECTION X-X

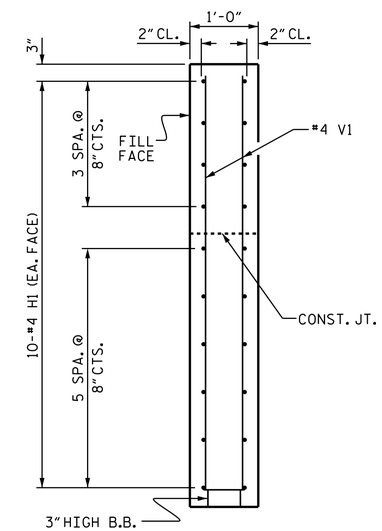

SECTION Y-Y

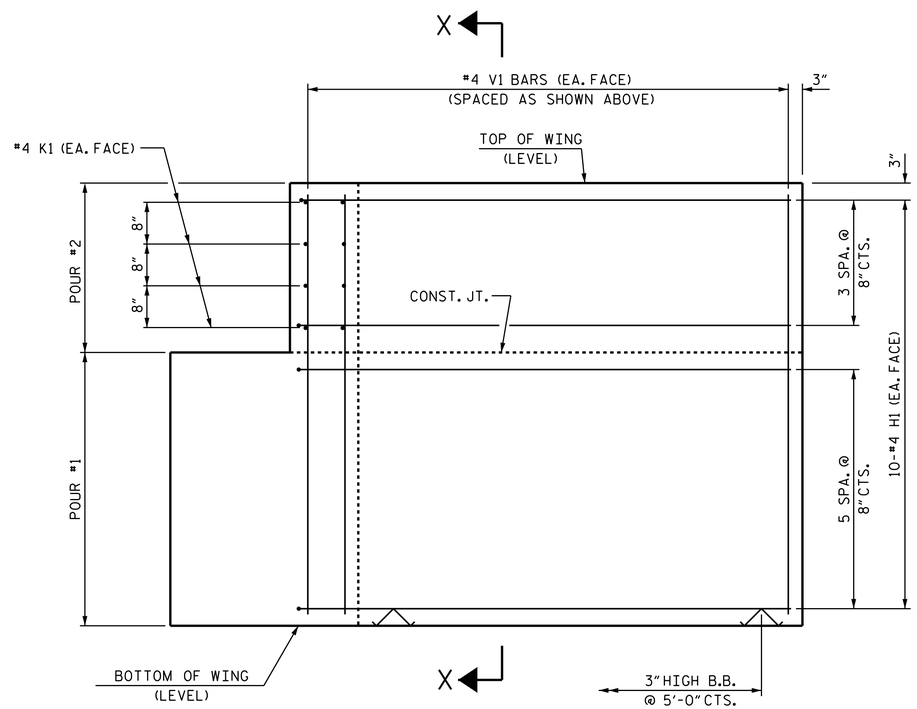

ELEVATION OF WING (W1)

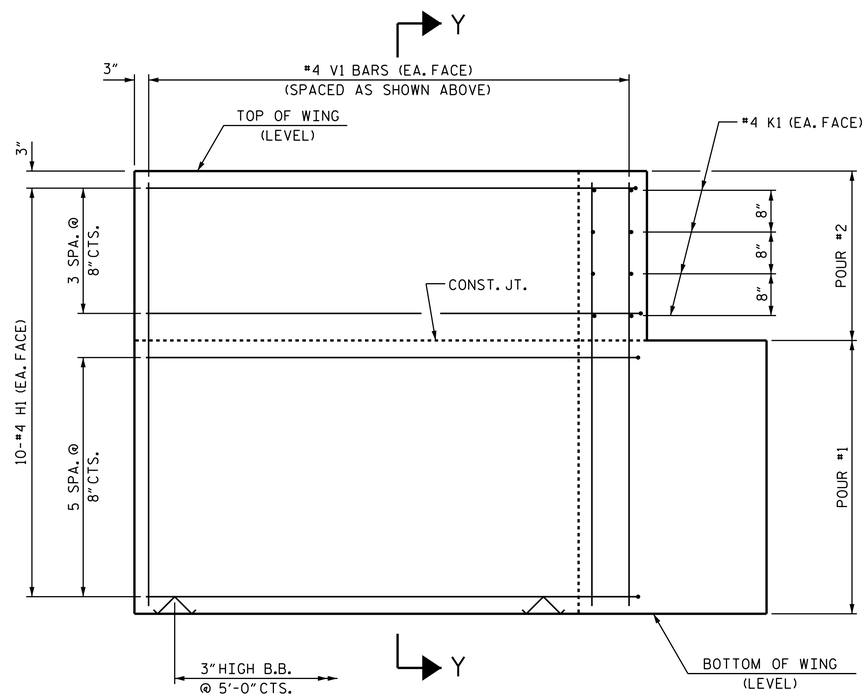

ELEVATION OF WING (W2)

WING DETAILS

PROJECT NO. 17BP.12.R.26

CATAWBA COUNTY

STATION: 15+90.06 -L-

SHEET 3 OF 4

STATE OF NORTH CAROLINA
DEPARTMENT OF TRANSPORTATION
RALEIGH

SUBSTRUCTURE

END BENT
WING DETAILS

NORTH CAROLINA PROFESSIONAL SEAL 031480 ENGINEER DONALD R. SMITH, JR.

DocuSigned by: Donald R. Smith, Jr
EDC877061748490...
3/8/2016

ASSEMBLED BY : R. P. PATEL	DATE : 12-5-13
CHECKED BY : M. E. GILES	DATE : 1-17-14
DRAWN BY : WJH 12/11	
CHECKED BY : AAC 12/11	

DOCUMENT NOT CONSIDERED FINAL UNLESS ALL SIGNATURES COMPLETED

REVISIONS							
NO.	BY:	DATE:	NO.	BY:	DATE:	SHEET NO.	
1			3			S-14	
2			4			TOTAL SHEETS	
						18	

STD. NO. EB_30_90S4

08-MAR-2016 11:22
S:\DPG3\DivisionLets\Div12\17BP12R26\Plans\17BP12R26_SD_EB_01.dgn
jdhawk

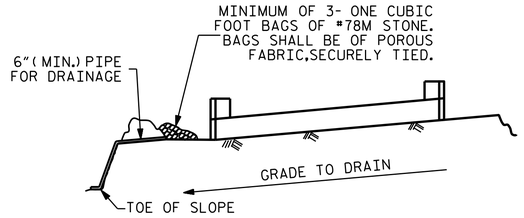

BAGGED STONE AND PIPE SHALL BE PLACED IMMEDIATELY AFTER COMPLETION OF END BENT EXCAVATION. PIPE MAY BE EITHER CONCRETE, CORRUGATED STEEL, CORRUGATED ALUMINUM ALLOY, OR CORRUGATED PLASTIC. PERFORATED PIPE WILL NOT BE ALLOWED.

BAGGED STONE SHALL REMAIN IN PLACE UNTIL THE ENGINEER DIRECTS THAT IT BE REMOVED. THE CONTRACTOR SHALL REMOVE AND DISPOSE OF SILT ACCUMULATIONS AT BAGGED STONE WHEN SO DIRECTED BY THE ENGINEER. BAGS SHALL BE REMOVED AND REPLACED WHENEVER THE ENGINEER DETERMINES THAT THEY HAVE DETERIORATED AND LOST THEIR EFFECTIVENESS.

NO SEPARATE PAYMENT WILL BE MADE FOR THIS WORK AND THE ENTIRE COST OF THIS WORK SHALL BE INCLUDED IN THE UNIT CONTRACT PRICE BID FOR THE SEVERAL PAY ITEMS.

TEMPORARY DRAINAGE AT END BENT

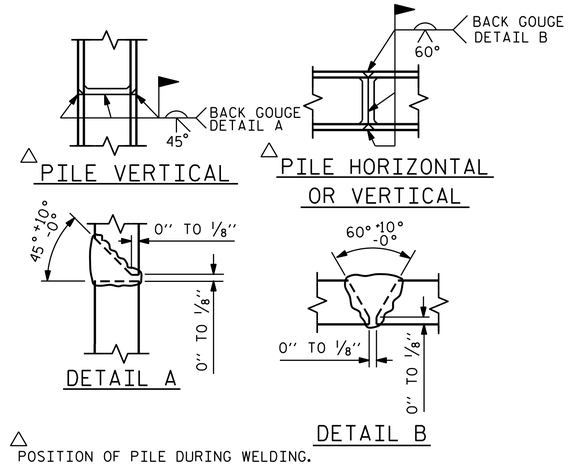

△ POSITION OF PILE DURING WELDING.

PILE SPLICE DETAILS

BAR TYPES

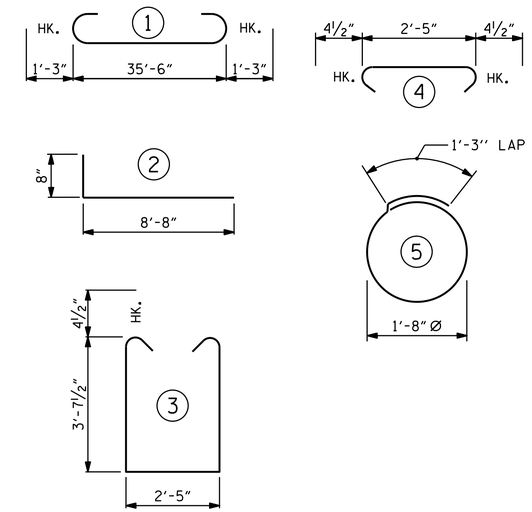

ALL BAR DIMENSIONS ARE OUT TO OUT.

END BENT 1		END BENT 2	
HP 12 X 53 STEEL PILES		HP 12 X 53 STEEL PILES	
NO: 5	LIN. FT. = 155	NO: 5	LIN. FT. = 100
STEEL PILE POINTS	5 EA.	STEEL PILE POINTS	5 EA.

BILL OF MATERIAL FOR ONE END BENT

BAR	NO.	SIZE	TYPE	LENGTH	WEIGHT
B1	8	#9	1	38'-0"	1034
B2	28	#4	STR	19'-1"	357
B3	9	#4	STR	2'-5"	15
D1	20	#6	STR	1'-6"	45
H1	40	#4	2	9'-4"	249
K1	16	#4	STR	2'-11"	31
S1	46	#4	3	10'-5"	320
S2	46	#4	4	3'-2"	97
S3	20	#4	5	6'-6"	87
V1	52	#4	STR	6'-2"	214
REINFORCING STEEL (FOR ONE END BENT)				LBS.	2,449

END BENT 1

CLASS A CONCRETE BREAKDOWN

POUR #1	CAP, LOWER PART OF WINGS & COLLARS	17.9 C.Y.
POUR #2	UPPER PART OF WINGS	2.1 C.Y.
TOTAL CLASS A CONCRETE		20.0 C.Y.

END BENT 2

CLASS A CONCRETE BREAKDOWN

POUR #1	CAP, LOWER PART OF WINGS & COLLARS	17.9 C.Y.
POUR #2	UPPER PART OF WINGS	2.3 C.Y.
TOTAL CLASS A CONCRETE		20.2 C.Y.

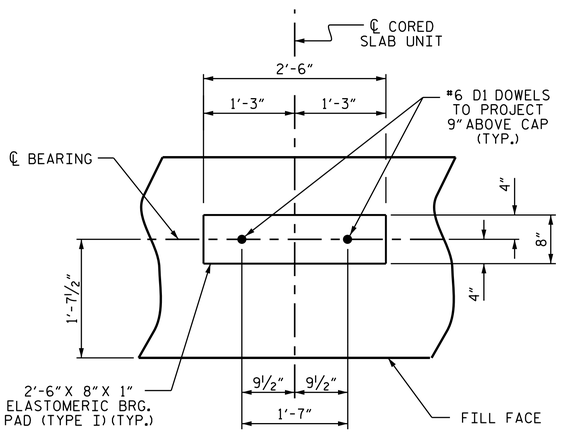

DETAIL "A"

(END BENT 1 SHOWN, END BENT 2 SIMILAR BY ROTATION)

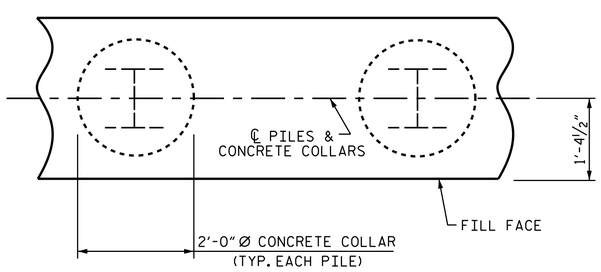

PLAN

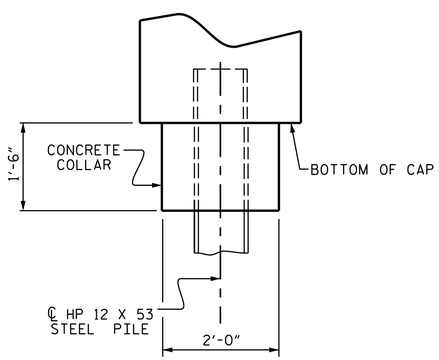

ELEVATION

CORROSION PROTECTION FOR STEEL PILES DETAIL

(END BENT 1 SHOWN, END BENT 2 SIMILAR BY ROTATION)

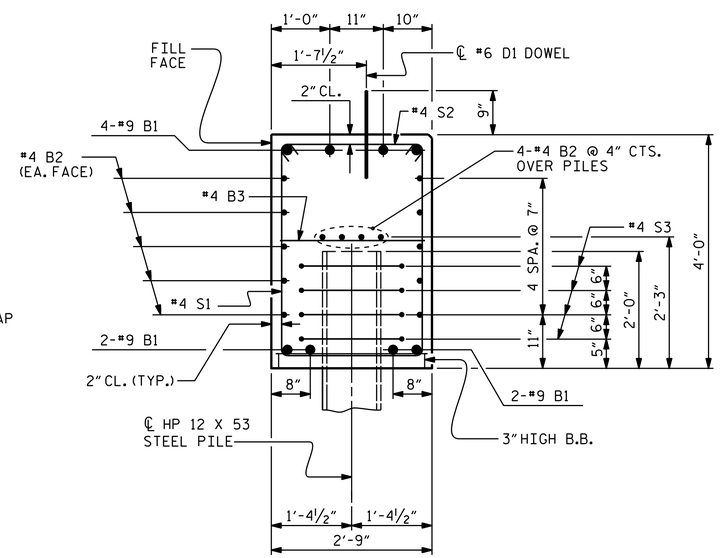

SECTION A-A

(CONCRETE COLLAR NOT SHOWN FOR CLARITY. SEE "CORROSION PROTECTION FOR STEEL PILES DETAIL.")

PROJECT NO. 17BP.12.R.26

CATAWBA COUNTY

STATION: 15+90.06 -L-

SHEET 4 OF 4

STATE OF NORTH CAROLINA
DEPARTMENT OF TRANSPORTATION
RALEIGH

SUBSTRUCTURE

END BENT 1 & 2 DETAILS

NORTH CAROLINA PROFESSIONAL SEAL 031480 ENGINEER DONALD R. SMITH, JR.

DocuSigned by: Donald R. Smith, Jr
EDC877061748490...
3/8/2016

DOCUMENT NOT CONSIDERED FINAL UNLESS ALL SIGNATURES COMPLETED

REVISIONS						
NO.	BY:	DATE:	NO.	BY:	DATE:	
1			3			
2			4			

SHEET NO. S-15

TOTAL SHEETS 18

STD. NO. EB_30_90S4

ASSEMBLED BY :	R. P. PATEL	DATE :	12-5-13
CHECKED BY :	M. E. GILES	DATE :	1-17-14
DRAWN BY :	WJH	12/11	
CHECKED BY :	AAC	12/11	

08-MAR-2016 11:22
S:\DPG3\DivisionLets\Div12\17BP12R26\Plans\17BP12R26_SD_EB_01.dgn
jdhawk

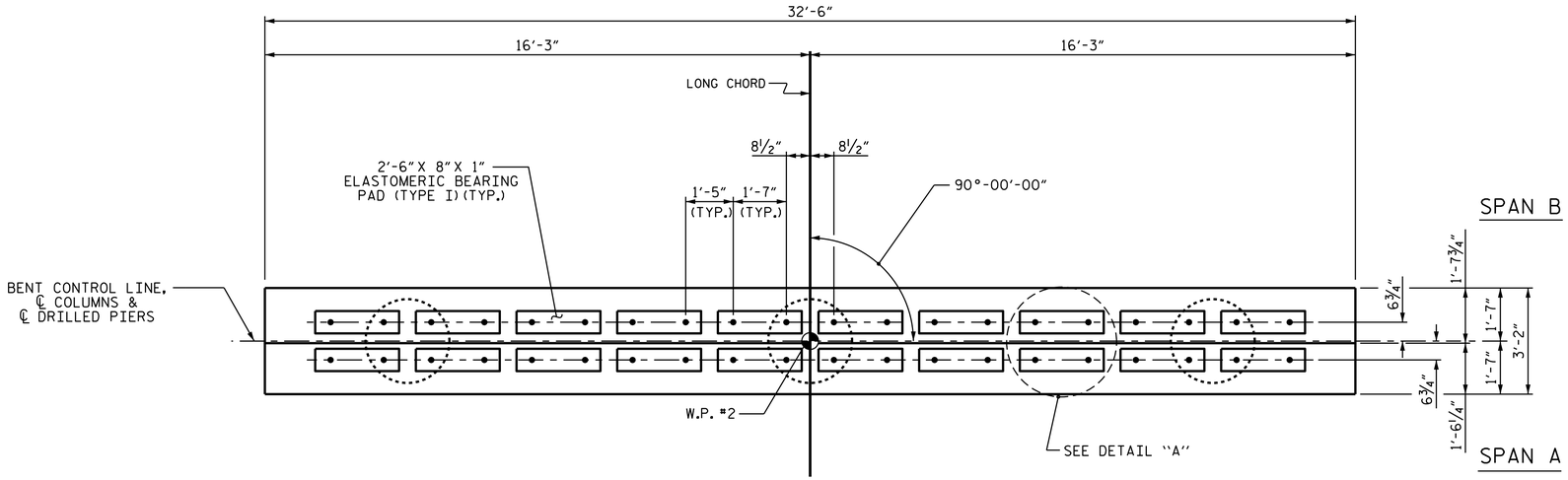

PLAN

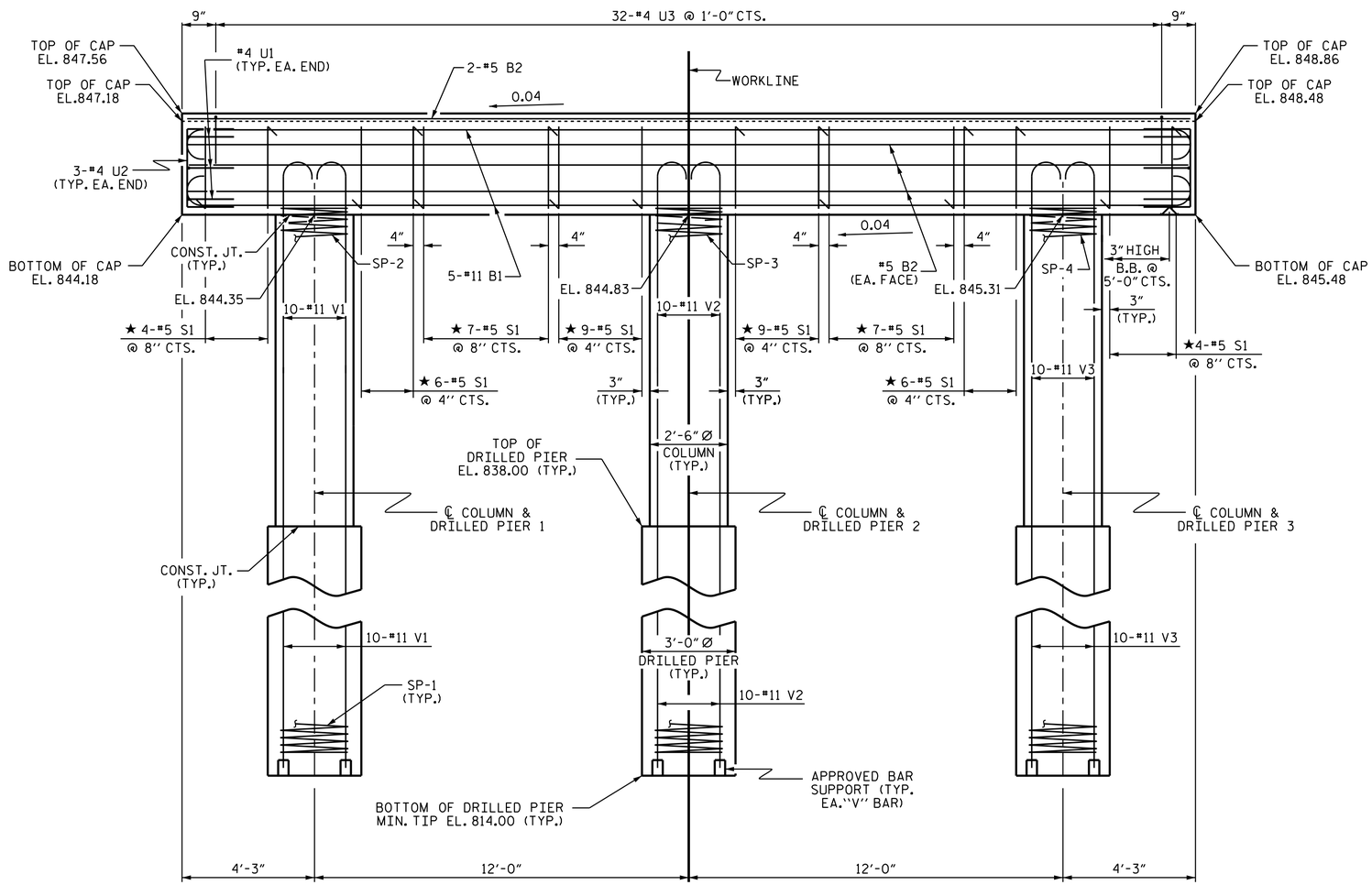

ELEVATION

DIMENSIONS & REINFORCING STEEL ARE TYPICAL FOR EACH COLUMN & DRILLED PIER UNLESS OTHERWISE NOTED.

NOTES

STIRRUPS IN CAP MAY BE SHIFTED AS NECESSARY TO CLEAR DOWELS.

HOOKS ON "V" BARS MAY BE TURNED AS NECESSARY FOR PLACING REINFORCING STEEL.

FOR DRILLED PIERS, SEE SECTION 411 OF STANDARD SPECIFICATIONS.

ALL STEEL IN THE DRILLED PIERS IS INCLUDED IN THE PAY ITEMS FOR "REINFORCING STEEL" AND "SPIRAL COLUMN REINFORCING STEEL."

★ INVERT ALTERNATE STIRRUPS.

THE LOCATION OF THE CONSTRUCTION JOINT IN THE DRILLED PIERS IS BASED ON AN APPROXIMATE GROUND LINE ELEVATION. IF THE CONSTRUCTION JOINT IS ABOVE THE ACTUAL GROUND LINE ELEVATION, THE CONTRACTOR SHALL PLACE THE CONSTRUCTION JOINT ONE FOOT BELOW THE GROUND LINE.

THE CONTRACTOR'S ATTENTION IS CALLED TO THE FACT THAT THE LONGITUDINAL REINFORCEMENT FOR DRILLED PIERS IS DETAILED WITH 3 FEET OF EXTRA LENGTH.

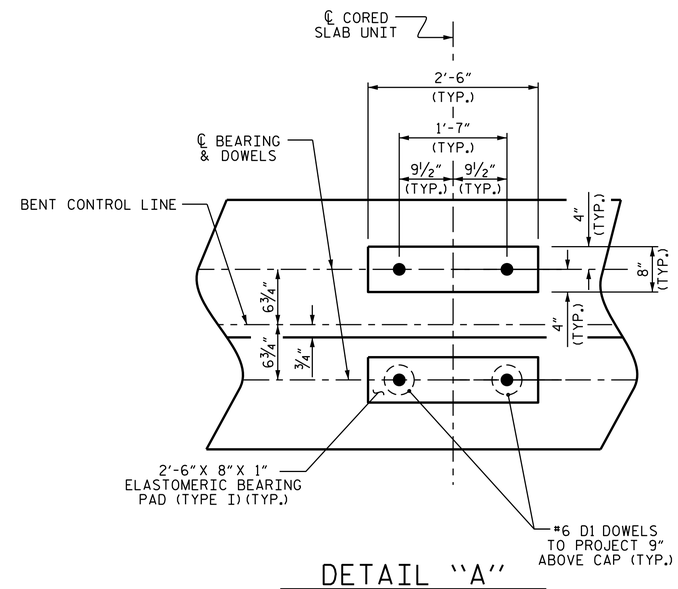

DETAIL "A"

(DIMENSIONS ARE TYPICAL EACH BEARING)

BRIDGE NO. 17BP.12.R.26

CATAWBA COUNTY

STATION: 15+90.06 -L-

SHEET 1 OF 2

STATE OF NORTH CAROLINA
DEPARTMENT OF TRANSPORTATION
RALEIGH

SUBSTRUCTURE

BENT 1

NORTH CAROLINA PROFESSIONAL SEAL 031480 ENGINEER DONALD R. SMITH, JR.

DocuSigned by: Donald R. Smith, Jr
EDC877061748490...
3/8/2016

ASSEMBLED BY : R. P. PATEL	DATE : 12-5-13		
CHECKED BY : M. E. GILES	DATE : 2-4-14		
DRAWN BY : DGE	03/10		
CHECKED BY : MKT	03/10		

DOCUMENT NOT CONSIDERED FINAL UNLESS ALL SIGNATURES COMPLETED

REVISIONS								
NO.	BY:	DATE:	NO.	BY:	DATE:			
1			3					
2			4					

SHEET NO. S-16

TOTAL SHEETS 18

STD. NO. DP_BT_30_90S_<50'

08-MAR-2016 11:22
S:\DPG3\DivisionLets\Div12\17BP12R26\Plans\17BP12R26_SD_B1_01.dgn
jdhawk

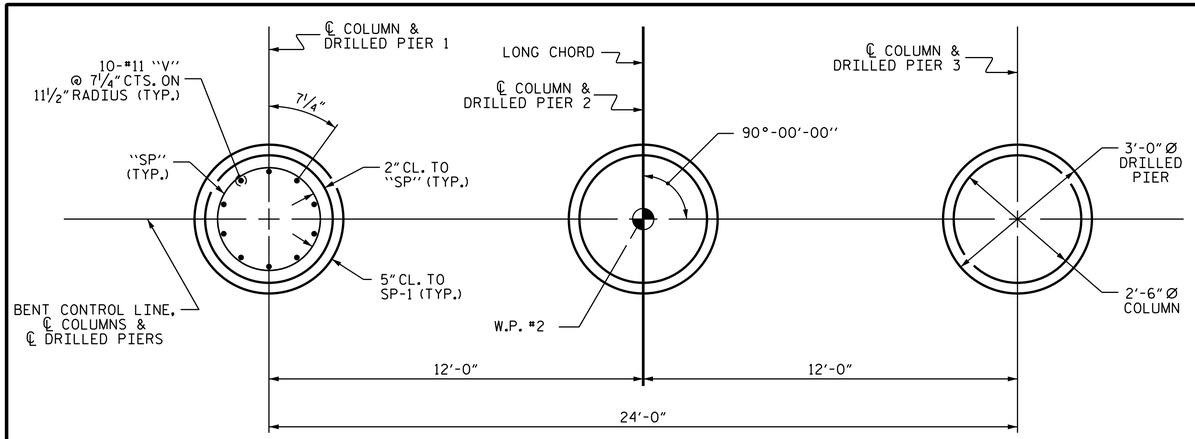

PLAN OF DRILLED PIERS & COLUMNS

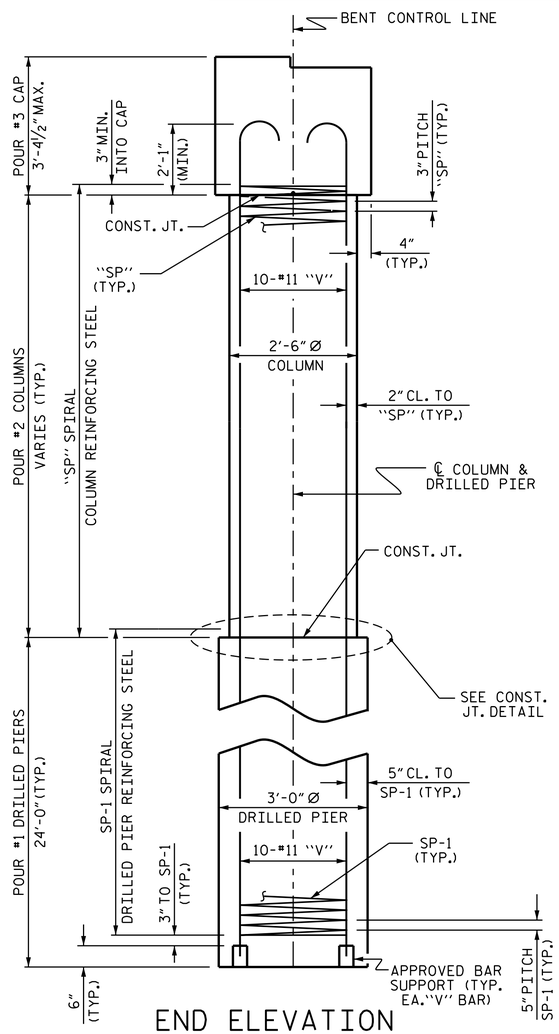

END ELEVATION

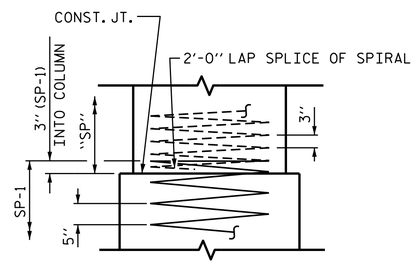

CONSTRUCTION JOINT DETAIL

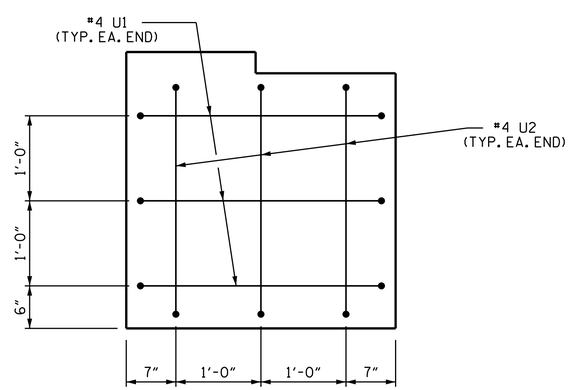

END OF CAP VIEW

(TYPICAL BOTH ENDS)

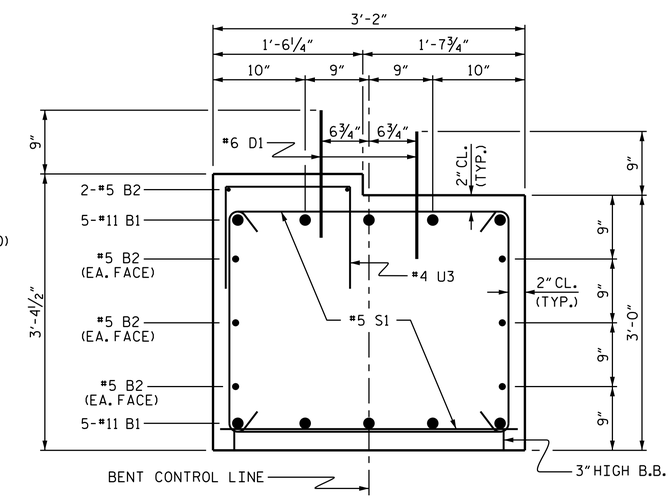

SECTION THRU CAP

BAR TYPES

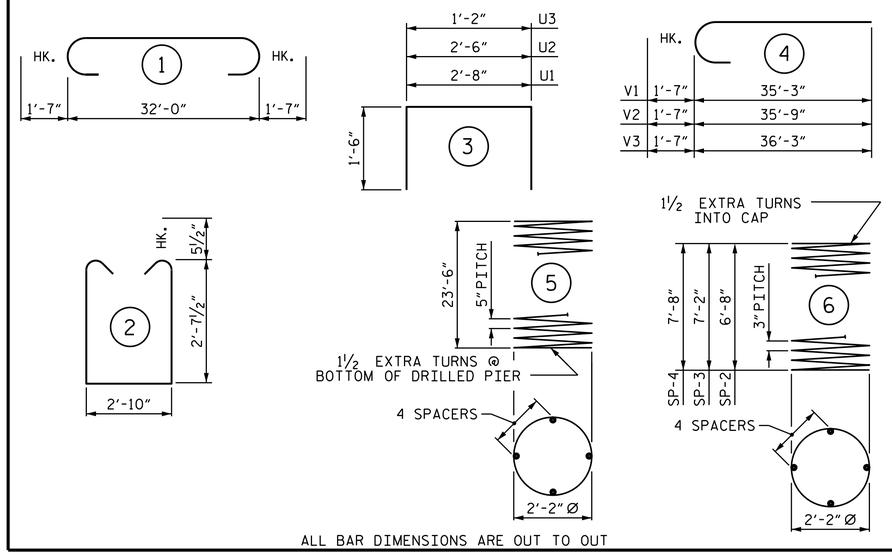

ALL BAR DIMENSIONS ARE OUT TO OUT

BILL OF MATERIAL

BENT 1

BAR	NO.	SIZE	TYPE	LENGTH	WEIGHT
B1	10	#11	1	35'-2"	1868
B2	8	#5	STR	32'-2"	268
D1	40	#6	STR	1'-6"	90
S1	52	#5	2	9'-0"	488
U1	6	#4	3	5'-8"	23
U2	6	#4	3	5'-6"	22
U3	32	#4	3	4'-2"	89
V1	10	#11	4	36'-10"	1957
V2	10	#11	4	37'-4"	1984
V3	10	#11	4	37'-10"	2010
REINFORCING STEEL				LBS.	8,799
SP-1	3	*	5	386'-1"	1208
SP-2	1	**	6	188'-9"	126
SP-3	1	**	6	202'-2"	135
SP-4	1	**	6	215'-6"	144
SPIRAL COLUMN REINFORCING STEEL				LBS.	1,613

* THE SP-1 SPIRAL REINFORCING STEEL SHALL BE W31 OR D-31 COLD DRAWN WIRE OR #5 PLAIN OR DEFORMED BAR

** THE SP-2, SP-3, & SP-4 SPIRAL REINFORCING STEEL SHALL BE W20 OR D-20 COLD DRAWN WIRE OR #4 PLAIN OR DEFORMED BAR

POUR #2 (COLUMNS)	3.7 C.Y.
POUR #3 (CAP)	12.1 C.Y.
TOTAL CLASS A CONCRETE	15.8 C.Y.

DRILLED PIER CONCRETE

POUR #1 (DRILLED PIERS)	18.9 C.Y.
3'-0" Ø DRILLED PIER IN SOIL	46.00 LIN. FT.
3'-0" Ø DRILLED PIER NOT IN SOIL	26.00 LIN. FT.
SPT TESTING	3 EA.
CSL TUBES	324.00 LIN. FT.

PROJECT NO. 17BP.12.R.26

CATAWBA COUNTY

STATION: 15+90.06 -L-

SHEET 2 OF 2

STATE OF NORTH CAROLINA
DEPARTMENT OF TRANSPORTATION
RALEIGH

SUBSTRUCTURE

BENT 1

NORTH CAROLINA PROFESSIONAL SEAL 031480 ENGINEER DONALD R. SMITH, JR.

DocuSigned by: Donald R. Smith, Jr
EDC877061748490...
3/8/2016

DOCUMENT NOT CONSIDERED FINAL UNLESS ALL SIGNATURES COMPLETED

REVISIONS						
NO.	BY:	DATE:	NO.	BY:	DATE:	SHEET NO. S-17
1			3			TOTAL SHEETS 18
2			4			

ASSEMBLED BY :	R. P. PATEL	DATE :	12-5-13
CHECKED BY :	M. E. GILES	DATE :	2-4-14
DRAWN BY :	DGE	03/10	
CHECKED BY :	MKT	03/10	

08-MAR-2016 11:22
S:\DPG3\DivisionLets\Div12\17BP12R26\Plans\17BP12R26_SD_B1_01.dgn
jdhawk

STD. NO. DP_BT_30_90S_<50'

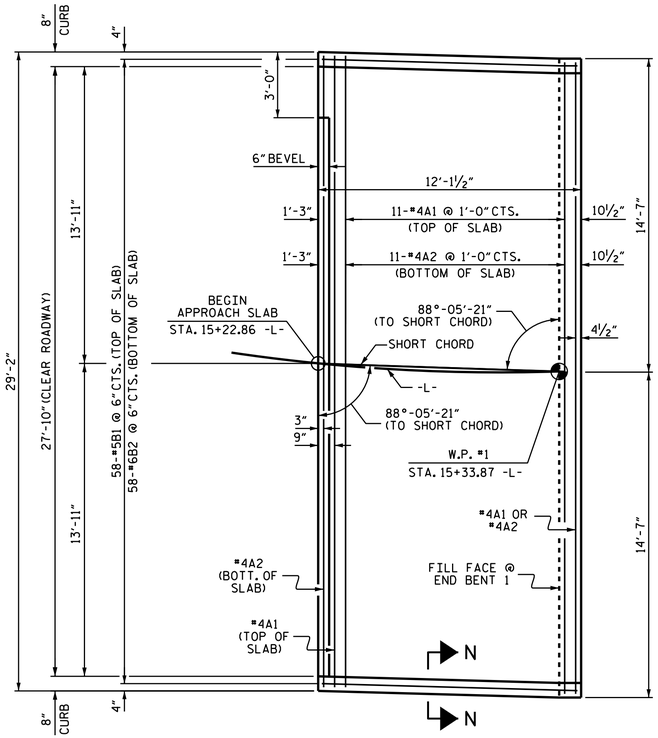

PLAN @ END BENT 1

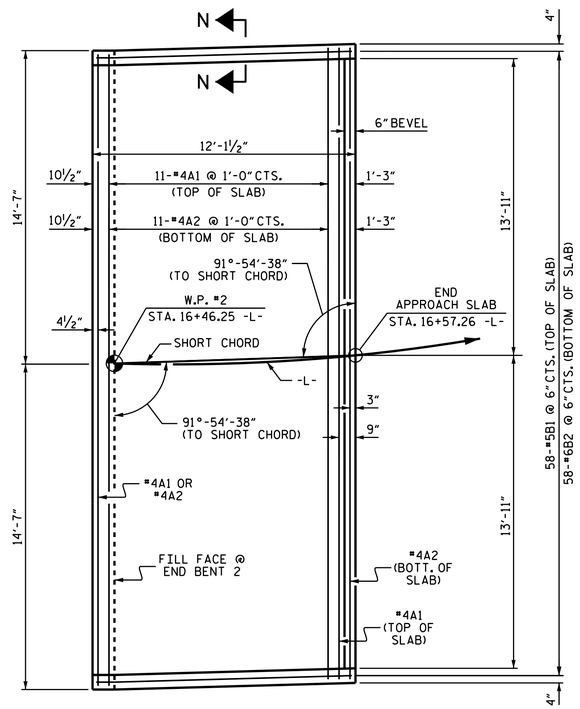

PLAN @ END BENT 2

DIMENSIONS SHOWN ARE TYPICAL FOR BOTH APPROACH SLABS

NOTES

FOR BRIDGE APPROACH FILL INCLUDING GEOTEXTILE, 4"Ø DRAINAGE PIPE, AND #78M STONE BACKFILL, SEE ROADWAY PLANS.

GEOTEXTILE SHALL BE TYPE 1 IN ACCORDANCE WITH THE STANDARD SPECIFICATIONS SECTION 1056.

#78M STONE BACKFILL (CLASS V SELECT MATERIAL) SHALL BE IN ACCORDANCE WITH STANDARD SPECIFICATIONS SECTION 1016.

#78M STONE BACKFILL IS TO BE CONTINUOUS ALONG FILL FACE OF BACKWALL FROM OUTSIDE EDGE TO OUTSIDE EDGE OF APPROACH SLAB.

FOR THE 4"Ø DRAINAGE PIPE OUTLET(S), SEE ROADWAY STANDARD DRAWINGS.

AREA BETWEEN THE WINGWALL AND APPROACH SLAB SHALL BE GRADED TO DRAIN THE WATER AWAY FROM THE FILL FACE OF THE BRIDGE AND SHALL BE PAVED. SEE ROADWAY PLANS.

APPROACH SLAB GROOVING IS NOT REQUIRED.

BILL OF MATERIAL

APPROACH SLAB AT EB 1

BAR	NO.	SIZE	TYPE	LENGTH	WEIGHT
* A1	13	#4	STR	28'-10"	250
A2	13	#4	STR	28'-10"	250
* B1	58	#5	STR	11'-2"	676
B2	58	#6	STR	11'-8"	1016
REINFORCING STEEL				LBS.	1,266
* EPOXY COATED REINFORCING STEEL				LBS.	926
CLASS AA CONCRETE				C. Y.	17.1

APPROACH SLAB AT EB 2

BAR	NO.	SIZE	TYPE	LENGTH	WEIGHT
* A1	13	#4	STR	28'-10"	250
A2	13	#4	STR	28'-10"	250
* B1	58	#5	STR	11'-2"	676
B2	58	#6	STR	11'-8"	1016
REINFORCING STEEL				LBS.	1,266
* EPOXY COATED REINFORCING STEEL				LBS.	926
CLASS AA CONCRETE				C. Y.	18.3

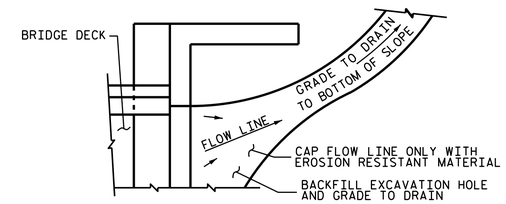

NOTE: IF THE APPROACH SLAB IS NOT CONSTRUCTED IMMEDIATELY AFTER THE BACKFILLING OF THE END BENT EXCAVATION, GRADE TO DRAIN TO THE BOTTOM OF THE SLOPE AND PROVIDE EROSION RESISTANT MATERIAL, SUCH AS FIBERGLASS ROVING OR AS DIRECTED BY THE ENGINEER TO PREVENT SOIL EROSION AND TO PROTECT THE AREA ADJACENT TO THE STRUCTURE. THE CONTRACTOR WILL BE REQUIRED TO REMOVE THESE MATERIALS PRIOR TO CONSTRUCTION OF THE APPROACH SLAB.

TEMPORARY DRAINAGE DETAIL

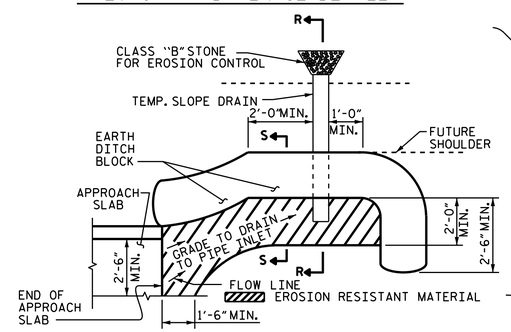

NOTE: IMMEDIATELY AFTER THE CONSTRUCTION OF THE APPROACH SLAB, THE CONTRACTOR SHALL PROVIDE TEMPORARY BERM AND SLOPE DRAIN. CONTRACTOR SHALL GRADE TO PIPE INLET AND PROVIDE EROSION RESISTANT MATERIAL AS SHOWN. THE EROSION RESISTANT MATERIAL SHALL BE EITHER 1) ASPHALT PLANT MIX, TYPE 1 OR TYPE 2, MIN. 2" DEPTH, 2) EROSION CONTROL MAT, OR 3) CONCRETE, AS DIRECTED BY THE ENGINEER. THE SLOPE DRAIN SHALL CONSIST OF A NON-PERFORATED TEMPORARY DRAINAGE PIPE, 12 INCHES IN DIAMETER.

PLAN VIEW

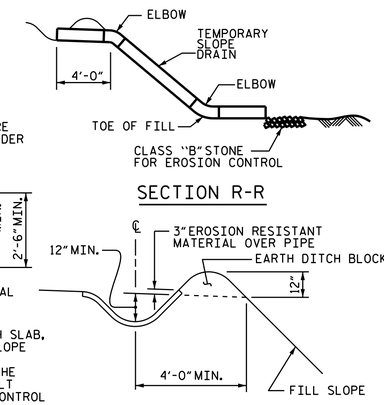

SECTION R-R

SECTION S-S

TEMPORARY BERM AND SLOPE DRAIN DETAILS

(TO BE USED WHEN SHOULDER BERM GUTTER IS REQUIRED)

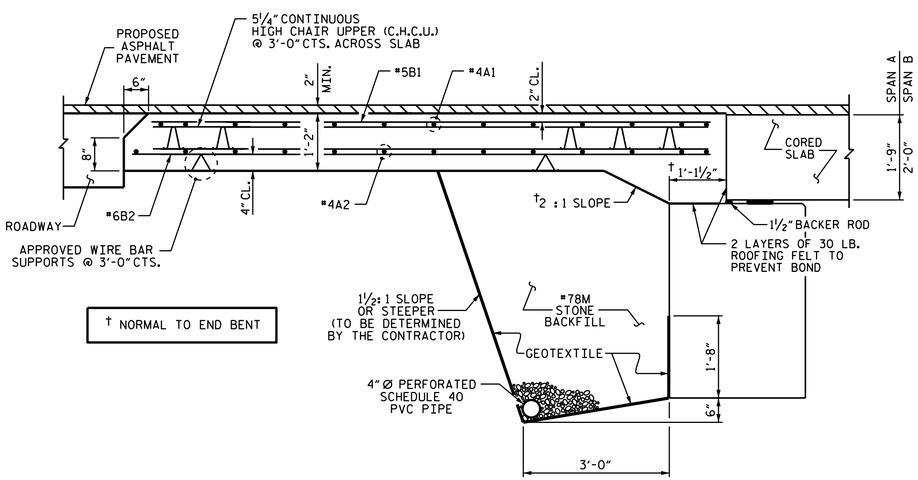

SECTION THRU SLAB

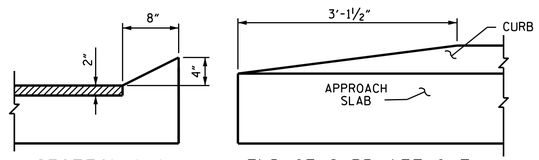

SECTION N-N

END OF CURB WITHOUT SHOULDER BERM GUTTER

CURB DETAILS

SPLICE LENGTHS		
BAR SIZE	EPOXY COATED	UNCOATED
#4	2'-0"	1'-9"
#5	2'-6"	2'-2"
#6	3'-10"	2'-7"

PROJECT NO. 17BP.12.R.26

CATAWBA COUNTY

STATION: 15+90.06 -L-

STATE OF NORTH CAROLINA
DEPARTMENT OF TRANSPORTATION
RALEIGH

STANDARD
BRIDGE APPROACH SLAB
FOR PRESTRESSED CONCRETE
CORED SLAB UNIT
(SUB-REGIONAL TIER)
90° SKEW

NORTH CAROLINA PROFESSIONAL SEAL 031480 ENGINEER DONALD R. SMITH, JR.

DocuSigned by: Donald R. Smith, Jr
EDC87706174840...
3/8/2016

DOCUMENT NOT CONSIDERED FINAL UNLESS ALL SIGNATURES COMPLETED

REVISIONS							
NO.	BY:	DATE:	NO.	BY:	DATE:	SHEET NO.	S-18
1			3			TOTAL SHEETS	18
2			4				

STD. NO. BAS_30_90S

ASSEMBLED BY :	M.E.GILES	DATE :	1/16/14
CHECKED BY :	R.P.PATEL	DATE :	1/27/14
DRAWN BY : SHS/MAA	5-09	REV. 12-11	MAA/AAC
CHECKED BY : BCH	5-09		

08-MAR-2016 11:22
S:\DPG3\DivisionLets\Div12\17BP12R26\Plans\17BP12R26_SD_AS_01.dgn
jdhawk

STANDARD NOTES

DESIGN DATA:

SPECIFICATIONS	A.A.S.H.T.O. (CURRENT)
LIVE LOAD	SEE PLANS
IMPACT ALLOWANCE	SEE A.A.S.H.T.O.
STRESS IN EXTREME FIBER OF	
STRUCTURAL STEEL - AASHTO M270 GRADE 36	20,000 LBS. PER SQ. IN.
- AASHTO M270 GRADE 50W	27,000 LBS. PER SQ. IN.
- AASHTO M270 GRADE 50	27,000 LBS. PER SQ. IN.
REINFORCING STEEL IN TENSION	
GRADE 60	24,000 LBS. PER SQ. IN.
CONCRETE IN COMPRESSION	1,200 LBS. PER SQ. IN.
CONCRETE IN SHEAR	SEE A.A.S.H.T.O.
STRUCTURAL TIMBER - TREATED OR	
UNTREATED - EXTREME FIBER STRESS	1,800 LBS. PER SQ. IN.
COMPRESSION PERPENDICULAR TO GRAIN OF TIMBER	375 LBS. PER SQ. IN.
EQUIVALENT FLUID PRESSURE OF EARTH	30 LBS. PER CU. FT. (MINIMUM)

MATERIAL AND WORKMANSHIP:

EXCEPT AS MAY OTHERWISE BE SPECIFIED ON PLANS OR IN THE SPECIAL PROVISIONS, ALL MATERIAL AND WORKMANSHIP SHALL BE IN ACCORDANCE WITH THE 2012 "STANDARD SPECIFICATIONS FOR ROADS AND STRUCTURES" OF THE N. C. DEPARTMENT OF TRANSPORTATION.

STEEL SHEET PILING FOR PERMANENT OR TEMPORARY APPLICATIONS SHALL BE HOT ROLLED.

CONCRETE:

UNLESS OTHERWISE REQUIRED ON PLANS, CLASS A CONCRETE SHALL BE USED FOR ALL PORTIONS OF ALL STRUCTURES WITH THE EXCEPTION THAT: CLASS AA CONCRETE SHALL BE USED IN BRIDGE SUPERSTRUCTURES, ABUTMENT BACKWALLS, AND APPROACH SLABS; AND CLASS B CONCRETE SHALL BE USED FOR SLOPE PROTECTION AND RIP RAP.

CONCRETE CHAMFERS:

UNLESS OTHERWISE NOTED ON THE PLANS, ALL EXPOSED CORNERS ON STRUCTURES SHALL BE CHAMFERED 3/4" WITH THE FOLLOWING EXCEPTIONS: TOP CORNERS OF CURBS MAY BE ROUNDED TO 1-1/2" RADIUS WHICH IS BUILT INTO CURB FORMS; CORNERS OF TRANSVERSE FLOOR EXPANSION JOINTS SHALL BE ROUNDED WITH A 1/4" FINISHING TOOL UNLESS OTHERWISE REQUIRED ON PLANS; AND CORNERS OF EXPANSION JOINTS IN THE ROADWAY FACES AND TOPS OF CURBS AND SIDEWALKS SHALL BE ROUNDED TO A 1/4" RADIUS WITH A FINISHING STONE OR TOOL UNLESS OTHERWISE REQUIRED ON PLANS.

DOWELS:

DOWELS WHEN INDICATED ON PLANS AS FOR CULVERT EXTENSIONS, SHALL BE EMBEDDED AT LEAST 12" INTO THE OLD CONCRETE AND GROUTED INTO PLACE WITH 1:2 CEMENT MORTAR.

ALLOWANCE FOR DEAD LOAD DEFLECTION, SETTLEMENT, ETC. IN CASTING SUPERSTRUCTURES:

BRIDGES SHALL BE BUILT ON THE GRADE OR VERTICAL CURVE SHOWN ON PLANS. SLABS, CURBS AND PARAPETS SHALL CONFORM TO THE GRADE OR CURVE.

ALL DIMENSIONS WHICH ARE GIVEN IN SECTION AND ARE AFFECTED BY DEAD LOAD DEFLECTIONS ARE DIMENSIONS AT CENTER LINE OF BEARING UNLESS OTHERWISE NOTED ON PLANS. IN SETTING FORMS FOR STEEL BEAM BRIDGES AND PRESTRESSED CONCRETE GIRDER BRIDGES, ADJUSTMENTS SHALL BE MADE DUE TO THE DEAD LOAD DEFLECTIONS FOR THE ELEVATIONS SHOWN. WHERE BLOCKS ARE SHOWN OVER BEAMS FOR BUILDING UP TO THE SLAB, THE VERTICAL DIMENSIONS OF THE BLOCKS SHALL BE ADJUSTED BETWEEN BEARINGS TO COMPENSATE FOR DEAD LOAD DEFLECTIONS, VERTICAL CURVE ORDINATE, AND ACTUAL BEAM CAMBER. WHERE BOTTOM OF SLAB IS IN LINE WITH BOTTOM OF TOP FLANGES, DEPTH OF SLAB BETWEEN BEARINGS SHALL BE ADJUSTED TO COMPENSATE FOR DEAD LOAD DEFLECTION, VERTICAL CURVE ORDINATE, AND ACTUAL BEAM CAMBER.

IN SETTING FALSEWORK AND FORMS FOR REINFORCED CONCRETE SPANS, AN ALLOWANCE SHALL BE MADE FOR DEAD LOAD DEFLECTIONS, SETTLEMENT OF FALSEWORK, AND PERMANENT CAMBER WHICH SHALL BE PROVIDED FOR IN ADDITION TO THE ELEVATIONS SHOWN. AFTER REMOVAL OF THE FALSEWORK, THE FINISHED STRUCTURES SHALL CONFORM TO THE PROFILE AND ELEVATIONS SHOWN ON THE PLANS AND CONSTRUCTION ELEVATIONS FURNISHED BY THE ENGINEER.

DETAILED DRAWINGS FOR FALSEWORK OR FORMS FOR BRIDGE SUPERSTRUCTURE AND ANY STRUCTURE OR PARTS OF A STRUCTURE AS NOTED ON THE PLANS SHALL BE SUBMITTED TO THE ENGINEER FOR APPROVAL BEFORE CONSTRUCTION OF THE FALSEWORK OR FORMS IS STARTED.

REINFORCING STEEL:

ALL REINFORCING STEEL SHALL BE DEFORMED. DIMENSIONS RELATIVE TO PLACEMENT OF REINFORCING ARE TO CENTERS OF BARS UNLESS OTHERWISE INDICATED IN THE PLANS. DIMENSIONS ON BAR DETAILS ARE TO CENTERS OF BARS OR ARE OUT TO OUT AS INDICATED ON PLANS.

WIRE BAR SUPPORTS SHALL BE PROVIDED FOR REINFORCING STEEL WHERE INDICATED ON THE PLANS. WHEN BAR SUPPORT PIECES ARE PLACED IN CONTINUOUS LINES, THEY SHALL BE SO PLACED THAT THE ENDS OF THE SUPPORTING WIRES SHALL BE LAPPED TO LOCK LEGS ON ADJOINING PIECES.

STRUCTURAL STEEL:

AT THE CONTRACTOR'S OPTION, HE MAY SUBSTITUTE 7/8" Ø SHEAR STUDS FOR THE 3/4" Ø STUDS SPECIFIED ON THE PLANS. THIS SUBSTITUTION SHALL BE MADE AT THE RATE OF 3 - 7/8" Ø STUDS FOR 4 - 3/4" Ø STUDS, AND STUD SPACING CHANGES SHALL BE MADE AS NECESSARY TO PROVIDE THE SAME EQUIVALENT NUMBER OF 7/8" Ø STUDS ALONG THE BEAM AS SHOWN FOR 3/4" Ø STUDS BASED ON THE RATIO OF 3 - 7/8" Ø STUDS FOR 4 - 3/4" Ø STUDS. STUDS OF THE LENGTH SPECIFIED ON THE PLANS MUST BE PROVIDED. THE MAXIMUM SPACING SHALL BE 2'-0".

EXCEPT AT THE INTERIOR SUPPORTS OF CONTINUOUS BEAMS WHERE THE COVER PLATE IS IN CONTACT WITH BEARING PLATE, THE CONTRACTOR MAY, AT HIS OPTION, SUBSTITUTE FOR THE COVER PLATES DESIGNATED ON THE PLANS COVER PLATES OF THE EQUIVALENT AREA PROVIDED THESE PLATES ARE AT LEAST 5/16" IN THICKNESS AND DO NOT EXCEED A WIDTH EQUAL TO THE FLANGE WIDTH LESS 2" OR A THICKNESS EQUAL TO 2 TIMES THE FLANGE THICKNESS. THE SIZE OF FILLET WELDS SHALL CONFORM TO THE REQUIREMENTS OF THE CURRENT ANSI/AASHTO/AWS "BRIDGE WELDING CODE". ELECTROSLAG WELDING WILL NOT BE PERMITTED.

WITH THE SOLE EXCEPTION OF EDGES AT SURFACES WHICH BEAR ON OTHER SURFACES, ALL SHARP EDGES AND ENDS OF SHAPES AND PLATES SHALL BE SLIGHTLY ROUNDED BY SUITABLE MEANS TO A RADIUS OF APPROXIMATELY 1/16 INCH OR EQUIVALENT FLAT SURFACE AT A SUITABLE ANGLE PRIOR TO PAINTING, GALVANIZING, OR METALLIZING.

HANDRAILS AND POSTS:

METAL STANDARDS AND FACES OF THE CONCRETE END POSTS FOR THE METAL RAIL SHALL BE SET NORMAL TO THE GRADE OF THE CURB, UNLESS OTHERWISE SHOWN ON PLANS. THE METAL RAIL AND TOPS OF CONCRETE POSTS USED WITH THE ALUMINUM RAIL SHALL BE BUILT PARALLEL TO THE GRADE OF THE CURB.

METAL HANDRAILS SHALL BE IN ACCORDANCE WITH THE PLANS. RAILS SHALL BE AS MANUFACTURED FOR BRIDGE RAILING. CASTINGS SHALL BE OF A UNIFORM APPEARANCE. FINS AND OTHER DEFORMATIONS RESULTING FROM CASTING OR OTHERWISE SHALL BE REMOVED IN A MANNER SO THAT A UNIFORM COLORING OF THE COMPLETED CASTING SHALL BE OBTAINED. CASTINGS WITH DISCOLORATIONS OR OF NON-UNIFORM COLORING WILL NOT BE ACCEPTED. CERTIFIED MILL REPORTS ARE REQUIRED FOR METAL RAILS AND POSTS.

SPECIAL NOTES:

GENERALLY, IN CASE OF DISCREPANCY, THIS STANDARD SHEET OF NOTES SHALL GOVERN OVER THE SPECIFICATIONS, BUT THE REMAINDER OF THE PLANS SHALL GOVERN OVER NOTES HEREON, AND SPECIAL PROVISIONS SHALL GOVERN OVER ALL. SEE SPECIFICATIONS ARTICLE 105-4.

ENGLISH

JANUARY, 1990

STD. NO. SN