This electronic collection of documents is provided for the convenience of the user and is Not a Certified Document –

The documents contained herein were originally issued and sealed by the individuals whose names and license numbers appear on each page, on the dates appearing with their signature on that page.
This file or an individual page shall not be considered a certified document.

09/08/99

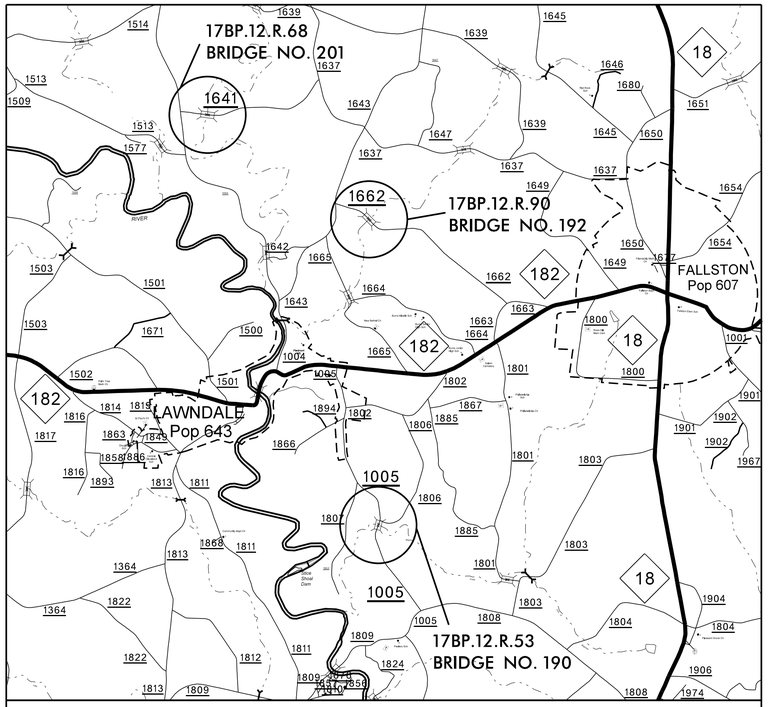

VICINITY MAP
(NOT TO SCALE)

STATE OF NORTH CAROLINA
DIVISION OF HIGHWAYS

CLEVELAND COUNTY

TYPE OF WORK: GRADING, DRAINAGE, PAVING, EROSION CONTROL, STRUCTURE & TRAFFIC CONTROL

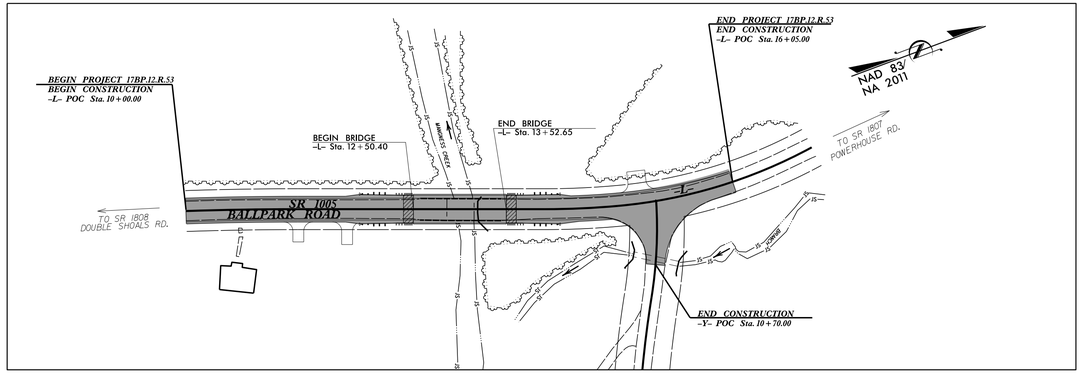

17BP.12.R.53 LOCATION SKETCH BRIDGE NO. 190

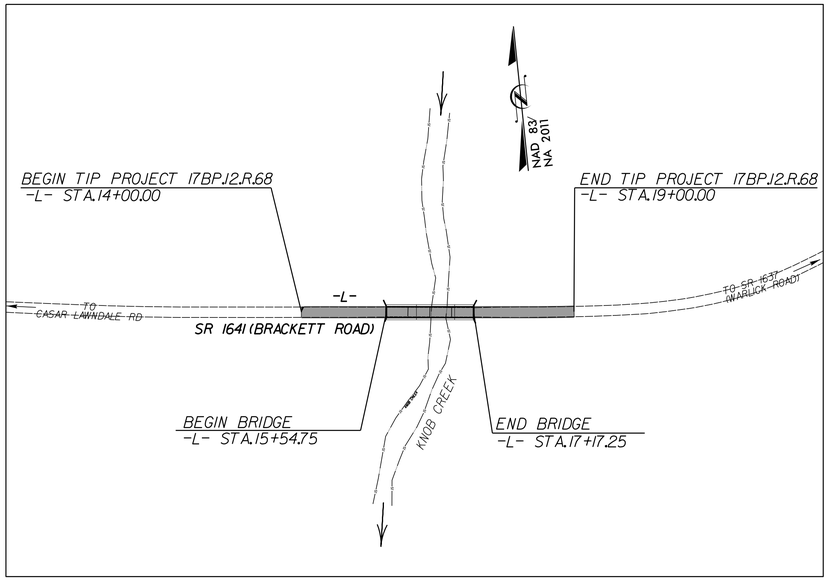

17BP.12.R68 LOCATION SKETCH BRIDGE NO. 201

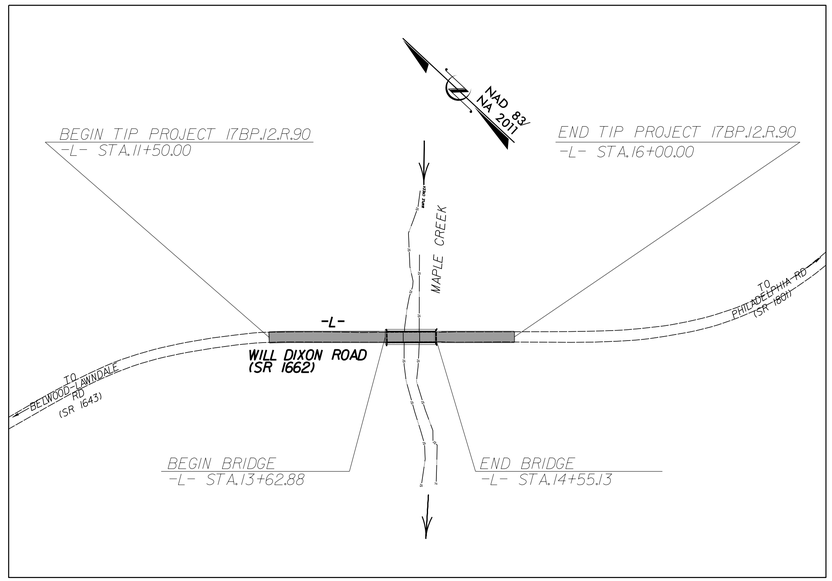

17BP.12.R.90 LOCATION SKETCH BRIDGE NO. 192

CONTRACT: DL00167

19-APR-2018 14:22
S:\DOC\District I\Cleveland\lawndale bridges\DL00167_Rdy_tsh.dgn
$$$$USERNAME$$$$

DocuSign Envelope ID: A47F62F4-20C2-46E7-9AED-CBD1A4561238

09/08/99

TIP PROJECT: 17BP.12.R.53

CONTRACT: DL00167

See Sheet 1-A For Index of Sheets
See Sheet 1-B For Conventional Symbols

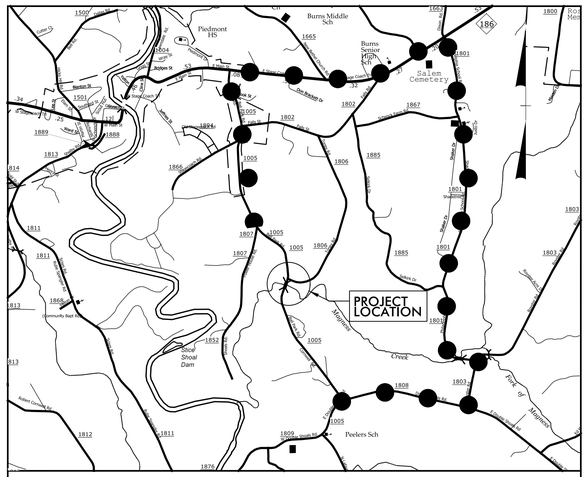

VICINITY MAP

DETOUR ROUTE

STATE OF NORTH CAROLINA
DIVISION OF HIGHWAYS

CLEVELAND COUNTY

STATE	STATE PROJECT REFERENCE NO.	SHEET NO.	TOTAL SHEETS
N.C.	17BP.12.R.53	1	

STATE PROJ. NO.	F. A. PROJ. NO.	DESCRIPTION
17BP.12.R.53		PE, R/W, UTILITY & CONST.

LOCATION: ***STRUCTURE NO. 190 OVER MANGNESS CREEK ON SR 1005***

TYPE OF WORK: GRADING, DRAINAGE, PAVING, & STRUCTURE

NC GRID NAD 83 NA 2011

4

BEGIN PROJECT 17BP.12.R.53
BEGIN CONSTRUCTION
–L– POC Sta. 10 + 00.00

END PROJECT 17BP.12.R.53
END CONSTRUCTION
–L– POC Sta. 16 + 05.00

BEGIN BRIDGE
–L– Sta. 12 + 50.40

END BRIDGE
–L– Sta. 13 + 52.65

MANGNESS CREEK

SR 1005
BALLPARK ROAD

TO SR 1808
DOUBLE SHOALS RD.

TO SR 1807
POWERHOUSE RD.

END CONSTRUCTION
–Y– POC Sta. 10 + 70.00

DOCUMENT NOT CONSIDERED FINAL UNLESS ALL SIGNATURES COMPLETED

GRAPHIC SCALES

50 25 0 50 100
PLANS

50 25 0 50 100
PROFILE (HORIZONTAL)

10 5 0 10 20
PROFILE (VERTICAL)

DESIGN DATA

ADT 2014 = 2,400 VPD
V = 40 MPH
FUNC CLASS = R. LOCAL
SUBREGIONAL TIER

PROJECT LENGTH

LENGTH ROADWAY PROJECT 17BP.12.R.53 = 0.096 MI
LENGTH STRUCTURE PROJECT 17BP.12.R.53 = 0.019 MI
TOTAL LENGTH OF PROJECT 17BP.12.R.53 = 0.115 MI

NCDOT CONTACT: STEVE RACKLEY, PE
DIVISION 12

Prepared In the Office of:
Michael Baker INTERNATIONAL
Michael Baker Engineering, Inc.
8000 Regency Parkway, Suite 600
Cary, NC 27518
Professional Corporation License Number: F-1084

2018 STANDARD SPECIFICATIONS

RIGHT OF WAY DATE: JANUARY 10, 2017

LETTING DATE: MAY 22, 2018

TODD H. BUCKNER, PE
PROJECT ENGINEER

SUE FLOWERS
PROJECT DESIGN ENGINEER

HYDRAULICS ENGINEER
NORTH CAROLINA PROFESSIONAL SEAL 28639 ENGINEER STEVEN D SWYGERT
DocuSigned by: Steve Swygert B29900704CE540F...
4/24/2018
P.E.
SIGNATURE:

ROADWAY DESIGN ENGINEER
NORTH CAROLINA PROFESSIONAL SEAL 034367 ENGINEER TODD H BUCKNER
DocuSigned by: 10B7D11E87F643F...
4/24/2018
P.E.
SIGNATURE:

STATE OF NORTH CAROLINA • DEPARTMENT OF TRANSPORTATION •

4/23/2018 7:27:05 AM
R:\17BP.12.R.53\Roadway\Proj\17BP.12.R.53_RDY_TSH_01.dgn
USER: todd.buckner

DocuSign Envelope ID: A47F62F4-20C2-46E7-9AED-CBD1A4561238

8/17/99

DOCUMENT NOT CONSIDERED FINAL UNLESS ALL SIGNATURES COMPLETED

PROJECT REFERENCE NO.	SHEET NO.
17BP.12.R.53	1–A

ROADWAY DESIGN ENGINEER

NORTH CAROLINA PROFESSIONAL SEAL 034367 ENGINEER TODD H. BUCKNER

DocuSigned by:
[signature]
1987D1187B79435...
4/24/2018

Michael Baker Engineering, Inc.
Michael Baker INTERNATIONAL
8000 Regency Pkwy Suite 600 Cary, NC 27518
NC License: F-1054

INDEX OF SHEETS

SHEET NUMBER	SHEET
1	TITLE SHEET
1A	INDEX OF SHEETS, GENERAL NOTES, AND STANDARD DRAWINGS
1B	CONVENTIONAL PLAN SHEET SYMBOLS
1C–1	SURVEY CONTROL SHEET
1D–1	PROPOSED ALIGNMENT CONTROL SHEET
1E–1	RIGHT OF WAY CONTROL SHEET
RW–1	RIGHT OF WAY EASEMENTS AND PROPERTY TITLE SHEET
RW–4	RIGHT OF WAY EASEMENTS AND PROPERTY
2A–1	TYPICAL SECTIONS
2D–1	GUARDRAIL ANCHOR UNIT DETAIL
2D–2	GUARDRAIL END UNIT DETAIL
3B–1	SUMMARY OF QUANTITIES
4	ROADWAY PLAN AND PROFILE SHEET
TMP–1 THRU TMP–3	TRANSPORTATION MANAGEMENT PLANS
PMP–1	PAVEMENT MARKING PLAN
EC–1 THRU EC–5	EROSION CONTROL PLANS
UO–1 THRU UO–2	UTILITIES BY OTHERS PLANS
X–1	CROSS SECTION SUMMARY SHEET
X–2 THRU X–7	CROSS SECTIONS
S–1 THRU S–14	STRUCTURES PLANS
SN	STRUCTURE STANDARD NOTES

GENERAL NOTES

GENERAL NOTES: 2018 SPECIFICATIONS

EFFECTIVE: 01–16–18
REVISED:

GRADE LINE:
GRADING AND SURFACING:

THE GRADE LINES SHOWN DENOTE THE FINISHED ELEVATION OF THE PROPOSED SURFACING AT GRADE POINTS SHOWN ON THE TYPICAL SECTIONS. GRADE LINES MAY BE ADJUSTED AT THEIR BEGINNING AND ENDING AND AT STRUCTURES AS DIRECTED BY THE ENGINEER IN ORDER TO SECURE A PROPER TIE–IN.

CLEARING:

CLEARING ON THIS PROJECT SHALL BE PERFORMED TO THE LIMITS ESTABLISHED BY METHOD III.

SUPERELEVATION:

ALL CURVES ON THIS PROJECT SHALL BE SUPERELEVATED IN ACCORDANCE WITH STD. NO. 225.04 USING THE RATE OF SUPERELEVATION AND RUNOFF SHOWN ON THE PLANS. SUPERELEVATION IS TO BE REVOLVED ABOUT THE GRADE POINTS SHOWN ON THE TYPICAL SECTIONS.

SHOULDER CONSTRUCTION:

ASPHALT, EARTH, AND CONCRETE SHOULDER CONSTRUCTION ON THE HIGH SIDE OF SUPERELEVATED CURVES SHALL BE IN ACCORDANCE WITH STD. NO. 560.01.

GUARDRAIL:

THE GUARDRAIL LOCATIONS SHOWN ON THE PLANS MAY BE ADJUSTED DURING CONSTRUCTION AS DIRECTED BY THE ENGINEER. THE CONTRACTOR SHOULD CONSULT WITH THE ENGINEER PRIOR TO ORDERING GUARDRAIL MATERIAL.

SUBSURFACE PLANS:

SUBSURFACE PLANS ARE AVAILABLE FOR STRUCTURES ONLY.

END BENTS:

THE ENGINEER SHALL CHECK THE STRUCTURE END BENT PLANS, DETAILS, AND CROSS–SECTION PRIOR TO SETTING OF THE SLOPE STAKES FOR THE EMBANKMENT OR EXCAVATION APPROACHING A BRIDGE.

UTILITIES:

UTILITY OWNERS ON THIS PROJECT ARE ONE CALL: RUTHERFORD EMC AND AT&T.

ANY RELOCATION OF EXISTING UTILITIES WILL BE ACCOMPLISHED BY OTHERS.

RIGHT–OF–WAY MARKERS:

ALL RIGHT–OF–WAY MARKERS ON THIS PROJECT SHALL BE PLACED BY CONTRACT.

STANDARD DRAWINGS

2018 ROADWAY ENGLISH STANDARD DRAWINGS

The following Roadway Standards as appear in "Roadway Standard Drawings" Highway Design Branch – N. C. Department of Transportation – Raleigh, N. C., Dated January, 2018 are applicable to this project and by reference hereby are considered a part of these plans:

STD.NO.	TITLE
DIVISION 2 – EARTHWORK	
200.03	Method of Clearing – Method III
225.02	Guide for Grading Subgrade – Secondary and Local
225.04	Method of Obtaining Superelevation – Two Lane Pavement
DIVISION 3 – PIPE CULVERTS	
300.01	Method of Pipe Installation
DIVISION 4 – MAJOR STRUCTURES	
422.02	Bridge Approach Fills – Type II Modified Approach Fill
DIVISION 5 – SUBGRADE, BASES AND SHOULDERS	
560.01	Method of Shoulder Construction – High Side of Superelevated Curve – Method I
DIVISION 8 – INCIDENTALS	
840.00	Concrete Base Pad for Drainage Structures
840.14	Concrete Drop Inlet – 12" thru 30" Pipe
840.15	Brick Drop Inlet – 12" thru 30" Pipe
840.24	Frames and Narrow Slot Sag Grates
840.25	Anchorage for Frames – Brick or Concrete or Precast
840.45	Precast Drainage Structure
840.66	Drainage Structure Steps
862.01	Guardrail Placement
862.02	Guardrail Installation
866.02	Woven Wire Fence – with Wood Post
876.02	Guide for Rip Rap at Pipe Outlets
876.04	Drainage Ditches with Class 'B' Rip Rap

23-APR-2018 07:27
P:\Roadway\Proj\17BP.12.R.53_RDY_PSH_01A.dgn
$$$$USERNAME$$$$

DocuSign Envelope ID: A47F62F4-20C2-46E7-9AED-CBD1A4561238

12/2/2016

PROJECT REFERENCE NO.	SHEET NO.
17BP.12.R.53	1B

STATE OF NORTH CAROLINA, DIVISION OF HIGHWAYS

CONVENTIONAL PLAN SHEET SYMBOLS

Note: Not to Scale **S.U.E. = Subsurface Utility Engineering*

BOUNDARIES AND PROPERTY:

- State Line
- County Line
- Township Line
- City Line
- Reservation Line
- Property Line
- Existing Iron Pin — EIP
- Computed Property Corner
- Property Monument — ECM
- Parcel/Sequence Number — 123
- Existing Fence Line
- Proposed Woven Wire Fence
- Proposed Chain Link Fence
- Proposed Barbed Wire Fence
- Existing Wetland Boundary — WLB
- Proposed Wetland Boundary — WLB
- Existing Endangered Animal Boundary — EAB
- Existing Endangered Plant Boundary — EPB
- Existing Historic Property Boundary — HPB
- Known Contamination Area: Soil — S
- Potential Contamination Area: Soil — S
- Known Contamination Area: Water — W
- Potential Contamination Area: Water — W
- Contaminated Site: Known or Potential

BUILDINGS AND OTHER CULTURE:

- Gas Pump Vent or U/G Tank Cap
- Sign — S
- Well — W
- Small Mine
- Foundation
- Area Outline
- Cemetery
- Building
- School
- Church
- Dam

HYDROLOGY:

- Stream or Body of Water
- Hydro, Pool or Reservoir
- Jurisdictional Stream — JS
- Buffer Zone 1 — BZ 1
- Buffer Zone 2 — BZ 2
- Flow Arrow
- Disappearing Stream
- Spring
- Wetland
- Proposed Lateral, Tail, Head Ditch — FLOW
- False Sump

RAILROADS:

- Standard Gauge — CSX TRANSPORTATION
- RR Signal Milepost — MILEPOST 35
- Switch — SWITCH
- RR Abandoned
- RR Dismantled

RIGHT OF WAY & PROJECT CONTROL:

- Secondary Horiz and Vert Control Point
- Primary Horiz Control Point
- Primary Horiz and Vert Control Point
- Exist Permanent Easment Pin and Cap
- New Permanent Easement Pin and Cap
- Vertical Benchmark
- Existing Right of Way Marker
- Existing Right of Way Line
- New Right of Way Line — RW
- New Right of Way Line with Pin and Cap — RW
- New Right of Way Line with Concrete or Granite R/W Marker — RW
- New Control of Access Line with Concrete C/A Marker — CA
- Existing Control of Access — CA
- New Control of Access — CA
- Existing Easement Line — E
- New Temporary Construction Easement — E
- New Temporary Drainage Easement — TDE
- New Permanent Drainage Easement — PDE
- New Permanent Drainage / Utility Easement — DUE
- New Permanent Utility Easement — PUE
- New Temporary Utility Easement — TUE
- New Aerial Utility Easement — AUE

ROADS AND RELATED FEATURES:

- Existing Edge of Pavement
- Existing Curb
- Proposed Slope Stakes Cut — C
- Proposed Slope Stakes Fill — F
- Proposed Curb Ramp — CR
- Existing Metal Guardrail
- Proposed Guardrail
- Existing Cable Guiderail
- Proposed Cable Guiderail
- Equality Symbol
- Pavement Removal

VEGETATION:

- Single Tree
- Single Shrub
- Hedge
- Woods Line
- Orchard
- Vineyard — Vineyard

EXISTING STRUCTURES:

MAJOR:

- Bridge, Tunnel or Box Culvert — CONC
- Bridge Wing Wall, Head Wall and End Wall — CONC WW

MINOR:

- Head and End Wall — CONC HW
- Pipe Culvert
- Footbridge
- Drainage Box: Catch Basin, DI or JB — CB
- Paved Ditch Gutter
- Storm Sewer Manhole — S
- Storm Sewer — S

UTILITIES:

POWER:

- Existing Power Pole
- Proposed Power Pole
- Existing Joint Use Pole
- Proposed Joint Use Pole
- Power Manhole — P
- Power Line Tower
- Power Transformer
- U/G Power Cable Hand Hole
- H–Frame Pole
- U/G Power Line LOS B (S.U.E.*) — P
- U/G Power Line LOS C (S.U.E.*) — P
- U/G Power Line LOS D (S.U.E.*) — P

TELEPHONE:

- Existing Telephone Pole
- Proposed Telephone Pole
- Telephone Manhole — T
- Telephone Pedestal — T
- Telephone Cell Tower
- U/G Telephone Cable Hand Hole — HH
- U/G Telephone Cable LOS B (S.U.E.*) — T
- U/G Telephone Cable LOS C (S.U.E.*) — T
- U/G Telephone Cable LOS D (S.U.E.*) — T
- U/G Telephone Conduit LOS B (S.U.E.*) — TC
- U/G Telephone Conduit LOS C (S.U.E.*) — TC
- U/G Telephone Conduit LOS D (S.U.E.*) — TC
- U/G Fiber Optics Cable LOS B (S.U.E.*) — T FO
- U/G Fiber Optics Cable LOS C (S.U.E.*) — T FO
- U/G Fiber Optics Cable LOS D (S.U.E.*) — T FO

WATER:

- Water Manhole — W
- Water Meter
- Water Valve
- Water Hydrant
- U/G Water Line LOS B (S.U.E*) — W
- U/G Water Line LOS C (S.U.E*) — W
- U/G Water Line LOS D (S.U.E*) — W
- Above Ground Water Line — A/G Water

TV:

- TV Pedestal — C
- TV Tower
- U/G TV Cable Hand Hole — HH
- U/G TV Cable LOS B (S.U.E.*) — TV
- U/G TV Cable LOS C (S.U.E.*) — TV
- U/G TV Cable LOS D (S.U.E.*) — TV
- U/G Fiber Optic Cable LOS B (S.U.E.*) — TV FO
- U/G Fiber Optic Cable LOS C (S.U.E.*) — TV FO
- U/G Fiber Optic Cable LOS D (S.U.E.*) — TV FO

GAS:

- Gas Valve
- Gas Meter
- U/G Gas Line LOS B (S.U.E.*) — G
- U/G Gas Line LOS C (S.U.E.*) — G
- U/G Gas Line LOS D (S.U.E.*) — G
- Above Ground Gas Line — A/G Gas

SANITARY SEWER:

- Sanitary Sewer Manhole
- Sanitary Sewer Cleanout
- U/G Sanitary Sewer Line — SS
- Above Ground Sanitary Sewer — A/G Sanitary Sewer
- SS Forced Main Line LOS B (S.U.E.*) — FSS
- SS Forced Main Line LOS C (S.U.E.*) — FSS
- SS Forced Main Line LOS D (S.U.E.*) — FSS

MISCELLANEOUS:

- Utility Pole
- Utility Pole with Base
- Utility Located Object
- Utility Traffic Signal Box — S
- Utility Unknown U/G Line LOS B (S.U.E.*) — ?UTL
- U/G Tank; Water, Gas, Oil
- Underground Storage Tank, Approx. Loc. — UST
- A/G Tank; Water, Gas, Oil
- Geoenvironmental Boring
- U/G Test Hole LOS A (S.U.E.*)
- Abandoned According to Utility Records — AATUR
- End of Information — E.O.I.

PROJECT REFERENCE NO.	SHEET NO.
17BP.12.R.53	1C-1
Location and Surveys	

SURVEY CONTROL SHEET

W/ EXISTING CENTERLINE ALIGNMENTS PRIOR TO CONSTRUCTION

DATUM DESCRIPTION

THE LOCALIZED COORDINATE SYSTEM DEVELOPED FOR THIS PROJECT IS BASED ON THE STATE PLANE COORDINATES ESTABLISHED BY NCDOT FOR MONUMENT "GPS 190-2"
WITH NAD 83/NA 2011 STATE PLANE GRID COORDINATES OF
NORTHING: 610055.365(ft) EASTING: 1242287.277(ft)
ELEVATION: 795.44(ft)
THE AVERAGE COMBINED GRID FACTOR USED ON THIS PROJECT (GROUND TO GRID) IS: 0.99984226
THE N.C. LAMBERT GRID BEARING AND LOCALIZED HORIZONTAL GROUND DISTANCE FROM "GPS 190-2" TO -L- STATION 10+00.00 IS
S 23°37'11.0" W 227.206'
ALL LINEAR DIMENSIONS ARE LOCALIZED HORIZONTAL DISTANCES
VERTICAL DATUM USED IS NAVD 88

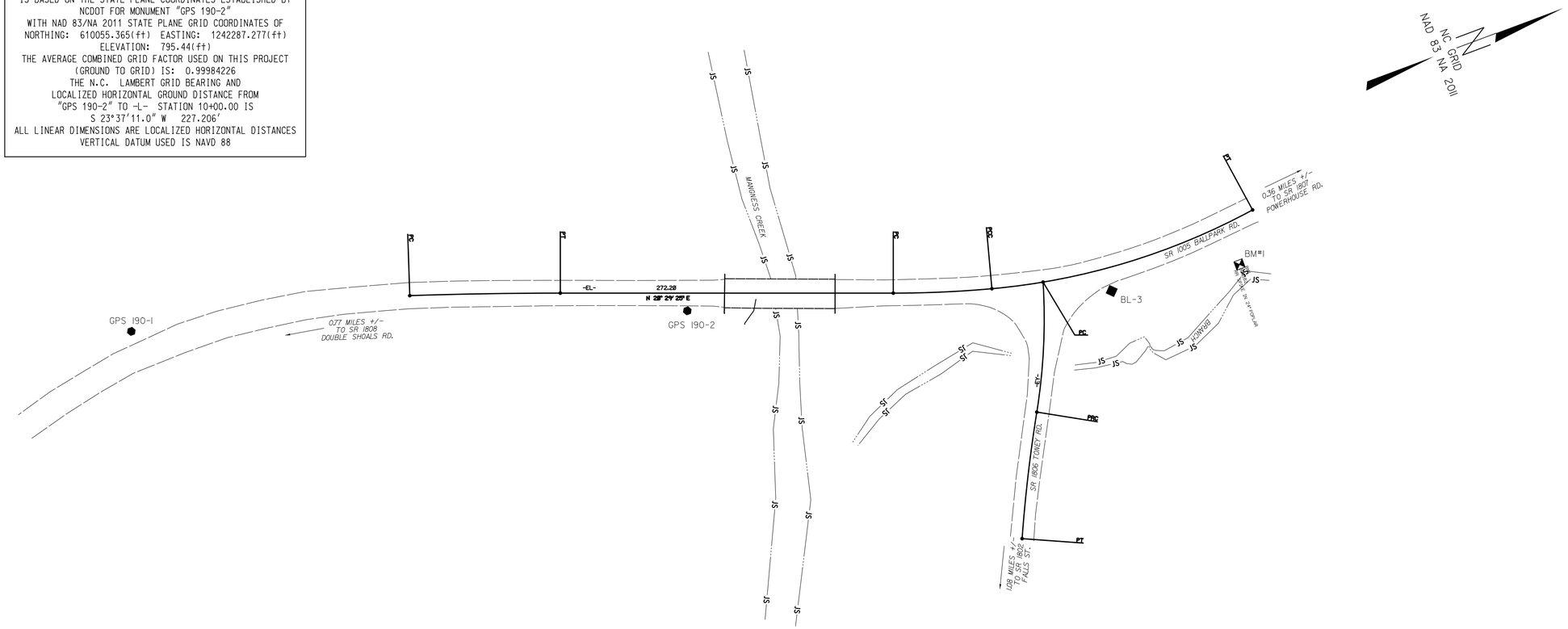

BL

POINT	DESC.	NORTH	EAST	ELEVATION
1	GPS 190-1	609623.7370	1242143.9430	819.26
2	GPS 190-2	610055.3650	1242287.2770	795.44
3	BL-3	610385.9990	1242393.5312	800.29

****
BM1 ELEVATION = 800.82
N 610491 E 1242410
RR SPIKE IN 24" POPLAR
****

EL

POINT	N	E	BEARING	DIST	DELTA	D	L	T	R
PC	609847.194	1242196.244							
CURVE			N 19°32'14.4" E	123.07	01°54'21.0"(RT)	01°32'54.7"	123.07	61.54	3700.00
PT	609963.175	1242237.400							
LINE			N 20°29'24.9" E	272.20					
PC	610218.150	1242332.682							
CURVE			N 17°55'15.5" E	80.69	05°08'18.7"(LT)	06°21'58.3"	80.72	40.38	900.00
PCC	610294.923	1242357.510							
CURVE			N 03°40'31.0" E	222.62	23°21'10.4"(LT)	10°25'02.7"	224.17	113.66	550.00
PT	610294.923	1242357.510							

EY

POINT	N	E	BEARING	DIST	DELTA	D	L	T	R
PC	610336.000	1242367.110							
CURVE			S 66°45'11.5" E	106.35	12°43'14.1"(RT)	11°56'11.8"	106.57	53.50	480.00
PCC	610294.025	1242464.824							
CURVE			S 62°52'47.8" E	104.14	04°58'26.7"(LT)	04°46'28.7"	104.18	52.12	1200.00
PT	610294.025	1242464.824							

NOTES:

1. IF FURTHER INFORMATION REGARDING PROJECT CONTROL IS NEEDED, PLEASE CONTACT THE LOCATION AND SURVEYS UNIT.

2. PROJECT CONTROL WAS ESTABLISHED USING GNSS, THE GLOBAL NAVIGATION SATELLITE SYSTEM.

11/3/17

REVISIONS

26-APR-2018 14:16
C:\Projects\NCDOT\Div 12 On Call\17BP.12.R.53\LocationSurveys\SurveyControlSheets\17BP.12.R.53_ls_1C-1.dgn
$$$$USERNAME$$$$

PROJECT REFERENCE NO.	SHEET NO.
17BP.12.R.53	1D-1
Location and Surveys	

PROPOSED ALIGNMENT CONTROL SHEET

L

TYPE	STATION	NORTH	EAST
PC	10+00.00	609847.1936	1242196.2438
PT	11+23.07	609963.1748	1242237.4000
PC	13+95.27	610218.1496	1242332.6816
PCC	14+75.98	610294.9234	1242357.5099
PT	17+00.16	610517.0888	1242371.7805

Y

TYPE	STATION	NORTH	EAST
PC	10+00.00	610335.9998	1242367.1095
PRC	11+06.57	610294.0246	1242464.8244
PT	12+10.74	610246.5498	1242557.5183

NOTES:

1. IF FURTHER INFORMATION REGARDING PROJECT CONTROL IS NEEDED, PLEASE CONTACT THE LOCATION AND SURVEYS UNIT.

2. PROJECT CONTROL WAS ESTABLISHED USING GNSS, THE GLOBAL NAVIGATION SATELLITE SYSTEM.

REVISIONS

11/3/17

26-APR-2018 14:20
$$$$USERNAME$$$$
C:\Projects\NCDOT\Div 12 On Call\17BP.12.R.53\Location Surveys\Survey Control Sheets\17BP.12.R.53_ls_1D-1.dgn

10/31/17

REVISIONS

$$$$USERNAME$$$$
$$$$SYSTIME$$$$
$$$$DGN$$$$
$$$$
$$$$

TIP PROJECT: 17BP.12.R.53

CONTRACT: _____

STATE OF NORTH CAROLINA
DIVISION OF HIGHWAYS

RIGHT OF WAY, EASEMENTS, AND PROPERTY TIES

CLEVELAND COUNTY

STATE	STATE PROJECT REFERENCE NO.	SHEET NO.	TOTAL SHEETS
N.C.	17BP.12.R.53	RW-1	

STATE PROJ. NO.	F. A. PROJ. NO.	DESCRIPTION



NC GRID NAD 83 NA 2011

LOCATION: STRUCTURE NO. 190 OVER MANGNESS CREEK ON SR 1005

TYPE OF WORK: GRADING, DRAINAGE, PAVING, & STRUCTURE

4

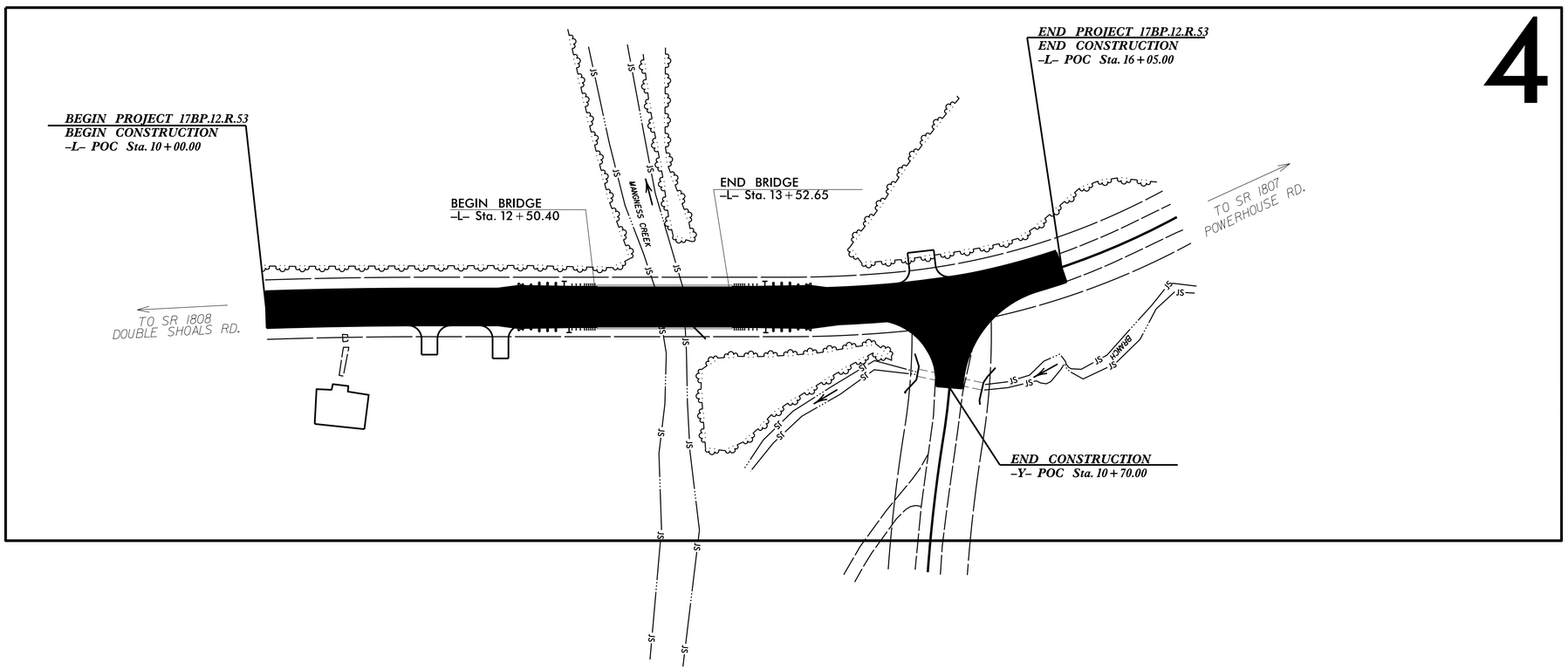

GRAPHIC SCALES

50 25 0 50 100
PLANS

50 25 0 50 100
PROFILE (HORIZONTAL)

10 5 0 10 20
PROFILE (VERTICAL)

DESIGN DATA

ADT 2011 = 2,100 VPD
V = 40 MPH
FUNC CLASS = R. LOCAL
SUBREGIONAL TIER

PROJECT LENGTH

LENGTH ROADWAY PROJECT 17BP.12.R.53	=	0.096 MI
LENGTH STRUCTURE PROJECT 17BP.12.R.53	=	0.019 MI
TOTAL LENGTH OF PROJECT 17BP.12.R.53	=	0.115 MI

Prepared In the Office of:

DIVISION OF HIGHWAYS

1000 Birch Ridge Dr., Raleigh NC, 27610

2012 STANDARD SPECIFICATIONS

RIGHT OF WAY DATE:
JANUARY 10, 2017

LETTING DATE:
JUNE 27, 2017

PROFESSIONAL LAND SURVEYOR

NORTH CAROLINA PROFESSIONAL SEAL L-4775 LAND SURVEYOR MATTHEW T. CORNWELL

SIGNATURE:

STATE OF NORTH CAROLINA • DEPARTMENT OF TRANSPORTATION •

PROJECT REFERENCE NO.	SHEET NO.
17BP.12.R.53	RW-4

Location and Surveys

PROJECT SURVEYOR

NORTH CAROLINA PROFESSIONAL SEAL L-4775 LAND SURVEYOR MATTHEW T. CORNWELL

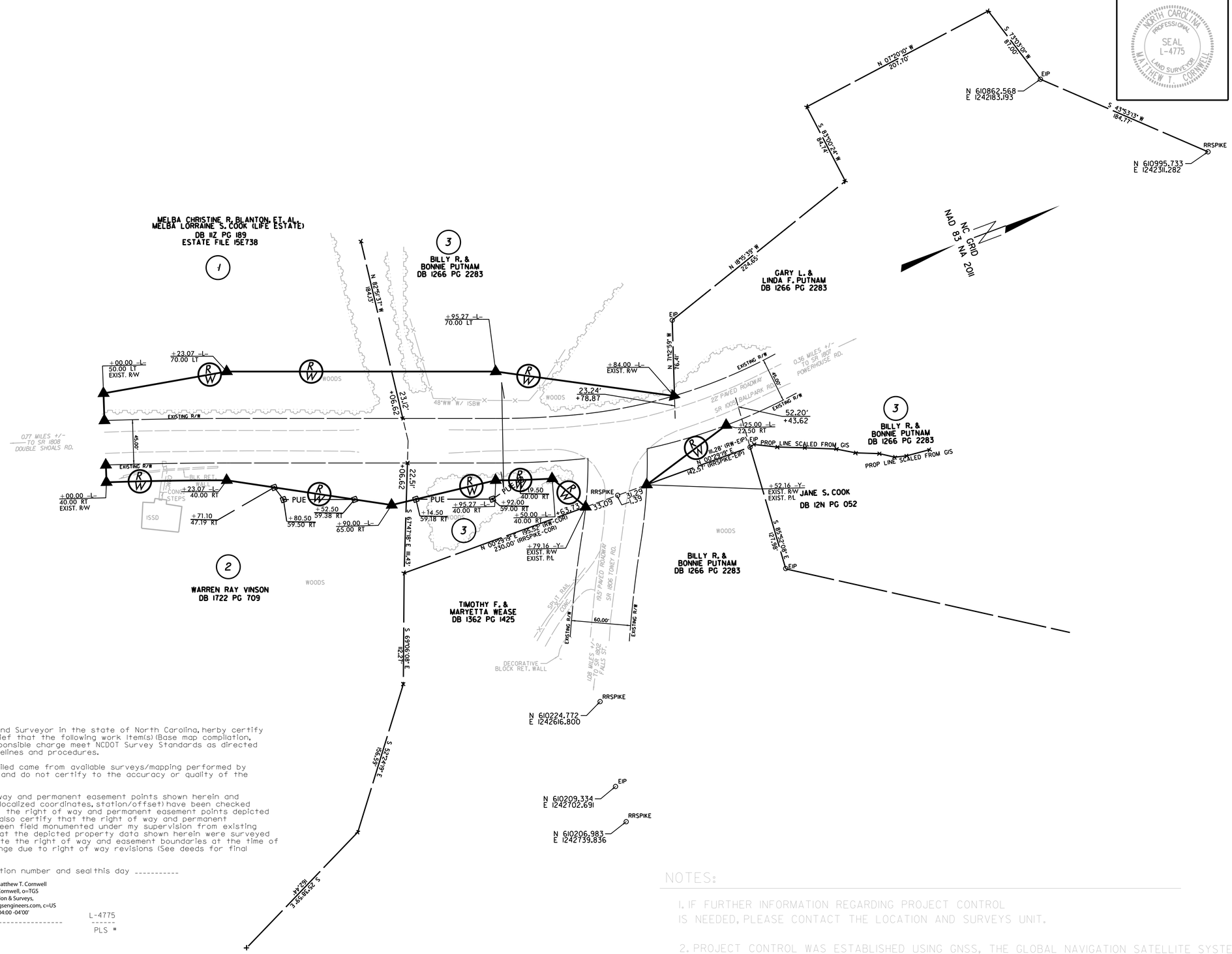

I, Matthew T. Cornwell, a Professional Land Surveyor in the state of North Carolina, herby certify to the best of my knowledge and belief that the following work item(s) (Base map compilation, R/W Staking) performed under my responsible charge meet NCDOT Survey Standards as directed in the NCDOT Location & Surveys guidelines and procedures.

I further certify that the data compiled came from available surveys/mapping performed by others and provided to me by NCDOT and do not certify to the accuracy or quality of the individual data sources.

I further certify that the right of way and permanent easement points shown herein and outlined in the tables shown hereon (localized coordinates, station/offset) have been checked and are accurate representations of the right of way and permanent easement points depicted on the corresponding highway plans. I also certify that the right of way and permanent easement points shown herein have been field monumented under my supervision from existing survey control provided by others; that the depicted property data shown herein were surveyed by others; and these monuments denote the right of way and easement boundaries at the time of staking which may be subject to change due to right of way revisions (See deeds for final determination).

Witness my original signature, registration number and seal this day _____

Matthew T. Cornwell

Digitally signed by Matthew T. Cornwell
DN: cn=Matthew T. Cornwell, o=TGS Engineers, ou=Location & Surveys, email=mcornwell@tgsengineers.com, c=US
Date: 2017.11.03 13:04:00 -04'00'

L-4775

Professional Land Surveyor

PLS #

NOTES:

1. IF FURTHER INFORMATION REGARDING PROJECT CONTROL IS NEEDED, PLEASE CONTACT THE LOCATION AND SURVEYS UNIT.

2. PROJECT CONTROL WAS ESTABLISHED USING GNSS, THE GLOBAL NAVIGATION SATELLITE SYSTEM.

REVISIONS

11/3/17

03-NOV-2017 13:03
S:\Surveyors\Projects\LIB\2017\220190\BACK FROM JEFF\17BP.12.R.53_LS_RW-4.dgn
mcornwell AT MCORNWELL LAPTOP

5/14/99

PROJECT REFERENCE NO.	SHEET NO.
17BP.12.R.53	2A–1
R/W SHEET NO.	

ROADWAY DESIGN ENGINEER

NORTH CAROLINA PROFESSIONAL SEAL 034367 ENGINEER TODD W. BUCKNER

DocuSigned by: 1087011E67F6435...

4/23/2018

PAVEMENT DESIGN ENGINEER

PAVEMENT DESIGN PROVIDED BY DIVISION

Michael Baker Engineering, Inc.
Michael Baker INTERNATIONAL
8000 Regency Pkwy Suite 600 Cary, NC 27518
NC License: F-1084

NC DEPARTMENT OF TRANSPORTATION
PAVEMENT MANAGEMENT UNIT
1593 MAIL SERVICE CENTER
RALEIGH, NC 27699-1593

PAVEMENT SCHEDULE

C1	PROP. APPROX. 1 1/2" ASPHALT CONCRETE SURFACE COURSE, TYPE S9.5B, AT AN AVERAGE RATE OF 168 LBS PER SQ. YARD.	D2	PROP. VAR. DEPTH ASPHALT CONCRETE SURFACE COURSE, TYPE I19.0C, AT AN AVERAGE RATE OF 114 LBS. PER SQ. YARD PER 1" DEPTH TO BE PLACED IN LAYERS NOT LESS THAN 2½" OR GREATER THAN 4" IN DEPTH.	T	EARTH MATERIAL.
C2	PROP. VAR. DEPTH ASPHALT CONCRETE SURFACE COURSE, TYPE S9.5B, AT AN AVERAGE RATE OF 112 LBS. PER SQ. YARD PER 1" DEPTH TO BE PLACED IN LAYERS NOT TO EXCEED 1½" IN DEPTH.	E1	PROP. APPROX. 5½" ASPHALT CONCRETE BASE COURSE, TYPE B25.0C, AT AN AVERAGE RATE OF 627 LBS PER SQ. YARD.	U	EXISTING PAVEMENT.
D1	PROP. APPROX. 4" ASPHALT CONCRETE INTERMEDIATE COURSE, TYPE I19.0C, AT AN AVERAGE RATE OF 456 LBS PER SQ. YARD.	E2	PROP. VAR. DEPTH ASPHALT CONCRETE BASE COURSE, TYPE B25.0C, AT AN AVERAGE RATE OF 114 LBS. PER SQ. YARD PER 1" DEPTH TO BE PLACED IN LAYERS NOT GREATER THAN 5½" IN DEPTH OR LESS THAN 3" IN DEPTH.	W	VARIABLE DEPTH ASPHALT PAVEMENT (SEE STANDARD WEDGING DETAIL THIS SHEET)

NOTE: PAVEMENT EDGE SLOPES ARE 1:1 UNLESS SHOWN OTHERWISE.

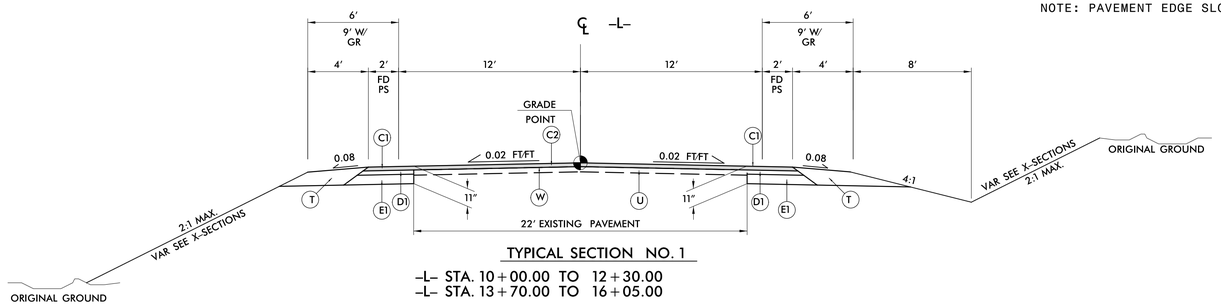

TYPICAL SECTION NO. 1

–L– STA. 10+00.00 TO 12+30.00
–L– STA. 13+70.00 TO 16+05.00

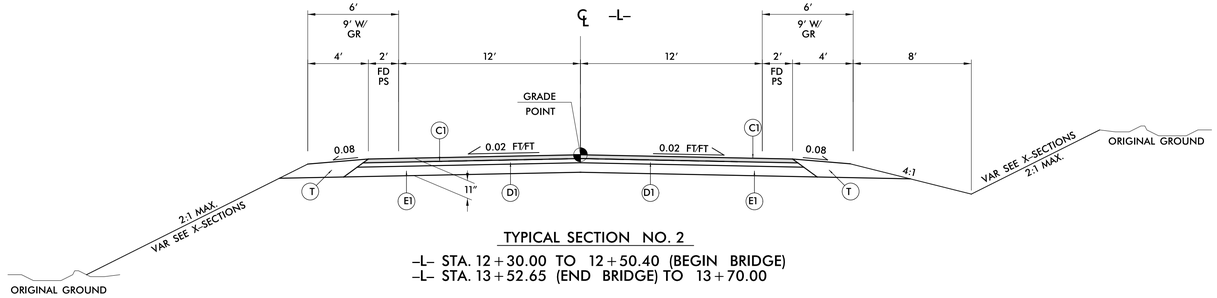

TYPICAL SECTION NO. 2

–L– STA. 12+30.00 TO 12+50.40 (BEGIN BRIDGE)
–L– STA. 13+52.65 (END BRIDGE) TO 13+70.00

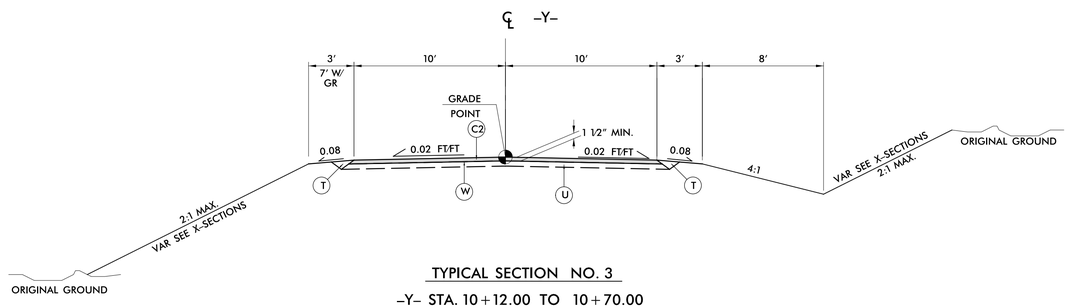

TYPICAL SECTION NO. 3

–Y– STA. 10+12.00 TO 10+70.00

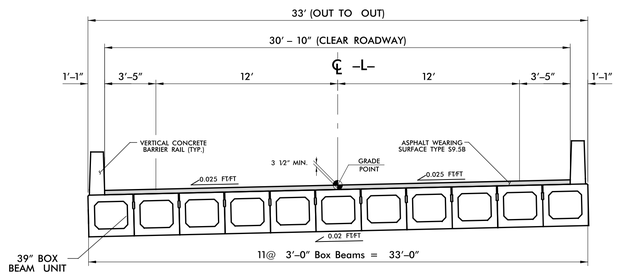

TYPICAL SECTION NO. 4

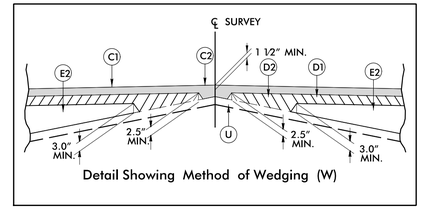

Detail Showing Method of Wedging (W)

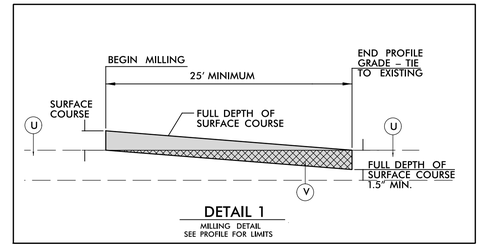

DETAIL 1
MILLING DETAIL
SEE PROFILE FOR LIMITS

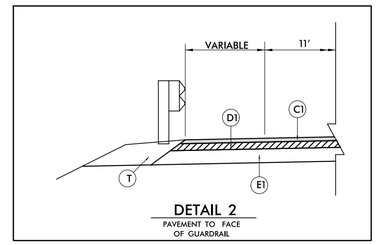

DETAIL 2
PAVEMENT TO FACE OF GUARDRAIL

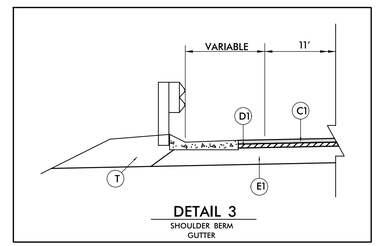

DETAIL 3
SHOULDER BERM GUTTER

4/23/2018 7:46:50 AM
C:\Projects\Roadway\U\17BP.12.R.53_RDY_TYP_02.dgn
17BP.12.R.53_RDY_TYP_02.dgn
USER: tcoulombe

DocuSign Envelope ID: A47F62F4-20C2-46E7-9AED-CBD1A4561238

PROJECT REFERENCE NO.	SHEET NO.
17BP.12.R.53	2D-1

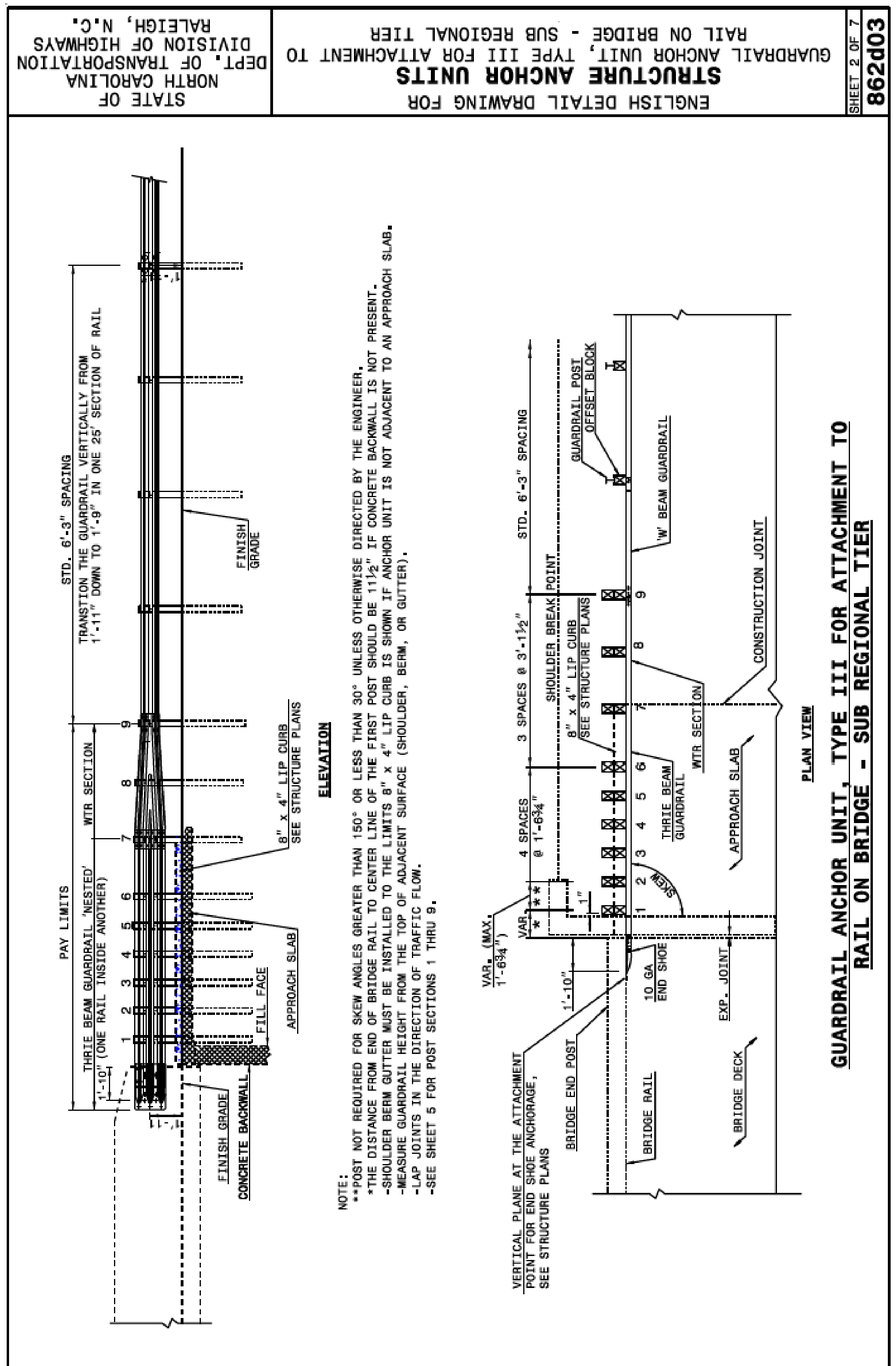

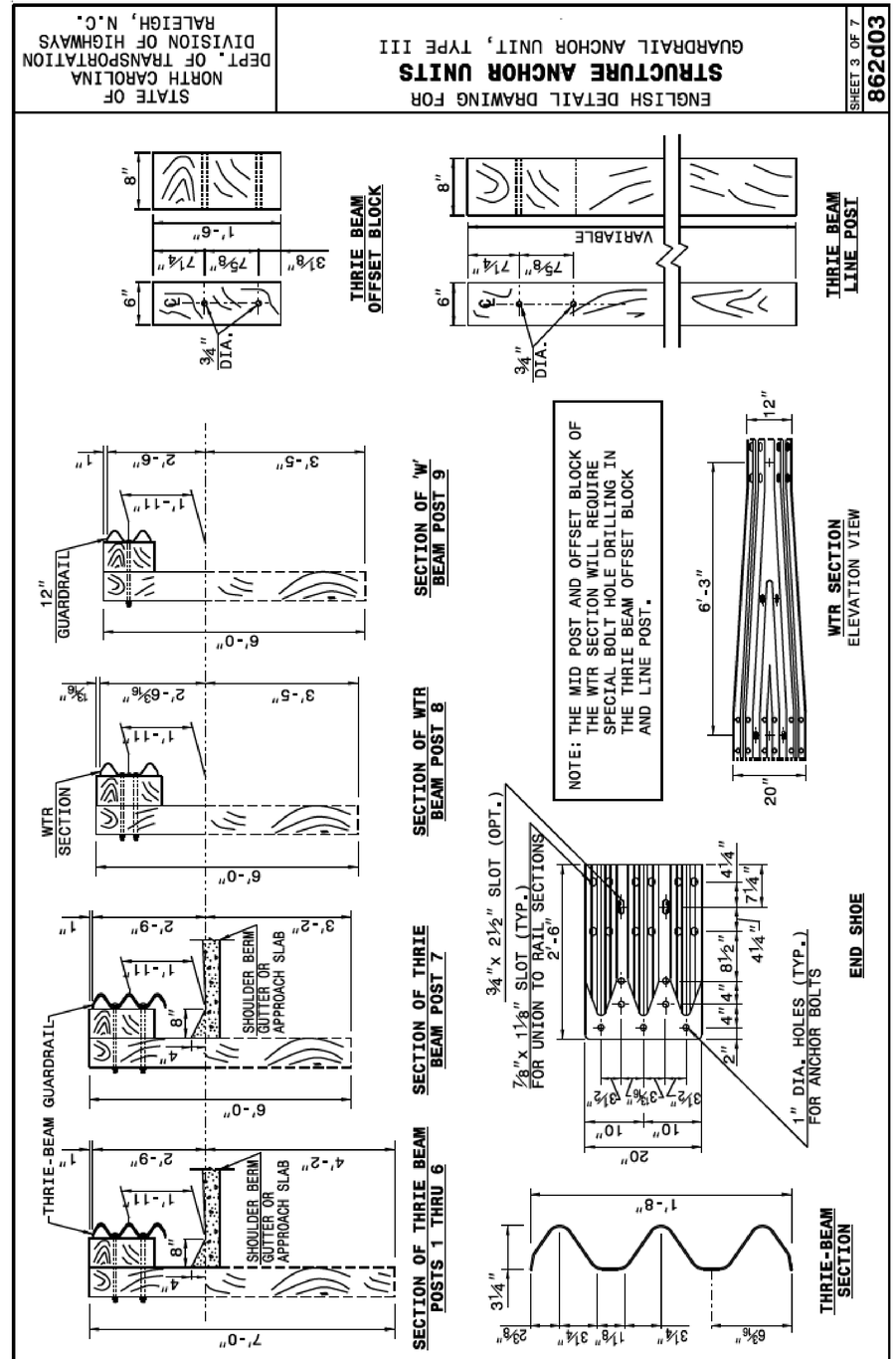

STATE OF NORTH CAROLINA DEPT. OF TRANSPORTATION DIVISION OF HIGHWAYS RALEIGH, N.C.	ENGLISH DETAIL DRAWING FOR **STRUCTURE ANCHOR UNITS** GUARDRAIL ANCHOR UNIT, TYPE III FOR ATTACHMENT TO RAIL ON BRIDGE - SUB REGIONAL TIER	SHEET 2 OF 7 862d03

STATE OF NORTH CAROLINA DEPT. OF TRANSPORTATION DIVISION OF HIGHWAYS RALEIGH, N.C.	ENGLISH DETAIL DRAWING FOR **STRUCTURE ANCHOR UNITS** GUARDRAIL ANCHOR UNIT, TYPE III	SHEET 3 OF 7 862d03

CONTRACT STANDARDS AND DEVELOPMENT UNIT
Office 919-707-6950 FAX 919-250-4119

SEE TITLE BLOCK

ORIGINAL BY: J HOWERTON DATE: 06-22-12
MODIFIED BY: DATE:
CHECKED BY: DATE:
FILE SPEC.:

$$$$$SYSTIME$$$$$
$$$$$$$$$$$$$$$$$$$$DGN$$$$$$$$$$$$$$$$$$$$
$$$$$USERNAME$$$$$

DocuSign Envelope ID: A47F62F4-20C2-46E7-9AED-CBD1A4561238

12/06/07

COMPUTED BY: _____ DATE: _____
CHECKED BY: _____ DATE: _____

STATE OF NORTH CAROLINA
DIVISION OF HIGHWAYS

PROJECT REFERENCE NO.	SHEET NO.
17BP.12.R.53	3

"N" = DISTANCE FROM EDGE OF LANE TO FACE OF GUARDRAIL
TOTAL SHOULDER WIDTH = DISTANCE FROM EDGE OF TRAVEL LANE TO SHOULDER BREAK POINT.
FLARE LENGTH = DISTANCE FROM LAST SECTION OF PARALLEL GUARDRAIL TO END OF GUARDRAIL
W = TOTAL WIDTH OF FLARE FROM BEGINNING OF TAPER TO END OF GUARDRAIL

GUARDRAIL SUMMARY

G = GATING IMPACT ATTENUATOR TYPE 350
NG = NON-GATING IMPACT ATTENUATOR TYPE 350

SURVEY LINE	BEG. STA.	END STA.	LOCATION	LENGTH			WARRANT POINT		"N" DIST. FROM E.O.L.	TOTAL SHOUL WIDTH	FLARE LENGTH		W		ANCHORS								IMPACT ATTENUATOR TYPE 350		SINGLE FACED CONCRETE BARRIER	REMOVE EXISTING GUARDRAIL	REMOVE & STOCKPILE EXISTING GUARDRAIL	REMARKS
				STRAIGHT	SHOP CURVED	DOUBLE FACED	APPROACH END	TRAILING END			APPROACH END	TRAILING END	APPROACH END	TRAILING END	XI MOD	XI	GREU TL-2	M-350	XIII	AT-1	VI MOD	III	SHOP CURVED III	G	NG				
L	11+90	12+50	LT	56.25					4	7	N/A	25		1			1					1						
L	11+90	12+50	RT	56.25					4	7	25	N/A	1				1					1						
L	13+52	14+13	LT	68.75					4	7	25	N/A	1				1					1						
L	13+52	14+13	RT	68.75					4	7	N/A	25		1			1					1						
	LESS ANCHOR DEDUCTIONS																											
	GREU TL-2	4@ 25'	=	-100																								
	TYPE-III	4@ 18.75'	=	-75																								
TOTAL				75													4					4						
			SAY	75													4					4						
	(5 ADDITIONAL GUARDRAIL POSTS)																											

NOTE: Invert Elevations are for Bid Purposes only and shall not be used for project construction stakeout. See "Standard Specifications For Roads and Structures, Section 300–5".

LIST OF PIPES, ENDWALLS, ETC. (FOR PIPES 48" & UNDER)

STATION	LOCATION (LT,RT, OR CL)	STRUCTURE NO. FROM	STRUCTURE NO. TO	TOP ELEVATION	INVERT ELEVATION	INVERT ELEVATION	% SLOPE CRITICAL	DRAINAGE PIPE (RCP, CSP, CAAP, HDPE, or PVC) SIZE	DRAINAGE PIPE THICKNESS OR GAUGE	C.S. PIPE (UNLESS NOTED OTHRWISE) SIZE	C.S. PIPE THICKNESS OR GAUGE	CLASS III R.C. PIPE (UNLESS OTHERWISE NOTED)	15" SIDE DRAIN PIPE	18" SIDE DRAIN PIPE	24" SIDE DRAIN PIPE	ENDWALLS STD. 838.01, STD. 838.11 OR STD. 838.80 (UNLESS NOTED OTHERWISE) CU. YDS. R.C.P.	ENDWALLS CU. YDS. C.S.P.	QUANTITIES FOR DRAINAGE STRUCTURES * TOTAL L.F. FOR PAY QUANTITY SHALL BE COL. "A" + (1.3 X COL. "B") PER EACH (0' THRU 5.0')	LIN. FT. A (5.0' THRU 10.0')	LIN. FT. B (10.0' AND ABOVE)	C.B. STD. 840.01 OR STD. 840.02	FRAME, GRATES AND HOOD STANDARD 840.03 TYPE OF GRATE E	F	G	D.I. STD. 840.14 OR STD. 840.15	D.I. FRAME & GRATE STD. 840.16	G.D.I. TYPE "A" STD. 840.17 OR 840.26	G.D.I. TYPE "B" STD. 840.18 OR 840.27	G.D.I. TYPE "D" STD. 840.19 OR 840.28	G.D.I. FRAME WITH GRATE STD. 840.22	G.D.I. FRAME WITH TWO GRATES STD. 840.22	G.D.I. (N.S.) FRAME WITH GRATE STD. 840.24	G.D.I. (N.S.) FRAME WITH TWO GRATES STD. 840.24	J.B. STD. 840.31 OR 840.32	G.D.I. (N.S.) FRAME WITH TWO GRATES STD. 840.29	T.B.D.I. STD. 840.35	M.H. FRAME AND COVER STD. 840.54	CORR. STEEL ELBOWS NO. & SIZE	CONC. COLLARS CL. "B" C.Y. STD 840.72	CONC. & BRICK PIPE PLUG, C.Y. STD. 840.71	PIPE REMOVAL LIN.FT.	REMARKS
–L– 11+10	RT	0401		798.5						.064								1							1							1						
		0401	0402	794.3	793.9							28																										
–L– 11+78	RT	0405													20																					21	REMOVE 24" RCP
–L– 15+00	LT	0406												36																					25	REMOVE 15" RCP
TOTAL												28		36	20			2				1					1		1	1					46	

ABBREVIATIONS

C.B.	CATCH BASIN
N.D.I.	NARROW DROP INLET
D.I.	DROP INLET
G.D.I.	GRATED DROP INLET
G.D.I. (N.S.)	GRATED DROP INLET (NARROW SLOT)
J.B.	JUNCTION BOX
M.H.	MANHOLE
T.B.D.I.	TRAFFIC BEARING DROP INLET
T.B.J.B.	TRAFFIC BEARING JUNCTION BOX

EARTHWORK SUMMARY

STATION	STATION	EXCAVATION TOTAL UNCLASS.	EXCAVATION UNDERCUT	EMBANK EMBANK.	BORROW	WASTE TOTAL
-L- 10+00.00	12+50.40	92		449	357	
-L- 13+52.65	16+05.00	455		368		87
-L- 12+57.73	12+77.23	216				216
-L- 13+23.60	13+45.70	231				231
-Y- 10+25.00	10+70.00	9		8		1
	SUBTOTAL	1,003		825	356	535
TOTAL		1,003		825	356	535
MATERIAL FOR SHOULDER CONSTRUCTION						
LOSS DUE TO CLEARING & GRUBBING						
ADDITIONAL UNDERCUT						
ROCK WASTE TO REPLACE BORROW						
ADJUST FOR ROCK WASTE						
WASTE IN LIEU OF BORROW					-356	-356
PROJECT TOTAL		1,003		825		179
EST. 5% TO REPLACE TOP SOIL ON BORROW PIT						
GRAND TOTAL		1,003		825		179
SAY		1,050			0	
Est. DDE = 110 CY						

NOTE: APPROXIMATE QUANTITIES ONLY. UNCLASSIFIED EXCAVATION, BORROW EXCAVATION, SHOULDER BORROW, FINE GRADING, CLEARING AND GRUBBING, AND REMOVAL OF EXISTING PAVEMENT WILL BE PAID FOR AT THE CONTRACT LUMP SUM PRICE FOR "GRADING".

PAVEMENT REMOVAL SUMMARY

SURVEY LINE	STATION	STATION	LOCATION LT/RT/CL	YD²
L	12+30	12+57	CL	60
L	13+47	13+70	CL	52
			TOTAL:	112
			SAY:	120

SUMMARY OF FENCE

STATION TO STATION	LT. OR RT.	A FABRIC L.F.	B END BRACE	C CORNER BRACE	D LINE BRACE	E 4" POSTS	F 5" POSTS
13+24.10 TO 14+50.46		124.00		2	1	4	9
TOTAL		124.00				4	9
SAY		**130**				**4**	**9**

23-APR-2018 07:07
C:\Projects\17BP.12.R.53_RDY_PSH_03.dgn
$$$$USERNAME$$$$

DocuSign Envelope ID: A47F62F4-20C2-46E7-9AED-CBD1A4561238

8/17/99

REVISIONS

DOCUMENT NOT CONSIDERED FINAL UNLESS ALL SIGNATURES COMPLETED

PROJECT REFERENCE NO.	SHEET NO.
17BP.12.R.53	4
R/W SHEET NO.	

ROADWAY DESIGN ENGINEER — NORTH CAROLINA PROFESSIONAL SEAL 034367 ENGINEER — TODD B. BUCKNER — Docusigned by: 1087011E67F6435... — 4/24/2018

HYDRAULICS ENGINEER — NORTH CAROLINA PROFESSIONAL SEAL 28639 ENGINEER — STEVEN B. SMOAK — Docusigned by: B29900704CE5404... — 4/24/2018

Michael Baker Engineering, Inc. — Michael Baker INTERNATIONAL — 8000 Regency Pkwy Suite 600 Cary, NC 27518 NC License: F-1084

BRIDGE SKETCH – –L– OVER MAGNESS CREEK

PC Sta. 13+95.27

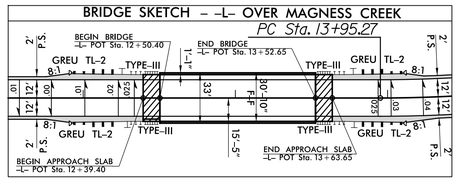

DETAIL 5
DECK DRAIN DISSIPATOR PAD
(Not to Scale)

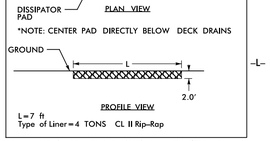

L=7 ft
Type of Liner=4 TONS CL II Rip–Rap

–L– STA. 12+73 TO STA. 12+86 LT
–L– STA. 13+23 TO STA. 13+46 LT

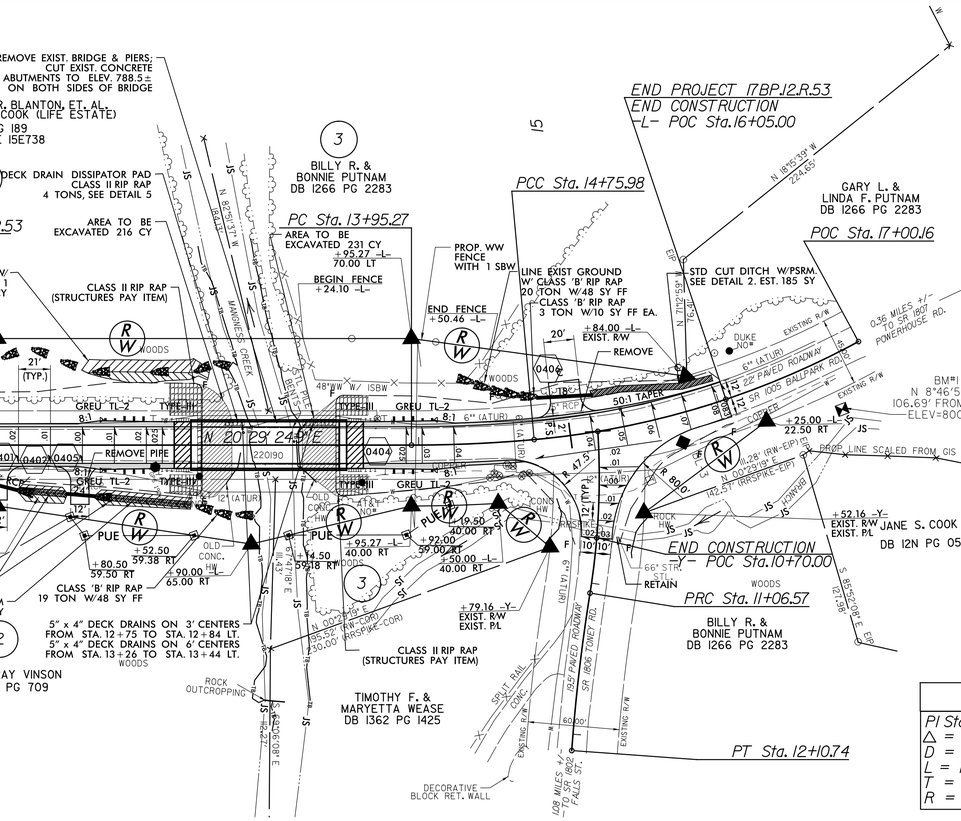

DETAIL 1
STANDARD 'V' DITCH
(Not to Scale)

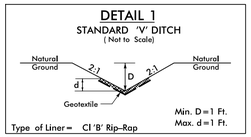

DETAIL 2
CUT DITCH
(Not to Scale)

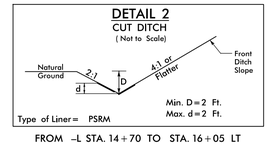

FROM –L STA. 14+70 TO STA. 16+05 LT

DETAIL 3
TOE PROTECTION
(Not to Scale)

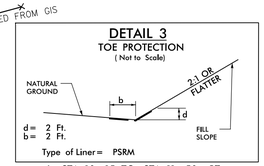

–L– STA. 10+15 TO STA. 11+50 RT

DETAIL 4
LATERAL 'V' DITCH
(Not to Scale)

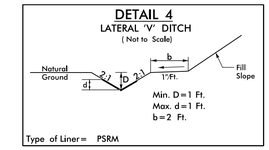

FROM –L STA. 11+50 TO STA. 12+40 RT

–L–

PI Sta 10+61.54	PI Sta 14+35.65	PI Sta 15+89.65
Δ = 1° 54' 21.0" (RT)	Δ = 5° 08' 18.7" (LT)	Δ = 23° 21' 10.4" (LT)
D = 1° 32' 54.7"	D = 6° 21' 58.3"	D = 10° 25' 02.7"
L = 123.07'	L = 80.72'	L = 224.17'
T = 61.54'	T = 40.38'	T = 113.66'
R = 3,700.00'	R = 900.00'	R = 550.00'
DS = 40 mph	DS = 40 mph	DS = 40 mph
SE = 0.04	SE = 0.04	SE = 0.04
R = 84'	R = 84'	R = 84'

–Y–

PI Sta 10+53.50	PI Sta 11+58.69
Δ = 12° 43' 14.1" (RT)	Δ = 4° 58' 26.7" (LT)
D = 11° 56' 11.8"	D = 4° 46' 28.7"
L = 106.57'	L = 104.18'
T = 53.50'	T = 52.12'
R = 480.00'	R = 1,200.00'

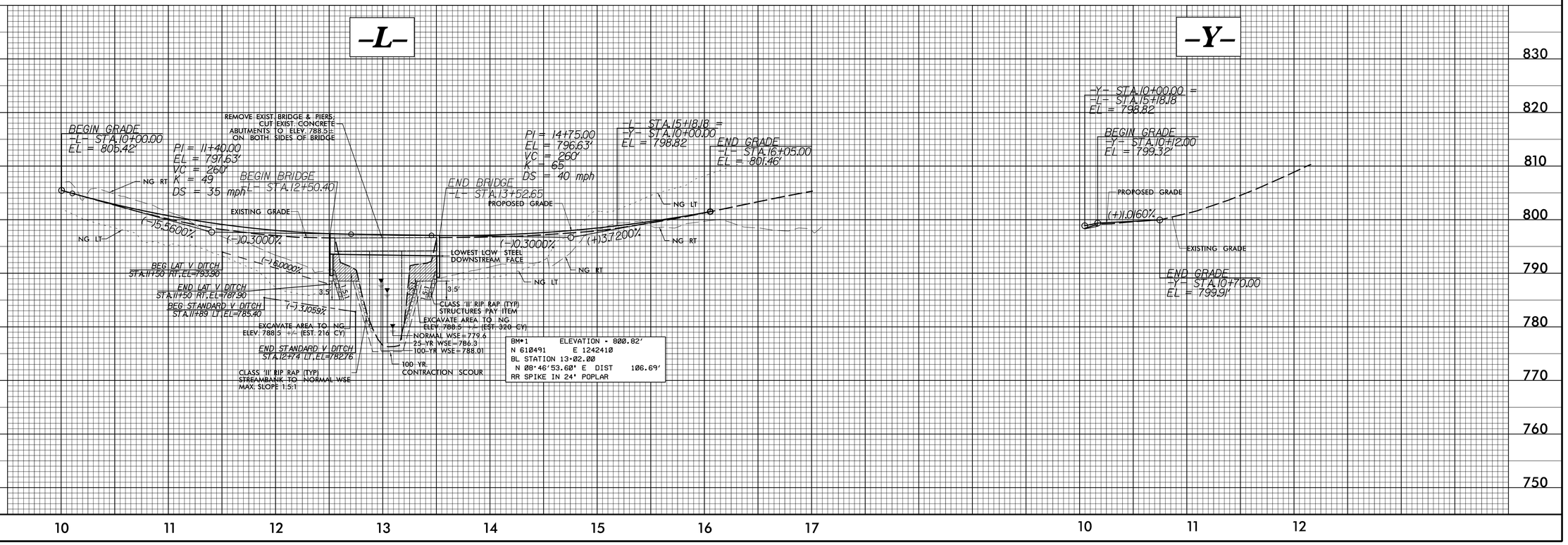

4/23/2018 7:51:20 AM
C:\Users\ksteadley\Projects\17BP.12.R.53_RDY_PSH_04.dgn
USER:ksteadley

STATE OF NORTH CAROLINA
DIVISION OF HIGHWAYS

TRANSPORTATION MANAGEMENT PLAN

CLEVELAND COUNTY

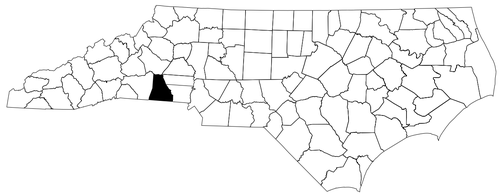

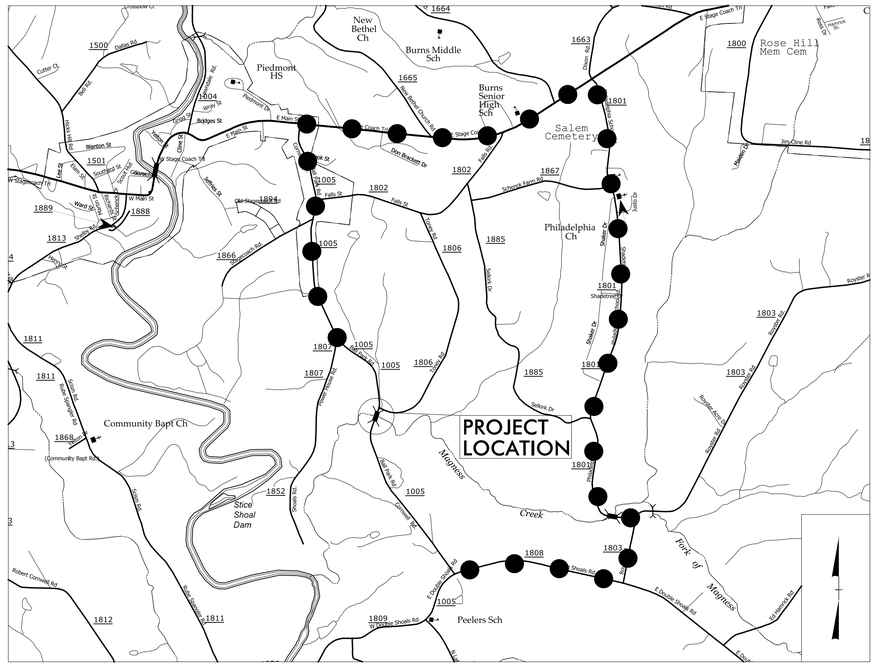

VICINITY MAP
(NOT TO SCALE)

DETOUR ROUTE

INDEX OF SHEETS

SHEET NO.	TITLE
TMP-1	TITLE SHEET, AND INDEX OF SHEETS
TMP-1A	LIST OF APPLICABLE ROADWAY STANDARD DRAWINGS, AND LEGEND
TMP-1B	GENERAL NOTES AND PHASING
TMP-2	OFFSITE DETOUR PLAN - BALL PARK ROAD (SR 1005)
TMP-3	BALL PARK ROAD SIGN DESIGN

SHEET NO.
TMP-1

17BP.12.R.53

TIP PROJECT:



WORK ZONE SAFETY & MOBILITY
"from the MOUNTAINS to the COAST"

N.C.D.O.T. WORK ZONE TRAFFIC CONTROL
1561 MAIL SERVICE CENTER (MSC) RALEIGH, NC 27699-1561
750 N. GREENFIELD PARKWAY, GARNER, NC 27529 (DELIVERY)
PHONE: (919) 773-2800 FAX: (919) 771-2745

J. S. BOURNE, P.E. — STATE TRAFFIC MANAGEMENT ENGINEER
BYRON ENGLE, PE — DIVISION TRAFFIC ENGINEER
TODD H. BUCKNER, PE — TRAFFIC CONTROL PROJECT ENGINEER

DIVISION OF HIGHWAYS · STATE OF NORTH CAROLINA · DEPARTMENT OF TRANSPORTATION · WORK ZONE TRAFFIC CONTROL

DOCUMENT NOT CONSIDERED FINAL
UNLESS ALL SIGNATURES COMPLETED

Michael Baker
INTERNATIONAL
MICHAEL BAKER ENGINEERING, INC.
8000 Regency Parkway, Suite 600
Cary, NC 27518
NC LICENSE NO. -F-1084

APPROVED: DocuSigned by: 10870116E67F6435 4/23/2018
DATE:

SEAL

NORTH CAROLINA PROFESSIONAL SEAL 034367 ENGINEER TODD H. BUCKNER

4/23/2018 7:29:28 AM
R:\TIP\12.R.53\Traffic\TrafficControl\TCP\17BP.12.R.53_tc_tsh.dgn
User: toddbuckner

PROJ. REFERENCE NO.	SHEET NO.
17BP.12.R.53	TMP-1A

ROADWAY STANDARD DRAWINGS

THE FOLLOWING ROADWAY STANDARDS AS SHOWN IN "ROADWAY STANDARD DRAWINGS" - PROJECT SERVICES UNIT - N.C. DEPARTMENT OF TRANSPORTATION - RALEIGH, N.C., DATED JANAUARY 2018 ARE APPLICABLE TO THIS PROJECT AND BY REFERENCE HEREBY ARE CONSIDERED A PART OF THESE PLANS:

STD. NO.	TITLE
1101.01	WORK ZONE WARNING SIGNS
1101.03	TEMPORARY ROAD CLOSURES
1101.05	WORK ZONE VEHICLE ACCESSES
1101.11	TRAFFIC CONTROL DESIGN TABLES
1110.01	STATIONARY WORK ZONE SIGNS
1145.01	BARRICADES
1205.01	PAVEMENT MARKINGS - LINE TYPES AND OFFSETS
1205.02	PAVEMENT MARKINGS - TWO LANE AND MULTILANE ROADWAYS
1261.01	GUARDRAIL AND BARRIER DELINEATORS - INSTALLATION SPACING
1261.02	GUARDRAIL AND BARRIER DELINEATORS - TYPES AND MOUNTING
1262.01	GUARDRAIL END DELINEATION

LEGEND

GENERAL

- DIRECTION OF TRAFFIC FLOW
- DIRECTION OF PEDESTRIAN TRAFFIC FLOW
- EXIST. PVMT.
- NORTH ARROW
- PROPOSED PVMT.
- WORK AREA
- REMOVAL
- USER DEFINED (IF NEEDED)
- USER DEFINED (IF NEEDED)

TRAFFIC CONTROL DEVICES

- BARRICADE (TYPE III)
- CONE
- DRUM SKINNY DRUM TUBULAR MARKER
- TEMPORARY CRASH CUSHION
- FLASHING ARROW PANEL (TYPE C)
- FLAGGER
- LAW ENFORCEMENT
- TRUCK MOUNTED IMPACT ATTENUATOR (TMIA)
- CHANGEABLE MESSAGE SIGN

TEMPORARY SIGNING

- PORTABLE SIGN
- STATIONARY SIGN
- STATIONARY OR PORTABLE SIGN

SIGNALS

- EXISTING
- PROPOSED
- TEMP TEMPORARY

PAVEMENT MARKINGS

- EXISTING LINES
- TEMPORARY LINES

PAVEMENT MARKERS

- CRYSTAL/CRYSTAL
- CRYSTAL/RED
- YELLOW/YELLOW

PAVEMENT MARKING SYMBOLS

- PAVEMENT MARKING SYMBOLS

DOCUMENT NOT CONSIDERED FINAL UNLESS ALL SIGNATURES COMPLETED

APPROVED: Docusigned by: 1087011E67F6431... DATE: 4/23/2018

SEAL

NORTH CAROLINA PROFESSIONAL SEAL 034367 ENGINEER TODD H. BUCKNER

DIVISION OF HIGHWAYS · STATE OF NORTH CAROLINA · DEPARTMENT OF TRANSPORTATION · WORK ZONE TRAFFIC CONTROL

ROADWAY STANDARD DRAWINGS & LEGEND

Michael Baker Engineering, Inc.
Michael Baker INTERNATIONAL
8000 Regency Pkwy
Suite 600
Cary, NC 27518
NC License: F-1084

4/23/2018 7:29:31 AM
R:\17BP.12.R.53\Traffic\TrafficControl\TCP\17BP.12.R.53_tc_sht1A.dgn
USER:toddbuckner

PROJ. REFERENCE NO.	SHEET NO.
17BP.12.R.53	TMP-1B

GENERAL NOTES

CHANGES MAY BE REQUIRED WHEN PHYSICAL DIMENSIONS IN THE DETAIL DRAWINGS, STANDARD DETAILS, AND ROADWAY DETAILS ARE NOT ATTAINABLE TO MEET FIELD CONDITIONS OR RESULT IN DUPLICATE OR UNDESIRED OVERLAPPING OF DEVICES. MODIFICATION MAY INCLUDE: MOVING, SUPPLEMENTING, COVERING, OR REMOVAL OF DEVICES AS DIRECTED BY THE ENGINEER.

THE FOLLOWING GENERAL NOTES APPLY AT ALL TIMES FOR THE DURATION OF THE CONSTRUCTION PROJECT EXCEPT WHEN OTHERWISE NOTED IN THE PLAN OR DIRECTED BY THE ENGINEER.

TRAFFIC PATTERN ALTERATIONS

A) NOTIFY THE ENGINEER TWENTY ONE (21) CALENDAR DAYS PRIOR TO ANY TRAFFIC PATTERN ALTERATION.

SIGNING

B) INSTALL ADVANCE WORK ZONE WARNING SIGNS WHEN WORK IS WITHIN 40 FT FROM THE EDGE OF TRAVEL LANE AND NO MORE THAN THREE (3) DAYS PRIOR TO THE BEGINNING OF CONSTRUCTION.

C) PROVIDE SIGNING AND DEVICES REQUIRED TO CLOSE THE ROAD ACCORDING TO THE ROADWAY STANDARD DRAWINGS AND TRAFFIC CONTROL PLANS.

PROVIDE SIGNING REQUIRED FOR THE OFF–SITE DETOUR ROUTE AS SHOWN IN THE TRAFFIC CONTROL PLANS.

D) COVER OR REMOVE ALL SIGNS AND DEVICES REQUIRED TO CLOSE THE ROAD WHEN ROAD CLOSURE IS NOT IN OPERATION.

COVER OR REMOVE ALL SIGNS REQUIRED FOR THE OFF–SITE DETOUR WHEN THE DETOUR IS NOT IN OPERATION.

E) ENSURE ALL NECESSARY SIGNING IS IN PLACE PRIOR TO ALTERING ANY TRAFFIC PATTERN.

TRAFFIC CONTROL DEVICES

F) PLACE TYPE III BARRICADES, WITH "ROAD CLOSED" SIGN R11–2 ATTACHED, OF SUFFICIENT LENGTH TO CLOSE ENTIRE ROADWAY.

PAVEMENT MARKINGS AND MARKERS

G) UPON COMPLETION OF ALL OTHER CONSTRUCTION OPERATIONS, INSTALL 2 APPLICATIONS OF PAINT PAVEMENT MARKINGS ON THE FINAL SURFACE, ACCORDING TO RSD 1205.01, 1205.02 AND 1205.12.

PHASING NOTES

TRAFFIC CONTROL PHASING

NOTES: COORDINATE WITH THE ENGINEER FOR INSTALLATION AND REMOVAL OF ALL SIGNING AND TRAFFIC CONTROL DEVICES.

STEP 1: USING RSD 1101.01, SHEET 3 OF 3, INSTALL ADVANCE WORK ZONE WARNING SIGNS ON BALL PARK ROAD (SR 1005).

STEP 2: USING RSD 1101.03, SHEET 1 OF 9 AND SHEET TMP–2, INSTALL DETOUR SIGNS AND BARRICADES AND CLOSE BALL PARK ROAD (SR 1005).

STEP 3: REMOVE EXISTING BRIDGE NO. 87 AND CONSTRUCT PROPOSED BRIDGE AND ROADWAY, UP TO AND INCLUDING THE FINAL LAYER OF SURFACE COURSE. PLACE FINAL PAVEMENT MARKINGS ON BALL PARK ROAD (SR 1005) FROM STA. 10+45.00 TO STA. 15+00.00.

STEP 4: REMOVE ALL ADVANCE WORK ZONE DETOUR SIGNS AND TRAFFIC CONTROL DEVICES AND OPEN BALL PARK ROAD (SR 1005) TO TRAFFIC.

4/23/2018 7:29:34 AM
R:\17BP.12.R.53\Traffic\TrafficControl\TCP\17BP.12.R.53_tc_sht1B.dgn
USER: todd.buckner

Michael Baker Engineering, Inc.
Michael Baker INTERNATIONAL
8000 Regency Pkwy
Suite 600
Cary, NC 27518
NC License: F-1084

DOCUMENT NOT CONSIDERED FINAL UNLESS ALL SIGNATURES COMPLETED

APPROVED: DocuSigned by: 1087011E67F6435... DATE: 4/23/2018

SEAL

NORTH CAROLINA PROFESSIONAL SEAL 034367 ENGINEER TODD H BUCKNER

DIVISION OF HIGHWAYS · STATE OF NORTH CAROLINA · DEPARTMENT OF TRANSPORTATION · WORK ZONE TRAFFIC CONTROL

GENERAL NOTES AND PHASING

PROJ. REFERENCE NO.	SHEET NO.
BD-5112W	TMP-2

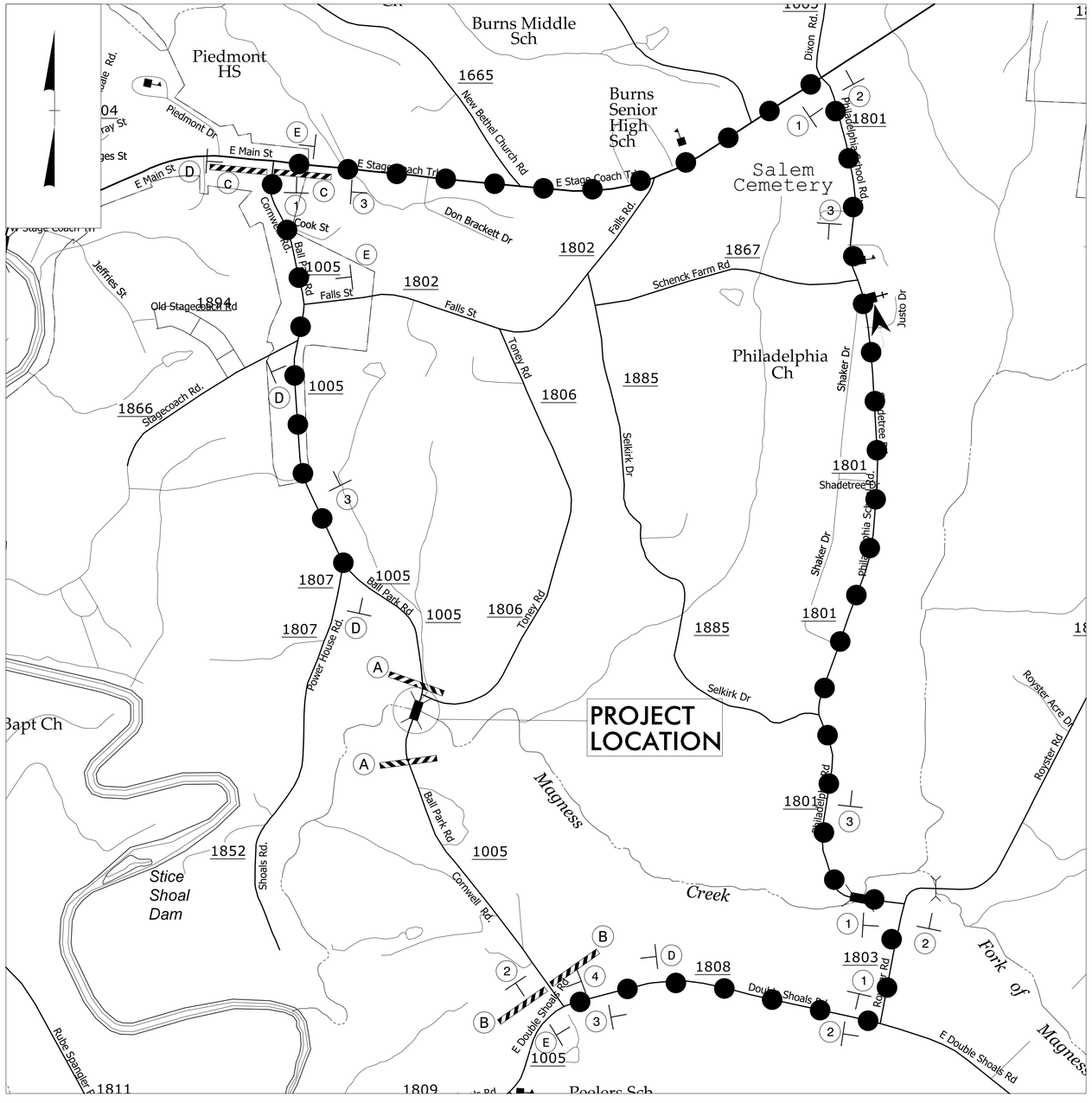

DETOUR ROUTE

REFER TO RSD 1101.03, SHEET 1 OF 9, FOR ADDITIONAL SIGN AND BARRICADE PLACEMENT

R11-2
48″ x 30″

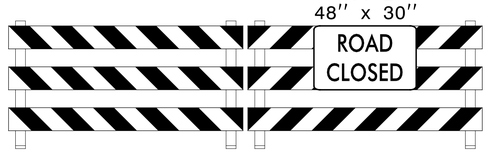

TYPE III BARRICADE(S)

A

R11-4
60″ x 30″

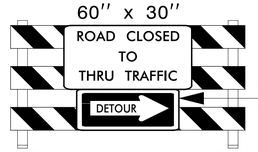

M4-10R
48″ x 18″

TYPE III BARRICADE

B

R11-4
60″ x 30″



M4-10L
48″ x 18″

TYPE III BARRICADE(S)

C

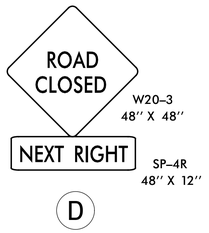

W20-3
48″ X 48″

SP-4R
48″ X 12″

D

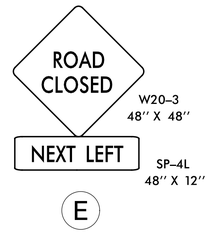

W20-3
48″ X 48″

SP-4L
48″ X 12″

E

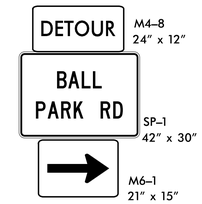

M4-8
24″ x 12″

SP-1
42″ x 30″

M6-1
21″ x 15″

1

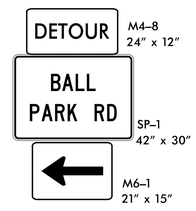

M4-8
24″ x 12″

SP-1
42″ x 30″

M6-1
21″ x 15″

2

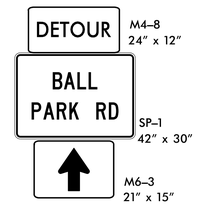

M4-8
24″ x 12″

SP-1
42″ x 30″

M6-3
21″ x 15″

3



M4-8 A
24″ X 18″

4

DOCUMENT NOT CONSIDERED FINAL UNLESS ALL SIGNATURES COMPLETED

APPROVED: DocuSigned by: DATE: 4/23/2018

SEAL

NORTH CAROLINA PROFESSIONAL SEAL 034367 ENGINEER TODD H. BUCKNER

DIVISION OF HIGHWAYS · STATE OF NORTH CAROLINA · DEPARTMENT OF TRANSPORTATION · WORK ZONE TRAFFIC CONTROL

OFFSITE DETOUR PLAN BALL PARK ROAD (SR 1005)

Michael Baker Engineering, Inc.
Michael Baker INTERNATIONAL
8000 Regency Pkwy
Suite 600
Cary, NC 27518
NC License: F-1084

4/23/2018 7:29:37 AM
R:\TBP\2\R\53\Traffic\TrafficControl\TCP\TBP.2.R.53_tc_detour.dgn
USER: todd.buckner

PROJ. REFERENCE NO.	SHEET NO.
17BP.12.R.53	TMP-3

SIGN NUMBER: name
TYPE: D
QUANTITY: 1

SIGN WIDTH: 3′-6″
HEIGHT: 2′-6″
TOTAL AREA: 8.8 Sq.Ft.

BORDER TYPE: FLUSH
RECESS: 0.47″
WIDTH: 0.63″
RADII: 1.5″

NO. Z BARS:
LENGTH:

BACKG COLOR: Orange
COPY COLOR: Black

SYMBOL	X	Y	WID	HT

MAT′L: 0.063″ (1.6 mm) ALUMINUM
0.080″ (2.0 mm) ALUMINUM
0.125″ (3.2 mm) ALUMINUM

USE NOTES:

1. Legend and border(except those that are colored black) shall be direct applied Grade B sheeting.
2. Background shall be Grade A, B, or C reflective sheeting.
3. Shields; A, B, and C type arrows shall be on 0.032″ (0.8mm) aluminum and demountable.
4. Bottom panel shall be yellow Grade C sheeting. Legend shall be direct applied black non-reflective sheeting. Yellow panel is:

DESIGN BY: none
PROJECT ID: ID
CHECKED BY:
LOCATION:
Apr 26, 2017
DIV: DIV

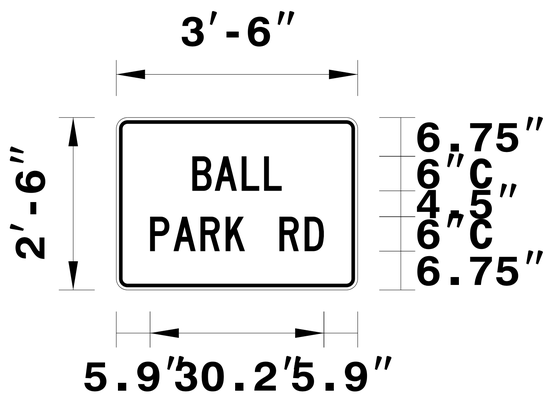

BORDER
R=1.5″
TH=0.63″
IN=0.47″

Spacing Factor is 1 unless specified otherwise

LETTER POSITIONS

Letter spacings are to start of next letter

Series/Size
Text Length

| | | | |

STATE OF NORTH CAROLINA
DIVISION OF HIGHWAYS

PAVEMENT MARKING PLAN

CLEVELAND COUNTY

PAVEMENT MARKING SCHEDULE

SYMBOL	DESCRIPTION (PAINT - 4")
PA	WHITE EDGELINE
PB	YELLOW DOUBLE CENTER

NOTE: FINAL PAINT TO BE A DOUBLE COAT.

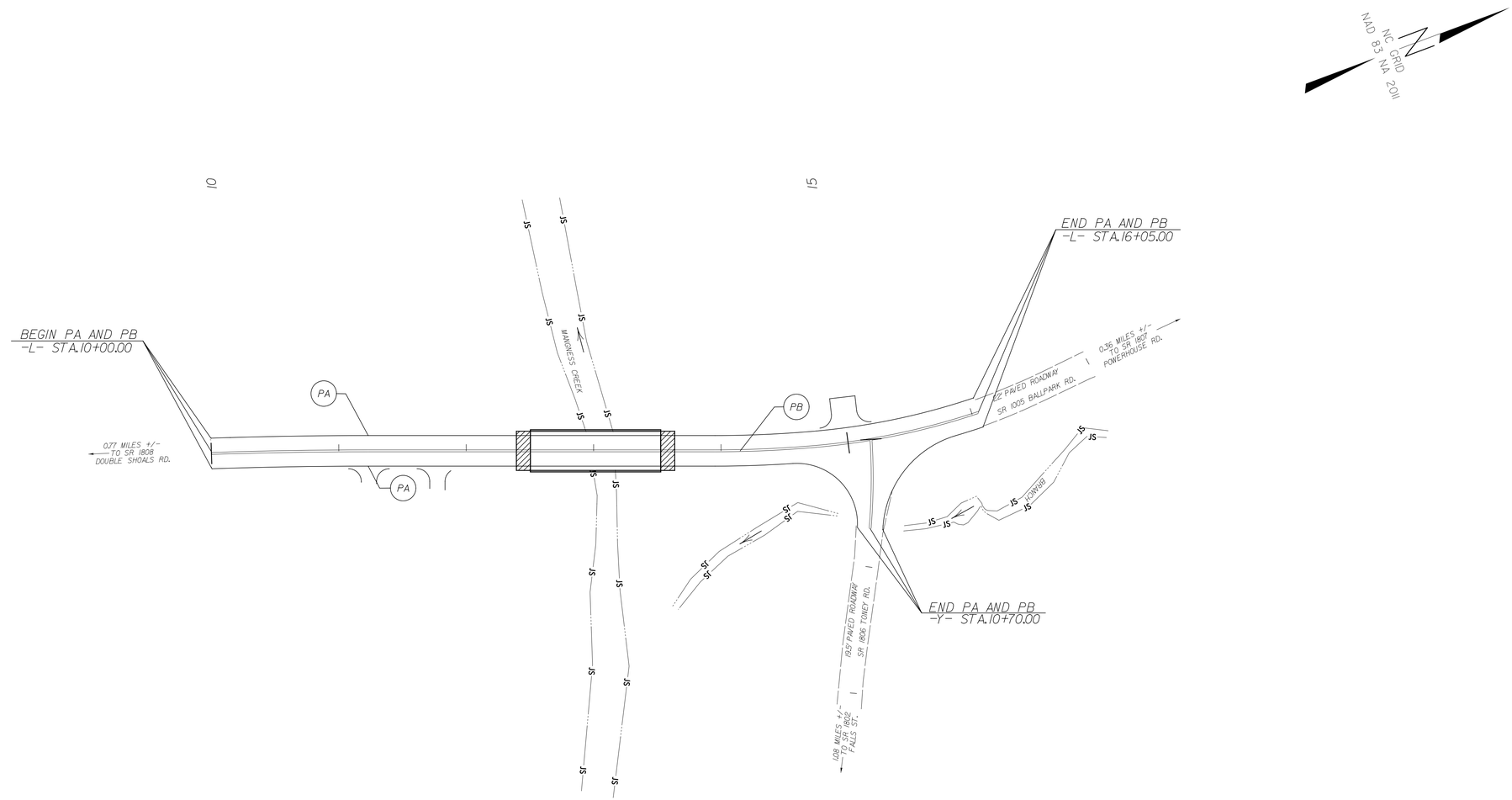

NOTE: NOT TO SCALE

DOCUMENT NOT CONSIDERED FINAL UNLESS ALL SIGNATURES COMPLETED

Michael Baker Engineering, Inc.
Michael Baker INTERNATIONAL
8000 Regency Pkwy
Suite 600
Cary, NC 27518
NC License: F-1084

APPROVED: DocuSigned by: 1087011E67F6435...
DATE: 4/23/2018
SEAL
NORTH CAROLINA PROFESSIONAL SEAL 034367 ENGINEER TODD H. BUCKNER

SHEET NO.
PMP-1

WBS ELEMENT: 17BP.12.R.53

4/23/2018 7:29:42 AM
R:\17BP.12.R.53\Traffic\TrafficControl\TCP\17BP.12.R.53_PMP1.dgn
USER: todd.buckner

TIP PROJECT: 17BP.12.R.53

STATE	STATE PROJECT REFERENCE NO.	SHEET NO.	TOTAL SHEETS
N.C.	17BP.12.R.53	EC-1	

STATE PROJ. NO.	F. A. PROJ. NO.	DESCRIPTION
17BP.12.R.53		PE, R/W, UTILITY, CONST

STATE OF NORTH CAROLINA
DIVISION OF HIGHWAYS

PLAN FOR PROPOSED
HIGHWAY EROSION CONTROL

CLEVELAND COUNTY

LOCATION: STRUCTURE NO. 190 OVER MANGNESS CREEK ON SR 1005
TYPE OF WORK: GRADING, DRAINAGE, PAVING, & STRUCTURE

4

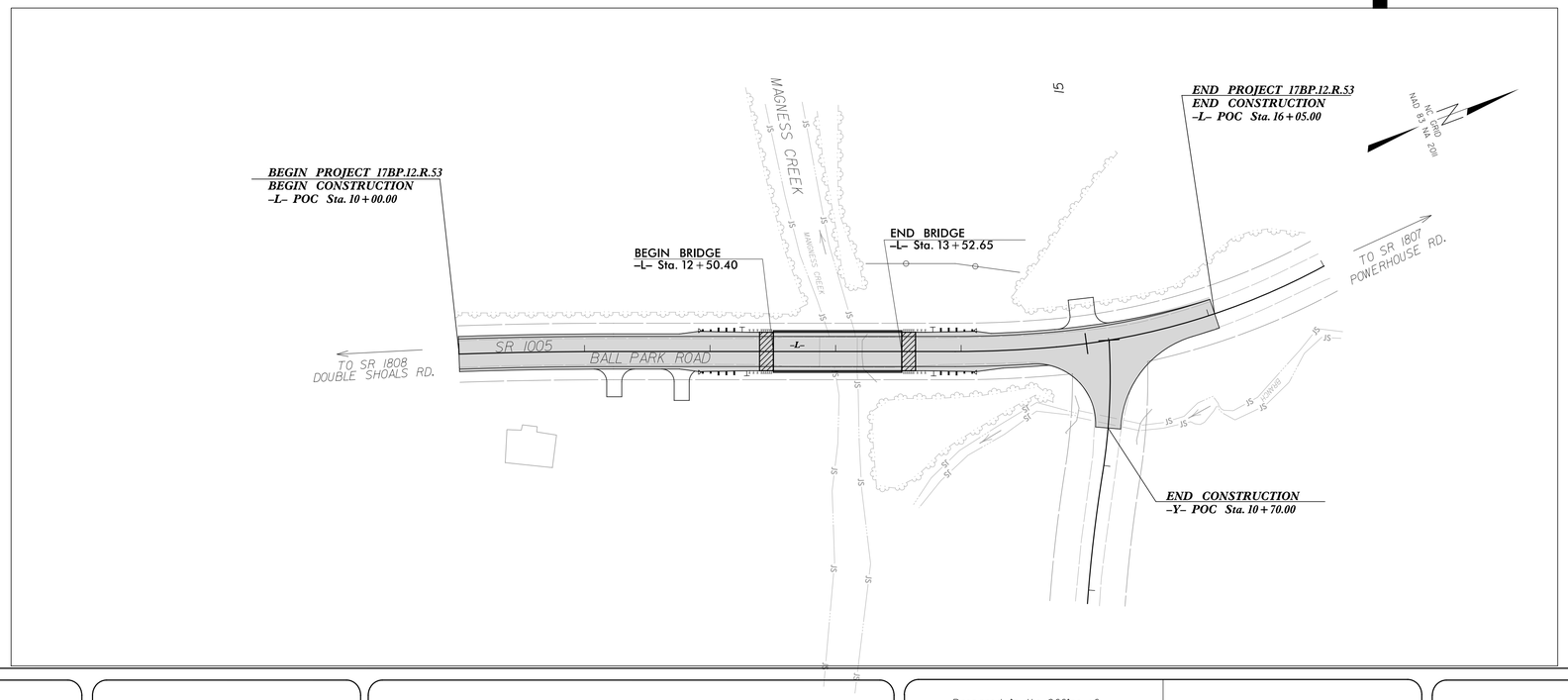

EROSION AND SEDIMENT CONTROL MEASURES

Std. #	Description	Symbol
1630.03	Temporary Silt Ditch	TSD
1630.05	Temporary Diversion	TD
1605.01	Temporary Silt Fence	
1606.01	Special Sediment Control Fence	
1622.01	Temporary Berms and Slope Drains	
1630.02	Silt Basin Type B	
1633.01	Temporary Rock Silt Check Type-A	
	Temporary Rock Silt Check Type-A with Matting and Polyacrylamide (PAM)	
1633.02	Temporary Rock Silt Check Type-B	
	Wattle / Coir Fiber Wattle	RW CFW
	Wattle / Coir Fiber Wattle with Polyacrylamide (PAM)	
1634.01	Temporary Rock Sediment Dam Type-A	
1634.02	Temporary Rock Sediment Dam Type-B	
1635.01	Rock Pipe Inlet Sediment Trap Type-A	
1635.02	Rock Pipe Inlet Sediment Trap Type-B	
1630.04	Stilling Basin	
1630.06	Special Stilling Basin	
	Rock Inlet Sediment Trap:	
1632.01	Type A	A
1632.02	Type B	B
1632.03	Type C	C
	Skimmer Basin	D
	Tiered Skimmer Basin	D
	Infiltration Basin	D

THIS PROJECT CONTAINS EROSION CONTROL PLANS FOR CLEARING AND GRUBBING PHASE OF CONSTRUCTION.

GRAPHIC SCALE

25 0 50
PLANS

25 0 50
PROFILE (HORIZONTAL)

5 0 10
PROFILE (VERTICAL)

THESE EROSION AND SEDIMENT CONTROL PLANS COMPLY WITH THE REGULATIONS SET FORTH BY THE NCG-010000 GENERAL CONSTRUCTION PERMIT EFFECTIVE AUGUST 3, 2011 ISSUED BY THE NORTH CAROLINA DEPARTMENT OF ENVIRONMENT AND NATURAL RESOURCES DIVISION OF WATER QUALITY.

Prepared In the Office of:

Michael Baker
INTERNATIONAL
Michael Baker Engineering, Inc.
8000 Regency Parkway, Suite 600
Cary, NC 27518
Professional Corporation License Number: F-1084

NCDOT DIVISION 12
NCDOT Contact:

STEVE RACKLEY, PE

2018 STANDARD SPECIFICATIONS

TODD H. BUCKNER, PE
LEVEL IIIA NAME

3542
LEVEL IIIA CERTIFICATION NO.

Roadway Standard Drawings

The following roadway english standards as appear in "Roadway Standard Drawings"– Roadway Design Unit – N. C. Department of Transportation – Raleigh, N. C., dated January 2018 and the latest revison thereto are applicable to this project and by reference hereby are considered a part of these plans.

1604.01	Railroad Erosion Control Detail	1632.01	Rock Inlet Sediment Trap Type A
1605.01	Temporary Silt Fence	1632.02	Rock Inlet Sediment Trap Type B
1606.01	Special Sediment Control Fence	1632.03	Rock Inlet Sediment Trap Type C
1607.01	Gravel Construction Entrance	1633.01	Temporary Rock Silt Check Type A
1622.01	Temporary Berms and Slope Drains	1633.02	Temporary Rock Silt Check Type B
1630.01	Riser Basin	1634.01	Temporary Rock Sediment Dam Type A
1630.02	Silt Basin Type B	1634.02	Temporary Rock Sediment Dam Type B
1630.03	Temporary Silt Ditch	1635.01	Rock Pipe Inlet Sediment Trap Type A
1630.04	Stilling Basin	1635.02	Rock Pipe Inlet Sediment Trap Type B
1630.05	Temporary Diversion	1640.01	Coir Fiber Baffle
1630.06	Special Stilling Basin	1645.01	Temporary Stream Crossing
1631.01	Matting Installation		

C:\Users\tbuckner\Desktop\17BP.12.R.53_Erosion Control\17BP.12.R.53_EC_TSH_01.dgn
4/23/2018 7:30:42 AM
User: tbuckner

PROJECT REFERENCE NO.	SHEET NO.
17BP.12.R.53	EC-2
R/W SHEET NO.	

TODD H. BUCKNER, PE
LEVEL III NAME

3542
LEVEL III CERTIFICATION NO.

Michael Baker INTERNATIONAL
Michael Baker Engineering, Inc.
8000 Regency Parkway
Suite 600
Cary, NC 27518
NC License: F-1084

TEMPORARY ROCK SILT CHECK TYPE 'A' WITH EXCELSIOR MATTING AND POLYACRYLAMIDE (PAM)

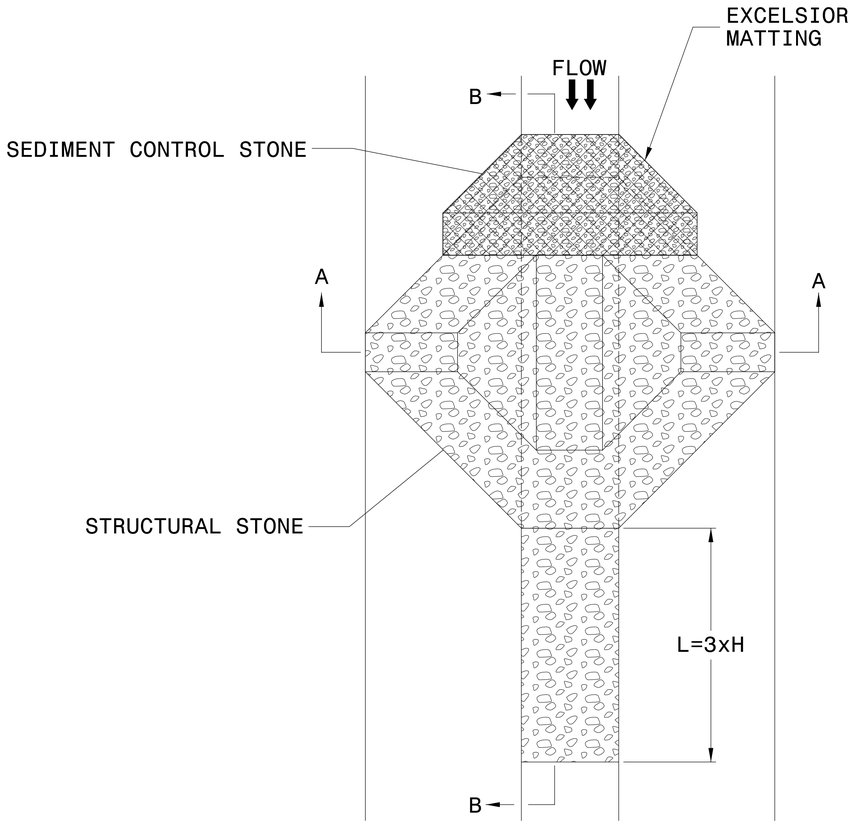

PLAN

NOTES

USE EXCELSIOR FOR MATTING MATERIAL AND ANCHOR MATTING SECTION AT TOP AND BOTTOM WITH CLASS B STONE.

PRIOR TO POLYACRYLAMIDE (PAM) APPLICATION, OBTAIN A SOIL SAMPLE FROM PROJECT LOCATION, AND FROM OFFSITE MATERIAL, AND ANALYZE FOR APPROPRIATE PAM FLOCCULANT TO BE APPLIED TO EACH ROCK SILT CHECK.

INITIALLY APPLY 4 OUNCES OF POLYACRYLAMIDE (PAM) TO TOP OF MATTING SECTION AND AFTER EVERY RAINFALL EVENT THAT EQUALS OR EXCEEDS 0.50 INCHES.

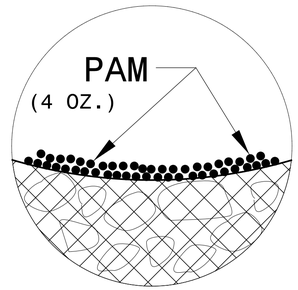

INSET A

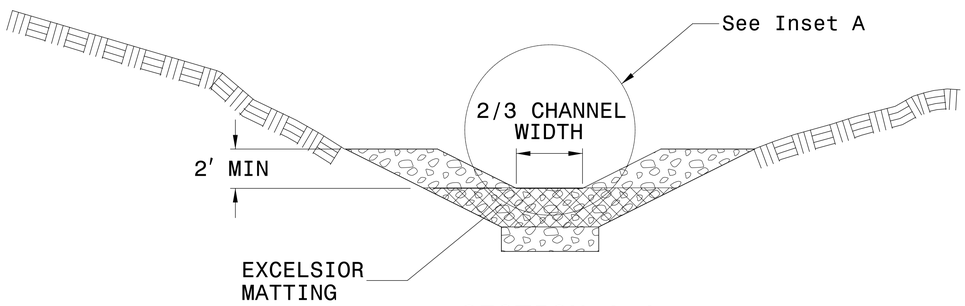

SECTION A-A

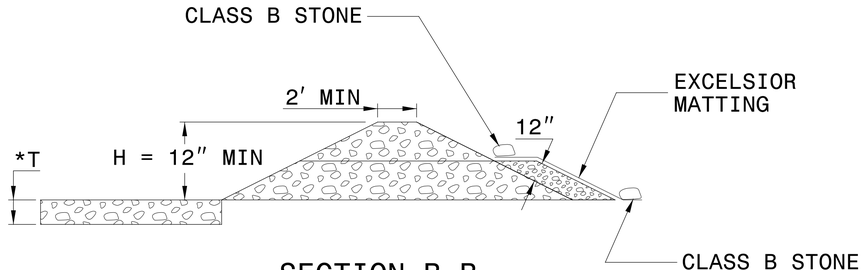

SECTION B-B

*T = 12" MIN., 18" MAX.

NOT TO SCALE

REVISIONS

5/14/99

4/23/2018 7:30:49 AM
17BP.12.R.53_ErosionControl\17BP.12.R.53_EC_PSH_02.dgn
USER: toddbuckner

PROJECT REFERENCE NO.	SHEET NO.
17BP.12.R.53	EC-3
R/W SHEET NO.	

TODD H. BUCKNER, PE
LEVEL III NAME

3542
LEVEL III CERTIFICATION NO.

Michael Baker INTERNATIONAL
Michael Baker Engineering, Inc.
8000 Regency Parkway
Suite 600
Cary, NC 27518
NC License: F-1084

DIVISION OF HIGHWAYS
STATE OF NORTH CAROLINA

SOIL STABILIZATION SUMMARY SHEET

MATTING FOR EROSION CONTROL

CONST SHEET NO.	LINE	FROM STATION	TO STATION	SIDE	ESTIMATE (SY)
4	L	12+00	12+50.40	LT	65
4	L	12+00	12+50.40	RT	35
4	L	13+52.65	14+15	LT	100
4	L	13+52.65	14+15	RT	100
4	L	14+50	16+05	LT	210
				SUBTOTAL	510
MISCELLANEOUS MATTING TO BE INSTALLED AS DIRECTED BY THE ENGINEER					25
				TOTAL	535
				SAY	535

PERMANENT SOIL REINFORCEMENT MAT

CONST SHEET NO.	LINE	FROM STATION	TO STATION	SIDE	ESTIMATE (SY)
4	L	10+15	11+50	RT	75
4	L	11+50	12+40	RT	50
4	L	14+70	16+05	LT	185
				SUBTOTAL	310
		ADDITIONAL PSRM TO BE INSTALLED			
				TOTAL	310
				SAY	310

REVISIONS

5/14/99

4/23/2018 7:30:56 AM
17BP.12.R.53\ErosionControl\17BP.12.R.53_EC_PSH_03.dgn
USER: toddbuckner

PROJECT REFERENCE NO.	SHEET NO.
17BP.12.R.53	EC-3A
R/W SHEET NO.	

TODD H. BUCKNER, PE
LEVEL III NAME

3542
LEVEL III CERTIFICATION NO.

Michael Baker INTERNATIONAL
Michael Baker Engineering, Inc.
8000 Regency Parkway
Suite 600
Cary, NC 27518
NC License: F-1084

DIVISION OF HIGHWAYS
STATE OF NORTH CAROLINA

SOIL STABILIZATION TIMEFRAMES

SITE DESCRIPTION	STABILIZATION TIME	TIMEFRAME EXCEPTIONS
PERIMETER DIKES, SWALES, DITCHES AND SLOPES	7 DAYS	NONE
HIGH QUALITY WATER (HQW) ZONES	7 DAYS	NONE
SLOPES STEEPER THAN 3:1	7 DAYS	IF SLOPES ARE 10' OR LESS IN LENGTH AND ARE NOT STEEPER THAN 2:1, 14 DAYS ARE ALLOWED.
SLOPES 3:1 OR FLATTER	14 DAYS	7 DAYS FOR SLOPES GREATER THAN 50' IN LENGTH.
ALL OTHER AREAS WITH SLOPES FLATTER THAN 4:1	14 DAYS	NONE, EXCEPT FOR PERIMETERS AND HQW ZONES.

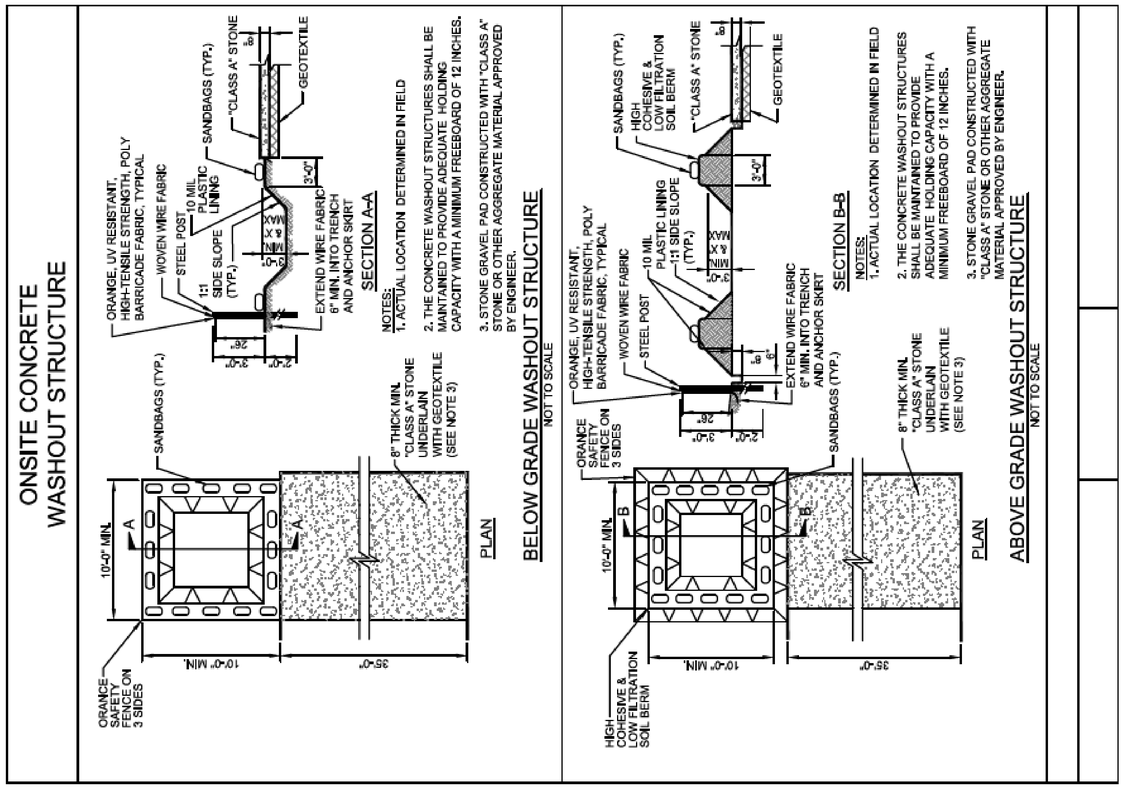

REVISIONS

5/14/99

4/23/2018 7:31:02 AM
7BP.12.R.53\Erosion\Control\17BP.12.R.53_EC_PSH_03A.dgn
USER: toddbuckner

CLEARING AND GRUBBING PLAN

PROJECT REFERENCE NO.	SHEET NO.
17BP.12.R.53	EC-4 CONST. 4
R/W SHEET NO.	

TODD H. BUCKNER, PE
LEVEL III NAME

3542
LEVEL III CERTIFICATION NO.

Michael Baker INTERNATIONAL
Michael Baker Engineering, Inc.
8000 Regency Parkway
Suite 600
Cary, NC 27518
NC License: F-1084

CLEARING AND GRUBBING
EROSION CONTROL FOR
CONSTRUCTION SHEET 4

NOTE:
PLACE TEMPORARY ROCK SEDIMENT DAMS TYPE – B AND TEMPORARY ROCK SILT CHECKS TYPE – A AT DRAINAGE OUTLETS.

NOTE:
UTILIZE TEMPORARY SEDIMENT BASIN OR SPECIAL STILLING BASIN(S) AS STILLING BASIN WHERE APPLICABLE.

NC GRID
NAD 83 NA 2011

DETAIL 5
DECK DRAIN DISSIPATOR PAD
(Not to Scale)

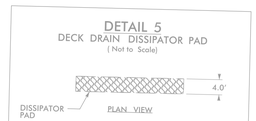

L=7 ft
Type of Liner= 4 TONS CL II Rip-Rap

–L– STA. 12+73 TO STA. 12+86 LT
–L– STA. 13+23 TO STA. 13+46 LT

DETAIL 1
STANDARD 'V' DITCH
(Not to Scale)

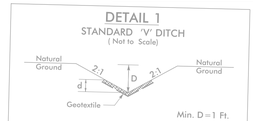

Type of Liner= CI '8' Rip-Rap
Min. D=1 Ft.
Max. d=1 Ft.

DETAIL 2
CUT DITCH
(Not to Scale)

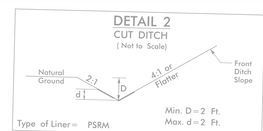

Type of Liner= PSRM
Min. D=2 Ft.
Max. d=2 Ft.

FROM –L STA. 14+70 TO STA. 16+05 LT

DETAIL 3
TOE PROTECTION
(Not to Scale)

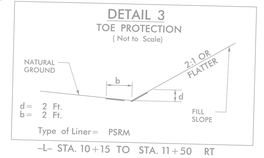

d= 2 Ft.
b= 2 Ft.
Type of Liner= PSRM

–L– STA. 10+15 TO STA. 11+50 RT

DETAIL 4
LATERAL 'V' DITCH
(Not to Scale)

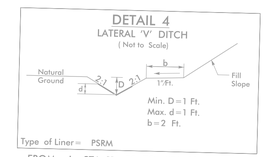

Min. D=1 Ft.
Max. d=1 Ft.
b=2 Ft.
Type of Liner= PSRM

FROM –L– STA. 11+50 TO STA. 12+40 RT

REMOVE EXIST. BRIDGE & PIERS; CUT EXIST. CONCRETE ABUTMENTS TO ELEV. 788.5 ± ON BOTH SIDES OF BRIDGE

MELBA CHRISTINE R. BLANTON, ET. AL.
MELBA LORRAINE S. COOK (LIFE ESTATE)
DB 1IZ PG 189
ESTATE FILE 15E738

1 DECK DRAIN DISSIPATOR PAD CLASS II RIP RAP 4 TONS, SEE DETAIL 5

3 BILLY R. & BONNIE PUTNAM DB 1266 PG 2283

AREA TO BE EXCAVATED 216 CY

AREA TO BE EXCAVATED 231 CY
+93.27 –L–
70.00 LT

CLASS II RIP RAP (STRUCTURES PAY ITEM)

STANDARD V DITCH W/ CLASS 'B' RIP RAP, SEE DETAIL 1
30 TONS, 101 SY FF, DDE = 69 CY

+23.07 –L–
70.00 LT

+00.00 –L–
50.00 LT
EXIST. R/W

LINE EXIST DITCH W/CLASS 'B' RIP RAP
10+00 TO 11+79 LT
63 TONS, 212 SY FF

0.77 MILES +/– TO SR 1808 DOUBLE SHOALS RD.

REMOVE 25 LF OF 24" PIPE

REMOVE PIPE

+00.00 –L–
40.00 RT
EXIST. R/W

23.07 –L–
40.00 RT

TOE PROTECTION W/PSRM SEE DETAIL 3, 75 SY

RETAIN PIPE

77.10
47.19 RT

CLASS 'B' RIP RAP
5 TON W/14 SY FF EA.
LATERAL V DITCH W/PSRM
SEE DETAIL 4, 50 SY, DDE = 41 CY

2 WARREN RAY VINSON DB 1722 PG 709

PUE

92.50
59.38 RT

80.50
59.50 RT

90.00 –L–
65.00 RT

CLASS 'B' RIP RAP
19 TON W/48 SY FF

5" x 4" DECK DRAINS ON 3' CENTERS FROM STA. 12+75 TO STA. 12+84 LT
5" x 4" DECK DRAINS ON 6' CENTERS FROM STA. 13+26 TO STA. 13+44 LT

TIMOTHY F. & MARYE HTA WEASE DB 1362 PG 1425

CLASS II RIP RAP (STRUCTURES PAY ITEM)

LINE EXIST GROUND W/ CLASS 'B' RIP RAP 20 TON W/48 SY FF
CLASS 'B' RIP RAP 3 TON W/10 SY FF EA.

84.00 –L–
EXIST. R/W

REMOVE

STD CUT DITCH W/PSRM SEE DETAIL 2, EST. 185 LSY

0.36 MILES +/– TO SR 1807 POPLAR HOUSE RD.

BM#1
N 8°46'54" E
106.69' FROM BL-3
ELEV=800.82'

3 BILLY R. & BONNIE PUTNAM DB 1266 PG 2283

FROM –L STA. 11+89 TO STA. 12+74 LT

PROP LINE SCALED FROM GIS

GARY L. & LINDA F. PUTNAM DB 1266 PG 2283

N 18°5'39" W
224.65

S 8°30'0"24" W
84.74'

S 73°33'01" W
87.00'

N 10°02'10" W
20.70'

S 43°53'13" W
184.77'

RRSPIKE

175.00 –L–
22.50 RT

EXIST. R/W
EXIST. B4

JANE S. COOK DB 12N PG 052

52.16 –L–
EXIST. R/W
EXIST. B4

RETAIN

79.16 –L–
EXIST. R/W
EXIST. B4

BILLY R. & BONNIE PUTNAM DB 1266 PG 2283

DECORATIVE BLOCK RET. WALL

RRSPIKE

S 52°39'19" E
162.39'

S 37°58'59" E
162.41'

ENVIRONMENTALLY SENSITIVE AREA
SEE PROJECT SPECIAL PROVISIONS

REVISIONS
5/14/99

4/23/2018 7:31:11 AM
17BP.12.R.53_ErosionControl\17BP.12.R.53_EC_PSH_04.dgn

EROSION CONTROL FOR FINAL GRADING PLAN

PROJECT REFERENCE NO.	SHEET NO.
17BP.12.R.53	EC-5CONST. 4
R/W SHEET NO.	

TODD H. BUCKNER, PE
LEVEL III NAME

3542
LEVEL III CERTIFICATION NO.

Michael Baker INTERNATIONAL
Michael Baker Engineering, Inc.
8000 Regency Parkway
Suite 600
Cary, NC 27518
NC License: F-1084

REVISIONS 5/14/99

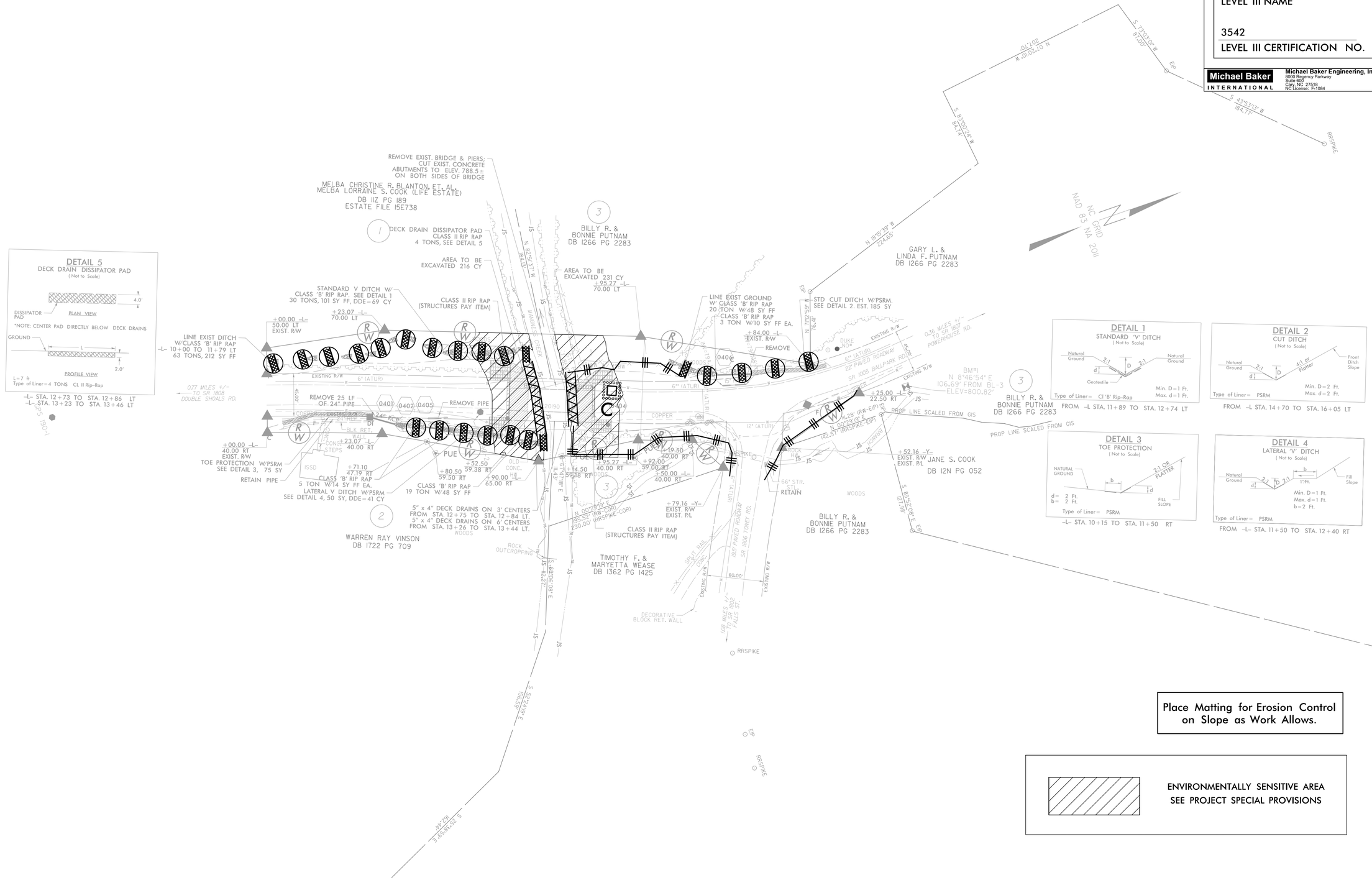

4/23/2018 7:31:19 AM
J:\PROJECTS\Roadwork\Control\17BP.12.R.53_EC_PSH_05.dgn
17BP.12.R.53_EC_PSH_05.dgn

09/08/09

WBS ELEMENT: 17BP.12.R.53

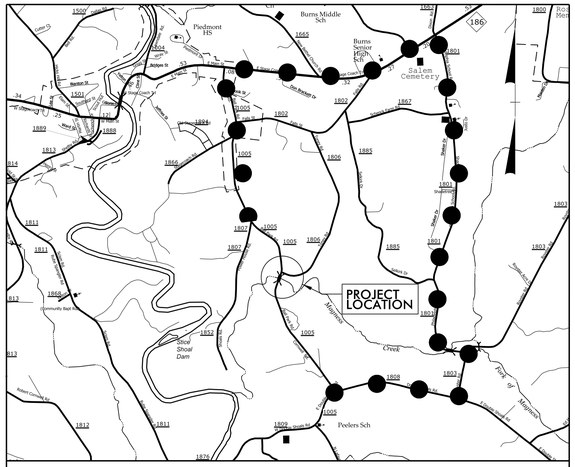

VICINITY MAP
DETOUR ROUTE

STATE OF NORTH CAROLINA
DIVISION OF HIGHWAYS

UTILITIES BY OTHERS PLANS
CLEVELAND COUNTY

STATE PROJECT REFERENCE NO.	SHEET NO.
17BP.12.R.53	UO–1

NOTE:
ALL UTILITY WORK SHOWN ON THIS SHEET IS DONE BY OTHERS.
NO PAYMENT WILL BE MADE TO THE CONTRACTOR FOR UTILITY WORK SHOWN ON THIS SHEET.

LOCATION: STRUCTURE NO. 190 OVER MANGNESS CREEK ON SR 1005

TYPE OF WORK: TELEPHONE AND WATER RELOCATION

UO–2

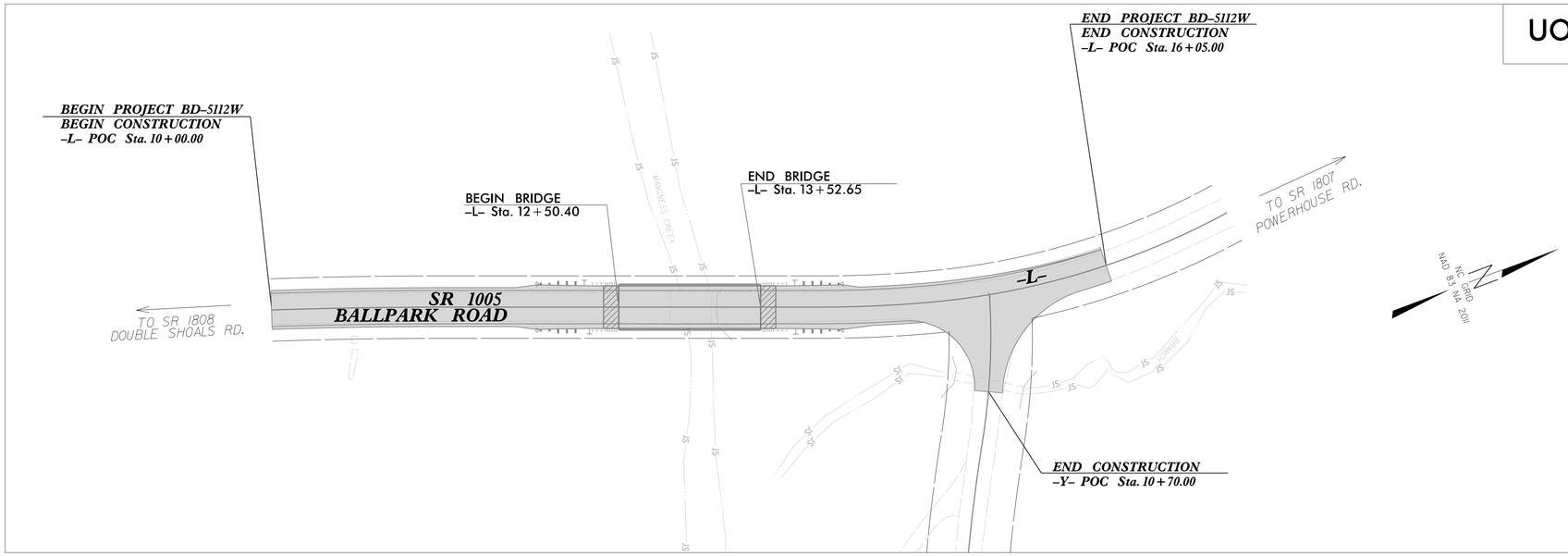

CLEARING ON THIS PROJECT SHALL BE PERFORMED TO THE LIMITS ESTABLISHED BY METHOD II.

THIS PROJECT IS NOT WITHIN ANY MUNICIPAL BOUNDARIES.

GRAPHIC SCALES

50 25 0 50 100
PLANS

50 25 0 50 100
PROFILE (HORIZONTAL)

10 5 0 10 20
PROFILE (VERTICAL)

INDEX OF SHEETS

SHEET NO.:	*DESCRIPTION:*
UO–1	*TITLE SHEET*
UO–2	*UBO PLAN SHEET*

UTILITY OWNERS WITH CONFLICTS

(A) AT&T – COMMUNICATIONS
(B) CLEVELAND COUNTY WATER – WATER

PREPARED IN THE OFFICE OF:

Michael Baker
INTERNATIONAL
Michael Baker Engineering, Inc.
8000 Regency Parkway, Suite 600
Cary, NC 27518
919-463-5488

Brandy Creech — *PROJECT UTILITY COORDINATOR*
Christina Newsome — *PROJECT UTILITY TECHNICIAN*

DIVISION OF HIGHWAYS
DIVISION 12
P.O. BOX 47
1710 E. MARION STREET
SHELBY, NC 28151-0047
980-552-4200

Steve Rackley, P.E. — *DIVISION BRIDGE MANAGER*
Chad Drewery — *DIVISION UTILITY ENGINEER*

27-APR-2018 15:29
Y:\Projects\NCDOT\Div 12 On Call\17BP.12.R.53\Utilities\17BP.12.R.53_ut_tsh_U01_psh.dgn
cnewsome AT CARYLCNEWSOME

5/14/99

PROJECT REFERENCE NO.	SHEET NO.
17BPJ2.R.53	U0-2
THIS SHEET CORRESPONDS TO RDY-4	

UTILITIES BY OTHERS

ALL PROPOSED UTILITY WORK SHOWN ON THIS SHEET WILL BE DONE BY OTHERS. NO PAYMENT WILL BE MADE TO THE CONTRACTOR FOR PROPOSED UTILITY WORK SHOWN ON THIS SHEET.

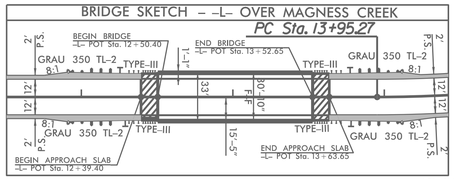

CLEVELAND CO. WATER
PROP. 6" DIP WATER IN
16" ENCASEMENT PIPE
AT&T
SPLICE UNDERGROUND CABLE TO PED
APPROX. 200 FT OFF PROJECT LIMITS
AT&T
OVERHEAD CABLE
AT&T
ABANDONED
CLEVELAND CO. WATER
PROP. 16" DIP WATER
CLEVELAND CO. WATER
ABANDONED
AT&T
REMAIN
AT&T
UNDERGROUND CABLE
AT&T
ABANDONED
CLEVELAND CO. WATER
PROP. 2" BLOWOFF, TEST BOX
CLEVELAND CO. WATER
PROP. 2" SDR PVC BLOWOFF LINE
BEGIN PROJECT 17BPJ2.R.53
BEGIN CONSTRUCTION
-L- POC Sta.10+00.00
END PROJECT 17BPJ2.R.53
END CONSTRUCTION
-L- POC Sta.16+05.00
END CONSTRUCTION
-L- POC Sta.10+70.00
PC Sta. 13+95.27
PT Sta. 11+23.07
PCC Sta. 14+75.98
PRC Sta. 11+06.57
PT Sta. 12+10.74
POC Sta. 17+00.6
REMOVE EXIST. BRIDGE & PIERS; CUT EXIST. CONCRETE ABUTMENTS TO ELEV. 788.5± ON BOTH SIDES OF BRIDGE
MELBA CHRISTINE R. BLANTON, ET. AL.
MELBA LORRAINE S. COOK (LIFE ESTATE)
DB 1IZ PG 189
ESTATE FILE 15E738
BILLY R. & BONNIE PUTNAM
DB 1266 PG 2283
GARY L. & LINDA F. PUTNAM
DB 1266 PG 2283
WARREN RAY VINSON
DB 1722 PG 709
TIMOTHY F. & MARYETTA WEASE
DB 1362 PG 1425
JIMMIE S. COOK
DB 12N PG 052
DECK DRAIN DISSIPATOR PAD
CLASS II RIP RAP
4 TONS, SEE DETAIL 5
AREA TO BE EXCAVATED 216 CY
AREA TO BE EXCAVATED 231 CY
STANDARD V DITCH W/ CLASS 'B' RIP RAP, SEE DETAIL 1
CLASS II RIP RAP (STRUCTURES PAY ITEM)
LINE EXIST DITCH W/CLASS 'B' RIP RAP
-L- 10+00 TO 11+79 LT
63 TONS, 212 SY FF
LINE EXIST GROUND W/ CLASS 'B' RIP RAP
20 TON W/48 SY FF
CLASS 'B' RIP RAP
3 TON W/10 SY FF EA.
STD CUT DITCH W/PSRM SEE DETAIL 2. EST. 185 SY
REMOVE
EXIST. R/W
+84.00 -L-
50.00 LT
+00.00 -L-
50.00 LT
EXIST. R/W
+23.07 -L-
70.00 LT
+95.27 -L-
70.00 LT
+00.00 -L-
40.00 RT
EXIST. R/W
+23.07 -L-
40.00 RT
+71.10
47.19 RT
+74.50
52.18 RT
+95.27 -L-
40.00 RT
+50.00
40.00 RT
+52.50
50.00 RT
+50.50
59.38 RT
+90.00
65.00 RT
+79.16
EXIST. R/W
EXIST. P/L
+25.00
22.50 RT
+52.50
EXIST. R/W
EXIST. P/L
TOE PROTECTION W/PSRM SEE DETAIL 3, 75 SY
RETAIN PIPE
CLASS 'B' RIP RAP
5 TON W/14 SY FF EA.
W/PSRM
DDE= CY
5" x 4" DECK DRAINS ON 3' CENTERS FROM STA. 12+75 TO STA. 12+84 LT.
5" x 4" DECK DRAINS ON 6' CENTERS FROM STA. 13+25 TO STA. 13+44 LT.
REMOVE 25 LF OF 24" PIPE
REMOVE PIPE
BLK RET. WALL
CONC. STEPS
ISSD
OLD CONC.
DECORATIVE BLOCK RET. WALL
ROCK OUTCROPPING
ROCK HILL
66" STR. STL. RETAIN
WOODS
0.77 MILES +/- TO SR 1808 DOUBLE SHOALS RD.
0.36 MILES +/- TO SR 1809 POWERHOUSE RD.
0.28 MILES +/- TO SR 1005 BALLPARK RD.
1.08 MILES +/- TO SR 1822 FALLS ST.
PROP LINE SCALED FROM GIS
PROP U/G TEL CABLE
GPS 190-1
BM#1
N 8°46'54" E
106.69' FROM BL-3
ELEV=800.82'
N 82°51'37" W 104.13'
N 18°15'39" W 224.65'
S 85°52'08" E 121.38'
N 00°29'24.9" E 220.90'
N 00°29'24.9" E 247.18'
N 00°29'24.9" E 195.52'
N 00°29'24.9" E 250.00'
S 00°29'24.9" W 247.18'
S 00°29'24.9" W 195.52'
S 00°29'24.9" W 250.00'
N 00°29'24.9" E 42.57'
N 00°29'24.9" E 42.57'
N 00°29'24.9" E 42.57'
S 00°29'24.9" W 42.57'
S 00°29'24.9" W 42.57'
S 00°29'24.9" W 42.57'
(040)
(060)
(220)
(240)
(260)
(280)
(300)
(320)
(340)
(360)
(380)
(400)
(420)
(440)
(460)
(480)
(500)
(520)
(540)
(560)
(580)
(600)
(620)
(640)
(660)
(680)
(700)
(720)
(740)
(760)
(780)
(800)
(820)
(840)
(860)
(880)
(900)
(920)
(940)
(960)
(980)
(1000)

DocuSign Envelope ID: A47F62F4-20C2-46E7-9AED-CBD1A4561238

PROJECT REFERENCE NO.	SHEET NO.
17BP.12.R.53	X–1

STATE OF NORTH CAROLINA
DIVISION OF HIGHWAYS

CLEVELAND COUNTY
17BP.12.R.53

INDEX OF SHEETS

DESCRIPTION	SHEET NO.
INDEX OF SHEETS & CROSS–SECTION SUMMARY	X–1
–L–	X–2 TO X–6
–Y–	X–7

CROSS–SECTION SUMMARY

Station L	Uncl. Exc. (cu. yd.)	Embt (cu. yd.)
10+00.00	0	0
10+50.00	31	2
11+00.00	38	26
11+50.00	14	69
12+00.00	0	134
12+50.00	9	158
12+50.40	0	1

Station L	Uncl. Exc. (cu. yd.)	Embt (cu. yd.)
13+52.65	0	0
14+00.00	18	82
14+50.00	3	136
15+00.00	51	102
15+50.00	133	0
16+00.00	222	0
16+05.00	28	0

Station Y	Uncl. Exc. (cu. yd.)	Embt (cu. yd.)
10+25.00	0	0
10+50.00	5	6
10+70.00	4	1

NOTE: APPROXIMATE QUANTITIES ONLY. UNCLASSIFIED EXCAVATION, SHOULDER BORROW, FINE GRADING, CLEARING AND GRUBBING, AND REMOVAL OF EXISTING PAVEMENT WILL BE PAID FOR AT THE CONTRACT LUMP SUM PRICE FOR "GRADING".

REVISIONS

8/17/99

23-APR-2018 07:27
R:\17BP.12.R.53_Roadway\CorridorModeling\17BP.12.R.53_Rdy_XPL_01.dgn
$$$$USERNAME$$$$

DocuSign Envelope ID: A47F62F4-20C2-46E7-9AED-CBD1A4561238

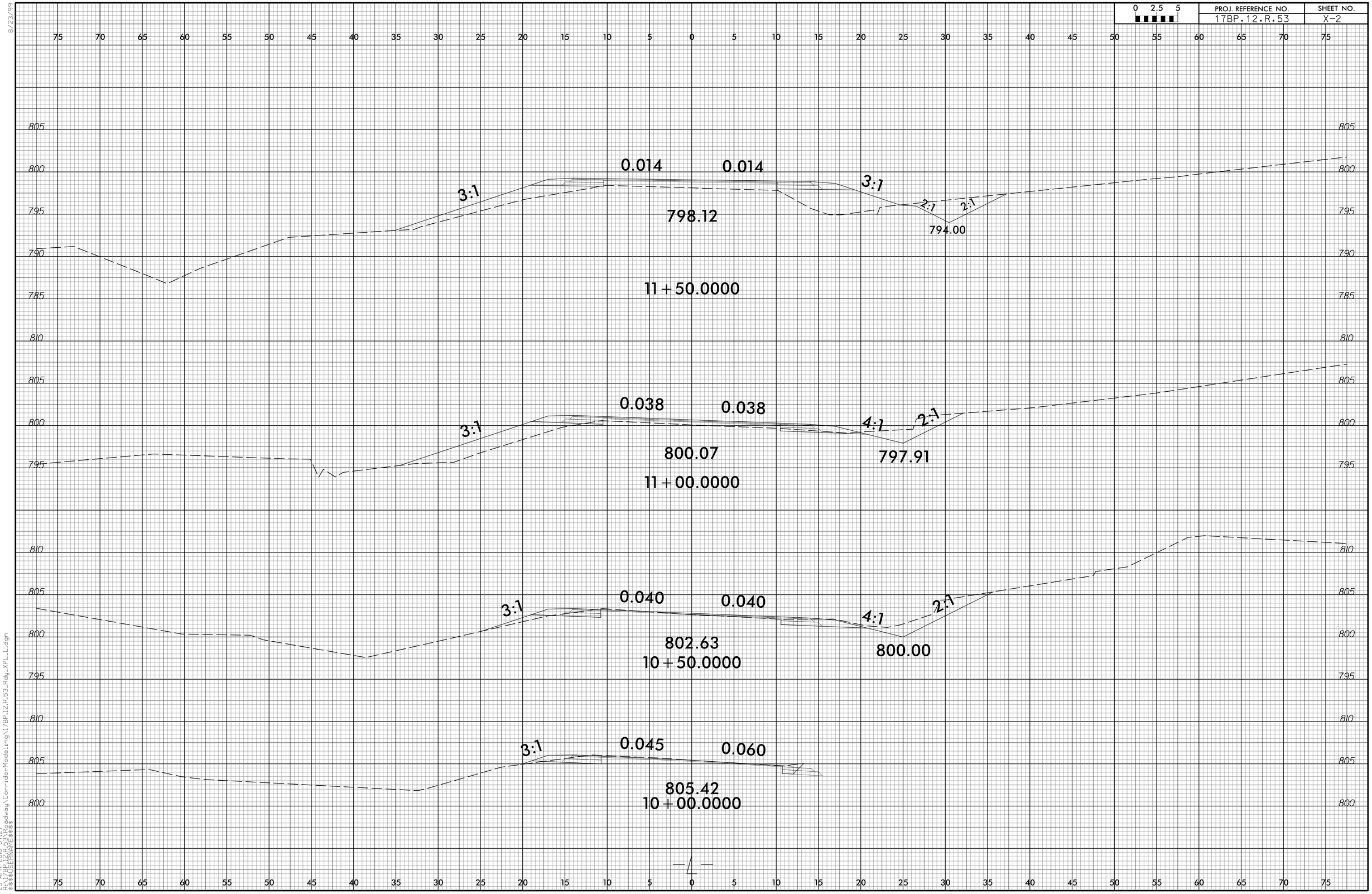

8/23/99
23-APR-2018 07:27
R:\17BP.12.R.53\Roadway\CorridorModeling\17BP.12.R.53_Rdy_XPL_L.dgn
$$$$USERNAME$$$$

DocuSign Envelope ID: A47F62F4-20C2-46E7-9AED-CBD1A4561238

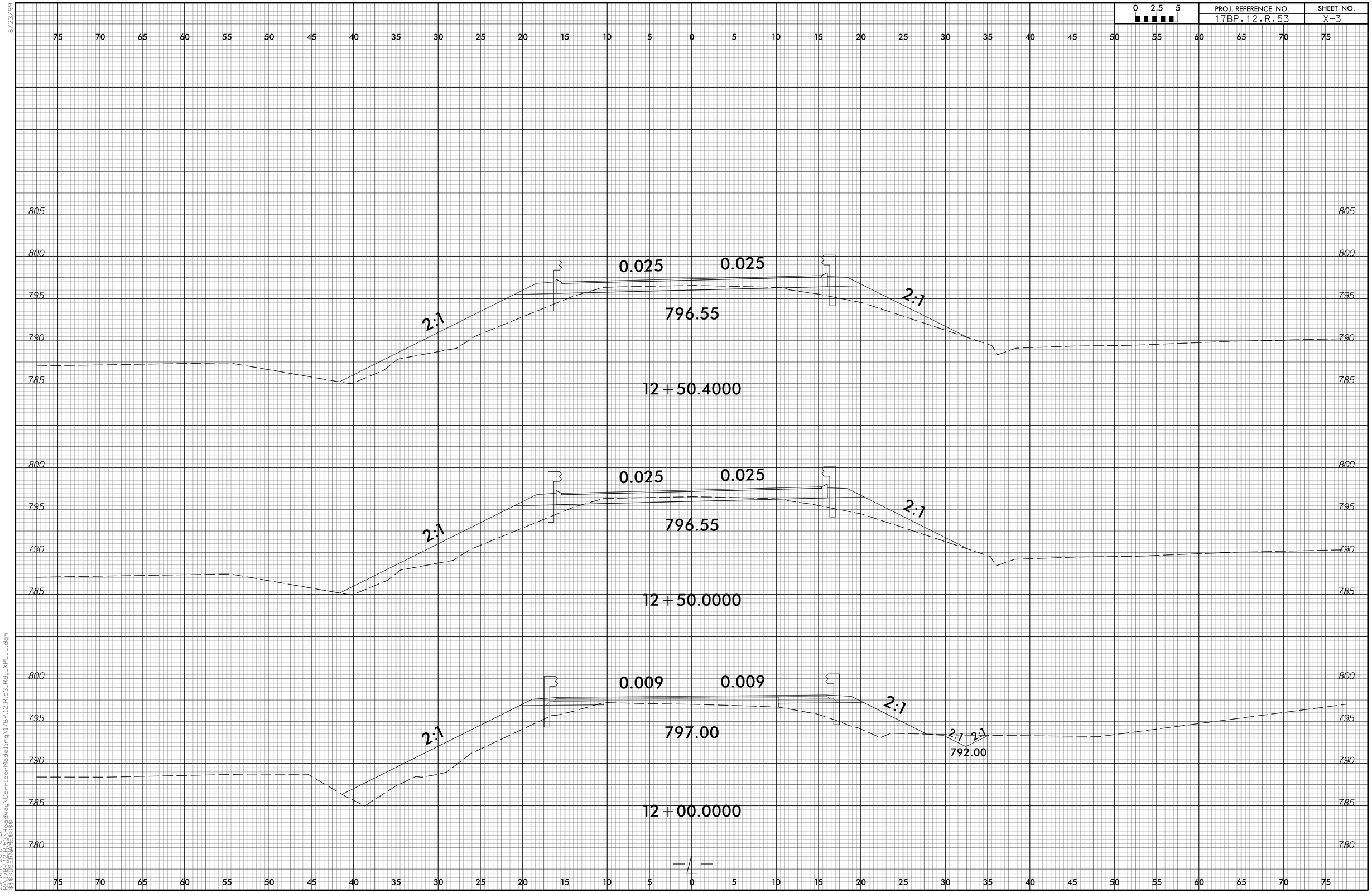

8/23/99
23-APR-2018 07:27
R:\17BP.12.R.53\Roadway\CorridorModeling\17BP.12.R.53_Rdy_XPL_L.dgn
$$$$USERNAME$$$$

DocuSign Envelope ID: A47F62F4-20C2-46E7-9AED-CBD1A4561238

PROJ. REFERENCE NO.	SHEET NO.
17BP.12.R.53	X-4

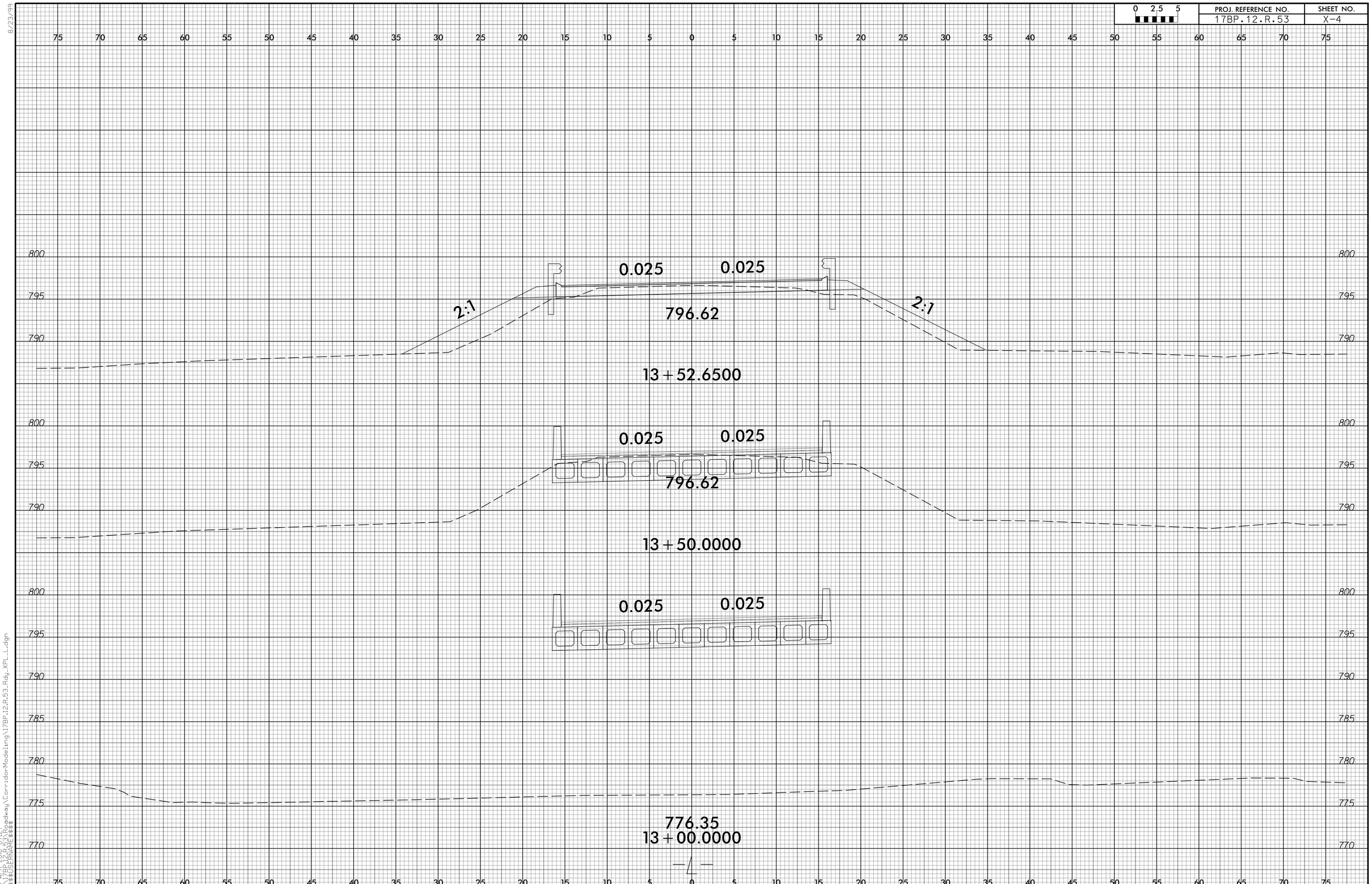

23-APR-2018 07:27
R:\17BP.12.R.53\Roadway\CorridorModeling\17BP.12.R.53_Rdy_XPL_L.dgn
$$$$USERNAME$$$$

DocuSign Envelope ID: A47F62F4-20C2-46E7-9AED-CBD1A4561238

PROJ. REFERENCE NO.	SHEET NO.
17BP.12.R.53	X-5

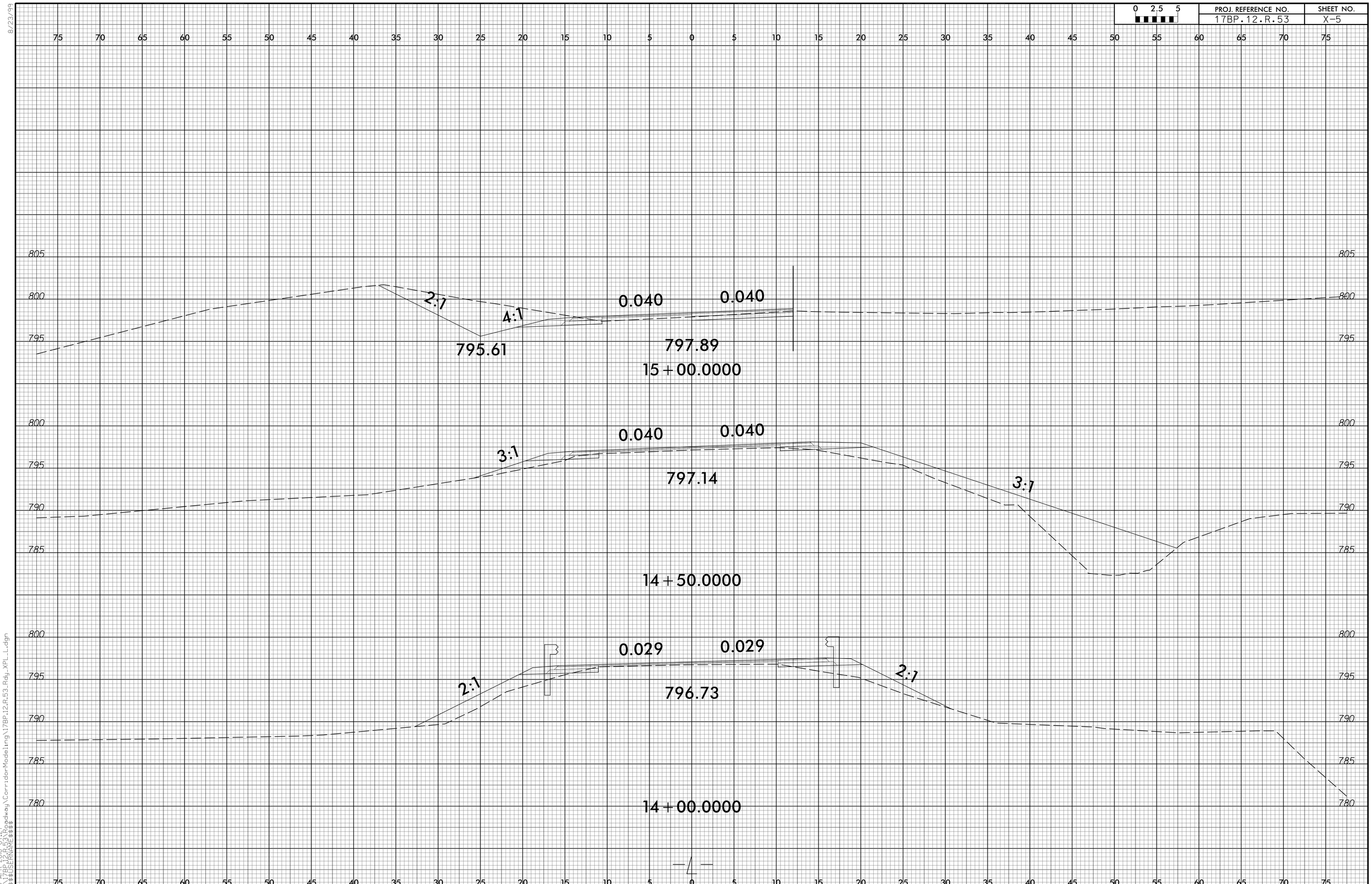

23-APR-2018 07:27
R:\17BP.12.R.53\Roadway\CorridorModeling\17BP.12.R.53_Rdy_XPL_L.dgn
$$$$USERNAME$$$$

DocuSign Envelope ID: A47F62F4-20C2-46E7-9AED-CBD1A4561238

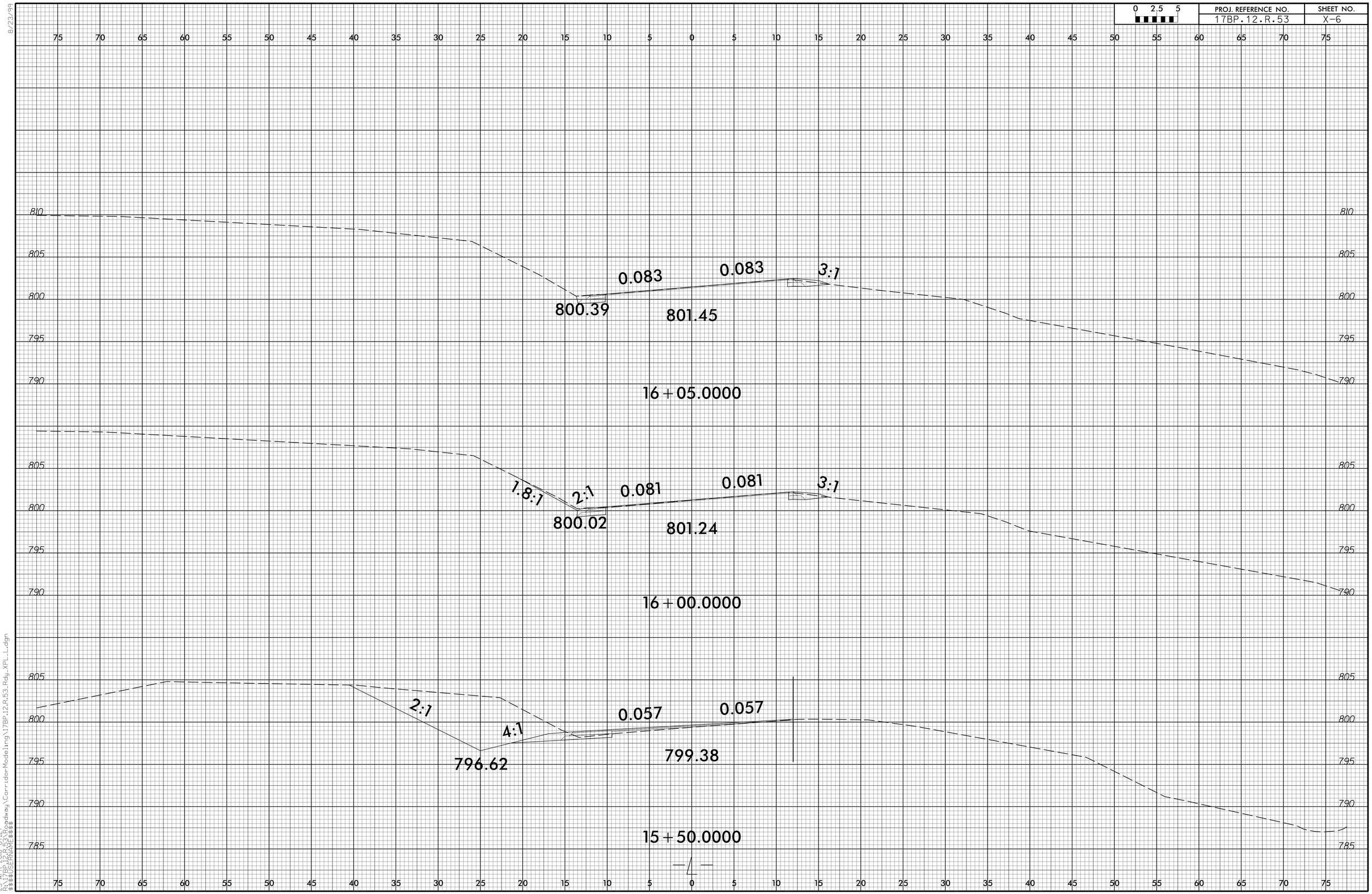

8/23/99
23-APR-2018 07:27
R:\17BP.12.R.53\Roadway\CorridorModeling\17BP.12.R.53_Rdy_XPL_L.dgn
$$$$USERNAME$$$$

DocuSign Envelope ID: A47F62F4-20C2-46E7-9AED-CBD1A4561238

8/23/99

0 2.5 5	PROJ. REFERENCE NO.	SHEET NO.
	17BP.12.R.53	X-7

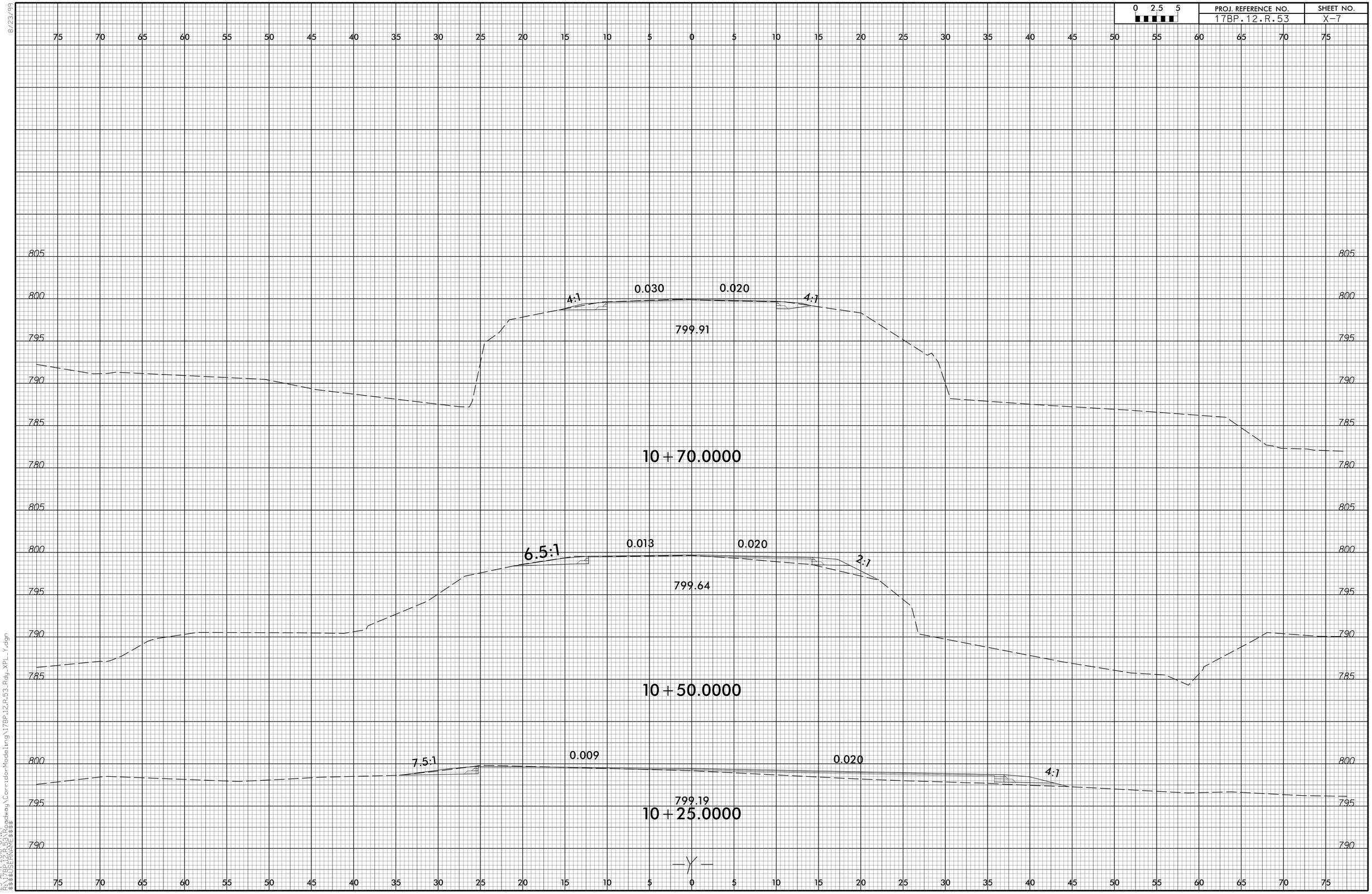

23-APR-2018 07:27
R:\17BP.12.R.53_Roadway\CorridorModeling\17BP.12.R.53_Rdy_XPL_Y.dgn
$$$$USERNAME$$$$

DocuSign Envelope ID: 77E72B5E-6A5D-4B71-AB0B-3848CAD589EF

12+00 (-)5.5600% (-)0.3000%

PI STA. = 11+40.00
ELEV. = 797.63
VC = 260'

-L- GRADE DATA

12+50 13+00 13+50 14+00

(-)0.3000% (+)3.7200%

PI STA. = 14+75.00
ELEV. = 796.63
VC = 260'

-L- GRADE DATA

SPAN A

FILL FACE @ END BENT 1
STA. 12+50.40 -L-
G.P. EL. 797.34

1'-6" EXCAVATION LIMIT (TYP.)

BEGIN FRONT SLOPE
STA. 12+41.21 -L-
G.P. EL. 797.41

EL. 797± FIX.

LOW CHORD EL. 793.63

BASE HIGH WATER SURFACE (Q100) EL. 788.01

EL. 790.0±

EL. 788.5±

EL. 797± FILL

APPROXIMATE LINE OF EXISTING GROUND

3 12

GEOTEXTILE FOR DRAINAGE (TYP.)

RIP RAP (CLASS II) (2'-0" THK.) (TYP.)

WATER SURFACE EL. 779.6

EL. 776± EL. 776±

EXISTING SUBSTRUCTURE (TYP.)

EL. 791.0±

LOW CHORD EL. 793.30

EL. 788.5±

1'-7" MIN. RIP RAP BERM (TYP.)

EL. 797± FIX.

FILL FACE @ END BENT 2
STA. 13+52.65 -L-
G.P. EL. 797.00

BEGIN FRONT SLOPE
STA. 13+61.84 -L-
G.P. EL. 796.99

PROPOSED GRADE

EL. 797±

1'-0" (TYP.)

1'-0" MIN. EARTH BERM (TYP.)

HP 12x53 STEEL PILES (TYP.)

3'-6" MIN. (TYP.)

1½:1 SLOPE (TYP.)

EL. 778.6± (TYP.)

1½:1 SLOPE (TYP.)

END BENT 1

END BENT 2

SECTION ALONG -L-

UNCLASSIFIED STRUCTURE EXCAVATION

GRADE TO DRAIN

102'-3"
(FILL FACE TO FILL FACE)

1'-0" MIN. EARTH BERM EL. 788.21

1'-0" MIN. EARTH BERM EL. 787.89

RIP RAP (CLASS II) (2'-0" THK.) (TYP.)

DECK DRAIN DISSIPATOR PAD RIP RAP (CLASS II)

11'-0"± (TYP.)

TO SR 1808

W.P. #1
STA. 12+50.40 -L-

1½:1

16'-6"± (TYP.)

BRIDGE ID
STA. 13+01.53 -L-

N 20° 29' 24.9" E

SR 1005
BALLPARK RD.

1½:1

W.P. #2
STA. 13+52.65 -L-

-L-

BEGIN APPROACH SLAB
STA. 12+39.53 -L-

BEGIN FRONT SLOPE
STA. 12+41.21 -L-

90°-00'-00" (TYP.)

FILL FACE

16'-6"± (TYP.)

END APPROACH SLAB
STA. 13+63.53 -L-

BEGIN FRONT SLOPE
STA. 13+61.84 -L-

FILL FACE

TO SR 1807

17'-0"± (TYP.)

EXISTING SUBSTRUCTURE (TYP.)

MANGNESS CREEK

GEOTEXTILE FOR DRAINAGE (TYP.)

RIP RAP CLASS II (2'-0" THK.) (TYP.)

1'-0" MIN. EARTH BERM EL. 789.19

1'-0" MIN. EARTH BERM EL. 788.87

PLAN

PILES NOT SHOWN IN PLAN VIEW FOR CLARITY

I HEREBY CERTIFY THESE PLANS ARE THE AS-BUILT PLANS.

PROJECT NO. 17BP.12.R.53

CLEVELAND COUNTY

STATION: 13+01.53 -L-

SHEET 1 OF 2 REPLACES BRIDGE NO. 190

DOCUMENT NOT CONSIDERED FINAL UNLESS ALL SIGNATURES COMPLETED

NORTH CAROLINA PROFESSIONAL SEAL 023371 ENGINEER VIPUL A. PATEL

DocuSigned by: Vipul Patel AC3E8B7A79B544D...

4/18/2018

STATE OF NORTH CAROLINA
DEPARTMENT OF TRANSPORTATION
RALEIGH

GENERAL DRAWING

FOR BRIDGE ON SR 1005
OVER MANGNESS CREEK
BETWEEN SR 1808 & SR 1807

Michael Baker INTERNATIONAL

Michael Baker Engineering
8000 Regency Parkway, Suite 600
Cary, North Carolina 27518
NC License No. : F-1084

REVISIONS						SHEET NO.
NO.	BY:	DATE:	NO.	BY:	DATE:	S-1
1			3			TOTAL SHEETS
2			4			14

DRAWN BY : N. B. SPEAKS DATE : 4-18-18
CHECKED BY : V. A. PATEL DATE : 4-18-18

nbspeaks
4/18/2018 9:22:10 AM
Filename: Y:\Projects\NCDOT\Div 12 On Call\17BP.12.R.53\Structures\Dwgs\Final\4190_S01_BD-5112W_SMU_GD01.dgn

DocuSign Envelope ID: 27A9EF3C-E83A-4C09-9860-A164241C7297

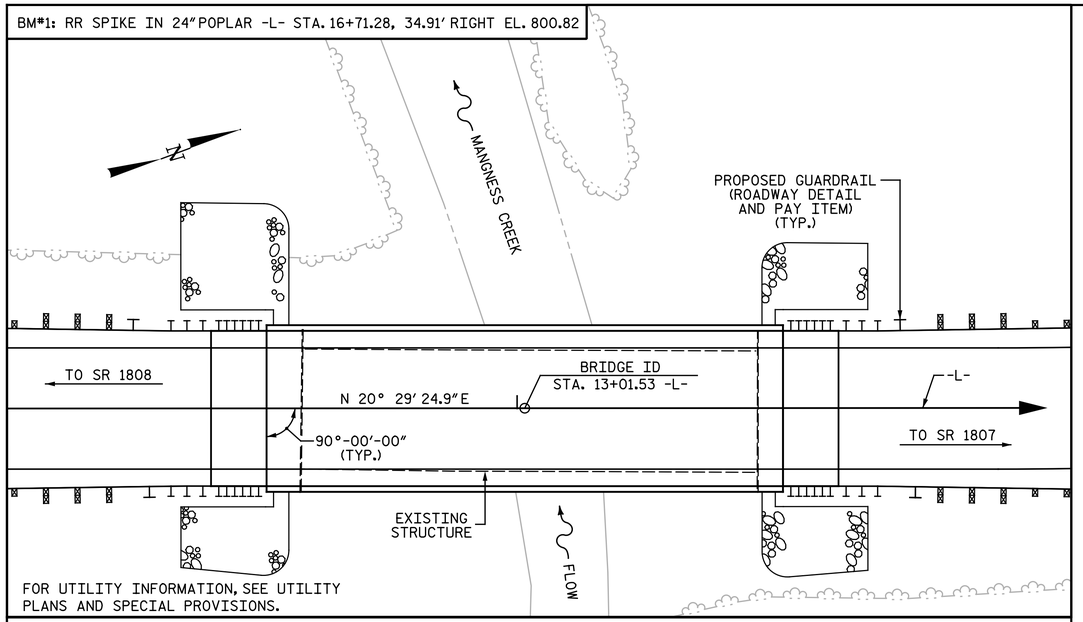

LOCATION SKETCH

NOTES:

ASSUMED LIVE LOAD = HL-93 OR ALTERNATE LOADING.

FOR OTHER DESIGN DATA AND GENERAL NOTES, SEE SHEET SN.

THIS BRIDGE HAS BEEN DESIGNED IN ACCORDANCE WITH THE AASHTO LRFD BRIDGE DESIGN SPECIFICATIONS.

THIS BRIDGE IS LOCATED IN SEISMIC ZONE 1.

FOR SUBMITTAL OF WORKING DRAWINGS, SEE SPECIAL PROVISIONS.

FOR FALSEWORK AND FORMWORK, SEE SPECIAL PROVISIONS.

FOR GROUT FOR STRUCTURES, SEE SPECIAL PROVISIONS.

FOR CRANE SAFETY, SEE SPECIAL PROVISIONS.

REMOVAL OF THE EXISTING BRIDGE SHALL BE PERFORMED SO AS NOT TO ALLOW DEBRIS TO FALL INTO THE WATER. THE CONTRACTOR SHALL REMOVE THE BRIDGE AND SUBMIT PLANS FOR DEMOLITION IN ACCORDANCE WITH ARTICLE 402-2 OF THE STANDARD SPECIFICATIONS.

THE MATERIAL SHOWN ON SHEET 1 OF 2 IN THE CROSS-HATCHED AREA SHALL BE EXCAVATED FOR A DISTANCE OF 40 FT EACH SIDE OF CENTERLINE ROADWAY AS DIRECTED BY THE ENGINEER. THIS WORK WILL BE PAID FOR AT THE CONTRACT LUMP SUM PRICE FOR UNCLASSIFIED STRUCTURE EXCAVATION. SEE SECTION 412 OF THE STANDARD SPECIFICATIONS.

THE SUBSTRUCTURE OF THE EXISTING BRIDGE INDICATED ON THE PLANS IS FROM THE BEST INFORMATION AVAILABLE. SINCE THIS INFORMATION IS SHOWN FOR THE CONVENIENCE OF THE CONTRACTOR, THE CONTRACTOR SHALL HAVE NO CLAIM WHATSOEVER AGAINST THE DEPARTMENT OF TRANSPORTATION FOR ANY DELAYS OR ADDITIONAL COST INCURRED BASED ON DIFFERENCES BETWEEN THE EXISTING BRIDGE SUBSTRUCTURE SHOWN ON THE PLANS AND THE ACTUAL CONDITIONS AT THE PROJECT SITE.

THE EXISTING STRUCTURE CONSISTING OF 3 SPANS (1 @ 30'-0"AND 2 @ 30'-3") WITH PRECAST PRESTRESSED CONCRETE CHANNELS AND A CLEAR ROADWAY OF 24.42' ON PRECAST PRESTRESSED CONCRETE CAPS ON STEEL PILES AT END & INTERIOR BENTS AND LOCATED AT THE PROPOSED SITE SHALL BE REMOVED.

FOR EROSION CONTROL MEASURES, SEE EROSION CONTROL PLANS.

ASPHALT WEARING SURFACE IS INCLUDED IN ROADWAY QUANTITY ON ROADWAY PLANS.

THIS STRUCTURE HAS BEEN DESIGNED IN ACCORDANCE WITH "HEC 18-EVALUATING SCOUR AT BRIDGES".

INASMUCH AS THE PAINT SYSTEM ON THE EXISTING STRUCTURAL STEEL CONTAINS LEAD, THE CONTRACTOR'S ATTENTION IS DIRECTED TO ARTICLE 107-1 OF THE STANDARD SPECIFICATIONS. ANY COSTS RESULTING FROM COMPLIANCE WITH APPLICABLE STATE OR FEDERAL REGULATIONS PERTAINING TO HANDLING OF MATERIALS CONTAINING LEAD BASED PAINT SHALL BE INCLUDED IN THE BID PRICE FOR "REMOVAL OF EXISTING STRUCTURE AT STATION 13+01.53 -L-".

FOR ASBESTOS ASSESSMENT FOR BRIDGE DEMOLITION AND RENOVATION ACTIVITIES, SEE SPECIAL PROVISIONS.

FOUNDATION NOTES:

FOR PILES, SEE SECTION 450 OF THE STANDARD SPECIFICATIONS.

PILES AT END BENT NO. 1 AND END BENT NO. 2 ARE DESIGNED FOR A FACTORED RESISTANCE OF 113 TONS PER PILE.

DRIVE PILES AT END BENT NO. 1 AND END BENT NO. 2 TO A REQUIRED DRIVING RESISTANCE OF 190 TONS PER PILE.

STEEL H-PILE POINTS ARE REQUIRED FOR STEEL H-PILES AT END BENT NO. 1 AND END BENT NO. 2. FOR STEEL PILE POINTS, SEE SECTION 450 OF THE STANDARD SPECIFICATIONS.

TESTING THE FIRST PRODUCTION PILE WITH THE PDA DURING DRIVING, RESTRIKING OR REDRIVING MAY BE REQUIRED. FOR PDA TESTING, SEE SECTION 450 OF THE STANDARD SPECIFICATIONS.

HYDRAULIC DATA

DESIGN DISCHARGE	= 1900 CFS
FREQUENCY OF DESIGN FLOOD	= 25 YR
DESIGN HIGH WATER ELEVATION	= 786.3
DRAINAGE AREA	= 6.3 SQ. MI.
BASE DISCHARGE (Q100)	= 2,830 CFS
BASE HIGH WATER ELEVATION	= 788.01

OVERTOPPING FLOOD DATA

OVERTOPPING DISCHARGE	= * CFS
FREQUENCY OF OVERTOPPING FLOOD	= 500+ YR
OVERTOPPING FLOOD ELEVATION	= 797.0

* OVERTOPPING FLOOD IS >500+ YEAR EVENT

TOTAL BILL OF MATERIAL

	REMOVAL OF EXISTING STRUCTURE	UNCLASSIFIED STRUCTURE EXCAVATION	CLASS A CONCRETE	BRIDGE APPROACH SLABS	REINFORCING STEEL	PILE DRIVING EQUIPMENT SETUP FOR HP 12X53 STEEL PILES	HP 12X53 STEEL PILES		STEEL PILE POINTS	VERTICAL CONCRETE BARRIER RAIL	RIP RAP CLASS II (2'-0" THICK)	GEOTEXTILE FOR DRAINAGE	ELASTOMERIC BEARINGS	3'-0"x 3'-3" PRESTRESSED CONCRETE BOX BEAMS		ASBESTOS ASSESSMENT
	LUMP SUM	LUMP SUM	CU. YDS.	LUMP SUM	LBS.	EA.	NO.	LIN. FT.	EA.	LIN. FT.	TONS	SQ. YDS.	LUMP SUM	NO.	LIN. FT.	LUMP SUM
SUPERSTRUCTURE										200.00			LUMP SUM	11	1,100	
END BENT 1		LUMP SUM	29.0		4,642	7	7	140	7		230	320				
END BENT 2		LUMP SUM	29.0		4,642	7	7	210	7		195	260				
TOTAL	LUMP SUM	LUMP SUM	58.0	LUMP SUM	9,284	14	14	350	14	200.00	425	580	LUMP SUM	11	1,100	LUMP SUM

PROJECT NO. 17BP.12.R.53

CLEVELAND COUNTY

STATION: 13+01.53 -L-

SHEET 2 OF 2

DOCUMENT NOT CONSIDERED FINAL UNLESS ALL SIGNATURES COMPLETED

NORTH CAROLINA PROFESSIONAL SEAL 023371 ENGINEER VIPUL A. PATEL

DocuSigned by: Vipul Patel AC3E887A798544D...

4/18/2018

Michael Baker INTERNATIONAL

Michael Baker Engineering
8000 Regency Parkway, Suite 600
Cary, North Carolina 27518
NC License No.: F-1084

STATE OF NORTH CAROLINA
DEPARTMENT OF TRANSPORTATION
RALEIGH

GENERAL DRAWING

FOR BRIDGE ON SR 1005
OVER MANGNESS CREEK
BETWEEN SR 1808 & SR 1807

REVISIONS						SHEET NO.
NO.	BY:	DATE:	NO.	BY:	DATE:	S-2
1			3			TOTAL SHEETS
2			4			14

DRAWN BY : N. B. SPEAKS DATE : 4-18-18
CHECKED BY : V. A. PATEL DATE : 4-18-18

nbspeaks
4/18/2018 8:43:59 AM
Filename: Y:\Projects\NCDOT\Div 12 On Call\17BP.12.R.53\Structures\Dwgs\Final\4190_SOL_BD-5112W_SMU_G002.dgn

DocuSign Envelope ID: 60916B75-D116-4C4C-8CD4-716FC2BB6447

LOAD AND RESISTANCE FACTOR RATING (LRFD) SUMMARY FOR PRESTRESSED CONCRETE GIRDERS

LEVEL		VEHICLE	WEIGHT (W) (TONS)	CONTROLLING LOAD RATING	MINIMUM RATING FACTORS (RF)	TONS = W X RF	STRENGTH I LIMIT STATE										SERVICE III LIMIT STATE						COMMENT NUMBER
								MOMENT					SHEAR					MOMENT						
							LIVELOAD FACTORS	DISTRIBUTION FACTORS (DF)	RATING FACTOR	SPAN	GIRDER LOCATION	DISTANCE FROM LEFT END OF SPAN (ft)	DISTRIBUTION FACTORS (DF)	RATING FACTOR	SPAN	GIRDER LOCATION	DISTANCE FROM LEFT END OF SPAN (ft)	LIVELOAD FACTORS	DISTRIBUTION FACTORS (DF)	RATING FACTOR	SPAN	GIRDER LOCATION	DISTANCE FROM LEFT END OF SPAN (ft)	
DESIGN LOAD RATING		HL-93(Inv)	N/A	(1)	**1.035**	--	1.75	0.272	1.26	A	EL	49.25	0.489	1.34	A	EL	4.925	0.80	0.272	**1.04**	A	EL	**49.25**	
		HL-93(Opr)	N/A	--	1.633	--	1.35	0.272	1.63	A	EL	49.25	0.489	1.73	A	EL	4.925	N/A	--	--	--	--	--	
		HS-20(Inv)	36.000	(2)	**1.440**	51.840	1.75	0.272	1.75	A	EL	49.25	0.489	1.81	A	EL	4.925	0.80	0.272	**1.44**	A	EL	**49.25**	
		HS-20(Opr)	36.000	--	2.271	81.756	1.35	0.272	2.27	A	EL	49.25	0.489	2.35	A	EL	4.925	N/A	--	--	--	--	--	
LEGAL LOAD RATING	SV	SNSH	13.500	--	3.413	46.079	1.40	0.272	5.19	A	EL	49.25	0.489	5.59	A	EL	4.925	0.80	0.272	3.41	A	EL	49.25	
		SNGARBS2	20.000	--	2.473	49.452	1.40	0.272	3.76	A	EL	49.25	0.489	3.91	A	EL	4.925	0.80	0.272	2.47	A	EL	49.25	
		SNAGRIS2	22.000	--	2.313	50.885	1.40	0.272	3.52	A	EL	49.25	0.489	3.60	A	EL	4.925	0.80	0.272	2.31	A	EL	49.25	
		SNCOTTS3	27.250	--	1.696	46.228	1.40	0.272	2.58	A	EL	49.25	0.489	2.78	A	EL	4.925	0.80	0.272	1.70	A	EL	49.25	
		SNAGGRS4	34.925	--	1.390	48.556	1.40	0.272	2.11	A	EL	49.25	0.489	2.26	A	EL	4.925	0.80	0.272	1.39	A	EL	49.25	
		SNS5A	35.550	--	1.361	48.398	1.40	0.272	2.07	A	EL	49.25	0.489	2.27	A	EL	4.925	0.80	0.272	1.36	A	EL	49.25	
		SNS6A	39.950	--	1.238	49.456	1.40	0.272	1.88	A	EL	49.25	0.489	2.05	A	EL	4.925	0.80	0.272	1.24	A	EL	49.25	
		SNS7B	42.000	--	1.178	49.496	1.40	0.272	1.79	A	EL	49.25	0.489	2.00	A	EL	4.925	0.80	0.272	1.18	A	EL	49.25	
	TTST	TNAGRIT3	33.000	--	1.506	49.709	1.40	0.272	2.29	A	EL	49.25	0.489	2.46	A	EL	4.925	0.80	0.272	1.51	A	EL	49.25	
		TNT4A	33.075	--	1.510	49.942	1.40	0.272	2.30	A	EL	49.25	0.489	2.41	A	EL	4.925	0.80	0.272	1.51	A	EL	49.25	
		TNT6A	41.600	--	1.224	50.926	1.40	0.272	1.86	A	EL	49.25	0.489	2.09	A	EL	4.925	0.80	0.272	1.22	A	EL	49.25	
		TNT7A	42.000	--	1.225	51.442	1.40	0.272	1.86	A	EL	49.25	0.489	2.05	A	EL	4.925	0.80	0.272	1.22	A	EL	49.25	
		TNT7B	42.000	--	1.254	52.657	1.40	0.272	1.91	A	EL	49.25	0.489	1.96	A	EL	4.925	0.80	0.272	1.25	A	EL	49.25	
		TNAGRIT4	43.000	--	1.203	51.711	1.40	0.272	1.83	A	EL	49.25	0.489	1.91	A	EL	4.925	0.80	0.272	1.20	A	EL	49.25	
		TNAGT5A	45.000	--	1.139	51.236	1.40	0.272	1.73	A	EL	49.25	0.489	1.87	A	EL	4.925	0.80	0.272	1.14	A	EL	49.25	
		TNAGT5B	45.000	(3)	**1.129**	50.805	1.40	0.272	1.72	A	EL	49.25	0.489	1.82	A	EL	4.925	0.80	0.272	**1.13**	A	EL	**49.25**	

LOAD FACTORS:

DESIGN LOAD RATING FACTORS	LIMIT STATE	γ_{DC}	γ_{DW}
	STRENGTH I	1.25	1.50
	SERVICE III	1.00	1.00

NOTES:

MINIMUM RATING FACTORS ARE BASED ON THE STRENGTH I AND SERVICE III LIMIT STATES.

ALLOWABLE STRESSES FOR SERVICE III LIMIT STATE ARE AS REQUIRED FOR DESIGN.

(#) CONTROLLING LOAD RATING

(1) DESIGN LOAD RATING (HL-93)

(2) DESIGN LOAD RATING (HS-20)

(3) LEGAL LOAD RATING **

** SEE CHART FOR VEHICLE TYPE

GIRDER LOCATION

I - INTERIOR GIRDER
EL - EXTERIOR LEFT GIRDER
ER - EXTERIOR RIGHT GIRDER

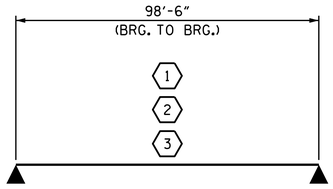

LRFR SUMMARY

PROJECT NO. 17BP.12.R.53

CLEVELAND COUNTY

STATION: 13+01.53 -L-

NORTH CAROLINA PROFESSIONAL SEAL 037479 ENGINEER NICHOLAS A. PIERCE

Docusigned by: Nicholas Pierce 15110B434D0B485...

2/19/2018

STATE OF NORTH CAROLINA
DEPARTMENT OF TRANSPORTATION
RALEIGH

STANDARD

LRFR SUMMARY FOR 100' BOX BEAM UNIT 90° SKEW

(NON-INTERSTATE TRAFFIC)

REVISIONS						SHEET NO.
NO.	BY:	DATE:	NO.	BY:	DATE:	S-3
1			3			TOTAL SHEETS
2			4			14

DOCUMENT NOT CONSIDERED FINAL UNLESS ALL SIGNATURES COMPLETED

ASSEMBLED BY : T. H. CARROLL DATE : 3/10/15
CHECKED BY : T. R. PETERSON DATE : 3/18/15

DRAWN BY : TMG 11/11
CHECKED BY : AAC 11/11

19-FEB-2018 16:06
S:\DPG3\Low Impact Projects\17BP\Submitted\17BP12R53\FinalSetofPlans\S03_17BP.12.R.53_SMU_LR_01.dgn
naplerce

STD. NO. 39LRFR1_90S_100L

DocuSign Envelope ID: 60916B75-D116-4C4C-8CD4-716FC2BB6447

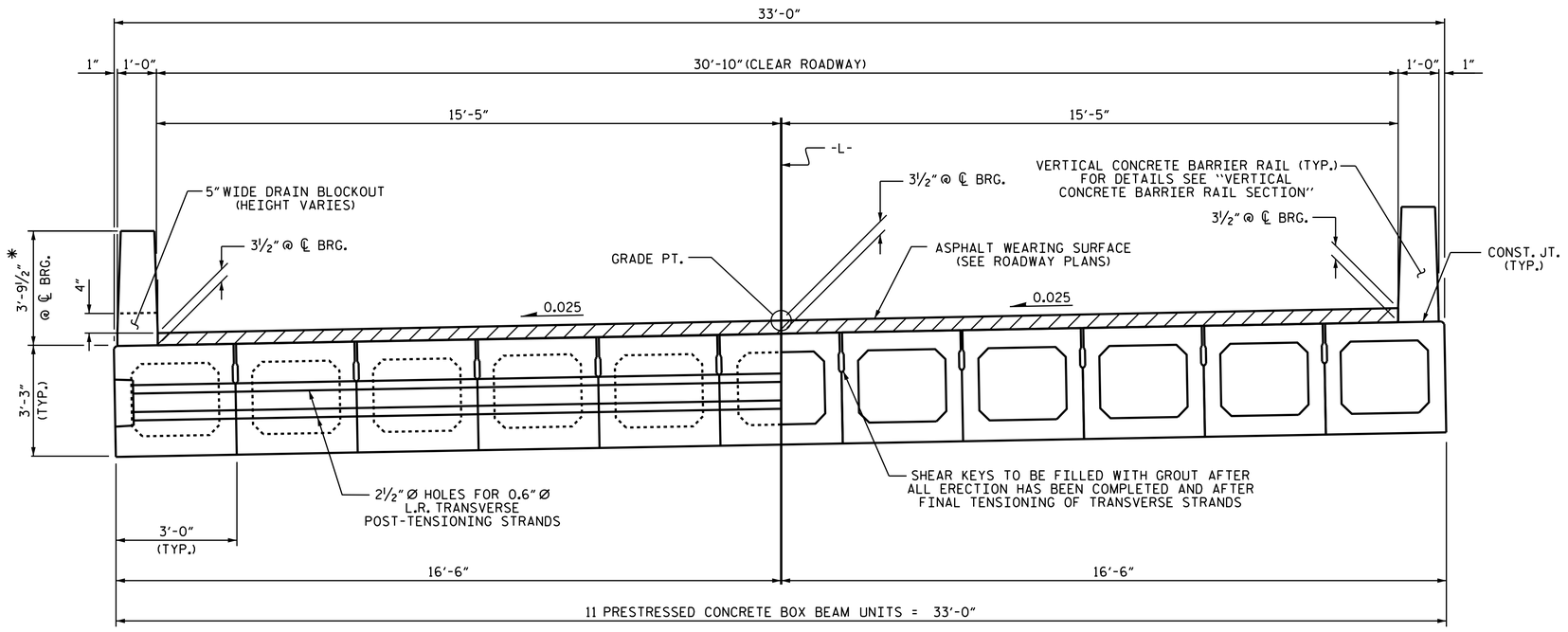

HALF SECTION
AT INTERMEDIATE DIAPHRAGMS

HALF SECTION
THROUGH VOIDS

TYPICAL SECTION

* THE MAXIMUM BARRIER RAIL HEIGHT AND ASPHALT THICKNESS IS SHOWN. THE HEIGHT OF THE BARRIER RAIL AND ASPHALT THICKNESS VARIES WHILE THE TOP OF THE BARRIER RAIL FOLLOWS THE PROFILE OF THE GUTTERLINE. FOR RAIL HEIGHT DETAILS AND ASPHALT THICKNESS, SEE THE "VERTICAL CONCRETE BARRIER RAIL SECTION" DETAIL.

FIXED END

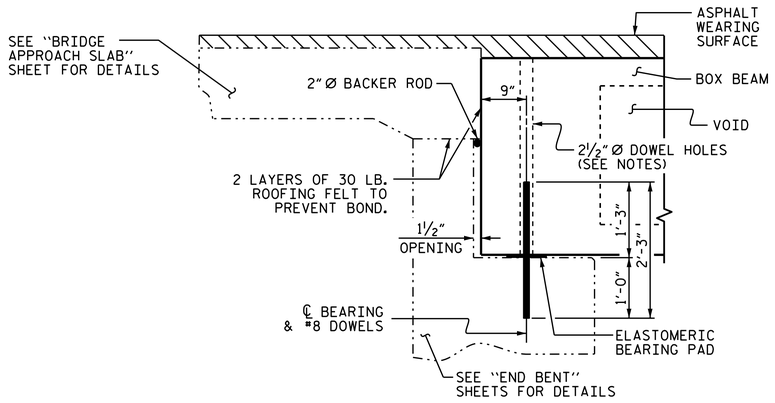

SECTION AT END BENT

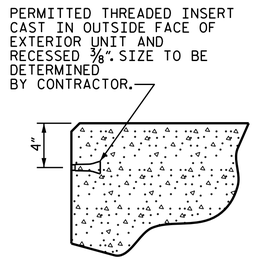

THREADED INSERT DETAIL

NOTES

ALL PRESTRESSING STRANDS SHALL BE 7-WIRE LOW RELAXATION GRADE 270 STRANDS AND SHALL CONFORM TO AASHTO M203 EXCEPT FOR SAMPLING REQUIREMENTS WHICH SHALL BE IN ACCORDANCE WITH THE STANDARD SPECIFICATIONS.

ALL REINFORCING STEEL CAST WITH THE BOX BEAM SECTIONS SHALL BE GRADE 60 AND SHALL BE INCLUDED IN THE UNIT PRICE BID FOR PRESTRESSED CONCRETE BOX BEAMS.

FLAME CUTTING OF THE TRANSVERSE POST-TENSIONING STRAND IS NOT ALLOWED.

RECESSES FOR TRANSVERSE STRANDS SHALL BE GROUTED AFTER THE TENSIONING OF THE STRANDS.

THE 2½" Ø DOWEL HOLES AT FIXED ENDS OF BOX BEAM SECTIONS SHALL BE FILLED WITH NON-SHRINK GROUT.

THE BACKER RODS SHALL CONFORM TO THE REQUIREMENTS OF TYPE M BOND BREAKER. SEE SECTION 1028 OF THE STANDARD SPECIFICATIONS.

THE TRANSFER OF LOAD FROM THE ANCHORAGES TO THE BOX BEAM UNIT SHALL BE DONE WHEN THE CONCRETE HAS REACHED A COMPRESSIVE STRENGTH OF NOT LESS THAN 5,500 PSI.

ALL REINFORCING STEEL IN VERTICAL CONCRETE BARRIER RAILS SHALL BE EPOXY COATED.

PRESTRESSING STRANDS SHALL BE CUT FLUSH WITH THE BOX BEAM UNIT ENDS.

APPLY EPOXY PROTECTIVE COATING TO BOX BEAM UNIT ENDS.

VERTICAL GROOVED CONTRACTION JOINTS, ½" IN DEPTH, SHALL BE TOOLED IN ALL EXPOSED FACES OF THE BARRIER RAIL AND IN ACCORDANCE WITH ARTICLE 825-10(B) OF THE STANDARD SPECIFICATIONS. A VERTICAL CONTRACTION JOINT SHALL BE LOCATED AT EACH THIRD POINT BETWEEN BARRIER RAIL EXPANSION JOINTS. ONLY ONE CONTRACTION JOINT IS REQUIRED AT MIDPOINT OF BARRIER RAIL SEGMENTS LESS THAN 20 FEET IN LENGTH AND NO CONTRACTION JOINTS ARE REQUIRED FOR THOSE SEGMENTS LESS THAN 10 FEET IN LENGTH.

THE LOCATION OF THE VOID DRAINS MAY BE SHIFTED SLIGHTLY WHERE NECESSARY TO CLEAR PRESTRESSING STRANDS OR TRANSVERSE REINFORCING STEEL.

FOR GROUT FOR STRUCTURES, SEE SPECIAL PROVISIONS.

THE PERMITTED THREADED INSERTS ARE DETAILED AS AN OPTION FOR THE CONTRACTOR TO ATTACH FALSEWORK AND FORMWORK DURING CONSTRUCTION.

THE PERMITTED THREADED INSERTS IN THE EXTERIOR UNITS SHALL BE SIZED BY THE CONTRACTOR, SPACED AT 4'-0" CENTERS AND GALVANIZED IN ACCORDANCE WITH SECTION 1076 OF THE STANDARD SPECIFICATIONS. STAINLESS STEEL THREADED INSERTS MAY BE USED AS AN ALTERNATE.

THE PERMITTED THREADED INSERTS SHALL BE GROUTED BY THE CONTRACTOR IMMEDIATELY FOLLOWING REMOVAL OF THE FALSEWORK.

THE COST OF THE PERMITTED THREADED INSERTS SHALL BE INCLUDED IN THE PRICE BID FOR THE PRECAST UNITS.

THE DRAIN OPENING AT THE GUTTERLINE SHALL BE 5" X 4". THE HEIGHT OF THE BLOCKOUT IN THE VERTICAL CONCRETE BARRIER RAIL SHALL EXTEND FROM THE TOP OF THE BOX BEAM UNIT TO THE TOP OF THE DRAIN OPENING.

APPLY EPOXY PROTECTIVE COATING TO EXTERIOR FACE OF THE EXTERIOR BOX BEAM UNITS THAT REQUIRE DRAINS IN THE BARRIER RAIL.

PROJECT NO. 17BP.12.R.53
CLEVELAND COUNTY
STATION: 13+01.53 -L-

SHEET 1 OF 5

STATE OF NORTH CAROLINA
DEPARTMENT OF TRANSPORTATION
RALEIGH
STANDARD
3'-0" X 3'-3" PRESTRESSED CONCRETE BOX BEAM UNIT

NORTH CAROLINA PROFESSIONAL SEAL 037479 ENGINEER NICHOLAS A. PIERCE
DocuSigned by: Nicholas Pierce 15110B434D0B485...
2/19/2018

REVISIONS						SHEET NO.
NO.	BY:	DATE:	NO.	BY:	DATE:	S-4
1			3			TOTAL SHEETS
2			4			14

DOCUMENT NOT CONSIDERED FINAL UNLESS ALL SIGNATURES COMPLETED

ASSEMBLED BY : T. H. CARROLL	DATE : 3/9/15
CHECKED BY : T. R. PETERSON	DATE : 3/18/15
DRAWN BY : DGE 8/11	REV. 9/14 MAA/TMG
CHECKED BY : TMG 11/11	

19-FEB-2018 16:06
S:\DPG3\Low Impact Projects\17BP\Submitted\17BP12R53\FinalSetofPlans\S04_17BP.12.R.53_SMU_ TS_04.dgn
napierce

STD. NO. 39PCBB1_33

DocuSign Envelope ID: 60916B75-D116-4C4C-8CD4-716FC2BB6447

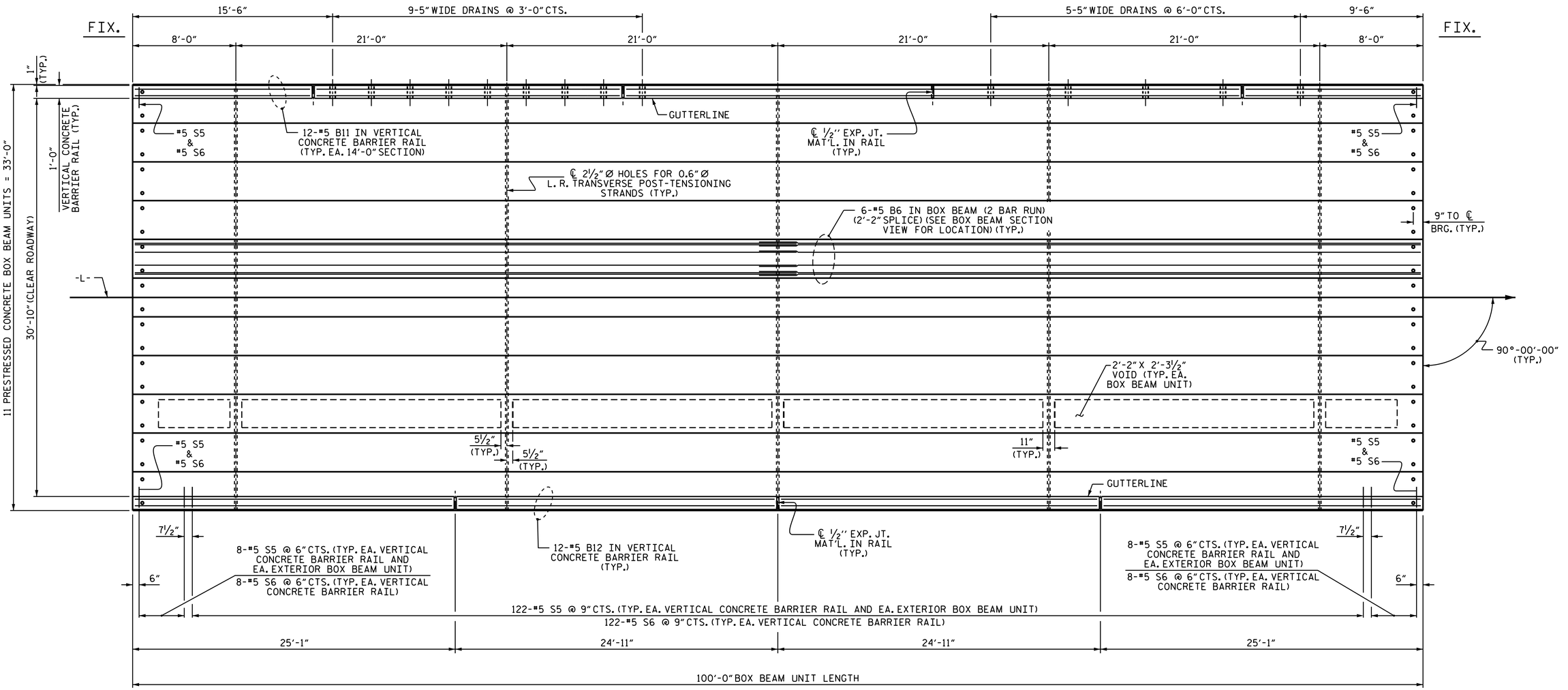

PLAN OF UNIT

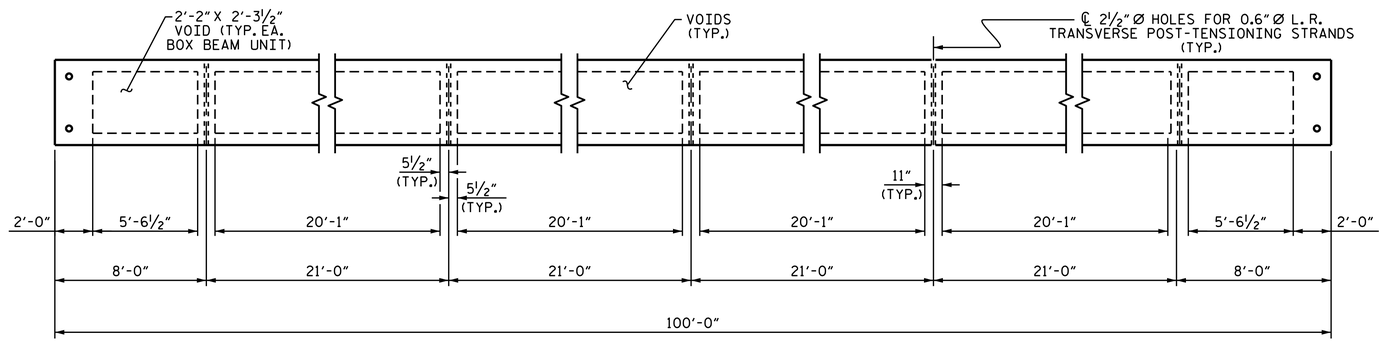

DIAPHRAGM AND VOID LAYOUT

PROJECT NO. 17BP.12.R.53

CLEVELAND COUNTY

STATION: 13+01.53 -L-

SHEET 2 OF 5

STATE OF NORTH CAROLINA
DEPARTMENT OF TRANSPORTATION
RALEIGH

PLAN OF 100' UNIT 30'-10" CLEAR ROADWAY

90° SKEW

NORTH CAROLINA PROFESSIONAL SEAL 037479 ENGINEER NICHOLAS A. PIERCE

DocuSigned by: Nicholas Pierce 151108434D0B485...

2/19/2018

REVISIONS						SHEET NO.
NO.	BY:	DATE:	NO.	BY:	DATE:	S-5
1			3			TOTAL SHEETS
2			4			14

DOCUMENT NOT CONSIDERED FINAL UNLESS ALL SIGNATURES COMPLETED

ASSEMBLED BY : T. H. CARROLL DATE : 3/9/15
CHECKED BY : T. R. PETERSON DATE : 3/18/15

19-FEB-2018 16:06
S:\DPG3\Low Impact Projects\17BP\Submitted\17BP12R53\FinalSetofPlans\S05_17BP.12.R.53_SMU_PS_01.dgn
napierce

DocuSign Envelope ID: 60916B75-D116-4C4C-8CD4-716FC2BB6447

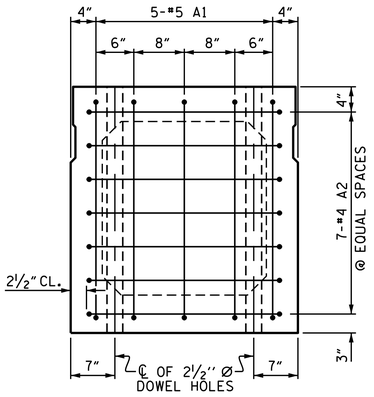

END ELEVATION

SHOWING PLACEMENT OF #5 & #4 "A" BARS AND LOCATION OF DOWEL HOLES. (INTERIOR BOX BEAM SECTION SHOWN-EXTERIOR SECTION SIMILAR EXCEPT SHEAR KEY LOCATION. STRAND LAYOUT NOT SHOWN.)

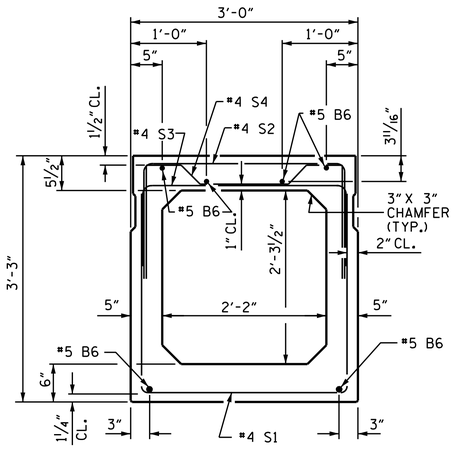

INTERIOR BOX BEAM SECTION

(STRAND LAYOUT NOT SHOWN)

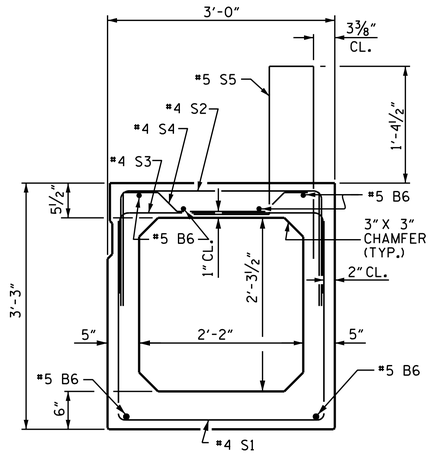

EXTERIOR BOX BEAM SECTION

(STRAND LAYOUT NOT SHOWN)

0.6" Ø LOW RELAXATION STRAND LAYOUT

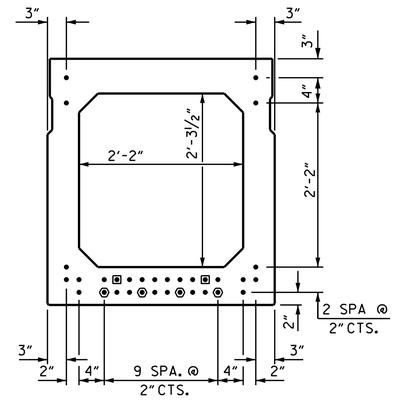

TYPICAL STRAND LOCATION

(32 STRANDS REQUIRED)

DEBONDING LEGEND

- ● FULLY BONDED STRANDS
- ◉ STRANDS DEBONDED FOR 4'-0" FROM END OF GIRDER
- ⬢ STRANDS DEBONDED FOR 12'-0" FROM END OF GIRDER

BOND SHALL BE BROKEN ON STRANDS AS SHOWN FOR THE SPECIFIED LENGTH FROM EACH END OF THE BOX BEAM. SEE STANDARD SPECIFICATIONS ARTICLE 1078-7.

BAR TYPES

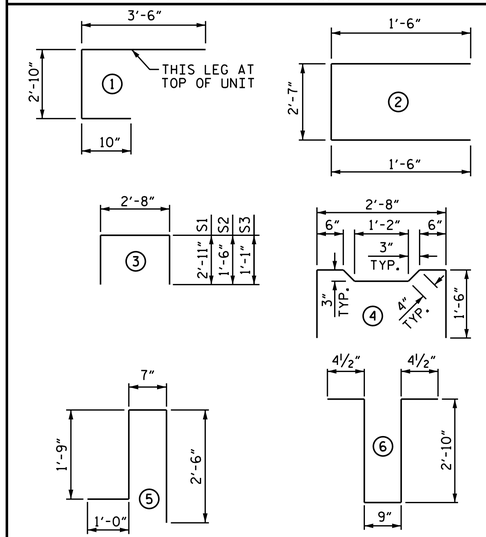

ALL BAR DIMENSIONS ARE OUT TO OUT

BILL OF MATERIAL FOR ONE BOX BEAM SECTION

				EXTERIOR UNIT		INTERIOR UNIT	
BAR	NUMBER	SIZE	TYPE	LENGTH	WEIGHT	LENGTH	WEIGHT
A1	10	#5	1	7'-2"	75	7'-2"	75
A2	44	#4	2	5'-7"	164	5'-7"	164
B6	12	#5	STR	50'-11"	637	50'-11"	637
K1	15	#4	6	7'-2"	72	7'-2"	72
K2	10	#4	STR	2'-7"	17	2'-7"	17
S1	81	#4	3	8'-6"	460	8'-6"	460
S2	81	#4	3	5'-8"	307	5'-8"	307
S3	141	#4	3	4'-10"	455	4'-10"	455
S4	60	#4	4	5'-10"	234	5'-10"	234
✱ S5	138	#5	5	5'-10"	840	--	--
REINFORCING STEEL					LBS. 2,421		LBS. 2,421
✱ EPOXY COATED REINF. STEEL					LBS. 840		
7,500 P.S.I. CONCRETE					CU. YDS. 19.6		CU. YDS. 19.4
0.6" Ø L.R. STRANDS					No. 32		No. 32

GRADE 270 STRANDS

	0.6" Ø L.R.
AREA (SQUARE INCHES)	0.217
ULTIMATE STRENGTH (LBS. PER STRAND)	58,600
APPLIED PRESTRESS (LBS. PER STRAND)	43,950

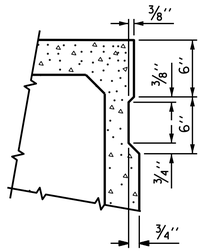

SHEAR KEY DETAIL

NOTE: OMIT SHEAR KEY ON OUTSIDE FACE OF EXTERIOR BOX BEAMS.

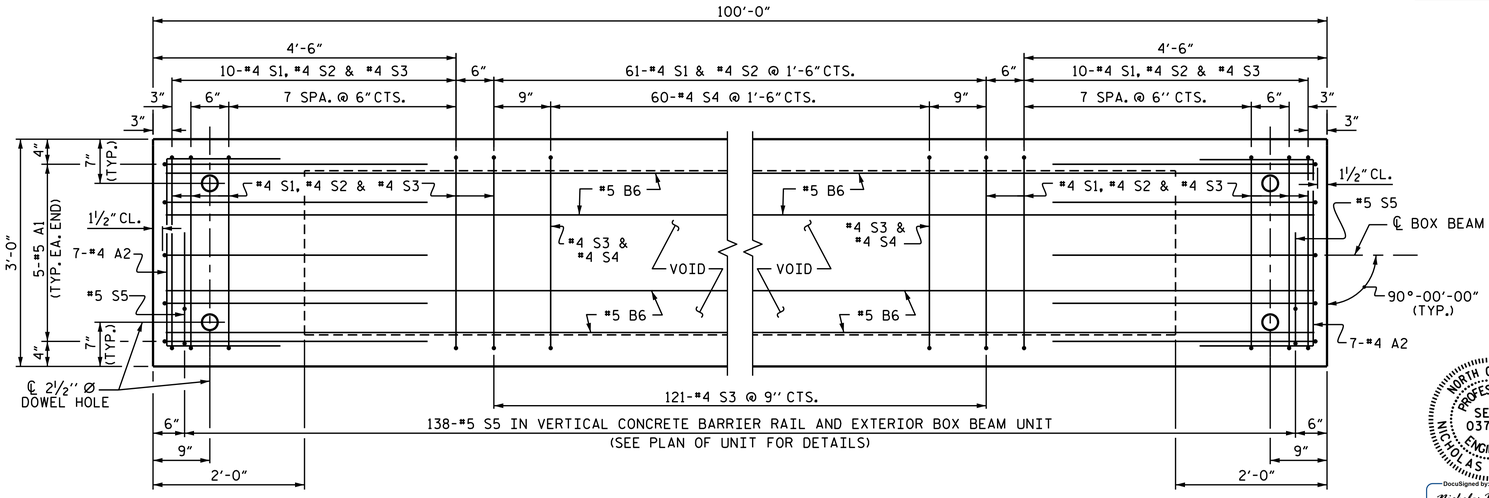

PLAN OF BOX BEAM

EXTERIOR UNIT SHOWN, INTERIOR UNIT SIMILAR EXCEPT OMIT #5 S5 BARS.
FOR LOCATION OF DIAPHRAGMS, SEE "PLAN OF UNIT".
FOR THREADED INSERTS, SEE "THREADED INSERT DETAIL".
FOR REINFORCING STEEL IN DIAPHRAGMS, SEE "DOUBLE DIAPHRAGM DETAILS".

PROJECT NO. 17BP.12.R.53
CLEVELAND COUNTY
STATION: 13+01.53 -L-

SHEET 3 OF 5

STATE OF NORTH CAROLINA
DEPARTMENT OF TRANSPORTATION
RALEIGH

STANDARD
3'-0" X 3'-3"
PRESTRESSED CONCRETE
BOX BEAM UNIT
90° SKEW

NORTH CAROLINA PROFESSIONAL SEAL 037479 ENGINEER NICHOLAS A. PIERCE
DocuSigned by: Nicholas Pierce 151108434D0B485...
2/19/2018

REVISIONS						SHEET NO.
NO.	BY:	DATE:	NO.	BY:	DATE:	S-6
1			3			TOTAL SHEETS
2			4			14

DOCUMENT NOT CONSIDERED FINAL UNLESS ALL SIGNATURES COMPLETED

ASSEMBLED BY : T. H. CARROLL	DATE : 3/9/15
CHECKED BY : T. R. PETERSON	DATE : 3/18/15
DRAWN BY : DGE II/II	REV. 9/14 MAA/TMG
CHECKED BY : TMG II/II	

19-FEB-2018 16:06
S:\DPG3\Low Impact Projects\17BP\Submitted\17BP12R53\FinalSetofPlans\S06_17BP.12.R.53_SMU_BX_01.dgn
napierce

STD. NO. 39PCBB6_90S_100L

DocuSign Envelope ID: 60916B75-D116-4C4C-8CD4-716FC2BB6447

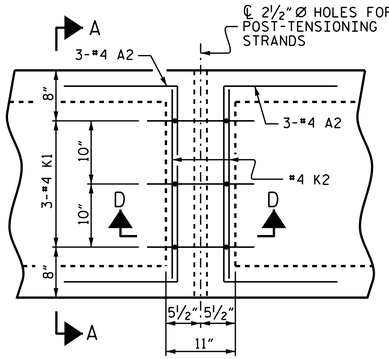

PLAN

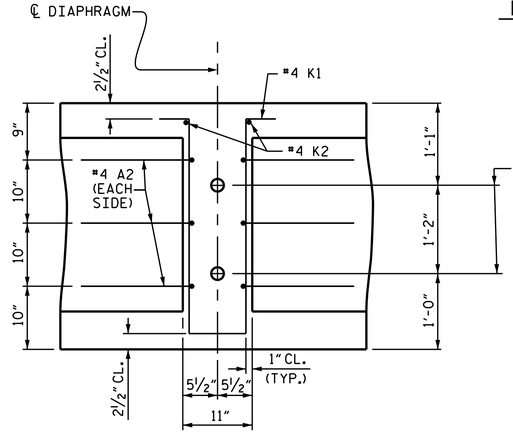

SECTION D-D

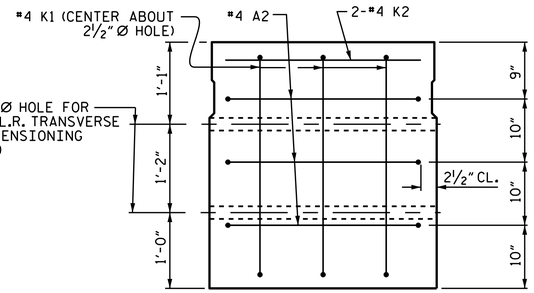

SECTION A-A
VOIDS NOT SHOWN

DOUBLE DIAPHRAGM DETAILS

#4 "S" BARS NOT SHOWN. #4 "S" BARS MAY BE SHIFTED SLIGHTLY TO CLEAR 2½" Ø HOLE.

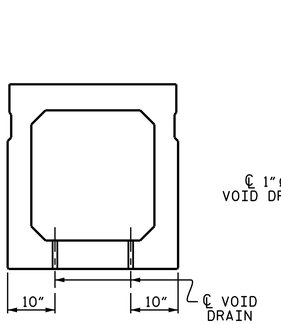

SECTION B-B

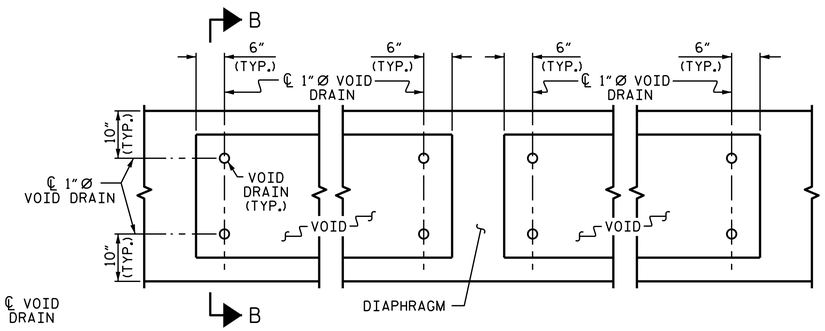

PART PLAN

VOID DRAIN DETAILS

(DIMENSIONS SHOWN ARE TYPICAL FOR EACH VOID)

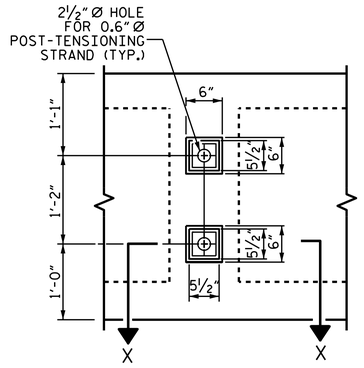

VIEW Y-Y
SHOWING ELEVATION VIEW OF GROUTED RECESS

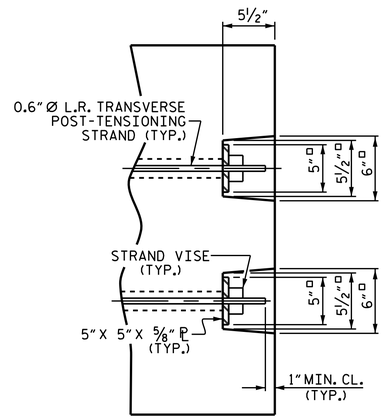

DETAIL "C"

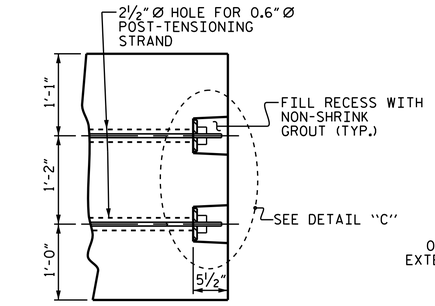

PART SECTION AT RECESS

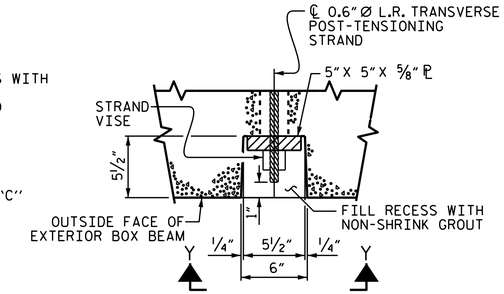

SECTION X-X
SHOWING PLAN VIEW OF GROUTED RECESS

GROUTED RECESS DETAIL AT END OF POST-TENSIONED STRANDS OF EXTERIOR BOX BEAM

DEAD LOAD DEFLECTION AND CAMBER	
	3'-0" x 3'-3"
100' BOX BEAM UNIT	0.6" Ø L.R. STRAND
CAMBER (SLAB ALONE IN PLACE)	2" ↑
DEFLECTION DUE TO SUPERIMPOSED DEAD LOAD**	⅞" ↓
FINAL CAMBER	1⅛" ↑

** INCLUDES FUTURE WEARING SURFACE

PROJECT NO. 17BP.12.R.53
CLEVELAND COUNTY
STATION: 13+01.53 -L-

SHEET 4 OF 5

STATE OF NORTH CAROLINA
DEPARTMENT OF TRANSPORTATION
RALEIGH

STANDARD
3'-0" X 3'-3"
PRESTRESSED CONCRETE
BOX BEAM UNIT
90° SKEW

NORTH CAROLINA PROFESSIONAL SEAL 037479 ENGINEER NICHOLAS A. PIERCE
DocuSigned by: Nicholas Pierce 151108434D0B485...
2/19/2018

DOCUMENT NOT CONSIDERED FINAL UNLESS ALL SIGNATURES COMPLETED

REVISIONS						SHEET NO.
NO.	BY:	DATE:	NO.	BY:	DATE:	S-7
1			3			TOTAL SHEETS
2			4			14

ASSEMBLED BY : T. H. CARROLL DATE : 3/9/15
CHECKED BY : T. R. PETERSON DATE : 3/18/15
DRAWN BY : DGE 11/11
CHECKED BY : TMG 11/11
REV. 8/14 MAA/TMG

19-FEB-2018 16:06
S:\DPG3\Low Impact Projects\17BP\Submitted\17BP12R53\FinalSetofPlans\S07_17BP.12.R.53_SMU_BX_02.dgn
napierce

STD.NO.39PCBB7_90S

DocuSign Envelope ID: 60916B75-D116-4C4C-8CD4-716FC2BB6447

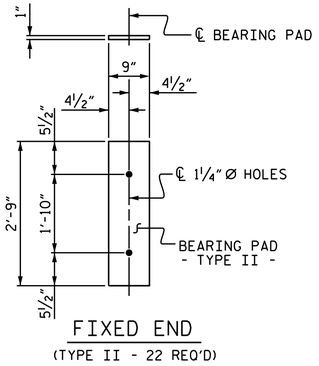

FIXED END

(TYPE II - 22 REQ'D)

ELASTOMERIC BEARING DETAILS

ELASTOMER IN ALL BEARINGS SHALL BE 60 DUROMETER HARDNESS.

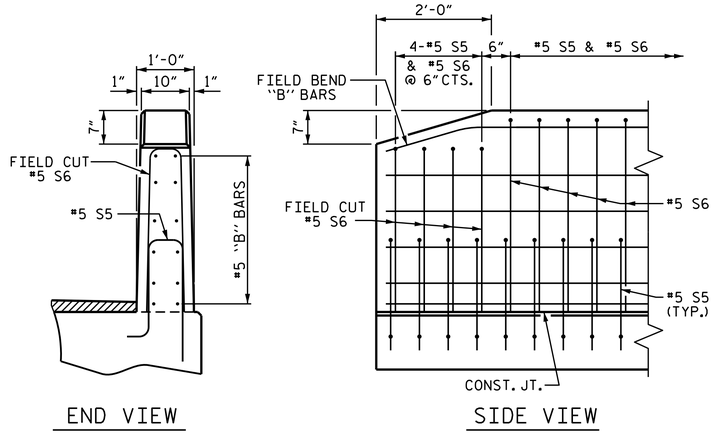

END VIEW

SIDE VIEW

END OF RAIL DETAILS

BOX BEAM UNITS REQUIRED			
	NUMBER	LENGTH	TOTAL LENGTH
EXTERIOR B.B.	2	100'-0"	200'-0"
INTERIOR B.B.	9	100'-0"	900'-0"
TOTAL	11	———	1100'-0"

BILL OF MATERIAL FOR VERTICAL CONCRETE BARRIER RAIL					
BAR	BARS PER PAIR OF EXTERIOR UNITS	SIZE	TYPE	LENGTH	WEIGHT
✱B11	48	#5	STR	13'-7"	680
✱B12	72	#5	STR	23'-7"	1771
✱ S6	276	#5	1	7'-2"	2063
✱EPOXY COATED REINFORCING STEEL			LBS.		4,514
CLASS AA CONCRETE			CU.YDS.		25.9
TOTAL VERTICAL CONCRETE BARRIER RAIL			LIN.FT.		200.00

BAR TYPE

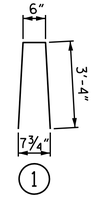

BAR DIMENSIONS ARE OUT TO OUT

GUTTERLINE ASPHALT THICKNESS & RAIL HEIGHT		
	ASPHALT OVERLAY THICKNESS @ MIDSPAN	RAIL HEIGHT @ MIDSPAN
100' UNITS	2⅜"	3'-8⅜"

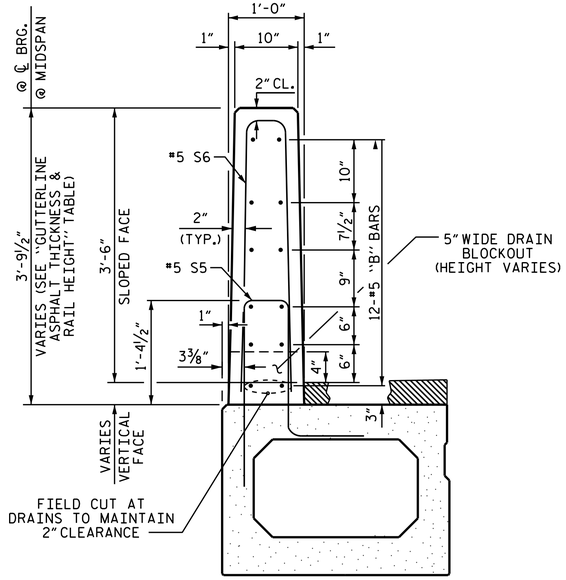

SECTION THROUGH RAIL

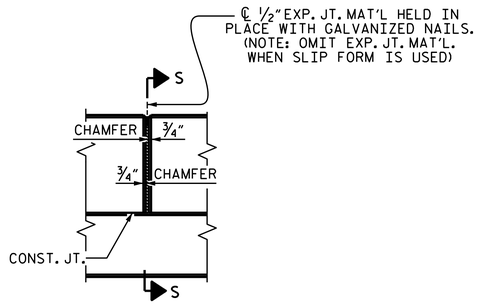

ELEVATION AT EXPANSION JOINTS

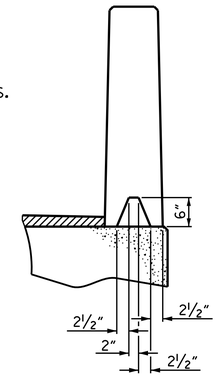

SECTION S-S

AT DAM IN OPEN JOINT
(THIS IS TO BE USED ONLY WHEN SLIP FORM IS USED)

VERTICAL CONCRETE BARRIER RAIL DETAILS

PROJECT NO. 17BP.12.R.53

CLEVELAND COUNTY

STATION: 13+01.53 -L-

SHEET 5 OF 5

STATE OF NORTH CAROLINA
DEPARTMENT OF TRANSPORTATION
RALEIGH

STANDARD
3'-0" X 3'-3"
PRESTRESSED CONCRETE
BOX BEAM UNIT
90° SKEW

NORTH CAROLINA PROFESSIONAL SEAL 037479 ENGINEER NICHOLAS A. PIERCE

DocuSigned by: Nicholas Pierce 151108434008485...

2/19/2018

DOCUMENT NOT CONSIDERED FINAL UNLESS ALL SIGNATURES COMPLETED

REVISIONS						SHEET NO.
NO.	BY:	DATE:	NO.	BY:	DATE:	S-8
1			3			TOTAL SHEETS
2			4			14

STD. NO. 39PCBB8_90S

ASSEMBLED BY : T. H. CARROLL	DATE : 5/7/15
CHECKED BY : T. R. PETERSON	DATE : 5/11/15
DRAWN BY : DGE 10/11	REV. 4/15 MAA/TMG
CHECKED BY : TMG 11/11	

19-FEB-2018 16:06
S:\DPG3\Low Impact Projects\17BP\Submitted\17BP12R53\FinalSetofPlans\S08_17BP.12.R.53_SMU_BX_03.dgn
naplerce

DocuSign Envelope ID: 60916B75-D116-4C4C-8CD4-716FC2BB6447

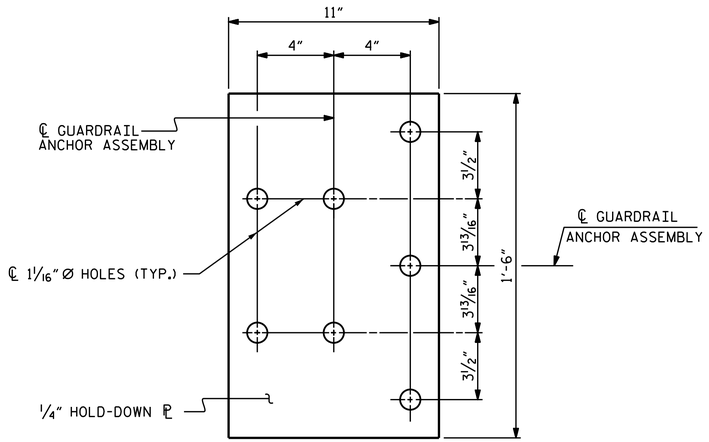

PLAN

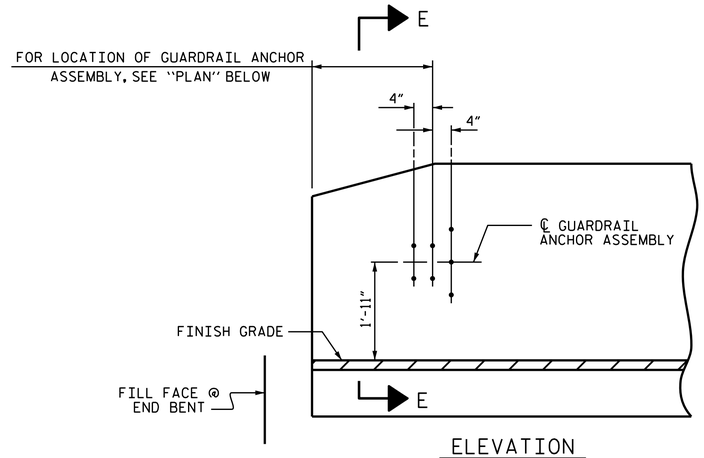

ELEVATION

NOTES

THE GUARDRAIL ANCHOR ASSEMBLY SHALL CONSIST OF A 1/4" HOLD DOWN PLATE AND 7 - 7/8" Ø BOLTS WITH NUTS AND WASHERS.

THE HOLD-DOWN PLATE SHALL CONFORM TO AASHTO M270 GRADE 36. AFTER FABRICATION, THE HOLD-DOWN PLATE SHALL BE HOT-DIP GALVANIZED IN ACCORDANCE WITH AASHTO M111.

BOLTS SHALL CONFORM TO THE REQUIREMENTS OF ASTM A307 AND NUTS SHALL CONFORM TO THE REQUIREMENTS OF AASHTO M291. BOLTS, NUTS AND WASHERS SHALL BE GALVANIZED. (AT THE CONTRACTOR'S OPTION, STAINLESS STEEL BOLTS, NUTS AND WASHERS MAY BE USED AS AN ALTERNATE FOR THE 7/8" Ø GALVANIZED BOLTS, NUTS AND WASHERS. THEY SHALL CONFORM TO OR EXCEED THE MECHANICAL REQUIREMENTS OF ASTM A307. THE USE OF THIS ALTERNATE SHALL BE APPROVED BY THE ENGINEER.)

THE GUARDRAIL ANCHOR ASSEMBLY IS REQUIRED AT ALL POINTS WHERE APPROACH GUARDRAIL IS TO BE ATTACHED TO THE END OF BARRIER RAIL. FOR POINTS OF ATTACHMENT, SEE SKETCH.

AFTER INSTALLATION, THE EXPOSED THREAD OF THE BOLT SHALL BE BURRED WITH A SHARP POINTED TOOL.

THE COST OF THE GUARDRAIL ANCHOR ASSEMBLY SHALL BE INCLUDED IN THE UNIT CONTRACT PRICE BID FOR VERTICAL CONCRETE BARRIER RAIL.

THE VERTICAL REINFORCING BARS MAY BE SHIFTED SLIGHTLY IN THE VERTICAL CONCRETE BARRIER RAIL TO CLEAR ASSEMBLY BOLTS.

THE 1 1/4" Ø HOLES SHALL BE FORMED OR DRILLED WITH A CORE BIT. IMPACT TOOLS WILL NOT BE PERMITTED. ANY CONCRETE DAMAGED BY THIS WORK SHALL BE REPAIRED TO THE SATISFACTION OF THE ENGINEER.

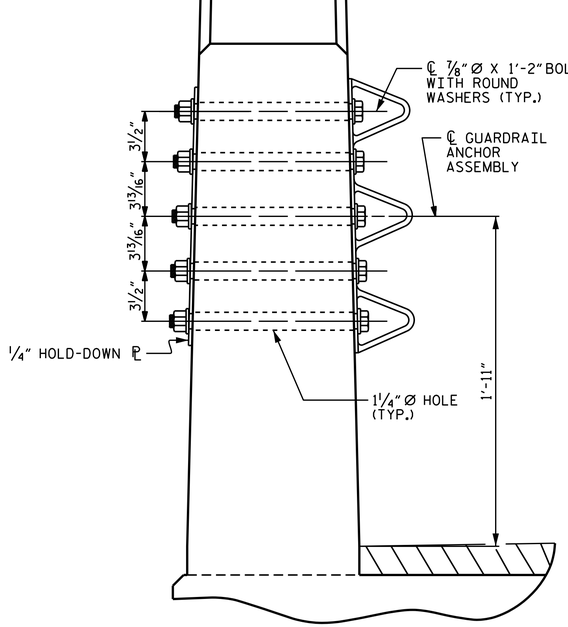

SECTION E-E

GUARDRAIL ANCHOR ASSEMBLY DETAILS

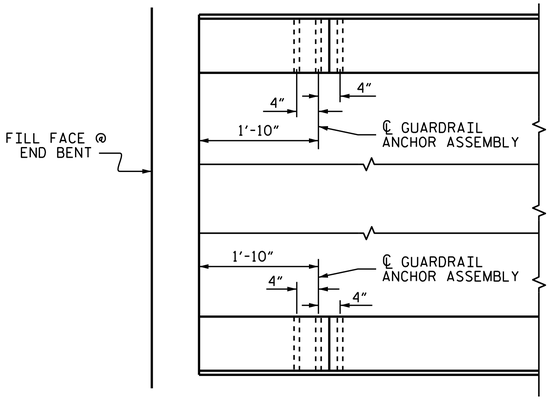

PLAN

LOCATION OF ANCHORS FOR GUARDRAIL

END BENT 1 SHOWN, END BENT 2 SIMILAR.

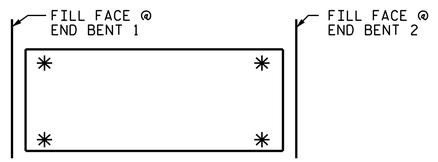

SKETCH SHOWING POINTS OF ATTACHMENT

✳ DENOTES GUARDRAIL ANCHOR ASSEMBLY

PROJECT NO. 17BP.12.R.53

CLEVELAND COUNTY

STATION: 13+01.53 -L-

NORTH CAROLINA PROFESSIONAL SEAL 037479 ENGINEER NICHOLAS A. PIERCE

DocuSigned by: Nicholas Pierce 151108434D0B485...

2/19/2018

DOCUMENT NOT CONSIDERED FINAL UNLESS ALL SIGNATURES COMPLETED

STATE OF NORTH CAROLINA
DEPARTMENT OF TRANSPORTATION
RALEIGH

STANDARD
GUARDRAIL ANCHORAGE DETAILS FOR VERTICAL CONCRETE BARRIER RAIL

REVISIONS						SHEET NO.
NO.	BY:	DATE:	NO.	BY:	DATE:	S-9
1			3			TOTAL SHEETS
2			4			14

STD. NO. GRA3

ASSEMBLED BY : T. H. CARROLL DATE : 3/10/15		
CHECKED BY : T. R. PETERSON DATE : 3/18/15		
DRAWN BY : MAA 5/10	REV. 12/5/11	MAA/GM
CHECKED BY : GM 5/10	REV. 6/13	MAA/GM
	REV. 1/15	MAA/TMG

19-FEB-2018 16:06
S:\DPG3\Low Impact Projects\17BP\Submitted\17BP12R53\FinalSetofPlans\S09_17BP.12.R.53_SMU_GR_01.dgn
naplerce

DocuSign Envelope ID: 60916B75-D116-4C4C-8CD4-716FC2BB6447

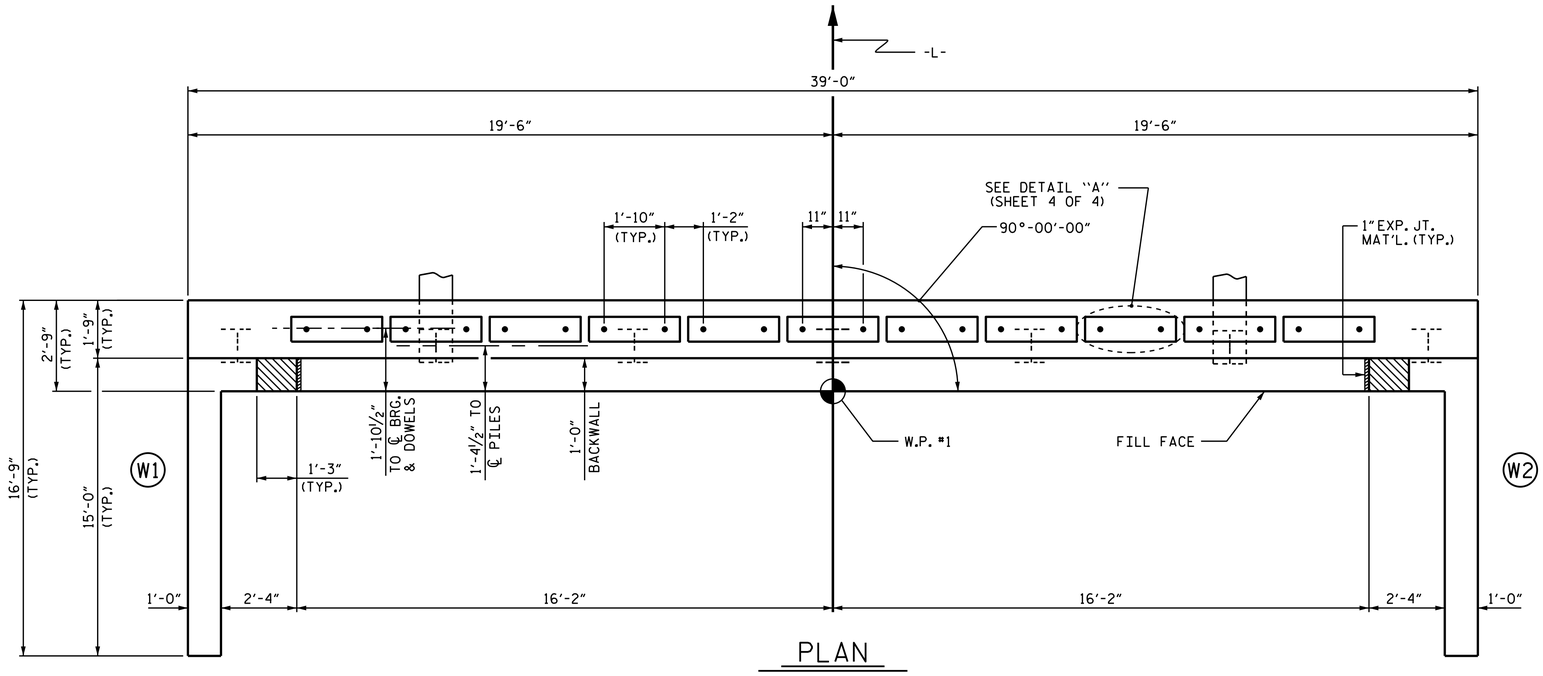

PLAN

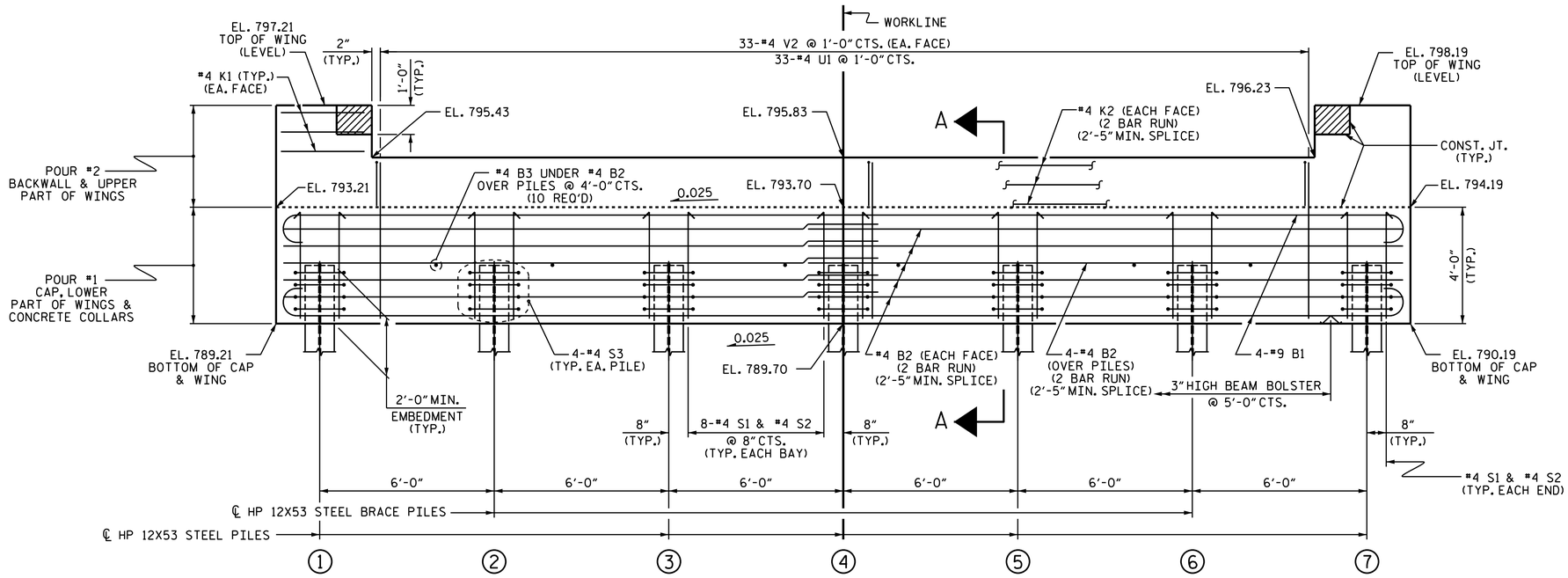

ELEVATION

WINGS NOT SHOWN FOR CLARITY.
FOR SECTION A-A, SEE SHEET 4 OF 4.
CONCRETE COLLARS FOR STEEL PILES NOT SHOWN IN PLAN AND ELEVATION VIEWS FOR CLARITY.
SEE "CORROSION PROTECTION FOR STEEL PILES DETAIL", SHEET 4 OF 4.

NOTES

STIRRUPS IN CAP MAY BE SHIFTED AS NECESSARY TO CLEAR DOWELS.

THE CONCRETE IN THE SHADED AREA OF THE WING SHALL BE POURED AFTER THE VERTICAL CONCRETE BARRIER RAIL IS CAST IF SLIP FORMING IS USED.

FOR PILE SPLICE DETAILS, SEE SHEET 4 OF 4.

FOR WING DETAILS, SEE SHEET 3 OF 4.

TOP OF PILE ELEVATIONS	
1	791.26
2	791.41
3	791.56
4	791.70
5	791.85
6	792.01
7	792.16

PROJECT NO. 17BP.12.R.53
CLEVELAND COUNTY
STATION: 13+01.53 -L-

SHEET 1 OF 4

STATE OF NORTH CAROLINA
DEPARTMENT OF TRANSPORTATION
RALEIGH

SUBSTRUCTURE

END BENT 1

NORTH CAROLINA PROFESSIONAL SEAL 037479 ENGINEER NICHOLAS A. PIERCE

DocuSigned by: Nicholas Pierce 151108434D08485...
2/19/2018

DOCUMENT NOT CONSIDERED FINAL UNLESS ALL SIGNATURES COMPLETED

REVISIONS						SHEET NO.
NO.	BY:	DATE:	NO.	BY:	DATE:	S-10
1			3			TOTAL SHEETS
2			4			14

ASSEMBLED BY : T. H. CARROLL	DATE : 5/7/15
CHECKED BY : T. R. PETERSON	DATE : 5/11/15
DRAWN BY : WJH 12/11	REV. 4/15 MAA/TMG
CHECKED BY : AAC 12/11	

19-FEB-2018 16:07
S:\DPG3\Low Impact Projects\17BP\Submitted\17BP12R53\FinalSetofPlans\S10_17BP.12.R.53_SMU_ E1_01.dgn
napierce

STD. NO. EB_33_90S4_39BB

DocuSign Envelope ID: 60916B75-D116-4C4C-8CD4-716FC2BB6447

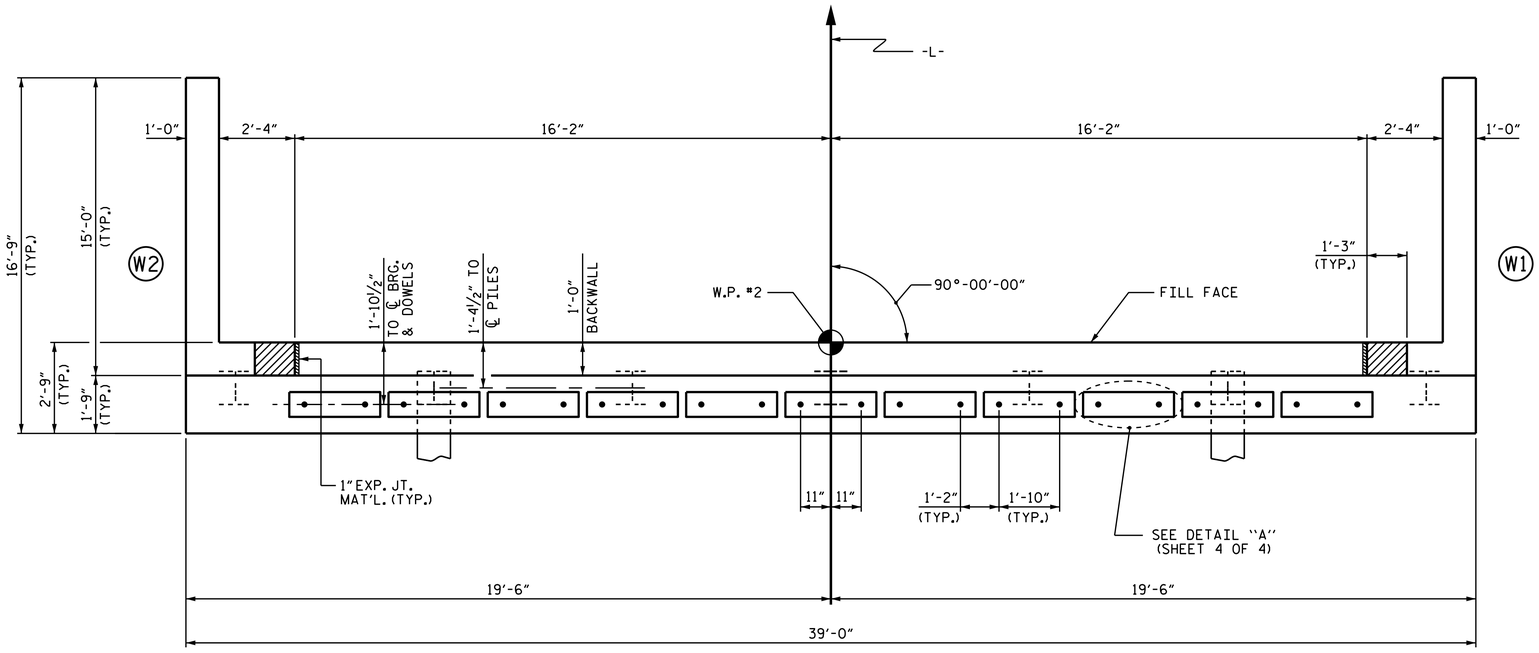

PLAN

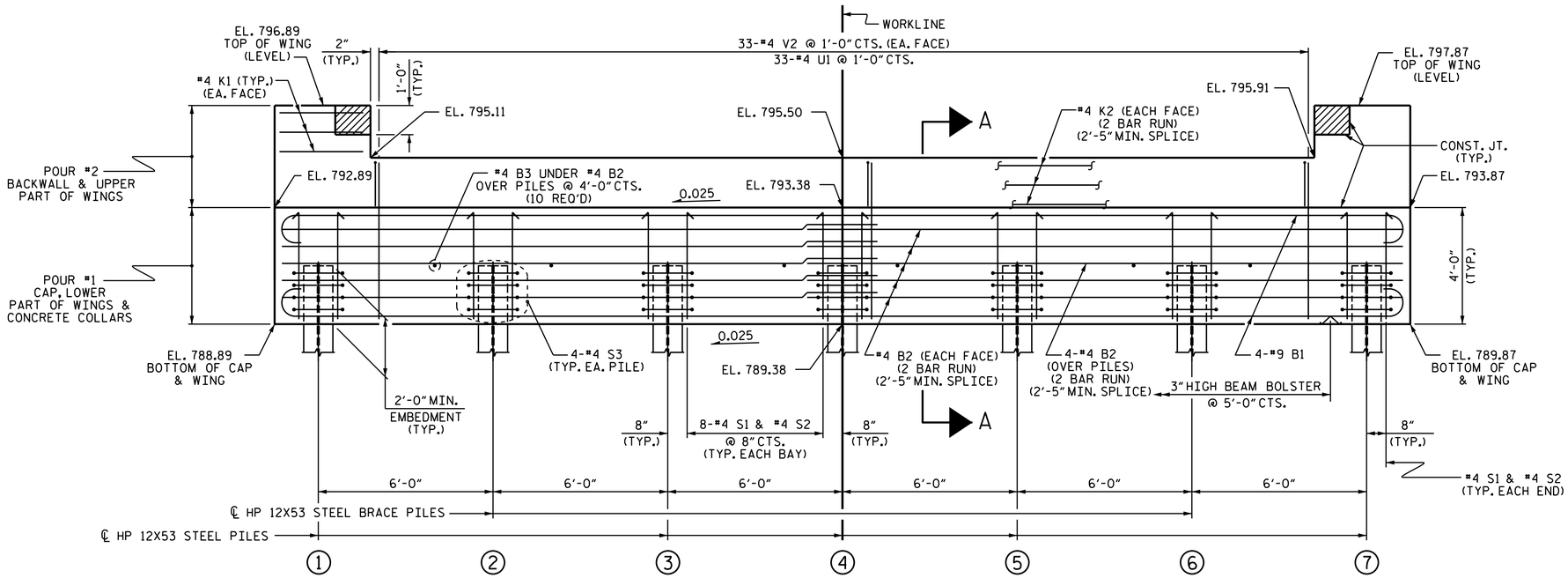

ELEVATION

WINGS NOT SHOWN FOR CLARITY.
FOR SECTION A-A, SEE SHEET 4 OF 4.
CONCRETE COLLARS FOR STEEL PILES NOT SHOWN IN PLAN AND ELEVATION VIEWS FOR CLARITY.
SEE "CORROSION PROTECTION FOR STEEL PILES DETAIL", SHEET 4 OF 4.

NOTES

STIRRUPS IN CAP MAY BE SHIFTED AS NECESSARY TO CLEAR DOWELS.

THE CONCRETE IN THE SHADED AREA OF THE WING SHALL BE POURED AFTER THE VERTICAL CONCRETE BARRIER RAIL IS CAST IF SLIP FORMING IS USED.

FOR PILE SPLICE DETAILS, SEE SHEET 4 OF 4.

FOR WING DETAILS, SEE SHEET 3 OF 4.

TOP OF PILE ELEVATIONS	
1	790.94
2	791.09
3	791.24
4	791.39
5	791.54
6	791.69
7	791.84

PROJECT NO. 17BP.12.R.53
CLEVELAND COUNTY
STATION: 13+01.53 -L-

SHEET 2 OF 4

STATE OF NORTH CAROLINA
DEPARTMENT OF TRANSPORTATION
RALEIGH

SUBSTRUCTURE

END BENT 2

NORTH CAROLINA PROFESSIONAL SEAL 037479 ENGINEER NICHOLAS A. PIERCE

DocuSigned by: Nicholas Pierce 15110B434D0B485...
2/19/2018

ASSEMBLED BY : T. H. CARROLL	DATE : 5/7/15
CHECKED BY : T. R. PETERSON	DATE : 5/11/15
DRAWN BY : WJH 12/11	REV. 4/15 MAA/TMG
CHECKED BY : AAC 12/11	

19-FEB-2018 16:07
S:\DPG3\Low Impact Projects\17BP\Submitted\17BP12R53\FinalSetofPlans\S11_17BP.12.R.53_SMU_ E2_02.dgn
napierce

DOCUMENT NOT CONSIDERED FINAL UNLESS ALL SIGNATURES COMPLETED

REVISIONS						SHEET NO.
NO.	BY:	DATE:	NO.	BY:	DATE:	S-11
1			3			TOTAL SHEETS
2			4			14

STD. NO. EB_33_90S4_39BB

DocuSign Envelope ID: 60916B75-D116-4C4C-8CD4-716FC2BB6447

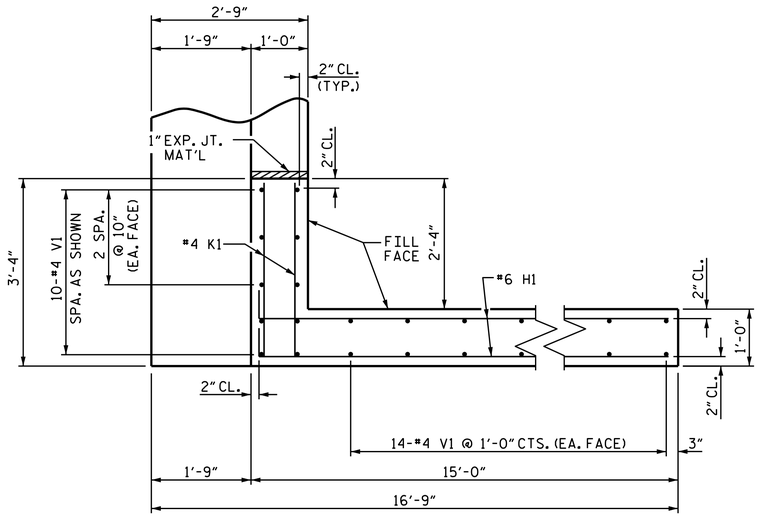

PLAN OF WING (W1)

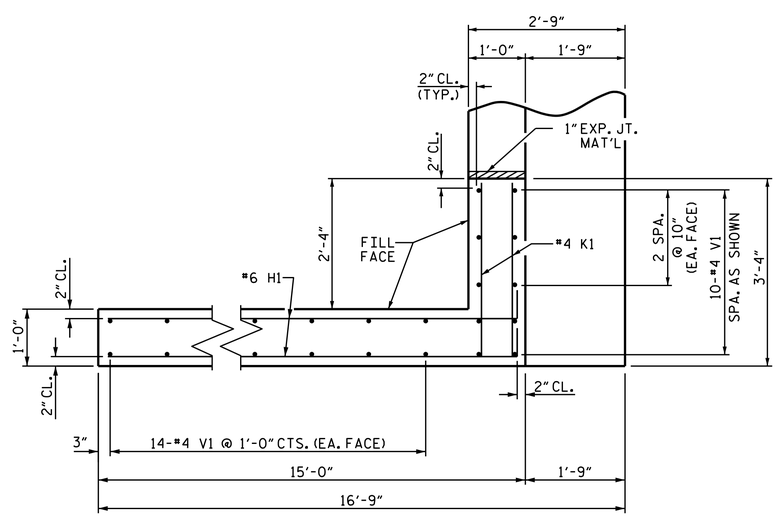

PLAN OF WING (W2)

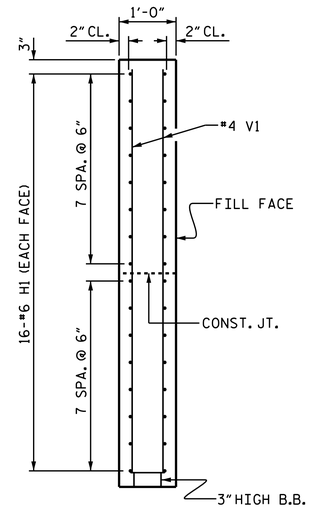

SECTION X-X

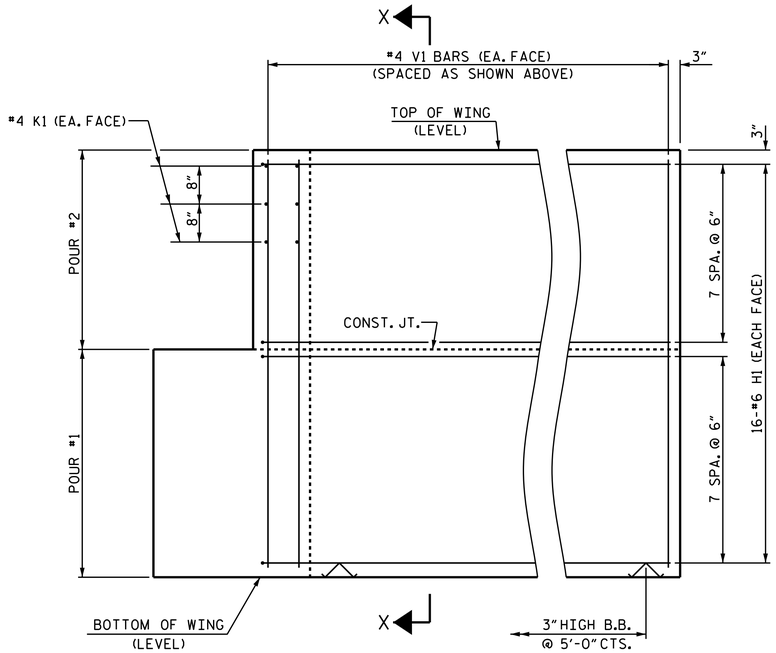

ELEVATION OF WING (W1)

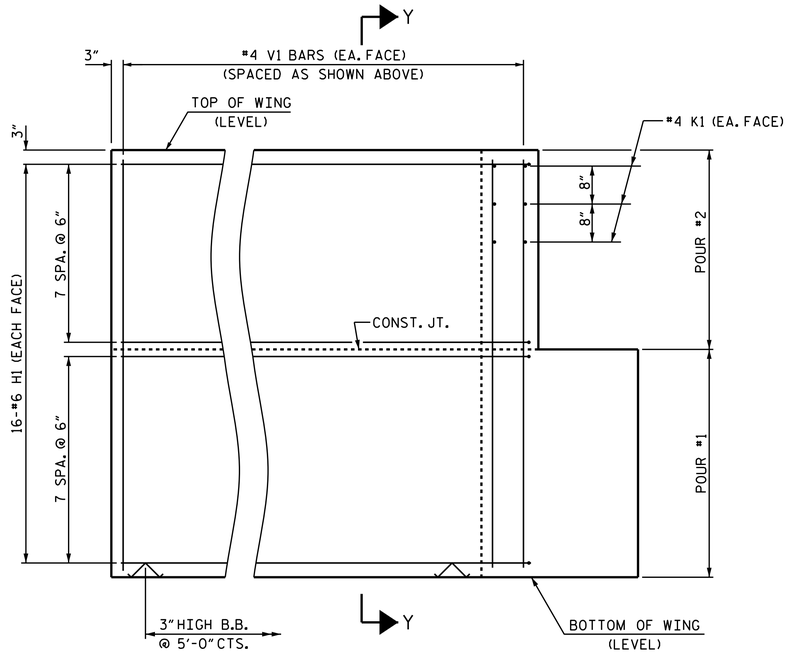

ELEVATION OF WING (W2)

SECTION Y-Y

WING DETAILS

PROJECT NO. 17BP.12.R.53

CLEVELAND COUNTY

STATION: 13+01.53 -L-

SHEET 3 OF 4

STATE OF NORTH CAROLINA
DEPARTMENT OF TRANSPORTATION
RALEIGH

SUBSTRUCTURE

END BENT
WING DETAILS

NORTH CAROLINA PROFESSIONAL SEAL 037479 ENGINEER NICHOLAS A. PIERCE

DocuSigned by: Nicholas Pierce 151108434C0B485...

2/19/2018

REVISIONS						SHEET NO.
NO.	BY:	DATE:	NO.	BY:	DATE:	S-12
1			3			TOTAL SHEETS
2			4			14

DOCUMENT NOT CONSIDERED FINAL UNLESS ALL SIGNATURES COMPLETED

ASSEMBLED BY : T. H. CARROLL	DATE : 5/7/15
CHECKED BY : T. R. PETERSON	DATE : 5/11/15
DRAWN BY : WJH 12/11	REV. 4/15 MAA/TMG
CHECKED BY : AAC 12/11	

19-FEB-2018 16:07
S:\DP03\Low Impact Projects\17BP\Submitted\17BP12R53\FinalSetofPlans\S12_17BP.12.R.53_SMU. EB_01.dgn
naplerce

STD. NO. EB_33_90S4_39BB

DocuSign Envelope ID: 60916B75-D116-4C4C-8CD4-716FC2BB6447

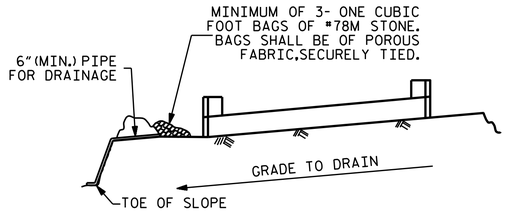

BAGGED STONE AND PIPE SHALL BE PLACED IMMEDIATELY AFTER COMPLETION OF END BENT EXCAVATION. PIPE MAY BE EITHER CONCRETE, CORRUGATED STEEL, CORRUGATED ALUMINUM ALLOY, OR CORRUGATED PLASTIC. PERFORATED PIPE WILL NOT BE ALLOWED.

BAGGED STONE SHALL REMAIN IN PLACE UNTIL THE ENGINEER DIRECTS THAT IT BE REMOVED. THE CONTRACTOR SHALL REMOVE AND DISPOSE OF SILT ACCUMULATIONS AT BAGGED STONE WHEN SO DIRECTED BY THE ENGINEER. BAGS SHALL BE REMOVED AND REPLACED WHENEVER THE ENGINEER DETERMINES THAT THEY HAVE DETERIORATED AND LOST THEIR EFFECTIVENESS.

NO SEPARATE PAYMENT WILL BE MADE FOR THIS WORK AND THE ENTIRE COST OF THIS WORK SHALL BE INCLUDED IN THE UNIT CONTRACT PRICE BID FOR THE SEVERAL PAY ITEMS.

TEMPORARY DRAINAGE AT END BENT

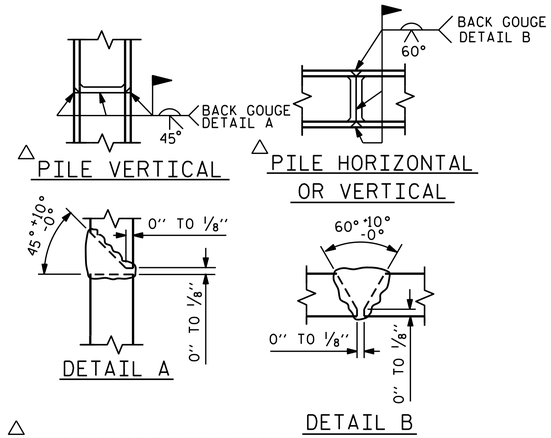

△ POSITION OF PILE DURING WELDING.

PILE SPLICE DETAILS

BAR TYPES

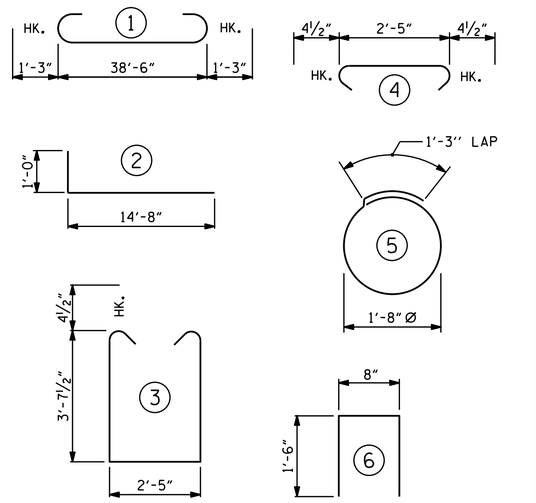

ALL BAR DIMENSIONS ARE OUT TO OUT.

END BENT 1		END BENT 2	
HP 12X53 STEEL PILES		HP 12X53 STEEL PILES	
NO: 7	LIN. FT. 140	NO: 7	LIN. FT. 210
STEEL PILE POINTS	EA. 7	STEEL PILE POINTS	EA. 7
PILE DRIVING EQUIPMENT SETUP FOR HP 12 X 53 STEEL PILES NO: 7		PILE DRIVING EQUIPMENT SETUP FOR HP 12 X 53 STEEL PILES NO: 7	

BILL OF MATERIAL

FOR ONE END BENT

BAR	NO.	SIZE	TYPE	LENGTH	WEIGHT
B1	8	#9	1	41'-0"	1115
B2	28	#4	STR	20'-7"	385
B3	10	#4	STR	2'-5"	16
D1	22	#8	STR	2'-3"	132
H1	64	#6	2	15'-8"	1506
K1	12	#4	STR	2'-11"	23
K2	12	#4	STR	20'-7"	165
S1	50	#4	3	10'-5"	348
S2	50	#4	4	3'-2"	106
S3	28	#4	5	6'-6"	122
U1	33	#4	6	3'-8"	81
V1	76	#4	STR	7'-8"	389
V2	66	#4	STR	5'-9"	254

REINFORCING STEEL (FOR ONE END BENT) LBS. 4,642

CLASS A CONCRETE BREAKDOWN (FOR ONE END BENT)

POUR #1	CAP, LOWER PART OF WINGS & COLLARS	C.Y. 21.3
POUR #2	BACKWALL & UPPER PART OF WINGS	C.Y. 7.7
TOTAL CLASS A CONCRETE		C.Y. 29.0

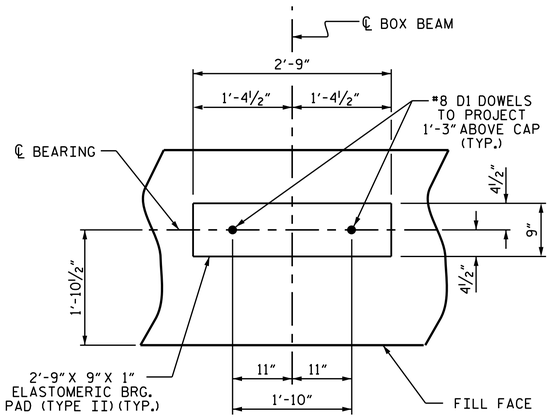

DETAIL "A"

(END BENT 1 SHOWN, END BENT 2 SIMILAR BY ROTATION)

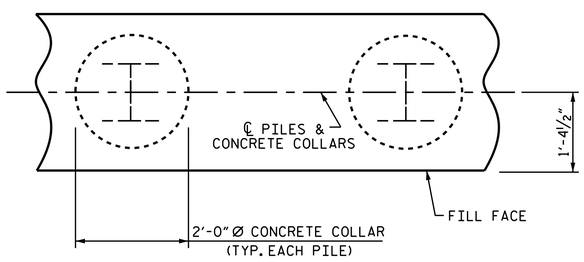

PLAN

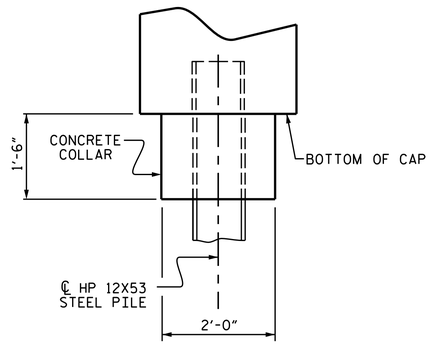

ELEVATION

CORROSION PROTECTION FOR STEEL PILES DETAIL

(END BENT 1 SHOWN, END BENT 2 SIMILAR BY ROTATION)

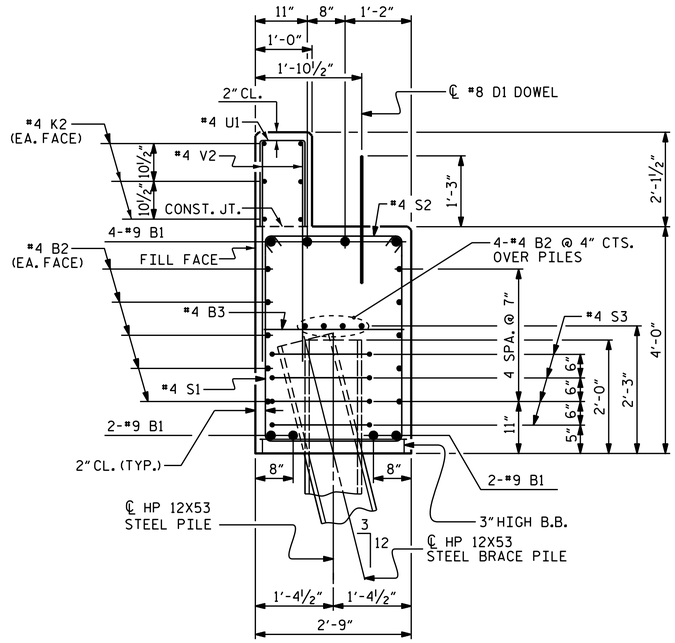

SECTION A-A

(CONCRETE COLLAR NOT SHOWN FOR CLARITY. SEE "CORROSION PROTECTION FOR STEEL PILES DETAIL.")

NORTH CAROLINA PROFESSIONAL SEAL 037479 ENGINEER NICHOLAS A. PIERCE

DocuSigned by: Nicholas Pierce 15110B434D0B485...

2/19/2018

DOCUMENT NOT CONSIDERED FINAL UNLESS ALL SIGNATURES COMPLETED

PROJECT NO. 17BP.12.R.53

CLEVELAND COUNTY

STATION: 13+01.53 -L-

SHEET 4 OF 4

STATE OF NORTH CAROLINA
DEPARTMENT OF TRANSPORTATION
RALEIGH

SUBSTRUCTURE

END BENT 1 & 2 DETAILS

REVISIONS						SHEET NO.
NO.	BY:	DATE:	NO.	BY:	DATE:	S-13
1			3			TOTAL SHEETS
2			4			14

STD. NO. EB_33_90S4_39BB

ASSEMBLED BY : T. H. CARROLL	DATE : 3/10/15
CHECKED BY : T. R. PETERSON	DATE : 3/18/15
DRAWN BY : WJH 12/11	REV. 8/14 MAA/TMG
CHECKED BY : AAC 12/11	

19-FEB-2018 16:07
S:\DPG3\Low Impact Projects\17BP\Submitted\17BP12R53\FinalSetofPlans\S13_17BP.12.R.53_SMU_EB_02.dgn
napierce

DocuSign Envelope ID: 60916B75-D116-4C4C-8CD4-716FC2BB6447

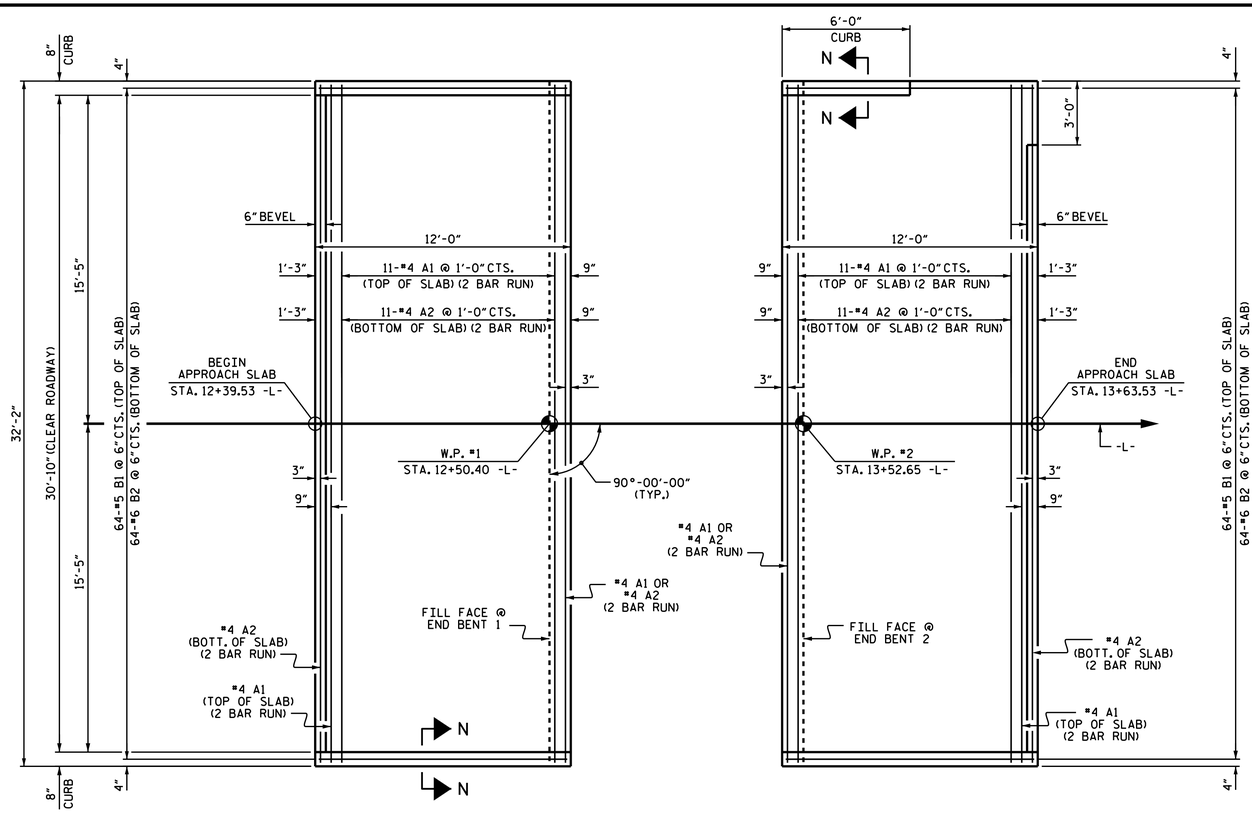

PLAN @ END BENT 1

PLAN @ END BENT 2

DIMENSIONS SHOWN ARE TYPICAL FOR BOTH APPROACH SLABS

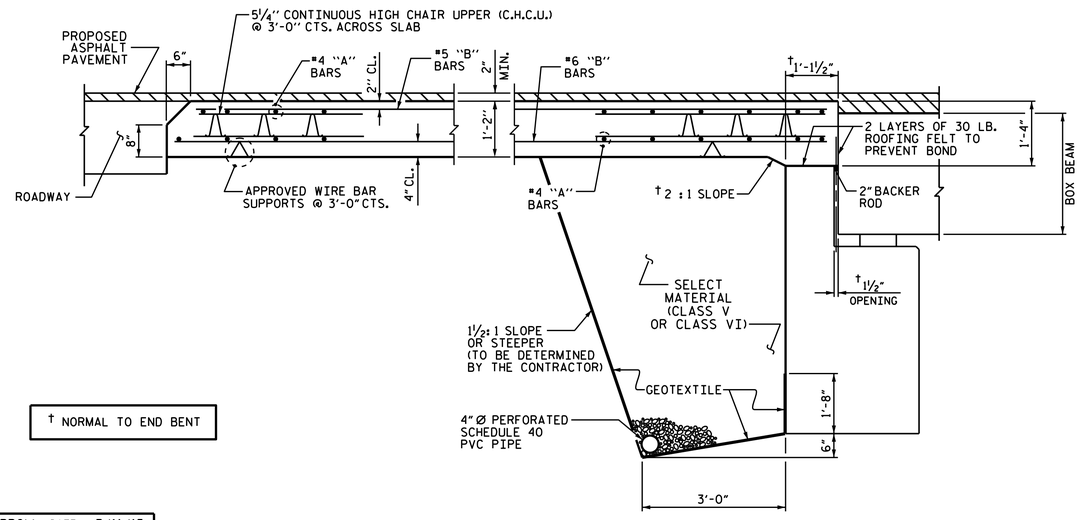

† NORMAL TO END BENT

SECTION THRU SLAB

(TYPE II - MODIFIED APPROACH FILL)

NOTES

FOR BRIDGE APPROACH FILL INCLUDING GEOTEXTILE, 4" Ø DRAINAGE PIPE, AND SELECT MATERIAL BACKFILL, SEE ROADWAY PLANS.

GEOTEXTILE SHALL BE TYPE 1 IN ACCORDANCE WITH THE STANDARD SPECIFICATIONS SECTION 1056.

SELECT MATERIAL BACKFILL (CLASS V OR CLASS VI) SHALL BE IN ACCORDANCE WITH STANDARD SPECIFICATIONS SECTION 1016.

SELECT MATERIAL BACKFILL IS TO BE CONTINUOUS ALONG FILL FACE OF BACKWALL FROM OUTSIDE EDGE TO OUTSIDE EDGE OF APPROACH SLAB.

AREA BETWEEN THE WINGWALL AND APPROACH SLAB SHALL BE GRADED TO DRAIN THE WATER AWAY FROM THE FILL FACE OF THE BRIDGE AND SHALL BE PAVED. SEE ROADWAY PLANS.

FOR THE 4" Ø DRAINAGE PIPE OUTLET(S), SEE ROADWAY STANDARD DRAWINGS.

APPROACH SLAB GROOVING IS NOT REQUIRED.

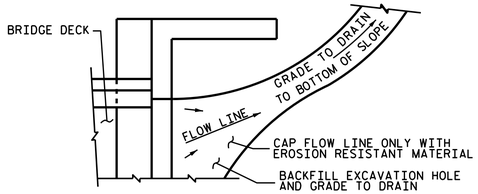

NOTE: IF THE APPROACH SLAB IS NOT CONSTRUCTED IMMEDIATELY AFTER THE BACKFILLING OF THE END BENT EXCAVATION, GRADE TO DRAIN TO THE BOTTOM OF THE SLOPE AND PROVIDE EROSION RESISTANT MATERIAL, SUCH AS FIBERGLASS ROVING OR AS DIRECTED BY THE ENGINEER TO PREVENT SOIL EROSION AND TO PROTECT THE AREA ADJACENT TO THE STRUCTURE. THE CONTRACTOR WILL BE REQUIRED TO REMOVE THESE MATERIALS PRIOR TO CONSTRUCTION OF THE APPROACH SLAB.

TEMPORARY DRAINAGE DETAIL

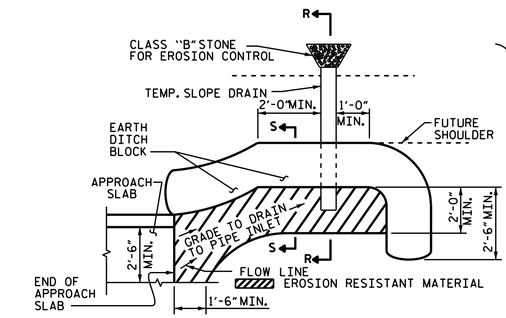

NOTE: IMMEDIATELY AFTER THE CONSTRUCTION OF THE APPROACH SLAB, THE CONTRACTOR SHALL PROVIDE TEMPORARY BERM AND SLOPE DRAIN. CONTRACTOR SHALL GRADE TO PIPE INLET AND PROVIDE EROSION RESISTANT MATERIAL AS SHOWN. THE EROSION RESISTANT MATERIAL SHALL BE EITHER 1) ASPHALT PLANT MIX, TYPE 1 OR TYPE 2, MIN. 2" DEPTH, 2) EROSION CONTROL MAT, OR 3) CONCRETE, AS DIRECTED BY THE ENGINEER. THE SLOPE DRAIN SHALL CONSIST OF A NON-PERFORATED TEMPORARY DRAINAGE PIPE, 12 INCHES IN DIAMETER.

PLAN VIEW

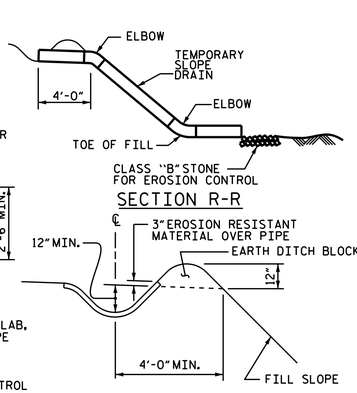

SECTION S-S

TEMPORARY BERM AND SLOPE DRAIN DETAILS

(TO BE USED WHEN SHOULDER BERM GUTTER IS REQUIRED)

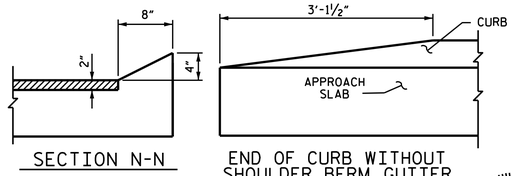

CURB DETAILS

BILL OF MATERIAL

APPROACH SLAB AT EB 1

BAR	NO.	SIZE	TYPE	LENGTH	WEIGHT
* A1	26	#4	STR	16'-11"	294
A2	26	#4	STR	16'-9"	291
* B1	64	#5	STR	11'-2"	745
B2	64	#6	STR	11'-8"	1121
REINFORCING STEEL				LBS.	1,412
* EPOXY COATED REINFORCING STEEL				LBS.	1,039
CLASS AA CONCRETE				C.Y.	17.0

APPROACH SLAB AT EB 2

BAR	NO.	SIZE	TYPE	LENGTH	WEIGHT
* A1	26	#4	STR	16'-11"	294
A2	26	#4	STR	16'-9"	291
* B1	64	#5	STR	11'-2"	745
B2	64	#6	STR	11'-8"	1121
REINFORCING STEEL				LBS.	1,412
* EPOXY COATED REINFORCING STEEL				LBS.	1,039
CLASS AA CONCRETE				C.Y.	17.0

SPLICE LENGTHS

BAR SIZE	EPOXY COATED	UNCOATED
#4	2'-0"	1'-9"

PROJECT NO. 17BP.12.R.53

CLEVELAND COUNTY

STATION: 13+01.53 -L-

STATE OF NORTH CAROLINA
DEPARTMENT OF TRANSPORTATION
RALEIGH

STANDARD
BRIDGE APPROACH SLAB
FOR PRESTRESSED CONCRETE
BOX BEAM UNIT
(SUB-REGIONAL TIER)
90° SKEW

NORTH CAROLINA PROFESSIONAL SEAL 037479 ENGINEER NICHOLAS A. PIERCE

DocuSigned by: Nicholas Pierce 151108434D0B485...

2/19/2018

DOCUMENT NOT CONSIDERED FINAL UNLESS ALL SIGNATURES COMPLETED

REVISIONS						SHEET NO.
NO.	BY:	DATE:	NO.	BY:	DATE:	S-14
1			3			TOTAL SHEETS
2			4			14

ASSEMBLED BY : T. H. CARROLL	DATE : 3/11/15	
CHECKED BY : T. R. PETERSON	DATE : 3/18/15	
DRAWN BY : MAA	11/11	REV. 9-15 MAA/TMG
CHECKED BY : AAC	11/11	

19-FEB-2018 16:07
S:\DPG3\Low Impact Projects\17BP\Submitted\17BP12R53\FinalSetofPlans\S14_17BP.12.R.53_SMU_AS_01.dgn
naplerce

STD. NO. BAS_BB_33_90S

DocuSign Envelope ID: 60916B75-D116-4C4C-8CD4-716FC2BB6447

STANDARD NOTES

DESIGN DATA:

SPECIFICATIONS - - - - - - - - - - - - - - - - -	A.A.S.H.T.O. (CURRENT)
LIVE LOAD -	SEE PLANS
IMPACT ALLOWANCE - - - - - - - - - - - - - - - -	SEE A.A.S.H.T.O.
STRESS IN EXTREME FIBER OF STRUCTURAL STEEL - AASHTO M270 GRADE 36 - -	20,000 LBS. PER SQ. IN.
- AASHTO M270 GRADE 50W - -	27,000 LBS. PER SQ. IN.
- AASHTO M270 GRADE 50 - -	27,000 LBS. PER SQ. IN.
REINFORCING STEEL IN TENSION - GRADE 60 - - -	24,000 LBS. PER SQ. IN.
CONCRETE IN COMPRESSION - - - - - - - - - - - -	1,200 LBS. PER SQ. IN.
CONCRETE IN SHEAR - - - - - - - - - - - - - - -	SEE A.A.S.H.T.O.
STRUCTURAL TIMBER - TREATED OR UNTREATED EXTREME FIBER STRESS - - -	1,800 LBS. PER SQ. IN.
COMPRESSION PERPENDICULAR TO GRAIN OF TIMBER - - - - -	375 LBS. PER SQ. IN.
EQUIVALENT FLUID PRESSURE OF EARTH - - - - -	30 LBS. PER CU. FT. (MINIMUM)

MATERIAL AND WORKMANSHIP:

EXCEPT AS MAY OTHERWISE BE SPECIFIED ON PLANS OR IN THE SPECIAL PROVISIONS, ALL MATERIAL AND WORKMANSHIP SHALL BE IN ACCORDANCE WITH THE 2018 "STANDARD SPECIFICATIONS FOR ROADS AND STRUCTURES" OF THE N. C. DEPARTMENT OF TRANSPORTATION.

STEEL SHEET PILING FOR PERMANENT OR TEMPORARY APPLICATIONS SHALL BE HOT ROLLED.

CONCRETE:

UNLESS OTHERWISE REQUIRED ON PLANS, CLASS A CONCRETE SHALL BE USED FOR ALL PORTIONS OF ALL STRUCTURES WITH THE EXCEPTION THAT: CLASS AA CONCRETE SHALL BE USED IN BRIDGE SUPERSTRUCTURES, ABUTMENT BACKWALLS, AND APPROACH SLABS; AND CLASS B CONCRETE SHALL BE USED FOR SLOPE PROTECTION AND RIP RAP.

CONCRETE CHAMFERS:

UNLESS OTHERWISE NOTED ON THE PLANS, ALL EXPOSED CORNERS ON STRUCTURES SHALL BE CHAMFERED ¾" WITH THE FOLLOWING EXCEPTIONS: TOP CORNERS OF CURBS MAY BE ROUNDED TO 1½" RADIUS WHICH IS BUILT INTO CURB FORMS; CORNERS OF TRANSVERSE FLOOR EXPANSION JOINTS SHALL BE ROUNDED WITH A ¼" FINISHING TOOL UNLESS OTHERWISE REQUIRED ON PLANS; AND CORNERS OF EXPANSION JOINTS IN THE ROADWAY FACES AND TOPS OF CURBS AND SIDEWALKS SHALL BE ROUNDED TO A ¼" RADIUS WITH A FINISHING STONE OR TOOL UNLESS OTHERWISE REQUIRED ON PLANS.

DOWELS:

DOWELS WHEN INDICATED ON PLANS AS FOR CULVERT EXTENSIONS, SHALL BE EMBEDDED AT LEAST 12" INTO THE OLD CONCRETE AND GROUTED INTO PLACE WITH 1:2 CEMENT MORTAR.

ALLOWANCE FOR DEAD LOAD DEFLECTION, SETTLEMENT, ETC. IN CASTING SUPERSTRUCTURES:

BRIDGES SHALL BE BUILT ON THE GRADE OR VERTICAL CURVE SHOWN ON PLANS. SLABS, CURBS AND PARAPETS SHALL CONFORM TO THE GRADE OR CURVE.

ALL DIMENSIONS WHICH ARE GIVEN IN SECTION AND ARE AFFECTED BY DEAD LOAD DEFLECTIONS ARE DIMENSIONS AT CENTER LINE OF BEARING UNLESS OTHERWISE NOTED ON PLANS. IN SETTING FORMS FOR STEEL BEAM BRIDGES AND PRESTRESSED CONCRETE GIRDER BRIDGES, ADJUSTMENTS SHALL BE MADE DUE TO THE DEAD LOAD DEFLECTIONS FOR THE ELEVATIONS SHOWN. WHERE BLOCKS ARE SHOWN OVER BEAMS FOR BUILDING UP TO THE SLAB, THE VERTICAL DIMENSIONS OF THE BLOCKS SHALL BE ADJUSTED BETWEEN BEARINGS TO COMPENSATE FOR DEAD LOAD DEFLECTIONS, VERTICAL CURVE ORDINATE, AND ACTUAL BEAM CAMBER. WHERE BOTTOM OF SLAB IS IN LINE WITH BOTTOM OF TOP FLANGES, DEPTH OF SLAB BETWEEN BEARINGS SHALL BE ADJUSTED TO COMPENSATE FOR DEAD LOAD DEFLECTION, VERTICAL CURVE ORDINATE, AND ACTUAL BEAM CAMBER.

IN SETTING FALSEWORK AND FORMS FOR REINFORCED CONCRETE SPANS, AN ALLOWANCE SHALL BE MADE FOR DEAD LOAD DEFLECTIONS, SETTLEMENT OF FALSEWORK, AND PERMANENT CAMBER WHICH SHALL BE PROVIDED FOR IN ADDITION TO THE ELEVATIONS SHOWN. AFTER REMOVAL OF THE FALSEWORK, THE FINISHED STRUCTURES SHALL CONFORM TO THE PROFILE AND ELEVATIONS SHOWN ON THE PLANS AND CONSTRUCTION ELEVATIONS FURNISHED BY THE ENGINEER.

DETAILED DRAWINGS FOR FALSEWORK OR FORMS FOR BRIDGE SUPERSTRUCTURE AND ANY STRUCTURE OR PARTS OF A STRUCTURE AS NOTED ON THE PLANS SHALL BE SUBMITTED TO THE ENGINEER FOR APPROVAL BEFORE CONSTRUCTION OF THE FALSEWORK OR FORMS IS STARTED.

REINFORCING STEEL:

ALL REINFORCING STEEL SHALL BE DEFORMED. DIMENSIONS RELATIVE TO PLACEMENT OF REINFORCING ARE TO CENTERS OF BARS UNLESS OTHERWISE INDICATED IN THE PLANS. DIMENSIONS ON BAR DETAILS ARE TO CENTERS OF BARS OR ARE OUT TO OUT AS INDICATED ON PLANS.

WIRE BAR SUPPORTS SHALL BE PROVIDED FOR REINFORCING STEEL WHERE INDICATED ON THE PLANS. WHEN BAR SUPPORT PIECES ARE PLACED IN CONTINUOUS LINES, THEY SHALL BE SO PLACED THAT THE ENDS OF THE SUPPORTING WIRES SHALL BE LAPPED TO LOCK LEGS ON ADJOINING PIECES.

STRUCTURAL STEEL:

AT THE CONTRACTOR'S OPTION, HE MAY SUBSTITUTE ⅞" Ø SHEAR STUDS FOR THE ¾" Ø STUDS SPECIFIED ON THE PLANS. THIS SUBSTITUTION SHALL BE MADE AT THE RATE OF 3 - ⅞" Ø STUDS FOR 4 - ¾" Ø STUDS, AND STUD SPACING CHANGES SHALL BE MADE AS NECESSARY TO PROVIDE THE SAME EQUIVALENT NUMBER OF ⅞" Ø STUDS ALONG THE BEAM AS SHOWN FOR ¾" Ø STUDS BASED ON THE RATIO OF 3 - ⅞" Ø STUDS FOR 4 - ¾" Ø STUDS. STUDS OF THE LENGTH SPECIFIED ON THE PLANS MUST BE PROVIDED. THE MAXIMUM SPACING SHALL BE 2'-0".

EXCEPT AT THE INTERIOR SUPPORTS OF CONTINUOUS BEAMS WHERE THE COVER PLATE IS IN CONTACT WITH BEARING PLATE, THE CONTRACTOR MAY, AT HIS OPTION, SUBSTITUTE FOR THE COVER PLATES DESIGNATED ON THE PLANS COVER PLATES OF THE EQUIVALENT AREA PROVIDED THESE PLATES ARE AT LEAST 5/16" IN THICKNESS AND DO NOT EXCEED A WIDTH EQUAL TO THE FLANGE WIDTH LESS 2" OR A THICKNESS EQUAL TO 2 TIMES THE FLANGE THICKNESS. THE SIZE OF FILLET WELDS SHALL CONFORM TO THE REQUIREMENTS OF THE CURRENT ANSI/AASHTO/AWS "BRIDGE WELDING CODE". ELECTROSLAG WELDING WILL NOT BE PERMITTED.

WITH THE SOLE EXCEPTION OF EDGES AT SURFACES WHICH BEAR ON OTHER SURFACES, ALL SHARP EDGES AND ENDS OF SHAPES AND PLATES SHALL BE SLIGHTLY ROUNDED BY SUITABLE MEANS TO A RADIUS OF APPROXIMATELY 1/16 INCH OR EQUIVALENT FLAT SURFACE AT A SUITABLE ANGLE PRIOR TO PAINTING, GALVANIZING, OR METALLIZING.

HANDRAILS AND POSTS:

METAL STANDARDS AND FACES OF THE CONCRETE END POSTS FOR THE METAL RAIL SHALL BE SET NORMAL TO THE GRADE OF THE CURB, UNLESS OTHERWISE SHOWN ON PLANS. THE METAL RAIL AND TOPS OF CONCRETE POSTS USED WITH THE ALUMINUM RAIL SHALL BE BUILT PARALLEL TO THE GRADE OF THE CURB.

METAL HANDRAILS SHALL BE IN ACCORDANCE WITH THE PLANS. RAILS SHALL BE AS MANUFACTURED FOR BRIDGE RAILING. CASTINGS SHALL BE OF A UNIFORM APPEARANCE. FINS AND OTHER DEFORMATIONS RESULTING FROM CASTING OR OTHERWISE SHALL BE REMOVED IN A MANNER SO THAT A UNIFORM COLORING OF THE COMPLETED CASTING SHALL BE OBTAINED. CASTINGS WITH DISCOLORATIONS OR OF NON-UNIFORM COLORING WILL NOT BE ACCEPTED. CERTIFIED MILL REPORTS ARE REQUIRED FOR METAL RAILS AND POSTS.

SPECIAL NOTES:

GENERALLY, IN CASE OF DISCREPANCY, THIS STANDARD SHEET OF NOTES SHALL GOVERN OVER THE SPECIFICATIONS, BUT THE REMAINDER OF THE PLANS SHALL GOVERN OVER NOTES HEREON, AND SPECIAL PROVISIONS SHALL GOVERN OVER ALL. SEE SPECIFICATIONS ARTICLE 105-4.

ENGLISH

JANUARY, 1990

STD. NO. SN

REV. 6-16-95 EEM (-) RGW REV. 5-7-03 RWW (-) JTE REV. 10-1-11 MAA (-) GM
REV. 8-16-99 RWW (-) LES REV. 5-1-06 TLA (-) GM REV. 12-17 MAA (-) THC
23-JAN-2018 13:13
S:\DPG3\Low Impact Projects\17BP\Submitted\17BP12R53\Plans\401_09_BD5112W_SN_S15.DGN
napierce

DocuSign Envelope ID: 5BFA923A-FE03-4692-B330-86EF01408AAC

09/08/99

TIP PROJECT: 17BP.12.R.68

CONTRACT: DL00167

See Sheet 1A For Index of Sheets
See Sheet 1B For Conventional Plan Sheet Symbols

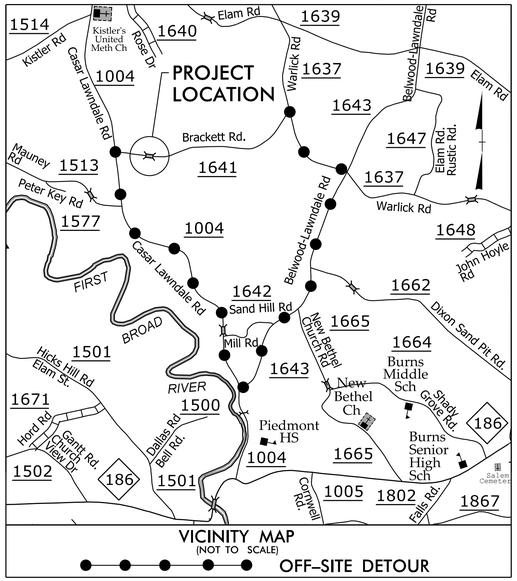

VICINITY MAP
(NOT TO SCALE)
OFF-SITE DETOUR

STATE OF NORTH CAROLINA
DIVISION OF HIGHWAYS

CLEVELAND COUNTY

LOCATION: REPLACE BRIDGE NO. 201 OVER KNOB CREEK ON SR 1641 (BRACKETT ROAD)

TYPE OF WORK: GRADING, DRAINAGE, PAVING, EROSION CONTROL, STRUCTURE AND TRAFFIC CONTROL

STATE	STATE PROJECT REFERENCE NO.	SHEET NO.	TOTAL SHEETS
N.C.	17BP.12.R.68	1	

STATE PROJ. NO.	F.A. PROJ. NO.	DESCRIPTION
46107.1.1	BRZ-1641(4)	PE
46107.2.1	BRZ-1641(4)	R/W, UTIL
17BP.12.R.68	N/A	CONST

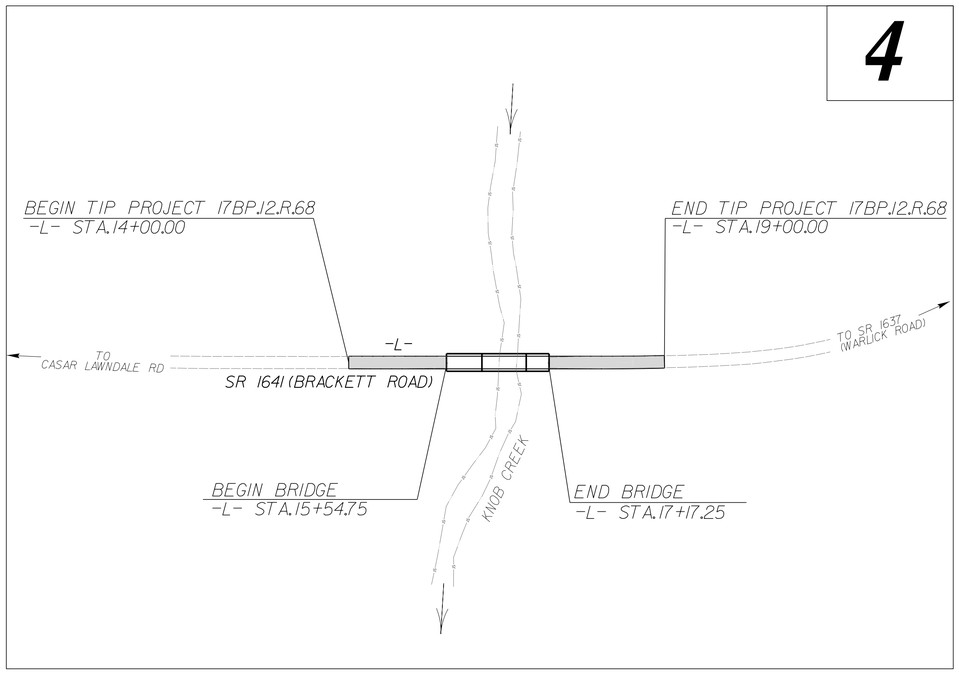



*DESIGN EXCEPTION:
SAG VERTICAL CURVE K
VERTICAL SSD

THIS PROJECT IS NOT WITHIN ANY MUNICIPAL BOUNDARIES.

CLEARING ON THIS PROJECT SHALL BE PERFORMED TO THE LIMITS ESTABLISHED BY METHOD III.

DOCUMENT NOT CONSIDERED FINAL UNLESS ALL SIGNATURES COMPLETED

GRAPHIC SCALES

50 25 0 50 100
PLANS

50 25 0 50 100
PROFILE (HORIZONTAL)

10 5 0 10 20
PROFILE (VERTICAL)

DESIGN DATA

ADT 2018 = 119
ADT 2038 = 193
K = 18 %
D = 65 %
T = 6 % *
V = 50 MPH
* TTST =1 DUAL 5
FUNC CLASS = LOCAL
SUB-REGIONAL TIER

PROJECT LENGTH

LENGTH ROADWAY TIP PROJECT 17BP.12.R.68 = 0.064 MILES
LENGTH STRUCTURE TIP PROJECT 17BP.12.R.68 = 0.031 MILES
TOTAL LENGTH OF TIP PROJECT 17BP.12.R.68 = 0.095 MILES

PLANS PREPARED FOR THE NCDOT BY:
MOTT MACDONALD
PO Box 700
Fuquay-Varina, NC 27526
(919) 552-2253
(919) 552-2254 (Fax)
www.mottmac.com
LICENSE NO. F-0669

2018 STANDARD SPECIFICATIONS

RIGHT OF WAY DATE:
APRIL 21, 2017

LETTING DATE:
MAY 22, 2018

DAVID C. WALLER, PE
PROJECT ENGINEER

STEVE RACKLEY, PE
NCDOT CONTACT

HYDRAULICS ENGINEER
DocuSigned by: Trenton J. Cooper
BAE073AA58A4428...
NORTH CAROLINA PROFESSIONAL SEAL 34364 ENGINEER TRENTON J. COOPER
9/2018
P.E.
SIGNATURE:

ROADWAY DESIGN ENGINEER
DocuSigned by: David C. Waller
58A6E5F4D013452...
NORTH CAROLINA PROFESSIONAL SEAL 22606 ENGINEER DAVID C. WALLER
9/2018
P.E.
SIGNATURE:

STATE OF NORTH CAROLINA DEPARTMENT OF TRANSPORTATION

15:40:54
R:\Roadway\Proj\b5392_rdy_tsh.dgn
RIE81413

DocuSign Envelope ID: 5BFA923A-FE03-4692-B330-86EF01408AAC

5/14/99

GENERAL NOTES: 2018 SPECIFICATIONS
EFFECTIVE: 01-16-2018
REVISED:

GRADE LINE:
GRADING AND SURFACING:

THE GRADE LINES SHOWN DENOTE THE FINISHED ELEVATION OF THE PROPOSED SURFACING AT GRADE POINTS SHOWN ON THE TYPICAL SECTIONS. GRADE LINES MAY BE ADJUSTED AT THEIR BEGINNING AND ENDING AND AT STRUCTURES AS DIRECTED BY THE ENGINEER IN ORDER TO SECURE A PROPER TIE-IN.

CLEARING:

CLEARING ON THIS PROJECT SHALL BE PERFORMED TO THE LIMITS ESTABLISHED BY METHOD III.

SUPERELEVATION:

ALL CURVES ON THIS PROJECT SHALL BE SUPERELEVATED IN ACCORDANCE WITH STD. NO. 225.04 USING THE RATE OF SUPERELEVATION AND RUNOFF SHOWN ON THE PLANS. SUPERELEVATION IS TO BE REVOLVED ABOUT THE GRADE POINTS SHOWN ON THE TYPICAL SECTIONS.

SHOULDER CONSTRUCTION:

ASPHALT, EARTH, AND CONCRETE SHOULDER CONSTRUCTION ON THE HIGH SIDE OF SUPERELEVATED CURVES SHALL BE IN ACCORDANCE WITH STD. NO. 560.01

DRIVEWAYS:

DRIVEWAYS SHALL BE CONSTRUCTED IN ACCORDANCE WITH STD. 848.02 USING 3 FOOT RADII OR RADII AS SHOWN ON THE PLANS. LOCATIONS OF DRIVES WILL BE AS SHOWN ON THE PLANS OR AS DIRECTED BY THE ENGINEER.

GUARDRAIL:

THE GUARDRAIL LOCATIONS SHOWN ON THE PLANS MAY BE ADJUSTED DURING CONSTRUCTION AS DIRECTED BY THE ENGINEER. THE CONTRACTOR SHOULD CONSULT WITH THE ENGINEER PRIOR TO ORDERING GUARDRAIL MATERIAL.

END BENTS:

THE ENGINEER SHALL CHECK THE STRUCTURE END BENT PLANS, DETAILS, AND CROSS-SECTION PRIOR TO SETTING OF THE SLOPE STAKES FOR THE EMBANKMENT OR EXCAVATION APPROACHING A BRIDGE.

UTILITIES:

THERE ARE NO UTILITY CONFLICTS ON THIS PROJECT.

RIGHT-OF-WAY MARKERS:

ALL RIGHT-OF-WAY MARKERS ON THIS PROJECT SHALL BE PLACED BY OTHERS.

1	TITLE SHEET
1A	INDEX OF SHEETS, GENERAL NOTES AND LIST OF STANDARDS
1B	CONVENTIONAL SYMBOLS
1C-1	SURVEY CONTROL SHEET
1D-1	PROPOSED ALIGNMENT CONTROL SHEET
1E-1, RW01 & RW04	RIGHT OF WAY CONTROL SHEETS
2A-1	PAVEMENT SCHEDULE AND TYPIAL SECTIONS
3B-1	ROADWAY SUMMARIES
3D-1	DRAINAGE SUMMARIES
4	PLANS SHEET
5	PROFILE SHEET
TMP-1 THRU TMP-3	TRANSPORTATION MANAGEMENT PLANS
EC-1 THRU EC-5	EROSION CONTROL PLANS
X-1 THRU X-3	CROSS SECTIONS
S-1 THRU S-18	STRUCTURE PLANS

PROJECT REFERENCE NO.	SHEET NO.
17BP.12.R.90	1A
R/W SHEET NO.	

ROADWAY DESIGN ENGINEER

NORTH CAROLINA PROFESSIONAL SEAL 22606 ENGINEER DAVID W. WALLER
Digitally signed by David W. Waller
4/9/2020

MOTT MACDONALD I & E, LLC
LICENSE NO. F-0669

DOCUMENT NOT CONSIDERED FINAL UNLESS ALL SIGNATURES COMPLETED

EFF. 01-16-2018
REV.

2018 ROADWAY ENGLISH STANDARD DRAWINGS

The following Roadway Standards as appear in "Roadway Standard Drawings" Highway Design Branch - N. C. Department of Transportation - Raleigh, N. C., Dated January, 2018 are applicable to this project and by reference hereby are considered a part of these plans:

STD.NO.	TITLE
DIVISION 2 - EARTHWORK	
200.03	Method of Clearing - Method III
225.02	Guide for Grading Subgrade - Secondary and Local
225.04	Method of Obtaining Superelevation - Two Lane Pavement
DIVISION 3 - PIPE CULVERTS	
300.01	Method of Pipe Installation
DIVISION 4 - MAJOR STRUCTURES	
422.01	Bridge Approach Fills - Type I Standard Approach Fill
DIVISION 5 - SUBGRADE, BASES AND SHOULDERS	
560.01	Method of Shoulder Construction - High Side of Superelevated Curve - Method I
DIVISION 8 - INCIDENTALS	
840.00	Concrete Base Pad for Drainage Structures
840.25	Anchorage for Frames - Brick or Concrete or Precast
840.29	Frames and Narrow Slot Flat Grates
840.35	Traffic Bearing Grated Drop Inlet - for Cast Iron Double Frame and Grates
840.46	Traffic Bearing Precast Drainage Structure
840.66	Drainage Structure Steps
846.01	Concrete Curb, Gutter and Curb & Gutter
846.04	Drop Inlet Installation in Shoulder Berm Gutter
862.01	Guardrail Placement
862.02	Guardrail Installation
862.03	Structure Anchor Units
876.02	Guide for Rip Rap at Pipe Outlets
876.04	Drainage Ditches with Class 'B' Rip Rap

15:40:55
R:\RoadwayStd\Proj\b5392_rdy_pst01A.dgn
RIEBEN

12/2/2016

PROJECT REFERENCE NO.	SHEET NO.
17BPJ2.R.68	1B

STATE OF NORTH CAROLINA, DIVISION OF HIGHWAYS

CONVENTIONAL PLAN SHEET SYMBOLS

Note: Not to Scale **S.U.E. = Subsurface Utility Engineering*

BOUNDARIES AND PROPERTY:

- State Line
- County Line
- Township Line
- City Line
- Reservation Line
- Property Line
- Existing Iron Pin — EIP
- Computed Property Corner
- Property Monument — ECM
- Parcel/Sequence Number — 123
- Existing Fence Line
- Proposed Woven Wire Fence
- Proposed Chain Link Fence
- Proposed Barbed Wire Fence
- Existing Wetland Boundary — WLB
- Proposed Wetland Boundary — WLB
- Existing Endangered Animal Boundary — EAB
- Existing Endangered Plant Boundary — EPB
- Existing Historic Property Boundary — HPB
- Known Contamination Area: Soil — S
- Potential Contamination Area: Soil — S
- Known Contamination Area: Water — W
- Potential Contamination Area: Water — W
- Contaminated Site: Known or Potential

BUILDINGS AND OTHER CULTURE:

- Gas Pump Vent or U/G Tank Cap
- Sign — S
- Well — W
- Small Mine
- Foundation
- Area Outline
- Cemetery
- Building
- School
- Church
- Dam

HYDROLOGY:

- Stream or Body of Water
- Hydro, Pool or Reservoir
- Jurisdictional Stream — JS
- Buffer Zone 1 — BZ 1
- Buffer Zone 2 — BZ 2
- Flow Arrow
- Disappearing Stream
- Spring
- Wetland
- Proposed Lateral, Tail, Head Ditch — FLOW
- False Sump

RAILROADS:

- Standard Gauge — CSX TRANSPORTATION
- RR Signal Milepost — MILEPOST 35
- Switch — SWITCH
- RR Abandoned
- RR Dismantled

RIGHT OF WAY & PROJECT CONTROL:

- Secondary Horiz and Vert Control Point
- Primary Horiz Control Point
- Primary Horiz and Vert Control Point
- Exist Permanent Easement Pin and Cap
- New Permanent Easement Pin and Cap
- Vertical Benchmark
- Existing Right of Way Marker
- Existing Right of Way Line
- New Right of Way Line — RW
- New Right of Way Line with Pin and Cap — RW
- New Right of Way Line with Concrete or Granite R/W Marker — RW
- New Control of Access Line with Concrete C/A Marker — CA
- Existing Control of Access — CA
- New Control of Access — CA
- Existing Easement Line — E
- New Temporary Construction Easement — E
- New Temporary Drainage Easement — TDE
- New Permanent Drainage Easement — PDE
- New Permanent Drainage / Utility Easement — DUE
- New Permanent Utility Easement — PUE
- New Temporary Utility Easement — TUE
- New Aerial Utility Easement — AUE

ROADS AND RELATED FEATURES:

- Existing Edge of Pavement
- Existing Curb
- Proposed Slope Stakes Cut — C
- Proposed Slope Stakes Fill — F
- Proposed Curb Ramp — CR
- Existing Metal Guardrail
- Proposed Guardrail
- Existing Cable Guiderail
- Proposed Cable Guiderail
- Equality Symbol
- Pavement Removal

VEGETATION:

- Single Tree
- Single Shrub
- Hedge
- Woods Line
- Orchard
- Vineyard — Vineyard

EXISTING STRUCTURES:

MAJOR:

- Bridge, Tunnel or Box Culvert — CONC
- Bridge Wing Wall, Head Wall and End Wall — CONC WW

MINOR:

- Head and End Wall — CONC HW
- Pipe Culvert
- Footbridge
- Drainage Box: Catch Basin, DI or JB — CB
- Paved Ditch Gutter
- Storm Sewer Manhole — S
- Storm Sewer — S

UTILITIES:

POWER:

- Existing Power Pole
- Proposed Power Pole
- Existing Joint Use Pole
- Proposed Joint Use Pole
- Power Manhole — P
- Power Line Tower
- Power Transformer
- U/G Power Cable Hand Hole
- H-Frame Pole
- U/G Power Line LOS B (S.U.E.*) — P
- U/G Power Line LOS C (S.U.E.*) — P
- U/G Power Line LOS D (S.U.E.*) — P

TELEPHONE:

- Existing Telephone Pole
- Proposed Telephone Pole
- Telephone Manhole — T
- Telephone Pedestal — T
- Telephone Cell Tower
- U/G Telephone Cable Hand Hole — HH
- U/G Telephone Cable LOS B (S.U.E.*) — T
- U/G Telephone Cable LOS C (S.U.E.*) — T
- U/G Telephone Cable LOS D (S.U.E.*) — T
- U/G Telephone Conduit LOS B (S.U.E.*) — TC
- U/G Telephone Conduit LOS C (S.U.E.*) — TC
- U/G Telephone Conduit LOS D (S.U.E.*) — TC
- U/G Fiber Optics Cable LOS B (S.U.E.*) — T FO
- U/G Fiber Optics Cable LOS C (S.U.E.*) — T FO
- U/G Fiber Optics Cable LOS D (S.U.E.*) — T FO

WATER:

- Water Manhole — W
- Water Meter
- Water Valve
- Water Hydrant
- U/G Water Line LOS B (S.U.E*) — W
- U/G Water Line LOS C (S.U.E*) — W
- U/G Water Line LOS D (S.U.E*) — W
- Above Ground Water Line — A/G Water

TV:

- TV Pedestal — C
- TV Tower
- U/G TV Cable Hand Hole — HH
- U/G TV Cable LOS B (S.U.E.*) — TV
- U/G TV Cable LOS C (S.U.E.*) — TV
- U/G TV Cable LOS D (S.U.E.*) — TV
- U/G Fiber Optic Cable LOS B (S.U.E.*) — TV FO
- U/G Fiber Optic Cable LOS C (S.U.E.*) — TV FO
- U/G Fiber Optic Cable LOS D (S.U.E.*) — TV FO

GAS:

- Gas Valve
- Gas Meter
- U/G Gas Line LOS B (S.U.E.*) — G
- U/G Gas Line LOS C (S.U.E.*) — G
- U/G Gas Line LOS D (S.U.E.*) — G
- Above Ground Gas Line — A/G Gas

SANITARY SEWER:

- Sanitary Sewer Manhole
- Sanitary Sewer Cleanout
- U/G Sanitary Sewer Line — SS
- Above Ground Sanitary Sewer — A/G Sanitary Sewer
- SS Forced Main Line LOS B (S.U.E.*) — FSS
- SS Forced Main Line LOS C (S.U.E.*) — FSS
- SS Forced Main Line LOS D (S.U.E.*) — FSS

MISCELLANEOUS:

- Utility Pole
- Utility Pole with Base
- Utility Located Object
- Utility Traffic Signal Box — S
- Utility Unknown U/G Line LOS B (S.U.E.*) — ?UTL
- U/G Tank; Water, Gas, Oil
- Underground Storage Tank, Approx. Loc. — UST
- A/G Tank; Water, Gas, Oil
- Geoenvironmental Boring
- U/G Test Hole LOS A (S.U.E.*)
- Abandoned According to Utility Records — AATUR
- End of Information — E.O.I.

PROJECT REFERENCE NO.	SHEET NO.
17BP.12.R.68	1C-1
Location and Surveys	

SURVEY CONTROL SHEET

W/ EXISTING CENTERLINE ALIGNMENTS PRIOR TO CONSTRUCTION

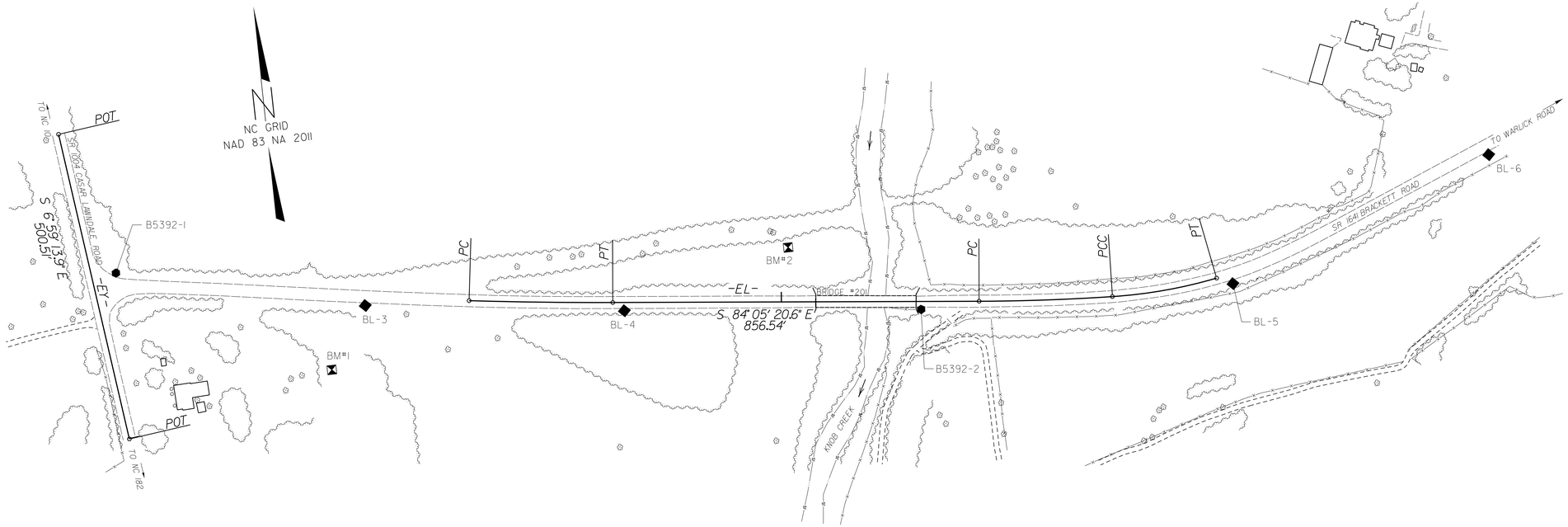

BL

POINT	DESC.	NORTH	EAST	ELEVATION
1	B5392-1	628182.1080	1233699.6340	911.84
3	BL-3	628088.0515	1234091.0586	884.13
4	BL-4	628035.5859	1234502.6080	854.13
2	B5392-2	627987.2003	1234975.4508	830.38
5	BL-5	627974.9262	1235476.2914	862.62
6	BL-6	628136.6526	1235905.4122	882.12

BM1 ELEVATION = 890.77
N 627991 E 1234027
RR SPIKE IN BASE 18" YELLOW PINE

BM2 ELEVATION = 830.30
N 628108 E 1234774
RR SPIKE IN BASE 16" TULIP-POPLAR

EL

POINT	N	E	BEARING	DIST	DELTA	D	L	T	R
PC	628158.829	1233663.105							
CURVE			S 84°40'51.5" E	172.14	08°35'04.0"(RT)	04°58'56.1"	172.30	86.31	1150.00
PCC	628142.871	1233834.503							
CURVE			S 80°52'31.6" E	152.89	00°58'24.1"(LT)	00°38'11.8"	152.89	76.45	9000.00
PT	628118.626	1233985.461							
LINE			S 81°21'43.6" E	169.35					
PC	628093.191	1234152.888							
CURVE			S 82°43'32.1" E	335.51	02°43'37.0"(LT)	00°48'45.7"	335.54	167.80	7050.00
PT	628050.709	1234485.694							
LINE			S 84°05'20.6" E	586.54					
PC	627990.306	1235069.114							
CURVE			S 85°53'20.9" E	213.60	03°36'00.6"(LT)	01°41'06.6"	213.64	106.85	3400.00
PCC	627974.993	1235282.167							
CURVE			N 80°05'23.5" E	330.22	24°26'30.7"(LT)	07°20'44.2"	332.74	168.94	780.00
PT	628031.826	1235607.464							
LINE			N 67°52'08.2" E	336.88					
POT	628158.738	1235919.525							

EY

POINT	N	E	BEARING	DIST
POT	628412.745	1233631.985		
LINE			S 06°59'13.9" E	500.51
POT	627915.948	1233692.872		

DATUM DESCRIPTION

THE LOCALIZED COORDINATE SYSTEM DEVELOPED FOR THIS PROJECT IS BASED ON THE STATE PLANE COORDINATES ESTABLISHED BY NCDOT FOR MONUMENT "B5392-1" WITH NAD 83/NA 2011 STATE PLANE GRID COORDINATES OF NORTHING: 628182.108(ft) EASTING: 1233699.634(ft) ELEVATION: 911.84(ft)
THE AVERAGE COMBINED GRID FACTOR USED ON THIS PROJECT (GROUND TO GRID) IS: 0.99983995
THE N.C. LAMBERT GRID BEARING AND LOCALIZED HORIZONTAL GROUND DISTANCE FROM "B5392-1" TO -L- STATION 10+00.00 IS S 79° 26' 16.78" E 567.24'
ALL LINEAR DIMENSIONS ARE LOCALIZED HORIZONTAL DISTANCES
VERTICAL DATUM USED IS NAVD 88

NOTES:

1. IF FURTHER INFORMATION REGARDING PROJECT CONTROL IS NEEDED, PLEASE CONTACT THE LOCATION AND SURVEYS UNIT.

2. PROJECT CONTROL WAS ESTABLISHED USING GNSS, THE GLOBAL NAVIGATION SATELLITE SYSTEM.

REVISIONS

3/16/18

7:32:57 AM
R:\Roadway\Proj\B5392_Ls_lc-1.dgn
wp178449

PROJECT REFERENCE NO.	SHEET NO.
17BP.12.R.68	1D-1
Location and Surveys	

PROPOSED ALIGNMENT CONTROL SHEET

L

TYPE	STATION	NORTH	EAST
PC	10·00.00	628078.1332	1234257.2633
PT	12·30.08	628050.7089	1234485.6936
PC	18·16.62	627990.3056	1235069.1145
PCC	20·30.26	627974.9932	1235282.1673
PT	22·00.00	627986.5848	1235451.1777

NOTES:

1. IF FURTHER INFORMATION REGARDING PROJECT CONTROL IS NEEDED, PLEASE CONTACT THE LOCATION AND SURVEYS UNIT.

2. PROJECT CONTROL WAS ESTABLISHED USING GNSS, THE GLOBAL NAVIGATION SATELLITE SYSTEM.

REVISIONS

3/16/18

7:34:19 AM
R:\Roadway\Proj\b5392_ls_1D-1.dgn
wp178449

3/16/18

REVISIONS

$$$$$$SYSTIME$$$$
$$$$$$TIME$$$$
$$$$$$FILENAME$$$$
$$$$$$USERNAME$$$$$$

03/16/18

TIP PROJECT: 17BP.12.R.68

See Sheet 1A For Index of Sheets
See Sheet 1B For Conventional Plan Sheet Symbols

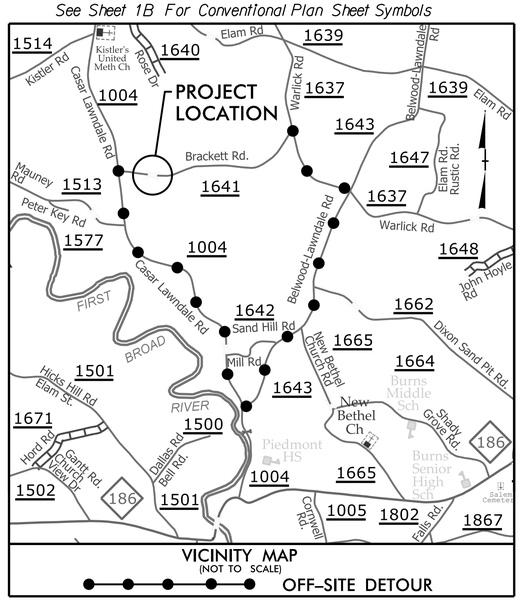

RW PLANS

STATE OF NORTH CAROLINA
DIVISION OF HIGHWAYS

SURVEY CONTROL, EXISTING CENTERLINES, RIGHT OF WAY, EASEMENTS AND PROPERTY TIES

CLEVELAND COUNTY

STATE	STATE PROJECT REFERENCE NO.	SHEET NO.	TOTAL SHEETS
N.C.	17BP.12.R.68	RW01	



LOCATION: REPLACE BRIDGE NO. 201 OVER KNOB CREEK ON SR 1641 (BRACKETT ROAD)

TYPE OF WORK: GRADING, DRAINAGE, PAVING, EROSION CONTROL, STRUCTURE AND TRAFFIC CONTROL

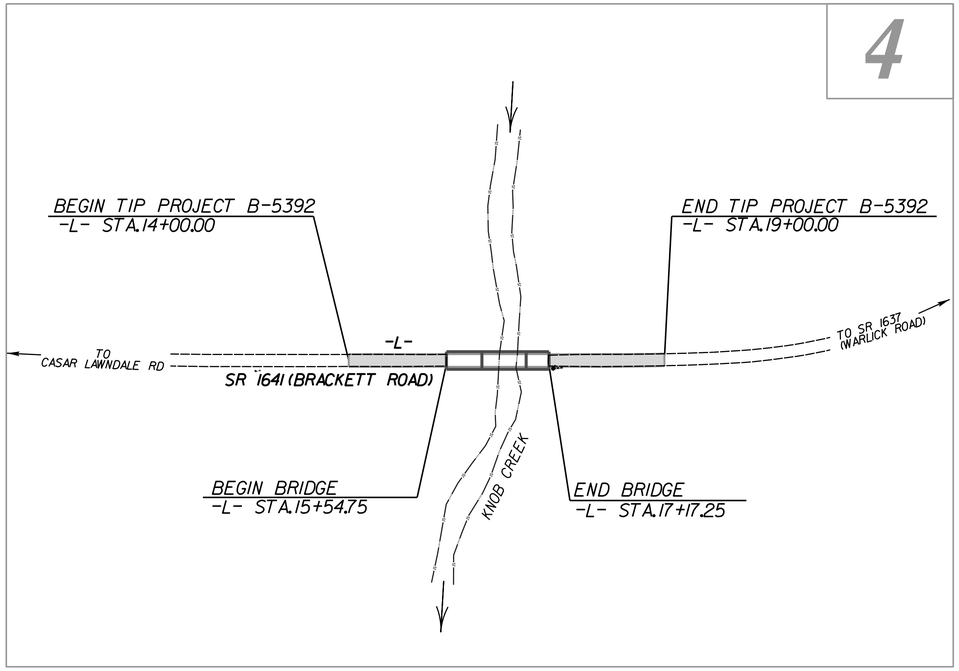



DOCUMENT NOT CONSIDERED FINAL UNLESS ALL SIGNATURES COMPLETED

GRAPHIC SCALE

50 25 0 50 100

PLANS

DATUM DESCRIPTION

THE LOCALIZED COORDINATE SYSTEM DEVELOPED FOR THIS PROJECT IS BASED ON THE STATE PLANE COORDINATES ESTABLISHED BY NCDOT FOR MONUMENT "B5392-1" WITH NAD 83/NA 2011 STATE PLANE GRID COORDINATES OF NORTHING: 628182.108(ft) EASTING: 1233699.634(ft) ELEVATION: 911.84(ft)
THE AVERAGE COMBINED GRID FACTOR USED ON THIS PROJECT (GROUND TO GRID) IS: 0.99983995
THE N.C. LAMBERT GRID BEARING AND LOCALIZED HORIZONTAL GROUND DISTANCE FROM "B5392-1" TO -L- STATION 10+00.00 IS S 79° 26' 16.78" E 567.24'
ALL LINEAR DIMENSIONS ARE LOCALIZED HORIZONTAL DISTANCES
VERTICAL DATUM USED IS NAVD 88

Prepared In the Office of:
DIVISION OF HIGHWAYS
1000 Birch Ridge Dr., Raleigh NC, 27610

2012 STANDARD SPECIFICATIONS

RIGHT OF WAY DATE: APRIL 21, 2017

LETTING DATE: MARCH 22, 2018

PROFESSIONAL LAND SURVEYOR

NORTH CAROLINA PROFESSIONAL SEAL L-3828 LAND SURVEYOR JAMES I JEFFREYS III

DocuSigned by: James I Jeffreys
A43045A2D7AE4CA...
SIGNATURE:

3/16/2018

STATE OF NORTH CAROLINA • DEPARTMENT OF TRANSPORTATION •

$$$$SYSTIME$$$$
$$$$DGN$$$$
$$$$USERNAME$$$$

PROJECT REFERENCE NO.	SHEET NO.
17BP.12.R.68	RW-4

Location and Surveys

PROJECT SURVEYOR

NORTH CAROLINA PROFESSIONAL SEAL L-3828 LAND SURVEYOR JAMES I. JEFFREYS III

I, JAMES I. JEFFREYS, a Professional Land Surveyor in the state of North Carolina hereby certify to the best of my knowledge and belief that the following work item(s) (R/W Staking) performed under my responsible charge meet NCDOT Survey Standards as directed in the NCDOT Location & Surveys guidelines and procedures.

I further certify that the right of way and permanent easement points shown herein and outlined in the tables shown hereon (localized coordinates, station/offset) have been checked and are accurate representations of the right of way and permanent easement points depicted on the corresponding highway plans. I also certify that the right of way and permanent easement points shown herein have been field monumented under my supervision from existing survey control provided by others; that the depicted property data shown herein were surveyed by others; and these monuments denote the right of way and easement boundaries at the time of staking which may be subject to change due to right of way revisions (See deeds for final determination).

Witness my original signature, registration number and seal this day 3/16/2018.

DocuSigned by:
James I. Jeffreys III
A43045A2D7AE4CA...
Professional Land Surveyor

L-3828
PLS #

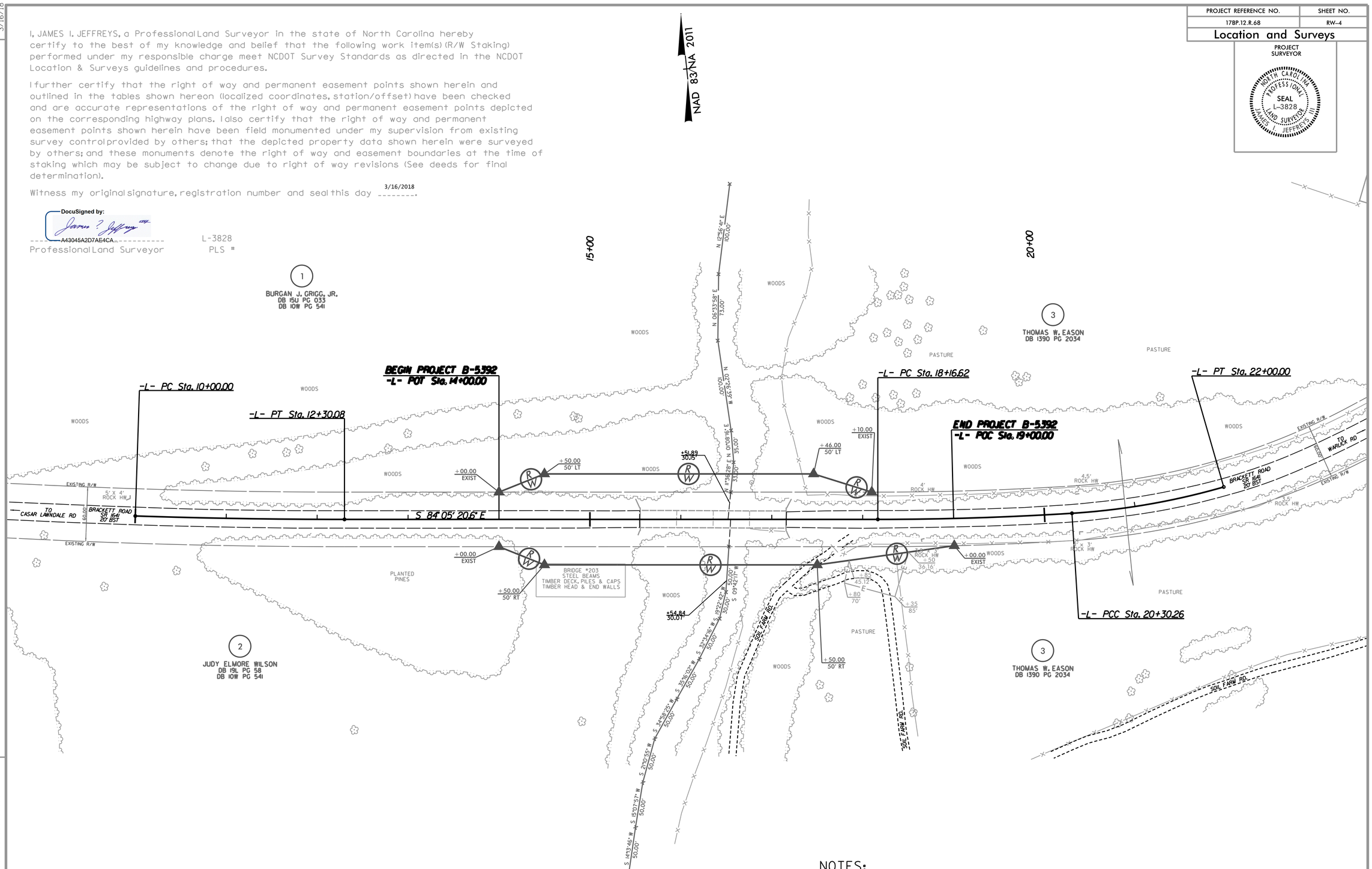

-L-

PI Sta 11+15.05	PI Sta 19+23.47	PI Sta 21+15.47
Δ = 1° 52' 11.6" (LT)	Δ = 3° 36' 00.6" (LT)	Δ = 12° 28' 07.0" (LT)
D = 0° 48' 45.7"	D = 1° 41' 06.6"	D = 7° 20' 44.2"
L = 230.08'	L = 213.64'	L = 169.74'
T = 115.05'	T = 106.85'	T = 85.21'
R = 7,050.00'	R = 3,400.00'	R = 780.00'

NOTES:

1. IF FURTHER INFORMATION REGARDING PROJECT CONTROL IS NEEDED, PLEASE CONTACT THE LOCATION AND SURVEYS UNIT.

2. PROJECT CONTROL WAS ESTABLISHED USING GNSS, THE GLOBAL NAVIGATION SATELLITE SYSTEM.

REVISIONS

3/16/18

$$$$SYSTIME$$$$
$$$$DGN$$$$
$$$$USERNAME$$$$

DocuSign Envelope ID: 5BFA923A-FE03-4692-B330-86EF01408AAC

PROJECT REFERENCE NO.	SHEET NO.
17BP.12.R.68	2A-1
ROADWAY DESIGN ENGINEER	PAVEMENT DESIGN ENGINEER

NORTH CAROLINA PROFESSIONAL SEAL 22606 ENGINEER DAVID C. WALLER
DocuSigned by: DAVID C. WALLER
4/9/2018
MOTT MACDONALD I & E, LLC
LICENSE NO. F-0669

DOCUMENT NOT CONSIDERED FINAL UNLESS ALL SIGNATURES COMPLETED

Prepared in the Office of:
MOTT MACDONALD
PO Box 700
Fuquay-Varina, NC 27526
www.mottmac.com

FINAL PAVEMENT SCHEDULE

C1	PROP. APPROX. 3" ASPHALT CONCRETE SURFACE COURSE, TYPE S9.SB, AT AN AVERAGE RATE OF 168 LBS. PER SQ. YD. IN EACH OF TWO LAYERS.
C2	PROP. VAR. DEPTH ASPHALT CONCRETE SURFACE COURSE, TYPE S9.SB, AT AN AVERAGE RATE OF 112 LBS. PER SQ. YD. PER 1" DEPTH. TO BE PLACED IN LAYERS NOT LESS THAN 1½" IN DEPTH OR GREATER THAN 2" IN DEPTH.
E1	PROP. APPROX. 4" ASPHALT CONCRETE BASE COURSE, TYPE B25.0C, AT AN AVERAGE RATE OF 456 LBS. PER SQ. YD.
E2	PROP. VAR. DEPTH ASPHALT CONCRETE BASE COURSE, TYPE B25.0C, AT AN AVERAGE RATE OF 114 LBS. PER SQ. YD. PER 1" DEPTH. TO BE PLACED IN LAYERS NOT LESS THAN 3" IN DEPTH OR GREATER THAN 5½" IN DEPTH
R1	SHOULDER BERM GUTTER.
T	EARTH MATERIAL.
W	WEDGING (SEE DETAIL)

NOTE: PAVEMENT EDGE SLOPES ARE 1:1 UNLESS SHOWN OTHERWISE.

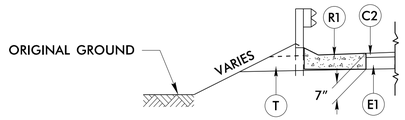

DETAIL SHOWING
SHOULDER BERM GUTTER LOCATIONS

–L– STA. 17+28.13 TO STA. 17+65.00 RT
–L– STA. 17+28.13 TO STA. 17+42.00 LT

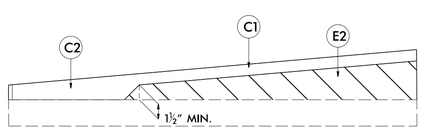

(W) Wedging Detail For Surface on Bridge

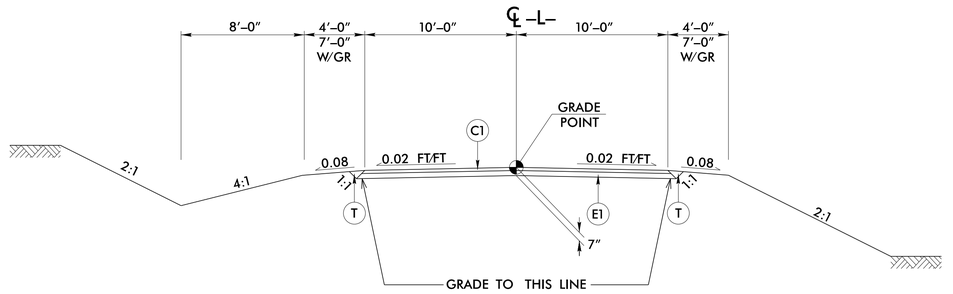

TYPICAL SECTION NO. 1

USE TYPICAL SECTION NO. 2:

–L– STA 14+00.00 TO 15+54.75 (BEGIN BRIDGE)
–L– STA 17+17.25 (END BRIDGE) TO 19+00.00

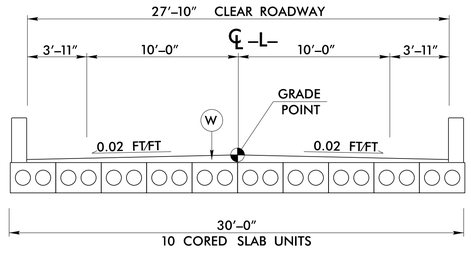

TYPICAL SECTION NO. 2

USE TYPICAL SECTION NO. 3:

–L– STA 15+54.75 (BEGIN BRIDGE) TO 17+17.25 (END BRIDGE)

6/2/99
15:40:56
R:\Roadway\Proj\b5392_rdy_typ.dgn
RIE81413

6/21/08

COMPUTED BY: BLP DATE: 9/2016
CHECKED BY: _____ DATE: _____

STATE OF NORTH CAROLINA
DIVISION OF HIGHWAYS

PROJECT REFERENCE NO.	SHEET NO.
17BP.12.R.68	3B-1

SUMMARY OF EARTHWORK

STATION	STATION	UNCL. EXCAV.	EMBANK. + %	BORROW	WASTE
14+00.00	15+54.75	11	621	610	
17+17.25	19+00.00	59	210	151	
PROJECT TOTALS:		70	831	761	
5% TO REPLACE BORROW				39	
GRAND TOTALS:		70		800	
SAY:		90		960	

Earthwork quantities are calculated by the Roadway Design Unit. These earthwork quantities are based in part on subsurface data provided by the Geotechnical Engineering Unit.

SHOULDER BERM GUTTER SUMMARY

SURVEY LINE	STATION	STATION	LENGTH
–L– LT	17+28.13	17+42	14
–L– RT	17+28.13	17+65	37
		TOTAL:	51
		SAY:	55

EXISTING ASPHALT PAVEMENT REMOVAL SUMMARY

SURVEY LINE	STATION	STATION	LOCATION LT/RT/CL	YD^2
–L–	14+00.00	15+56.00	CL	325.47
–L–	17+16.00	19+00.00	CL	384.31
			TOTAL:	709.78
			SAY:	790

FLARE LENGTH = DISTANCE FROM LAST SECTION OF PARALLEL GUARDRAIL TO END OF GUARDRAIL.
W = TOTAL WIDTH OF FLARE FROM BEGINNING OF TAPER TO END OF GUARDRAIL.
G = GATING IMPACT ATTENUATOR TYPE 350
NG = NON-GATING IMPACT ATTENUATOR TYPE 350

GUARDRAIL SUMMARY

SURVEY LINE	BEG. STA.	END STA.	LOCATION	LENGTH STRAIGHT	LENGTH SHOP CURVED	LENGTH DOUBLE FACED	WARRANT POINT APPROACH END	WARRANT POINT TRAILING END	"N" DIST. FROM E.O.L.	TOTAL SHOUL. WIDTH	FLARE LENGTH APPROACH END	FLARE LENGTH TRAILING END	W APPROACH END	W TRAILING END	ANCHORS XI MOD	XI	GREU TL–3	M–350	TYPE III	CAT–1	VI MOD	BIC	AT–1	IMPACT ATTENUATOR TYPE 350 EA	G	NG	SINGLE FACED GUARDRAIL	REMOVE EXISTING GUARDRAIL	REMOVE AND STOCKPILE EXISTING GUARDRAIL	REMARKS
–L–	14+48.50	15+54.75	LT	106.25				15+50.00	3'–11"	4'		50'					1		1											
–L–	14+48.50	15+54.75	RT	106.25			15+50.00		3'–11"	4'	50'						1		1											
–L–	17+17.25	18+61.00	LT	143.75			17+50.00		3'–11"	4'	50'						1		1											
–L–	17+17.25	17+98.50	RT	81.25				17+16.00	3'–11"	4'		50'					1		1											
			TOTALS	437.50													4		4											
	DEDUCTION FOR ANCHOR UNITS																													
	GREU TL–3		4 @ 50' =	–200.00																										
	TYPE III		4 @ 18.75' =	–75.00																										
			GRAND TOTALS	162.5													4		4											
			SAY	162.5			5 EACH ADDITIONAL GUARDRAIL POSTS																									

3:08:40 PM
R:\Roadway\Proj\b5392_rdy_psh03B-1.dgn
dan.hogan
60082710

6/21/00

COMPUTED BY: BLP DATE: 9/2016
CHECKED BY: _____ DATE: _____

STATE OF NORTH CAROLINA
DIVISION OF HIGHWAYS

PROJECT REFERENCE NO.	SHEET NO.
17BP.12.R.68	3D-1

NOTE: Invert Elevations are for Bid Purposes only and shall not be used for project construction stakeout. See "Standard Specifications For Roads and Structures, Section 300-5".

LIST OF PIPES, ENDWALLS, ETC. (FOR PIPES 48" & UNDER)

STATION	LOCATION (LT,RT, OR CL)	STRUCTURE NO. FROM	STRUCTURE NO. TO	TOP ELEVATION	INVERT ELEVATION	INVERT ELEVATION	SLOPE CRITICAL	DRAINAGE PIPE (RCP, CSP, CAAP, HDPE, or PVC) SIZE	12"	15"	18"	24"	30"	36"	42"	48"
								THICKNESS OR GAUGE								
17+36	LT	401		833.21												
		401	402		829.96	829.81										
17+36	RT	402		833.21												
		402	403		829.81	829.68										
17+60	RT	403														
		403	404		829.68	827.65				24						
18+25	RT	405			834.7											
TOTALS										24						

C.S. PIPE (UNLESS NOTED OTHRWISE)	12"	15"	18"	24"	30"	36"	42"	48"
		.064	.064	.064	.064	.079	.079	.109	.109	.109

CLASS III R.C. PIPE (UNLESS OTHERWISE NOTED)	12"	15"	18"	24"	30"	36"	42"	48"
		28						
		20						

15" SIDE DRAIN PIPE	18" SIDE DRAIN PIPE	24" SIDE DRAIN PIPE
	48	
	48	

ENDWALLS STD. 838.01, STD. 838.11 OR STD. 838.80 (UNLESS NOTED OTHERWISE) CU. YDS. R.C.P.	C.S.P.

QUANTITIES FOR DRAINAGE STRUCTURES * TOTAL L.F. FOR PAY QUANTITY SHALL BE COL. 'A' + (1.3 X COL. 'B') LIN. FT.	A	B
PER EACH (0' THRU 5.0')		
5.0' THRU 10.0'		
10.0' AND ABOVE		

C.B. STD. 840.01 OR STD. 840.02

FRAME, GRATES AND HOOD STANDARD 840.03 TYPE OF GRATE	E	F	G

D.I. STD. 840.14 OR STD. 840.15	D.I. FRAME & GRATE STD. 840.16	G.D.I. TYPE "A" STD. 840.17 OR 840.26	G.D.I. TYPE "B" STD. 840.18 OR 840.27	G.D.I. TYPE "D" STD. 840.19 OR 840.28	G.D.I. FRAME WITH GRATE STD. 840.22	G.D.I. FRAME WITH TWO GRATES STD. 840.22	G.D.I. (N.S.) FRAME WITH GRATE STD. 840.24	G.D.I. (N.S.) FRAME WITH TWO GRATES STD. 840.24	G.D.I. (N.S.) FRAME WITH TWO GRATES STD. 840.29	T.B.D.I. FRAME WITH TWO GRATES STD. 840.33	T.B.D.I. STD. 840.35	CORR. STEEL ELBOWS NO. & SIZE	CONC. COLLARS CL. "B" C.Y. STD. 840.72	CONC. & BRICK PIPE PLUG, C.Y. STD. 840.71	PIPE REMOVAL LIN.FT.	REMARKS
									1		1					
									1		1					
									1		1					
															45	REMOVED HEAD WALL AND END WALL.
									3		3				45	

ABBREVIATIONS

C.B.	CATCH BASIN
N.D.I.	NARROW DROP INLET
D.I.	DROP INLET
G.D.I.	GRATED DROP INLET
G.D.I. (N.S.)	GRATED DROP INLET (NARROW SLOT)
J.B.	JUNCTION BOX
M.H.	MANHOLE
T.B.D.I.	TRAFFIC BEARING DROP INLET
T.B.J.B.	TRAFFIC BEARING JUNCTION BOX

3:08:41 PM
R:\Roadway\Proj\b5392_rdy_psh030-1.dgn
09/23/10

DocuSign Envelope ID: 5BFA923A-FE03-4692-B330-86EF01408AAC

8/17/99

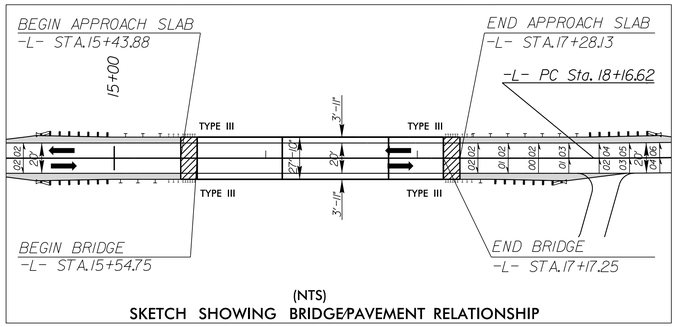

(NTS)

SKETCH SHOWING BRIDGE/PAVEMENT RELATIONSHIP

NAD 83/NA 2011

DETAIL A
TOE PROTECTION
(Not to Scale)

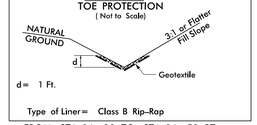

d = 1 Ft.

Type of Liner = Class B Rip-Rap

FROM STA. 14+20 TO STA. 14+50 RT.
FROM STA. 14+10 TO STA. 14+55 LT.

DETAIL B
RIP RAP AT EMBANKMENT
(Not to Scale)

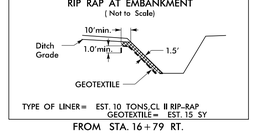

TYPE OF LINER = EST. 10 TONS, CL II RIP-RAP
GEOTEXTILE = EST. 15 SY

FROM STA. 16+79 RT.

DETAIL C
LATERAL 'V' DITCH
(Not to Scale)

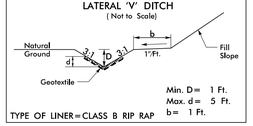

Min. D = 1 Ft.
Max. d = 5 Ft.
b = 1 Ft.

TYPE OF LINER = CLASS B RIP RAP

FROM STA. 16+79 TO STA. 18+00 RT.
FROM STA. 18+50 TO STA. 19+00 RT.

PROJECT REFERENCE NO.	SHEET NO.
17BPJ2.R.68	4

R/W SHEET NO.

ROADWAY DESIGN ENGINEER
NORTH CAROLINA PROFESSIONAL ENGINEER SEAL 22606 BRADLEY E. WALLER
Digitally signed by Bradley E. Waller
DN: cn=Bradley E. Waller, o=Mott MacDonald, ou=Engineering, email=brad.waller@mottmac.com, c=US
Date: 2018.04.09 14:18:16 -04'00'
4/9/2018

HYDRAULICS ENGINEER
NORTH CAROLINA PROFESSIONAL ENGINEER SEAL 34364 JOSEPH J. CORNER
Digitally signed by Joseph J. Corner
DN: cn=Joseph J. Corner, o=Mott MacDonald, ou=Engineering, email=joe.corner@mottmac.com, c=US
Date: 2018.04.09 14:18:16 -04'00'
4/9/2018

MOTT MACDONALD I & E, LLC
LICENSE NO. F-0669

DOCUMENT NOT CONSIDERED FINAL UNLESS ALL SIGNATURES COMPLETED

Prepared in the Office of:
MOTT MACDONALD
PO Box 700
Fuquay-Varina, NC 27526
www.mottmac.com

HDR Engineering, Inc. of the Carolinas
555 Fayetteville St. Suite 900 Raleigh, N.C. 27601
N.C.B.E.L.S. License Number: F-0116

15+00

20+00

1
BURGAN J. GRIGG, JR.
DB 15U PG 033
DB 10W PG 541

2
JUDY ELMORE WILSON
DB 19L PG 58
DB 10W PG 541

3
THOMAS W. EASON
DB 1390 PG 2034

3
THOMAS W. EASON
DB 1390 PG 2034

WOODS
PASTURE
PLANTED PINES

-L- PC Sta. 10+00.00
-L- PT Sta. 12+30.08
BEGIN PROJECT 17BPJ2.R.68
-L- POT Sta. 14+00.00
-L- PC Sta. 18+16.62
-L- PT Sta. 22+00.00
END PROJECT 17BPJ2.R.68
-L- POC Sta. 19+00.00
-L- PCC Sta. 20+30.26

S 84° 05' 20.6" E

TOE PROTECTION W/CL B RIP RAP SEE DETAIL A EST 15 TONS EST 30 SY GEOTEXTILE
BM#2
EXISTING RIP RAP
TIE PROP.WW FENCE TO EXIST.FENCE -L- STA.16+33.20,50' LT.
TIE PROP.WW FENCE TO EXIST.FENCE -L- STA.18+23.95,25.65' LT.
PROP. WW FENCE
TIE PROP.WW FENCE TO EXIST.FENCE -L- STA.19+16.90,28.09' RT.
TIE PROP.WW FENCE TO EXIST.FENCE -L- STA.18+39.76,69.34' RT.
SAG STA. 17+36.72 ELEV. 833.49
-0.537%
+7.466%
RETAIN EW
REMOVE EW
RETAIN HW
REMOVE HW
GREU TL-3
TB 2GI
END SBG +42
15" RCP-III
END SBG +65
LATERAL 'V' DITCH W/CLASS B RIP RAP SEE DETAIL C EST 15 TONS EST 35 SY GEOTEXTILE
LATERAL 'V' DITCH W/CLASS B RIP RAP SEE DETAIL C EST 40 TONS EST 85 SY GEOTEXTILE
CLASS B RIP RAP EST. 2 TONS EST. 7 SY GEOTEXTILE
RIP RAP AT EMBANKMENT SEE DETAIL B
CLASS II RIP RAP UP TO SHOULDER POINT (TYP.)
8" x 4" DRAINAGE OPENINGS @ 6' SPACING (TOTAL 28)
DECK DRAIN DISSIPATOR PAD (TYP.), SEE DETAIL D
BANK STABILIZATION TIE TO EXISTING RIP RAP SEE DETAIL E EST. 50 TONS RIP RAP EST. 60 SY GEOTEXTILE
TOE PROTECTION W/CL B RIP RAP SEE DETAIL A EST 10 TONS EST 20 SY GEOTEXTILE
BL-4
BL-5
B5392-2
KNOB CREEK
SOIL FARM RD.
BRACKETT ROAD SR 1641 20' BST
TO CASAR LAWNDALE RD
TO WARLICK RD
AT&T CORP. 50 PR. COPPER
24" RCP
18" RCP
48"WW W/ISBW
EXISTING R/W
5' X 4' ROCK HW
4.5' ROCK HW
3' X 3' ROCK HW
6' X 3' ROCK HW
SOPR IN STEEL CONDUIT (VISIBLE IN CREEK BED)

-L-

PI Sta 11+15.05	PI Sta 19+23.47	PI Sta 21+15.47
Δ = 1° 52' 11.6" (LT)	Δ = 3° 36' 00.6" (LT)	Δ = 12° 28' 07.0" (LT)
D = 0° 48' 45.7"	D = 1° 41' 06.6"	D = 7° 20' 44.2"
L = 230.08'	L = 213.64'	L = 169.74'
T = 115.05'	T = 106.85'	T = 85.21'
R = 7,050.00'	R = 3,400.00'	R = 780.00'

NOTE:
GREU TL-3 GUARDRAIL END UNITS ON ALL FOUR CORNERS OF GUARDRAIL

DETAIL D
DECK DRAIN DISSIPATOR PAD
(Not to Scale)

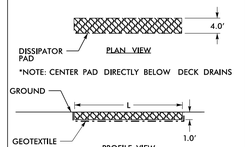

Total L = 150'
Type of Liner = 10 TONS CL B Rip-Rap
Geotextile = 25 sy

FROM STA. 15+61 TO STA. 16+09 LT. & RT., L=48'
FROM STA. 16+84 TO STA. 17+08 LT. & RT., L=27'

DETAIL E
BANK STABILIZATION
(Not to Scale)

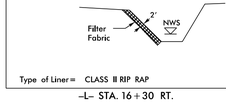

Type of Liner = CLASS II RIP RAP

-L- STA. 16+30 RT.

SEE SHEET 5 FOR -L- PROFILE

15-40-58
P:\Roadway\Proj\b5392_rdy_psh04.dgn
BJE61413

DocuSign Envelope ID: 5BFA923A-FE03-4692-B330-86EF01408AAC

PROJECT REFERENCE NO.	SHEET NO.
17BP.12.R.68	5

ROADWAY DESIGN ENGINEER
NORTH CAROLINA PROFESSIONAL SEAL 22606 ENGINEER DAVID C. WALLER
4/9/2018
MOTT MACDONALD I & E, LLC
LICENSE NO. F-0669

HYDRAULICS ENGINEER
NORTH CAROLINA PROFESSIONAL SEAL 34364 ENGINEER TRENTON J. CORNER
4/9/2018

DOCUMENT NOT CONSIDERED FINAL UNLESS ALL SIGNATURES COMPLETED

Prepared in the Office of:
MOTT MACDONALD
PO Box 700
Fuquay-Varina, NC 27526
www.mottmac.com

HDR
555 Fayetteville St, Suite 900 Raleigh, N.C. 27601
N.C.B.E.L.S. License Number: F-0116

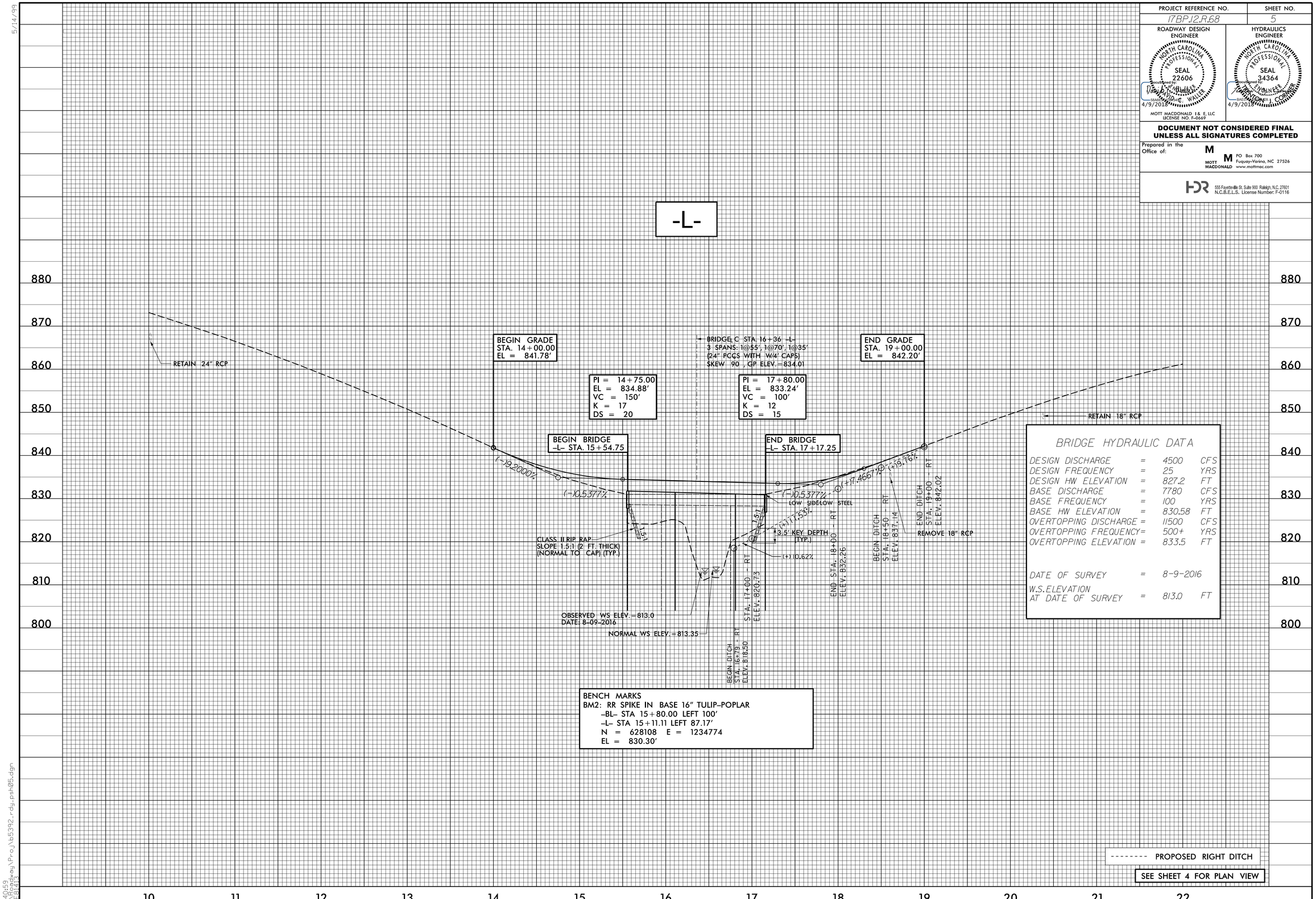

BRIDGE HYDRAULIC DATA

DESIGN DISCHARGE	=	4500	CFS
DESIGN FREQUENCY	=	25	YRS
DESIGN HW ELEVATION	=	827.2	FT
BASE DISCHARGE	=	7780	CFS
BASE FREQUENCY	=	100	YRS
BASE HW ELEVATION	=	830.58	FT
OVERTOPPING DISCHARGE	=	11500	CFS
OVERTOPPING FREQUENCY	=	500+	YRS
OVERTOPPING ELEVATION	=	833.5	FT
DATE OF SURVEY	=	8-9-2016	
W.S. ELEVATION AT DATE OF SURVEY	=	813.0	FT

-------- PROPOSED RIGHT DITCH

SEE SHEET 4 FOR PLAN VIEW

5/14/99

15:40:59
R:\Roadway\Proj\b5392_rdy_psh05.dgn
RIE81413

STATE OF NORTH CAROLINA
DIVISION OF HIGHWAYS

TRANSPORTATION MANAGEMENT PLAN

CLEVELAND COUNTY

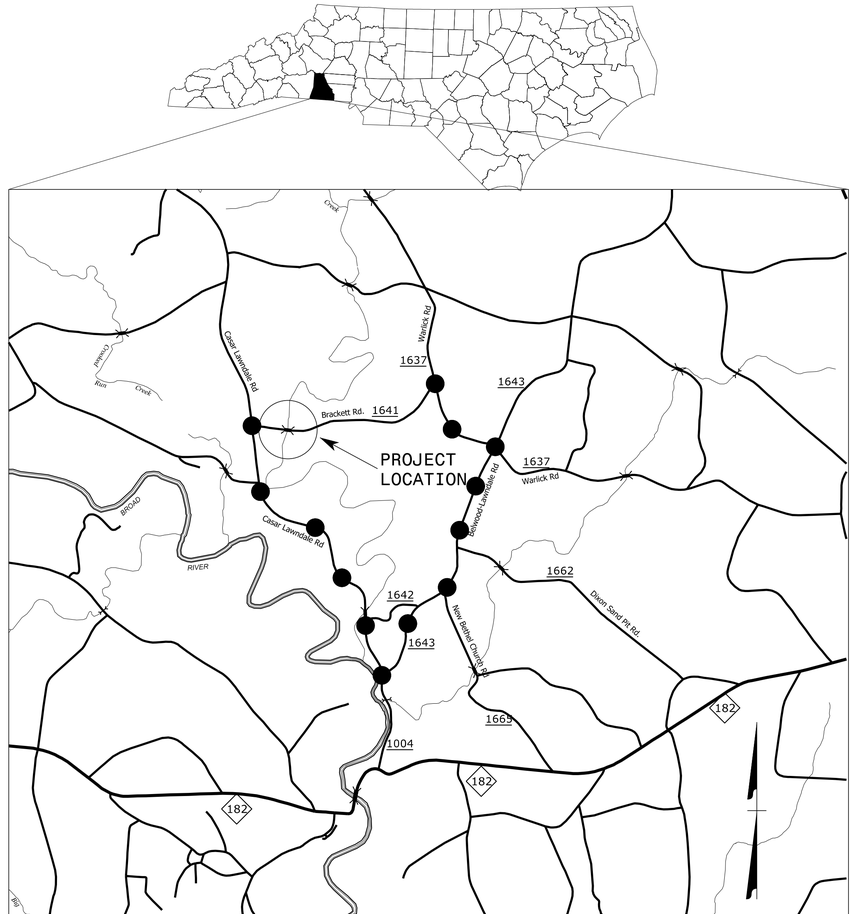

VICINITY MAP

LOCATION: BRIDGE 201 OVER KNOB CREEK ON SR 1641

OFFSITE DETOUR ROUTE

INDEX OF SHEETS

SHEET NO.	TITLE
TMP-1	TITLE SHEET, VICINITY MAP, AND INDEX OF SHEETS
TMP-1A	LIST OF APPLICABLE ROADWAY STANDARD DRAWINGS AND LEGEND
TMP-1B	TRANSPORTATION OPERATIONS PLAN AND PHASING
TMP-2	SPECIAL SIGN DESIGN
TMP-3	OFFSITE DETOUR ROUTE AND ROAD CLOSURE

SHEET NO.
TMP-1

17BP.12.R.68

TIP PROJECT:

DOCUMENT NOT CONSIDERED FINAL UNLESS ALL SIGNATURES COMPLETED



WORK ZONE SAFETY & MOBILITY
"from the MOUNTAINS to the COAST"

PLANS PREPARED BY:

KARMEN DAIS

NCDOT CONTACTS:

DON PARKER, P.E.
PROJECT ENGINEER

ROGER GARRETT
PROJECT DESIGN ENGINEER

DIVISION OF HIGHWAYS
STATE OF NORTH CAROLINA
DEPARTMENT OF TRANSPORTATION
WORK ZONE TRAFFIC CONTROL

APPROVED: Don A. Parker
DATE: 11/29/2017

SEAL

NORTH CAROLINA PROFESSIONAL SEAL 043251 ENGINEER DON A. PARKER

11/29/2017
P:\TIPProjects-B\B5392\Traffic\TrafficControl\TCP\17BP_12_R_68_TC_TMP_1.dgn
User:kedais

PROJ. REFERENCE NO.	SHEET NO.
17BP.12.R.68	TMP-1A

ROADWAY STANDARD DRAWINGS

THE FOLLOWING ROADWAY STANDARDS AS SHOWN IN "ROADWAY STANDARD DRAWINGS" - N.C. DEPARTMENT OF TRANSPORTATION - RALEIGH, N.C., DATED JANUARY 2018 ARE APPLICABLE TO THIS PROJECT AND BY REFERENCE HEREBY ARE CONSIDERED A PART OF THESE PLANS:

STD. NO.	TITLE
1101.01	WORK ZONE ADVANCE WARNING SIGNS
1101.02	TEMPORARY LANE CLOSURES
1101.03	TEMPORARY ROAD CLOSURES
1101.04	TEMPORARY SHOULDER CLOSURES
1101.05	WORK ZONE VEHICLE ACCESSES
1101.06	WARNING SIGNS FOR BLASTING ZONES
1101.11	TRAFFIC CONTROL DESIGN TABLES
1110.01	STATIONARY WORK ZONE SIGNS
1110.02	PORTABLE WORK ZONE SIGNS
1115.01	FLASHING ARROW BOARDS
1130.01	DRUM
1135.01	CONES
1145.01	BARRICADES
1150.01	FLAGGING DEVICES
1160.01	TEMPORARY CRASH CUSHION
1165.01	WORK VEHICLE LIGHTING SYSTEMS AND TMA DELINEATION
1170.01	POSITIVE PROTECTION
1180.01	SKINNY-DRUM
1205.01	PAVEMENT MARKINGS - LINE TYPES AND OFFSETS
1205.02	PAVEMENT MARKINGS - TWO-LANE AND MULTI-LANE ROADWAYS
1205.03	PAVEMENT MARKINGS - EXITS AND ENTRANCE RAMPS
1205.04	PAVEMENT MARKINGS - INTERSECTIONS
1205.05	PAVEMENT MARKINGS - TURN LANES
1205.06	PAVEMENT MARKINGS - LANE DROPS
1205.07	PAVEMENT MARKINGS - PEDESTRIAN CROSSWALKS
1205.08	PAVEMENT MARKINGS - SYMBOLS AND WORD MESSAGES
1205.09	PAVEMENT MARKINGS - PAINTED ISLANDS
1205.10	PAVEMENT MARKINGS - SCHOOL AREAS
1205.11	PAVEMENT MARKINGS - RAILROAD CROSSINGS
1205.12	PAVEMENT MARKINGS - BRIDGES
1205.13	PAVEMENT MARKINGS - LANE REDUCTIONS
1250.01	RAISED PAVEMENT MARKERS - INSTALLATION SPACING
1251.01	RAISED PAVEMENT MARKERS - PERMANENT AND TEMPORARY
1261.01	GUARDRAIL AND BARRIER DELINEATORS - INSTALLATION SPACING
1261.02	GUARDRAIL AND BARRIER DELINEATORS - TYPES AND MOUNTING
1262.01	GUARDRAIL END DELINEATION
1264.01	OBJECT MARKERS - TYPES
1264.02	OBJECT MARKERS - INSTALLATION

LEGEND

GENERAL

- DIRECTION OF TRAFFIC FLOW
- DIRECTION OF PEDESTRIAN TRAFFIC FLOW
- EXIST. PVMT.
- NORTH ARROW
- PROPOSED PVMT.
- TEMP. SHORING (LOCATION PURPOSES ONLY)
- WORK AREA
- REMOVAL

SIGNALS

- EXISTING
- PROPOSED
- TEMPORARY

PAVEMENT MARKINGS

- EXISTING LINES
- TEMPORARY LINES

TRAFFIC CONTROL DEVICES

- BARRICADE (TYPE III)
- CONE
- DRUM
- SKINNY DRUM
- TUBULAR MARKER
- TEMPORARY CRASH CUSHION
- FLASHING ARROW BOARD
- FLAGGER
- LAW ENFORCEMENT
- TRUCK MOUNTED ATTENUATOR (TMA)
- CHANGEABLE MESSAGE SIGN

TEMPORARY SIGNING

- PORTABLE SIGN
- STATIONARY SIGN
- STATIONARY OR PORTABLE SIGN

PAVEMENT MARKERS

- CRYSTAL/CRYSTAL
- CRYSTAL/RED
- YELLOW/YELLOW

PAVEMENT MARKING SYMBOLS

- PAVEMENT MARKING SYMBOLS

APPROVED: DocuSigned by: Don A. Parker 4DD482862618410...

DATE: 11/29/2017

NORTH CAROLINA PROFESSIONAL SEAL 043251 ENGINEER DON A. PARKER

DOCUMENT NOT CONSIDERED FINAL UNLESS ALL SIGNATURES COMPLETED

DIVISION OF HIGHWAYS · STATE OF NORTH CAROLINA · DEPARTMENT OF TRANSPORTATION · WORK ZONE TRAFFIC CONTROL

ROADWAY STANDARD DRAWINGS & LEGEND

11/8/2017
P:\TIPProjects-B\B5392\Traffic\TrafficControl\TCP\B-5392_TC_TMP_1A.dgn
User:kedais

PROJ. REFERENCE NO.	SHEET NO.
17BP.12.R.68	TMP-1B

MANAGEMENT STRATEGIES

TRAFFIC WILL BE DETOURED OFF-SITE DURING THE CONSTRUCTION PERIOD.

THE OFF-SITE DETOUR WILL INCLUDE CASAR-LAWNDALE ROAD (SR 1004), BELWOOD-LAWNDALE ROAD (SR 1643), AND WARLICK ROAD (SR 1637)

GENERAL NOTES

CHANGES MAY BE REQUIRED WHEN PHYSICAL DIMENSIONS IN THE DETAIL DRAWINGS, STANDARD DETAILS, AND ROADWAY DETAILS ARE NOT ATTAINABLE TO MEET FIELD CONDITIONS OR RESULT IN DUPLICATE OR UNDESIRED OVERLAPPING OF DEVICES. MODIFICATION MAY INCLUDE: MOVING, SUPPLEMENTING, COVERING, OR REMOVAL OF DEVICES AS DIRECTED BY THE ENGINEER.

THE FOLLOWING GENERAL NOTES APPLY AT ALL TIMES FOR THE DURATION OF THE CONSTRUCTION PROJECT EXCEPT WHEN OTHERWISE NOTED IN THE PLAN OR DIRECTED BY THE ENGINEER.

TRAFFIC PATTERN ALTERATIONS

A) NOTIFY THE ENGINEER THIRTY (30) CALENDAR DAYS PRIOR TO ANY TRAFFIC PATTERN ALTERATION.

SIGNING

B) PROVIDE SIGNING AND DEVICES REQUIRED TO CLOSE THE ROAD ACCORDING TO THE ROADWAY STANDARD DRAWINGS AND TRAFFIC CONTROL PLANS.

PROVIDE SIGNING REQUIRED FOR THE OFF-SITE DETOUR ROUTE AS SHOWN IN THE TRAFFIC CONTROL PLANS.

C) COVER OR REMOVE ALL SIGNS AND DEVICES REQUIRED TO CLOSE THE ROAD WHEN ROAD CLOSURE IS NOT IN OPERATION.

COVER OR REMOVE ALL SIGNS REQUIRED FOR THE OFF-SITE DETOUR WHEN THE DETOUR IS NOT IN OPERATION.

D) ENSURE ALL NECESSARY SIGNING IS IN PLACE PRIOR TO ALTERING ANY TRAFFIC PATTERN.

PAVEMENT MARKINGS AND MARKERS

E) INSTALL PAVEMENT MARKINGS AND PAVEMENT MARKERS ON THE FINAL SURFACE AS SHOWN IN THE FINAL PAVEMENT MARKING PLAN.

F) TIE PROPOSED PAVEMENT MARKING LINES TO EXISTING PAVEMENT MARKING LINES.

PHASING

STEP 1. USING ROADWAY STANDARD DRAWINGS 1101.03, SHEET 1, AND TMP-3 INSTALL OFFSITE DETOUR SIGNS AND TRAFFIC CONTROL DEVICES AND CLOSE BRACKETT ROAD (SR 1641) TO THROUGH TRAFFIC.

STEP 2. COMPLETE THE FOLLOWING WITHIN THE ROAD CLOSURE:

A) REMOVE THE EXISTING BRIDGE.

B) CONSTRUCT THE PROPOSED BRIDGE AND ROADWAY APPROACHES INCLUDING THE FINAL LAYER OF SURFACE COURSE AND FINAL PAVEMENT MARKINGS.

STEP 3. REMOVE ALL TRAFFIC CONTROL DEVICES AND DETOUR SIGNS AND OPEN BRACKETT ROAD (SR 1641) TO THROUGH TRAFFIC.

APPROVED: DocuSigned by: Don A. Parker 4D04828626164 1D

DATE: 11/29/2017

NORTH CAROLINA PROFESSIONAL SEAL 043251 ENGINEER DON A. PARKER

DOCUMENT NOT CONSIDERED FINAL UNLESS ALL SIGNATURES COMPLETED

DIVISION OF HIGHWAYS STATE OF NORTH CAROLINA DEPARTMENT OF TRANSPORTATION WORK ZONE TRAFFIC CONTROL

TRANSPORTATION OPERATIONS PLAN AND PHASING

11/29/2017
P:\TIPProjects-B\B5392\Traffic\TrafficControl\TCP\17BP_12_R_68_TC_TMP_1B.dgn
User:kedgis

PROJ. REFERENCE NO.	SHEET NO.
17BP.12.R.68	TMP-02

SIGN NUMBER: SP17313
TYPE: STATIONARY
QUANTITY: SEE PLANS

SIGN WIDTH: 3′-0″
HEIGHT: 2′-0″
TOTAL AREA: 6.0 Sq.Ft.

BORDER TYPE: INSET
RECESS: 0.38″
WIDTH: 0.63″
RADII: 1.5″

NO. Z BARS:
LENGTH:

BACKG COLOR: Fluorescent Orange
COPY COLOR: Black

SYMBOL	X	Y	WID	HT

MAT′L: 0.080″ (2.0 mm) ALUMINUM

USE NOTES: 1,2

1. Legend and border shall be direct applied black non-reflective sheeting.
2. Background shall be NC GRADE B fluorescent orange retroreflective sheeting.

DESIGN BY: D. Beard
PROJECT ID: 17BP.12.R.68
CHECKED BY: K. Jordan
LOCATION: Cleveland Co.
Sep 11, 2017
DIV: 12

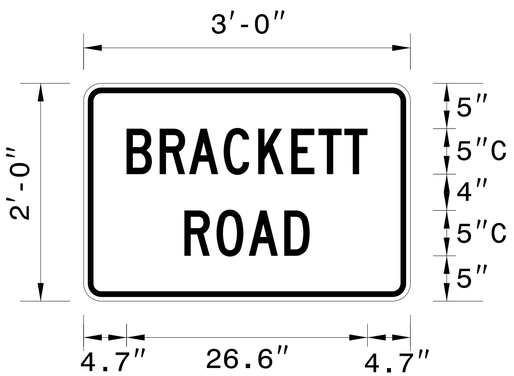

BORDER
R=1.5″
TH=0.63″
IN=0.38″

Spacing Factor is 1 unless specified otherwise

LETTER POSITIONS

Letter spacings are to start of next letter

																										Series/Size Text Length
		B	R	A	C	K	E	T	T																	C 2000
	4.7	3.7	3.3	3.8	3.8	3.7	3	2.8	2.6	4.7																26.6
		R	O	A	D																					C 2000
	11.1	3.5	3.6	3.9	2.8	11.1																				13.8

FILENAME: Guidsign_English

NORTH CAROLINA D.O.T. SIGN DETAIL

APPROVED: DocuSigned by: Renee Roach B3C6C6F7CF4640D...
DATE: 11/30/2017

NORTH CAROLINA PROFESSIONAL SEAL 024921 ENGINEER RENEE B ROACH

DOCUMENT NOT CONSIDERED FINAL UNLESS ALL SIGNATURES COMPLETED

DIVISION OF HIGHWAYS · STATE OF NORTH CAROLINA · DEPARTMENT OF TRANSPORTATION · WORK ZONE TRAFFIC CONTROL

SPECIAL SIGN DESIGN

11/8/2017
P:\TIPProjects-BY\B5392\Traffic\TrafficControl\TCP\B-5392_TC_TMP_2.dgn
User:keddis

PROJ. REFERENCE NO.	SHEET NO.
17BP.12.R.68	TMP-3

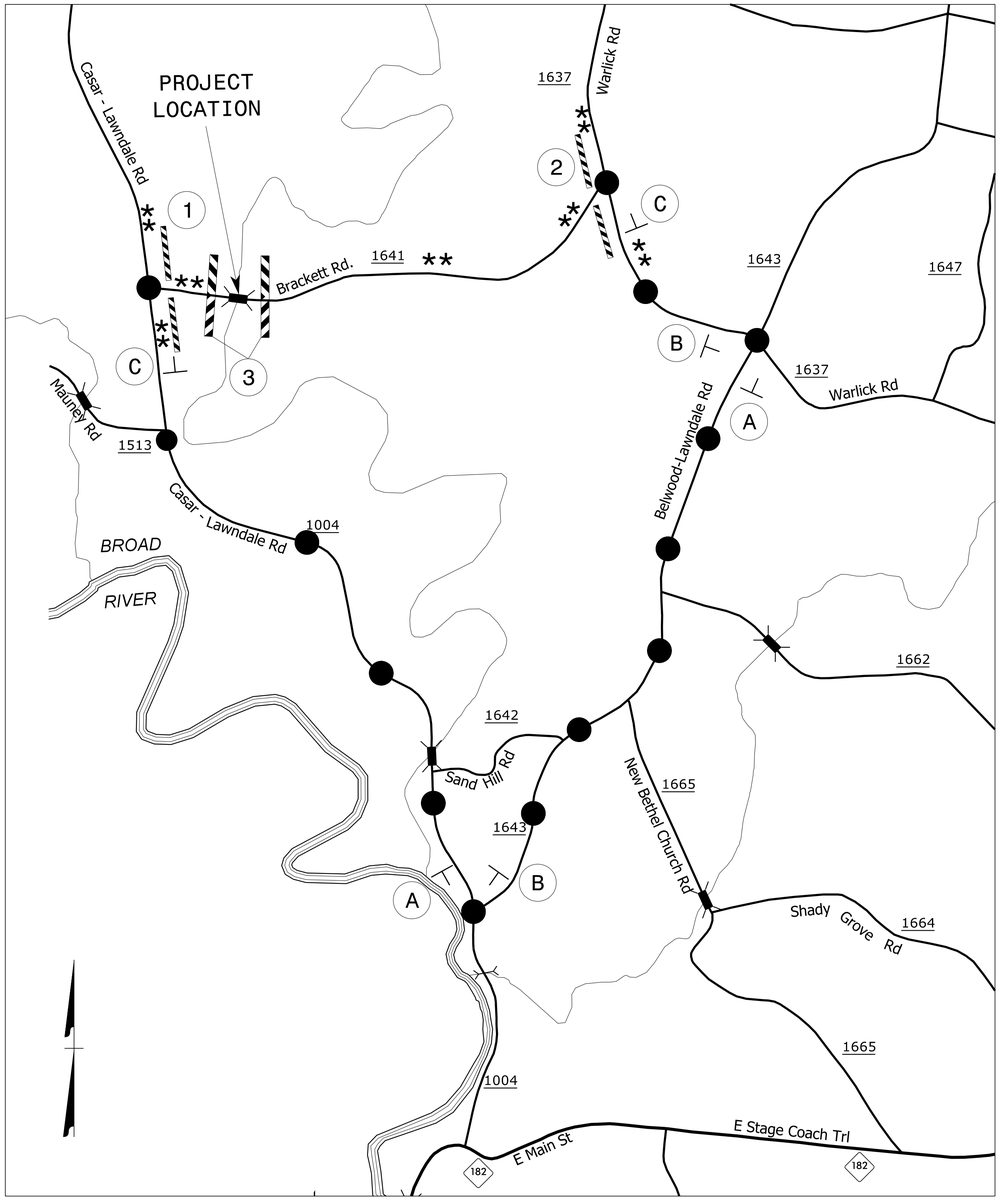

OFFSITE DETOUR ROUTE

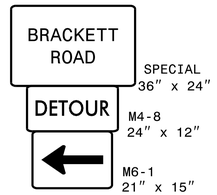

A

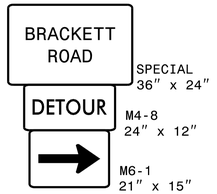

B

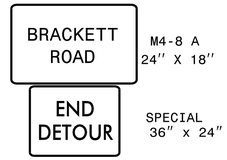

C

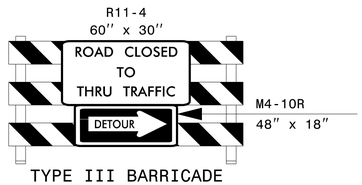

TYPE III BARRICADE

1

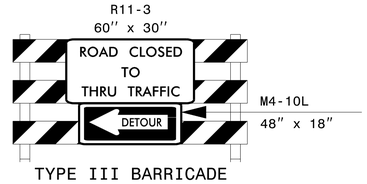

TYPE III BARRICADE

2

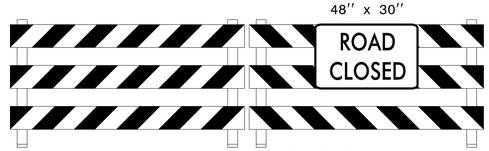

TYPE III BARRICADE(S)

3

** REFER TO RSD 1101.03, SHEET 1, FOR WORK ZONE SIGNS, AND LOCATIONS, REQUIRED ALONG BRACKETT RD, WARLICK RD, AND CASAR-LAWNDALE RD **

APPROVED: DocuSigned by: Don A. Parker 4DD482862616410...

DATE: 11/29/2017

NORTH CAROLINA PROFESSIONAL SEAL 043251 ENGINEER DON A. PARKER

DOCUMENT NOT CONSIDERED FINAL UNLESS ALL SIGNATURES COMPLETED

DIVISION OF HIGHWAYS · STATE OF NORTH CAROLINA · DEPARTMENT OF TRANSPORTATION · WORK ZONE TRAFFIC CONTROL

OFFSITE DETOUR ROUTE AND ROAD CLOSURE

11/29/2017
P:\TIPProjects-B\B5392\Traffic\TrafficControl\TCP\17BP_12_R_68_TC_TMP_3.dgn
User:kdodls

TIP PROJECT: 17BP.12.R.68

STATE	STATE PROJECT REFERENCE NO.	SHEET NO.	TOTAL SHEETS
N.C.	17BP.12.R.68	EC-1	

STATE PROJ. NO.	F. A. PROJ. NO.	DESCRIPTION

STATE OF NORTH CAROLINA
DIVISION OF HIGHWAYS

PLAN FOR PROPOSED
HIGHWAY EROSION CONTROL

CLEVELAND COUNTY

BRIDGE NO. 201 ON SR 1641
OVER KNOB CREEK

TYPE OF WORK: GRADING, DRAINAGE, PAVING, EROSION CONTROL, STRUCTURE AND TRAFFIC CONTROL

NAD 83/
NA 2011

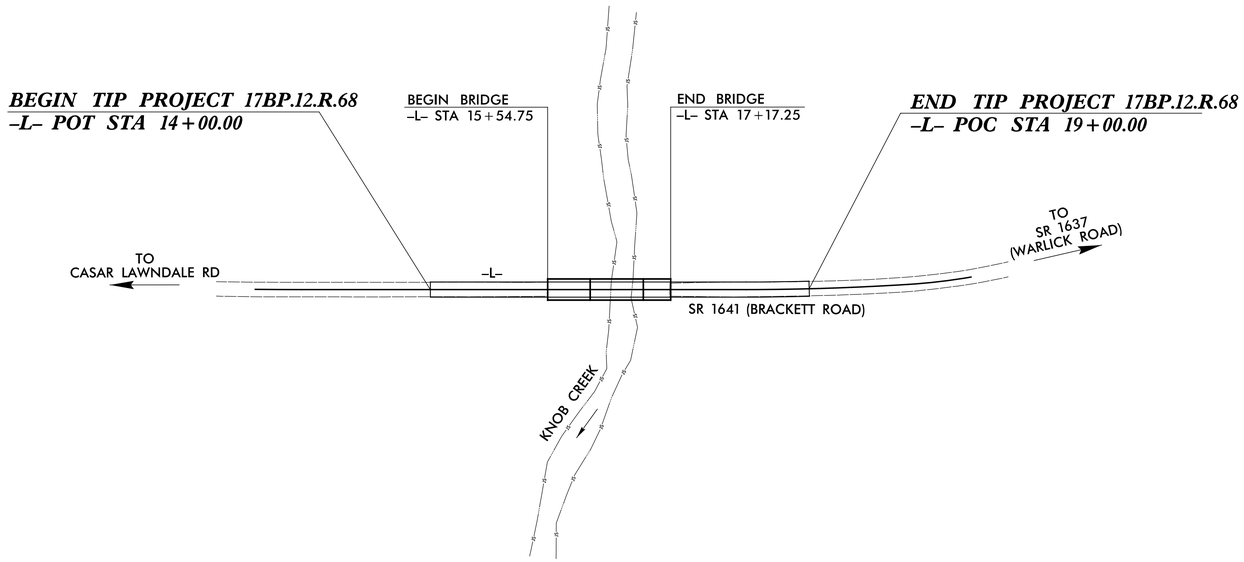

ALEXANDER D. SNIDER, PE
ROADSIDE ENVIRONMENTAL ENGINEER

3064
LEVEL III CERTIFICATION NUMBER

TRENTON J. CORMIER, PE
ROADSIDE ENVIRONMENTAL PROJECT ENGINEER

3377
LEVEL III CERTIFICATION NUMBER

EROSION AND SEDIMENT CONTROL MEASURES

Std. #	Description	Symbol
1630.03	Temporary Silt Ditch	TSD
1630.05	Temporary Diversion	TD
1605.01	Temporary Silt Fence	
1606.01	Special Sediment Control Fence	
1622.01	Temporary Berms and Slope Drains	
1630.02	Silt Basin Type B	
1633.01	Temporary Rock Silt Check Type-A	
	Temporary Rock Silt Check Type-A with Matting and Polyacrylamide (PAM)	
1633.02	Temporary Rock Silt Check Type-B	
	Wattle / Coir Fiber Wattle	SW CFW
	Wattle / Coir Fiber Wattle with Polyacrylamide (PAM)	
1634.01	Temporary Rock Sediment Dam Type-A	
1634.02	Temporary Rock Sediment Dam Type-B	
1635.01	Rock Pipe Inlet Sediment Trap Type-A	
1635.02	Rock Pipe Inlet Sediment Trap Type-B	
1630.04	Stilling Basin	
1630.06	Special Stilling Basin	
	Rock Inlet Sediment Trap:	
1632.01	Type A	A
1632.02	Type B	B
1632.03	Type C	C
	Skimmer Basin	SK
	Tiered Skimmer Basin	
	Infiltration Basin	

THIS PROJECT CONTAINS EROSION CONTROL PLANS FOR CLEARING AND GRUBBING PHASE OF CONSTRUCTION.

GRAPHIC SCALE

25 0 50
PLANS

25 0 50
PROFILE (HORIZONTAL)

5 0 10
PROFILE (VERTICAL)

THESE EROSION AND SEDIMENT CONTROL PLANS COMPLY WITH THE REGULATIONS SET FORTH BY THE NCG-010000 GENERAL CONSTRUCTION PERMIT EFFECTIVE AUGUST 1, 2016 AND ISSUED BY THE NORTH CAROLINA DEPARTMENT OF ENVIRONMENT AND NATURAL RESOURCES DIVISION OF WATER RESOURCES.

Prepared In the Office of:

HDR Engineering, Inc. of the Carolinas
555 Fayetteville St, Suite 900 Raleigh, N.C. 27601
N.C.B.E.L.S. License Number: F-0116

Designed by:

ALEXANDER D. SNIDER, PE ***3064***
NAME *LEVEL III CERTIFICATION NO.*

Reviewed In the Office of:

ROADSIDE ENVIRONMENTAL UNIT
1 South Wilmington St.
Raleigh, NC 27611

2018 STANDARD SPECIFICATIONS

Reviewed by:

NOELLE RING, CPESC

Roadway Standard Drawings

The following roadway english standards as appear in "Roadway Standard Drawings"– Roadway Design Unit – N. C. Department of Transportation – Raleigh, N. C., dated January 2018 and the latest revison thereto are applicable to this project and by reference hereby are considered a part of these plans.

1604.01	Railroad Erosion Control Detail	1632.01	Rock Inlet Sediment Trap Type A
1605.01	Temporary Silt Fence	1632.02	Rock Inlet Sediment Trap Type B
1606.01	Special Sediment Control Fence	1632.03	Rock Inlet Sediment Trap Type C
1607.01	Gravel Construction Entrance	1633.01	Temporary Rock Silt Check Type A
1622.01	Temporary Berms and Slope Drains	1633.02	Temporary Rock Silt Check Type B
1630.01	Riser Basin	1634.01	Temporary Rock Sediment Dam Type A
1630.02	Silt Basin Type B	1634.02	Temporary Rock Sediment Dam Type B
1630.03	Temporary Silt Ditch	1635.01	Rock Pipe Inlet Sediment Trap Type A
1630.04	Stilling Basin	1635.02	Rock Pipe Inlet Sediment Trap Type B
1630.05	Temporary Diversion	1640.01	Coir Fiber Baffle
1630.06	Special Stilling Basin	1645.01	Temporary Stream Crossing
1631.01	Matting Installation		

SUBMITTED DESIGNS SYSTEMS

PROJECT REFERENCE NO.	SHEET NO.
17BP.12.R.68	EC-2

TEMPORARY ROCK SILT CHECK TYPE 'A' WITH EXCELSIOR MATTING AND POLYACRYLAMIDE (PAM)

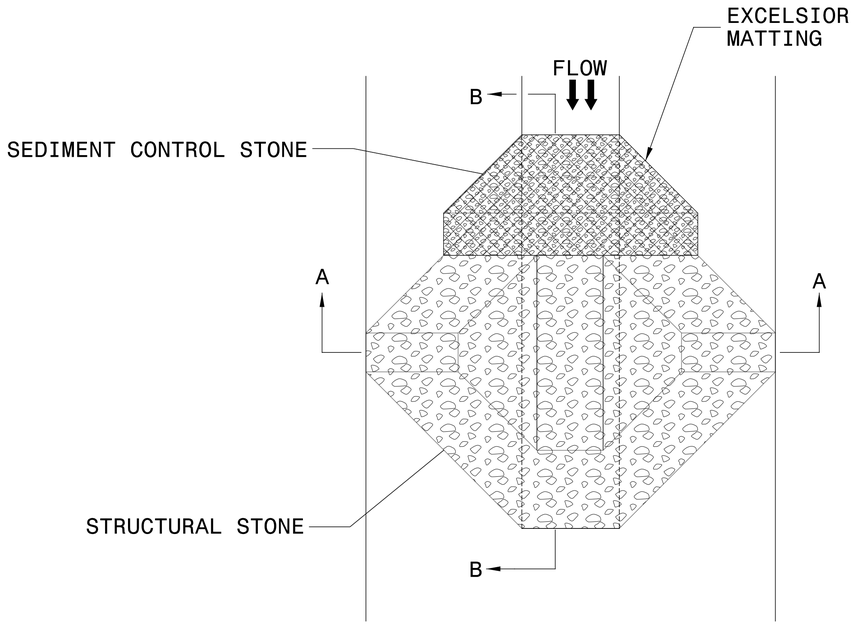

PLAN

NOTES:

INSTALL TEMPORARY ROCK SILT CHECK TYPE A IN ACCORDANCE WITH ROADWAY STANDARD DRAWING NO. 1633.01.

USE EXCELSIOR FOR MATTING MATERIAL AND ANCHOR MATTING SECTION AT TOP AND BOTTOM WITH CLASS B STONE.

PRIOR TO POLYACRYLAMIDE (PAM) APPLICATION, OBTAIN A SOIL SAMPLE FROM PROJECT LOCATION, AND FROM OFFSITE MATERIAL, AND ANALYZE FOR APPROPRIATE PAM FLOCCULANT TO BE APPLIED TO EACH ROCK SILT CHECK.

INITIALLY APPLY 4 OUNCES OF POLYACRYLAMIDE (PAM) TO TOP OF MATTING SECTION AND AFTER EVERY RAINFALL EVENT THAT EQUALS OR EXCEEDS 0.50 INCHES.

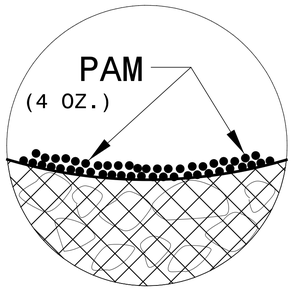

INSET A

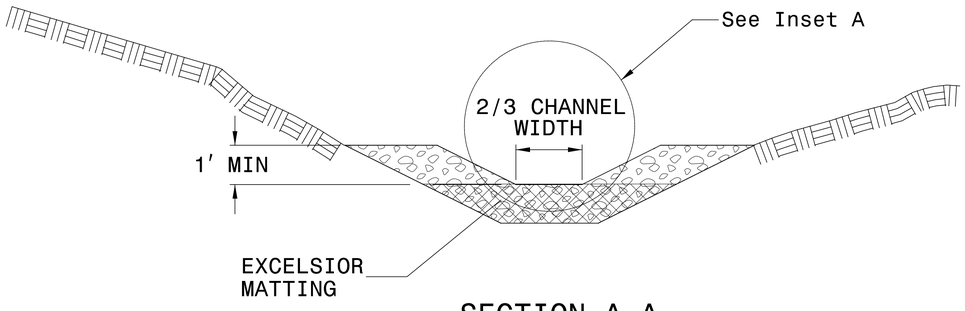

SECTION A-A

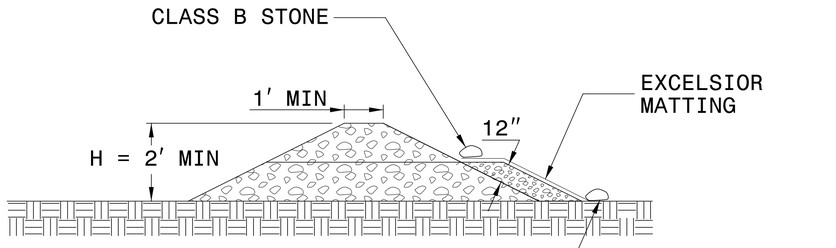

SECTION B-B

NOT TO SCALE

PROJECT REFERENCE NO.	SHEET NO.
17BP.12.R.68	EC-3

DIVISION OF HIGHWAYS
STATE OF NORTH CAROLINA

SOIL STABILIZATION TIMEFRAMES

SITE DESCRIPTION	STABILIZATION TIME	TIMEFRAME EXCEPTIONS
PERIMETER DIKES, SWALES, DITCHES AND SLOPES	7 DAYS	NONE
HIGH QUALITY WATER (HQW) ZONES	7 DAYS	NONE
SLOPES STEEPER THAN 3:1	7 DAYS	IF SLOPES ARE 10' OR LESS IN LENGTH AND ARE NOT STEEPER THAN 2:1, 14 DAYS ARE ALLOWED.
SLOPES 3:1 OR FLATTER	14 DAYS	7 DAYS FOR SLOPES GREATER THAN 50' IN LENGTH.
ALL OTHER AREAS WITH SLOPES FLATTER THAN 4:1	14 DAYS	NONE, EXCEPT FOR PERIMETERS AND HQW ZONES.

PROJECT REFERENCE NO.	SHEET NO.
17BP.12.R.68	EC-4/CONST.4
R/W SHEET NO.	
ROADSIDE ENVIRONMENTAL PROJECT ENGINEER	

LEVEL III CERTIFIED BY:
ALEXANDER D SNIDER, PE
CERTIFICATION NUMBER: 3064
ISSUED: MAY 15, 2017

Prepared in the Office of:
MOTT MACDONALD
PO Box 700
Fuquay-Varina, NC 27526
www.mottmac.com/americas

HDR Engineering, Inc. of the Carolinas
555 Fayetteville St. Suite 900 Raleigh, N.C. 27601
N.C.B.E.L.S. License Number: F-0116

CLEARING AND GRUBBING
EROSION CONTROL FOR
CONSTRUCTION SHEET 4

5/14/99

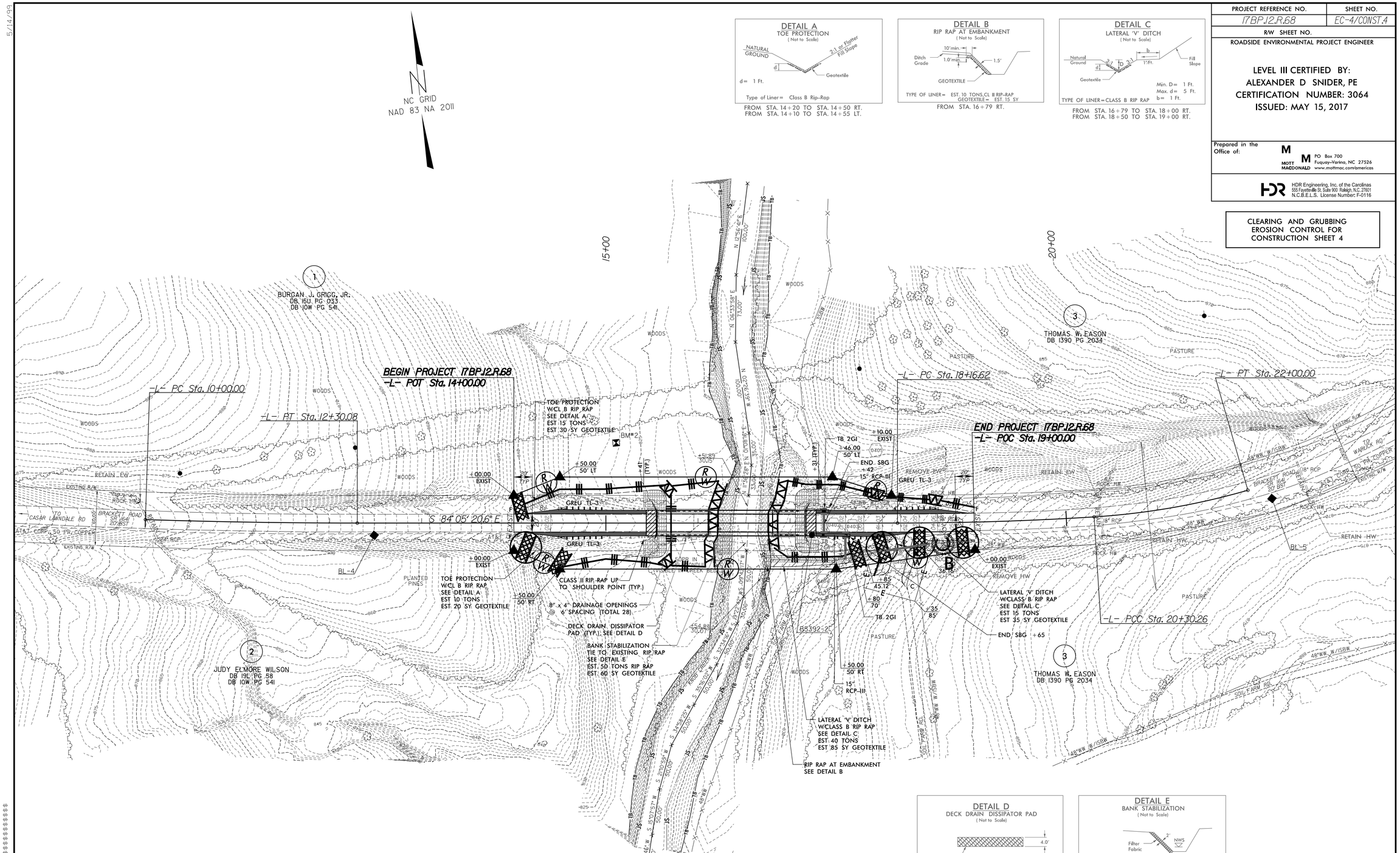

DETAIL A
TOE PROTECTION
(Not to Scale)

Type of Liner= Class B Rip-Rap

FROM STA. 14+20 TO STA. 14+50 RT.
FROM STA. 14+10 TO STA. 14+55 LT.

DETAIL B
RIP RAP AT EMBANKMENT
(Not to Scale)

TYPE OF LINER= EST. 10 TONS,CL II RIP-RAP
GEOTEXTILE= EST. 15 SY

FROM STA. 16+79 RT.

DETAIL C
LATERAL 'V' DITCH
(Not to Scale)

TYPE OF LINER=CLASS B RIP RAP

FROM STA. 16+79 TO STA. 18+00 RT.
FROM STA. 18+50 TO STA. 19+00 RT.

DETAIL D
DECK DRAIN DISSIPATOR PAD
(Not to Scale)

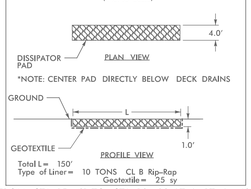

*NOTE: CENTER PAD DIRECTLY BELOW DECK DRAINS

Total L= 150'
Type of Liner= 10 TONS CL B Rip-Rap
Geotextile= 25 sy

FROM STA. 15+61 TO STA. 16+09 LT. & RT., L=48'
FROM STA. 16+84 TO STA. 17+08 LT. & RT., L=27'

DETAIL E
BANK STABILIZATION
(Not to Scale)

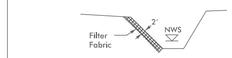

Type of Liner= CLASS II RIP RAP

-L- STA. 16+30 RT.

NOTE:
ALL EROSION CONTROL DEVICES SHOWN ARE LOCATED WITHIN EXISTING/PROPOSED R/W OR EASEMENT.

NOTE:
PLACE TEMPORARY ROCK SILT CHECKS TYPE - A AT DRAINAGE OUTLETS.

NOTE:
UTILIZE SPECIAL STILLING BASIN(S) WHERE APPLICABLE

GRAPHIC SCALE
50 0 50 100

5/14/99

PROJECT REFERENCE NO.	SHEET NO.
17BP.12.R.68	EC-5/CONST.4
R/W SHEET NO.	

ROADSIDE ENVIRONMENTAL PROJECT ENGINEER

LEVEL III CERTIFIED BY:
ALEXANDER D SNIDER, PE
CERTIFICATION NUMBER: 3064
ISSUED: MAY 15, 2017

Prepared in the Office of:
MOTT MACDONALD
PO Box 700
Fuquay-Varina, NC 27526
www.mottmac.com/americas

HDR Engineering, Inc. of the Carolinas
555 Fayetteville St. Suite 900 Raleigh, N.C. 27601
N.C.B.E.L.S. License Number: F-0116

FINAL EROSION CONTROL FOR CONSTRUCTION SHEET 4

NC GRID
NAD 83 NA 2011

DETAIL A
TOE PROTECTION
(Not to Scale)

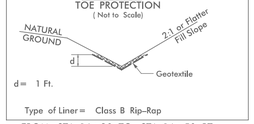

d= 1 Ft.

Type of Liner= Class B Rip-Rap

FROM STA. 14+20 TO STA. 14+50 RT.
FROM STA. 14+10 TO STA. 14+55 LT.

DETAIL B
RIP RAP AT EMBANKMENT
(Not to Scale)

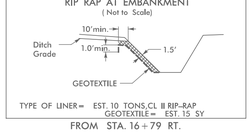

TYPE OF LINER= EST. 10 TONS, CL II RIP-RAP
GEOTEXTILE= EST. 15 SY

FROM STA. 16+79 RT.

DETAIL C
LATERAL 'V' DITCH
(Not to Scale)

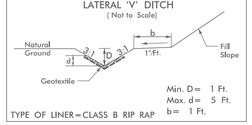

Min. D= 1 Ft.
Max. d= 5 Ft.
b= 1 Ft.

TYPE OF LINER= CLASS B RIP RAP

FROM STA. 16+79 TO STA. 18+00 RT.
FROM STA. 18+50 TO STA. 19+00 RT.

1
BURGAN J. GRIGG, JR.
DB 15U PG 033
DB 10W PG 541

2
JUDY ELMORE WILSON
DB 19L PG 58
DB 10W PG 541

3
THOMAS W. EASON
DB 1390 PG 2034

3
THOMAS W. EASON
DB 1390 PG 2034

15+00

20+00

WOODS

PASTURE

PLANTED PINES

BEGIN PROJECT 17BP.12.R.68
-L- POT Sta. 14+00.00

-L- PC Sta. 10+00.00

-L- PT Sta. 12+30.08

-L- PC Sta. 18+16.62

END PROJECT 17BP.12.R.68
-L- POC Sta. 19+00.00

-L- PT Sta. 22+00.00

-L- PCC Sta. 20+30.26

S 84° 05' 20.6" E

N 12°56'41" E 100.00'

N 06°53'58" E 73.00'

N 66°39'40" E 100.00'

S 23°06'19" W 35.00'

N 11°54'28" W 30.00'

N 09°21'11" W 50.00'

S 34°38'29" W 50.00'

S 35°45'04" W 50.00'

S 21°00'05" W 50.00'

S 15°07'51" W 50.00'

S 41°47'46" W 50.00'

S 39°24'16" W 50.00'

S 09°21'11" W 50.00'

S 35°W

TOE PROTECTION
W/CL B RIP RAP
SEE DETAIL A
EST 15 TONS
EST 30 SY GEOTEXTILE

BM#2

+50.00 50' LT

+41 (TYP.)

20' TYP

+00.00 EXIST

GREU TL-3

+00.00 EXIST

+50.00 50' RT

TOE PROTECTION
W/CL B RIP RAP
SEE DETAIL A
EST 10 TONS
EST 20 SY GEOTEXTILE

CLASS II RIP RAP UP TO SHOULDER POINT (TYP.)

8" x 4" DRAINAGE OPENINGS @ 6' SPACING (TOTAL 28)

DECK DRAIN DISSIPATOR PAD (TYP.), SEE DETAIL D

BANK STABILIZATION TIE TO EXISTING RIP RAP SEE DETAIL E
EST. 50 TONS RIP RAP
EST. 60 SY GEOTEXTILE

+54.89 30.07

+51.89 30.07

KNOB CREEK

TB 2GI +46.00 50' LT

END SBG +42

15" RCP-III

+10.00 EXIST

(040)

REMOVE EW

GREU TL-3

RETAIN EW

4.5' ROCK HW

3' ROCK HW

+00.00 EXIST

REMOVE HW

+50 36.16'

+85 45.12'

+80 70'

+35 85'

TB 2GI

LATERAL 'V' DITCH
W/CLASS B RIP RAP
SEE DETAIL C
EST 15 TONS
EST 35 SY GEOTEXTILE

END SBG +65

B5392-2

+50.00 50' RT

15" RCP-III

LATERAL 'V' DITCH
W/CLASS B RIP RAP
SEE DETAIL C
EST 40 TONS
EST 85 SY GEOTEXTILE

RIP RAP AT EMBANKMENT
SEE DETAIL B

EXISTING R/W

5' X 4' ROCK HW

TO CASAR LAWNDALE RD

BRACKETT ROAD SR 1641 20' BST

AT&T CORP. 50 PR. COPPER

24" RCP

BL-4

BL-5

18" RCP

48"WW W/ISBW

RETAIN HW

50' BST FARM RD.

TO WARLICK RD

AT&T CORP. 150 PR. COPPER

DETAIL D
DECK DRAIN DISSIPATOR PAD
(Not to Scale)

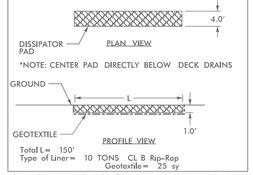

Total L= 150'
Type of Liner= 10 TONS CL B Rip-Rap
Geotextile= 25 sy

FROM STA. 15+61 TO STA. 16+09 LT. & RT., L=48'
FROM STA. 16+84 TO STA. 17+08 LT. & RT., L=27'

DETAIL E
BANK STABILIZATION
(Not to Scale)

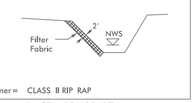

Type of Liner= CLASS II RIP RAP

-L- STA. 16+30 RT.

NOTE:
ALL EROSION CONTROL DEVICES SHOWN ARE LOCATED WITHIN EXISTING/PROPOSED R/W OR EASEMENT.

NOTE:
UTILIZE SPECIAL STILLING BASIN(S) WHERE APPLICABLE

GRAPHIC SCALE
50 0 50 100

SYSTIMES\$\$ \$\$ \$\$ \

TIP PROJECT: 17BP.12.R.68

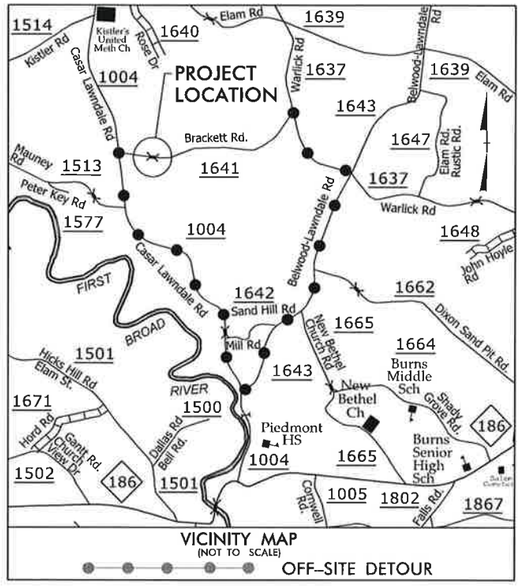

STATE OF NORTH CAROLINA
DIVISION OF HIGHWAYS

UTILITIES BY OTHERS PLANS
CLEVELAND COUNTY

LOCATION: BRIDGE 201 OVER KNOB CREEK ON SR 1641 (BRACKETT ROAD)

TYPE OF WORK: TELEPHONE RELOCATION

T.I.P. NO.	SHEET NO.
17BP.12.R.68	UO–1

NOTE:
ALL UTILITY WORK SHOWN ON THIS SHEET IS DONE BY OTHERS.
NO PAYMENT WILL BE MADE TO THE CONTRACTOR FOR UTILITY WORK SHOWN ON THIS SHEET.



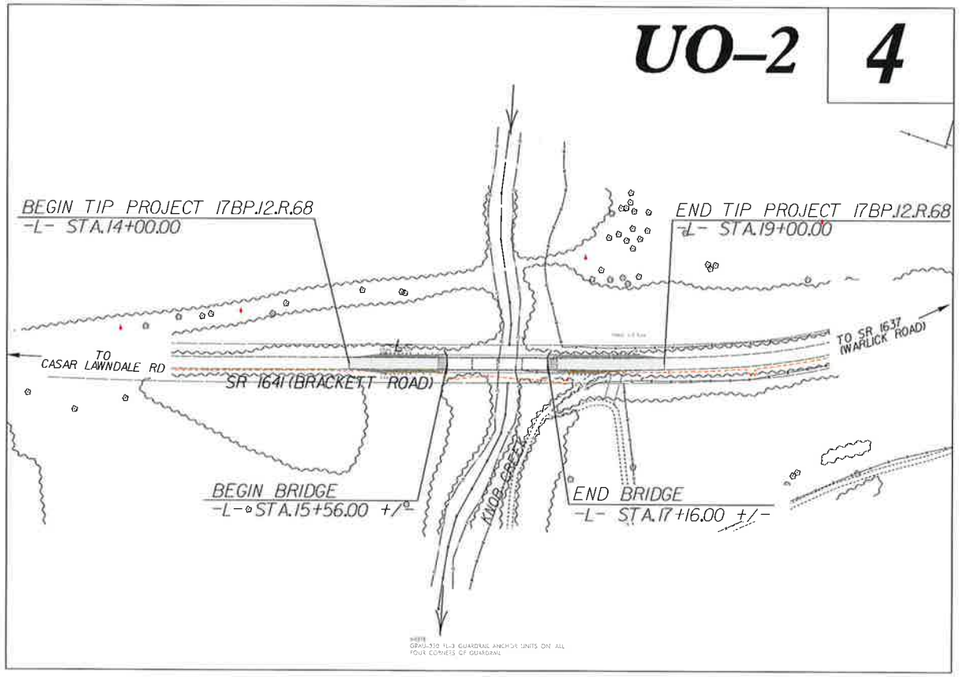



GRAPHIC SCALES

50 25 0 50 100
PLANS

INDEX OF SHEETS

SHEET NO.:	*DESCRIPTION:*
UO–1	*TITLE SHEET*
UO–2	*UBO PLAN SHEET*

UTILITY OWNERS WITH CONFLICTS

(A) AT&T – TELEPHONE

PREPARED IN THE OFFICE OF:

PLANS PREPARED BY:
RK&K
RUMMEL, KLEPPER & KAHL, LLP
900 RIDGEFIELD DRIVE, SUITE 350
RALEIGH, NORTH CAROLINA 27609
NC LICENSE NO. F-0112
1-888-521-4455 OR 919-878-9560

HOWARD WOODALL, PE	*UTILITY PROJECT MANAGER*
NATE HARRIS	*PROJECT UTILITY COORDINATOR*
NATE HARRIS	*PROJECT UTILITY CADD*

DIVISION OF HIGHWAYS
UTILITIES UNIT

1555 MAIL SERVICES CENTER
RALEIGH, NC 27699-1555
PHONE (919) 707-6690
FAX (919) 250-4151

MICHAEL BRIGHT	*UTILITIES REGIONAL ENGINEER*
DONALD HAMPTON	*UTILITIES ENGINEER*
AMY DUPREE	*UTILITIES AREA COORDINATOR*
GREG SEALY	*UTILITIES COORDINATOR*

09/08/99
M:\Projects\3311_Utility_Coordination_(NCDOT)\HOL_B-5392\Design\Utilities\Engineering\UBO\Proj\b5392_ut_tsh_U001_psh.dgn
3/19/2018
nharris

PROJECT REFERENCE NO.	SHEET NO.
17BPJ2.R.68	U0-2

UTILITIES BY OTHERS

NOTE:
ALL UTILITY WORK SHOWN ON THIS SHEET WILL BE DONE BY OTHERS. NO PAYMENT WILL BE MADE TO THE CONTRACTOR FOR UTILITY WORK SHOWN ON THIS SHEET.

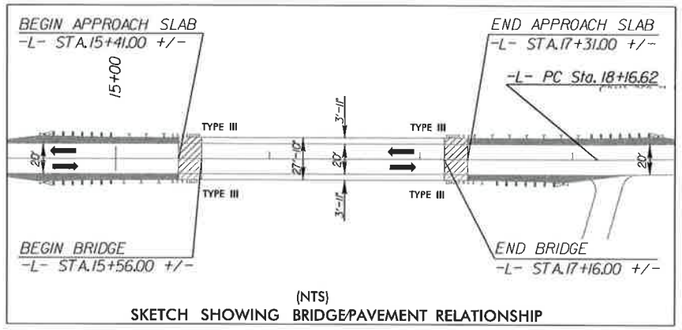

(NTS)
SKETCH SHOWING BRIDGE/PAVEMENT RELATIONSHIP

NAD 83/NA 2011

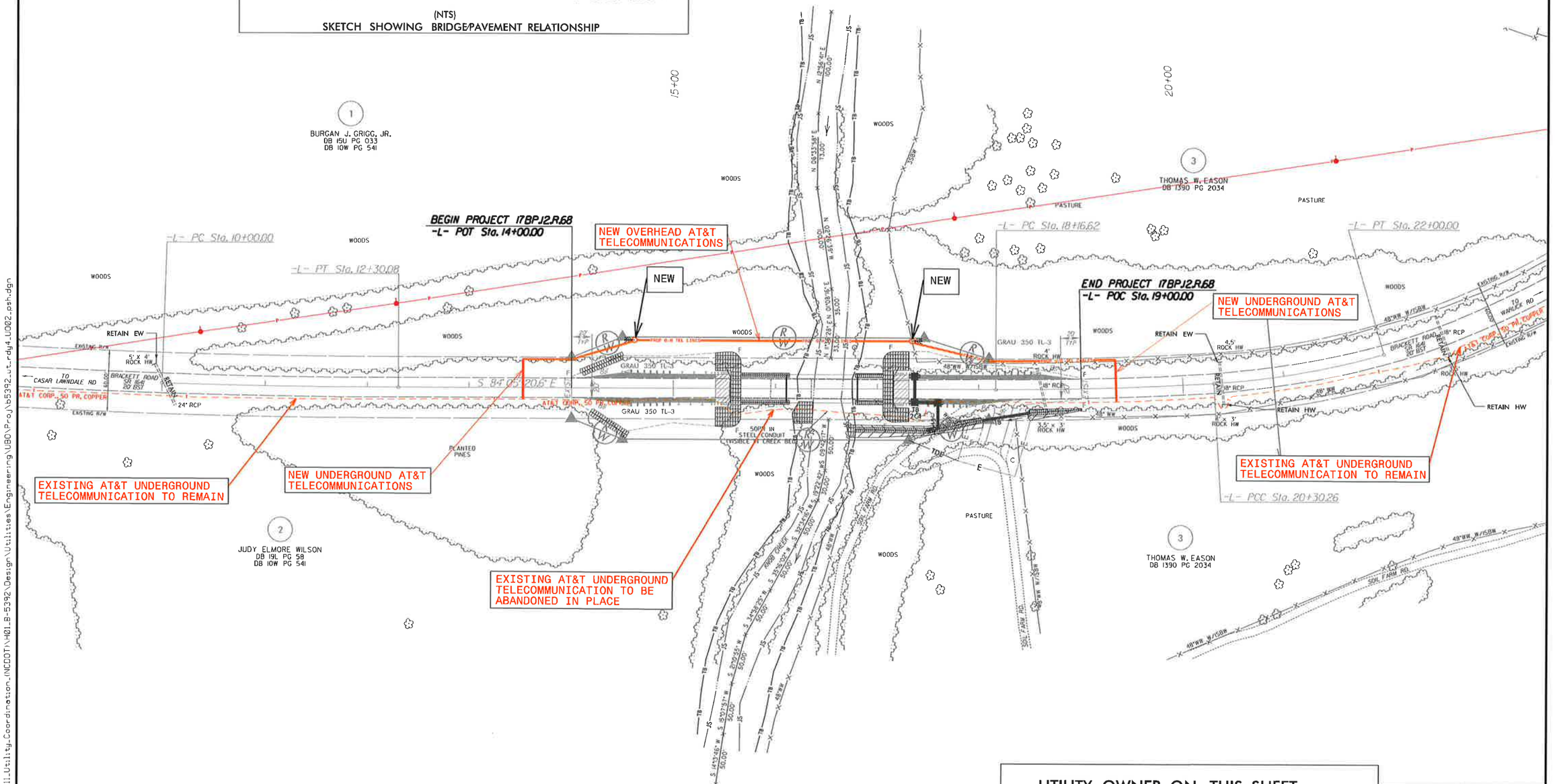
15+00
20+00
1
BURGAN J. GRIGG, JR.
DB 15U PG 033
DB 10W PG 541
2
JUDY ELMORE WILSON
DB 19L PG 58
DB 10W PG 541
3
THOMAS W. EASON
DB 1390 PG 2034
3
THOMAS W. EASON
DB 1390 PG 2034
BEGIN PROJECT 17BPJ2.R.68
-L- POT Sta. 14+00.00
-L- PC Sta. 10+00.00
-L- PT Sta. 12+30.08
-L- PC Sta. 18+16.62
-L- PT Sta. 22+00.00
END PROJECT 17BPJ2.R.68
-L- POC Sta. 19+00.00
-L- PCC Sta. 20+30.26
NEW OVERHEAD AT&T TELECOMMUNICATIONS
NEW
NEW
NEW UNDERGROUND AT&T TELECOMMUNICATIONS
EXISTING AT&T UNDERGROUND TELECOMMUNICATION TO REMAIN
NEW UNDERGROUND AT&T TELECOMMUNICATIONS
EXISTING AT&T UNDERGROUND TELECOMMUNICATION TO BE ABANDONED IN PLACE
EXISTING AT&T UNDERGROUND TELECOMMUNICATION TO REMAIN
WOODS
PASTURE
PLANTED PINES
RETAIN EW
RETAIN HW
GRAU 350 TL-3
TO CASAR LAWNDALE RD
BRACKETT ROAD SR 1646 20 BST
TO WARLICK RD
SOIL FARM RD
AT&T CORP. 50 PR. COPPER
24" RCP
18" RCP
48"RW W/15SW
50FT IN STEEL CONDUIT (VISIBLE AT CREEK BED)
S 84°05'206" E
N 84°39'43" E 60.00'
N 08°35'48" E 13.00'
N 08°35'48" E 60.00'
S 84°39'43" W 35.00'
S 84°39'43" W 35.00'
S 84°39'43" W 35

PROJ. REFERENCE NO.	SHEET NO.
17BP.12.R.68	X-1

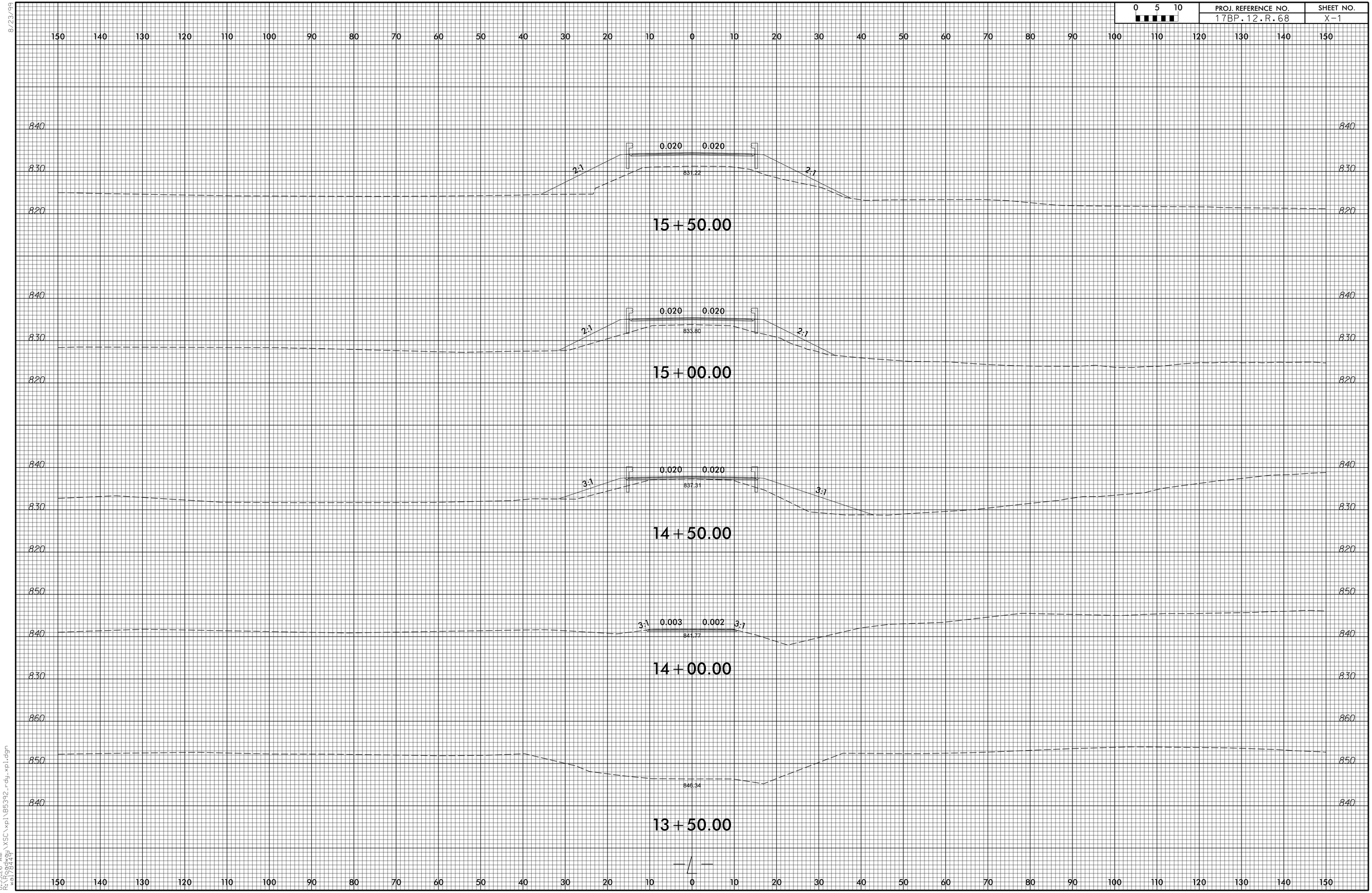

8/23/99

8:53:26 AM
R:\Roadway\XSC\xpl\B5392_rdy_xpl.dgn
wal78449

PROJ. REFERENCE NO.	SHEET NO.
17BP.12.R.68	X-2

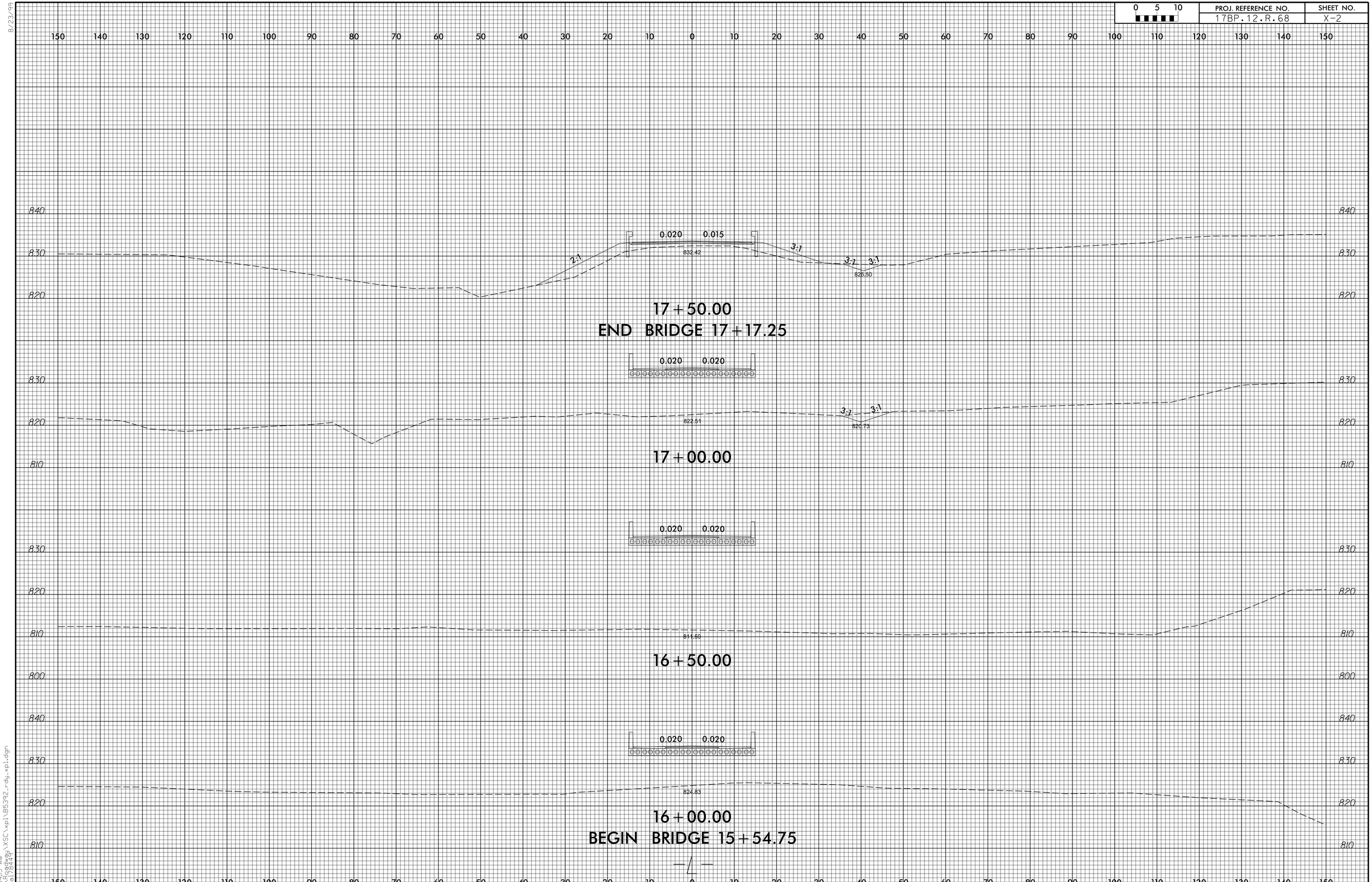

8/23/99

8:54:15 AM
R:\Roadway\XSC\xpl\B5392_rdy_xpl.dgn
wel78449

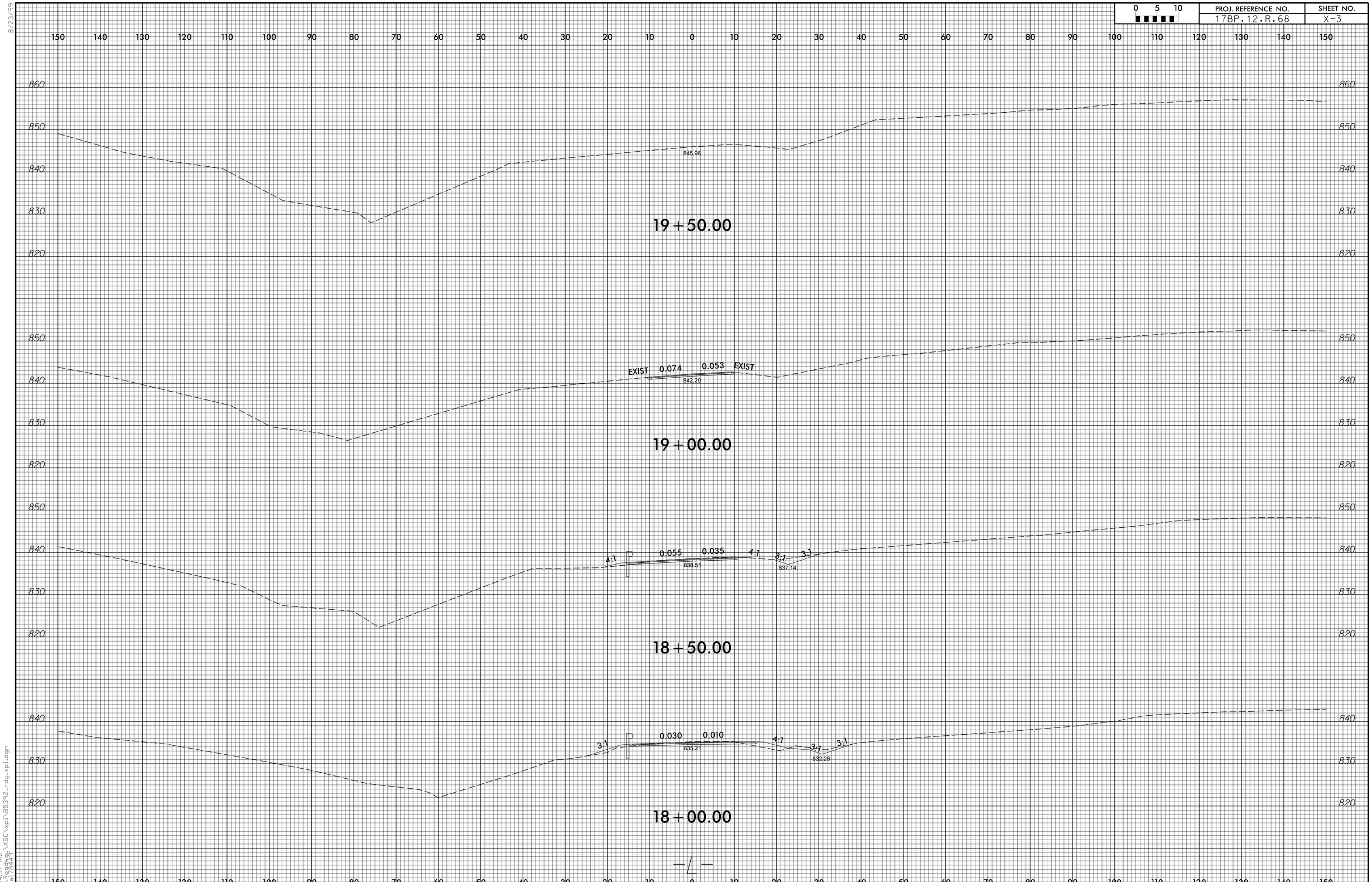

8/23/99

8:54:57 AM
R:\Roadway\XSC\xpl\B5392_rdy_xpl.dgn
wel78449

PROJECT: 17BP.12.R.68

CONTRACT: DL00167

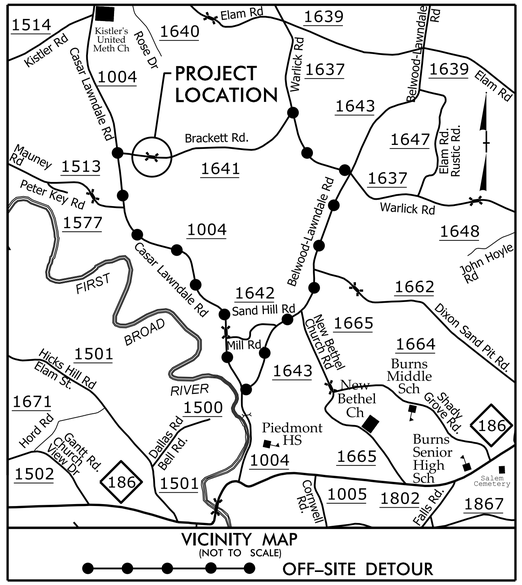

STATE OF NORTH CAROLINA

DIVISION OF HIGHWAYS

CLEVELAND COUNTY

STATE	STATE PROJECT REFERENCE NO.	SHEET NO.	TOTAL SHEETS
N.C.	17BP.12.R.68		

STATE PROJ. NO.	F. A. PROJ. NO.	DESCRIPTION
46107.1.1	BRZ-1641(4)	PE
46107.2.1		R/W, UTIL
46107.3.1		CONST.

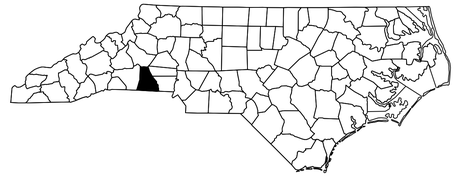

LOCATION: REPLACE BRIDGE NO. 201 OVER KNOB CREEK ON SR 1641 (BRACKETT ROAD).

TYPE OF WORK: GRADING, DRAINAGE, PAVING, EROSION CONTROL, STRUCTURE AND TRAFFIC CONTROL.

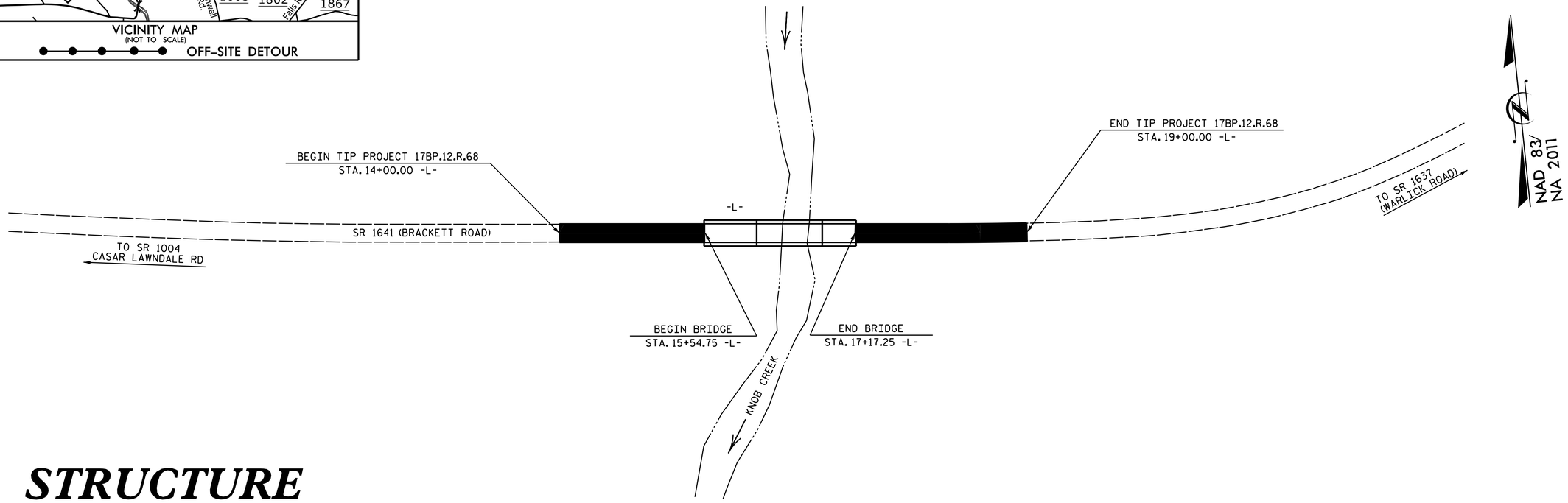

STRUCTURE

DESIGN DATA

ADT 2018 = 119
ADT 2038 = 193
K = 18 %
D = 65 %
T = 6 % *
V = 50 MPH
* TTST =1 DUAL 5
FUNC CLASS =
LOCAL
SUB-REGIONAL TIER

PROJECT LENGTH

LENGTH ROADWAY TIP PROJECT 17BP.12.R.68 = 0.064 MILES

LENGTH STRUCTURE TIP PROJECT 17BP.12.R.68 = 0.031 MILES

TOTAL LENGTH OF TIP PROJECT 17BP.12.R.68 = 0.095 MILES

Prepared In the Office of:

DIVISION OF HIGHWAYS

STRUCTURES MANAGEMENT UNIT

1000 BIRCH RIDGE DR.

RALEIGH, N.C. 27610

2018 STANDARD SPECIFICATIONS

LETTING DATE :

MAY 22, 2018

A. KEITH PASCHAL, P.E.
PROJECT ENGINEER

N. A. PIERCE, P.E.
PROJECT DESIGN ENGINEER

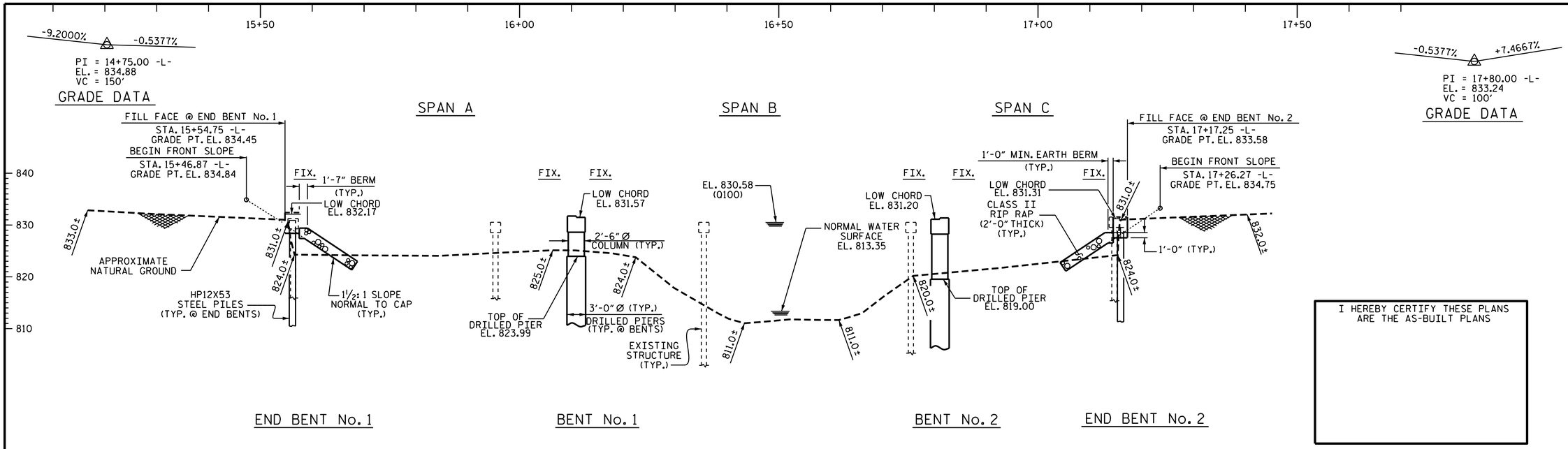

I HEREBY CERTIFY THESE PLANS ARE THE AS-BUILT PLANS

SECTION ALONG -L-

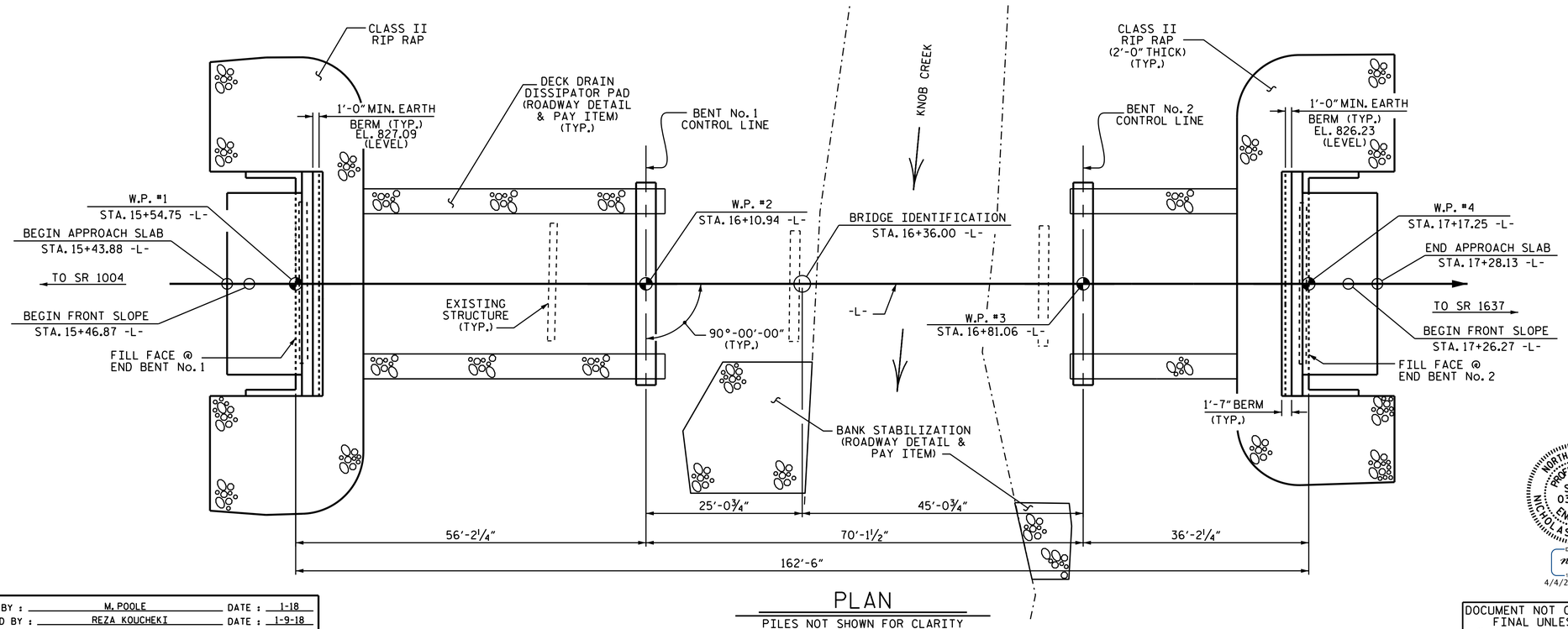

PLAN

PILES NOT SHOWN FOR CLARITY

N

PROJECT NO. 17BP.12.R.68

CLEVELAND COUNTY

STATION: 16+36.00 -L-

SHEET 1 OF 3 REPLACES BRIDGE #201

NORTH CAROLINA PROFESSIONAL SEAL 037479 ENGINEER NICHOLAS A. PIERCE

DocuSigned by: Nicholas Pierce 151108434D0B485...

4/4/2018

STATE OF NORTH CAROLINA
DEPARTMENT OF TRANSPORTATION
RALEIGH

GENERAL DRAWING
FOR BRIDGE OVER KNOB CREEK
ON SR 1641 BETWEEN
SR 1004 & SR 1637

REVISIONS						SHEET NO.
NO.	BY:	DATE:	NO.	BY:	DATE:	S-1
1			3			TOTAL SHEETS
2			4			25

DOCUMENT NOT CONSIDERED FINAL UNLESS ALL SIGNATURES COMPLETED

DRAWN BY : M. POOLE DATE : 1-18
CHECKED BY : REZA KOUCHEKI DATE : 1-9-18
DESIGN ENGINEER OF RECORD: REZA KOUCHEKI DATE : 1-18

04-APR-2018 09:04
B:\TIPProjects-B\B5392\Structures\FinalPlans\401_003_17BP.12.R.68_SMU_GD_001_220201.DGN
naplerce

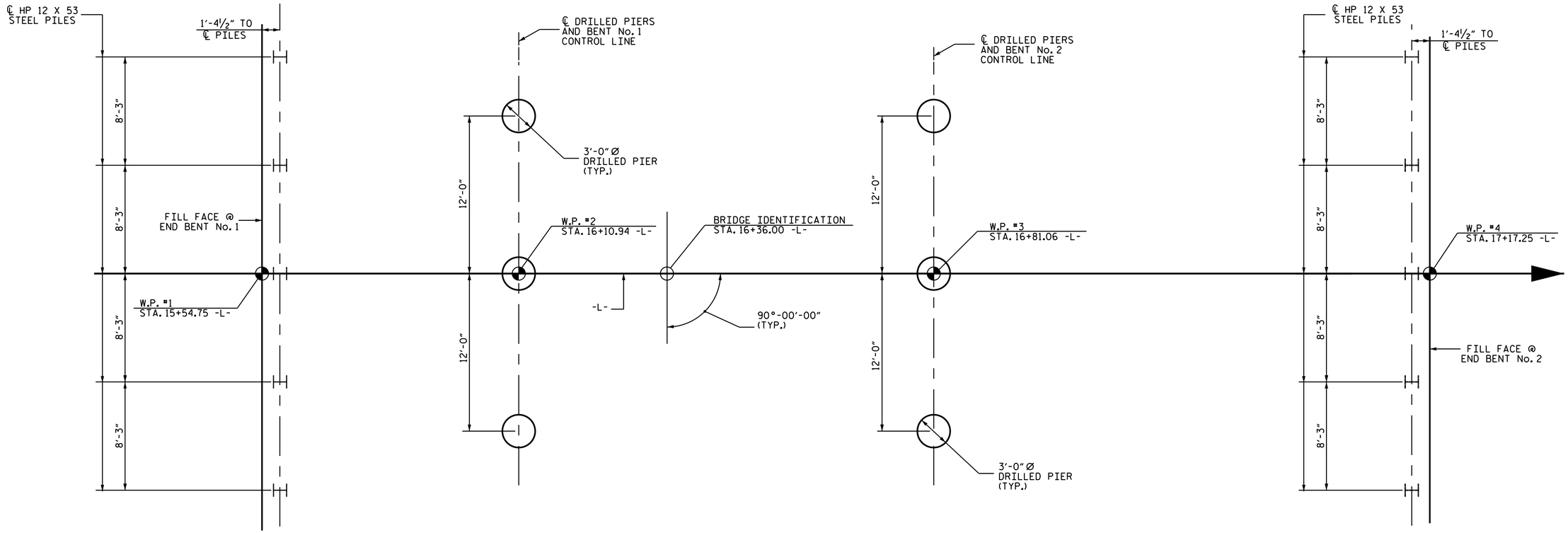

FOUNDATION LAYOUT

ALL PILES ARE HP 12 X 53 STEEL PILES.

DIMENSIONS LOCATING PILES ARE SHOWN TO THE CENTERLINE OF PILE AT BOTTOM OF CAP.

DIMENSIONS LOCATING DRILLED PIERS ARE TO THE CENTERLINE OF DRILLED PIERS.

NOTES

FOR PILES, SEE SECTION 450 OF THE STANDARD SPECIFICATIONS.

PILES AT END BENT NO. 1 ARE DESIGNED FOR A FACTORED RESISTANCE OF 90 TONS PER PILE.

DRIVE PILES AT END BENT No. 1 TO A REQUIRED DRIVING RESISTANCE OF 150 TONS PER PILE.

FOR DRILLED PIERS, SEE SECTION 411 OF THE STANDARD SPECIFICATIONS.

DRILLED PIERS AT BENT No. 1 ARE DESIGNED FOR A FACTORED RESISTANCE OF 400 TONS/PIER. CHECK FIELD CONDITIONS FOR THE REQUIRED TIP RESISTANCE OF 30 TSF.

INSTALL DRILLED PIERS AT BENT No. 1 TO A TIP ELEVATION NO HIGHER THAN 796 FT(LT); 795 FT (CT); 795 FT (RT) SATISFY THE REQUIRED TIP RESISTANCE AND HAVE A PENETRATION OF AT LEAST 6 FT INTO ROCK AS DEFINED BY ARTICLE 411-1 OF THE STANDARD SPECIFICATIONS.

PERMANENT STEEL CASINGS MAY BE REQUIRED FOR DRILLED PIERS AT BENT NO. 1. IF REQUIRED, DO NOT EXTEND PERMANENT CASINGS BELOW ELEVATION 806 FT WITHOUT PRIOR APPROVAL FROM THE ENGINEER.

THE SCOUR CRITICAL ELEVATION FOR BENT No. 1 IS 805 FT. THE SCOUR CRITICAL ELEVATIONS ARE USED TO MONITOR POSSIBLE SCOUR PROBLEMS DURING THE LIFE OF THE STRUCTURE.

DRILLED PIERS AT BENT No. 2 ARE DESIGNED FOR A FACTORED RESISTANCE OF 340 TONS/PIER. CHECK FIELD CONDITIONS FOR THE REQUIRED TIP RESISTANCE OF 110 TSF.

INSTALL DRILLED PIERS AT BENT No. 2 TO A TIP ELEVATION NO HIGHER THAN 788.5 FT (LT); 788.5 FT (CT); 798 FT (RT), SATISFY THE REQUIRED TIP RESISTANCE AND HAVE A PENETRATION OF AT LEAST 6 FT INTO ROCK AS DEFINED BY ARTICLE 411-1 OF THE STANDARD SPECIFICATIONS.

PERMANENT STEEL CASINGS MAY BE REQUIRED FOR DRILLED PIERS AT BENT NO. 2. IF REQUIRED, DO NOT EXTEND PERMANENT CASINGS BELOW ELEVATION 805 FT WITHOUT PRIOR APPROVAL FROM THE ENGINEER.

THE SCOUR CRITICAL ELEVATION FOR BENT No. 2 IS 804 FT. THE SCOUR CRITICAL ELEVATIONS ARE USED TO MONITOR POSSIBLE SCOUR PROBLEMS DURING THE LIFE OF THE STRUCTURE.

CSL TUBES ARE REQUIRED AND CSL TESTING MAY BE REQUIRED FOR THE DRILLED PIERS . THE ENGINEER WILL DETERMINE THE NEED FOR CSL TESTING. FOR CSL TESTING, SEE SECTION 411 OF THE STANDARD SPECIFICATIONS.

PILES AT END BENT No. 2 ARE DESIGNED FOR A FACTORED RESISTANCE OF 70 TONS PER PILE.

DRIVE PILES AT END BENT No. 2 TO A REQUIRED DRIVING RESISTANCE OF 117 TONS PER PILE.

PROJECT NO. 17BP.12.R.68

CLEVELAND COUNTY

STATION: 16+36.00 -L-

SHEET 2 OF 3

NORTH CAROLINA PROFESSIONAL SEAL 037479 ENGINEER NICHOLAS A. PIERCE

DocuSigned by: Nicholas Pierce 15110B434D0B485...

4/4/2018

STATE OF NORTH CAROLINA
DEPARTMENT OF TRANSPORTATION
RALEIGH

GENERAL DRAWING
FOR BRIDGE OVER KNOB CREEK
ON SR 1641 BETWEEN
SR 1004 & SR 1637

REVISIONS						SHEET NO.
NO.	BY:	DATE:	NO.	BY:	DATE:	S-2
1			3			TOTAL SHEETS
2			4			25

DOCUMENT NOT CONSIDERED FINAL UNLESS ALL SIGNATURES COMPLETED

DRAWN BY : M. POOLE DATE : 1-18
CHECKED BY : REZA KOUCHEKI DATE : 1-9-18
DESIGN ENGINEER OF RECORD: REZA KOUCHEKI DATE : 1-18

04-APR-2018 09:04
B:\TIPProjects-B\B5392\Structures\FinalPlans\401_005_17BP.12.R.68_SMU_ FL_002_220201.DGN
naplerce

BENCHMARK #2 : RR SPIKE IN 16"BASE OF TULIP POPLAR TREE STA. 15+11.11 -L-, 87.17' LT., EL. 830.30

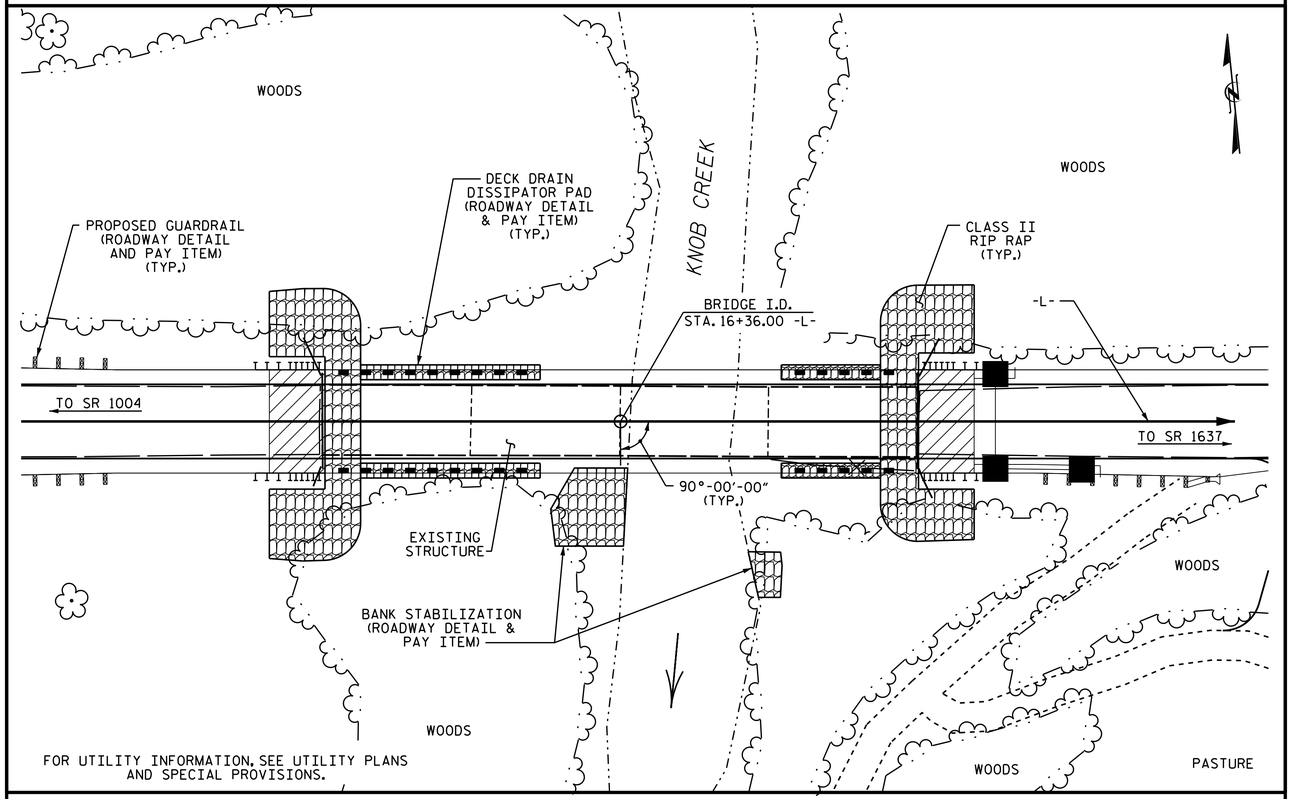

LOCATION SKETCH

NOTES

ASSUMED LIVE LOAD = HL-93 OR ALTERNATE LOADING.

THIS BRIDGE HAS BEEN DESIGNED IN ACCORDANCE WITH THE AASHTO LRFD BRIDGE DESIGN SPECIFICATIONS.

THIS BRIDGE IS LOCATED IN SEISMIC ZONE 1.

FOR OTHER DESIGN DATA AND GENERAL NOTES, SEE SHEET SN.

FOR SUBMITTAL OF WORKING DRAWINGS, SEE SPECIAL PROVISIONS.

FOR FALSEWORK AND FORMWORK, SEE SPECIAL PROVISIONS.

FOR CRANE SAFETY, SEE SPECIAL PROVISIONS.

FOR GROUT FOR STRUCTURES, SEE SPECIAL PROVISIONS.

INASMUCH AS THE PAINT SYSTEM ON THE EXISTING STRUCTURAL STEEL CONTAINS LEAD, THE CONTRACTOR'S ATTENTION IS DIRECTED TO ARTICLE 107-1 OF THE STANDARD SPECIFICATIONS. ANY COSTS RESULTING FROM COMPLIANCE WITH APPLICABLE STATE OR FEDERAL REGULATIONS PERTAINING TO HANDLING OF MATERIALS CONTAINING LEAD BASED PAINT SHALL BE INCLUDED IN THE BID PRICE FOR "REMOVAL OF EXISTING STRUCTURE."

REMOVAL OF THE EXISTING BRIDGE SHALL BE PERFORMED IN A MANNER THAT PREVENTS DEBRIS FROM FALLING INTO THE WATER. THE CONTRACTOR SHALL SUBMIT DEMOLITION PLANS FOR REVIEW AND REMOVE THE BRIDGE IN ACCORDANCE WITH ARTICLE 402-2 OF THE STANDARD SPECIFICATIONS.

THIS STRUCTURE HAS BEEN DESIGNED IN ACCORDANCE WITH "HEC 18-EVALUATING SCOUR AT BRIDGES."

FOR EROSION CONTROL MEASURES, SEE EROSION CONTROL PLANS.

ASPHALT WEARING SURFACE IS INCLUDED IN ROADWAY QUANTITY ON ROADWAY PLANS.

FOR ASBESTOS ASSESSMENT FOR DEMOLITION AND RENOVATION ACTIVITIES, SEE SPECIAL PROVISIONS.

THE EXISTING STRUCTURE CONSISTING OF FOUR SPANS 1 @ 40'-3", 2 @ 40'-0", 1 @ 40'-3", WITH A CLEAR ROADWAY WIDTH OF 19'-2" AND AN ASPHALT WEARING SURFACE, TIMBER DECK ON (8) LINES OF STEEL I-BEAMS, AND WITH A SUBSTRUCTURE CONSISTING OF TIMBER CAP/TIMBER POSTS AND SILL BULKHEADS, AND LOCATED AT THE PROPOSED BRIDGE SHALL BE REMOVED. THE EXISTING BRIDGE IS PRESENTLY POSTED FOR LOAD LIMIT. SHOULD THE STRUCTURAL INTEGRITY OF THE BRIDGE DETERIORATE DURING CONSTRUCTION OF THE PROPOSED BRIDGE, THE LOAD LIMIT MAY BE REDUCED AS FOUND NECESSARY DURING THE LIFE OF THE PROJECT.

THE SUBSTRUCTURE OF THE EXISTING BRIDGE INDICATED ON THE PLANS IS FROM THE BEST INFORMATION AVAILABLE. SINCE THIS INFORMATION IS SHOWN FOR THE CONVENIENCE OF THE CONTRACTOR, THE CONTRACTOR SHALL HAVE NO CLAIM WHATSOEVER AGAINST THE DEPARTMENT OF TRANSPORTATION FOR ANY DELAYS OR ADDITIONAL COST INCURRED BASED ON DIFFERENCES BETWEEN THE EXISTING BRIDGE SUBSTRUCTURE SHOWN ON THE PLANS AND THE ACTUAL CONDITIONS AT THE PROJECT SITE.

HYDRAULIC DATA

DESIGN DISCHARGE	= 4500 CFS
FREQUENCY OF DESIGN FLOOD	= 25 YRS.
DESIGN HIGH WATER ELEVATION	= 827.20
DRAINAGE AREA	= 33.3 SQ. MI.
BASE DISCHARGE (Q100)	= 7780 CFS
BASE HIGH WATER ELEVATION	= 830.58

OVERTOPPING FLOOD DATA

OVERTOPPING DISCHARGE	= 11500 CFS
FREQUENCY OF OVERTOPPING FLOOD	= 500+ YRS.
OVERTOPPING FLOOD ELEVATION	= 833.50 *

* OCCURS AT ROADWAY SAG STA. 17+37 -L- AT ROADWAY CENTERLINE

TOTAL BILL OF MATERIAL

	REMOVAL OF EXISTING STRUCTURE	ASBESTOS ASSESSMENT	3'-0"DIA. DRILLED PIERS IN SOIL	3'-0"DIA. DRILLED PIERS NOT IN SOIL	PERMANENT STEEL CASING FOR 3'-0"DIA. DRILLED PIERS	CSL TESTING	CLASS A CONCRETE	BRIDGE APPROACH SLABS	REINFORCING STEEL	SPIRAL COLUMN REINFORCING STEEL	PILE DRIVING EQUIPMENT SETUP FOR HP 12 X 53 STEEL PILES	HP 12 X 53 STEEL PILES		VERTICAL CONCRETE BARRIER RAIL	RIP RAP CLASS II (2'-0" THICK)	GEOTEXTILE FOR DRAINAGE	ELASTOMERIC BEARINGS	3'-0" X 1'-9" PRESTRESSED CONCRETE CORED SLABS		3'-0" X 2'-0" PRESTRESSED CONCRETE CORED SLABS	
	LUMP SUM	LUMP SUM	LIN. FT.	LIN. FT.	LIN. FT.	EACH	CU. YDS.	LUMP SUM	LBS.	LBS.	EACH	NO.	LIN. FT.	LIN. FT.	TONS	SQ. YDS.	LUMP SUM	NO.	LIN. FT.	NO.	LIN. FT.
SUPERSTRUCTURE		LUMP SUM						LUMP SUM						320.75			LUMP SUM	20	900.00	10	700.00
END BENT NO. 1							20.0		2449		5	5	125		162	180					
BENT NO. 1			60.0	26.0	57.0		14.5		9130	1716											
BENT NO. 2			57.0	25.0	45.0		17.0		10831	1895											
END BENT NO. 2							20.0		2449		5	5	100		167	185					
TOTAL	LUMP SUM	LUMP SUM	117.0	51.0	102.0	1	71.5	LUMP SUM	24859	3611	10	10	225	320.75	329	365	LUMP SUM	20	900.00	10	700.00

PROJECT NO. 17BP.12.R.68

CLEVELAND COUNTY

STATION: 16+36.00 -L-

SHEET 3 OF 3

NORTH CAROLINA PROFESSIONAL SEAL 037479 ENGINEER NICHOLAS A. PIERCE

DocuSigned by: Nicholas Pierce 151108434D0B485...

4/4/2018

STATE OF NORTH CAROLINA
DEPARTMENT OF TRANSPORTATION
RALEIGH

GENERAL DRAWING
FOR BRIDGE OVER KNOB CREEK ON SR 1641 BETWEEN SR 1004 & SR 1637

REVISIONS						SHEET NO.
NO.	BY:	DATE:	NO.	BY:	DATE:	S-3
1			3			TOTAL SHEETS
2			4			25

DOCUMENT NOT CONSIDERED FINAL UNLESS ALL SIGNATURES COMPLETED

DRAWN BY : M. POOLE DATE : 1-18
CHECKED BY : REZA KOUCHEKI DATE : 1-9-18
DESIGN ENGINEER OF RECORD: REZA KOUCHEKI DATE : 1-18

04-APR-2018 09:04
B:\TIPProjects-B\B5392\Structures\FinalPlans\401_007_17BP.12.R.68_SMU_GD_.003.220201.DGN
naplerce

LOAD AND RESISTANCE FACTOR RATING (LRFD) SUMMARY FOR PRESTRESSED CONCRETE GIRDERS

LEVEL		VEHICLE	WEIGHT (W) (TONS)	CONTROLLING LOAD RATING	MINIMUM RATING FACTORS (RF)	TONS = W X RF	STRENGTH I LIMIT STATE										SERVICE III LIMIT STATE						COMMENT NUMBER
								MOMENT					SHEAR					MOMENT						
							LIVELOAD FACTORS	DISTRIBUTION FACTORS (DF)	RATING FACTOR	SPAN	GIRDER LOCATION	DISTANCE FROM LEFT END OF SPAN (ft)	DISTRIBUTION FACTORS (DF)	RATING FACTOR	SPAN	GIRDER LOCATION	DISTANCE FROM LEFT END OF SPAN (ft)	LIVELOAD FACTORS	DISTRIBUTION FACTORS (DF)	RATING FACTOR	SPAN	GIRDER LOCATION	DISTANCE FROM LEFT END OF SPAN (ft)	
DESIGN LOAD RATING		HL-93(Inv)	N/A	1	1.055	--	1.75	0.275	1.23	55′	EL	27	0.523	1.23	55′	EL	5.4	0.80	0.275	1.05	55′	EL	27	
		HL-93(Opr)	N/A	--	1.591	--	1.35	0.275	1.59	55′	EL	27	0.523	1.59	55′	EL	5.4	N/A	--	--	--	--	--	
		HS-20(Inv)	36.000	2	1.322	47.585	1.75	0.275	1.54	55′	EL	27	0.523	1.47	55′	EL	5.4	0.80	0.275	1.32	55′	EL	27	
		HS-20(Opr)	36.000	--	1.900	68.396	1.35	0.275	1.99	55′	EL	27	0.523	1.90	55′	EL	5.4	N/A	--	--	--	--	--	
LEGAL LOAD RATING	SV	SNSH	13.500	--	2.776	37.476	1.40	0.275	4.04	55′	EL	27	0.523	4.17	55′	EL	5.4	0.80	0.275	2.78	55′	EL	27	
		SNGARBS2	20.000	--	2.155	43.095	1.40	0.275	3.14	55′	EL	27	0.523	3.02	55′	EL	5.4	0.80	0.275	2.15	55′	EL	27	
		SNAGRIS2	22.000	--	2.079	45.734	1.40	0.275	3.03	55′	EL	27	0.523	2.83	55′	EL	5.4	0.80	0.275	2.08	55′	EL	27	
		SNCOTTS3	27.250	--	1.384	37.708	1.40	0.275	2.01	55′	EL	27	0.523	2.09	55′	EL	5.4	0.80	0.275	1.38	55′	EL	27	
		SNAGGRS4	34.925	--	1.189	41.527	1.40	0.275	1.73	55′	EL	27	0.523	1.77	55′	EL	5.4	0.80	0.275	1.19	55′	EL	27	
		SNS5A	35.550	--	1.160	41.255	1.40	0.275	1.69	55′	EL	27	0.523	1.82	55′	EL	5.4	0.80	0.275	1.16	55′	EL	27	
		SNS6A	39.950	--	1.079	43.102	1.40	0.275	1.57	55′	EL	27	0.523	1.68	55′	EL	5.4	0.80	0.275	1.08	55′	EL	27	
		SNS7B	42.000	--	1.028	43.175	1.40	0.275	1.50	55′	EL	27	0.523	1.67	55′	EL	5.4	0.80	0.275	1.03	55′	EL	27	
	TTST	TNAGRIT3	33.000	--	1.320	43.556	1.40	0.275	1.92	55′	EL	27	0.523	1.98	55′	EL	5.4	0.80	0.275	1.32	55′	EL	27	
		TNT4A	33.075	--	1.330	43.979	1.40	0.275	1.94	55′	EL	27	0.523	1.91	55′	EL	5.4	0.80	0.275	1.33	55′	EL	27	
		TNT6A	41.600	--	1.101	45.811	1.40	0.275	1.60	55′	EL	27	0.523	1.83	55′	EL	5.4	0.80	0.275	1.10	55′	EL	27	
		TNT7A	42.000	--	1.114	46.804	1.40	0.275	1.62	55′	EL	27	0.523	1.71	55′	EL	5.4	0.80	0.275	1.11	55′	EL	27	
		TNT7B	42.000	--	1.163	48.848	1.40	0.275	1.69	55′	EL	27	0.523	1.62	55′	EL	5.4	0.80	0.275	1.16	55′	EL	27	
		TNAGRIT4	43.000	--	1.101	47.33	1.40	0.275	1.60	55′	EL	27	0.523	1.56	55′	EL	5.4	0.80	0.275	1.10	55′	EL	27	
		TNAGT5A	45.000	--	1.031	46.405	1.40	0.275	1.50	55′	EL	27	0.523	1.58	55′	EL	5.4	0.80	0.275	1.03	55′	EL	27	
		TNAGT5B	45.000	3	1.013	45.582	1.40	0.275	1.47	55′	EL	27	0.523	1.48	55′	EL	5.4	0.80	0.275	1.01	55′	EL	27	

LOAD FACTORS:

DESIGN LOAD RATING FACTORS	LIMIT STATE	γ_{DC}	γ_{DW}
	STRENGTH I	1.25	1.50
	SERVICE III	1.00	1.00

NOTES:

MINIMUM RATING FACTORS ARE BASED ON THE STRENGTH I AND SERVICE III LIMIT STATES.

ALLOWABLE STRESSES FOR SERVICE III LIMIT STATE ARE AS REQUIRED FOR DESIGN.

COMMENTS:

1.
2.
3.
4.

(#) CONTROLLING LOAD RATING

(1) DESIGN LOAD RATING (HL-93)

(2) DESIGN LOAD RATING (HS-20)

(3) LEGAL LOAD RATING **

** SEE CHART FOR VEHICLE TYPE

GIRDER LOCATION

I - INTERIOR GIRDER
EL - EXTERIOR LEFT GIRDER
ER - EXTERIOR RIGHT GIRDER

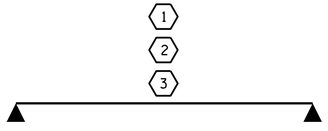

LRFR SUMMARY

FOR SPAN 'A'

PROJECT NO. 17BP.12.R.68

CLEVELAND COUNTY

STATION: 16+36.00 -L-

NORTH CAROLINA PROFESSIONAL SEAL 037479 ENGINEER NICHOLAS A. PIERCE

DocuSigned by: Nicholas Pierce 151108434D0B485...

4/4/2018

STATE OF NORTH CAROLINA
DEPARTMENT OF TRANSPORTATION
RALEIGH

STANDARD

LRFR SUMMARY FOR 55′ CORED SLAB UNIT 90° SKEW

(NON-INTERSTATE TRAFFIC)

REVISIONS						SHEET NO.
NO.	BY:	DATE:	NO.	BY:	DATE:	S-4
1			3			TOTAL SHEETS
2			4			25

DOCUMENT NOT CONSIDERED FINAL UNLESS ALL SIGNATURES COMPLETED

ASSEMBLED BY : REZA KOUCHEKI DATE : 11/16
CHECKED BY : E K POPE DATE : 1/19/17

DRAWN BY : CVC 6/10
CHECKED BY : DNS 6/10

04-APR-2018 09:04
B:\TIPProjects-B\B5392\Structures\FinalPlans\401_009_17BP.12.R.68_SMU_LRFR_004_220201.DGN
naplerce

STD. NO. 21LRFR1_90S_55L

LOAD AND RESISTANCE FACTOR RATING (LRFD) SUMMARY FOR PRESTRESSED CONCRETE GIRDERS

LEVEL		VEHICLE	WEIGHT (W) (TONS)	CONTROLLING LOAD RATING	MINIMUM RATING FACTORS (RF)	TONS = W X RF	STRENGTH I LIMIT STATE										SERVICE III LIMIT STATE						COMMENT NUMBER
								MOMENT					SHEAR					MOMENT						
							LIVELOAD FACTORS	DISTRIBUTION FACTORS (DF)	RATING FACTOR	SPAN	GIRDER LOCATION	DISTANCE FROM LEFT END OF SPAN (ft)	DISTRIBUTION FACTORS (DF)	RATING FACTOR	SPAN	GIRDER LOCATION	DISTANCE FROM LEFT END OF SPAN (ft)	LIVELOAD FACTORS	DISTRIBUTION FACTORS (DF)	RATING FACTOR	SPAN	GIRDER LOCATION	DISTANCE FROM LEFT END OF SPAN (ft)	
DESIGN LOAD RATING		HL-93(Inv)	N/A	**1**	1.006	--	1.75	0.273	1.03	70′	EL	34.5	0.507	1.32	70′	EL	6.9	0.80	0.273	**1.01**	70′	EL	**34.5**	
		HL-93(Opr)	N/A	--	1.341	--	1.35	0.273	1.34	70′	EL	34.5	0.507	1.72	70′	EL	6.9	N/A	--	--	--	--	--	
		HS-20(Inv)	36.000	**2**	1.306	47.020	1.75	0.273	1.34	70′	EL	34.5	0.507	1.65	70′	EL	6.9	0.80	0.273	**1.31**	70′	EL	**34.5**	
		HS-20(Opr)	36.000	--	1.74	62.640	1.35	0.273	1.74	70′	EL	34.5	0.507	2.14	70′	EL	6.9	N/A	--	--	--	--	--	
LEGAL LOAD RATING	SV	SNSH	13.500	--	2.917	39.379	1.40	0.273	3.75	70′	EL	34.5	0.507	4.87	70′	EL	6.9	0.80	0.273	2.92	70′	EL	34.5	
		SNGARBS2	20.000	--	2.187	43.741	1.40	0.273	2.81	70′	EL	34.5	0.507	3.47	70′	EL	6.9	0.80	0.273	2.19	70′	EL	34.5	
		SNAGRIS2	22.000	--	2.077	45.690	1.40	0.273	2.67	70′	EL	34.5	0.507	3.23	70′	EL	6.9	0.80	0.273	2.08	70′	EL	34.5	
		SNCOTTS3	27.250	--	1.452	39.565	1.40	0.273	1.87	70′	EL	34.5	0.507	2.43	70′	EL	6.9	0.80	0.273	1.45	70′	EL	34.5	
		SNAGGRS4	34.925	--	1.218	42.554	1.40	0.273	1.57	70′	EL	34.5	0.507	2.03	70′	EL	6.9	0.80	0.273	1.22	70′	EL	34.5	
		SNS5A	35.550	--	1.191	42.346	1.40	0.273	1.53	70′	EL	34.5	0.507	2.06	70′	EL	6.9	0.80	0.273	1.19	70′	EL	34.5	
		SNS6A	39.950	--	1.095	43.747	1.40	0.273	1.41	70′	EL	34.5	0.507	1.88	70′	EL	6.9	0.80	0.273	1.10	70′	EL	34.5	
		SNS7B	42.000	--	1.043	43.801	1.40	0.273	1.34	70′	EL	34.5	0.507	1.85	70′	EL	6.9	0.80	0.273	1.04	70′	EL	34.5	
	TTST	TNAGRIT3	33.000	--	1.336	44.087	1.40	0.273	1.72	70′	EL	34.5	0.507	2.23	70′	EL	6.9	0.80	0.273	1.34	70′	EL	34.5	
		TNT4A	33.075	--	1.342	44.401	1.40	0.273	1.72	70′	EL	34.5	0.507	2.17	70′	EL	6.9	0.80	0.273	1.34	70′	EL	34.5	
		TNT6A	41.600	--	1.100	45.746	1.40	0.273	1.41	70′	EL	34.5	0.507	1.98	70′	EL	6.9	0.80	0.273	1.10	70′	EL	34.5	
		TNT7A	42.000	--	1.106	46.462	1.40	0.273	1.42	70′	EL	34.5	0.507	1.94	70′	EL	6.9	0.80	0.273	1.11	70′	EL	34.5	
		TNT7B	42.000	--	1.147	48.180	1.40	0.273	1.47	70′	EL	34.5	0.507	1.80	70′	EL	6.9	0.80	0.273	1.15	70′	EL	34.5	
		TNAGRIT4	43.000	--	1.089	46.838	1.40	0.273	1.40	70′	EL	34.5	0.507	1.74	70′	EL	6.9	0.80	0.273	1.09	70′	EL	34.5	
		TNAGT5A	45.000	--	1.026	46.175	1.40	0.273	1.32	70′	EL	34.5	0.507	1.74	70′	EL	6.9	0.80	0.273	1.03	70′	EL	34.5	
		TNAGT5B	45.000	**3**	1.013	45.579	1.40	0.273	1.30	70′	EL	34.5	0.507	1.66	70′	EL	6.9	0.80	0.273	**1.01**	70′	EL	**34.5**	

LOAD FACTORS:

DESIGN LOAD RATING FACTORS	LIMIT STATE	γ_{DC}	γ_{DW}
	STRENGTH I	1.25	1.50
	SERVICE III	1.00	1.00

NOTES:

MINIMUM RATING FACTORS ARE BASED ON THE STRENGTH I AND SERVICE III LIMIT STATES.

ALLOWABLE STRESSES FOR SERVICE III LIMIT STATE ARE AS REQUIRED FOR DESIGN.

COMMENTS:

1.
2.
3.
4.

(#) CONTROLLING LOAD RATING

(1) DESIGN LOAD RATING (HL-93)

(2) DESIGN LOAD RATING (HS-20)

(3) LEGAL LOAD RATING **

** SEE CHART FOR VEHICLE TYPE

GIRDER LOCATION

I - INTERIOR GIRDER
EL - EXTERIOR LEFT GIRDER
ER - EXTERIOR RIGHT GIRDER

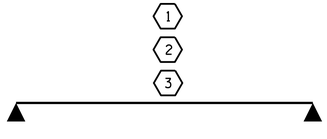

LRFR SUMMARY

FOR SPAN 'B'

PROJECT NO. 17BP.12.R.68

CLEVELAND COUNTY

STATION: 16+36.00 -L-

NORTH CAROLINA PROFESSIONAL SEAL 037479 ENGINEER NICHOLAS A. PIERCE

DocuSigned by: Nicholas Pierce 151108434D0B485...

4/4/2018

DOCUMENT NOT CONSIDERED FINAL UNLESS ALL SIGNATURES COMPLETED

STATE OF NORTH CAROLINA
DEPARTMENT OF TRANSPORTATION
RALEIGH

STANDARD
LRFR SUMMARY FOR 70′ CORED SLAB UNIT 90° SKEW
(NON-INTERSTATE TRAFFIC)

REVISIONS						SHEET NO.
NO.	BY:	DATE:	NO.	BY:	DATE:	S-5
1			3			TOTAL SHEETS
2			4			25

ASSEMBLED BY : REZA KOUCHEKI	DATE : 11/16
CHECKED BY : E K POPE	DATE : 1/11/17
DRAWN BY : CVC 6/10	
CHECKED BY : DNS 6/10	

04-APR-2018 09:04
B:\TIPProjects-B\B5392\Structures\FinalPlans\401_011_17BP.12.R.68_SMU_LRFR_005_220201.DGN
naplerce

STD. NO. 24LRFR1_90S_70L

LOAD AND RESISTANCE FACTOR RATING (LRFD) SUMMARY FOR PRESTRESSED CONCRETE GIRDERS

LEVEL		VEHICLE	WEIGHT (W) (TONS)	CONTROLLING LOAD RATING	MINIMUM RATING FACTORS (RF)	TONS = W X RF	STRENGTH I LIMIT STATE										SERVICE III LIMIT STATE						COMMENT NUMBER
								MOMENT					SHEAR					MOMENT						
							LIVELOAD FACTORS	DISTRIBUTION FACTORS (DF)	RATING FACTOR	SPAN	GIRDER LOCATION	DISTANCE FROM LEFT END OF SPAN (ft)	DISTRIBUTION FACTORS (DF)	RATING FACTOR	SPAN	GIRDER LOCATION	DISTANCE FROM LEFT END OF SPAN (ft)	LIVELOAD FACTORS	DISTRIBUTION FACTORS (DF)	RATING FACTOR	SPAN	GIRDER LOCATION	DISTANCE FROM LEFT END OF SPAN (ft)	
DESIGN LOAD RATING		HL-93(Inv)	N/A	1	1.032	--	1.75	0.28	1.36	35′	EL	17	0.561	**1.03**	35′	EL	**1.7**	0.80	0.28	1.05	35′	EL	17	
		HL-93(Opr)	N/A	--	1.338	--	1.35	0.28	1.77	35′	EL	17	0.561	1.34	35′	EL	1.7	N/A	--	--	--	--	--	
		HS-20(Inv)	36.000	2	1.189	42.810	1.75	0.28	1.79	35′	EL	13.6	0.561	**1.19**	35′	EL	**1.7**	0.80	0.28	1.39	35′	EL	17	
		HS-20(Opr)	36.000	--	1.542	55.494	1.35	0.28	2.32	35′	EL	13.6	0.561	1.54	35′	EL	1.7	N/A	--	--	--	--	--	
LEGAL LOAD RATING	SV	SNSH	13.500	--	2.400	32.402	1.40	0.28	3.89	35′	EL	17	0.561	3.06	35′	EL	1.7	0.80	0.28	2.40	35′	EL	17	
		SNGARBS2	20.000	--	2.052	41.044	1.40	0.28	3.29	35′	EL	13.6	0.561	2.32	35′	EL	1.7	0.80	0.28	2.05	35′	EL	13.6	
		SNAGRIS2	22.000	--	2.053	45.174	1.40	0.28	3.26	35′	EL	13.6	0.561	2.21	35′	EL	1.7	0.80	0.28	2.05	35′	EL	13.6	
		SNCOTTS3	27.250	--	1.202	32.744	1.40	0.28	1.95	35′	EL	17	0.561	1.54	35′	EL	1.7	0.80	0.28	1.20	35′	EL	17	
		SNAGGRS4	34.925	--	1.111	38.816	1.40	0.28	1.80	35′	EL	17	0.561	1.38	35′	EL	1.7	0.80	0.28	1.11	35′	EL	17	
		SNS5A	35.550	--	1.079	38.354	1.40	0.28	1.75	35′	EL	17	0.561	1.46	35′	EL	1.7	0.80	0.28	1.08	35′	EL	17	
		SNS6A	39.950	--	1.041	41.601	1.40	0.28	1.69	35′	EL	17	0.561	1.37	35′	EL	1.7	0.80	0.28	1.04	35′	EL	17	
		SNS7B	42.000	3	1.000	41.734	1.40	0.28	1.61	35′	EL	17	0.561	1.40	35′	EL	1.7	0.80	0.28	**1.00**	35′	EL	**17**	
	TTST	TNAGRIT3	33.000	--	1.286	42.439	1.40	0.28	2.08	35′	EL	17	0.561	1.60	35′	EL	1.7	0.80	0.28	1.29	35′	EL	17	
		TNT4A	33.075	--	1.285	42.512	1.40	0.28	2.08	35′	EL	17	0.561	1.51	35′	EL	1.7	0.80	0.28	1.29	35′	EL	17	
		TNT6A	41.600	--	1.126	46.84	1.40	0.28	1.82	35′	EL	17	0.561	1.48	35′	EL	1.7	0.80	0.28	1.13	35′	EL	17	
		TNT7A	42.000	--	1.163	48.833	1.40	0.28	1.89	35′	EL	17	0.561	1.37	35′	EL	1.7	0.80	0.28	1.16	35′	EL	17	
		TNT7B	42.000	--	1.144	48.061	1.40	0.28	1.85	35′	EL	17	0.561	1.33	35′	EL	1.7	0.80	0.28	1.14	35′	EL	17	
		TNAGRIT4	43.000	--	1.158	49.810	1.40	0.28	1.86	35′	EL	13.6	0.561	1.28	35′	EL	1.7	0.80	0.28	1.16	35′	EL	17	
		TNAGT5A	45.000	--	1.068	48.071	1.40	0.28	1.73	35′	EL	17	0.561	1.35	35′	EL	1.7	0.80	0.28	1.07	35′	EL	17	
		TNAGT5B	45.000	--	1.031	46.373	1.40	0.28	1.67	35′	EL	17	0.561	1.21	35′	EL	1.7	0.80	0.28	1.03	35′	EL	17	

LOAD FACTORS:

DESIGN LOAD RATING FACTORS	LIMIT STATE	γ_{DC}	γ_{DW}
	STRENGTH I	1.25	1.50
	SERVICE III	1.00	1.00

NOTES:

MINIMUM RATING FACTORS ARE BASED ON THE STRENGTH I AND SERVICE III LIMIT STATES.

ALLOWABLE STRESSES FOR SERVICE III LIMIT STATE ARE AS REQUIRED FOR DESIGN.

COMMENTS:

1.
2.
3.
4.

(#) CONTROLLING LOAD RATING

(1) DESIGN LOAD RATING (HL-93)

(2) DESIGN LOAD RATING (HS-20)

(3) LEGAL LOAD RATING **

** SEE CHART FOR VEHICLE TYPE

GIRDER LOCATION

I - INTERIOR GIRDER
EL - EXTERIOR LEFT GIRDER
ER - EXTERIOR RIGHT GIRDER

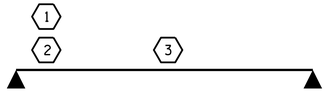

LRFR SUMMARY

FOR SPAN 'C'

PROJECT NO. 17BP.12.R.68

CLEVELAND COUNTY

STATION: 16+36.00 -L-

NORTH CAROLINA PROFESSIONAL SEAL 037479 ENGINEER NICHOLAS A. PIERCE

DocuSigned by: Nicholas Pierce 151108434D0B485...

4/4/2018

STATE OF NORTH CAROLINA
DEPARTMENT OF TRANSPORTATION
RALEIGH

STANDARD
LRFR SUMMARY FOR
35′ CORED SLAB UNIT
90° SKEW
(NON-INTERSTATE TRAFFIC)

REVISIONS						SHEET NO.
NO.	BY:	DATE:	NO.	BY:	DATE:	S-6
1			3			TOTAL SHEETS
2			4			25

DOCUMENT NOT CONSIDERED FINAL UNLESS ALL SIGNATURES COMPLETED

ASSEMBLED BY : REZA KOUCHEKI DATE : 11/16
CHECKED BY : E K POPE DATE : 1/11/17

DRAWN BY : CVC 6/10
CHECKED BY : DNS 6/10

04-APR-2018 09:04
B:\TIPProjects-B\B5392\Structures\FinalPlans\401_013_17BP.12.R.68_SMU_LRFR_006_220201.DGN
naplerce

STD. NO. 21LRFR1_90S_35L

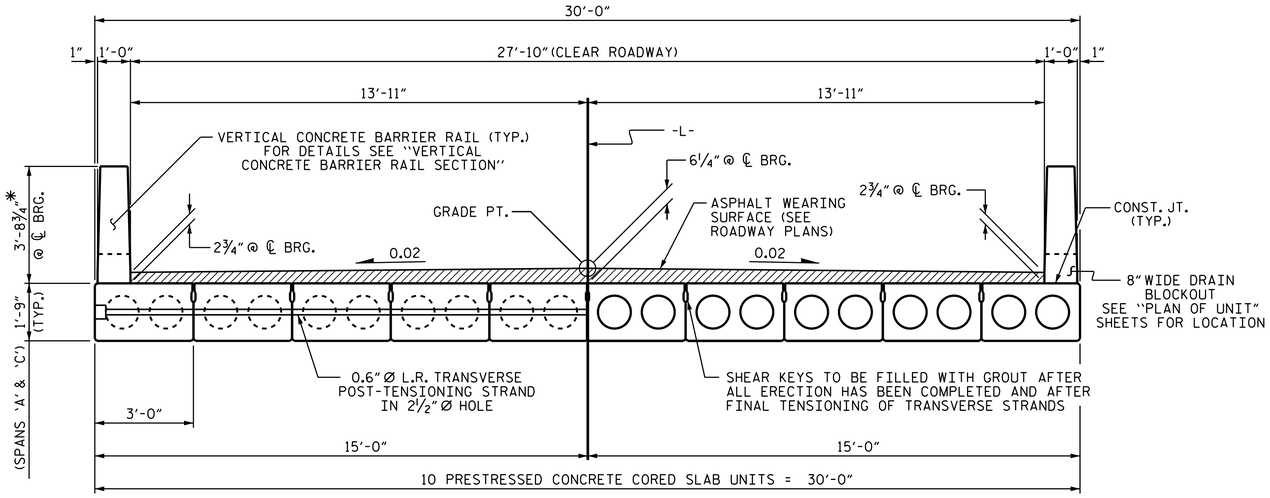

HALF SECTION
AT INTERMEDIATE DIAPHRAGMS

HALF SECTION
THROUGH VOIDS

TYPICAL SECTION

* - THE MAXIMUM BARRIER RAIL HEIGHT AND ASPHALT THICKNESS IS SHOWN. THE HEIGHT OF THE BARRIER RAIL AND ASPHALT THICKNESS VARIES WHILE THE TOP OF THE BARRIER RAIL FOLLOWS THE PROFILE OF THE GUTTERLINE. FOR RAIL HEIGHT DETAILS AND ASPHALT THICKNESS SEE THE "VERTICAL CONCRETE BARRIER RAIL SECTION" DETAIL.

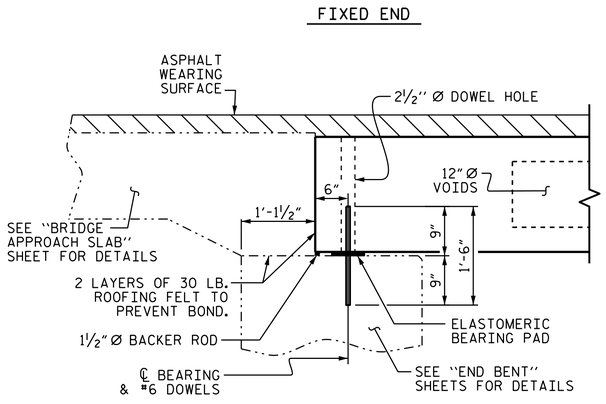

SECTION AT END BENT

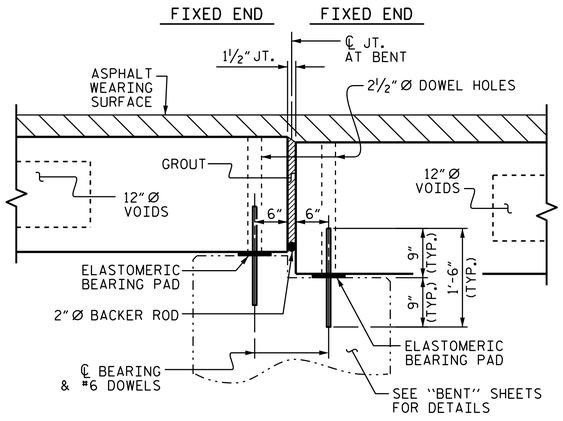

STEPPED SECTION AT BENT No. 1

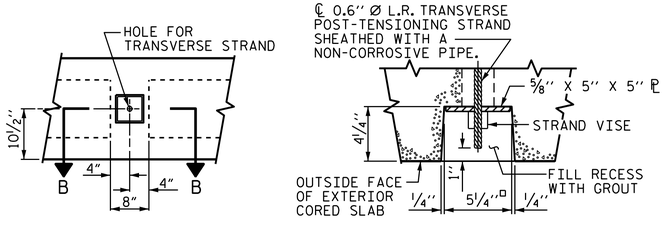

ELEVATION VIEW

SECTION B-B

GROUTED RECESS AT END OF POST-TENSIONED STRAND OF CORED SLABS

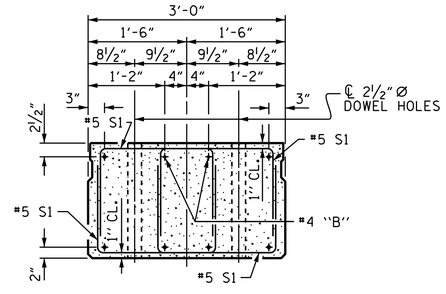

END ELEVATION

SHOWING PLACEMENT OF DOUBLE STIRRUPS AND LOCATION OF DOWEL HOLES. (STRAND LAYOUT NOT SHOWN.) INTERIOR SLAB UNIT SHOWN-EXTERIOR SLAB UNIT SIMILAR EXCEPT SHEAR KEY LOCATION.

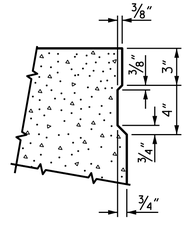

SHEAR KEY DETAIL

NOTE: OMIT SHEAR KEY ON OUTSIDE FACE OF EXTERIOR CORED SLABS.

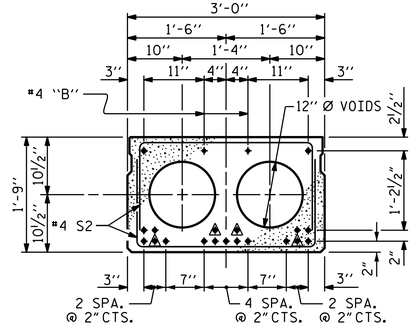

INTERIOR SLAB SECTION
(55' UNIT)
(19 STRANDS REQUIRED)

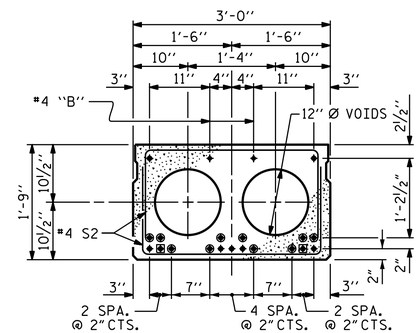

INTERIOR SLAB SECTION
(35' UNIT)
(9 STRANDS REQUIRED)

0.6" Ø LOW RELAXATION STRAND LAYOUT

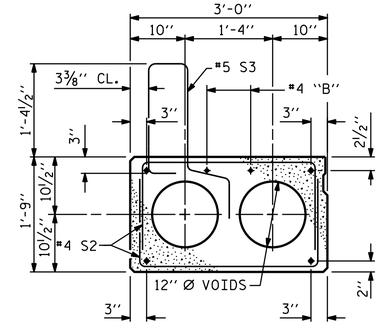

EXT. SLAB SECTION

(FOR PRESTRESSED STRAND LAYOUT, SEE INTERIOR SLAB SECTION.)

△ BOND SHALL BE BROKEN ON THESE STRANDS FOR A DISTANCE OF 6'-0" FROM END OF CORED SLAB UNIT. SEE STANDARD SPECIFICATIONS, ARTICLE 1078-7.

▣ BOND SHALL BE BROKEN ON THESE STRANDS FOR A DISTANCE OF 2'-0" FROM END OF CORED SLAB UNIT. SEE STANDARD SPECIFICATIONS, ARTICLE 1078-7.

◉ OPTIONAL FULL LENGTH DEBONDED STRANDS. THESE STRANDS ARE NOT REQUIRED. IF THE FABRICATOR CHOOSES TO INCLUDE THESE STRANDS IN THE CORED SLAB UNIT, THE STRANDS SHALL BE DEBONDED FOR THE FULL LENGTH OF THE UNIT AT NO ADDITIONAL COST. SEE STANDARD SPECIFICATIONS, ARTICLE 1078-7.

DEBONDING LEGEND

PERMITTED THREADED INSERT CAST IN OUTSIDE FACE OF EXTERIOR UNIT AND RECESSED ⅜". SIZE TO BE DETERMINED BY CONTRACTOR.

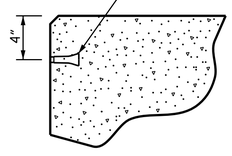

THREADED INSERT DETAIL

PROJECT NO. 17BP.12.R.68
CLEVELAND COUNTY
STATION: 16+36.00 -L-

SHEET 1 OF 8

STATE OF NORTH CAROLINA
DEPARTMENT OF TRANSPORTATION
RALEIGH

STANDARD 3'-0" X 1'-9" PRESTRESSED CONCRETE CORED SLAB UNIT 90° SKEW SPANS 'A' & 'C'

NORTH CAROLINA PROFESSIONAL SEAL 037479 ENGINEER NICHOLAS A. PIERCE
Digitally signed by: Nicholas Pierce
15110B434D0B485...
4/4/2018

DOCUMENT NOT CONSIDERED FINAL UNLESS ALL SIGNATURES COMPLETED

REVISIONS						SHEET NO.
NO.	BY:	DATE:	NO.	BY:	DATE:	S-7
1			3			TOTAL SHEETS
2			4			25

ASSEMBLED BY : REZA KOUCHEKI	DATE : 11/16
CHECKED BY : E K POPE	DATE : 1/19/17
DRAWN BY : DGE 5/09	REV. 8/14 MAA/TMG
CHECKED BY : BCH 6/09	

28-MAR-2018 07:33
R:\Structures\Final Plans\401_015_17BP.12.R.68_SMU_TS_007_220201.DGN
naplerce

STD. NO. 21"PCS2_30_90S

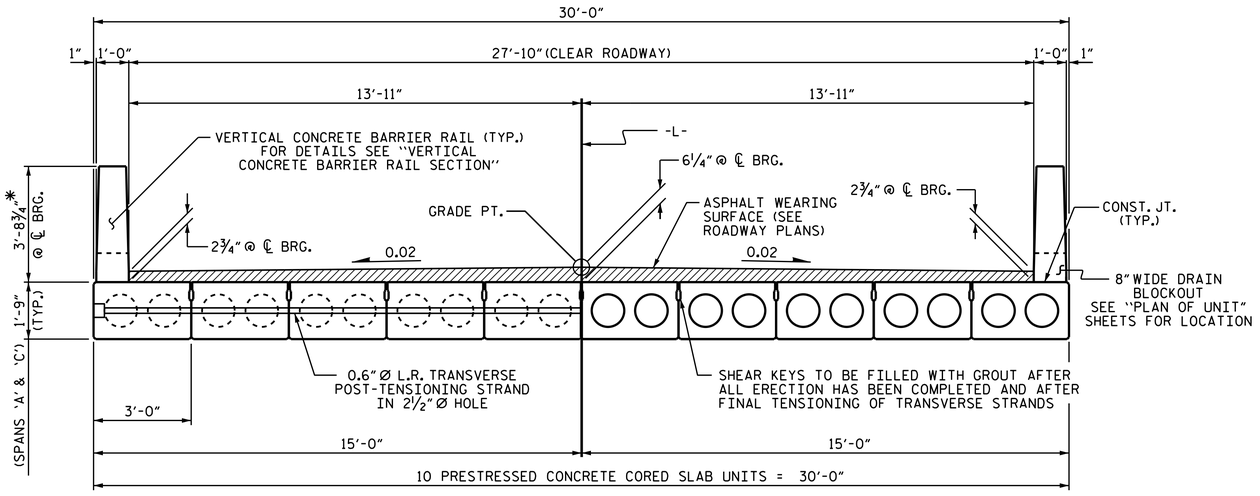

HALF SECTION
AT INTERMEDIATE DIAPHRAGMS

HALF SECTION
THROUGH VOIDS

TYPICAL SECTION

*- THE MAXIMUM BARRIER RAIL HEIGHT AND ASPHALT THICKNESS IS SHOWN. THE HEIGHT OF THE BARRIER RAIL AND ASPHALT THICKNESS VARIES WHILE THE TOP OF THE BARRIER RAIL FOLLOWS THE PROFILE OF THE GUTTERLINE. FOR RAIL HEIGHT DETAILS AND ASPHALT THICKNESS SEE THE "VERTICAL CONCRETE BARRIER RAIL SECTION" DETAIL.

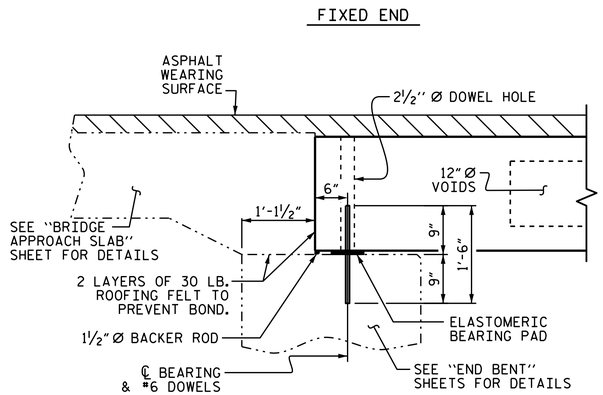

SECTION AT END BENT

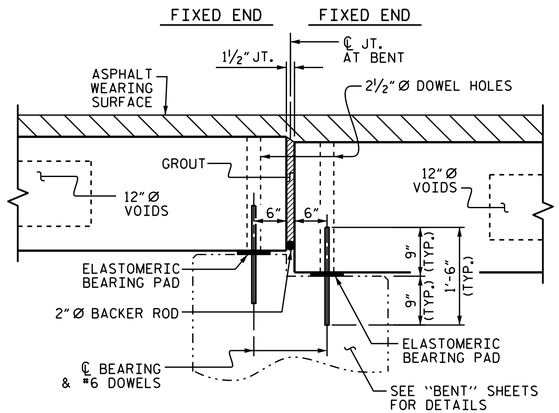

STEPPED SECTION AT BENT No. 1

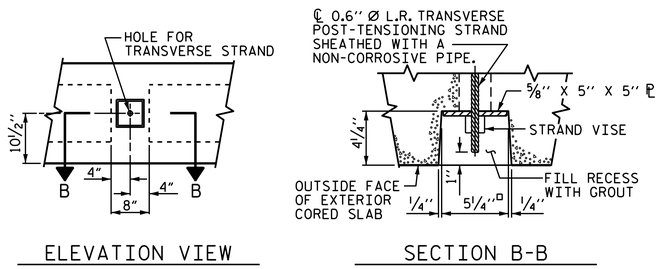

ELEVATION VIEW

SECTION B-B

GROUTED RECESS AT END OF POST-TENSIONED STRAND OF CORED SLABS

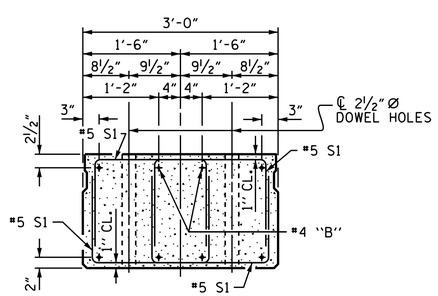

END ELEVATION

SHOWING PLACEMENT OF DOUBLE STIRRUPS AND LOCATION OF DOWEL HOLES. (STRAND LAYOUT NOT SHOWN.) INTERIOR SLAB UNIT SHOWN-EXTERIOR SLAB UNIT SIMILAR EXCEPT SHEAR KEY LOCATION.

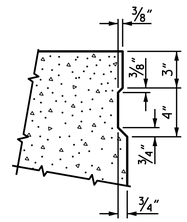

SHEAR KEY DETAIL

NOTE: OMIT SHEAR KEY ON OUTSIDE FACE OF EXTERIOR CORED SLABS.

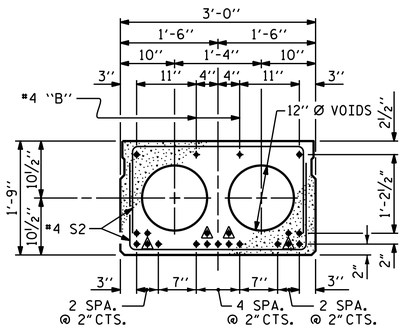

INTERIOR SLAB SECTION
(55' UNIT)
(19 STRANDS REQUIRED)

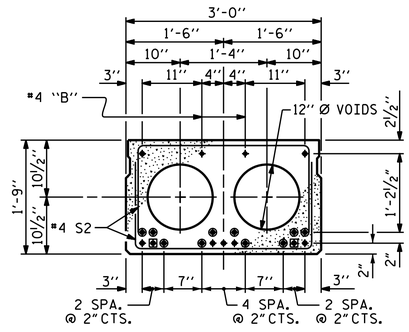

INTERIOR SLAB SECTION
(35' UNIT)
(9 STRANDS REQUIRED)

0.6" Ø LOW RELAXATION STRAND LAYOUT

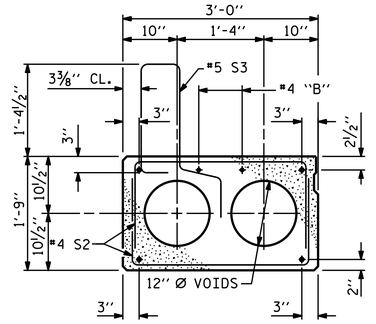

EXT. SLAB SECTION
(FOR PRESTRESSED STRAND LAYOUT, SEE INTERIOR SLAB SECTION.)

▲ BOND SHALL BE BROKEN ON THESE STRANDS FOR A DISTANCE OF 6'-0" FROM END OF CORED SLAB UNIT. SEE STANDARD SPECIFICATIONS, ARTICLE 1078-7.

▣ BOND SHALL BE BROKEN ON THESE STRANDS FOR A DISTANCE OF 2'-0" FROM END OF CORED SLAB UNIT. SEE STANDARD SPECIFICATIONS, ARTICLE 1078-7.

◉ OPTIONAL FULL LENGTH DEBONDED STRANDS. THESE STRANDS ARE NOT REQUIRED. IF THE FABRICATOR CHOOSES TO INCLUDE THESE STRANDS IN THE CORED SLAB UNIT, THE STRANDS SHALL BE DEBONDED FOR THE FULL LENGTH OF THE UNIT AT NO ADDITIONAL COST. SEE STANDARD SPECIFICATIONS, ARTICLE 1078-7.

DEBONDING LEGEND

PERMITTED THREADED INSERT CAST IN OUTSIDE FACE OF EXTERIOR UNIT AND RECESSED ⅜". SIZE TO BE DETERMINED BY CONTRACTOR.

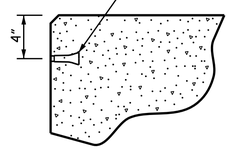

THREADED INSERT DETAIL

PROJECT NO. 17BP.12.R.68
CLEVELAND COUNTY
STATION: 16+36.00 -L-

SHEET 1 OF 8

STATE OF NORTH CAROLINA
DEPARTMENT OF TRANSPORTATION
RALEIGH

STANDARD 3'-0" X 1'-9" PRESTRESSED CONCRETE CORED SLAB UNIT 90° SKEW SPANS 'A' & 'C'

NORTH CAROLINA PROFESSIONAL SEAL 037479 ENGINEER NICHOLAS A. PIERCE
DocuSigned by: Nicholas Pierce 15110B434D0B485...
4/4/2018

REVISIONS						SHEET NO.
NO.	BY:	DATE:	NO.	BY:	DATE:	S-7
1			3			TOTAL SHEETS
2			4			25

DOCUMENT NOT CONSIDERED FINAL UNLESS ALL SIGNATURES COMPLETED

ASSEMBLED BY : REZA KOUCHEKI	DATE : 11/16	
CHECKED BY : E K POPE	DATE : 1/19/17	
DRAWN BY : DGE 5/09	REV. 8/14	MAA/TMG
CHECKED BY : BCH 6/09		

04-APR-2018 09:05
B:\TIPProjects-B\B5392\Structures\FinalPlans\401_015_17BP.12.R.68_SMU_TS_007_220201.DGN
naplerce

STD. NO. 21"PCS2_30_90S

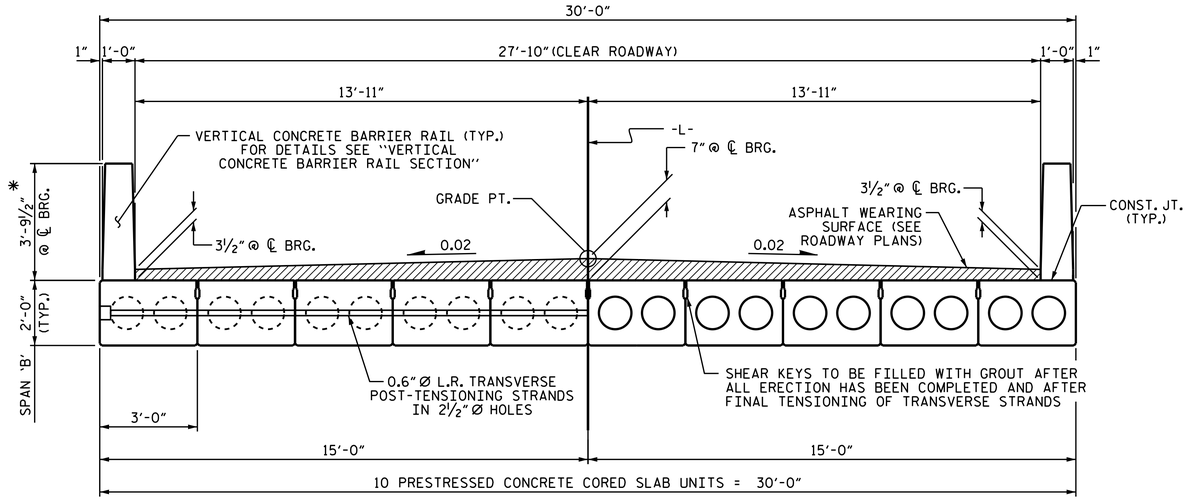

HALF SECTION AT INTERMEDIATE DIAPHRAGMS

HALF SECTION THROUGH VOIDS

TYPICAL SECTION

* - THE MAXIMUM BARRIER RAIL HEIGHT AND ASPHALT THICKNESS IS SHOWN. THE HEIGHT OF THE BARRIER RAIL AND ASPHALT THICKNESS VARIES WHILE THE TOP OF THE BARRIER RAIL FOLLOWS THE PROFILE OF THE GUTTERLINE. FOR RAIL HEIGHT DETAILS AND ASPHALT THICKNESS, SEE THE "VERTICAL CONCRETE BARRIER RAIL SECTION" DETAIL.

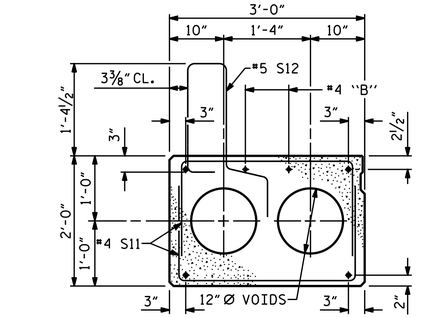

EXTERIOR SLAB SECTION

(FOR PRESTRESSED STRAND LAYOUT, SEE INTERIOR SLAB SECTION.)

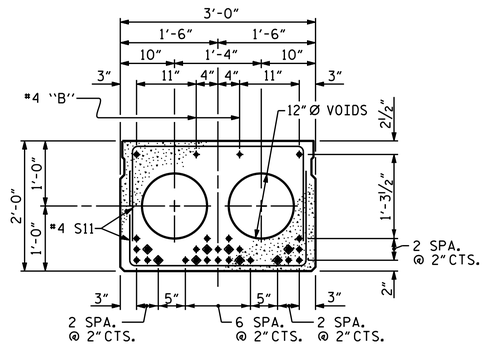

INTERIOR SLAB SECTION (70' UNIT)

(28 STRANDS REQUIRED)

0.6'' Ø LOW RELAXATION STRAND LAYOUT

◈ BOND SHALL BE BROKEN ON THESE STRANDS FOR A DISTANCE OF 12'-0" FROM END OF CORED SLAB UNIT. SEE STANDARD SPECIFICATIONS, ARTICLE 1078-7.

DEBONDING LEGEND

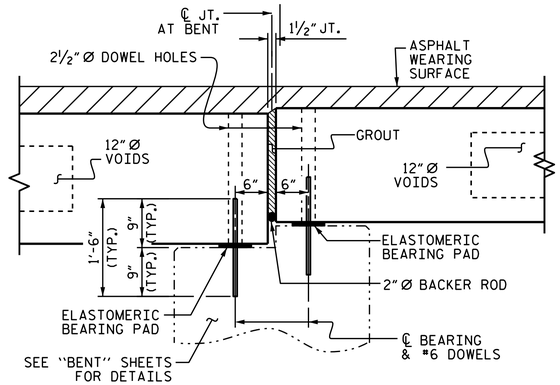

STEPPED SECTION AT BENT No. 2

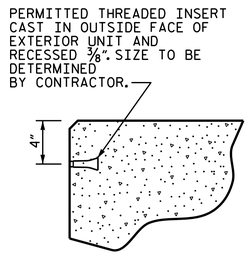

THREADED INSERT DETAIL

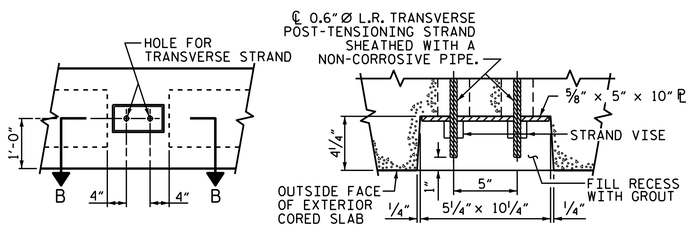

GROUTED RECESS AT END OF POST-TENSIONED STRAND CORED SLABS

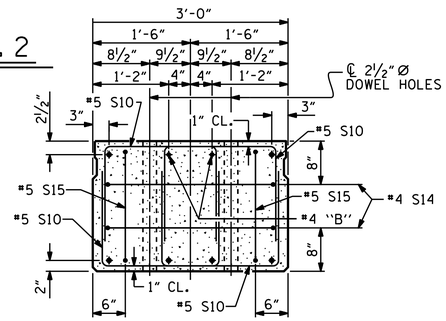

END ELEVATION

SHOWING PLACEMENT OF DOUBLE STIRRUPS AND LOCATION OF DOWEL HOLES. (STRAND LAYOUT NOT SHOWN.) INTERIOR SLAB UNIT SHOWN-EXTERIOR SLAB UNIT SIMILAR EXCEPT SHEAR KEY LOCATION.

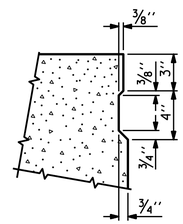

SHEAR KEY DETAIL

NOTE: OMIT SHEAR KEY ON OUTSIDE FACE OF EXTERIOR CORED SLABS.

PROJECT NO. 17BP.12.R.68

CLEVELAND COUNTY

STATION: 16+36.00 -L-

SHEET 2 OF 8

STATE OF NORTH CAROLINA
DEPARTMENT OF TRANSPORTATION
RALEIGH

STANDARD 3'-0'' X 2'-0'' PRESTRESSED CONCRETE CORED SLAB UNIT 90° SKEW SPAN 'B'

NORTH CAROLINA PROFESSIONAL SEAL 037479 ENGINEER NICHOLAS A. PIERCE

Docusigned by: Nicholas Pierce 151108434D0B485...
4/4/2018

REVISIONS						SHEET NO.
NO.	BY:	DATE:	NO.	BY:	DATE:	S-8
1			3			TOTAL SHEETS
2			4			25

DOCUMENT NOT CONSIDERED FINAL UNLESS ALL SIGNATURES COMPLETED

ASSEMBLED BY : REZA KOUCHEKI	DATE : 11/16		
CHECKED BY : E K POPE	DATE : 1/19/17		
DRAWN BY : MAA	6/10	REV. 8/14	MAA/TMG
CHECKED BY : MKT	7/10		

04-APR-2018 09:05
B:\TIPProjects-B\B5392\Structures\FinalPlans\401_017_17BP.12.R.68_SMU_TS_008_220201.DGN
napierce

STD. NO. 24PCS4_30_90S

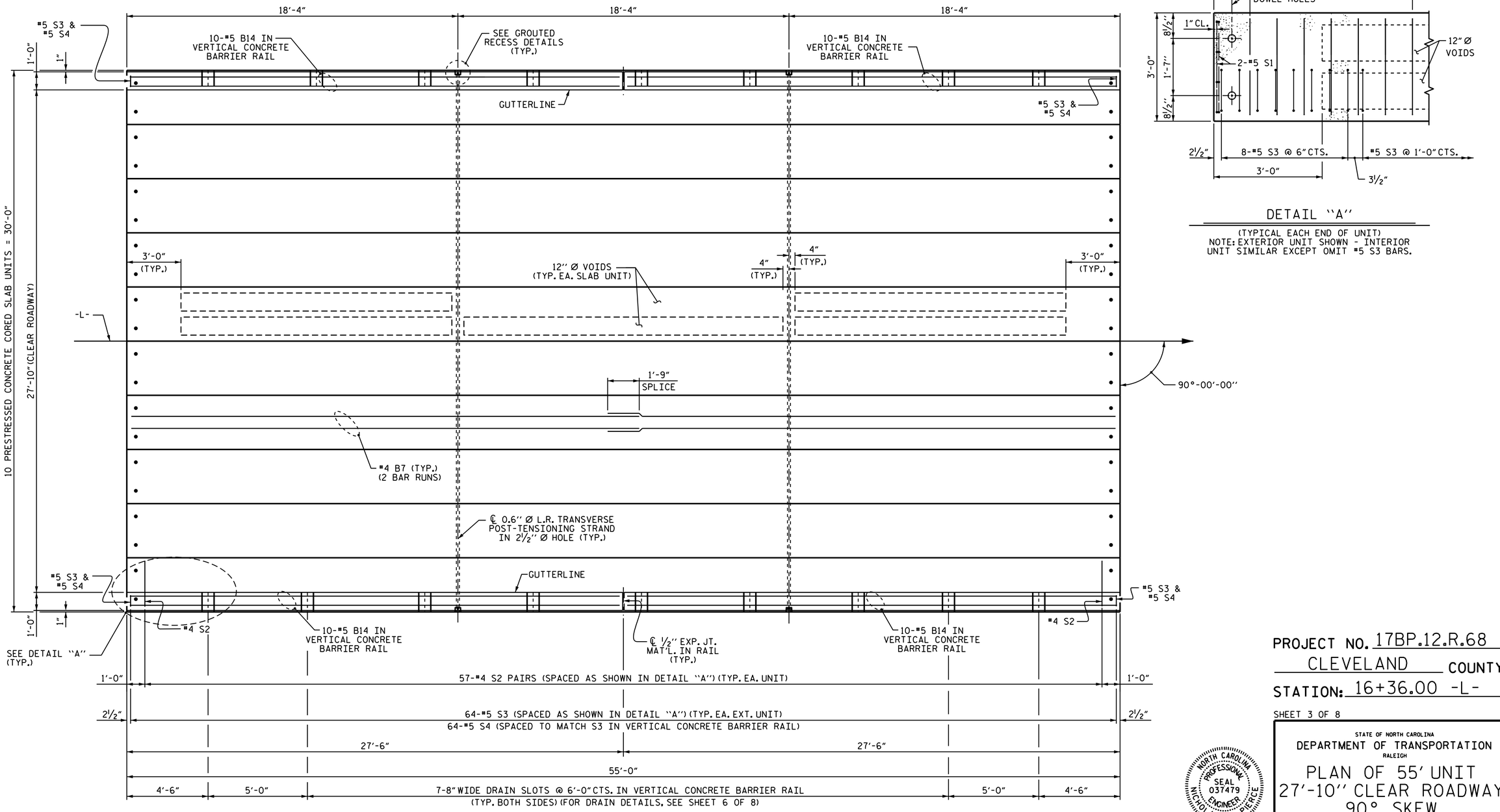

PLAN OF UNIT

DETAIL "A"

(TYPICAL EACH END OF UNIT)
NOTE: EXTERIOR UNIT SHOWN - INTERIOR UNIT SIMILAR EXCEPT OMIT #5 S3 BARS.

PROJECT NO. 17BP.12.R.68
CLEVELAND COUNTY
STATION: 16+36.00 -L-

SHEET 3 OF 8

STATE OF NORTH CAROLINA
DEPARTMENT OF TRANSPORTATION
RALEIGH

PLAN OF 55' UNIT 27'-10" CLEAR ROADWAY 90° SKEW SPAN 'A'

NORTH CAROLINA PROFESSIONAL SEAL 037479 ENGINEER NICHOLAS A. PIERCE
DocuSigned by: Nicholas Pierce 151108434D0B485...
4/4/2018

DOCUMENT NOT CONSIDERED FINAL UNLESS ALL SIGNATURES COMPLETED

REVISIONS						SHEET NO.
NO.	BY:	DATE:	NO.	BY:	DATE:	S-9
1			3			TOTAL SHEETS
2			4			25

ASSEMBLED BY : REZA KOUCHEKI DATE : 12/16
CHECKED BY : E K POPE DATE : 1/19/17

DRAWN BY : DGE 3/09
CHECKED BY : BCH 3/09

REV. 12/5/11 MAA/AAC
REV. 8/14 MAA/TMG

04-APR-2018 09:05
B:\TIPProjects-B\B5392\Structures\FinalPlans\401_019_17BP.12.R.68_SMU_PS_009_220201.DGN
naplerce

STD. NO. 21"PCS_30_90S_55L

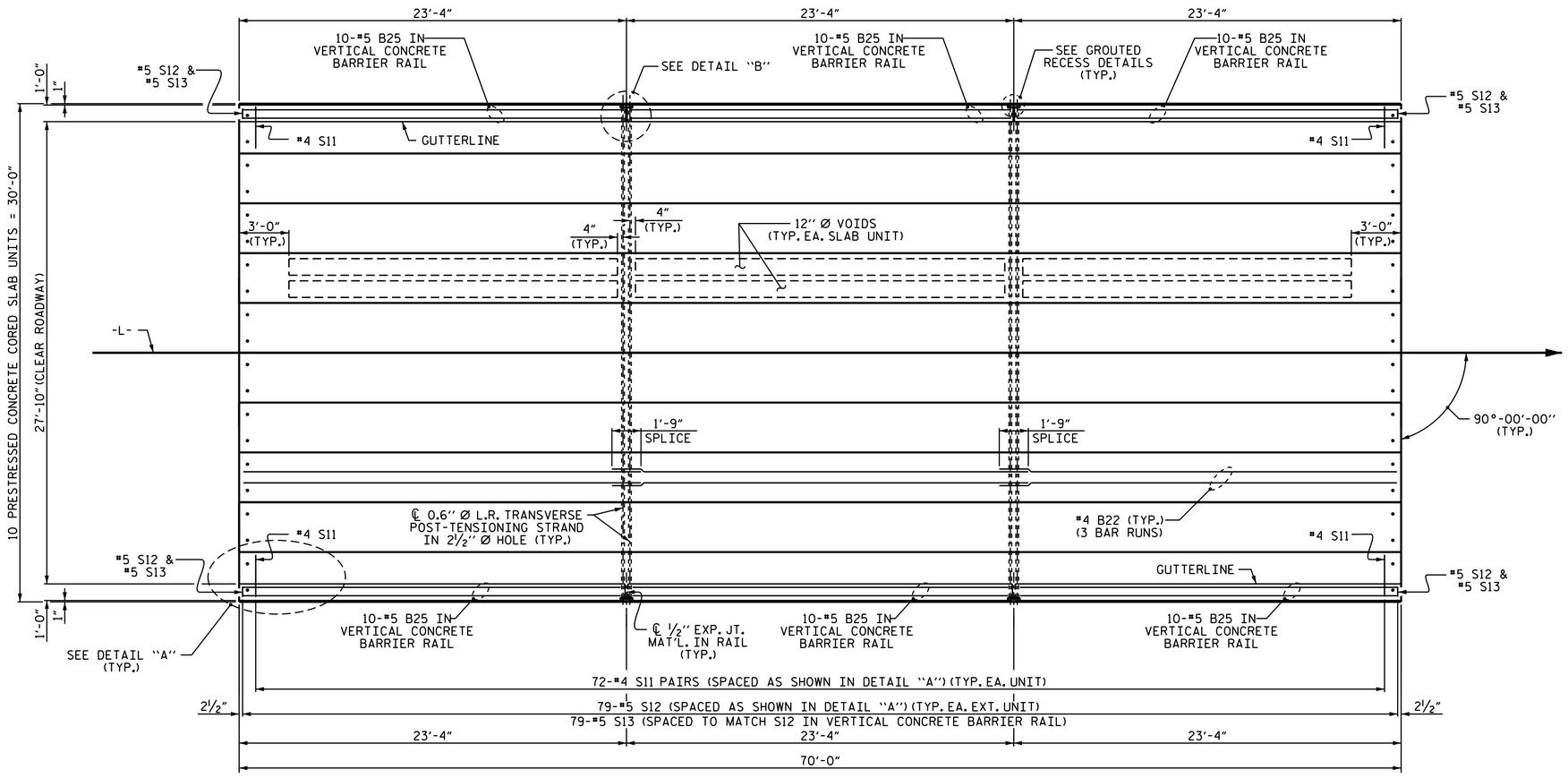

PLAN OF UNIT

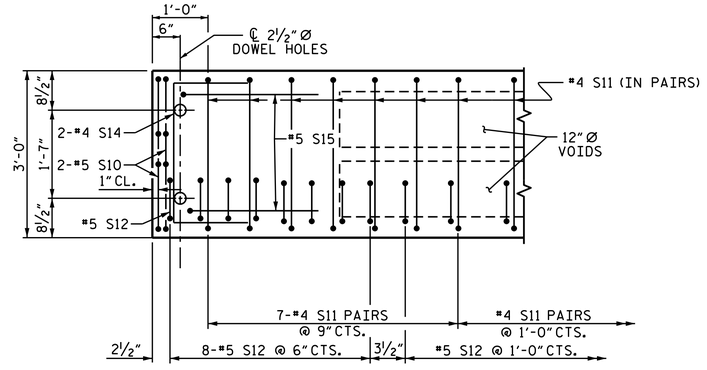

DETAIL "A"

(TYPICAL EACH END OF UNIT)
NOTE: EXTERIOR UNIT SHOWN - INTERIOR UNIT SIMILAR EXCEPT OMIT #5 S12 BARS.

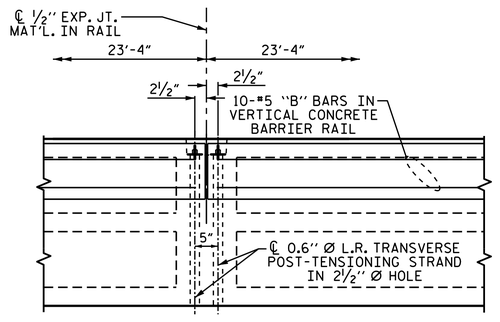

DETAIL "B"

#4 S11 BARS MAY BE SHIFTED AS NECESSARY TO MAINTAIN 1" CLEAR TO GROUTED RECESS AND 2½" Ø TRANSVERSE POST-TENSIONING STRAND HOLES

ASSEMBLED BY : REZA KOUCHEKI	DATE : 11/16		
CHECKED BY : E K POPE	DATE : 1/19/17		
DRAWN BY : MAA	6/10	REV. 12/5/11	MAA/AAC
CHECKED BY : MKT	7/10	REV. 8/14	MAA/TMG

04-APR-2018 09:05
B:\TIPProjects-B\B5392\Structures\FinalPlans\401_021_17BP.12.R.68_SMU_PS_010_220201.DGN
naplerce

PROJECT NO. 17BP.12.R.68
CLEVELAND COUNTY
STATION: 16+36.00 -L-

SHEET 4 OF 8

NORTH CAROLINA PROFESSIONAL SEAL 037479 ENGINEER NICHOLAS A. PIERCE
DocuSigned by: Nicholas Pierce 151108434D08485...
4/4/2018

DOCUMENT NOT CONSIDERED FINAL UNLESS ALL SIGNATURES COMPLETED

STATE OF NORTH CAROLINA
DEPARTMENT OF TRANSPORTATION
RALEIGH

PLAN OF 70' UNIT 27'-10" CLEAR ROADWAY 90° SKEW SPAN 'B'

REVISIONS						SHEET NO.
NO.	BY:	DATE:	NO.	BY:	DATE:	S-10
1			3			TOTAL SHEETS
2			4			25

STD. NO. 24PCS_30_90S_70L

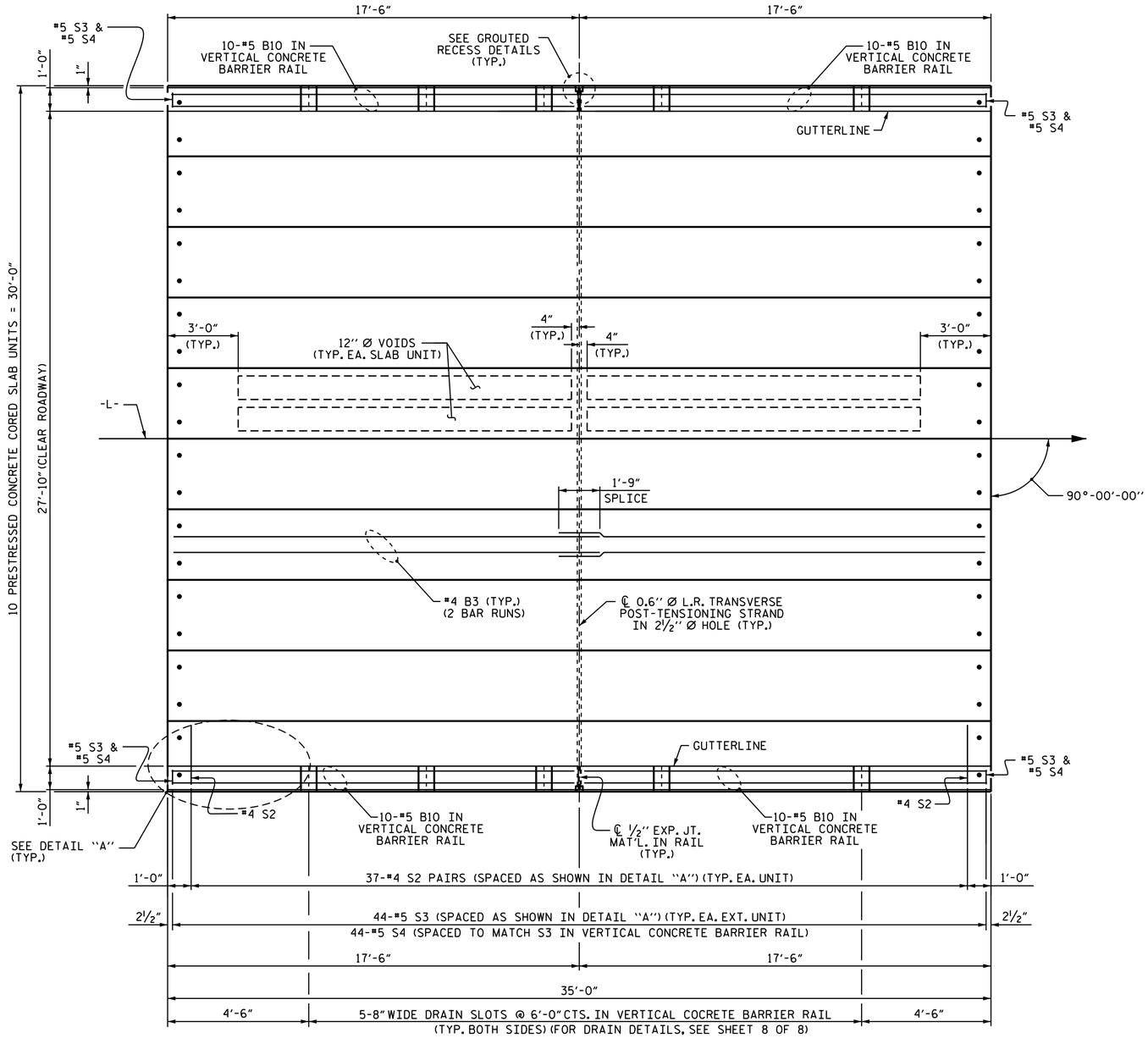

PLAN OF UNIT

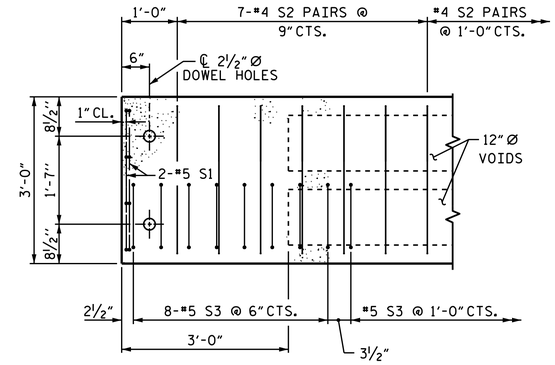

DETAIL ″A″

(TYPICAL EACH END OF UNIT)
NOTE: EXTERIOR UNIT SHOWN - INTERIOR UNIT SIMILAR EXCEPT OMIT #5 S3 BARS.

PROJECT NO. 17BP.12.R.68
CLEVELAND COUNTY
STATION: 16+36.00-L-

SHEET 5 OF 8

STATE OF NORTH CAROLINA
DEPARTMENT OF TRANSPORTATION
RALEIGH

PLAN OF 35′ UNIT 27′-10″ CLEAR ROADWAY 90° SKEW SPAN ′C′

NORTH CAROLINA PROFESSIONAL SEAL 037479 ENGINEER NICHOLAS A. PIERCE
DocuSigned by: Nicholas Pierce 151108434D0B485...
4/4/2018

DOCUMENT NOT CONSIDERED FINAL UNLESS ALL SIGNATURES COMPLETED

REVISIONS						SHEET NO.
NO.	BY:	DATE:	NO.	BY:	DATE:	S-11
1			3			TOTAL SHEETS
2			4			25

ASSEMBLED BY : REZA KOUCHEKI		DATE : 12/16	
CHECKED BY : E K POPE		DATE : 1/19/17	
DRAWN BY : DGE	3/09	REV. 12/5/11	MAA/AAC
CHECKED BY : BCH	3/09	REV. 8/14	MAA/TMG

04-APR-2018 09:05
B:\TIPProjects-B\B5392\Structures\FinalPlans\401_023_17BP.12.R.68_SMU_PS_011_220201.DGN
naplerce

STD. NO. 21″PCS_30_90S_35L

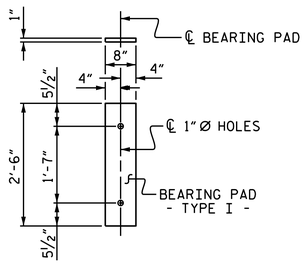

FIXED END
(TYPE I - 20 REQ'D)

ELASTOMERIC BEARING DETAILS

ELASTOMER IN ALL BEARINGS IN SPAN 'A' SHALL BE 50 DUROMETER HARDNESS.

BILL OF MATERIAL FOR ONE 55' CORED SLAB UNIT

				EXTERIOR UNIT		INTERIOR UNIT	
BAR	NUMBER	SIZE	TYPE	LENGTH	WEIGHT	LENGTH	WEIGHT
B7	4	#4	STR	28'-3"	75	28'-3"	75
S1	8	#5	3	4'-3"	35	4'-3"	35
S2	114	#4	3	5'-4"	406	5'-4"	406
✱ S3	64	#5	1	5'-7"	373		
REINFORCING STEEL			LBS.		516		516
✱EPOXY COATED REINFORCING STEEL			LBS.		373		
6500 P.S.I. CONCRETE			CU. YDS.		7.8		7.8
0.6"Ø L.R. STRANDS			No.		19		19

GUTTERLINE ASPHALT THICKNESS & RAIL HEIGHT

	ASPHALT OVERLAY THICKNESS	RAIL HEIGHT
	@ MID-SPAN	@ MID-SPAN
55' UNITS	1⅝"	3'-7⅝"

CORED SLABS REQUIRED

	NUMBER	LENGTH	TOTAL LENGTH
55' UNIT			
EXTERIOR C.S.	2	55'-0"	110'-0"
INTERIOR C.S.	8	55'-0"	440'-0"
TOTAL	10	55'-0"	550'-0"

BAR TYPES

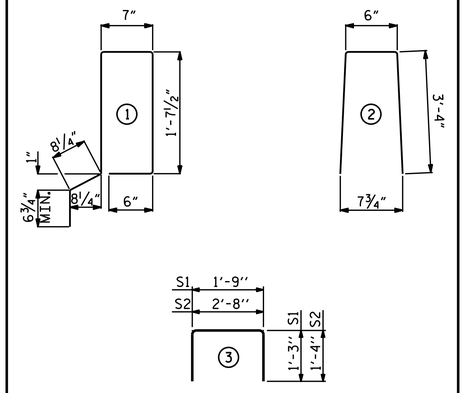

ALL BAR DIMENSIONS ARE OUT TO OUT

BILL OF MATERIAL FOR VERTICAL CONCRETE BARRIER RAIL

BAR	BARS PER PAIR OF EXTERIOR UNITS	TOTAL NO.	SIZE	TYPE	LENGTH	WEIGHT
	55' UNIT					
✱B14	40	40	#5	STR	27'-1"	1130
✱ S4	128	128	#5	2	7'-2"	957
✱EPOXY COATED REINFORCING STEEL				LBS.		2087
CLASS AA CONCRETE				CU.YDS.		14.1
TOTAL VERTICAL CONCRETE BARRIER RAIL				LN. FT.		110.25

DEAD LOAD DEFLECTION AND CAMBER

	3'-0" x 1'-9"
55' CORED SLAB UNIT	0.6"Ø L.R. STRAND
CAMBER (SLAB ALONE IN PLACE)	1½" ↑
DEFLECTION DUE TO SUPERIMPOSED DEAD LOAD✱✱	⅜" ↓
FINAL CAMBER	1⅛" ↑

✱✱ INCLUDES FUTURE WEARING SURFACE

NOTES

ALL PRESTRESSING STRANDS SHALL BE 7-WIRE LOW RELAXATION GRADE 270 STRANDS AND SHALL CONFORM TO AASHTO M203 EXCEPT FOR SAMPLING REQUIREMENTS WHICH SHALL BE IN ACCORDANCE WITH THE STANDARD SPECIFICATIONS.

ALL REINFORCING STEEL CAST WITH THE CORED SLAB SECTIONS SHALL BE GRADE 60 AND SHALL BE INCLUDED IN THE UNIT PRICE BID FOR PRESTRESSED CONCRETE CORED SLABS.

RECESSES FOR TRANSVERSE STRANDS SHALL BE GROUTED AFTER THE TENSIONING OF THE STRANDS.

THE 2½"Ø DOWEL HOLES AT FIXED ENDS OF SLAB SECTIONS SHALL BE FILLED WITH NON-SHRINK GROUT.

THE BACKER RODS SHALL CONFORM TO THE REQUIREMENTS OF TYPE M BOND BREAKER. SEE SECTION 1028 OF THE STANDARD SPECIFICATIONS.

WHEN CORED SLABS ARE CAST, AN INTERNAL HOLD-DOWN SYSTEM SHALL BE EMPLOYED TO PREVENT VOIDS FROM RISING OR MOVING SIDEWAYS. AT LEAST SIX WEEKS PRIOR TO CASTING CORED SLABS, THE CONTRACTOR SHALL SUBMIT TO THE ENGINEER FOR REVIEW AND COMMENT, DETAILED DRAWINGS OF THE PROPOSED HOLD-DOWN SYSTEM. IN ADDITION TO STRUCTURAL DETAILS, LOCATION AND SPACING OF THE HOLD-DOWNS SHALL BE INDICATED.

ALL REINFORCING STEEL IN THE VERTICAL CONCRETE BARRIER RAIL SHALL BE EPOXY COATED.

PRESTRESSING STRANDS SHALL BE CUT FLUSH WITH THE CORED SLAB UNIT ENDS.

APPLY EPOXY PROTECTIVE COATING TO CORED SLAB UNIT ENDS.

GROOVED CONTRACTION JOINTS, ½" IN DEPTH, SHALL BE TOOLED IN ALL EXPOSED FACES OF THE BARRIER RAIL AND IN ACCORDANCE WITH ARTICLE 825-10(B) OF THE STANDARD SPECIFICATIONS. A CONTRACTION JOINT SHALL BE LOCATED AT EACH THIRD POINT BETWEEN BARRIER RAIL EXPANSION JOINTS. ONLY ONE CONTRACTION JOINT IS REQUIRED AT MIDPOINT OF BARRIER RAIL SEGMENTS LESS THAN 20 FEET IN LENGTH AND NO CONTRACTION JOINTS ARE REQUIRED FOR THOSE SEGMENTS LESS THAN 10 FEET IN LENGTH.

FLAME CUTTING OF THE TRANSVERSE POST-TENSIONING STRAND IS NOT ALLOWED.

THE TRANSFER OF LOAD FROM THE ANCHORAGES TO THE CORED SLAB UNIT SHALL BE DONE WHEN THE CONCRETE HAS REACHED A COMPRESSIVE STRENGTH OF NOT LESS THAN THE REQUIRED STRENGTH SHOWN IN THE "CONCRETE RELEASE STRENGTH" TABLE.

FOR GROUT FOR STRUCTURES, SEE SPECIAL PROVISIONS.

THE PERMITTED THREADED INSERTS ARE DETAILED AS AN OPTION FOR THE CONTRACTOR TO ATTACH FALSEWORK AND FORMWORK DURING CONSTRUCTION.

THE PERMITTED THREADED INSERTS IN THE EXTERIOR UNITS SHALL BE SIZED BY THE CONTRACTOR, SPACED AT 4'-0" CENTERS AND GALVANIZED IN ACCORDANCE WITH SECTION 1076 OF THE STANDARD SPECIFICATIONS. STAINLESS STEEL THREADED INSERTS MAY BE USED AS AN ALTERNATE.

THE PERMITTED THREADED INSERTS SHALL BE GROUTED BY THE CONTRACTOR IMMEDIATELY FOLLOWING REMOVAL OF THE FALSEWORK.

THE COST OF THE PERMITTED THREADED INSERTS SHALL BE INCLUDED IN THE PRICE BID FOR THE PRECAST UNITS.

THE DRAIN OPENING AT THE GUTTERLINE SHALL BE 4" X 8". THE HEIGHT OF THE BLOCKOUT IN THE VERTICAL CONCRETE BARRIER RAIL SHALL EXTEND FROM THE TOP OF THE CORED SLAB UNIT TO THE TOP OF THE DRAIN OPENING.

APPLY EPOXY PROTECTIVE COATING TO EXTERIOR FACE OF THE EXTERIOR CORED SLAB UNITS THAT REQUIRE DRAINS IN THE BARRIER RAIL.

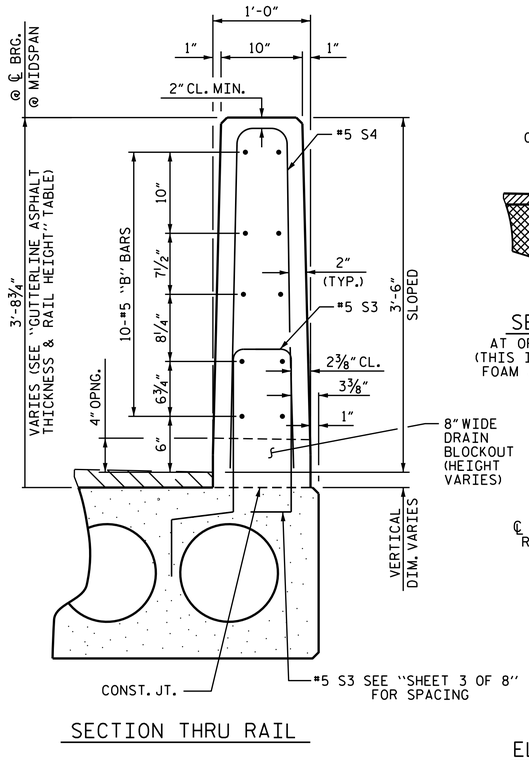

SECTION THRU RAIL

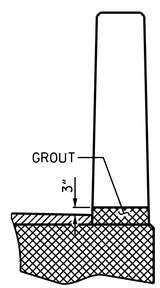

SECTION T-T
AT OPEN JOINT AT BENT
(THIS IS TO BE USED WHERE FOAM JOINT IS NOT USED)

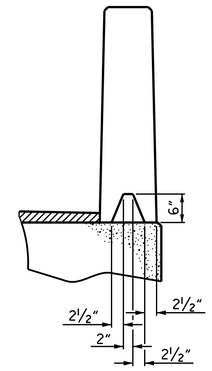

SECTION S-S
AT DAM IN OPEN JOINT
(THIS IS TO BE USED ONLY WHEN SLIP FORM IS USED)

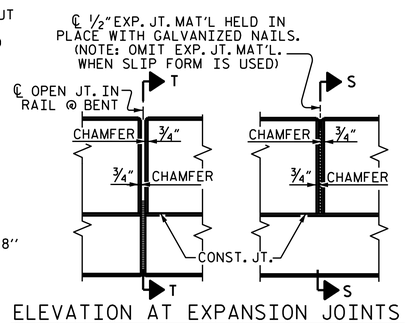

ELEVATION AT EXPANSION JOINTS

VERTICAL CONCRETE BARRIER RAIL SECTION

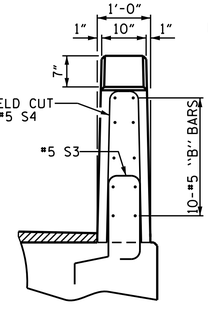

END VIEW

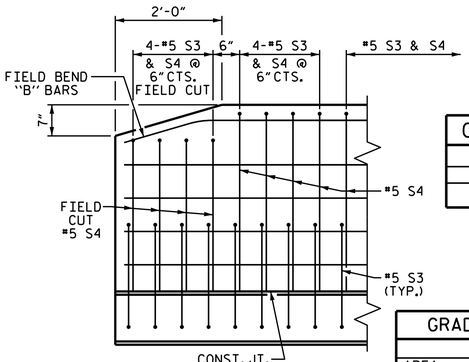

SIDE VIEW

END OF RAIL DETAILS

CONCRETE RELEASE STRENGTH

UNIT	PSI
55' UNITS	4900

GRADE 270 STRANDS

	0.6"Ø L.R.
AREA (SQUARE INCHES)	0.217
ULTIMATE STRENGTH (LBS. PER STRAND)	58,600
APPLIED PRESTRESS (LBS. PER STRAND)	43,950

NORTH CAROLINA PROFESSIONAL SEAL 037479 ENGINEER NICHOLAS A. PIERCE
Digitally signed by: Nicholas Pierce
15110B434D0B485...
4/4/2018

PROJECT NO. 17BP.12.R.68
CLEVELAND COUNTY
STATION: 16+36.00 -L-

SHEET 6 OF 8

STATE OF NORTH CAROLINA
DEPARTMENT OF TRANSPORTATION
RALEIGH

STANDARD
3'-0" X 1'-9"
PRESTRESSED CONCRETE
CORED SLAB UNIT
90° SKEW
SPAN 'A'

REVISIONS						SHEET NO.
NO.	BY:	DATE:	NO.	BY:	DATE:	S-12
1			3			TOTAL SHEETS
2			4			25

ASSEMBLED BY : REZA KOUCHEKI	DATE : 12/2/16
CHECKED BY : E K POPE	DATE : 1/19/17
DRAWN BY : DGE 5/09	REV. 11/14 MAA/TMG
CHECKED BY : BCH 6/09	

DOCUMENT NOT CONSIDERED FINAL UNLESS ALL SIGNATURES COMPLETED

04-APR-2018 09:05
B:\TIPProjects-B\B5392\Structures\FinalPlans\401_025_17BP.12.R.68_SMU_BR_012_220201.DGN
noplerce

STD. NO. 21"PCS3_30_90S

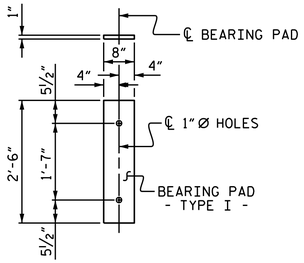

FIXED END
(TYPE I - 20 REQ'D)

ELASTOMERIC BEARING DETAILS

ELASTOMER IN ALL BEARINGS IN SPAN 'B' SHALL BE 60 DUROMETER HARDNESS.

BILL OF MATERIAL FOR ONE 70' CORED SLAB UNIT

BAR	NUMBER	SIZE	TYPE	EXTERIOR UNIT LENGTH	EXTERIOR UNIT WEIGHT	INTERIOR UNIT LENGTH	INTERIOR UNIT WEIGHT
B22	6	#4	STR	24'-6"	98	24'-6"	98
S10	8	#5	3	4'-9"	40	4'-9"	40
S11	144	#4	3	5'-10"	561	5'-10"	561
✱S12	79	#5	1	5'-7"	460		
S14	4	#4	3	5'-7"	15	5'-7"	15
S15	4	#5	3	7'-1"	30	7'-1"	30
REINFORCING STEEL			LBS.		744		744
✱EPOXY COATED REINFORCING STEEL			LBS.		460		
7000 P.S.I. CONCRETE			CU. YDS.		11.8		11.8
0.6"Ø L.R. STRANDS			No.		28		28

BAR TYPES

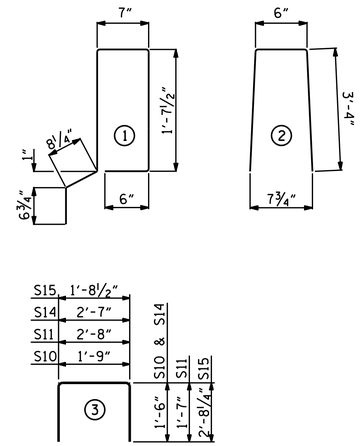

ALL BAR DIMENSIONS ARE OUT TO OUT

NOTES

ALL PRESTRESSING STRANDS SHALL BE 7-WIRE LOW RELAXATION GRADE 270 STRANDS AND SHALL CONFORM TO AASHTO M203 EXCEPT FOR SAMPLING REQUIREMENTS WHICH SHALL BE IN ACCORDANCE WITH THE STANDARD SPECIFICATIONS.

ALL REINFORCING STEEL CAST WITH THE CORED SLAB SECTIONS SHALL BE GRADE 60 AND SHALL BE INCLUDED IN THE UNIT PRICE BID FOR PRESTRESSED CONCRETE CORED SLABS.

RECESSES FOR TRANSVERSE STRANDS SHALL BE GROUTED AFTER THE TENSIONING OF THE STRANDS.

THE 2½"Ø DOWEL HOLES AT FIXED ENDS OF SLAB SECTIONS SHALL BE FILLED WITH NON-SHRINK GROUT.

THE BACKER RODS SHALL CONFORM TO THE REQUIREMENTS OF TYPE M BOND BREAKER. SEE SECTION 1028 OF THE STANDARD SPECIFICATIONS.

WHEN CORED SLABS ARE CAST, AN INTERNAL HOLD-DOWN SYSTEM SHALL BE EMPLOYED TO PREVENT VOIDS FROM RISING OR MOVING SIDEWAYS. AT LEAST SIX WEEKS PRIOR TO CASTING CORED SLABS, THE CONTRACTOR SHALL SUBMIT TO THE ENGINEER FOR REVIEW AND COMMENT, DETAILED DRAWINGS OF THE PROPOSED HOLD-DOWN SYSTEM. IN ADDITION TO STRUCTURAL DETAILS, LOCATION AND SPACING OF THE HOLD-DOWNS SHALL BE INDICATED.

THE TRANSFER OF LOAD FROM THE ANCHORAGES TO THE CORED SLAB UNIT SHALL BE DONE WHEN THE CONCRETE HAS REACHED A COMPRESSIVE STRENGTH OF NOT LESS THAN THE REQUIRED STRENGTH SHOWN IN THE "CONCRETE RELEASE STRENGTH" TABLE.

ALL REINFORCING STEEL IN VERTICAL CONCRETE BARRIER RAILS SHALL BE EPOXY COATED.

PRESTRESSING STRANDS SHALL BE CUT FLUSH WITH THE CORED SLAB UNIT ENDS.

APPLY EPOXY PROTECTIVE COATING TO CORED SLAB UNIT ENDS.

GROOVED CONTRACTION JOINTS, ½" IN DEPTH, SHALL BE TOOLED IN ALL EXPOSED FACES OF THE BARRIER RAIL AND IN ACCORDANCE WITH ARTICLE 825-10(B) OF THE STANDARD SPECIFICATIONS. A CONTRACTION JOINT SHALL BE LOCATED AT EACH THIRD POINT BETWEEN BARRIER RAIL EXPANSION JOINTS. ONLY ONE CONTRACTION JOINT IS REQUIRED AT MIDPOINT OF BARRIER RAIL SEGMENTS LESS THAN 20 FEET IN LENGTH AND NO CONTRACTION JOINTS ARE REQUIRED FOR THOSE SEGMENTS LESS THAN 10 FEET IN LENGTH.

FLAME CUTTING OF THE TRANSVERSE POST-TENSIONING STRAND IS NOT ALLOWED.

MAINTAIN A SYMMETRIC TENSION FORCE BETWEEN EACH PAIR OF TRANSVERSE POST TENSIONING STRANDS IN THE DIAPHRAGM.

THE #4 S11 STIRRUPS MAY BE SHIFTED AS NECESSARY TO MAINTAIN 1" CLEAR TO THE GROUTED RECESS.

FOR GROUT FOR STRUCTURES, SEE SPECIAL PROVISIONS.

THE PERMITTED THREADED INSERTS ARE DETAILED AS AN OPTION FOR THE CONTRACTOR TO ATTACH FALSEWORK AND FORMWORK DURING CONSTRUCTION.

THE PERMITTED THREADED INSERTS IN THE EXTERIOR UNITS SHALL BE SIZED BY THE CONTRACTOR, SPACED AT 4'-0" CENTERS AND GALVANIZED IN ACCORDANCE WITH SECTION 1076 OF THE STANDARD SPECIFICATIONS. STAINLESS STEEL THREADED INSERTS MAY BE USED AS AN ALTERNATE.

THE PERMITTED THREADED INSERTS SHALL BE GROUTED BY THE CONTRACTOR IMMEDIATELY FOLLOWING REMOVAL OF THE FALSEWORK.

THE COST OF THE PERMITTED THREADED INSERTS SHALL BE INCLUDED IN THE PRICE BID FOR THE PRECAST UNITS.

CORED SLABS REQUIRED

	NUMBER	LENGTH	TOTAL LENGTH
70' UNIT			
EXTERIOR C.S.	2	70'-0"	140'-0"
INTERIOR C.S.	8	70'-0"	560'-0"
TOTAL	10	70'-0"	700'-0"

GUTTERLINE ASPHALT THICKNESS & RAIL HEIGHT

	ASPHALT OVERLAY THICKNESS @ MID-SPAN	RAIL HEIGHT @ MID-SPAN
70' UNITS	2"	3'-8"

BILL OF MATERIAL FOR VERTICAL CONCRETE BARRIER RAIL

BAR	BARS PER PAIR OF EXTERIOR UNITS 70' UNIT	TOTAL NO.	SIZE	TYPE	LENGTH	WEIGHT
✱B25	60	60	#5	STR	22'-11"	1434
✱S13	158	158	#5	2	7'-2"	1181
✱EPOXY COATED REINFORCING STEEL				LBS.		2615
CLASS AA CONCRETE				CU.YDS.		18.1
TOTAL VERTICAL CONCRETE BARRIER RAIL				LN. FT.		140.25

DEAD LOAD DEFLECTION AND CAMBER

	3'-0" x 2'-0" 0.6"Ø L.R. STRAND
70' CORED SLAB UNIT	
CAMBER (SLAB ALONE IN PLACE)	2¼" ↑
DEFLECTION DUE TO SUPERIMPOSED DEAD LOAD✱✱	¾" ↓
FINAL CAMBER	1½" ↑

✱✱ INCLUDES FUTURE WEARING SURFACE

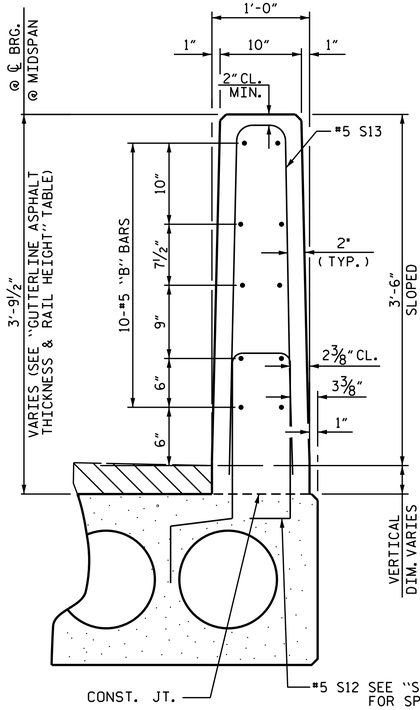

SECTION THRU RAIL

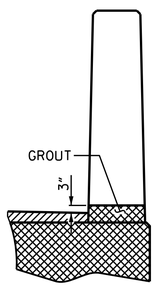

SECTION T-T
AT OPEN JOINT AT BENT
(THIS IS TO BE USED WHERE FOAM JOINT IS NOT USED)

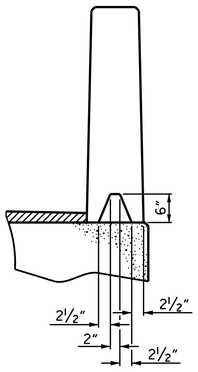

SECTION S-S
AT DAM IN OPEN JOINT
(THIS IS TO BE USED ONLY WHEN SLIP FORM IS USED)

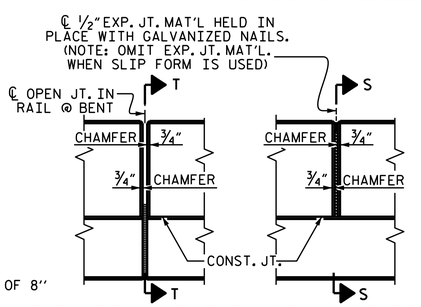

ELEVATION AT EXPANSION JOINTS

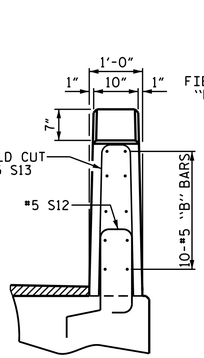

END VIEW

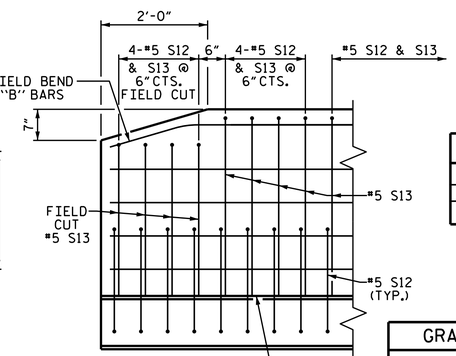

SIDE VIEW

VERTICAL CONCRETE BARRIER RAIL DETAILS

END OF RAIL DETAILS

CONCRETE RELEASE STRENGTH

UNIT	PSI
70' UNITS	5500

GRADE 270 STRANDS

	0.6"Ø L.R.
AREA (SQUARE INCHES)	0.217
ULTIMATE STRENGTH (LBS. PER STRAND)	58,600
APPLIED PRESTRESS (LBS. PER STRAND)	43,950

NORTH CAROLINA PROFESSIONAL SEAL 037479 ENGINEER NICHOLAS A. PIERCE
DocuSigned by: Nicholas Pierce
15110B434D0B485...
4/4/2018

PROJECT NO. 17BP.12.R.68
CLEVELAND COUNTY
STATION: 16+36.00 -L-

SHEET 7 OF 8

STATE OF NORTH CAROLINA
DEPARTMENT OF TRANSPORTATION
RALEIGH
STANDARD
3'-0" X 2'-0"
PRESTRESSED CONCRETE
CORED SLAB UNIT
90° SKEW
SPAN 'B'

REVISIONS						SHEET NO.
NO.	BY:	DATE:	NO.	BY:	DATE:	S-13
1			3			TOTAL SHEETS
2			4			25

ASSEMBLED BY : REZA KOUCHEKI	DATE : 12/2/16
CHECKED BY : E K POPE	DATE : 1/19/17
DRAWN BY : MAA 6/10	REV. 11/14 MAA/TMG
CHECKED BY : MKT 7/10	

DOCUMENT NOT CONSIDERED FINAL UNLESS ALL SIGNATURES COMPLETED

04-APR-2018 09:05
B:\TIPProjects-B\B5392\Structures\FinalPlans\401_027_17BP.12.R.68_SMU_BR_013_220201.DGN
naplerce

STD. NO. 24PCS3_30_90S

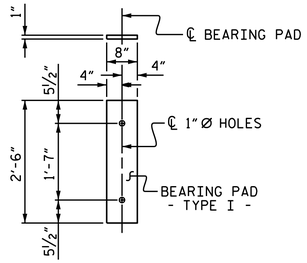

FIXED END
(TYPE I - 20 REQ'D)

ELASTOMERIC BEARING DETAILS

ELASTOMER IN ALL BEARINGS IN SPAN 'C' SHALL BE 50 DUROMETER HARDNESS.

BILL OF MATERIAL FOR ONE 35' CORED SLAB UNIT

				EXTERIOR UNIT		INTERIOR UNIT	
BAR	NUMBER	SIZE	TYPE	LENGTH	WEIGHT	LENGTH	WEIGHT
B3	4	#4	STR	18'-3"	49	18'-3"	49
S1	8	#5	3	4'-3"	35	4'-3"	35
S2	74	#4	3	5'-4"	264	5'-4"	264
✱ S3	44	#5	1	5'-7"	256		
REINFORCING STEEL			LBS.		348		348
✱EPOXY COATED REINFORCING STEEL			LBS.		256		
5000 P.S.I. CONCRETE			CU. YDS.		5.1		5.1
0.6"Ø L.R. STRANDS			No.		9		9

GUTTERLINE ASPHALT THICKNESS & RAIL HEIGHT

	ASPHALT OVERLAY THICKNESS	RAIL HEIGHT
	@ MID-SPAN	@ MID-SPAN
35' UNITS	2⅝"	3'-8⅝"

BAR TYPES

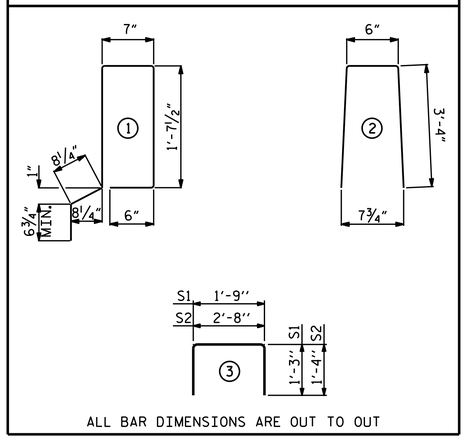

ALL BAR DIMENSIONS ARE OUT TO OUT

NOTES

ALL PRESTRESSING STRANDS SHALL BE 7-WIRE LOW RELAXATION GRADE 270 STRANDS AND SHALL CONFORM TO AASHTO M203 EXCEPT FOR SAMPLING REQUIREMENTS WHICH SHALL BE IN ACCORDANCE WITH THE STANDARD SPECIFICATIONS.

ALL REINFORCING STEEL CAST WITH THE CORED SLAB SECTIONS SHALL BE GRADE 60 AND SHALL BE INCLUDED IN THE UNIT PRICE BID FOR PRESTRESSED CONCRETE CORED SLABS.

RECESSES FOR TRANSVERSE STRANDS SHALL BE GROUTED AFTER THE TENSIONING OF THE STRANDS.

THE 2½"Ø DOWEL HOLES AT FIXED ENDS OF SLAB SECTIONS SHALL BE FILLED WITH NON-SHRINK GROUT.

THE BACKER RODS SHALL CONFORM TO THE REQUIREMENTS OF TYPE M BOND BREAKER. SEE SECTION 1028 OF THE STANDARD SPECIFICATIONS.

WHEN CORED SLABS ARE CAST, AN INTERNAL HOLD-DOWN SYSTEM SHALL BE EMPLOYED TO PREVENT VOIDS FROM RISING OR MOVING SIDEWAYS. AT LEAST SIX WEEKS PRIOR TO CASTING CORED SLABS, THE CONTRACTOR SHALL SUBMIT TO THE ENGINEER FOR REVIEW AND COMMENT, DETAILED DRAWINGS OF THE PROPOSED HOLD-DOWN SYSTEM. IN ADDITION TO STRUCTURAL DETAILS, LOCATION AND SPACING OF THE HOLD-DOWNS SHALL BE INDICATED.

ALL REINFORCING STEEL IN THE VERTICAL CONCRETE BARRIER RAIL SHALL BE EPOXY COATED.

PRESTRESSING STRANDS SHALL BE CUT FLUSH WITH THE CORED SLAB UNIT ENDS.

APPLY EPOXY PROTECTIVE COATING TO CORED SLAB UNIT ENDS.

GROOVED CONTRACTION JOINTS, ½" IN DEPTH, SHALL BE TOOLED IN ALL EXPOSED FACES OF THE BARRIER RAIL AND IN ACCORDANCE WITH ARTICLE 825-10(B) OF THE STANDARD SPECIFICATIONS. A CONTRACTION JOINT SHALL BE LOCATED AT EACH THIRD POINT BETWEEN BARRIER RAIL EXPANSION JOINTS. ONLY ONE CONTRACTION JOINT IS REQUIRED AT MIDPOINT OF BARRIER RAIL SEGMENTS LESS THAN 20 FEET IN LENGTH AND NO CONTRACTION JOINTS ARE REQUIRED FOR THOSE SEGMENTS LESS THAN 10 FEET IN LENGTH.

FLAME CUTTING OF THE TRANSVERSE POST-TENSIONING STRAND IS NOT ALLOWED.

THE TRANSFER OF LOAD FROM THE ANCHORAGES TO THE CORED SLAB UNIT SHALL BE DONE WHEN THE CONCRETE HAS REACHED A COMPRESSIVE STRENGTH OF NOT LESS THAN THE REQUIRED STRENGTH SHOWN IN THE "CONCRETE RELEASE STRENGTH" TABLE.

FOR GROUT FOR STRUCTURES, SEE SPECIAL PROVISIONS.

THE PERMITTED THREADED INSERTS ARE DETAILED AS AN OPTION FOR THE CONTRACTOR TO ATTACH FALSEWORK AND FORMWORK DURING CONSTRUCTION.

THE PERMITTED THREADED INSERTS IN THE EXTERIOR UNITS SHALL BE SIZED BY THE CONTRACTOR, SPACED AT 4'-0" CENTERS AND GALVANIZED IN ACCORDANCE WITH SECTION 1076 OF THE STANDARD SPECIFICATIONS. STAINLESS STEEL THREADED INSERTS MAY BE USED AS AN ALTERNATE.

THE PERMITTED THREADED INSERTS SHALL BE GROUTED BY THE CONTRACTOR IMMEDIATELY FOLLOWING REMOVAL OF THE FALSEWORK.

THE COST OF THE PERMITTED THREADED INSERTS SHALL BE INCLUDED IN THE PRICE BID FOR THE PRECAST UNITS.

THE DRAIN OPENING AT THE GUTTERLINE SHALL BE 4" X 8". THE HEIGHT OF THE BLOCKOUT IN THE VERTICAL CONCRETE BARRIER RAIL SHALL EXTEND FROM THE TOP OF THE CORED SLAB UNIT TO THE TOP OF THE DRAIN OPENING.

APPLY EPOXY PROTECTIVE COATING TO EXTERIOR FACE OF THE EXTERIOR CORED SLAB UNITS THAT REQUIRE DRAINS IN THE BARRIER RAIL.

CORED SLABS REQUIRED

	NUMBER	LENGTH	TOTAL LENGTH
35' UNIT			
EXTERIOR C.S.	2	35'-0"	70'-0"
INTERIOR C.S.	8	35'-0"	280'-0"
TOTAL	10	35'-0"	350'-0"

BILL OF MATERIAL FOR VERTICAL CONCRETE BARRIER RAIL

BAR	BARS PER PAIR OF EXTERIOR UNITS	TOTAL NO.	SIZE	TYPE	LENGTH	WEIGHT
	35' UNIT					
✱B10	40	40	#5	STR	17'-1"	713
✱ S4	88	88	#5	2	7'-2"	658
✱EPOXY COATED REINFORCING STEEL				LBS.		1371
CLASS AA CONCRETE				CU.YDS.		9.0
TOTAL VERTICAL CONCRETE BARRIER RAIL				LN. FT.		70.25

DEAD LOAD DEFLECTION AND CAMBER

	3'-0" x 1'-9"
35' CORED SLAB UNIT	0.6"Ø L.R. STRAND
CAMBER (SLAB ALONE IN PLACE)	¼" ↑
DEFLECTION DUE TO SUPERIMPOSED DEAD LOAD✱✱	⅛" ↓
FINAL CAMBER	⅛" ↑

✱✱ INCLUDES FUTURE WEARING SURFACE

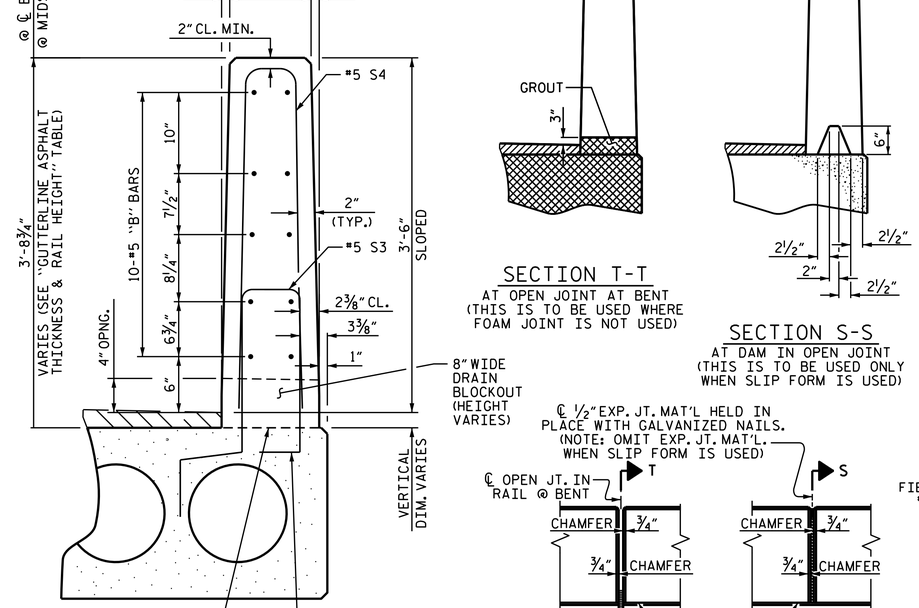

SECTION THRU RAIL

SECTION T-T
AT OPEN JOINT AT BENT
(THIS IS TO BE USED WHERE FOAM JOINT IS NOT USED)

SECTION S-S
AT DAM IN OPEN JOINT
(THIS IS TO BE USED ONLY WHEN SLIP FORM IS USED)

ELEVATION AT EXPANSION JOINTS

VERTICAL CONCRETE BARRIER RAIL SECTION

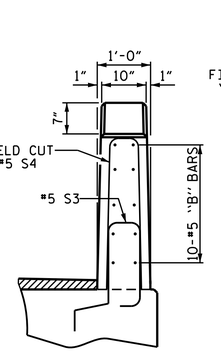

END VIEW

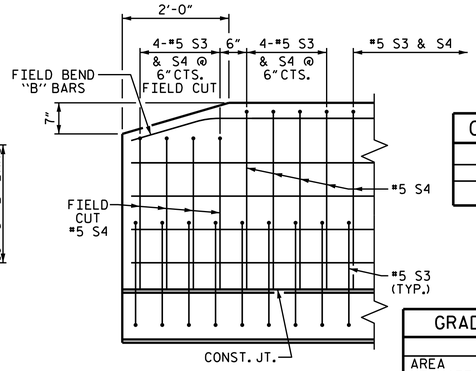

SIDE VIEW

END OF RAIL DETAILS

CONCRETE RELEASE STRENGTH

UNIT	PSI
35' UNITS	4000

GRADE 270 STRANDS

	0.6"Ø L.R.
AREA (SQUARE INCHES)	0.217
ULTIMATE STRENGTH (LBS. PER STRAND)	58,600
APPLIED PRESTRESS (LBS. PER STRAND)	43,950

NORTH CAROLINA PROFESSIONAL SEAL 037479 ENGINEER NICHOLAS A. PIERCE
Docusigned by: Nicholas Pierce
4/4/2018

PROJECT NO. 17BP.12.R.68
CLEVELAND COUNTY
STATION: 16+36.00 -L-

SHEET 8 OF 8

STATE OF NORTH CAROLINA
DEPARTMENT OF TRANSPORTATION
RALEIGH

STANDARD
3'-0" X 1'-9"
PRESTRESSED CONCRETE
CORED SLAB UNIT
90° SKEW
SPAN 'C'

REVISIONS						SHEET NO.
NO.	BY:	DATE:	NO.	BY:	DATE:	S-14
1			3			TOTAL SHEETS
2			4			25

ASSEMBLED BY : REZA KOUCHEKI	DATE : 12/2/16
CHECKED BY : E K POPE	DATE : 1/19/17
DRAWN BY : DGE 5/09	REV. 11/14 MAA/TMG
CHECKED BY : BCH 6/09	

DOCUMENT NOT CONSIDERED FINAL UNLESS ALL SIGNATURES COMPLETED

04-APR-2018 09:05
B:\TIPProjects-B\B5392\Structures\FinalPlans\401_029_17BP.12.R.68_SMU_BR_014_220201.DGN
naplerce

STD. NO. 21"PCS3_30_90S

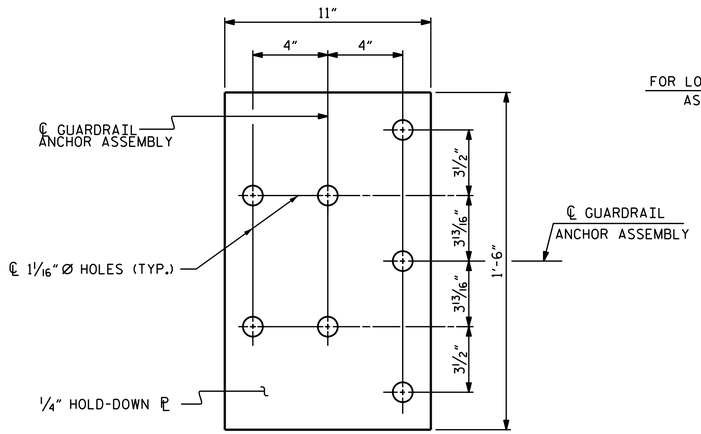

PLAN

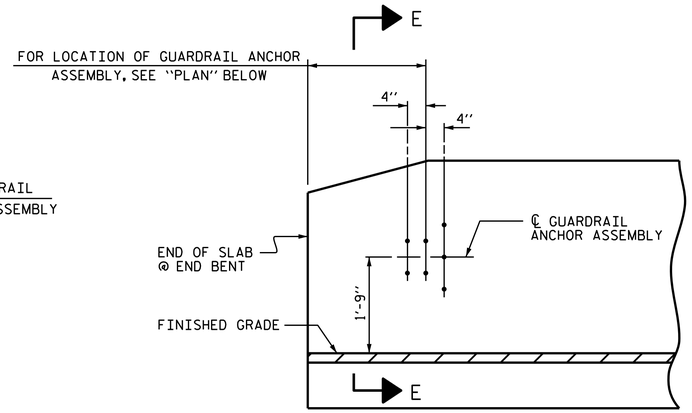

ELEVATION

NOTES

THE GUARDRAIL ANCHOR ASSEMBLY SHALL CONSIST OF A 1/4" HOLD DOWN PLATE AND 7 - 7/8" Ø BOLTS WITH NUTS AND WASHERS.

THE HOLD-DOWN PLATE SHALL CONFORM TO AASHTO M270 GRADE 36. AFTER FABRICATION, THE HOLD-DOWN PLATE SHALL BE HOT-DIP GALVANIZED IN ACCORDANCE WITH AASHTO M111.

BOLTS SHALL CONFORM TO THE REQUIREMENTS OF ASTM A307 AND NUTS SHALL CONFORM TO THE REQUIREMENTS OF AASHTO M291. BOLTS, NUTS AND WASHERS SHALL BE GALVANIZED. (AT THE CONTRACTOR'S OPTION, STAINLESS STEEL BOLTS, NUTS AND WASHERS MAY BE USED AS AN ALTERNATE FOR THE 7/8" Ø GALVANIZED BOLTS, NUTS AND WASHERS. THEY SHALL CONFORM TO OR EXCEED THE MECHANICAL REQUIREMENTS OF ASTM A307. THE USE OF THIS ALTERNATE SHALL BE APPROVED BY THE ENGINEER.)

THE GUARDRAIL ANCHOR ASSEMBLY IS REQUIRED AT ALL POINTS WHERE APPROACH GUARDRAIL IS TO BE ATTACHED TO THE END OF BARRIER RAIL. FOR POINTS OF ATTACHMENT, SEE SKETCH.

AFTER INSTALLATION, THE EXPOSED THREAD OF THE BOLT SHALL BE BURRED WITH A SHARP POINTED TOOL.

THE COST OF THE GUARDRAIL ANCHOR ASSEMBLY SHALL BE INCLUDED IN THE UNIT CONTRACT PRICE BID FOR VERTICAL CONCRETE BARRIER RAIL.

THE VERTICAL REINFORCING BARS MAY BE SHIFTED SLIGHTLY IN THE VERTICAL CONCRETE BARRIER RAIL TO CLEAR ASSEMBLY BOLTS.

THE 1 1/4" Ø HOLES SHALL BE FORMED OR DRILLED WITH A CORE BIT. IMPACT TOOLS WILL NOT BE PERMITTED. ANY CONCRETE DAMAGED BY THIS WORK SHALL BE REPAIRED TO THE SATISFACTION OF THE ENGINEER.

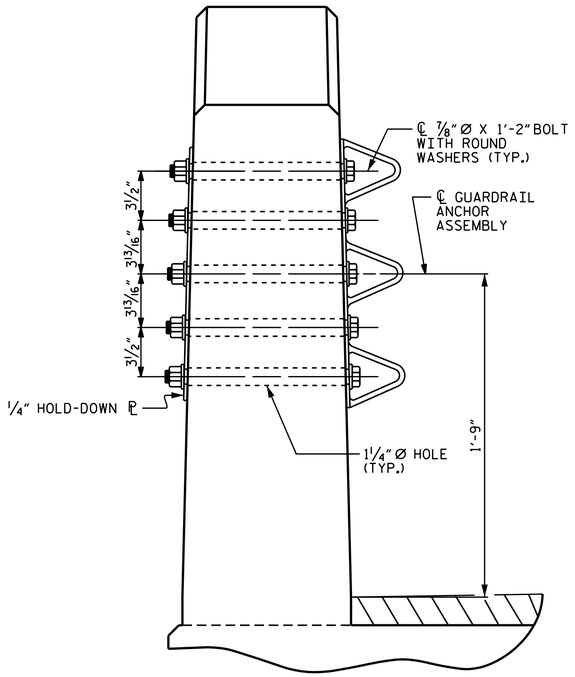

SECTION E-E

GUARDRAIL ANCHOR ASSEMBLY DETAILS

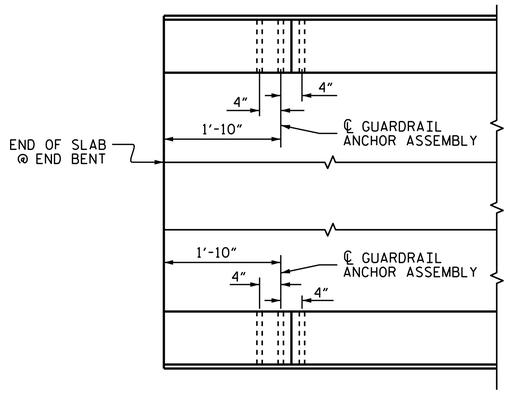

PLAN

LOCATION OF ANCHORS FOR GUARDRAIL

END BENT NO. 1 SHOWN, END BENT NO. 2 SIMILAR.

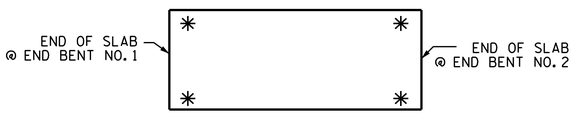

SKETCH SHOWING POINTS OF ATTACHMENT

✳ DENOTES GUARDRAIL ANCHOR ASSEMBLY

PROJECT NO. 17BP.12.R.68

CLEVELAND COUNTY

STATION: 16+36.00 -L-

NORTH CAROLINA PROFESSIONAL SEAL 037479 ENGINEER NICHOLAS A. PIERCE

DocuSigned by: Nicholas Pierce 15110B434D0B485...

4/4/2018

STATE OF NORTH CAROLINA
DEPARTMENT OF TRANSPORTATION
RALEIGH

STANDARD GUARDRAIL ANCHORAGE DETAILS FOR VERTICAL CONCRETE BARRIER RAIL

ASSEMBLED BY : REZA KOUCHEKI	DATE : 11/16
CHECKED BY : E K POPE	DATE : 1/19/17
DRAWN BY : MAA 5/10	REV. 12/5/11 MAA/GM
CHECKED BY : GM 5/10	REV. 6/13 MAA/GM
	REV. 1/15 MAA/TMC

DOCUMENT NOT CONSIDERED FINAL UNLESS ALL SIGNATURES COMPLETED

REVISIONS						SHEET NO.
NO.	BY:	DATE:	NO.	BY:	DATE:	S-15
1			3			TOTAL SHEETS
2			4			25

STD. NO. GRA3

04-APR-2018 09:05
B:\TIPProjects-B\B5392\Structures\FinalPlans\401_031_17BP.12.R.68_SMU_GR_015_220201.DGN
naplerce

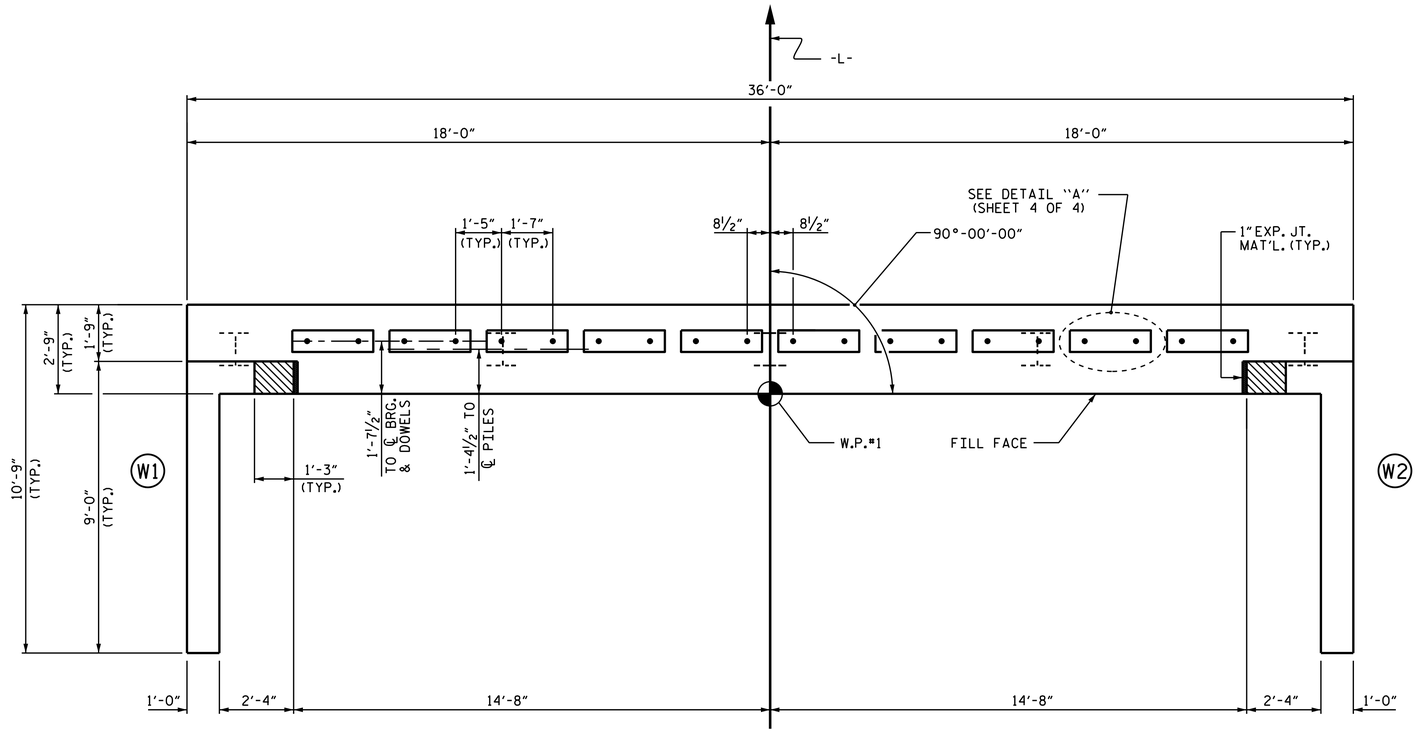

PLAN

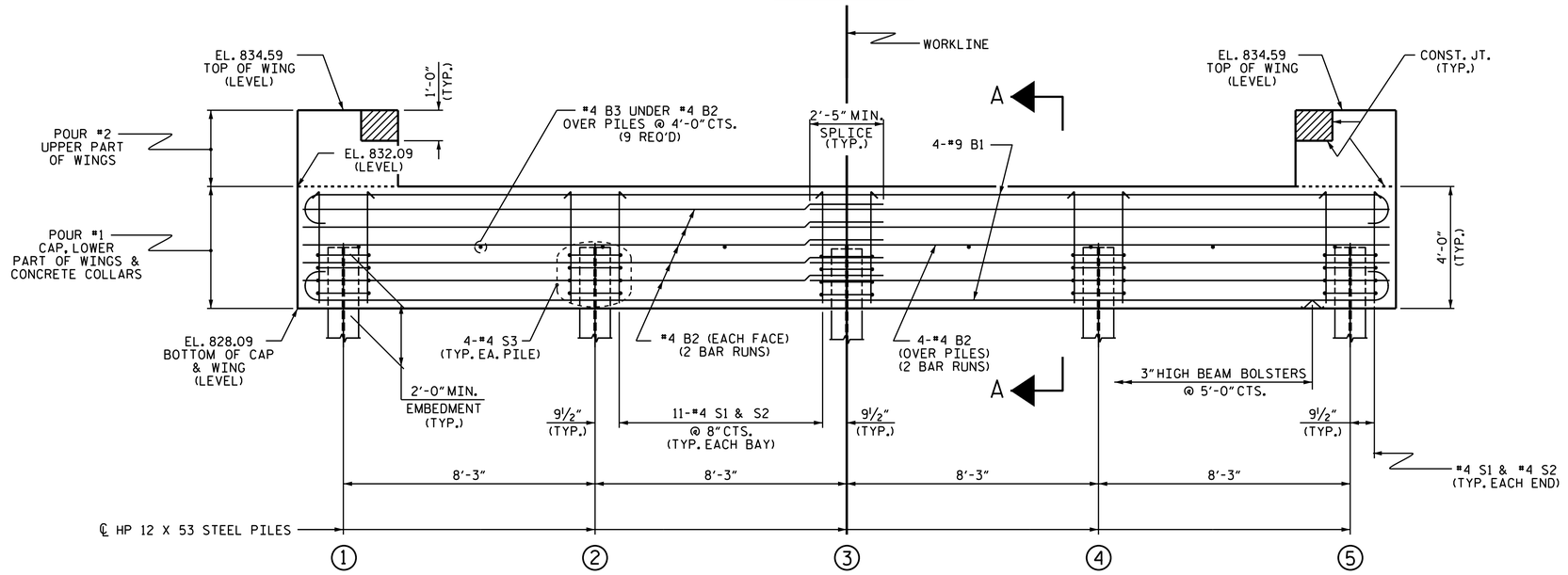

ELEVATION

WINGS NOT SHOWN FOR CLARITY.
FOR SECTION A-A, SEE SHEET 4 OF 4.
CONCRETE COLLARS FOR STEEL PILES NOT SHOWN IN PLAN AND ELEVATION VIEWS FOR CLARITY.
SEE "CORROSION PROTECTION FOR STEEL PILES DETAIL", SHEET 4 OF 4.

NOTES

STIRRUPS IN CAP MAY BE SHIFTED AS NECESSARY TO CLEAR DOWELS.

THE CONCRETE IN THE SHADED AREA OF THE WING SHALL BE POURED AFTER THE VERTICAL CONCRETE BARRIER RAIL IS CAST IF SLIP FORMING IS USED.

FOR PILE SPLICE DETAILS, SEE SHEET 4 OF 4.

FOR WING DETAILS, SEE SHEET 3 OF 4.

ASSEMBLED BY : REZA KOUCHEKI	DATE : 11/16
CHECKED BY : E K POPE	DATE : 1/19/17
DRAWN BY : WJH 12/11	REV. 4/15 MAA/TMG
CHECKED BY : AAC 12/11	

04-APR-2018 09:05
B:\TIPProjects-B\B5392\Structures\FinalPlans\401_033_17BP.12.R.68_SMU_EBI_016_220201.DGN
naplerce

PROJECT NO. 17BP.12.R.68
CLEVELAND COUNTY
STATION: 16+36.00 -L-

SHEET 1 OF 4

NORTH CAROLINA PROFESSIONAL SEAL 037479 ENGINEER NICHOLAS A. PIERCE
Docusigned by: Nicholas Pierce 151108434D08485...
4/4/2018

DOCUMENT NOT CONSIDERED FINAL UNLESS ALL SIGNATURES COMPLETED

STATE OF NORTH CAROLINA
DEPARTMENT OF TRANSPORTATION
RALEIGH

SUBSTRUCTURE

END BENT No. 1

REVISIONS						SHEET NO.
NO.	BY:	DATE:	NO.	BY:	DATE:	S-16
1			3			TOTAL SHEETS
2			4			25

STD. NO. EB_30_90S4

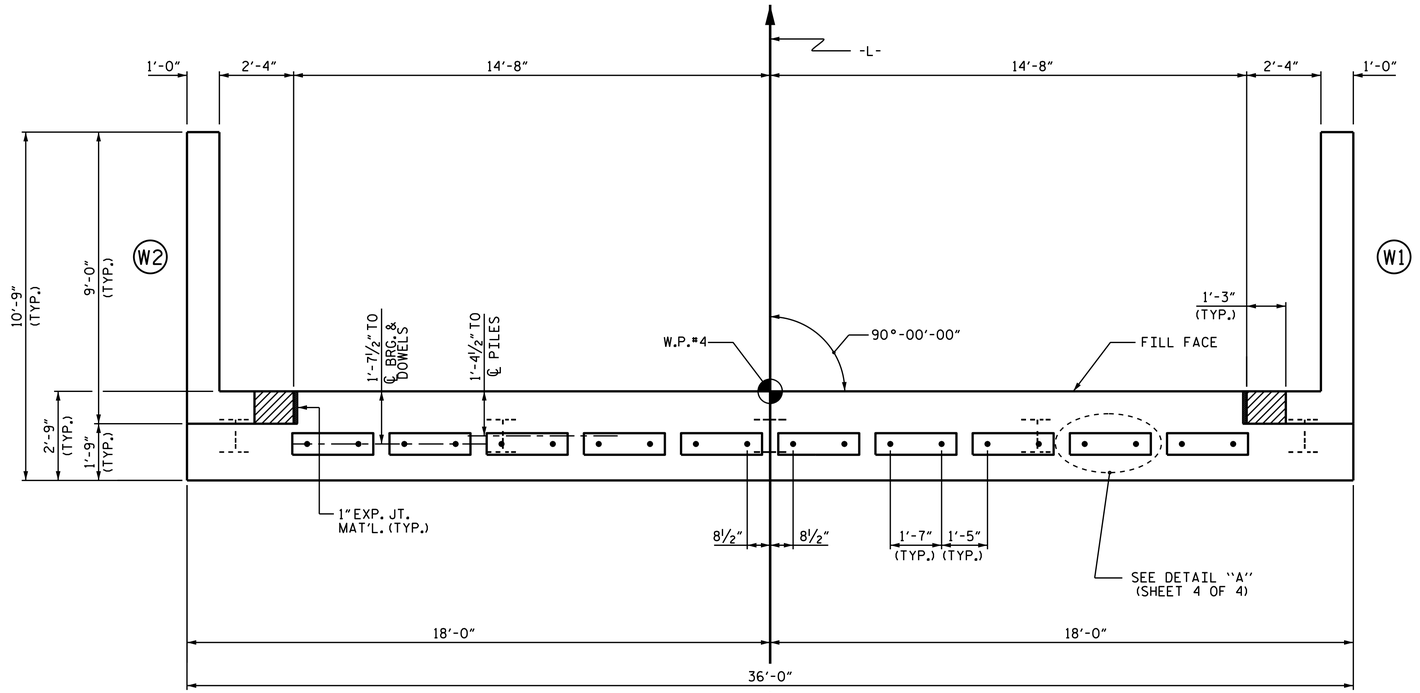

PLAN

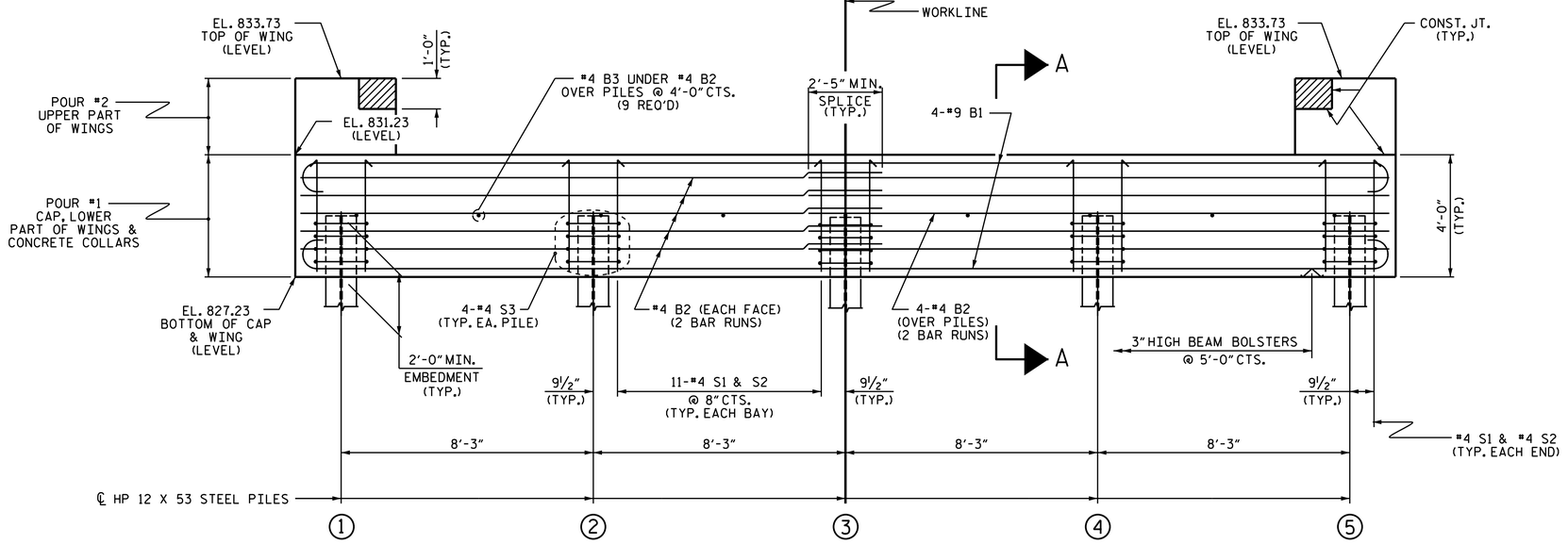

ELEVATION

WINGS NOT SHOWN FOR CLARITY.
FOR SECTION A-A, SEE SHEET 4 OF 4.
CONCRETE COLLARS FOR STEEL PILES NOT SHOWN IN PLAN AND ELEVATION VIEWS FOR CLARITY.
SEE "CORROSION PROTECTION FOR STEEL PILES DETAIL", SHEET 4 OF 4.

NOTES

STIRRUPS IN CAP MAY BE SHIFTED AS NECESSARY TO CLEAR DOWELS.

THE CONCRETE IN THE SHADED AREA OF THE WING SHALL BE POURED AFTER THE VERTICAL CONCRETE BARRIER RAIL IS CAST IF SLIP FORMING IS USED.

FOR PILE SPLICE DETAILS, SEE SHEET 4 OF 4.

FOR WING DETAILS, SEE SHEET 3 OF 4.

PROJECT NO. 17BP.12.R.68
CLEVELAND COUNTY
STATION: 16+36.00 -L-

SHEET 2 OF 4

STATE OF NORTH CAROLINA
DEPARTMENT OF TRANSPORTATION
RALEIGH

SUBSTRUCTURE

END BENT No. 2

NORTH CAROLINA PROFESSIONAL SEAL 037479 ENGINEER NICHOLAS A. PIERCE
DocuSigned by: Nicholas Pierce 15110B434D0B485...
4/4/2018

DOCUMENT NOT CONSIDERED FINAL UNLESS ALL SIGNATURES COMPLETED

REVISIONS						SHEET NO.
NO.	BY:	DATE:	NO.	BY:	DATE:	S-17
1			3			TOTAL SHEETS
2			4			25

ASSEMBLED BY : REZA KOUCHEKI	DATE : 11/16	
CHECKED BY : E K POPE	DATE : 1/19/17	
DRAWN BY : WJH 12/11	REV. 4/15	MAA/TMG
CHECKED BY : AAC 12/11		

04-APR-2018 09:05
B:\TIPProjects-B\B5392\Structures\FinalPlans\401_035_17BP.12.R.68_SMU_EB2_017_220201.DGN
naplerce

STD. NO. EB_30_90S4

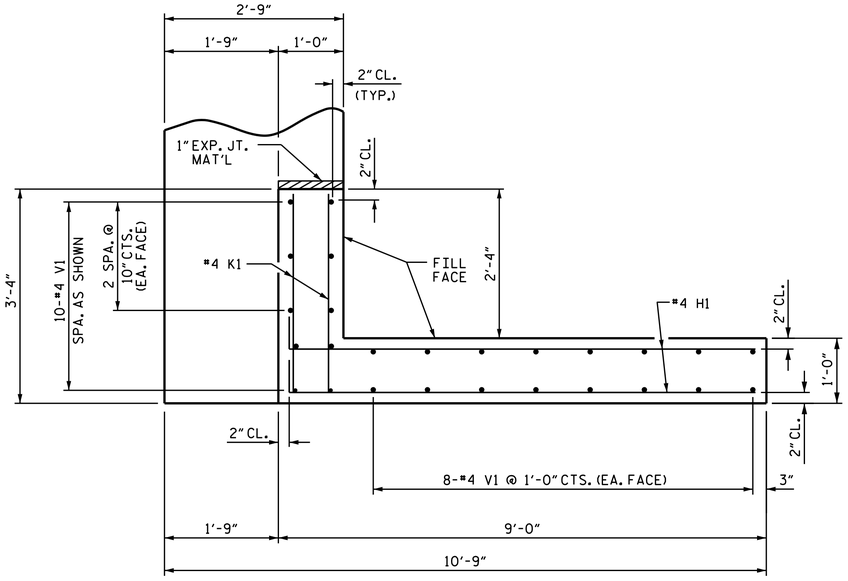

PLAN OF WING (W1)

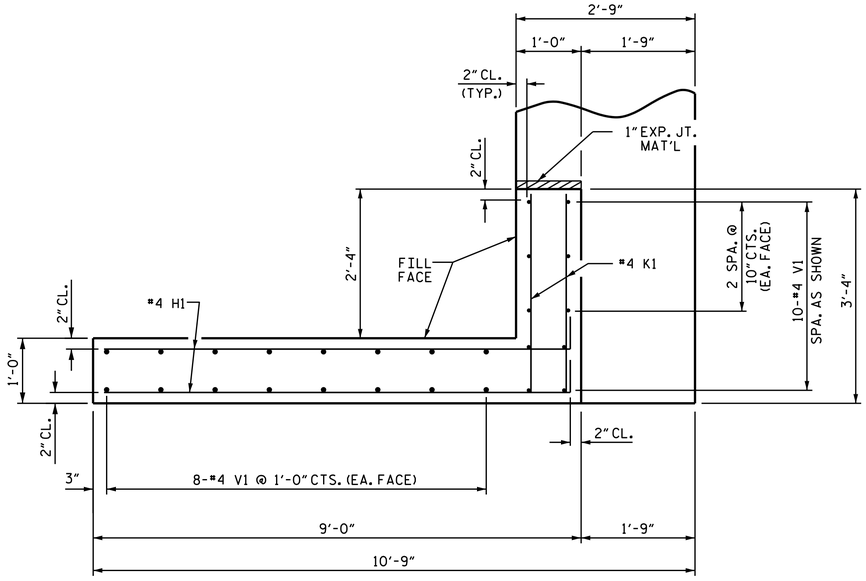

PLAN OF WING (W2)

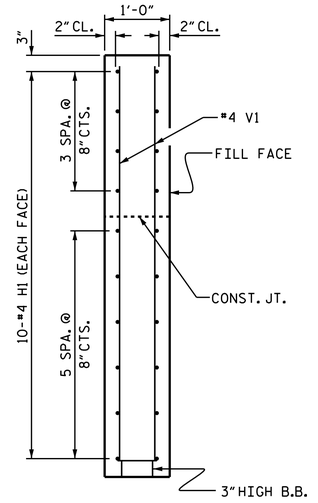

SECTION X-X

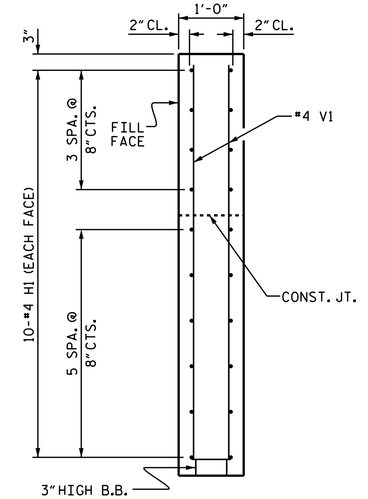

SECTION Y-Y

X

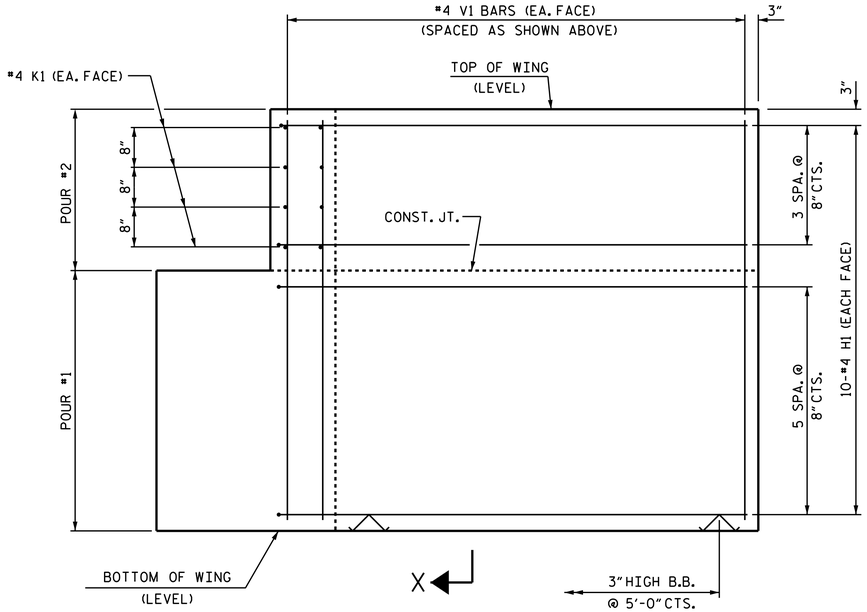

ELEVATION OF WING (W1)

Y

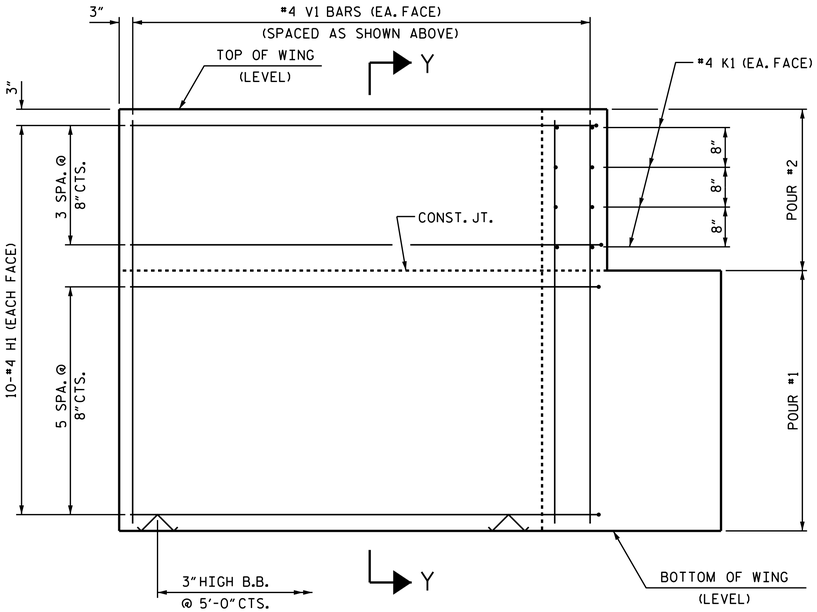

ELEVATION OF WING (W2)

WING DETAILS

ASSEMBLED BY : REZA KOUCHEKI	DATE : 11/16
CHECKED BY : E K POPE	DATE : 1/19/17
DRAWN BY : WJH 12/11	REV. 4/15 MAA/TMG
CHECKED BY : AAC 12/11	

04-APR-2018 09:05
B:\TIPProjects-B\B5392\Structures\FinalPlans\401_037_17BP.12.R.68_SMU_EB1_2_018_220201.DGN
naplerce

NORTH CAROLINA PROFESSIONAL SEAL 037479 ENGINEER NICHOLAS A. PIERCE
DocuSigned by: Nicholas Pierce 151108434D0B485...
4/4/2018

DOCUMENT NOT CONSIDERED FINAL UNLESS ALL SIGNATURES COMPLETED

PROJECT NO. 17BP.12.R.68
CLEVELAND COUNTY
STATION: 16+36.00 -L-

SHEET 3 OF 4

STATE OF NORTH CAROLINA
DEPARTMENT OF TRANSPORTATION
RALEIGH

SUBSTRUCTURE
END BENT
WING DETAILS

REVISIONS						SHEET NO.
NO.	BY:	DATE:	NO.	BY:	DATE:	S-18
1			3			TOTAL SHEETS
2			4			25

STD. NO. EB_30_90S4

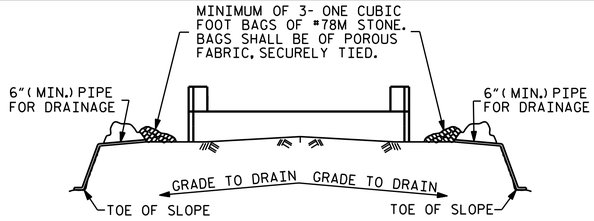

BAGGED STONE AND PIPE SHALL BE PLACED IMMEDIATELY AFTER COMPLETION OF END BENT EXCAVATION. PIPE MAY BE EITHER CONCRETE, CORRUGATED STEEL, CORRUGATED ALUMINUM ALLOY, OR CORRUGATED PLASTIC. PERFORATED PIPE WILL NOT BE ALLOWED.

BAGGED STONE SHALL REMAIN IN PLACE UNTIL THE ENGINEER DIRECTS THAT IT BE REMOVED. THE CONTRACTOR SHALL REMOVE AND DISPOSE OF SILT ACCUMULATIONS AT BAGGED STONE WHEN SO DIRECTED BY THE ENGINEER. BAGS SHALL BE REMOVED AND REPLACED WHENEVER THE ENGINEER DETERMINES THAT THEY HAVE DETERIORATED AND LOST THEIR EFFECTIVENESS.

NO SEPARATE PAYMENT WILL BE MADE FOR THIS WORK AND THE ENTIRE COST OF THIS WORK SHALL BE INCLUDED IN THE UNIT CONTRACT PRICE BID FOR THE SEVERAL PAY ITEMS.

TEMPORARY DRAINAGE AT END BENT

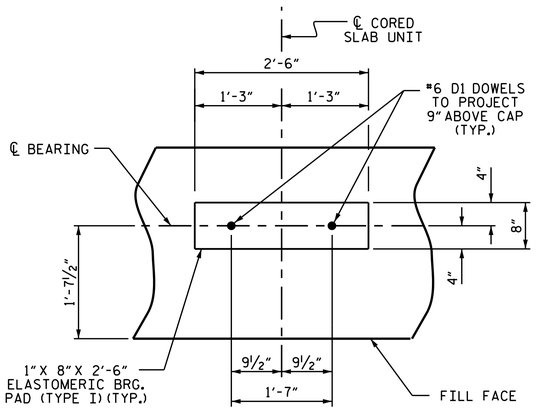

DETAIL "A"

(END BENT No. 1 SHOWN, END BENT No. 2 SIMILAR BY ROTATION)

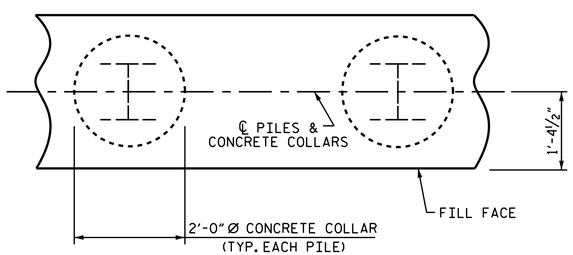

PLAN

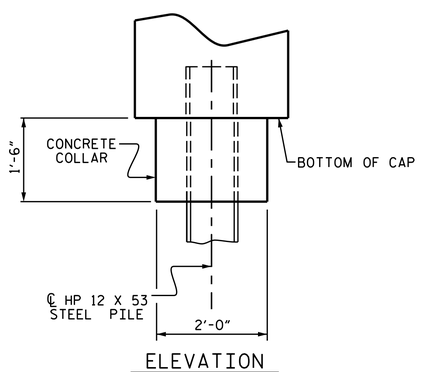

ELEVATION

CORROSION PROTECTION FOR STEEL PILES DETAIL

(END BENT No. 1 SHOWN, END BENT No. 2 SIMILAR BY ROTATION)

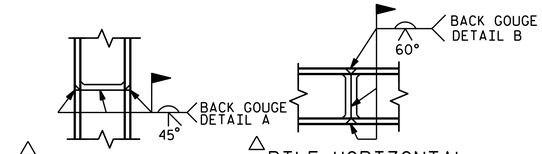

△ PILE VERTICAL

△ PILE HORIZONTAL OR VERTICAL

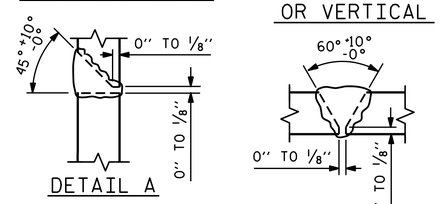

△ POSITION OF PILE DURING WELDING.

PILE SPLICE DETAILS

BAR TYPES

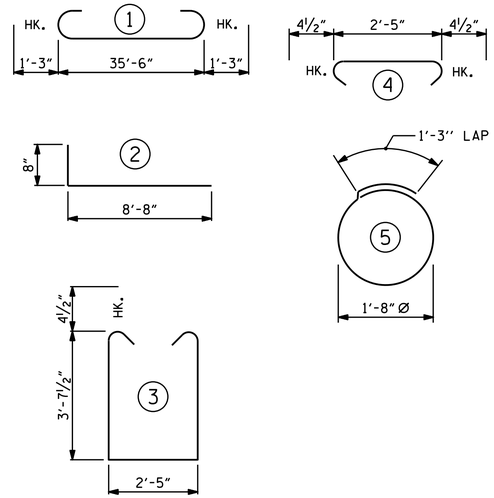

ALL BAR DIMENSIONS ARE OUT TO OUT.

END BENT No. 1	END BENT No. 2
HP 12 X 53 STEEL PILES	HP 12 X 53 STEEL PILES
NO: 5 LIN. FT.= 125	NO: 5 LIN. FT.= 100
PILE DRIVING EQUIPMENT SET UP FOR HP 12X53 STEEL PILES 5 EA.	PILE DRIVING EQUIPMENT SET UP FOR HP 12X53 STEEL PILES 5 EA.

BILL OF MATERIAL

FOR ONE END BENT

BAR	NO.	SIZE	TYPE	LENGTH	WEIGHT
B1	8	#9	1	38'-0"	1034
B2	28	#4	STR	19'-1"	357
B3	9	#4	STR	2'-5"	15
D1	20	#6	STR	1'-6"	45
H1	40	#4	2	9'-4"	249
K1	16	#4	STR	2'-11"	31
S1	46	#4	3	10'-5"	320
S2	46	#4	4	3'-2"	97
S3	20	#4	5	6'-6"	87
V1	52	#4	STR	6'-2"	214

REINFORCING STEEL (FOR ONE END BENT) 2449 LBS.

CLASS A CONCRETE BREAKDOWN (FOR ONE END BENT)

POUR #1 CAP, LOWER PART OF WINGS & COLLARS 17.9 C.Y.

POUR #2 UPPER PART OF WINGS 2.1 C.Y.

TOTAL CLASS A CONCRETE 20.0 C.Y.

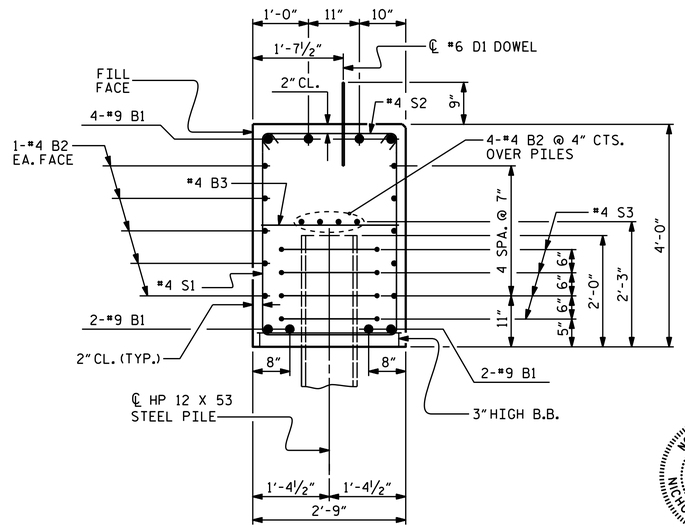

SECTION A-A

(CONCRETE COLLAR NOT SHOWN FOR CLARITY. SEE "CORROSION PROTECTION FOR STEEL PILES DETAIL.")

NORTH CAROLINA PROFESSIONAL SEAL 037479 ENGINEER NICHOLAS A. PIERCE

Docusigned by: Nicholas Pierce 151108434D0B485...

4/4/2018

DOCUMENT NOT CONSIDERED FINAL UNLESS ALL SIGNATURES COMPLETED

PROJECT NO. 17BP.12.R.68

CLEVELAND COUNTY

STATION: 16+36.00 -L-

SHEET 4 OF 4

STATE OF NORTH CAROLINA
DEPARTMENT OF TRANSPORTATION
RALEIGH

SUBSTRUCTURE

END BENT No. 1 & 2 DETAILS

REVISIONS						SHEET NO.
NO.	BY:	DATE:	NO.	BY:	DATE:	S-19
1			3			TOTAL SHEETS
2			4			25

ASSEMBLED BY : REZA KOUCHEKI	DATE : 11/16
CHECKED BY : E K POPE	DATE : 1/19/17
DRAWN BY : WJH 12/11	
CHECKED BY : AAC 12/11	

04-APR-2018 09:05
B:\TIPProjects-B\B5392\Structures\FinalPlans\401_039_17BP.12.R.68_SMU_EB1_2_019_220201.DGN
naplerce

STD. NO. EB_30_90S4

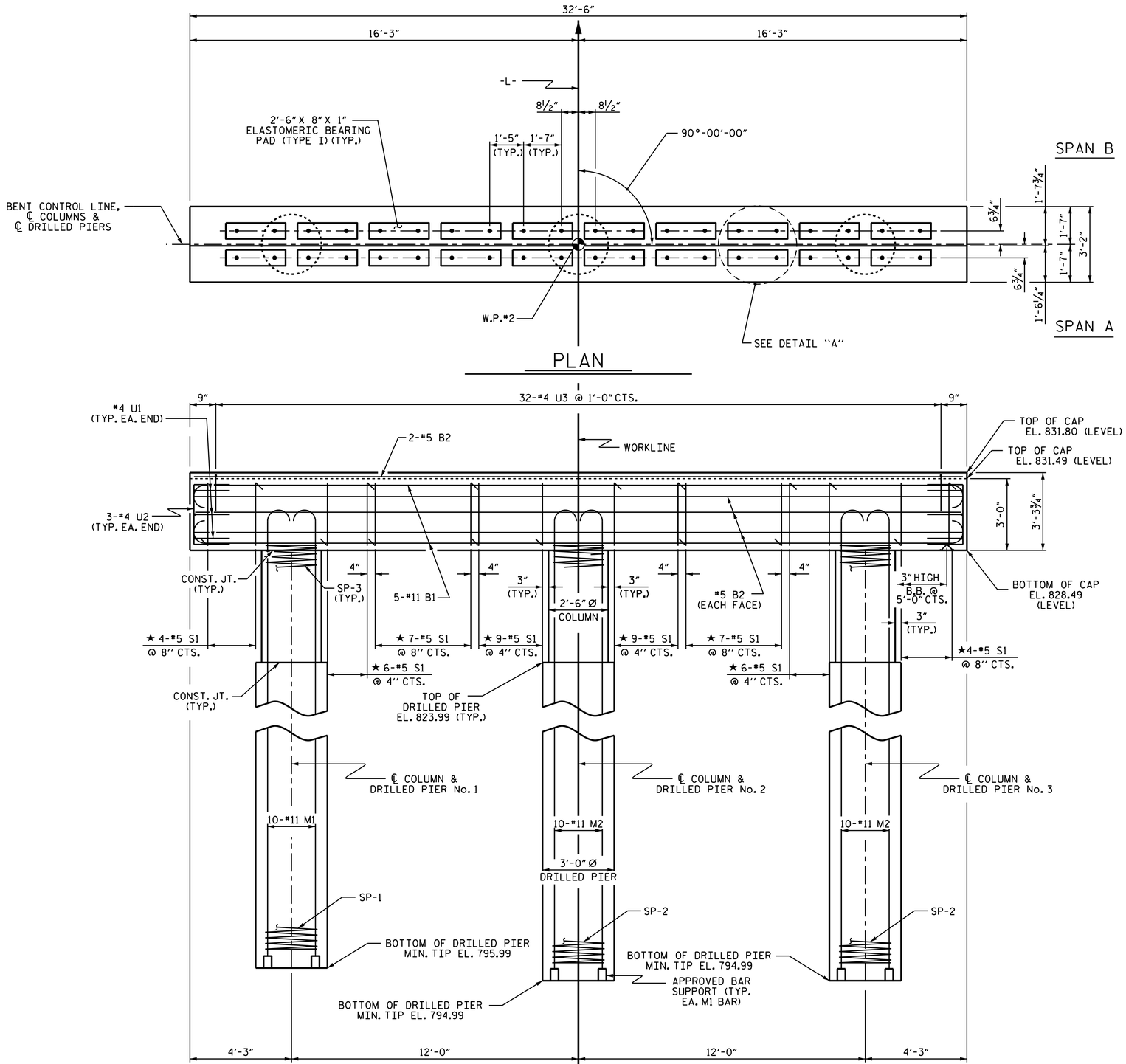

ELEVATION

DIMENSIONS & REINFORCING STEEL ARE TYPICAL FOR EACH COLUMN & DRILLED PIER UNLESS OTHERWISE NOTED.

NOTES

STIRRUPS IN CAP MAY BE SHIFTED AS NECESSARY TO CLEAR DOWELS.

HOOKS ON "M" BARS MAY BE TURNED AS NECESSARY FOR PLACING REINFORCING STEEL.

FOR DRILLED PIERS, SEE SECTION 411 OF THE STANDARD SPECIFICATIONS.

ALL STEEL IN THE DRILLED PIERS IS INCLUDED IN THE PAY ITEMS FOR "REINFORCING STEEL" AND "SPIRAL COLUMN REINFORCING STEEL."

★ INVERT ALTERNATE STIRRUPS.

THE LOCATION OF THE CONSTRUCTION JOINT IN THE DRILLED PIERS IS BASED ON AN APPROXIMATE GROUND LINE ELEVATION. IF THE CONSTRUCTION JOINT IS ABOVE THE ACTUAL GROUND LINE ELEVATION, THE CONTRACTOR SHALL PLACE THE CONSTRUCTION JOINT ONE FOOT BELOW THE GROUND LINE.

DRILLED PIERS SHALL BE TERMINATED ONE FOOT ± ABOVE NORMAL WATER SURFACE ELEVATION FOR SHAFTS LOCATED IN WATER.

THE CONTRACTOR'S ATTENTION IS CALLED TO THE FACT THAT THE LONGITUDINAL REINFORCEMENT FOR DRILLED PIERS IS DETAILED WITH 3 FEET OF EXTRA LENGTH.

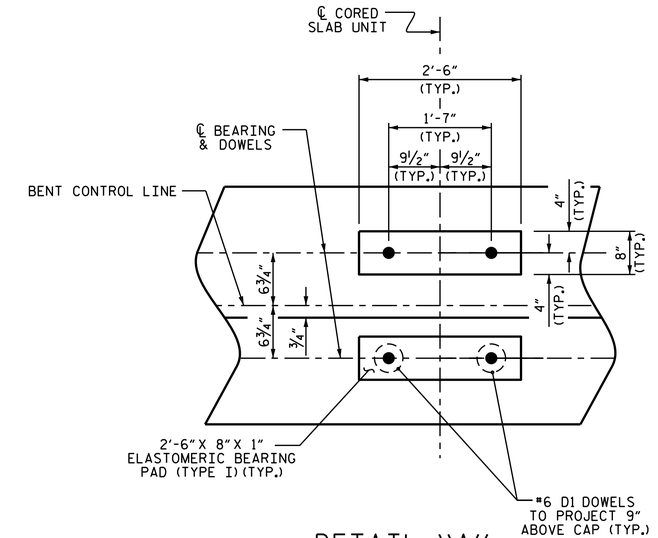

DETAIL "A"

(DIMENSIONS ARE TYPICAL EACH BEARING)

BRIDGE NO. 17BP.12.R.68

CLEVELAND COUNTY

STATION: 16+36.00 -L-

SHEET 1 OF 2

STATE OF NORTH CAROLINA
DEPARTMENT OF TRANSPORTATION
RALEIGH

SUBSTRUCTURE

BENT No. 1

NORTH CAROLINA PROFESSIONAL SEAL 037479 ENGINEER NICHOLAS A. PIERCE

Docusigned by: Nicholas Pierce 151108434D0B485...

4/4/2018

DOCUMENT NOT CONSIDERED FINAL UNLESS ALL SIGNATURES COMPLETED

REVISIONS						SHEET NO.
NO.	BY:	DATE:	NO.	BY:	DATE:	S-20
1			3			TOTAL SHEETS
2			4			25

ASSEMBLED BY : REZA KOUCHEKI	DATE : 03/16/17
CHECKED BY : H.T. BARBOUR	DATE : 03/17
DRAWN BY : DGE	03/10
CHECKED BY : MKT	03/10

04-APR-2018 09:05
B:\TIPProjects-B\B5392\Structures\FinalPlans\401_041_17BP.12.R.68_SMU_B1_020_220201.DGN
naplerce

STD. NO. DP_BT_30_90S_<50'

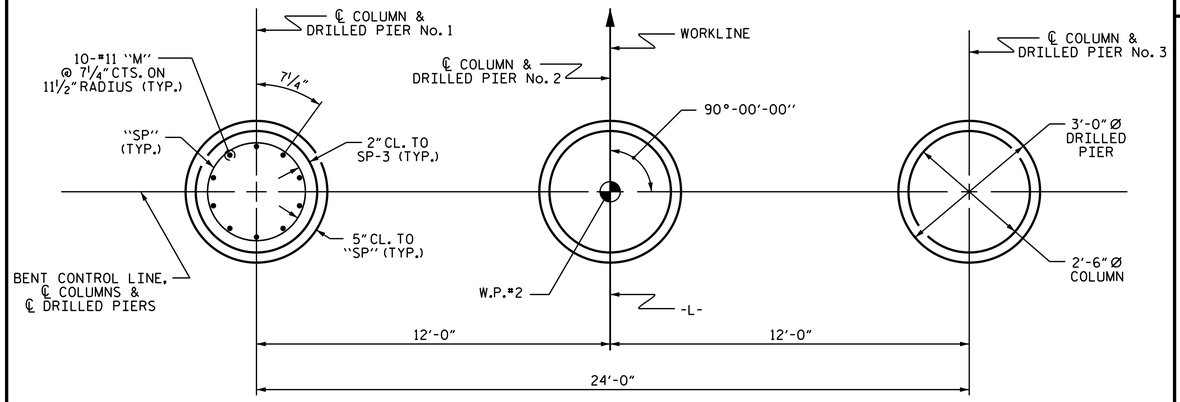

PLAN OF DRILLED PIERS & COLUMNS

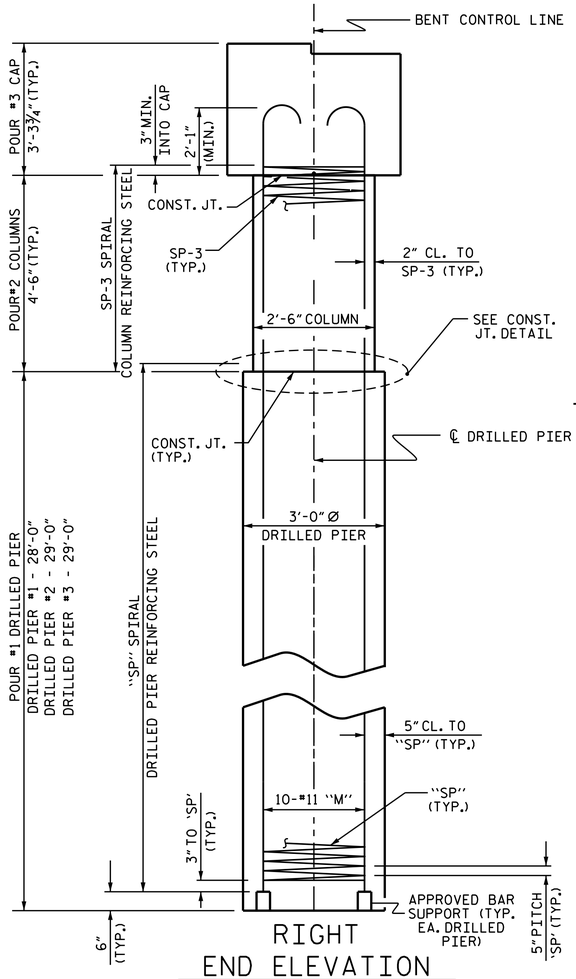

RIGHT END ELEVATION

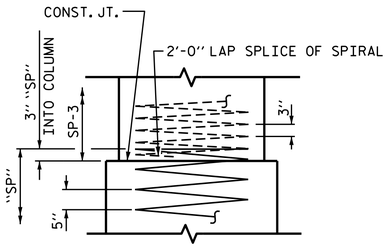

CONSTRUCTION JOINT DETAIL

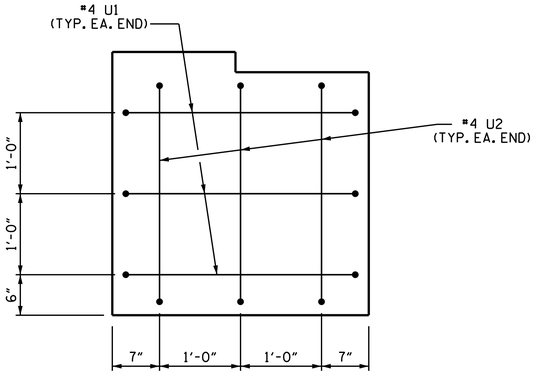

END OF CAP VIEW

(TYPICAL BOTH ENDS)

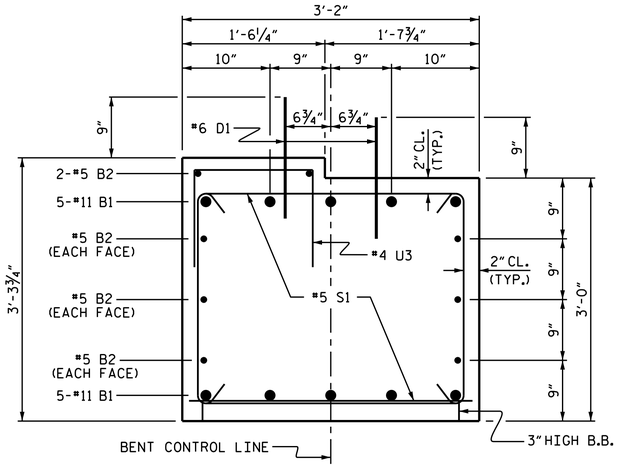

SECTION THRU CAP

BAR TYPES

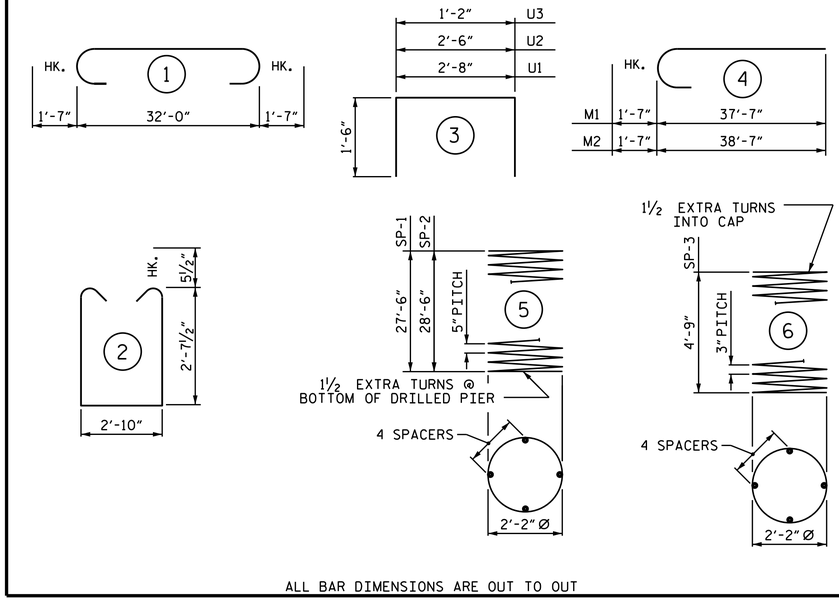

ALL BAR DIMENSIONS ARE OUT TO OUT

BILL OF MATERIAL

FOR BENT NO.1

BAR	NO.	SIZE	TYPE	LENGTH	WEIGHT
B1	10	#11	1	35'-2"	1868
B2	6	#5	STR	32'-2"	201
D1	40	#6	STR	1'-6"	90
M1	10	#11	4	39'-2"	2081
M2	20	#11	4	40'-2"	4268
S1	52	#5	2	9'-0"	488
U1	6	#4	3	5'-8"	23
U2	6	#4	3	5'-6"	22
U3	32	#4	3	4'-2"	89

REINFORCING STEEL 9130 LBS.

SP-1	1	5	5	449'-4"	469
SP-2	2	5	5	466'-0"	972
SP-3	3	4	6	137'-0"	275

SPIRAL COLUMN REINFORCING STEEL 1716 LBS.

* THE SP-1 & SP-2 SPIRAL REINFORCING STEEL SHALL BE W31 OR D-31 COLD DRAWN WIRE OR #5 PLAIN OR DEFORMED BAR

** THE SP-3 SPIRAL REINFORCING STEEL SHALL BE W20 OR D-20 COLD DRAWN WIRE OR #4 PLAIN OR DEFORMED BAR

CLASS A CONCRETE BREAKDOWN

POUR #2 (COLUMNS)	2.5 C.Y.
POUR #3 (CAP)	12.0 C.Y.
TOTAL CLASS A CONCRETE	14.5 C.Y.

DRILLED PIERS:

DRILLED PIER CONCRETE
POUR #1 (DRILLED PIERS) 22.5 C.Y.

3'-0" Ø DRILLED PIER NOT IN SOIL 26.0 LIN. FT.

3'-0" Ø DRILLED PIER IN SOIL 60.0 LIN. FT.

PERMANENT STEEL CASING FOR 3'-0" Ø DRILLED PIER 57.00 LIN. FT.

CSL TUBES 362 LIN. FT.

PROJECT NO. 17BP.12.R.68

CLEVELAND COUNTY

STATION: 16+36.00 -L-

SHEET 2 OF 2

STATE OF NORTH CAROLINA
DEPARTMENT OF TRANSPORTATION
RALEIGH

SUBSTRUCTURE

BENT No. 1

NORTH CAROLINA PROFESSIONAL SEAL 037479 ENGINEER NICHOLAS A. PIERCE

Docusigned by: Nicholas Pierce 151108434D0B485...

4/4/2018

ASSEMBLED BY : REZA KOUCHEKI	DATE : 03/16/17
CHECKED BY : H.T. BARBOUR	DATE : 03/17
DRAWN BY : DGE 3/10	REV. 11/14 MAA/TMG
CHECKED BY : MKT 3/10	

DOCUMENT NOT CONSIDERED FINAL UNLESS ALL SIGNATURES COMPLETED

REVISIONS					
NO.	BY:	DATE:	NO.	BY:	DATE:
1			3		
2			4		

SHEET NO. S-21

TOTAL SHEETS 25

04-APR-2018 09:05
B:\TIPProjects-B\B5392\Structures\FinalPlans\401_043_17BP.12.R.68_SMU_B1_021_220201.DGN
naplerce

STD. NO. DP_BT_30_90S_<50'

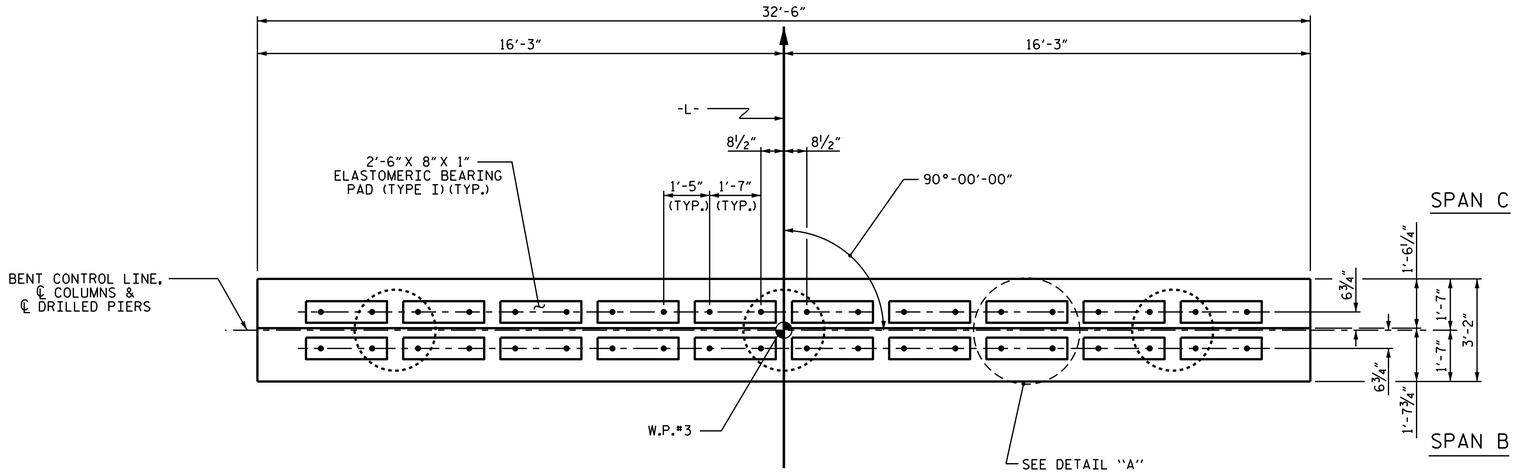

PLAN

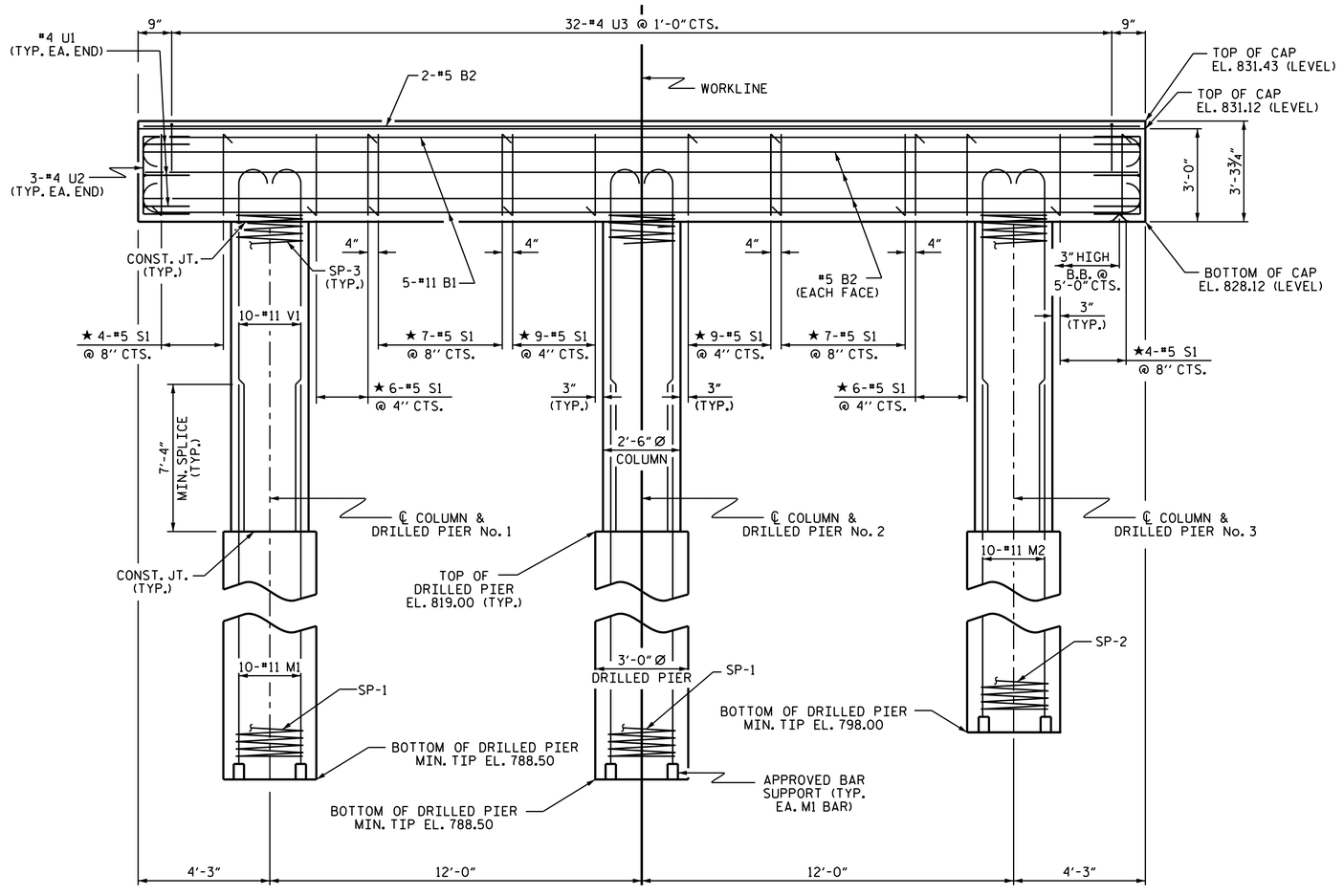

ELEVATION

DIMENSIONS & REINFORCING STEEL ARE TYPICAL FOR EACH COLUMN & DRILLED PIER UNLESS OTHERWISE NOTED.

NOTES

STIRRUPS IN CAP MAY BE SHIFTED AS NECESSARY TO CLEAR DOWELS.

HOOKS ON "V" BARS MAY BE TURNED AS NECESSARY FOR PLACING REINFORCING STEEL.

FOR DRILLED PIERS, SEE SECTION 411 OF THE STANDARD SPECIFICATION.

ALL STEEL IN THE DRILLED PIERS IS INCLUDED IN THE PAY ITEMS FOR "REINFORCING STEEL" AND "SPIRAL COLUMN REINFORCING STEEL."

★ INVERT ALTERNATE STIRRUPS.

THE LOCATION OF THE CONSTRUCTION JOINT IN THE DRILLED PIERS IS BASED ON AN APPROXIMATE GROUND LINE ELEVATION. IF THE CONSTRUCTION JOINT IS ABOVE THE ACTUAL GROUND LINE ELEVATION, THE CONTRACTOR SHALL PLACE THE CONSTRUCTION JOINT ONE FOOT BELOW THE GROUND ILNE.

THE CONTRACTOR'S ATTENTION IS CALLED TO THE FACT THAT THE LONGITUDINAL REINFORCEMENT FOR DRILLED PIERS IS DETAILED WITH 3 FEET OF EXTRA LENGTH.

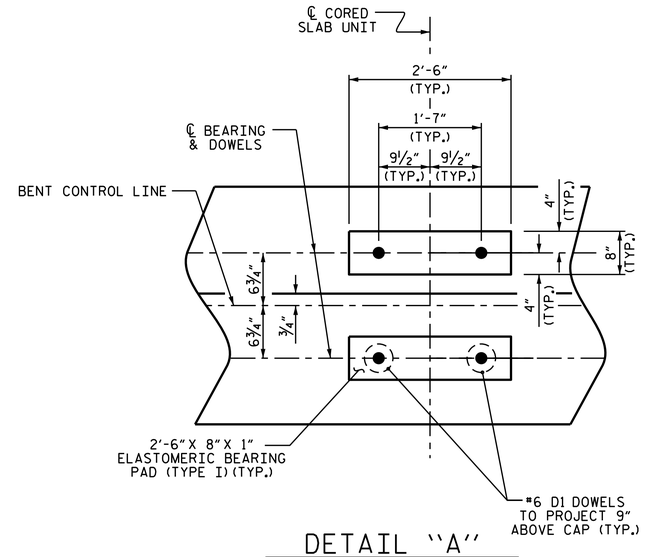

DETAIL "A"

(DIMENSIONS ARE TYPICAL EACH BEARING)

BRIDGE NO. 17BP.12.R.68

CLEVELAND COUNTY

STATION: 16+36.00 -L-

SHEET 1 OF 2

STATE OF NORTH CAROLINA
DEPARTMENT OF TRANSPORTATION
RALEIGH

SUBSTRUCTURE

BENT No. 2

NORTH CAROLINA PROFESSIONAL SEAL 037479 ENGINEER NICHOLAS A. PIERCE

DocuSigned by: Nicholas Pierce 151108434D0B485...

4/4/2018

ASSEMBLED BY : REZA KOUCHEKI	DATE : 03/16/17
CHECKED BY : H.T. BARBOUR	DATE : 03/17
DRAWN BY : DGE	03/10
CHECKED BY : MKT	03/10

DOCUMENT NOT CONSIDERED FINAL UNLESS ALL SIGNATURES COMPLETED

REVISIONS						SHEET NO.
NO.	BY:	DATE:	NO.	BY:	DATE:	S-22
1			3			TOTAL SHEETS
2			4			25

04-APR-2018 09:05
B:\TIPProjects-B\B5392\Structures\FinalPlans\401_045_17BP.12.R.68_SMU_B2_022_220201.DGN
naplerce

STD. NO. DP_BT_30_90S_<50'

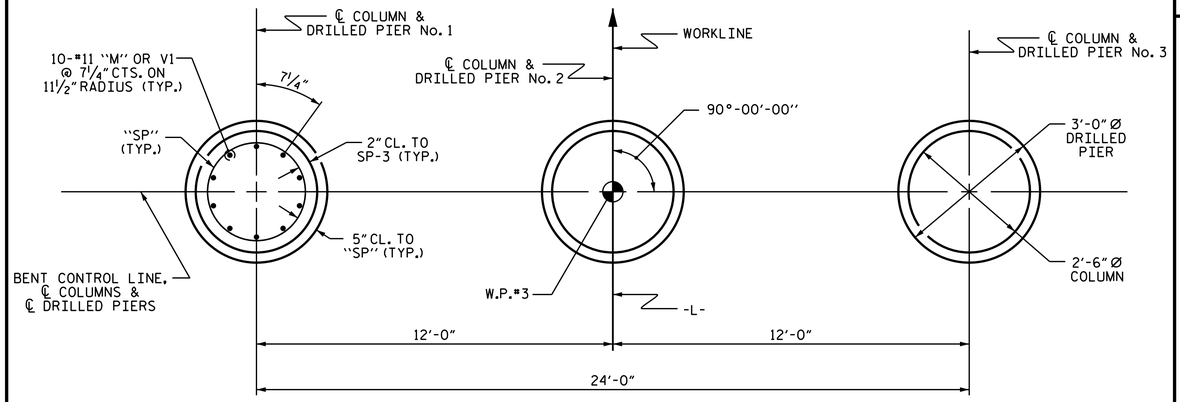

PLAN OF DRILLED PIERS & COLUMNS

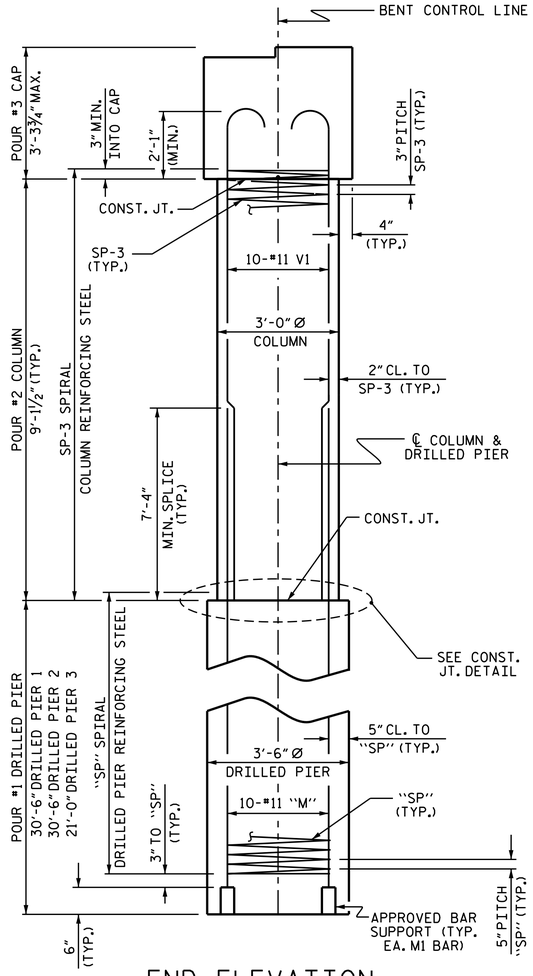

END ELEVATION

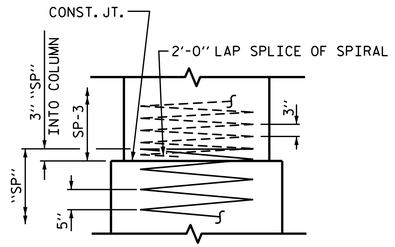

CONSTRUCTION JOINT DETAIL

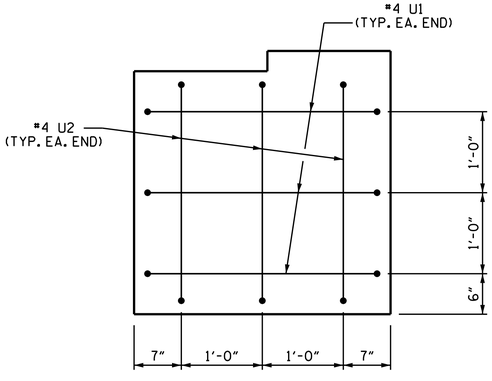

END OF CAP VIEW

(TYPICAL BOTH ENDS)

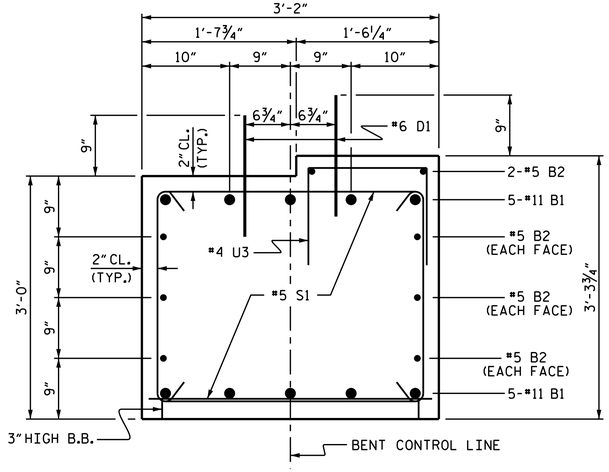

SECTION THRU CAP

BAR TYPES

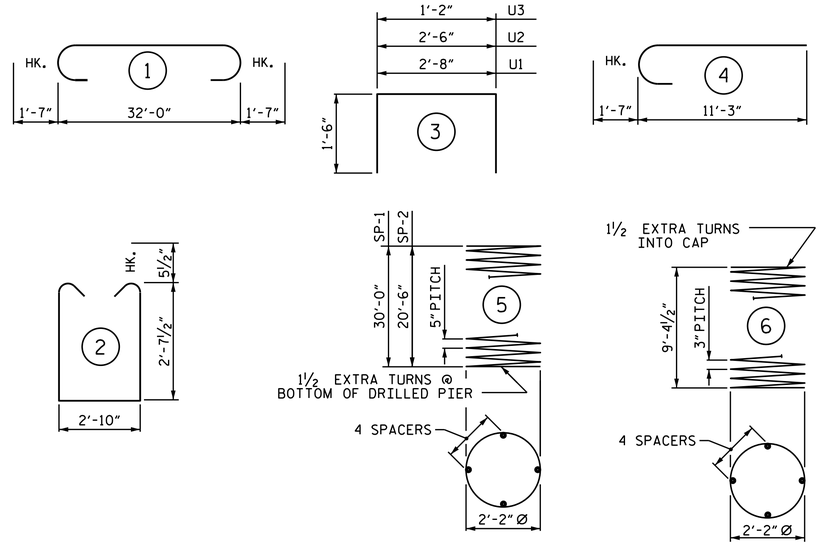

ALL BAR DIMENSIONS ARE OUT TO OUT

BILL OF MATERIAL

FOR BENT NO.2

BAR	NO.	SIZE	TYPE	LENGTH	WEIGHT
B1	10	#11	1	35'-2"	1868
B2	6	#5	STR	32'-2"	201
D1	40	#6	STR	1'-6"	90
M1	20	#11	STR	40'-10"	4339
M2	10	#11	STR	31'-4"	1655
S1	52	#5	2	9'-0"	488
U1	6	#4	3	5'-8"	23
U2	6	#4	3	5'-6"	22
U3	32	#4	3	4'-2"	89
V1	30	#11	4	12'-10"	2046

REINFORCING STEEL 10831 LBS.

SP-1	2	5	5	489'-3"	1021
SP-2	1	5	5	337'-10"	352
SP-3	3	4	6	260'-7"	522

SPIRAL COLUMN REINFORCING STEEL 1895 LBS.

✱ THE SP-1 & SP-2 SPIRAL REINFORCING STEEL SHALL BE W31 OR D-31 COLD DRAWN WIRE OR #5 PLAIN OR DEFORMED BAR

✱✱ THE SP-3 SPIRAL REINFORCING STEEL SHALL BE W20 OR D-20 COLD DRAWN WIRE OR #4 PLAIN OR DEFORMED BAR

CLASS A CONCRETE BREAKDOWN

POUR #2 (COLUMNS)	5.0 C.Y.
POUR #3 (CAP)	12.0 C.Y.
TOTAL CLASS A CONCRETE	17.0 C.Y.

DRILLED PIERS:

DRILLED PIER CONCRETE
POUR #1 (DRILLED PIERS) 21.5 C.Y.

3'-0" Ø DRILLED PIER NOT IN SOIL 25.0 LIN. FT.

3'-0" Ø DRILLED PIER IN SOIL 57.00 LIN. FT.

PERMANENT STEEL CASING FOR 3'-0" Ø DRILLED PIER 45.00 LIN. FT.

CSL TUBES 346 LIN. FT.

PROJECT NO. 17BP.12.R.68
CLEVELAND COUNTY
STATION: 16+36.00 -L-

SHEET 2 OF 2

STATE OF NORTH CAROLINA
DEPARTMENT OF TRANSPORTATION
RALEIGH

SUBSTRUCTURE

BENT No. 2

NORTH CAROLINA PROFESSIONAL SEAL 037479 ENGINEER NICHOLAS A. PIERCE
DocuSigned by: Nicholas Pierce 15110B434D0B485...
4/4/2018

ASSEMBLED BY : REZA KOUCHEKI	DATE : 03/16/17
CHECKED BY : H.T. BARBOUR	DATE : 03/17
DRAWN BY : DGE 3/10	REV. 11/14 MAA/TMG
CHECKED BY : MKT 3/10	

DOCUMENT NOT CONSIDERED FINAL UNLESS ALL SIGNATURES COMPLETED

REVISIONS						SHEET NO.
NO.	BY:	DATE:	NO.	BY:	DATE:	S-23
1			3			TOTAL SHEETS
2			4			25

04-APR-2018 09:05
B:\TIPProjects-B\B5392\Structures\FinalPlans\401_047_17BP.12.R.68_SMU_B2_023_220201.DGN
naplerce

STD. NO. DP_BT_30_90S_<50'

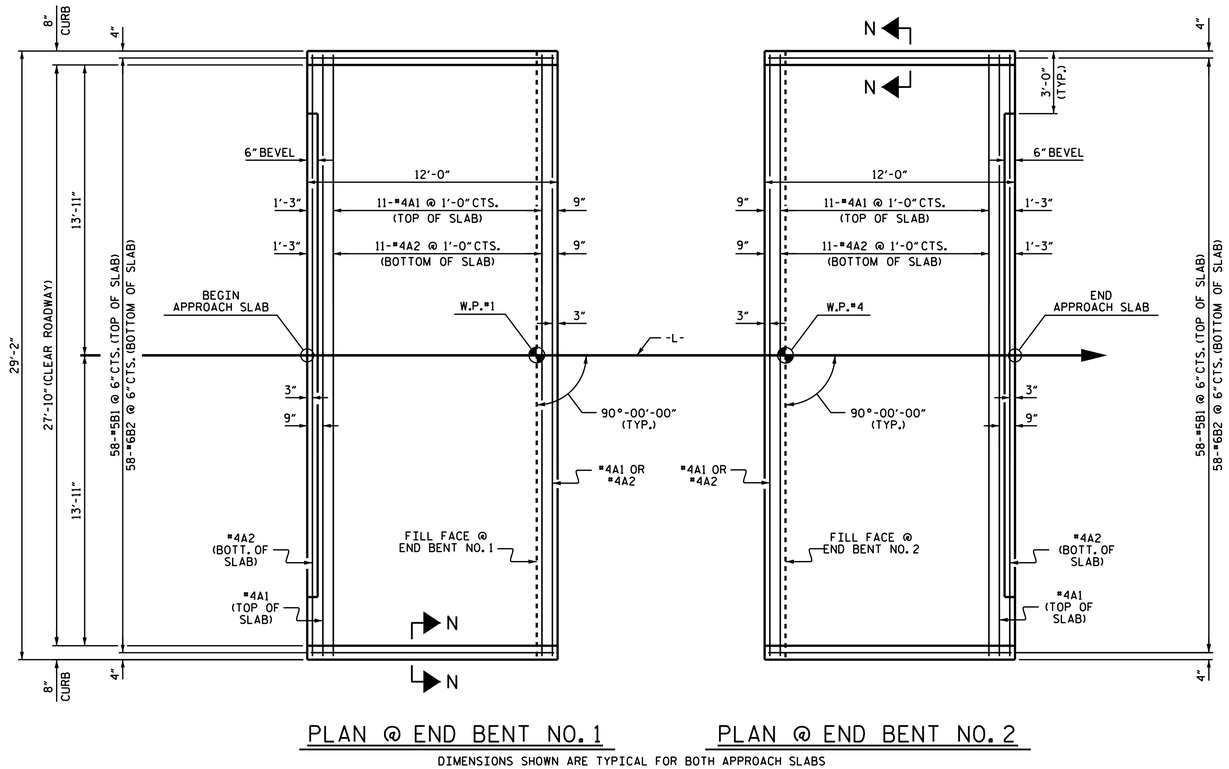

PLAN @ END BENT NO. 1 PLAN @ END BENT NO. 2

DIMENSIONS SHOWN ARE TYPICAL FOR BOTH APPROACH SLABS

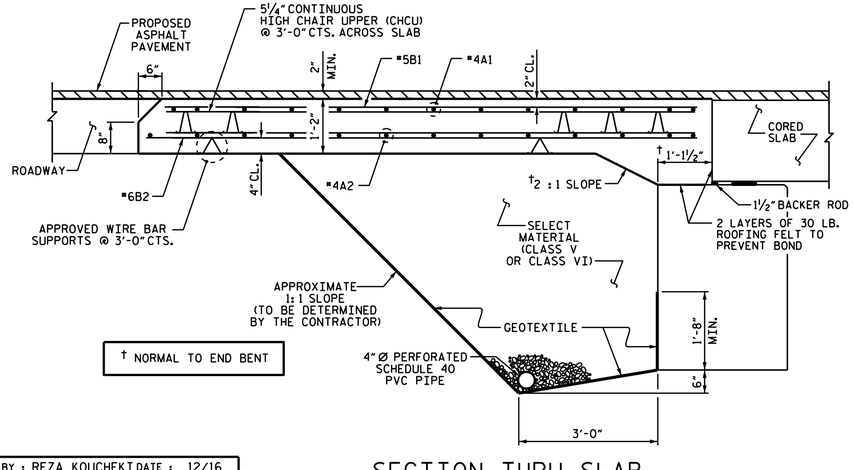

SECTION THRU SLAB

(TYPE II - MODIFIED APPROACH FILL)

NOTES

FOR BRIDGE APPROACH FILL INCLUDING GEOTEXTILE, 4" Ø DRAINAGE PIPE, AND SELECT MATERIAL BACKFILL, SEE ROADWAY PLANS.

GEOTEXTILE SHALL BE TYPE I IN ACCORDANCE WITH THE STANDARD SPECIFICATIONS SECTION 1056.

SELECT MATERIAL BACKFILL (CLASS V OR CLASS VI) SHALL BE IN ACCORDANCE WITH STANDARD SPECIFICATIONS SECTION 1016.

SELECT MATERIAL BACKFILL IS TO BE CONTINUOUS ALONG FILL FACE OF BACKWALL FROM OUTSIDE EDGE TO OUTSIDE EDGE OF APPROACH SLAB.

FOR THE 4" Ø DRAINAGE PIPE OUTLET(S), SEE ROADWAY STANDARD DRAWINGS.

AREA BETWEEN THE WINGWALL AND APPROACH SLAB SHALL BE GRADED TO DRAIN THE WATER AWAY FROM THE FILL FACE OF THE BRIDGE AND SHALL BE PAVED. SEE ROADWAY PLANS.

APPROACH SLAB GROOVING IS NOT REQUIRED.

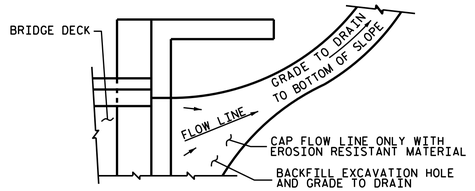

NOTE: IF THE APPROACH SLAB IS NOT CONSTRUCTED IMMEDIATELY AFTER THE BACKFILLING OF THE END BENT EXCAVATION, GRADE TO DRAIN TO THE BOTTOM OF THE SLOPE AND PROVIDE EROSION RESISTANT MATERIAL, SUCH AS FIBERGLASS ROVING OR AS DIRECTED BY THE ENGINEER TO PREVENT SOIL EROSION AND TO PROTECT THE AREA ADJACENT TO THE STRUCTURE. THE CONTRACTOR WILL BE REQUIRED TO REMOVE THESE MATERIALS PRIOR TO CONSTRUCTION OF THE APPROACH SLAB.

TEMPORARY DRAINAGE DETAIL

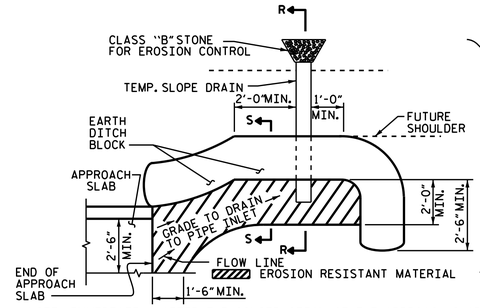

NOTE: IMMEDIATELY AFTER THE CONSTRUCTION OF THE APPROACH SLAB, THE CONTRACTOR SHALL PROVIDE TEMPORARY BERM AND SLOPE DRAIN. CONTRACTOR SHALL GRADE TO PIPE INLET AND PROVIDE EROSION RESISTANT MATERIAL AS SHOWN. THE EROSION RESISTANT MATERIAL SHALL BE EITHER 1) ASPHALT PLANT MIX, TYPE 1 OR TYPE 2, MIN. 2" DEPTH, 2) EROSION CONTROL MAT, OR 3) CONCRETE, AS DIRECTED BY THE ENGINEER. THE SLOPE DRAIN SHALL CONSIST OF A NON-PERFORATED TEMPORARY DRAINAGE PIPE, 12 INCHES IN DIAMETER.

PLAN VIEW

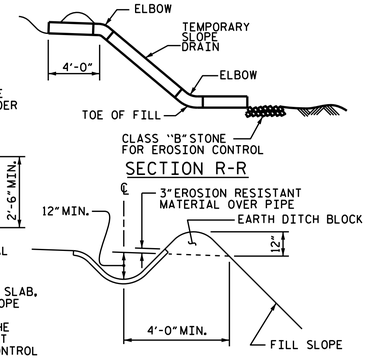

SECTION S-S

TEMPORARY BERM AND SLOPE DRAIN DETAILS

(TO BE USED WHEN SHOULDER BERM GUTTER IS REQUIRED)

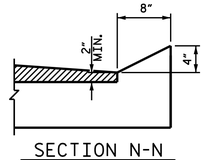

SECTION N-N

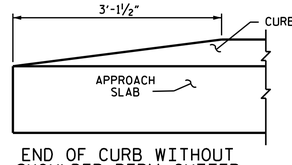

END OF CURB WITHOUT SHOULDER BERM GUTTER

CURB DETAILS

BILL OF MATERIAL					
APPROACH SLAB AT EB NO.1					
BAR	NO.	SIZE	TYPE	LENGTH	WEIGHT
✱ A1	13	#4	STR	28'-10"	250
A2	13	#4	STR	28'-10"	250
✱ B1	58	#5	STR	11'-2"	676
B2	58	#6	STR	11'-8"	1016
REINFORCING STEEL				LBS.	1266
✱ EPOXY COATED REINFORCING STEEL				LBS.	926
CLASS AA CONCRETE				C.Y.	16.7
APPROACH SLAB AT EB NO.2					
BAR	NO.	SIZE	TYPE	LENGTH	WEIGHT
✱ A1	13	#4	STR	28'-10"	250
A2	13	#4	STR	28'-10"	250
✱ B1	58	#5	STR	11'-2"	676
B2	58	#6	STR	11'-8"	1016
REINFORCING STEEL				LBS.	1266
✱ EPOXY COATED REINFORCING STEEL				LBS.	926
CLASS AA CONCRETE				C.Y.	16.7

SPLICE LENGTHS		
BAR SIZE	EPOXY COATED	UNCOATED
#4	2'-0"	1'-9"
#5	2'-6"	2'-2"
#6	3'-10"	2'-7"

PROJECT NO. 17BP.12.R.68

CLEVELAND COUNTY

STATION: 16+36.00 -L-

STATE OF NORTH CAROLINA
DEPARTMENT OF TRANSPORTATION
RALEIGH

STANDARD BRIDGE APPROACH SLAB FOR PRESTRESSED CONCRETE CORED SLAB UNIT (SUB-REGIONAL TIER) 90° SKEW

NORTH CAROLINA PROFESSIONAL SEAL 037479 ENGINEER NICHOLAS A. PIERCE

DocuSigned by: Nicholas Pierce 151108434D0B485...

4/4/2018

DOCUMENT NOT CONSIDERED FINAL UNLESS ALL SIGNATURES COMPLETED

REVISIONS						SHEET NO.
NO.	BY:	DATE:	NO.	BY:	DATE:	S-24
1			3			TOTAL SHEETS
2			4			25

ASSEMBLED BY : REZA KOUCHEKI	DATE : 12/16	
CHECKED BY : E K POPE	DATE : 1/9/17	
DRAWN BY : SHS/MAA 5-09	REV. 12-17	MAA/THC
CHECKED BY : BCH 5-09		

04-APR-2018 09:05
B:\TIPProjects-B\B5392\Structures\FinalPlans\401_049_17BP.12.R.68_SMU_AS_024_220201.DGN
naplerce

STD. NO. BAS_30_90S

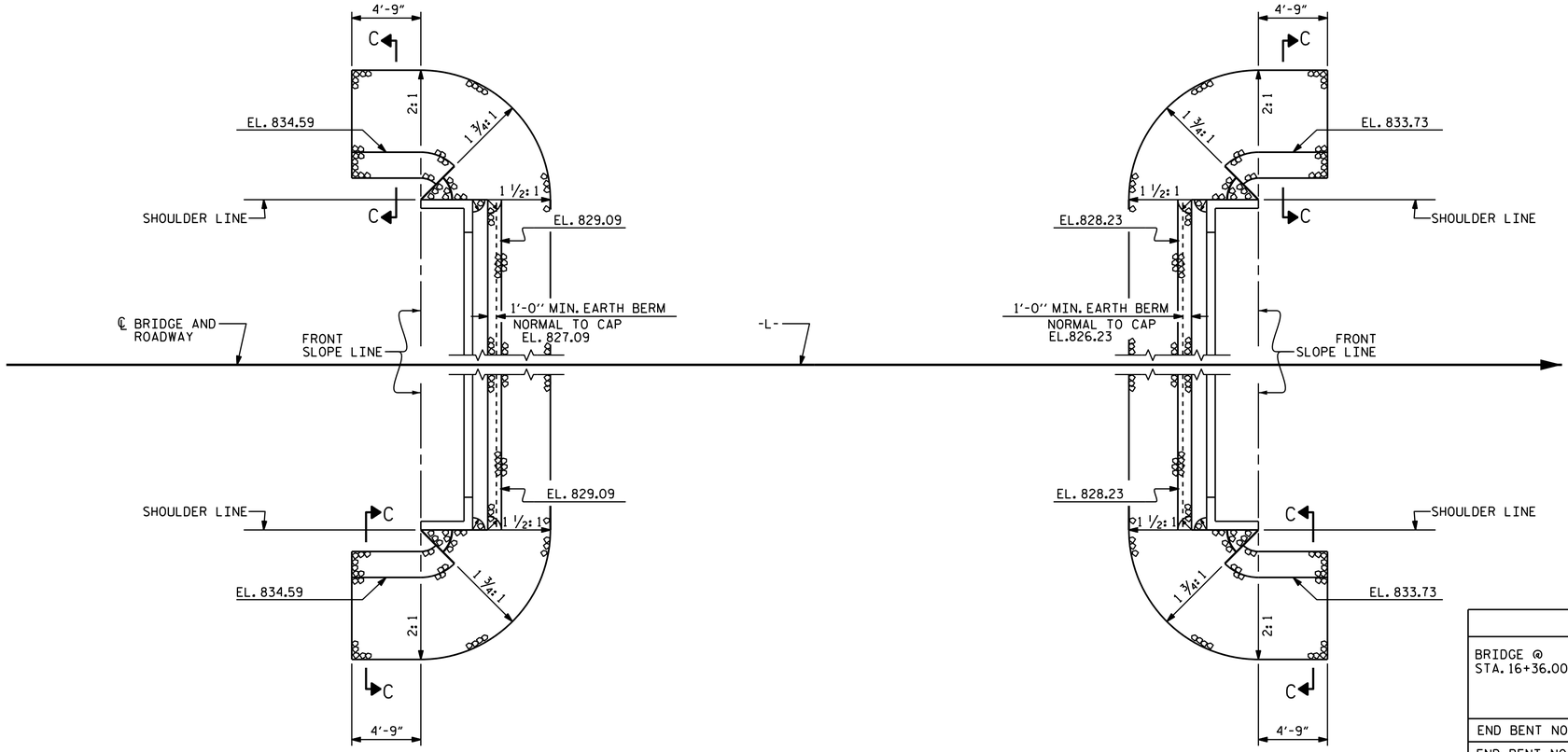

PLAN

ESTIMATED QUANTITIES		
BRIDGE @ STA. 16+36.00 -L-	RIP RAP CLASS II (2'-0" THICK)	GEOTEXTILE FOR DRAINAGE
	TONS	SQUARE YARDS
END BENT NO. 1	162	180
END BENT NO. 2	167	185
TOTAL	329	365

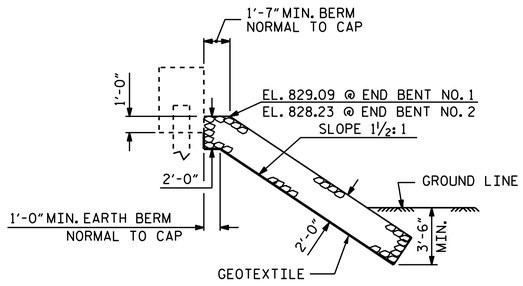

℄ SECTION
BERM RIP RAPPED

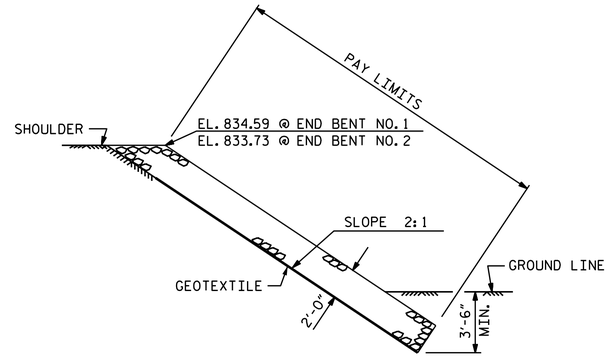

SECTION C-C

PROJECT NO. 17BP.12.R.68
CLEVELAND COUNTY
STATION: 16+36.00 -L-

STATE OF NORTH CAROLINA
DEPARTMENT OF TRANSPORTATION
RALEIGH
STANDARD
RIP RAP DETAILS

NORTH CAROLINA PROFESSIONAL SEAL 037479 ENGINEER NICHOLAS A. PIERCE
DocuSigned by: Nicholas Pierce 151108434D08485...
4/4/2018

DOCUMENT NOT CONSIDERED FINAL UNLESS ALL SIGNATURES COMPLETED

REVISIONS						SHEET NO.
NO.	BY:	DATE:	NO.	BY:	DATE:	S-25
1			3			TOTAL SHEETS
2			4			25

ASSEMBLED BY : REZA KOUCHEKI DATE : 03/2017
CHECKED BY : H.T. BARBOUR DATE : 04/03/17

DRAWN BY : REK 1/84
CHECKED BY : RDU 1/84

REV. 5/1/06R	TLA/GM
REV. 10/1/11	MAA/GM
REV. 12/21/11	MAA/GM

04-APR-2018 09:05
B:\TIPProjects-B\B5392\Structures\FinalPlans\401_051_17BP.12.R.68_SMU_RR_025_220201.DGN
napierce

STD. NO. RR2

STANDARD NOTES

DESIGN DATA:

SPECIFICATIONS	A.A.S.H.T.O. (CURRENT)
LIVE LOAD	SEE PLANS
IMPACT ALLOWANCE	SEE A.A.S.H.T.O.
STRESS IN EXTREME FIBER OF STRUCTURAL STEEL - AASHTO M270 GRADE 36	20,000 LBS. PER SQ. IN.
- AASHTO M270 GRADE 50W	27,000 LBS. PER SQ. IN.
- AASHTO M270 GRADE 50	27,000 LBS. PER SQ. IN.
REINFORCING STEEL IN TENSION - GRADE 60	24,000 LBS. PER SQ. IN.
CONCRETE IN COMPRESSION	1,200 LBS. PER SQ. IN.
CONCRETE IN SHEAR	SEE A.A.S.H.T.O.
STRUCTURAL TIMBER - TREATED OR UNTREATED EXTREME FIBER STRESS	1,800 LBS. PER SQ. IN.
COMPRESSION PERPENDICULAR TO GRAIN OF TIMBER	375 LBS. PER SQ. IN.
EQUIVALENT FLUID PRESSURE OF EARTH	30 LBS. PER CU. FT. (MINIMUM)

MATERIAL AND WORKMANSHIP:

EXCEPT AS MAY OTHERWISE BE SPECIFIED ON PLANS OR IN THE SPECIAL PROVISIONS, ALL MATERIAL AND WORKMANSHIP SHALL BE IN ACCORDANCE WITH THE 2018 "STANDARD SPECIFICATIONS FOR ROADS AND STRUCTURES" OF THE N. C. DEPARTMENT OF TRANSPORTATION.

STEEL SHEET PILING FOR PERMANENT OR TEMPORARY APPLICATIONS SHALL BE HOT ROLLED.

CONCRETE:

UNLESS OTHERWISE REQUIRED ON PLANS, CLASS A CONCRETE SHALL BE USED FOR ALL PORTIONS OF ALL STRUCTURES WITH THE EXCEPTION THAT: CLASS AA CONCRETE SHALL BE USED IN BRIDGE SUPERSTRUCTURES, ABUTMENT BACKWALLS, AND APPROACH SLABS; AND CLASS B CONCRETE SHALL BE USED FOR SLOPE PROTECTION AND RIP RAP.

CONCRETE CHAMFERS:

UNLESS OTHERWISE NOTED ON THE PLANS, ALL EXPOSED CORNERS ON STRUCTURES SHALL BE CHAMFERED ¾" WITH THE FOLLOWING EXCEPTIONS: TOP CORNERS OF CURBS MAY BE ROUNDED TO 1½" RADIUS WHICH IS BUILT INTO CURB FORMS; CORNERS OF TRANSVERSE FLOOR EXPANSION JOINTS SHALL BE ROUNDED WITH A ¼" FINISHING TOOL UNLESS OTHERWISE REQUIRED ON PLANS; AND CORNERS OF EXPANSION JOINTS IN THE ROADWAY FACES AND TOPS OF CURBS AND SIDEWALKS SHALL BE ROUNDED TO A ¼" RADIUS WITH A FINISHING STONE OR TOOL UNLESS OTHERWISE REQUIRED ON PLANS.

DOWELS:

DOWELS WHEN INDICATED ON PLANS AS FOR CULVERT EXTENSIONS, SHALL BE EMBEDDED AT LEAST 12" INTO THE OLD CONCRETE AND GROUTED INTO PLACE WITH 1:2 CEMENT MORTAR.

ALLOWANCE FOR DEAD LOAD DEFLECTION, SETTLEMENT, ETC. IN CASTING SUPERSTRUCTURES:

BRIDGES SHALL BE BUILT ON THE GRADE OR VERTICAL CURVE SHOWN ON PLANS. SLABS, CURBS AND PARAPETS SHALL CONFORM TO THE GRADE OR CURVE.

ALL DIMENSIONS WHICH ARE GIVEN IN SECTION AND ARE AFFECTED BY DEAD LOAD DEFLECTIONS ARE DIMENSIONS AT CENTER LINE OF BEARING UNLESS OTHERWISE NOTED ON PLANS. IN SETTING FORMS FOR STEEL BEAM BRIDGES AND PRESTRESSED CONCRETE GIRDER BRIDGES, ADJUSTMENTS SHALL BE MADE DUE TO THE DEAD LOAD DEFLECTIONS FOR THE ELEVATIONS SHOWN. WHERE BLOCKS ARE SHOWN OVER BEAMS FOR BUILDING UP TO THE SLAB, THE VERTICAL DIMENSIONS OF THE BLOCKS SHALL BE ADJUSTED BETWEEN BEARINGS TO COMPENSATE FOR DEAD LOAD DEFLECTIONS, VERTICAL CURVE ORDINATE, AND ACTUAL BEAM CAMBER. WHERE BOTTOM OF SLAB IS IN LINE WITH BOTTOM OF TOP FLANGES, DEPTH OF SLAB BETWEEN BEARINGS SHALL BE ADJUSTED TO COMPENSATE FOR DEAD LOAD DEFLECTION, VERTICAL CURVE ORDINATE, AND ACTUAL BEAM CAMBER.

IN SETTING FALSEWORK AND FORMS FOR REINFORCED CONCRETE SPANS, AN ALLOWANCE SHALL BE MADE FOR DEAD LOAD DEFLECTIONS, SETTLEMENT OF FALSEWORK, AND PERMANENT CAMBER WHICH SHALL BE PROVIDED FOR IN ADDITION TO THE ELEVATIONS SHOWN. AFTER REMOVAL OF THE FALSEWORK, THE FINISHED STRUCTURES SHALL CONFORM TO THE PROFILE AND ELEVATIONS SHOWN ON THE PLANS AND CONSTRUCTION ELEVATIONS FURNISHED BY THE ENGINEER.

DETAILED DRAWINGS FOR FALSEWORK OR FORMS FOR BRIDGE SUPERSTRUCTURE AND ANY STRUCTURE OR PARTS OF A STRUCTURE AS NOTED ON THE PLANS SHALL BE SUBMITTED TO THE ENGINEER FOR APPROVAL BEFORE CONSTRUCTION OF THE FALSEWORK OR FORMS IS STARTED.

REINFORCING STEEL:

ALL REINFORCING STEEL SHALL BE DEFORMED. DIMENSIONS RELATIVE TO PLACEMENT OF REINFORCING ARE TO CENTERS OF BARS UNLESS OTHERWISE INDICATED IN THE PLANS. DIMENSIONS ON BAR DETAILS ARE TO CENTERS OF BARS OR ARE OUT TO OUT AS INDICATED ON PLANS.

WIRE BAR SUPPORTS SHALL BE PROVIDED FOR REINFORCING STEEL WHERE INDICATED ON THE PLANS. WHEN BAR SUPPORT PIECES ARE PLACED IN CONTINUOUS LINES, THEY SHALL BE SO PLACED THAT THE ENDS OF THE SUPPORTING WIRES SHALL BE LAPPED TO LOCK LEGS ON ADJOINING PIECES.

STRUCTURAL STEEL:

AT THE CONTRACTOR'S OPTION, HE MAY SUBSTITUTE ⅞" Ø SHEAR STUDS FOR THE ¾" Ø STUDS SPECIFIED ON THE PLANS. THIS SUBSTITUTION SHALL BE MADE AT THE RATE OF 3 - ⅞" Ø STUDS FOR 4 - ¾" Ø STUDS, AND STUD SPACING CHANGES SHALL BE MADE AS NECESSARY TO PROVIDE THE SAME EQUIVALENT NUMBER OF ⅞" Ø STUDS ALONG THE BEAM AS SHOWN FOR ¾" Ø STUDS BASED ON THE RATIO OF 3 - ⅞" Ø STUDS FOR 4 - ¾" Ø STUDS. STUDS OF THE LENGTH SPECIFIED ON THE PLANS MUST BE PROVIDED. THE MAXIMUM SPACING SHALL BE 2'-0".

EXCEPT AT THE INTERIOR SUPPORTS OF CONTINUOUS BEAMS WHERE THE COVER PLATE IS IN CONTACT WITH BEARING PLATE, THE CONTRACTOR MAY, AT HIS OPTION, SUBSTITUTE FOR THE COVER PLATES DESIGNATED ON THE PLANS COVER PLATES OF THE EQUIVALENT AREA PROVIDED THESE PLATES ARE AT LEAST 5/16" IN THICKNESS AND DO NOT EXCEED A WIDTH EQUAL TO THE FLANGE WIDTH LESS 2" OR A THICKNESS EQUAL TO 2 TIMES THE FLANGE THICKNESS. THE SIZE OF FILLET WELDS SHALL CONFORM TO THE REQUIREMENTS OF THE CURRENT ANSI/AASHTO/AWS "BRIDGE WELDING CODE". ELECTROSLAG WELDING WILL NOT BE PERMITTED.

WITH THE SOLE EXCEPTION OF EDGES AT SURFACES WHICH BEAR ON OTHER SURFACES, ALL SHARP EDGES AND ENDS OF SHAPES AND PLATES SHALL BE SLIGHTLY ROUNDED BY SUITABLE MEANS TO A RADIUS OF APPROXIMATELY 1/16 INCH OR EQUIVALENT FLAT SURFACE AT A SUITABLE ANGLE PRIOR TO PAINTING, GALVANIZING, OR METALLIZING.

HANDRAILS AND POSTS:

METAL STANDARDS AND FACES OF THE CONCRETE END POSTS FOR THE METAL RAIL SHALL BE SET NORMAL TO THE GRADE OF THE CURB, UNLESS OTHERWISE SHOWN ON PLANS. THE METAL RAIL AND TOPS OF CONCRETE POSTS USED WITH THE ALUMINUM RAIL SHALL BE BUILT PARALLEL TO THE GRADE OF THE CURB.

METAL HANDRAILS SHALL BE IN ACCORDANCE WITH THE PLANS. RAILS SHALL BE AS MANUFACTURED FOR BRIDGE RAILING. CASTINGS SHALL BE OF A UNIFORM APPEARANCE. FINS AND OTHER DEFORMATIONS RESULTING FROM CASTING OR OTHERWISE SHALL BE REMOVED IN A MANNER SO THAT A UNIFORM COLORING OF THE COMPLETED CASTING SHALL BE OBTAINED. CASTINGS WITH DISCOLORATIONS OR OF NON-UNIFORM COLORING WILL NOT BE ACCEPTED. CERTIFIED MILL REPORTS ARE REQUIRED FOR METAL RAILS AND POSTS.

SPECIAL NOTES:

GENERALLY, IN CASE OF DISCREPANCY, THIS STANDARD SHEET OF NOTES SHALL GOVERN OVER THE SPECIFICATIONS, BUT THE REMAINDER OF THE PLANS SHALL GOVERN OVER NOTES HEREON, AND SPECIAL PROVISIONS SHALL GOVERN OVER ALL. SEE SPECIFICATIONS ARTICLE 105-4.

ENGLISH

JANUARY, 1990

STD. NO. SN

REV. 6-16-95 EEM (c) RGW REV. 5-7-03 RWW (c) JTE REV. 10-1-11 MAA (c) GM
REV. 8-16-99 RWW (c) LES REV. 5-1-06 TLA (c) GM REV. 12-17 MAA (c) THC

04-APR-2018 09:05
B:\TIPProjects-B\B5392\Structures\FinalPlans\401_053_17BP_12_R_68_SN_220201.DGN
napierce

DocuSign Envelope ID: E2E99FF9-4956-40BC-9B2D-93B1DC306A7B

09/08/99

TIP PROJECT: 17BP.12.R.90

CONTRACT: DL00167

See Sheet 1A For Index of Sheets
See Sheet 1B For Conventional Plan Sheet Symbols

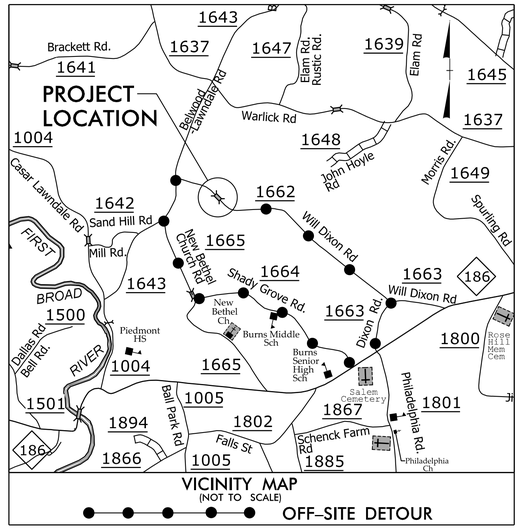

STATE OF NORTH CAROLINA
DIVISION OF HIGHWAYS

CLEVELAND COUNTY

LOCATION: REPLACE BRIDGE NO. 192 OVER MAPLE CREEK ON SR 1662 (WILL DIXON ROAD)

TYPE OF WORK: GRADING, DRAINAGE, PAVING, BRIDGE, EROSION CONTROL & TRAFFIC CONTROL

STATE	STATE PROJECT REFERENCE NO.	SHEET NO.	TOTAL SHEETS
N.C.	17BP.12.R.90	1	

STATE PROJ. NO.	F. A. PROJ. NO.	DESCRIPTION
46108.1.1	BRZ-1662(4)	PE
46108.2.1	BRZ-1662(4)	R/W, UTIL
17BP.12.R.90	N/A	CONST

4

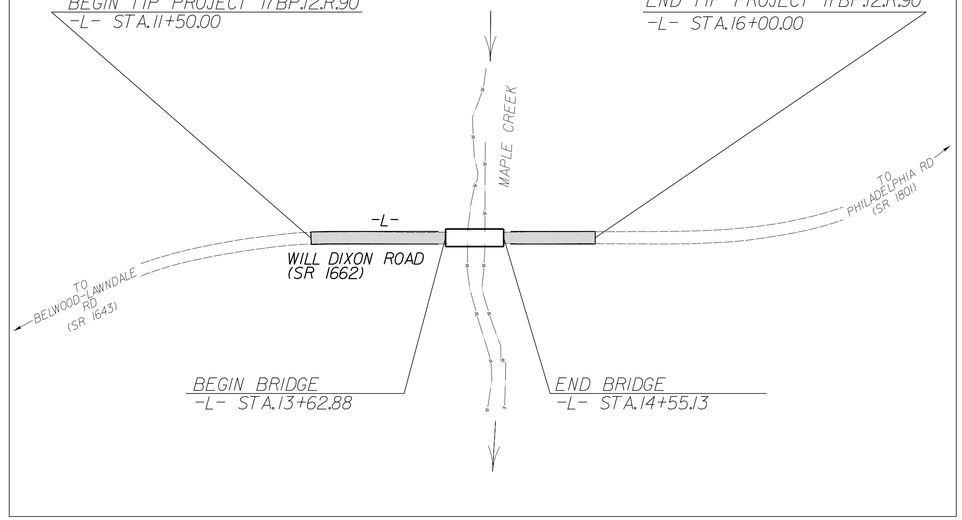

NAD 83/ NA 2011

*DESIGN EXCEPTION:
SAG VERTICAL CURVE K
VERTICAL SSD

DOCUMENT NOT CONSIDERED FINAL UNLESS ALL SIGNATURES COMPLETED

GRAPHIC SCALES

50 25 0 50 100
PLANS

50 25 0 50 100
PROFILE (HORIZONTAL)

10 5 0 10 20
PROFILE (VERTICAL)

DESIGN DATA

ADT 2018 = 356
ADT 2038 = 578
K = 18 %
D = 80%
T = 9 % *
V = 50 MPH
* TTST =1% DUAL 8%
FUNC CLASS =
LOCAL
SUB-REGIONAL TIER

PROJECT LENGTH

LENGTH ROADWAY TIP PROJECT 17BP.12.R.90 = 0.068 MILES
LENGTH STRUCTURE TIP PROJECT 17BP.12.R.90 = 0.017 MILES
TOTAL LENGTH OF TIP PROJECT 17BP.12.R.90 = 0.085 MILES

PLANS PREPARED FOR THE NCDOT BY:
MOTT MACDONALD
PO Box 700
Fuquay-Varina, NC 27526
(919) 552-2253
(919) 552-2254 (Fax)
www.mottmac.com
LICENSE NO. F-0669

HDR Engineering, Inc. of the Carolinas
555 Fayetteville St. Suite 900 Raleigh, N.C. 27601
N.C.B.E.L.S. License Number: F-0116

2018 STANDARD SPECIFICATIONS

RIGHT OF WAY DATE:
FEBRUARY 17, 2017

LETTING DATE:
MAY 22, 2018

DAVID WALLER, PE
PROJECT ENGINEER

STEVE RACKLEY, PE
NCDOT CONTACT

HYDRAULICS ENGINEER

DocuSigned by: Trenton J. Cormier 4/9/2018
BAE073AA58A4428...
SIGNATURE:
NORTH CAROLINA PROFESSIONAL SEAL 34364 ENGINEER TRENTON J. CORMIER
P.E.

ROADWAY DESIGN ENGINEER

DocuSigned by: David C. Waller 4/9/2018
58A6E5F4D013452...
SIGNATURE:
NORTH CAROLINA PROFESSIONAL SEAL 22606 ENGINEER DAVID C. WALLER
P.E.

STATE OF NORTH CAROLINA * DEPARTMENT OF TRANSPORTATION *

14:48:12
R:\Roadway\Proj\5393_rdy_tsh.dgn
RIE8143

DocuSign Envelope ID: 31124AF4-8F4B-4722-AB3E-C31D4BE768B7

5/14/99

PROJECT REFERENCE NO.	SHEET NO.
17BP.12.R.90	1A
R/W SHEET NO.	

ROADWAY DESIGN ENGINEER

NORTH CAROLINA PROFESSIONAL SEAL 22606 ENGINEER D. C. WALLER

DocuSigned by: D. C. Waller 58AD...

2/21/2018

DOCUMENT NOT CONSIDERED FINAL UNLESS ALL SIGNATURES COMPLETED

GENERAL NOTES:

2018 SPECIFICATIONS
EFFECTIVE: 01-16-2018
REVISED:

GRADE LINE:
GRADING AND SURFACING:

THE GRADE LINES SHOWN DENOTE THE FINISHED ELEVATION OF THE PROPOSED SURFACING AT GRADE POINTS SHOWN ON THE TYPICAL SECTIONS. GRADE LINES MAY BE ADJUSTED AT THEIR BEGINNING AND ENDING AND AT STRUCTURES AS DIRECTED BY THE ENGINEER IN ORDER TO SECURE A PROPER TIE-IN.

CLEARING:

CLEARING ON THIS PROJECT SHALL BE PERFORMED TO THE LIMITS ESTABLISHED BY METHOD III.

SUPERELEVATION:

ALL CURVES ON THIS PROJECT SHALL BE SUPERELEVATED IN ACCORDANCE WITH STD. NO. 225.04 USING THE RATE OF SUPERELEVATION AND RUNOFF SHOWN ON THE PLANS. SUPERELEVATION IS TO BE REVOLVED ABOUT THE GRADE POINTS SHOWN ON THE TYPICAL SECTIONS.

SHOULDER CONSTRUCTION:

ASPHALT, EARTH, AND CONCRETE SHOULDER CONSTRUCTION ON THE HIGH SIDE OF SUPERELEVATED CURVES SHALL BE IN ACCORDANCE WITH STD. NO. 560.01

DRIVEWAYS:

DRIVEWAYS SHALL BE CONSTRUCTED IN ACCORDANCE WITH STD. 848.02 USING 3 FOOT RADII OR RADII AS SHOWN ON THE PLANS. LOCATIONS OF DRIVES WILL BE AS SHOWN ON THE PLANS OR AS DIRECTED BY THE ENGINEER.

GUARDRAIL:

THE GUARDRAIL LOCATIONS SHOWN ON THE PLANS MAY BE ADJUSTED DURING CONSTRUCTION AS DIRECTED BY THE ENGINEER. THE CONTRACTOR SHOULD CONSULT WITH THE ENGINEER PRIOR TO ORDERING GUARDRAIL MATERIAL.

END BENTS:

THE ENGINEER SHALL CHECK THE STRUCTURE END BENT PLANS, DETAILS, AND CROSS-SECTION PRIOR TO SETTING OF THE SLOPE STAKES FOR THE EMBANKMENT OR EXCAVATION APPROACHING A BRIDGE.

UTILITIES:

THERE ARE NO UTILITY CONFLICTS ON THIS PROJECT.

RIGHT-OF-WAY MARKERS:

ALL RIGHT-OF-WAY MARKERS ON THIS PROJECT SHALL BE PLACED BY OTHERS.

INDEX OF SHEETS

SHEET NUMBER	DESCRIPTION
1	TITLE SHEET
1A	INDEX OF SHEETS, GENERAL NOTES, AND LIST OF STANDARD DRAWINGS
1B	CONVENTIONAL SYMBOLS
1C-1 THRU 1C-2	SURVEY CONTROL SHEETS
2A-1	PAVEMENT SCHEDULE AND TYPICAL SECTIONS
3B-1	ROADWAY SUMMARIES
3D-1	DRAINAGE SUMMARY
4	PLAN SHEET
5	PROFILE SHEET
TMP-1 THRU TMP-3	TRAFFIC MANAGEMENT PLANS
EC-1 THRU EC-5	EROSION CONTROL PLANS
X-1 THRU X-3	CROSS-SECTIONS
S-1 THRU S-18	STRUCTURE PLANS

EFF. 01-16-2018
REV.

2018 ROADWAY ENGLISH STANDARD DRAWINGS

The following Roadway Standards as appear in "Roadway Standard Drawings" Highway Design Branch - N. C. Department of Transportation - Raleigh, N. C., Dated January, 2018 are applicable to this project and by reference hereby are considered a part of these plans:

STD.NO.	TITLE
DIVISION 2 - EARTHWORK	
200.03	Method of Clearing - Method III
225.02	Guide for Grading Subgrade - Secondary and Local
225.04	Method of Obtaining Superelevation - Two Lane Pavement
DIVISION 3 - PIPE CULVERTS	
300.01	Method of Pipe Installation
DIVISION 4 - MAJOR STRUCTURES	
422.01	Bridge Approach Fills - Type I Standard Approach Fill
DIVISION 5 - SUBGRADE, BASES AND SHOULDERS	
560.01	Method of Shoulder Construction - High Side of Superelevated Curve - Method I
DIVISION 8 - INCIDENTALS	
840.00	Concrete Base Pad for Drainage Structures
840.25	Anchorage for Frames - Brick or Concrete or Precast
840.29	Frames and Narrow Slot Flat Grates
840.35	Traffic Bearing Grated Drop Inlet - for Cast Iron Double Frame and Grates
840.46	Traffic Bearing Precast Drainage Structure
840.66	Drainage Structure Steps
846.01	Concrete Curb, Gutter and Curb & Gutter
846.04	Drop Inlet Installation in Shoulder Berm Gutter
862.01	Guardrail Placement
862.02	Guardrail Installation
862.03	Structure Anchor Units
876.02	Guide for Rip Rap at Pipe Outlets
876.04	Drainage Ditches with Class 'B' Rip Rap

9:48:06 AM
R:\Roadway\Proj\tb5393_rdy_pst01A.dgn
mdavis
01/28/19

12/2/2016

PROJECT REFERENCE NO.	SHEET NO.
17BPJ2.R.90	1B

STATE OF NORTH CAROLINA, DIVISION OF HIGHWAYS

CONVENTIONAL PLAN SHEET SYMBOLS

Note: Not to Scale **S.U.E. = Subsurface Utility Engineering*

BOUNDARIES AND PROPERTY:

- State Line
- County Line
- Township Line
- City Line
- Reservation Line
- Property Line
- Existing Iron Pin — EIP
- Computed Property Corner
- Property Monument — ECM
- Parcel/Sequence Number — 123
- Existing Fence Line
- Proposed Woven Wire Fence
- Proposed Chain Link Fence
- Proposed Barbed Wire Fence
- Existing Wetland Boundary — WLB
- Proposed Wetland Boundary — WLB
- Existing Endangered Animal Boundary — EAB
- Existing Endangered Plant Boundary — EPB
- Existing Historic Property Boundary — HPB
- Known Contamination Area: Soil — S
- Potential Contamination Area: Soil — S
- Known Contamination Area: Water — W
- Potential Contamination Area: Water — W
- Contaminated Site: Known or Potential

BUILDINGS AND OTHER CULTURE:

- Gas Pump Vent or U/G Tank Cap
- Sign — S
- Well — W
- Small Mine
- Foundation
- Area Outline
- Cemetery
- Building
- School
- Church
- Dam

HYDROLOGY:

- Stream or Body of Water
- Hydro, Pool or Reservoir
- Jurisdictional Stream — JS
- Buffer Zone 1 — BZ 1
- Buffer Zone 2 — BZ 2
- Flow Arrow
- Disappearing Stream
- Spring
- Wetland
- Proposed Lateral, Tail, Head Ditch — FLOW
- False Sump

RAILROADS:

- Standard Gauge — CSX TRANSPORTATION
- RR Signal Milepost — MILEPOST 35
- Switch — SWITCH
- RR Abandoned
- RR Dismantled

RIGHT OF WAY & PROJECT CONTROL:

- Secondary Horiz and Vert Control Point
- Primary Horiz Control Point
- Primary Horiz and Vert Control Point
- Exist Permanent Easement Pin and Cap
- New Permanent Easement Pin and Cap
- Vertical Benchmark
- Existing Right of Way Marker
- Existing Right of Way Line
- New Right of Way Line — RW
- New Right of Way Line with Pin and Cap — RW
- New Right of Way Line with Concrete or Granite R/W Marker — RW
- New Control of Access Line with Concrete C/A Marker — CA
- Existing Control of Access — CA
- New Control of Access — CA
- Existing Easement Line — E
- New Temporary Construction Easement — E
- New Temporary Drainage Easement — TDE
- New Permanent Drainage Easement — PDE
- New Permanent Drainage / Utility Easement — DUE
- New Permanent Utility Easement — PUE
- New Temporary Utility Easement — TUE
- New Aerial Utility Easement — AUE

ROADS AND RELATED FEATURES:

- Existing Edge of Pavement
- Existing Curb
- Proposed Slope Stakes Cut — C
- Proposed Slope Stakes Fill — F
- Proposed Curb Ramp — CR
- Existing Metal Guardrail
- Proposed Guardrail
- Existing Cable Guiderail
- Proposed Cable Guiderail
- Equality Symbol
- Pavement Removal

VEGETATION:

- Single Tree
- Single Shrub
- Hedge
- Woods Line
- Orchard
- Vineyard — Vineyard

EXISTING STRUCTURES:

MAJOR:

- Bridge, Tunnel or Box Culvert — CONC
- Bridge Wing Wall, Head Wall and End Wall — CONC WW

MINOR:

- Head and End Wall — CONC HW
- Pipe Culvert
- Footbridge
- Drainage Box: Catch Basin, DI or JB — CB
- Paved Ditch Gutter
- Storm Sewer Manhole — S
- Storm Sewer — S

UTILITIES:

POWER:

- Existing Power Pole
- Proposed Power Pole
- Existing Joint Use Pole
- Proposed Joint Use Pole
- Power Manhole — P
- Power Line Tower
- Power Transformer
- U/G Power Cable Hand Hole
- H-Frame Pole
- U/G Power Line LOS B (S.U.E.*) — P
- U/G Power Line LOS C (S.U.E.*) — P
- U/G Power Line LOS D (S.U.E.*) — P

TELEPHONE:

- Existing Telephone Pole
- Proposed Telephone Pole
- Telephone Manhole — T
- Telephone Pedestal — T
- Telephone Cell Tower
- U/G Telephone Cable Hand Hole — HH
- U/G Telephone Cable LOS B (S.U.E.*) — T
- U/G Telephone Cable LOS C (S.U.E.*) — T
- U/G Telephone Cable LOS D (S.U.E.*) — T
- U/G Telephone Conduit LOS B (S.U.E.*) — TC
- U/G Telephone Conduit LOS C (S.U.E.*) — TC
- U/G Telephone Conduit LOS D (S.U.E.*) — TC
- U/G Fiber Optics Cable LOS B (S.U.E.*) — T FO
- U/G Fiber Optics Cable LOS C (S.U.E.*) — T FO
- U/G Fiber Optics Cable LOS D (S.U.E.*) — T FO

WATER:

- Water Manhole — W
- Water Meter
- Water Valve
- Water Hydrant
- U/G Water Line LOS B (S.U.E*) — W
- U/G Water Line LOS C (S.U.E*) — W
- U/G Water Line LOS D (S.U.E*) — W
- Above Ground Water Line — A/G Water

TV:

- TV Pedestal — C
- TV Tower
- U/G TV Cable Hand Hole — HH
- U/G TV Cable LOS B (S.U.E.*) — TV
- U/G TV Cable LOS C (S.U.E.*) — TV
- U/G TV Cable LOS D (S.U.E.*) — TV
- U/G Fiber Optic Cable LOS B (S.U.E.*) — TV FO
- U/G Fiber Optic Cable LOS C (S.U.E.*) — TV FO
- U/G Fiber Optic Cable LOS D (S.U.E.*) — TV FO

GAS:

- Gas Valve
- Gas Meter
- U/G Gas Line LOS B (S.U.E.*) — G
- U/G Gas Line LOS C (S.U.E.*) — G
- U/G Gas Line LOS D (S.U.E.*) — G
- Above Ground Gas Line — A/G Gas

SANITARY SEWER:

- Sanitary Sewer Manhole
- Sanitary Sewer Cleanout
- U/G Sanitary Sewer Line — SS
- Above Ground Sanitary Sewer — A/G Sanitary Sewer
- SS Forced Main Line LOS B (S.U.E.*) — FSS
- SS Forced Main Line LOS C (S.U.E.*) — FSS
- SS Forced Main Line LOS D (S.U.E.*) — FSS

MISCELLANEOUS:

- Utility Pole
- Utility Pole with Base
- Utility Located Object
- Utility Traffic Signal Box — S
- Utility Unknown U/G Line LOS B (S.U.E.*) — ?UTL
- U/G Tank; Water, Gas, Oil
- Underground Storage Tank, Approx. Loc. — UST
- A/G Tank; Water, Gas, Oil
- Geoenvironmental Boring
- U/G Test Hole LOS A (S.U.E.*)
- Abandoned According to Utility Records — AATUR
- End of Information — E.O.I.

6/2/99

PROJECT REFERENCE NO.	SHEET NO.
17BP.12.R.90	1C-1
Location and Surveys	

SURVEY CONTROL SHEET 17BP.12.R.90

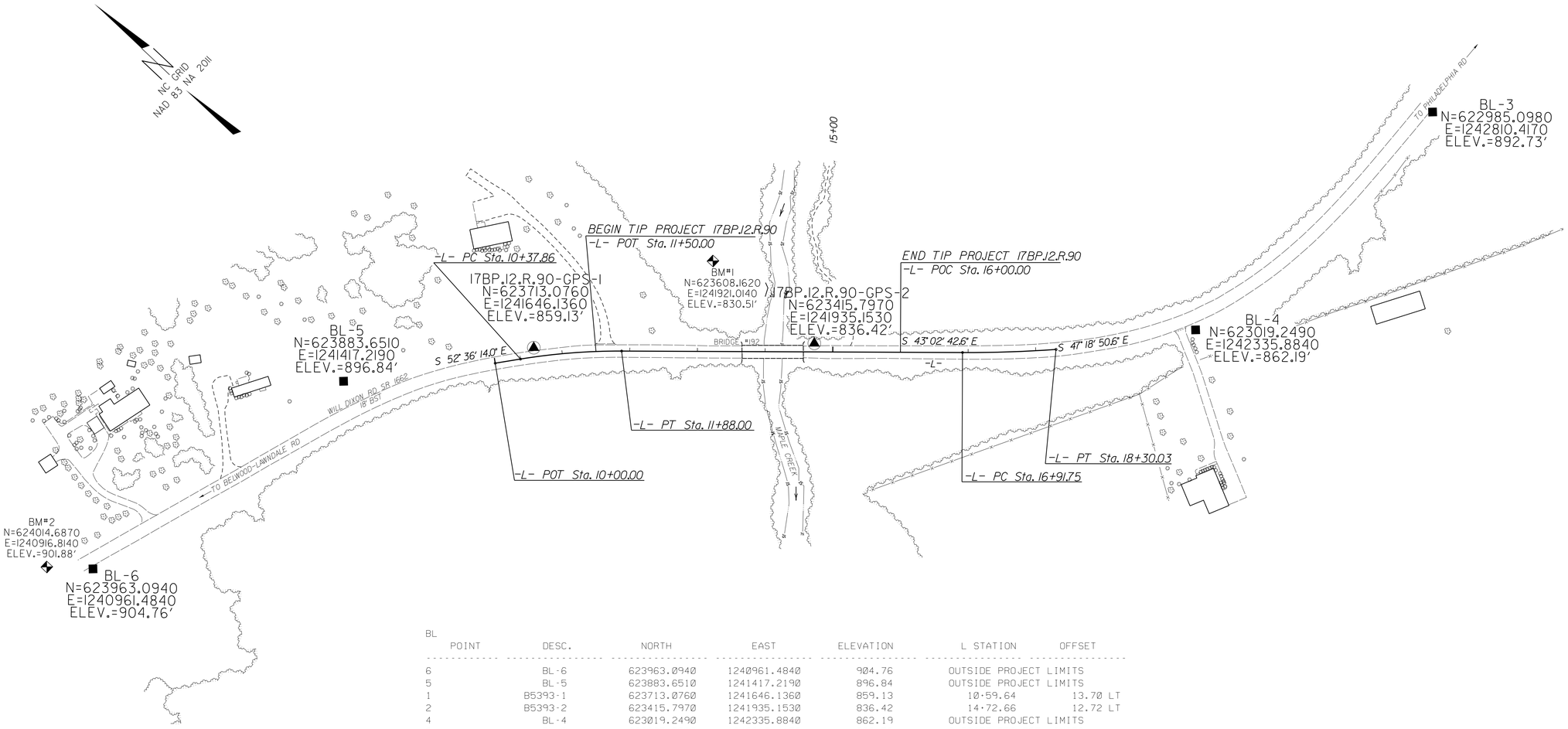

BL

POINT	DESC.	NORTH	EAST	ELEVATION	L STATION	OFFSET
6	BL-6	623963.0940	1240961.4840	904.76	OUTSIDE PROJECT LIMITS	
5	BL-5	623883.6510	1241417.2190	896.84	OUTSIDE PROJECT LIMITS	
1	B5393-1	623713.0760	1241646.1360	859.13	10+59.64	13.70 LT
2	B5393-2	623415.7970	1241935.1530	836.42	14+72.66	12.72 LT
4	BL-4	623019.2490	1242335.8840	862.19	OUTSIDE PROJECT LIMITS	
3	BL-3	622985.0980	1242810.4170	892.73	OUTSIDE PROJECT LIMITS	

```
****************************************
BM#1       ELEVATION = 830.51'
N 623608      E 1241921
L STATION 13+22.00 134' LEFT
RR SPIKE IN SW ROOT OF A 18" BLACK
WALNUT
****************************************
****************************************
BM#2       ELEVATION = 901.88'
N 624015      E 1240917
L STATION 18+30.00
N 55°27'16.56" W  DIST   1525.66'
CHISELED SQUARE IN CONCRETE DITCH
****************************************
****************************************
BM#3       ELEVATION = 892.73'
N 622985      E 1242810
L STATION 18+30.00
S 75°31'24.52" E  DIST    657.84'
"BL-3" (SET FLUSH WITH GROUND)
POINT LIES 3.45' SOUTH OF EDGE OF
WILL DIXON ROAD
****************************************
```

DATUM DESCRIPTION

THE LOCALIZED COORDINATE SYSTEM DEVELOPED FOR THIS PROJECT IS BASED ON THE STATE PLANE COORDINATES ESTABLISHED BY NCDOT FOR MONUMENT "B5393-1" WITH NAD 83/NA 2011 STATE PLANE GRID COORDINATES OF NORTHING: 623713.0760(ft) EASTING: 1241646.1360(ft) ELEVATION: 859.13'(ft)
THE AVERAGE COMBINED GRID FACTOR USED ON THIS PROJECT (GROUND TO GRID) IS: 0.9998417899
THE N.C. LAMBERT GRID BEARING AND LOCALIZED HORIZONTAL GROUND DISTANCE FROM "B5393-1" TO -L- STATION 10+00.00 IS N 65° 13' 34.15" W 61.45'
ALL LINEAR DIMENSIONS ARE LOCALIZED HORIZONTAL DISTANCES
VERTICAL DATUM USED IS NAVD 88

NOTES:

1. *THE CONTROL DATA FOR THIS PROJECT CAN BE FOUND ELECTRONICALLY BY SELECTING PROJECT CONTROL DATA AT: HTTPS://CONNECT.NCDOT.GOV/RESOURCES/LOCATION/*

   THE FILES TO BE FOUND ARE AS FOLLOWS: 17BP.12.R.90_LS_CONTROL.TXT

   SITE CALIBRATION INFORMATION HAS NOT BEEN PROVIDED FOR THIS PROJECT. IF FURTHER INFORMATION IS NEEDED, PLEASE CONTACT THE LOCATION AND SURVEYS UNIT.

▲ *INDICATES GEODETIC CONTROL MONUMENTS USED OR SET FOR HORIZONTAL PROJECT CONTROL BY THE NCDOT LOCATION AND SURVEYS UNIT.*

PROJECT CONTROL ESTABLISHED USING GLOBAL POSITIONING SYSTEM.

NOTE: DRAWING NOT TO SCALE

10:40:48 AM
R:\Roadway\Proj\B5393_Ls_lc-1.dgn

PROJECT REFERENCE NO.	SHEET NO.
17BP.12.R.90	1C-2
Location and Surveys	

SURVEY CONTROL SHEET 17BP.12.R.90
PRELIMINARY

L

TYPE	STATION	NORTH	EAST
POT	10+00.00	623738.8264	1241590.3402
PC	10+37.86	623715.8361	1241620.4145
PT	11+88.00	623615.1429	1241731.5592
PC	16+91.75	623246.9988	1242075.4021
PT	18+30.03	623149.5458	1242173.4679

ROW MARKER CONCRETE OR GRANITE-E

ALIGN	STATION	OFFSET	NORTH	EAST
L	11+50.00	22.50	623626.3222	1241689.2600
L	11+50.00	40.00	623613.8479	1241676.9864
L	11+50.00	-22.50	623658.3990	1241720.8208
L	11+50.00	-40.00	623670.8732	1241733.0944
L	11+88.00	40.00	623587.8399	1241702.3265
L	11+88.00	-40.00	623642.4459	1241760.7918
L	16+00.00	40.00	623286.7463	1241983.5449
L	16+00.00	22.50	623298.6913	1241996.3342
L	16+00.00	-40.00	623341.3523	1242042.0102
L	16+00.00	-22.50	623329.4072	1242029.2209

DATUM DESCRIPTION

THE LOCALIZED COORDINATE SYSTEM DEVELOPED FOR THIS PROJECT IS BASED ON THE STATE PLANE COORDINATES ESTABLISHED BY NCDOT FOR MONUMENT "B5393-1"
WITH NAD 83/NA 2011 STATE PLANE GRID COORDINATES OF
NORTHING: 623713.0760(ft) EASTING: 1241646.1360(ft)
ELEVATION: 859.13'(ft)
THE AVERAGE COMBINED GRID FACTOR USED ON THIS PROJECT (GROUND TO GRID) IS: 0.9998417899
THE N.C. LAMBERT GRID BEARING AND LOCALIZED HORIZONTAL GROUND DISTANCE FROM "B5393-1" TO -L- STATION 10+00.00 IS
N 65° 13' 34.15" W 61.45'
ALL LINEAR DIMENSIONS ARE LOCALIZED HORIZONTAL DISTANCES
VERTICAL DATUM USED IS NAVD 88

NOTES:

1. *THE CONTROL DATA FOR THIS PROJECT CAN BE FOUND ELECTRONICALLY BY SELECTING PROJECT CONTROL DATA AT:*
   HTTPS://CONNECT.NCDOT.GOV/RESOURCES/LOCATION/

   THE FILES TO BE FOUND ARE AS FOLLOWS:
   17BP.12.R.90_LS_CONTROL.TXT

   SITE CALIBRATION INFORMATION HAS NOT BEEN PROVIDED FOR THIS PROJECT. IF FURTHER INFORMATION IS NEEDED, PLEASE CONTACT THE LOCATION AND SURVEYS UNIT.

▲ *INDICATES GEODETIC CONTROL MONUMENTS USED OR SET FOR HORIZONTAL PROJECT CONTROL BY THE NCDOT LOCATION AND SURVEYS UNIT.*
PROJECT CONTROL ESTABLISHED USING GLOBAL POSITIONING SYSTEM.

NOTE: DRAWING NOT TO SCALE

6/2/99
10:40:49 AM
R:\Roadway\Proj\B5393_Ls_1c-2.dgn
bar56861

DocuSign Envelope ID: FAEEE23C-3C2A-4667-AF45-44EF552E07AA

6/2/99

FINAL PAVEMENT SCHEDULE

C1	PROP. APPROX. 3″ ASPHALT CONCRETE SURFACE COURSE, TYPE S9.5B, AT AN AVERAGE RATE OF 168 LBS. PER SQ. YD. IN EACH OF TWO LAYERS.
C2	PROP. VAR. DEPTH ASPHALT CONCRETE SURFACE COURSE, TYPE S9.5B, AT AN AVERAGE RATE OF 112 LBS. PER SQ. YD. PER 1″ DEPTH. TO BE PLACED IN LAYERS NOT LESS THAN 1″ IN DEPTH OR GREATER THAN 1½″ IN DEPTH.
E1	PROP. APPROX. 5″ ASPHALT CONCRETE BASE COURSE, TYPE B25.0C, AT AN AVERAGE RATE OF 570 LBS. PER SQ. YD.
E2	PROP. VAR. DEPTH ASPHALT CONCRETE SURFACE COURSE, TYPE B25.0C, AT AN AVERAGE RATE OF 114 LBS. PER SQ. YD. PER 1″ DEPTH. TO BE PLACED IN LAYERS NOT LESS THAN 3″ IN DEPTH OR GREATER THAN 5½″ IN DEPTH.
R1	SHOULDER BERM GUTTER.
T	EARTH MATERIAL.
W	WEDGING (SEE DETAIL)

NOTE: PAVEMENT EDGE SLOPES ARE 1:1 UNLESS SHOWN OTHERWISE.

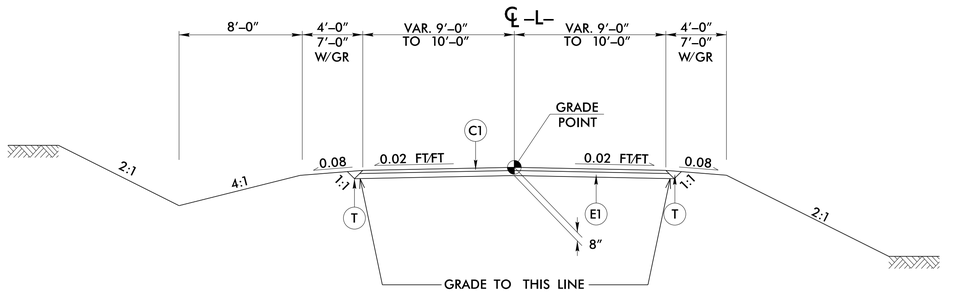

TYPICAL SECTION NO. 1

USE TYPICAL SECTION NO. 1:

–L– STA 11+50.00 TO 13+62.88 (BEGIN BRIDGE)
–L– STA 14+55.13 (END BRIDGE) TO 16+00.00

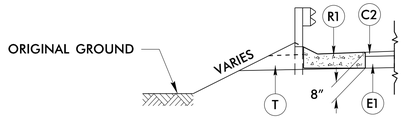

DETAIL SHOWING SHOULDER BERM GUTTER LOCATIONS

–L– STA. 14+65.00 TO STA. 14+75.00 LT & RT

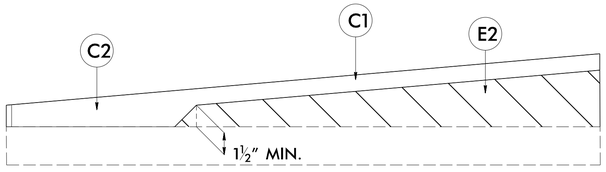

(W) Wedging Detail For Surface on Bridge

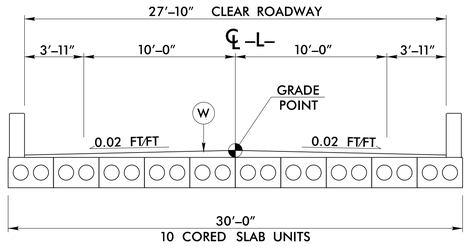

TYPICAL SECTION NO. 2

USE TYPICAL SECTION NO. 2:

–L– STA 13+62.88 (BEGIN BRIDGE) TO 14+55.13 (END BRIDGE)

PROJECT REFERENCE NO.	SHEET NO.
I7BPJ2.R.90	2A-1

ROADWAY DESIGN ENGINEER

NORTH CAROLINA PROFESSIONAL SEAL 22606 ENGINEER DAVID C. WALLER

DocuSigned by: David C. Waller 58A8651A1F1D...
3/5/2018

MOTT MACDONALD I & E, LLC
LICENSE NO. F-0669

PAVEMENT DESIGN ENGINEER

DOCUMENT NOT CONSIDERED FINAL UNLESS ALL SIGNATURES COMPLETED

Prepared in the Office of:
MOTT MACDONALD
PO Box 700
Fuquay-Varina, NC 27526
www.mottmac.com

7:54:52 AM
R:\Roadway\Proj\b5393_rdy_typ.dgn

6/21/00

COMPUTED BY: BLP DATE: 10/13/16
CHECKED BY: _____ DATE: _____

STATE OF NORTH CAROLINA
DIVISION OF HIGHWAYS

PROJECT REFERENCE NO.	SHEET NO.
17BP.12.R.90	3B-1

SUMMARY OF EARTHWORK

STATION	STATION	UNCL. EXCAV.	EMBANK. +%	BORROW	WASTE
11+50.00	13+62.88	14	328	314	
14+55.13	16+00.00	59	78	27	
PROJECT TOTALS:		65	406	341	
5% TO REPLACE BORROW				18	
GRAND TOTALS:		65		359	
SAY:		80		440	

Earthwork quantities are calculated by the Roadway Design Unit. These earthwork quantities are based in part on subsurface data provided by the Geotechnical Engineering Unit.

SHOULDER BERM GUTTER SUMMARY

SURVEY LINE	STATION	STATION	LENGTH
–L– (LT)	14+65	14+75	10
–L– (RT)	14+65	14+75	10
		TOTAL:	20
		SAY:	25

EXISTING ASPHALT PAVEMENT REMOVAL SUMMARY

SURVEY LINE	STATION	STATION	LOCATION LT/RT/CL	YD²
–L–	11+50.00	13+65.00	CL	442.92
–L–	14+56.00	16+00.00	CL	298.14
			TOTAL:	741.06
			SAY:	820

FLARE LENGTH = DISTANCE FROM LAST SECTION OF PARALLEL GUARDRAIL TO END OF GUARDRAIL.
W = TOTAL WIDTH OF FLARE FROM BEGINNING OF TAPER TO END OF GUARDRAIL.
G = GATING IMPACT ATTENUATOR TYPE 350
NG = NON-GATING IMPACT ATTENUATOR TYPE 350

GUARDRAIL SUMMARY

SURVEY LINE	BEG. STA.	END STA.	LOCATION	LENGTH			WARRANT POINT		"N" DIST. FROM E.O.L.	TOTAL SHOUL. WIDTH	FLARE LENGTH		W		ANCHORS								IMPACT ATTENUATOR TYPE 350			SINGLE FACED GUARDRAIL	REMOVE EXISTING GUARDRAIL	REMOVE AND STOCKPILE EXISTING GUARDRAIL	REMARKS
				STRAIGHT	SHOP CURVED	DOUBLE FACED	APPROACH END	TRAILING END			APPROACH END	TRAILING END	APPROACH END	TRAILING END	XI MOD	XI	GREU 350	M-350	TYPE III	AT-1	VI MOD	BIC		EA	G	NG				
–L–	12+81.63	13+62.88	LT	81.25				13+64.00	3'-11"	7'		50'					1		1										
–L–	12+81.63	13+62.88	RT	81.25			13+64.00		3'-11"	7'	50'						1		1										
–L–	14+55.13	15+23.00	LT	50	24.25		14+54.00		3'-11"	7'	50'								1	1									
–L–	14+55.13	15+36.38	RT	81.25				14+54.00	3'-11"	7'		50'					1		1										
			TOTALS	318													3		4	1									
	DEDUCTION FOR ANCHOR UNITS																												
	GRAU-350		3 @ 50' =	-150.00																									
	TYPE III		4 @ 18.75' =	-75.00																									
	CAT-1		1 @ 6.25' =	-6.25																									
			GRAND TOTALS	86.75													3		4	1									
			SAY	86.75			5 EACH ADDITIONAL GUARDRAIL POSTS																							

7:38:09 AM
R:\Roadway\Proj\b5393_rdy_psh03B-1.dgn
xs07449

6/21/00

COMPUTED BY: BLP DATE: 10/13/16
CHECKED BY: _____ DATE: _____

STATE OF NORTH CAROLINA
DIVISION OF HIGHWAYS

PROJECT REFERENCE NO.	SHEET NO.
17BP.12.R.90	3D-1

NOTE: Invert Elevations are for Bid Purposes only and shall not be used for project construction stakeout. See "Standard Specifications For Roads and Structures, Section 300-5".

LIST OF PIPES, ENDWALLS, ETC. (FOR PIPES 48" & UNDER)

STATION	LOCATION (LT,RT, OR CL)	STRUCTURE NO. FROM	STRUCTURE NO. TO	TOP ELEVATION	INVERT ELEVATION	INVERT ELEVATION	SLOPE CRITICAL	DRAINAGE PIPE (RCP, CSP, CAAP, HDPE, or PVC) SIZE	12"	15"	18"	24"	30"	36"	42"	48"
								THICKNESS OR GAUGE								
14+70	LT	401		837.26												
		401	402		834.01	833.86										
14+70	RT	402		837.26												
		402	403		833.86	830.26				24						
11+65	LT	404			834.7											
11+56	RT	405			844.64											
TOTALS										24						

C.S. PIPE (UNLESS NOTED OTHRWISE) SIZE	12"	15"	18"	24"	30"	36"	42"	48"
THICKNESS OR GAUGE		.064	.064	.064	.064	.079	.079	.109	.109

CLASS IV R.C. PIPE (UNLESS OTHERWISE NOTED)	12"	15"	18"	24"	30"	36"	42"	48"
		24						

15" SIDE DRAIN PIPE	18" SIDE DRAIN PIPE	24" SIDE DRAIN PIPE	ENDWALLS STD. 838.01, STD. 838.11 OR STD. 838.80 (UNLESS NOTED OTHERWISE) CU. YDS. R.C.P.	ENDWALLS STD. 838.01, STD. 838.11 OR STD. 838.80 (UNLESS NOTED OTHERWISE) CU. YDS. C.S.P.
28				
24				
52				

QUANTITIES FOR DRAINAGE STRUCTURES * TOTAL L.F. FOR PAY QUANTITY SHALL BE COL. 'A' + (1.3 X COL. 'B') LIN. FT. PER EACH (0' THRU 5.0')	A 5.0' THRU 10.0'	B 10.0' AND ABOVE	C.B. STD. 840.01 OR STD. 840.02
1			
1			
2			

FRAME, GRATES AND HOOD STANDARD 840.03 TYPE OF GRATE E	F	G	D.I. STD. 840.14 OR STD. 840.15	D.I. FRAME & GRATE STD. 840.16	G.D.I. TYPE "A" STD. 840.17 OR 840.26	G.D.I. TYPE "B" STD. 840.18 OR 840.27	G.D.I. TYPE "D" STD. 840.19 OR 840.28	G.D.I. FRAME WITH GRATE STD. 840.22	G.D.I. FRAME WITH TWO GRATES STD. 840.22	G.D.I. (N.S.) FRAME WITH GRATE STD. 840.24	G.D.I. (N.S.) FRAME WITH TWO GRATES STD. 840.24	G.D.I. (N.S.) FRAME WITH TWO GRATES STD. 840.29	T.B.D.I. FRAME WITH TWO GRATES STD. 840.33	T.B.D.I. STD. 840.35	CORR. STEEL ELBOWS NO. & SIZE	CONC. COLLARS CL. "B" C.Y. STD. 840.72	CONC. & BRICK PIPE PLUG, C.Y. STD. 840.71	PIPE REMOVAL LIN.FT.	REMARKS
												1		1					
												1		1					
																		24	REMOVE EXISTING
												2		2					

ABBREVIATIONS

C.B.	CATCH BASIN
N.D.I.	NARROW DROP INLET
D.I.	DROP INLET
G.D.I.	GRATED DROP INLET
G.D.I. (N.S.)	GRATED DROP INLET (NARROW SLOT)
J.B.	JUNCTION BOX
M.H.	MANHOLE
T.B.D.I.	TRAFFIC BEARING DROP INLET
T.B.J.B.	TRAFFIC BEARING JUNCTION BOX

ll05dlAM
H:\Highway\Proj\b5393_rdy_psh030-1.dgn
ejl78449

DocuSign Envelope ID: 31124AF4-8F4B-4722-AB3E-C31D4BE768B7

8/17/99

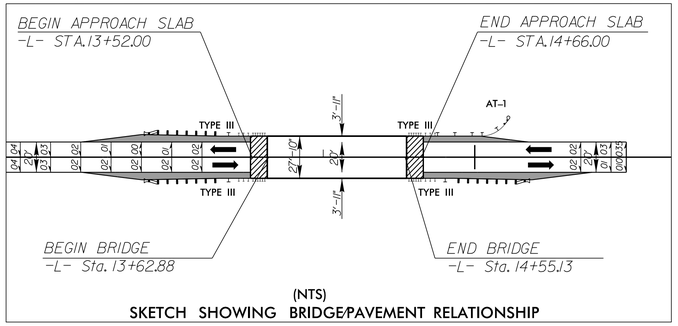

(NTS)

SKETCH SHOWING BRIDGE/PAVEMENT RELATIONSHIP

NAD 83/NA 2011

DETAIL A
TOE PROTECTION
(Not to Scale)

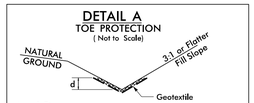

Type of Liner= Class B Rip-Rap

FROM STA. 12+20 TO STA. 13+53 LT.

PROJECT REFERENCE NO.	SHEET NO.
17BP.12.R.90	4
R/W SHEET NO.	

ROADWAY DESIGN ENGINEER
NORTH CAROLINA PROFESSIONAL SEAL 22606 ENGINEER DAVID C. WALLER
Registered by: DocuSigned by: David C. Waller
SIGNATURE
2/21/2018

HYDRAULICS ENGINEER
NORTH CAROLINA PROFESSIONAL SEAL 34364 ENGINEER BENTON J. CORNETT
Registered by: DocuSigned by: Benton J. Cornett
SIGNATURE
2/22/2018

MOTT MACDONALD I & E, LLC
LICENSE NO. F-0669

DOCUMENT NOT CONSIDERED FINAL UNLESS ALL SIGNATURES COMPLETED

Prepared in the Office of:
MOTT MACDONALD
PO Box 700
Fuquay-Varina, NC 27526
www.mottmac.com

HDR Engineering, Inc. of the Carolinas
555 Fayetteville St, Suite 900 Raleigh, N.C. 27601
N.C.B.E.L.S. License Number: F-0116

*DESIGN EXCEPTION:
SAG VERTICAL CURVE K
VERTICAL SSD

PHILIP SHANE McKEE
MINDY MICHELLE PARKER
DB 1516 PG 652

1
SHEILA DIXON BARKLEY
DB 1016 PG 250

2
CHRISTY DIXON BEHELER
DB 1692 PG 1431

WILLIAM J. DIXON JR.
& GAIL PRICE DIXON
DB 1692 PG 1435

3
CINDY DIXON MAYNARD
DB 1692 PG 1428

3
CINDY DIXON MAYNARD
DB 1692 PG 1428

SHANNON ROSE FROEHLICH
VIRGINIA CAROLINA LEDBETTER
JEREMY ALEXANDER PENDER
ADAM PAUL PENDER
BRITTANY MARGARET PENDER
DB 1610 PG 1393
DB 14H PG 90
HOWARD MELVIN PENDER
GRANTED LIFE ESTATE

BEGIN TIP PROJECT 17BP.12.R.90
-L- POT Sta. 11+50.00

END TIP PROJECT 17BP.12.R.90
-L- POT Sta. 16+00.00

-L- PC Sta. 10+37.86

-L- POT Sta. 10+00.00

-L- PT Sta. 11+88.00

-L- PC Sta. 16+91.75

-L- PT Sta. 18+30.03

17BP.12.R.90-1

17BP.12.R.90-2

TOE PROTECTION W/CL B RIP RAP SEE DETAIL A

EXCAVATION LIMIT

CL II RIP RAP UP TO ELEV. 832.0 (TYP.)

CLASS B RIP RAP
EST 2 TONS
EST 7 SY GEOTEXTILE

GREU TL-3

TB 2GI

END SBG +75

AT-1

EIP=4.28'

REMOVE

ASPHALT DRIVE APPRON

BL-5

BL-4

S 52° 36' 14.0" E

S 43° 02' 42.6" E

S 47° 18' 50.6" E

S 62°26'13" E
838.83'

S 62°26'13" E
1663.23'

S 43°22'38" W
458.32'

N 35°43'16" E
958.99'

N 34°55'38" E
167.24'

N 37°51'36" E
90.01'

-L-

PI Sta 11+13.10	PI Sta 17+60.92
Δ = 9° 33' 31.4" (RT)	Δ = 4° 16' 08.0" (LT)
D = 6° 21' 58.3"	D = 3° 05' 13.3"
L = 150.15'	L = 138.29'
T = 75.25'	T = 69.17'
R = 900.00'	R = 1,856.03'

WILL DIXON RD SR 1662
18' BST

BELMOOD-LAWNDALE RD TO CLEVELAND COUNTY WATER

PHILADELPHIA RD TO CLEVELAND COUNTY WATER

EXISTING R/W

RETAIN

30' X 100' EASEMENT

MTL GATE

ISFD

ISBKD

BK & CONC

CONC

MAPLE CREEK

OLD CONC. BRIDGE ABUTMENTS

SEE SHEET 5 FOR -L- PROFILE

9:54:02 AM
8/16/2018
kpl78449

DocuSign Envelope ID: 31124AF4-8F4B-4722-AB3E-C31D4BE768B7

5/14/99

PROJECT REFERENCE NO.	SHEET NO.
17BPJ2.R.90	5

ROADWAY DESIGN ENGINEER

NORTH CAROLINA PROFESSIONAL SEAL 22606 ENGINEER DAVID C. WALLER

DocuSigned by: David C. Waller 58A8E1F1A1D04DC...

2/21/2018

HYDRAULICS ENGINEER

NORTH CAROLINA PROFESSIONAL SEAL 34364 ENGINEER TIMOTHY J. CORNER

DocuSigned by: Timothy J. Corner BAE7B0A1A1F1...

2/22/2018

MOTT MACDONALD I & E, LLC
LICENSE NO. F-0669

DOCUMENT NOT CONSIDERED FINAL UNLESS ALL SIGNATURES COMPLETED

Prepared in the Office of:

MOTT MACDONALD
PO Box 700
Fuquay-Varina, NC 27526
www.mottmac.com

HDR Engineering, Inc. of the Carolinas
555 Fayetteville St, Suite 900 Raleigh, N.C. 27601
N.C.B.E.L.S. License Number: F-0116

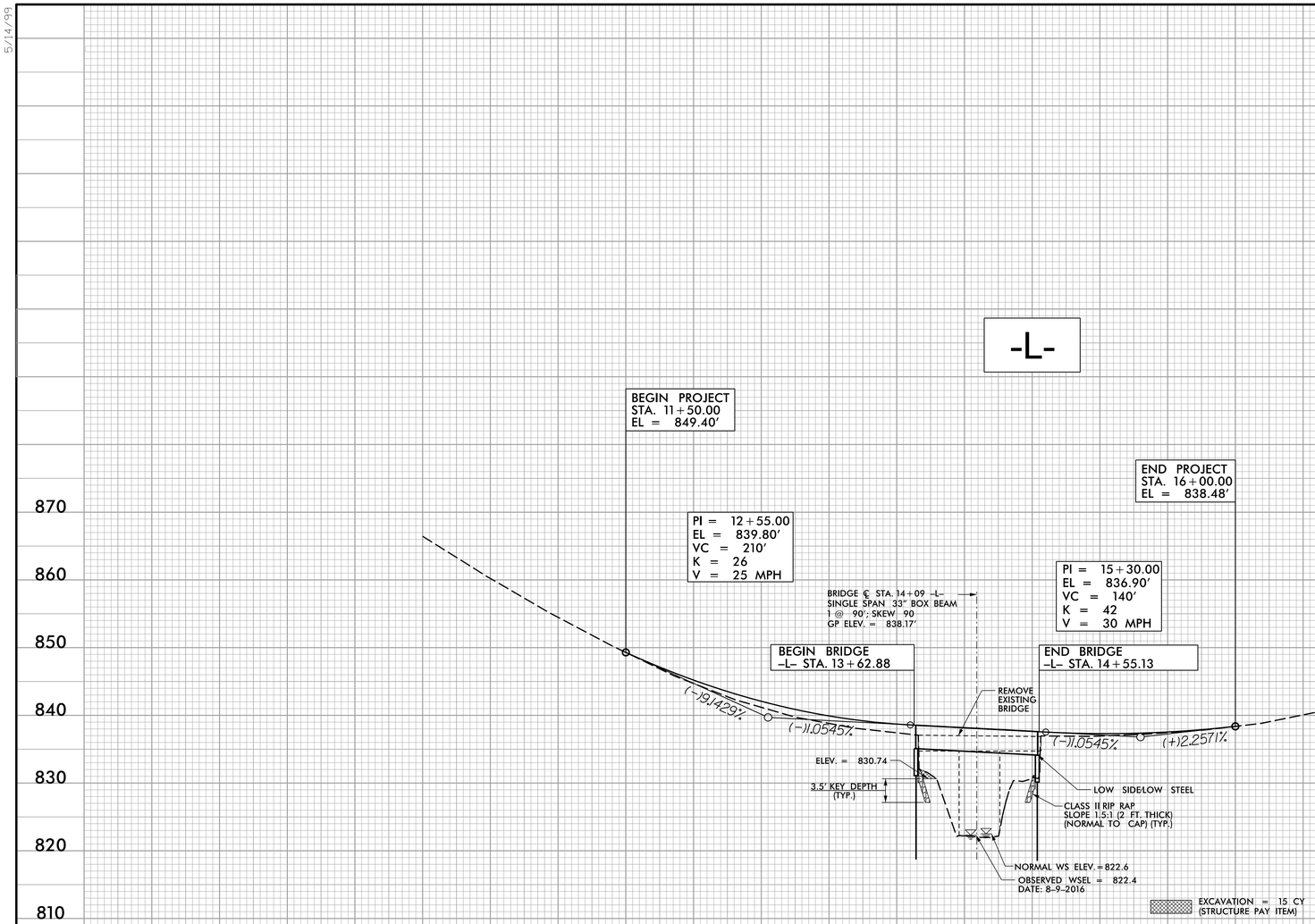

BRIDGE HYDRAULIC DATA

DESIGN DISCHARGE	=	1700	CFS
DESIGN FREQUENCY	=	25	YRS
DESIGN HW ELEVATION	=	829.6	FT
BASE DISCHARGE	=	2400	CFS
BASE FREQUENCY	=	100	YRS
BASE HW ELEVATION	=	830.76	FT
OVERTOPPING DISCHARGE	=	14000	CFS
OVERTOPPING FREQUENCY	=	500+	YRS
OVERTOPPING ELEVATION	=	837.4	FT
DATE OF SURVEY	=	8-9-2016	
W.S. ELEVATION AT DATE OF SURVEY	=	822.4	FT

BENCH MARKS
BM1: RR SPIKE IN SW ROOT OF A 18" BLACK WALNUT
-L- STA 13+22.42 LEFT 133.69'
N = 623608 E = 1241921
EL = 830.51'

SEE SHEET 4 FOR PLAN VIEW

10:48:58 AM
C:\Projects\Proj\tb5393_rdy_pf105.dgn
mjohnson
0178449

STATE OF NORTH CAROLINA
DIVISION OF HIGHWAYS

TRANSPORTATION MANAGEMENT PLAN

CLEVELAND COUNTY

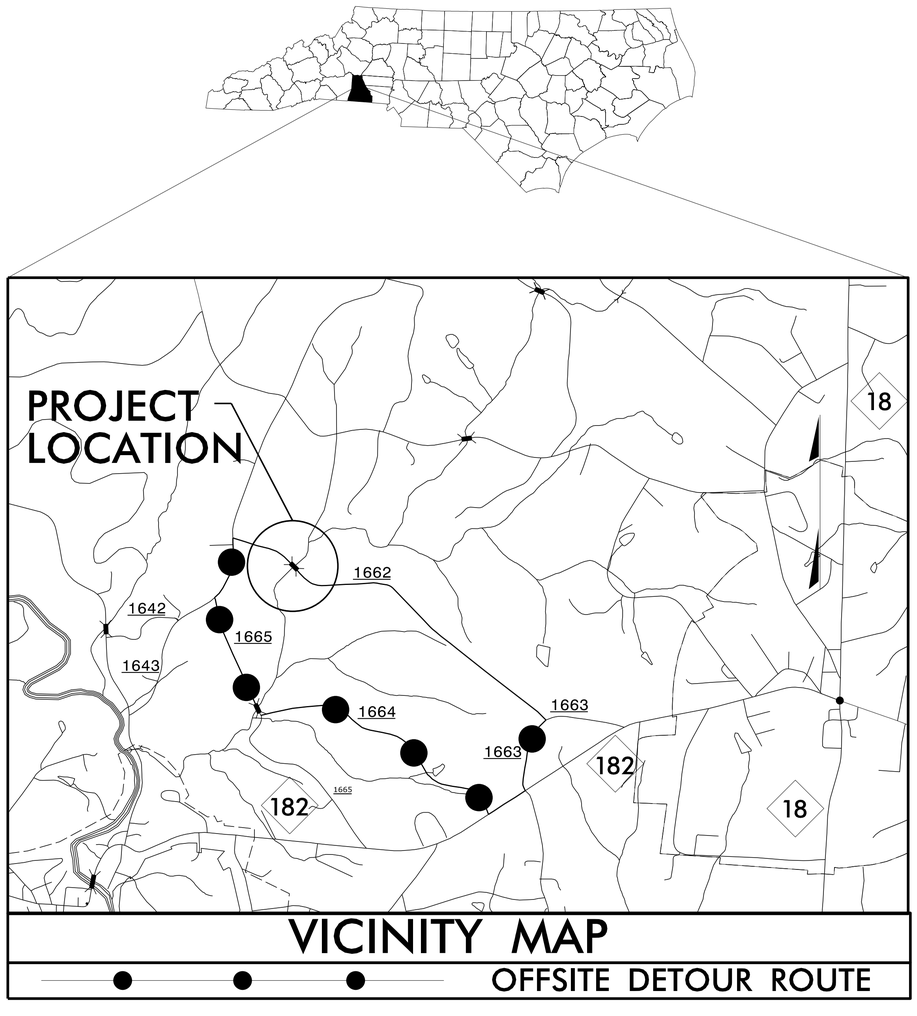

VICINITY MAP

OFFSITE DETOUR ROUTE

INDEX OF SHEETS

SHEET NO.	TITLE
TMP-1	TITLE SHEET, VICINITY MAP, AND INDEX OF SHEETS
TMP-1A	LIST OF APPLICABLE ROADWAY STANDARD DRAWINGS AND LEGEND
TMP-1B	TRANSPORTATION OPERATIONS PLAN AND PHASING
TMP-2	SPECIAL SIGN DESIGN
TMP-3	ROAD CLOSURE AND OFFSITE DETOUR ROUTE

SHEET NO.
TMP-1

17BP.12.R.90

TIP PROJECT:



WORK ZONE SAFETY & MOBILITY
"from the MOUNTAINS to the COAST"

PLANS PREPARED BY:

KARMEN DAIS

NCDOT CONTACTS:

DON PARKER, P.E.
PROJECT ENGINEER

ROGER GARRETT
PROJECT DESIGN ENGINEER

DIVISION OF HIGHWAYS
STATE OF NORTH CAROLINA
DEPARTMENT OF TRANSPORTATION
WORK ZONE TRAFFIC CONTROL

DOCUMENT NOT CONSIDERED FINAL
UNLESS ALL SIGNATURES COMPLETED

APPROVED: DocuSigned by: Don A. Parker 4DD48286261841D...

DATE: 11/9/2017

SEAL

NORTH CAROLINA PROFESSIONAL SEAL 043251 ENGINEER DON A PARKER

11/7/2017
P:\TIPProjects-BV\B5393\Traffic\TrafficControl\TCP\B-5393_TC_TMP_01.dgn
User:keddis

PROJ. REFERENCE NO.	SHEET NO.
17BP.12.R.90	TMP-1A

ROADWAY STANDARD DRAWINGS

THE FOLLOWING ROADWAY STANDARDS AS SHOWN IN "ROADWAY STANDARD DRAWINGS" - N.C. DEPARTMENT OF TRANSPORTATION - RALEIGH, N.C., DATED JANUARY 2018 ARE APPLICABLE TO THIS PROJECT AND BY REFERENCE HEREBY ARE CONSIDERED A PART OF THESE PLANS:

STD. NO.	TITLE
1101.01	WORK ZONE ADVANCE WARNING SIGNS
1101.02	TEMPORARY LANE CLOSURES
1101.03	TEMPORARY ROAD CLOSURES
1101.04	TEMPORARY SHOULDER CLOSURES
1101.05	WORK ZONE VEHICLE ACCESSES
1101.06	WARNING SIGNS FOR BLASTING ZONES
1101.11	TRAFFIC CONTROL DESIGN TABLES
1110.01	STATIONARY WORK ZONE SIGNS
1110.02	PORTABLE WORK ZONE SIGNS
1115.01	FLASHING ARROW BOARDS
1130.01	DRUM
1135.01	CONES
1145.01	BARRICADES
1150.01	FLAGGING DEVICES
1160.01	TEMPORARY CRASH CUSHION
1165.01	WORK VEHICLE LIGHTING SYSTEMS AND TMA DELINEATION
1170.01	POSITIVE PROTECTION
1180.01	SKINNY-DRUM
1205.01	PAVEMENT MARKINGS - LINE TYPES AND OFFSETS
1205.02	PAVEMENT MARKINGS - TWO-LANE AND MULTI-LANE ROADWAYS
1205.03	PAVEMENT MARKINGS - EXITS AND ENTRANCE RAMPS
1205.04	PAVEMENT MARKINGS - INTERSECTIONS
1205.05	PAVEMENT MARKINGS - TURN LANES
1205.06	PAVEMENT MARKINGS - LANE DROPS
1205.07	PAVEMENT MARKINGS - PEDESTRIAN CROSSWALKS
1205.08	PAVEMENT MARKINGS - SYMBOLS AND WORD MESSAGES
1205.09	PAVEMENT MARKINGS - PAINTED ISLANDS
1205.10	PAVEMENT MARKINGS - SCHOOL AREAS
1205.11	PAVEMENT MARKINGS - RAILROAD CROSSINGS
1205.12	PAVEMENT MARKINGS - BRIDGES
1205.13	PAVEMENT MARKINGS - LANE REDUCTIONS
1250.01	RAISED PAVEMENT MARKERS - INSTALLATION SPACING
1251.01	RAISED PAVEMENT MARKERS - PERMANENT AND TEMPORARY
1261.01	GUARDRAIL AND BARRIER DELINEATORS - INSTALLATION SPACING
1261.02	GUARDRAIL AND BARRIER DELINEATORS - TYPES AND MOUNTING
1262.01	GUARDRAIL END DELINEATION
1264.01	OBJECT MARKERS - TYPES
1264.02	OBJECT MARKERS - INSTALLATION

LEGEND

GENERAL

- DIRECTION OF TRAFFIC FLOW
- DIRECTION OF PEDESTRIAN TRAFFIC FLOW
- EXIST. PVMT.
- NORTH ARROW
- PROPOSED PVMT.
- TEMP. SHORING (LOCATION PURPOSES ONLY)
- WORK AREA
- REMOVAL

SIGNALS

EXISTING PROPOSED TEMPORARY

PAVEMENT MARKINGS

- EXISTING LINES
- TEMPORARY LINES

TRAFFIC CONTROL DEVICES

- BARRICADE (TYPE III)
- CONE
- DRUM SKINNY DRUM TUBULAR MARKER
- TEMPORARY CRASH CUSHION
- FLASHING ARROW BOARD
- FLAGGER
- LAW ENFORCEMENT
- TRUCK MOUNTED ATTENUATOR (TMA)
- CHANGEABLE MESSAGE SIGN

TEMPORARY SIGNING

- PORTABLE SIGN
- STATIONARY SIGN
- STATIONARY OR PORTABLE SIGN

PAVEMENT MARKERS

- CRYSTAL/CRYSTAL
- CRYSTAL/RED
- YELLOW/YELLOW

PAVEMENT MARKING SYMBOLS

PAVEMENT MARKING SYMBOLS

APPROVED: Don A. Parker (DocuSigned by: 4DD4828626184 1D...)

DATE: 11/9/2017

NORTH CAROLINA PROFESSIONAL SEAL 043251 ENGINEER DON A PARKER

DOCUMENT NOT CONSIDERED FINAL UNLESS ALL SIGNATURES COMPLETED

DIVISION OF HIGHWAYS · STATE OF NORTH CAROLINA · DEPARTMENT OF TRANSPORTATION · WORK ZONE TRAFFIC CONTROL

ROADWAY STANDARD DRAWINGS & LEGEND

11/7/2017
P:\TIPProjects-B\B5393\Traffic\TrafficControl\TCP\B5393_TC_TMP_OIA.dgn
User:kedois

PROJ. REFERENCE NO.	SHEET NO.
17BP.12.R.90	TMP-1B

TRANSPORTATION OPERATIONS

MANAGEMENT STRATEGIES

TRAFFIC WILL BE DETOURED OFF-SITE DURING THE CONSTRUCTION PERIOD.

THE OFF-SITE DETOUR WILL INCLUDE BELWOOD-LAWNDALE RD. SR(1643), NEW BETHEL CHURCH RD. SR(1665), SHADY GROVE RD. SR(1664), E STAGE COACH TRAIL, AND PHILADELPHIA RD. (1663).

GENERAL NOTES

CHANGES MAY BE REQUIRED WHEN PHYSICAL DIMENSIONS IN THE DETAIL DRAWINGS, STANDARD DETAILS, AND ROADWAY DETAILS ARE NOT ATTAINABLE TO MEET FIELD CONDITIONS OR RESULT IN DUPLICATE OR UNDESIRED OVERLAPPING OF DEVICES. MODIFICATION MAY INCLUDE: MOVING, SUPPLEMENTING, COVERING, OR REMOVAL OF DEVICES AS DIRECTED BY THE ENGINEER.

THE FOLLOWING GENERAL NOTES APPLY AT ALL TIMES FOR THE DURATION OF THE CONSTRUCTION PROJECT EXCEPT WHEN OTHERWISE NOTED IN THE PLAN OR DIRECTED BY THE ENGINEER.

A) NOTIFY THE ENGINEER THIRTY (30) DAYS PRIOR TO ANY TRAFFIC PATTERN ALTERATION.

SIGNING

B) PROVIDE SIGNING AND DEVICES REQUIRED TO CLOSE THE ROAD ACCORDING TO THE ROADWAY STANDARD DRAWINGS AND TRAFFIC CONTROL PLANS.

PROVIDE SIGNING REQUIRED FOR THE OFF-SITE DETOUR ROUTE AS SHOWN IN THE TRAFFIC CONTROL PLANS.

C) COVER OR REMOVE ALL SIGNS AND DEVICES REQUIRED TO CLOSE THE ROAD WHEN ROAD CLOSURE IS NOT IN OPERATION.

COVER OR REMOVE ALL SIGNS REQUIRED FOR THE OFF-SITE DETOUR WHEN THE DETOUR IS NOT IN OPERATION.

D) ENSURE ALL NECESSARY SIGNING IS IN PLACE PRIOR TO ALTERING ANY TRAFFIC PATTERN.

PAVEMENT MARKINGS AND MARKERS

E) INSTALL PAVEMENT MARKINGS AND PAVEMENT MARKERS ON THE FINAL SURFACE AS SHOWN IN FINAL PAVEMENT MARKING PLAN.

F) TIE PROPOSED PAVEMENT MARKING LINES TO EXISTING PAVEMENT MARKING LINES.

PHASING

NOTE: MAINTAIN DRIVEWAY ACCESS WITHIN PROJECT LIMITS AT ALL TIMES.

STEP 1. INSTALL SIGNS AND BARRICADES CLOSING SR 1662 TO THROUGH TRAFFIC AS SHOWN ON TMP-3 AND IN ACCORDANCE WITH ROADWAY STANDARD DRAWING 1101.03, SHEET 1, AND ROADWAY STANDARD DRAWING 1145.01, SHEET 1.

STEP 2. CONSTRUCT THE FOLLOWING WITHIN THE ROAD CLOSURE:

a) REMOVE THE EXISTING STRUCTURE.

b) CONSTRUCT THE PROPOSED STRUCTURE.

c) CONSTRUCT THE PROPOSED ROADWAY SECTIONS, INCLUDING THE FINAL LAYER OF SURFACE AND FINAL PAVEMENT MARKINGS.

STEP 3. REMOVE TRAFFIC CONTROL DEVICES AND OFFSITE DETOUR SIGNS AND OPEN SR 1662 TO THROUGH TRAFFIC.

APPROVED: Don A. Parker
4DD4828626184 1D...

DATE: 11/9/2017

NORTH CAROLINA PROFESSIONAL SEAL 043251 ENGINEER DON A. PARKER

DOCUMENT NOT CONSIDERED FINAL UNLESS ALL SIGNATURES COMPLETED

DIVISION OF HIGHWAYS · STATE OF NORTH CAROLINA · DEPARTMENT OF TRANSPORTATION · WORK ZONE TRAFFIC CONTROL

TRANSPORTATION OPERATIONS PLAN AND PHASING

11/7/2017
P:\TIPProjects-B\B5393\Traffic\TrafficControl\TCP\B5393_TC_TMP_01B.dgn
User:kedals

PROJ. REFERENCE NO.	SHEET NO.
17BP.12.R.90	TMP-2

SIGN NUMBER: SP17368
TYPE: STATIONARY
QUANTITY: SEE PLANS

SIGN WIDTH: 3′-6″
HEIGHT: 2′-0″
TOTAL AREA: 7.0 Sq.Ft.

BORDER TYPE: INSET
RECESS: 0.47″
WIDTH: 0.63″
RADII: 1.5″

NO. Z BARS:
LENGTH:

BACKG COLOR: Fluorescent Orange
COPY COLOR: Black

SYMBOL	X	Y	WID	HT

MAT′L: 0.080″ (2.0 mm) ALUMINUM

DESIGN BY: J.Navarrete
PROJECT ID: 17BP.12.R.90

CHECKED BY:
LOCATION: Cleveland Co.

Nov 02, 2017
DIV: 12

USE NOTES: 1,2

1. Legend and border shall be direct applied black non-reflective sheeting.
2. Background shall be NC GRADE B fluorescent orange retroreflective sheeting.

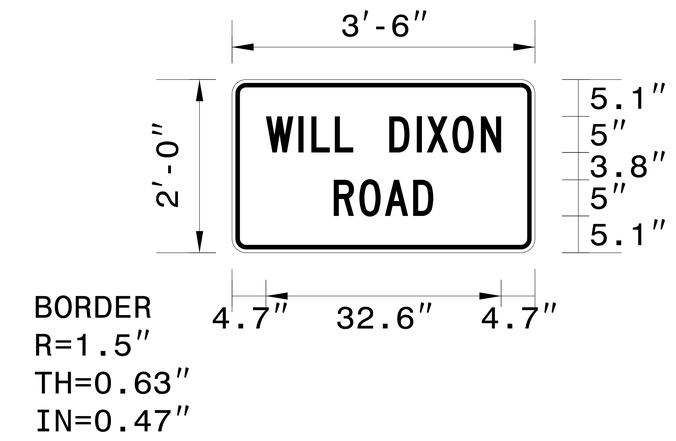

Spacing Factor is 1 unless specified otherwise

LETTER POSITIONS

Letter spacings are to start of next letter

																											Series/Size Text Length
		W	I	L	L		D	I	X	O	N																C 2000
	4.7	4.5	1.8	3.3	2.6	5	3.8	1.4	3.6	3.9	2.8	4.7															32.6
		R	O	A	D																						C 2000
	14.1	3.5	3.6	3.9	2.8	14.1																					13.8

FILENAME: Special Signs 6

NORTH CAROLINA D.O.T. SIGN DETAIL

APPROVED: DocuSigned by: Renee Roach B3C6C6F7CF4640D...
DATE: 11/9/2017

NORTH CAROLINA PROFESSIONAL SEAL 024921 ENGINEER RENEE B. ROACH

DOCUMENT NOT CONSIDERED FINAL UNLESS ALL SIGNATURES COMPLETED

DIVISION OF HIGHWAYS · STATE OF NORTH CAROLINA · DEPARTMENT OF TRANSPORTATION · WORK ZONE TRAFFIC CONTROL

SPECIAL SIGN DESIGN

11/8/2017
P:\TIPProjects-BV\B5393\Traffic\TrafficControl\TCP\B5393_TC_TMP_02.dgn
User:keddis

PROJ. REFERENCE NO.	SHEET NO.
17BP.12.R.90	TMP-3

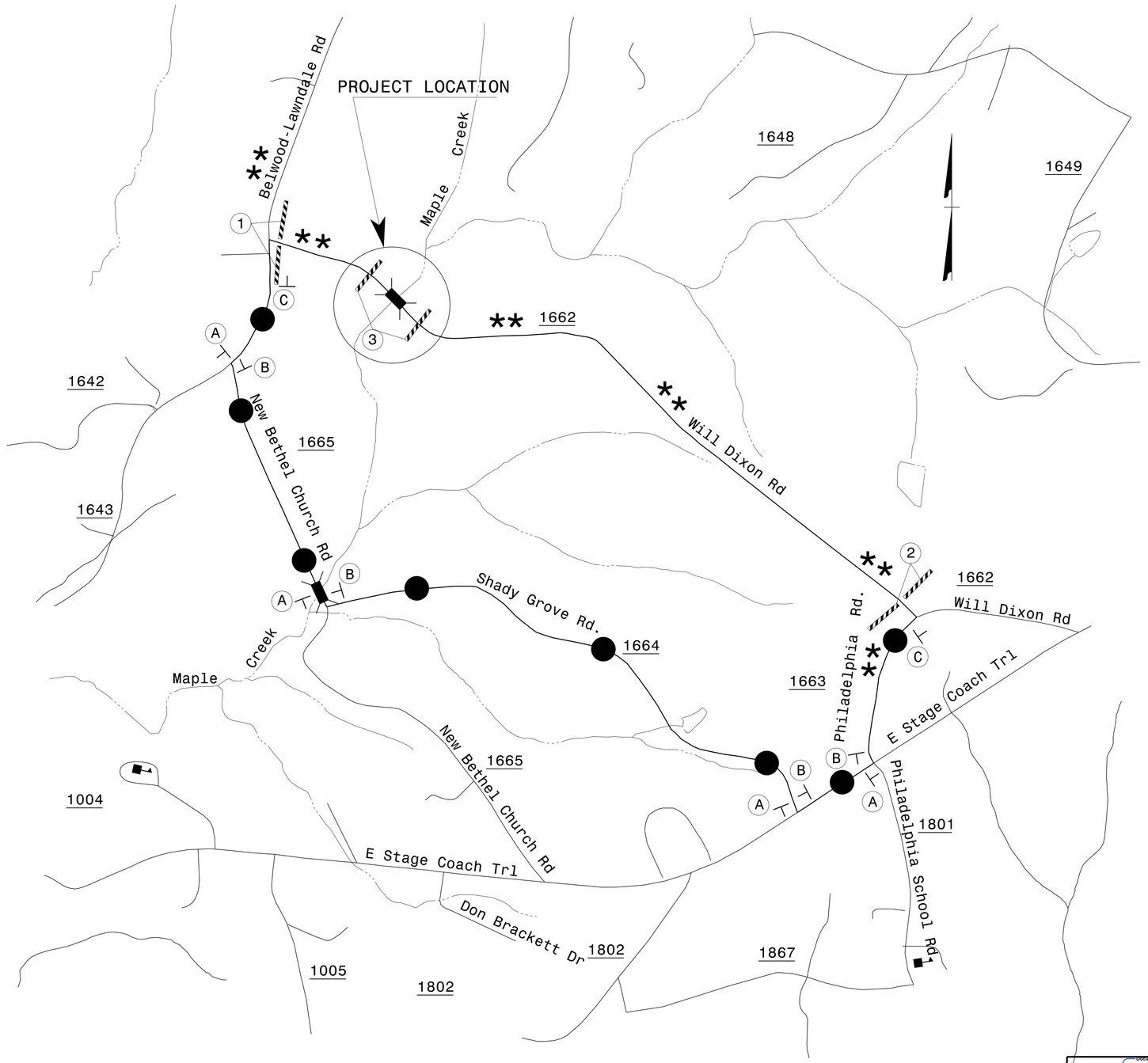

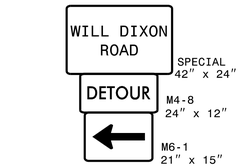

A

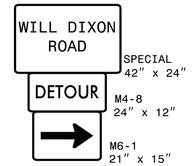

B



C

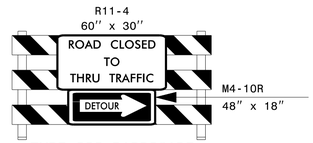

TYPE III BARRICADE

1

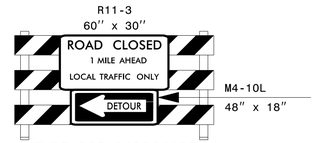

TYPE III BARRICADE

2

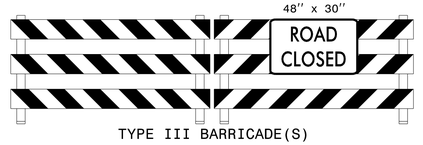

TYPE III BARRICADE(S)

3

** SEE RSD 1101.03, SHEET 1 OF 9, FOR ADDITIONAL WORK ZONE SIGNS AND LOCATIONS ALONG WILL DIXON RD., BELWOOD-LAWNDALE RD., AND PHILADELPHIA RD.

OFFSITE DETOUR ROUTE

APPROVED: Docusigned by: Don A. Parker 4DD4828626184 1D...

DATE: 11/9/2017

NORTH CAROLINA PROFESSIONAL SEAL 043251 ENGINEER DON A. PARKER

DOCUMENT NOT CONSIDERED FINAL UNLESS ALL SIGNATURES COMPLETED

DIVISION OF HIGHWAYS STATE OF NORTH CAROLINA DEPARTMENT OF TRANSPORTATION WORK ZONE TRAFFIC CONTROL

ROAD CLOSURE AND OFFSITE DETOUR ROUTE

11/7/2017
P:\TIPProjects-B\B5393\TrafficControl\TCP\B-5393_TC_TMP_03.dgn
User:keddis

TIP PROJECT: 17BP.12.R.90

STATE	STATE PROJECT REFERENCE NO.	SHEET NO.	TOTAL SHEETS
N.C.	17BP.12.R.90	EC-1	

STATE PROJ. NO.	F. A. PROJ. NO.	DESCRIPTION

STATE OF NORTH CAROLINA
DIVISION OF HIGHWAYS

PLAN FOR PROPOSED
HIGHWAY EROSION CONTROL

CLEVELAND COUNTY

BRIDGE NO. 192 ON SR 1662
OVER MAPLE CREEK

TYPE OF WORK: GRADING, DRAINAGE, PAVING, CULVERT, EROSION CONTROL & TRAFFIC CONTROL

NAD 83/NA 2011

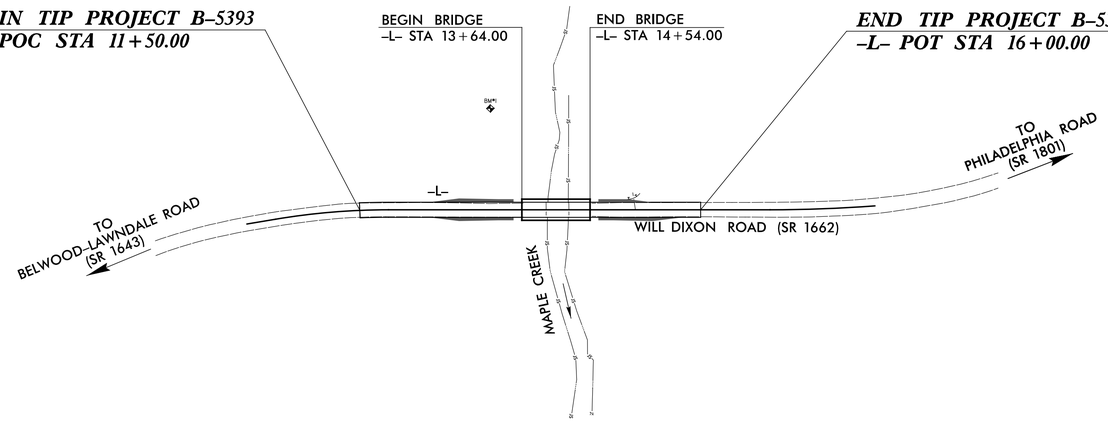

EROSION AND SEDIMENT CONTROL MEASURES

Std. #	Description	Symbol
1630.03	Temporary Silt Ditch	TSD
1630.05	Temporary Diversion	TD
1605.01	Temporary Silt Fence	
1606.01	Special Sediment Control Fence	
1622.01	Temporary Berms and Slope Drains	
1630.02	Silt Basin Type B	
1633.01	Temporary Rock Silt Check Type-A	
	Temporary Rock Silt Check Type-A with Matting and Polyacrylamide (PAM)	
1633.02	Temporary Rock Silt Check Type-B	
	Wattle / Coir Fiber Wattle	SW CFW
	Wattle / Coir Fiber Wattle with Polyacrylamide (PAM)	
1634.01	Temporary Rock Sediment Dam Type-A	
1634.02	Temporary Rock Sediment Dam Type-B	
1635.01	Rock Pipe Inlet Sediment Trap Type-A	
1635.02	Rock Pipe Inlet Sediment Trap Type-B	
1630.04	Stilling Basin	
1630.06	Special Stilling Basin	
	Rock Inlet Sediment Trap:	
1632.01	Type A	A
1632.02	Type B	B
1632.03	Type C	C
	Skimmer Basin	SK
	Tiered Skimmer Basin	SK
	Infiltration Basin	SK

THIS PROJECT CONTAINS EROSION CONTROL PLANS FOR CLEARING AND GRUBBING PHASE OF CONSTRUCTION.

ALEXANDER D. SNIDER, PE
ROADSIDE ENVIRONMENTAL ENGINEER
3064
LEVEL III CERTIFICATION NUMBER

TRENTON J. CORMIER, PE
ROADSIDE ENVIRONMENTAL PROJECT ENGINEER
3377
LEVEL III CERTIFICATION NUMBER

GRAPHIC SCALE

25 0 50
PLANS
25 0 50
PROFILE (HORIZONTAL)
5 0 10
PROFILE (VERTICAL)

THESE EROSION AND SEDIMENT CONTROL PLANS COMPLY WITH THE REGULATIONS SET FORTH BY THE NCG-010000 GENERAL CONSTRUCTION PERMIT EFFECTIVE AUGUST 1, 2016 AND ISSUED BY THE NORTH CAROLINA DEPARTMENT OF ENVIRONMENT AND NATURAL RESOURCES DIVISION OF WATER RESOURCES.

Prepared In the Office of:

HDR Engineering, Inc. of the Carolinas
555 Fayetteville St, Suite 900 Raleigh, N.C. 27601
N.C.B.E.L.S. License Number: F-0116

Designed by:

ALEXANDER D. SNIDER, PE *3064*
NAME *LEVEL III CERTIFICATION NO.*

Reviewed In the Office of:

ROADSIDE ENVIRONMENTAL UNIT
1 South Wilmington St.
Raleigh, NC 27611

2018 STANDARD SPECIFICATIONS

Reviewed by:

NOELLE RING, CPESC

Roadway Standard Drawings

The following roadway english standards as appear in "Roadway Standard Drawings"- Roadway Design Unit - N. C. Department of Transportation - Raleigh, N. C., dated January 2018 and the latest revison thereto are applicable to this project and by reference hereby are considered a part of these plans.

1604.01	Railroad Erosion Control Detail	1632.01	Rock Inlet Sediment Trap Type A
1605.01	Temporary Silt Fence	1632.02	Rock Inlet Sediment Trap Type B
1606.01	Special Sediment Control Fence	1632.03	Rock Inlet Sediment Trap Type C
1607.01	Gravel Construction Entrance	1633.01	Temporary Rock Silt Check Type A
1622.01	Temporary Berms and Slope Drains	1633.02	Temporary Rock Silt Check Type B
1630.01	Riser Basin	1634.01	Temporary Rock Sediment Dam Type A
1630.02	Silt Basin Type B	1634.02	Temporary Rock Sediment Dam Type B
1630.03	Temporary Silt Ditch	1635.01	Rock Pipe Inlet Sediment Trap Type A
1630.04	Stilling Basin	1635.02	Rock Pipe Inlet Sediment Trap Type B
1630.05	Temporary Diversion	1640.01	Coir Fiber Baffle
1630.06	Special Stilling Basin	1645.01	Temporary Stream Crossing
1631.01	Matting Installation		

$$$$$$SYSTIME$$$$$$
$$$$$$USERNAME$$$$$$
$$$$$$DGNFILE$$$$$$
HDR INC. ALL RIGHTS RESERVED.

PROJECT REFERENCE NO.	SHEET NO.
17BP.12.R.90	EC-2
R/W SHEET NO.	

TEMPORARY ROCK SILT CHECK TYPE 'A' WITH EXCELSIOR MATTING AND POLYACRYLAMIDE (PAM)

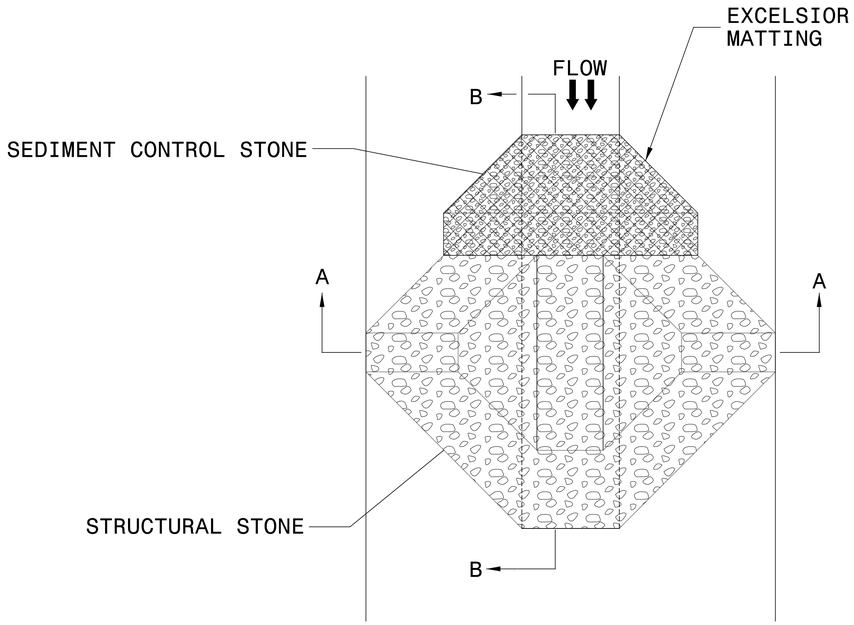

PLAN

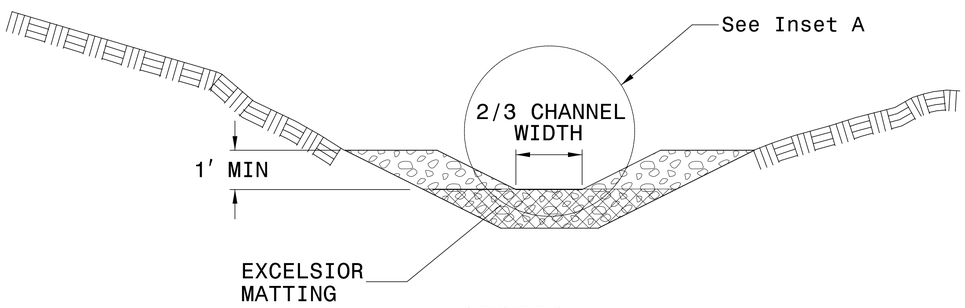

SECTION A-A

NOTES:

INSTALL TEMPORARY ROCK SILT CHECK TYPE A IN ACCORDANCE WITH ROADWAY STANDARD DRAWING NO. 1633.01.

USE EXCELSIOR FOR MATTING MATERIAL AND ANCHOR MATTING SECTION AT TOP AND BOTTOM WITH CLASS B STONE.

PRIOR TO POLYACRYLAMIDE (PAM) APPLICATION, OBTAIN A SOIL SAMPLE FROM PROJECT LOCATION, AND FROM OFFSITE MATERIAL, AND ANALYZE FOR APPROPRIATE PAM FLOCCULANT TO BE APPLIED TO EACH ROCK SILT CHECK.

INITIALLY APPLY 4 OUNCES OF POLYACRYLAMIDE (PAM) TO TOP OF MATTING SECTION AND AFTER EVERY RAINFALL EVENT THAT EQUALS OR EXCEEDS 0.50 INCHES.

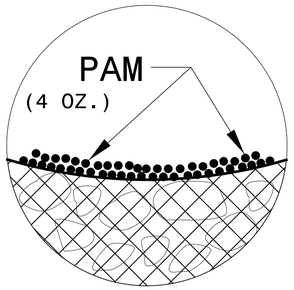

INSET A

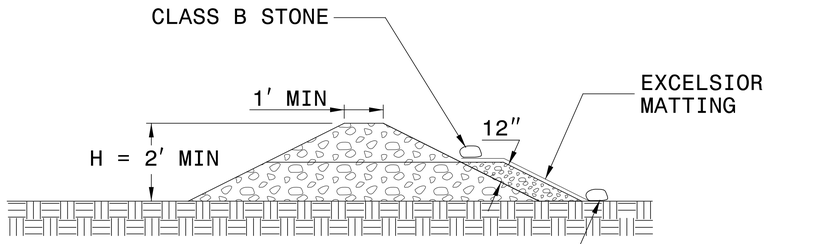

SECTION B-B

NOT TO SCALE

PROJECT REFERENCE NO.	SHEET NO.
17BP.12.R.90	EC-3

DIVISION OF HIGHWAYS
STATE OF NORTH CAROLINA

SOIL STABILIZATION TIMEFRAMES

SITE DESCRIPTION	STABILIZATION TIME	TIMEFRAME EXCEPTIONS
PERIMETER DIKES, SWALES, DITCHES AND SLOPES	7 DAYS	NONE
HIGH QUALITY WATER (HQW) ZONES	7 DAYS	NONE
SLOPES STEEPER THAN 3:1	7 DAYS	IF SLOPES ARE 10' OR LESS IN LENGTH AND ARE NOT STEEPER THAN 2:1, 14 DAYS ARE ALLOWED.
SLOPES 3:1 OR FLATTER	14 DAYS	7 DAYS FOR SLOPES GREATER THAN 50' IN LENGTH.
ALL OTHER AREAS WITH SLOPES FLATTER THAN 4:1	14 DAYS	NONE, EXCEPT FOR PERIMETERS AND HQW ZONES.

PROJECT REFERENCE NO.	SHEET NO.
17BP.12.R.90	EC-4/CONST.4
R/W SHEET NO.	
ROADSIDE ENVIRONMENTAL PROJECT ENGINEER	

LEVEL III CERTIFIED BY:
ALEXANDER D SNIDER, PE
CERTIFICATION NUMBER: 3064
ISSUED: MAY 15, 2017

Prepared in the Office of:
MOTT MACDONALD
PO Box 700
Fuquay-Varina, NC 27526
www.mottmac.com/americas

HDR Engineering, Inc. of the Carolinas
555 Fayetteville St, Suite 900 Raleigh, N.C. 27601
N.C.B.E.L.S. License Number: F-0116

GRAPHIC SCALE
50 0 50 100

CLEARING AND GRUBBING
EROSION CONTROL FOR
CONSTRUCTION SHEET 4

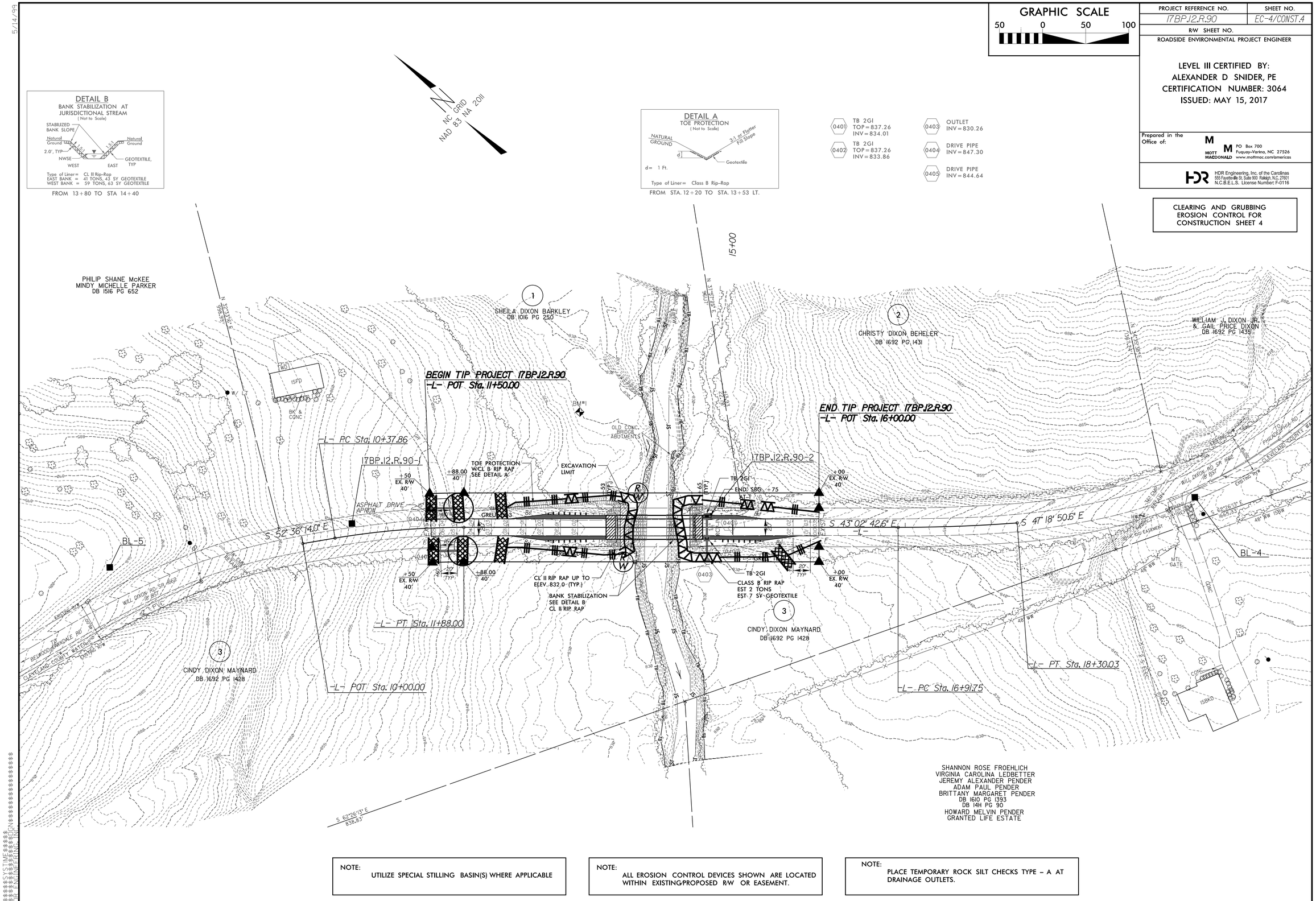

NOTE:
UTILIZE SPECIAL STILLING BASIN(S) WHERE APPLICABLE

NOTE:
ALL EROSION CONTROL DEVICES SHOWN ARE LOCATED WITHIN EXISTING/PROPOSED R/W OR EASEMENT.

NOTE:
PLACE TEMPORARY ROCK SILT CHECKS TYPE - A AT DRAINAGE OUTLETS.

5/14/99

5/14/99

GRAPHIC SCALE
50 0 50 100

PROJECT REFERENCE NO.	SHEET NO.
17BP.12.R.90	EC-5/CONST.4
R/W SHEET NO.	
ROADSIDE ENVIRONMENTAL PROJECT ENGINEER	

LEVEL III CERTIFIED BY:
ALEXANDER D SNIDER, PE
CERTIFICATION NUMBER: 3064
ISSUED: MAY 15, 2017

Prepared in the Office of:
MOTT MACDONALD
PO Box 700
Fuquay-Varina, NC 27526
www.mottmac.com/americas

HDR Engineering, Inc. of the Carolinas
555 Fayetteville St. Suite 900 Raleigh, N.C. 27601
N.C.B.E.L.S. License Number: F-0116

FINAL EROSION CONTROL FOR CONSTRUCTION SHEET 04

DETAIL B
BANK STABILIZATION AT JURISDICTIONAL STREAM
(Not to Scale)

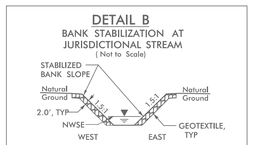

Type of Liner= CL II Rip-Rap
EAST BANK = 41 TONS, 43 SY GEOTEXTILE
WEST BANK = 59 TONS, 63 SY GEOTEXTILE

FROM 13+80 TO STA 14+40

NC GRID
NAD 83 NA 2011

DETAIL A
TOE PROTECTION
(Not to Scale)

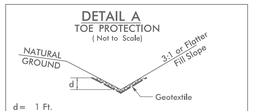

d= 1 Ft.

Type of Liner= Class B Rip-Rap

FROM STA. 12+20 TO STA. 13+53 LT.

(0401) TB 2GI
TOP=837.26
INV=834.01

(0402) TB 2GI
TOP=837.26
INV=833.86

(0403) OUTLET
INV=830.26

(0404) DRIVE PIPE
INV=847.30

(0405) DRIVE PIPE
INV=844.64

PHILIP SHANE McKEE
MINDY MICHELLE PARKER
DB 1516 PG 652

1
SHEILA DIXON BARKLEY
DB 1016 PG 250

2
CHRISTY DIXON BEHELER
DB 1692 PG 1431

WILLIAM J. DIXON JR.
& GAIL PRICE DIXON
DB 1692 PG 1435

3
CINDY DIXON MAYNARD
DB 1692 PG 1428

3
CINDY DIXON MAYNARD
DB 1692 PG 1428

SHANNON ROSE FROEHLICH
VIRGINIA CAROLINA LEDBETTER
JEREMY ALEXANDER PENDER
ADAM PAUL PENDER
BRITTANY MARGARET PENDER
DB 1610 PG 1393
DB 14H PG 90
HOWARD MELVIN PENDER
GRANTED LIFE ESTATE

BEGIN TIP PROJECT 17BP.12.R.90
-L- POT Sta. 11+50.00

END TIP PROJECT 17BP.12.R.90
-L- POT Sta. 16+00.00

-L- PC Sta. 10+37.86

-L- PT Sta. 11+88.00

-L- POT Sta. 10+00.00

-L- PC Sta. 16+91.75

-L- PT Sta. 18+30.03

17BP.12.R.90-1

17BP.12.R.90-2

BL-5

BL-4

BM#1

15+00

N 37° 45' 38" E
1057.24'

S 52° 36' 14.0" E

S 43° 02' 42.6" E
-L-

S 47° 18' 50.6" E

S 62° 26' 13" E
836.85'

S 62° 26' 13" E
1665.33'

TOE PROTECTION W/CL B RIP RAP SEE DETAIL A

EXCAVATION LIMIT

CL II RIP RAP UP TO ELEV. 832.0 (TYP.)

BANK STABILIZATION SEE DETAIL B CL II RIP RAP

TB 2GI
END SBG +75

CLASS B RIP RAP
EST 2 TONS
EST 7 SY GEOTEXTILE

ASPHALT DRIVE APRON

OLD CONC. BRIDGE ABUTMENTS

MAPLE CREEK

WILL DIXON RD SR 1662
18' BST

EXISTING R/W

TO BELWOOD-LAWNDALE RD

CLEVELAND COUNTY WATER

PHILADELPHIA RD

CLEVELAND COUNTY WATER

35' CMP RETAIN

30' X 100' EASEMENT

MTL GATE

CONC

ISBKD

2 STDC

48" WW

15" RCP

2 - PVC

BK & CONC

ISFD

W/ LT

NOTE:
UTILIZE SPECIAL STILLING BASIN(S) WHERE APPLICABLE

NOTE:
ALL EROSION CONTROL DEVICES SHOWN ARE LOCATED WITHIN EXISTING/PROPOSED R/W OR EASEMENT.

NOTE:
PLACE TEMPORARY ROCK SILT CHECKS TYPE - A AT DRAINAGE OUTLETS.

$$$

PROJ. REFERENCE NO.	SHEET NO.
17BP.12.R.90	X-1

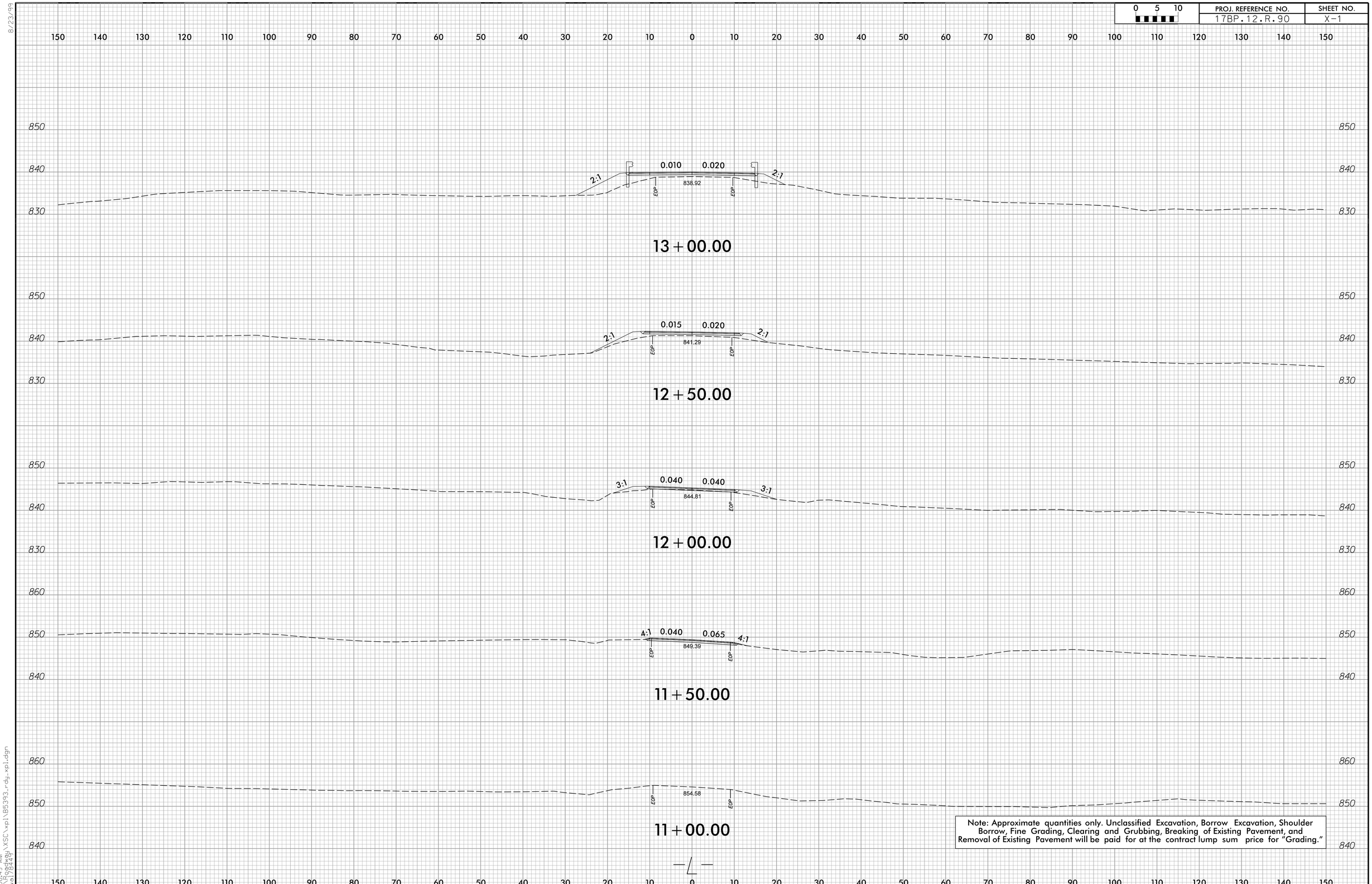

Note: Approximate quantities only. Unclassified Excavation, Borrow Excavation, Shoulder Borrow, Fine Grading, Clearing and Grubbing, Breaking of Existing Pavement, and Removal of Existing Pavement will be paid for at the contract lump sum price for "Grading."

8/23/99

11:08:49 AM
R:\Roadway\XSC\xpl\B5393_rdy_xpl.dgn
wal78449

PROJ. REFERENCE NO.	SHEET NO.
17BP.12.R.90	X-2

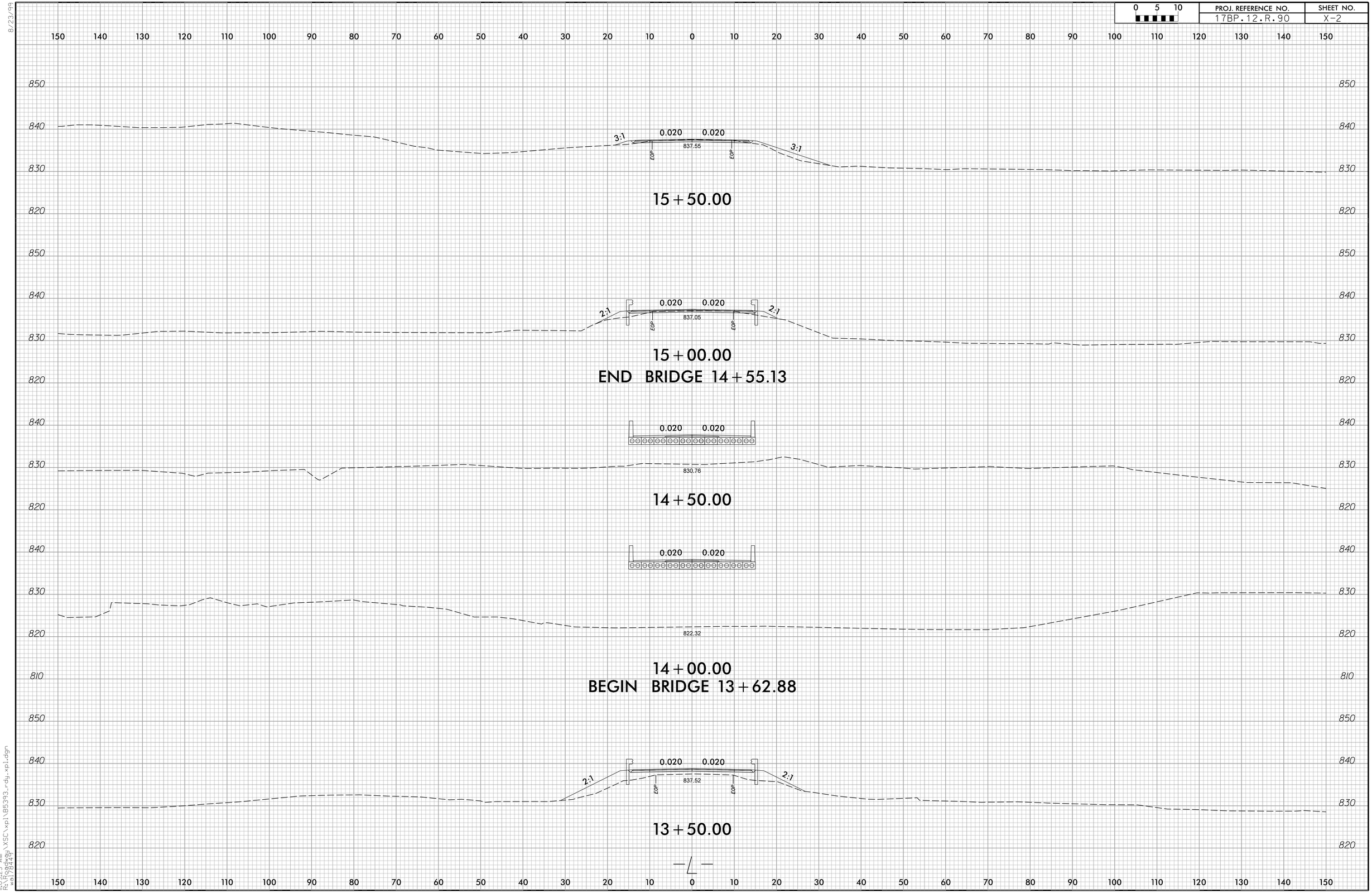

8/23/99

11:09:23 AM
R:\Roadway\XSC\xpl\B5393_rdy_xpl.dgn
wal78449

PROJ. REFERENCE NO.	SHEET NO.
17BP.12.R.90	X-3

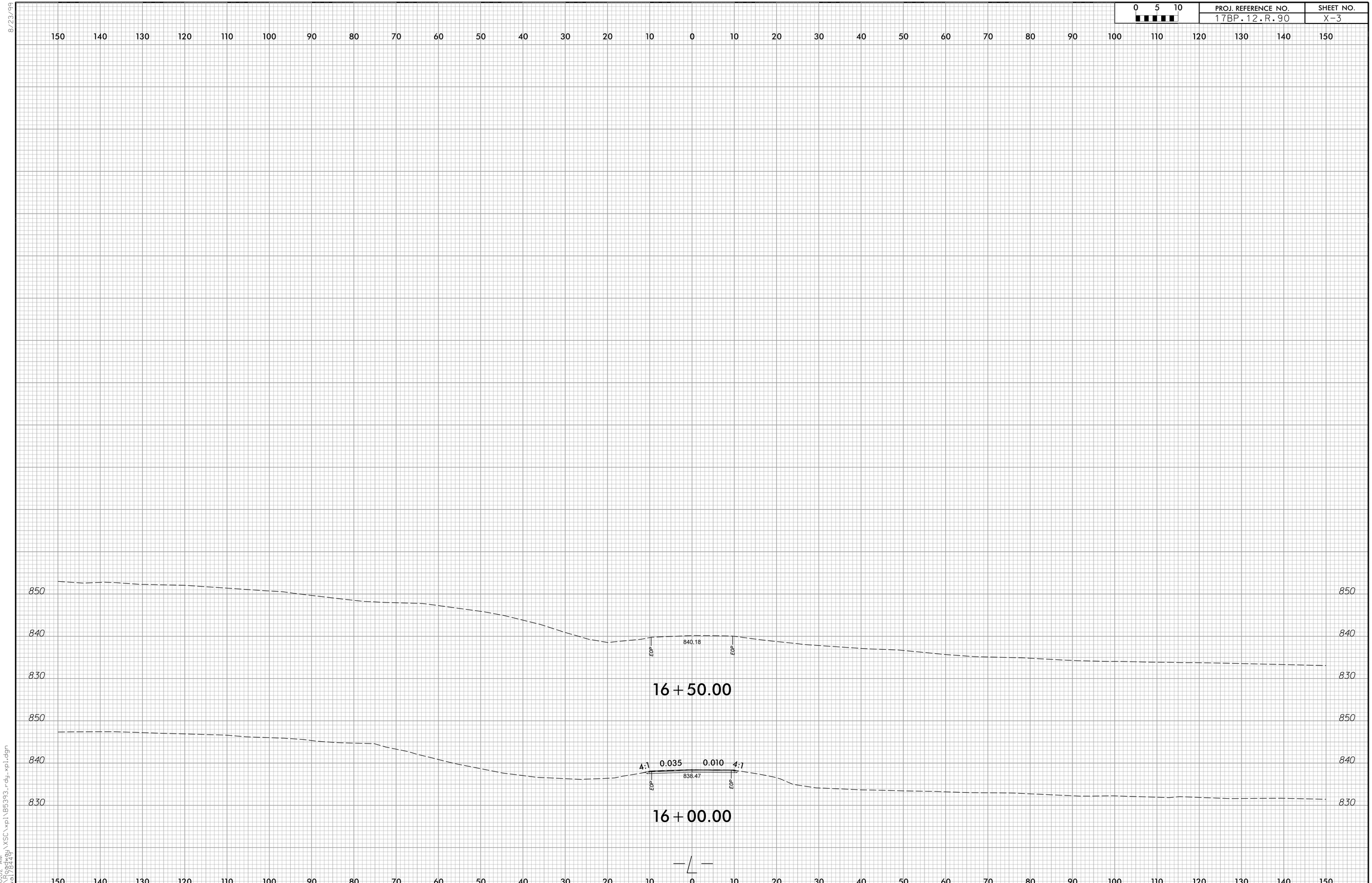

8/23/99

11:10:02 AM
R:\Roadway\XSC\xpl\B5393_rdy_xpl.dgn
wal78449

09/08/99

PROJECT: 17BP.12.R.90

CONTRACT: DL00167

$$$$$$SYSTIME$$$$$$

$$$$$$USERNAME$$$$$$

$$$$$$DGN$$$$$$

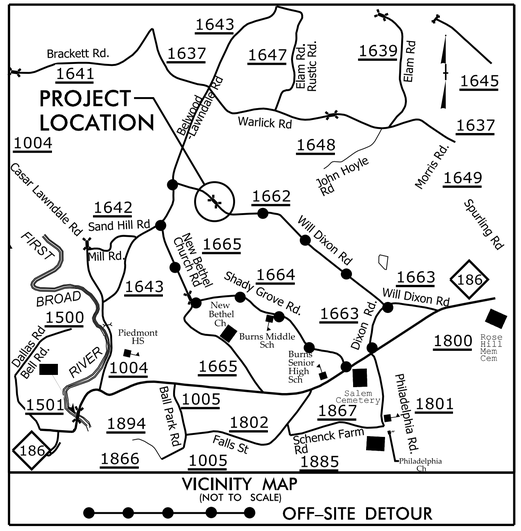

STATE OF NORTH CAROLINA
DIVISION OF HIGHWAYS

CLEVELAND COUNTY

LOCATION: REPLACE BRIDGE NO. 192 OVER MAPLE CREEK ON SR 1662 (WILL DIXON ROAD)

TYPE OF WORK: GRADING, DRAINAGE, PAVING, STRUCTURE, EROSION CONTROL & TRAFFIC CONTROL

STATE	STATE PROJECT REFERENCE NO.	SHEET NO.	TOTAL SHEETS
N.C.	17BP.12.R.90		

STATE PROJ. NO.	F. A. PROJ. NO.	DESCRIPTION
46108.1.1	BRZ-1662(4)	PE
46108.2.1	BRZ-1662(4)	RW, UTIL
17BP.12.R.90		CONST

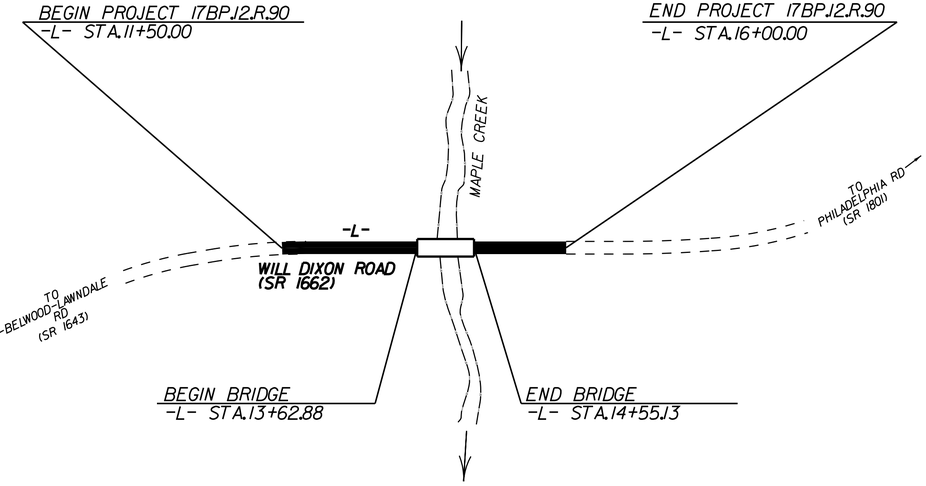



STRUCTURE

DOCUMENT NOT CONSIDERED FINAL UNLESS ALL SIGNATURES COMPLETED

GRAPHIC SCALES

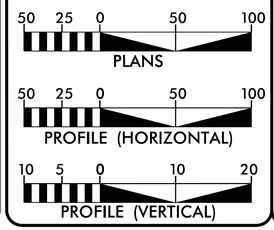

DESIGN DATA

ADT 2018 = 356
ADT 2038 = 578
K = 18 %
D = 80%
T = 9 % *
V = 50 MPH
* TTST =1% DUAL 8%
FUNC CLASS = LOCAL
SUB-REGIONAL TIER

PROJECT LENGTH

LENGTH ROADWAY PROJECT 17BP.12.R.90 = 0.068 MILES
LENGTH STRUCTURE PROJECT 17BP.12.R.90 = 0.017 MILES
TOTAL LENGTH OF PROJECT 17BP.12.R.90 = 0.085 MILES

PLANS PREPARED BY:

TGS ENGINEERS

TGS ENGINEERS
804-C N. LAFAYETTE ST.
SHELBY, NC 28150
PH (704) 476-0003

PLANS PREPARED FOR:

NCDOT

2018 STANDARD SPECIFICATIONS

LETTING DATE:
APRIL 10, 2018

ALLEN RAYNOR JR, PE
STRUCTURES DESIGN ENGINEER

NORTH CAROLINA PROFESSIONAL SEAL 014556 ENGINEER ROBERT ALLEN RAYNOR JR

DocuSigned by:
Robert Allen Raynor, Jr.
2C82A5257FA543C...
2/23/2018

STATE OF NORTH CAROLINA • DEPARTMENT OF TRANSPORTATION •

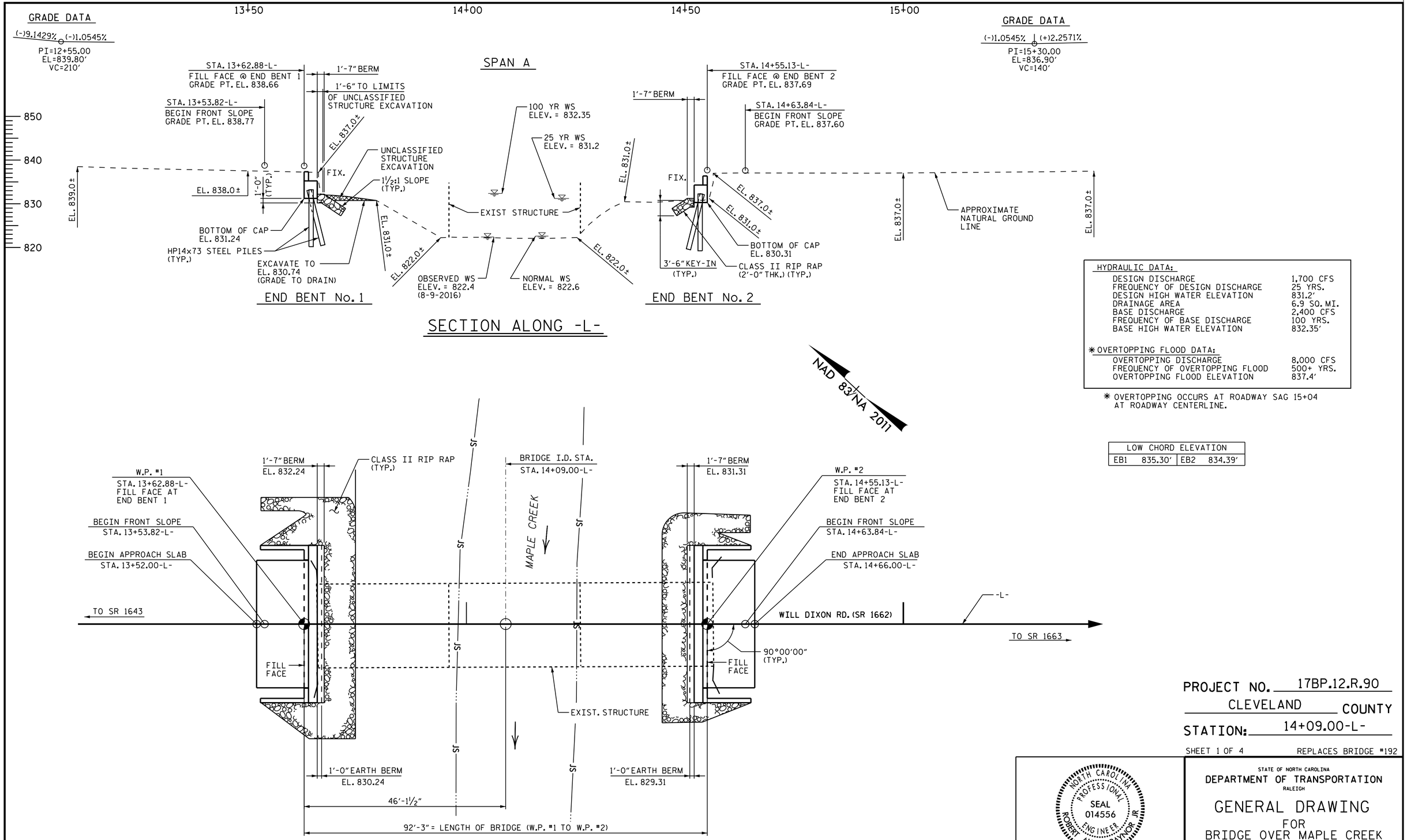

SECTION ALONG -L-

HYDRAULIC DATA:	
DESIGN DISCHARGE	1,700 CFS
FREQUENCY OF DESIGN DISCHARGE	25 YRS.
DESIGN HIGH WATER ELEVATION	831.2'
DRAINAGE AREA	6.9 SQ. MI.
BASE DISCHARGE	2,400 CFS
FREQUENCY OF BASE DISCHARGE	100 YRS.
BASE HIGH WATER ELEVATION	832.35'
✱OVERTOPPING FLOOD DATA:	
OVERTOPPING DISCHARGE	8,000 CFS
FREQUENCY OF OVERTOPPING FLOOD	500+ YRS.
OVERTOPPING FLOOD ELEVATION	837.4'

✱ OVERTOPPING OCCURS AT ROADWAY SAG 15+04 AT ROADWAY CENTERLINE.

LOW CHORD ELEVATION			
EB1	835.30'	EB2	834.39'

PLAN

PILES NOT SHOWN FOR CLARITY.

PROJECT NO. 17BP.12.R.90

CLEVELAND COUNTY

STATION: 14+09.00-L-

SHEET 1 OF 4 REPLACES BRIDGE #192

DRAWN BY :	RTJ	DATE :	3/17
CHECKED BY :	RAR	DATE :	8/17
DESIGN ENGINEER OF RECORD :	RAR	DATE :	8/17

NORTH CAROLINA PROFESSIONAL SEAL 014556 ENGINEER ROBERT ALLEN RAYNOR JR

DocuSigned by: Robert Allen Raynor, Jr. 2C82A9257EA543C 2/23/2018

DOCUMENT NOT CONSIDERED FINAL UNLESS ALL SIGNATURES COMPLETED

TGS ENGINEERS
804-C N. LAFAYETTE ST
SHELBY, NC 28150
PH (704) 476-0003
CORP. LICENSE NO.: C-0275

STATE OF NORTH CAROLINA
DEPARTMENT OF TRANSPORTATION
RALEIGH

GENERAL DRAWING
FOR
BRIDGE OVER MAPLE CREEK
ON SR 1662 BETWEEN
SR 1643 & SR 1663

REVISIONS						SHEET NO.
NO.	BY:	DATE:	NO.	BY:	DATE:	S-1
1			3			TOTAL SHEETS
2			4			18

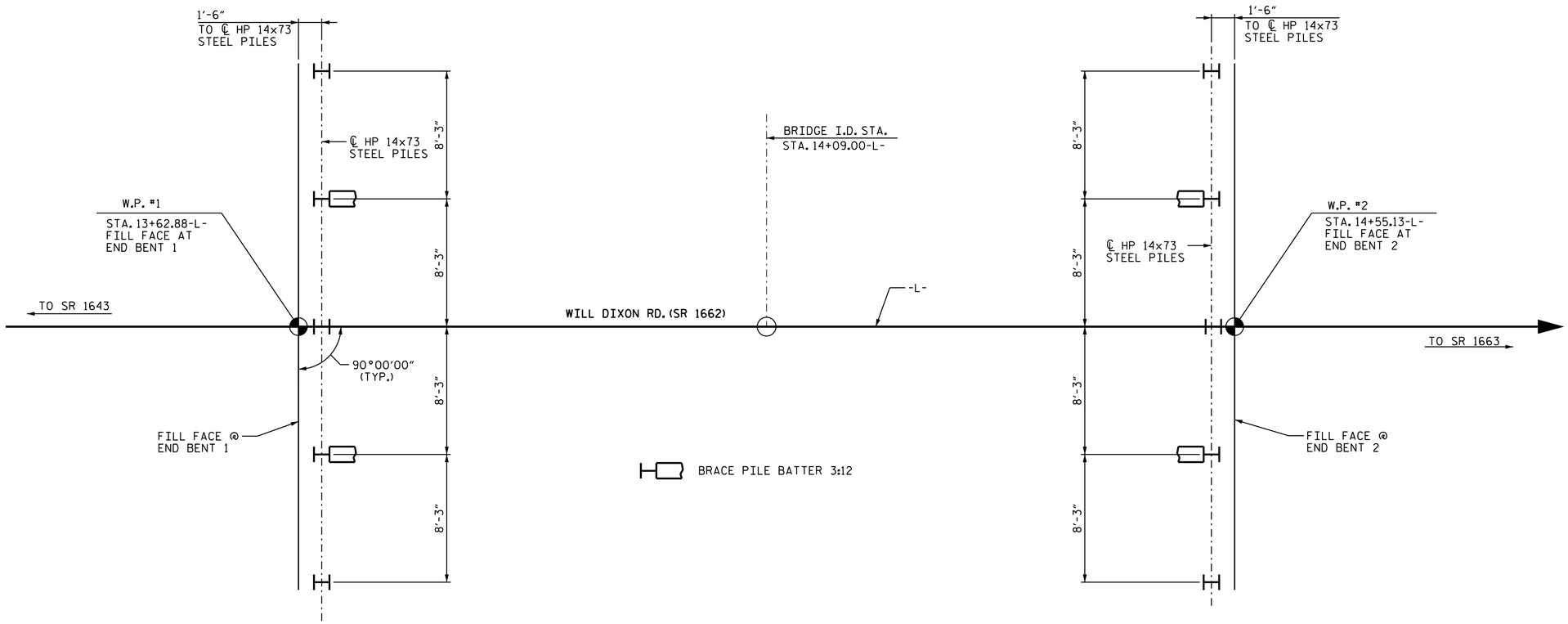

END BENT No. 1

END BENT No. 2

FOUNDATION LAYOUT PLAN

ALL PILES ARE HP 14x73 STEEL PILES.
DIMENSIONS LOCATING PILES ARE SHOWN TO THE CENTERLINE OF PILES. ORIENT PILES AS SHOWN.

FOUNDATION RECOMMENDATION NOTES

FOR PILES, SEE SECTION 450 OF THE STANDARD SPECIFICATIONS.

PILES AT END BENT NO. 1 AND END BENT NO. 2 ARE DESIGNED FOR A FACTORED RESISTANCE OF 130 TONS PER PILE.

DRIVE PILES AT END BENT NO. 1 AND END BENT NO. 2 TO A REQUIRED DRIVING RESISTANCE OF 217 TONS PER PILE.

IT HAS BEEN ESTIMATED THAT A HAMMER WITH A EQUIVALENT RATED ENERGY IN THE RANGE OF 40-50 FT. KIPS PER BLOW WILL BE REQUIRED TO DRIVE PILES AT END BENT NO. 1 AND END BENT NO. 2 IF PILE DRIVING IS REQUIRED. THIS ESTIMATED ENERGY RANGE DOES NOT RELEASE THE CONTRACTOR FROM PROVIDING DRIVING EQUIPMENT IN ACCORDANCE WITH SUBARTICLE 450-3(D)(2) OF THE STANDARD SPECIFICATIONS.

DRAWN BY :	RTJ	DATE :	6/17
CHECKED BY :	RAR	DATE :	6/17
DESIGN ENGINEER OF RECORD : RAR		DATE :	8/17

PROJECT NO. 17BP.12.R.90

CLEVELAND COUNTY

STATION: 14+09.00-L-

SHEET 2 OF 4

NORTH CAROLINA PROFESSIONAL SEAL 014556 ENGINEER ROBERT ALLEN RAYNOR JR

DocuSigned by: Robert Allen Raynor, Jr. 2/23/2018
2C82A3257FFA543C...

DOCUMENT NOT CONSIDERED FINAL UNLESS ALL SIGNATURES COMPLETED

TGS ENGINEERS
804-C N. LAFAYETTE ST
SHELBY, NC 28150
PH (704) 476-0003
CORP. LICENSE NO.: C-0275

STATE OF NORTH CAROLINA
DEPARTMENT OF TRANSPORTATION
RALEIGH

GENERAL DRAWING

FOR
BRIDGE OVER MAPLE CREEK
ON SR 1662 BETWEEN
SR 1643 & SR 1663

REVISIONS						SHEET NO.
NO.	BY:	DATE:	NO.	BY:	DATE:	S-2
1			3			TOTAL SHEETS
2			4			18

BENCHMARK #1 : RAILROAD SPIKE IN SW ROOT OF 18" BLACK WALNUT TREE, 133.7' LT. OF STA. 13+22-L-, EL. 830.51'

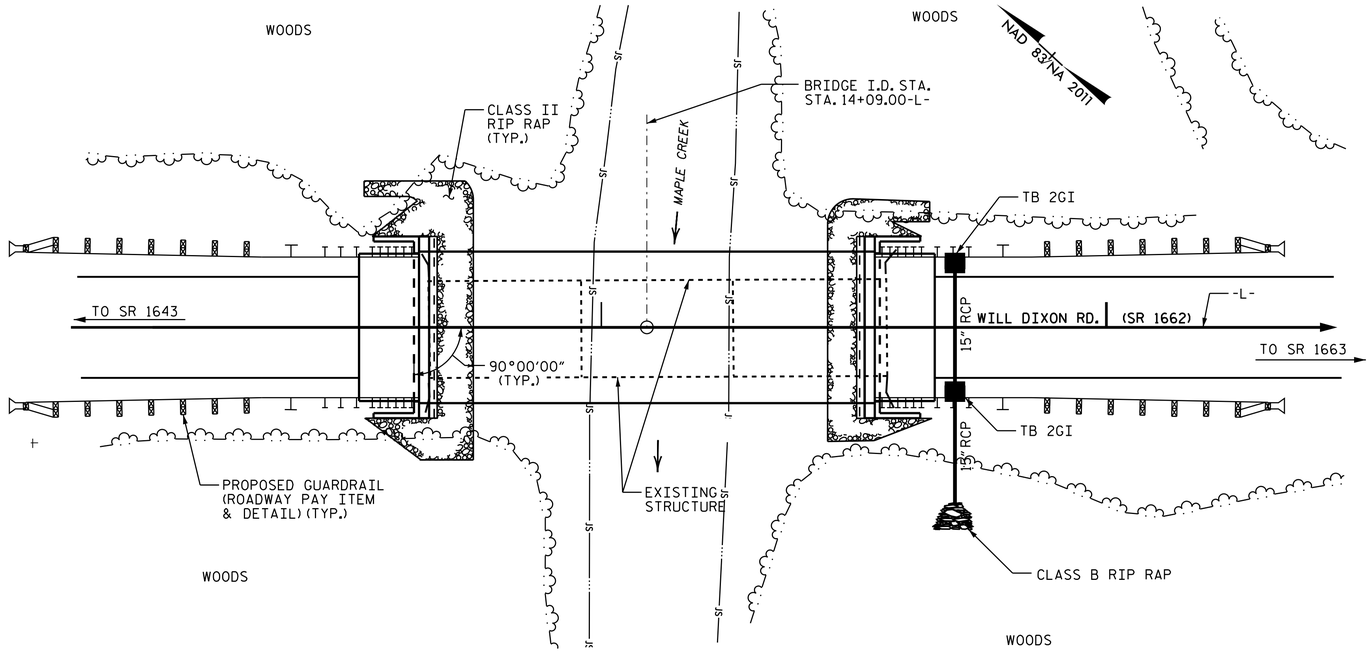

NO KNOWN UTILITY CONFLICTS.

LOCATION SKETCH

NOTES

ASSUMED LIVE LOAD = HL-93 OR ALTERNATE LOADING.

FOR OTHER DESIGN DATA AND GENERAL NOTES, SEE SHEET SN (S-18).

FOR EROSION CONTROL MEASURES, SEE EROSION CONTROL PLANS.

THIS BRIDGE HAS BEEN DESIGNED IN ACCORDANCE WITH THE AASHTO LRFD BRIDGE DESIGN SPECIFICATIONS.

THE EXISTING STRUCTURE CONSISTING OF 1 SPAN @ 30'-0" 2 SPANS @ 30'-3" WITH A CLEAR ROADWAY WIDTH OF 19'-2", TIMBER FLOOR ON I-BEAMS, END BENTS AND INTERIOR BENTS - TIMBER CAPS, TIMBER PILES AND BULKHEADS SHALL BE REMOVED. THE EXISTING BRIDGE IS PRESENTLY POSTED BELOW THE LEGAL LOAD LIMIT.

REMOVAL OF THE EXISTING BRIDGE SHALL BE PERFORMED IN A MANNER THAT PREVENTS DEBRIS FROM FALLING INTO WATER. THE CONTRACTOR SHALL SUBMIT DEMOLITION PLANS FOR REVIEW AND REMOVE THE BRIDGE IN ACCORDANCE WITH ARTICLE 402-2 OF THE STANDARD SPECIFICATIONS.

THE MATERIAL SHOWN IN THE CROSS-HATCHED AREA SHALL BE EXCAVATED FOR THE DISTANCE OF 20 FT. EACH SIDE OF THE CENTERLINE OF THE BRIDGE AS DIRECTED BY THE ENGINEER. THIS WORK WILL BE PAID FOR AT THE CONTRACT LUMP SUM PRICE FOR UNCLASSIFIED STRUCTURE EXCAVATION, SEE SECTION 412 OF THE STANDARD SPECIFICATIONS.

THE SUBSTRUCTURE OF THE EXISTING BRIDGE INDICATED ON THE PLANS IS FROM THE BEST INFORMATION AVAILABLE. THIS INFORMATION IS SHOWN FOR THE CONVENIENCE OF THE CONTRACTOR. THE CONTRACTOR SHALL HAVE NO CLAIM WHATSOEVER AGAINST THE DEPARTMENT OF TRANSPORTATION FOR ANY DELAYS OR ADDITIONAL COST INCURRED BASED ON DIFFERENCES BETWEEN THE EXISTING BRIDGE SUBSTRUCTURE SHOWN ON THE PLANS AND THE ACTUAL CONDITIONS AT THE PROJECT SITE.

ASPHALT WEARING SURFACE IS INCLUDED IN ROADWAY QUANTITIES ON ROADWAY PLANS.

THIS STRUCTURE HAS BEEN DESIGNED IN ACCORDANCE WITH HEC 18, "EVALUATING SCOUR AT BRIDGES".

FOR GROUT FOR STRUCTURES, SEE SPECIAL PROVISIONS.

THIS BRIDGE IS LOCATED IN SEISMIC ZONE 1.

FOR FALSEWORK AND FORMWORK, SEE SPECIAL PROVISIONS.

FOR SUBMITTAL OF WORKING DRAWINGS, SEE SPECIAL PROVISIONS.

FOR CRANE SAFTY, SEE SPECIAL PROVISIONS.

FOR ASBESTOS ASSESMENT FOR BRIDGE DEMOLITION AND RENOVATION ACTIVITIES, SEE SPECIAL PROVISIONS.

INASMUCH AS THE PAINT SYSTEM ON THE EXISTING STRUCTURAL STEEL CONTAINS LEAD, THE CONTRACTOR'S ATTENTION IS DIRECTED TO ARTICLE 107-1 OF THE STANDARD SPECIFICATIONS. ANY COSTS RESULTING FROM COMPLIANCE WITH APPLICABLE STATE OR FEDERAL REGULATIONS PERTAINING TO HANDLING OF MATERIALS CONTAINING LEAD BASED PAINT SHALL BE INCLUDED IN THE BID PRICE FOR "REMOVAL OF EXISTING STRUCTURE AT STATION 14+09.00-L-.

DRAWN BY :	RTJ	DATE :	3/17
CHECKED BY :	RAR	DATE :	8/17
DESIGN ENGINEER OF RECORD :	RAR	DATE :	8/17

PROJECT NO. 17BP.12.R.90

CLEVELAND COUNTY

STATION: 14+09.00-L-

SHEET 3 OF 4

NORTH CAROLINA PROFESSIONAL SEAL 014556 ENGINEER ROBERT ALLEN RAYNOR JR

DocuSigned by: Robert Allen Raynor, Jr. 2/23/2018

DOCUMENT NOT CONSIDERED FINAL UNLESS ALL SIGNATURES COMPLETED

TGS ENGINEERS
804-C N. LAFAYETTE ST
SHELBY, NC 28150
PH (704) 476-0003
CORP. LICENSE NO.: C-0275

STATE OF NORTH CAROLINA
DEPARTMENT OF TRANSPORTATION
RALEIGH

GENERAL DRAWING
FOR
BRIDGE OVER MAPLE CREEK
ON SR 1662 BETWEEN
SR 1643 & SR 1663

REVISIONS						SHEET NO.
NO.	BY:	DATE:	NO.	BY:	DATE:	S-3
1			3			TOTAL SHEETS
2			4			18

TOTAL BILL OF MATERIAL

ITEM	REMOVAL OF EXISTING STRUCTURE AT STA. 14+09.00-L-	UNCLASSIFIED STRUCTURE EXCAVATION AT STA. 14+09.00-L-	CLASS "A" CONCRETE (BRIDGE)	BRIDGE APPROACH SLABS	REINFORCING STEEL (BRIDGE)	PILE DRIVING EQUIPMENT SETUP FOR HP14 x 73 STEEL PILES	HP14x73 STEEL PILES		VERTICAL CONCRETE BARRIER RAIL	RIP RAP CLASS II (2'-0" THK.)	GEOTEXTILE FOR DRAINAGE	ELASTOMERIC BEARINGS	3'-0" x 2'-9" PRESTRESSED CONCRETE BOX BEAMS		ASBESTOS ASSESSMENT
	LUMP SUM	LUMP SUM	C.Y.	LUMP SUM	LBS.	EACH	NO.	LIN. FT.	LIN. FT.	TONS	SQ. YDS.	LUMP SUM	NO.	LIN. FT.	LUMP SUM
SUPERSTRUCTURE									180				10	900	
END BENT 1			25.7		3,373	5	5	280		75	83				
END BENT 2			25.7		3,373	5	5	165		55	61				
TOTALS	LUMP SUM	LUMP SUM	51.4	LUMP SUM	6,746	10	10	445	180	130	144	LUMP SUM	10	900	LUMP SUM

PROJECT NO. 17BP.12.R.90

CLEVELAND COUNTY

STATION: 14+09.00-L-

SHEET 4 OF 4

NORTH CAROLINA PROFESSIONAL SEAL 014556 ENGINEER ROBERT ALLEN RAYNOR JR

DocuSigned by: Robert Allen Raynor, Jr. 2CB2A5257FA643C... 2/23/2018

DOCUMENT NOT CONSIDERED FINAL UNLESS ALL SIGNATURES COMPLETED

TGS ENGINEERS
804-C N. LAFAYETTE ST
SHELBY, NC 28150
PH (704) 476-0003
CORP. LICENSE NO.: C-0275

STATE OF NORTH CAROLINA
DEPARTMENT OF TRANSPORTATION
RALEIGH

BILL OF MATERIAL

REVISIONS						SHEET NO.
NO.	BY:	DATE:	NO.	BY:	DATE:	S-4
1			3			TOTAL SHEETS
2			4			18

DRAWN BY : NMW DATE : 6/17
CHECKED BY : RAR DATE : 8/17
DESIGN ENGINEER OF RECORD : RAR DATE : 8/17

LOAD AND RESISTANCE FACTOR RATING (LRFD) SUMMARY FOR PRESTRESSED CONCRETE GIRDERS

LEVEL		VEHICLE	WEIGHT (W) (TONS)	CONTROLLING LOAD RATING	MINIMUM RATING FACTORS (RF)	TONS = W X RF	STRENGTH I LIMIT STATE										SERVICE III LIMIT STATE						COMMENT NUMBER
								MOMENT					SHEAR					MOMENT						
							LIVELOAD FACTORS	DISTRIBUTION FACTORS (DF)	RATING FACTOR	SPAN	GIRDER LOCATION	DISTANCE FROM LEFT END OF SPAN (ft)	DISTRIBUTION FACTORS (DF)	RATING FACTOR	SPAN	GIRDER LOCATION	DISTANCE FROM LEFT END OF SPAN (ft)	LIVELOAD FACTORS	DISTRIBUTION FACTORS (DF)	RATING FACTOR	SPAN	GIRDER LOCATION	DISTANCE FROM LEFT END OF SPAN (ft)	
DESIGN LOAD RATING		HL-93(Inv)	N/A	1	1.109	--	1.75	0.272	1.47	A	EL	44.25	0.493	1.26	A	EL	4.425	0.80	0.272	**1.11**	A	EL	**44.25**	
		HL-93(Opr)	N/A	--	1.633	--	1.35	0.272	1.9	A	EL	44.25	0.493	1.63	A	EL	4.425	N/A	--	--	--	--	--	
		HS-20(Inv)	36.000	2	1.507	54.255	1.75	0.272	1.99	A	EL	44.25	0.493	1.65	A	EL	4.425	0.80	0.272	**1.51**	A	EL	**44.25**	
		HS-20(Opr)	36.000	--	2.14	77.039	1.35	0.272	2.59	A	EL	44.25	0.493	2.14	A	EL	4.425	N/A	--	--	--	--	--	
LEGAL LOAD RATING	SV	SNSH	13.500	--	3.519	47.501	1.4	0.272	5.82	A	EL	44.25	0.493	5.05	A	EL	4.425	0.80	0.272	3.52	A	EL	44.25	
		SNGARBS2	20.000	--	2.572	51.43	1.4	0.272	4.25	A	EL	44.25	0.493	3.55	A	EL	4.425	0.80	0.272	2.57	A	EL	44.25	
		SNAGRIS2	22.000	--	2.415	53.122	1.4	0.272	4	A	EL	44.25	0.493	3.27	A	EL	4.425	0.80	0.272	2.41	A	EL	44.25	
		SNCOTTS3	27.250	--	1.749	47.674	1.4	0.272	2.89	A	EL	44.25	0.493	2.52	A	EL	4.425	0.80	0.272	1.75	A	EL	44.25	
		SNAGGRS4	34.925	--	1.443	50.381	1.4	0.272	2.39	A	EL	44.25	0.493	2.06	A	EL	4.425	0.80	0.272	1.44	A	EL	44.25	
		SNS5A	35.550	--	1.412	50.195	1.4	0.272	2.34	A	EL	44.25	0.493	2.07	A	EL	4.425	0.80	0.272	1.41	A	EL	44.25	
		SNS6A	39.950	--	1.287	51.435	1.4	0.272	2.13	A	EL	44.25	0.493	1.88	A	EL	4.425	0.80	0.272	1.29	A	EL	44.25	
		SNS7B	42.000	--	1.226	51.483	1.4	0.272	2.03	A	EL	44.25	0.493	1.83	A	EL	4.425	0.80	0.272	1.23	A	EL	44.25	
	TTST	TNAGRIT3	33.000	--	1.568	51.733	1.4	0.272	2.59	A	EL	44.25	0.493	2.24	A	EL	4.425	0.80	0.272	1.57	A	EL	44.25	
		TNT4A	33.075	--	1.572	52.007	1.4	0.272	2.6	A	EL	44.25	0.493	2.2	A	EL	4.425	0.80	0.272	1.57	A	EL	44.25	
		TNT6A	41.600	--	1.278	53.17	1.4	0.272	2.11	A	EL	44.25	0.493	1.92	A	EL	4.425	0.80	0.272	1.28	A	EL	44.25	
		TNT7A	42.000	--	1.281	53.782	1.4	0.272	2.12	A	EL	44.25	0.493	1.89	A	EL	4.425	0.80	0.272	1.28	A	EL	44.25	
		TNT7B	42.000	--	1.315	55.229	1.4	0.272	2.18	A	EL	44.25	0.493	1.79	A	EL	4.425	0.80	0.272	1.31	A	EL	44.25	
		TNAGRIT4	43.000	--	1.258	54.101	1.4	0.272	2.08	A	EL	44.25	0.493	1.74	A	EL	4.425	0.80	0.272	1.26	A	EL	44.25	
		TNAGT5A	45.000	--	1.19	53.537	1.4	0.272	1.97	A	EL	44.25	0.493	1.71	A	EL	4.425	0.80	0.272	1.19	A	EL	44.25	
		TNAGT5B	45.000	3	1.178	53.027	1.4	0.272	1.95	A	EL	44.25	0.493	1.66	A	EL	4.425	0.80	0.272	**1.18**	A	EL	**44.25**	

LOAD FACTORS:

DESIGN LOAD RATING FACTORS	LIMIT STATE	γ_{DC}	γ_{DW}
	STRENGTH I	1.25	1.50
	SERVICE III	1.00	1.00

NOTES:

MINIMUM RATING FACTORS ARE BASED ON THE STRENGTH I AND SERVICE III LIMIT STATES.

ALLOWABLE STRESSES FOR SERVICE III LIMIT STATE ARE AS REQUIRED FOR DESIGN.

COMMENTS:

1.
2.
3.
4.

(#) CONTROLLING LOAD RATING

(1) DESIGN LOAD RATING (HL-93)

(2) DESIGN LOAD RATING (HS-20)

(3) LEGAL LOAD RATING **

** SEE CHART FOR VEHICLE TYPE

GIRDER LOCATION

I - INTERIOR GIRDER
EL - EXTERIOR LEFT GIRDER
ER - EXTERIOR RIGHT GIRDER

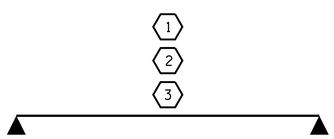

LRFR SUMMARY

PROJECT NO. 17BP.12.R.90

CLEVELAND COUNTY

STATION: 14+09.00-L-

ASSEMBLED BY : RTJ DATE : 8/17
CHECKED BY : RAR DATE : 8/17
DESIGN ENGINEER OF RECORD : RAR DATE : 8/17

DRAWN BY : TMG II/II
CHECKED BY : AAC II/II

NORTH CAROLINA PROFESSIONAL SEAL 014556 ENGINEER ROBERT ALLEN RAYNOR JR

DocuSigned by: Robert Allen Raynor, Jr. 2/23/2018
2C82A5257FA543C...

DOCUMENT NOT CONSIDERED FINAL UNLESS ALL SIGNATURES COMPLETED

TGS ENGINEERS
804-C N. LAFAYETTE ST
SHELBY, NC 28150
PH (704) 476-0003
CORP. LICENSE NO.: C-0275

STATE OF NORTH CAROLINA
DEPARTMENT OF TRANSPORTATION
RALEIGH

STANDARD

LRFR SUMMARY FOR 90' BOX BEAM UNIT 90° SKEW (NON-INTERSTATE TRAFFIC)

REVISIONS						SHEET NO.
NO.	BY:	DATE:	NO.	BY:	DATE:	S-5
1			3			TOTAL SHEETS
2			4			18

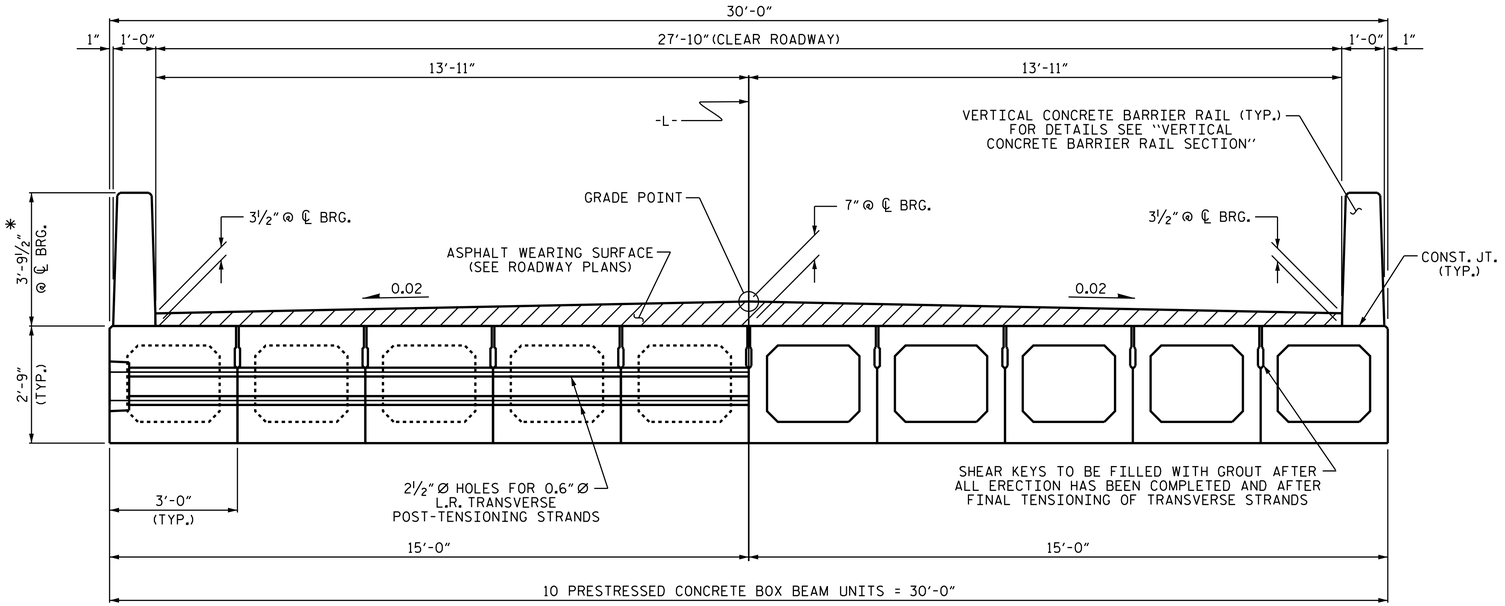

HALF SECTION
AT INTERMEDIATE DIAPHRAGMS

HALF SECTION
THROUGH VOIDS

TYPICAL SECTION

*THE MAXIMUM BARRIER RAIL HEIGHT AND ASPHALT THICKNESS IS SHOWN. THE HEIGHT OF THE BARRIER RAIL AND ASPHALT THICKNESS VARIES WHILE THE TOP OF THE BARRIER RAIL FOLLOWS THE PROFILE OF THE GUTTERLINE. FOR RAIL HEIGHT DETAILS AND ASPHALT THICKNESS, SEE THE "VERTICAL CONCRETE BARRIER RAIL SECTION" DETAIL.

FIXED END

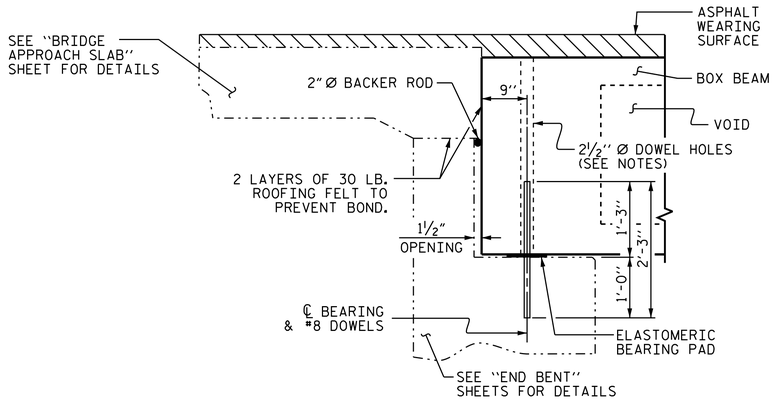

SECTION AT END BENT

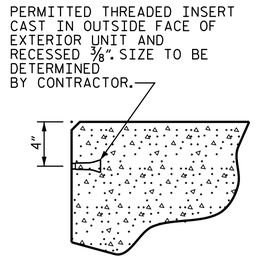

THREADED INSERT DETAIL

NOTES

ALL PRESTRESSING STRANDS SHALL BE 7-WIRE LOW RELAXATION GRADE 270 STRANDS AND SHALL CONFORM TO AASHTO M203 EXCEPT FOR SAMPLING REQUIREMENTS WHICH SHALL BE IN ACCORDANCE WITH THE STANDARD SPECIFICATIONS.

ALL REINFORCING STEEL CAST WITH THE BOX BEAM SECTIONS SHALL BE GRADE 60 AND SHALL BE INCLUDED IN THE UNIT PRICE BID FOR PRESTRESSED CONCRETE BOX BEAMS.

FLAME CUTTING OF THE TRANSVERSE POST-TENSIONING STRAND IS NOT ALLOWED.

RECESSES FOR TRANSVERSE STRANDS SHALL BE GROUTED AFTER THE TENSIONING OF THE STRANDS.

THE 2½" Ø DOWEL HOLES AT FIXED ENDS OF BOX BEAM SECTIONS SHALL BE FILLED WITH NON-SHRINK GROUT.

THE BACKER RODS SHALL CONFORM TO THE REQUIREMENTS OF TYPE M BOND BREAKER. SEE SECTION 1028 OF THE STANDARD SPECIFICATIONS.

THE TRANSFER OF LOAD FROM THE ANCHORAGES TO THE BOX BEAM UNIT SHALL BE DONE WHEN THE CONCRETE HAS REACHED A COMPRESSIVE STRENGTH OF NOT LESS THAN 6000 PSI.

ALL REINFORCING STEEL IN VERTICAL CONCRETE BARRIER RAILS SHALL BE EPOXY COATED.

PRESTRESSING STRANDS SHALL BE CUT FLUSH WITH THE BOX BEAM UNIT ENDS.

APPLY EPOXY PROTECTIVE COATING TO BOX BEAM UNIT ENDS.

VERTICAL GROOVED CONTRACTION JOINTS, ½" IN DEPTH, SHALL BE TOOLED IN ALL EXPOSED FACES OF THE BARRIER RAIL AND IN ACCORDANCE WITH ARTICLE 825-10(B) OF THE STANDARD SPECIFICATIONS. A VERTICAL CONTRACTION JOINT SHALL BE LOCATED AT EACH THIRD POINT BETWEEN BARRIER RAIL EXPANSION JOINTS. ONLY ONE CONTRACTION JOINT IS REQUIRED AT MIDPOINT OF BARRIER RAIL SEGMENTS LESS THAN 20 FEET IN LENGTH AND NO CONTRACTION JOINTS ARE REQUIRED FOR THOSE SEGMENTS LESS THAN 10 FEET IN LENGTH.

THE LOCATION OF THE VOID DRAINS MAY BE SHIFTED SLIGHTLY WHERE NECESSARY TO CLEAR PRESTRESSING STRANDS OR TRANSVERSE REINFORCING STEEL.

FOR GROUT FOR STRUCTURES, SEE SPECIAL PROVISIONS.

THE PERMITTED THREADED INSERTS ARE DETAILED AS AN OPTION FOR THE CONTRACTOR TO ATTACH FALSEWORK AND FORMWORK DURING CONSTRUCTION.

THE PERMITTED THREADED INSERTS IN THE EXTERIOR UNITS SHALL BE SIZED BY THE CONTRACTOR, SPACED AT 4'-0" CENTERS AND GALVANIZED IN ACCORDANCE WITH SECTION 1076 OF THE STANDARD SPECIFICATIONS. STAINLESS STEEL THREADED INSERTS MAY BE USED AS AN ALTERNATE.

THE PERMITTED THREADED INSERTS SHALL BE GROUTED BY THE CONTRACTOR IMMEDIATELY FOLLOWING REMOVAL OF THE FALSEWORK.

THE COST OF THE PERMITTED THREADED INSERTS SHALL BE INCLUDED IN THE PRICE BID FOR THE PRECAST UNITS.

PROJECT NO. 17BP.12.R.90

CLEVELAND COUNTY

STATION: 14+09.00-L-

SHEET 1 OF 5

ASSEMBLED BY :	RTJ	DATE :	8/17
CHECKED BY :	RAR	DATE :	8/17
DESIGN ENGINEER OF RECORD :	RAR	DATE :	8/17
DRAWN BY : DGE 8/11		REV. 8/14	MAA/TMG
CHECKED BY : TMG 11/11			

NORTH CAROLINA PROFESSIONAL SEAL 014556 ENGINEER ROBERT ALLEN RAYNOR JR.

DocuSigned by: Robert Allen Raynor, Jr. 2C82A5257FA543C... 2/23/2018

DOCUMENT NOT CONSIDERED FINAL UNLESS ALL SIGNATURES COMPLETED

TGS ENGINEERS
804-C N. LAFAYETTE ST
SHELBY, NC 28150
PH (704) 476-0003
CORP. LICENSE NO.: C-0275

STATE OF NORTH CAROLINA
DEPARTMENT OF TRANSPORTATION
RALEIGH

STANDARD

3'-0" X 2'-9" PRESTRESSED CONCRETE BOX BEAM UNIT

REVISIONS						SHEET NO.
NO.	BY:	DATE:	NO.	BY:	DATE:	S-6
1			3			TOTAL SHEETS
2			4			18

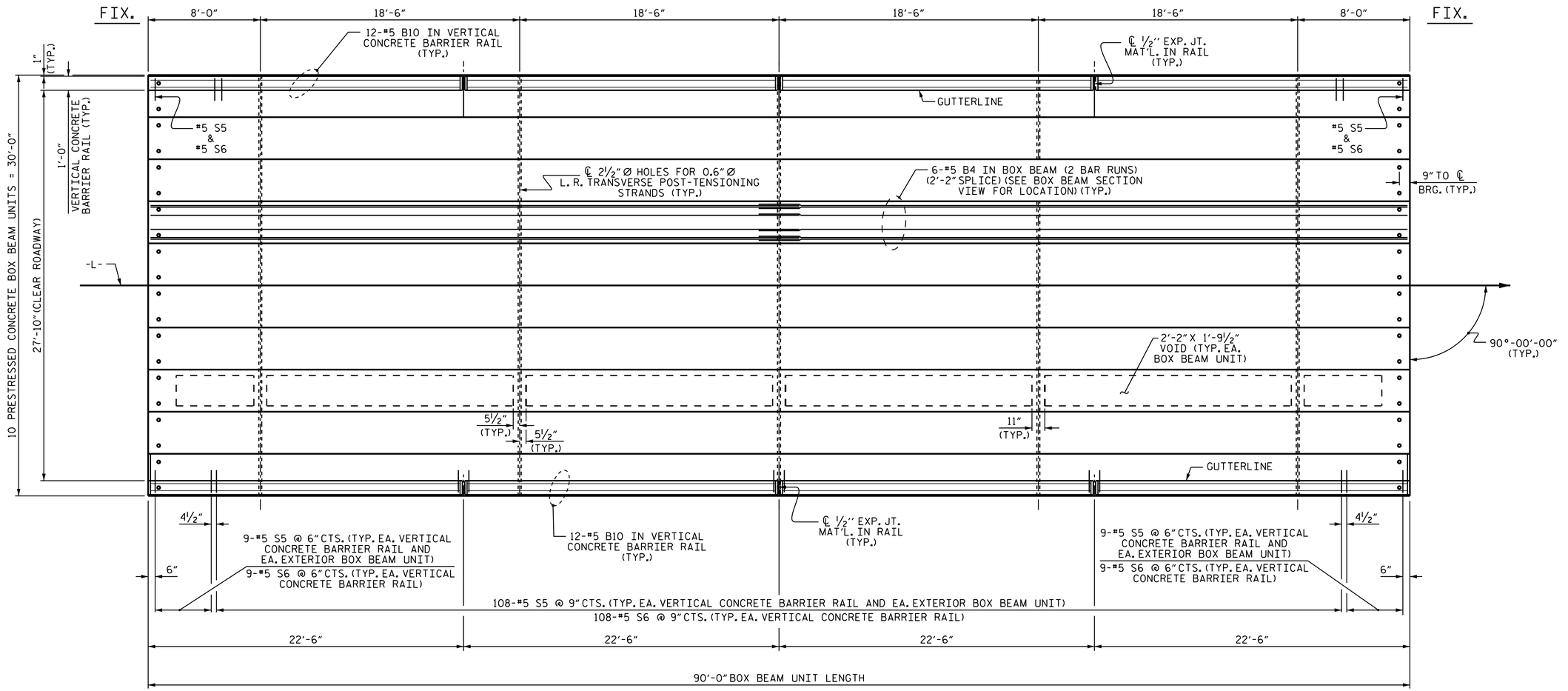

PLAN OF UNIT

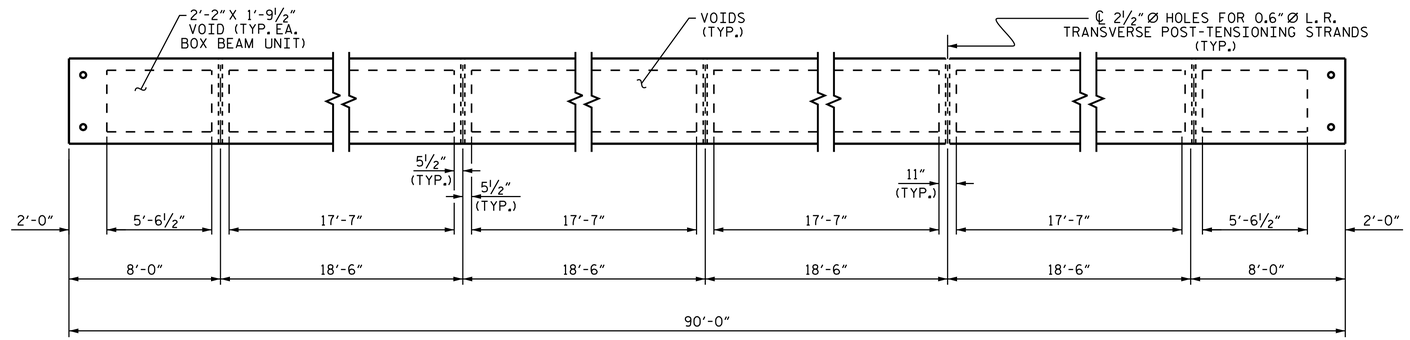

DIAPHRAGM AND VOID LAYOUT

PROJECT NO. 17BP.12.R.90

CLEVELAND COUNTY

STATION: 14+09.00-L-

SHEET 2 OF 5

ASSEMBLED BY :	RTJ	DATE :	8/17
CHECKED BY :	RAR	DATE :	8/17
DESIGN ENGINEER OF RECORD :	RAR	DATE :	8/17
DRAWN BY : DGE	8/10	REV. 8/14	MAA/TMG
CHECKED BY : TMG	11/11		

NORTH CAROLINA PROFESSIONAL SEAL 014556 ENGINEER ROBERT ALLEN RAYNOR JR

DocuSigned by: Robert Allen Raynor, Jr. 2/23/2018
2C82A5257FA543C...

DOCUMENT NOT CONSIDERED FINAL UNLESS ALL SIGNATURES COMPLETED

TGS ENGINEERS
804-C N. LAFAYETTE ST
SHELBY, NC 28150
PH (704) 476-0003
CORP. LICENSE NO.: C-0275

STATE OF NORTH CAROLINA
DEPARTMENT OF TRANSPORTATION
RALEIGH

STANDARD

PLAN OF 90' UNIT 27'-10" CLEAR ROADWAY 90° SKEW

REVISIONS						SHEET NO.
NO.	BY:	DATE:	NO.	BY:	DATE:	S-7
1			3			TOTAL SHEETS
2			4			18

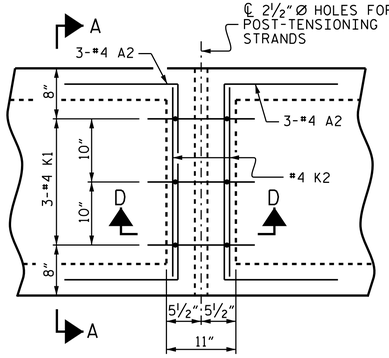

PLAN

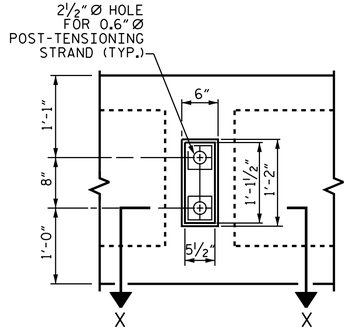

VIEW Y-Y

SHOWING ELEVATION VIEW OF GROUTED RECESS

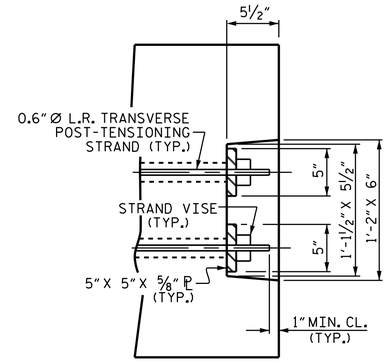

DETAIL "C"

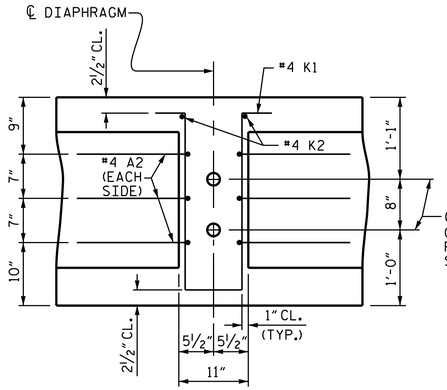

SECTION D-D

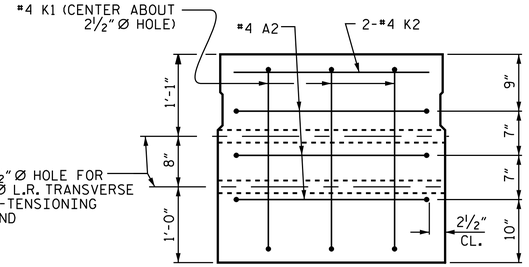

SECTION A-A

VOIDS NOT SHOWN

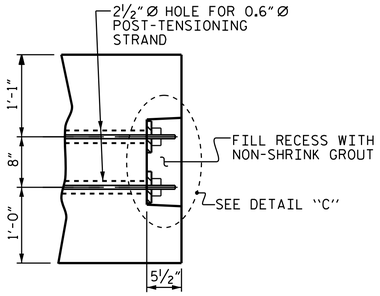

PART SECTION AT RECESS

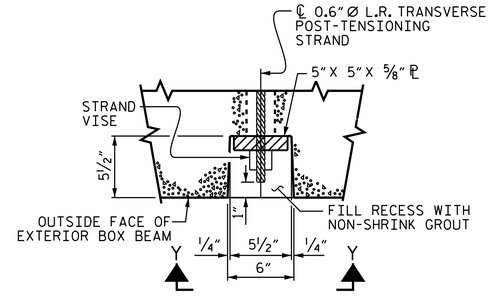

SECTION X-X

SHOWING PLAN VIEW OF GROUTED RECESS

GROUTED RECESS DETAIL AT END OF POST-TENSIONED STRANDS OF EXTERIOR BOX BEAM

DOUBLE DIAPHRAGM DETAILS

#4 "S" BARS NOT SHOWN. #4 "S" BARS MAY BE SHIFTED SLIGHTLY TO CLEAR 2½" Ø HOLE.

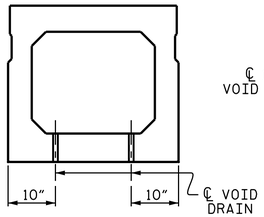

SECTION B-B

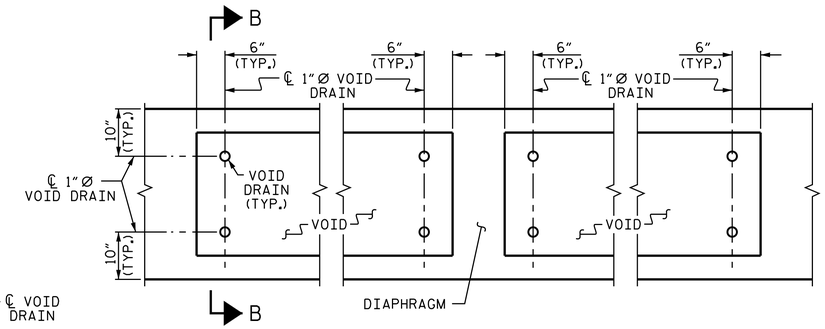

PART PLAN

VOID DRAIN DETAILS

(DIMENSIONS SHOWN ARE TYPICAL FOR EACH VOID)

DEAD LOAD DEFLECTION AND CAMBER	
	3'-0" x 2'-9"
85' & 90' BOX BEAM UNIT (NC & SE)	0.6" Ø L.R. STRAND
CAMBER (SLAB ALONE IN PLACE)	2¾" ↑
DEFLECTION DUE TO SUPERIMPOSED DEAD LOAD**	¾" ↓
FINAL CAMBER	2" ↑

** INCLUDES FUTURE WEARING SURFACE

PROJECT NO. 17BP.12.R.90

CLEVELAND COUNTY

STATION: 14+09.00-L-

SHEET 3 OF 5

ASSEMBLED BY :	RTJ	DATE :	8/17
CHECKED BY :	RAR	DATE :	8/17
DESIGN ENGINEER OF RECORD :	RAR	DATE :	8/17
DRAWN BY : DGE 10/11	REV. 8/14		MAA/TMG
CHECKED BY : TMG 11/11			

NORTH CAROLINA PROFESSIONAL SEAL 014556 ENGINEER ROBERT ALLEN RAYNOR JR

DocuSigned by: Robert Allen Raynor, Jr. 2C82A5257FA543C...

2/23/2018

DOCUMENT NOT CONSIDERED FINAL UNLESS ALL SIGNATURES COMPLETED

TGS ENGINEERS
804-C N. LAFAYETTE ST
SHELBY, NC 28150
PH (704) 476-0003
CORP. LICENSE NO.: C-0275

STATE OF NORTH CAROLINA
DEPARTMENT OF TRANSPORTATION
RALEIGH

STANDARD

3'-0" X 2'-9" PRESTRESSED CONCRETE BOX BEAM UNIT

REVISIONS						SHEET NO.
NO.	BY:	DATE:	NO.	BY:	DATE:	S-8
1			3			TOTAL SHEETS
2			4			18

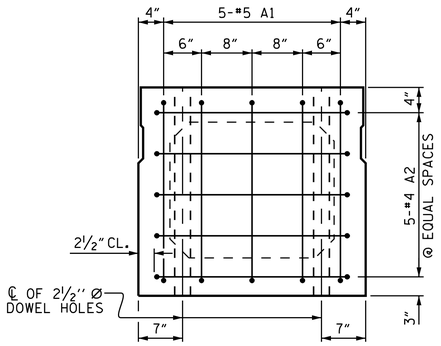

END ELEVATION

SHOWING PLACEMENT OF #5 & #4 "A" BARS AND LOCATION OF DOWEL HOLES.
(INTERIOR BOX BEAM SECTION SHOWN-EXTERIOR SECTION SIMILAR EXCEPT SHEAR KEY LOCATION. STRAND LAYOUT NOT SHOWN.)

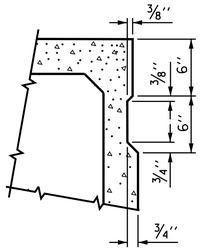

SHEAR KEY DETAIL

NOTE: OMIT SHEAR KEY ON OUTSIDE FACE OF EXTERIOR BOX BEAMS.

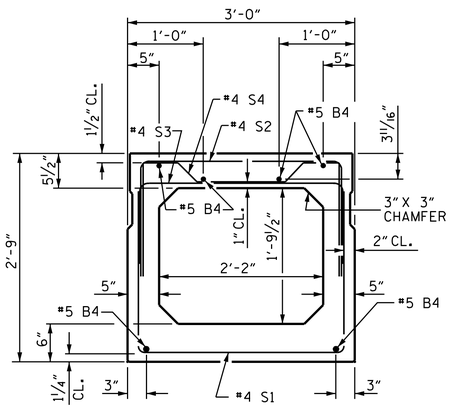

INTERIOR BOX BEAM SECTION

(STRAND LAYOUT NOT SHOWN)

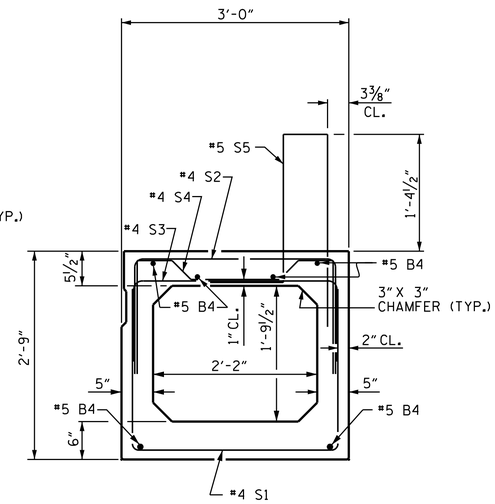

EXTERIOR BOX BEAM SECTION

(STRAND LAYOUT NOT SHOWN)

0.6" Ø LOW RELAXATION STRAND LAYOUT

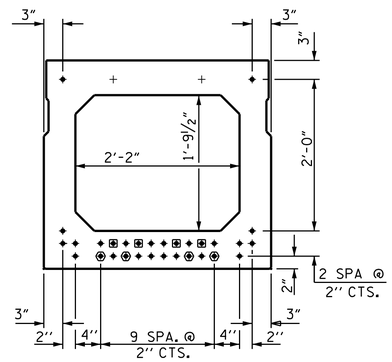

TYPICAL STRAND LOCATION

(30 STRANDS REQUIRED)

DEBONDING LEGEND

- ● FULLY BONDED STRANDS
- ◉ STRANDS DEBONDED FOR 4'-0" FROM END OF GIRDER
- ⬢ STRANDS DEBONDED FOR 12'-0" FROM END OF GIRDER

BOND SHALL BE BROKEN ON STRANDS AS SHOWN FOR THE SPECIFIED LENGTH FROM EACH END OF THE BOX BEAM. SEE STANDARD SPECIFICATIONS ARTICLE 1078-7.

BAR TYPES

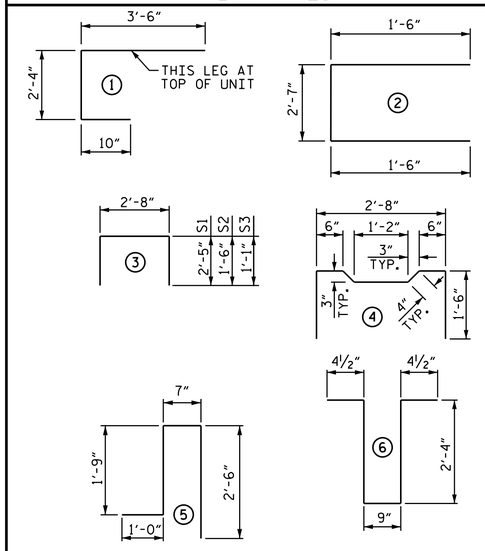

ALL BAR DIMENSIONS ARE OUT TO OUT

GRADE 270 STRANDS

	0.6" Ø L.R.
AREA (SQUARE INCHES)	0.217
ULTIMATE STRENGTH (LBS. PER STRAND)	58,600
APPLIED PRESTRESS (LBS. PER STRAND)	43,950

BILL OF MATERIAL FOR ONE BOX BEAM SECTION

				EXTERIOR UNIT		INTERIOR UNIT	
BAR	NUMBER	SIZE	TYPE	LENGTH	WEIGHT	LENGTH	WEIGHT
A1	10	#5	1	6'-8"	70	6'-8"	70
A2	40	#4	2	5'-7"	149	5'-7"	149
B4	12	#5	STR	45'-11"	575	45'-11"	575
K1	15	#4	6	6'-2"	62	6'-2"	62
K2	10	#4	STR	2'-7"	17	2'-7"	17
S1	73	#4	3	7'-6"	366	7'-6"	366
S2	73	#4	3	5'-8"	276	5'-8"	276
S3	127	#4	3	4'-10"	410	4'-10"	410
S4	54	#4	4	5'-10"	210	5'-10"	210
✱ S5	126	#5	5	5'-10"	767	--	--
REINFORCING STEEL				2135	LBS.	2135	LBS.
✱ EPOXY COATED REINF. STEEL				767	LBS.		
8000 P.S.I. CONCRETE				16.0	CU. YDS.	15.9	CU. YDS.
0.6" Ø L.R. STRANDS				No. 30		No. 30	

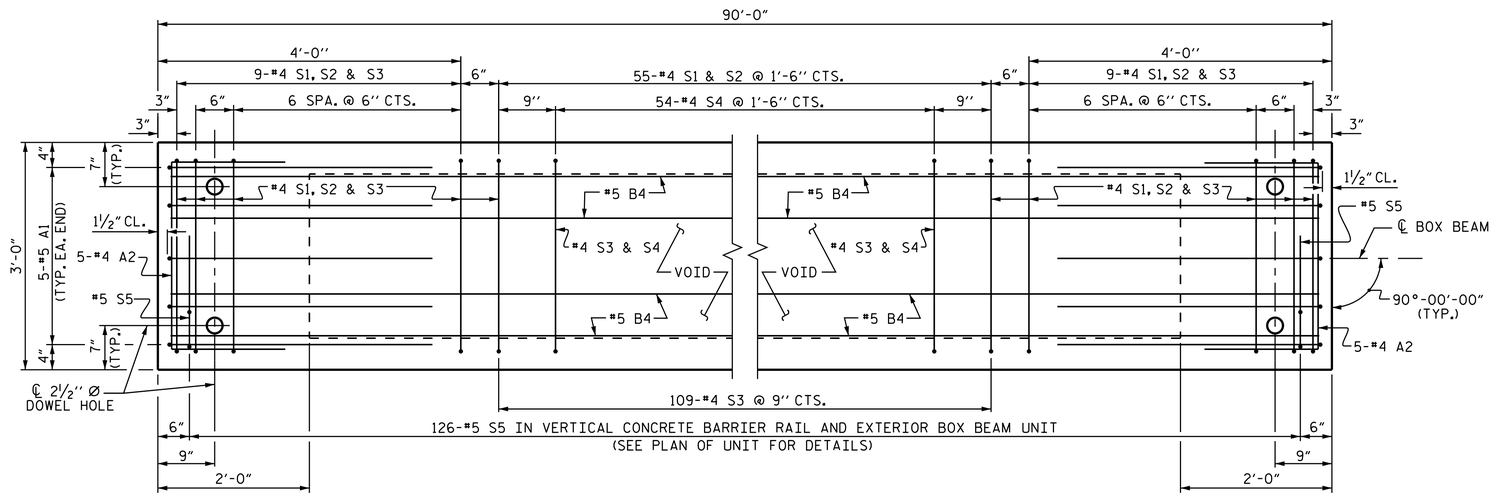

PLAN OF BOX BEAM

EXTERIOR UNIT SHOWN, INTERIOR UNIT SIMILAR EXCEPT OMIT #5 S5 BARS.
FOR LOCATION OF DIAPHRAGMS, SEE "PLAN OF UNIT".
FOR THREADED INSERTS, SEE "THREADED INSERT DETAIL".
FOR REINFORCING STEEL IN DIAPHRAGMS, SEE "DOUBLE DIAPHRAGM DETAILS".

ASSEMBLED BY :	RTJ	DATE :	8/17
CHECKED BY :	RAR	DATE :	8/17
DESIGN ENGINEER OF RECORD :	RAR	DATE :	8/17
DRAWN BY :	DGE 10/11	REV. 9/14	MAA/TMG
CHECKED BY :	TMG 11/11		

PROJECT NO. 17BP.12.R.90
CLEVELAND COUNTY
STATION: 14+09.00-L-

SHEET 4 OF 5

NORTH CAROLINA PROFESSIONAL SEAL 014556 ENGINEER ROBERT ALLEN RAYNOR JR

DocuSigned by: Robert Allen Raynor, Jr. 2/23/2018
2C82A5257FA543C...

DOCUMENT NOT CONSIDERED FINAL UNLESS ALL SIGNATURES COMPLETED

TGS ENGINEERS
804-C N. LAFAYETTE ST
SHELBY, NC 28150
PH (704) 476-0003
CORP. LICENSE NO.: C-0275

STATE OF NORTH CAROLINA
DEPARTMENT OF TRANSPORTATION
RALEIGH
STANDARD

3'-0" X 2'-9" PRESTRESSED CONCRETE BOX BEAM UNIT

REVISIONS						SHEET NO.
NO.	BY:	DATE:	NO.	BY:	DATE:	S-9
1			3			TOTAL SHEETS
2			4			18

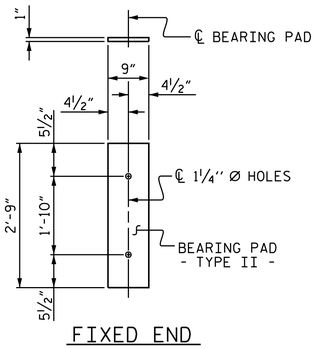

FIXED END

(TYPE II - 20 REQ'D)

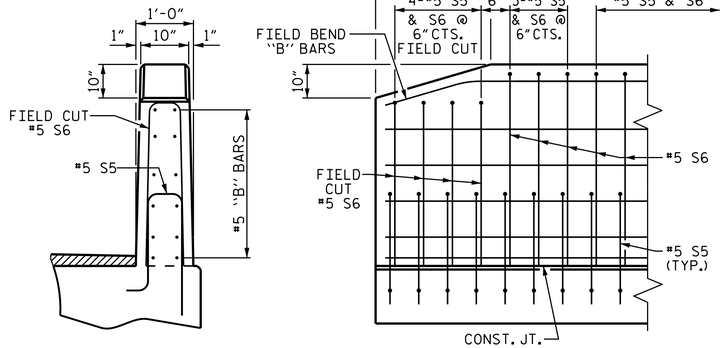

END VIEW SIDE VIEW

ELASTOMERIC BEARING DETAILS

ELASTOMER IN ALL BEARINGS SHALL BE 60 DUROMETER HARDNESS.

END OF RAIL DETAILS

BOX BEAM UNITS REQUIRED			
	NUMBER	LENGTH	TOTAL LENGTH
EXTERIOR B.B.	2	90'-0"	180'-0"
INTERIOR B.B.	8	90'-0"	720'-0"
TOTAL	10	———	900'-0"

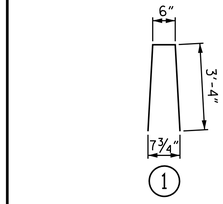

BAR TYPE

BAR DIMENSIONS ARE OUT TO OUT

GUTTERLINE ASPHALT THICKNESS & RAIL HEIGHT		
	ASPHALT OVERLAY THICKNESS @ MID-SPAN	RAIL HEIGHT @ MID-SPAN
90' UNITS	1½"	3'-7½"

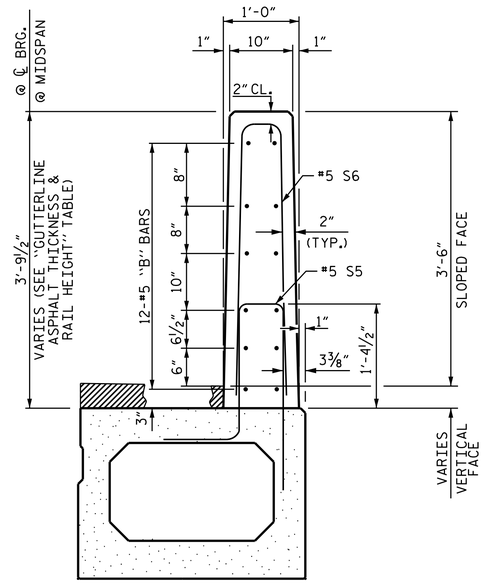

SECTION THRU RAIL

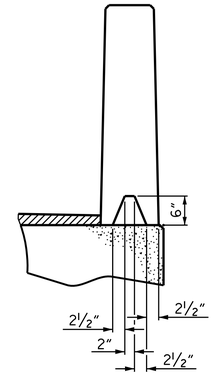

SECTION S-S

AT DAM IN OPEN JOINT
(THIS IS TO BE USED ONLY WHEN SLIP FORM IS USED)

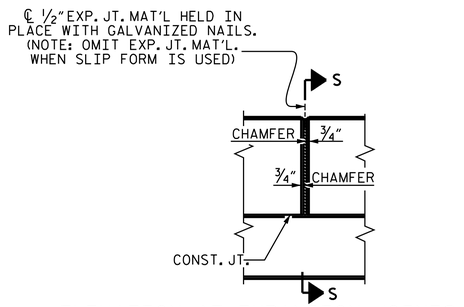

ELEVATION AT EXPANSION JOINTS

VERTICAL CONCRETE BARRIER RAIL DETAILS

BILL OF MATERIAL FOR VERTICAL CONCRETE BARRIER RAIL					
BAR	BARS PER PAIR OF EXTERIOR UNITS 90' UNIT	SIZE	TYPE	LENGTH	WEIGHT
✱B10	96	#5	STR	22'-1"	2211
✱ S6	252	#5	1	7'-2"	1884
✱EPOXY COATED REINFORCING STEEL			LBS.		4095
CLASS AA CONCRETE			CU.YDS.		23.3
TOTAL VERTICAL CONCRETE BARRIER RAIL			LN. FT.		180.0

PROJECT NO. 17BP.12.R.90

CLEVELAND COUNTY

STATION: 14+09.00-L-

SHEET 5 OF 5

ASSEMBLED BY :	RTJ	DATE :	8/17
CHECKED BY :	RAR	DATE :	8/17
DESIGN ENGINEER OF RECORD :	RAR	DATE :	8/17
DRAWN BY : DGE 10/11	REV. 4/15		MAA/TMG
CHECKED BY : TMG 11/11			

NORTH CAROLINA PROFESSIONAL SEAL 014556 ENGINEER ROBERT ALLEN RAYNOR JR

DocuSigned by: Robert Allen Raynor, Jr. 2/23/2018

DOCUMENT NOT CONSIDERED FINAL UNLESS ALL SIGNATURES COMPLETED

TGS ENGINEERS
804-C N. LAFAYETTE ST
SHELBY, NC 28150
PH (704) 476-0003
CORP. LICENSE NO.: C-0275

STATE OF NORTH CAROLINA
DEPARTMENT OF TRANSPORTATION
RALEIGH
STANDARD

3'-0" X 2'-9" PRESTRESSED CONCRETE BOX BEAM UNIT

REVISIONS						SHEET NO.
NO.	BY:	DATE:	NO.	BY:	DATE:	S-10
1			3			TOTAL SHEETS
2			4			18

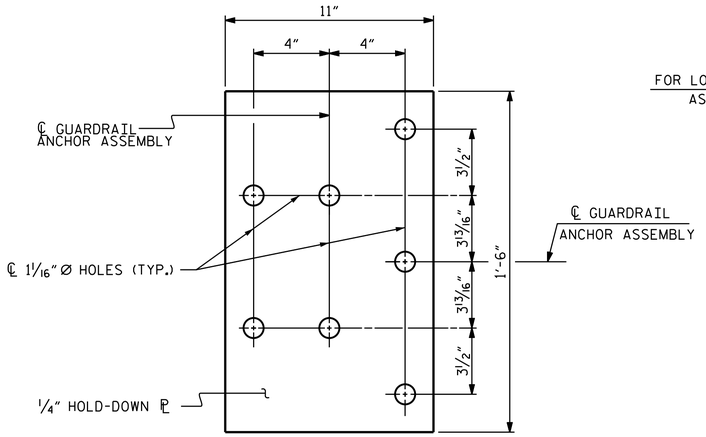

PLAN

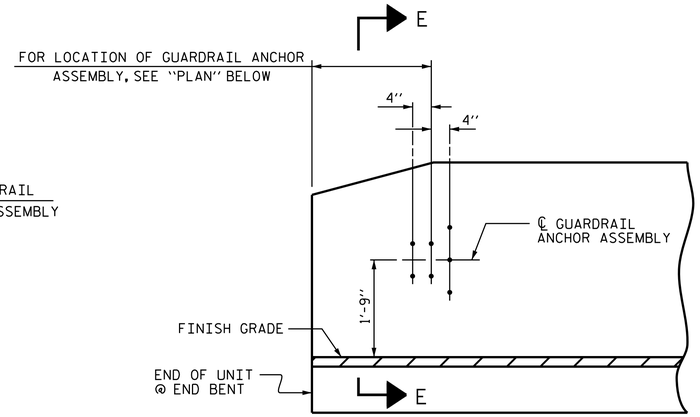

ELEVATION

NOTES

THE GUARDRAIL ANCHOR ASSEMBLY SHALL CONSIST OF A 1/4" HOLD DOWN PLATE AND 7 - 7/8" Ø BOLTS WITH NUTS AND WASHERS.

THE HOLD-DOWN PLATE SHALL CONFORM TO AASHTO M270 GRADE 36. AFTER FABRICATION, THE HOLD-DOWN PLATE SHALL BE HOT-DIP GALVANIZED IN ACCORDANCE WITH AASHTO M111.

BOLTS SHALL CONFORM TO THE REQUIREMENTS OF ASTM A307 AND NUTS SHALL CONFORM TO THE REQUIREMENTS OF AASHTO M291. BOLTS, NUTS AND WASHERS SHALL BE GALVANIZED. (AT THE CONTRACTOR'S OPTION, STAINLESS STEEL BOLTS, NUTS AND WASHERS MAY BE USED AS AN ALTERNATE FOR THE 7/8" Ø GALVANIZED BOLTS, NUTS AND WASHERS. THEY SHALL CONFORM TO OR EXCEED THE MECHANICAL REQUIREMENTS OF ASTM A307. THE USE OF THIS ALTERNATE SHALL BE APPROVED BY THE ENGINEER.)

THE GUARDRAIL ANCHOR ASSEMBLY IS REQUIRED AT ALL POINTS WHERE APPROACH GUARDRAIL IS TO BE ATTACHED TO THE END OF BARRIER RAIL. FOR POINTS OF ATTACHMENT, SEE SKETCH.

AFTER INSTALLATION, THE EXPOSED THREAD OF THE BOLT SHALL BE BURRED WITH A SHARP POINTED TOOL.

THE COST OF THE GUARDRAIL ANCHOR ASSEMBLY SHALL BE INCLUDED IN THE UNIT CONTRACT PRICE BID FOR VERTICAL CONCRETE BARRIER RAIL.

THE VERTICAL REINFORCING BARS MAY BE SHIFTED SLIGHTLY IN THE VERTICAL CONCRETE BARRIER RAIL TO CLEAR ASSEMBLY BOLTS.

THE 1 1/4" Ø HOLES SHALL BE FORMED OR DRILLED WITH A CORE BIT. IMPACT TOOLS WILL NOT BE PERMITTED. ANY CONCRETE DAMAGED BY THIS WORK SHALL BE REPAIRED TO THE SATISFACTION OF THE ENGINEER.

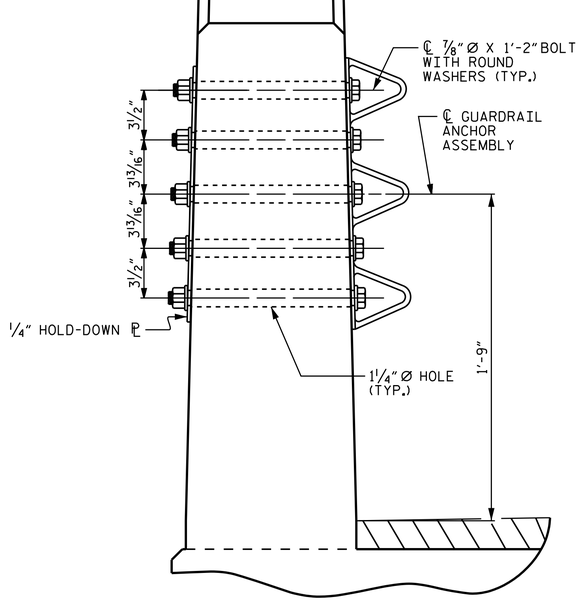

SECTION E-E

GUARDRAIL ANCHOR ASSEMBLY DETAILS

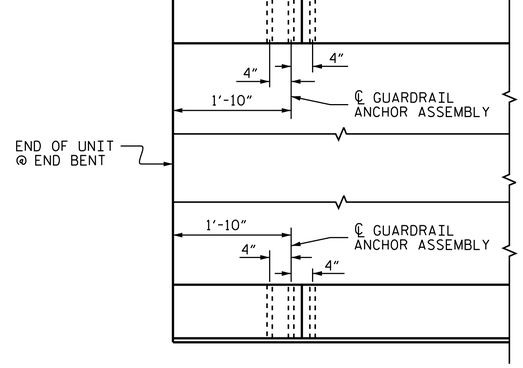

PLAN

LOCATION OF ANCHORS FOR GUARDRAIL

END BENT #1 SHOWN, END BENT #2 SIMILAR.



SKETCH SHOWING POINTS OF ATTACHMENT

✳ DENOTES GUARDRAIL ANCHOR ASSEMBLY

PROJECT NO. 17BP.12.R.90

CLEVELAND COUNTY

STATION: 14+09.00-L-

ASSEMBLED BY :	JLA	DATE :	6/17
CHECKED BY :	RAR	DATE :	8/17
DESIGN ENGINEER OF RECORD :	RAR	DATE :	8/17
DRAWN BY : MAA	5/10	REV. 12/5/11	MAA/GM
CHECKED BY : GM	5/10	REV. 6/13	MAA/GM
		REV. 1/15	MAA/TMG

NORTH CAROLINA PROFESSIONAL SEAL 014556 ENGINEER ROBERT ALLEN RAYNOR JR.

DocuSigned by: Robert Allen Raynor, Jr. 2C82A5257FA543C... 2/23/2018

DOCUMENT NOT CONSIDERED FINAL UNLESS ALL SIGNATURES COMPLETED

TGS ENGINEERS
804-C N. LAFAYETTE ST
SHELBY, NC 28150
PH (704) 476-0003
CORP. LICENSE NO.: C-0275

STATE OF NORTH CAROLINA
DEPARTMENT OF TRANSPORTATION
RALEIGH

STANDARD
GUARDRAIL ANCHORAGE DETAILS FOR VERTICAL CONCRETE BARRIER RAIL

REVISIONS						SHEET NO.
NO.	BY:	DATE:	NO.	BY:	DATE:	S-11
1			3			TOTAL SHEETS
2			4			18

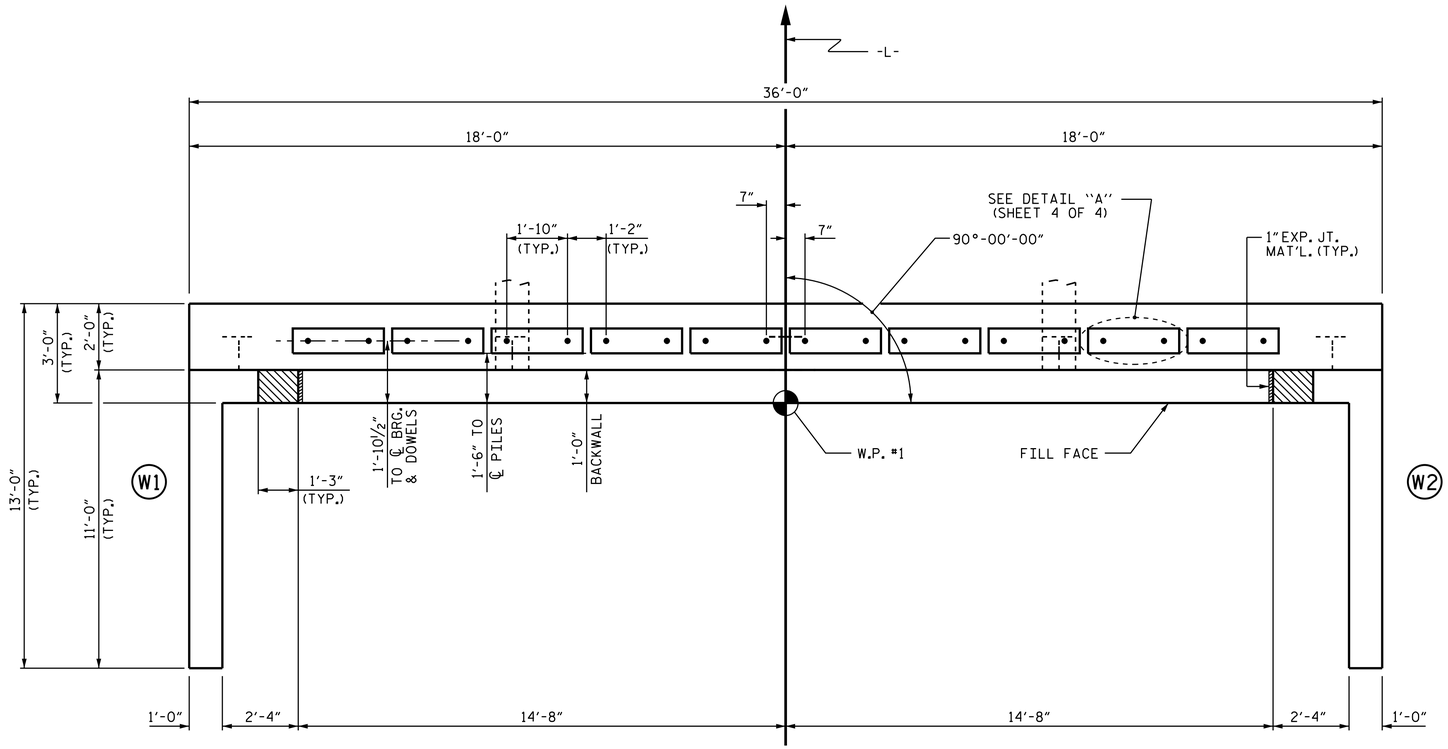

PLAN

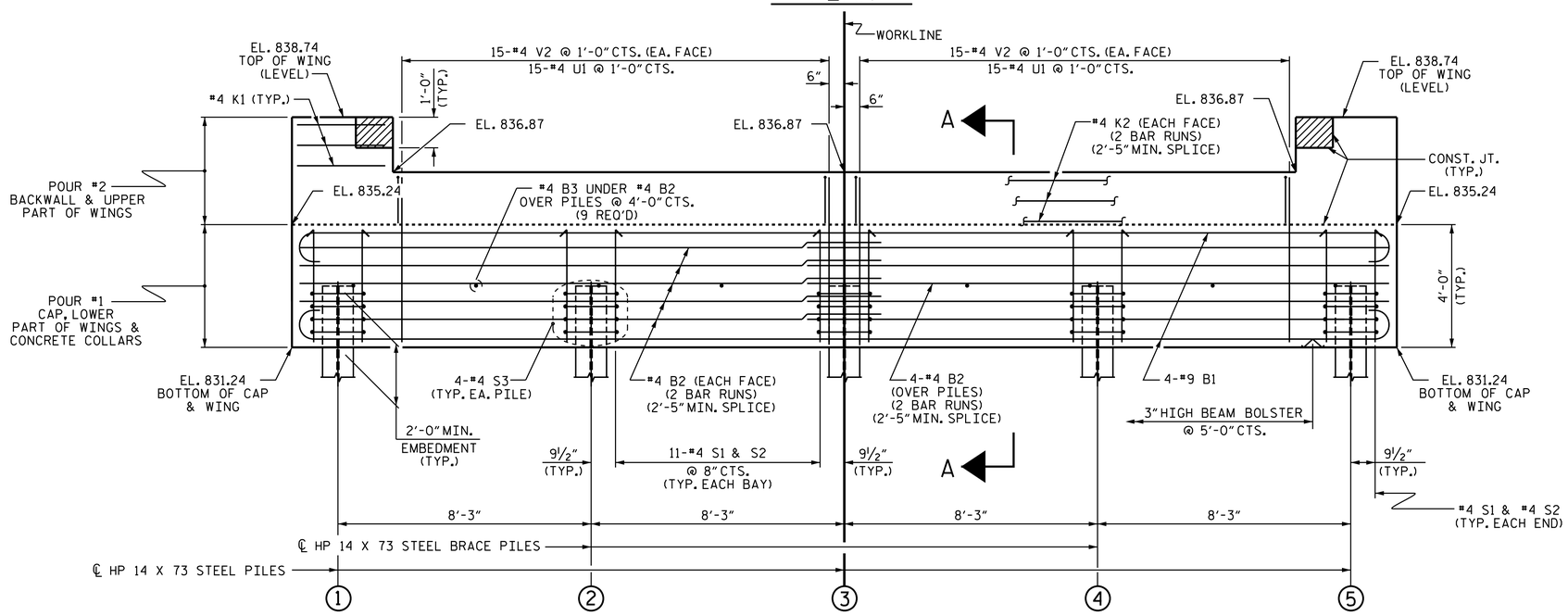

ELEVATION

WINGS NOT SHOWN FOR CLARITY.
FOR SECTION A-A, SEE SHEET 4 OF 4.
CONCRETE COLLARS FOR STEEL PILES NOT SHOWN IN PLAN AND ELEVATION VIEWS FOR CLARITY.
SEE "CORROSION PROTECTION FOR STEEL PILES DETAIL", SHEET 4 OF 4.

NOTES

STIRRUPS IN CAP MAY BE SHIFTED AS NECESSARY TO CLEAR DOWELS.

THE CONCRETE IN THE SHADED AREA OF THE WING SHALL BE POURED AFTER THE VERTICAL CONCRETE BARRIER RAIL IS CAST IF SLIP FORMING IS USED.

FOR PILE SPLICE DETAILS, SEE SHEET 4 OF 4.

FOR WING DETAILS, SEE SHEET 3 OF 4.

PROJECT NO. 17BP.12.R.90

CLEVELAND COUNTY

STATION: 14+09.00-L-

SHEET 1 OF 4

ASSEMBLED BY :	JLA	DATE :	6/17
CHECKED BY :	RAR	DATE :	8/17
DESIGN ENGINEER OF RECORD :	RAR	DATE :	8/17
DRAWN BY : WJH	12/11	REV. 4/15	MAA/TMG
CHECKED BY : AAC	12/11		

NORTH CAROLINA PROFESSIONAL SEAL 014556 ENGINEER ROBERT ALLEN RAYNOR JR

DocuSigned by: Robert Allen Raynor, Jr. 2C82A8257FA543C...

2/23/2018

DOCUMENT NOT CONSIDERED FINAL UNLESS ALL SIGNATURES COMPLETED

TGS ENGINEERS
804-C N. LAFAYETTE ST
SHELBY, NC 28150
PH (704) 476-0003
CORP. LICENSE NO.: C-0275

STATE OF NORTH CAROLINA
DEPARTMENT OF TRANSPORTATION
RALEIGH

SUBSTRUCTURE

END BENT No. 1

REVISIONS						SHEET NO.
NO.	BY:	DATE:	NO.	BY:	DATE:	S-12
1			3			TOTAL SHEETS
2			4			18

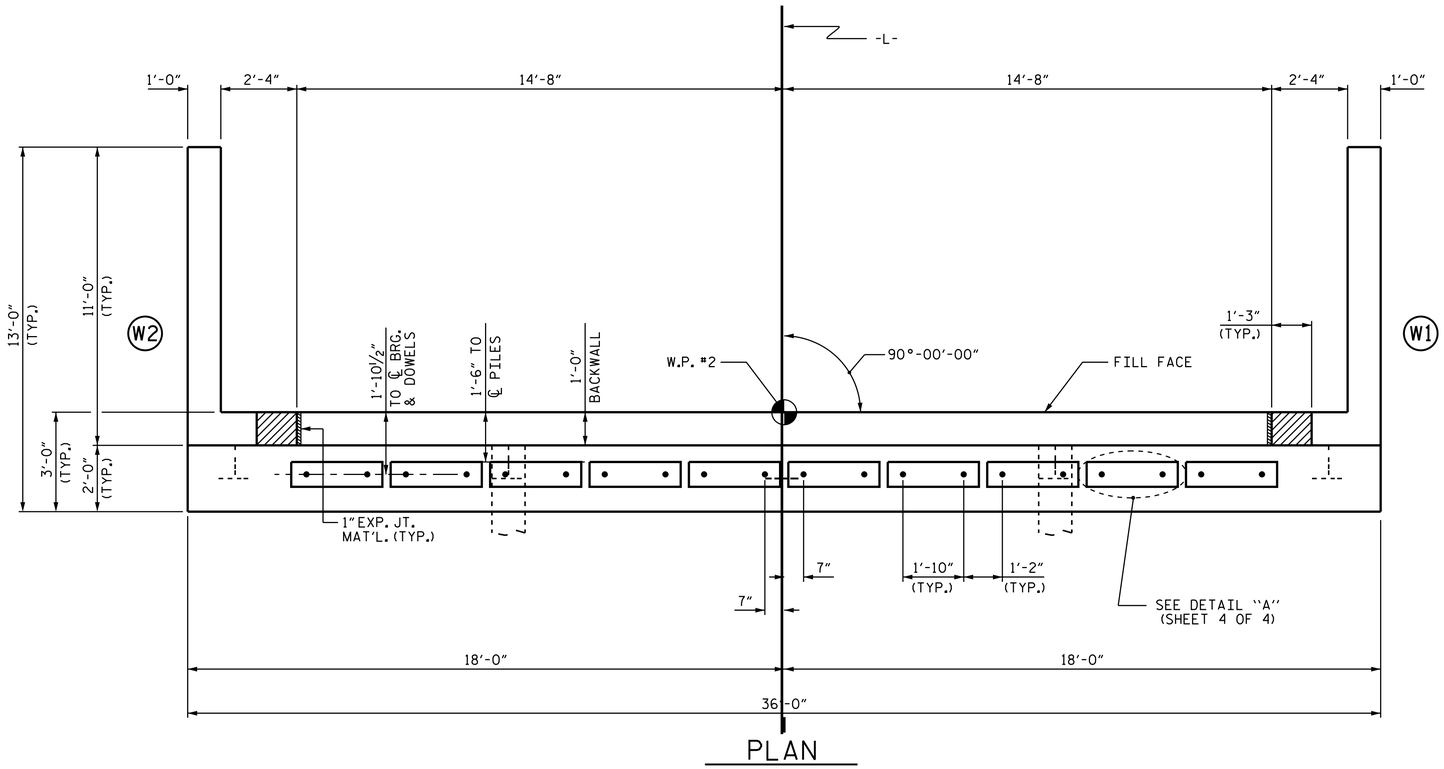

PLAN

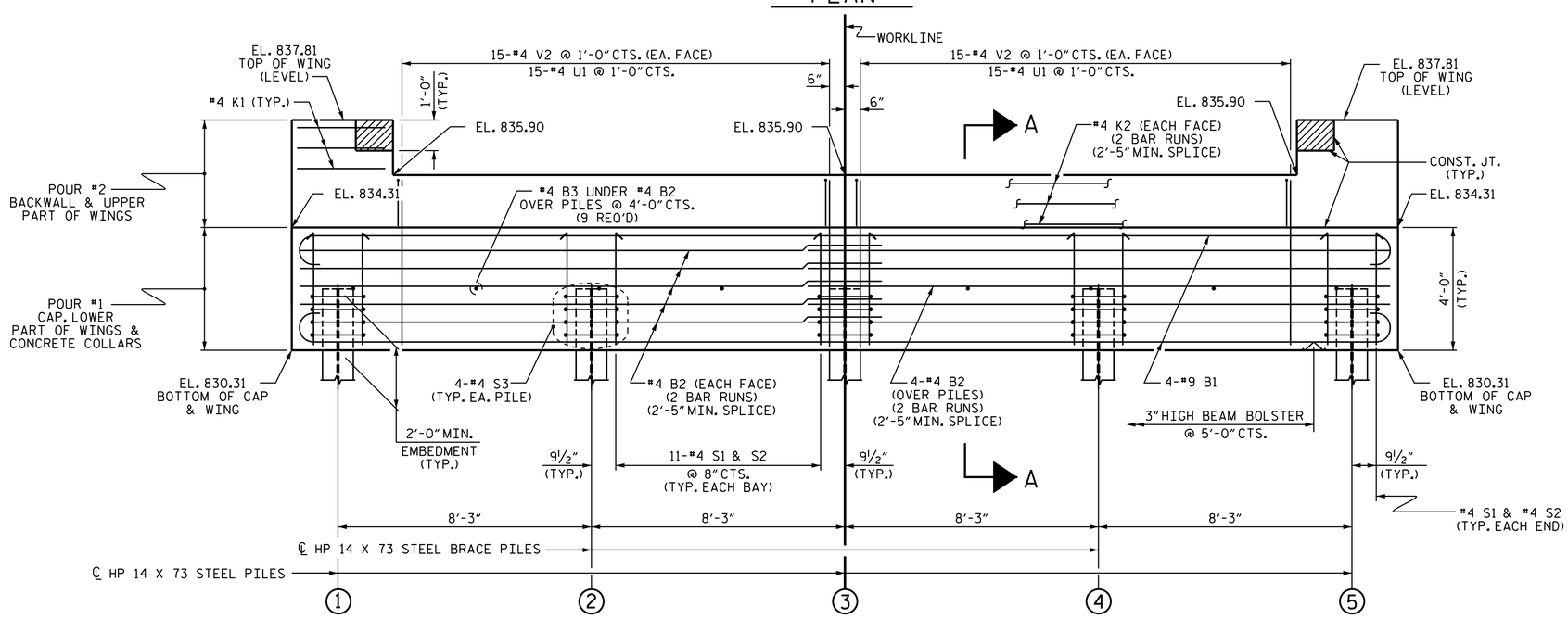

ELEVATION

WINGS NOT SHOWN FOR CLARITY.
FOR SECTION A-A, SEE SHEET 4 OF 4.
CONCRETE COLLARS FOR STEEL PILES NOT SHOWN IN PLAN AND ELEVATION VIEWS FOR CLARITY.
SEE "CORROSION PROTECTION FOR STEEL PILES DETAIL", SHEET 4 OF 4.

NOTES

STIRRUPS IN CAP MAY BE SHIFTED AS NECESSARY TO CLEAR DOWELS.

THE CONCRETE IN THE SHADED AREA OF THE WING SHALL BE POURED AFTER THE VERTICAL CONCRETE BARRIER RAIL IS CAST IF SLIP FORMING IS USED.

FOR PILE SPLICE DETAILS, SEE SHEET 4 OF 4.

FOR WING DETAILS, SEE SHEET 3 OF 4.

ASSEMBLED BY :	JLA	DATE :	6/17
CHECKED BY :	RAR	DATE :	8/17
DESIGN ENGINEER OF RECORD :	RAR	DATE :	8/17
DRAWN BY : WJH	12/11	REV. 4/15	MAA/TMG
CHECKED BY : AAC	12/11		

PROJECT NO. 17BP.12.R.90
CLEVELAND COUNTY
STATION: 14+09.00-L-

SHEET 2 OF 4

NORTH CAROLINA PROFESSIONAL SEAL 014556 ENGINEER ROBERT ALLEN RAYNOR JR

DocuSigned by: Robert Allen Raynor, Jr. 2C82A5257FA643C...

2/23/2018

DOCUMENT NOT CONSIDERED FINAL UNLESS ALL SIGNATURES COMPLETED

TGS ENGINEERS
804-C N. LAFAYETTE ST
SHELBY, NC 28150
PH (704) 476-0003
CORP. LICENSE NO.: C-0275

STATE OF NORTH CAROLINA
DEPARTMENT OF TRANSPORTATION
RALEIGH

SUBSTRUCTURE

END BENT No. 2

REVISIONS						SHEET NO.
NO.	BY:	DATE:	NO.	BY:	DATE:	S-13
1			3			TOTAL SHEETS
2			4			18

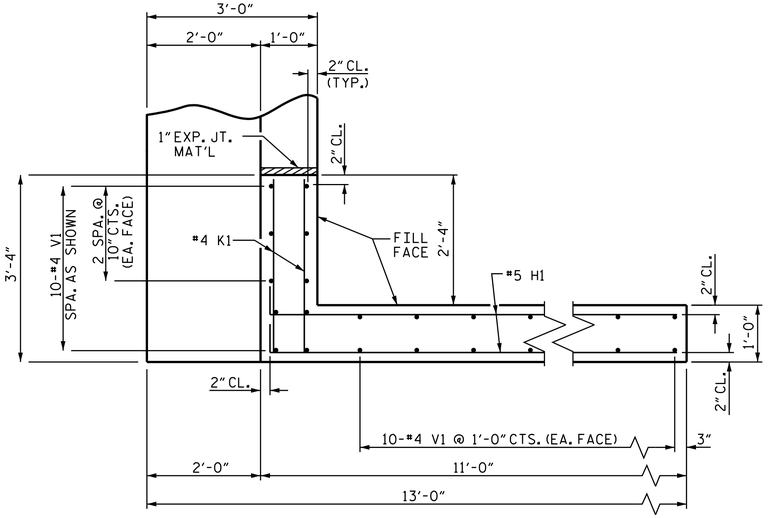

PLAN OF WING (W1)

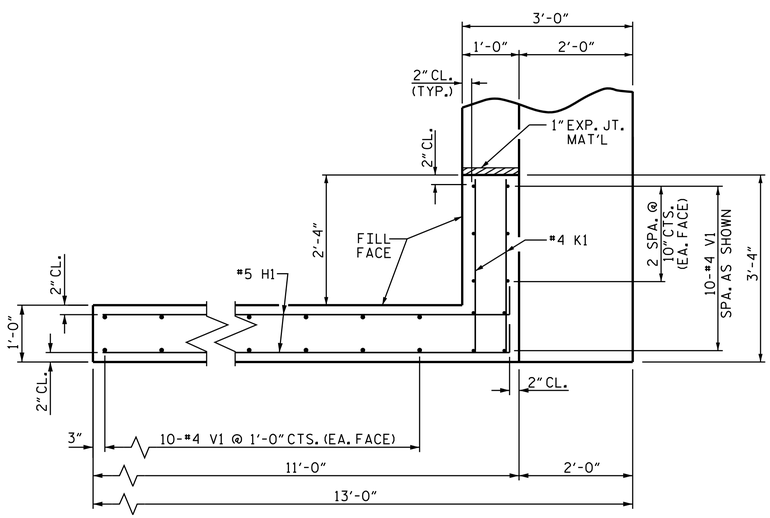

PLAN OF WING (W2)

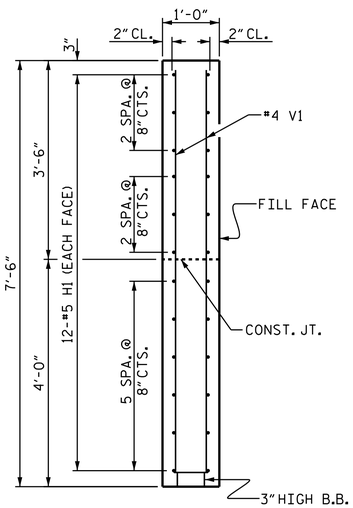

SECTION X-X

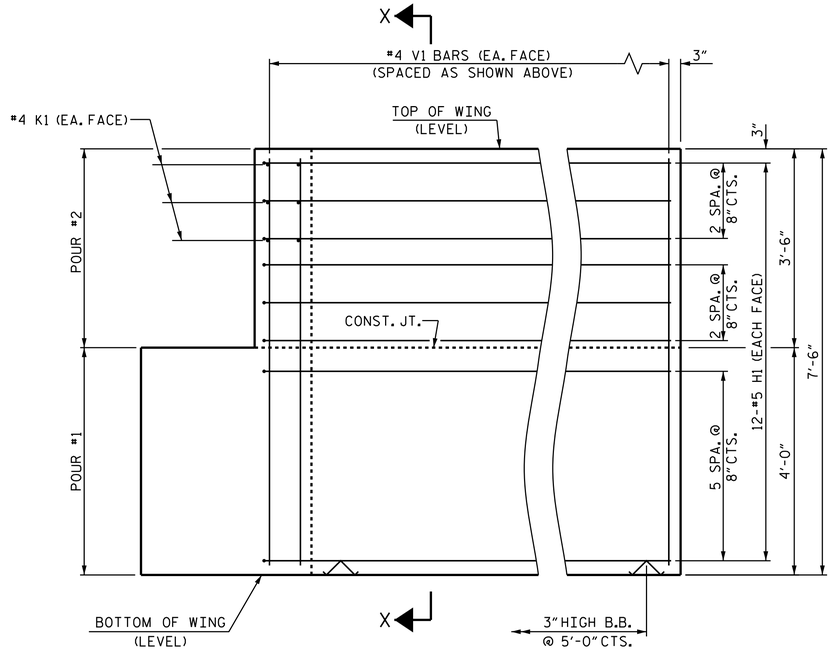

ELEVATION OF WING (W1)

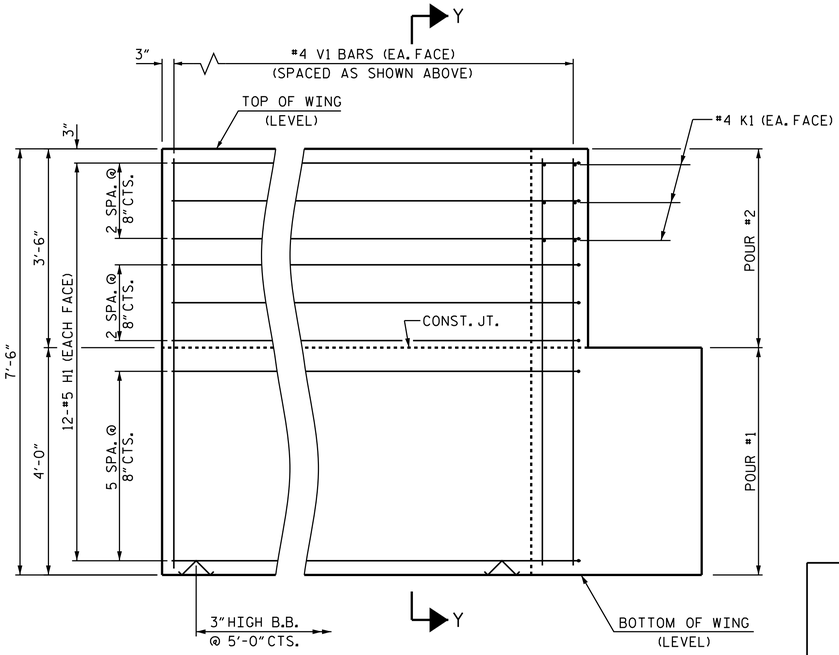

ELEVATION OF WING (W2)

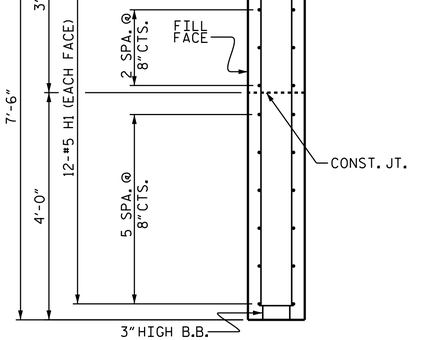

SECTION Y-Y

WING DETAILS

ASSEMBLED BY :	JLA	DATE :	6/17
CHECKED BY :	RAR	DATE :	8/17
DESIGN ENGINEER OF RECORD :	RAR	DATE :	8/17
DRAWN BY : WJH	12/11	REV. 4/15	MAA/TMG
CHECKED BY : AAC	12/11		

PROJECT NO. 17BP.12.R.90

CLEVELAND COUNTY

STATION: 14+09.00-L-

SHEET 3 OF 4

NORTH CAROLINA PROFESSIONAL SEAL 014556 ENGINEER ROBERT ALLEN RAYNOR JR.

DocuSigned by: Robert Allen Raynor, Jr. 2/23/2018

DOCUMENT NOT CONSIDERED FINAL UNLESS ALL SIGNATURES COMPLETED

TGS ENGINEERS
804-C N. LAFAYETTE ST
SHELBY, NC 28150
PH (704) 476-0003
CORP. LICENSE NO.: C-0275

STATE OF NORTH CAROLINA
DEPARTMENT OF TRANSPORTATION
RALEIGH

SUBSTRUCTURE

END BENT
WING DETAILS

REVISIONS						SHEET NO.
NO.	BY:	DATE:	NO.	BY:	DATE:	S-14
1			3			TOTAL SHEETS
2			4			18

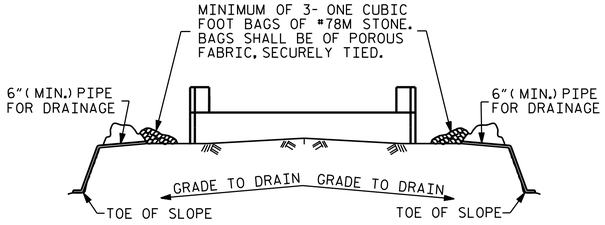

BAGGED STONE AND PIPE SHALL BE PLACED IMMEDIATELY AFTER COMPLETION OF END BENT EXCAVATION. PIPE MAY BE EITHER CONCRETE, CORRUGATED STEEL, CORRUGATED ALUMINUM ALLOY, OR CORRUGATED PLASTIC. PERFORATED PIPE WILL NOT BE ALLOWED.

BAGGED STONE SHALL REMAIN IN PLACE UNTIL THE ENGINEER DIRECTS THAT IT BE REMOVED. THE CONTRACTOR SHALL REMOVE AND DISPOSE OF SILT ACCUMULATIONS AT BAGGED STONE WHEN SO DIRECTED BY THE ENGINEER. BAGS SHALL BE REMOVED AND REPLACED WHENEVER THE ENGINEER DETERMINES THAT THEY HAVE DETERIORATED AND LOST THEIR EFFECTIVENESS.

NO SEPARATE PAYMENT WILL BE MADE FOR THIS WORK AND THE ENTIRE COST OF THIS WORK SHALL BE INCLUDED IN THE UNIT CONTRACT PRICE BID FOR THE SEVERAL PAY ITEMS.

TEMPORARY DRAINAGE AT END BENT

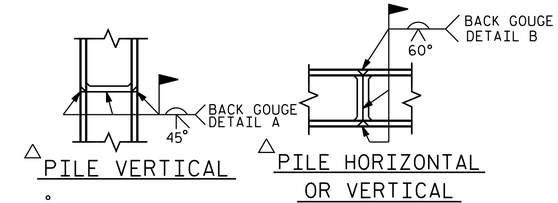

△ POSITION OF PILE DURING WELDING.

PILE SPLICE DETAILS

BAR TYPES

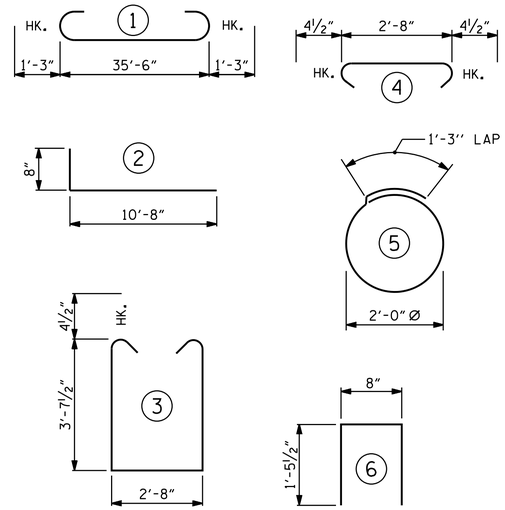

ALL BAR DIMENSIONS ARE OUT TO OUT.

END BENT No. 1	END BENT No. 2
HP 14 X 73 STEEL PILES	HP 14 X 73 STEEL PILES
NO: 5 LIN. FT.= 280	NO: 5 LIN. FT.= 165
PILE DRIVING EQUIPMENT SETUP FOR HP14x73 STEEL PILES 5 EACH	PILE DRIVING EQUIPMENT SETUP FOR HP14x73 STEEL PILES 5 EACH

BILL OF MATERIAL
FOR ONE END BENT

BAR	NO.	SIZE	TYPE	LENGTH	WEIGHT
B1	8	#9	1	38'-0"	1034
B2	28	#4	STR	19'-1"	357
B3	9	#4	STR	2'-8"	16
D1	20	#8	STR	2'-3"	120
H1	48	#5	2	11'-4"	567
K1	12	#4	STR	2'-11"	23
K2	12	#4	STR	19'-1"	153
S1	46	#4	3	10'-8"	328
S2	46	#4	4	3'-5"	105
S3	20	#4	5	7'-7"	101
U1	30	#4	6	3'-7"	72
V1	60	#4	STR	7'-2"	287
V2	60	#4	STR	5'-3"	210

REINFORCING STEEL (FOR ONE END BENT) 3373 LBS.

CLASS A CONCRETE BREAKDOWN (FOR ONE END BENT)

POUR #1 CAP, LOWER PART OF WINGS & COLLARS 20.3 C.Y.

POUR #2 BACKWALL & UPPER PART OF WINGS 5.4 C.Y.

TOTAL CLASS A CONCRETE 25.7 C.Y.

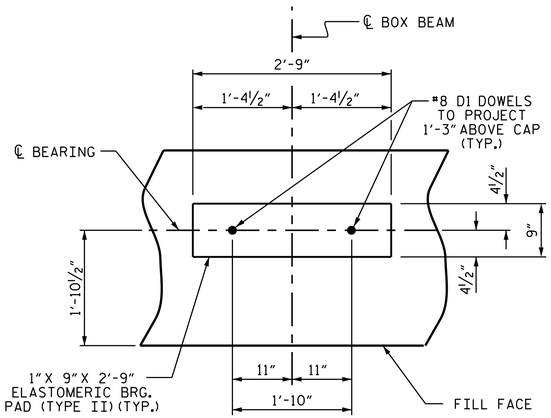

DETAIL "A"

(END BENT No. 1 SHOWN, END BENT No. 2 SIMILAR BY ROTATION)

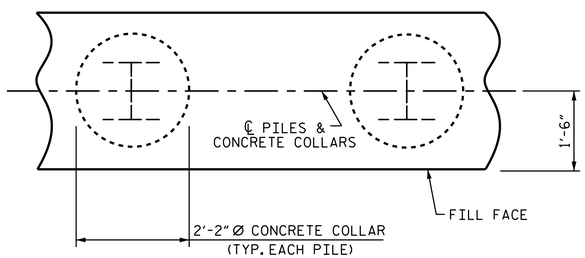

PLAN

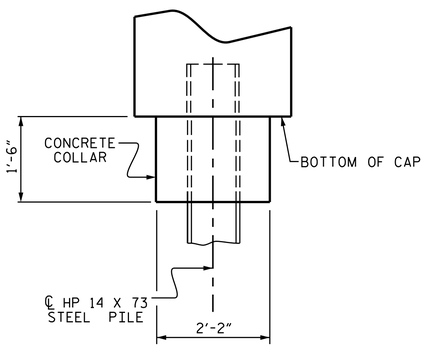

ELEVATION

CORROSION PROTECTION FOR STEEL PILES DETAIL

(END BENT No. 1 SHOWN, END BENT No. 2 SIMILAR BY ROTATION)

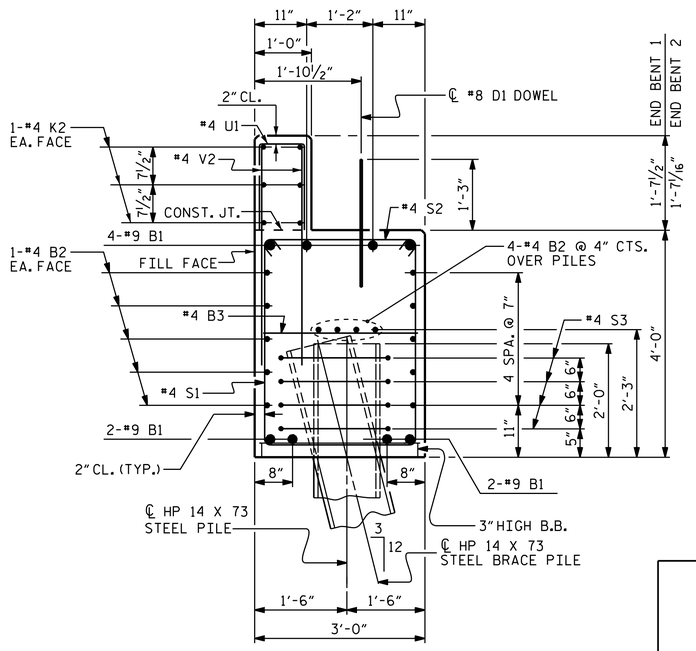

SECTION A-A

(CONCRETE COLLAR NOT SHOWN FOR CLARITY. SEE "CORROSION PROTECTION FOR STEEL PILES DETAIL.")

PROJECT NO. 17BP.12.R.90

CLEVELAND COUNTY

STATION: 14+09.00-L-

SHEET 4 OF 4

NORTH CAROLINA PROFESSIONAL SEAL 014556 ENGINEER ROBERT ALLEN RAYNOR JR

DocuSigned by: Robert Allen Raynor, Jr. 2/23/2018

DOCUMENT NOT CONSIDERED FINAL UNLESS ALL SIGNATURES COMPLETED

TGS ENGINEERS
804-C N. LAFAYETTE ST
SHELBY, NC 28150
PH (704) 476-0003
CORP. LICENSE NO.: C-0275

STATE OF NORTH CAROLINA
DEPARTMENT OF TRANSPORTATION
RALEIGH

SUBSTRUCTURE

END BENT No. 1 & 2 DETAILS

REVISIONS						SHEET NO.
NO.	BY:	DATE:	NO.	BY:	DATE:	S-15
1			3			TOTAL SHEETS
2			4			18

ASSEMBLED BY :	JLA	DATE :	6/17
CHECKED BY :	RAR	DATE :	8/17
DESIGN ENGINEER OF RECORD :	RAR	DATE :	8/17
DRAWN BY : WJH	12/11	REV. 4/15	MAA/TMG
CHECKED BY : AAC	12/11		

NOTES :

FOR BERM WIDTH DIMENSIONS, SEE GENERAL DRAWING.

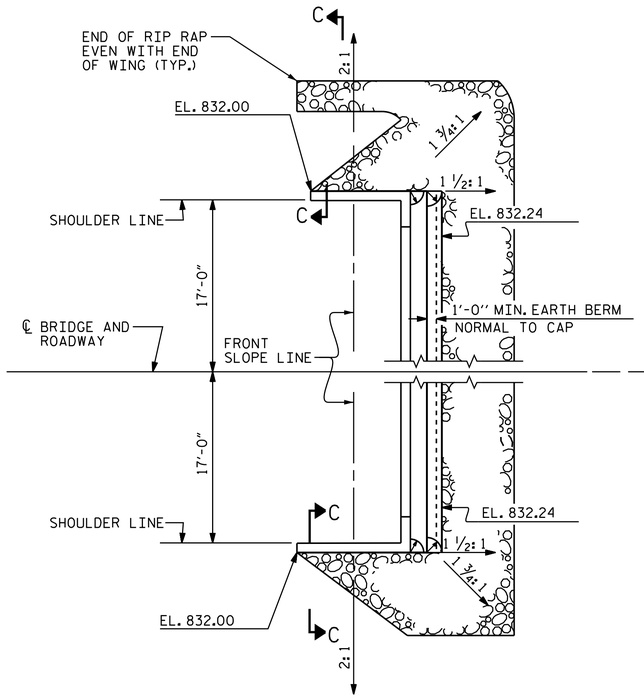

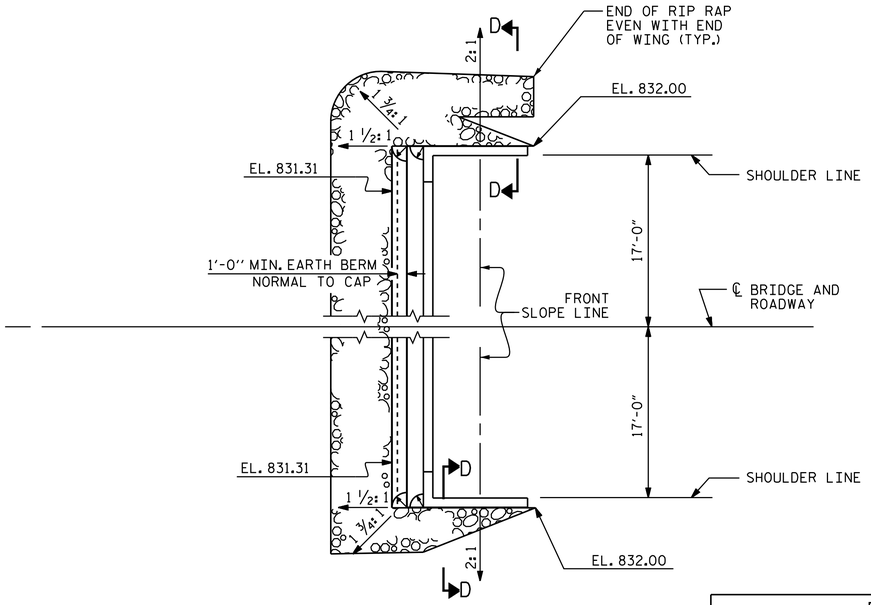

BERM RIP RAPPED - END BENT 1

BERM RIP RAPPED - END BENT 2

ESTIMATED QUANTITIES		
BRIDGE @ STA. 14+09.00-L-	RIP RAP CLASS II (2'-0" THICK)	GEOTEXTILE FOR DRAINAGE
	TONS	SQUARE YARDS
END BENT 1	75	83
END BENT 2	55	61

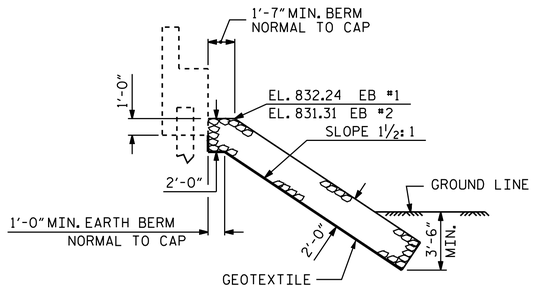

℄ SECTION

BERM RIP RAPPED

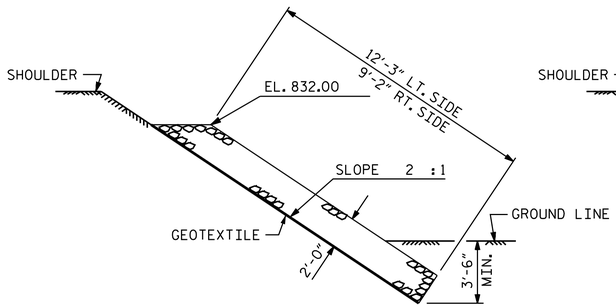

SECTION C-C

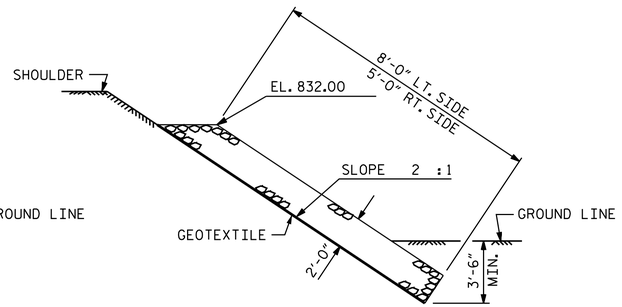

SECTION D-D

PROJECT NO. 17BP.12.R.90

CLEVELAND COUNTY

STATION: 14+09.00-L-

NORTH CAROLINA PROFESSIONAL SEAL 014556 ENGINEER ROBERT ALLEN RAYNOR JR

DocuSigned by: Robert Allen Raynor, Jr. 2/23/2018

2C82A5257FA543C

DOCUMENT NOT CONSIDERED FINAL UNLESS ALL SIGNATURES COMPLETED

TGS ENGINEERS
804-C N. LAFAYETTE ST
SHELBY, NC 28150
PH (704) 476-0003
CORP. LICENSE NO.: C-0275

STATE OF NORTH CAROLINA
DEPARTMENT OF TRANSPORTATION
RALEIGH

STANDARD

RIP RAP DETAILS

REVISIONS						SHEET NO.
NO.	BY:	DATE:	NO.	BY:	DATE:	S-16
1			3			TOTAL SHEETS
2			4			18

ASSEMBLED BY :	RTJ	DATE :	6/17
CHECKED BY :	RAR	DATE :	6/17
DESIGN ENGINEER OF RECORD :	RAR	DATE :	8/17
DRAWN BY : REK 1/84	REV. 5/1/06R	TLA/GM	
CHECKED BY : RDU 1/84	REV. 10/1/11	MAA/GM	
	REV. 12/21/11	MAA/GM	

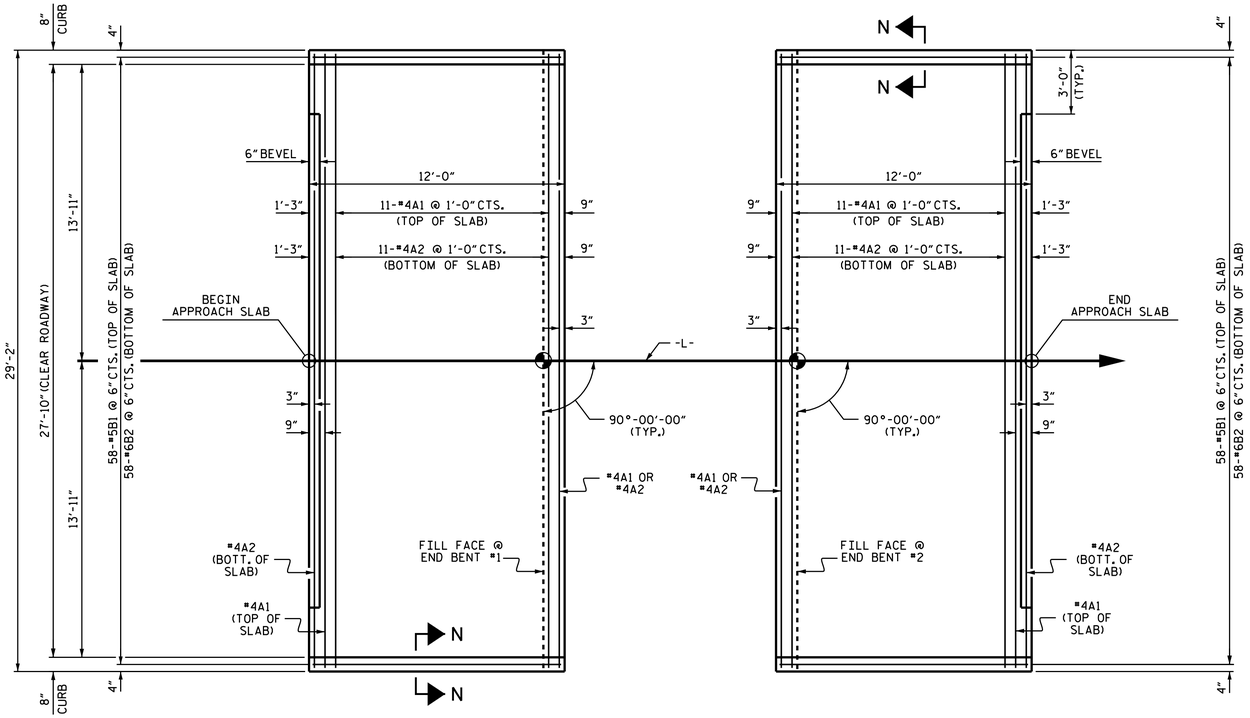

PLAN @ END BENT #1 PLAN @ END BENT #2

DIMENSIONS SHOWN ARE TYPICAL FOR BOTH APPROACH SLABS

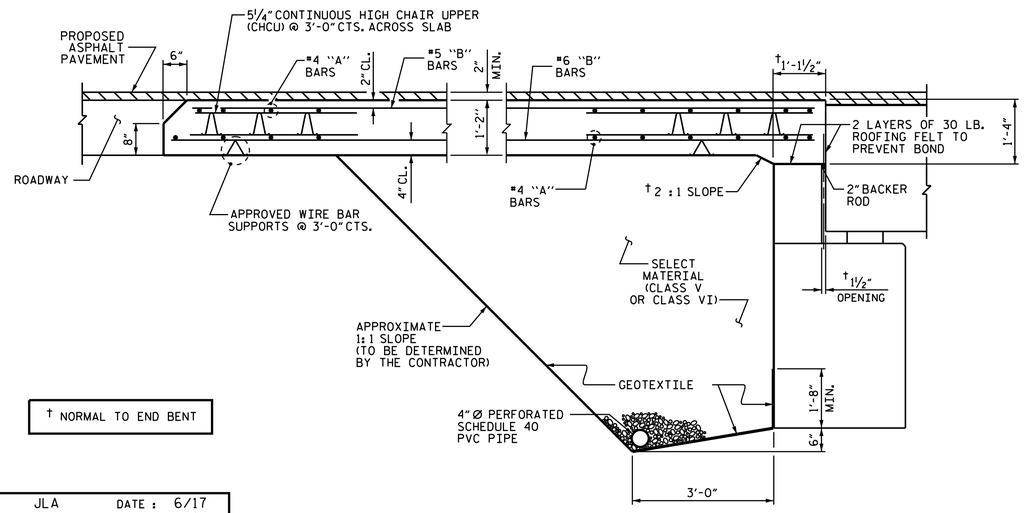

† NORMAL TO END BENT

SECTION THRU SLAB

(TYPE II - MODIFIED APPROACH FILL)

ASSEMBLED BY :	JLA	DATE :	6/17
CHECKED BY :	RAR	DATE :	8/17
DESIGN ENGINEER OF RECORD :	RAR	DATE :	8/17
DRAWN BY : MAA 11/11	REV. 12-17		MAA/THC
CHECKED BY : AAC 11/11			

NOTES

FOR BRIDGE APPROACH FILL INCLUDING GEOTEXTILE, 4" Ø DRAINAGE PIPE, AND SELECT MATERIAL BACKFILL, SEE ROADWAY PLANS.

GEOTEXTILE SHALL BE TYPE 1 IN ACCORDANCE WITH THE STANDARD SPECIFICATIONS SECTION 1056.

SELECT MATERIAL BACKFILL (CLASS V OR CLASS VI) SHALL BE IN ACCORDANCE WITH STANDARD SPECIFICATIONS SECTION 1016.

SELECT MATERIAL BACKFILL IS TO BE CONTINUOUS ALONG FILL FACE OF BACKWALL FROM OUTSIDE EDGE TO OUTSIDE EDGE OF APPROACH SLAB.

AREA BETWEEN THE WINGWALL AND APPROACH SLAB SHALL BE GRADED TO DRAIN THE WATER AWAY FROM THE FILL FACE OF THE BRIDGE AND SHALL BE PAVED. SEE ROADWAY PLANS.

FOR THE 4" Ø DRAINAGE PIPE OUTLET(S), SEE ROADWAY STANDARD DRAWINGS.

APPROACH SLAB GROOVING IS NOT REQUIRED.

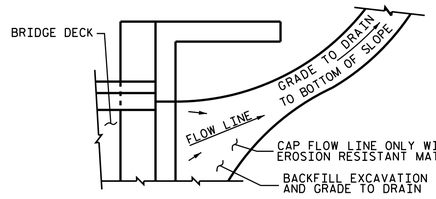

NOTE: IF THE APPROACH SLAB IS NOT CONSTRUCTED IMMEDIATELY AFTER THE BACKFILLING OF THE END BENT EXCAVATION, GRADE TO DRAIN TO THE BOTTOM OF THE SLOPE AND PROVIDE EROSION RESISTANT MATERIAL, SUCH AS FIBERGLASS ROVING OR AS DIRECTED BY THE ENGINEER TO PREVENT SOIL EROSION AND TO PROTECT THE AREA ADJACENT TO THE STRUCTURE. THE CONTRACTOR WILL BE REQUIRED TO REMOVE THESE MATERIALS PRIOR TO CONSTRUCTION OF THE APPROACH SLAB.

TEMPORARY DRAINAGE DETAIL

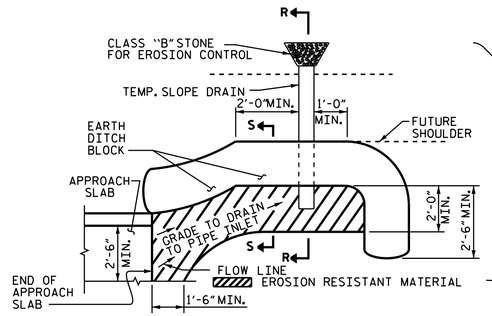

NOTE: IMMEDIATELY AFTER THE CONSTRUCTION OF THE APPROACH SLAB, THE CONTRACTOR SHALL PROVIDE TEMPORARY BERM AND SLOPE DRAIN. CONTRACTOR SHALL GRADE TO PIPE INLET AND PROVIDE EROSION RESISTANT MATERIAL AS SHOWN. THE EROSION RESISTANT MATERIAL SHALL BE EITHER 1) ASPHALT PLANT MIX, TYPE 1 OR TYPE 2, MIN. 2" DEPTH, 2) EROSION CONTROL MAT, OR 3) CONCRETE, AS DIRECTED BY THE ENGINEER. THE SLOPE DRAIN SHALL CONSIST OF A NON-PERFORATED TEMPORARY DRAINAGE PIPE, 12 INCHES IN DIAMETER.

PLAN VIEW

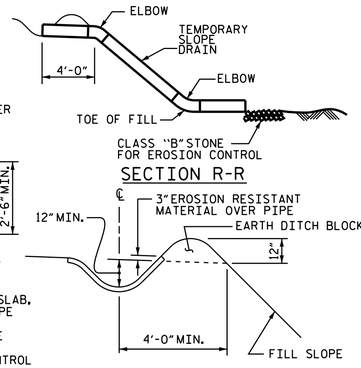

SECTION S-S

TEMPORARY BERM AND SLOPE DRAIN DETAILS

(TO BE USED WHEN SHOULDER BERM GUTTER IS REQUIRED)

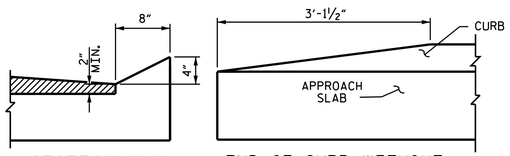

SECTION N-N

END OF CURB WITHOUT SHOULDER BERM GUTTER

CURB DETAILS

SPLICE LENGTHS		
BAR SIZE	EPOXY COATED	UNCOATED
#4	2'-0"	1'-9"
#5	2'-6"	2'-2"
#6	3'-10"	2'-7"

BILL OF MATERIAL					
APPROACH SLAB AT EB #1					
BAR	NO.	SIZE	TYPE	LENGTH	WEIGHT
* A1	13	#4	STR	28'-10"	250
A2	13	#4	STR	28'-10"	250
* B1	58	#5	STR	11'-2"	676
B2	58	#6	STR	11'-8"	1016
REINFORCING STEEL				LBS.	1266
* EPOXY COATED REINFORCING STEEL				LBS.	926
CLASS AA CONCRETE				C.Y.	15.4
APPROACH SLAB AT EB #2					
BAR	NO.	SIZE	TYPE	LENGTH	WEIGHT
* A1	13	#4	STR	28'-10"	250
A2	13	#4	STR	28'-10"	250
* B1	58	#5	STR	11'-2"	676
B2	58	#6	STR	11'-8"	1016
REINFORCING STEEL				LBS.	1266
* EPOXY COATED REINFORCING STEEL				LBS.	926
CLASS AA CONCRETE				C.Y.	15.4

PROJECT NO. 17BP.12.R.90

CLEVELAND COUNTY

STATION: 14+09.00-L-

NORTH CAROLINA PROFESSIONAL SEAL 014556 ENGINEER ROBERT ALLEN RAYNOR JR

DocuSigned by: Robert Allen Raynor, Jr. 2/23/2018 2C82A5257FA543C...

DOCUMENT NOT CONSIDERED FINAL UNLESS ALL SIGNATURES COMPLETED

TGS ENGINEERS
804-C N. LAFAYETTE ST
SHELBY, NC 28150
PH (704) 476-0003
CORP. LICENSE NO.: C-0275

STATE OF NORTH CAROLINA
DEPARTMENT OF TRANSPORTATION
RALEIGH

STANDARD BRIDGE APPROACH SLAB FOR PRESTRESSED CONCRETE BOX BEAM UNIT (SUB-REGIONAL TIER) 90° SKEW

REVISIONS						SHEET NO.
NO.	BY:	DATE:	NO.	BY:	DATE:	S-17
1			3			TOTAL SHEETS
2			4			18

STANDARD NOTES

DESIGN DATA:

SPECIFICATIONS	A.A.S.H.T.O. (CURRENT)
LIVE LOAD	SEE PLANS
IMPACT ALLOWANCE	SEE A.A.S.H.T.O.
STRESS IN EXTREME FIBER OF	
STRUCTURAL STEEL - AASHTO M270 GRADE 36	20,000 LBS. PER SQ. IN.
- AASHTO M270 GRADE 50W	27,000 LBS. PER SQ. IN.
- AASHTO M270 GRADE 50	27,000 LBS. PER SQ. IN.
REINFORCING STEEL IN TENSION	
GRADE 60	24,000 LBS. PER SQ. IN.
CONCRETE IN COMPRESSION	1,200 LBS. PER SQ. IN.
CONCRETE IN SHEAR	SEE A.A.S.H.T.O.
STRUCTURAL TIMBER - TREATED OR	
UNTREATED - EXTREME FIBER STRESS	1,800 LBS. PER SQ. IN.
COMPRESSION PERPENDICULAR TO GRAIN OF TIMBER	375 LBS. PER SQ. IN.
EQUIVALENT FLUID PRESSURE OF EARTH	30 LBS. PER CU. FT. (MINIMUM)

MATERIAL AND WORKMANSHIP:

EXCEPT AS MAY OTHERWISE BE SPECIFIED ON PLANS OR IN THE SPECIAL PROVISIONS, ALL MATERIAL AND WORKMANSHIP SHALL BE IN ACCORDANCE WITH THE 2018 "STANDARD SPECIFICATIONS FOR ROADS AND STRUCTURES" OF THE N. C. DEPARTMENT OF TRANSPORTATION.

STEEL SHEET PILING FOR PERMANENT OR TEMPORARY APPLICATIONS SHALL BE HOT ROLLED.

CONCRETE:

UNLESS OTHERWISE REQUIRED ON PLANS, CLASS A CONCRETE SHALL BE USED FOR ALL PORTIONS OF ALL STRUCTURES WITH THE EXCEPTION THAT: CLASS AA CONCRETE SHALL BE USED IN BRIDGE SUPERSTRUCTURES, ABUTMENT BACKWALLS, AND APPROACH SLABS; AND CLASS B CONCRETE SHALL BE USED FOR SLOPE PROTECTION AND RIP RAP.

CONCRETE CHAMFERS:

UNLESS OTHERWISE NOTED ON THE PLANS, ALL EXPOSED CORNERS ON STRUCTURES SHALL BE CHAMFERED 3/4" WITH THE FOLLOWING EXCEPTIONS: TOP CORNERS OF CURBS MAY BE ROUNDED TO 1-1/2" RADIUS WHICH IS BUILT INTO CURB FORMS; CORNERS OF TRANSVERSE FLOOR EXPANSION JOINTS SHALL BE ROUNDED WITH A 1/4" FINISHING TOOL UNLESS OTHERWISE REQUIRED ON PLANS; AND CORNERS OF EXPANSION JOINTS IN THE ROADWAY FACES AND TOPS OF CURBS AND SIDEWALKS SHALL BE ROUNDED TO A 1/4" RADIUS WITH A FINISHING STONE OR TOOL UNLESS OTHERWISE REQUIRED ON PLANS.

DOWELS:

DOWELS WHEN INDICATED ON PLANS AS FOR CULVERT EXTENSIONS, SHALL BE EMBEDDED AT LEAST 12" INTO THE OLD CONCRETE AND GROUTED INTO PLACE WITH 1:2 CEMENT MORTAR.

ALLOWANCE FOR DEAD LOAD DEFLECTION, SETTLEMENT, ETC. IN CASTING SUPERSTRUCTURES:

BRIDGES SHALL BE BUILT ON THE GRADE OR VERTICAL CURVE SHOWN ON PLANS. SLABS, CURBS AND PARAPETS SHALL CONFORM TO THE GRADE OR CURVE.

ALL DIMENSIONS WHICH ARE GIVEN IN SECTION AND ARE AFFECTED BY DEAD LOAD DEFLECTIONS ARE DIMENSIONS AT CENTER LINE OF BEARING UNLESS OTHERWISE NOTED ON PLANS. IN SETTING FORMS FOR STEEL BEAM BRIDGES AND PRESTRESSED CONCRETE GIRDER BRIDGES, ADJUSTMENTS SHALL BE MADE DUE TO THE DEAD LOAD DEFLECTIONS FOR THE ELEVATIONS SHOWN. WHERE BLOCKS ARE SHOWN OVER BEAMS FOR BUILDING UP TO THE SLAB, THE VERTICAL DIMENSIONS OF THE BLOCKS SHALL BE ADJUSTED BETWEEN BEARINGS TO COMPENSATE FOR DEAD LOAD DEFLECTIONS, VERTICAL CURVE ORDINATE, AND ACTUAL BEAM CAMBER. WHERE BOTTOM OF SLAB IS IN LINE WITH BOTTOM OF TOP FLANGES, DEPTH OF SLAB BETWEEN BEARINGS SHALL BE ADJUSTED TO COMPENSATE FOR DEAD LOAD DEFLECTION, VERTICAL CURVE ORDINATE, AND ACTUAL BEAM CAMBER.

IN SETTING FALSEWORK AND FORMS FOR REINFORCED CONCRETE SPANS, AN ALLOWANCE SHALL BE MADE FOR DEAD LOAD DEFLECTIONS, SETTLEMENT OF FALSEWORK, AND PERMANENT CAMBER WHICH SHALL BE PROVIDED FOR IN ADDITION TO THE ELEVATIONS SHOWN. AFTER REMOVAL OF THE FALSEWORK, THE FINISHED STRUCTURES SHALL CONFORM TO THE PROFILE AND ELEVATIONS SHOWN ON THE PLANS AND CONSTRUCTION ELEVATIONS FURNISHED BY THE ENGINEER.

DETAILED DRAWINGS FOR FALSEWORK OR FORMS FOR BRIDGE SUPERSTRUCTURE AND ANY STRUCTURE OR PARTS OF A STRUCTURE AS NOTED ON THE PLANS SHALL BE SUBMITTED TO THE ENGINEER FOR APPROVAL BEFORE CONSTRUCTION OF THE FALSEWORK OR FORMS IS STARTED.

REINFORCING STEEL:

ALL REINFORCING STEEL SHALL BE DEFORMED. DIMENSIONS RELATIVE TO PLACEMENT OF REINFORCING ARE TO CENTERS OF BARS UNLESS OTHERWISE INDICATED IN THE PLANS. DIMENSIONS ON BAR DETAILS ARE TO CENTERS OF BARS OR ARE OUT TO OUT AS INDICATED ON PLANS.

WIRE BAR SUPPORTS SHALL BE PROVIDED FOR REINFORCING STEEL WHERE INDICATED ON THE PLANS. WHEN BAR SUPPORT PIECES ARE PLACED IN CONTINUOUS LINES, THEY SHALL BE SO PLACED THAT THE ENDS OF THE SUPPORTING WIRES SHALL BE LAPPED TO LOCK LEGS ON ADJOINING PIECES.

STRUCTURAL STEEL:

AT THE CONTRACTOR'S OPTION, HE MAY SUBSTITUTE 7/8" Ø SHEAR STUDS FOR THE 3/4" Ø STUDS SPECIFIED ON THE PLANS. THIS SUBSTITUTION SHALL BE MADE AT THE RATE OF 3 - 7/8" Ø STUDS FOR 4 - 3/4" Ø STUDS, AND STUD SPACING CHANGES SHALL BE MADE AS NECESSARY TO PROVIDE THE SAME EQUIVALENT NUMBER OF 7/8" Ø STUDS ALONG THE BEAM AS SHOWN FOR 3/4" Ø STUDS BASED ON THE RATIO OF 3 - 7/8" Ø STUDS FOR 4 - 3/4" Ø STUDS. STUDS OF THE LENGTH SPECIFIED ON THE PLANS MUST BE PROVIDED. THE MAXIMUM SPACING SHALL BE 2'-0".

EXCEPT AT THE INTERIOR SUPPORTS OF CONTINUOUS BEAMS WHERE THE COVER PLATE IS IN CONTACT WITH BEARING PLATE, THE CONTRACTOR MAY, AT HIS OPTION, SUBSTITUTE FOR THE COVER PLATES DESIGNATED ON THE PLANS COVER PLATES OF THE EQUIVALENT AREA PROVIDED THESE PLATES ARE AT LEAST 5/16" IN THICKNESS AND DO NOT EXCEED A WIDTH EQUAL TO THE FLANGE WIDTH LESS 2" OR A THICKNESS EQUAL TO 2 TIMES THE FLANGE THICKNESS. THE SIZE OF FILLET WELDS SHALL CONFORM TO THE REQUIREMENTS OF THE CURRENT ANSI/AASHTO/AWS "BRIDGE WELDING CODE". ELECTROSLAG WELDING WILL NOT BE PERMITTED.

WITH THE SOLE EXCEPTION OF EDGES AT SURFACES WHICH BEAR ON OTHER SURFACES, ALL SHARP EDGES AND ENDS OF SHAPES AND PLATES SHALL BE SLIGHTLY ROUNDED BY SUITABLE MEANS TO A RADIUS OF APPROXIMATELY 1/16 INCH OR EQUIVALENT FLAT SURFACE AT A SUITABLE ANGLE PRIOR TO PAINTING, GALVANIZING, OR METALLIZING.

HANDRAILS AND POSTS:

METAL STANDARDS AND FACES OF THE CONCRETE END POSTS FOR THE METAL RAIL SHALL BE SET NORMAL TO THE GRADE OF THE CURB, UNLESS OTHERWISE SHOWN ON PLANS. THE METAL RAIL AND TOPS OF CONCRETE POSTS USED WITH THE ALUMINUM RAIL SHALL BE BUILT PARALLEL TO THE GRADE OF THE CURB.

METAL HANDRAILS SHALL BE IN ACCORDANCE WITH THE PLANS. RAILS SHALL BE AS MANUFACTURED FOR BRIDGE RAILING. CASTINGS SHALL BE OF A UNIFORM APPEARANCE. FINS AND OTHER DEFORMATIONS RESULTING FROM CASTING OR OTHERWISE SHALL BE REMOVED IN A MANNER SO THAT A UNIFORM COLORING OF THE COMPLETED CASTING SHALL BE OBTAINED. CASTINGS WITH DISCOLORATIONS OR OF NON-UNIFORM COLORING WILL NOT BE ACCEPTED. CERTIFIED MILL REPORTS ARE REQUIRED FOR METAL RAILS AND POSTS.

SPECIAL NOTES:

GENERALLY, IN CASE OF DISCREPANCY, THIS STANDARD SHEET OF NOTES SHALL GOVERN OVER THE SPECIFICATIONS, BUT THE REMAINDER OF THE PLANS SHALL GOVERN OVER NOTES HEREON, AND SPECIAL PROVISIONS SHALL GOVERN OVER ALL. SEE SPECIFICATIONS ARTICLE 105-4.

PROJECT NO. 17BP.12.R.90

CLEVELAND COUNTY

STATION: 14+09.00-L-

DRAWN BY :	JLA	DATE :	6/17
CHECKED BY :	RAR	DATE :	8/17
DESIGN ENGINEER OF RECORD :	RAR	DATE :	8/17

REV. 6-16-95 EEM (c) RGW REV. 5-7-03 RWW (c) JTE REV. 10-1-11 MAA (c) GM
REV. 8-16-99 RWW (c) LES REV. 5-1-06 TLA (c) GM

NORTH CAROLINA PROFESSIONAL SEAL 014556 ENGINEER ROBERT ALLEN RAYNOR JR

DocuSigned by: Robert Allen Raynor, Jr. 2/23/2018
2C82A5257FA543C...

DOCUMENT NOT CONSIDERED FINAL UNLESS ALL SIGNATURES COMPLETED

TGS ENGINEERS
804-C N. LAFAYETTE ST
SHELBY, NC 28150
PH (704) 476-0003
CORP. LICENSE NO.: C-0275

STATE OF NORTH CAROLINA
DEPARTMENT OF TRANSPORTATION
RALEIGH

STANDARD NOTES

REVISIONS						SHEET NO.
NO.	BY:	DATE:	NO.	BY:	DATE:	S-18
1			3			TOTAL SHEETS
2			4			18