DocuSign Envelope ID: 28E38E00-ECC9-4310-9548-23495F6F1534

WBS ELEMENT: 17BP.12.R.47

CONTRACT: DL00102

See Sheet 1-A For Index of Sheets
See Sheet 1-B For Conventional Symbols

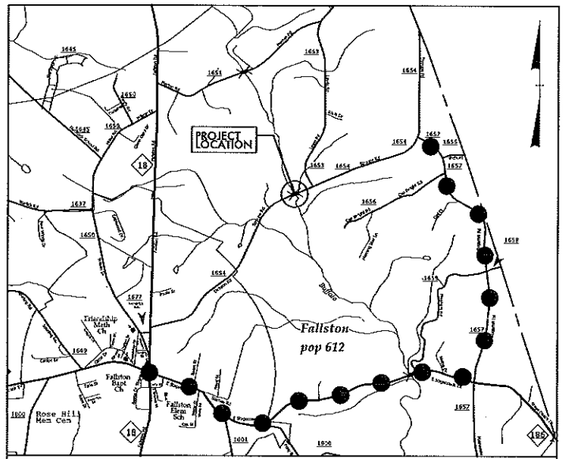

VICINITY MAP
DETOUR ROUTE

STATE OF NORTH CAROLINA
DIVISION OF HIGHWAYS

CLEVELAND COUNTY

STATE	STATE PROJECT REFERENCE NO.	SHEET NO.	TOTAL SHEETS
N.C.	17BP.12.R.47	1	

STATE PROJ. NO.	F.A. PROJ. NO.	DESCRIPTION
17BP.12.R.47		PE, R/W, UTILITY & CONST

LOCATION: STRUCTURE NO. 160 OVER BUFFALO CREEK ON SR 1654

TYPE OF WORK: GRADING, DRAINAGE, PAVING, & STRUCTURE

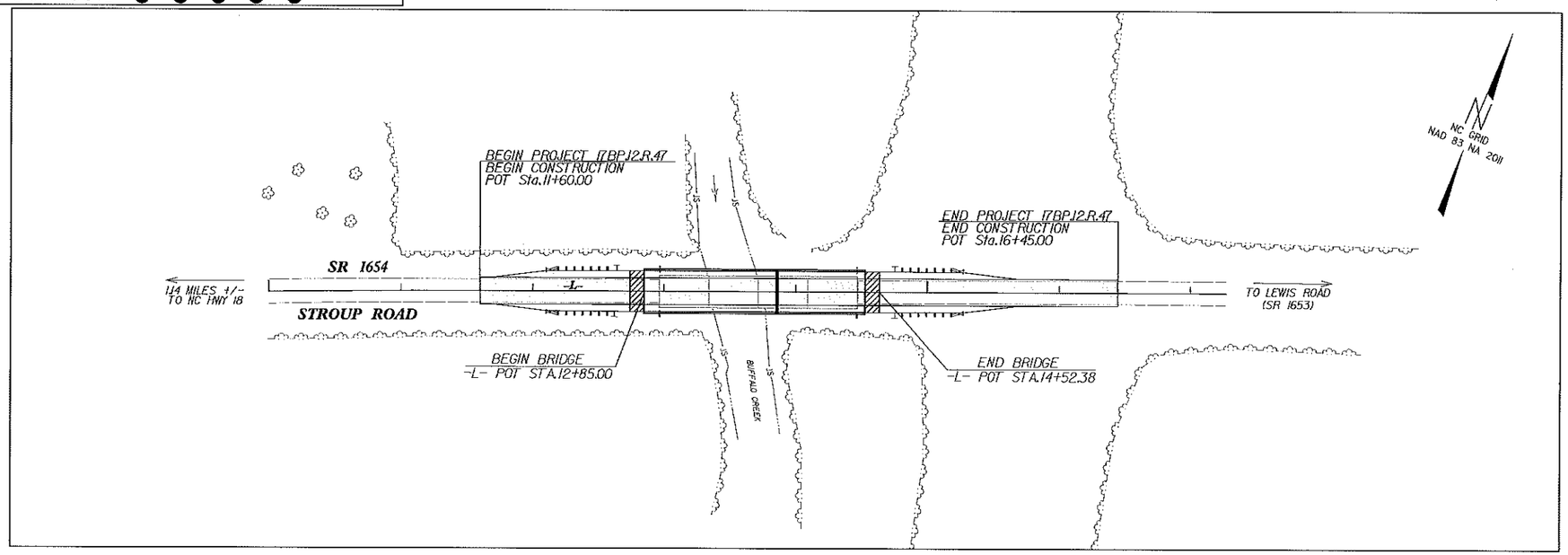

GRAPHIC SCALES

50 25 0 50 100
PLANS

50 25 0 50 100
PROFILE (HORIZONTAL)

10 5 0 10 20
PROFILE (VERTICAL)

DESIGN DATA

ADT 2012 = 710 vpd
V = 55 MPH
FUNC CLASS = R. LOCAL
SUBREGIONAL TIER

PROJECT LENGTH

LENGTH ROADWAY PROJECT 17BP.12.R.47	=	0.060 MI
LENGTH STRUCTURE PROJECT 17BP.12.R.47	=	0.032 MI
TOTAL LENGTH OF PROJECT 17BP.12.R.47	=	0.092 MI

NCDOT CONTACT: STEVE RACKLEY, PE
DIVISION 12

Prepared In the Office of:
Michael Baker INTERNATIONAL
Michael Baker Engineering, Inc.
8000 Regency Parkway, Suite 600
Cary, NC 27518
Professional Corporation License Number: F-1084

2012 STANDARD SPECIFICATIONS

RIGHT OF WAY DATE: DECEMBER 14, 2015

LETTING DATE: JUNE 28, 2016

TODD H. BUCKNER, PE
PROJECT ENGINEER

WARREN JOHNSON
PROJECT DESIGN ENGINEER

HYDRAULICS ENGINEER

NORTH CAROLINA PROFESSIONAL SEAL 20117 ENGINEER WINGMAN BUCKNER

DocuSigned by: Scott William Bridges
SIGNATURE: P.E. 4/28/2016

ROADWAY DESIGN ENGINEER

NORTH CAROLINA PROFESSIONAL SEAL 034367 ENGINEER TODD H. BUCKNER

DocuSigned by:
SIGNATURE: P.E. 4/28/2016

STATE OF NORTH CAROLINA DEPARTMENT OF TRANSPORTATION

4/27/2016 1:46:48 PM
R:\17BP.12.R.47\Roadway\Proj\22-0160_RDY_TSH_01.dgn
USER: todd.buckner

PROJECT REFERENCE NO.	SHEET NO.
17BP.12.R.47	1A

ROADWAY DESIGN ENGINEER

NORTH CAROLINA PROFESSIONAL SEAL 034367 ENGINEER TODD H. BUCKNER

DocuSigned by: 1087011E67F6435...

4/28/2016

Michael Baker Engineering, Inc.
Michael Baker INTERNATIONAL
8000 Regency Pkwy
Suite 600
Cary, NC 27518
NC License: F-1084

DOCUMENT NOT CONSIDERED FINAL UNLESS ALL SIGNATURES COMPLETED

INDEX OF SHEETS

SHEET NUMBER	SHEET
1	TITLE SHEET
1A	INDEX OF SHEETS, GENERAL NOTES, AND STANDARD DRAWINGS
1B	CONVENTIONAL PLAN SHEET SYMBOLS
1C–1 THRU 1C–1	SURVEY CONTROL SHEETS
2A–1	TYPICAL SECTIONS
2D–1	GUARDRAIL ANCHOR UNIT DETAILS
3B–1	SUMMARY OF QUANTITIES
4	ROADWAY PLAN AND PROFILE SHEET
TMP–1 THRU TMP–3	TRANSPORTATION MANAGEMENT PLANS
PMP–1	PAVEMENT MARKING PLANS
UBO–1 THRU UBO–2	UTILITIES BY OTHER PLANS
EC–1 THRU EC–5	EROSION CONTROL PLANS
X–1	CROSS SECTION SUMMARY
X–2 THRU X–6	CROSS SECTIONS
S–1 THRU S–19	STRUCTURES PLANS
SN–1	STRUCTURE STANDARD NOTES

GENERAL NOTES

GENERAL NOTES: 2012 SPECIFICATIONS

EFFECTIVE: 01–17–12
REVISED: 01–12–15

GRADE LINE:
GRADING AND SURFACING:

THE GRADE LINES SHOWN DENOTE THE FINISHED ELEVATION OF THE PROPOSED SURFACING AT GRADE POINTS SHOWN ON THE TYPICAL SECTIONS. GRADE LINES MAY BE ADJUSTED AT THEIR BEGINNING AND ENDING AND AT STRUCTURES AS DIRECTED BY THE ENGINEER IN ORDER TO SECURE A PROPER TIE–IN.

CLEARING:

CLEARING ON THIS PROJECT SHALL BE PERFORMED TO THE LIMITS ESTABLISHED BY METHOD II.

SUPERELEVATION:

ALL CURVES ON THIS PROJECT SHALL BE SUPERELEVATED IN ACCORDANCE WITH STD. NO. 225.04 USING THE RATE OF SUPERELEVATION AND RUNOFF SHOWN ON THE PLANS. SUPERELEVATION IS TO BE REVOLVED ABOUT THE GRADE POINTS SHOWN ON THE TYPICAL SECTIONS.

SHOULDER CONSTRUCTION:

ASPHALT, EARTH, AND CONCRETE SHOULDER CONSTRUCTION ON THE HIGH SIDE OF SUPERELEVATED CURVES SHALL BE IN ACCORDANCE WITH STD. NO. 560.01.

GUARDRAIL:

THE GUARDRAIL LOCATIONS SHOWN ON THE PLANS MAY BE ADJUSTED DURING CONSTRUCTION AS DIRECTED BY THE ENGINEER. THE CONTRACTOR SHOULD CONSULT WITH THE ENGINEER PRIOR TO ORDERING GUARDRAIL MATERIAL.

END BENTS:

THE ENGINEER SHALL CHECK THE STRUCTURE END BENT PLANS, DETAILS, AND CROSS–SECTION PRIOR TO SETTING OF THE SLOPE STAKES FOR THE EMBANKMENT OR EXCAVATION APPROACHING A BRIDGE.

UTILITIES:

UTILITY OWNERS ON THIS PROJECT ARE DUKE PROGRESS AND AT&T.

ANY RELOCATION OF EXISTING UTILITIES WILL BE ACCOMPLISHED BY OTHERS.

RIGHT–OF–WAY MARKERS:

ALL RIGHT–OF–WAY MARKERS ON THIS PROJECT SHALL BE PLACED BY CONTRACT.

STANDARD DRAWINGS

2012 ROADWAY ENGLISH STANDARD DRAWINGS

The following Roadway Standards as appear in "Roadway Standard Drawings" Highway Design Branch – N. C. Department of Transportation – Raleigh, N. C., Dated January, 2012 are applicable to this project and by reference hereby are considered a part of these plans:

STD.NO.	TITLE
DIVISION 2 – EARTHWORK	
200.02	Method of Clearing – Method II
225.02	Guide for Grading Subgrade – Secondary and Local
225.04	Method of Obtaining Superelevation – Two Lane Pavement
DIVISION 3 – PIPE CULVERTS	
300.01	Method of Pipe Installation
DIVISION 4 – MAJOR STRUCTURES	
422.11	Reinforced Bridge Approach Fills – Sub Regional Tier
DIVISION 5 – SUBGRADE, BASES AND SHOULDERS	
560.01	Method of Shoulder Construction – High Side of Superelevated Curve – Method I
DIVISION 8 – INCIDENTALS	
840.00	Concrete Base Pad for Drainage Structures
840.25	Anchorage for Frames – Brick or Concrete or Precast
840.29	Frames and Narrow Slot Flat Grates
840.35	Traffic Bearing Grated Drop Inlet – for Cast Iron Double Frame and Grates
840.46	Traffic Bearing Precast Drainage Structure
846.01	Concrete Curb, Gutter and Curb & Gutter
846.04	Drop Inlet Installation in Shoulder Berm Gutter
862.01	Guardrail Placement
862.02	Guardrail Installation
876.01	Rip Rip in Channels
876.02	Guide for Rip Rap at Pipe Outlets
876.04	Drainage Ditches with Class 'B' Rip Rap

8/17/99
4/27/2016 1:46:49 PM
N:\PDEA\Roadway\Proj\22-0160_RDY_PSH_01A.dgn
USER: cpatterson

12/05/11

PROJECT REFERENCE NO.	SHEET NO.
17BP.12.R.47	1B

Note: Not to Scale

S.U.E. = Subsurface Utility Engineering

STATE OF NORTH CAROLINA
DIVISION OF HIGHWAYS

CONVENTIONAL PLAN SHEET SYMBOLS

BOUNDARIES AND PROPERTY:

- State Line
- County Line
- Township Line
- City Line
- Reservation Line
- Property Line
- Existing Iron Pin — EIP
- Property Corner
- Property Monument — ECM
- Parcel/Sequence Number — 123
- Existing Fence Line
- Proposed Woven Wire Fence
- Proposed Chain Link Fence
- Proposed Barbed Wire Fence
- Existing Wetland Boundary — WLB
- Proposed Wetland Boundary — WLB
- Existing Endangered Animal Boundary — EAB
- Existing Endangered Plant Boundary — EPB
- Known Soil Contamination: Area or Site
- Potential Soil Contamination: Area or Site

BUILDINGS AND OTHER CULTURE:

- Gas Pump Vent or U/G Tank Cap
- Sign — S
- Well — W
- Small Mine
- Foundation
- Area Outline
- Cemetery
- Building
- School
- Church
- Dam

HYDROLOGY:

- Stream or Body of Water
- Hydro, Pool or Reservoir
- Jurisdictional Stream — JS
- Buffer Zone 1 — BZ 1
- Buffer Zone 2 — BZ 2
- Flow Arrow
- Disappearing Stream
- Spring
- Wetland
- Proposed Lateral, Tail, Head Ditch — FLOW
- False Sump

RAILROADS:

- Standard Gauge — CSX TRANSPORTATION
- RR Signal Milepost — MILEPOST 35
- Switch — SWITCH
- RR Abandoned
- RR Dismantled

RIGHT OF WAY:

- Baseline Control Point
- Existing Right of Way Marker
- Existing Right of Way Line
- Proposed Right of Way Line — RW
- Proposed Right of Way Line with Iron Pin and Cap Marker — RW
- Proposed Right of Way Line with Concrete or Granite R/W Marker — RW
- Proposed Control of Access Line with Concrete C/A Marker — CA
- Existing Control of Access — CA
- Proposed Control of Access — CA
- Existing Easement Line — E
- Proposed Temporary Construction Easement — E
- Proposed Temporary Drainage Easement — TDE
- Proposed Permanent Drainage Easement — PDE
- Proposed Permanent Drainage / Utility Easement — DUE
- Proposed Permanent Utility Easement — PUE
- Proposed Temporary Utility Easement — TUE
- Proposed Aerial Utility Easement — AUE
- Proposed Permanent Easement with Iron Pin and Cap Marker

ROADS AND RELATED FEATURES:

- Existing Edge of Pavement
- Existing Curb
- Proposed Slope Stakes Cut — C
- Proposed Slope Stakes Fill — F
- Proposed Curb Ramp — CR
- Existing Metal Guardrail
- Proposed Guardrail
- Existing Cable Guiderail
- Proposed Cable Guiderail
- Equality Symbol
- Pavement Removal

VEGETATION:

- Single Tree
- Single Shrub
- Hedge
- Woods Line
- Orchard
- Vineyard — Vineyard

EXISTING STRUCTURES:

MAJOR:

- Bridge, Tunnel or Box Culvert — CONC
- Bridge Wing Wall, Head Wall and End Wall — CONC WW

MINOR:

- Head and End Wall — CONC HW
- Pipe Culvert
- Footbridge
- Drainage Box: Catch Basin, DI or JB — CB
- Paved Ditch Gutter
- Storm Sewer Manhole — S
- Storm Sewer — S

UTILITIES:

POWER:

- Existing Power Pole
- Proposed Power Pole
- Existing Joint Use Pole
- Proposed Joint Use Pole
- Power Manhole — P
- Power Line Tower
- Power Transformer
- U/G Power Cable Hand Hole
- H-Frame Pole
- Recorded U/G Power Line — P
- Designated U/G Power Line (S.U.E.*) — P

TELEPHONE:

- Existing Telephone Pole
- Proposed Telephone Pole
- Telephone Manhole — T
- Telephone Booth
- Telephone Pedestal — T
- Telephone Cell Tower
- U/G Telephone Cable Hand Hole
- Recorded U/G Telephone Cable — T
- Designated U/G Telephone Cable (S.U.E.*) — T
- Recorded U/G Telephone Conduit — TC
- Designated U/G Telephone Conduit (S.U.E.*) — TC
- Recorded U/G Fiber Optics Cable — T FO
- Designated U/G Fiber Optics Cable (S.U.E.*) — T FO

WATER:

- Water Manhole — W
- Water Meter
- Water Valve
- Water Hydrant
- Recorded U/G Water Line — W
- Designated U/G Water Line (S.U.E.*) — W
- Above Ground Water Line — A/G Water

TV:

- TV Satellite Dish
- TV Pedestal — C
- TV Tower
- U/G TV Cable Hand Hole
- Recorded U/G TV Cable — TV
- Designated U/G TV Cable (S.U.E.*) — TV
- Recorded U/G Fiber Optic Cable — TV FO
- Designated U/G Fiber Optic Cable (S.U.E.*) — TV FO

GAS:

- Gas Valve
- Gas Meter
- Recorded U/G Gas Line — G
- Designated U/G Gas Line (S.U.E.*) — G
- Above Ground Gas Line — A/G Gas

SANITARY SEWER:

- Sanitary Sewer Manhole
- Sanitary Sewer Cleanout
- U/G Sanitary Sewer Line — SS
- Above Ground Sanitary Sewer — A/G Sanitary Sewer
- Recorded SS Forced Main Line — FSS
- Designated SS Forced Main Line (S.U.E.*) — FSS

MISCELLANEOUS:

- Utility Pole
- Utility Pole with Base
- Utility Located Object
- Utility Traffic Signal Box — S
- Utility Unknown U/G Line — ?UTL
- U/G Tank; Water, Gas, Oil
- Underground Storage Tank, Approx. Loc. — UST
- A/G Tank; Water, Gas, Oil
- Geoenvironmental Boring
- U/G Test Hole (S.U.E.*)
- Abandoned According to Utility Records — AATUR
- End of Information — E.O.I.

PROJECT REFERENCE NO.	SHEET NO.
17BP.12.R.47	1C-1
Location and Surveys	

SURVEY CONTROL SHEET

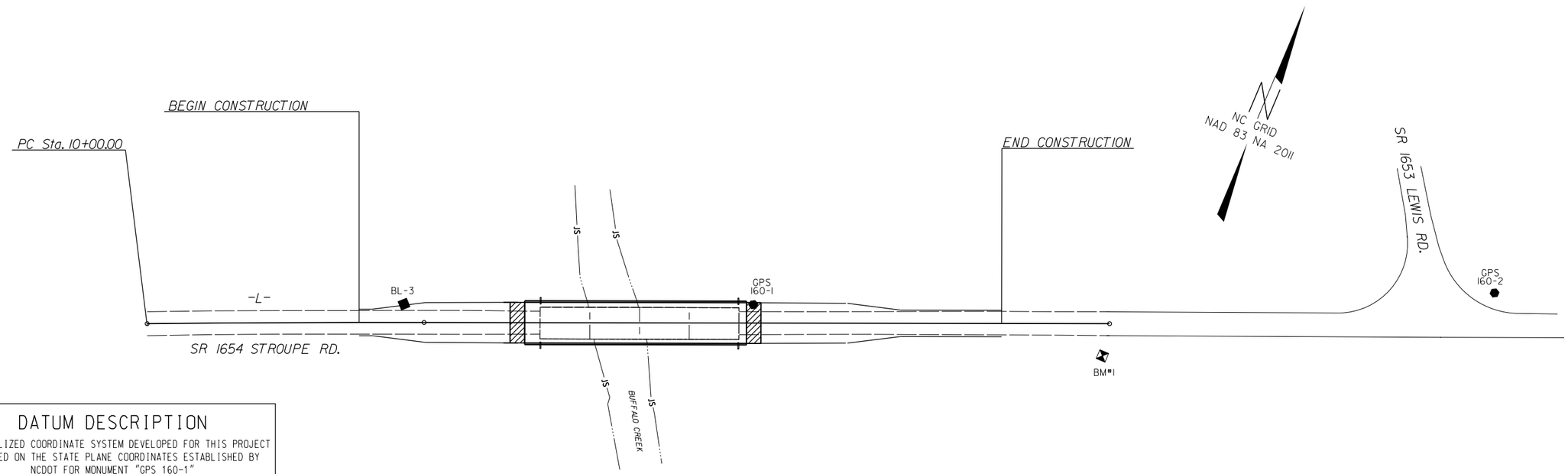

DATUM DESCRIPTION

THE LOCALIZED COORDINATE SYSTEM DEVELOPED FOR THIS PROJECT
IS BASED ON THE STATE PLANE COORDINATES ESTABLISHED BY
NCDOT FOR MONUMENT "GPS 160-1"
WITH NAD 83/NA 2011 STATE PLANE GRID COORDINATES OF
NORTHING: 625790.464(ft) EASTING: 1259482.329(ft)
ELEVATION: 871.98(ft)
THE AVERAGE COMBINED GRID FACTOR USED ON THIS PROJECT
(GROUND TO GRID) IS: 0.99984128
THE N.C. LAMBERT GRID BEARING AND
LOCALIZED HORIZONTAL GROUND DISTANCE FROM
"GPS 160-1" TO -L- STATION 10+00.00 IS
S 65°19'56.1" W 457.832'
ALL LINEAR DIMENSIONS ARE LOCALIZED HORIZONTAL DISTANCES
VERTICAL DATUM USED IS NAVD 88

BL

POINT	DESC.	NORTH	EAST	ELEVATION	L STATION	OFFSET
3	BL-3	625688.3122	1259239.1477	879.86	11+93.83	13.81 LT
1	GPS 160-1	625790.4640	1259482.3290	871.98	14+57.59	13.86 LT
2	GPS 160-2	626016.0540	1259994.3580	881.53	OUTSIDE PROJECT LIMITS	

BM1 ELEVATION = 869.41
N 625857 E 1259740
L STATION 17+21 24 RIGHT
RR SPIKE IN 16" BLACK WALNUT

NOTES:

1. *THE CONTROL DATA FOR THIS PROJECT CAN BE FOUND ELECTRONICALLY BY SELECTING PROJECT CONTROL DATA AT: HTTPS://CONNECT.NCDOT.GOV/RESOURCES/LOCATION/*

   THE FILES TO BE FOUND ARE AS FOLLOWS:
   220160_LS_CONTROL.TXT
   220160_LS_LOCAL.TXT

2. *SITE CALIBRATION INFORMATION HAS NOT BEEN PROVIDED FOR THIS PROJECT. IF FURTHER INFORMATION IS NEEDED, PLEASE CONTACT THE LOCATION AND SURVEYS UNIT.*

3. *PROJECT CONTROL ESTABLISHED USING GLOBAL POSITIONING SYSTEM, UTILIZING THE NCGS RTN SYSTEM (VRS).*

   MONUMENTS USED OR SET FOR PROJECT CONTROL BY THE NCDOT LOCATION AND SURVEYS UNIT:

● *INDICATES GEODETIC CONTROL MONUMENTS FOR HORIZONTAL CONTROL*
■ *INDICATES BASELINE MONUMENTS FOR HORIZONTAL PROJECT CONTROL*
⧓ *INDICATES BENCHMARKS FOR VERTICAL CONTROL*

L

TYPE	STATION	NORTH	EAST
PC	10+00.00	625599.3852	1259066.2773
PT	12+09.04	625681.4772	1259258.5258
POT	17+26.49	625881.7705	1259735.6404

ROW MARKER IRON PIN AND CAP

ALIGN	STATION	OFFSET	NORTH	EAST
L	11+60.00	-60.00	625717.6848	1259189.9496
L	11+60.00	-22.50	625683.1498	1259204.5641
L	11+60.00	22.50	625641.7078	1259222.1014
L	11+60.00	50.00	625616.3821	1259232.8187
L	12+09.04	-60.00	625736.8000	1259235.3012
L	12+09.04	50.00	625635.3748	1259277.8797
L	14+50.00	-60.00	625830.0687	1259457.4746
L	15+50.00	50.00	625767.3512	1259592.2578
L	16+45.00	-22.50	625870.9719	1259651.7893
L	16+45.00	22.50	625829.4798	1259669.2077

NOTE: DRAWING NOT TO SCALE

4/28/16
$$$$$$SYSTIME$$$$$$
$$$$$$DGN$$$$$$$$$$$$$$$$$$$$
$$$$$$USERNAME$$$$

PROJECT REFERENCE NO.	SHEET NO.
17BP.12.R.47	2A-1

ROADWAY DESIGN ENGINEER

NORTH CAROLINA PROFESSIONAL SEAL 034367 ENGINEER TODD M. BUCKNER

DocuSigned by: 4/28/2016 108701E67F6435...

PAVEMENT DESIGN ENGINEER

PAVEMENT DESIGN PROVIDED BY DIVISION

Michael Baker Engineering, Inc. Michael Baker INTERNATIONAL 5000 Regency Pkwy Suite 600 Cary, NC 27518 NC License: F-1084

NC DEPARTMENT OF TRANSPORTATION PAVEMENT MANAGEMENT UNIT 1593 MAIL SERVICE CENTER RALEIGH, NC 27699-1593

DOCUMENT NOT CONSIDERED FINAL UNLESS ALL SIGNATURES COMPLETED

PAVEMENT SCHEDULE

	PROP. APPROX. 1½″ ASPHALT CONCRETE SURFACE COURSE, TYPE S9.5B, AT AN AVERAGE RATE OF 168 LBS PER SQ. YARD.	D2	PROP. VAR. DEPTH ASPHALT CONCRETE SURFACE COURSE, TYPE I19.0B, AT AN AVERAGE RATE OF 114 LBS. PER SQ. YARD PER 1″ DEPTH TO BE PLACED IN LAYERS NOT LESS THAN 2½″ OR GREATER THAN 4″ IN DEPTH.	T	EARTH MATERIAL.
	PROP. VAR. DEPTH ASPHALT CONCRETE SURFACE COURSE, TYPE S9.5B, AT AN AVERAGE RATE OF 112 LBS. PER SQ. YARD PER 1″ DEPTH TO BE PLACED IN LAYERS NOT TO EXCEED 1.5″ IN DEPTH.	E1	PROP. APPROX. 5½″ ASPHALT CONCRETE BASE COURSE, TYPE B25.0B, AT AN AVERAGE RATE OF 627 LBS PER SQ. YARD.	U	EXISTING PAVEMENT.
	PROP. APPROX. 4″ ASPHALT CONCRETE INTERMEDIATE COURSE, TYPE I19.0B, AT AN AVERAGE RATE OF 576 LBS PER SQ. YARD.	E2	PROP. VAR. DEPTH ASPHALT CONCRETE BASE COURSE, TYPE B25.0B, AT AN AVERAGE RATE OF 114 LBS. PER SQ. YARD PER 1″ DEPTH TO BE PLACED IN LAYERS NOT GREATER THAN 5.5″ IN DEPTH OR LESS THAN 3.0″ IN DEPTH. FOR B25.0B PLACED ON UNSTABILIZED SUBGRADE, MINIMUM LIFT THICKNESS IS 4″.	W	VARIABLE DEPTH ASPHALT PAVEMENT (SEE STANDARD WEDGING DETAIL THIS SHEET)

NOTE: PAVEMENT EDGE SLOPES ARE 1:1 UNLESS SHOWN OTHERWISE.

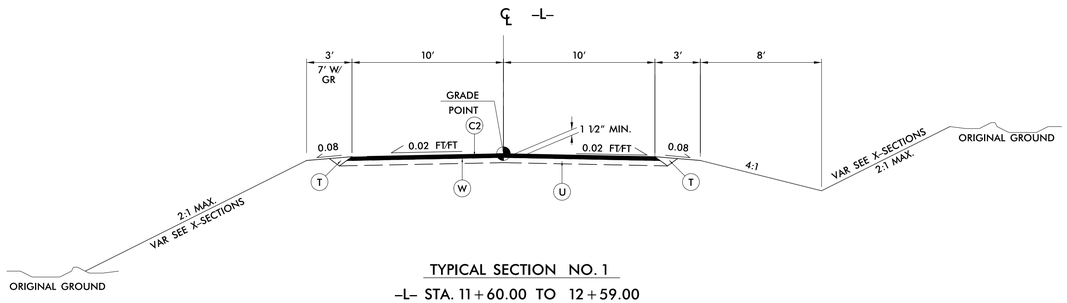

TYPICAL SECTION NO. 1

–L– STA. 11+60.00 TO 12+59.00
–L– STA. 14+80.00 TO 16+45.00

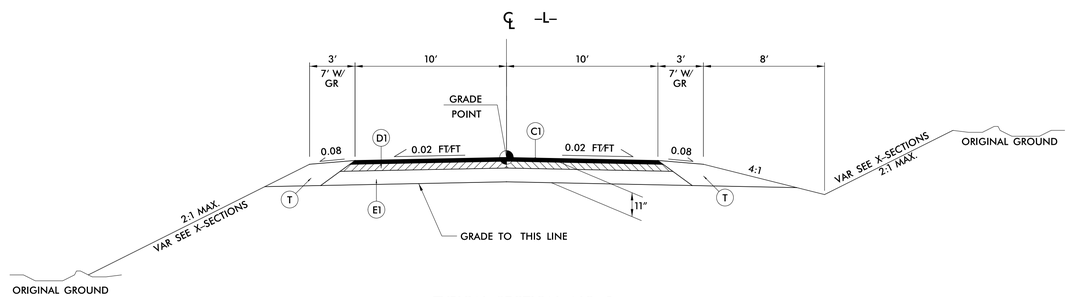

TYPICAL SECTION NO. 2

–L– STA. 12+59.00 TO 12+85.00 (BEGIN BRIDGE)
–L– STA. 14+52.38 (END BRIDGE) TO 14+80.00

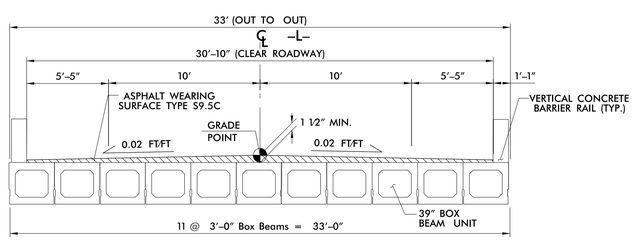

BRIDGE SECTION

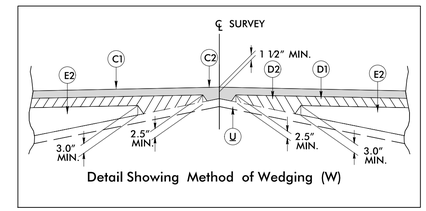

Detail Showing Method of Wedging (W)

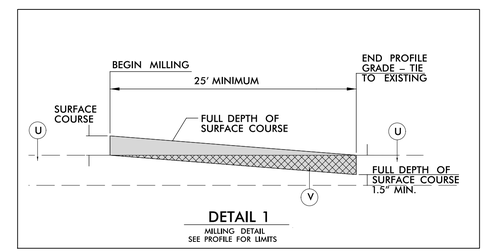

DETAIL 1

MILLING DETAIL
SEE PROFILE FOR LIMITS

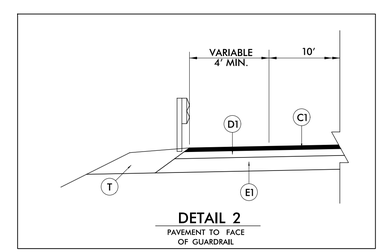

DETAIL 2

PAVEMENT TO FACE OF GUARDRAIL

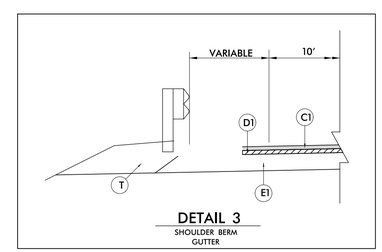

DETAIL 3

SHOULDER BERM GUTTER

5/14/99

I:\17BP.12.R.47\Roadway\Proj\22-0160_RDY_TYP_02.dgn
4/27/2016 1:46:51 PM
USER: t.buckner

PROJECT REFERENCE NO.	SHEET NO.
17BP.12.R.47	2D-1

STATE OF NORTH CAROLINA DEPT. OF TRANSPORTATION DIVISION OF HIGHWAYS RALEIGH, N.C.

ENGLISH DETAIL DRAWING FOR
STRUCTURE ANCHOR UNITS
GUARDRAIL ANCHOR UNIT, TYPE III FOR ATTACHMENT TO RAIL ON BRIDGE - SUB REGIONAL TIER

SHEET 2 OF 7
862d03

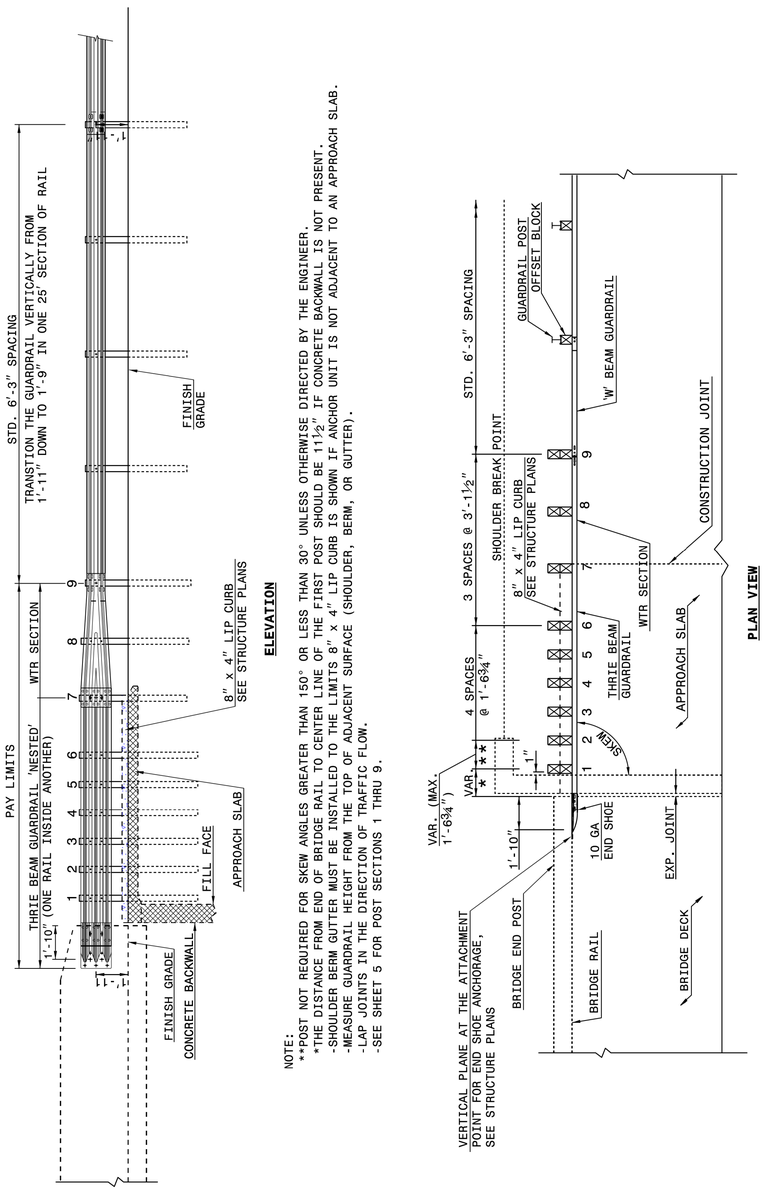

ELEVATION

NOTE:
**POST NOT REQUIRED FOR SKEW ANGLES GREATER THAN 150° UNLESS OTHERWISE DIRECTED BY THE ENGINEER.
*THE DISTANCE FROM END OF BRIDGE RAIL TO CENTER LINE OF THE FIRST POST SHOULD BE 11½" IF CONCRETE BACKWALL IS NOT PRESENT.
-SHOULDER BERM GUTTER MUST BE INSTALLED TO THE LIMITS 8" x 4" LIP CURB IS SHOWN IF ANCHOR UNIT IS NOT ADJACENT TO AN APPROACH SLAB.
-MEASURE GUARDRAIL HEIGHT FROM THE TOP OF ADJACENT SURFACE (SHOULDER, BERM, OR GUTTER).
-LAP JOINTS IN THE DIRECTION OF TRAFFIC FLOW.
-SEE SHEET 5 FOR POST SECTIONS 1 THRU 9.

PLAN VIEW

GUARDRAIL ANCHOR UNIT, TYPE III FOR ATTACHMENT TO RAIL ON BRIDGE - SUB REGIONAL TIER

STATE OF NORTH CAROLINA DEPT. OF TRANSPORTATION DIVISION OF HIGHWAYS RALEIGH, N.C.

ENGLISH DETAIL DRAWING FOR
STRUCTURE ANCHOR UNITS
GUARDRAIL ANCHOR UNIT, TYPE III FOR ATTACHMENT TO RAIL ON BRIDGE - SUB REGIONAL TIER

SHEET 2 OF 7
862d03

STATE OF NORTH CAROLINA DEPT. OF TRANSPORTATION DIVISION OF HIGHWAYS RALEIGH, N.C.

ENGLISH DETAIL DRAWING FOR
STRUCTURE ANCHOR UNITS
GUARDRAIL ANCHOR UNIT, TYPE III

SHEET 3 OF 7
862d03

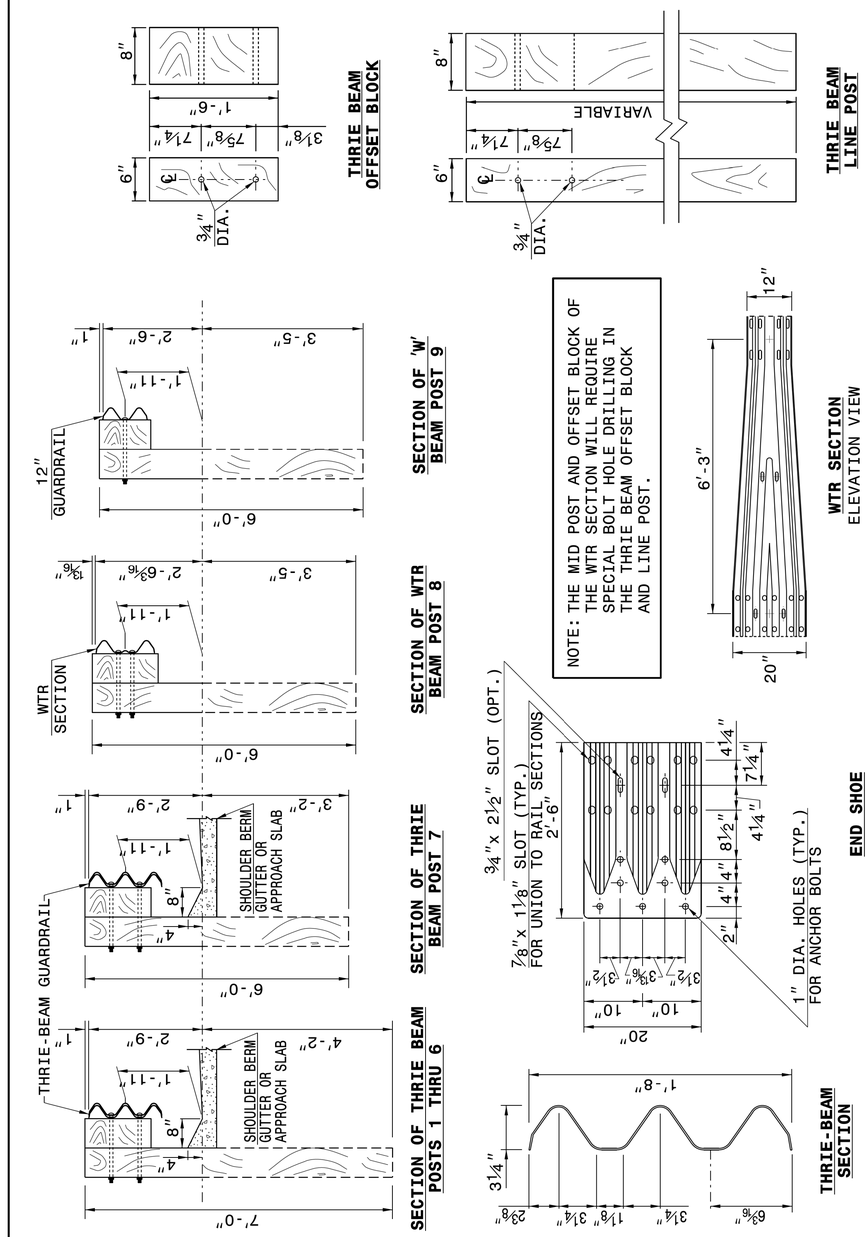

STATE OF NORTH CAROLINA DEPT. OF TRANSPORTATION DIVISION OF HIGHWAYS RALEIGH, N.C.

ENGLISH DETAIL DRAWING FOR
STRUCTURE ANCHOR UNITS
GUARDRAIL ANCHOR UNIT, TYPE III

SHEET 3 OF 7
862d03

CONTRACT STANDARDS AND DEVELOPMENT UNIT
Office 919-707-6950 FAX 919-250-4119

SEE TITLE BLOCK

ORIGINAL BY: J HOWERTON DATE: 06-22-12
MODIFIED BY: DATE:
CHECKED BY: DATE:
FILE SPEC.:

$$$$$$SYSTIME$$$$$$
$$$$$$

COMPUTED BY: WEJ	DATE: 4/27/16
CHECKED BY: THB	DATE: 4/27/16

STATE OF NORTH CAROLINA
DIVISION OF HIGHWAYS

PROJECT REFERENCE NO.	SHEET NO.
17BP.12.R.47	3B–1

GUARDRAIL SUMMARY

"N" = DISTANCE FROM EDGE OF LANE TO FACE OF GUARDRAIL
TOTAL SHOULDER WIDTH = DISTANCE FROM EDGE OF TRAVEL LANE TO SHOULDER BREAK POINT.
FLARE LENGTH = DISTANCE FROM LAST SECTION OF PARALLEL GUARDRAIL TO END OF GUARDRAIL
W = TOTAL WIDTH OF FLARE FROM BEGINNING OF TAPER TO END OF GUARDRAIL

G = GATING IMPACT ATTENUATOR TYPE 350
NG = NON-GATING IMPACT ATTENUATOR TYPE 350

SURVEY LINE	BEG. STA.	END STA.	LOCATION	LENGTH			WARRANT POINT		"N" DIST. FROM E.O.L.	TOTAL SHOUL WIDTH	FLARE LENGTH		W		ANCHORS									IMPACT ATTENUATOR TYPE 350		SINGLE FACED CONCRETE BARRIER	REMOVE EXISTING GUARDRAIL	REMOVE & STOCKPILE EXISTING GUARDRAIL	REMARKS
				STRAIGHT	SHOP CURVED	DOUBLE FACED	APPROACH END	TRAILING END			APPROACH END	TRAILING END	APPROACH END	TRAILING END	XI MOD	XI	GRAU 350 TL-3	M-350	XIII	AT-1	VI MOD	III	SHOP CURVED III	G	NG				
L	12+09	12+85	LT	81.25					4	7	N/A	50		1			1					1							
L	12+09	12+85	RT	81.25					4	7	50	N/A	1				1					1							
L	14+52	15+27	LT	81.25					4	7	50	N/A	1				1					1							
L	14+52	15+27	RT	81.25					4	7	N/A	50		1			1					1							
	LESS ANCHOR DEDUCTIONS																												
	GRAU-350 TL-3	4@ 50'	=	-200																									
	TYPE-III	4@ 18.75'	=	-75																									
TOTAL				50													4					4							
			SAY	50													4					4							
	(5 ADDITIONAL GUARDRAIL POSTS)																												

LIST OF PIPES, ENDWALLS, ETC. (FOR PIPES 48" & UNDER)

NOTE: Invert Elevations are for Bid Purposes only and shall not be used for project construction stakeout. See "Standard Specifications For Roads and Structures, Section 300–5".

| LINE & STATION / SIZE / THICKNESS OR GAUGE | OFFSET | STRUCTURE NUMBER FROM | STRUCTURE NUMBER TO | TOP ELEVATION FT. | INVERT ELEVATION FT. | INVERT ELEVATION FT. | MINIMUM REQUIRED SLOPE % | C.S. PIPE 12 .064 | C.S. PIPE 15 .064 | C.S. PIPE 18 .064 | C.S. PIPE 24 .064 | C.S. PIPE 30 .079 | C.S. PIPE 36 .079 | C.S. PIPE 42 .109 | C.S. PIPE 48 .109 | R.C. PIPE CLASS III 12 | R.C. PIPE CLASS III 15 | R.C. PIPE CLASS III 18 | R.C. PIPE CLASS III 24 | R.C. PIPE CLASS III 30 | R.C. PIPE CLASS III 36 | R.C. PIPE CLASS III 42 | R.C. PIPE CLASS III 48 | 15" SIDE DRAIN PIPE | 18" SIDE DRAIN PIPE | 24" SIDE DRAIN PIPE | ENDWALLS STD. 838.01 OR STD. 838.11 (UNLESS NOTED OTHERWISE) CY | REINFORCED ENDWALLS CY | DRAINAGE STRUCTURE MASONRY CY | QUANTITIES FOR DRAINAGE STRUCTURES NOTE: TOTAL LIN. FT. FOR PAY QUANTITY SHALL BE A + (1.3 X B) 0' THRU 5' EACH | A 5' THRU 10' LIN.FT. | B 10' AND ABOVE LIN.FT. | C.B. STD. 840.01 OR STD. 840.02 | FRAME, GRATES, AND HOOD STD. 840.03 GRATE TYPE E | F | G | CONCRETE TRANSITIONAL SECTION D.I. STD. 852.04 OR STD. 852.06 | C.B. STD. 852.05 | OPEN THROAT C.B. STD. 840.04 OR STD. 840.05 | CONCRETE BRIDGE APPROACH D.I. STD. 840.13 | D.I. STD. 840.14 OR STD. 840.15 | D.I. FRAME AND GRATES STD. 840.16 | G.D.I. TYPE "A" STD. 840.17 OR STD. 840.26 | G.D.I. TYPE "B" STD. 840.18 OR STD. 840.27 | G.D.I. TYPE "D" STD. 840.19 OR STD. 840.28 | G.D.I. (W.S.-FLAT) FRAME WITH GRATE STD. 840.20 | G.D.I. (W.S.-FLAT) FRAME W/ 2 GRATES STD. 840.20 | G.D.I. (W.S.-FLAT) FRAME W/ 2 GRATES STD. 840.22 | G.D.I. (W.S.-SAG) FRAME W/ GRATE STD. 840.22 | G.D.I. (W.S.-SAG) FRAME W/ 2 GRATES STD. 840.22 | G.D.I. (N.S.-SAG) FRAME W/ GRATE STD. 840.24 | G.D.I. (N.S.-SAG) FRAME W/ 2 GRATES STD. 840.24 | G.D.I. (N.S.-FLAT) FRAME W/ GRATE STD. 840.29 | G.D.I. (N.S.-FLAT) FRAME W/ 2 GRATES STD. 840.29 | DRIVEWAY D.I. STD. 840.30 | FRAME W/ GRATE FOR DRIVEWAY STD. 840.30 | J.B. STD. 840.31 OR STD. 840.32 | ANGLED VANE GRATES AND FRAMES STD. 840.33 | T.B.J.B. STD. 840.34 | T.B.D.I. STD. 840.35 | T.B.D.I. FOR STEEL GRATES STD. 840.36 | STEEL FRAME WITH TWO GRATES STD. 840.37 | TEMP STEEL PLATE COVER MASONRY DRAINAGE | SPRING BOX STD. 840.41 | M.H. STD. 840.51, STD. 840.52, OR STD. 840.53 | M.H. FRAME AND COVER STD. 840.54 | CONVERT EXISTING C.B. TO J.B. | CONVERT EXISTING C.B. TO D.I. | CONVERT EXISTING D.I. TO J.B. | CONVERT EXISTING J.B. TO D.I. | ADJUST C.B. | ADJUST D.I. | 15" C.S. ELBOW | 18" C.S. ELBOW | 24" C.S. ELBOW | 30" C.S. ELBOW | 36" C.S. ELBOW | BERM DITCH OUTLET STD. 859.10 (PER EACH) | BERM DITCH OUTLET STD. 859.11 (PER EACH) | MODIFIED CONC. FLUME | PREFORMED SCOUR HOLE (PER EACH) | ENERGY DISSIPATION BASIN | FLOWABLE FILL CY | CONCRETE COLLARS CL. "B" STD. 840.72 CY | CONCRETE AND BRICK PIPE PLUG STD. 840.71 CY | PIPE REMOVAL LIN.FT. | REMARKS |
|---|---|---|---|---|---|---|---|---|---|---|---|---|---|---|---|---|---|---

DocuSign Envelope ID: 28E38E00-ECC9-4310-9548-23495F6F1534

PROJECT REFERENCE NO.	SHEET NO.
17BP.12.R.47	4
R/W SHEET NO.	

ROADWAY DESIGN ENGINEER
NORTH CAROLINA PROFESSIONAL SEAL 034367 ENGINEER TODD H. BUCKNER
DocuSigned by: 4/28/2016
Michael Baker Engineering, Inc. Michael Baker 3000 Regency Pkwy Suite 600 Cary, NC 27518 NC License: F-1084 INTERNATIONAL

HYDRAULICS ENGINEER
NORTH CAROLINA PROFESSIONAL SEAL 20117 ENGINEER SCOTT WILDMAN BROCKHART
DocuSigned by: Scott Wildman Brockhart
Michael Baker Engineering, Inc. Michael Baker 3000 Regency Pkwy Suite 600 Cary, NC 27518 NC License: F-1084 INTERNATIONAL

DOCUMENT NOT CONSIDERED FINAL UNLESS ALL SIGNATURES COMPLETED

REVISIONS

8/17/99

DETAIL 1
STANDARD 'V' DITCH
(Not to Scale)

-L- FROM STA. 13+63 TO STA. 14+22 LT

-L-
PI Sta 11+04.52
△ = 0° 42' 01.5" (RT)
D = 0° 20' 06.2"
L = 209.04'
T = 104.52'
R = 17,100.00'
DS = 55 mph

BRIDGE SKETCH - -L- OVER BUFFALO CREEK

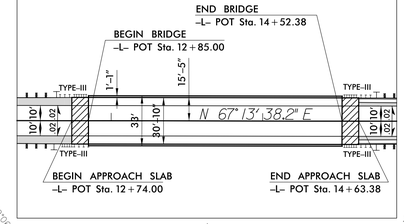

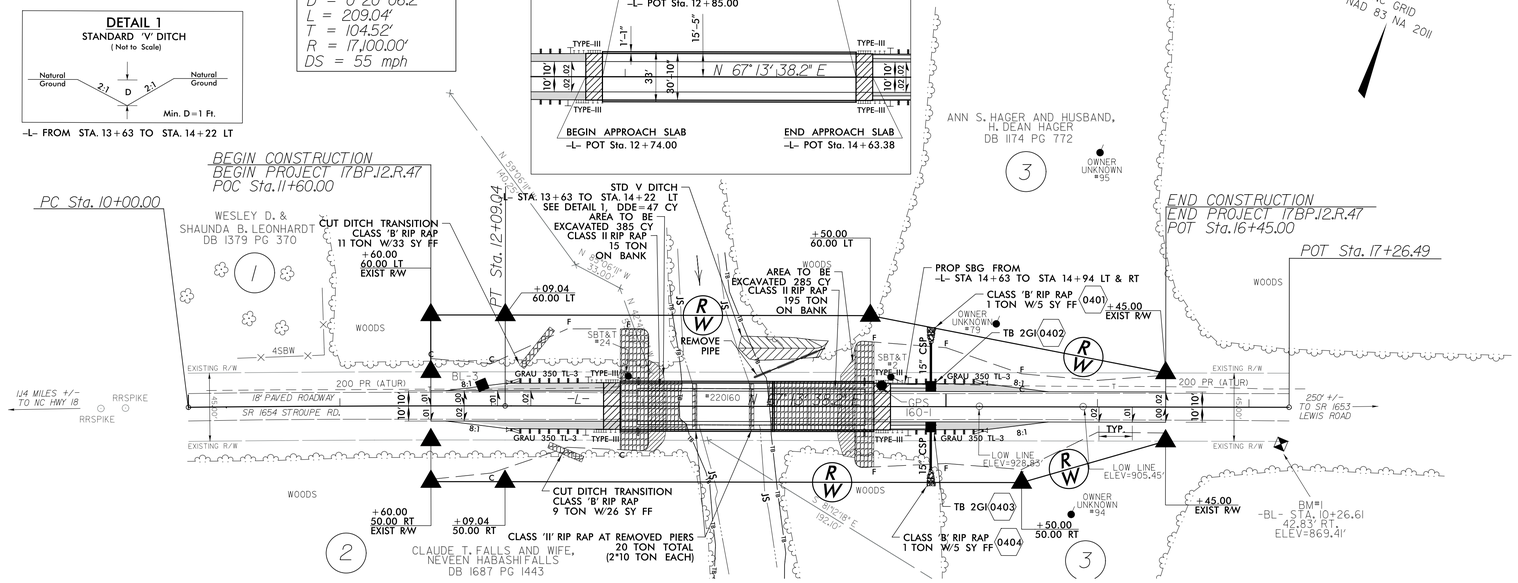

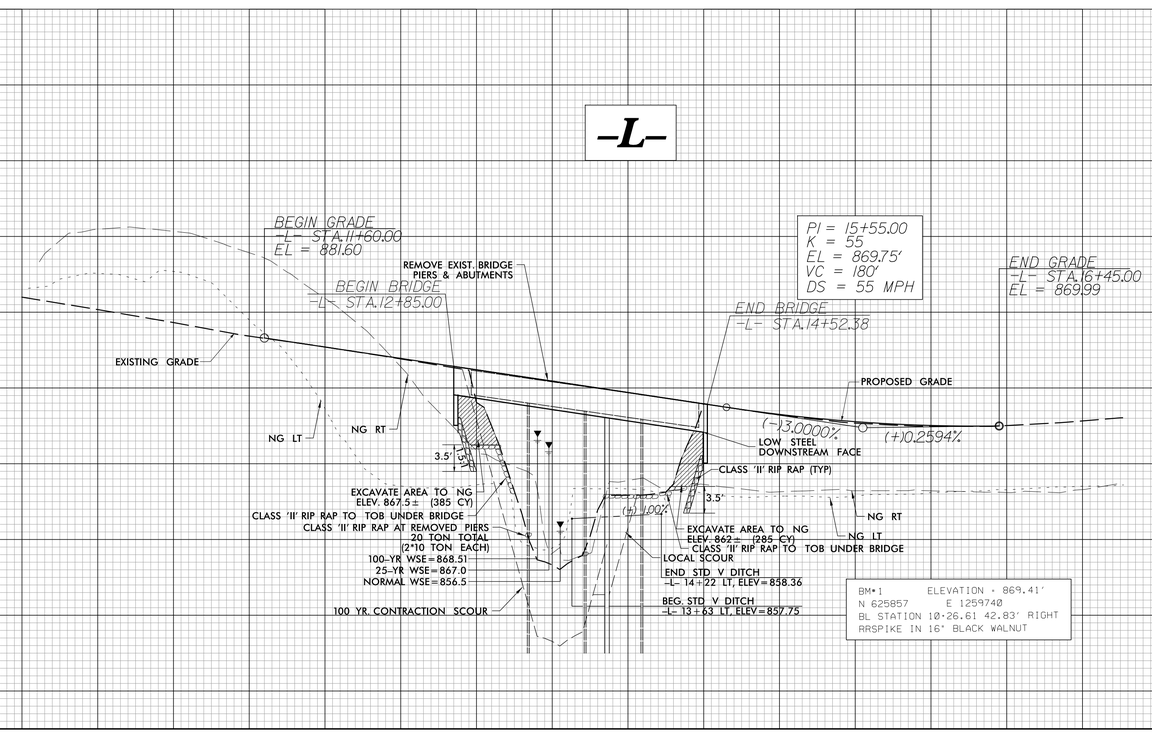

BM#1 ELEVATION = 869.41'
N 625857 E 1259740
BL STATION 10+26.61 42.83' RIGHT
RRSPIKE IN 16" BLACK WALNUT

NCDOT PERFORMANCE TABLE

	FREQUENCY				
	10yr.	25yr.	50yr.	100yr.	500yr.
NATURAL	865.6	866.3	866.8	867.42	868.2
EXISTING	866.2	867.1	867.8	868.65	869.8
PROPOSED	866.1	867.0	867.7	868.51	869.6

@SECTION 136671
62.5 FT. FROM US FACE OF BRIDGE

FEMA PERFORMANCE TABLE

	100yr.
DUPLICATE EFFECTIVE	868.85
CORRECTED EFFECTIVE	869.00
REVISED	868.87

@SECTION 136910
301.5 FT. FROM US FACE OF BRIDGE

4/28/2016 10:17:47 AM
C:\Users\tbuckner\Desktop\Proj\22-0160_RDY_PSH_04.dgn
USER: toddbuckner

STATE OF NORTH CAROLINA
DIVISION OF HIGHWAYS

TRANSPORTATION MANAGEMENT PLAN

CLEVELAND COUNTY

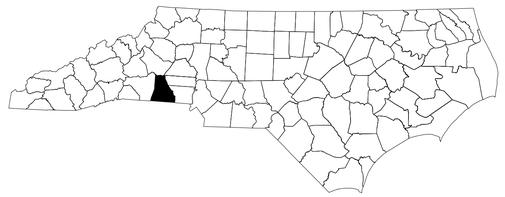

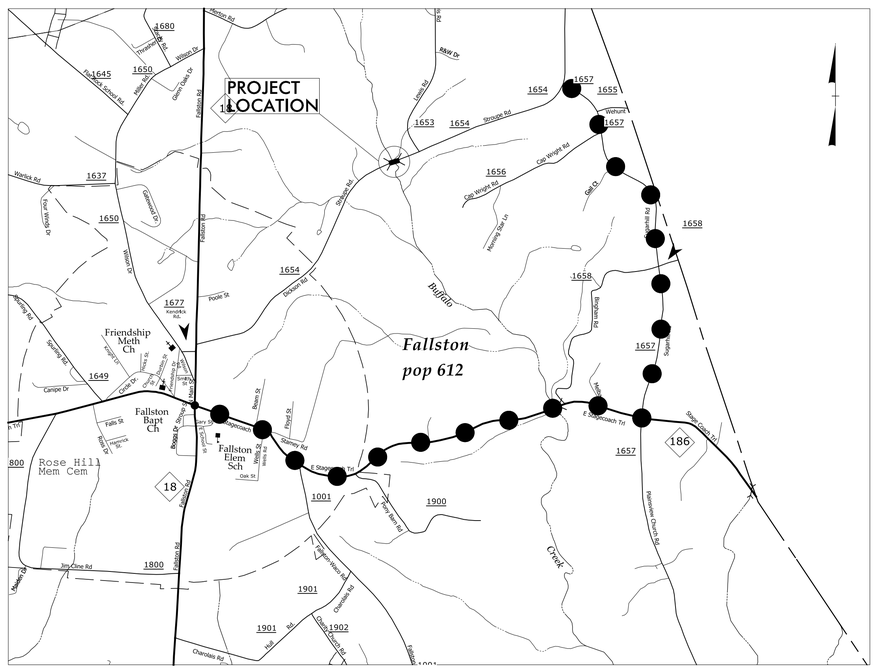

VICINITY MAP
(NOT TO SCALE)

DETOUR ROUTE

INDEX OF SHEETS

SHEET NO.	TITLE
TMP-1	TITLE SHEET, AND INDEX OF SHEETS
TMP-1A	LIST OF APPLICABLE ROADWAY STANDARD DRAWINGS, AND LEGEND
TMP-1B	GENERAL NOTES AND PHASING
TMP-2	OFFSITE DETOUR PLAN - STROUP ROAD (SR 1654)
TMP-3	STROUP ROAD SIGN DESIGN

SHEET NO.
TMP-1

17BP.12.R.47

TIP PROJECT:

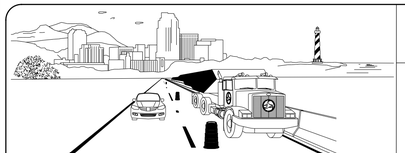

WORK ZONE SAFETY & MOBILITY
"from the MOUNTAINS to the COAST"

N.C.D.O.T. WORK ZONE TRAFFIC CONTROL
1561 MAIL SERVICE CENTER (MSC) RALEIGH, NC 27699-1561
750 N. GREENFIELD PARKWAY, GARNER, NC 27529 (DELIVERY)
PHONE: (919) 773-2800 FAX: (919) 771-2745

J. S. BOURNE, P.E. STATE TRAFFIC MANAGEMENT ENGINEER
BYRON ENGLE, PE DIVISION TRAFFIC ENGINEER
TODD H. BUCKNER, PE TRAFFIC CONTROL PROJECT ENGINEER

DIVISION OF HIGHWAYS · STATE OF NORTH CAROLINA · DEPARTMENT OF TRANSPORTATION · WORK ZONE TRAFFIC CONTROL

DOCUMENT NOT CONSIDERED FINAL UNLESS ALL SIGNATURES COMPLETED

Michael Baker
INTERNATIONAL
MICHAEL BAKER ENGINEERING, INC.
8000 Regency Parkway, Suite 600
Cary, NC 27518
NC LICENSE NO. -F-1084

APPROVED: DocuSigned by: 1087011E67F6435...
DATE: 4/28/2016

SEAL

NORTH CAROLINA PROFESSIONAL SEAL 034367 ENGINEER TODD H. BUCKNER

4/28/2016 7:57:17 AM
R:\17BP.12.R.47\TrafficTrafficControl\TCP\17BP.12.R.47_tc_tsh.dgn
USER: todd.buckner

PROJ. REFERENCE NO.	SHEET NO.
17BP.12.R.47	TMP-1A

ROADWAY STANDARD DRAWINGS

THE FOLLOWING ROADWAY STANDARDS AS SHOWN IN "ROADWAY STANDARD DRAWINGS" - PROJECT SERVICES UNIT - N.C. DEPARTMENT OF TRANSPORTATION - RALEIGH, N.C., DATED JANAUARY 2012 ARE APPLICABLE TO THIS PROJECT AND BY REFERENCE HEREBY ARE CONSIDERED A PART OF THESE PLANS:

STD. NO.	TITLE
1101.01	WORK ZONE WARNING SIGNS
1101.03	TEMPORARY ROAD CLOSURES
1101.05	WORK ZONE VEHICLE ACCESSES
1101.11	TRAFFIC CONTROL DESIGN TABLES
1110.01	STATIONARY WORK ZONE SIGNS
1145.01	BARRICADES
1205.01	PAVEMENT MARKINGS - LINE TYPES AND OFFSETS
1205.02	PAVEMENT MARKINGS - TWO LANE AND MULTILANE ROADWAYS
1261.01	GUARDRAIL AND BARRIER DELINEATORS - INSTALLATION SPACING
1261.02	GUARDRAIL AND BARRIER DELINEATORS - TYPES AND MOUNTING
1262.01	GUARDRAIL END DELINEATION

LEGEND

GENERAL

- DIRECTION OF TRAFFIC FLOW
- DIRECTION OF PEDESTRIAN TRAFFIC FLOW
- EXIST. PVMT.
- NORTH ARROW
- PROPOSED PVMT.
- WORK AREA
- REMOVAL
- USER DEFINED (IF NEEDED)
- USER DEFINED (IF NEEDED)

TRAFFIC CONTROL DEVICES

- BARRICADE (TYPE III)
- CONE
- DRUM SKINNY DRUM TUBULAR MARKER
- TEMPORARY CRASH CUSHION
- FLASHING ARROW PANEL (TYPE C)
- FLAGGER
- LAW ENFORCEMENT
- TRUCK MOUNTED IMPACT ATTENUATOR (TMIA)
- CHANGEABLE MESSAGE SIGN

TEMPORARY SIGNING

- PORTABLE SIGN
- STATIONARY SIGN
- STATIONARY OR PORTABLE SIGN

SIGNALS

EXISTING PROPOSED TEMPORARY

PAVEMENT MARKINGS

- EXISTING LINES
- TEMPORARY LINES

PAVEMENT MARKERS

- CRYSTAL/CRYSTAL
- CRYSTAL/RED
- YELLOW/YELLOW

PAVEMENT MARKING SYMBOLS

PAVEMENT MARKING SYMBOLS

DOCUMENT NOT CONSIDERED FINAL UNLESS ALL SIGNATURES COMPLETED

APPROVED: Docu Signed by: 108701E07F6435... DATE: 4/28/2016

SEAL — NORTH CAROLINA PROFESSIONAL SEAL 034367 ENGINEER TODD H. BUCKNER

DIVISION OF HIGHWAYS · STATE OF NORTH CAROLINA · DEPARTMENT OF TRANSPORTATION · WORK ZONE TRAFFIC CONTROL

ROADWAY STANDARD DRAWINGS & LEGEND

Michael Baker Engineering, Inc.
Michael Baker INTERNATIONAL
8000 Regency Parkway
Suite 600
Cary, NC 27518
NC License: F-1084

4/27/2016 1:50:42 PM
R:\17BP.12.R.47\Traffic\TrafficControl\TCP\17BP.12.R.47_tc_sht1A.dgn
USER: toddbuckner

PROJ. REFERENCE NO.	SHEET NO.
17BP.12.R.47	TMP-1B

GENERAL NOTES

CHANGES MAY BE REQUIRED WHEN PHYSICAL DIMENSIONS IN THE DETAIL DRAWINGS, STANDARD DETAILS, AND ROADWAY DETAILS ARE NOT ATTAINABLE TO MEET FIELD CONDITIONS OR RESULT IN DUPLICATE OR UNDESIRED OVERLAPPING OF DEVICES. MODIFICATION MAY INCLUDE: MOVING, SUPPLEMENTING, COVERING, OR REMOVAL OF DEVICES AS DIRECTED BY THE ENGINEER.

THE FOLLOWING GENERAL NOTES APPLY AT ALL TIMES FOR THE DURATION OF THE CONSTRUCTION PROJECT EXCEPT WHEN OTHERWISE NOTED IN THE PLAN OR DIRECTED BY THE ENGINEER.

TRAFFIC PATTERN ALTERATIONS

A) NOTIFY THE ENGINEER TWENTY ONE (21) CALENDAR DAYS PRIOR TO ANY TRAFFIC PATTERN ALTERATION.

SIGNING

B) INSTALL ADVANCE WORK ZONE WARNING SIGNS WHEN WORK IS WITHIN 40 FT FROM THE EDGE OF TRAVEL LANE AND NO MORE THAN THREE (3) DAYS PRIOR TO THE BEGINNING OF CONSTRUCTION.

C) PROVIDE SIGNING AND DEVICES REQUIRED TO CLOSE THE ROAD ACCORDING TO THE ROADWAY STANDARD DRAWINGS AND TRAFFIC CONTROL PLANS.

PROVIDE SIGNING REQUIRED FOR THE OFF–SITE DETOUR ROUTE AS SHOWN IN THE TRAFFIC CONTROL PLANS.

D) COVER OR REMOVE ALL SIGNS AND DEVICES REQUIRED TO CLOSE THE ROAD WHEN ROAD CLOSURE IS NOT IN OPERATION.

COVER OR REMOVE ALL SIGNS REQUIRED FOR THE OFF–SITE DETOUR WHEN THE DETOUR IS NOT IN OPERATION.

E) ENSURE ALL NECESSARY SIGNING IS IN PLACE PRIOR TO ALTERING ANY TRAFFIC PATTERN.

TRAFFIC CONTROL DEVICES

F) PLACE TYPE III BARRICADES, WITH "ROAD CLOSED" SIGN R11–2 ATTACHED, OF SUFFICIENT LENGTH TO CLOSE ENTIRE ROADWAY.

PAVEMENT MARKINGS AND MARKERS

G) UPON COMPLETION OF ALL OTHER CONSTRUCTION OPERATIONS, INSTALL 2 APPLICATIONS OF PAINT PAVEMENT MARKINGS ON THE FINAL SURFACE, ACCORDING TO RSD 1205.01, 1205.02 AND 1205.12.

PHASING NOTES

TRAFFIC CONTROL PHASING

NOTES: COORDINATE WITH THE ENGINEER FOR INSTALLATION AND REMOVAL OF ALL SIGNING AND TRAFFIC CONTROL DEVICES.

STEP 1: USING RSD 1101.01, SHEET 3 OF 3, INSTALL ADVANCE WORK ZONE WARNING SIGNS ON STROUP ROAD (SR 1654).

STEP 2: USING RSD 1101.03, SHEET 1 OF 9 AND SHEET TMP–2, INSTALL DETOUR SIGNS AND BARRICADES AND CLOSE STROUP ROAD (SR 1654).

STEP 3: REMOVE EXISTING BRIDGE NO. 87 AND CONSTRUCT PROPOSED BRIDGE AND ROADWAY, UP TO AND INCLUDING THE FINAL LAYER OF SURFACE COURSE. PLACE FINAL PAVEMENT MARKINGS ON STROUP ROAD (SR 1654) FROM STA. 10+45.00 TO STA. 15+00.00.

STEP 4: REMOVE ALL ADVANCE WORK ZONE DETOUR SIGNS AND TRAFFIC CONTROL DEVICES AND OPEN STROUP ROAD (SR 1654) TO TRAFFIC.

DOCUMENT NOT CONSIDERED FINAL UNLESS ALL SIGNATURES COMPLETED

APPROVED: DocuSigned by: 1087011E67F6435... DATE: 4/28/2016

SEAL

NORTH CAROLINA PROFESSIONAL SEAL 034367 ENGINEER TODD H. BUCKNER

DIVISION OF HIGHWAYS · STATE OF NORTH CAROLINA · DEPARTMENT OF TRANSPORTATION · WORK ZONE TRAFFIC CONTROL

GENERAL NOTES AND PHASING

Michael Baker Engineering, Inc.
Michael Baker INTERNATIONAL
8000 Regency Parkway
Suite 600
Cary, NC 27518
NC License: F-1084

4/27/2016 1:50:43 PM
R:\17BP.12.R.47\Traffic\TrafficControl\TCP\17BP.12.R.47_tc_sht1B.dgn
USER: todd.buckner

PROJ. REFERENCE NO.	SHEET NO.
17BP.12.R.47	TMP-2

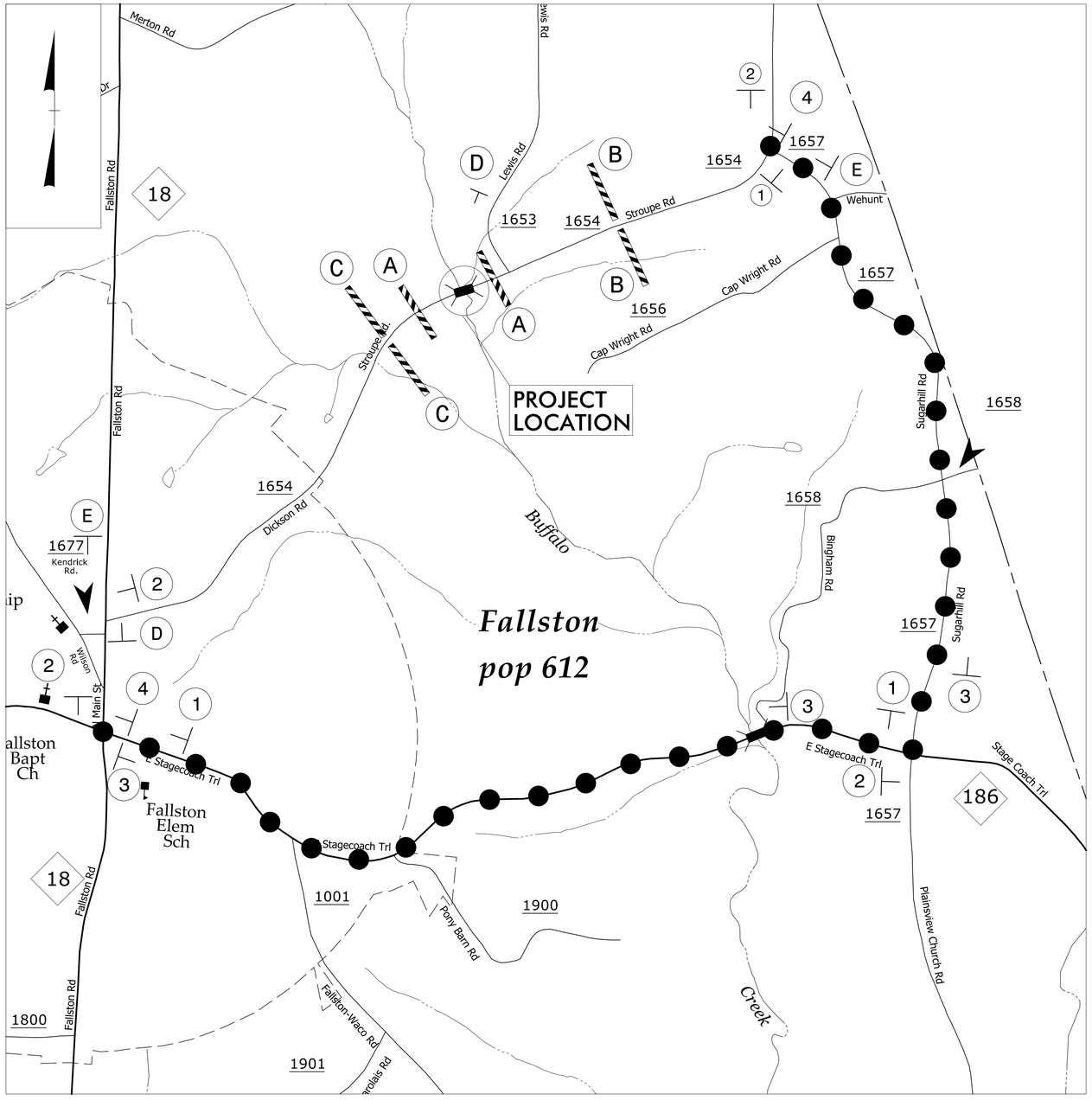

DETOUR ROUTE

REFER TO RSD 1101.03, SHEET 1 OF 9, FOR ADDITIONAL SIGN AND BARRICADE PLACEMENT

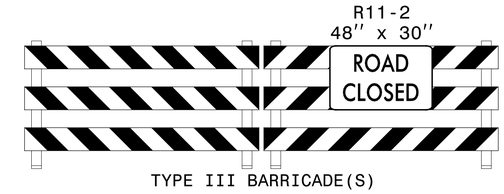

TYPE III BARRICADE(S)

A

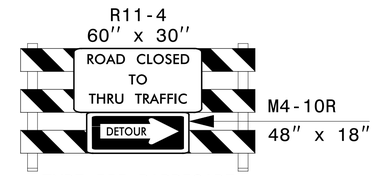

TYPE III BARRICADE

B

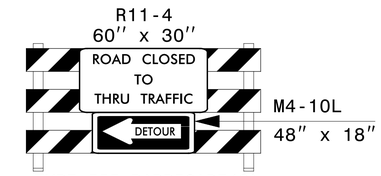

TYPE III BARRICADE(S)

C

D

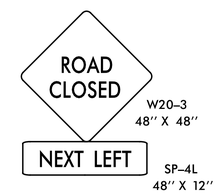

E

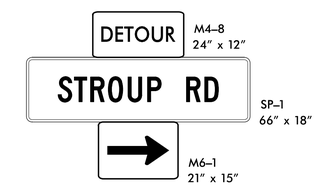

1

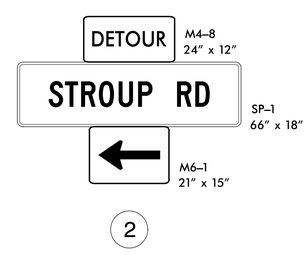

2

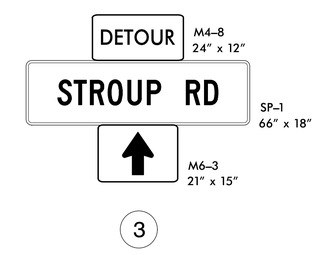

3

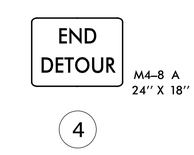

4

DOCUMENT NOT CONSIDERED FINAL UNLESS ALL SIGNATURES COMPLETED

APPROVED: DocuSigned by: 1087011E67F6435... DATE: 4/28/2016

SEAL

NORTH CAROLINA PROFESSIONAL SEAL 034367 ENGINEER TODD H. BUCKNER

DIVISION OF HIGHWAYS · STATE OF NORTH CAROLINA · DEPARTMENT OF TRANSPORTATION · WORK ZONE TRAFFIC CONTROL

OFFSITE DETOUR PLAN STROUP ROAD (SR 1654)

Michael Baker Engineering, Inc.
Michael Baker INTERNATIONAL
8000 Regency Parkway
Suite 600
Cary, NC 27518
NC License: F-1084

4/28/2016 8:04:01 AM
R:\TBP.12.R.47\Traffic\TrafficControl\TCP\TBP.12.R.47_tc_detour.dgn
USER: todd.buckner

PROJ. REFERENCE NO.	SHEET NO.
17BP.12.R.47	TMP-3

SIGN NUMBER: DET-1
TYPE: STATIONARY
QUANTITY: SEE PLANS

SIGN WIDTH: 4'-6"
HEIGHT: 1'-6"
TOTAL AREA: 6.8 Sq.Ft.

BORDER TYPE: FLUSH
RECESS: 0"
WIDTH: 0.63"
RADII: 1.5"

NO. Z BARS:
LENGTH:

BACKG COLOR: Fluorescent Orange
COPY COLOR: Black

SYMBOL	X	Y	WID	HT

MAT'L: 1.6 mm ALUMINUM

DESIGN BY: _____
PROJECT ID: 17BP.12.R.47

CHECKED BY: _____
DIV: 12

DATE: Sept 9, 2014

USE NOTES: 1,2

1. Legend and border shall be direct applied black non-reflective sheeting.
2. Background shall be NC GRADE B fluoresent orange retroreflective sheeting.

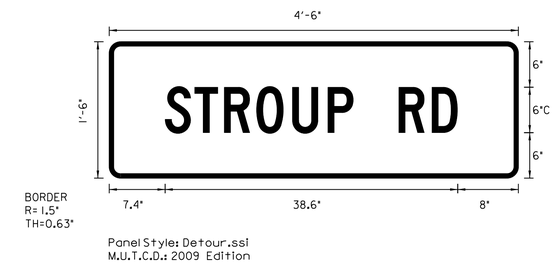

Spacing Factor is 1 unless specified otherwise

LETTER POSITIONS

Letter spacings are to start of next letter

S	T	R	O	U	P		R	D
7.4	11.3	15.2	19.4	24.2	28.9	32.2	38.2	42.6

Series/Size
Text Length
C 2000
38.6

FILENAME: 17BP.12.R.47_tc_sign

NORTH CAROLINA D.O.T. SIGN DETAIL

DOCUMENT NOT CONSIDERED FINAL
UNLESS ALL SIGNATURES COMPLETED

APPROVED: DocuSigned by: 1087011E6776435... DATE: 4/28/2016

SEAL

NORTH CAROLINA PROFESSIONAL SEAL 034367 ENGINEER TODD H. BUCKNER

DIVISION OF HIGHWAYS STATE OF NORTH CAROLINA DEPARTMENT OF TRANSPORTATION WORK ZONE TRAFFIC CONTROL

SPECIAL SIGN DESIGN
STROUP RD

Michael Baker Engineering, Inc.
Michael Baker INTERNATIONAL
8000 Regency Parkway
Suite 600
Cary, NC 27518
NC License: F-1084

4/27/2016 1:50:45 PM
R:\17BP.12.R.47\Traffic\TrafficControl\TCP\17BP.12.R.47_tc_sign.dgn
USER: todd.buckner

STATE OF NORTH CAROLINA
DIVISION OF HIGHWAYS

PAVEMENT MARKING PLAN

CLEVELAND COUNTY

PAVEMENT MARKING SCHEDULE

SYMBOL	DESCRIPTION (PAINT - 4")
PA	WHITE EDGELINE
PB	YELLOW DOUBLE CENTER

NOTE: FINAL PAINT TO BE A DOUBLE COAT.

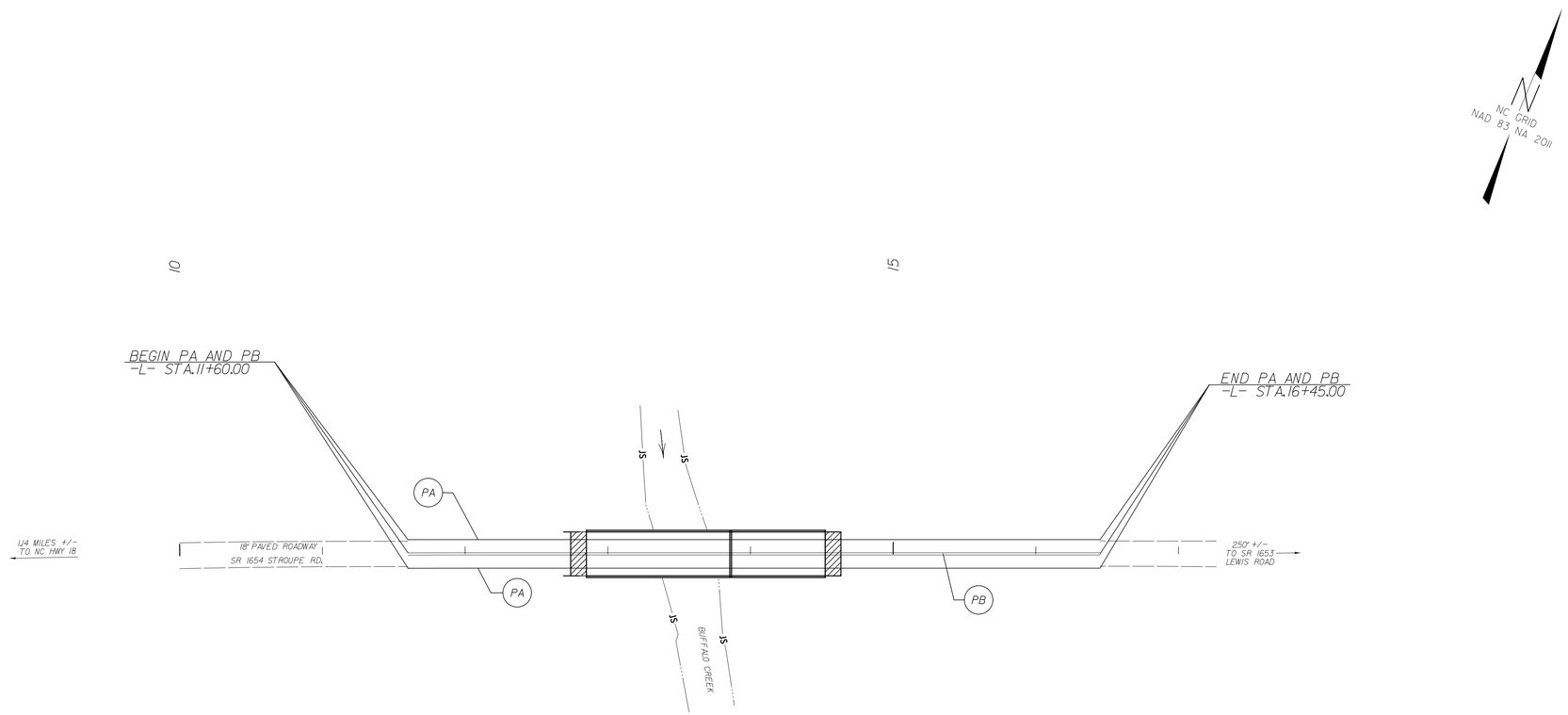

DOCUMENT NOT CONSIDERED FINAL
UNLESS ALL SIGNATURES COMPLETED

NOTE: NOT TO SCALE

Michael Baker
INTERNATIONAL
Michael Baker Engineering, Inc.
8000 Regency Pkwy
Suite 600
Cary, NC 27518
NC License: F-1084

APPROVED: DocuSigned by: 1087011E87F6435...
DATE: 4/28/2016

SEAL
NORTH CAROLINA PROFESSIONAL SEAL 034367 ENGINEER TODD H. BUCKNER

SHEET NO.
PMP-1

WBS ELEMENT: 17BP.12.R.47

4/27/2016 1:53:37 PM
R:\17BP.12.R.47\Traffic\TrafficControl\TCP\17BP.12.R.47_PMP1.dgn
USER: todd.buckner

TIP PROJECT: 17BP.12.R.47

STATE	STATE PROJECT REFERENCE NO.	SHEET NO.	TOTAL SHEETS
N.C.	17BP.12.R.47	EC-1	

STATE PROJ. NO.	F.A. PROJ. NO.	DESCRIPTION
17BP.12.R.47		PE, R/W, UTILITY, CONST

STATE OF NORTH CAROLINA
DIVISION OF HIGHWAYS

PLAN FOR PROPOSED
HIGHWAY EROSION CONTROL

CLEVELAND COUNTY

LOCATION: STRUCTURE NO. 160 OVER BUFFALO CREEK ON STROUP RD. SR 1654
TYPE OF WORK: GRADING, DRAINAGE, PAVING, & STRUCTURE

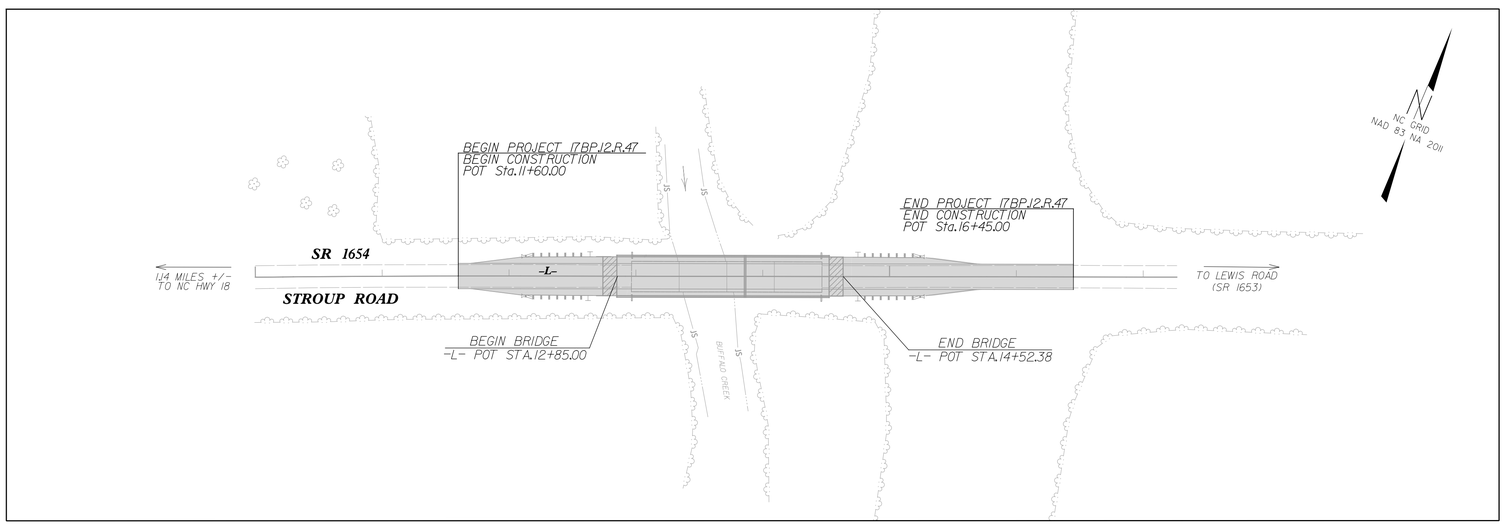

EROSION AND SEDIMENT CONTROL MEASURES

Std. #	Description	Symbol
1630.03	Temporary Silt Ditch	TSD
1630.05	Temporary Diversion	TD
1605.01	Temporary Silt Fence	
1606.01	Special Sediment Control Fence	
1622.01	Temporary Berms and Slope Drains	
1630.02	Silt Basin Type B	
1633.01	Temporary Rock Silt Check Type-A	
	Temporary Rock Silt Check Type-A with Matting and Polyacrylamide (PAM)	
1633.02	Temporary Rock Silt Check Type-B	
	Wattle / Coir Fiber Wattle	RW CFW
	Wattle / Coir Fiber Wattle with Polyacrylamide (PAM)	
1634.01	Temporary Rock Sediment Dam Type-A	
1634.02	Temporary Rock Sediment Dam Type-B	
1635.01	Rock Pipe Inlet Sediment Trap Type-A	
1635.02	Rock Pipe Inlet Sediment Trap Type-B	
1630.04	Stilling Basin	
1630.06	Special Stilling Basin	
	Rock Inlet Sediment Trap:	
1632.01	Type A	A
1632.02	Type B	B
1632.03	Type C	C
	Skimmer Basin	
	Tiered Skimmer Basin	
	Infiltration Basin	

PRELIMINARY PLANS
DO NOT USE FOR CONSTRUCTION

THIS PROJECT CONTAINS EROSION CONTROL PLANS FOR CLEARING AND GRUBBING PHASE OF CONSTRUCTION.

GRAPHIC SCALE

25 0 50
PLANS

25 0 50
PROFILE (HORIZONTAL)

5 0 10
PROFILE (VERTICAL)

THESE EROSION AND SEDIMENT CONTROL PLANS COMPLY WITH THE REGULATIONS SET FORTH BY THE NCG-010000 GENERAL CONSTRUCTION PERMIT EFFECTIVE AUGUST 3, 2011 ISSUED BY THE NORTH CAROLINA DEPARTMENT OF ENVIRONMENT AND NATURAL RESOURCES DIVISION OF WATER QUALITY.

Prepared in the Office of:

Michael Baker
INTERNATIONAL
Michael Baker Engineering, Inc.
8000 Regency Parkway, Suite 600
Cary, NC 27518
Professional Corporation License Number: F-1084

NCDOT DIVISION 12
NCDOT Contact:

STEVE RACKLEY, PE

2012 STANDARD SPECIFICATIONS

TODD H. BUCKNER, PE
LEVEL IIIA NAME

3542
LEVEL IIIA CERTIFICATION NO.

Roadway Standard Drawings

The following roadway english standards as appear in "Roadway Standard Drawings"– Roadway Design Unit – N. C. Department of Transportation – Raleigh, N. C., dated January 2012 and the latest revison thereto are applicable to this project and by reference hereby are considered a part of these plans.

1604.01	Railroad Erosion Control Detail	1632.01	Rock Inlet Sediment Trap Type A
1605.01	Temporary Silt Fence	1632.02	Rock Inlet Sediment Trap Type B
1606.01	Special Sediment Control Fence	1632.03	Rock Inlet Sediment Trap Type C
1607.01	Gravel Construction Entrance	1633.01	Temporary Rock Silt Check Type A
1622.01	Temporary Berms and Slope Drains	1633.02	Temporary Rock Silt Check Type B
1630.01	Riser Basin	1634.01	Temporary Rock Sediment Dam Type A
1630.02	Silt Basin Type B	1634.02	Temporary Rock Sediment Dam Type B
1630.03	Temporary Silt Ditch	1635.01	Rock Pipe Inlet Sediment Trap Type A
1630.04	Stilling Basin	1635.02	Rock Pipe Inlet Sediment Trap Type B
1630.05	Temporary Diversion	1640.01	Coir Fiber Baffle
1630.06	Special Stilling Basin	1645.01	Temporary Stream Crossing
1631.01	Matting Installation		

R:\17BP.12.R.47\Erosion Control\22-0160_EC_TSH_01.dgn
4/27/2016 1:54:28 PM
USER: tcobuckner

PROJECT REFERENCE NO.	SHEET NO.
17BP.12.R.44	EC-2
R/W SHEET NO.	

TODD H. BUCKNER, PE
LEVEL III NAME

3542
LEVEL III CERTIFICATION NO.

Michael Baker INTERNATIONAL
Michael Baker Engineering, Inc.
8000 Regency Parkway
Suite 600
Cary, NC 27518
NC License: F-1084

TEMPORARY ROCK SILT CHECK TYPE 'A' WITH EXCELSIOR MATTING AND POLYACRYLAMIDE (PAM)

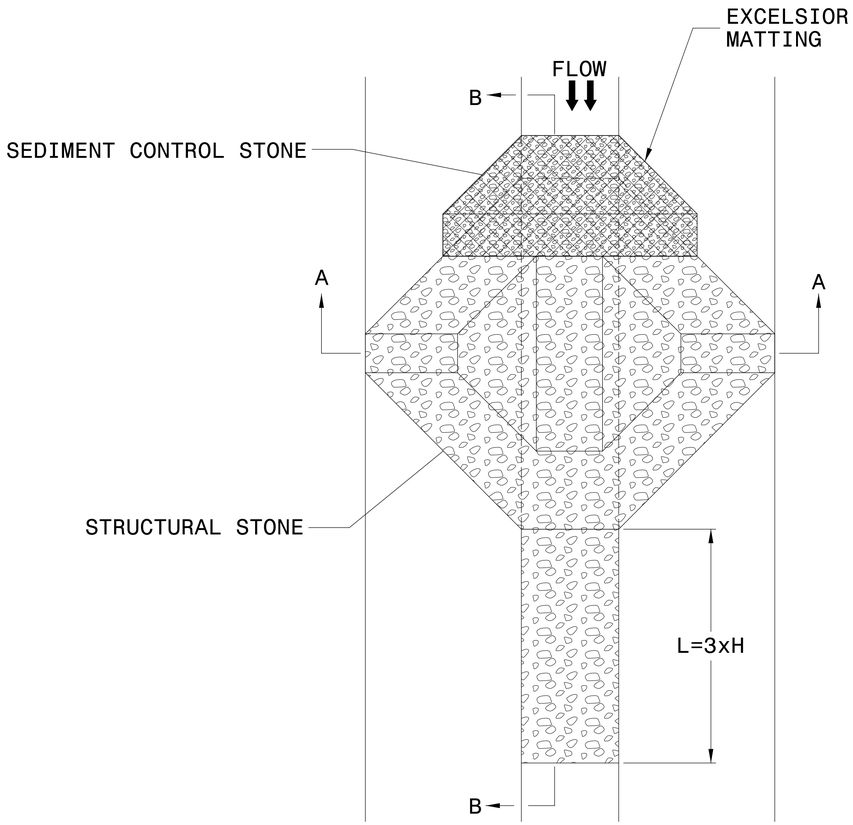

PLAN

NOTES

USE EXCELSIOR FOR MATTING MATERIAL AND ANCHOR MATTING SECTION AT TOP AND BOTTOM WITH CLASS B STONE.

PRIOR TO POLYACRYLAMIDE (PAM) APPLICATION, OBTAIN A SOIL SAMPLE FROM PROJECT LOCATION, AND FROM OFFSITE MATERIAL, AND ANALYZE FOR APPROPRIATE PAM FLOCCULANT TO BE APPLIED TO EACH ROCK SILT CHECK.

INITIALLY APPLY 4 OUNCES OF POLYACRYLAMIDE (PAM) TO TOP OF MATTING SECTION AND AFTER EVERY RAINFALL EVENT THAT EQUALS OR EXCEEDS 0.50 INCHES.

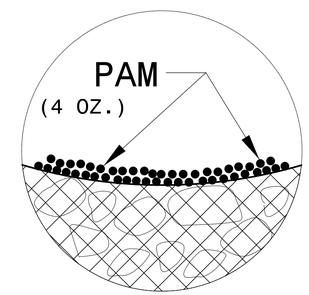

INSET A

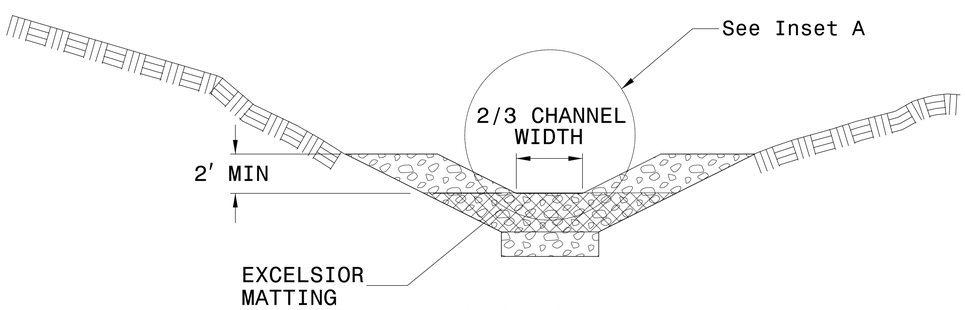

SECTION A-A

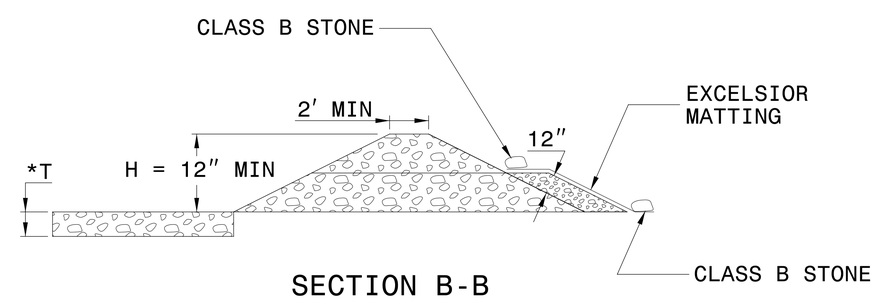

SECTION B-B

*T = 12" MIN., 18" MAX.

NOT TO SCALE

REVISIONS

5/14/99

4/27/2016 1:54:31PM
17BP.12.R.44 EC_PSH_02.dgn
Users\tocoldwell\Desktop\Erosion Control\22-0160_EC_PSH_02.dgn

PROJECT REFERENCE NO.	SHEET NO.
17BP.12.R.44	EC-3
R/W SHEET NO.	

TODD H. BUCKNER, PE
LEVEL III NAME

3542
LEVEL III CERTIFICATION NO.

Michael Baker INTERNATIONAL
Michael Baker Engineering, Inc.
8000 Regency Parkway
Suite 600
Cary, NC 27518
NC License: F-1084

DIVISION OF HIGHWAYS
STATE OF NORTH CAROLINA

SOIL STABILIZATION SUMMARY SHEET

MATTING FOR EROSION CONTROL

CONST SHEET NO.	LINE	FROM STATION	TO STATION	SIDE	ESTIMATE (SY)
4	L	12+40	12+85	LT	185
4	L	14+52	15+30	LT	200
4	L	14+52	15+30	RT	200
4	L	11+60	12+80	LT	85
				SUBTOTAL	670
MISCELLANEOUS MATTING TO BE INSTALLED AS DIRECTED BY THE ENGINEER					50
				TOTAL	720
				SAY	720

PERMANENT SOIL REINFORCEMENT MAT

CONST SHEET NO.	LINE	FROM STATION	TO STATION	SIDE	ESTIMATE (SY)
				SUBTOTAL	
		ADDITIONAL PSRM TO BE INSTALLED			
				TOTAL	
				SAY	

REVISIONS

5/14/99

4/27/2016 1:54:33 PM
:\17BP.12.R.47\ErosionControl\22-0160_EC_PSH_03.dgn
USER: todd.buckner

PROJECT REFERENCE NO.	SHEET NO.
17BP.12.R.44	EC-3A
R/W SHEET NO.	

TODD H. BUCKNER, PE
LEVEL III NAME

3542
LEVEL III CERTIFICATION NO.

Michael Baker INTERNATIONAL
Michael Baker Engineering, Inc.
8000 Regency Parkway
Suite 600
Cary, NC 27518
NC License: F-1084

DIVISION OF HIGHWAYS
STATE OF NORTH CAROLINA

SOIL STABILIZATION TIMEFRAMES

SITE DESCRIPTION	STABILIZATION TIME	TIMEFRAME EXCEPTIONS
PERIMETER DIKES, SWALES, DITCHES AND SLOPES	7 DAYS	NONE
HIGH QUALITY WATER (HQW) ZONES	7 DAYS	NONE
SLOPES STEEPER THAN 3:1	7 DAYS	IF SLOPES ARE 10' OR LESS IN LENGTH AND ARE NOT STEEPER THAN 2:1, 14 DAYS ARE ALLOWED.
SLOPES 3:1 OR FLATTER	14 DAYS	7 DAYS FOR SLOPES GREATER THAN 50' IN LENGTH.
ALL OTHER AREAS WITH SLOPES FLATTER THAN 4:1	14 DAYS	NONE, EXCEPT FOR PERIMETERS AND HQW ZONES.

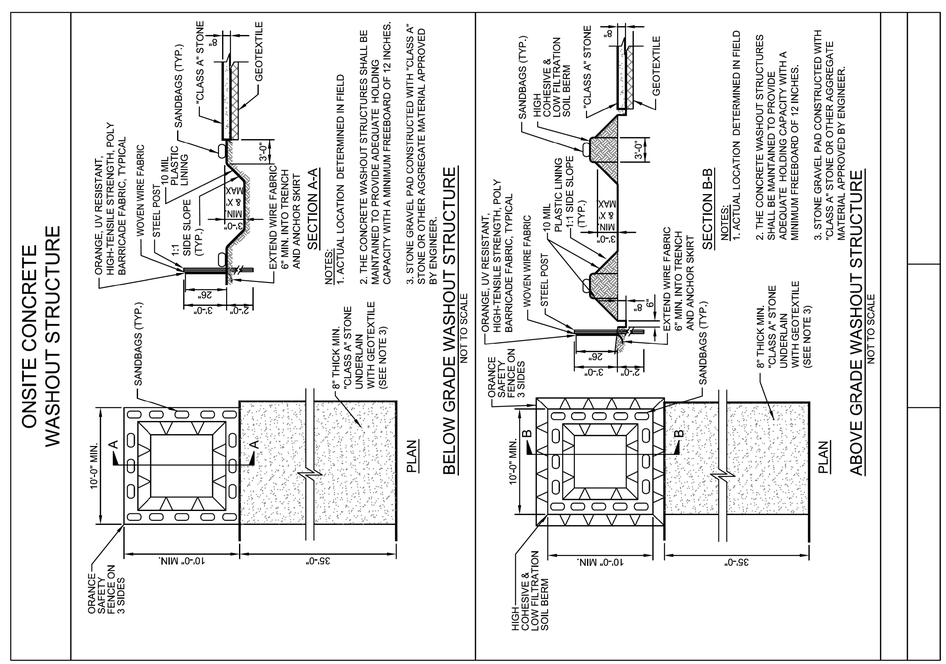

REVISIONS

5/14/99

4/27/2016 1:54:35 PM
\17BP.12.R.44\ErosionControl\22-0160_EC_PSH_03A.dgn
USER: toddbuckner

CLEARING AND GRUBBING PLAN

PROJECT REFERENCE NO.	SHEET NO.
17BP.12.R.47	EC. 4/CONST. 4
R/W SHEET NO.	

TODD H. BUCKNER, PE
LEVEL III NAME

3542
LEVEL III CERTIFICATION NO.

Michael Baker INTERNATIONAL
Michael Baker Engineering, Inc.
8000 Regency Parkway
Suite 600
Cary, NC 27518
NC License: F-1084

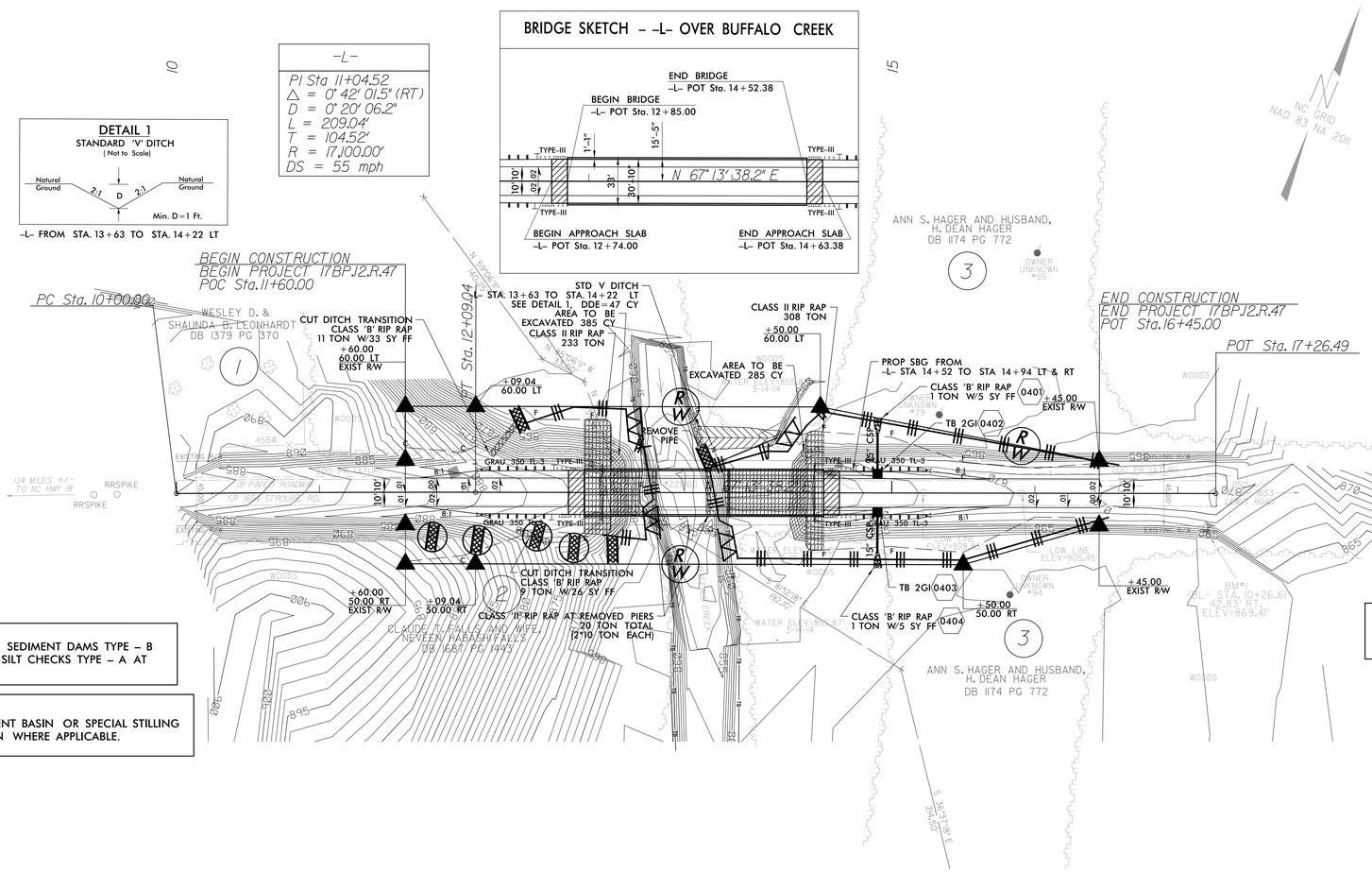

NOTE:
PLACE TEMPORARY ROCK SEDIMENT DAMS TYPE – B AND TEMPORARY ROCK SILT CHECKS TYPE – A AT DRAINAGE OUTLETS.

NOTE:
UTILIZE TEMPORARY SEDIMENT BASIN OR SPECIAL STILLING BASIN(S) AS STILLING BASIN WHERE APPLICABLE.

CLEARING AND GRUBBING EROSION CONTROL FOR CONSTRUCTION SHEET 4

REVISIONS

5/14/99

4/27/2016 1:55:03 PM
17BP.12.R.47_ErosionControl\22-0160_EC_PSH_04.dgn
USER: todd.buckner

EROSION CONTROL FOR FINAL GRADING PLAN

PROJECT REFERENCE NO.	SHEET NO.
17BP.12.R.47	EC. 5 CONST. 4
R/W SHEET NO.	____

TODD H. BUCKNER, PE
LEVEL III NAME

3542
LEVEL III CERTIFICATION NO.

Michael Baker INTERNATIONAL
Michael Baker Engineering, Inc.
8000 Regency Parkway
Suite 600
Cary, NC 27518
NC License: F-1084

Place Matting for Erosion Control on Slope as Work Allows.

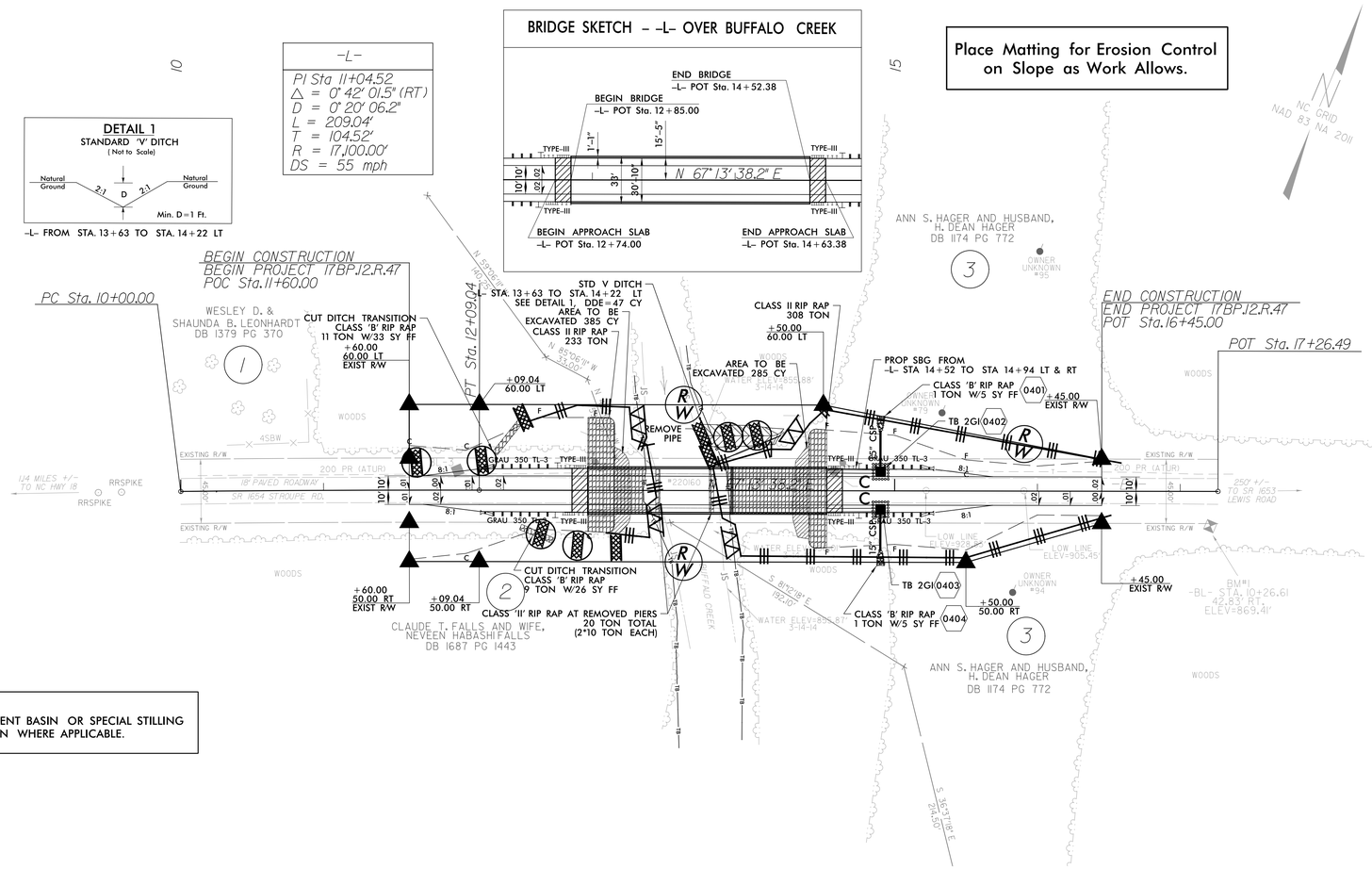

NOTE:
UTILIZE TEMPORARY SEDIMENT BASIN OR SPECIAL STILLING BASIN(S) AS STILLING BASIN WHERE APPLICABLE.

REVISIONS

5/14/99

4/27/2016 1:55:07 PM
C:\Projects\EC\EC_EROSIONCONTROL\22-0160_EC_PSH_05.dgn
USER: tcbuckner

WBS ELEMENT: 17BP.12.R.47

STATE PROJECT REFERENCE NO.	SHEET NO.
17BP.12.R.47	UO–1

STATE OF NORTH CAROLINA
DIVISION OF HIGHWAYS

UTILITIES BY OTHERS PLAN
CLEVELAND COUNTY

LOCATION: STRUCTURE NO. 160 OVER BUFFALO CREEK ON SR 1654

TYPE OF WORK: POWER DISTRIBUTION, POWER TRANSMISSION AND TELEPHONE RELOCATION

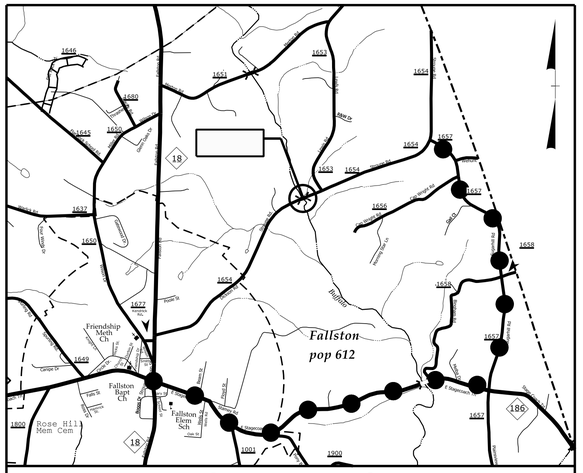

VICINITY MAP
DETOUR ROUTE

UO–2

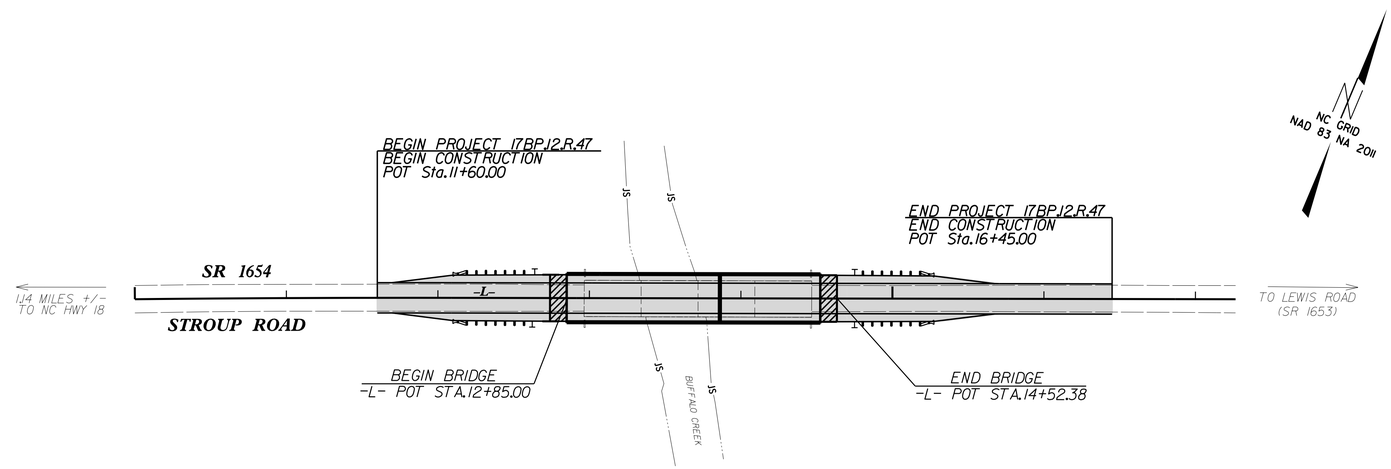

CLEARING ON THIS PROJECT SHALL BE PERFORMED TO THE LIMITS ESTABLISHED BY METHOD II.

THIS PROJECT IS NOT WITHIN ANY MUNICIPAL BOUNDARIES.

GRAPHIC SCALES

50 25 0 50 100
PLANS

50 25 0 50 100
PROFILE (HORIZONTAL)

10 5 0 10 20
PROFILE (VERTICAL)

INDEX OF SHEETS

SHEET NO.	DESCRIPTION
UO–1	TITLE SHEET
UO–2	UTILITIES BY OTHERS PLAN SHEET

UTILITY OWNERS ON PROJECT

(A) DUKE ENERGY PROGRESS (POWER TRANSMISSION)
(B) DUKE ENERGY PROGRESS (POWER DISTRIBUTION)
(C) AT&T (COMMUNICATIONS)

Michael Baker INTERNATIONAL
Michael Baker Engineering, Inc.
8000 Regency Parkway, Suite 600
Cary, NC 27518
919-463-5488

BRANDY CREECH
UTILITIES COORDINATION CONSULTANT

NCDOT CONTACTS:
STEVE RACKLEY, P.E.
DIVISION 12 BRIDGE MANAGER
CHAD DREWERY
DIVISION 12 UTILITY COORDINATOR

09/08/99
28-APR-2016 16:28
Y:\Projects\NCDOT\Div 12 On Call\17BP.12.R.47\Utilities\22-0160_ut_tsh_U01_psh.dgn
CNewsome AT CARYWMK00N3

PROJECT REFERENCE NO.	SHEET NO.
17BP.12.R.47	U0-2

UTILITIES BY OTHERS

NOTE:
ALL PROPOSED UTILITY WORK SHOWN ON THIS SHEET WILL BE DONE BY OTHERS

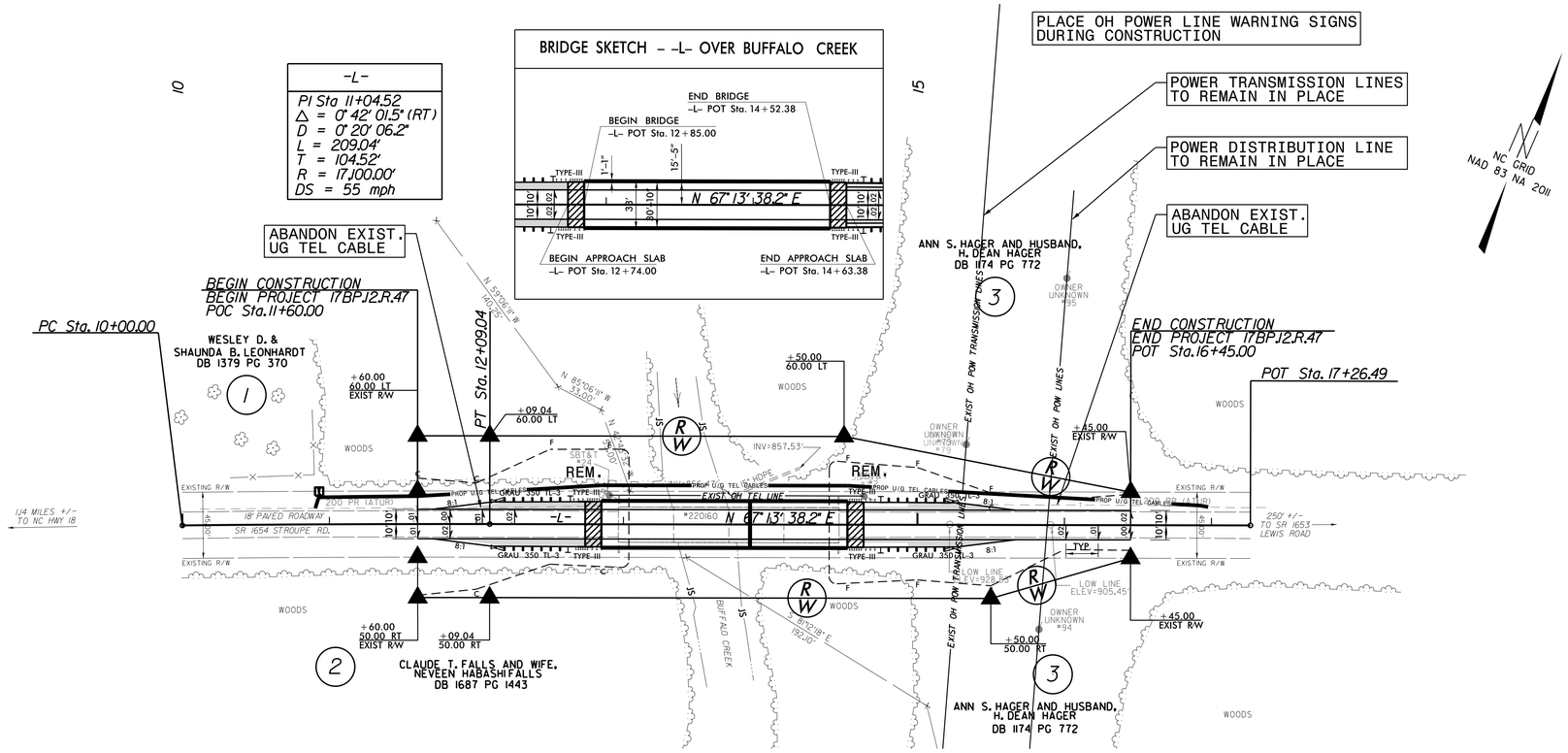

Michael Baker INTERNATIONAL

Michael Baker Engineering, Inc.
8000 Regency Parkway, Suite 600
Cary, NC 27518
919-463-5488

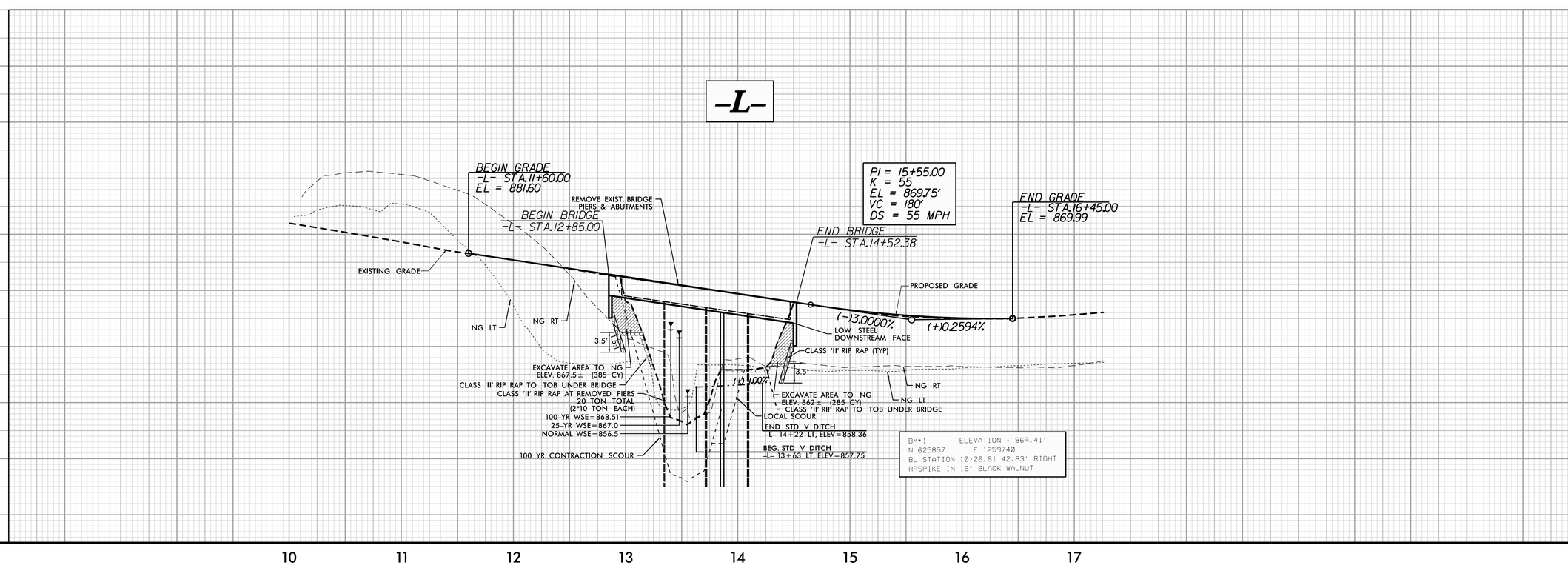

REVISIONS

8/17/99

28-APR-2016 16:28
s:\PROJECTS\RDT\Div 12 On Call\17BP.12.R.47\Utilities\22-0160_ut_rdy4_U02_psh.dgn
$$$$USERNAME$$$$ = FARRYMKDN3

STATE OF NORTH CAROLINA
DIVISION OF HIGHWAYS

CLEVELAND COUNTY
17BP.12.R.47

CROSS SECTION SUMMARY

Station L	Uncl. Exc. (cu. yd.)	Embt (cu. yd.)
11+60.0000	0	0
12+00.0000	173	2
12+50.0000	95	47
12+85.0000	36	69
Station **L**	**Uncl. Exc.** **(cu. yd.)**	**Embt** **(cu. yd.)**
14+52.3800	0	0
15+00.0000	40	142
15+50.0000	7	95
16+00.0000	8	42
16+45.0000	8	2

NOTE: APPROXIMATE QUANTITIES ONLY. UNCLASSIFIED EXCAVATION, SHOULDER BORROW, FINE GRADING, CLEARING AND GRUBBING, AND REMOVAL OF EXISTING PAVEMENT WILL BE PAID FOR AT THE CONTRACT LUMP SUM PRICE FOR "GRADING".

8/17/99
REVISIONS
4/27/2016 1:15:42 PM
R:\17BP.12.R.47\Roadway\CorridorModeling\22-0160_Rdy_XPL_01.dgn
USER: toddbuckner

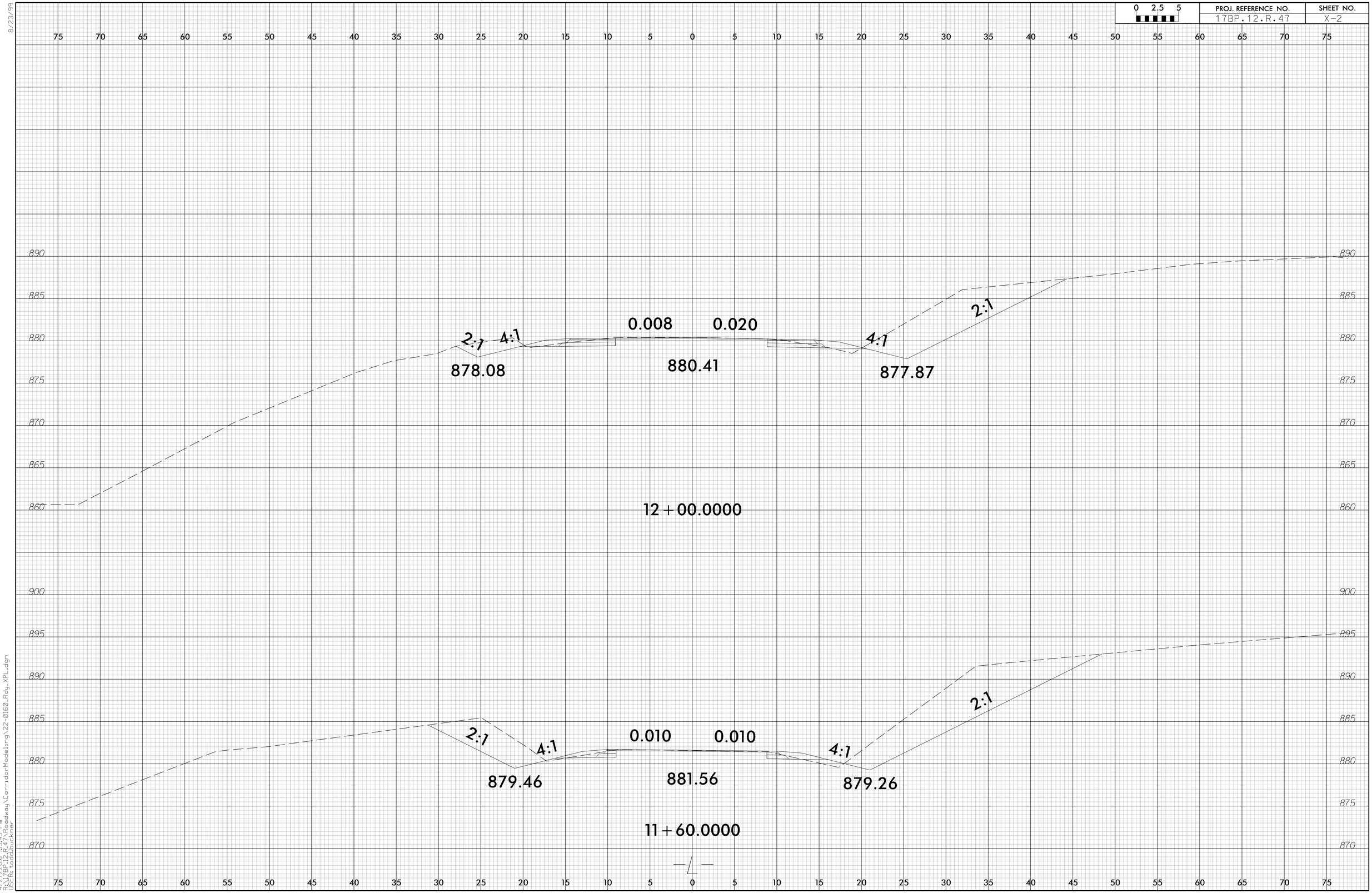

0 2.5 5
PROJ. REFERENCE NO.
17BP.12.R.47
SHEET NO.
X-2
8/23/99
2:1
4:1
0.008
0.020
878.08
880.41
877.87
12+00.0000
0.010
0.010
879.46
881.56
879.26
11+60.0000
4/27/2016 1:15:43 PM
R:\17BP.12.R.47\Roadway\CorridorModeling\22-0160_Rdy_XPL.dgn
USER: todd.buckner

PROJ. REFERENCE NO.	SHEET NO.
17BP.12.R.47	X-3

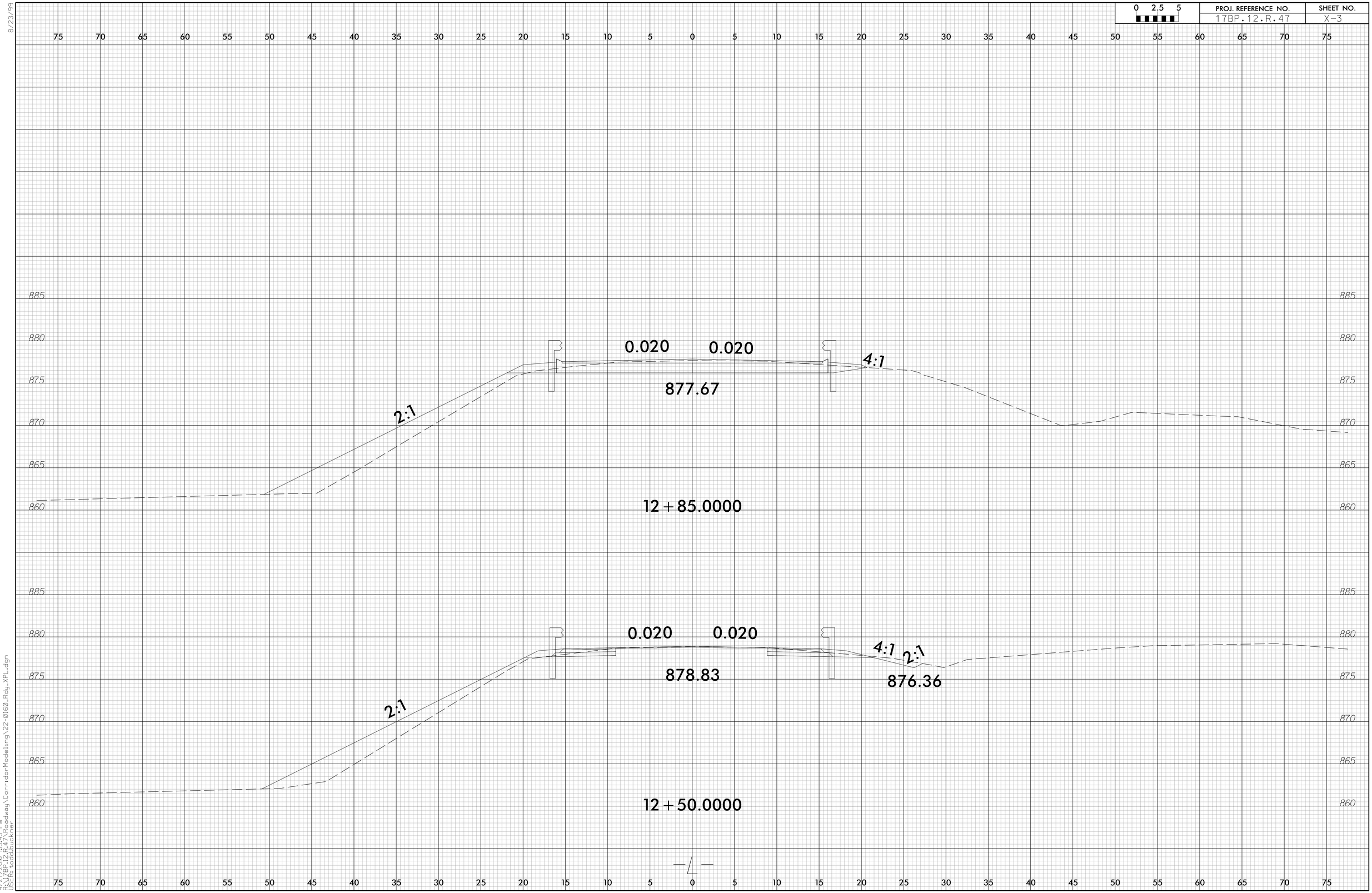

8/23/99

4/27/2016 1:15:43 PM
R:\17BP.12.R.47\Roadway\CorridorModeling\22-0160_Rdy_XPL.dgn
USER: todd.buckner

PROJ. REFERENCE NO.	SHEET NO.
17BP.12.R.47	X-4

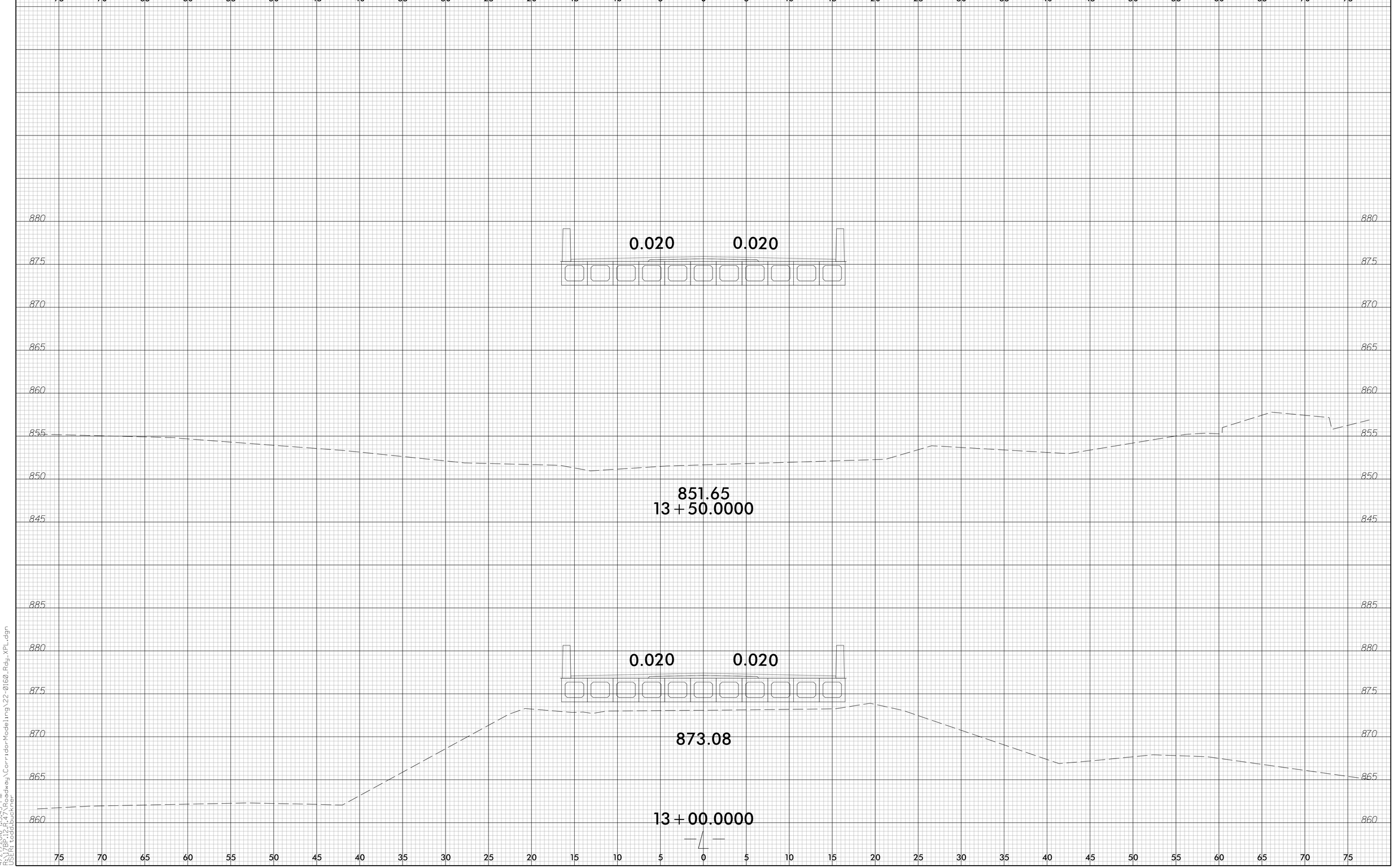

8/23/99

4/27/2016 1:15:43 PM
R:\17BP.12.R.47\Roadway\CorridorModeling\22-0160_Rdy_XPL.dgn
USER: todd.buckner

8/23/99

0 2.5 5	PROJ. REFERENCE NO.	SHEET NO.
	17BP.12.R.47	X-5

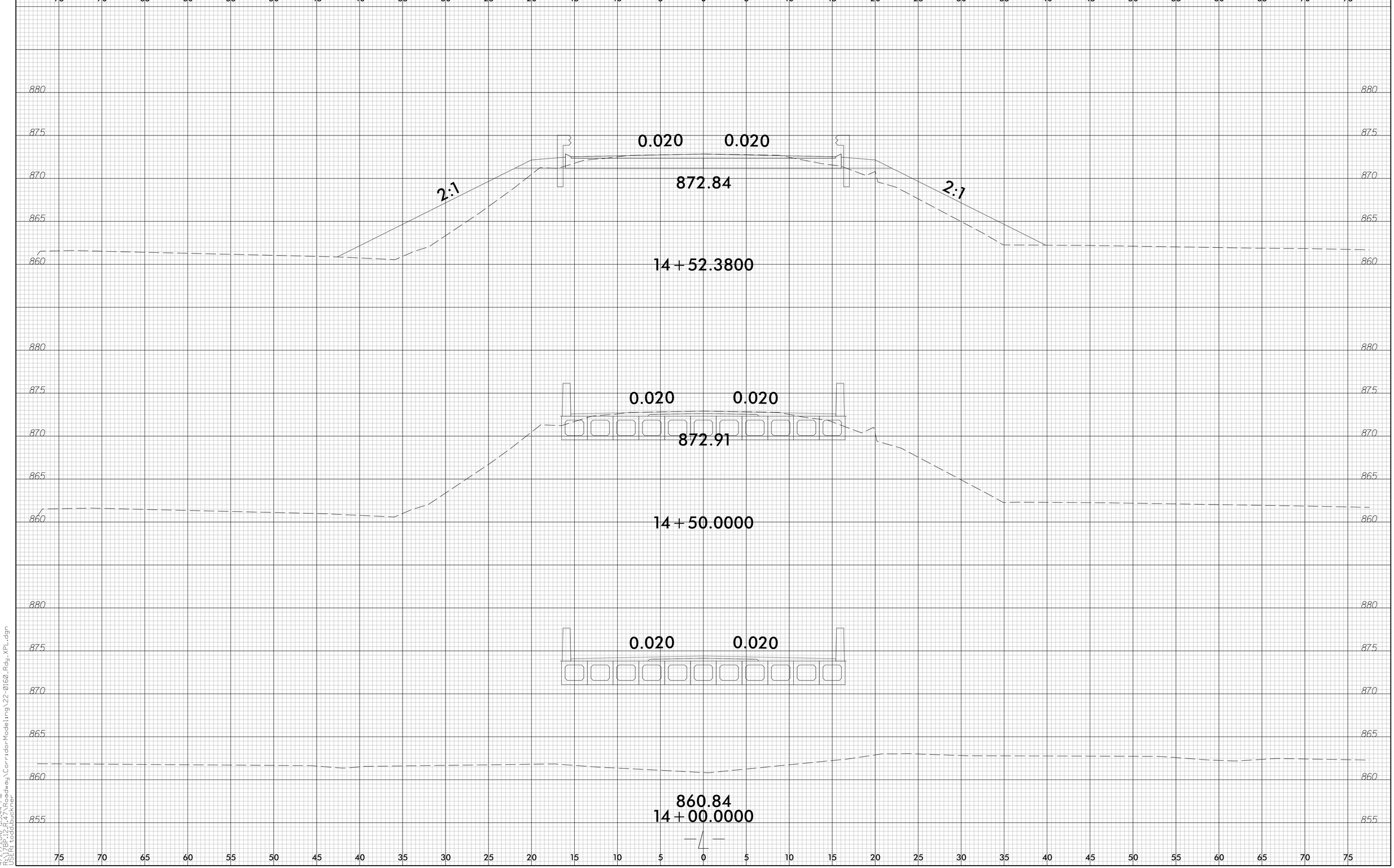

4/27/2016 11:54:44 PM
R:\17BP.12.R.47\Roadway\CorridorModeling\22-0160_Rdy_XPL.dgn
USER: tcadbickne

PROJ. REFERENCE NO.	SHEET NO.
17BP.12.R.47	X-6

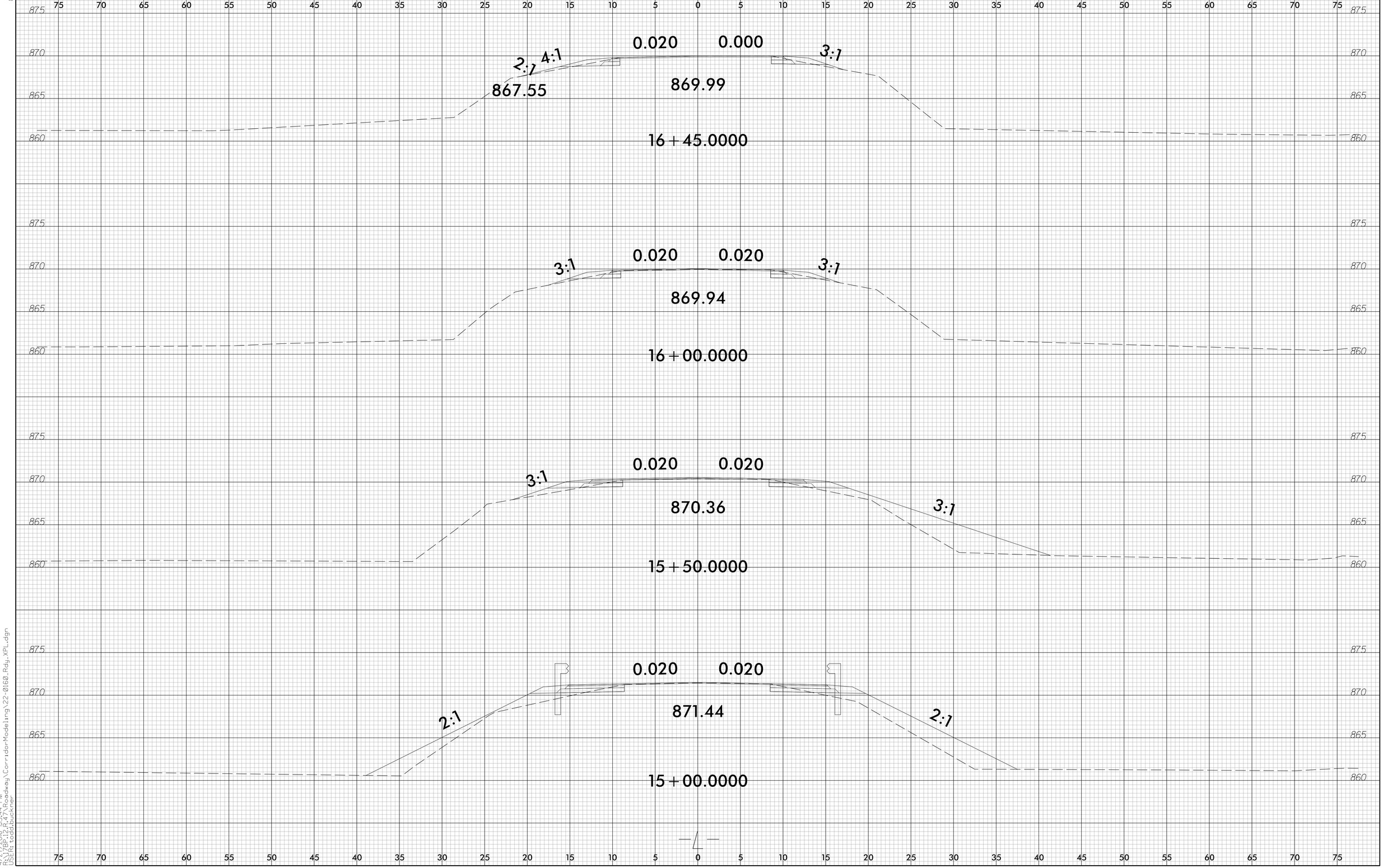

8/23/99

4/27/2016 1:15:44 PM
R:\17BP.12.R.47\Roadway\CorridorModeling\22-0160_Rdy_XPL.dgn
USER: todd.buckner

DocuSign Envelope ID: A9132627-D677-471D-B7DC-91DE9445B27E

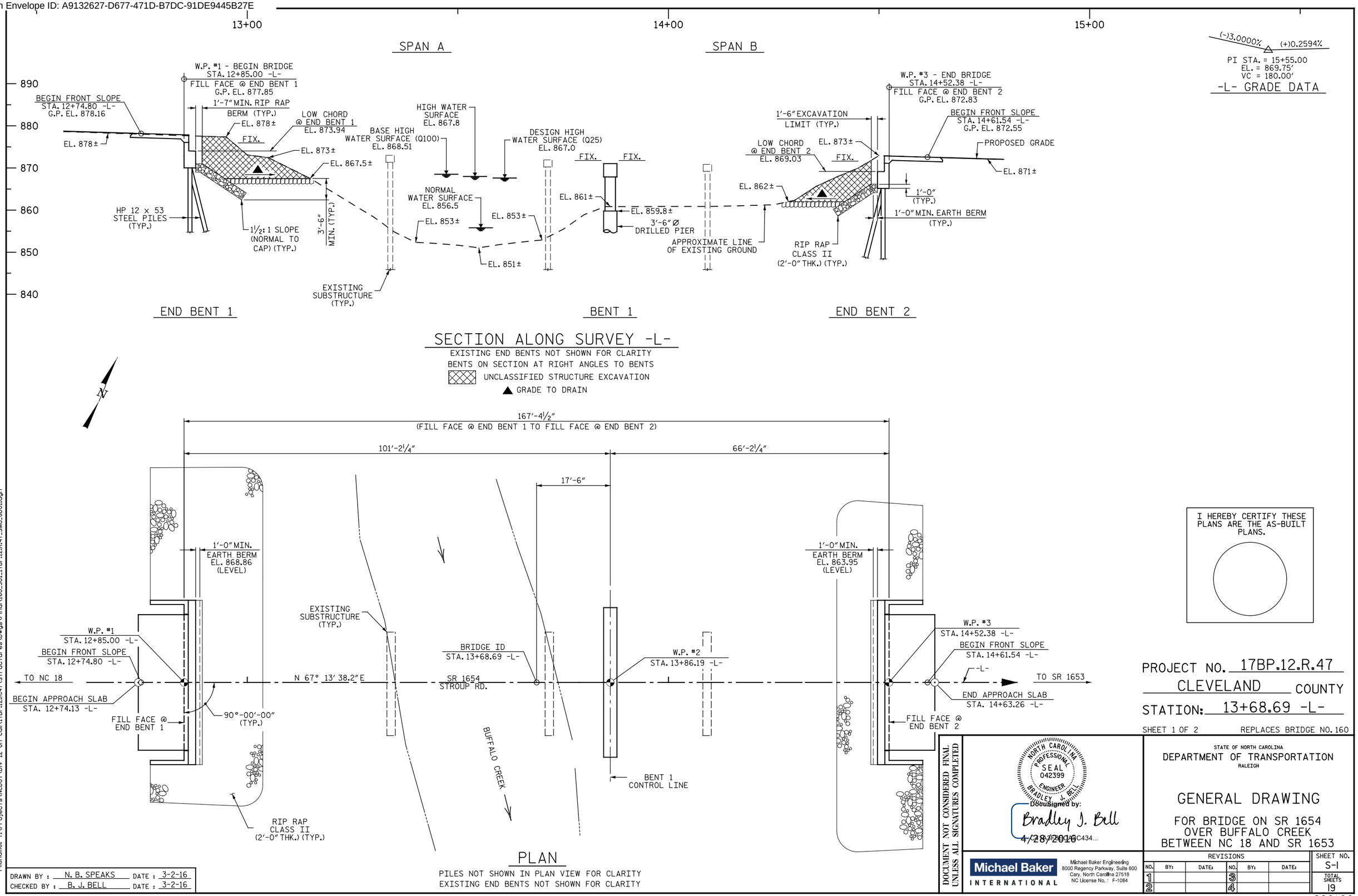

I HEREBY CERTIFY THESE PLANS ARE THE AS-BUILT PLANS.

PROJECT NO. 17BP.12.R.47

CLEVELAND COUNTY

STATION: 13+68.69 -L-

SHEET 1 OF 2 REPLACES BRIDGE NO. 160

DOCUMENT NOT CONSIDERED FINAL UNLESS ALL SIGNATURES COMPLETED

NORTH CAROLINA PROFESSIONAL SEAL 042399 ENGINEER BRADLEY J. BELL

DocuSigned by: Bradley J. Bell

4/28/2016

Michael Baker INTERNATIONAL

Michael Baker Engineering
8000 Regency Parkway, Suite 600
Cary, North Carolina 27518
NC License No.: F-1084

STATE OF NORTH CAROLINA
DEPARTMENT OF TRANSPORTATION
RALEIGH

GENERAL DRAWING

FOR BRIDGE ON SR 1654
OVER BUFFALO CREEK
BETWEEN NC 18 AND SR 1653

REVISIONS								SHEET NO.
NO.	BY:	DATE:	NO.	BY:	DATE:			S-1
1			3					TOTAL SHEETS
2			4					19

DRAWN BY : N. B. SPEAKS DATE : 3-2-16

CHECKED BY : B. J. BELL DATE : 3-2-16

nbspeaks
4/28/2016 3:38:08 PM
Filename: Y:\Projects\NCDOT\Div 12 On Call\17BP.12.R.47\Structures\Dwgs\Final\160_S01_17BP.12.R.47_SMU_GD01.dgn

220160

DocuSign Envelope ID: 9AE9D220-1436-46B0-AC7B-45D199C19B17

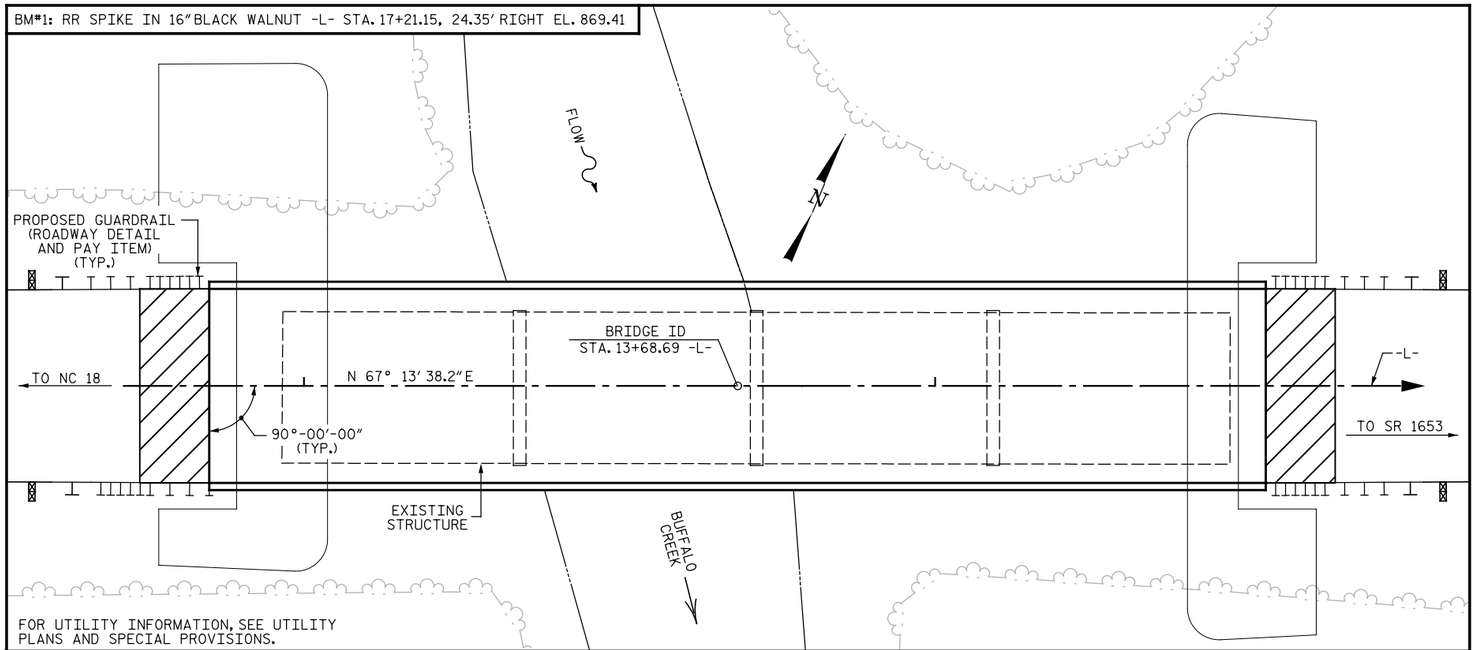

LOCATION SKETCH

HYDRAULIC DATA

DESIGN DISCHARGE	= 3640 CFS
FREQUENCY OF DESIGN FLOOD	= 25 YR
DESIGN HIGH WATER ELEVATION	= 867.0
DRAINAGE AREA	= 18.10 SQ. MI.
BASE DISCHARGE (Q100)	= 5280 CFS
BASE HIGH WATER ELEVATION	= 868.51

OVERTOPPING FLOOD DATA

OVERTOPPING DISCHARGE	= ✱✱ CFS
FREQUENCY OF OVERTOPPING FLOOD	= 500+ YR
OVERTOPPING FLOOD ELEVATION	= 870.0

✱✱ OVERTOPPING FLOOD IS > 500+ YEAR EVENT

FOUNDATION NOTES:

FOR PILES, SEE SECTION 450 OF THE STANDARD SPECIFICATIONS.

PILES AT END BENT NO. 1 ARE DESIGNED FOR A FACTORED RESISTANCE OF 112 TONS PER PILE.

PILES AT END BENT NO. 2 ARE DESIGNED FOR A FACTORED RESISTANCE OF 83 TONS PER PILE.

DRIVE PILES AT END BENT NO. 1 TO A REQUIRED DRIVING RESISTANCE OF 190 TONS PER PILE.

DRIVE PILES AT END BENT NO. 2 TO A REQUIRED DRIVING RESISTANCE OF 140 TONS PER PILE.

STEEL PILE POINTS ARE REQUIRED FOR STEEL H-PILES AT END BENT NO. 1 AND END BENT NO. 2. FOR STEEL PILE POINTS, SEE SECTION 450 OF THE STANDARD SPECIFICATIONS.

IT HAS BEEN ESTIMATED THAT A HAMMER WITH AN EQUIVALENT ENERGY IN THE RANGE OF 30,000 TO 40,000 FT-LBS PER BLOW WILL BE REQUIRED TO DRIVE PILES AT END BENT NO. 1 AND END BENT NO. 2. THIS ESTIMATED ENERGY RANGE DOES NOT RELEASE THE CONTRACTOR FROM PROVIDING DRIVING EQUIPMENT IN ACCORDANCE WITH SUB ARTICLE 450-3 (D)(2) OF THE STANDARD SPECIFICATIONS.

FOR DRILLED PIERS, SEE SECTION 411 OF THE STANDARD SPECIFICATIONS.

DRILLED PIERS AT BENT NO. 1 ARE DESIGNED FOR A FACTORED RESISTANCE OF 457 TONS PER PIER. CHECK FIELD CONDITIONS FOR THE REQUIRED TIP RESISTANCE OF 105 TSF.

INSTALL DRILLED PIERS AT BENT NO. 1 TO A TIP ELEVATION NO HIGHER THAN 815.7 FT AND WITH THE REQUIRED TIP RESISTANCE AND PENETRATION OF AT LEAST 3.0 FT INTO ROCK AS DEFINED BY ARTICLE 411-1 OF THE STANDARD SPECIFICATIONS.

PERMANENT STEEL CASINGS MAY BE REQUIRED FOR DRILLED PIERS AT BENT NO. 1. IF REQUIRED, DO NOT EXTEND PERMANENT CASINGS BELOW ELEVATION 821.0 FT WITHOUT PRIOR APPROVAL FROM THE ENGINEER. THE ENGINEER WILL DETERMINE THE NEED FOR PERMANENT CASINGS.

CSL TUBES ARE REQUIRED AND CSL TESTING MAY BE REQUIRED FOR DRILLED PIERS. THE ENGINEER WILL DETERMINE THE NEED FOR CSL TESTING. FOR CSL TESTING, SEE SECTION 411 OF THE STANDARD SPECIFICATIONS.

SID INSPECTION MAY BE REQUIRED FOR DRILLED PIERS AT BENT NO. 1. FOR SID INSPECTIONS, SEE SECTION 411 OF THE STANDARD SPECIFICATIONS.

THE SCOUR CRITICAL ELEVATION FOR BENT NO. 1 IS ELEVATION 845.0 FT. SCOUR CRITICAL ELEVATIONS ARE USED TO MONITOR POSSIBLE SCOUR DURING THE LIFE OF THE STRUCTURE.

NOTES:

ASSUMED LIVE LOAD = HL-93 OR ALTERNATE LOADING.

THIS BRIDGE HAS BEEN DESIGNED IN ACCORDANCE WITH THE AASHTO LRFD BRIDGE DESIGN SPECIFICATIONS.

THIS BRIDGE IS LOCATED IN SEISMIC ZONE 1.

FOR OTHER DESIGN DATA AND GENERAL NOTES, SEE SHEET SN.

FOR SUBMITTAL OF WORKING DRAWINGS, SEE SPECIAL PROVISIONS.

FOR FALSEWORK AND FORMWORK, SEE SPECIAL PROVISIONS.

FOR CRANE SAFETY, SEE SPECIAL PROVISIONS.

FOR GROUT FOR STRUCTURES, SEE SPECIAL PROVISIONS.

THE EXISTING STRUCTURE CONSISTING OF TWO 37'-6" SIMPLE SPANS AND TWO 37'-9" SIMPLE SPANS WITH A CLEAR ROADWAY WIDTH OF 24'-0" AND CONCRETE DECK ON STEEL I-BEAMS SUPPORTED BY CONCRETE CAPS ON TIMBER PILES, SOME OF WHICH ARE ENCASED IN CONCRETE, LOCATED AT THE PROPOSED SITE SHALL BE REMOVED.

THE SUBSTRUCTURE OF THE EXISTING BRIDGE INDICATED ON THE PLANS IS FROM THE BEST INFORMATION AVAILABLE. SINCE THIS INFORMATION IS SHOWN FOR THE CONVENIENCE OF THE CONTRACTOR, THE CONTRACTOR SHALL HAVE NO CLAIM WHATSOEVER AGAINST THE DEPARTMENT OF TRANSPORTATION FOR ANY DELAYS OR ADDITIONAL COST INCURRED BASED ON DIFFERENCES BETWEEN THE EXISTING BRIDGE SUBSTRUCTURE SHOWN ON THE PLANS AND THE ACTUAL CONDITIONS AT THE PROJECT SITE.

INASMUCH AS THE PAINT SYSTEM ON THE EXISTING STRUCTURAL STEEL CONTAINS LEAD, THE CONTRACTOR'S ATTENTION IS DIRECTED TO ARTICLE 107-1 OF THE STANDARD SPECIFICATIONS. ANY COSTS RESULTING FROM COMPLIANCE WITH APPLICABLE STATE OR FEDERAL REGULATIONS PERTAINING TO HANDLING OF MATERIALS CONTAINING LEAD BASED PAINT SHALL BE INCLUDED IN THE BID PRICE FOR "REMOVAL OF EXISTING STRUCTURE AT STA. 13+68.69 -L-".

REMOVAL OF THE EXISTING BRIDGE SHALL BE PERFORMED SO AS NOT TO ALLOW DEBRIS TO FALL INTO THE WATER. THE CONTRACTOR SHALL REMOVE THE BRIDGE AND SUBMIT PLANS FOR DEMOLITION IN ACCORDANCE WITH ARTICLE 402-2 OF THE STANDARD SPECIFICATIONS.

THE MATERIAL SHOWN ON SHEET 1 OF 2 IN THE CROSS-HATCHED AREA SHALL BE EXCAVATED FOR A DISTANCE OF 44 FT EACH SIDE OF CENTERLINE ROADWAY AS DIRECTED BY THE ENGINEER. THIS WORK WILL BE PAID FOR AT THE CONTRACT LUMP SUM PRICE FOR UNCLASSIFIED STRUCTURE EXCAVATION. SEE SECTION 412 OF THE STANDARD SPECIFICATIONS.

FOR EROSION CONTROL MEASURES, SEE EROSION CONTROL PLANS.

ASPHALT WEARING SURFACE IS INCLUDED IN ROADWAY QUANTITY ON ROADWAY PLANS.

THIS STRUCTURE HAS BEEN DESIGNED IN ACCORDANCE WITH "HEC 18-EVALUATING SCOUR AT BRIDGES".

FOR ASBESTOS ASSESSMENT FOR BRIDGE DEMOLITION AND RENOVATION ACTIVITIES, SEE SPECIAL PROVISIONS.

TOTAL BILL OF MATERIAL

	REMOVAL OF EXISTING STRUCTURE @ STA. 13+68.69 -L-	3'-6" Ø DRILLED PIERS IN SOIL	3'-6" Ø DRILLED PIERS NOT IN SOIL	PERMANENT STEEL CASING FOR 3'-6" Ø DRILLED PIER	SID INSPECTIONS	CSL TESTING	UNCLASSIFIED STRUCTURE EXCAVATION @ STA. 13+68.69 -L-	CLASS A CONCRETE	BRIDGE APPROACH SLABS	REINFORCING STEEL	SPIRAL COLUMN REINFORCING STEEL	HP 12 X 53 STEEL PILES		STEEL PILE POINTS	VERTICAL CONCRETE BARRIER RAIL	RIP RAP CLASS II (2'-0" THICK)	GEOTEXTILE FOR DRAINAGE	ELASTOMERIC BEARINGS	3'-0" x 3'-3" PRESTRESSED CONCRETE BOX BEAMS		ASBESTOS ASSESSMENT
	LUMP SUM	LF	LF	LF	EA	EA	LUMP SUM	CU. YDS.	LUMP SUM	LBS.	LBS.	NO.	LIN. FT.	EA.	LIN. FT.	TONS	SY	LUMP SUM	NO.	LIN. FT.	LUMP SUM
SUPERSTRUCTURE									LUMP SUM						330.3			LUMP SUM	22	1815	
END BENT 1							LUMP SUM	29.0		4,610		7	365	7		247	274				
BENT 1		106.8	26.0	120	3	1		20.8		11,207	3,311										
END BENT 2							LUMP SUM	29.0		4,610		7	295	7		190	211				
TOTAL	LUMP SUM	106.8	26.0	120	3	1	LUMP SUM	78.8	LUMP SUM	20,427	3,311	14	660	14	330.3	437	485	LUMP SUM	22	1815	LUMP SUM

PROJECT NO. 17BP.12.R.47
CLEVELAND COUNTY
STATION: 13+68.69 -L-

SHEET 2 OF 2

DRAWN BY : N. B. SPEAKS DATE : 3-2-16
CHECKED BY : B. J. BELL DATE : 3-2-16

DOCUMENT NOT CONSIDERED FINAL UNLESS ALL SIGNATURES COMPLETED

NORTH CAROLINA PROFESSIONAL SEAL 042399 ENGINEER BRADLEY J. BELL

DocuSigned by: Bradley J. Bell
4/28/2016 ...C434...

Michael Baker INTERNATIONAL
Michael Baker Engineering
8000 Regency Parkway, Suite 600
Cary, North Carolina 27518
NC License No.: F-1084

STATE OF NORTH CAROLINA
DEPARTMENT OF TRANSPORTATION
RALEIGH

GENERAL DRAWING
FOR BRIDGE ON SR 1654
OVER BUFFALO CREEK
BETWEEN NC 18 AND SR 1653

REVISIONS						SHEET NO.
NO.	BY:	DATE:	NO.	BY:	DATE:	S-2
1			3			TOTAL SHEETS
2			4			19

220160

nbspeaks 4/28/2016 3:39:09 PM
Filename: Y:\Projects\NCDOT\Div 12 On Call\17BP.12.R.47\Structures\Dwgs\Final\160_S01_17BP.12.R.47_SMU_GD02.dgn

LOAD AND RESISTANCE FACTOR RATING (LRFD) SUMMARY FOR PRESTRESSED CONCRETE GIRDERS

LEVEL		VEHICLE	WEIGHT (W) (TONS)	CONTROLLING LOAD RATING	MINIMUM RATING FACTORS	TONS = W X RF	STRENGTH I LIMIT STATE											SERVICE III LIMIT STATE						COMMENT NUMBER
								MOMENT					SHEAR						MOMENT					
							LIVELOAD FACTORS	DISTRIBUTION FACTORS (DF)	RATING FACTOR	SPAN	GIRDER LOCATION	DISTANCE FROM LEFT END OF SPAN (ft)	DISTRIBUTION FACTORS (DF)	RATING FACTOR	SPAN	GIRDER LOCATION	DISTANCE FROM LEFT END OF SPAN (ft)	LIVELOAD FACTORS	DISTRIBUTION FACTORS (DF)	RATING FACTOR	SPAN	GIRDER LOCATION	DISTANCE FROM LEFT END OF SPAN (ft)	
DESIGN LOAD RATING		HL-93(Inv)	N/A	(1)	**1.04**	--	1.75	0.272	1.26	A	EL	49.25	0.489	1.34	A	EL	4.925	0.80	0.272	**1.04**	A	EL	**49.25**	
		HL-93(Opr)	N/A	--	1.63	--	1.35	0.272	1.63	A	EL	49.25	0.489	1.73	A	EL	4.925	N/A	--	--	--	--	--	
		HS-20(Inv)	36.000	(2)	**1.44**	51.840	1.75	0.272	1.75	A	EL	49.25	0.489	1.81	A	EL	4.925	0.80	0.272	**1.44**	A	EL	**49.25**	
		HS-20(Opr)	36.000	--	2.27	81.756	1.35	0.272	2.27	A	EL	49.25	0.489	2.35	A	EL	4.925	N/A	--	--	--	--	--	
LEGAL LOAD RATING	SV	SNSH	13.500	--	3.41	46.079	1.40	0.272	5.19	A	EL	49.25	0.489	5.59	A	EL	4.925	0.80	0.272	3.41	A	EL	49.25	
		SNGARBS2	20.000	--	2.47	49.452	1.40	0.272	3.76	A	EL	49.25	0.489	3.91	A	EL	4.925	0.80	0.272	2.47	A	EL	49.25	
		SNAGRIS2	22.000	--	2.31	50.885	1.40	0.272	3.52	A	EL	49.25	0.489	3.60	A	EL	4.925	0.80	0.272	2.31	A	EL	49.25	
		SNCOTTS3	27.250	--	1.70	46.228	1.40	0.272	2.58	A	EL	49.25	0.489	2.78	A	EL	4.925	0.80	0.272	1.70	A	EL	49.25	
		SNAGGRS4	34.925	--	1.39	48.556	1.40	0.272	2.11	A	EL	49.25	0.489	2.26	A	EL	4.925	0.80	0.272	1.39	A	EL	49.25	
		SNS5A	35.550	--	1.36	48.398	1.40	0.272	2.07	A	EL	49.25	0.489	2.27	A	EL	4.925	0.80	0.272	1.36	A	EL	49.25	
		SNS6A	39.950	--	1.24	49.456	1.40	0.272	1.88	A	EL	49.25	0.489	2.05	A	EL	4.925	0.80	0.272	1.24	A	EL	49.25	
		SNS7B	42.000	--	1.18	49.496	1.40	0.272	1.79	A	EL	49.25	0.489	2.00	A	EL	4.925	0.80	0.272	1.18	A	EL	49.25	
	TTST	TNAGRIT3	33.000	--	1.51	49.709	1.40	0.272	2.29	A	EL	49.25	0.489	2.46	A	EL	4.925	0.80	0.272	1.51	A	EL	49.25	
		TNT4A	33.075	--	1.51	49.942	1.40	0.272	2.30	A	EL	49.25	0.489	2.41	A	EL	4.925	0.80	0.272	1.51	A	EL	49.25	
		TNT6A	41.600	--	1.22	50.926	1.40	0.272	1.86	A	EL	49.25	0.489	2.09	A	EL	4.925	0.80	0.272	1.22	A	EL	49.25	
		TNT7A	42.000	--	1.22	51.442	1.40	0.272	1.86	A	EL	49.25	0.489	2.05	A	EL	4.925	0.80	0.272	1.22	A	EL	49.25	
		TNT7B	42.000	--	1.25	52.657	1.40	0.272	1.91	A	EL	49.25	0.489	1.96	A	EL	4.925	0.80	0.272	1.25	A	EL	49.25	
		TNAGRIT4	43.000	--	1.20	51.711	1.40	0.272	1.83	A	EL	49.25	0.489	1.91	A	EL	4.925	0.80	0.272	1.20	A	EL	49.25	
		TNAGT5A	45.000	--	1.14	51.236	1.40	0.272	1.73	A	EL	49.25	0.489	1.87	A	EL	4.925	0.80	0.272	1.14	A	EL	49.25	
		TNAGT5B	45.000	(3)	**1.13**	50.805	1.40	0.272	1.72	A	EL	49.25	0.489	1.82	A	EL	4.925	0.80	0.272	**1.13**	A	EL	**49.25**	

LOAD FACTORS

DESIGN LOAD RATING FACTORS	LIMIT STATE	γ_{DC}	γ_{DW}
	STRENGTH I	1.25	1.50
	SERVICE III	1.00	1.00

NOTES

MINIMUM RATING FACTORS ARE BASED ON THE STRENGTH I AND SERVICE III LIMIT STATES.

ALLOWABLE STRESSES FOR SERVICE III LIMIT STATE ARE AS REQUIRED FOR DESIGN.

(#) CONTROLLING LOAD RATING

(1) DESIGN LOAD RATING (HL-93)

(2) DESIGN LOAD RATING (HS-20)

(3) LEGAL LOAD RATING **

** SEE CHART FOR VEHICLE TYPE

GIRDER LOCATION

I - INTERIOR GIRDER
EL - EXTERIOR LEFT GIRDER
ER - EXTERIOR RIGHT GIRDER

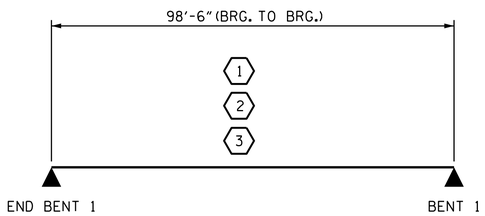

SPAN A

LRFR SUMMARY

PROJECT NO. 17BP.12.R.47
CLEVELAND COUNTY
STATION: 13+68.69 -L-

NORTH CAROLINA PROFESSIONAL SEAL 28950 ENGINEER HYEN P. KIM

DocuSigned by: Hyen Kim 07A7857 1E44145F... 2/2/2016

STATE OF NORTH CAROLINA
DEPARTMENT OF TRANSPORTATION
RALEIGH

STANDARD
LRFR SUMMARY FOR 100' BOX BEAM UNIT 90° SKEW
(NON-INTERSTATE TRAFFIC)

REVISIONS						SHEET NO.
NO.	BY:	DATE:	NO.	BY:	DATE:	S-3
1			3			TOTAL SHEETS
2			4			19

DOCUMENT NOT CONSIDERED FINAL UNLESS ALL SIGNATURES COMPLETED

ASSEMBLED BY : H. P. KIM DATE : 1/13/16
CHECKED BY : J. K. BOWLES DATE : 1/14/16
DRAWN BY : TMG 11/11
CHECKED BY : AAC 11/11

28-JAN-2016 11:59
S:\DPG2\oldDPG3\DivisionLets\Div12\17BP12R47\Plans\17BP12R47_SD_LR.dgn
jdhawk

STD. NO. 39LRFR1_90S_100L

LOAD AND RESISTANCE FACTOR RATING (LRFD) SUMMARY FOR PRESTRESSED CONCRETE GIRDERS

LEVEL		VEHICLE	WEIGHT (W) (TONS)	CONTROLLING LOAD RATING	MINIMUM RATING FACTORS (RF)	TONS = W X RF	STRENGTH I LIMIT STATE											SERVICE III LIMIT STATE						COMMENT NUMBER
								MOMENT					SHEAR						MOMENT					
							LIVELOAD FACTORS	DISTRIBUTION FACTORS (DF)	RATING FACTOR	SPAN	GIRDER LOCATION	DISTANCE FROM LEFT END OF SPAN (ft)	DISTRIBUTION FACTORS (DF)	RATING FACTOR	SPAN	GIRDER LOCATION	DISTANCE FROM LEFT END OF SPAN (ft)	LIVELOAD FACTORS	DISTRIBUTION FACTORS (DF)	RATING FACTOR	SPAN	GIRDER LOCATION	DISTANCE FROM LEFT END OF SPAN (ft)	
DESIGN LOAD RATING		HL-93(Inv)	N/A	1	**1.21**	--	1.75	0.274	1.64	B	EL	31.751	0.522	1.51	B	EL	6.35	0.80	0.274	**1.21**	B	EL	**31.751**	
		HL-93(Opr)	N/A	--	1.96	--	1.35	0.274	2.13	B	EL	31.751	0.522	1.96	B	EL	6.35	N/A	--	--	--	--	--	
		HS-20(Inv)	36.000	2	**1.55**	55.690	1.75	0.274	2.10	B	EL	31.751	0.522	1.84	B	EL	6.35	0.80	0.274	**1.55**	B	EL	**31.751**	
		HS-20(Opr)	36.000	--	2.39	85.894	1.35	0.274	2.73	B	EL	31.751	0.522	2.39	B	EL	6.35	N/A	--	--	--	--	--	
LEGAL LOAD RATING	SV	SNSH	13.500	--	3.39	45.787	1.40	0.274	5.77	B	EL	31.751	0.522	5.38	B	EL	6.35	0.80	0.274	3.39	B	EL	31.751	
		SNGARBS2	20.000	--	2.57	51.397	1.40	0.274	4.37	B	EL	31.751	0.522	3.85	B	EL	6.35	0.80	0.274	2.57	B	EL	31.751	
		SNAGRIS2	22.000	--	2.45	53.940	1.40	0.274	4.17	B	EL	31.751	0.522	3.59	B	EL	6.35	0.80	0.274	2.45	B	EL	31.751	
		SNCOTTS3	27.250	--	1.69	46.025	1.40	0.274	2.87	B	EL	31.751	0.522	2.69	B	EL	6.35	0.80	0.274	1.69	B	EL	31.751	
		SNAGGRS4	34.925	--	1.43	49.858	1.40	0.274	2.43	B	EL	31.751	0.522	2.25	B	EL	6.35	0.80	0.274	1.43	B	EL	31.751	
		SNS5A	35.550	--	1.40	49.590	1.40	0.274	2.37	B	EL	31.751	0.522	2.29	B	EL	6.35	0.80	0.274	1.39	B	EL	31.751	
		SNS6A	39.950	--	1.29	51.404	1.40	0.274	2.19	B	EL	31.751	0.522	2.10	B	EL	6.35	0.80	0.274	1.29	B	EL	31.751	
		SNS7B	42.000	--	1.23	51.475	1.40	0.274	2.08	B	EL	31.751	0.522	2.08	B	EL	6.35	0.80	0.274	1.23	B	EL	31.751	
	TTST	TNAGRIT3	33.000	--	1.57	51.846	1.40	0.274	2.67	B	EL	31.751	0.522	2.49	B	EL	6.35	0.80	0.274	1.57	B	EL	31.751	
		TNT4A	33.075	--	1.58	52.255	1.40	0.274	2.69	B	EL	31.751	0.522	2.42	B	EL	6.35	0.80	0.274	1.58	B	EL	31.751	
		TNT6A	41.600	--	1.30	54.014	1.40	0.274	2.21	B	EL	31.751	0.522	2.23	B	EL	6.35	0.80	0.274	1.30	B	EL	31.751	
		TNT7A	42.000	--	1.31	54.955	1.40	0.274	2.22	B	EL	31.751	0.522	2.16	B	EL	6.35	0.80	0.274	1.31	B	EL	31.751	
		TNT7B	42.000	--	1.36	57.227	1.40	0.274	2.32	B	EL	31.751	0.522	2.02	B	EL	6.35	0.80	0.274	1.36	B	EL	31.751	
		TNAGRIT4	43.000	--	1.29	55.451	1.40	0.274	2.19	B	EL	31.751	0.522	1.95	B	EL	6.35	0.80	0.274	1.29	B	EL	31.751	
		TNAGT5A	45.000	--	1.21	54.578	1.40	0.274	2.06	B	EL	31.751	0.522	1.95	B	EL	6.35	0.80	0.274	1.21	B	EL	31.751	
		TNAGT5B	45.000	3	**1.20**	53.796	1.40	0.274	2.03	B	EL	31.751	0.522	1.85	B	EL	6.35	0.80	0.274	**1.20**	B	EL	**31.751**	

LOAD FACTORS

DESIGN LOAD RATING FACTORS	LIMIT STATE	γ_{DC}	γ_{DW}
	STRENGTH I	1.25	1.50
	SERVICE III	1.00	1.00

NOTES

MINIMUM RATING FACTORS ARE BASED ON THE STRENGTH I AND SERVICE III LIMIT STATES.

ALLOWABLE STRESSES FOR SERVICE III LIMIT STATE ARE AS REQUIRED FOR DESIGN.

CONTROLLING LOAD RATING

- 1 DESIGN LOAD RATING (HL-93)
- 2 DESIGN LOAD RATING (HS-20)
- 3 LEGAL LOAD RATING **
- ** SEE CHART FOR VEHICLE TYPE

GIRDER LOCATION

- I - INTERIOR GIRDER
- EL - EXTERIOR LEFT GIRDER
- ER - EXTERIOR RIGHT GIRDER

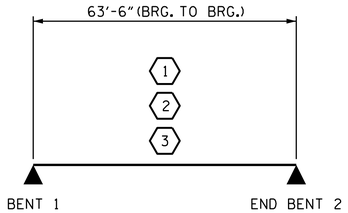

SPAN B

LRFR SUMMARY

PROJECT NO. 17BP.12.R.47

CLEVELAND COUNTY

STATION: 13+68.69 -L-

NORTH CAROLINA PROFESSIONAL SEAL 28950 ENGINEER HYEN P. KIM

DocuSigned by: Hyen Kim 07A7857 1E44145F... 2/2/2016

STATE OF NORTH CAROLINA
DEPARTMENT OF TRANSPORTATION
RALEIGH

STANDARD

LRFR SUMMARY FOR 65' BOX BEAM UNIT 90° SKEW

(NON-INTERSTATE TRAFFIC)

REVISIONS								SHEET NO.
NO.	BY:	DATE:	NO.	BY:	DATE:			S-4
1			3					TOTAL SHEETS
2			4					19

DOCUMENT NOT CONSIDERED FINAL UNLESS ALL SIGNATURES COMPLETED

STD. NO. LRFR1

ASSEMBLED BY : H. P. KIM DATE : 1/13/16
CHECKED BY : J. K. BOWLES DATE : 1/14/16

DRAWN BY : MAA 1/08 REV. 11/12/08RR MAA/GM
CHECKED BY : GM/DI 2/08 REV. 10/1/11 MAA/GM

DESIGN ENGINEER OF RECORD : H. P. KIM DATE : 1/14/16

28-JAN-2016 11:59
S:\DPG2\oldDPG3\DivisionLets\Div12\17BP12R47\Plans\17BP12R47_SD_LR.dgn
jdhawk

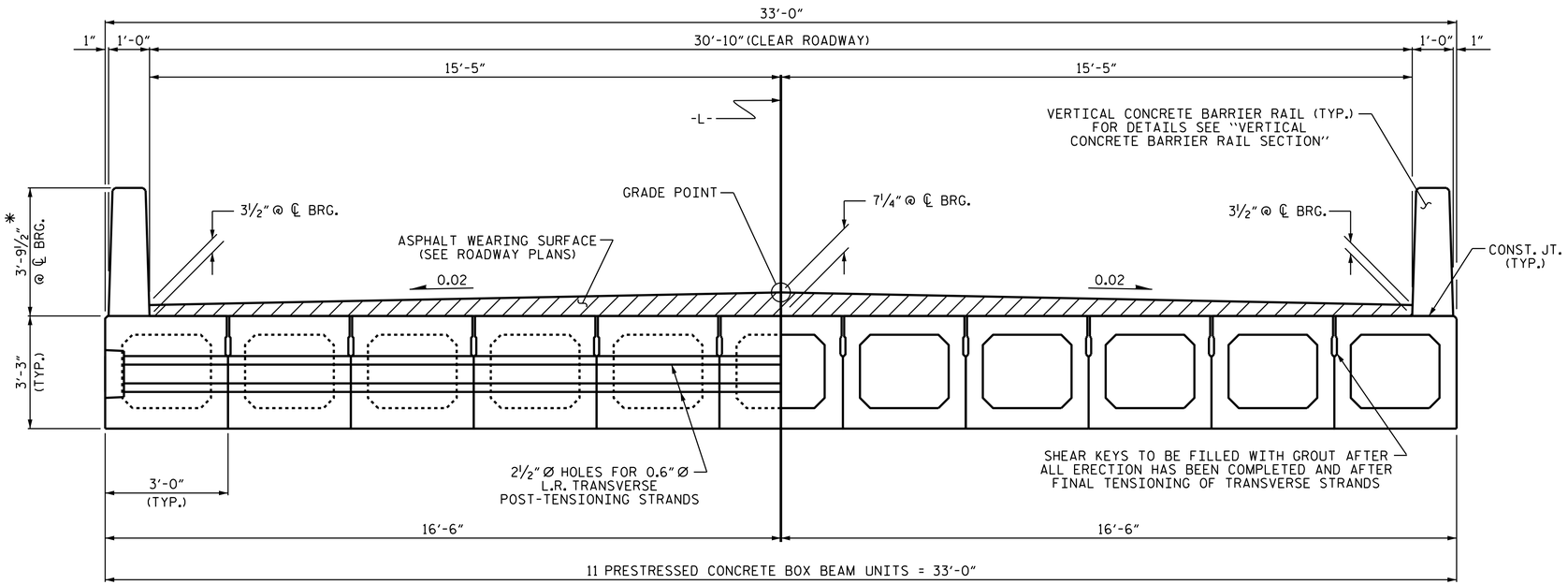

HALF SECTION
AT INTERMEDIATE DIAPHRAGMS

HALF SECTION
THROUGH VOIDS

TYPICAL SECTION

*THE MAXIMUM BARRIER RAIL HEIGHT AND ASPHALT THICKNESS IS SHOWN. THE HEIGHT OF THE BARRIER RAIL AND ASPHALT THICKNESS VARIES WHILE THE TOP OF THE BARRIER RAIL FOLLOWS THE PROFILE OF THE GUTTERLINE. FOR RAIL HEIGHT DETAILS AND ASPHALT THICKNESS, SEE THE "VERTICAL CONCRETE BARRIER RAIL SECTION" DETAIL.

FIXED END

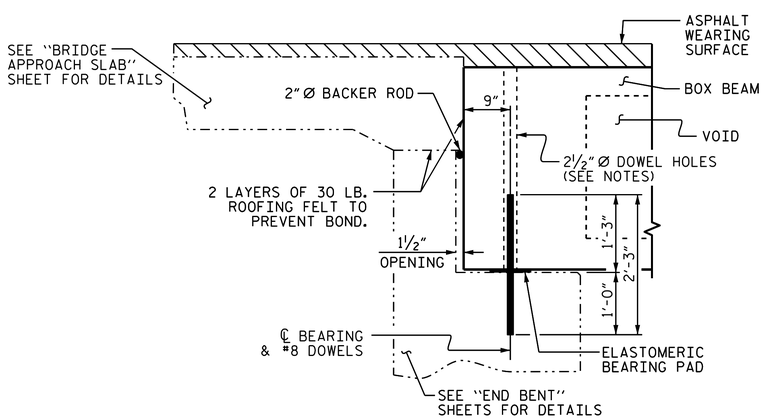

SECTION AT END BENT

FIXED END FIXED END

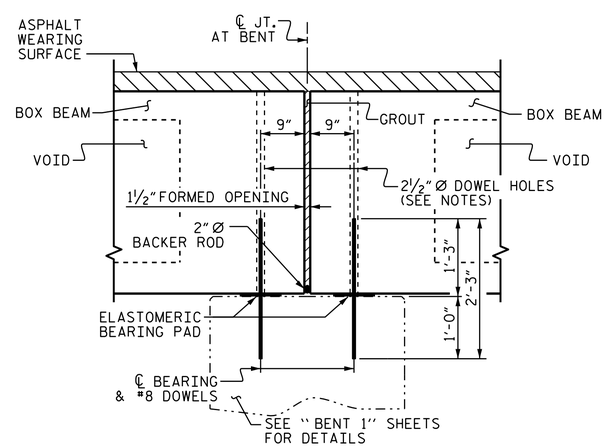

SECTION AT BENT 1

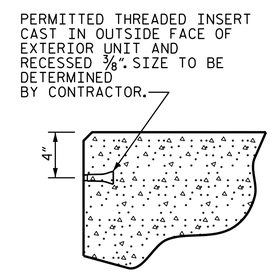

THREADED INSERT DETAIL

NOTES

ALL PRESTRESSING STRANDS SHALL BE 7-WIRE LOW RELAXATION GRADE 270 STRANDS AND SHALL CONFORM TO AASHTO M203 EXCEPT FOR SAMPLING REQUIREMENTS WHICH SHALL BE IN ACCORDANCE WITH THE STANDARD SPECIFICATIONS.

ALL REINFORCING STEEL CAST WITH THE BOX BEAM SECTIONS SHALL BE GRADE 60 AND SHALL BE INCLUDED IN THE UNIT PRICE BID FOR PRESTRESSED CONCRETE BOX BEAMS.

FLAME CUTTING OF THE TRANSVERSE POST-TENSIONING STRAND IS NOT ALLOWED.

RECESSES FOR TRANSVERSE STRANDS SHALL BE GROUTED AFTER THE TENSIONING OF THE STRANDS.

THE 2½" Ø DOWEL HOLES AT FIXED ENDS OF BOX BEAM SECTIONS SHALL BE FILLED WITH NON-SHRINK GROUT.

THE BACKER RODS SHALL CONFORM TO THE REQUIREMENTS OF TYPE M BOND BREAKER. SEE SECTION 1028 OF THE STANDARD SPECIFICATIONS.

THE TRANSFER OF LOAD FROM THE ANCHORAGES TO THE BOX BEAM UNIT SHALL BE DONE WHEN THE CONCRETE HAS REACHED A COMPRESSIVE STRENGTH OF NOT LESS THAN 5,500 PSI FOR SPAN A AND 4,000 PSI FOR SPAN B.

ALL REINFORCING STEEL IN VERTICAL CONCRETE BARRIER RAILS SHALL BE EPOXY COATED.

PRESTRESSING STRANDS SHALL BE CUT FLUSH WITH THE BOX BEAM UNIT ENDS.

APPLY EPOXY PROTECTIVE COATING TO BOX BEAM UNIT ENDS.

VERTICAL GROOVED CONTRACTION JOINTS, ½" IN DEPTH, SHALL BE TOOLED IN ALL EXPOSED FACES OF THE BARRIER RAIL AND IN ACCORDANCE WITH ARTICLE 825-10(B) OF THE STANDARD SPECIFICATIONS. A VERTICAL CONTRACTION JOINT SHALL BE LOCATED AT EACH THIRD POINT BETWEEN BARRIER RAIL EXPANSION JOINTS. ONLY ONE CONTRACTION JOINT IS REQUIRED AT MIDPOINT OF BARRIER RAIL SEGMENTS LESS THAN 20 FEET IN LENGTH AND NO CONTRACTION JOINTS ARE REQUIRED FOR THOSE SEGMENTS LESS THAN 10 FEET IN LENGTH.

THE LOCATION OF THE VOID DRAINS MAY BE SHIFTED SLIGHTLY WHERE NECESSARY TO CLEAR PRESTRESSING STRANDS OR TRANSVERSE REINFORCING STEEL.

FOR GROUT FOR STRUCTURES, SEE SPECIAL PROVISIONS.

THE PERMITTED THREADED INSERTS ARE DETAILED AS AN OPTION FOR THE CONTRACTOR TO ATTACH FALSEWORK AND FORMWORK DURING CONSTRUCTION.

THE PERMITTED THREADED INSERTS IN THE EXTERIOR UNITS SHALL BE SIZED BY THE CONTRACTOR, SPACED AT 4'-0" CENTERS AND GALVANIZED IN ACCORDANCE WITH SECTION 1076 OF THE STANDARD SPECIFICATIONS. STAINLESS STEEL THREADED INSERTS MAY BE USED AS AN ALTERNATE.

THE PERMITTED THREADED INSERTS SHALL BE GROUTED BY THE CONTRACTOR IMMEDIATELY FOLLOWING REMOVAL OF THE FALSEWORK.

THE COST OF THE PERMITTED THREADED INSERTS SHALL BE INCLUDED IN THE PRICE BID FOR THE PRECAST UNITS.

PROJECT NO. 17BP.12.R.47
CLEVELAND COUNTY
STATION: 13+68.69 -L-

SHEET 1 OF 7

NORTH CAROLINA PROFESSIONAL SEAL 28950 ENGINEER HYEUN P. KIM

DocuSigned by: Hyun Kim
07A78571E44145F...
2/2/2016

STATE OF NORTH CAROLINA
DEPARTMENT OF TRANSPORTATION
RALEIGH

STANDARD

3'-0" X 3'-3"
PRESTRESSED CONCRETE
BOX BEAM UNIT

ASSEMBLED BY : H. P. KIM	DATE : 10/7/15
CHECKED BY : J. K. BOWLES	DATE : 10/14/15
DRAWN BY : DGE 8/11	REV. 10/15 MAA/TMG
CHECKED BY : TMG 11/11	

DOCUMENT NOT CONSIDERED FINAL UNLESS ALL SIGNATURES COMPLETED

REVISIONS						SHEET NO.
NO.	BY:	DATE:	NO.	BY:	DATE:	S-5
1			3			TOTAL SHEETS
2			4			19

STD. NO. 39PCBB1_33

28-JAN-2016 11:59
S:\DPG2\oldDPG3\DivisionLets\Div12\17BP12R47\Plans\17BP12R47_SD_BX.dgn
jdhawk

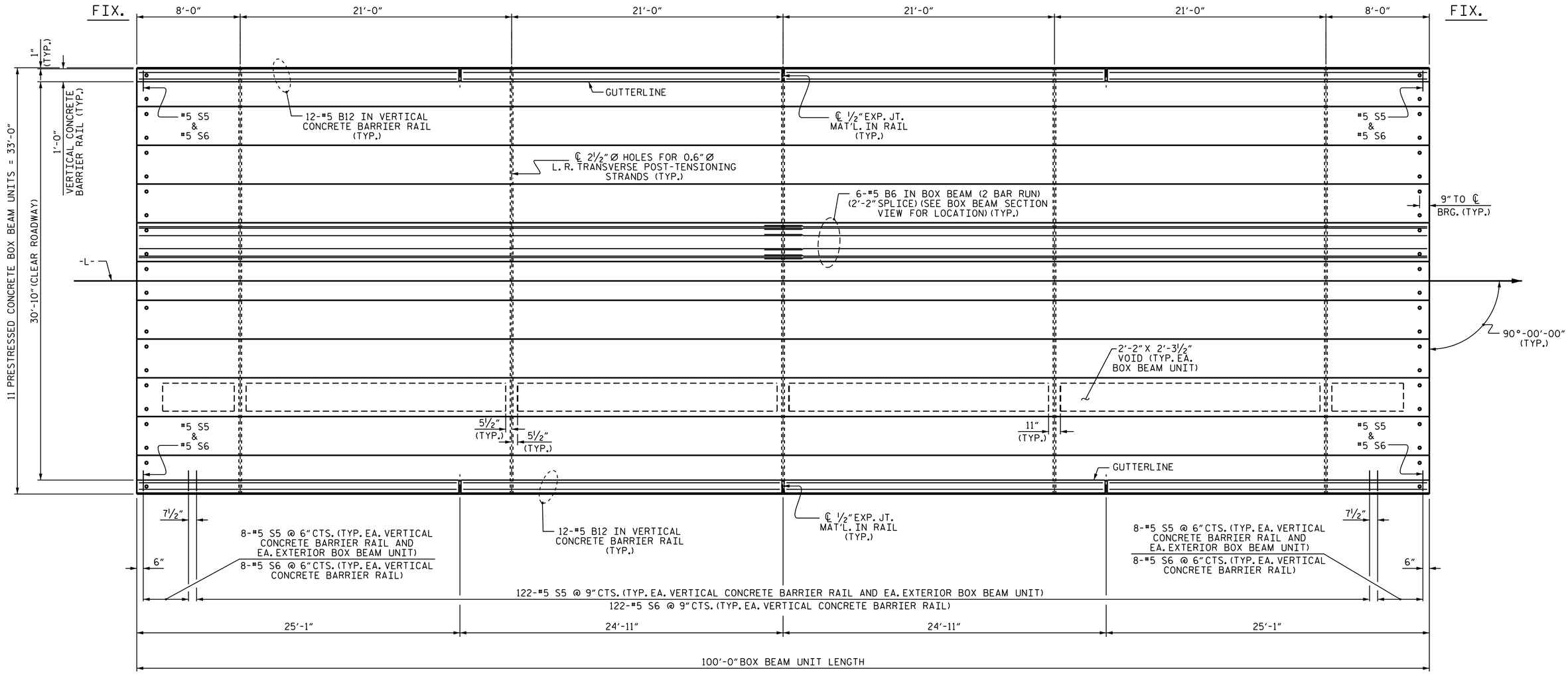

PLAN OF UNIT

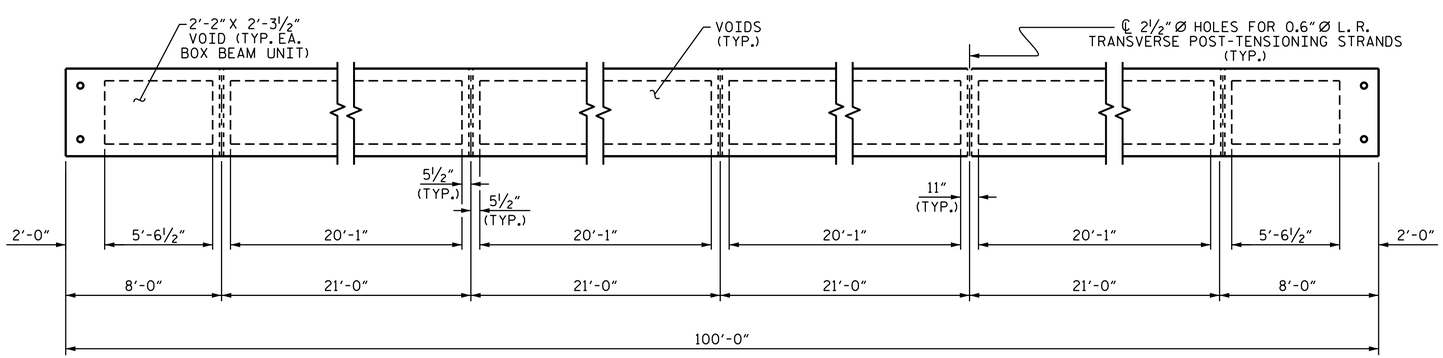

DIAPHRAGM AND VOID LAYOUT

PROJECT NO. 17BP.12.R.47

CLEVELAND COUNTY

STATION: 13+68.69 -L-

SHEET 2 OF 7

STATE OF NORTH CAROLINA
DEPARTMENT OF TRANSPORTATION
RALEIGH

PLAN OF 100' UNIT 30'-10" CLEAR ROADWAY 90° SKEW

SPAN A

NORTH CAROLINA PROFESSIONAL SEAL 28950 ENGINEER HYEN P. KIM

DocuSigned by: Hyen Kim 07A78571E441455F 2/2/2016

DOCUMENT NOT CONSIDERED FINAL UNLESS ALL SIGNATURES COMPLETED

REVISIONS						
NO.	BY:	DATE:	NO.	BY:	DATE:	
1			3			
2			4			

SHEET NO. S-6

TOTAL SHEETS 19

ASSEMBLED BY :	H. P. KIM	DATE : 10/7/15	
CHECKED BY :	J. K. BOWLES	DATE : 10/14/15	
DRAWN BY : DGE 8/10	REV. 8/14	MAA/TMG	
CHECKED BY : TMG 11/11			

28-JAN-2016 11:59
S:\DPG2\oldDPG3\DivisionLets\Div12\17BP12R47\Plans\17BP12R47_SD_BX.dgn
jdhawk

STD.NO.39PCBB_33_90S_100L

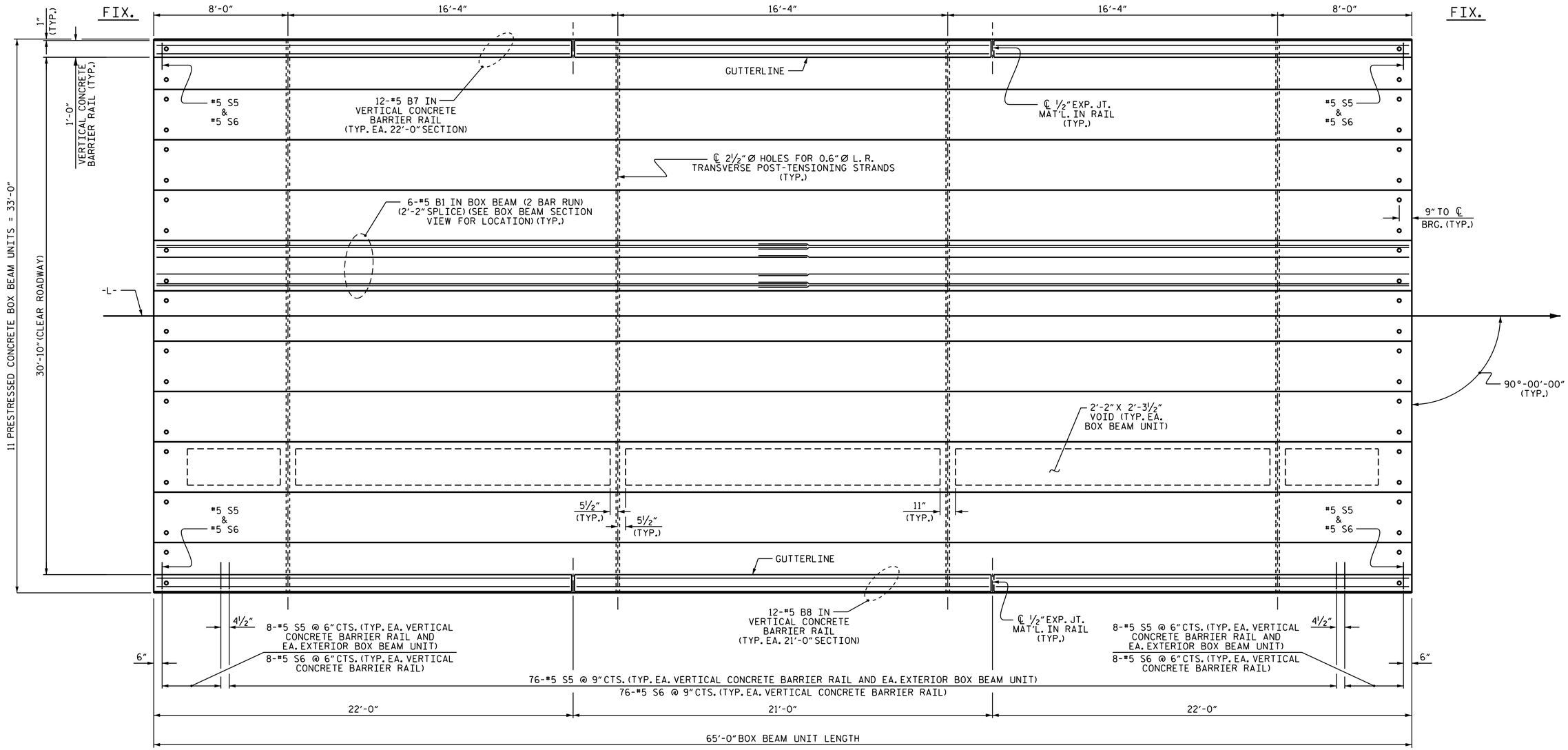

PLAN OF UNIT

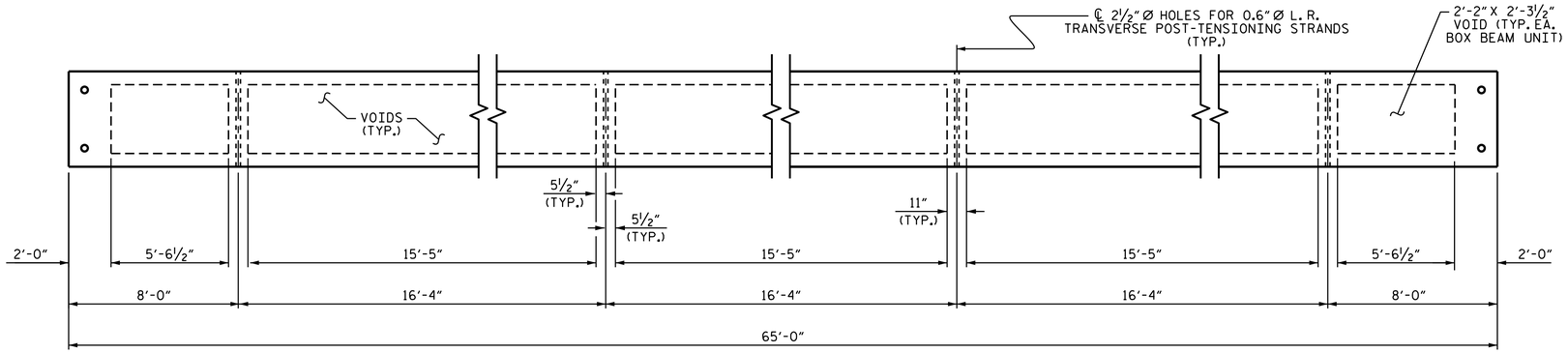

DIAPHRAGM AND VOID LAYOUT

PROJECT NO. 17BP.12.R.47

CLEVELAND COUNTY

STATION: 13+68.69 -L-

SHEET 3 OF 7

STATE OF NORTH CAROLINA
DEPARTMENT OF TRANSPORTATION
RALEIGH

PLAN OF 65' UNIT 30'-10" CLEAR ROADWAY 90° SKEW

SPAN B

NORTH CAROLINA PROFESSIONAL SEAL 28950 ENGINEER HYEN P. KIM

DocuSigned by: Hyen Kim 07A78571E44145F... 2/2/2016

DRAWN BY : H. P. KIM. DATE : 10/7/15
CHECKED BY : J. K. BOWLES DATE : 10/14/15
DESIGN ENGINEER OF RECORD: H. P. KIM. DATE : 10/14/15

DOCUMENT NOT CONSIDERED FINAL UNLESS ALL SIGNATURES COMPLETED

REVISIONS						
NO.	BY:	DATE:	NO.	BY:	DATE:	
1			3			
2			4			

SHEET NO. S-7

TOTAL SHEETS 19

28-JAN-2016 11:59
S:\DPG2\oldDPG3\DivisionLets\Div12\17BP12R47\Plans\17BP12R47_SD_BX.dgn
jdhawk

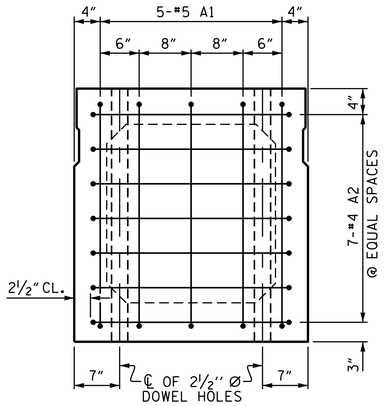

END ELEVATION

SHOWING PLACEMENT OF #5 & #4 "A" BARS AND LOCATION OF DOWEL HOLES.
(INTERIOR BOX BEAM SECTION SHOWN-EXTERIOR SECTION SIMILAR EXCEPT SHEAR KEY LOCATION. STRAND LAYOUT NOT SHOWN.)

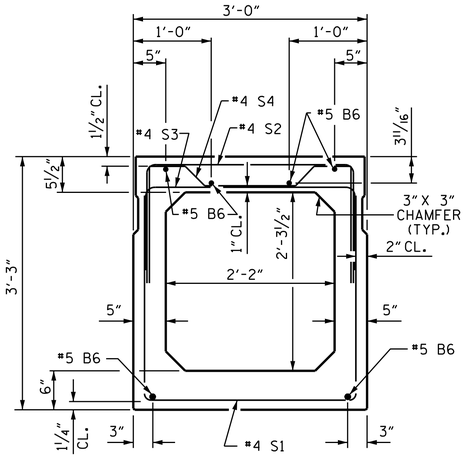

INTERIOR BOX BEAM SECTION

(STRAND LAYOUT NOT SHOWN)

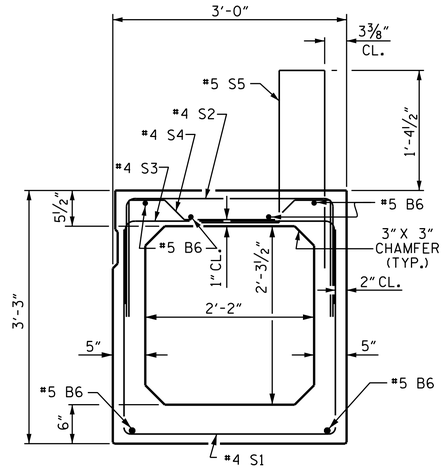

EXTERIOR BOX BEAM SECTION

(STRAND LAYOUT NOT SHOWN)

0.6" Ø LOW RELAXATION STRAND LAYOUT

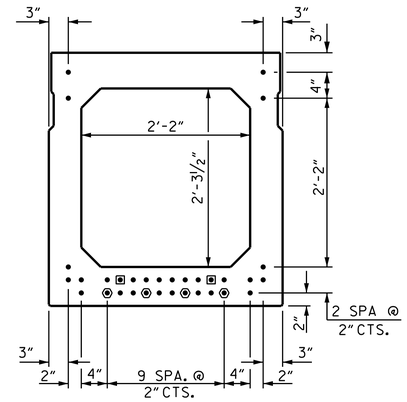

TYPICAL STRAND LOCATION

(32 STRANDS REQUIRED)

DEBONDING LEGEND

- ● FULLY BONDED STRANDS
- ▣ STRANDS DEBONDED FOR 4'-0" FROM END OF GIRDER
- ⬢ STRANDS DEBONDED FOR 12'-0" FROM END OF GIRDER

BOND SHALL BE BROKEN ON STRANDS AS SHOWN FOR THE SPECIFIED LENGTH FROM EACH END OF THE BOX BEAM. SEE STANDARD SPECIFICATIONS ARTICLE 1078-7.

BAR TYPES

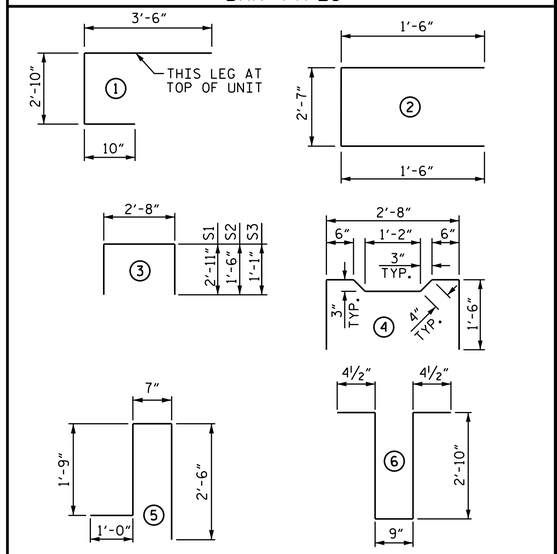

ALL BAR DIMENSIONS ARE OUT TO OUT.

BILL OF MATERIAL FOR ONE BOX BEAM SECTION

BAR	NUMBER	SIZE	TYPE	EXTERIOR UNIT LENGTH	EXTERIOR UNIT WEIGHT	INTERIOR UNIT LENGTH	INTERIOR UNIT WEIGHT
A1	10	#5	1	7'-2"	75	7'-2"	75
A2	44	#4	2	5'-7"	164	5'-7"	164
B6	12	#5	STR	50'-11"	637	50'-11"	637
K1	15	#4	6	7'-2"	72	7'-2"	72
K2	10	#4	STR	2'-7"	17	2'-7"	17
S1	81	#4	3	8'-6"	460	8'-6"	460
S2	81	#4	3	5'-8"	307	5'-8"	307
S3	141	#4	3	4'-10"	455	4'-10"	455
S4	60	#4	4	5'-10"	234	5'-10"	234
✱ S5	138	#5	5	5'-10"	840	--	--
REINFORCING STEEL			LBS.		2,421	LBS.	2,421
✱ EPOXY COATED REINF. STEEL			LBS.		840		
7500 P.S.I. CONCRETE			CU. YDS.		19.6	CU. YDS.	19.4
0.6" Ø L.R. STRANDS			NO.		32	NO.	32

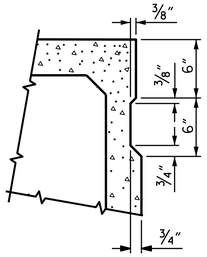

SHEAR KEY DETAIL

NOTE: OMIT SHEAR KEY ON OUTSIDE FACE OF EXTERIOR BOX BEAMS.

GRADE 270 STRANDS	
	0.6" Ø L.R.
AREA (SQUARE INCHES)	0.217
ULTIMATE STRENGTH (LBS. PER STRAND)	58,600
APPLIED PRESTRESS (LBS. PER STRAND)	43,950

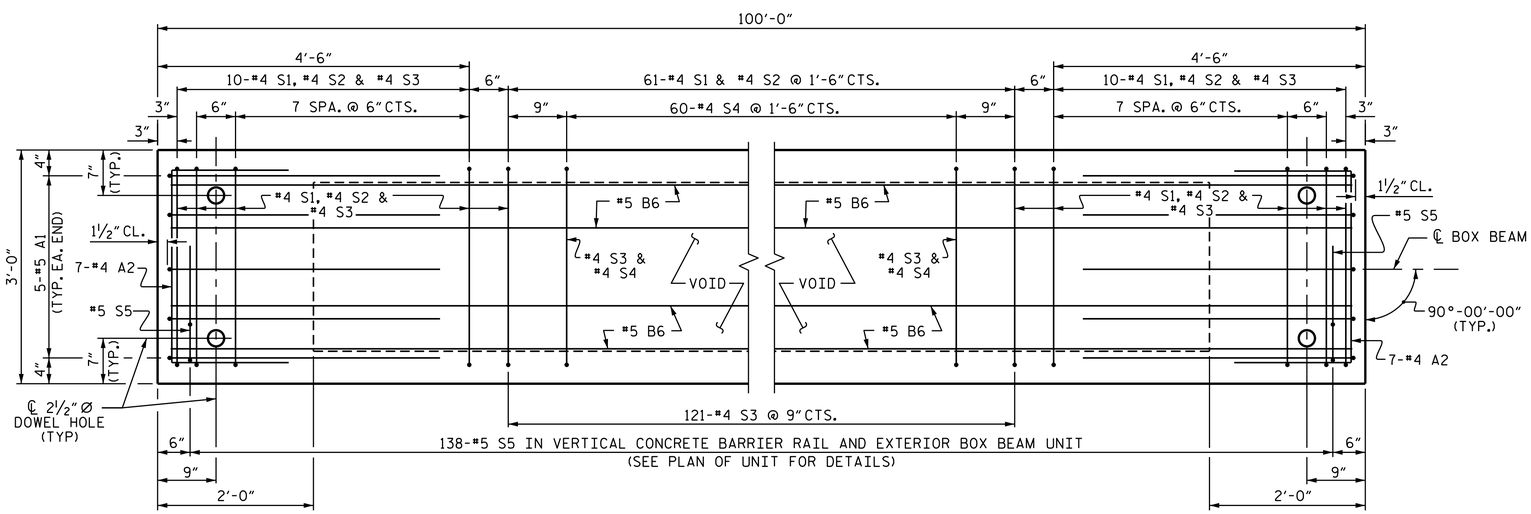

PLAN OF BOX BEAM

EXTERIOR UNIT SHOWN, INTERIOR UNIT SIMILAR EXCEPT OMIT #5 S5 BARS.
FOR LOCATION OF DIAPHRAGMS, SEE "PLAN OF UNIT".
FOR THREADED INSERTS, SEE "THREADED INSERT DETAIL".
FOR REINFORCING STEEL IN DIAPHRAGMS, SEE "DOUBLE DIAPHRAGM DETAILS".

PROJECT NO. 17BP.12.R.47
CLEVELAND COUNTY
STATION: 13+68.69 -L-

SHEET 4 OF 7

NORTH CAROLINA PROFESSIONAL SEAL 28950 ENGINEER HYER P. KIM

DocuSigned by: Hyer Kim 07A7857 1E44145F... 2/2/2016

STATE OF NORTH CAROLINA
DEPARTMENT OF TRANSPORTATION
RALEIGH

STANDARD
3'-0" X 3'-3"
PRESTRESSED CONCRETE
BOX BEAM UNIT
SPAN A

ASSEMBLED BY : H. P. KIM	DATE : 10/7/15
CHECKED BY : J. K. BOWLES	DATE : 10/14/15
DRAWN BY : DGE 11/11	REV. 9/14 MAA/TMG
CHECKED BY : TMG 11/11	

DOCUMENT NOT CONSIDERED FINAL UNLESS ALL SIGNATURES COMPLETED

REVISIONS								SHEET NO.
NO.	BY:	DATE:	NO.	BY:	DATE:			S-8
1			3					TOTAL SHEETS
2			4					19

STD. NO. 39PCBB6_90S_100L

28-JAN-2016 11:59
S:\DPG2\oldDPG3\DivisionLets\Div12\17BP12R47\Plans\17BP12R47_SD_BX.dgn
jdhawk

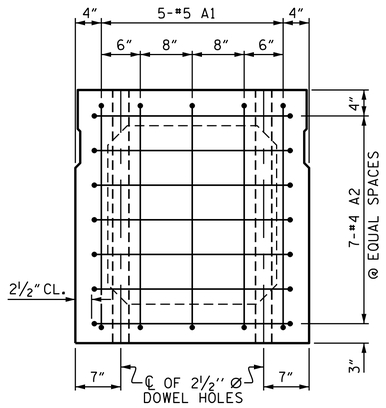

END ELEVATION

SHOWING PLACEMENT OF #5 & #4 "A" BARS AND LOCATION OF DOWEL HOLES.
(INTERIOR BOX BEAM SECTION SHOWN-EXTERIOR SECTION SIMILAR EXCEPT SHEAR KEY LOCATION. STRAND LAYOUT NOT SHOWN.)

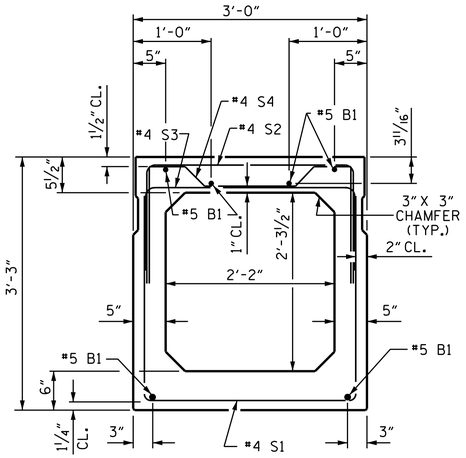

INTERIOR BOX BEAM SECTION

(STRAND LAYOUT NOT SHOWN)

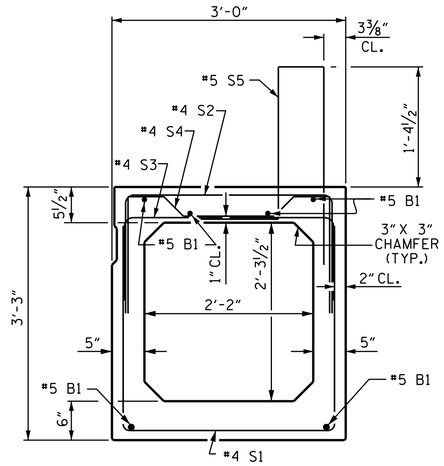

EXTERIOR BOX BEAM SECTION

(STRAND LAYOUT NOT SHOWN)

0.6" Ø LOW RELAXATION STRAND LAYOUT

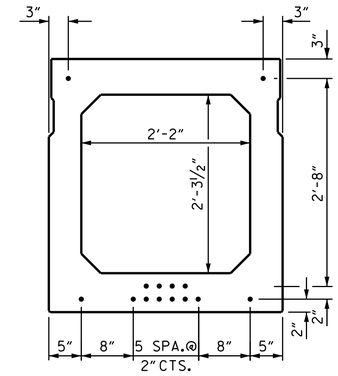

TYPICAL STRAND LOCATION

(14 STRANDS REQUIRED)

● FULLY BONDED STRANDS

BAR TYPES

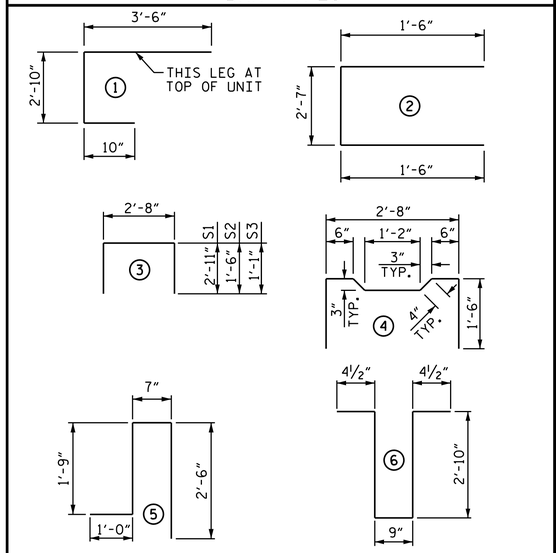

ALL BAR DIMENSIONS ARE OUT TO OUT.

BILL OF MATERIAL FOR ONE BOX BEAM SECTION

BAR	NUMBER	SIZE	TYPE	EXTERIOR UNIT LENGTH	EXTERIOR UNIT WEIGHT	INTERIOR UNIT LENGTH	INTERIOR UNIT WEIGHT
A1	10	#5	1	7'-2"	75	7'-2"	75
A2	38	#4	2	5'-7"	142	5'-7"	142
B1	12	#5	STR	33'-5"	418	33'-5"	418
K1	12	#4	6	7'-2"	57	7'-2"	57
K2	8	#4	STR	2'-7"	14	2'-7"	14
S1	56	#4	3	8'-6"	318	8'-6"	318
S2	56	#4	3	5'-8"	212	5'-8"	212
S3	92	#4	3	4'-10"	300	4'-10"	300
S4	37	#4	4	5'-10"	144	5'-10"	144
✱ S5	92	#5	5	5'-10"	560	--	--
REINFORCING STEEL			LBS.		1,680	LBS.	1,680
✱ EPOXY COATED REINF. STEEL			LBS.		560		
5000 P.S.I. CONCRETE			CU. YDS.		13.1	CU. YDS.	13.0
0.6" Ø L.R. STRANDS			NO.		14	NO.	14

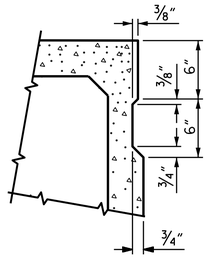

SHEAR KEY DETAIL

NOTE: OMIT SHEAR KEY ON OUTSIDE FACE OF EXTERIOR BOX BEAMS.

GRADE 270 STRANDS	
	0.6" Ø L.R.
AREA (SQUARE INCHES)	0.217
ULTIMATE STRENGTH (LBS. PER STRAND)	58,600
APPLIED PRESTRESS (LBS. PER STRAND)	43,950

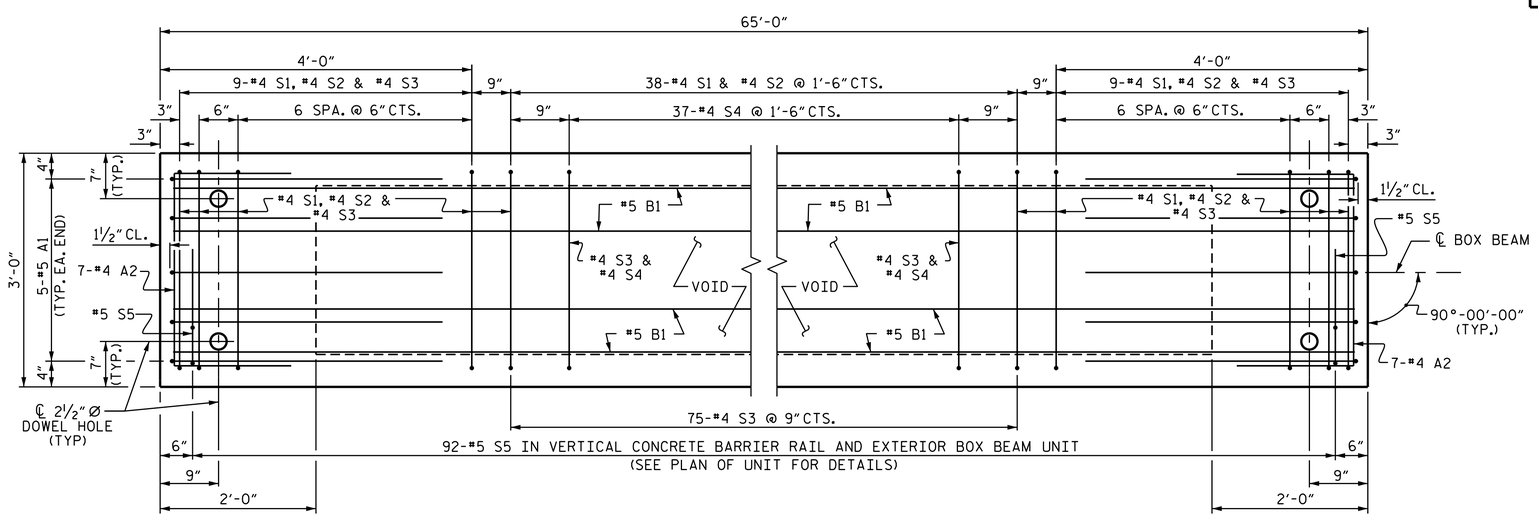

PLAN OF BOX BEAM

EXTERIOR UNIT SHOWN, INTERIOR UNIT SIMILAR EXCEPT OMIT #5 S5 BARS.
FOR LOCATION OF DIAPHRAGMS, SEE "PLAN OF UNIT".
FOR THREADED INSERTS, SEE "THREADED INSERT DETAIL".
FOR REINFORCING STEEL IN DIAPHRAGMS, SEE "DOUBLE DIAPHRAGM DETAILS".

PROJECT NO. 17BP.12.R.47
CLEVELAND COUNTY
STATION: 13+68.69 -L-

SHEET 5 OF 7

STATE OF NORTH CAROLINA
DEPARTMENT OF TRANSPORTATION
RALEIGH

STANDARD
3'-0" X 3'-3"
PRESTRESSED CONCRETE
BOX BEAM UNIT
SPAN B

NORTH CAROLINA PROFESSIONAL SEAL 28950 ENGINEER HYER P. KIM

DocuSigned by: Hyer Kim
07A7857 1E44145F...
2/2/2016

DOCUMENT NOT CONSIDERED FINAL UNLESS ALL SIGNATURES COMPLETED

REVISIONS							
NO.	BY:	DATE:	NO.	BY:	DATE:	SHEET NO.	S-9
1			3			TOTAL SHEETS	19
2			4				

STD. NO. PCBB4

ASSEMBLED BY : H. P. KIM	DATE : 10/7/15		
CHECKED BY : J. K. BOWLES	DATE : 10/14/15		
DRAWN BY : TLA 5/05	REV. 5/1/06	TLA/GM	DESIGN ENGINEER OF RECORD:
CHECKED BY : GM 6/05	REV. 10/1/11	MAA/GM	H. P. KIM DATE : 10/14/15
	REV. 1/15	RWW/TMG	

28-JAN-2016 11:59
S:\DPG2\oldDPG3\DivisionLets\Div12\17BP12R47\Plans\17BP12R47_SD_BX.dgn
jdhawk

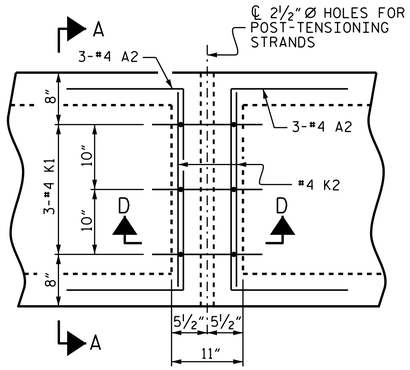

PLAN

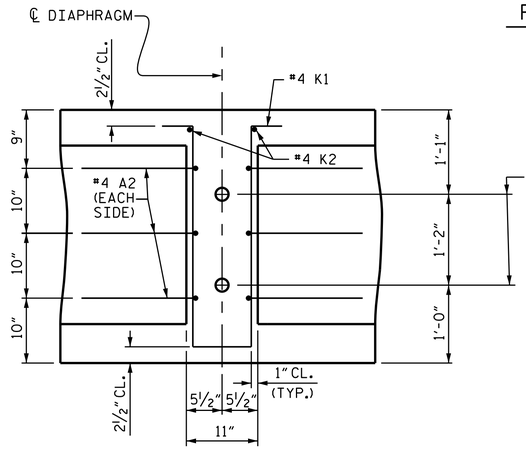

SECTION D-D

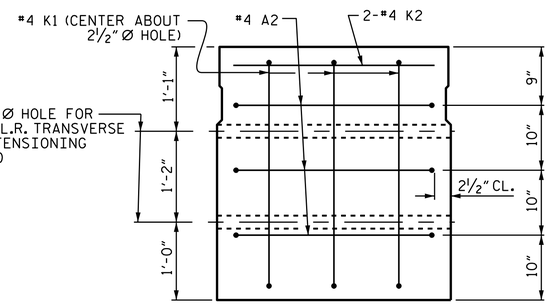

SECTION A-A

VOIDS NOT SHOWN

DOUBLE DIAPHRAGM DETAILS

#4 "S" BARS NOT SHOWN. #4 "S" BARS MAY BE SHIFTED SLIGHTLY TO CLEAR 2½" Ø HOLE.

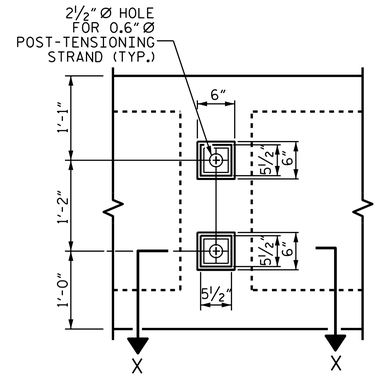

VIEW Y-Y

SHOWING ELEVATION VIEW OF GROUTED RECESS

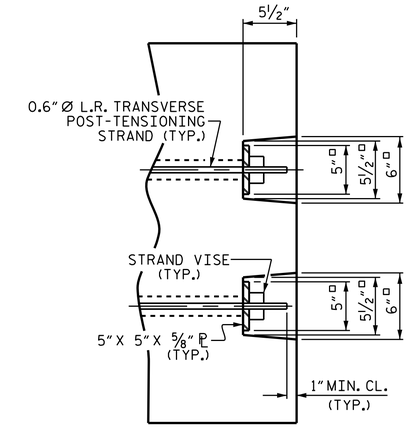

DETAIL "C"

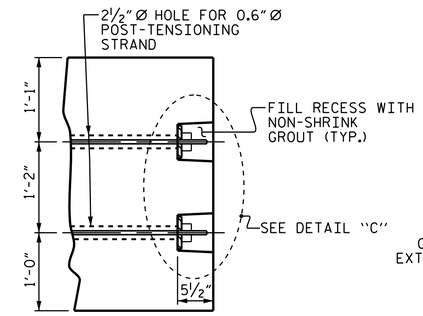

PART SECTION AT RECESS

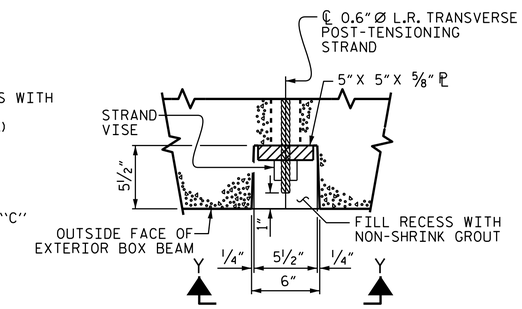

SECTION X-X

SHOWING PLAN VIEW OF GROUTED RECESS

GROUTED RECESS DETAIL AT END OF POST-TENSIONED STRANDS OF EXTERIOR BOX BEAM

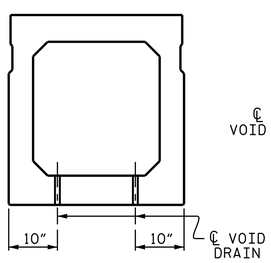

SECTION B-B

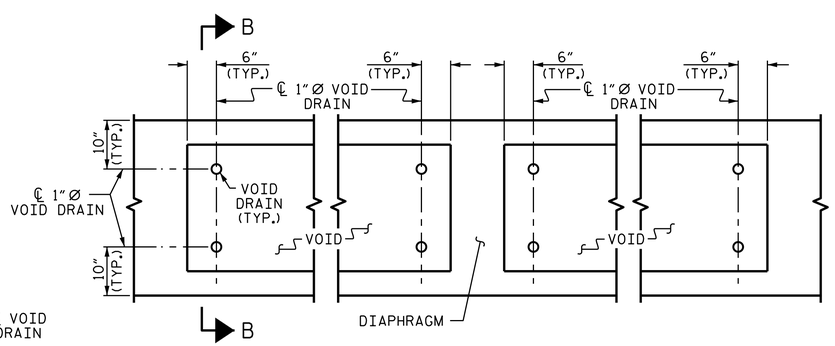

PART PLAN

VOID DRAIN DETAILS

(DIMENSIONS SHOWN ARE TYPICAL FOR EACH VOID)

DEAD LOAD DEFLECTION AND CAMBER	
	3'-0" x 3'-3"
100' BOX BEAM UNIT	0.6" Ø L.R. STRAND
CAMBER (SLAB ALONE IN PLACE)	2" ↑
DEFLECTION DUE TO SUPERIMPOSED DEAD LOAD**	⅞" ↓
FINAL CAMBER	1⅛" ↑

** INCLUDES FUTURE WEARING SURFACE

DEAD LOAD DEFLECTION AND CAMBER	
	3'-0" x 3'-3"
65' BOX BEAM UNIT	0.6" Ø L.R. STRAND
CAMBER (SLAB ALONE IN PLACE)	½" ↑
DEFLECTION DUE TO SUPERIMPOSED DEAD LOAD**	3/16" ↓
FINAL CAMBER	5/16" ↑

** INCLUDES FUTURE WEARING SURFACE

PROJECT NO. 17BP.12.R.47

CLEVELAND COUNTY

STATION: 13+68.69 -L-

SHEET 6 OF 7

STATE OF NORTH CAROLINA
DEPARTMENT OF TRANSPORTATION
RALEIGH

STANDARD

3'-0" X 3'-3"
PRESTRESSED CONCRETE
BOX BEAM UNIT

NORTH CAROLINA PROFESSIONAL SEAL 28950 ENGINEER HYER P. KIM

DocuSigned by: Hyer Kim 07A78571E44145F... 2/2/2016

DOCUMENT NOT CONSIDERED FINAL UNLESS ALL SIGNATURES COMPLETED

REVISIONS							
NO.	BY:	DATE:	NO.	BY:	DATE:	SHEET NO.	S-10
1			3			TOTAL SHEETS	19
2			4				

ASSEMBLED BY :	H. P. KIM	DATE :	10/7/15
CHECKED BY :	J. K. BOWLES	DATE :	10/14/15
DRAWN BY : DGE 11/11	REV. 8/14	MAA/TMG	
CHECKED BY : TMG 11/11			

28-JAN-2016 11:59
S:\DPG2\oldDPG3\DivisionLets\Div12\17BP12R47\Plans\17BP12R47_SD_BX.dgn
jdhawk

STD.NO.39PCBB7_90S

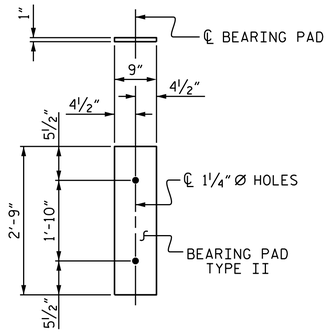

FIXED END
(TYPE II - 44 REQ'D)

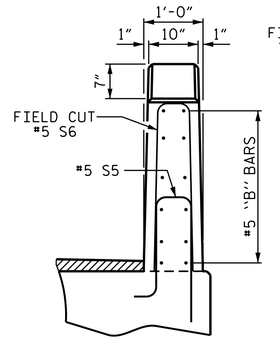

END VIEW

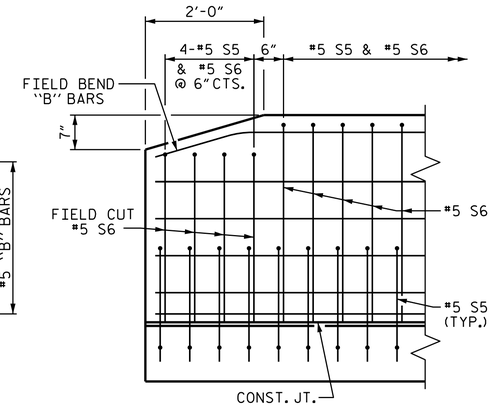

SIDE VIEW

ELASTOMERIC BEARING DETAILS

ELASTOMER IN ALL BEARINGS SHALL BE 60 DUROMETER HARDNESS.

END OF RAIL DETAILS

BAR TYPE

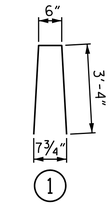

BAR DIMENSIONS ARE OUT TO OUT.

BOX BEAM UNITS REQUIRED			
SPAN A	NUMBER	LENGTH	TOTAL LENGTH
EXTERIOR B.B.	2	100'-0"	200'-0"
INTERIOR B.B.	9	100'-0"	900'-0"
SPAN B	NUMBER	LENGTH	TOTAL LENGTH
EXTERIOR B.B.	2	65'-0"	130'-0"
INTERIOR B.B.	9	65'-0"	585'-0"
TOTAL	22	———	1815'-0"

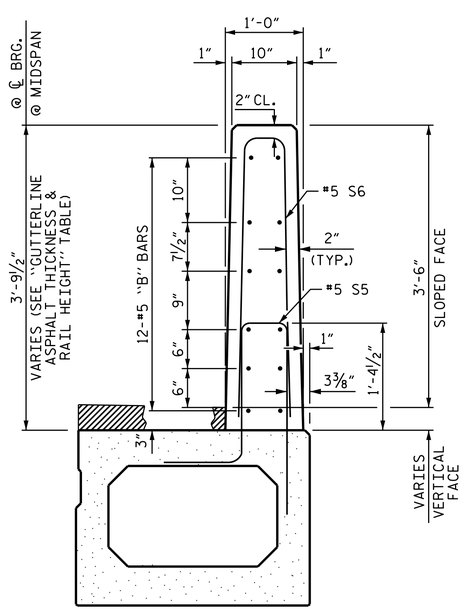

SECTION THRU RAIL

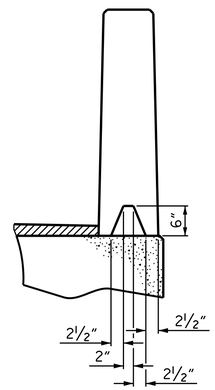

SECTION S-S
AT DAM IN OPEN JOINT
(THIS IS TO BE USED ONLY WHEN SLIP FORM IS USED)

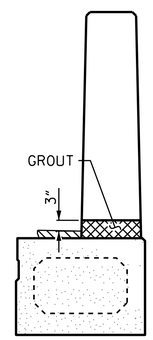

SECTION T-T
AT OPEN JOINT AT BENT
(THIS IS TO BE USED WHERE FOAM JOINT IS NOT USED)

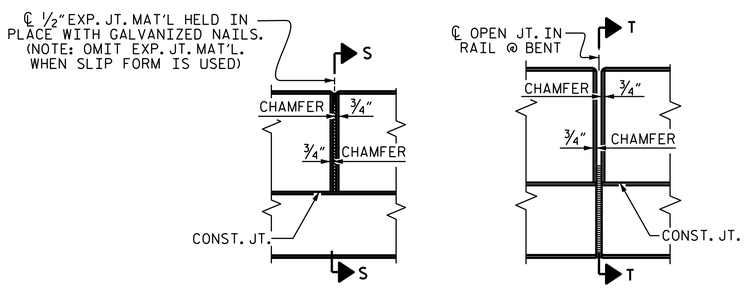

ELEVATION AT EXPANSION JOINTS

VERTICAL CONCRETE BARRIER RAIL DETAILS

BILL OF MATERIAL FOR VERTICAL CONCRETE BARRIER RAIL							
BAR	BARS PER PAIR OF EXTERIOR UNITS		TOTAL NO.	SIZE	TYPE	LENGTH	WEIGHT
	SPAN A	SPAN B					
✳ B7		48	48	#5	STR	21'-8"	1085
✳ B8		24	24	#5	STR	20'-8"	517
✳ B12	96		96	#5	STR	24'-7"	2461
✳ S6	276	184	460	#5	1	7'-2"	3438
✳ EPOXY COATED REINFORCING STEEL						LBS.	7,501
CLASS AA CONCRETE						CU.YDS.	42.8
TOTAL VERTICAL CONCRETE BARRIER RAIL						LIN. FT.	330.25

GUTTERLINE ASPHALT THICKNESS & RAIL HEIGHT		
	ASPHALT OVERLAY THICKNESS @ MID-SPAN	RAIL HEIGHT @ MID-SPAN
SPAN A - 100' UNITS	2⅜"	3'-8⅜"
SPAN B - 65' UNITS	3 3/16"	3'-9 3/16"

PROJECT NO. 17BP.12.R.47
CLEVELAND COUNTY
STATION: 13+68.69 -L-

SHEET 7 OF 7

STATE OF NORTH CAROLINA
DEPARTMENT OF TRANSPORTATION
RALEIGH

STANDARD
3'-0" X 3'-3"
PRESTRESSED CONCRETE
BOX BEAM UNIT

NORTH CAROLINA PROFESSIONAL SEAL 28950 ENGINEER HYER P. KIM

DocuSigned by: Hyer Kim
07A78571E44145F...
2/2/2016

DOCUMENT NOT CONSIDERED FINAL UNLESS ALL SIGNATURES COMPLETED

REVISIONS							
NO.	BY:	DATE:	NO.	BY:	DATE:	SHEET NO.	
1			3			S-11	
2			4			TOTAL SHEETS	
						19	

ASSEMBLED BY : H. P. KIM DATE : 10/7/15
CHECKED BY : J. K. BOWLES DATE : 10/14/15
DRAWN BY : DGE 10/11
CHECKED BY : TMG 11/11
REV. 4/15 MAA/TMG

28-JAN-2016 11:59
S:\DPG2\oldDPG3\DivisionLets\Div12\17BP12R47\Plans\17BP12R47_SD_BX.dgn
jdhawk

STD. NO. 39PCBB8_90S

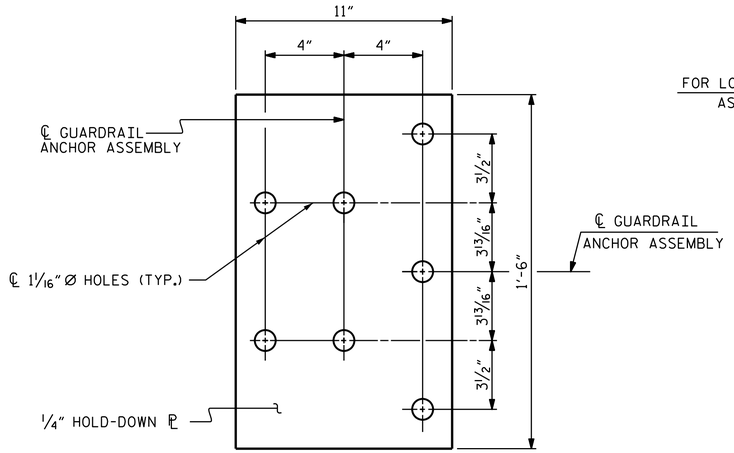

PLAN

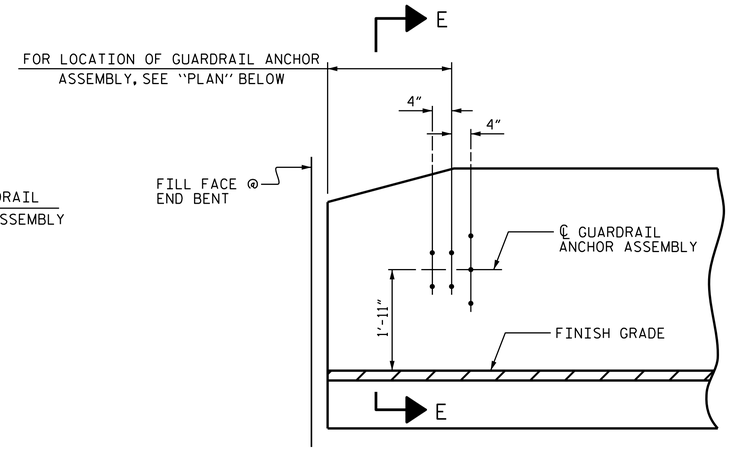

ELEVATION

NOTES

THE GUARDRAIL ANCHOR ASSEMBLY SHALL CONSIST OF A 1/4" HOLD DOWN PLATE AND 7 - 7/8" Ø BOLTS WITH NUTS AND WASHERS.

THE HOLD-DOWN PLATE SHALL CONFORM TO AASHTO M270 GRADE 36. AFTER FABRICATION, THE HOLD-DOWN PLATE SHALL BE HOT-DIP GALVANIZED IN ACCORDANCE WITH AASHTO M111.

BOLTS SHALL CONFORM TO THE REQUIREMENTS OF ASTM A307 AND NUTS SHALL CONFORM TO THE REQUIREMENTS OF AASHTO M291. BOLTS, NUTS AND WASHERS SHALL BE GALVANIZED. (AT THE CONTRACTOR'S OPTION, STAINLESS STEEL BOLTS, NUTS AND WASHERS MAY BE USED AS AN ALTERNATE FOR THE 7/8" Ø GALVANIZED BOLTS, NUTS AND WASHERS. THEY SHALL CONFORM TO OR EXCEED THE MECHANICAL REQUIREMENTS OF ASTM A307. THE USE OF THIS ALTERNATE SHALL BE APPROVED BY THE ENGINEER.)

THE GUARDRAIL ANCHOR ASSEMBLY IS REQUIRED AT ALL POINTS WHERE APPROACH GUARDRAIL IS TO BE ATTACHED TO THE END OF BARRIER RAIL. FOR POINTS OF ATTACHMENT, SEE SKETCH.

AFTER INSTALLATION, THE EXPOSED THREAD OF THE BOLT SHALL BE BURRED WITH A SHARP POINTED TOOL.

THE COST OF THE GUARDRAIL ANCHOR ASSEMBLY SHALL BE INCLUDED IN THE UNIT CONTRACT PRICE BID FOR VERTICAL CONCRETE BARRIER RAIL.

THE VERTICAL REINFORCING BARS MAY BE SHIFTED SLIGHTLY IN THE VERTICAL CONCRETE BARRIER RAIL TO CLEAR ASSEMBLY BOLTS.

THE 1 1/4" Ø HOLES SHALL BE FORMED OR DRILLED WITH A CORE BIT. IMPACT TOOLS WILL NOT BE PERMITTED. ANY CONCRETE DAMAGED BY THIS WORK SHALL BE REPAIRED TO THE SATISFACTION OF THE ENGINEER.

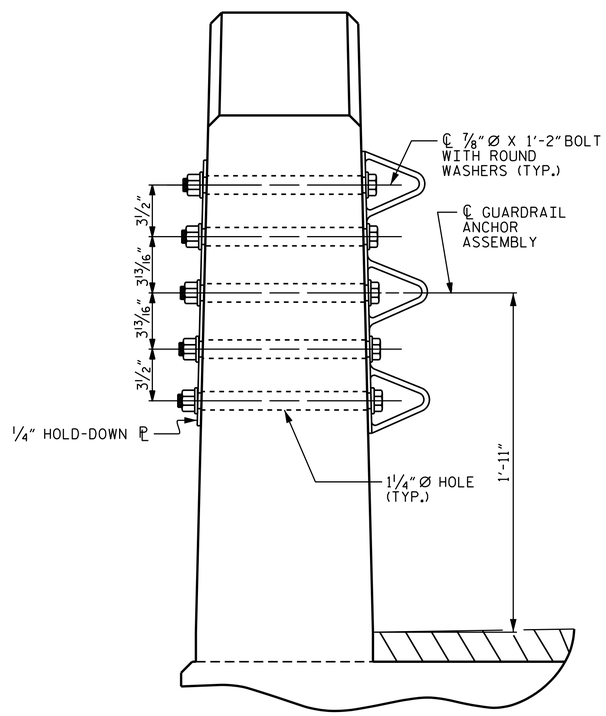

SECTION E-E

GUARDRAIL ANCHOR ASSEMBLY DETAILS

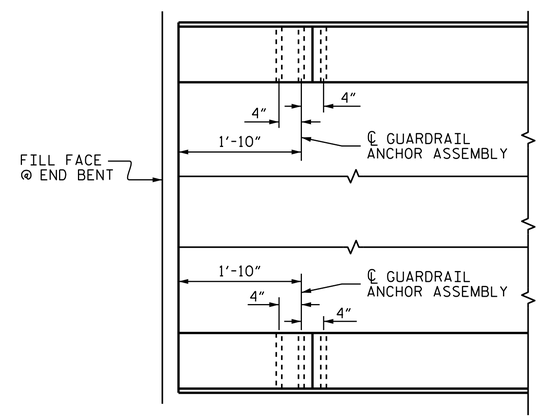

PLAN

LOCATION OF ANCHORS FOR GUARDRAIL

END BENT 1 SHOWN, END BENT 2 SIMILAR.

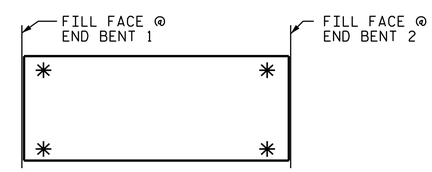

SKETCH SHOWING POINTS OF ATTACHMENT

✳ DENOTES GUARDRAIL ANCHOR ASSEMBLY

PROJECT NO. 17BP.12.R.47

CLEVELAND COUNTY

STATION: 13+68.69 -L-

NORTH CAROLINA PROFESSIONAL SEAL 28950 ENGINEER HYER P. KIM

DocuSigned by: Hyer Kim 07A78571E44145F... 2/2/016

STATE OF NORTH CAROLINA
DEPARTMENT OF TRANSPORTATION
RALEIGH

STANDARD
GUARDRAIL ANCHORAGE DETAILS FOR VERTICAL CONCRETE BARRIER RAIL

ASSEMBLED BY : J. K. BOWLES	DATE : 9/22/15
CHECKED BY : H. P. KIM	DATE : 1/14/16

DRAWN BY : MAA 5/10	REV. 12/5/11 MAA/GM
CHECKED BY : GM 5/10	REV. 6/13 MAA/GM
	REV. 1/15 MAA/TMC

DOCUMENT NOT CONSIDERED FINAL UNLESS ALL SIGNATURES COMPLETED

REVISIONS						
NO.	BY:	DATE:	NO.	BY:	DATE:	
1			3			
2			4			

SHEET NO. S-12

TOTAL SHEETS 19

STD. NO. GRA3

28-JAN-2016 11:59
S:\DPG2\oldDPG3\DivisionLets\Div12\17BP12R47\Plans\17BP12R47_SD_GR.dgn
jdhawk

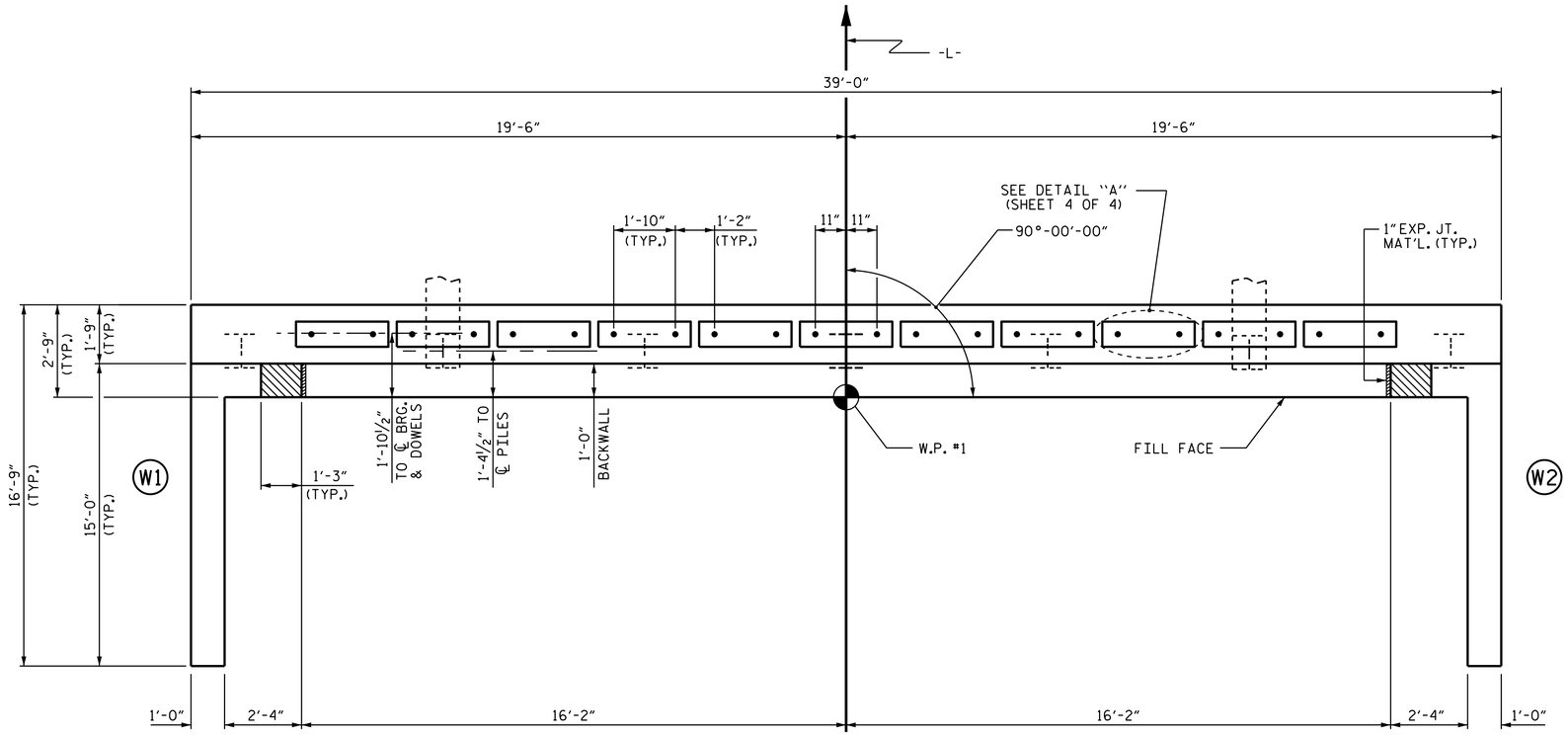

PLAN

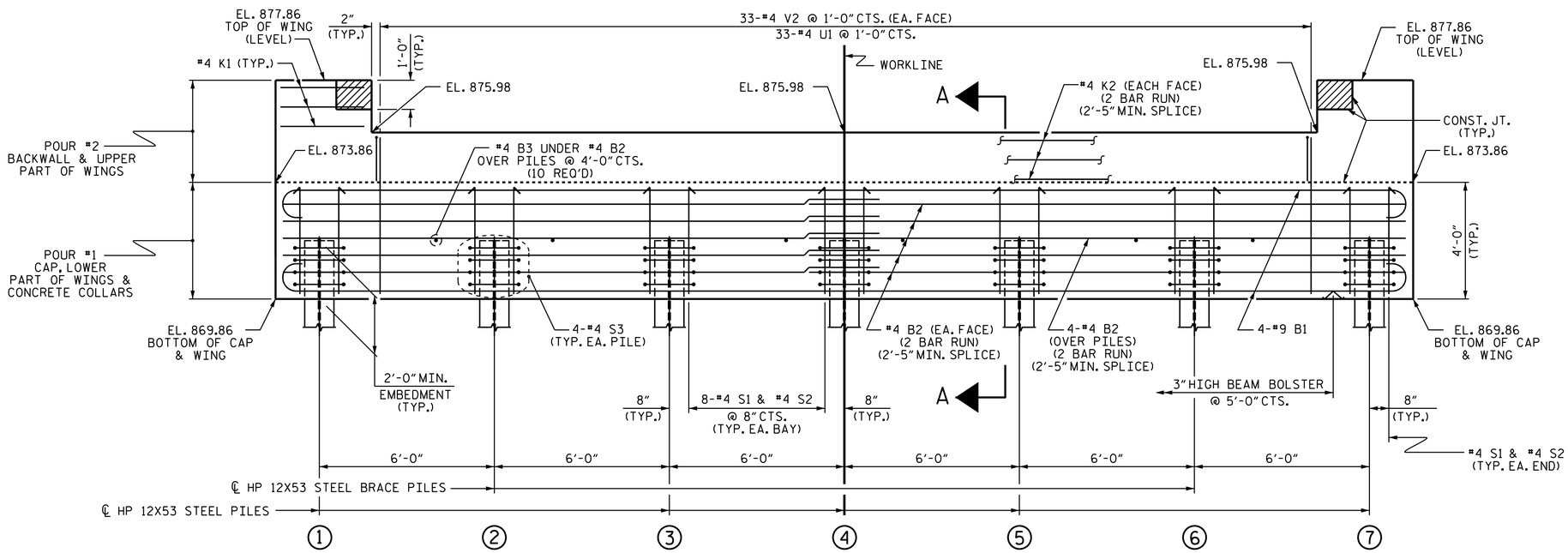

ELEVATION

WINGS NOT SHOWN FOR CLARITY.
FOR SECTION A-A, SEE SHEET 4 OF 4.
CONCRETE COLLARS FOR STEEL PILES NOT SHOWN IN PLAN AND ELEVATION VIEWS FOR CLARITY.
SEE "CORROSION PROTECTION FOR STEEL PILES DETAIL", SHEET 4 OF 4.

NOTES

STIRRUPS IN CAP MAY BE SHIFTED AS NECESSARY TO CLEAR DOWELS.

THE CONCRETE IN THE SHADED AREA OF THE WING SHALL BE POURED AFTER THE VERTICAL CONCRETE BARRIER RAIL IS CAST IF SLIP FORMING IS USED.

FOR PILE SPLICE DETAILS, SEE SHEET 4 OF 4.

FOR WING DETAILS, SEE SHEET 3 OF 4.

PROJECT NO. 17BP.12.R.47
CLEVELAND COUNTY
STATION: 13+68.69 -L-

SHEET 1 OF 4

STATE OF NORTH CAROLINA
DEPARTMENT OF TRANSPORTATION
RALEIGH

SUBSTRUCTURE

END BENT 1

NORTH CAROLINA PROFESSIONAL SEAL 28950 ENGINEER HYERI P. KIM
DocuSigned by: Hyeri Kim 07A78571E44145F
2/2/2016

ASSEMBLED BY :	N.D'AIUTO	DATE :	12/17/15
CHECKED BY :	R.P.PATEL	DATE :	12/29/15
DRAWN BY : WJH 12/11	REV. 4/15	MAA/TMG	
CHECKED BY : AAC 12/11			

DOCUMENT NOT CONSIDERED FINAL UNLESS ALL SIGNATURES COMPLETED

REVISIONS						SHEET NO.
NO.	BY:	DATE:	NO.	BY:	DATE:	S-13
1			3			TOTAL SHEETS
2			4			19

STD. NO. EB_33_90S4_39BB

28-JAN-2016 11:59
S:\DPG2\oldDPG3\DivisionLets\Div12\17BP12R47\Plans\17BP12R47_SD_E*.dgn
jdhawk

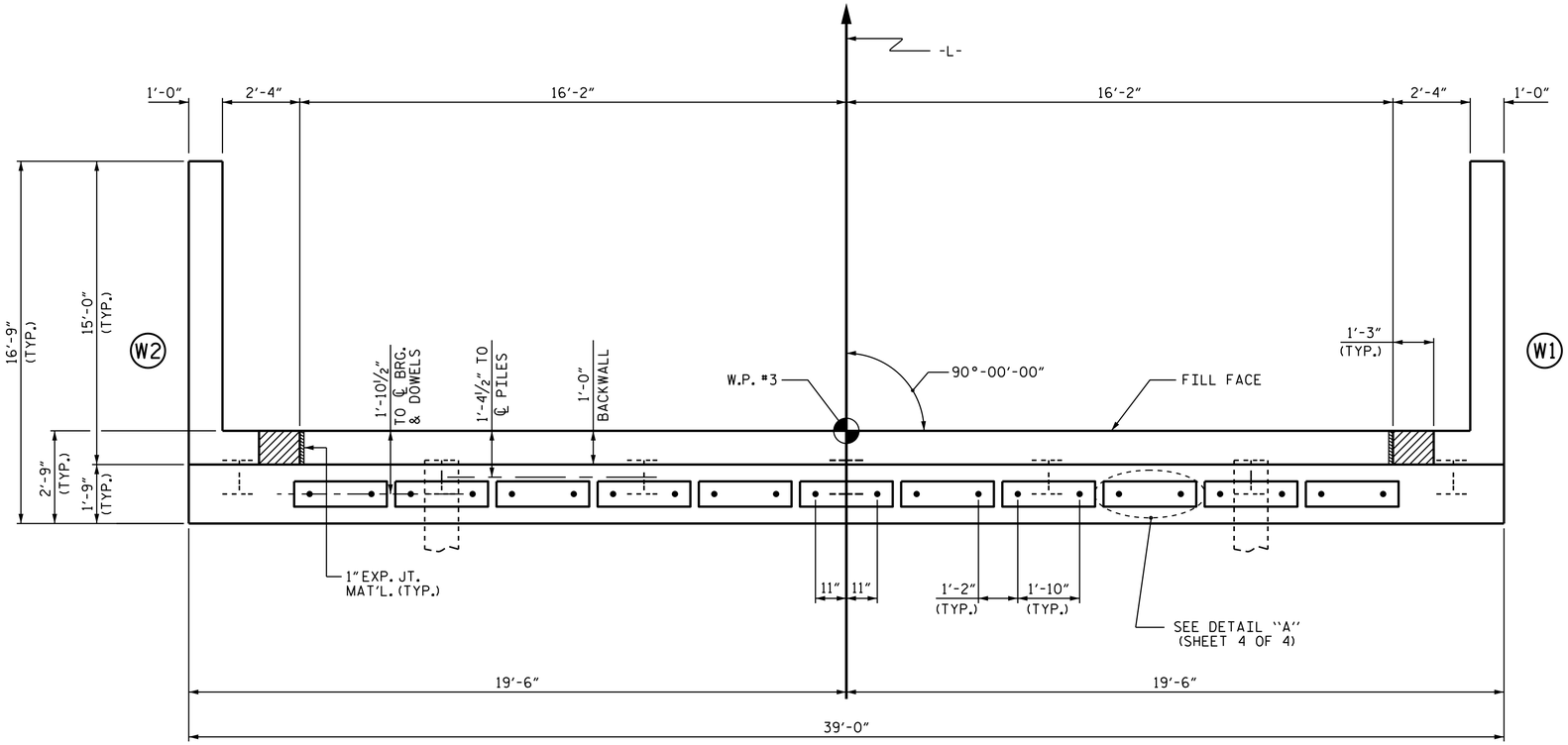

PLAN

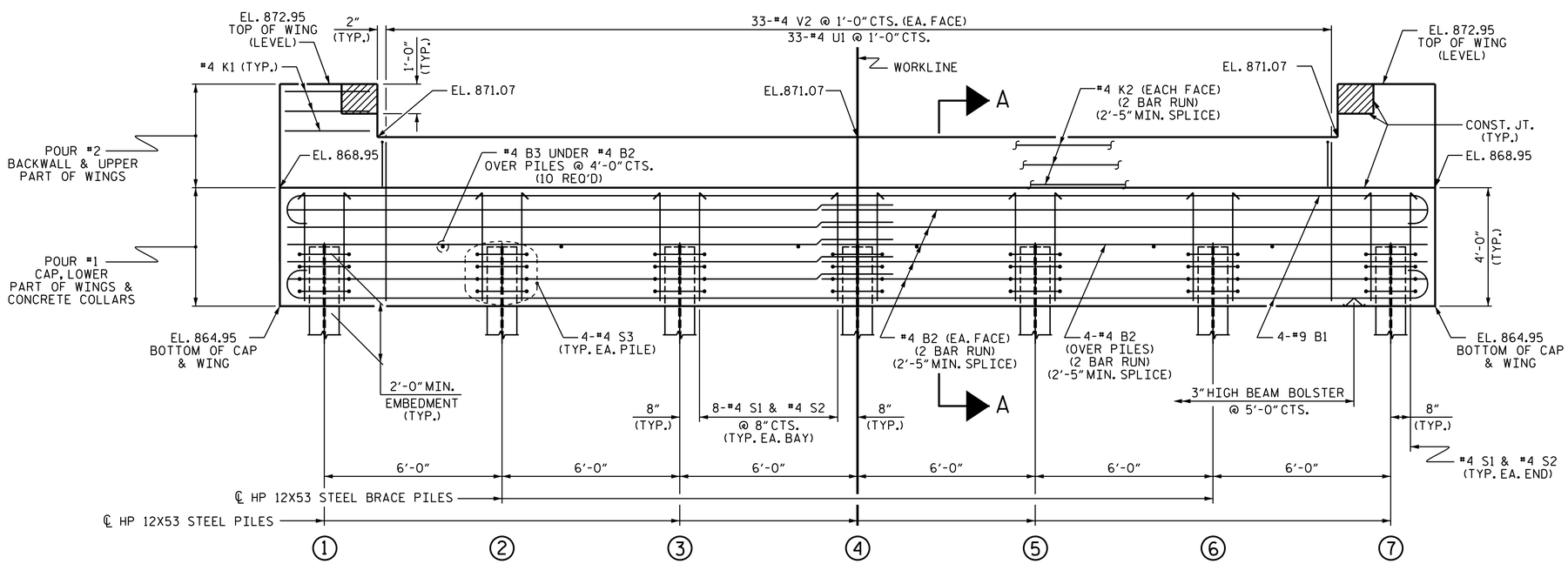

ELEVATION

WINGS NOT SHOWN FOR CLARITY.
FOR SECTION A-A, SEE SHEET 4 OF 4.
CONCRETE COLLARS FOR STEEL PILES NOT SHOWN IN PLAN AND ELEVATION VIEWS FOR CLARITY.
SEE "CORROSION PROTECTION FOR STEEL PILES DETAIL", SHEET 4 OF 4.

NOTES

STIRRUPS IN CAP MAY BE SHIFTED AS NECESSARY TO CLEAR DOWELS.

THE CONCRETE IN THE SHADED AREA OF THE WING SHALL BE POURED AFTER THE VERTICAL CONCRETE BARRIER RAIL IS CAST IF SLIP FORMING IS USED.

FOR PILE SPLICE DETAILS, SEE SHEET 4 OF 4.

FOR WING DETAILS, SEE SHEET 3 OF 4.

PROJECT NO. 17BP.12.R.47
CLEVELAND COUNTY
STATION: 13+68.69 -L

SHEET 2 OF 4

STATE OF NORTH CAROLINA
DEPARTMENT OF TRANSPORTATION
RALEIGH

SUBSTRUCTURE

END BENT 2

NORTH CAROLINA PROFESSIONAL SEAL 28950 ENGINEER HYERI P. KIM

DocuSigned by: Hyeri Kim 07A78571E44145F... 2/2/2016

ASSEMBLED BY : N.D'AIUTO	DATE : 12/17/15		
CHECKED BY : R.P.PATEL	DATE : 12/29/15		
DRAWN BY : WJH 12/11	REV. 4/15	MAA/TMG	
CHECKED BY : AAC 12/11			

DOCUMENT NOT CONSIDERED FINAL UNLESS ALL SIGNATURES COMPLETED

REVISIONS						SHEET NO.
NO.	BY:	DATE:	NO.	BY:	DATE:	S-14
1			3			TOTAL SHEETS
2			4			19

STD. NO. EB_33_90S4_39BB

28-JAN-2016 11:59
S:\DPG2\oldDPG3\DivisionLets\Div12\17BP12R47\Plans\17BP12R47_SD_E*.dgn
jdhawk

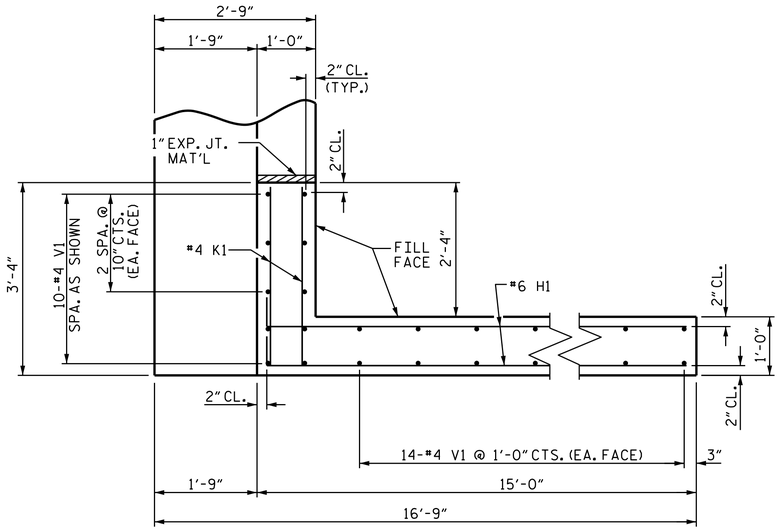

PLAN OF WING (W1)

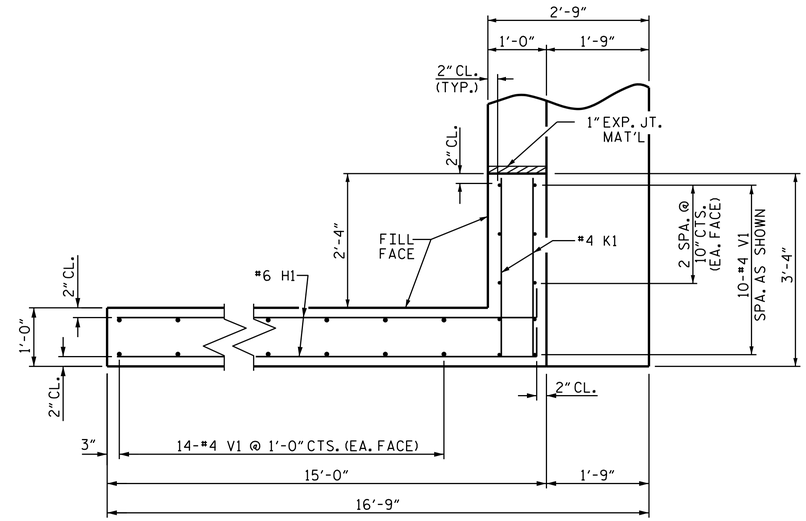

PLAN OF WING (W2)

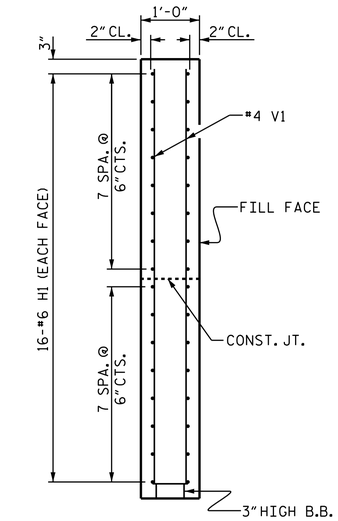

SECTION X-X

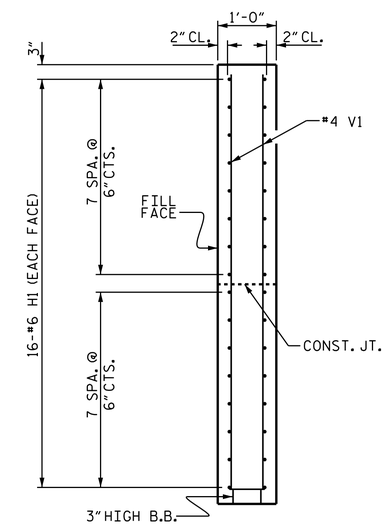

SECTION Y-Y

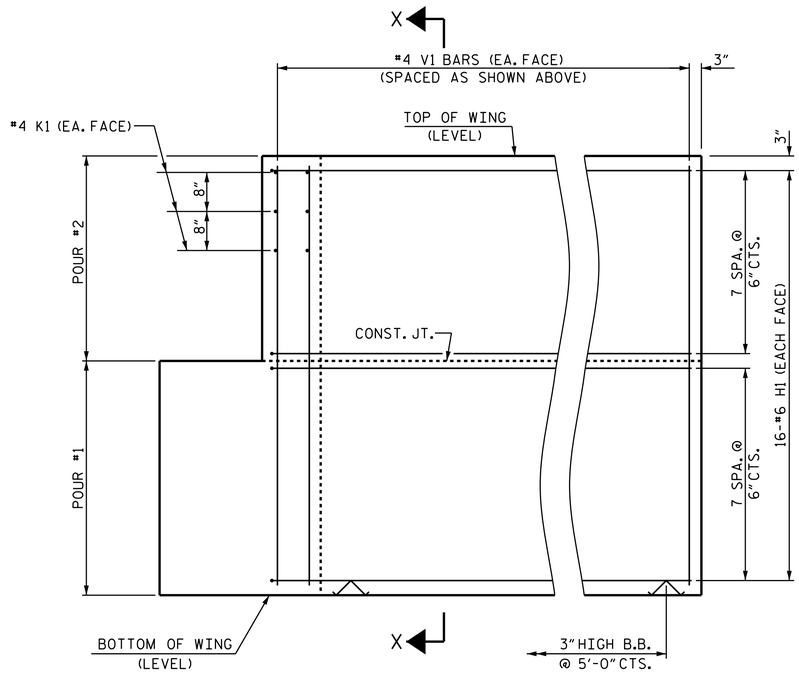

ELEVATION OF WING (W1)

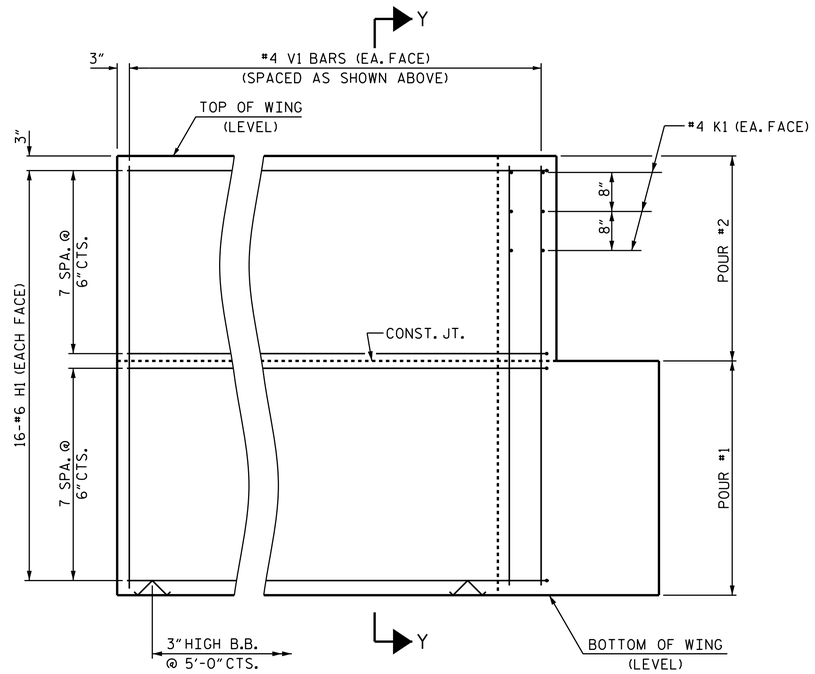

ELEVATION OF WING (W2)

WING DETAILS

PROJECT NO. 17BP.12.R.47

CLEVELAND COUNTY

STATION: 13+68.69 -L-

SHEET 3 OF 4

STATE OF NORTH CAROLINA
DEPARTMENT OF TRANSPORTATION
RALEIGH

SUBSTRUCTURE

END BENT
WING DETAILS

NORTH CAROLINA PROFESSIONAL SEAL 28950 ENGINEER HYEN P. KIM

DocuSigned by: Hyen Kim 07A78571E441455F 2/2/2016

DOCUMENT NOT CONSIDERED FINAL UNLESS ALL SIGNATURES COMPLETED

REVISIONS						
NO.	BY:	DATE:	NO.	BY:	DATE:	
1			3			
2			4			

SHEET NO. S-15

TOTAL SHEETS 19

STD. NO. EB_33_90S4_39BB

ASSEMBLED BY :	N.D'AIUTO	DATE :	12/17/15
CHECKED BY :	R.P.PATEL	DATE :	12/29/15
DRAWN BY :	WJH 12/11	REV. 4/15	MAA/TMG
CHECKED BY :	AAC 12/11		

28-JAN-2016 11:59
S:\DPG2\oldDPG3\DivisionLets\Div12\17BP12R47\Plans\17BP12R47_SD_E*.dgn
jdhawk

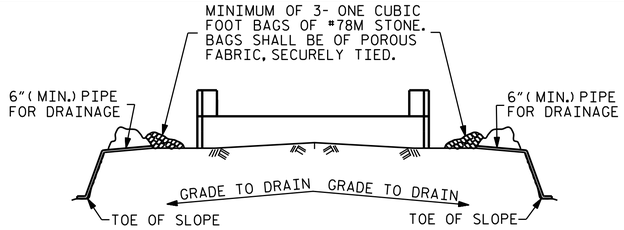

BAGGED STONE AND PIPE SHALL BE PLACED IMMEDIATELY AFTER COMPLETION OF END BENT EXCAVATION. PIPE MAY BE EITHER CONCRETE, CORRUGATED STEEL, CORRUGATED ALUMINUM ALLOY, OR CORRUGATED PLASTIC. PERFORATED PIPE WILL NOT BE ALLOWED.

BAGGED STONE SHALL REMAIN IN PLACE UNTIL THE ENGINEER DIRECTS THAT IT BE REMOVED. THE CONTRACTOR SHALL REMOVE AND DISPOSE OF SILT ACCUMULATIONS AT BAGGED STONE WHEN SO DIRECTED BY THE ENGINEER. BAGS SHALL BE REMOVED AND REPLACED WHENEVER THE ENGINEER DETERMINES THAT THEY HAVE DETERIORATED AND LOST THEIR EFFECTIVENESS.

NO SEPARATE PAYMENT WILL BE MADE FOR THIS WORK AND THE ENTIRE COST OF THIS WORK SHALL BE INCLUDED IN THE UNIT CONTRACT PRICE BID FOR THE SEVERAL PAY ITEMS.

TEMPORARY DRAINAGE AT END BENT

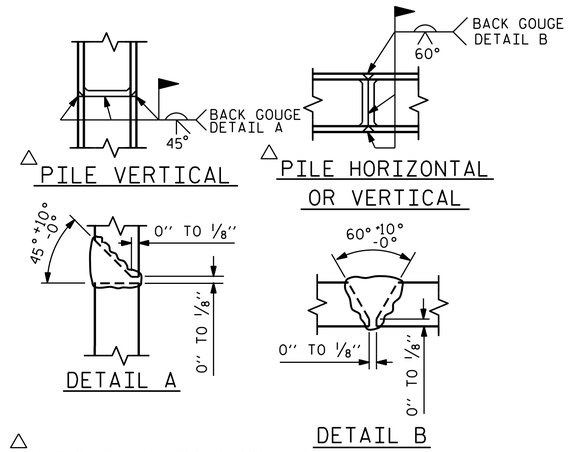

△ POSITION OF PILE DURING WELDING.

PILE SPLICE DETAILS

BAR TYPES

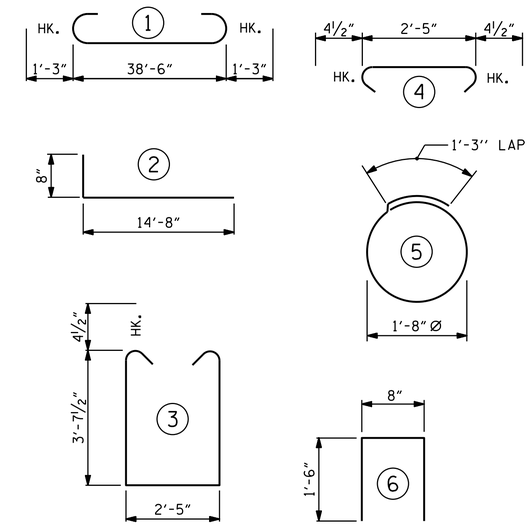

ALL BAR DIMENSIONS ARE OUT TO OUT.

END BENT 1	
HP 12X53 STEEL PILES	
NO: 7	LIN. FT.= 365
STEEL PILE POINTS	EA. 7

END BENT 2	
HP 12X53 STEEL PILES	
NO: 7	LIN. FT.= 295
STEEL PILE POINTS	EA. 7

BILL OF MATERIAL FOR ONE END BENT

BAR	NO.	SIZE	TYPE	LENGTH	WEIGHT
B1	8	#9	1	41'-0"	1115
B2	28	#4	STR	20'-7"	385
B3	10	#4	STR	2'-5"	16
D1	22	#8	STR	2'-3"	132
H1	64	#6	2	15'-4"	1474
K1	12	#4	STR	2'-11"	23
K2	12	#4	STR	20'-7"	165
S1	50	#4	3	10'-5"	348
S2	50	#4	4	3'-2"	106
S3	28	#4	5	6'-6"	122
U1	33	#4	6	3'-8"	81
V1	76	#4	STR	7'-8"	389
V2	66	#4	STR	5'-9"	254

REINFORCING STEEL (FOR ONE END BENT) LBS. 4,610

CLASS A CONCRETE BREAKDOWN (FOR ONE END BENT)

POUR #1 CAP, LOWER PART OF WINGS & COLLARS C.Y. 21.3

POUR #2 BACKWALL & UPPER PART OF WINGS C.Y. 7.7

TOTAL CLASS A CONCRETE C.Y. 29.0

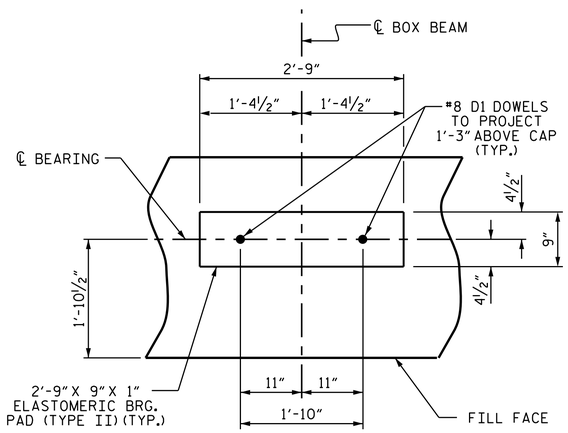

DETAIL "A"

(END BENT 1 SHOWN, END BENT 2 SIMILAR BY ROTATION)

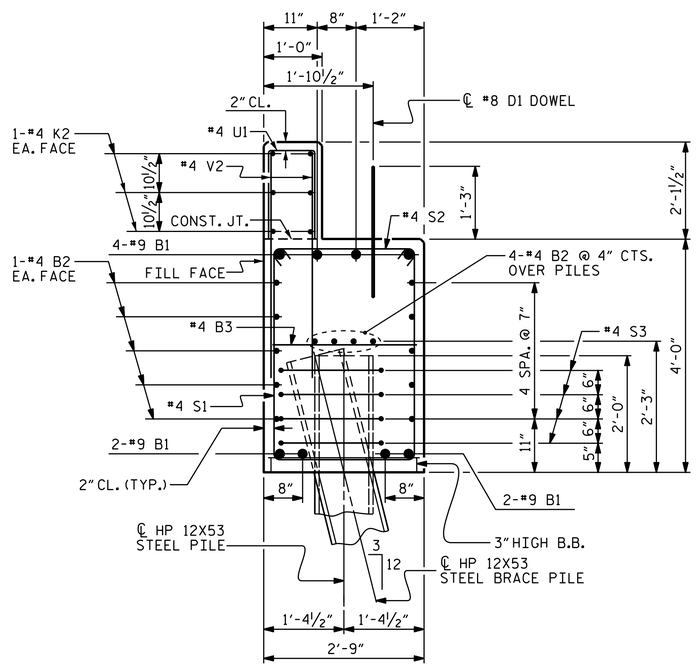

SECTION A-A

(CONCRETE COLLAR NOT SHOWN FOR CLARITY. SEE "CORROSION PROTECTION FOR STEEL PILES DETAIL.")

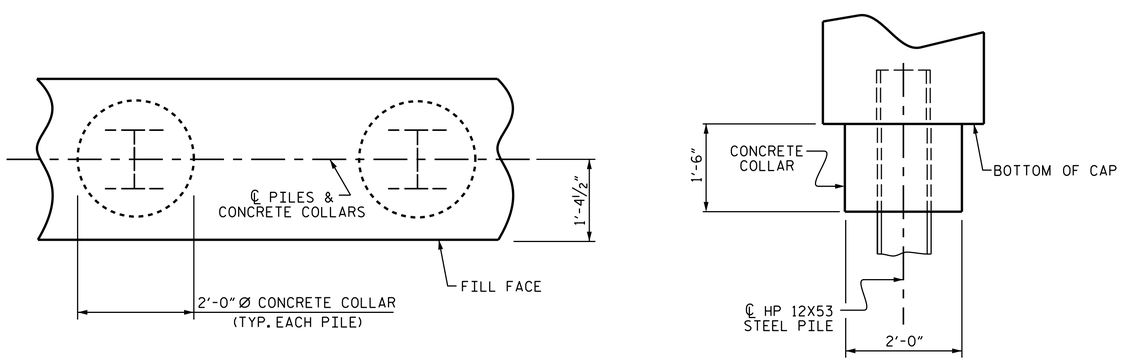

PLAN

ELEVATION

CORROSION PROTECTION FOR STEEL PILES DETAIL

(END BENT 1 SHOWN, END BENT 2 SIMILAR BY ROTATION)

PROJECT NO. 17BP.12.R.47

CLEVELAND COUNTY

STATION: 13+68.69 -L-

SHEET 4 OF 4

STATE OF NORTH CAROLINA
DEPARTMENT OF TRANSPORTATION
RALEIGH

SUBSTRUCTURE

END BENT 1 & 2 DETAILS

NORTH CAROLINA PROFESSIONAL SEAL 28950 ENGINEER HYEN P. KIM

DocuSigned by: Hyen Kim 07A78571E44145F... 2/2/2016

DOCUMENT NOT CONSIDERED FINAL UNLESS ALL SIGNATURES COMPLETED

REVISIONS						
NO.	BY:	DATE:	NO.	BY:	DATE:	
1			3			
2			4			

SHEET NO. S-16

TOTAL SHEETS 19

STD. NO. EB_33_90S4_39BB

ASSEMBLED BY : N.D'AIUTO		DATE : 12/17/15	
CHECKED BY : R.P.PATEL		DATE : 12/29/15	
DRAWN BY : WJH	12/11	REV. 8/14	MAA/TMG
CHECKED BY : AAC	12/11		

28-JAN-2016 11:59
S:\DPG2\oldDPG3\DivisionLets\Div12\17BP12R47\Plans\17BP12R47_SD_E*.dgn
jdhawk

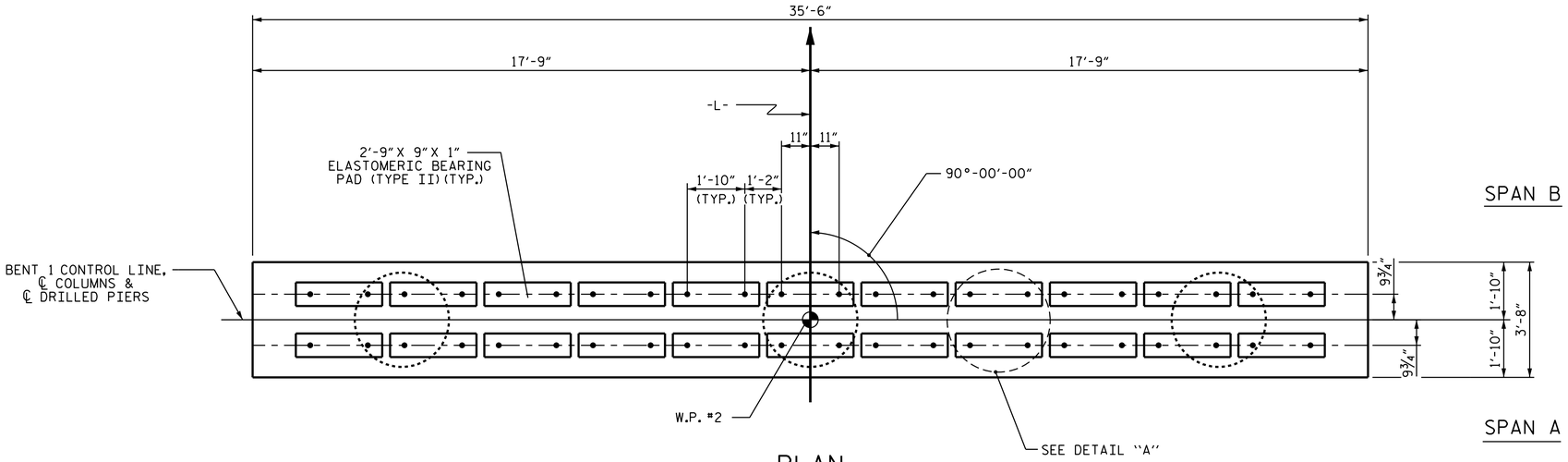

PLAN

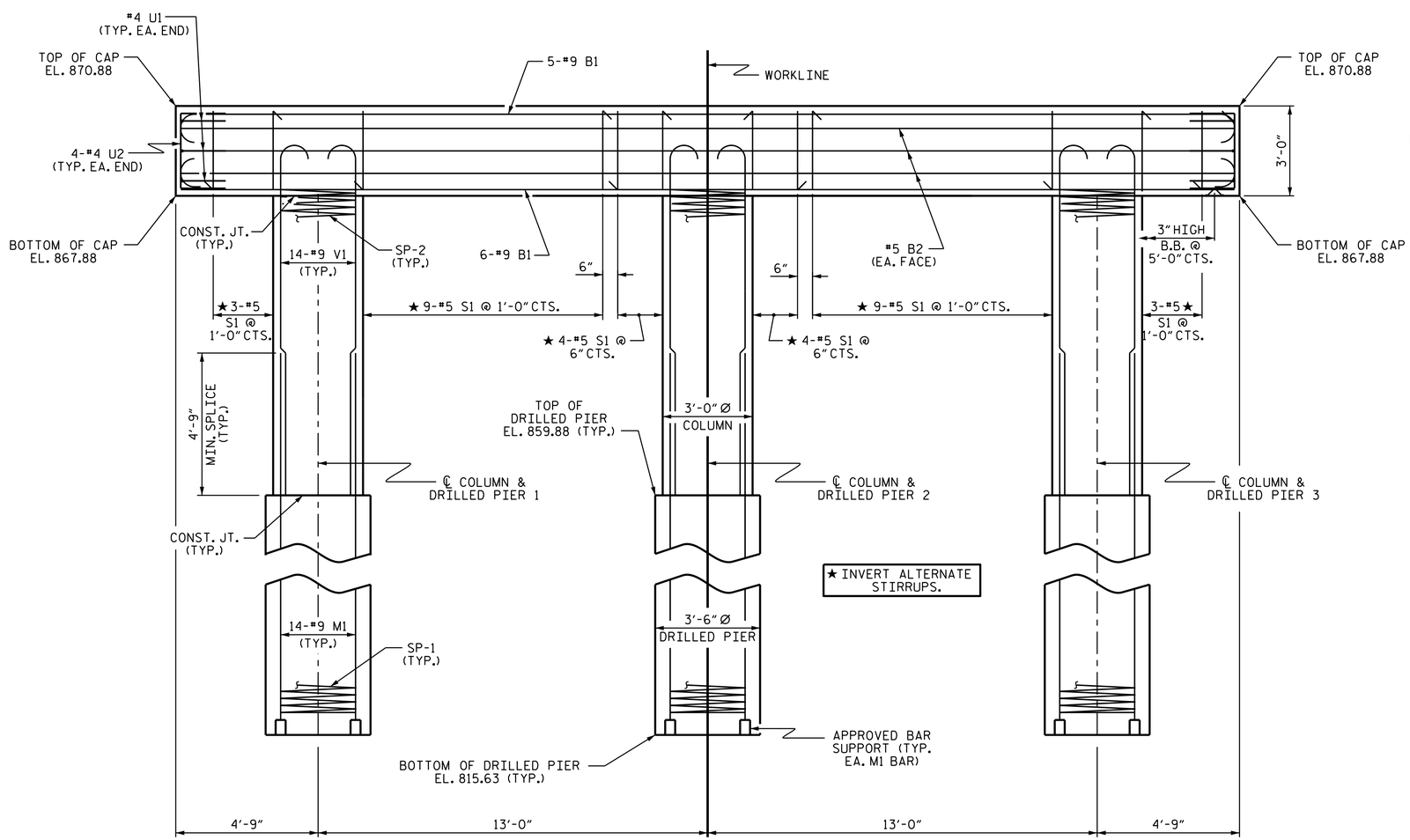

ELEVATION

DIMENSIONS & REINFORCING STEEL ARE TYPICAL FOR EACH COLUMN & DRILLED PIER UNLESS OTHERWISE NOTED.

NOTES

STIRRUPS IN CAP MAY BE SHIFTED AS NECESSARY TO CLEAR DOWELS.

HOOKS ON "V" BARS MAY BE TURNED AS NECESSARY FOR PLACING REINFORCING STEEL.

FOR DRILLED PIERS, SEE SECTION 411 OF THE STANDARD SPECIFICATIONS.

ALL STEEL IN THE DRILLED PIERS IS INCLUDED IN THE PAY ITEMS FOR "REINFORCING STEEL" AND "SPIRAL COLUMN REINFORCING STEEL."

THE LOCATION OF THE CONSTRUCTION JOINT IN THE DRILLED PIERS IS BASED ON AN APPROXIMATE GROUND LINE ELEVATION. IF THE CONSTRUCTION JOINT IS ABOVE THE ACTUAL GROUND LINE ELEVATION, THE CONTRACTOR SHALL PLACE THE CONSTRUCTION JOINT ONE FOOT BELOW THE GROUND LINE.

DRILLED PIERS SHALL BE TERMINATED ONE FOOT ± ABOVE NORMAL WATER SURFACE ELEVATION FOR SHAFTS LOCATED IN WATER.

THE CONTRACTOR'S ATTENTION IS CALLED TO THE FACT THAT THE LONGITUDINAL REINFORCEMENT FOR DRILLED PIERS IS DETAILED WITH 3 FEET OF EXTRA LENGTH.

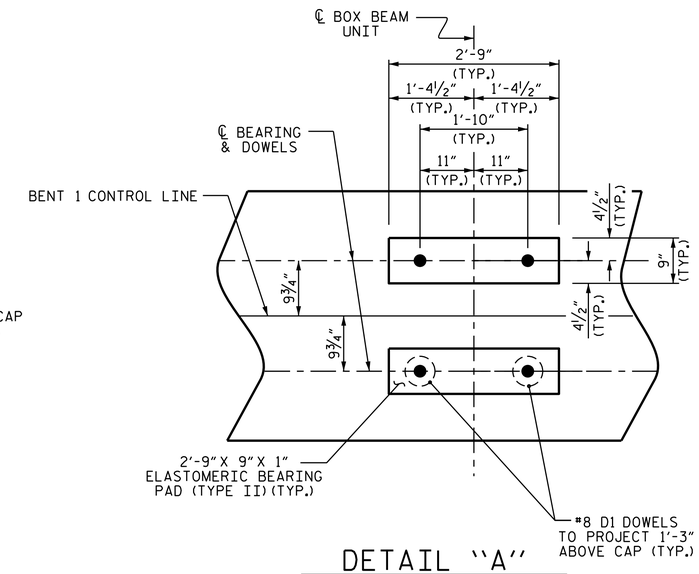

DETAIL "A"

PROJECT NO. 17BP.12.R.47

CLEVELAND COUNTY

STATION: 13+68.69 -L-

SHEET 1 OF 2

STATE OF NORTH CAROLINA
DEPARTMENT OF TRANSPORTATION
RALEIGH

SUBSTRUCTURE

BENT 1

NORTH CAROLINA PROFESSIONAL SEAL 28950 ENGINEER HYEN P. KIM

DocuSigned by: Hyen Kim
07A7857 1E44145F...
2/2/2016

REVISIONS							SHEET NO.
NO.	BY:	DATE:	NO.	BY:	DATE:		S-17
1			3				TOTAL SHEETS
2			4				19

DOCUMENT NOT CONSIDERED FINAL UNLESS ALL SIGNATURES COMPLETED

ASSEMBLED BY :	N.D'AIUTO	DATE : 12/17/15
CHECKED BY :	R.P.PATEL	DATE : 12/29/15
DESIGN ENGINEER OF RECORD:	H.P.KIM	DATE : 12/29/15

28-JAN-2016 11:59
S:\DPG2\oldDPG3\DivisionLets\Div12\17BP12R47\Plans\17BP12R47_SD_B*.dgn
jdhawk

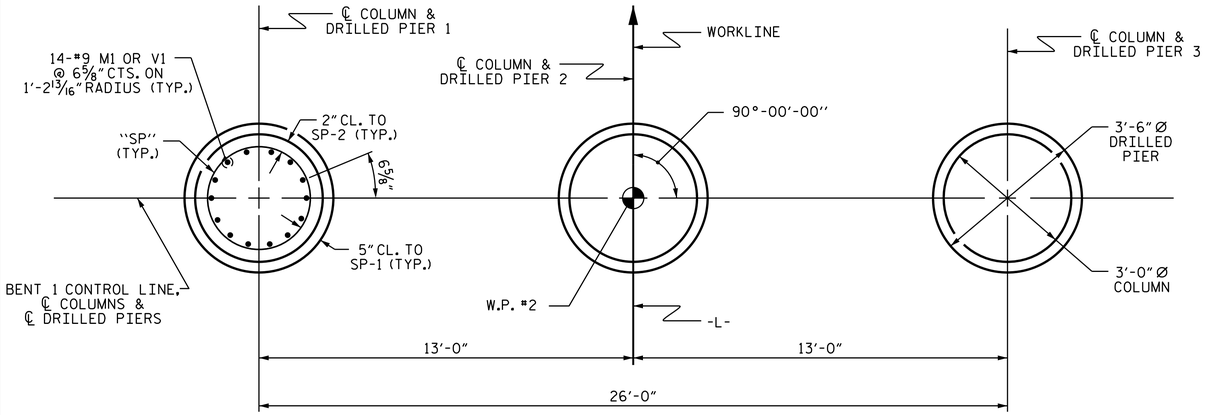

PLAN OF DRILLED PIERS & COLUMNS

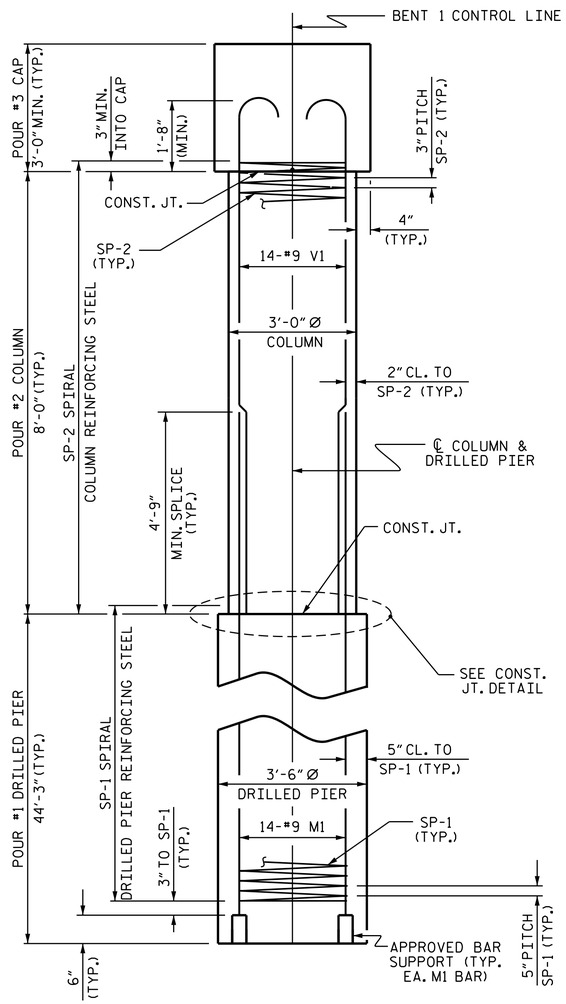

END ELEVATION

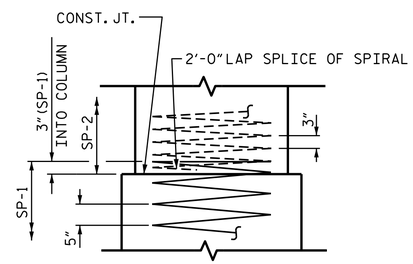

CONSTRUCTION JOINT DETAIL

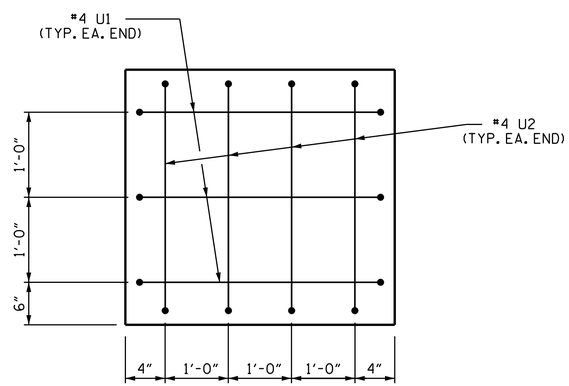

END OF CAP VIEW

(TYP. BOTH ENDS)

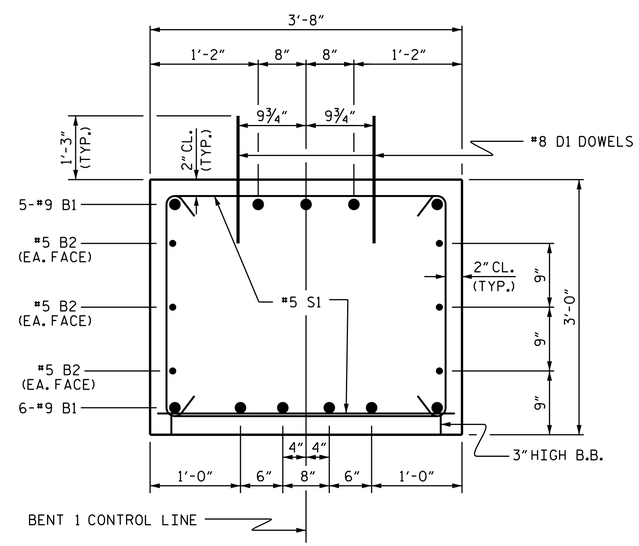

SECTION THRU CAP

BAR TYPES

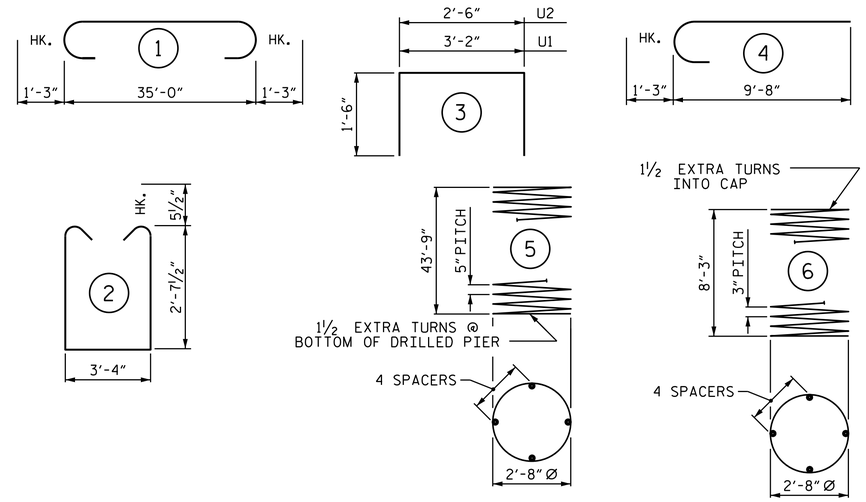

ALL BAR DIMENSIONS ARE OUT TO OUT.

BILL OF MATERIAL

BENT 1

BAR	NO.	SIZE	TYPE	LENGTH	WEIGHT
B1	11	#9	1	37'-6"	1403
B2	6	#5	STR	35'-2"	220
D1	44	#8	STR	2'-3"	264
M1	42	#9	STR	51'-9"	7390
S1	32	#5	2	9'-6"	317
U1	6	#4	3	6'-2"	25
U2	8	#4	3	5'-6"	29
V1	42	#9	4	10'-11"	1559
REINFORCING STEEL					LBS. 11,207
SP-1	3	*	5	875'-11"	2741
SP-2	3	**	6	284'-8"	570
SPIRAL COLUMN REINFORCING STEEL					LBS. 3,311

* THE SP-1 SPIRAL REINFORCING STEEL SHALL BE W31 OR D-31 COLD DRAWN WIRE OR #5 PLAIN OR DEFORMED BAR

** THE SP-2 SPIRAL REINFORCING STEEL SHALL BE W20 OR D-20 COLD DRAWN WIRE OR #4 PLAIN OR DEFORMED BAR

CLASS A CONCRETE BREAKDOWN

POUR #2 (COLUMNS)	C.Y.	6.3
POUR #3 (CAP)	C.Y.	14.5
TOTAL CLASS A CONCRETE	C.Y.	20.8

DRILLED PIERS:

DRILLED PIER CONCRETE POUR #1 (DRILLED PIERS)	C.Y.	47.3
3'-6"Ø DRILLED PIER NOT IN SOIL	LIN. FT.	26.0
3'-6"Ø DRILLED PIER IN SOIL	LIN. FT.	106.75
PERMANENT STEEL CASING FOR 3'-6"Ø DRILLED PIER	LIN. FT.	120.00
CSL TUBES	LIN. FT.	549.00

PROJECT NO. 17BP.12.R.47

CLEVELAND COUNTY

STATION: 13+68.69 -L-

SHEET 2 OF 2

STATE OF NORTH CAROLINA
DEPARTMENT OF TRANSPORTATION
RALEIGH

SUBSTRUCTURE

BENT 1

NORTH CAROLINA PROFESSIONAL SEAL 28950 ENGINEER HYEN P. KIM

DocuSigned by: Hyen Kim 07A7857 1E44145F... 2/2/2016

ASSEMBLED BY :	N.D'AIUTO	DATE : 12/17/15
CHECKED BY :	R.P.PATEL	DATE : 12/29/15
DESIGN ENGINEER OF RECORD:	H.P.KIM	DATE : 12/29/15

DOCUMENT NOT CONSIDERED FINAL UNLESS ALL SIGNATURES COMPLETED

REVISIONS							SHEET NO.
NO.	BY:	DATE:	NO.	BY:	DATE:		S-18
1			3				TOTAL SHEETS
2			4				19

28-JAN-2016 11:59
S:\DPG2\oldDPG3\DivisionLets\Div12\17BP12R47\Plans\17BP12R47_SD_B*.dgn
jdhawk

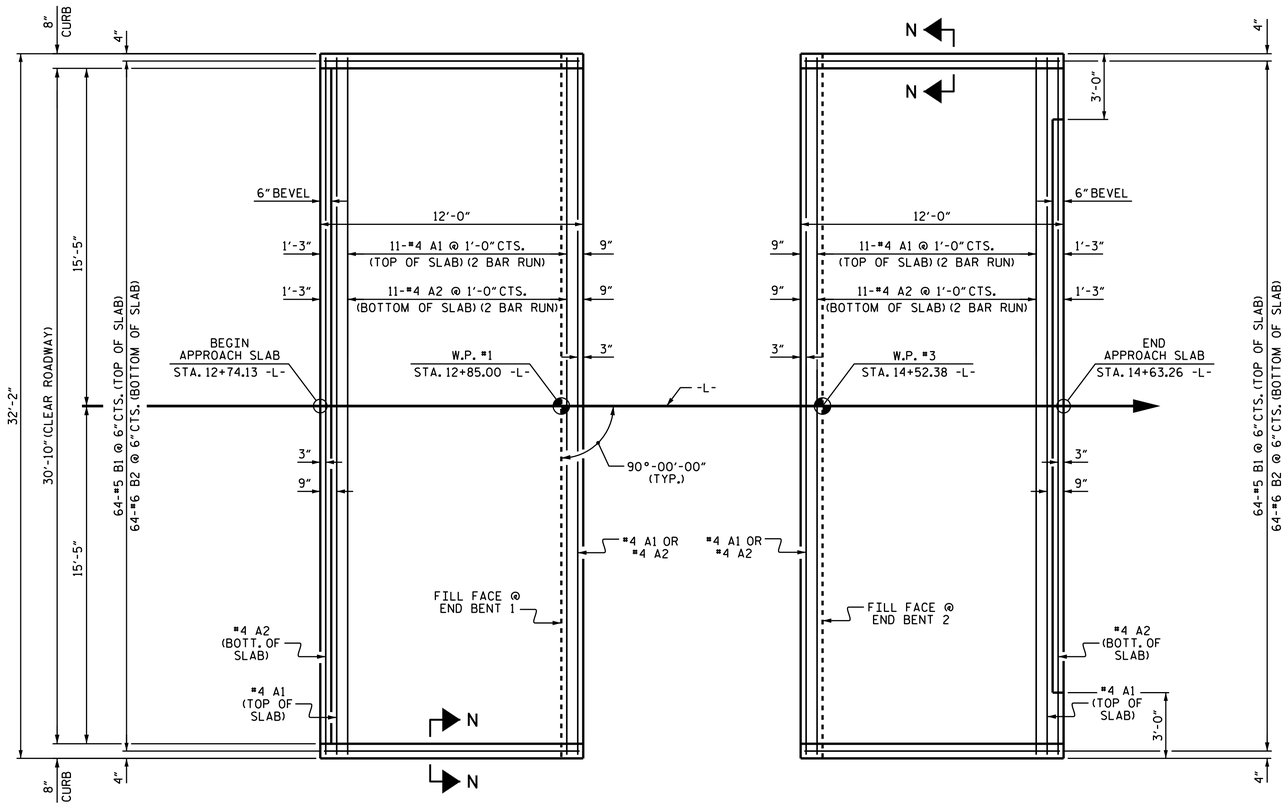

PLAN @ END BENT 1

PLAN @ END BENT 2

DIMENSIONS SHOWN ARE TYPICAL FOR BOTH APPROACH SLABS

NOTES

FOR BRIDGE APPROACH FILL INCLUDING GEOTEXTILE, 4" Ø DRAINAGE PIPE, AND #78M STONE BACKFILL, SEE ROADWAY PLANS.

GEOTEXTILE SHALL BE TYPE 1 IN ACCORDANCE WITH THE STANDARD SPECIFICATIONS SECTION 1056.

#78M STONE BACKFILL (CLASS V SELECT MATERIAL) SHALL BE IN ACCORDANCE WITH STANDARD SPECIFICATIONS SECTION 1016.

#78M STONE BACKFILL IS TO BE CONTINUOUS ALONG FILL FACE OF BACKWALL FROM OUTSIDE EDGE TO OUTSIDE EDGE OF APPROACH SLAB.

FOR THE 4" Ø DRAINAGE PIPE OUTLET(S), SEE ROADWAY STANDARD DRAWINGS.

AREA BETWEEN THE WINGWALL AND APPROACH SLAB SHALL BE GRADED TO DRAIN THE WATER AWAY FROM THE FILL FACE OF THE BRIDGE AND SHALL BE PAVED. SEE ROADWAY PLANS.

APPROACH SLAB GROOVING IS NOT REQUIRED.

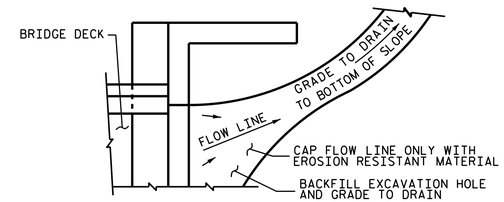

NOTE: IF THE APPROACH SLAB IS NOT CONSTRUCTED IMMEDIATELY AFTER THE BACKFILLING OF THE END BENT EXCAVATION, GRADE TO DRAIN TO THE BOTTOM OF THE SLOPE AND PROVIDE EROSION RESISTANT MATERIAL, SUCH AS FIBERGLASS ROVING OR AS DIRECTED BY THE ENGINEER TO PREVENT SOIL EROSION AND TO PROTECT THE AREA ADJACENT TO THE STRUCTURE. THE CONTRACTOR WILL BE REQUIRED TO REMOVE THESE MATERIALS PRIOR TO CONSTRUCTION OF THE APPROACH SLAB.

BILL OF MATERIAL

APPROACH SLAB AT EB 1

BAR	NO.	SIZE	TYPE	LENGTH	WEIGHT
* A1	26	#4	STR	16'-11"	294
A2	26	#4	STR	16'-9"	291
* B1	64	#5	STR	11'-2"	745
B2	64	#6	STR	11'-8"	1121
REINFORCING STEEL				LBS.	1,412
* EPOXY COATED REINFORCING STEEL				LBS.	1,039
CLASS AA CONCRETE				CU. YDS.	17.0

APPROACH SLAB AT EB 2

BAR	NO.	SIZE	TYPE	LENGTH	WEIGHT
* A1	26	#4	STR	16'-11"	294
A2	26	#4	STR	16'-9"	291
* B1	64	#5	STR	11'-2"	745
B2	64	#6	STR	11'-8"	1121
REINFORCING STEEL				LBS.	1,412
* EPOXY COATED REINFORCING STEEL				LBS.	1,039
CLASS AA CONCRETE				CU. YDS.	17.0

SPLICE LENGTHS		
BAR SIZE	EPOXY COATED	UNCOATED
#4	2'-0"	1'-9"
#5	2'-6"	2'-2"
#6	3'-10"	2'-7"

TEMPORARY DRAINAGE DETAIL

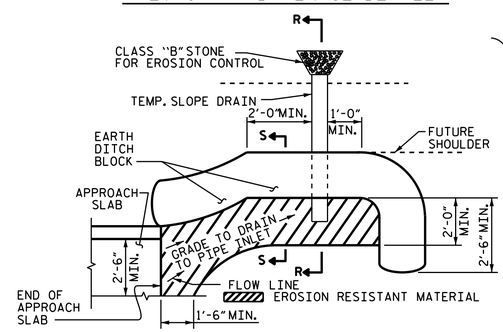

NOTE: IMMEDIATELY AFTER THE CONSTRUCTION OF THE APPROACH SLAB, THE CONTRACTOR SHALL PROVIDE TEMPORARY BERM AND SLOPE DRAIN. CONTRACTOR SHALL GRADE TO PIPE INLET AND PROVIDE EROSION RESISTANT MATERIAL AS SHOWN. THE EROSION RESISTANT MATERIAL SHALL BE EITHER 1) ASPHALT PLANT MIX, TYPE 1 OR TYPE 2, MIN. 2" DEPTH, 2) EROSION CONTROL MAT, OR 3) CONCRETE, AS DIRECTED BY THE ENGINEER. THE SLOPE DRAIN SHALL CONSIST OF A NON-PERFORATED TEMPORARY DRAINAGE PIPE, 12 INCHES IN DIAMETER.

PLAN VIEW

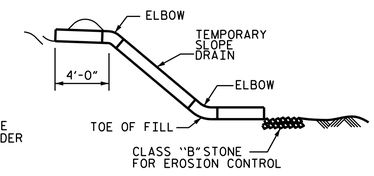

SECTION R-R

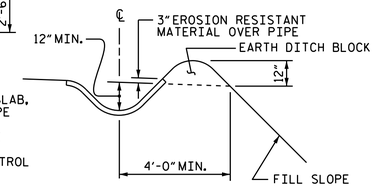

SECTION S-S

TEMPORARY BERM AND SLOPE DRAIN DETAILS

(TO BE USED WHEN SHOULDER BERM GUTTER IS REQUIRED)

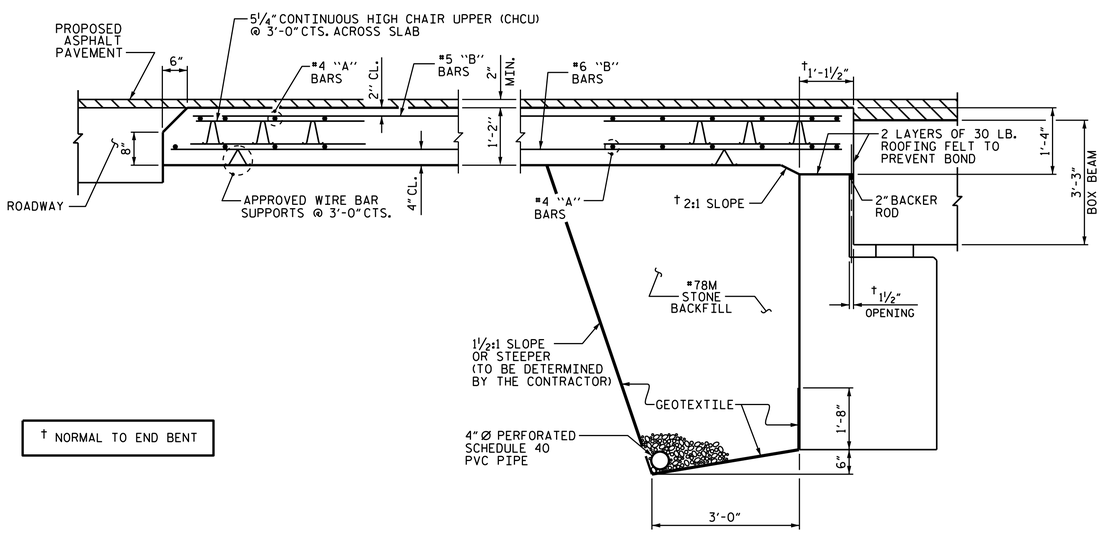

† NORMAL TO END BENT

SECTION THRU SLAB

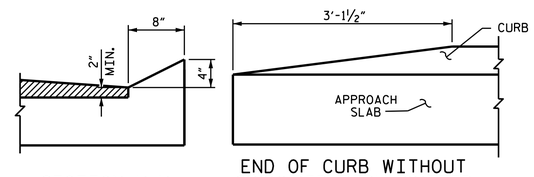

SECTION N-N

END OF CURB WITHOUT SHOULDER BERM GUTTER

CURB DETAILS

PROJECT NO. 17BP.12.R.47

CLEVELAND COUNTY

STATION: 13+68.69 -L-

STATE OF NORTH CAROLINA
DEPARTMENT OF TRANSPORTATION
RALEIGH

STANDARD
BRIDGE APPROACH SLAB
FOR PRESTRESSED CONCRETE
BOX BEAM UNIT
(SUB-REGIONAL TIER)
90° SKEW

NORTH CAROLINA PROFESSIONAL SEAL 28950 ENGINEER HYER P. KIM

DocuSigned by: Hyer Kim 07A7857 1E44145F... 2/2/2016

DOCUMENT NOT CONSIDERED FINAL UNLESS ALL SIGNATURES COMPLETED

REVISIONS							
NO.	BY:	DATE:	NO.	BY:	DATE:	SHEET NO.	
1			3			S-19	
2			4			TOTAL SHEETS	
						19	

STD. NO. BAS_BB_33_90S

ASSEMBLED BY :	J. K. BOWLES	DATE : 9/17/15	
CHECKED BY :	H.P. KIM	DATE : 10/7/15	
DRAWN BY : MAA	11/11	REV. 9-15	MAA/TMG
CHECKED BY : AAC	11/11		

28-JAN-2016 11:59
S:\DPG2\oldDPG3\DivisionLets\Div12\17BP12R47\Plans\17BP12R47_SD_AS.dgn
jdhawk

STANDARD NOTES

DESIGN DATA:

SPECIFICATIONS	A.A.S.H.T.O. (CURRENT)
LIVE LOAD	SEE PLANS
IMPACT ALLOWANCE	SEE A.A.S.H.T.O.
STRESS IN EXTREME FIBER OF	
STRUCTURAL STEEL - AASHTO M270 GRADE 36	20,000 LBS. PER SQ. IN.
- AASHTO M270 GRADE 50W	27,000 LBS. PER SQ. IN.
- AASHTO M270 GRADE 50	27,000 LBS. PER SQ. IN.
REINFORCING STEEL IN TENSION	
GRADE 60	24,000 LBS. PER SQ. IN.
CONCRETE IN COMPRESSION	1,200 LBS. PER SQ. IN.
CONCRETE IN SHEAR	SEE A.A.S.H.T.O.
STRUCTURAL TIMBER - TREATED OR	
UNTREATED - EXTREME FIBER STRESS	1,800 LBS. PER SQ. IN.
COMPRESSION PERPENDICULAR TO GRAIN OF TIMBER	375 LBS. PER SQ. IN.
EQUIVALENT FLUID PRESSURE OF EARTH	30 LBS. PER CU. FT. (MINIMUM)

MATERIAL AND WORKMANSHIP:

EXCEPT AS MAY OTHERWISE BE SPECIFIED ON PLANS OR IN THE SPECIAL PROVISIONS, ALL MATERIAL AND WORKMANSHIP SHALL BE IN ACCORDANCE WITH THE 2012 "STANDARD SPECIFICATIONS FOR ROADS AND STRUCTURES" OF THE N. C. DEPARTMENT OF TRANSPORTATION.

STEEL SHEET PILING FOR PERMANENT OR TEMPORARY APPLICATIONS SHALL BE HOT ROLLED.

CONCRETE:

UNLESS OTHERWISE REQUIRED ON PLANS, CLASS A CONCRETE SHALL BE USED FOR ALL PORTIONS OF ALL STRUCTURES WITH THE EXCEPTION THAT: CLASS AA CONCRETE SHALL BE USED IN BRIDGE SUPERSTRUCTURES, ABUTMENT BACKWALLS, AND APPROACH SLABS; AND CLASS B CONCRETE SHALL BE USED FOR SLOPE PROTECTION AND RIP RAP.

CONCRETE CHAMFERS:

UNLESS OTHERWISE NOTED ON THE PLANS, ALL EXPOSED CORNERS ON STRUCTURES SHALL BE CHAMFERED 3/4" WITH THE FOLLOWING EXCEPTIONS: TOP CORNERS OF CURBS MAY BE ROUNDED TO 1-1/2" RADIUS WHICH IS BUILT INTO CURB FORMS; CORNERS OF TRANSVERSE FLOOR EXPANSION JOINTS SHALL BE ROUNDED WITH A 1/4" FINISHING TOOL UNLESS OTHERWISE REQUIRED ON PLANS; AND CORNERS OF EXPANSION JOINTS IN THE ROADWAY FACES AND TOPS OF CURBS AND SIDEWALKS SHALL BE ROUNDED TO A 1/4" RADIUS WITH A FINISHING STONE OR TOOL UNLESS OTHERWISE REQUIRED ON PLANS.

DOWELS:

DOWELS WHEN INDICATED ON PLANS AS FOR CULVERT EXTENSIONS, SHALL BE EMBEDDED AT LEAST 12" INTO THE OLD CONCRETE AND GROUTED INTO PLACE WITH 1:2 CEMENT MORTAR.

ALLOWANCE FOR DEAD LOAD DEFLECTION, SETTLEMENT, ETC. IN CASTING SUPERSTRUCTURES:

BRIDGES SHALL BE BUILT ON THE GRADE OR VERTICAL CURVE SHOWN ON PLANS. SLABS, CURBS AND PARAPETS SHALL CONFORM TO THE GRADE OR CURVE.

ALL DIMENSIONS WHICH ARE GIVEN IN SECTION AND ARE AFFECTED BY DEAD LOAD DEFLECTIONS ARE DIMENSIONS AT CENTER LINE OF BEARING UNLESS OTHERWISE NOTED ON PLANS. IN SETTING FORMS FOR STEEL BEAM BRIDGES AND PRESTRESSED CONCRETE GIRDER BRIDGES, ADJUSTMENTS SHALL BE MADE DUE TO THE DEAD LOAD DEFLECTIONS FOR THE ELEVATIONS SHOWN. WHERE BLOCKS ARE SHOWN OVER BEAMS FOR BUILDING UP TO THE SLAB, THE VERTICAL DIMENSIONS OF THE BLOCKS SHALL BE ADJUSTED BETWEEN BEARINGS TO COMPENSATE FOR DEAD LOAD DEFLECTIONS, VERTICAL CURVE ORDINATE, AND ACTUAL BEAM CAMBER. WHERE BOTTOM OF SLAB IS IN LINE WITH BOTTOM OF TOP FLANGES, DEPTH OF SLAB BETWEEN BEARINGS SHALL BE ADJUSTED TO COMPENSATE FOR DEAD LOAD DEFLECTION, VERTICAL CURVE ORDINATE, AND ACTUAL BEAM CAMBER.

IN SETTING FALSEWORK AND FORMS FOR REINFORCED CONCRETE SPANS, AN ALLOWANCE SHALL BE MADE FOR DEAD LOAD DEFLECTIONS, SETTLEMENT OF FALSEWORK, AND PERMANENT CAMBER WHICH SHALL BE PROVIDED FOR IN ADDITION TO THE ELEVATIONS SHOWN. AFTER REMOVAL OF THE FALSEWORK, THE FINISHED STRUCTURES SHALL CONFORM TO THE PROFILE AND ELEVATIONS SHOWN ON THE PLANS AND CONSTRUCTION ELEVATIONS FURNISHED BY THE ENGINEER.

DETAILED DRAWINGS FOR FALSEWORK OR FORMS FOR BRIDGE SUPERSTRUCTURE AND ANY STRUCTURE OR PARTS OF A STRUCTURE AS NOTED ON THE PLANS SHALL BE SUBMITTED TO THE ENGINEER FOR APPROVAL BEFORE CONSTRUCTION OF THE FALSEWORK OR FORMS IS STARTED.

REINFORCING STEEL:

ALL REINFORCING STEEL SHALL BE DEFORMED. DIMENSIONS RELATIVE TO PLACEMENT OF REINFORCING ARE TO CENTERS OF BARS UNLESS OTHERWISE INDICATED IN THE PLANS. DIMENSIONS ON BAR DETAILS ARE TO CENTERS OF BARS OR ARE OUT TO OUT AS INDICATED ON PLANS.

WIRE BAR SUPPORTS SHALL BE PROVIDED FOR REINFORCING STEEL WHERE INDICATED ON THE PLANS. WHEN BAR SUPPORT PIECES ARE PLACED IN CONTINUOUS LINES, THEY SHALL BE SO PLACED THAT THE ENDS OF THE SUPPORTING WIRES SHALL BE LAPPED TO LOCK LEGS ON ADJOINING PIECES.

STRUCTURAL STEEL:

AT THE CONTRACTOR'S OPTION, HE MAY SUBSTITUTE 7/8" Ø SHEAR STUDS FOR THE 3/4" Ø STUDS SPECIFIED ON THE PLANS. THIS SUBSTITUTION SHALL BE MADE AT THE RATE OF 3 - 7/8" Ø STUDS FOR 4 - 3/4" Ø STUDS, AND STUD SPACING CHANGES SHALL BE MADE AS NECESSARY TO PROVIDE THE SAME EQUIVALENT NUMBER OF 7/8" Ø STUDS ALONG THE BEAM AS SHOWN FOR 3/4" Ø STUDS BASED ON THE RATIO OF 3 - 7/8" Ø STUDS FOR 4 - 3/4" Ø STUDS. STUDS OF THE LENGTH SPECIFIED ON THE PLANS MUST BE PROVIDED. THE MAXIMUM SPACING SHALL BE 2'-0".

EXCEPT AT THE INTERIOR SUPPORTS OF CONTINUOUS BEAMS WHERE THE COVER PLATE IS IN CONTACT WITH BEARING PLATE, THE CONTRACTOR MAY, AT HIS OPTION, SUBSTITUTE FOR THE COVER PLATES DESIGNATED ON THE PLANS COVER PLATES OF THE EQUIVALENT AREA PROVIDED THESE PLATES ARE AT LEAST 5/16" IN THICKNESS AND DO NOT EXCEED A WIDTH EQUAL TO THE FLANGE WIDTH LESS 2" OR A THICKNESS EQUAL TO 2 TIMES THE FLANGE THICKNESS. THE SIZE OF FILLET WELDS SHALL CONFORM TO THE REQUIREMENTS OF THE CURRENT ANSI/AASHTO/AWS "BRIDGE WELDING CODE". ELECTROSLAG WELDING WILL NOT BE PERMITTED.

WITH THE SOLE EXCEPTION OF EDGES AT SURFACES WHICH BEAR ON OTHER SURFACES, ALL SHARP EDGES AND ENDS OF SHAPES AND PLATES SHALL BE SLIGHTLY ROUNDED BY SUITABLE MEANS TO A RADIUS OF APPROXIMATELY 1/16 INCH OR EQUIVALENT FLAT SURFACE AT A SUITABLE ANGLE PRIOR TO PAINTING, GALVANIZING, OR METALLIZING.

HANDRAILS AND POSTS:

METAL STANDARDS AND FACES OF THE CONCRETE END POSTS FOR THE METAL RAIL SHALL BE SET NORMAL TO THE GRADE OF THE CURB, UNLESS OTHERWISE SHOWN ON PLANS. THE METAL RAIL AND TOPS OF CONCRETE POSTS USED WITH THE ALUMINUM RAIL SHALL BE BUILT PARALLEL TO THE GRADE OF THE CURB.

METAL HANDRAILS SHALL BE IN ACCORDANCE WITH THE PLANS. RAILS SHALL BE AS MANUFACTURED FOR BRIDGE RAILING. CASTINGS SHALL BE OF A UNIFORM APPEARANCE. FINS AND OTHER DEFORMATIONS RESULTING FROM CASTING OR OTHERWISE SHALL BE REMOVED IN A MANNER SO THAT A UNIFORM COLORING OF THE COMPLETED CASTING SHALL BE OBTAINED. CASTINGS WITH DISCOLORATIONS OR OF NON-UNIFORM COLORING WILL NOT BE ACCEPTED. CERTIFIED MILL REPORTS ARE REQUIRED FOR METAL RAILS AND POSTS.

SPECIAL NOTES:

GENERALLY, IN CASE OF DISCREPANCY, THIS STANDARD SHEET OF NOTES SHALL GOVERN OVER THE SPECIFICATIONS, BUT THE REMAINDER OF THE PLANS SHALL GOVERN OVER NOTES HEREON, AND SPECIAL PROVISIONS SHALL GOVERN OVER ALL. SEE SPECIFICATIONS ARTICLE 105-4.

ENGLISH

JANUARY, 1990

STD. NO. SN