09/08/99

TIP PROJECT: BD-5112T

CONTRACT: DL00040

STATE	STATE PROJECT REFERENCE NO.	SHEET NO.	TOTAL SHEETS
N.C.	BD-5112T	1	

STATE PROJ. NO.	F. A. PROJ. NO.	DESCRIPTION
45358.1.20	BRSTP-1448(3)	P.E.
45358.2.20	BRSTP-1448(3)	R/W
45358.3.20	BRSTP-1448(3)	CONSTR.

STATE OF NORTH CAROLINA
DIVISION OF HIGHWAYS

GASTON COUNTY

LOCATION: BRIDGE NO. 131 ON SR 1448 OVER LONG CREEK BETWEEN SR 1451 AND SR 1449

TYPE OF WORK: GRADING, DRAINAGE, PAVING, STRUCTURES, AND PAVEMENT MARKINGS

See Sheet 1-A For Index of Sheets

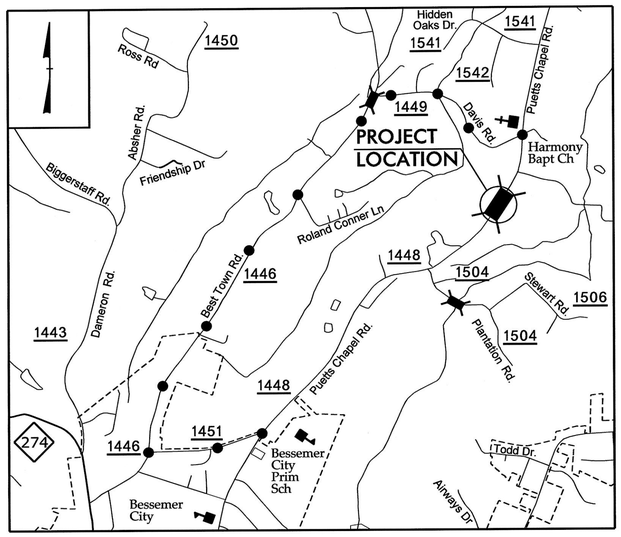

DETOUR ROUTE

VICINITY MAP
(NOT TO SCALE)

NAD 83/
NSRS 2007

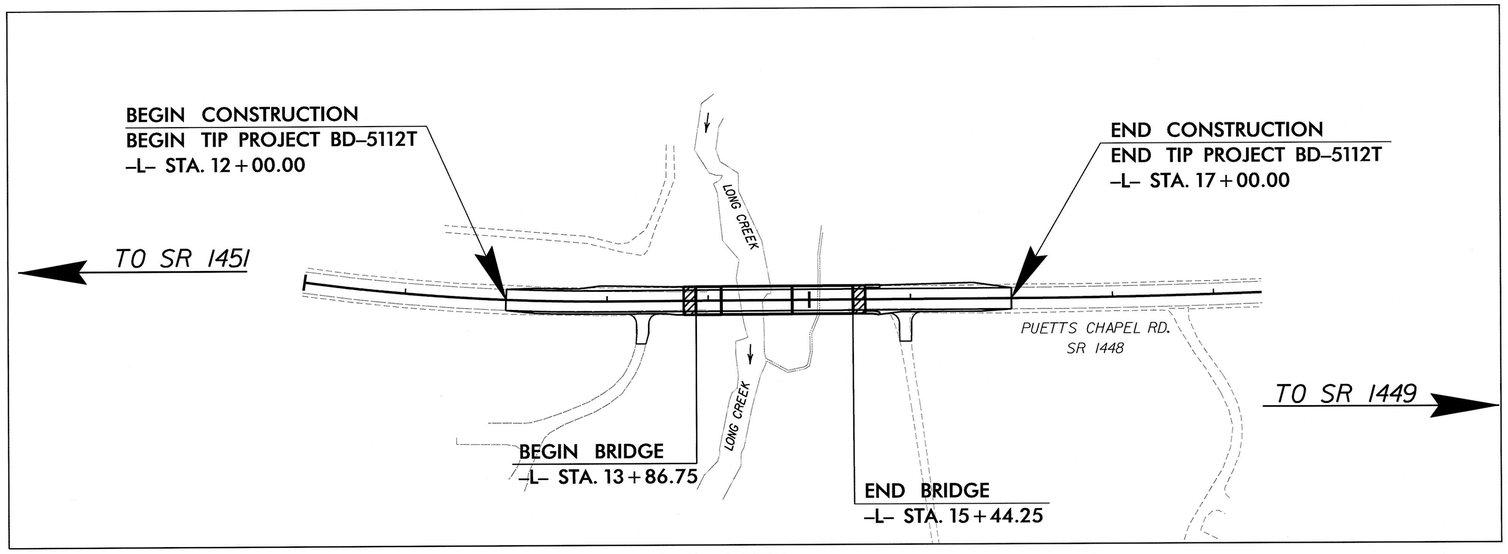

LOCATION SKETCH

HDR Engineering, Inc. of the Carolinas
3733 National Drive, Suite 207 Raleigh, N.C. 27612
N.C.B.E.L.S. License Number: F-0116

GRAPHIC SCALES

50 25 0 50 100
PLANS

50 20 0 50 100
PROFILE (HORIZONTAL)

10 5 0 10 20
PROFILE (VERTICAL)

DESIGN DATA

ADT 2010 = 2000
ADT 2025 =
DHV = %
D = %
T = 6 %
V = 45 MPH

FUNC CLASS =
MINOR COLLECTOR
SUBREGIONAL TIER

PROJECT LENGTH

LENGTH ROADWAY TIP PROJECT BD-5112T = 0.065 MILES
LENGTH STRUCTURES TIP PROJECT TIP BD-5112T = 0.030 MILES
TOTAL LENGTH TIP PROJECT BD-5112T = 0.095 MILES

Prepared in the Office of:
DIVISION OF HIGHWAYS
1000 Birch Ridge Dr., Raleigh NC, 27610

2012 STANDARD SPECIFICATIONS

RIGHT OF WAY DATE:
JANUARY 17, 2013

LETTING DATE:
JULY 9, 2013

DOMINIC M. WAINWRIGHT, P.E.
PROJECT ENGINEER

JAMES R. RICE, P.E.
PROJECT DESIGN ENGINEER

HYDRAULICS ENGINEER
NORTH CAROLINA PROFESSIONAL SEAL 31986 ENGINEER JAMES R. RICE
SIGNATURE: 6/4/13 P.E.

ROADWAY DESIGN ENGINEER
NORTH CAROLINA PROFESSIONAL SEAL 026441 ENGINEER DOMINIC M. WAINWRIGHT
SIGNATURE: Dominic M. Wainwright P.E. 6/4/13

DIVISION OF HIGHWAYS
STATE OF NORTH CAROLINA

MICHAEL L. HOLDER P.E.
DIVISION ENGINEER

6/4/2013
4:02:00 PM
\\hdr.bentley.com\projects\45358.1.20 (TIP BD-5112T)\BD-5112T_RDY_TSH.dgn

PROJECT REFERENCE NO.	SHEET NO.
BD-5112T	1-A

ROADWAY DESIGN ENGINEER

NORTH CAROLINA PROFESSIONAL SEAL 026441 ENGINEER DOMINIC M. WAINWRIGHT
5/7/13

INDEX OF SHEETS

SHEET NUMBER	SHEET
1	TITLE SHEET
1-A	INDEX OF SHEETS, GENERAL NOTES, AND LIST OF STANDARD DRAWINGS
1-B	CONVENTIONAL SYMBOLS
2	PAVEMENT SCHEDULE AND TYPICAL SECTIONS
3	RIGHT-OF-WAY AREA DATA, SUMMARY OF DRAINAGE QUANTITIES, SUMMARY OF GUARDRAIL
4	PLAN AND PROFILE SHEET
TMP-1 THRU TMP-2	TRAFFIC MANAGEMENT PLAN
SD-01	DETOUR SIGN DESIGN
EC-1 THRU EC-4	EROSION CONTROL PLANS
X-1 THRU X-10	CROSS-SECTIONS
S-1 THRU S-22	STRUCTURE PLANS
	STRUCTURE STANDARD NOTES

2012 ROADWAY ENGLISH STANDARD DRAWINGS

The following Roadway Standards as appear in "Roadway Standard Drawings" Highway Design Branch - N. C. Department of Transportation - Raleigh, N. C., Dated January, 2012 are applicable to this project and by reference hereby are considered a part of these plans:

STD.NO.	TITLE
DIVISION 2 - EARTHWORK	
200.02	Method of Clearing - Method II
225.02	Guide for Grading Subgrade - Secondary and Local
225.04	Method of Obtaining Superelevation - Two Lane Pavement
DIVISION 3 - PIPE CULVERTS	
300.01	Method of Pipe Installation
310.10	Driveway Pipe Construction
DIVISION 4 - MAJOR STRUCTURES	
422.11	Reinforced Bridge Approach Fills - Sub Regional Tier
DIVISION 5 - SUBGRADE, BASES AND SHOULDERS	
560.01	Method of Shoulder Construction - High Side of Superelevated Curve - Method I
DIVISION 8 - INCIDENTALS	
840.25	Anchorage for Frames - Brick or Concrete or Precast
840.29	Frames and Narrow Slot Flat Grates
840.35	Traffic Bearing Grated Drop Inlet - for Cast Iron Double Frame and Grates
846.04	Drop Inlet Installation in Shoulder Berm Gutter
848.02	Driveway Turnout - Radius Type
862.01	Guardrail Placement
862.02	Guardrail Installation
862.03	Structure Anchor Units
876.02	Guide for Rip Rap at Pipe Outlets

GENERAL NOTES:

2012 SPECIFICATIONS
EFFECTIVE: 01-17-12
REVISED: 11/01/11

GRADE LINE:
GRADING AND SURFACING:

THE GRADE LINES SHOWN DENOTE THE FINISHED ELEVATION OF THE PROPOSED SURFACING AT GRADE POINTS SHOWN ON THE TYPICAL SECTIONS. GRADE LINES MAY BE ADJUSTED AT THEIR BEGINNING AND ENDING AND AT STRUCTURES AS DIRECTED BY THE ENGINEER IN ORDER TO SECURE A PROPER TIE-IN.

CLEARING:

CLEARING ON THIS PROJECT SHALL BE PERFORMED TO THE LIMITS ESTABLISHED BY METHOD II.

SUPERELEVATION:

ALL CURVES ON THIS PROJECT SHALL BE SUPERELEVATED IN ACCORDANCE WITH STD. NO. 225.04 USING THE RATE OF SUPERELEVATION AND RUNOFF SHOWN ON THE PLANS. SUPERELEVATION IS TO BE REVOLVED ABOUT THE GRADE POINTS SHOWN ON THE TYPICAL SECTIONS.

SHOULDER CONSTRUCTION:

ASPHALT, EARTH, AND CONCRETE SHOULDER CONSTRUCTION ON THE HIGH SIDE OF SUPERELEVATED CURVES SHALL BE IN ACCORDANCE WITH STD. NO. 560.01.

SIDE ROADS:

THE CONTRACTOR WILL BE REQUIRED TO DO ALL NECESSARY WORK TO PROVIDE SUITABLE CONNECTIONS WITH ALL ROADS, STREETS, AND DRIVES ENTERING THIS PROJECT. THIS WORK WILL BE PAID FOR AT THE CONTRACT UNIT PRICE FOR THE PARTICULAR ITEMS INVOLVED.

DRIVEWAYS:

DRIVEWAYS SHALL BE CONSTRUCTED IN ACCORDANCE WITH STD. 848.02 USING 10' RADII OR RADII AS SHOWN ON THE PLANS. LOCATIONS OF DRIVES WILL BE AS SHOWN ON THE PLANS OR AS DIRECTED BY THE ENGINEER.

GUARDRAIL:

THE GUARDRAIL LOCATIONS SHOWN ON THE PLANS MAY BE ADJUSTED DURING CONSTRUCTION AS DIRECTED BY THE ENGINEER. THE CONTRACTOR SHOULD CONSULT WITH THE ENGINEER PRIOR TO ORDERING GUARDRAIL MATERIAL.

END BENTS:

THE ENGINEER SHALL CHECK THE STRUCTURE END BENT PLANS, DETAILS, AND CROSS-SECTION PRIOR TO SETTING OF THE SLOPE STAKES FOR THE EMBANKMENT OR EXCAVATION APPROACHING A BRIDGE.

UTILITIES:

UTILITY OWNERS ON THIS PROJECT ARE RUTHERFORD EMC AND AT&T.

ANY RELOCATION OF EXISTING UTILITIES WILL BE ACCOMPLISHED BY OTHERS.

RIGHT-OF-WAY MARKERS:

ALL RIGHT-OF-WAY MARKERS ON THIS PROJECT SHALL BE PLACED BY CONTRACT.

04/16/11

PROJECT REFERENCE NO.	SHEET NO.
BD-5112T	1-B

Note: Not to Scale

****S.U.E. = Subsurface Utility Engineering***

STATE OF NORTH CAROLINA
DIVISION OF HIGHWAYS

CONVENTIONAL PLAN SHEET SYMBOLS

BOUNDARIES AND PROPERTY:

- State Line
- County Line
- Township Line
- City Line
- Reservation Line
- Property Line
- Existing Iron Pin — EIP
- Property Corner
- Property Monument — ECM
- Parcel/Sequence Number — 123
- Existing Fence Line
- Proposed Woven Wire Fence
- Proposed Chain Link Fence
- Proposed Barbed Wire Fence
- Existing Wetland Boundary — WLB
- Proposed Wetland Boundary — WLB
- Existing Endangered Animal Boundary — EAB
- Existing Endangered Plant Boundary — EPB
- Known Soil Contamination: Boundary or Site
- Potential Soil Contamination: Boundary or Site

BUILDINGS AND OTHER CULTURE:

- Gas Pump Vent or U/G Tank Cap
- Sign — S
- Well — W
- Small Mine
- Foundation
- Area Outline
- Cemetery
- Building
- School
- Church
- Dam

HYDROLOGY:

- Stream or Body of Water
- Hydro, Pool or Reservoir
- Jurisdictional Stream — JS
- Buffer Zone 1 — BZ 1
- Buffer Zone 2 — BZ 2
- Flow Arrow
- Disappearing Stream
- Spring
- Wetland
- Proposed Lateral, Tail, Head Ditch — FLOW
- False Sump

RAILROADS:

- Standard Gauge — CSX TRANSPORTATION
- RR Signal Milepost — MILEPOST 35
- Switch — SWITCH
- RR Abandoned
- RR Dismantled

RIGHT OF WAY:

- Baseline Control Point
- Existing Right of Way Marker
- Existing Right of Way Line
- Proposed Right of Way Line — RW
- Proposed Right of Way Line with Iron Pin and Cap Marker — RW
- Proposed Right of Way Line with Concrete or Granite Marker — RW
- Existing Control of Access — CA
- Proposed Control of Access — CA
- Existing Easement Line — E
- Proposed Temporary Construction Easement — E
- Proposed Temporary Drainage Easement — TDE
- Proposed Permanent Drainage Easement — PDE
- Proposed Permanent Drainage / Utility Easement — DUE
- Proposed Permanent Utility Easement — PUE
- Proposed Temporary Utility Easement — TUE
- Proposed Aerial Utility Easement — AUE
- Proposed Permanent Easement with Iron Pin and Cap Marker

ROADS AND RELATED FEATURES:

- Existing Edge of Pavement
- Existing Curb
- Proposed Slope Stakes Cut — C
- Proposed Slope Stakes Fill — F
- Proposed Curb Ramp — CR
- Curb Cut Future Ramp — CCFR
- Existing Metal Guardrail
- Proposed Guardrail
- Existing Cable Guiderail
- Proposed Cable Guiderail
- Equality Symbol
- Pavement Removal

VEGETATION:

- Single Tree
- Single Shrub
- Hedge
- Woods Line
- Orchard
- Vineyard — Vineyard

EXISTING STRUCTURES:

MAJOR:

- Bridge, Tunnel or Box Culvert — CONC
- Bridge Wing Wall, Head Wall and End Wall — CONC WW

MINOR:

- Head and End Wall — CONC HW
- Pipe Culvert
- Footbridge
- Drainage Box: Catch Basin, DI or JB — CB
- Paved Ditch Gutter
- Storm Sewer Manhole — S
- Storm Sewer — S

UTILITIES:

POWER:

- Existing Power Pole
- Proposed Power Pole
- Existing Joint Use Pole
- Proposed Joint Use Pole
- Power Manhole — P
- Power Line Tower
- Power Transformer
- U/G Power Cable Hand Hole
- H-Frame Pole
- Recorded U/G Power Line — P
- Designated U/G Power Line (S.U.E.*) — P

TELEPHONE:

- Existing Telephone Pole
- Proposed Telephone Pole
- Telephone Manhole — T
- Telephone Booth
- Telephone Pedestal — T
- Telephone Cell Tower
- U/G Telephone Cable Hand Hole — HH
- Recorded U/G Telephone Cable — T
- Designated U/G Telephone Cable (S.U.E.*) — T
- Recorded U/G Telephone Conduit — TC
- Designated U/G Telephone Conduit (S.U.E.*) — TC
- Recorded U/G Fiber Optics Cable — T FO
- Designated U/G Fiber Optics Cable (S.U.E.*) — T FO

WATER:

- Water Manhole — W
- Water Meter
- Water Valve
- Water Hydrant
- Recorded U/G Water Line — W
- Designated U/G Water Line (S.U.E.*) — W
- Above Ground Water Line — A/G Water

TV:

- TV Satellite Dish
- TV Pedestal — C
- TV Tower
- U/G TV Cable Hand Hole — HH
- Recorded U/G TV Cable — TV
- Designated U/G TV Cable (S.U.E.*) — TV
- Recorded U/G Fiber Optic Cable — TV FO
- Designated U/G Fiber Optic Cable (S.U.E.*) — TV FO

GAS:

- Gas Valve
- Gas Meter
- Recorded U/G Gas Line — G
- Designated U/G Gas Line (S.U.E.*) — G
- Above Ground Gas Line — A/G Gas

SANITARY SEWER:

- Sanitary Sewer Manhole
- Sanitary Sewer Cleanout
- U/G Sanitary Sewer Line — SS
- Above Ground Sanitary Sewer — A/G Sanitary Sewer
- Recorded SS Forced Main Line — FSS
- Designated SS Forced Main Line (S.U.E.*) — FSS

MISCELLANEOUS:

- Utility Pole
- Utility Pole with Base
- Utility Located Object
- Utility Traffic Signal Box — S
- Utility Unknown U/G Line — ZUTL
- U/G Tank; Water, Gas, Oil
- Underground Storage Tank, Approx. Loc. — UST
- A/G Tank; Water, Gas, Oil
- Geoenvironmental Boring
- U/G Test Hole (S.U.E.*)
- Abandoned According to Utility Records — AATUR
- End of Information — E.O.I.

PROJECT REFERENCE NO.	SHEET NO.
BD-5112T	2
R/W SHEET NO.	

ROADWAY DESIGN ENGINEER

NORTH CAROLINA PROFESSIONAL SEAL 026441 ENGINEER DOMINIC M. WAINWRIGHT

4/23/13

HDR Engineering, Inc. of the Carolinas
3733 National Drive, Suite 207 Raleigh, N.C. 27612
N.C.B.E.L.S. License Number: F-0116

PAVEMENT SCHEDULE

C1	PROP. APPROX. 3.0" ASPHALT CONCRETE SURFACE COURSE, TYPE S9.5B, AT AN AVERAGE RATE OF 168 Lbs PER SQUARE YARD IN EACH OF TWO LAYERS.
C2	PROP. VAR. DEPTH ASPHALT CONCRETE SURFACE COURSE, TYPE S9.5B, AT AN AVERAGE RATE OF 112 LBS. PER SQ. YD. PER 1" DEPTH TO BE PLACED IN LAYERS NOT TO EXCEED 2.0" IN DEPTH.
D1	PROP. APPROX. 2.5" ASPHALT CONCRETE INTERMEDIATE COURSE, TYPE I19.0B, AT AN AVERAGE RATE OF 285 Lbs PER SQUARE YARD.
E1	PROP. APPROX. 4.0" ASPHALT CONCRETE BASE COURSE, TYPE B25.0B, AT AN AVERAGE RATE OF 570 Lbs PER SQUARE YARD.
T	EARTH MATERIAL

NOTE: PAVEMENT EDGE SLOPES ARE 1:1 UNLESS OTHERWISE SHOWN.

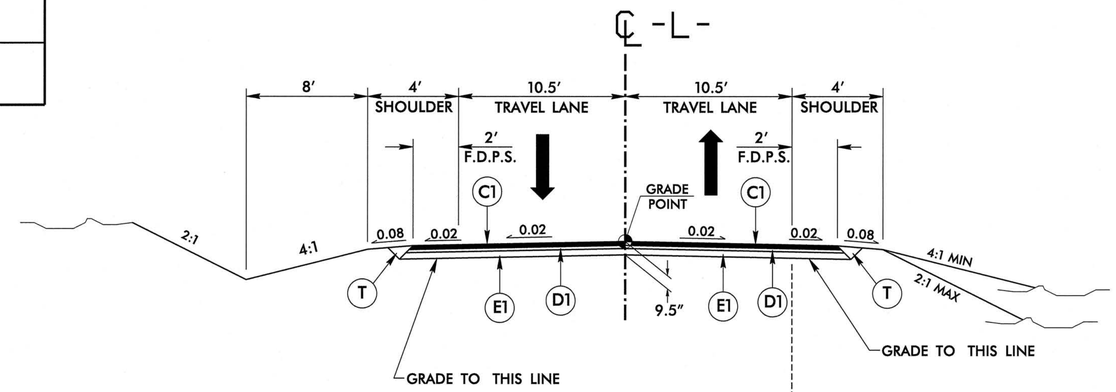

TYPICAL SECTION NO. 1

LINE	FROM STATION	TO STATION
-L-	12+00.00	13+86.75
-L-	15+44.25	17+00.00

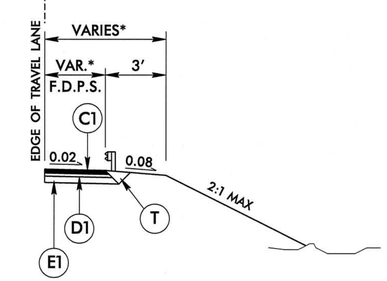

* SEE PLAN AND CROSS-SECTIONS FOR GUARDRAIL OFFSETS AND LOCATIONS

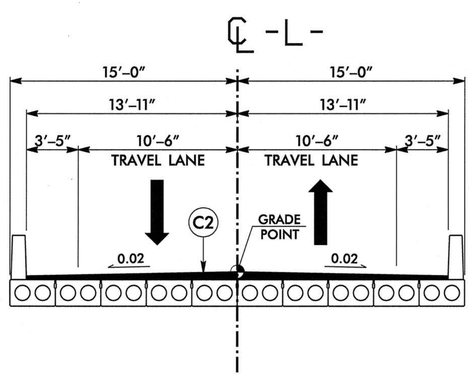

TYPICAL SECTION NO. 2

CORED SLAB BRIDGE

LINE	FROM STATION	TO STATION
-L-	13+86.75	15+44.25

REVISIONS

8/17/99

4/23/2013
C:\SS\14899\BD-5112T_RDY_TYP.dgn
12:37:21 PM

6/21/00

REVISIONS

COMPUTED BY: R.E. BROOKS DATE: SEPTEMBER 2012
CHECKED BY: T.N. BEDENBAUGH DATE: APRIL 2013

STATE OF NORTH CAROLINA
DIVISION OF HIGHWAYS

PROJECT REFERENCE NO.	SHEET NO.
BD-5112T	3

RIGHT OF WAY AREA DATA

PARCEL NO.	PROPERTY OWNERS NAMES	TOTAL ACREAGE	AREA TAKEN	AREA REMAINING RT.	AREA REMAINING LT.	CONST. EASE.	PERM. DRAIN. EASE.	TEMP. DRAIN. EASE.	PERM. UTILITY EASE.	PERM. DRAINAGE / UTILITY EASE.
1	VERNON GARY GRANT & SHEILA P. GRANT	24.32			24.32	0.074			0.046	
2	ARTHUR JAMES PETTRY & WIFE, CONNIE C. PETTRY	3.73	0.014	3.716		0.020			0.110	
3	JACK REUBEN COSTNER & LILLIE M. COSTNER	12.09			12.09	0.028	0.025			
4	CHARLIE STIWALT & WIFE, EDITH STIWALT	32.90		32.90						0.146
5	DWIGHT E. SMITH & WIFE, PHYLLIS S. SMITH	1.90	0.017	1.883					0.041	
6	CHARLIE STIWALT & WIFE, EDITH STIWALT	0.24		0.24					0.026	
7	PERRY N. STIWALT	1.65		1.65					0.135	

*NOTE: ALL AREAS ARE IN ACRES

SUMMARY OF PAVEMENT REMOVAL

IN SQUARE YARDS

LOCATION	ASPHALT REMOVAL	ASHPALT BREAK UP	CONCRETE REMOVAL	CONCRETE BREAK UP
–L– STA. 12+00.00 TO BRIDGE	428			
BRIDGE TO –L– STA. 17+00.00	365			
PROJECT TOTALS	793			

SUMMARY OF EARTHWORK

IN CUBIC YARDS

LOCATION	UNCLASSIFIED EXCAVATION	UNDERCUT	EMBT+15%	BORROW	WASTE
–L– STA. 12+00.00 TO BRIDGE	1114		64		1050
SUBTOTAL					
BRIDGE TO –L– STA. 17+00.00	621		47		574
SUBTOTAL					
PROJECT TOTALS	1735		111		1624
SAY	1750				

Note: Approximate quantities only. Unclassified Excavation, Borrow Excavation, Shoulder Borrow, Fine Grading, Clearing and Grubbing, Breaking of Existing Pavement, and Removal of Existing Pavement will be paid for at the contract lump sum price for "Grading."

LIST OF PIPES, ENDWALLS, ETC. (FOR PIPES 48" & UNDER)

STATION	LOCATION (LT,RT, OR CL)	STRUCTURE NO. FROM	STRUCTURE NO. TO	TOP ELEVATION	INVERT ELEVATION	INVERT ELEVATION	SLOPE CRITICAL	CLASS IV R.C. PIPE (UNLESS OTHERWISE NOTED) 12"	15"	18"	24"	30"	36"	42"	48"
15+65 –L–	RT	0401		751.23											
		0401	0402		747.98	747.85									
15+65 –L–	LT	0402		751.23											
		0402	0403		747.85	745.75									
15+93 –L–	RT	0404			748.29	748.29									
13+37 –L–	RT	0405			750.24	749.48									

STATION	C.S. PIPE (UNLESS NOTED OTHRWISE) 12" .064	15" .064	18" .064	24" .064	24"	30" .079	30"	36" .079	36"	42" .109	42"	48" .109	48"	CLASS III R.C. PIPE (UNLESS OTHERWISE NOTED) 12"	15"	18"	24"	30"	36"	42"	48"	15" SIDE DRAIN PIPE	18" SIDE DRAIN PIPE	24" SIDE DRAIN PIPE
15+65 –L–																								
															24									
15+65 –L–																								
															20									
15+93 –L–																						28		
13+37 –L–																						24		

STATION	ENDWALLS STD. 838.01, STD. 838.11 OR STD. 838.80 (UNLESS NOTED OTHERWISE) CU. YDS. R.C.P.	C.S.P.	QUANTITIES FOR DRAINAGE STRUCTURES * TOTAL L.F. FOR PAY QUANTITY SHALL BE COL. 'A' + (1.3 X COL.'B') PER EACH (0' THRU 5.0')	LIN. *FT. A 5.0' THRU 10.0'	B 10.0' AND ABOVE	C.B. STD. 840.01 OR STD. 840.02	FRAME, GRATES AND HOOD STANDARD 840.03 TYPE OF GRATE E	F	G		D.I. STD. 840.14 OR STD. 840.15	D.I. FRAME & GRATE STD. 840.16	G.D.I. TYPE "A" STD. 840.17 OR 840.26	G.D.I. TYPE "B" STD. 840.18 OR 840.27	G.D.I. TYPE "D" STD. 840.19 OR 840.28	G.D.I. FRAME WITH GRATE STD. 840.22	G.D.I. FRAME WITH TWO GRATES STD. 840.22	G.D.I. (N.S.) FRAME WITH GRATE STD. 840.24	G.D.I. (N.S.) FRAME WITH TWO GRATES STD. 840.24	J.B. STD. 840.31 OR 840.32	G.D.I. (N.S.) FRAME WITH TWO GRATES STD. 840.29	T.B.D.I. STD. 840.35						CORR. STEEL ELBOWS NO. & SIZE	CONC. COLLARS CL. "B" C.Y. STD 840.72	CONC. & BRICK PIPE PLUG, C.Y. STD. 840.71	PIPE REMOVAL LIN.FT.	REMARKS
15+65 –L–			1																		1	1										TBDI W/NARROW SLOT FLAT GRATE
15+65 –L–			1																		1	1						2@15"				TBDI W/NARROW SLOT FLAT GRATE
15+93 –L–																															26	
13+37 –L–																															20	

ABBREVIATIONS

C.B.	CATCH BASIN
N.D.I.	NARROW DROP INLET
D.I.	DROP INLET
G.D.I.	GRATED DROP INLET
G.D.I. (N.S.)	GRATED DROP INLET (NARROW SLOT)
J.B.	JUNCTION BOX
M.H.	MANHOLE
T.B.D.I.	TRAFFIC BEARING DROP INLET
T.B.J.B.	TRAFFIC BEARING JUNCTION BOX

NOTE: Invert Elevations are for Bid Purposes only and shall not be used for project construction stakeout.
See "Standard Specifications For Roads and Structures, Section 300–5".

"N" = DISTANCE FROM EDGE OF LANE TO FACE OF GUARDRAIL.
TOTAL SHOULDER WIDTH = DISTANCE FROM EDGE OF TRAVEL LANE TO SHOULDER BREAK POINT.
FLARE LENGTH = DISTANCE FROM LAST SECTION OF PARALLEL GUARDRAIL TO END OF GUARDRAIL.
W = TOTAL WIDTH OF FLARE FROM BEGINNING OF TAPER TO END OF GUARDRAIL.
G = GATING IMPACT ATTENUATOR TYPE 350
NG = NON-GATING IMPACT ATTENUATOR TYPE 350

GUARDRAIL SUMMARY

SURVEY LINE	BEG. STA.	END STA.	LOCATION	LENGTH STRAIGHT	LENGTH SHOP CURVED	LENGTH DOUBLE FACED	WARRANT POINT APPROACH END	WARRANT POINT TRAILING END	"N" DIST. FROM E.O.L.	TOTAL SHOUL. WIDTH	FLARE LENGTH APPROACH END	FLARE LENGTH TRAILING END	W APPROACH END	W TRAILING END	ANCHORS XI MOD	XI	GRAU 350	M–350	XIII	CAT–1	VI MOD	TYPE III	AT–1	IMPACT ATTENUATOR TYPE 350 EA	G	NG	SINGLE FACED GUARDRAIL	REMOVE EXISTING GUARDRAIL	REMOVE AND STOCKPILE EXISTING GUARDRAIL	REMARKS
–L–	12+94	13+88	LT	93.75			13+88		3.42	6.42		75		1.5			1					1								
–L–	13+40	13+88	RT	18.75	50			13+88	3.42	6.42												1	1							
–L–	15+43	16+62	LT	118.75				15+43	3.42	6.42	100		2				1					1								
–L–	15+43	15+86	RT	18.75	50		15+43		3.42	6.42												1	1							
		SUBTOTAL		250.00	100																									
		AT–1 @ 6.25' X2			–12.5																									
		TYPE III @ 18.75' X4		–75																										
		GRAU 350 @ 50'X2		–100																										
		TOTAL		75.00	87.5												2					4	2							

4/23/2013
...\d0314899\BD-5112T_RDY_SUM.dgn
5:14:31 PM

PROJECT REFERENCE NO.	SHEET NO.
BD-5112T	4
R/W SHEET NO.	

ROADWAY DESIGN ENGINEER: NORTH CAROLINA PROFESSIONAL SEAL 026441 ENGINEER DOMINIC M. WAINWRIGHT 4/23/13

HYDRAULICS ENGINEER: NORTH CAROLINA PROFESSIONAL SEAL 31986 ENGINEER JAMES R. RICE 4/23/13

HDR Engineering, Inc. of the Carolinas
3733 National Drive, Suite 207 Raleigh, N.C. 27612
N.C.B.E.L.S. License Number: F-0116

REVISIONS

8/17/99

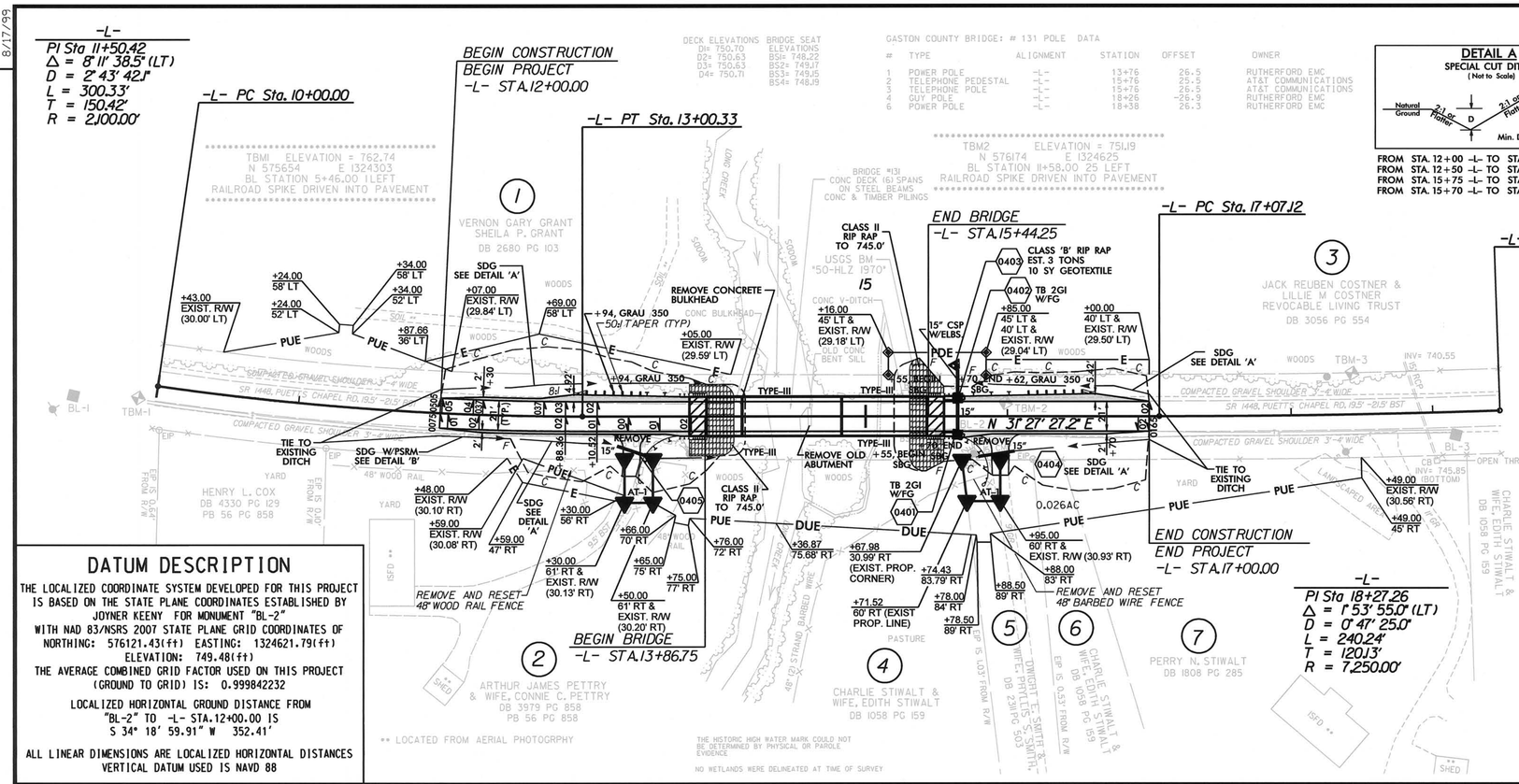

DETAIL A
SPECIAL CUT DITCH
(Not to Scale)

FROM STA. 12+00 -L- TO STA. 13+88 -L- LT
FROM STA. 12+50 -L- TO STA. 14+00 -L- RT
FROM STA. 15+75 -L- TO STA. 17+00 -L- LT
FROM STA. 15+70 -L- TO STA. 17+00 -L- RT

DETAIL B
SPECIAL CUT DITCH
(Not to Scale)

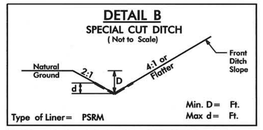

Type of Liner= PSRM

FROM STA. 12+00 -L- TO STA. 12+50 -L- RT

NAME	NORTHING	EASTING	ELEVATION
BL-1 =	N 575616.06	E 1324277.45	763.71
BL-2 =	N 576121.43	E 1324621.79	749.78
BL-3 =	N 576433.26	E 1324810.18	758.22

DATUM DESCRIPTION

THE LOCALIZED COORDINATE SYSTEM DEVELOPED FOR THIS PROJECT IS BASED ON THE STATE PLANE COORDINATES ESTABLISHED BY JOYNER KEENY FOR MONUMENT "BL-2"
WITH NAD 83/NSRS 2007 STATE PLANE GRID COORDINATES OF
NORTHING: 576121.43(ft) EASTING: 1324621.79(ft)
ELEVATION: 749.48(ft)
THE AVERAGE COMBINED GRID FACTOR USED ON THIS PROJECT (GROUND TO GRID) IS: 0.999842232

LOCALIZED HORIZONTAL GROUND DISTANCE FROM "BL-2" TO -L- STA.12+00.00 IS S 34° 18' 59.91" W 352.41'

ALL LINEAR DIMENSIONS ARE LOCALIZED HORIZONTAL DISTANCES
VERTICAL DATUM USED IS NAVD 88

4

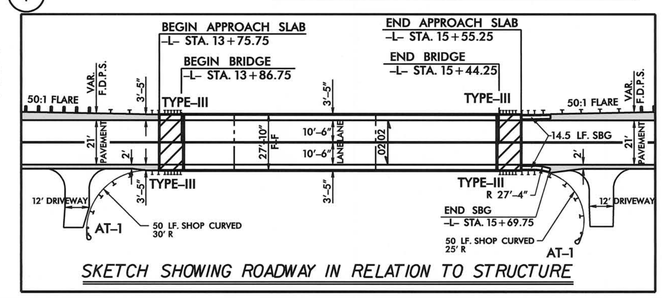

SKETCH SHOWING ROADWAY IN RELATION TO STRUCTURE

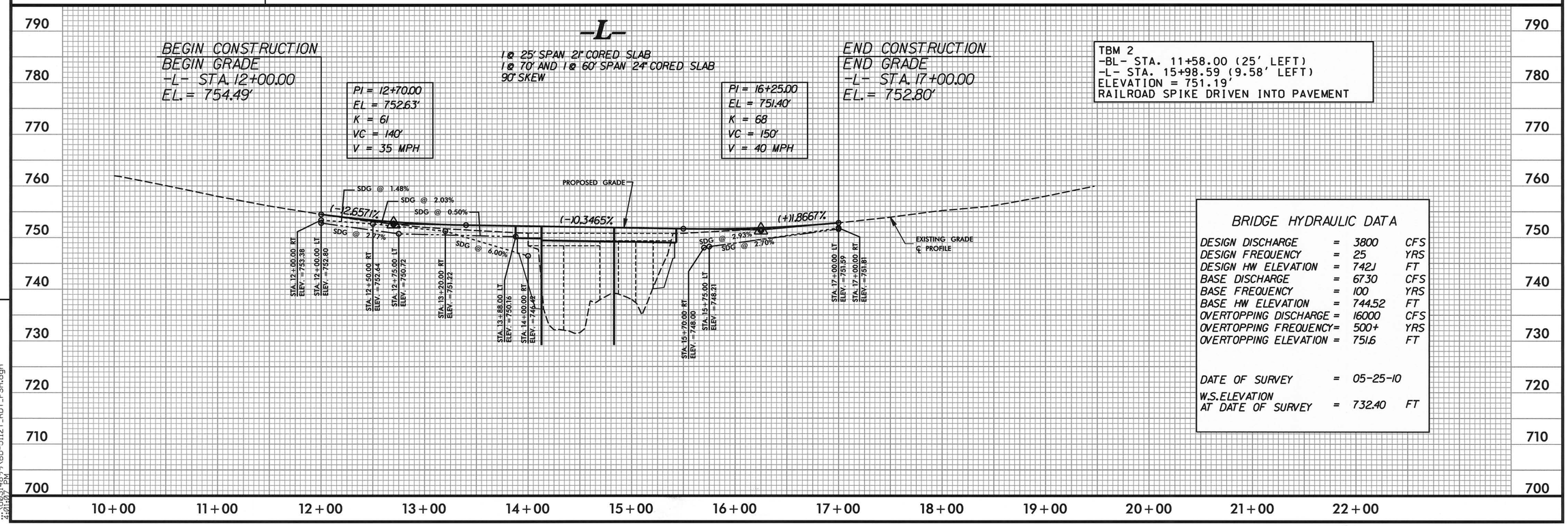

BRIDGE HYDRAULIC DATA

DESIGN DISCHARGE	=	3800	CFS
DESIGN FREQUENCY	=	25	YRS
DESIGN HW ELEVATION	=	742.1	FT
BASE DISCHARGE	=	6730	CFS
BASE FREQUENCY	=	100	YRS
BASE HW ELEVATION	=	744.52	FT
OVERTOPPING DISCHARGE	=	16000	CFS
OVERTOPPING FREQUENCY	=	500+	YRS
OVERTOPPING ELEVATION	=	751.6	FT
DATE OF SURVEY	=	05-25-10	
W.S. ELEVATION AT DATE OF SURVEY	=	732.40	FT

4/23/2013 4:01:07 PM S:\Hydraulics\Bridge\99\BD-5112T_RDY_PSH.dgn

STATE OF NORTH CAROLINA
DIVISION OF HIGHWAYS

TRANSPORTATION MANAGEMENT PLAN

GASTON COUNTY

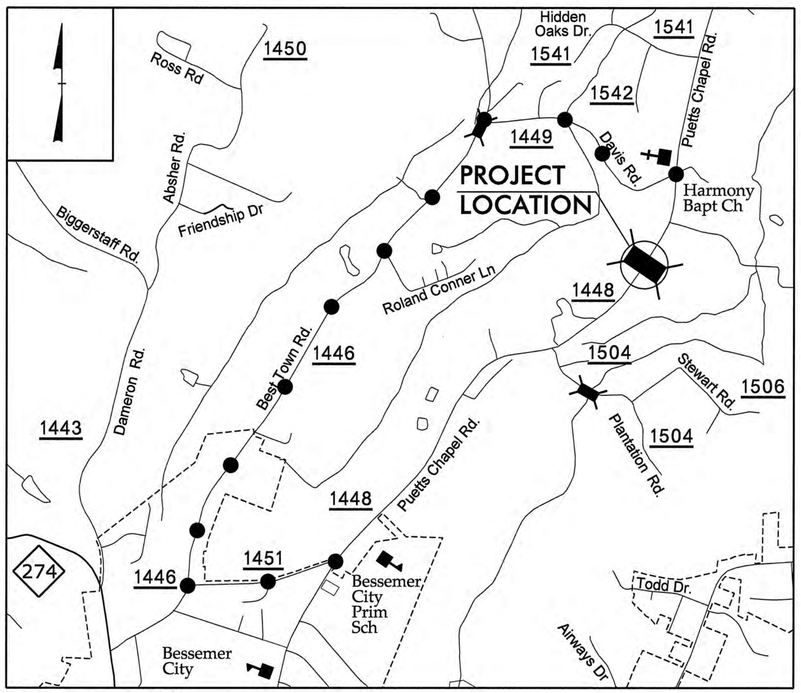

DETOUR ROUTE

VICINITY MAP
(NOT TO SCALE)

INDEX OF SHEETS

SHEET NO.	TITLE
TMP-1	TITLE SHEET AND INDEX OF SHEETS
TMP-1A	LIST OF APPLICABLE ROADWAY STANDARD DRAWINGS AND LEGEND
TMP-1B	GENERAL NOTES AND PHASING
TMP-2	OFFSITE DETOUR PLAN - PUETTS CHAPEL ROAD (SR 1448)
SD-01	SIGN DESIGN - PUETTS CHAPEL ROAD

SHEET NO.
TMP-1

BD-5112T

TIP PROJECT:

WORK ZONE SAFETY & MOBILITY
"from the MOUNTAINS to the COAST"

N.C.D.O.T. WORK ZONE TRAFFIC CONTROL
1561 MAIL SERVICE CENTER (MSC) RALEIGH, NC 27699-1561
750 N. GREENFIELD PARKWAY, GARNER, NC 27529 (DELIVERY)
PHONE: (919) 773-2800 FAX: (919) 771-2745

J. S. BOURNE, P.E. — STATE TRAFFIC MANAGEMENT ENGINEER
DOMINIC WAINWRIGHT, P.E. — PROJECT ENGINEER
R. ERSKINE BROOKS, P.E. — TRAFFIC CONTROL PROJECT DESIGN ENGINEER
T. N. BEDENBAUGH, E.I. — TRAFFIC CONTROL DESIGN ENGINEER

DIVISION OF HIGHWAYS · STATE OF NORTH CAROLINA · DEPARTMENT OF TRANSPORTATION · WORK ZONE TRAFFIC CONTROL

PLAN PREPARED BY:
HDR Engineering, Inc. of the Carolinas
3733 National Drive, Suite 207 Raleigh, N.C. 27612
N.C.B.E.L.S. License Number: F-0116

APPROVED: R. Erskine Brooks
DATE: 4/23/2013

NORTH CAROLINA PROFESSIONAL SEAL 032584 ENGINEER R. ERSKINE BROOKS

4/23/2013
c:\pwworking\tpd\d0349962\BD-5112T_TCP_DSN.dgn
2:06:58 PM

PROJ. REFERENCE NO.	SHEET NO.
BD-5112T	TMP-1A

HDR Engineering, Inc. of the Carolinas
3733 National Drive, Suite 207 Raleigh, N.C. 27612
N.C.B.E.L.S. License Number: F-0116

ROADWAY STANDARD DRAWINGS

THE FOLLOWING ROADWAY STANDARDS AS SHOWN IN "ROADWAY STANDARD DRAWINGS" - PROJECT SERVICES UNIT - N.C. DEPARTMENT OF TRANSPORTATION - RALEIGH, N.C., DATED JANUARY 2012 ARE APPLICABLE TO THIS PROJECT AND BY REFERENCE HEREBY ARE CONSIDERED A PART OF THESE PLANS:

STD. NO.	TITLE
1101.01	WORK ZONE WARNING SIGNS
1101.03	TEMPORARY ROAD CLOSURES
1101.11	TRAFFIC CONTROL DESIGN TABLES
1110.01	STATIONARY WORK ZONE SIGNS
1145.01	BARRICADES
1205.01	PAVEMENT MARKINGS - LINE TYPES & OFFSETS
1205.02	PAVEMENT MARKINGS - 2 LANE & MULTILANE ROADWAYS
1205.12	PAVEMENT MARKINGS - BRIDGES
1261.01	GUARDRAIL AND BARRIER DELINEATORS - INSTALLATION SPACING
1261.02	GUARDRAIL AND BARRIER DELINEATORS - TYPES AND MOUNTING
1262.01	GUARDRAIL END DELINEATION

LEGEND

GENERAL

- DIRECTION OF TRAFFIC FLOW
- DIRECTION OF PEDESTRIAN TRAFFIC FLOW
- EXIST. PVMT.
- NORTH ARROW
- PROPOSED PVMT.
- WORK AREA
- REMOVAL

TRAFFIC CONTROL DEVICES

- BARRICADE (TYPE III)
- CONE
- DRUM — SKINNY DRUM — TUBULAR MARKER
- TEMPORARY CRASH CUSHION
- FLASHING ARROW PANEL (TYPE C)
- FLAGGER
- LAW ENFORCEMENT
- TRUCK MOUNTED IMPACT ATTENUATOR (TMIA)
- CHANGEABLE MESSAGE SIGN

TEMPORARY SIGNING

- PORTABLE SIGN
- STATIONARY SIGN
- STATIONARY OR PORTABLE SIGN

SIGNALS

- EXISTING
- PROPOSED
- TEMPORARY (T E M P)

PAVEMENT MARKINGS

- EXISTING LINES
- TEMPORARY LINES

PAVEMENT MARKERS

- CRYSTAL/CRYSTAL
- CRYSTAL/RED
- YELLOW/YELLOW

PAVEMENT MARKING SYMBOLS

- PAVEMENT MARKING SYMBOLS

APPROVED:_____ DATE:_____

NORTH CAROLINA PROFESSIONAL SEAL 032584 ENGINEER R. ERSKINE BROOKS 4/23/13

DIVISION OF HIGHWAYS
STATE OF NORTH CAROLINA
DEPARTMENT OF TRANSPORTATION
WORK ZONE TRAFFIC CONTROL

ROADWAY STANDARD DRAWINGS & LEGEND

4/23/2013
c:\pwworking\tpa\d031496\2\BD-5112T_TCP_DSN.dgn
2:07:00 PM

PROJ. REFERENCE NO.	SHEET NO.
BD-5112T	TMP-1B

HDR Engineering, Inc. of the Carolinas
3733 National Drive, Suite 207 Raleigh, N.C. 27612
N.C.B.E.L.S. License Number: F-0116

GENERAL NOTES

CHANGES MAY BE REQUIRED WHEN PHYSICAL DIMENSIONS IN THE DETAIL DRAWINGS, STANDARD DETAILS, AND ROADWAY DETAILS ARE NOT ATTAINABLE TO MEET FIELD CONDITIONS, OR RESULT IN DUPLICATE, OR UNDESIRED OVERLAPPING OR DEVICES. MODIFICATION MAY INCLUDE: MOVING, SUPPLEMENTING, COVERING, OR REMOVAL OF DEVICES, AS DIRECTED BY THE ENGINEER.

THE FOLLOWING GENERAL NOTES APPLY AT ALL TIMES FOR THE DURATION OF THE CONSTRUCTION PROJECT, EXCEPT WHEN OTHERWISE NOTED IN THE PLAN, OR DIRECTED BY THE ENGINEER.

TRAFFIC PATTERN ALTERATIONS

A) NOTIFY THE ENGINEER TWENTY ONE (21) CALENDAR DAYS PRIOR TO ANY TRAFFIC PATTERN ALTERATION.

SIGNING

B) INSTALL ADVANCE WORK ZONE WARNING SIGNS WHEN WORK IS WITHIN 40 FT FROM THE EDGE OF TRAVEL LANE AND NO MORE THAN THREE (3) DAYS PRIOR TO THE BEGINNING OF CONSTRUCTION.

C) PROVIDE SIGNING AND DEVICES REQUIRED TO CLOSE THE ROAD ACCORDING TO THE ROADWAY STANDARD DRAWINGS AND TRAFFIC CONTROL PLANS.

PROVIDE SIGNING REQUIRED FOR THE OFFSITE DETOUR ROUTE AS SHOWN IN THE TRAFFIC CONTROL PLANS.

D) COVER OR REMOVE ALL SIGNS AND DEVICES REQUIRED TO CLOSE THE ROAD WHEN THE ROAD CLOSURE IS NOT IN OPERATION.

COVER OR REMOVE ALL SIGNS REQUIRED FOR THE OFFSITE DETOUR WHEN THE DETOUR IS NOT IN OPERATION.

E) ENSURE ALL NECESSARY SIGNING IS IN PLACE PRIOR TO ALTERING ANY TRAFFIC PATTERN.

TRAFFIC CONTROL DEVICES

F) PLACE TYPE III BARRICADES, WITH "ROAD CLOSED" SIGN R11-2 ATTACHED, OF SUFFICIENT LENGTH TO CLOSE ENTIRE ROADWAY.

PAVEMENT MARKINGS AND MARKERS

G) UPON COMPLETION OF ALL OTHER CONSTRUCTION OPERATIONS, INSTALL 2 APPLICATIONS OF PAINT PAVEMENT MARKINGS ON THE FINAL SURFACE, ACCORDING TO RSD 1205.1, 1205.2 AND 1205.12.

PHASING NOTES

TRAFFIC CONTROL PHASING

NOTE: COORDINATE WITH THE ENGINEER FOR INSTALLATION AND REMOVAL OF ALL SIGNING AND TRAFFIC CONTROL DEVICES.

NOTE: MAINTAIN ACCESS TO DRIVEWAYS WITHIN PROJECT LIMITS AT ALL TIMES.

STEP 1: USING RSD 1101.01, SHEET 3 OF 3, INSTALL ADVANCE WORK ZONE WARNING SIGNS ON PUETTS CHAPEL ROAD (SR 1448).

STEP 2: USING RSD 1101.03, SHEET 1 OF 9 AND SHEET TMP-2, INSTALL DETOUR SIGNS AND BARRICADES AND CLOSE PUETTS CHAPEL ROAD (SR 1448).

STEP 3: REMOVE EXISTING BRIDGE NO. 131 AND CONSTRUCT PROPOSED BRIDGE AND ROADWAY, UP TO AND INCLUDING THE FINAL LAYER OF SURFACE COURSE. PLACE FINAL PAVEMENT MARKINGS ON PUETTS CHAPEL ROAD (SR 1448) FROM -L- STA. 12+00 +/- TO STA. 17+00 +/-.

STEP 4: REMOVE ALL ADVANCE WORK ZONE DETOUR SIGNS, AND TRAFFIC CONTROL DEVICES AND OPEN PUETTS CHAPEL ROAD (SR 1448) TO TRAFFIC.

APPROVED:_____ DATE:_____

NORTH CAROLINA PROFESSIONAL SEAL 032584 ENGINEER R. ERSKINE BROOKS 4/23/13

DIVISION OF HIGHWAYS STATE OF NORTH CAROLINA DEPARTMENT OF TRANSPORTATION WORK ZONE TRAFFIC CONTROL

GENERAL NOTES AND PHASING

PLOT DRIVER: NCDOT_pdf_color_eng_50.plt PENTABLE: NCDOT_tcp_Conven.tbl
USER: tbedenbo DATE: 4/23/2013 TIME: 2:07:01 PM SCALE: half=1:100, full=1:50
FILE: c:\pwworking\tpo\d0314962\BD-5112T_TCP_DSN.dgn

PROJ. REFERENCE NO.	SHEET NO.
BD-5112T	TMP-2

HDR Engineering, Inc. of the Carolinas
3733 National Drive, Suite 207 Raleigh, N.C. 27612
N.C.B.E.L.S. License Number: F-0116

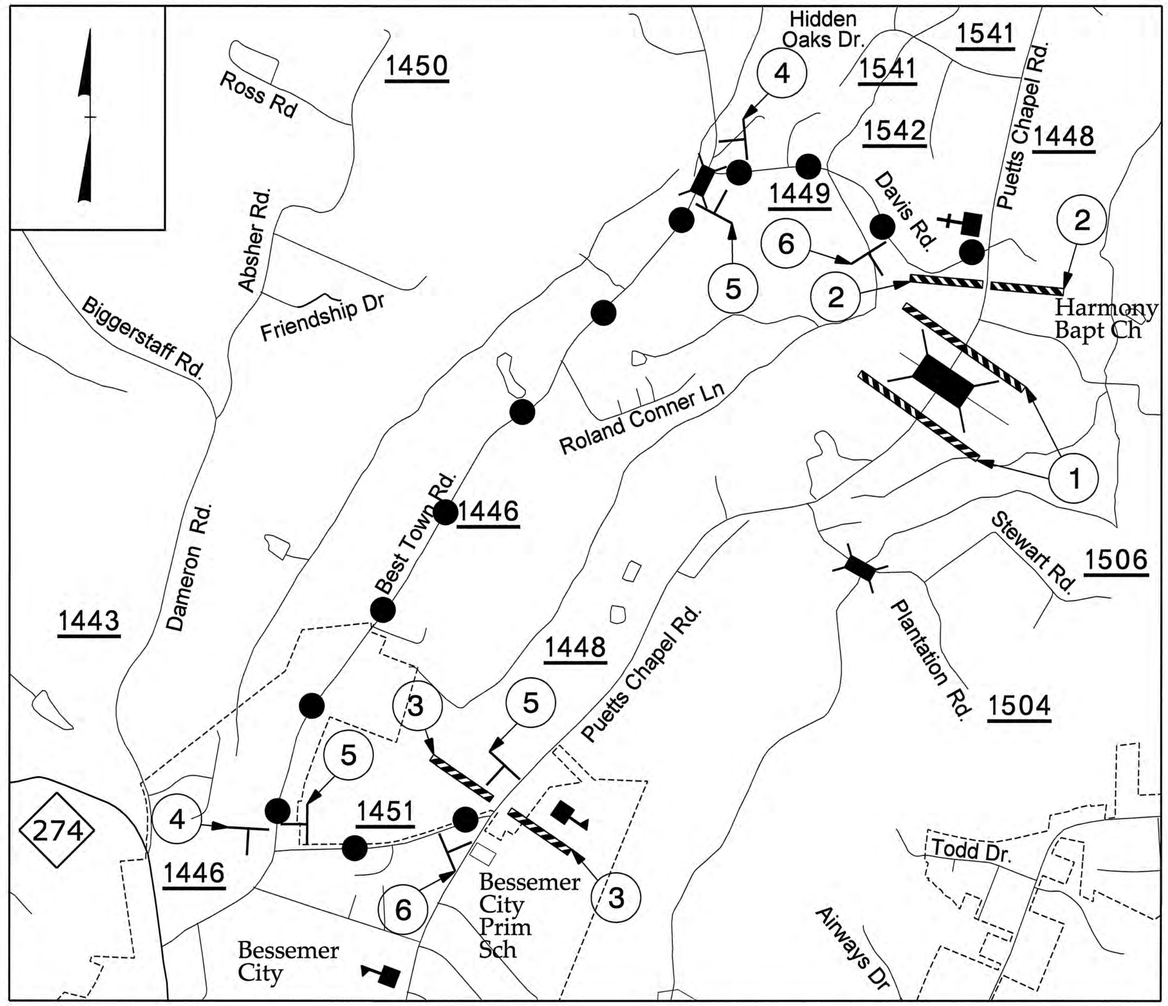

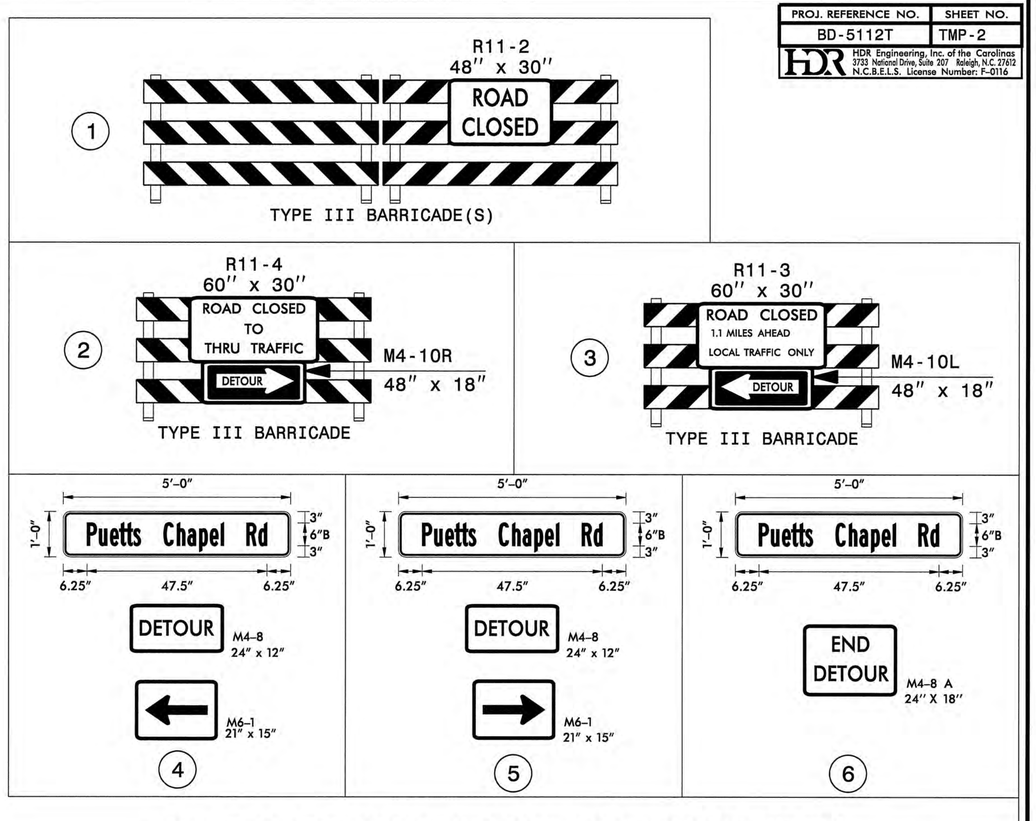

SEE SHEET SD-01 FOR SPECIAL SIGN DESIGN DETAIL

DETOUR ROUTE

REFER TO RSD 1101.03 SHEET 1 OF 9 FOR ADDITIONAL SIGN AND BARRICADE PLACEMENT

APPROVED:_____ DATE:_____

NORTH CAROLINA PROFESSIONAL SEAL 032584 ENGINEER R. ERSKINE BROOKS

R.E. 4/23/13

DIVISION OF HIGHWAYS
STATE OF NORTH CAROLINA
DEPARTMENT OF TRANSPORTATION
WORK ZONE TRAFFIC CONTROL

OFFSITE DETOUR PLAN
PUETTS CHAPEL ROAD
(SR 1448)

4/23/2013
c:\pwworking\tpa\d0314962\BD-5112T_TCP_DSN.dgn
2:07:03 PM

PROJ. REFERENCE NO.	SHEET NO.
BD-5112T	SD-01

HDR Engineering, Inc. of the Carolinas
3733 National Drive, Suite 207 Raleigh, N.C. 27612
N.C.B.E.L.S. License Number: F-0116

SIGN NUMBER:
TYPE: D
QUANTITY: 1

SIGN WIDTH: 5'-0"
HEIGHT: 1'-0"
TOTAL AREA: 5.0 Sq.Ft.

BORDER TYPE: FLUSH
RECESS: 0.38"
WIDTH: 0.38"
RADII: 1.5"

NO. Z BARS:
LENGTH:

BACKG COLOR: Orange
COPY COLOR: Black

SYMBOL	X	Y	WID	HT

MAT'L: 0.125" (3.2 mm) ALUMINUM

DESIGN BY: D KERNS
PROJECT ID: ID
CHECKED BY:
DIV: DIV
DATE: Sep 25, 2012

USE NOTES:

1. Legend and border shall be direct applied non-reflective sheeting.
2. Background shall be Grade B reflective sheeting.

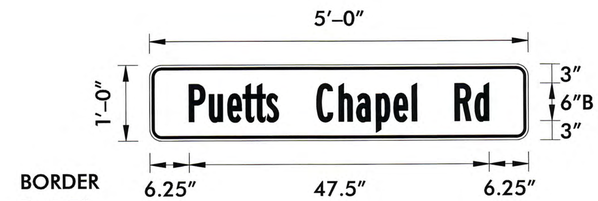

BORDER
R=1.5"
TH=0.38"
IN=0.38"

Spacing Factor is 1 unless specified otherwise

LETTER POSITIONS

Letter spacings are to start of next letter

Series/Size
Text Length

	P	u	e	t	t	s		C	h	a	p	e	l		R	d										B 2000
6.2	3.2	2.9	2.4	1.8	2	1.9	6	3.5	2.8	3.1	2.8	2.9	0.8	6	3.2	2.2	6.2									47.5

FILENAME: DWSignDesigns

NORTH CAROLINA D.O.T. SIGN DETAIL

APPROVED: DATE: 2/5/2013

NORTH CAROLINA PROFESSIONAL SEAL 030881 ENGINEER DAVID H. KERNS

DIVISION OF HIGHWAYS * STATE OF NORTH CAROLINA * DEPARTMENT OF TRANSPORTATION * WORK ZONE TRAFFIC CONTROL

SIGN DETAIL
PUETTS CHAPEL RD

PLOT DRIVER: NCDOT_pdf_mono_eng_50.plt PENTABLE: NCDOT_pshpfl.tbl
USER: tbedenba DATE: 2/4/2013 TIME: 1:32:41 PM SCALE: half=100:1 - full=50:1
FILE: North Carolina_Dept_of_Transportation\NCDOT_BM_LSC_Task_Order_1\NCDOT_Division_12_LIBR\13.00_TIP_folder_structure\BD-5112T\Traffic\TrafficControl\TCP\BD-5112T_TCP_DSN.dgn

EROSION CONTROL PLANS

PROJECT REFERENCE NO.	SHEET NO.
BD-5112T	EC-1

JOSHUA MASSROCK, E.I.
LEVEL III-A: DESIGNER OF EROSION AND SEDIMENT CONTROL PLANS.
CERTIFICATION NUMBER: 650

HDR Engineering, Inc. of the Carolinas
3733 National Drive, Suite 207 Raleigh, N.C. 27612
N.C.B.E.L.S. License Number: F-0116

THESE EROSION AND SEDIMENT CONTROL PLANS COMPLY WITH THE REGULATIONS SET FORTH BY THE NCG-010000 GENERAL CONSTRUCTION PERMIT EFFECTIVE AUGUST 3, 2011 ISSUED BY THE NORTH CAROLINA DEPARTMENT OF ENVIRONMENTAL AND NATURAL RESOURCES DIVISION OF WATER QUALITY.

Place Matting for Erosion Control on Slope as Work Allows.

INSTALL MATTING FOR EROSION CONTROL IN THE PROPOSED DITCH LINE.

INSTALL DRIVEWAY PIPES DURING CLEARING & GRUBBING PHASE

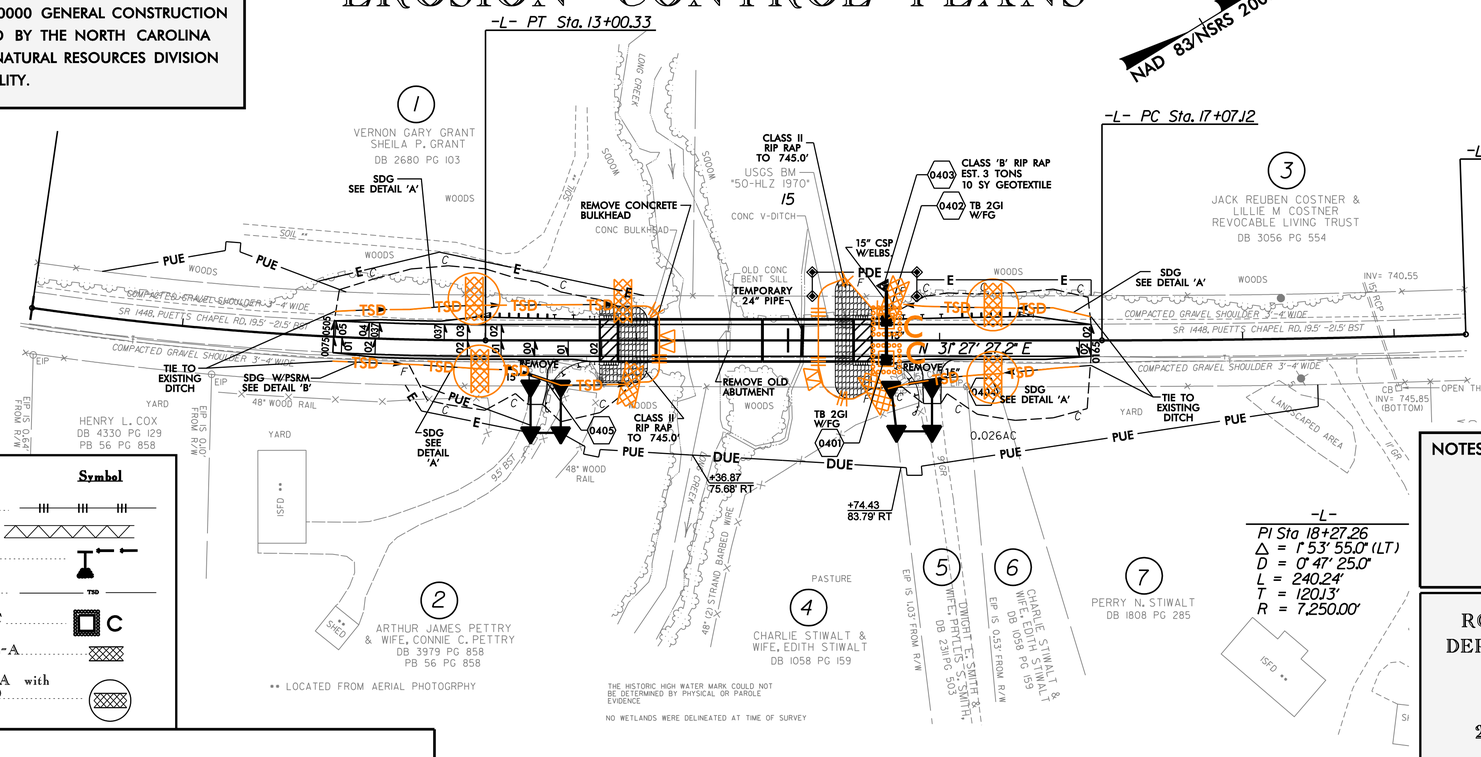

NOTE:
PLACE TEMPORARY ROCK SEDIMENT DAMS TYPE – B AND TEMPORARY ROCK SILT CHECKS TYPE – A AT DRAINAGE OUTLETS.

NOTE:
PERIMETER EROSION CONTROL MEASURES SHALL BE INSTALLED DURING CLEARING AND GRUBBING PHASE.

NOTES: ANY DEVIATION FROM OPTIONS GIVEN WILL REQUIRE PRIOR APPROVAL BY ENGINEER.

ADDITIONAL EROSION CONTROL DEVICES MAY NEED TO BE INSTALLED AS DIRECTED BY THE ENGINEER.

-L-
PI Sta 18+27.26
Δ = 1° 53' 55.0" (LT)
D = 0° 47' 25.0"
L = 240.24'
T = 120.13'
R = 7,250.00'

ROADSIDE ENVIRONMENTAL UNIT
DEPARTMENT OF TRANSPORTATION
DIVISION OF HIGHWAYS
RALEIGH, N.C.

2012 STANDARD SPECIFICATIONS

Std. #	Description	Symbol
1605.01	Temporary Silt Fence	
1606.01	Special Sediment Control Fence	
1622.01	Temporary Berms and Slope Drains	
1630.03	Temporary Silt Ditch	TSD
1632.03	Rock Inlet Sediment Trap Type C	C
1633.01	Temporary Rock Silt Check Type-A	
	Temporary Rock Silt Check Type-A with Matting and Polyacrylamide (PAM)	

Roadway Standard Drawings

The following roadway english standards as appear in "Roadway Standard Drawings"– Roadway Design Unit – N. C. Department of Transportation – Raleigh, N. C., dated January 2012 and the latest revison thereto are applicable to this project and by reference hereby are considered a part of these plans.

1605.01	Temporary Silt Fence	1630.06	Special Stilling Basin
1606.01	Special Sediment Control Fence	1631.01	Matting Installation
1622.01	Temporary Slope Drains	1632.03	Rock Inlet Sediment Trap Type C
1630.03	Temporary Silt Ditch	1633.01	Temporary Rock Silt Check Type A
		1645.01	Temporary Stream Crossing

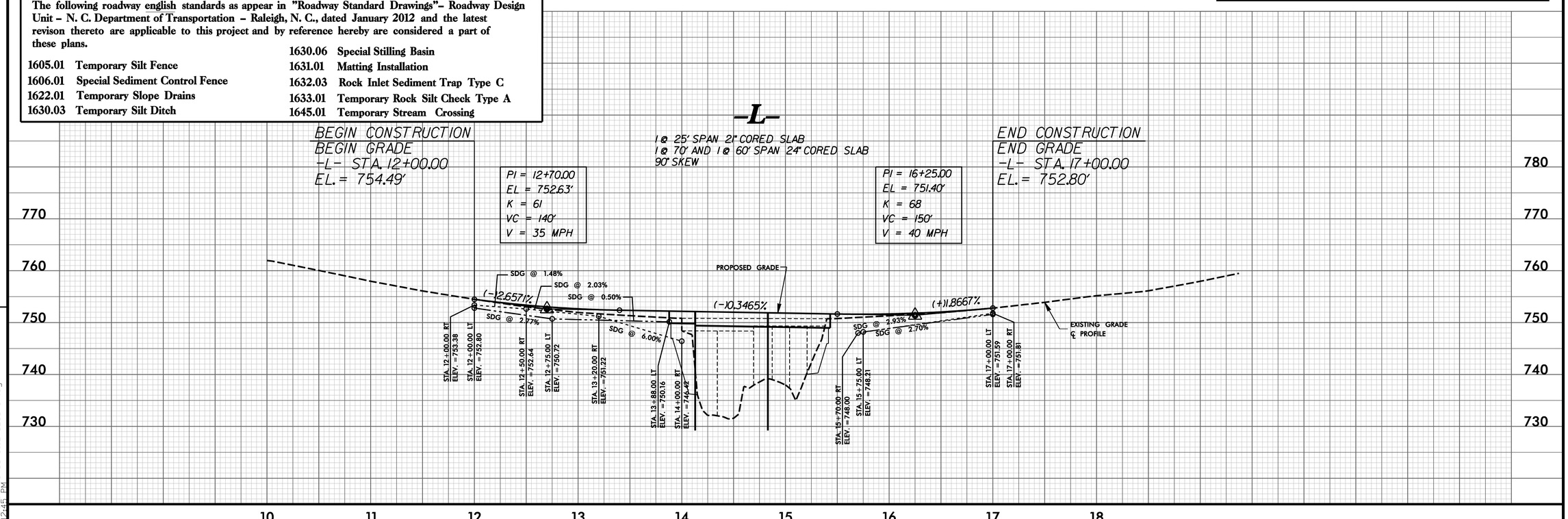

REVISIONS

8/17/99

4/23/2013
:\d0314766\BD-5112T_EC_PSH.dgn
4:12:41 PM

PROJECT REFERENCE NO.	SHEET NO.
BD-5112T	EC-2

DIVISION OF HIGHWAYS
STATE OF NORTH CAROLINA

SOIL STABILIZATION SUMMARY SHEET

MATTING FOR EROSION CONTROL: PROPOSED DITCH LINE

CONST SHEET NO.	LINE	FROM STATION	TO STATION	SIDE	ESTIMATE (SY)
4	-L-	12+00	13+88	LT	60
4	-L-	12+75	13+20	RT	20
4	-L-	15+75	17+00	LT	25
4	-L-	15+70	17+00	RT	35
				SUBTOTAL	140

MATTING FOR EROSION CONTROL: SIDE SLOPES 2:1 OR STEEPER

4	-L-	12+25	13+88	LT	380
4	-L-	12+75	13+88	RT	176
4	-L-	15+43	16+75	LT	120
4	-L-	15+43	16+75	RT	208
				SUBTOTAL	884
				TOTAL	1024
				SAY	1030

PSRM FOR EROSION CONTROL: PROPOSED DITCH LINE

CONST SHEET NO.	LINE	FROM STATION	TO STATION	SIDE	ESTIMATE (SY)
4	-L-	12+00	12+75	RT	20
4	-L-	13+20	14+00	RT	15
				TOTAL	35
				SAY	40

PROJECT REFERENCE NO.	SHEET NO.
BD-5112T	EC-3

DIVISION OF HIGHWAYS
STATE OF NORTH CAROLINA

SOIL STABILIZATION TIMEFRAMES

SITE DESCRIPTION	STABILIZATION TIME	TIMEFRAME EXCEPTIONS
PERIMETER DIKES, SWALES, DITCHES AND SLOPES	7 DAYS	NONE
HIGH QUALITY WATER (HQW) ZONES	7 DAYS	NONE
SLOPES STEEPER THAN 3:1	7 DAYS	IF SLOPES ARE 10' OR LESS IN LENGTH AND ARE NOT STEEPER THAN 2:1, 14 DAYS ARE ALLOWED.
SLOPES 3:1 OR FLATTER	14 DAYS	7 DAYS FOR SLOPES GREATER THAN 50' IN LENGTH.
ALL OTHER AREAS WITH SLOPES FLATTER THAN 4:1	14 DAYS	NONE, EXCEPT FOR PERIMETERS AND HQW ZONES.

PROJECT REFERENCE NO.	SHEET NO.
BD-5112T	EC-4
R/W SHEET NO.	

TEMPORARY ROCK SILT CHECK TYPE 'A' WITH EXCELSIOR MATTING AND POLYACRYLAMIDE (PAM)

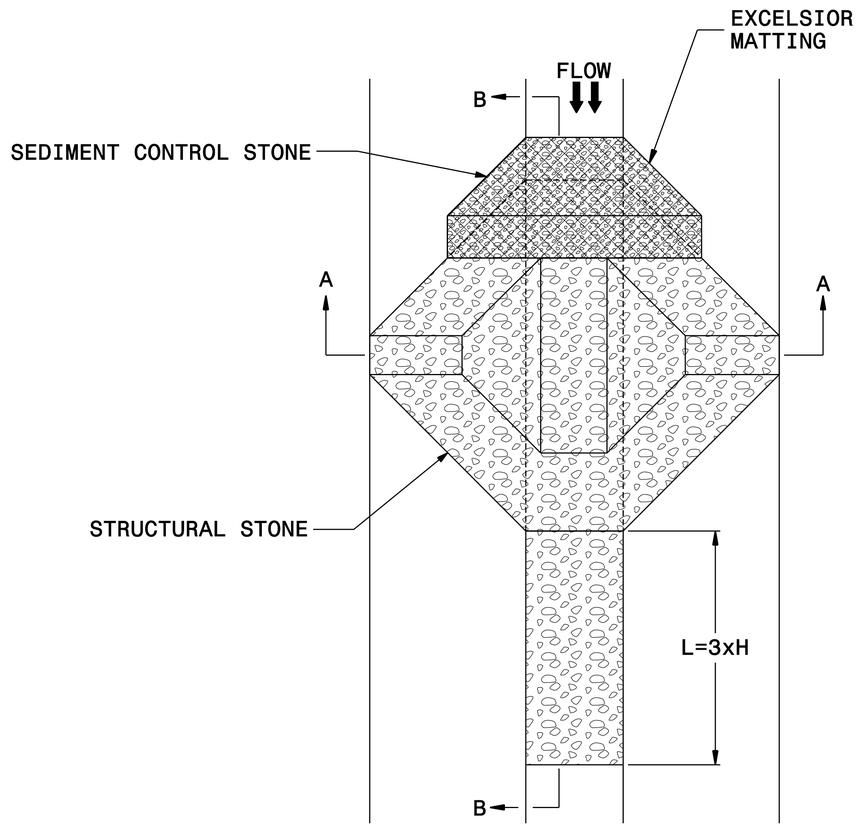

PLAN

NOTES

USE EXCELSIOR FOR MATTING MATERIAL AND ANCHOR MATTING SECTION AT TOP AND BOTTOM WITH CLASS B STONE.

PRIOR TO POLYACRYLAMIDE (PAM) APPLICATION, OBTAIN A SOIL SAMPLE FROM PROJECT LOCATION, AND FROM OFFSITE MATERIAL, AND ANALYZE FOR APPROPRIATE PAM FLOCCULANT TO BE APPLIED TO EACH ROCK SILT CHECK.

INITIALLY APPLY 3.5 OUNCES OF POLYACRYLAMIDE (PAM) TO TOP OF MATTING SECTION AND AFTER EVERY RAINFALL EVENT THAT EQUALS OR EXCEEDS 0.50 INCHES.

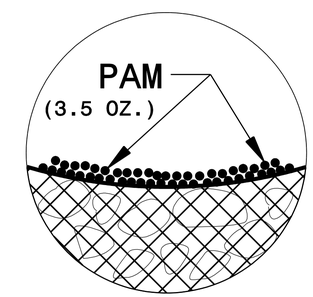

INSET A

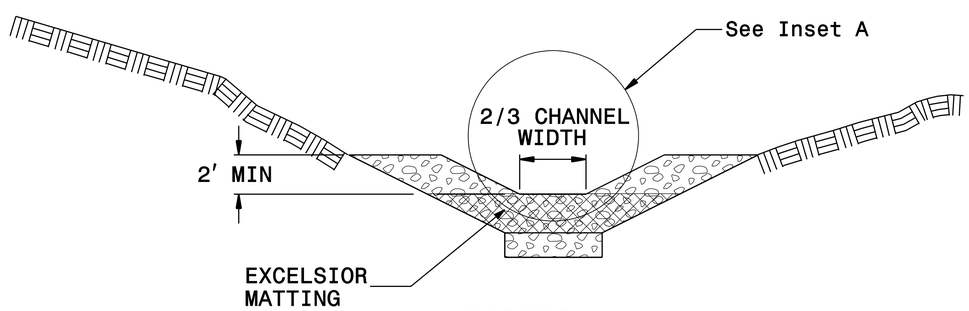

SECTION A-A

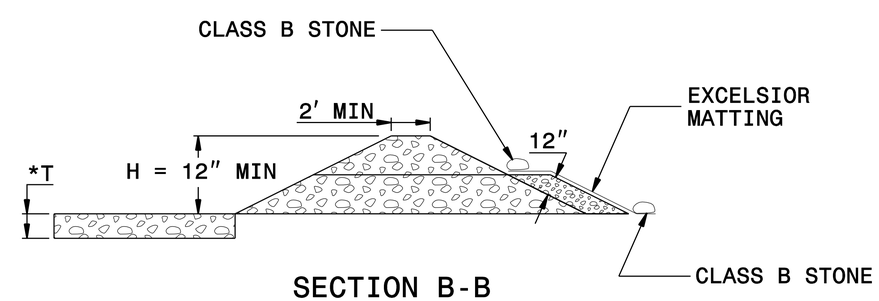

SECTION B-B

*T = 12" MIN., 18" MAX.

NOT TO SCALE

0 2.5 5	PROJ. REFERENCE NO.	SHEET NO.
	BD-5112T	X-1

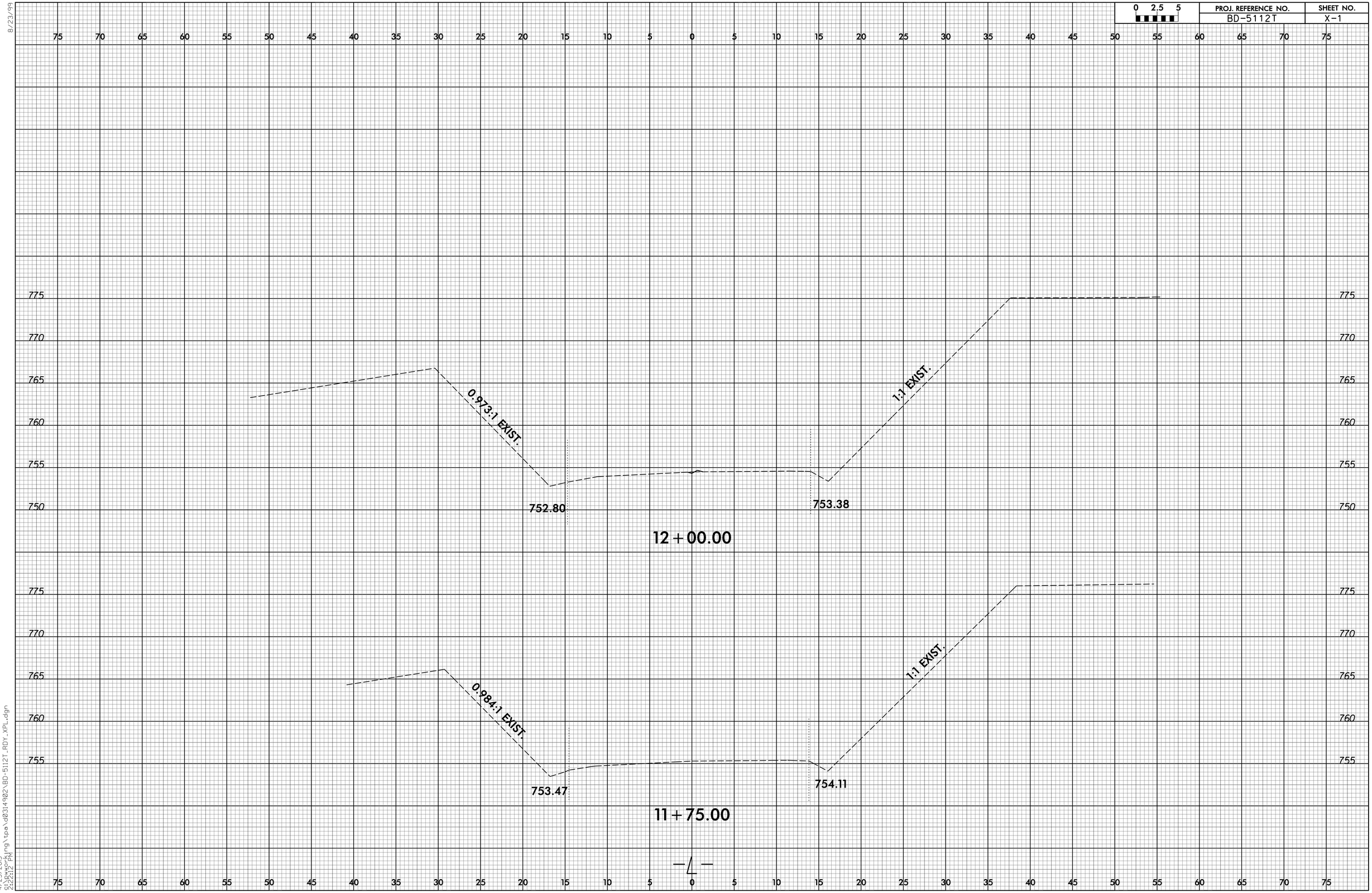

8/23/99

4/23/2013
5:12:12 PM
S:\Bworking\tpa\d0314902\BD-5112T_RDY_XPL.dgn

0 2.5 5	PROJ. REFERENCE NO.	SHEET NO.
	BD-5112T	X-2

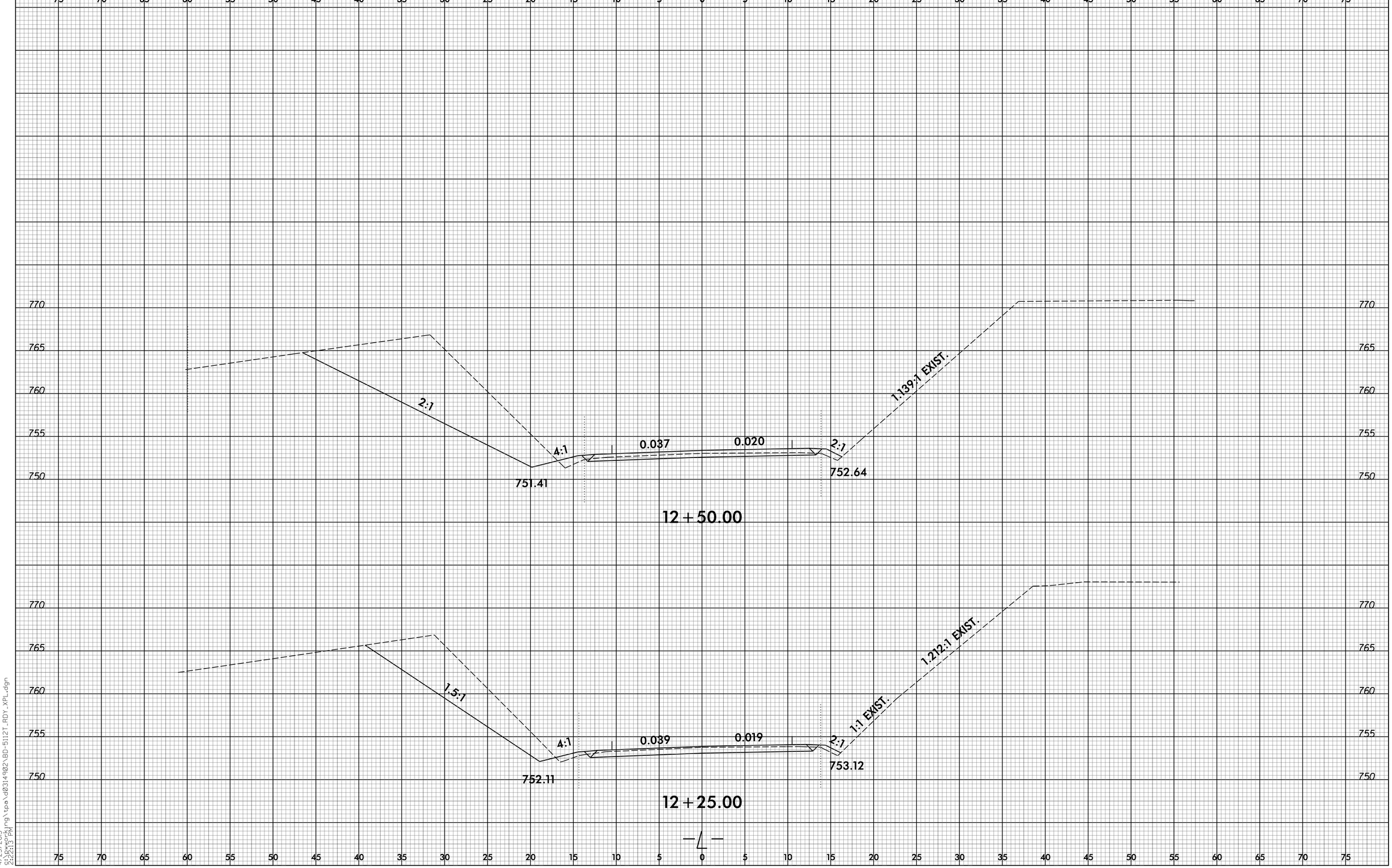

8/23/99
4/23/2013
S:\Bworking\tpa\d0314902\BD-5112T_RDY_XPL.dgn
2:22:13 PM

0 2.5 5	PROJ. REFERENCE NO.	SHEET NO.
	BD-5112T	X-3

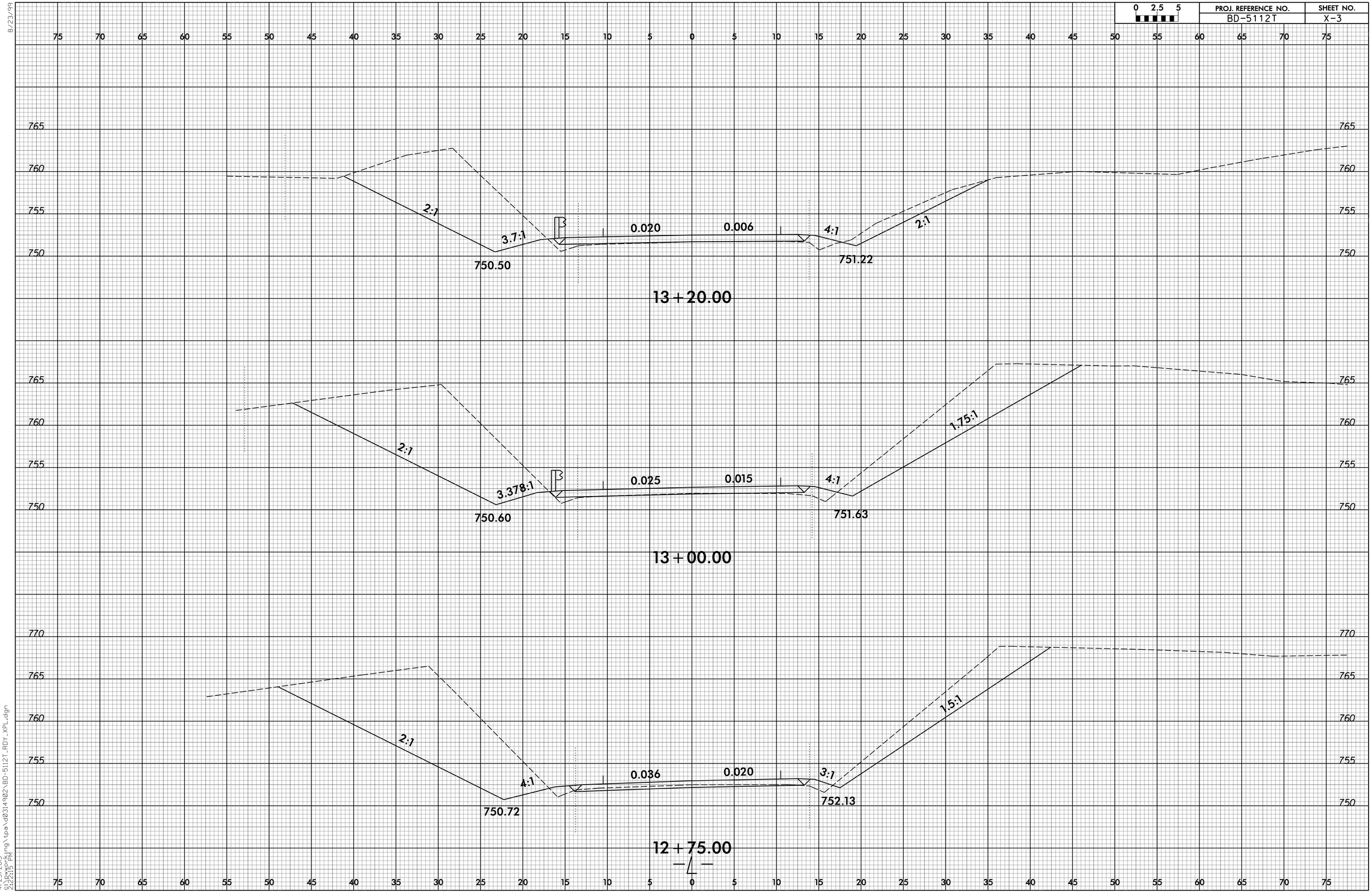

8/23/99

4/23/2013
5:13:26 PM
S:\Working\tpa\d0314902\BD-5112T_RDY_XPL.dgn

0 2.5 5	PROJ. REFERENCE NO.	SHEET NO.
	BD-5112T	X-4

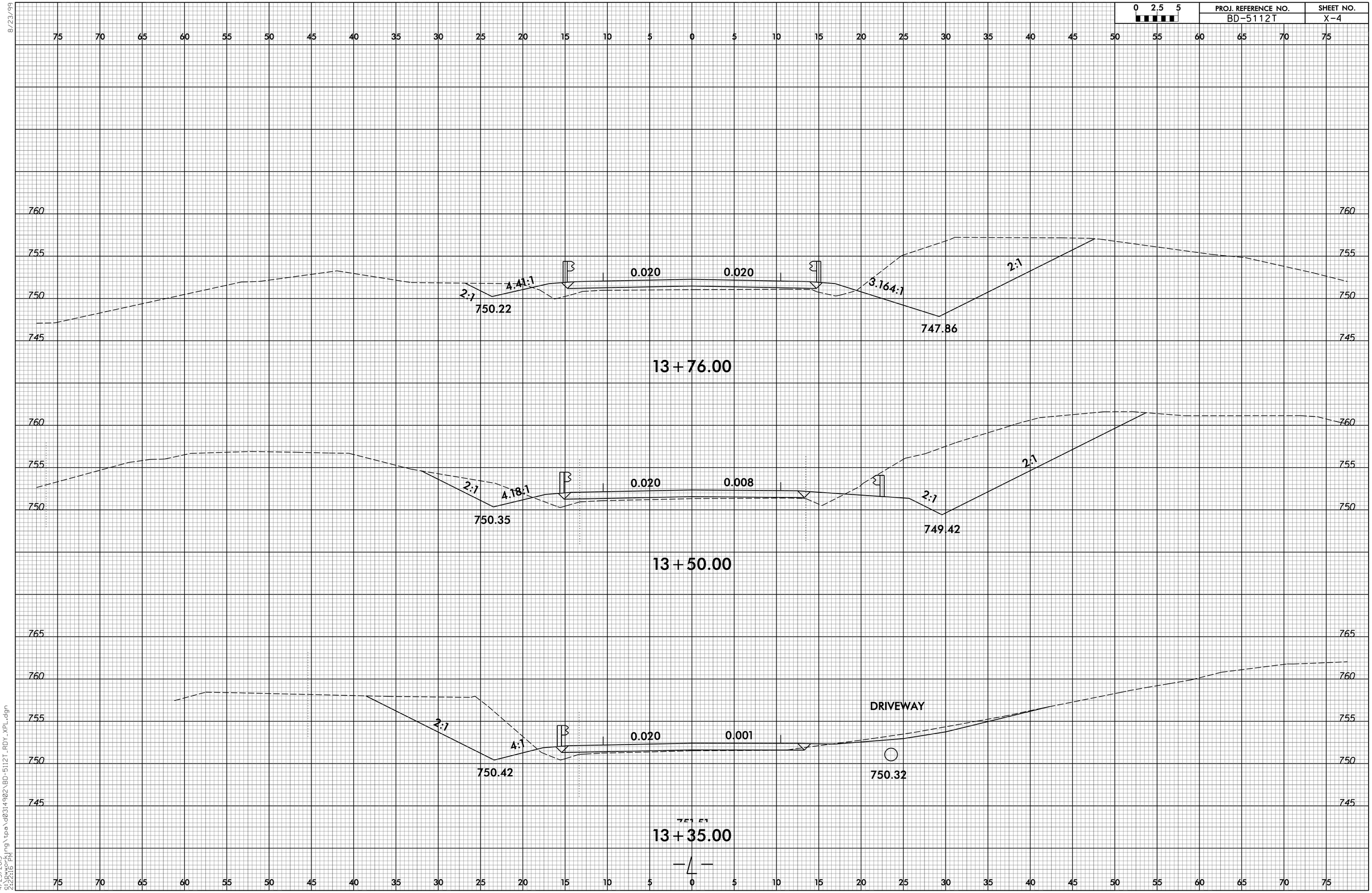

8/23/99

4/23/2013
2:22:16 PM
S:\Working\tpa\d0314902\BD-5112T_RDY_XPL.dgn

0 2.5 5	PROJ. REFERENCE NO.	SHEET NO.
	BD-5112T	X-5

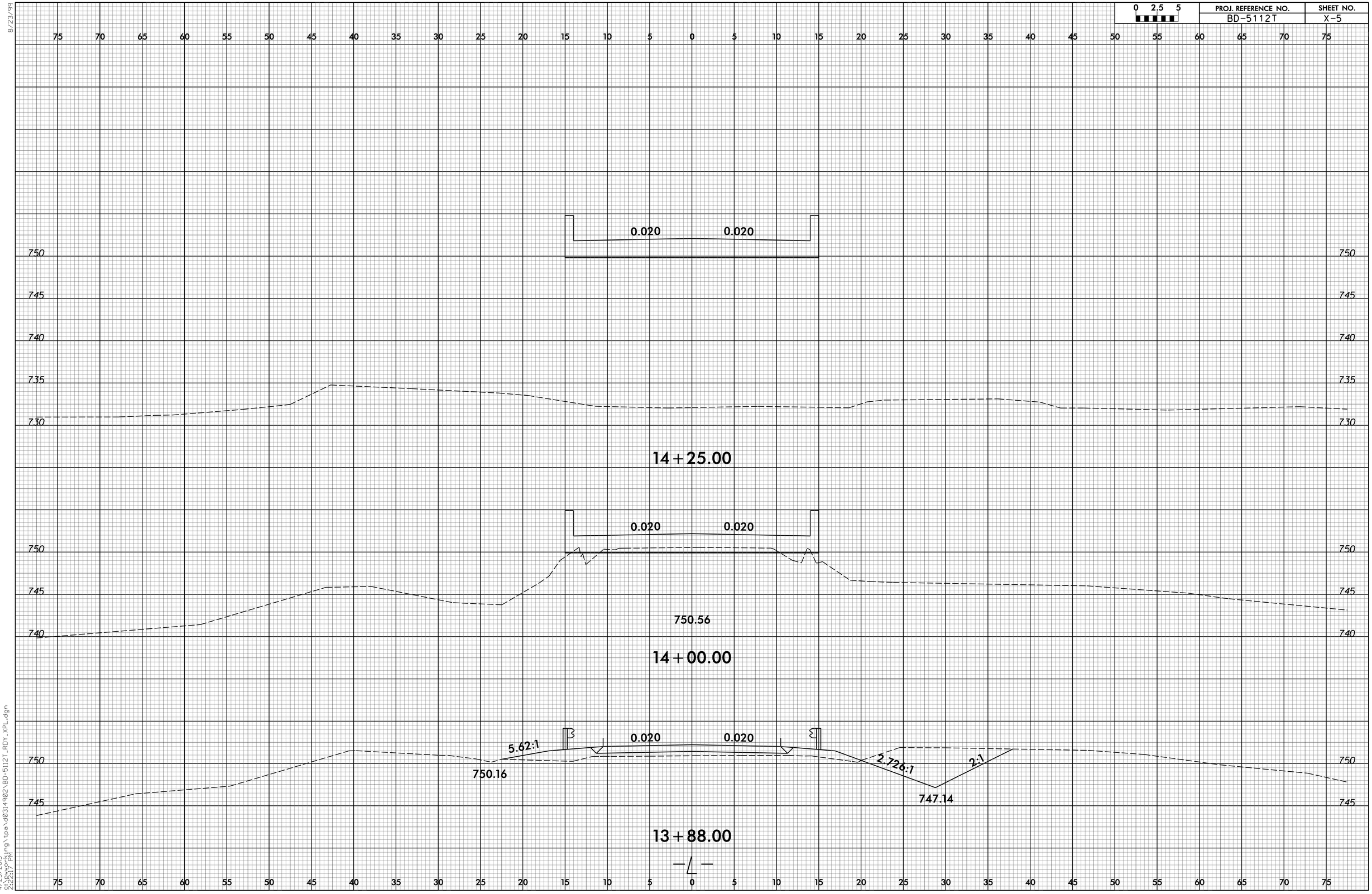

8/23/99

4/23/2013
2:22:17 PM
S:\Bworking\tpa\d0314902\BD-5112T_RDY_XPL.dgn

8/23/99

0 2.5 5	PROJ. REFERENCE NO.	SHEET NO.
	BD-5112T	X-6

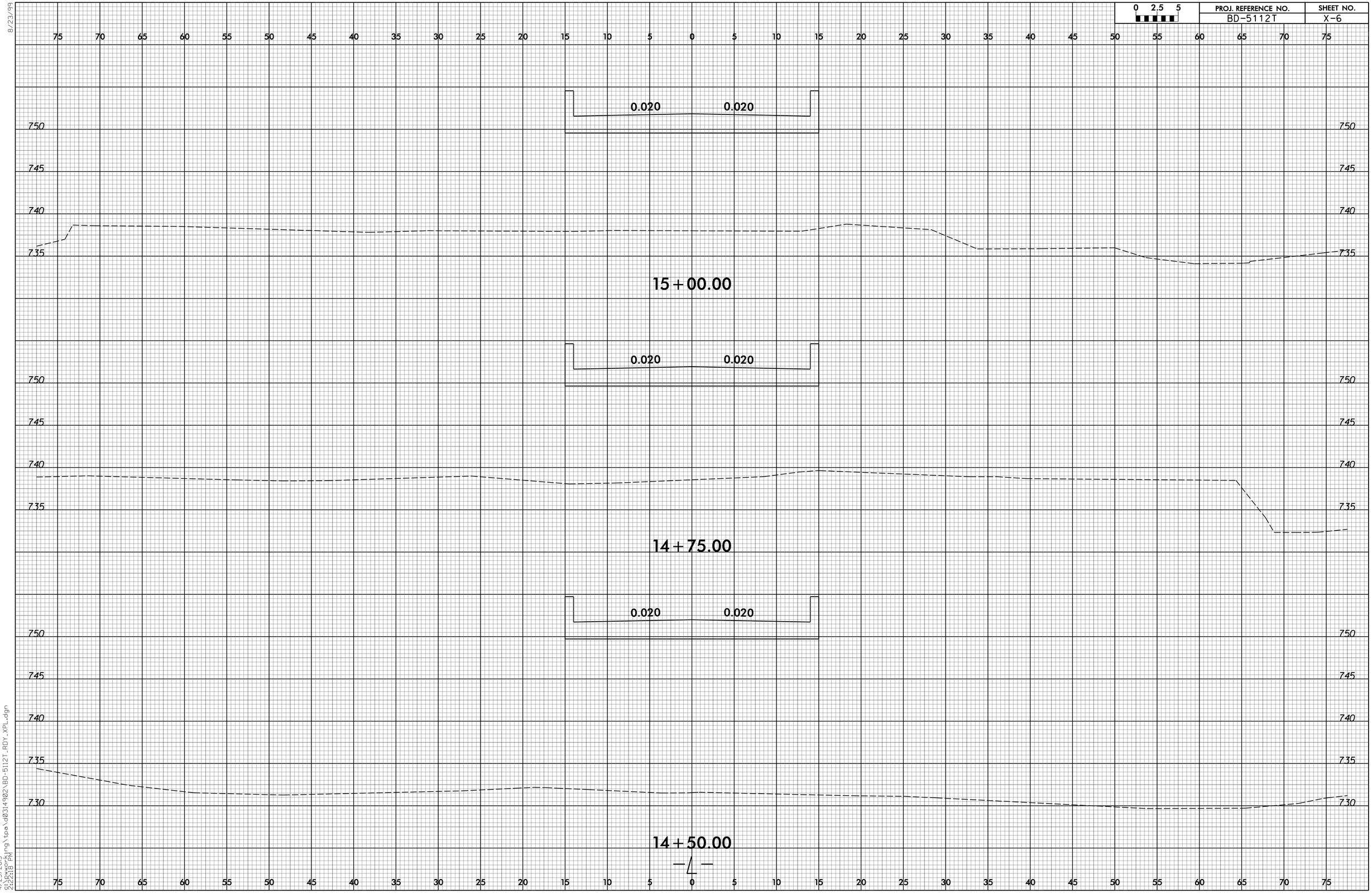

4/23/2013
S:\Bworking\tpa\d0314902\BD-5112T_RDY_XPL.dgn
2:22:18 PM

0 2.5 5	PROJ. REFERENCE NO.	SHEET NO.
	BD-5112T	X-7

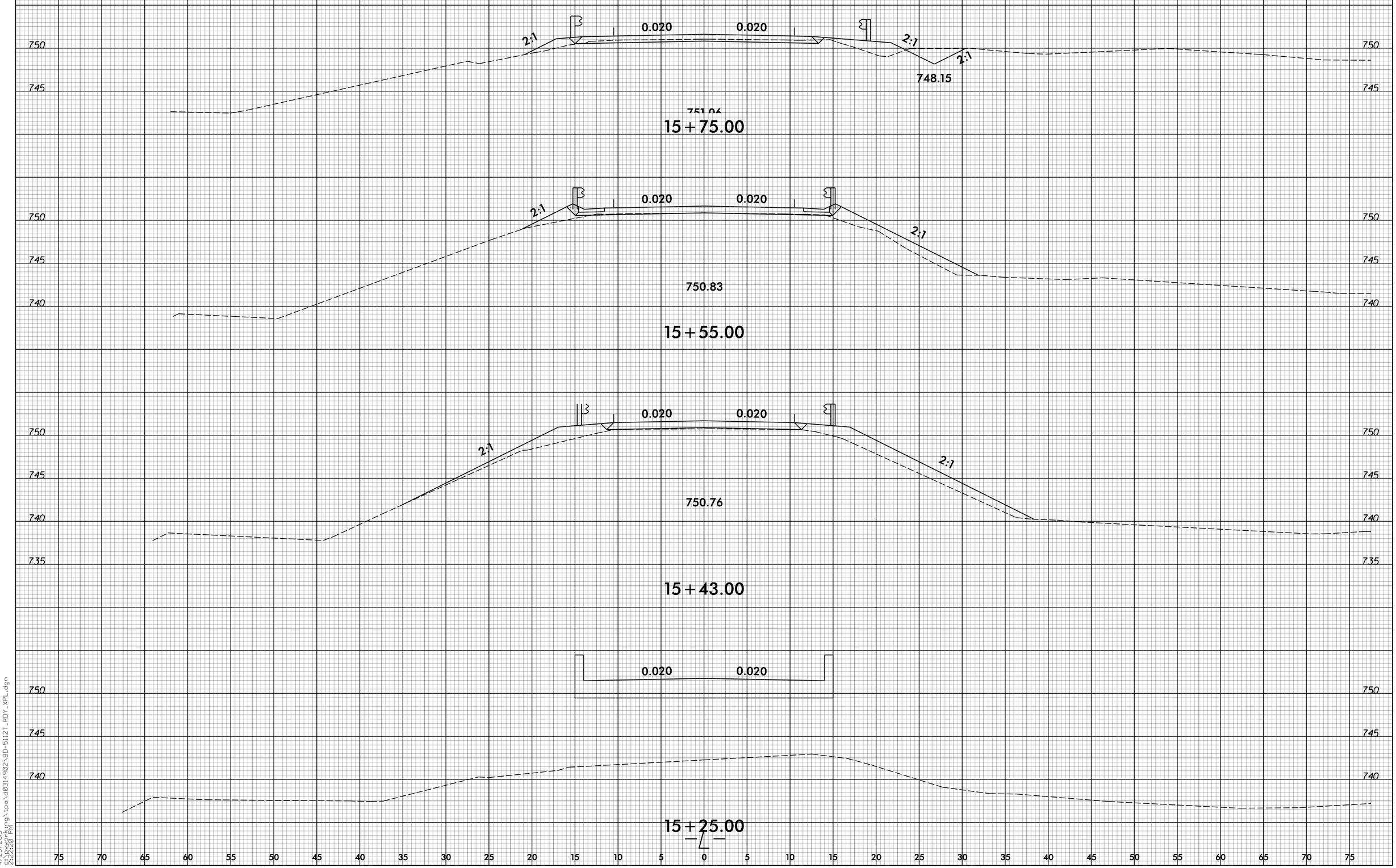

8/23/99

4/23/2013
S:\Pwworking\tpa\d0314902\BD-5112T_ROY_XPL.dgn
2:22:20 PM

0 2.5 5	PROJ. REFERENCE NO.	SHEET NO.
	BD-5112T	X-8

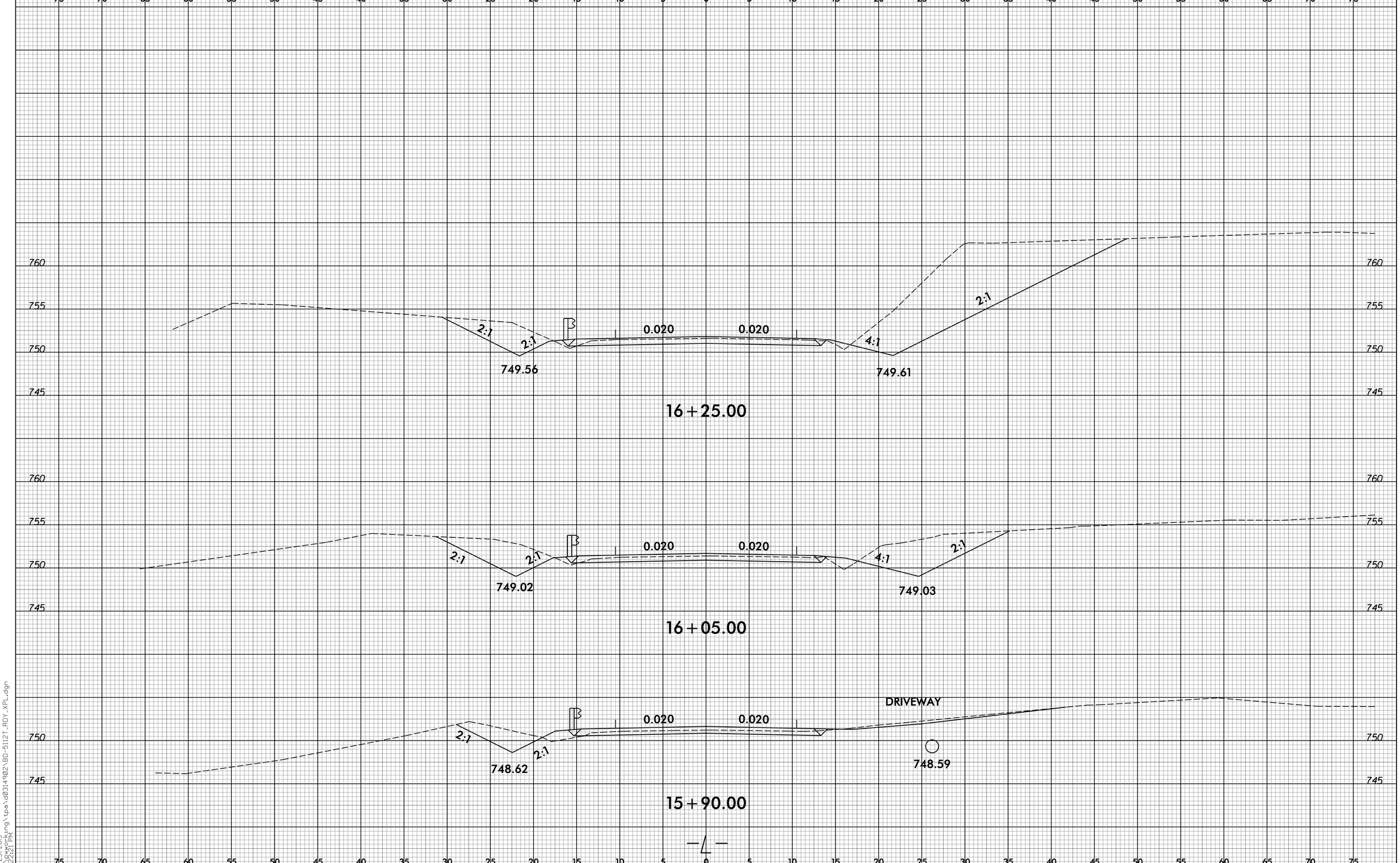

8/23/99
4/23/2013
5:19:44 PM
S:\Bwwpkjng\tpa\d0314902\BD-5112T_RDY_XPL.dgn

PROJ. REFERENCE NO.	SHEET NO.
BD-5112T	X-9

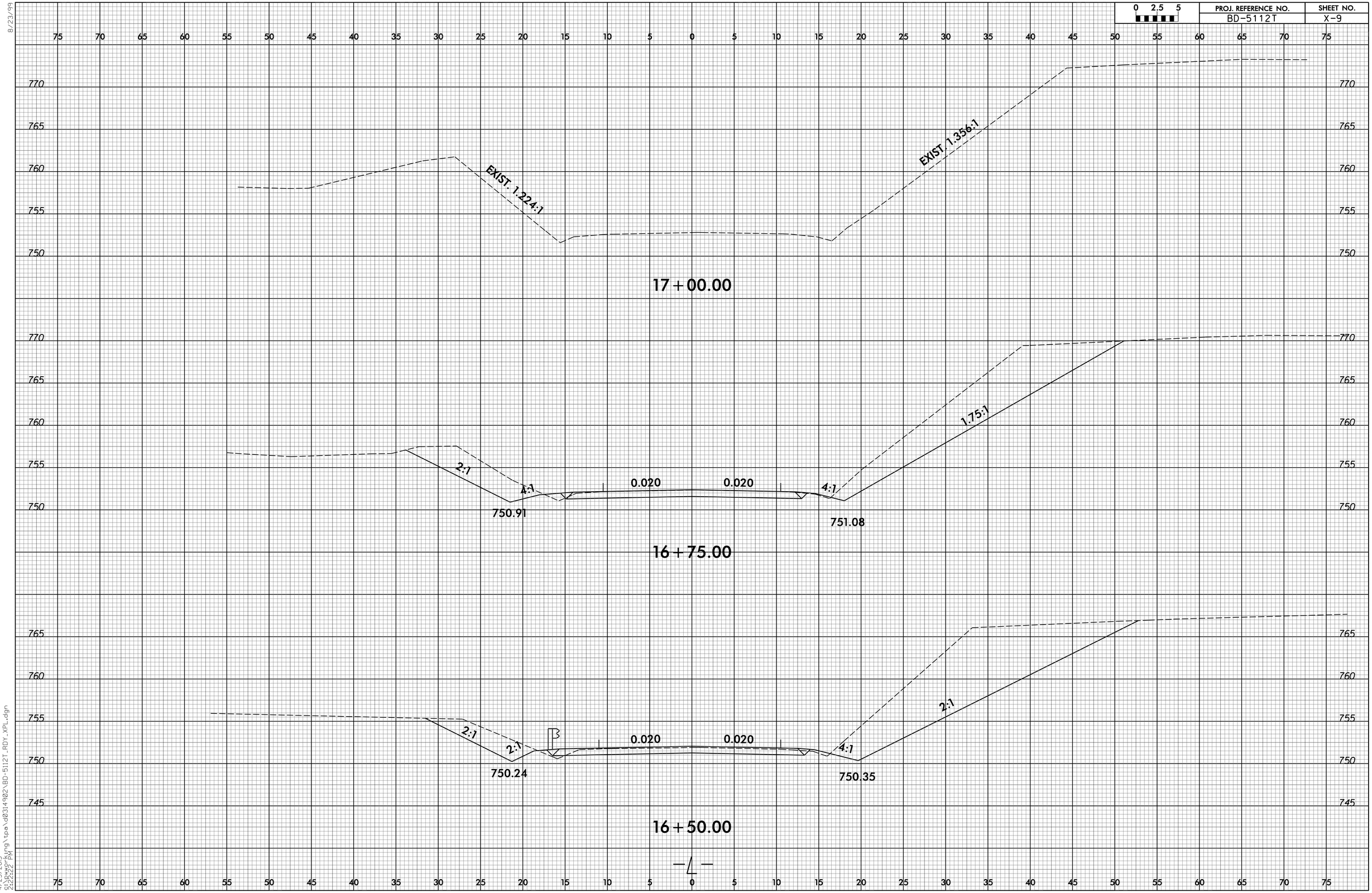

8/23/99

4/23/2013
5:29:44 PM
S:\pwworking\tpa\d0314902\BD-5112T_ROY_XPL.dgn

8/23/99

0 2.5 5	PROJ. REFERENCE NO.	SHEET NO.
	BD-5112T	X-10

4/23/2013
5:36:22 PM
S:\Bwp\kyng\tpa\d0314902\BD-5112T_RDY_XPL.dgn

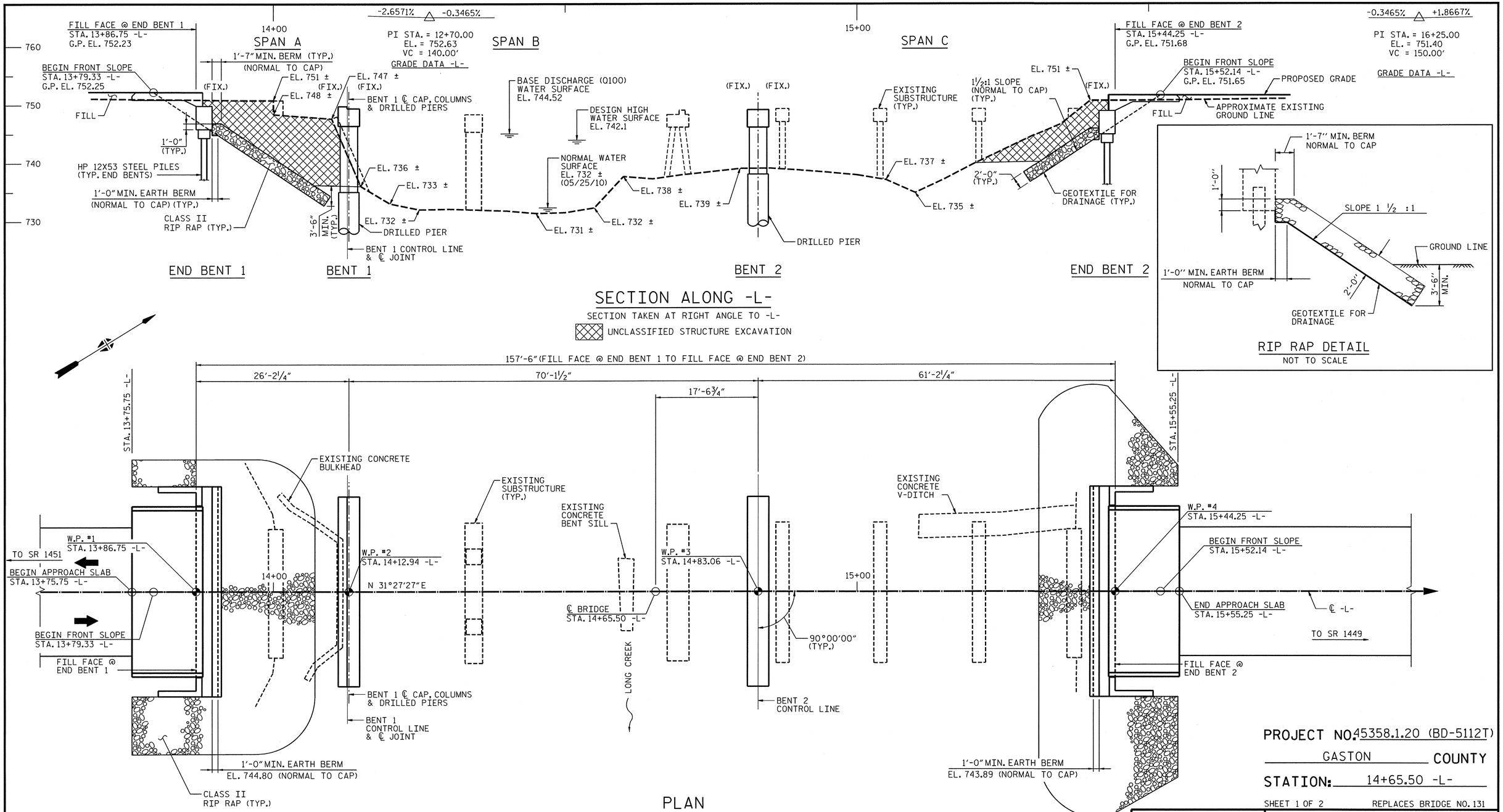

PROJECT NO. 45358.1.20 (BD-5112T)

GASTON COUNTY

STATION: 14+65.50 -L-

SHEET 1 OF 2 REPLACES BRIDGE NO. 131

STATE OF NORTH CAROLINA
DEPARTMENT OF TRANSPORTATION
RALEIGH

NORTH CAROLINA PROFESSIONAL SEAL 033730 ENGINEER ANNA C. TEAGUE 4-2-2013

GENERAL DRAWING

BRIDGE ON SR 1448
OVER LONG CREEK

HDR Engineering, Inc. of the Carolinas
3733 National Drive, Suite 207 Raleigh, N.C. 27612
N.C.B.E.L.S. License Number: F-0116

REVISIONS								
NO.	BY:	DATE:	NO.	BY:	DATE:			
1			3					
2			4					

SHEET NO. S-1

TOTAL SHEETS 22

DRAWN BY : M. SELLS DATE : 03/13
CHECKED BY : A. TEAGUE DATE : 03/13

PLOT DRIVER: NCDOT_pdf_mono_eng_50.plt
USER: msells
PENTABLE: Div12LIBR.tbl
DATE: 4/2/2013
TIME: 1:25:23 PM
FILE: North Carolina_Dept_of_Transportation\NCDOT_BM_LSC_Task_Order_1\NCDOT_Division_12_LIBR\3.00_TIP_folder_structure\BD-5112T\Structures\CAD\BD-5112T_SD_GD_01.dgn

BENCHMARK: TBM 2, RAILROAD SPIKE DRIVEN INTO PAVEMENT, 9.58' LT. OF STA. 15+98.59 -L-, EL. = 751.19'

HYDRAULIC DATA

DESIGN DISCHARGE	= 3800 CFS
FREQUENCY OF DESIGN FLOOD	= 25 YR
DESIGN HIGH WATER ELEVATION	= 742.1
DRAINAGE AREA	= 25.6 SQ. MI.
BASE DISCHARGE (Q100)	= 6730 CFS
BASE HIGH WATER ELEVATION	= 744.52

OVERTOPPING FLOOD DATA

OVERTOPPING DISCHARGE	= 16000 CFS
FREQUENCY OF OVERTOPPING FLOOD	= > 500 YR
OVERTOPPING FLOOD ELEVATION	= 751.6

NOTES:

ASSUMED LIVE LOAD = HL-93 OR ALTERNATE LOADING.

FOR OTHER DESIGN DATA AND GENERAL NOTES, SEE SHEET SN.

THIS BRIDGE HAS BEEN DESIGNED IN ACCORDANCE WITH THE AASHTO LRFD BRIDGE DESIGN SPECIFICATIONS.

THIS BRIDGE IS LOCATED IN SEISMIC ZONE 1.

FOR SUBMITTAL OF WORKING DRAWINGS, SEE SPECIAL PROVISIONS.

FOR FALSEWORK AND FORMWORK, SEE SPECIAL PROVISIONS.

FOR CRANE SAFETY, SEE SPECIAL PROVISIONS.

FOR GROUT FOR STRUCTURES, SEE SPECIAL PROVISIONS.

REMOVAL OF THE EXISTING BRIDGE SHALL BE PERFORMED IN A MANNER THAT PREVENTS DEBRIS FROM FALLING INTO THE WATER. THE CONTRACTOR SHALL SUBMIT DEMOLITION PLANS FOR REVIEW AND REMOVE THE BRIDGE IN ACCORDANCE WITH ARTICLE 402-2 OF THE STANDARD SPECIFICATIONS.

THE MATERIAL SHOWN IN THE CROSS-HATCHED AREA SHALL BE EXCAVATED FOR A DISTANCE OF 20 FT. EACH SIDE OF CENTERLINE ROADWAY AS DIRECTED BY THE ENGINEER. THIS WORK WILL BE PAID FOR AT THE CONTRACT LUMP SUM PRICE FOR UNCLASSIFIED STRUCTURE EXCAVATION. SEE SECTION 412 OF THE STANDARD SPECIFICATIONS.

THE SUBSTRUCTURE OF THE EXISTING BRIDGE INDICATED ON THE PLANS IS FROM THE BEST INFORMATION AVAILABLE. THIS INFORMATION IS SHOWN FOR THE CONVENIENCE OF THE CONTRACTOR. THE CONTRACTOR SHALL HAVE NO CLAIM WHATSOEVER AGAINST THE DEPARTMENT OF TRANSPORTATION FOR ANY DELAYS OR ADDITIONAL COST INCURRED BASED ON DIFFERENCES BETWEEN THE EXISTING BRIDGE SUBSTRUCTURE SHOWN ON THE PLANS AND THE ACTUAL CONDITIONS AT THE PROJECT SITE.

THE EXISTING STRUCTURE CONSISTING OF 6 SPANS (1 @ 35'-2", 1 @ 35'-0", 1 @ 17'-11", 1 @ 16'-9", 1 @ 16'-11", 1 @ 17'-10") WITH A REINFORCED CONCRETE DECK ON TIMBER JOISTS AND I-BEAMS AND A CLEAR ROADWAY OF 22'-0" ON REINFORCED CONCRETE ABUTMENTS AND CAPS AND TIMBER PILES, AND LOCATED AT THE PROPOSED SITE SHALL BE REMOVED. THE EXISTING BRIDGE IS PRESENTLY POSTED FOR LOAD LIMIT. SHOULD THE STRUCTURAL INTEGRITY OF THE BRIDGE DETERIORATE DURING CONSTRUCTION OF THE PROPOSED BRIDGE, A LOAD LIMIT MAY BE POSTED AND MAY BE REDUCED AS FOUND NECESSARY DURING THE LIFE OF THE PROJECT.

FOR PILES, SEE SECTION 450 OF THE STANDARD SPECIFICATIONS.

PILES AT END BENT NO. 1 ARE DESIGNED FOR A FACTORED RESISTANCE OF 55 TONS PER PILE.

DRIVE PILES AT END BENT NO. 1 TO A REQUIRED DRIVING RESISTANCE OF 95 TONS PER PILE.

PILE EXCAVATION IS REQUIRED TO INSTALL PILES AT END BENT 1. EXCAVATE HOLES AT PILE LOCATIONS TO ELEVATION 736 FT. (LT.) AND 733 FT. (RT.). FOR PILE EXCAVATION, SEE SECTION 450 OF THE STANDARD SPECIFICATIONS.

CONCRETE IS REQUIRED TO FILL HOLES FOR PILE EXCAVATION AT END BENT 1.

TESTING PILES WITH THE PDA DURING DRIVING, RESTRIKING OR REDRIVING MAY BE REQUIRED. THE ENGINEER WILL DETERMINE THE NEED FOR PDA TESTING. FOR PDA TESTING, SEE SECTION 450 OF THE STANDARD SPECIFICATIONS (AND FOR PILE DRIVING CRITERIA, SEE PILE DRIVING CRITERIA PROVISION).

FOR DRILLED PIERS, SEE SECTION 411 OF THE STANDARD SPECIFICATIONS.

DRILLED PIERS AT BENT NO. 1 ARE DESIGNED FOR A FACTORED RESISTANCE OF 365 TONS PER PIER. CHECK FIELD CONDITIONS FOR THE REQUIRED TIP RESISTANCE OF 5 TSF.

DRILLED PIERS AT BENT NO. 2 ARE DESIGNED FOR A FACTORED RESISTANCE OF 425 TONS PER PIER. CHECK FIELD CONDITIONS FOR THE REQUIRED TIP RESISTANCE OF 97 TSF.

INSTALL DRILLED PIERS AT BENT NO. 1 TO A TIP ELEVATION NO HIGHER THAN 706.5 FT. AND WITH THE REQUIRED TIP RESISTANCE AND PENETRATION OF AT LEAST 19.2 FT. INTO ROCK AS DEFINED BY ARTICLE 411-1 OF THE STANDARD SPECIFICATIONS.

INSTALL DRILLED PIERS AT BENT 2, LEFT, TO A TIP ELEVATION NO HIGHER THAN 715.5 FT. AND WITH THE REQUIRED TIP RESISTANCE.

INSTALL DRILLED PIERS AT BENT 2, RIGHT, TO A TIP ELEVATION NO HIGHER THAN 713.5 FT. AND WITH THE REQUIRED TIP RESISTANCE.

THE SCOUR CRITICAL ELEVATION FOR BENT NO. 1 IS ELEVATION 727.5 FT. THE SCOUR CRITICAL ELEVATION FOR BENT NO. 2 IS ELEVATION 726.5 FT. THE SCOUR CRITICAL ELEVATIONS ARE USED TO MONITOR POSSIBLE SCOUR PROBLEMS DURING THE LIFE OF THE STRUCTURE.

SID INSPECTIONS MAY BE REQUIRED FOR DRILLED PIERS. THE ENGINEER WILL DETERMINE THE NEED FOR SID INSPECTIONS. FOR SID INSPECTIONS, SEE SECTION 411 OF THE STANDARD SPECIFICATIONS.

CSL TUBES ARE REQUIRED AND CSL TESTING MAY BE REQUIRED FOR THE DRILLED PIERS. THE ENGINEER WILL DETERMINE THE NEED FOR CSL TESTING. FOR CSL TESTING, SEE SECTION 411 OF THE STANDARD SPECIFICATIONS.

PILES AT END BENT NO. 2 ARE DESIGNED FOR A FACTORED RESISTANCE OF 90 TONS PER PILE.

DRIVE PILES AT END BENT NO. 2 TO A REQUIRED DRIVING RESISTANCE OF 150 TONS PER PILE.

STEEL H-PILE POINTS ARE REQUIRED FOR STEEL H-PILES AT BENT NO. 2. FOR STEEL PILE POINTS, SEE SECTION 450 OF THE STANDARD SPECIFICATIONS.

FOR EROSION CONTROL MEASURES, SEE EROSION CONTROL PLANS.

ASPHALT WEARING SURFACE IS INCLUDED IN ROADWAY QUANTITY ON ROADWAY PLANS.

THIS STRUCTURE HAS BEEN DESIGNED IN ACCORDANCE WITH HEC 18, "EVALUATING SCOUR AT BRIDGES", MAY, 2001.

INASMUCH AS THE PAINT SYSTEM ON THE EXISTING STRUCTURAL STEEL CONTAINS LEAD, THE CONTRACTOR'S ATTENTION IS DIRECTED TO ARTICLE 107-1 OF THE STANDARD SPECIFICATIONS. ANY COSTS RESULTING FROM COMPLIANCE WITH APPLICABLE STATE OR FEDERAL REGULATIONS PERTAINING TO HANDLING OF MATERIALS CONTAINING LEAD BASED PAINT SHALL BE INCLUDED IN THE BID PRICE FOR "REMOVAL OF EXISTING STRUCTURE AT STATION 14+65.50 -L-".

FOR UTILITY INFORMATION, SEE ROADWAY PLANS.

TOTAL BILL OF MATERIAL

	REMOVAL OF EXISTING STRUCTURE AT STA. 14+65.50 -L-	PILE EXCAVATION IN SOIL	PILE EXCAVATION NOT IN SOIL	3'-6" DIA. DRILLED PIERS IN SOIL	3'-6" DIA. DRILLED PIERS NOT IN SOIL	PDA TESTING	SID INSPECTIONS	CSL TESTING	UNCLASSIFIED STRUCTURE EXCAVATION AT STA. 14+65.50 -L-	CLASS A CONCRETE	BRIDGE APPROACH SLABS STA. 14+65.50 -L-
	LUMP SUM	LIN. FT.	LIN. FT.	LIN. FT.	LIN. FT.	EACH	EACH	EACH	LUMP SUM	CU. YDS.	LUMP SUM
SUPERSTRUCTURE											
END BENT NO. 1		25	25							20.0	
BENT NO. 1				18.77	67.00					22.7	
BENT NO. 2				48.80	22.00					19.5	
END BENT NO. 2										20.2	
TOTAL	LUMP SUM	25	25	67.57	89.00	1	1	1	LUMP SUM	82.4	LUMP SUM

	REINFORCING STEEL	SPIRAL COLUMN REINFORCING STEEL	HP 12 x 53 STEEL PILES		STEEL PILE POINTS	VERTICAL CONCRETE BARRIER RAIL	RIP RAP CLASS II (2'-0" THICK)	GEOTEXTILE FOR DRAINAGE	ELASTOMERIC BEARINGS	3'-0" X 1'-9" PRESTRESSED CONCRETE CORED SLABS		3'-0" X 2'-0" PRESTRESSED CONCRETE CORED SLABS	
	LBS.	LBS.	NO.	LIN. FT.	EACH	LIN. FT.	TONS	SQ. YDS.	LUMP SUM	NO.	LIN. FT.	NO.	LIN. FT.
SUPERSTRUCTURE						310.75				10	250.0	20	1300.0
END BENT NO. 1	2449		5	90			162	180					
BENT NO. 1	10920	2567											
BENT NO. 2	9449	2041											
END BENT NO. 2	2449		5	75	5		180	200					
TOTAL	25267	4608	10	165	5	310.75	342	380	LUMP SUM	10	250.0	20	1300.0

DRAWN BY : M. SELLS DATE : 03/13
CHECKED BY : A. TEAGUE DATE : 03/13

PROJECT NO. 45358.1.20 (BD-5112T)

GASTON COUNTY

STATION: 14+65.50 -L-

SHEET 2 OF 2

NORTH CAROLINA PROFESSIONAL ENGINEER SEAL 033730 ANNA C. TEAGUE 4-2-2013

STATE OF NORTH CAROLINA
DEPARTMENT OF TRANSPORTATION
RALEIGH

GENERAL DRAWING

BRIDGE ON SR 1448
OVER LONG CREEK

REVISIONS						SHEET NO. S-2
NO.	BY:	DATE:	NO.	BY:	DATE:	TOTAL SHEETS 22
1			3			
2			4			

HDR Engineering, Inc. of the Carolinas
3733 National Drive, Suite 207 Raleigh, N.C. 27612
N.C.B.E.L.S. License Number: F-0116

PLOT DRIVER: NCDOT_pdf_mono_eng_50.plt PENTABLE: Div12LIBR.tbl
USER: msells DATE: 4/2/2013 TIME: 1:05:58 PM
FILE: North Carolina_Dept_of_Transportation\NCDOT_BM_LSC_Task_Order_1\NCDOT_Division_12_LIBRY\3.00_TIP_folder_structure\BD-5112T\Structures\CAD\BD-5112T_SD_GD_02.dgn

LOAD AND RESISTANCE FACTOR RATING (LRFD) SUMMARY FOR PRESTRESSED CONCRETE GIRDERS

LEVEL		VEHICLE	WEIGHT (W) (TONS)	CONTROLLING LOAD RATING	MINIMUM RATING FACTORS (RF)	TONS = W X RF	STRENGTH I LIMIT STATE											SERVICE III LIMIT STATE						COMMENT NUMBER
								MOMENT					SHEAR						MOMENT					
							LIVELOAD FACTORS	DISTRIBUTION FACTORS (DF)	RATING FACTOR	SPAN	GIRDER LOCATION	DISTANCE FROM LEFT END OF SPAN (ft)	DISTRIBUTION FACTORS (DF)	RATING FACTOR	SPAN	GIRDER LOCATION	DISTANCE FROM LEFT END OF SPAN (ft)	LIVELOAD FACTORS	DISTRIBUTION FACTORS (DF)	RATING FACTOR	SPAN	GIRDER LOCATION	DISTANCE FROM LEFT END OF SPAN (ft)	
DESIGN LOAD RATING		HL-93(Inv)	N/A	1	1.018	--	1.75	0.284	2.53	25'	EL	12	0.591	**1.02**	25'	EL	**1.2**	0.80	0.284	2.34	25'	EL	12	
		HL-93(Opr)	N/A	--	1.319	--	1.35	0.284	3.29	25'	EL	12	0.591	1.32	25'	EL	1.2	N/A	--	--	--	--	--	
		HS-20(Inv)	36.000	2	1.178	42.397	1.75	0.284	3.76	25'	EL	12	0.591	**1.18**	25'	EL	**1.2**	0.80	0.284	3.46	25'	EL	12	
		HS-20(Opr)	36.000	--	1.527	54.959	1.35	0.284	4.87	25'	EL	12	0.591	1.53	25'	EL	1.2	N/A	--	--	--	--	--	
LEGAL LOAD RATING	SV	SNSH	13.500	--	2.728	36.833	1.4	0.284	6.83	25'	EL	12	0.591	2.73	25'	EL	1.2	0.80	0.284	5.04	25'	EL	12	
		SNGARBS2	20.000	--	2.186	43.718	1.4	0.284	6.39	25'	EL	12	0.591	2.19	25'	EL	1.2	0.80	0.284	4.72	25'	EL	12	
		SNAGRIS2	22.000	--	2.141	47.107	1.4	0.284	6.83	25'	EL	12	0.591	2.14	25'	EL	1.2	0.80	0.284	5.04	25'	EL	12	
		SNCOTTS3	27.250	--	1.385	37.731	1.4	0.284	3.57	25'	EL	12	0.591	1.38	25'	EL	1.2	0.80	0.284	2.64	25'	EL	12	
		SNAGGRS4	34.925	--	1.332	46.511	1.4	0.284	3.56	25'	EL	12	0.591	1.33	25'	EL	1.2	0.80	0.284	2.62	25'	EL	12	
		SNS5A	35.550	--	1.392	49.477	1.4	0.284	3.45	25'	EL	12	0.591	1.39	25'	EL	1.2	0.80	0.284	2.54	25'	EL	12	
		SNS6A	39.950	--	1.334	53.31	1.4	0.284	3.23	25'	EL	12	0.591	1.33	25'	EL	1.2	0.80	0.284	2.39	25'	EL	12	
		SNS7B	42.000	--	1.344	56.455	1.4	0.284	3.23	25'	EL	12	0.591	1.34	25'	EL	1.2	0.80	0.284	2.37	25'	EL	12	
	TTST	TNAGRIT3	33.000	--	1.634	53.934	1.4	0.284	4.55	25'	EL	12	0.591	1.63	25'	EL	1.2	0.80	0.284	3.36	25'	EL	12	
		TNT4A	33.075	--	1.483	49.049	1.4	0.284	3.95	25'	EL	12	0.591	1.48	25'	EL	1.2	0.80	0.284	2.92	25'	EL	12	
		TNT6A	41.600	--	1.398	58.138	1.4	0.284	3.71	25'	EL	12	0.591	1.4	25'	EL	1.2	0.80	0.284	2.74	25'	EL	12	
		TNT7A	42.000	--	1.391	58.419	1.4	0.284	3.84	25'	EL	12	0.591	1.39	25'	EL	1.2	0.80	0.284	2.83	25'	EL	12	
		TNT7B	42.000	--	1.343	56.385	1.4	0.284	3.46	25'	EL	12	0.591	1.34	25'	EL	1.2	0.80	0.284	2.55	25'	EL	12	
		TNAGRIT4	43.000	--	1.340	57.604	1.4	0.284	3.71	25'	EL	12	0.591	1.34	25'	EL	1.2	0.80	0.284	2.73	25'	EL	12	
		TNAGT5A	45.000	--	1.367	61.501	1.4	0.284	3.71	25'	EL	12	0.591	1.37	25'	EL	1.2	0.80	0.284	2.73	25'	EL	12	
		TNAGT5B	45.000	3	1.239	55.766	1.4	0.284	3.65	25'	EL	9.6	0.591	**1.24**	25'	EL	**1.2**	0.80	0.284	2.71	25'	EL	9.6	

LOAD FACTORS:

DESIGN LOAD RATING FACTORS	LIMIT STATE	γ_{DC}	γ_{DW}
	STRENGTH I	1.25	1.50
	SERVICE III	1.00	1.00

NOTES:

MINIMUM RATING FACTORS ARE BASED ON THE STRENGTH I AND SERVICE III LIMIT STATES.

ALLOWABLE STRESSES FOR SERVICE III LIMIT STATE ARE AS REQUIRED FOR DESIGN.

(#) CONTROLLING LOAD RATING

(1) DESIGN LOAD RATING (HL-93)

(2) DESIGN LOAD RATING (HS-20)

(3) LEGAL LOAD RATING **

** SEE CHART FOR VEHICLE TYPE

GIRDER LOCATION

I - INTERIOR GIRDER
EL - EXTERIOR LEFT GIRDER
ER - EXTERIOR RIGHT GIRDER

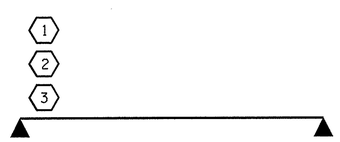

LRFR SUMMARY

SPAN A

PROJECT NO. BD-5112T

GASTON COUNTY

STATION: 14+65.50 -L-

STATE OF NORTH CAROLINA
DEPARTMENT OF TRANSPORTATION
RALEIGH

STANDARD

LRFR SUMMARY FOR 25' CORED SLAB UNIT 90° SKEW

(NON-INTERSTATE TRAFFIC)

NORTH CAROLINA PROFESSIONAL SEAL 21638 ENGINEER LAURA E. SUTTON 3/18/13

REVISIONS						SHEET NO.
NO.	BY:	DATE:	NO.	BY:	DATE:	S-3
1			3			TOTAL SHEETS
2			4			22

STD. NO. 21LRFR1_90S_25L

ASSEMBLED BY : J.P. MCCARTHA DATE : 11/28/12
CHECKED BY : L.E. SUTTON DATE : 12/4/12
DRAWN BY : CVC 6/10
CHECKED BY : DNS 6/10

18-MAR-2013 08:42
S:\DPGS\DIVISION_PROJECTS\Div_12\BD5112T\Plans\BD5112T_SD_LR_01.dgn
lsutton

LOAD AND RESISTANCE FACTOR RATING (LRFD) SUMMARY FOR PRESTRESSED CONCRETE GIRDERS

LEVEL		VEHICLE	WEIGHT (W) (TONS)	CONTROLLING LOAD RATING	MINIMUM RATING FACTORS (RF)	TONS = W X RF	STRENGTH I LIMIT STATE											SERVICE III LIMIT STATE						COMMENT NUMBER
								MOMENT					SHEAR						MOMENT					
							LIVELOAD FACTORS	DISTRIBUTION FACTORS (DF)	RATING FACTOR	SPAN	GIRDER LOCATION	DISTANCE FROM LEFT END OF SPAN (ft)	DISTRIBUTION FACTORS (DF)	RATING FACTOR	SPAN	GIRDER LOCATION	DISTANCE FROM LEFT END OF SPAN (ft)	LIVELOAD FACTORS	DISTRIBUTION FACTORS (DF)	RATING FACTOR	SPAN	GIRDER LOCATION	DISTANCE FROM LEFT END OF SPAN (ft)	
DESIGN LOAD RATING		HL-93(Inv)	N/A	**1**	1.006	--	1.75	0.273	1.03	70'	EL	34.5	0.507	1.32	70'	EL	6.9	0.80	0.273	**1.01**	70'	EL	**34.5**	
		HL-93(Opr)	N/A	--	1.341	--	1.35	0.273	1.34	70'	EL	34.5	0.507	1.72	70'	EL	6.9	N/A	--	--	--	--	--	
		HS-20(Inv)	36.000	**2**	1.306	47.02	1.75	0.273	1.34	70'	EL	34.5	0.507	1.65	70'	EL	6.9	0.80	0.273	**1.31**	70'	EL	**34.5**	
		HS-20(Opr)	36.000	--	1.74	62.64	1.35	0.273	1.74	70'	EL	34.5	0.507	2.14	70'	EL	6.9	N/A	--	--	--	--	--	
LEGAL LOAD RATING	SV	SNSH	13.500	--	2.917	39.379	1.4	0.273	3.75	70'	EL	34.5	0.507	4.87	70'	EL	6.9	0.80	0.273	2.92	70'	EL	34.5	
		SNGARBS2	20.000	--	2.187	43.741	1.4	0.273	2.81	70'	EL	34.5	0.507	3.47	70'	EL	6.9	0.80	0.273	2.19	70'	EL	34.5	
		SNAGRIS2	22.000	--	2.077	45.69	1.4	0.273	2.67	70'	EL	34.5	0.507	3.23	70'	EL	6.9	0.80	0.273	2.08	70'	EL	34.5	
		SNCOTTS3	27.250	--	1.452	39.565	1.4	0.273	1.87	70'	EL	34.5	0.507	2.43	70'	EL	6.9	0.80	0.273	1.45	70'	EL	34.5	
		SNAGGRS4	34.925	--	1.218	42.554	1.4	0.273	1.57	70'	EL	34.5	0.507	2.03	70'	EL	6.9	0.80	0.273	1.22	70'	EL	34.5	
		SNS5A	35.550	--	1.191	42.346	1.4	0.273	1.53	70'	EL	34.5	0.507	2.06	70'	EL	6.9	0.80	0.273	1.19	70'	EL	34.5	
		SNS6A	39.950	--	1.095	43.747	1.4	0.273	1.41	70'	EL	34.5	0.507	1.88	70'	EL	6.9	0.80	0.273	1.10	70'	EL	34.5	
		SNS7B	42.000	--	1.043	43.801	1.4	0.273	1.34	70'	EL	34.5	0.507	1.85	70'	EL	6.9	0.80	0.273	1.04	70'	EL	34.5	
	TTST	TNAGRIT3	33.000	--	1.336	44.087	1.4	0.273	1.72	70'	EL	34.5	0.507	2.23	70'	EL	6.9	0.80	0.273	1.34	70'	EL	34.5	
		TNT4A	33.075	--	1.342	44.401	1.4	0.273	1.72	70'	EL	34.5	0.507	2.17	70'	EL	6.9	0.80	0.273	1.34	70'	EL	34.5	
		TNT6A	41.600	--	1.1	45.746	1.4	0.273	1.41	70'	EL	34.5	0.507	1.98	70'	EL	6.9	0.80	0.273	1.10	70'	EL	34.5	
		TNT7A	42.000	--	1.106	46.462	1.4	0.273	1.42	70'	EL	34.5	0.507	1.94	70'	EL	6.9	0.80	0.273	1.11	70'	EL	34.5	
		TNT7B	42.000	--	1.147	48.18	1.4	0.273	1.47	70'	EL	34.5	0.507	1.8	70'	EL	6.9	0.80	0.273	1.15	70'	EL	34.5	
		TNAGRIT4	43.000	--	1.089	46.838	1.4	0.273	1.4	70'	EL	34.5	0.507	1.74	70'	EL	6.9	0.80	0.273	1.09	70'	EL	34.5	
		TNAGT5A	45.000	--	1.026	46.175	1.4	0.273	1.32	70'	EL	34.5	0.507	1.74	70'	EL	6.9	0.80	0.273	1.03	70'	EL	34.5	
		TNAGT5B	45.000	**3**	1.013	45.579	1.4	0.273	1.3	70'	EL	34.5	0.507	1.66	70'	EL	6.9	0.80	0.273	**1.01**	70'	EL	**34.5**	

LOAD FACTORS:

DESIGN LOAD RATING FACTORS	LIMIT STATE	γ_{DC}	γ_{DW}
	STRENGTH I	1.25	1.50
	SERVICE III	1.00	1.00

NOTES:

MINIMUM RATING FACTORS ARE BASED ON THE STRENGTH I AND SERVICE III LIMIT STATES.

ALLOWABLE STRESSES FOR SERVICE III LIMIT STATE ARE AS REQUIRED FOR DESIGN.

(#) CONTROLLING LOAD RATING

(1) DESIGN LOAD RATING (HL-93)

(2) DESIGN LOAD RATING (HS-20)

(3) LEGAL LOAD RATING **

** SEE CHART FOR VEHICLE TYPE

GIRDER LOCATION

I - INTERIOR GIRDER
EL - EXTERIOR LEFT GIRDER
ER - EXTERIOR RIGHT GIRDER

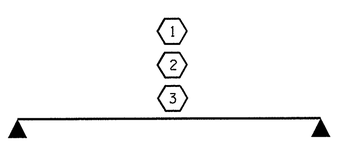

LRFR SUMMARY

SPAN B

PROJECT NO. BD-5112T

GASTON COUNTY

STATION: 14+65.50 -L-

STATE OF NORTH CAROLINA
DEPARTMENT OF TRANSPORTATION
RALEIGH

STANDARD
LRFR SUMMARY FOR
70' CORED SLAB UNIT
90° SKEW

(NON-INTERSTATE TRAFFIC)

NORTH CAROLINA PROFESSIONAL SEAL 21638 ENGINEER LAURA E. SUTTON 3/18/13

REVISIONS						SHEET NO.
NO.	BY:	DATE:	NO.	BY:	DATE:	S-4
1			3			TOTAL SHEETS
2			4			22

ASSEMBLED BY : J.P. MCCARTHA DATE : 11/28/12
CHECKED BY : L.E. SUTTON DATE : 12/4/12

DRAWN BY : CVC 6/10
CHECKED BY : DNS 6/10

18-MAR-2013 08:42
S:\DPG3\DIVISION_PROJECTS\Div_12\BD5112T\Plans\BD5112T_SD_LR_01.dgn
lsutton

STD. NO. 24LRFR1_90S_70L

LOAD AND RESISTANCE FACTOR RATING (LRFD) SUMMARY FOR PRESTRESSED CONCRETE GIRDERS

LEVEL		VEHICLE	WEIGHT (W) (TONS)	CONTROLLING LOAD RATING	MINIMUM RATING FACTORS (RF)	TONS = W X RF	STRENGTH I LIMIT STATE											SERVICE III LIMIT STATE						COMMENT NUMBER
								MOMENT					SHEAR						MOMENT					
							LIVELOAD FACTORS	DISTRIBUTION FACTORS (DF)	RATING FACTOR	SPAN	GIRDER LOCATION	DISTANCE FROM LEFT END OF SPAN (ft)	DISTRIBUTION FACTORS (DF)	RATING FACTOR	SPAN	GIRDER LOCATION	DISTANCE FROM LEFT END OF SPAN (ft)	LIVELOAD FACTORS	DISTRIBUTION FACTORS (DF)	RATING FACTOR	SPAN	GIRDER LOCATION	DISTANCE FROM LEFT END OF SPAN (ft)	
DESIGN LOAD RATING		HL-93(Inv)	N/A	**1**	1.33	--	1.75	0.275	1.33	60'	EL	29.5	0.52	**1.33**	60'	EL	**5.9**	0.80	0.275	1.37	60'	EL	29.5	
		HL-93(Opr)	N/A	--	1.725	--	1.35	0.275	1.73	60'	EL	29.5	0.52	1.72	60'	EL	5.9	N/A	--	--	--	--	--	
		HS-20(Inv)	36.000	**2**	1.601	57.643	1.75	0.275	1.69	60'	EL	29.5	0.52	**1.6**	60'	EL	**5.9**	0.80	0.275	1.74	60'	EL	29.5	
		HS-20(Opr)	36.000	--	2.076	74.723	1.35	0.275	2.19	60'	EL	29.5	0.52	2.08	60'	EL	5.9	N/A	--	--	--	--	--	
LEGAL LOAD RATING	SV	SNSH	13.500	--	3.745	50.557	1.4	0.275	4.55	60'	EL	29.5	0.52	4.63	60'	EL	5.9	0.80	0.275	3.74	60'	EL	29.5	
		SNGARBS2	20.000	--	2.867	57.338	1.4	0.275	3.48	60'	EL	29.5	0.52	3.33	60'	EL	5.9	0.80	0.275	2.87	60'	EL	29.5	
		SNAGRIS2	22.000	--	2.748	60.46	1.4	0.275	3.34	60'	EL	29.5	0.52	3.11	60'	EL	5.9	0.80	0.275	2.75	60'	EL	29.5	
		SNCOTTS3	27.250	--	1.866	50.841	1.4	0.275	2.27	60'	EL	29.5	0.52	2.31	60'	EL	5.9	0.80	0.275	1.87	60'	EL	29.5	
		SNAGGRS4	34.925	--	1.588	55.465	1.4	0.275	1.93	60'	EL	29.5	0.52	1.95	60'	EL	5.9	0.80	0.275	1.59	60'	EL	29.5	
		SNS5A	35.550	--	1.551	55.139	1.4	0.275	1.89	60'	EL	29.5	0.52	1.99	60'	EL	5.9	0.80	0.275	1.55	60'	EL	29.5	
		SNS6A	39.950	--	1.435	57.347	1.4	0.275	1.74	60'	EL	29.5	0.52	1.83	60'	EL	5.9	0.80	0.275	1.44	60'	EL	29.5	
		SNS7B	42.000	--	1.367	57.434	1.4	0.275	1.66	60'	EL	29.5	0.52	1.81	60'	EL	5.9	0.80	0.275	1.37	60'	EL	29.5	
	TTST	TNAGRIT3	33.000	--	1.754	57.887	1.4	0.275	2.13	60'	EL	29.5	0.52	2.17	60'	EL	5.9	0.80	0.275	1.75	60'	EL	29.5	
		TNT4A	33.075	--	1.765	58.389	1.4	0.275	2.15	60'	EL	29.5	0.52	2.1	60'	EL	5.9	0.80	0.275	1.77	60'	EL	29.5	
		TNT6A	41.600	--	1.456	60.551	1.4	0.275	1.77	60'	EL	29.5	0.52	1.96	60'	EL	5.9	0.80	0.275	1.46	60'	EL	29.5	
		TNT7A	42.000	--	1.469	61.714	1.4	0.275	1.79	60'	EL	29.5	0.52	1.88	60'	EL	5.9	0.80	0.275	1.47	60'	EL	29.5	
		TNT7B	42.000	--	1.535	64.463	1.4	0.275	1.87	60'	EL	29.5	0.52	1.76	60'	EL	5.9	0.80	0.275	1.53	60'	EL	29.5	
		TNAGRIT4	43.000	--	1.45	62.329	1.4	0.275	1.76	60'	EL	29.5	0.52	1.7	60'	EL	5.9	0.80	0.275	1.45	60'	EL	29.5	
		TNAGT5A	45.000	--	1.361	61.247	1.4	0.275	1.65	60'	EL	29.5	0.52	1.71	60'	EL	5.9	0.80	0.275	1.36	60'	EL	29.5	
		TNAGT5B	45.000	**3**	1.34	60.282	1.4	0.275	1.63	60'	EL	29.5	0.52	1.61	60'	EL	5.9	0.80	0.275	**1.34**	60'	EL	**29.5**	

LOAD FACTORS:

DESIGN LOAD RATING FACTORS	LIMIT STATE	γ_{DC}	γ_{DW}
	STRENGTH I	1.25	1.50
	SERVICE III	1.00	1.00

NOTES:

MINIMUM RATING FACTORS ARE BASED ON THE STRENGTH I AND SERVICE III LIMIT STATES.

ALLOWABLE STRESSES FOR SERVICE III LIMIT STATE ARE AS REQUIRED FOR DESIGN.

(#) CONTROLLING LOAD RATING

(1) DESIGN LOAD RATING (HL-93)

(2) DESIGN LOAD RATING (HS-20)

(3) LEGAL LOAD RATING **

** SEE CHART FOR VEHICLE TYPE

GIRDER LOCATION

I - INTERIOR GIRDER
EL - EXTERIOR LEFT GIRDER
ER - EXTERIOR RIGHT GIRDER

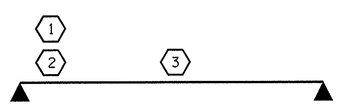

LRFR SUMMARY

SPAN C

PROJECT NO. BD-5112T

GASTON COUNTY

STATION: 14+65.50 -L-

STATE OF NORTH CAROLINA
DEPARTMENT OF TRANSPORTATION
RALEIGH

STANDARD
LRFR SUMMARY FOR
60' CORED SLAB UNIT
90° SKEW
(NON-INTERSTATE TRAFFIC)

NORTH CAROLINA PROFESSIONAL SEAL 21638 ENGINEER LAURA E. SUTTON 3/18/13

REVISIONS						SHEET NO.
NO.	BY:	DATE:	NO.	BY:	DATE:	S-5
1			3			TOTAL SHEETS
2			4			22

ASSEMBLED BY : J.P. MCCARTHA DATE : 11/28/12
CHECKED BY : L.E. SUTTON DATE : 12/4/12
DRAWN BY : CVC 6/10
CHECKED BY : DNS 6/10

18-MAR-2013 08:42
S:\DPG3\DIVISION_PROJECTS\Div_12\BD5112T\Plans\BD5112T_SD_LR_01.dgn
lsutton

STD. NO. 24LRFR1_90S_60L

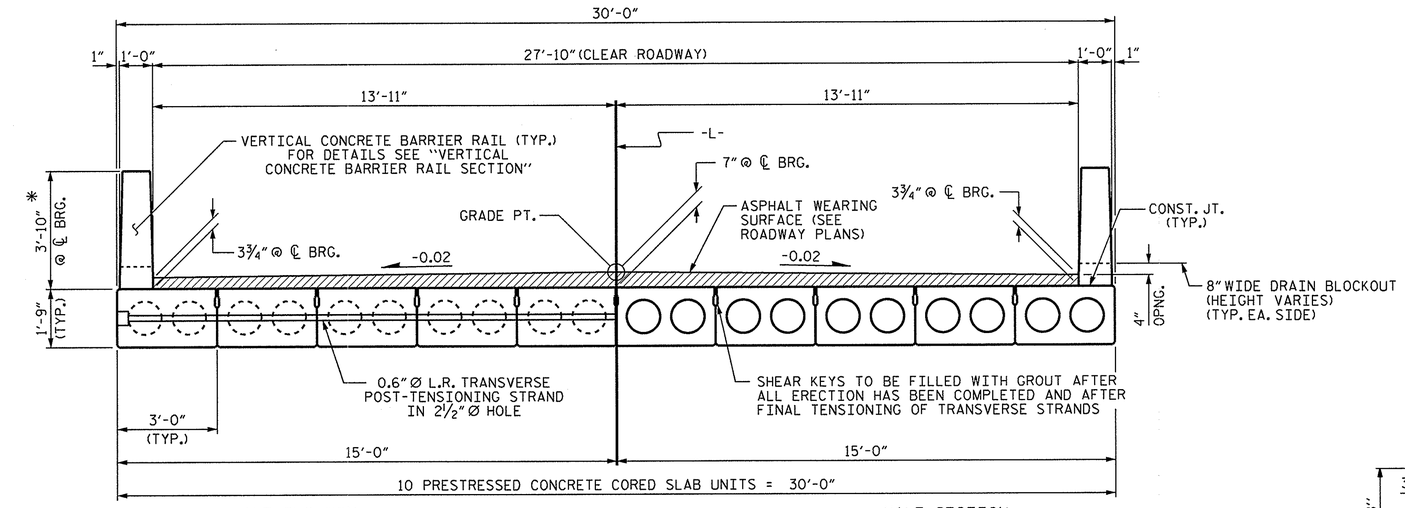

HALF SECTION
AT INTERMEDIATE DIAPHRAGMS

HALF SECTION
THROUGH VOIDS

TYPICAL SECTION

* - THE MAXIMUM BARRIER RAIL HEIGHT AND ASPHALT THICKNESS IS SHOWN. THE HEIGHT OF THE BARRIER RAIL AND ASPHALT THICKNESS VARIES WHILE THE TOP OF THE BARRIER RAIL FOLLOWS THE PROFILE OF THE GUTTERLINE. FOR RAIL HEIGHT DETAILS AND ASPHALT THICKNESS SEE THE "VERTICAL CONCRETE BARRIER RAIL SECTION" DETAIL.

FIXED END

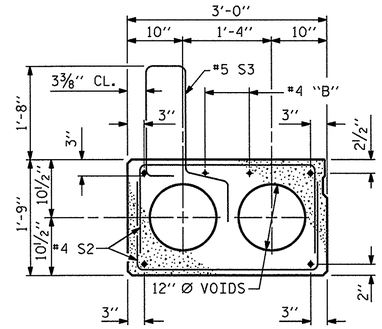

EXTERIOR SLAB SECTION

(FOR PRESTRESSED STRAND LAYOUT, SEE INTERIOR SLAB SECTION.)

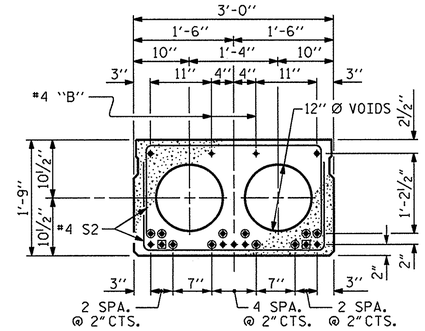

INTERIOR SLAB SECTION (25', 30' & 35' UNIT)

(9 STRANDS REQUIRED)

0.6" Ø LOW RELAXATION STRAND LAYOUT

- ◉ BOND SHALL BE BROKEN ON THESE STRANDS FOR A DISTANCE OF 2'-0" FROM END OF CORED SLAB UNIT. SEE STANDARD SPECIFICATIONS, ARTICLE 1078-7.
- ◉ OPTIONAL FULL LENGTH DEBONDED STRANDS. THESE STRANDS ARE NOT REQUIRED. IF THE FABRICATOR CHOOSES TO INCLUDE THESE STRANDS IN THE CORED SLAB UNIT, THE STRANDS SHALL BE DEBONDED FOR THE FULL LENGTH OF THE UNIT AT NO ADDITIONAL COST. SEE STANDARD SPECIFICATIONS, ARTICLE 1078-7.

DEBONDING LEGEND

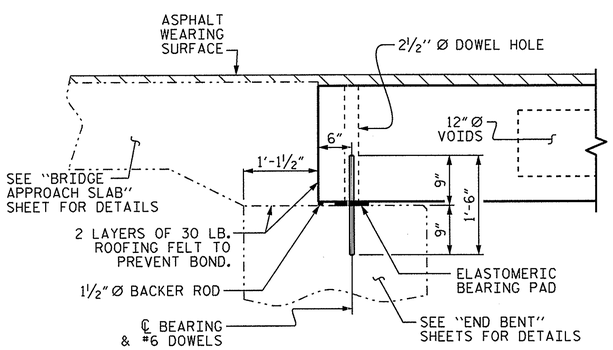

SECTION AT END BENT 1

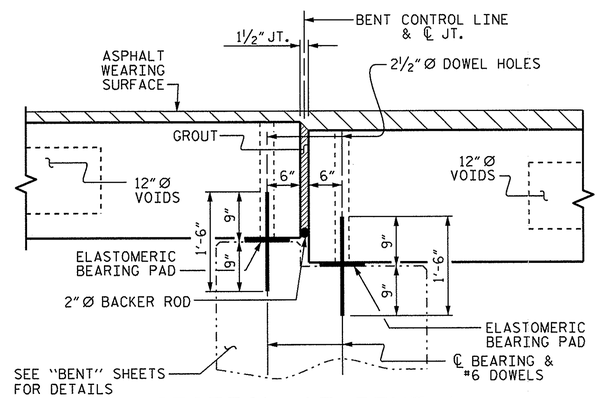

SECTION AT BENT 1

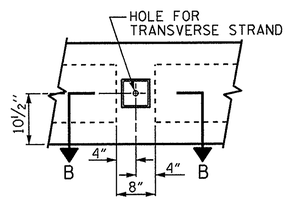

ELEVATION VIEW

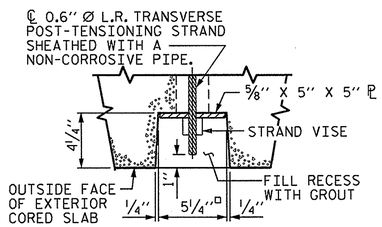

SECTION B-B

GROUTED RECESS AT END OF POST-TENSIONED STRAND OF CORED SLABS

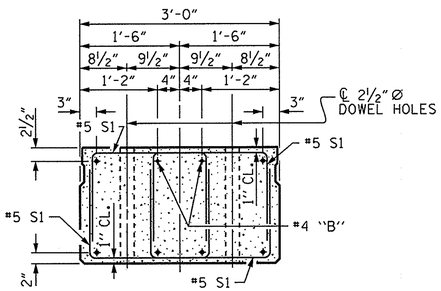

END ELEVATION

SHOWING PLACEMENT OF DOUBLE STIRRUPS AND LOCATION OF DOWEL HOLES. (STRAND LAYOUT NOT SHOWN.) INTERIOR SLAB UNIT SHOWN-EXTERIOR SLAB UNIT SIMILAR EXCEPT SHEAR KEY LOCATION.

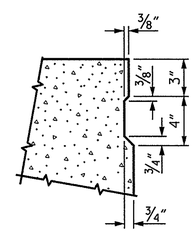

SHEAR KEY DETAIL

NOTE: OMIT SHEAR KEY ON OUTSIDE FACE OF EXTERIOR CORED SLABS.

PROJECT NO. BD-5112T
GASTON COUNTY
STATION: 14+65.50 -L-

SHEET 1 OF 3

STATE OF NORTH CAROLINA
DEPARTMENT OF TRANSPORTATION
RALEIGH

STANDARD
3'-0" X 1'-9"
PRESTRESSED CONCRETE CORED SLAB UNIT
90° SKEW - SPAN A

REVISIONS							SHEET NO.
NO.	BY:	DATE:	NO.	BY:	DATE:		S-6
1			3				TOTAL SHEETS
2			4				22

NORTH CAROLINA PROFESSIONAL SEAL 21838 ENGINEER LAURA E. SUTTON 3/18/13

ASSEMBLED BY : J.P. MCCARTHA		DATE : 11/28/12	
CHECKED BY : L.E. SUTTON		DATE : 12/4/12	
DRAWN BY : DGE	5/09	REV. 12/11	MAA/AAC
CHECKED BY : BCH	6/09		

18-MAR-2013 09:16
S:\DPGS\DIVISION_PROJECTS\Div_12\BD5112T\Plans\BD5112T_SD_CS_01.dgn
lsutton

STD. NO. 21" PCS2_30_90S

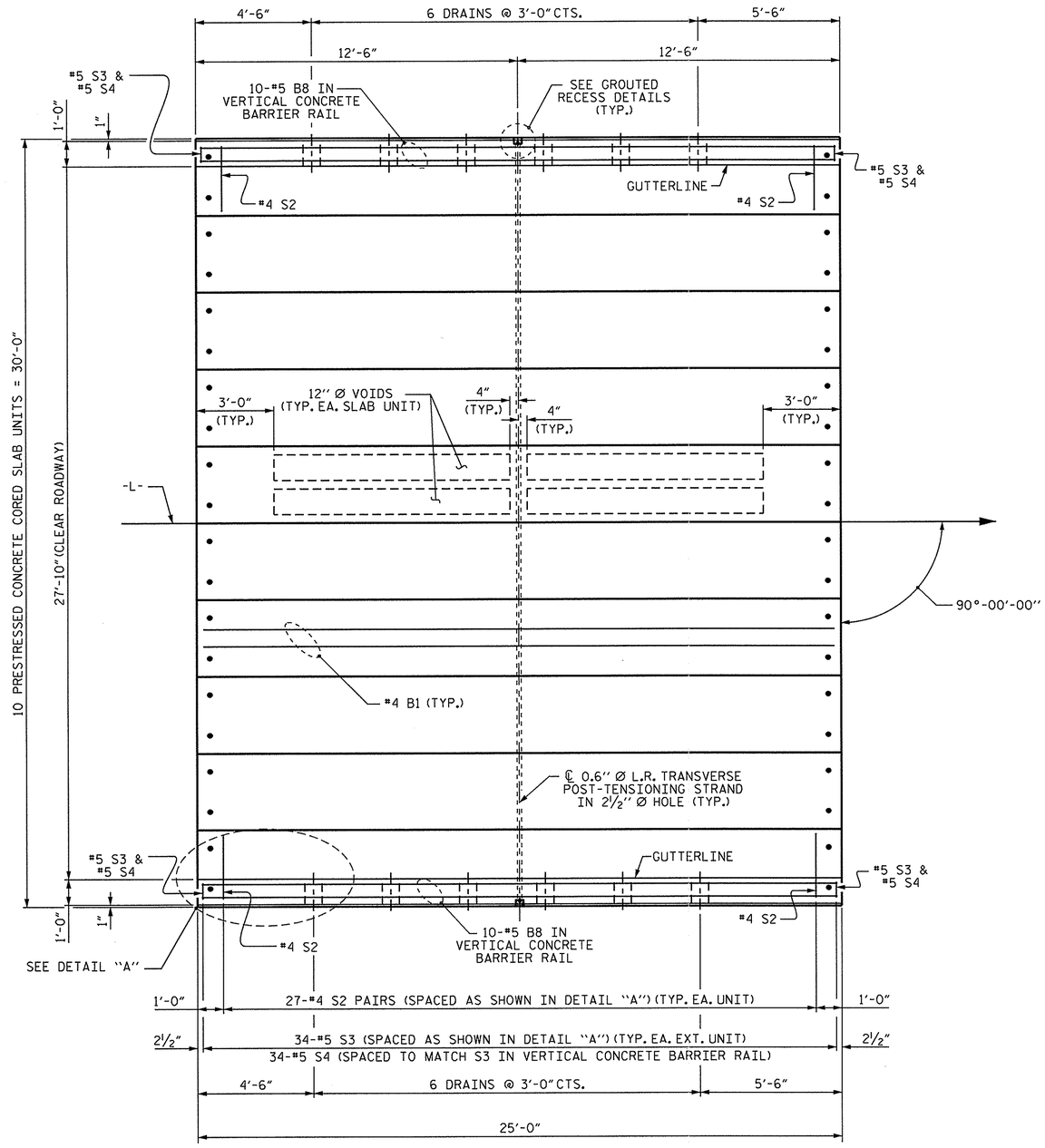

PLAN OF UNIT

SPAN A

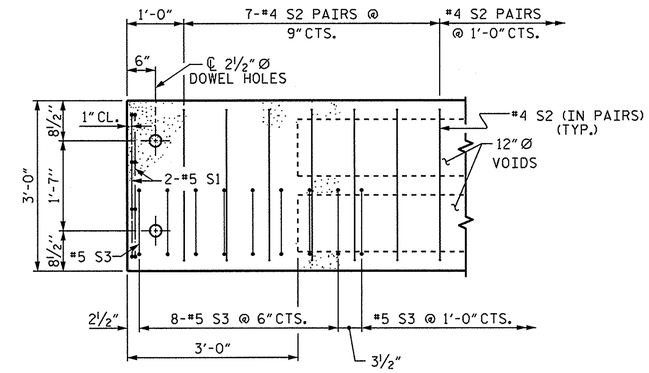

DETAIL "A"

NOTE: EXTERIOR UNIT SHOWN - INTERIOR UNIT SIMILAR EXCEPT OMIT #5 S3 BARS.

PROJECT NO. BD-5112T

GASTON COUNTY

STATION: 14+65.50 -L-

SHEET 2 OF 3

STATE OF NORTH CAROLINA
DEPARTMENT OF TRANSPORTATION
RALEIGH

PLAN OF 25' UNIT
27'-10" CLEAR ROADWAY

90° SKEW - SPAN A

REVISIONS						SHEET NO.
NO.	BY:	DATE:	NO.	BY:	DATE:	S-7
1			3			TOTAL SHEETS
2			4			22

NORTH CAROLINA PROFESSIONAL SEAL 21638 ENGINEER LAURA E. SUTTON 3/18/13

ASSEMBLED BY : J.P. MCCARTHA		DATE : 11/28/12	
CHECKED BY : L.E. SUTTON		DATE : 12/4/12	
DRAWN BY : DGE 3/09	REV. 12/5/11 MAA/AAC		
CHECKED BY : BCH 3/09			

18-MAR-2013 08:42
S:\DPG3\DIVISION_PROJECTS\Div_12\BD5112T\Plans\BD5112T_SD_CS_01.dgn
lsutton

STD. NO. 21" PCS_30_90S_25L

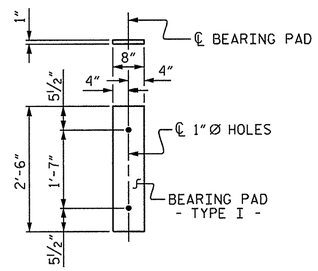

FIXED END
(TYPE I - 20 REQ'D)

ELASTOMERIC BEARING DETAILS

ELASTOMER IN ALL BEARINGS SHALL BE 60 DUROMETER HARDNESS.

BILL OF MATERIAL FOR VERTICAL CONCRETE BARRIER RAIL

BAR	BARS PER PAIR OF EXTERIOR UNITS	TOTAL NO.	SIZE	TYPE	LENGTH	WEIGHT
	25' UNIT					
*B8	20	20	#5	STR	24'-7"	513
*S4	68	68	#5	2	7'-2"	508
* EPOXY COATED REINFORCING STEEL					LBS.	1,021
CLASS AA CONCRETE					CU.YDS.	6.6
TOTAL VERTICAL CONCRETE BARRIER RAIL					LIN. FT.	50.25

GRADE 270 STRANDS

	0.6" Ø L.R.
AREA (SQUARE INCHES)	0.217
ULTIMATE STRENGTH (LBS. PER STRAND)	58,600
APPLIED PRESTRESS (LBS. PER STRAND)	43,950

CORED SLABS REQUIRED

25' UNIT	NUMBER	LENGTH	TOTAL LENGTH
EXTERIOR C.S.	2	25'-0"	50'-0"
INTERIOR C.S.	8	25'-0"	200'-0"
TOTAL	10		250'-0"

DEAD LOAD DEFLECTION AND CAMBER

	3'-0" x 1'-9"
25', 30' & 35' UNITS	0.6" Ø L.R. STRAND
CAMBER (SLAB ALONE IN PLACE)	½" ↑
DEFLECTION DUE TO SUPERIMPOSED DEAD LOAD**	⅛" ↓
FINAL CAMBER	⅜" ↑

** INCLUDES FUTURE WEARING SURFACE

BAR TYPES

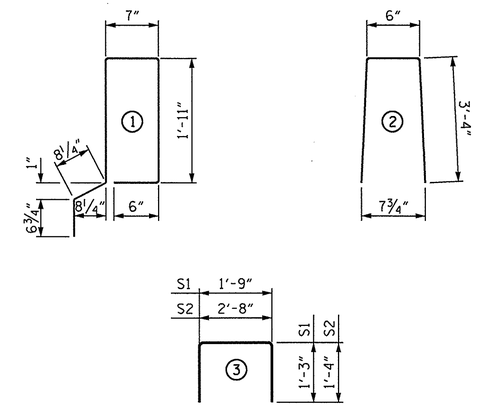

ALL BAR DIMENSIONS ARE OUT TO OUT.

BILL OF MATERIAL FOR ONE 25' CORED SLAB UNIT

				EXTERIOR UNIT		INTERIOR UNIT	
BAR	NO.	SIZE	TYPE	LENGTH	WEIGHT	LENGTH	WEIGHT
B1	2	#4	STR	24'-8"	33	24'-8"	33
S1	8	#5	3	4'-3"	35	4'-3"	35
S2	54	#4	3	5'-4"	192	5'-4"	192
*S3	34	#5	1	6'-2"	219		
REINFORCING STEEL				LBS.	260	LBS.	260
* EPOXY COATED REINFORCING STEEL				LBS.	219		
5000 PSI CONCRETE				CU. YDS.	3.7	CU. YDS.	3.7
0.6" Ø L.R. STRANDS				No.	9	No.	9

NOTES

ALL PRESTRESSING STRANDS SHALL BE 7-WIRE LOW RELAXATION GRADE 270 STRANDS AND SHALL CONFORM TO AASHTO M203 EXCEPT FOR SAMPLING REQUIREMENTS WHICH SHALL BE IN ACCORDANCE WITH THE STANDARD SPECIFICATIONS.

ALL REINFORCING STEEL CAST WITH THE CORED SLAB SECTIONS SHALL BE GRADE 60 AND SHALL BE INCLUDED IN THE UNIT PRICE BID FOR PRESTRESSED CONCRETE CORED SLABS.

RECESSES FOR TRANSVERSE STRANDS SHALL BE GROUTED AFTER THE TENSIONING OF THE STRANDS.

THE 2½" Ø DOWEL HOLES AT FIXED ENDS OF SLAB SECTIONS SHALL BE FILLED WITH NON-SHRINK GROUT.

THE BACKER RODS SHALL CONFORM TO THE REQUIREMENTS OF TYPE M BOND BREAKER. SEE SECTION 1028 OF THE STANDARD SPECIFICATIONS.

WHEN CORED SLABS ARE CAST, AN INTERNAL HOLD-DOWN SYSTEM SHALL BE EMPLOYED TO PREVENT VOIDS FROM RISING OR MOVING SIDEWAYS. AT LEAST SIX WEEKS PRIOR TO CASTING CORED SLABS, THE CONTRACTOR SHALL SUBMIT TO THE ENGINEER FOR REVIEW AND COMMENT, DETAILED DRAWINGS OF THE PROPOSED HOLD-DOWN SYSTEM. IN ADDITION TO STRUCTURAL DETAILS, LOCATION AND SPACING OF THE HOLD-DOWNS SHALL BE INDICATED.

ALL REINFORCING STEEL IN THE VERTICAL CONCRETE BARRIER RAILS SHALL BE EPOXY COATED.

PRESTRESSING STRANDS SHALL BE CUT FLUSH WITH THE CORED SLAB UNIT ENDS.

APPLY EPOXY PROTECTIVE COATING TO CORED SLAB UNIT ENDS.

GROOVED CONTRACTION JOINTS, ½" IN DEPTH, SHALL BE TOOLED IN ALL EXPOSED FACES OF THE BARRIER RAIL AND IN ACCORDANCE WITH ARTICLE 825-10(B) OF THE STANDARD SPECIFICATIONS. A CONTRACTION JOINT SHALL BE LOCATED AT EACH THIRD POINT BETWEEN BARRIER RAIL EXPANSION JOINTS. ONLY ONE CONTRACTION JOINT IS REQUIRED AT MIDPOINT OF BARRIER RAIL SEGMENTS LESS THAN 20 FEET IN LENGTH AND NO CONTRACTION JOINTS ARE REQUIRED FOR THOSE SEGMENTS LESS THAN 10 FEET IN LENGTH.

TRANSVERSE POST TENSIONING OF THE CORED SLAB UNITS SHALL BE DONE IN ACCORDANCE WITH THE STANDARD SPECIFICATIONS.

THE TRANSFER OF LOAD FROM THE ANCHORAGES TO THE CORED SLAB UNIT SHALL BE DONE WHEN THE CONCRETE HAS REACHED A COMPRESSIVE STRENGTH OF NOT LESS 4000 PSI.

FOR GROUT FOR STRUCTURES, SEE SPECIAL PROVISIONS.

THE DRAIN OPENING AT THE GUTTERLINE SHALL BE 4" X 8". THE HEIGHT OF THE BLOCKOUT IN THE VERTICAL CONCRETE BARRIER RAIL SHALL EXTEND FROM THE TOP OF THE CORED SLAB UNIT TO THE TOP OF THE DRAIN OPENING.

APPLY EPOXY PROTECTIVE COATING TO EXTERIOR FACE OF THE EXTERIOR CORED SLAB UNITS THAT REQUIRE DRAINS IN THE BARRIER RAIL.

GUTTERLINE ASPHALT THICKNESS & RAIL HEIGHT

	ASPHALT OVERLAY THICKNESS @ MID-SPAN	RAIL HEIGHT @ MID-SPAN
25', 30' & 35' UNITS	3⅜"	3'-9⅝"

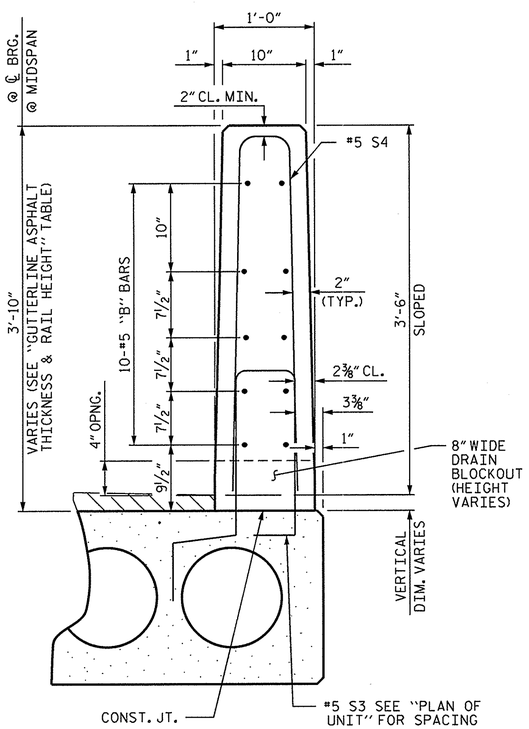

SECTION THRU RAIL

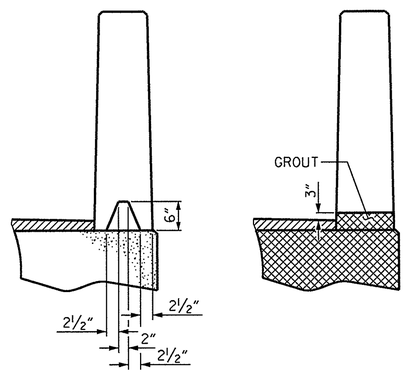

SECTION S-S
AT DAM IN OPEN JOINT
(THIS IS TO BE USED ONLY WHEN SLIP FORM IS USED)

SECTION T-T
AT OPEN JOINT AT BENT
(THIS IS TO BE USED WHERE FOAM JOINT IS NOT USED)

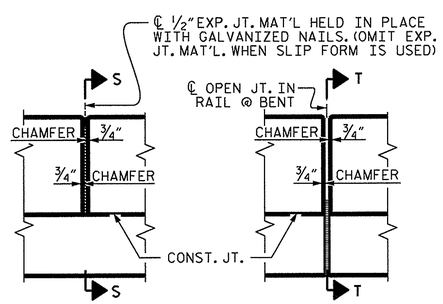

ELEVATION AT EXPANSION JOINTS

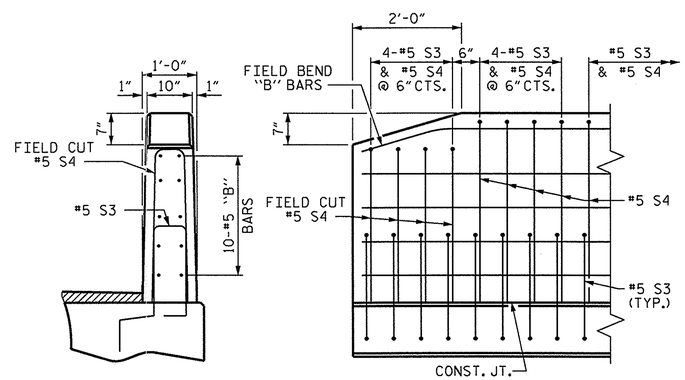

END VIEW

SIDE VIEW

VERTICAL CONCRETE BARRIER RAIL DETAILS

END OF RAIL DETAILS

PROJECT NO. BD-5112T
GASTON COUNTY
STATION: 14+65.50 -L-

SHEET 3 OF 3

STATE OF NORTH CAROLINA
DEPARTMENT OF TRANSPORTATION
RALEIGH

STANDARD
3'-0" X 1'-9"
PRESTRESSED CONCRETE
CORED SLAB UNIT
90° SKEW - SPAN A

REVISIONS						SHEET NO.
NO.	BY:	DATE:	NO.	BY:	DATE:	S-8
1			3			TOTAL SHEETS
2			4			22

NORTH CAROLINA PROFESSIONAL SEAL 21638 ENGINEER LAURA E. SUTTON 3/18/13

STD. NO. 21" PCS3_30_90S

ASSEMBLED BY : J.P. MCCARTHA	DATE : 11/28/12
CHECKED BY : L.E. SUTTON	DATE : 12/4/12
DRAWN BY : DGE 5/09	REV. 12/11 MAA/AAC
CHECKED BY : BCH 6/09	

18-MAR-2013 08:42
S:\DPG3\DIVISION_PROJECTS\Div_12\BD5112T\Plans\BD5112T_SD_CS_01.dgn
lsutton

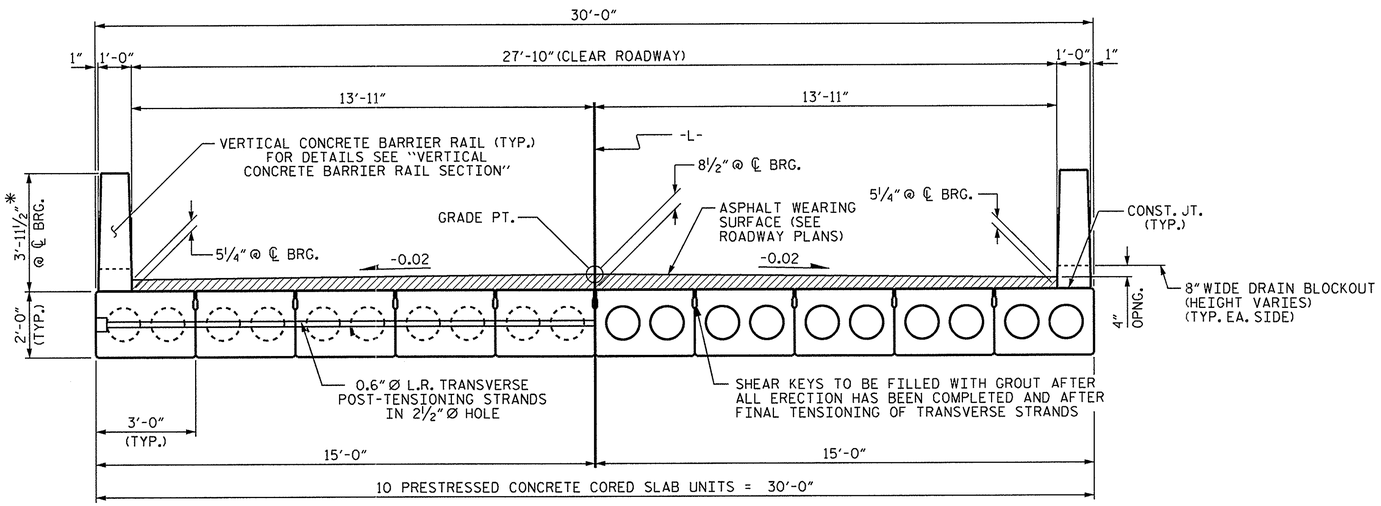

HALF SECTION
AT INTERMEDIATE DIAPHRAGMS

TYPICAL SECTION

HALF SECTION
THROUGH VOIDS

* - THE MAXIMUM BARRIER RAIL HEIGHT AND ASPHALT THICKNESS IS SHOWN. THE HEIGHT OF THE BARRIER RAIL AND ASPHALT THICKNESS VARIES WHILE THE TOP OF THE BARRIER RAIL FOLLOWS THE PROFILE OF THE GUTTERLINE. FOR RAIL HEIGHT DETAILS AND ASPHALT THICKNESS, SEE THE "VERTICAL CONCRETE BARRIER RAIL SECTION" DETAIL.

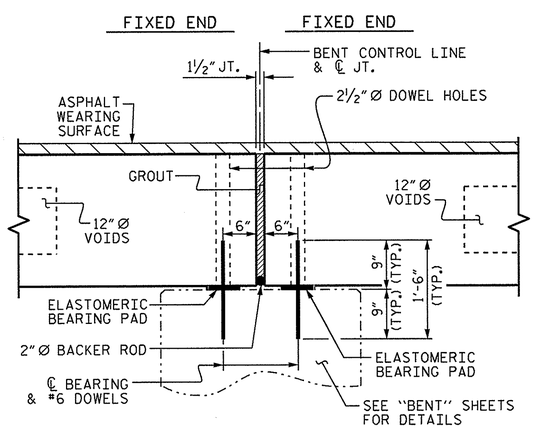

SECTION AT BENT 2

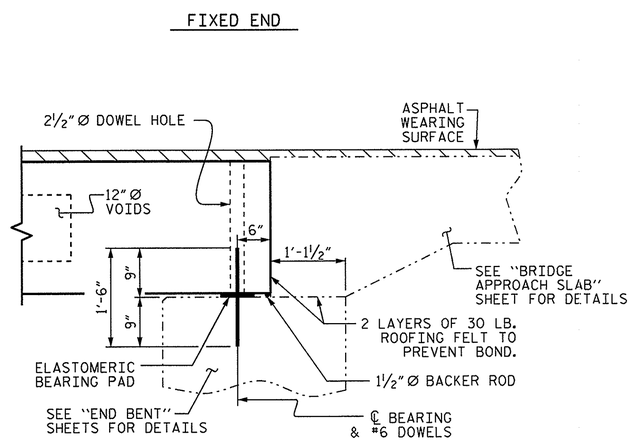

SECTION AT END BENT 2

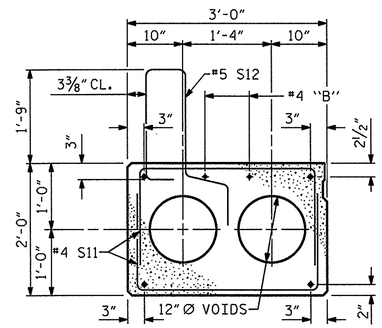

EXTERIOR SLAB SECTION

(FOR PRESTRESSED STRAND LAYOUT, SEE INTERIOR SLAB SECTION.)

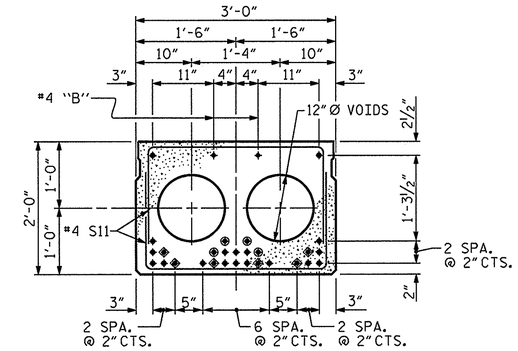

INTERIOR SLAB SECTION (60' & 65' UNIT)

(24 STRANDS REQUIRED)

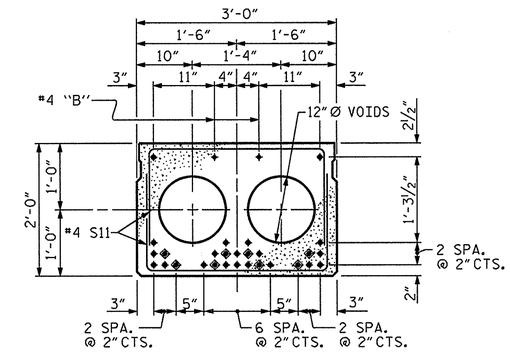

INTERIOR SLAB SECTION (70' UNIT)

(28 STRANDS REQUIRED)

0.6" Ø LOW RELAXATION STRAND LAYOUT

◈ BOND SHALL BE BROKEN ON THESE STRANDS FOR A DISTANCE OF 12'-0" FROM END OF CORED SLAB UNIT. SEE STANDARD SPECIFICATIONS, ARTICLE 1078-7.

◉ OPTIONAL FULL LENGTH DEBONDED STRANDS. THESE STRANDS ARE NOT REQUIRED. IF THE FABRICATOR CHOOSES TO INCLUDE THESE STRANDS IN THE CORED SLAB UNIT, THE STRANDS SHALL BE DEBONDED FOR THE FULL LENGTH OF THE UNIT AT NO ADDITIONAL COST. SEE STANDARD SPECIFICATIONS, ARTICLE 1078-7.

DEBONDING LEGEND

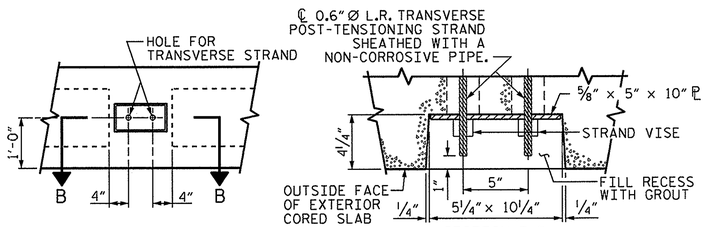

GROUTED RECESS AT END OF POST-TENSIONED STRAND CORED SLABS

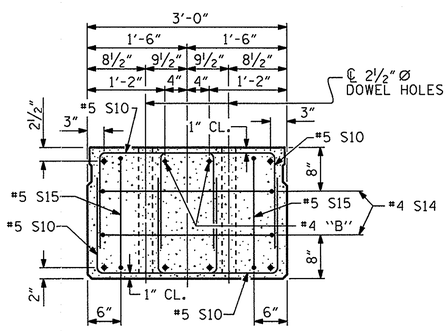

END ELEVATION

SHOWING PLACEMENT OF DOUBLE STIRRUPS AND LOCATION OF DOWEL HOLES. (STRAND LAYOUT NOT SHOWN.) INTERIOR SLAB UNIT SHOWN-EXTERIOR SLAB UNIT SIMILAR EXCEPT SHEAR KEY LOCATION.

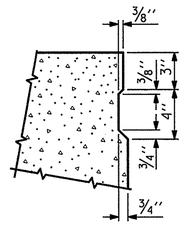

SHEAR KEY DETAIL

NOTE: OMIT SHEAR KEY ON OUTSIDE FACE OF EXTERIOR CORED SLABS.

PROJECT NO. BD-5112T
GASTON COUNTY
STATION: 14+65.50 -L-

SHEET 1 OF 4

STATE OF NORTH CAROLINA
DEPARTMENT OF TRANSPORTATION
RALEIGH

STANDARD
3'-0" X 2'-0"
PRESTRESSED CONCRETE CORED SLAB UNIT
90° SKEW - SPANS B & C

REVISIONS							SHEET NO.
NO.	BY:	DATE:	NO.	BY:	DATE:		S-9
1			3				TOTAL SHEETS
2			4				22

NORTH CAROLINA PROFESSIONAL SEAL 21638 ENGINEER LAURA E. SUTTON 3/18/13

ASSEMBLED BY : J.P. MCCARTHA		DATE : 11/28/12	
CHECKED BY : L.E. SUTTON		DATE : 12/5/12	
DRAWN BY : MAA	6/10	REV. 12/11	MAA/AAC
CHECKED BY : MKT	7/10		

18-MAR-2013 09:16
S:\DPG3\DIVISION_PROJECTS\Div_12\BD5112T\Plans\BD5112T_SD_CS_01.dgn
lsutton

STD. NO. 24PCS4_30_90S

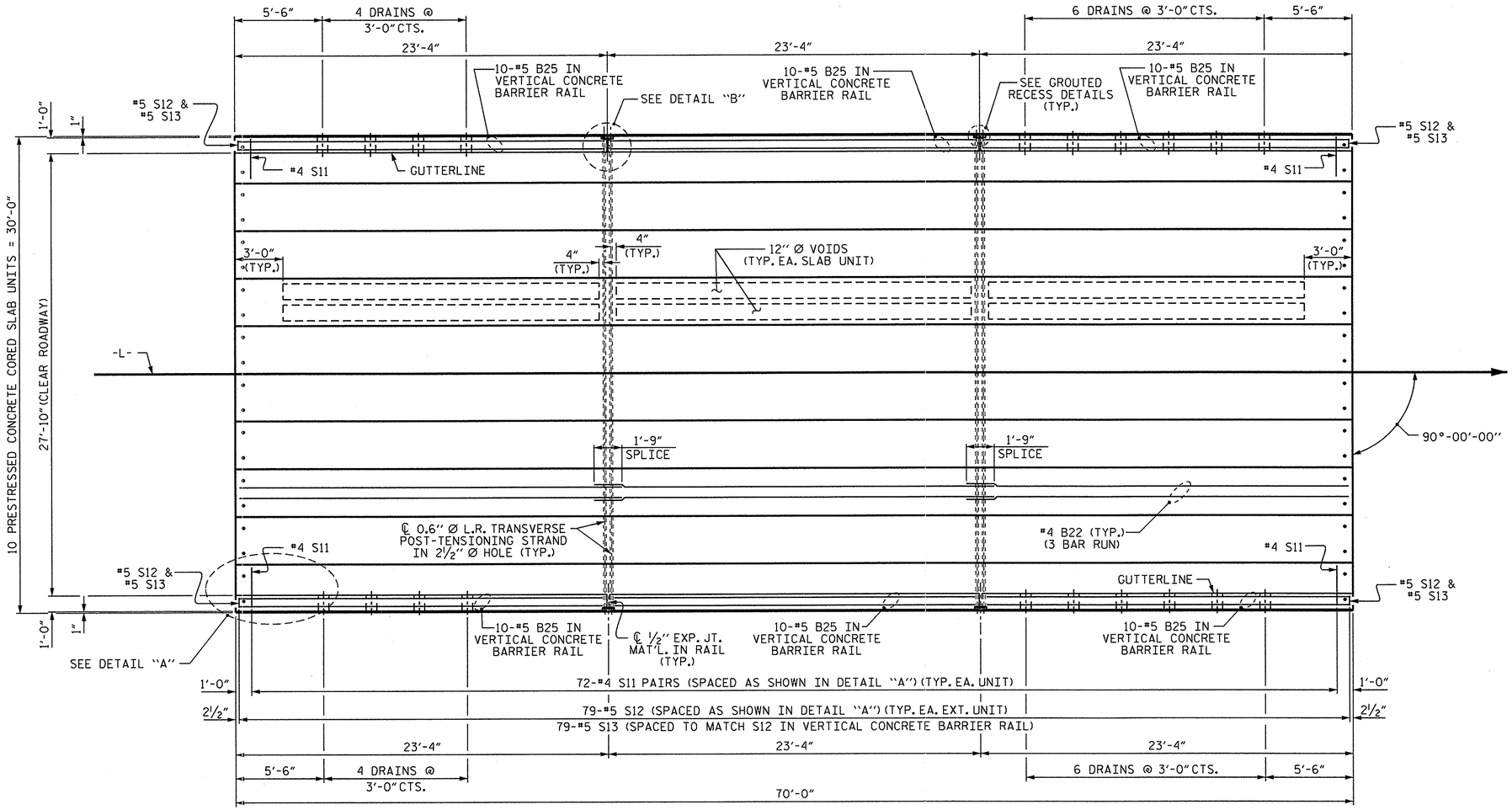

PLAN OF UNIT

SPAN B

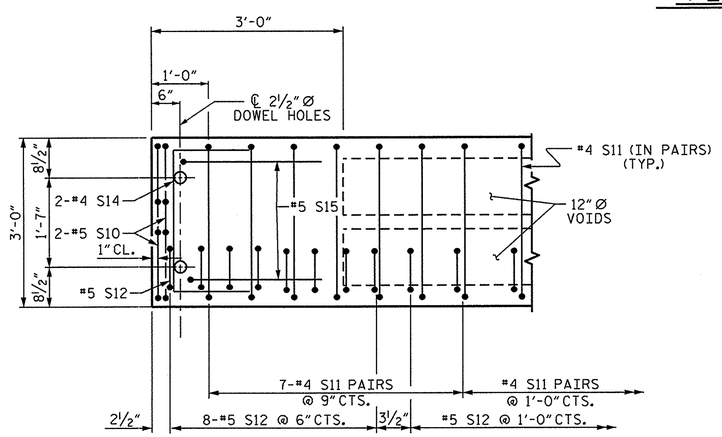

DETAIL "A"

NOTE: EXTERIOR UNIT SHOWN - INTERIOR UNIT SIMILAR EXCEPT OMIT #5 S12 BARS.

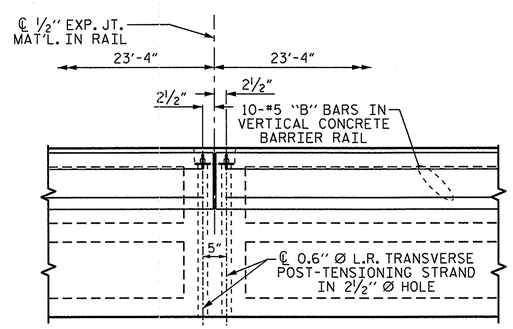

DETAIL "B"

#4 S11 BARS MAY BE SHIFTED AS NECESSARY TO MAINTAIN 1" CLEAR TO GROUTED RECESS AND 2½" Ø TRANSVERSE POST-TENSIONING STRAND HOLES

ASSEMBLED BY : J.P. MCCARTHA	DATE : 11/28/12		
CHECKED BY : L.E. SUTTON	DATE : 12/5/12		
DRAWN BY : MAA	6/10	REV. 12/5/11	MAA/AAC
CHECKED BY : MKT	7/10		

18-MAR-2013 08:42
S:\OPGS\DIVISION_PROJECTS\Div_12\BD5112T\Plans\BD5112T_SD_CS_01.dgn
lsutton

PROJECT NO. BD-5112T

GASTON COUNTY

STATION: 14+65.50 -L-

SHEET 2 OF 4

STATE OF NORTH CAROLINA
DEPARTMENT OF TRANSPORTATION
RALEIGH

PLAN OF 70' UNIT 27'-10" CLEAR ROADWAY

90° SKEW - SPAN B

NORTH CAROLINA PROFESSIONAL SEAL 21638 ENGINEER LAURA E. SUTTON 3/18/13

REVISIONS						SHEET NO.
NO.	BY:	DATE:	NO.	BY:	DATE:	S-10
1			3			TOTAL SHEETS
2			4			22

STD. NO. 24PCS_30_90S_70L

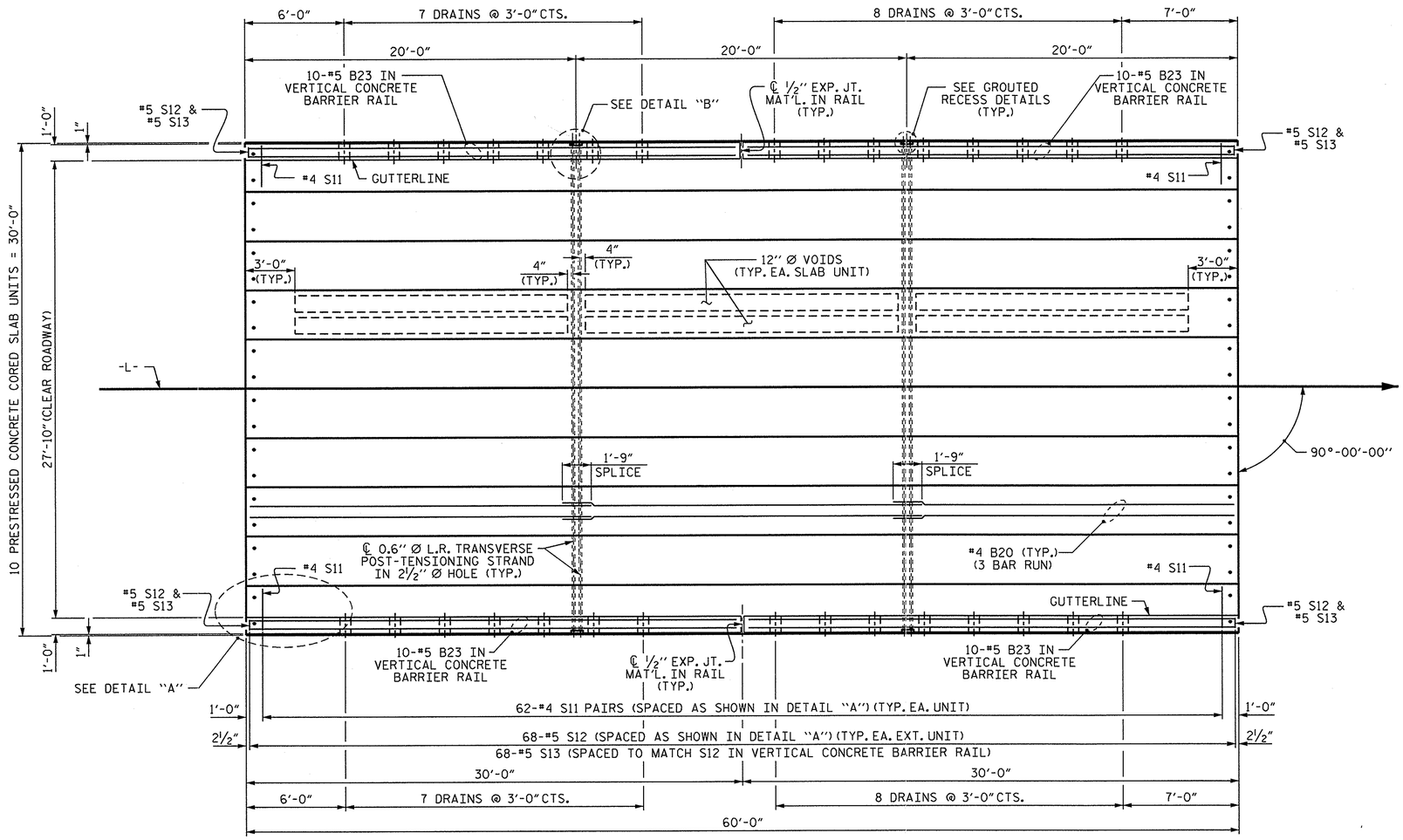

PLAN OF UNIT

SPAN C

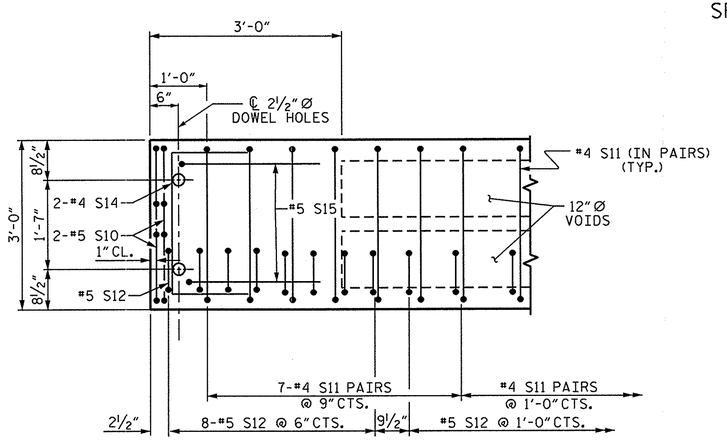

DETAIL "A"

NOTE: EXTERIOR UNIT SHOWN - INTERIOR UNIT SIMILAR EXCEPT OMIT #5 S12 BARS.

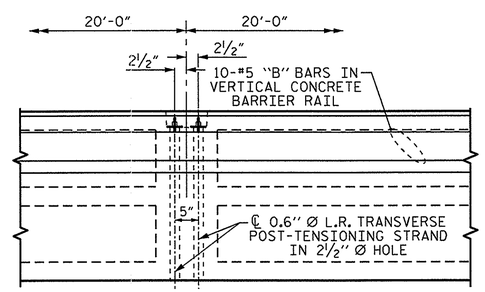

DETAIL "B"

#4 S11 BARS MAY BE SHIFTED AS NECESSARY TO MAINTAIN 1" CLEAR TO GROUTED RECESS AND 2 1/2" Ø TRANSVERSE POST-TENSIONING STRAND HOLES

ASSEMBLED BY : J.P. MCCARTHA	DATE : 11/28/12		
CHECKED BY : L.E. SUTTON	DATE : 12/5/12		
DRAWN BY : MAA	6/10	REV. 12/5/11	MAA/AAC
CHECKED BY : MKT	7/10		

18-MAR-2013 09:16
S:\DPG3\DIVISION_PROJECTS\Div_12\BD5112T\Plans\BD5112T_SD_CS_01.dgn
lsutton

PROJECT NO. BD-5112T

GASTON COUNTY

STATION: 14+65.50 -L-

SHEET 3 OF 4

STATE OF NORTH CAROLINA
DEPARTMENT OF TRANSPORTATION
RALEIGH

PLAN OF 60' UNIT 27'-10" CLEAR ROADWAY

90° SKEW - SPAN C

REVISIONS							SHEET NO.
NO.	BY:	DATE:	NO.	BY:	DATE:		S-11
1			3				TOTAL SHEETS
2			4				22

NORTH CAROLINA PROFESSIONAL SEAL 21838 ENGINEER LAURA E. SUTTON 3/18/13

STD. NO. 24PCS_30_90S_60L

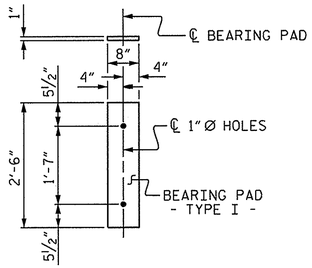

FIXED END
(TYPE I - 40 REQ'D)

ELASTOMERIC BEARING DETAILS

ELASTOMER IN ALL BEARINGS SHALL BE 60 DUROMETER HARDNESS.

GRADE 270 STRANDS	0.6"Ø L.R.
AREA (SQUARE INCHES)	0.217
ULTIMATE STRENGTH (LBS. PER STRAND)	58,600
APPLIED PRESTRESS (LBS. PER STRAND)	43,950

CORED SLABS REQUIRED

	NUMBER	LENGTH	TOTAL LENGTH
60' UNIT			
EXTERIOR C.S.	2	60'-0"	120'-0"
INTERIOR C.S.	8	60'-0"	480'-0"
70' UNIT			
EXTERIOR C.S.	2	70'-0"	140'-0"
INTERIOR C.S.	8	70'-0"	560'-0"
TOTAL	20		1300'-0"

DEAD LOAD DEFLECTION AND CAMBER

60' UNIT	3'-0" x 2'-0" 0.6"Ø L.R. STRAND
CAMBER (SLAB ALONE IN PLACE)	3⅜" ↑
DEFLECTION DUE TO SUPERIMPOSED DEAD LOAD**	½" ↓
FINAL CAMBER	2⅞" ↑
70' UNIT	0.6"Ø L.R. STRAND
CAMBER (SLAB ALONE IN PLACE)	4⁵⁄₁₆" ↑
DEFLECTION DUE TO SUPERIMPOSED DEAD LOAD**	¹³⁄₁₆" ↓
FINAL CAMBER	3½" ↑

** INCLUDES FUTURE WEARING SURFACE

BAR TYPES

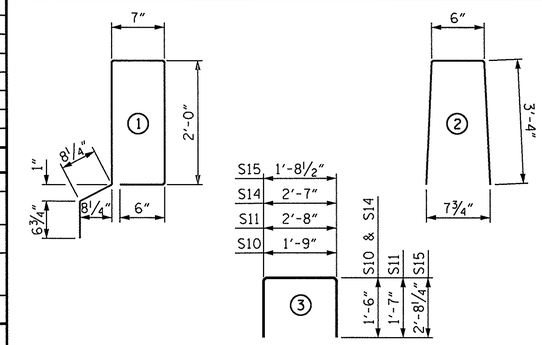

ALL BAR DIMENSIONS ARE OUT TO OUT.

BILL OF MATERIAL FOR ONE 60' CORED SLAB UNIT

BAR	NO.	SIZE	TYPE	EXTERIOR UNIT LENGTH	EXTERIOR UNIT WEIGHT	INTERIOR UNIT LENGTH	INTERIOR UNIT WEIGHT
B20	6	#4	STR	21'-1"	85	21'-1"	85
S10	8	#5	3	4'-9"	40	4'-9"	40
S11	124	#4	3	5'-10"	483	5'-10"	483
*S12	68	#5	1	6'-4"	449		
S14	4	#4	3	5'-7"	15	5'-7"	15
S15	4	#5	3	7'-1"	30	7'-1"	30
REINFORCING STEEL				LBS.	653	LBS.	653
* EPOXY COATED REINFORCING STEEL				LBS.	449	LBS.	
6000 PSI CONCRETE				CU. YDS.	10.3	CU. YDS.	10.2
0.6"Ø L.R. STRANDS				No.	24	No.	24

BILL OF MATERIAL FOR ONE 70' CORED SLAB UNIT

BAR	NO.	SIZE	TYPE	EXTERIOR UNIT LENGTH	EXTERIOR UNIT WEIGHT	INTERIOR UNIT LENGTH	INTERIOR UNIT WEIGHT
B22	6	#4	STR	24'-5"	98	24'-5"	98
S10	8	#5	3	4'-9"	40	4'-9"	40
S11	144	#4	3	5'-10"	561	5'-10"	561
*S12	79	#5	1	6'-4"	522		
S14	4	#4	3	5'-7"	15	5'-7"	15
S15	4	#5	3	7'-1"	30	7'-1"	30
REINFORCING STEEL				LBS.	744	LBS.	744
* EPOXY COATED REINFORCING STEEL				LBS.	522		
7000 PSI CONCRETE				CU. YDS.	11.9	CU. YDS.	11.8
0.6"Ø L.R. STRANDS				No.	28	No.	28

NOTES

ALL PRESTRESSING STRANDS SHALL BE 7-WIRE LOW RELAXATION GRADE 270 STRANDS AND SHALL CONFORM TO AASHTO M203 EXCEPT FOR SAMPLING REQUIREMENTS WHICH SHALL BE IN ACCORDANCE WITH THE STANDARD SPECIFICATIONS.

ALL REINFORCING STEEL CAST WITH THE CORED SLAB SECTIONS SHALL BE GRADE 60 AND SHALL BE INCLUDED IN THE UNIT PRICE BID FOR PRESTRESSED CONCRETE CORED SLABS.

RECESSES FOR TRANSVERSE STRANDS SHALL BE GROUTED AFTER THE TENSIONING OF THE STRANDS.

THE 2½"Ø DOWEL HOLES AT FIXED ENDS OF SLAB SECTIONS SHALL BE FILLED WITH NON-SHRINK GROUT.

THE BACKER RODS SHALL CONFORM TO THE REQUIREMENTS OF TYPE M BOND BREAKER. SEE SECTION 1028 OF THE STANDARD SPECIFICATIONS.

WHEN CORED SLABS ARE CAST, AN INTERNAL HOLD-DOWN SYSTEM SHALL BE EMPLOYED TO PREVENT VOIDS FROM RISING OR MOVING SIDEWAYS. AT LEAST SIX WEEKS PRIOR TO CASTING CORED SLABS, THE CONTRACTOR SHALL SUBMIT TO THE ENGINEER FOR REVIEW AND COMMENT, DETAILED DRAWINGS OF THE PROPOSED HOLD-DOWN SYSTEM. IN ADDITION TO STRUCTURAL DETAILS, LOCATION AND SPACING OF THE HOLD-DOWNS SHALL BE INDICATED.

THE TRANSFER OF LOAD FROM THE ANCHORAGES TO THE CORED SLAB UNIT SHALL BE DONE WHEN THE CONCRETE HAS REACHED A COMPRESSIVE STRENGTH OF NOT LESS 5500 PSI IN SPAN B AND 4800 PSI IN SPAN C.

ALL REINFORCING STEEL IN THE VERTICAL CONCRETE BARRIER RAILS SHALL BE EPOXY COATED.

PRESTRESSING STRANDS SHALL BE CUT FLUSH WITH THE CORED SLAB UNIT ENDS.

APPLY EPOXY PROTECTIVE COATING TO CORED SLAB UNIT ENDS.

GROOVED CONTRACTION JOINTS, ½" IN DEPTH, SHALL BE TOOLED IN ALL EXPOSED FACES OF THE BARRIER RAIL AND IN ACCORDANCE WITH ARTICLE 825-10(B) OF THE STANDARD SPECIFICATIONS. A CONTRACTION JOINT SHALL BE LOCATED AT EACH THIRD POINT BETWEEN BARRIER RAIL EXPANSION JOINTS. ONLY ONE CONTRACTION JOINT IS REQUIRED AT MIDPOINT OF BARRIER RAIL SEGMENTS LESS THAN 20 FEET IN LENGTH AND NO CONTRACTION JOINTS ARE REQUIRED FOR THOSE SEGMENTS LESS THAN 10 FEET IN LENGTH.

TRANSVERSE POST TENSIONING OF THE CORED SLAB UNITS SHALL BE DONE IN ACCORDANCE WITH THE STANDARD SPECIFICATIONS.

MAINTAIN A SYMMETRIC TENSION FORCE BETWEEN EACH PAIR OF TRANSVERSE POST TENSIONING STRANDS IN THE DIAPHRAGM.

THE #4 S11 STIRRUPS MAY BE SHIFTED AS NECESSARY TO MAINTAIN 1" CLEAR TO THE GROUTED RECESS.

FOR GROUT FOR STRUCTURES, SEE SPECIAL PROVISIONS.

THE DRAIN OPENING AT THE GUTTERLINE SHALL BE 4" X 8". THE HEIGHT OF THE BLOCKOUT IN THE VERTICAL CONCRETE BARRIER RAIL SHALL EXTEND FROM THE TOP OF THE CORED SLAB UNIT TO THE TOP OF THE DRAIN OPENING.

APPLY EPOXY PROTECTIVE COATING TO EXTERIOR FACE OF THE EXTERIOR CORED SLAB UNITS THAT REQUIRE DRAINS IN THE BARRIER RAIL.

GUTTERLINE ASPHALT THICKNESS & RAIL HEIGHT

	ASPHALT OVERLAY THICKNESS @ MID-SPAN	RAIL HEIGHT @ MID-SPAN
60' UNITS	2⅜"	3'-8⅝"
70' UNITS	1¾"	3'-8"

BILL OF MATERIAL FOR VERTICAL CONCRETE BARRIER RAIL

BAR	BARS PER PAIR OF EXTERIOR UNITS 60' UNIT	70' UNIT	TOTAL NO.	SIZE	TYPE	LENGTH	WEIGHT
*B23	40		40	#5	STR	29'-7"	1234
*B25		60	60	#5	STR	22'-11"	1434
*S13	136	158	294	#5	2	7'-2"	2198
*EPOXY COATED REINFORCING STEEL						LBS.	4,866
CLASS AA CONCRETE						CU.YDS.	35.1
TOTAL VERTICAL CONCRETE BARRIER RAIL						LIN. FT.	260.50

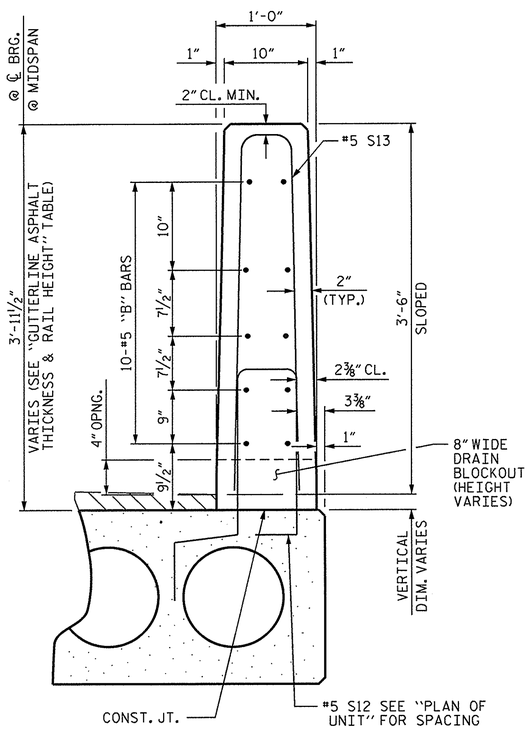

SECTION THRU RAIL

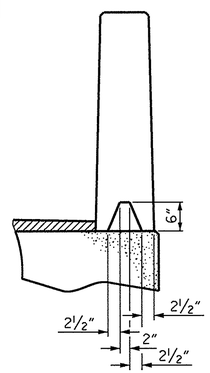

SECTION S-S
AT DAM IN OPEN JOINT
(THIS IS TO BE USED ONLY WHEN SLIP FORM IS USED)

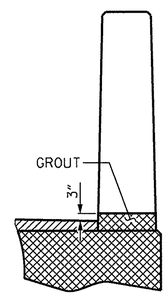

SECTION T-T
AT OPEN JOINT AT BENT
(THIS IS TO BE USED WHERE FOAM JOINT IS NOT USED)

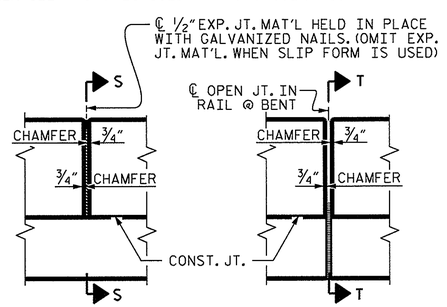

ELEVATION AT EXPANSION JOINTS

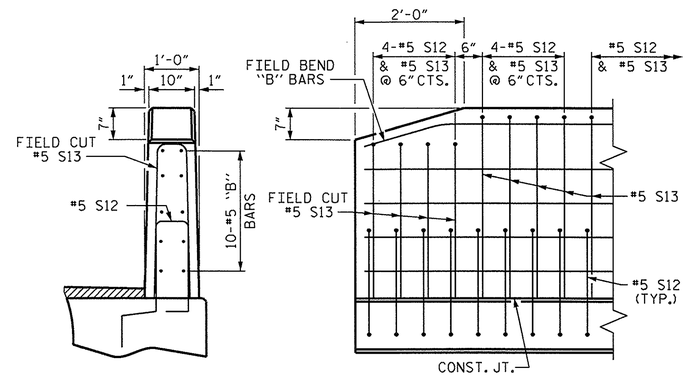

END VIEW

SIDE VIEW

VERTICAL CONCRETE BARRIER RAIL DETAILS

END OF RAIL DETAILS

ASSEMBLED BY : J.P. MCCARTHA DATE : 11/28/12
CHECKED BY : L.E. SUTTON DATE : 12/5/12
DRAWN BY : MAA 6/10
CHECKED BY : MKT 7/10
REV. 12/11 MAA/AAC

09-MAY-2013 14:04
S:\DPC3\DIVISION_PROJECTS\Div_12\BD5112T\Plans\BD5112T_SD_CS_01.dgn
lsutton

NORTH CAROLINA PROFESSIONAL SEAL 21638 ENGINEER LAURA E. SUTTON 9/10/13

PROJECT NO. BD-5112T
GASTON COUNTY
STATION: 14+65.50 -L-

SHEET 3 OF 3

STATE OF NORTH CAROLINA
DEPARTMENT OF TRANSPORTATION
RALEIGH

STANDARD
3'-0" X 2'-0"
PRESTRESSED CONCRETE
CORED SLAB UNIT
90° SKEW - SPANS B & C

REVISIONS NO.	BY:	DATE:	NO.	BY:	DATE:	SHEET NO.
1			3			S-12
2			4			TOTAL SHEETS 22

STD. NO. 24PCS3_30_90S

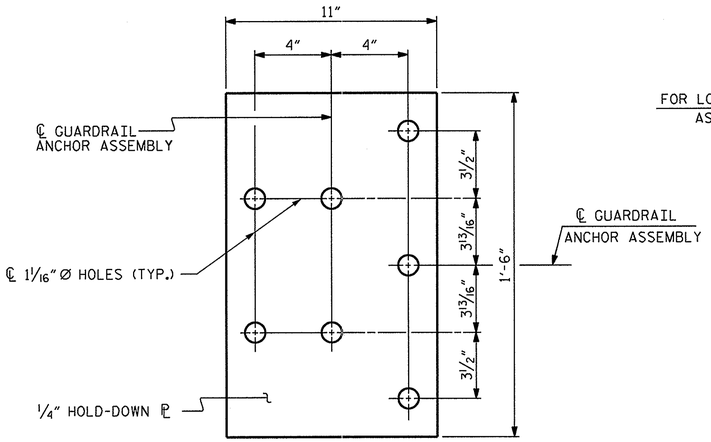

PLAN

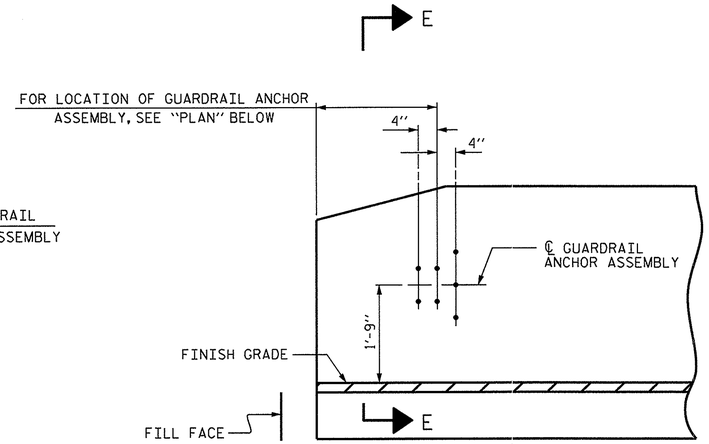

ELEVATION

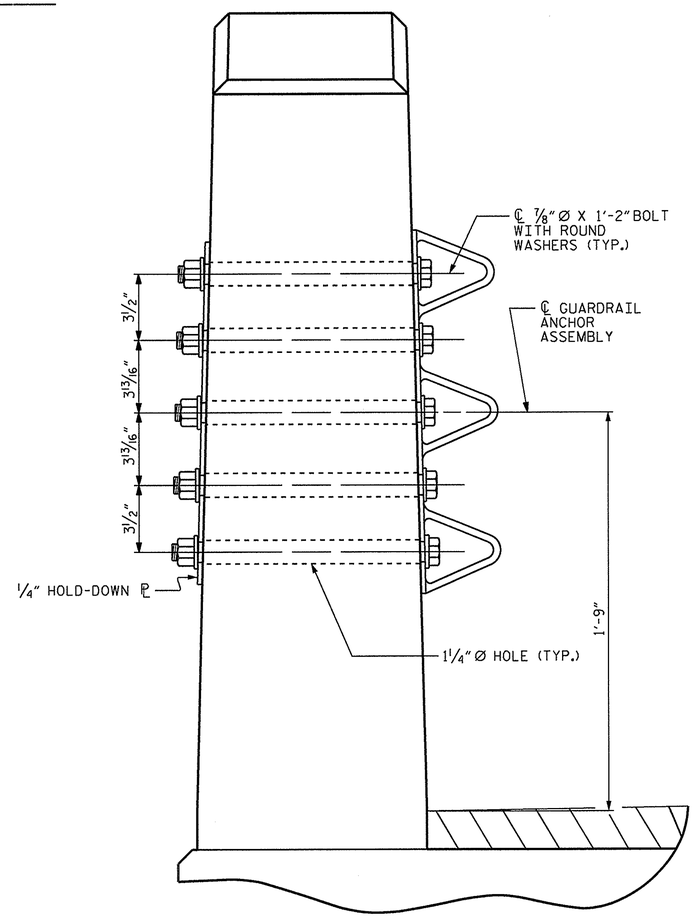

SECTION E-E

GUARDRAIL ANCHOR ASSEMBLY DETAILS

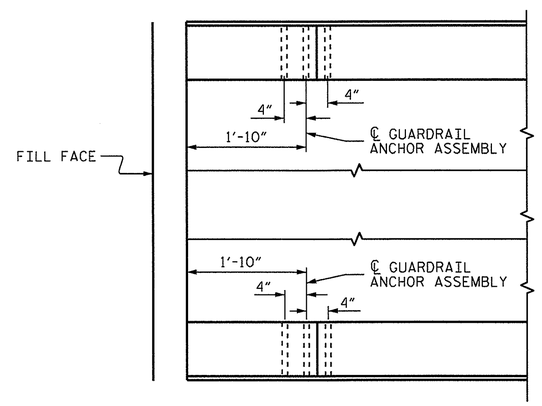

PLAN

LOCATION OF ANCHORS FOR GUARDRAIL

END BENT 1 SHOWN, END BENT 2 SIMILAR

NOTES

THE GUARDRAIL ANCHOR ASSEMBLY SHALL CONSIST OF A 1/4" HOLD DOWN PLATE AND 7 - 7/8" Ø BOLTS WITH NUTS AND WASHERS.

THE HOLD-DOWN PLATE SHALL CONFORM TO AASHTO M270 GRADE 36. AFTER FABRICATION, THE HOLD-DOWN PLATE SHALL BE HOT-DIP GALVANIZED IN ACCORDANCE WITH AASHTO M111.

BOLTS SHALL CONFORM TO THE REQUIREMENTS OF ASTM A307 AND NUTS SHALL CONFORM TO THE REQUIREMENTS OF AASHTO M291. BOLTS, NUTS AND WASHERS SHALL BE GALVANIZED. (AT THE CONTRACTOR'S OPTION, STAINLESS STEEL BOLTS, NUTS AND WASHERS MAY BE USED AS AN ALTERNATE FOR THE 7/8" Ø GALVANIZED BOLTS, NUTS AND WASHERS. THEY SHALL CONFORM TO OR EXCEED THE MECHANICAL REQUIREMENTS OF ASTM A307. THE USE OF THIS ALTERNATE SHALL BE APPROVED BY THE ENGINEER.)

THE GUARDRAIL ANCHOR ASSEMBLY IS REQUIRED AT ALL POINTS WHERE APPROACH GUARDRAIL IS TO BE ATTACHED TO THE END OF BARRIER RAIL. FOR POINTS OF ATTACHMENT, SEE SKETCH.

AFTER INSTALLATION, THE EXPOSED THREAD OF THE BOLT SHALL BE BURRED WITH A SHARP POINTED TOOL.

THE COST OF THE GUARDRAIL ANCHOR ASSEMBLY SHALL BE INCLUDED IN THE UNIT CONTRACT PRICE BID FOR VERTICAL CONCRETE BARRIER RAIL.

THE VERTICAL REINFORCING BARS MAY BE SHIFTED SLIGHTLY IN THE VERTICAL CONCRETE BARRIER RAIL TO CLEAR ASSEMBLY BOLTS.

THE 1 1/4" Ø HOLES SHALL BE FORMED OR DRILLED WITH A CORE BIT. IMPACT TOOLS WILL NOT BE PERMITTED. ANY CONCRETE DAMAGED BY THIS WORK SHALL BE REPAIRED TO THE SATISFACTION OF THE ENGINEER.

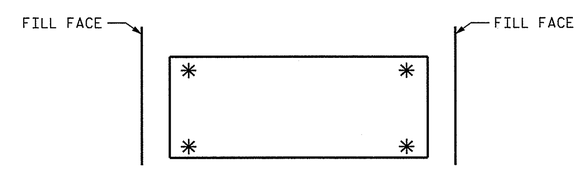

SKETCH SHOWING POINTS OF ATTACHMENT

✳ DENOTES GUARDRAIL ANCHOR ASSEMBLY

PROJECT NO. BD-5112T

GASTON COUNTY

STATION: 14+65.50 -L-

STATE OF NORTH CAROLINA
DEPARTMENT OF TRANSPORTATION
RALEIGH

STANDARD
GUARDRAIL ANCHORAGE FOR VERTICAL CONCRETE BARRIER RAIL

NORTH CAROLINA PROFESSIONAL SEAL 21638 ENGINEER LAURA E. SUTTON 3/18/13

REVISIONS						SHEET NO.
NO.	BY:	DATE:	NO.	BY:	DATE:	S-13
1			3			TOTAL SHEETS
2			4			22

ASSEMBLED BY : J.P. MCCARTHA	DATE : 11/28/12
CHECKED BY : L.E. SUTTON	DATE : 12/5/12
DRAWN BY : MAA 5/10	ADDED 5/6/10
CHECKED BY : GM 5/10	REV. 10/1/11 MAA/GM
	REV. 12/5/11 MAA/GM

18-MAR-2013 08:42
S:\OPGS\DIVISION_PROJECTS\Div_12\BD5112T\Plans\BD5112T_SD_GR_01.dgn
lsutton

STD. NO. GRA3

NOTES

STIRRUPS IN CAP MAY BE SHIFTED AS NECESSARY TO CLEAR DOWELS.

THE CONCRETE IN THE SHADED AREA OF THE WING SHALL BE POURED AFTER THE VERTICAL CONCRETE BARRIER RAIL IS CAST IF SLIP FORMING IS USED.

FOR PILE SPLICE DETAILS, SEE SHEET 4 OF 4.

FOR WING DETAILS, SEE SHEET 3 OF 4.

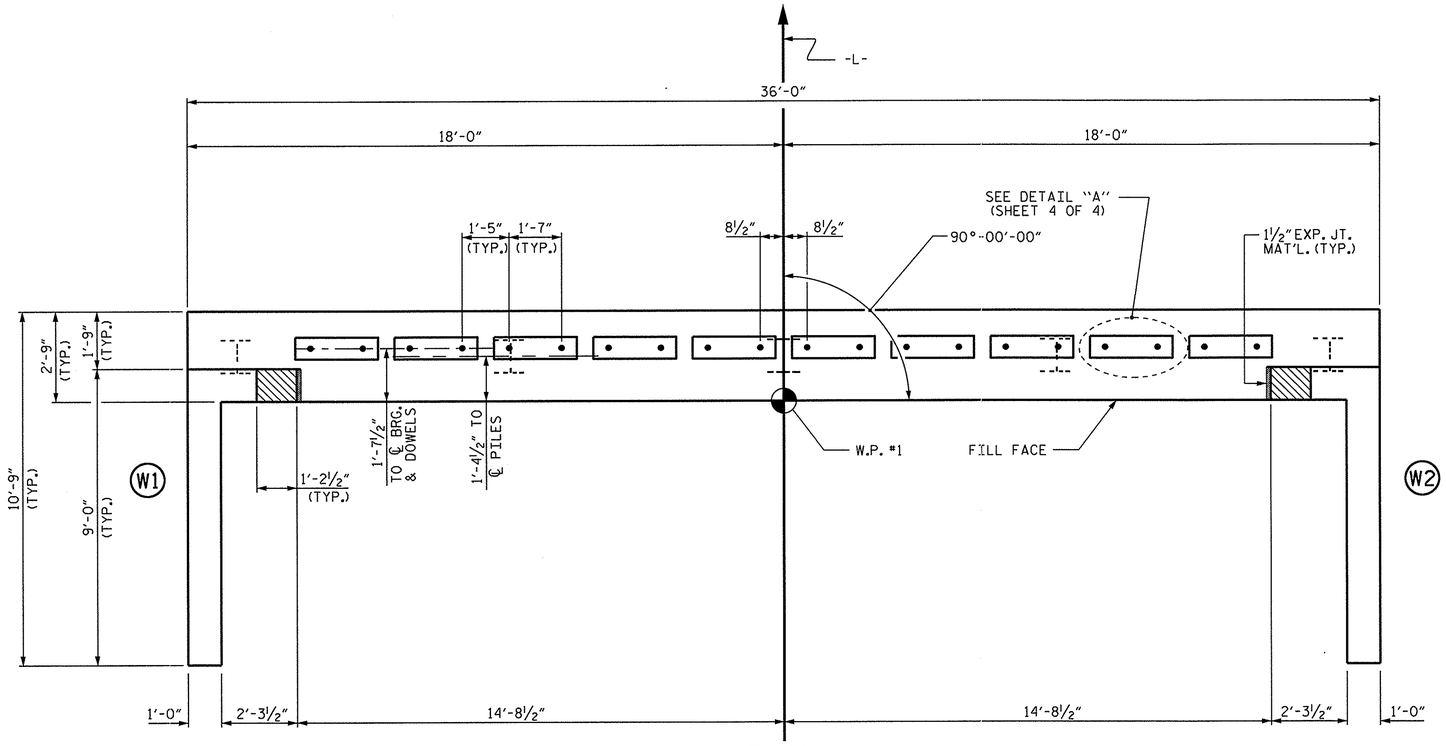

PLAN

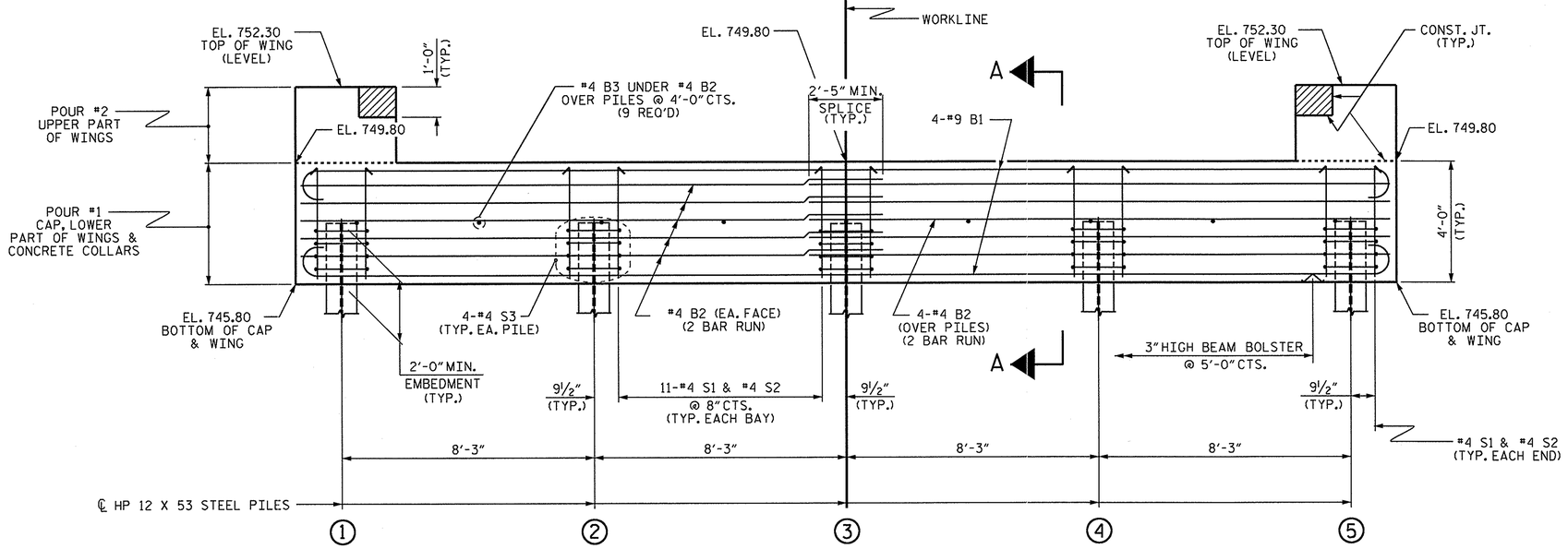

ELEVATION

WINGS NOT SHOWN FOR CLARITY.
FOR SECTION A-A, SEE SHEET 4 OF 4.
CONCRETE COLLARS FOR STEEL PILES NOT SHOWN IN PLAN AND ELEVATION VIEWS FOR CLARITY.
SEE "CORROSION PROTECTION FOR STEEL PILES DETAIL", SHEET 4 OF 4.

PROJECT NO. BD-5112T
GASTON COUNTY
STATION: 14+65.00 -L-

SHEET 1 OF 4

STATE OF NORTH CAROLINA
DEPARTMENT OF TRANSPORTATION
RALEIGH

SUBSTRUCTURE

END BENT 1

NORTH CAROLINA PROFESSIONAL SEAL 21638 ENGINEER LAURA E. SUTTON 9/18/13

REVISIONS								SHEET NO.
NO.	BY:	DATE:	NO.	BY:	DATE:			S-14
1			3					TOTAL SHEETS
2			4					22

ASSEMBLED BY : J.P. MCCARTHA DATE : 11/28/12
CHECKED BY : L.E. SUTTON DATE : 12/6/12
DRAWN BY : WJH 12/11
CHECKED BY : AAC 12/11

18-MAR-2013 08:42
S:\DPG3\DIVISION_PROJECTS\Div_12\BD5112T\Plans\BD5112T_SD_E*_01.dgn
lsutton

STD. NO. EB_30_90S4

NOTES

STIRRUPS IN CAP MAY BE SHIFTED AS NECESSARY TO CLEAR DOWELS.

THE CONCRETE IN THE SHADED AREA OF THE WING SHALL BE POURED AFTER THE VERTICAL CONCRETE BARRIER RAIL IS CAST IF SLIP FORMING IS USED.

FOR PILE SPLICE DETAILS, SEE SHEET 4 OF 4.

FOR WING DETAILS, SEE SHEET 3 OF 4.

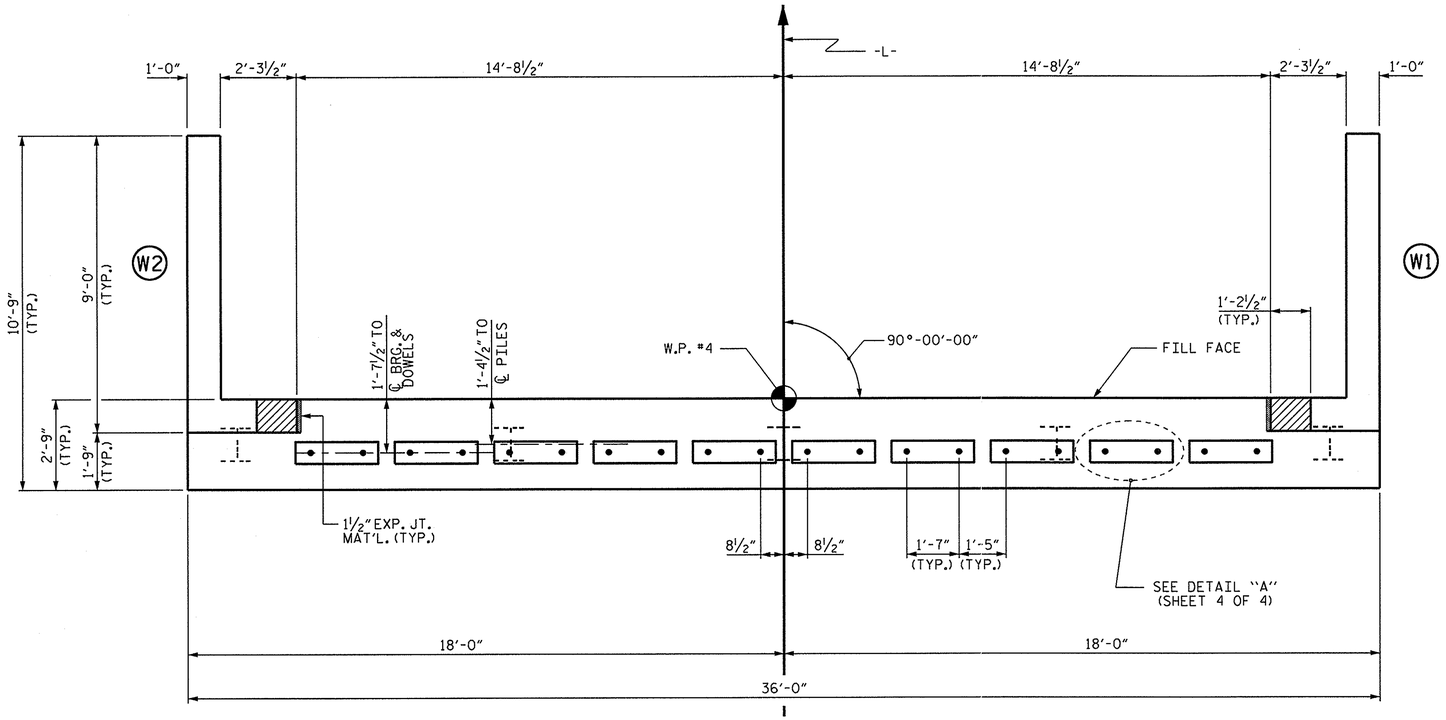

PLAN

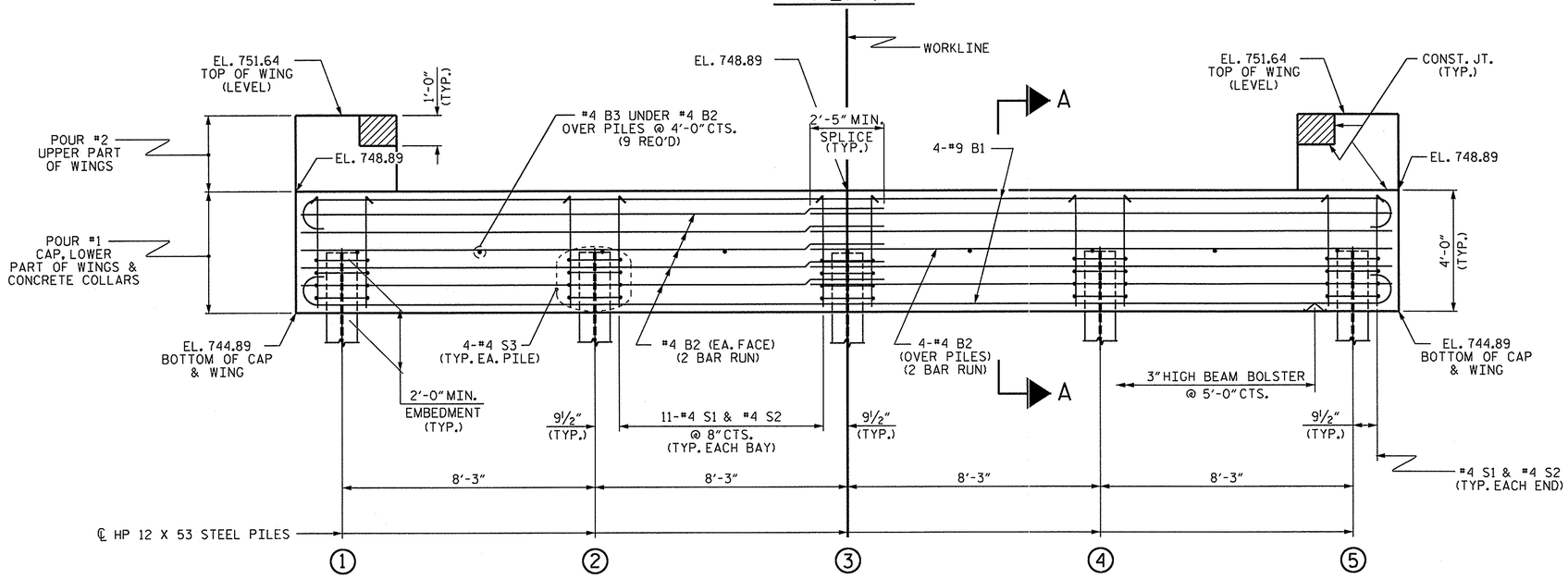

ELEVATION

WINGS NOT SHOWN FOR CLARITY.
FOR SECTION A-A, SEE SHEET 4 OF 4.
CONCRETE COLLARS FOR STEEL PILES NOT SHOWN IN PLAN AND ELEVATION VIEWS FOR CLARITY.
SEE "CORROSION PROTECTION FOR STEEL PILES DETAIL", SHEET 4 OF 4.

NORTH CAROLINA PROFESSIONAL SEAL 21638 ENGINEER LAURA E. SUTTON 3/18/13

PROJECT NO. BD-5112T
GASTON COUNTY
STATION: 14+65.50 -L-

SHEET 2 OF 4

STATE OF NORTH CAROLINA
DEPARTMENT OF TRANSPORTATION
RALEIGH

SUBSTRUCTURE

END BENT 2

REVISIONS						SHEET NO.
NO.	BY:	DATE:	NO.	BY:	DATE:	S-15
1			3			TOTAL SHEETS
2			4			22

ASSEMBLED BY : J.P. MCCARTHA DATE : 11/28/12
CHECKED BY : L.E. SUTTON DATE : 12/6/12
DRAWN BY : WJH 12/11
CHECKED BY : AAC 12/11

18-MAR-2013 08:41
S:\DPG3\DIVISION_PROJECTS\Div_12\BD5112T\Plans\BD5112T_SD_E*_01.dgn
lsutton

STD. NO. EB_30_90S4

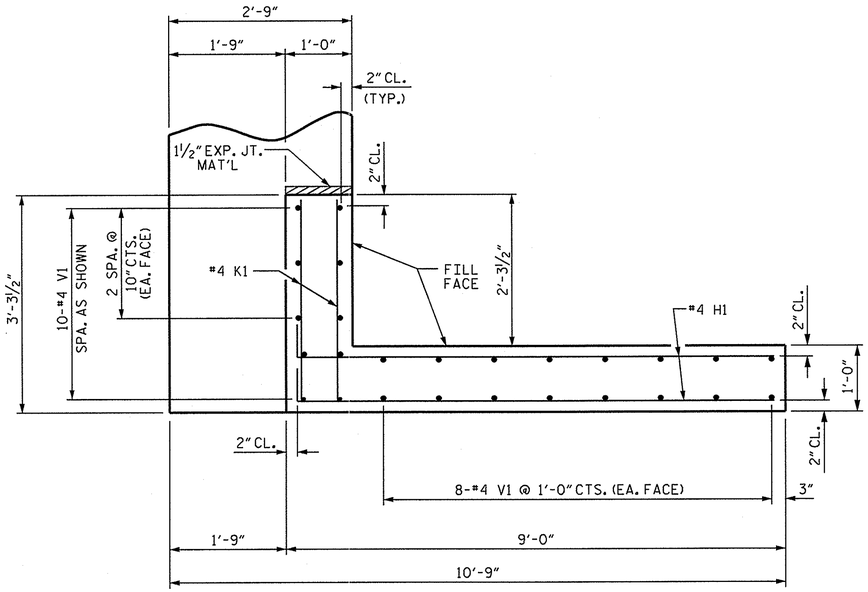

PLAN OF WING (W1)

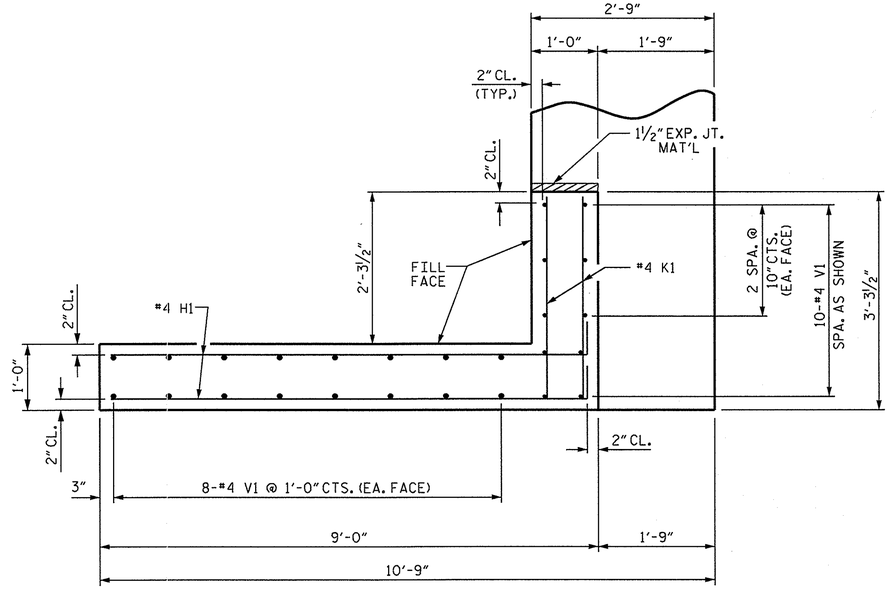

PLAN OF WING (W2)

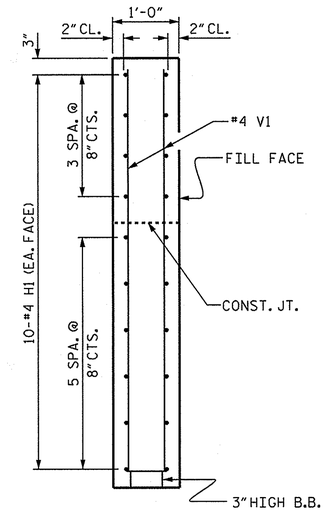

SECTION X-X

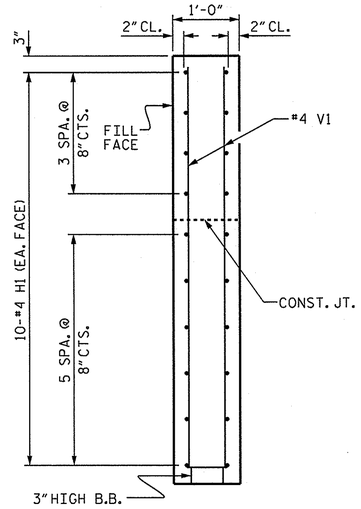

SECTION Y-Y

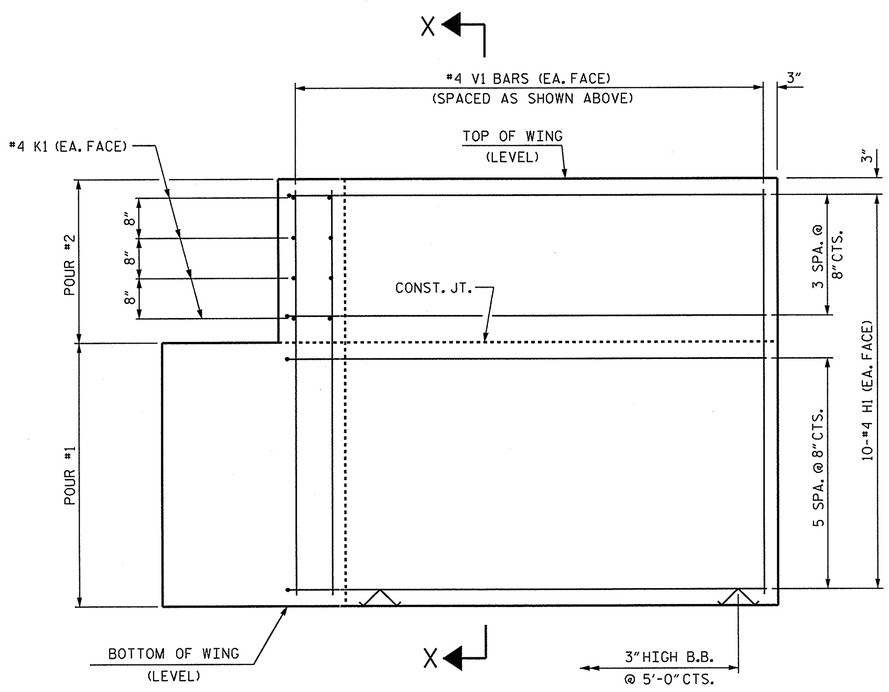

ELEVATION OF WING (W1)

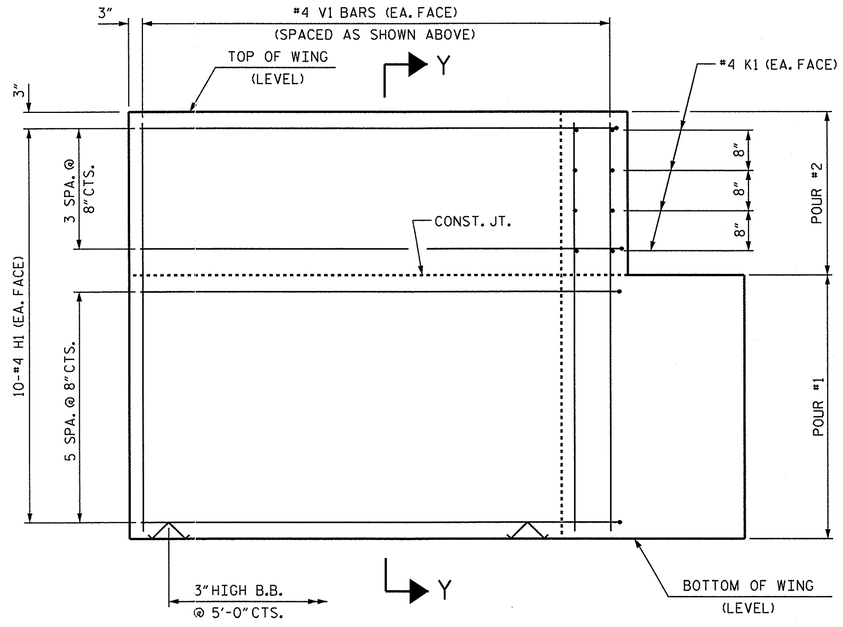

ELEVATION OF WING (W2)

WING DETAILS

PROJECT NO. BD-5112T

GASTON COUNTY

STATION: 14+65.50 -L-

SHEET 3 OF 4

STATE OF NORTH CAROLINA
DEPARTMENT OF TRANSPORTATION
RALEIGH

SUBSTRUCTURE

END BENT
WING DETAILS

NORTH CAROLINA PROFESSIONAL SEAL 21638 ENGINEER LAURA E. SUTTON 9/18/13

REVISIONS						SHEET NO.
NO.	BY:	DATE:	NO.	BY:	DATE:	S-16
1			3			TOTAL SHEETS
2			4			22

ASSEMBLED BY : J.P. MCCARTHA DATE : 11/28/12
CHECKED BY : L.E. SUTTON DATE : 12/6/12

DRAWN BY : WJH 12/11
CHECKED BY : AAC 12/11

18-MAR-2013 08:41
S:\DPG3\DIVISION_PROJECTS\Div_12\BD5112T\Plans\BD5112T_SD_E*_01.dgn
lsutton

STD. NO. EB_30_90S4

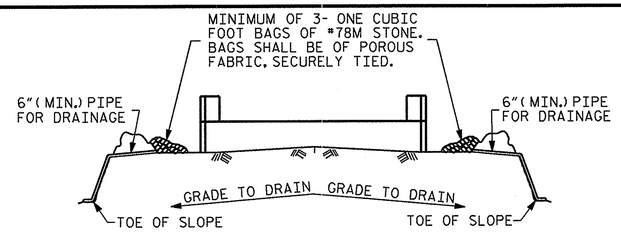

BAGGED STONE AND PIPE SHALL BE PLACED IMMEDIATELY AFTER COMPLETION OF END BENT EXCAVATION. PIPE MAY BE EITHER CONCRETE, CORRUGATED STEEL, CORRUGATED ALUMINUM ALLOY, OR CORRUGATED PLASTIC. PERFORATED PIPE WILL NOT BE ALLOWED.

BAGGED STONE SHALL REMAIN IN PLACE UNTIL THE ENGINEER DIRECTS THAT IT BE REMOVED. THE CONTRACTOR SHALL REMOVE AND DISPOSE OF SILT ACCUMULATIONS AT BAGGED STONE WHEN SO DIRECTED BY THE ENGINEER. BAGS SHALL BE REMOVED AND REPLACED WHENEVER THE ENGINEER DETERMINES THAT THEY HAVE DETERIORATED AND LOST THEIR EFFECTIVENESS.

NO SEPARATE PAYMENT WILL BE MADE FOR THIS WORK AND THE ENTIRE COST OF THIS WORK SHALL BE INCLUDED IN THE UNIT CONTRACT PRICE BID FOR THE SEVERAL PAY ITEMS.

TEMPORARY DRAINAGE AT END BENT

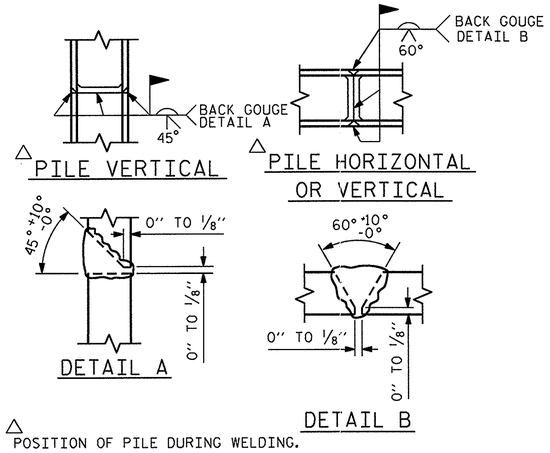

△ POSITION OF PILE DURING WELDING.

PILE SPLICE DETAILS

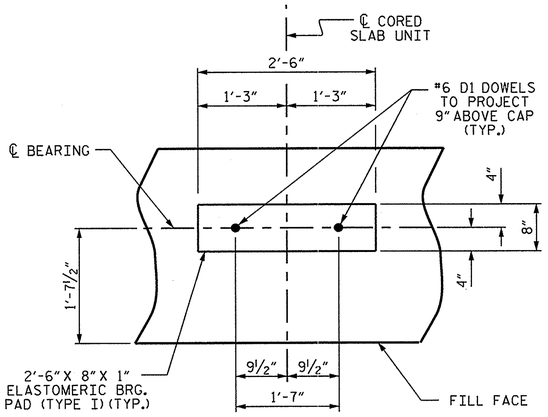

DETAIL "A"

(END BENT 1 SHOWN, END BENT 2 SIMILAR BY ROTATION)

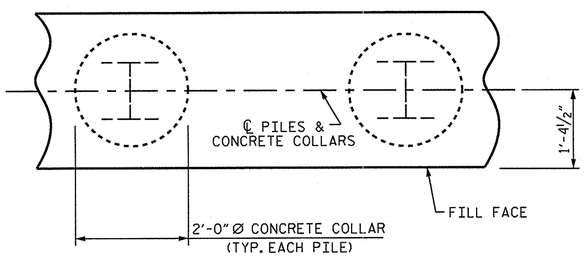

PLAN

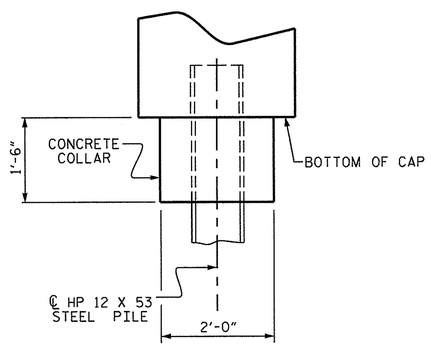

ELEVATION

CORROSION PROTECTION FOR STEEL PILES DETAIL

(END BENT 1 SHOWN, END BENT 2 SIMILAR BY ROTATION)

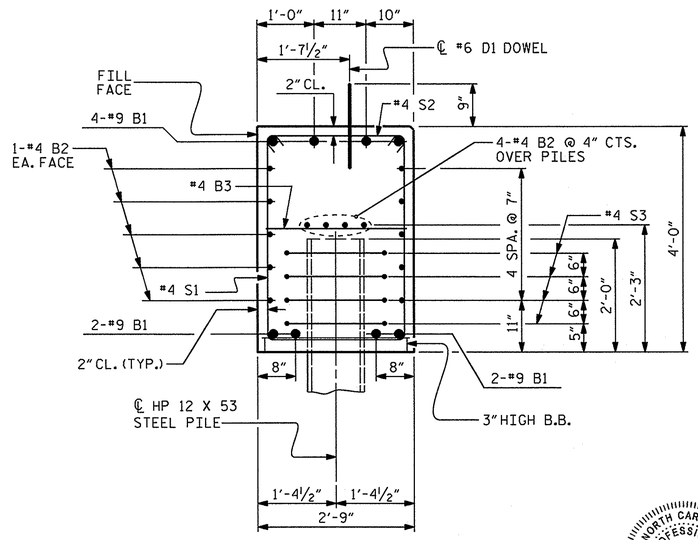

SECTION A-A

(CONCRETE COLLAR NOT SHOWN FOR CLARITY. SEE "CORROSION PROTECTION FOR STEEL PILES DETAIL.")

BAR TYPES

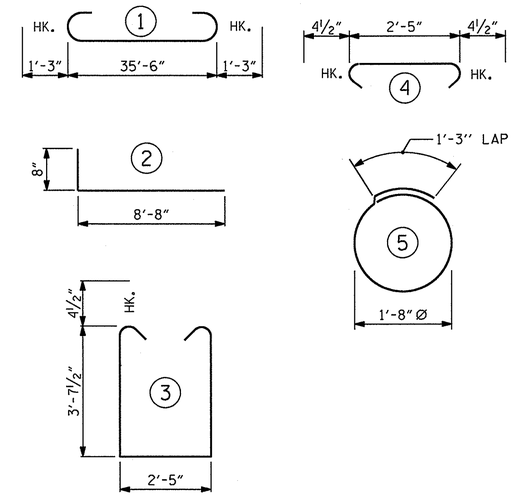

ALL BAR DIMENSIONS ARE OUT TO OUT.

END BENT 1		
HP 12 X 53 STEEL PILES NO. = 5	LIN. FT.	90
PILE EXCAVATION IN SOIL	LIN. FT.	25
PILE EXCAVATION NOT IN SOIL	LIN. FT.	25

END BENT 2		
HP 12 X 53 STEEL PILES NO. = 5	LIN. FT.	75
STEEL PILE POINTS	EA.	5

BILL OF MATERIAL FOR ONE END BENT

BAR	NO.	SIZE	TYPE	LENGTH	WEIGHT
B1	8	#9	1	38'-0"	1034
B2	28	#4	STR	19'-1"	357
B3	9	#4	STR	2'-5"	15
D1	20	#6	STR	1'-6"	45
H1	40	#4	2	9'-4"	249
K1	16	#4	STR	2'-11"	31
S1	46	#4	3	10'-5"	320
S2	46	#4	4	3'-2"	97
S3	20	#4	5	6'-6"	87
V1	52	#4	STR	6'-2"	214

REINFORCING STEEL (FOR ONE END BENT) LBS. 2,449

CLASS A CONCRETE BREAKDOWN (FOR END BENT 1)		
POUR #1 CAP, LOWER PART OF WINGS & COLLARS	C.Y.	17.9
POUR #2 UPPER PART OF WINGS	C.Y.	2.1
TOTAL CLASS A CONCRETE	C.Y.	20.0

CLASS A CONCRETE BREAKDOWN (FOR END BENT 2)		
POUR #1 CAP, LOWER PART OF WINGS & COLLARS	C.Y.	17.9
POUR #2 UPPER PART OF WINGS	C.Y.	2.3
TOTAL CLASS A CONCRETE	C.Y.	20.2

PROJECT NO. BD-5112T
GASTON COUNTY
STATION: 14+65.50 -L-

SHEET 4 OF 4

STATE OF NORTH CAROLINA
DEPARTMENT OF TRANSPORTATION
RALEIGH

SUBSTRUCTURE

END BENT 1 & 2 DETAILS

NORTH CAROLINA PROFESSIONAL SEAL 21638 ENGINEER LAURA E. SUTTON 3/18/13

REVISIONS						SHEET NO.
NO.	BY:	DATE:	NO.	BY:	DATE:	S-17
1			3			TOTAL SHEETS
2			4			22

ASSEMBLED BY : J.P. MCCARTHA	DATE : 11/28/12		
CHECKED BY : L.E. SUTTON	DATE : 3/4/13		
DRAWN BY : WJH	12/11		
CHECKED BY : AAC	12/11		

18-MAR-2013 08:41
S:\DPG3\DIVISION_PROJECTS\Div_12\BD5112T\Plans\BD5112T_SD_E*_01.dgn
lsutton

STD. NO. EB_30_90S4

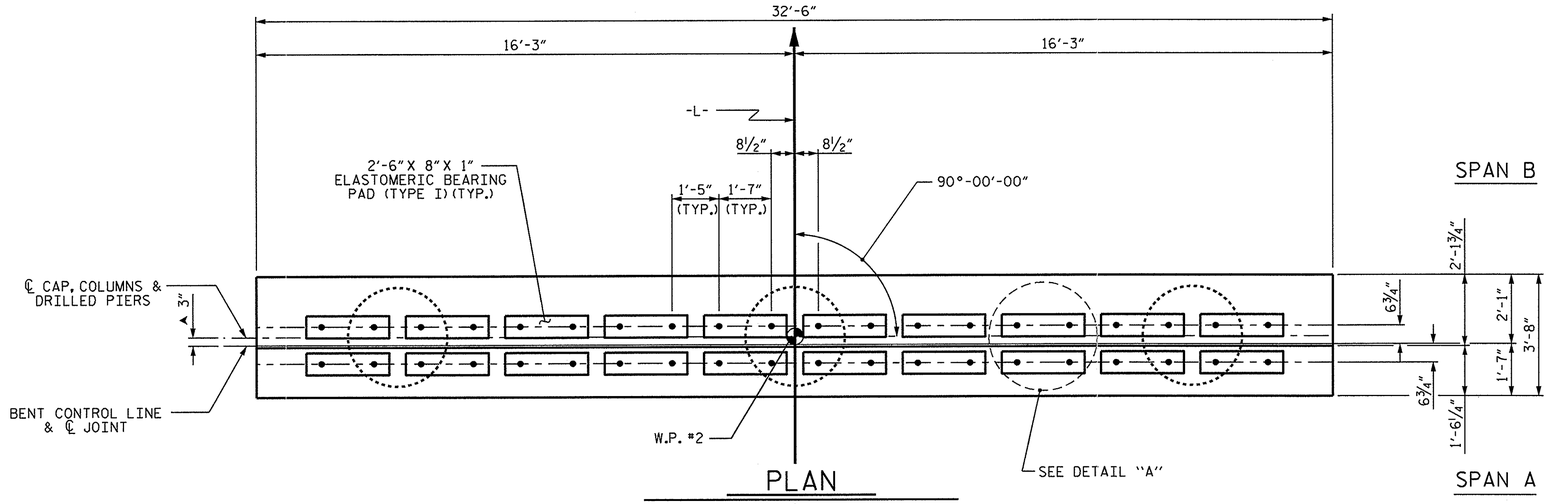

PLAN

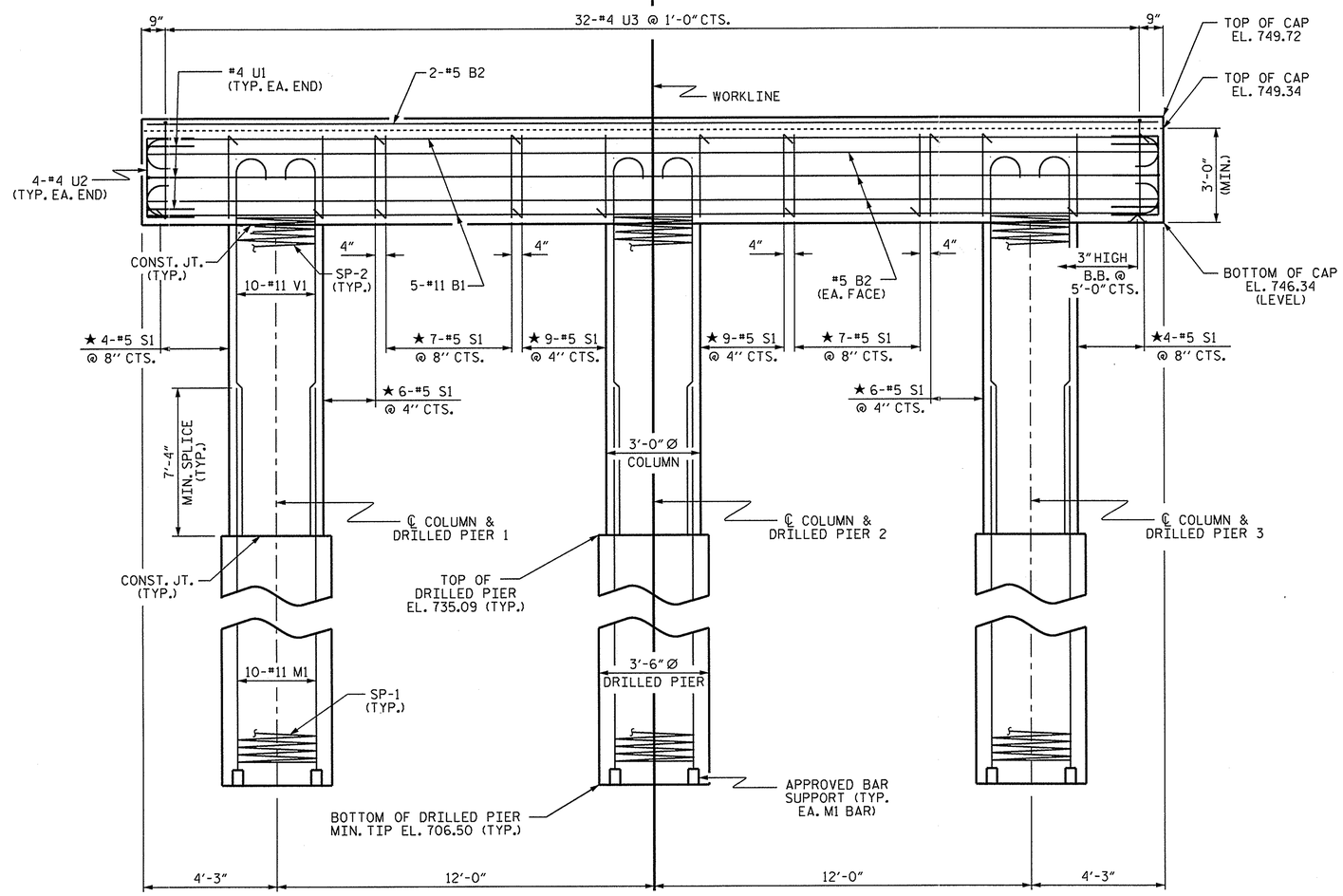

ELEVATION

DIMENSIONS & REINFORCING STEEL ARE TYPICAL FOR EACH COLUMN & DRILLED PIER UNLESS OTHERWISE NOTED.

NOTES

STIRRUPS IN CAP MAY BE SHIFTED AS NECESSARY TO CLEAR DOWELS.

HOOKS ON "V" BARS MAY BE TURNED AS NECESSARY FOR PLACING REINFORCING STEEL.

FOR DRILLED PIERS, SEE SECTION 411 OF THE STANDARD SPECIFICATIONS.

ALL STEEL IN THE DRILLED PIERS IS INCLUDED IN THE PAY ITEMS FOR "REINFORCING STEEL" AND "SPIRAL COLUMN REINFORCING STEEL."

★ INVERT ALTERNATE STIRRUPS.

THE LOCATION OF THE CONSTRUCTION JOINT IN THE DRILLED PIERS IS BASED ON AN APPROXIMATE GROUND LINE ELEVATION. IF THE CONSTRUCTION JOINT IS ABOVE THE ACTUAL GROUND LINE ELEVATION, THE CONTRACTOR SHALL PLACE THE CONSTRUCTION JOINT ONE FOOT BELOW THE GROUND LINE.

▲ THE CONTRACTOR'S ATTENTION IS CALLED TO THE FACT THAT THE CENTERLINE JOINT (BENT CONTROL LINE) IS OFFSET FROM THE CENTERLINE BENT.

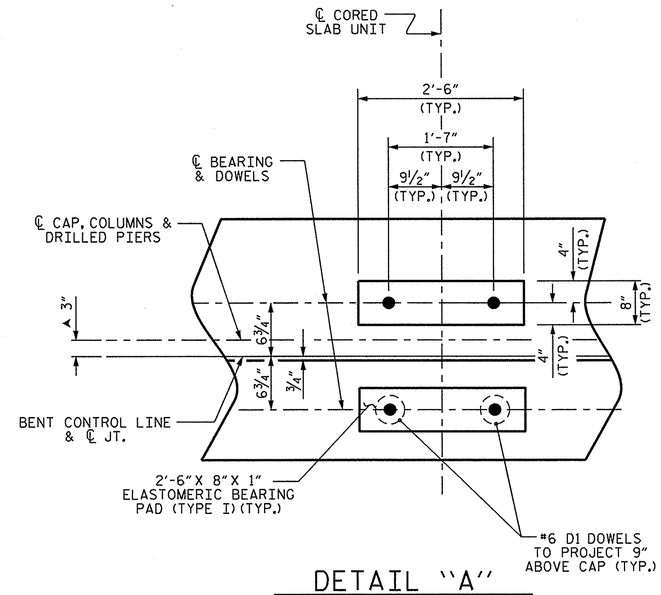

DETAIL "A"

(DIMENSIONS ARE TYPICAL EACH BEARING)

PROJECT NO. BD-5112T

GASTON COUNTY

STATION: 14+65.50 -L-

SHEET 1 OF 2

STATE OF NORTH CAROLINA
DEPARTMENT OF TRANSPORTATION
RALEIGH

SUBSTRUCTURE

BENT 1

NORTH CAROLINA PROFESSIONAL SEAL 21638 ENGINEER LAURA E. SUTTON 3/18/13

REVISIONS							SHEET NO.
NO.	BY:	DATE:	NO.	BY:	DATE:		S-18
1			3				TOTAL SHEETS
2			4				22

ASSEMBLED BY : J.P. MCCARTHA	DATE : 2/28/13
CHECKED BY : L.E. SUTTON	DATE : 3/7/13
DRAWN BY : DGE 03/10	
CHECKED BY : MKT 03/10	

18-MAR-2013 08:41
S:\DPG3\DIVISION_PROJECTS\Div_12\BD5112T\Plans\BD5112T_SD_B*_01.dgn
lsutton

STD. NO. DP_BT_30_90S_>50'

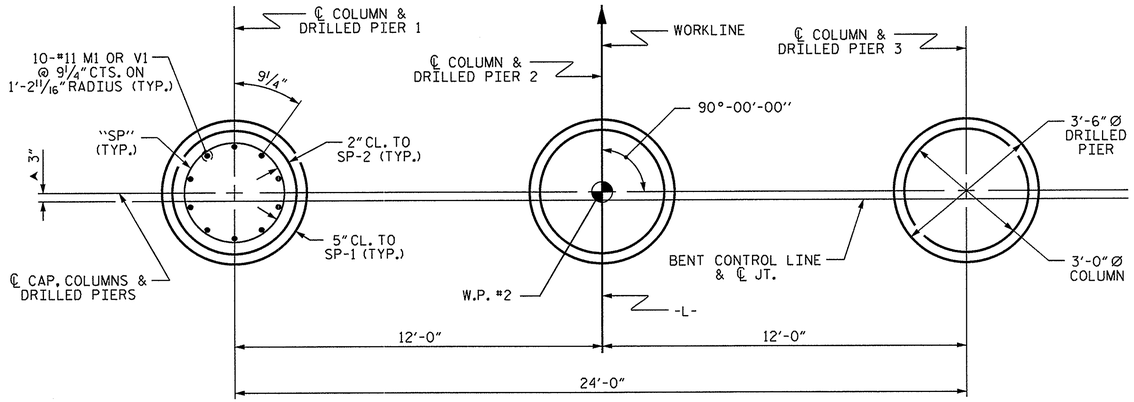

PLAN OF DRILLED PIERS & COLUMNS

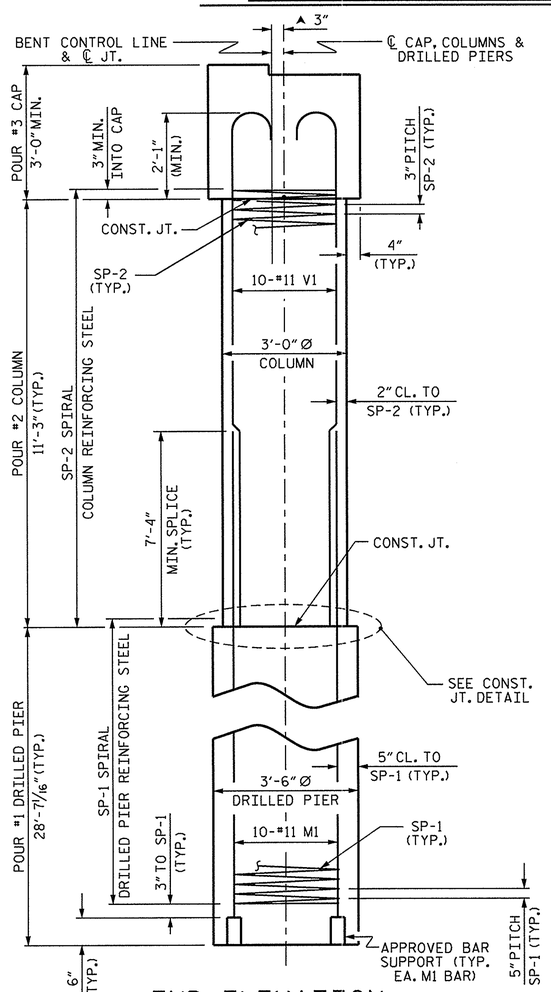

END ELEVATION

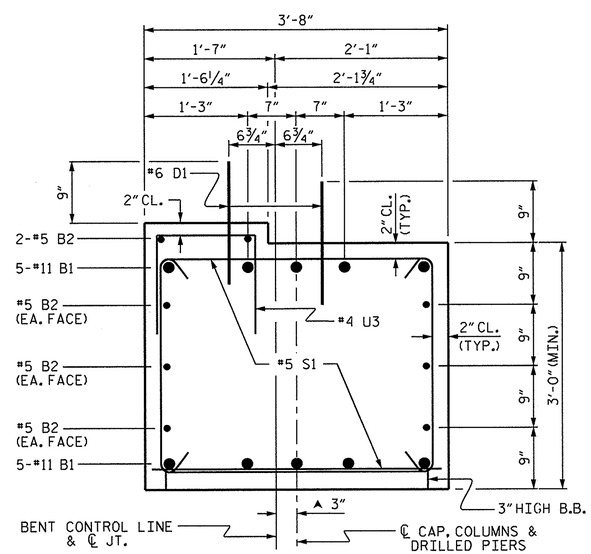

SECTION THRU CAP

(COLUMN AND COLUMN STEEL NOT SHOWN FOR CLARITY)

BAR TYPES

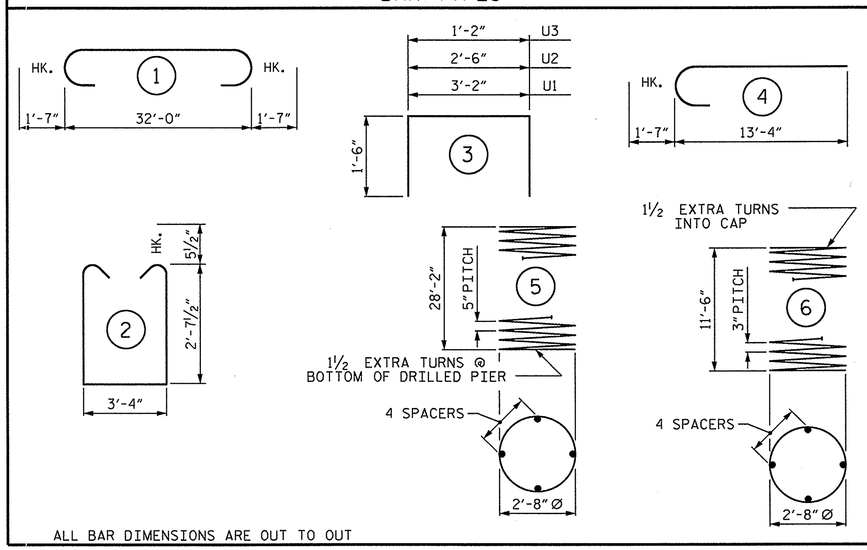

ALL BAR DIMENSIONS ARE OUT TO OUT

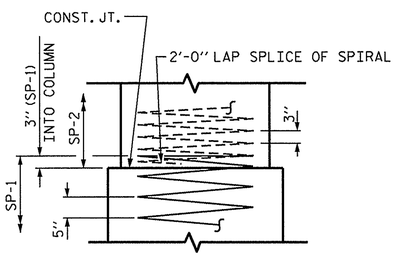

CONSTRUCTION JOINT DETAIL

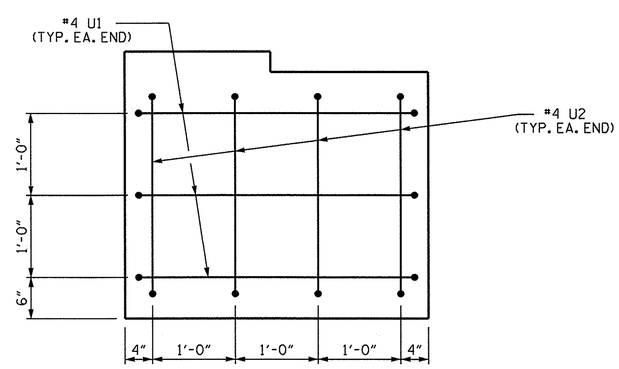

END OF CAP VIEW

(TYPICAL BOTH ENDS)

BILL OF MATERIAL

BENT 1

BAR	NO.	SIZE	TYPE	LENGTH	WEIGHT
B1	10	#11	1	35'-2"	1868
B2	8	#5	STR	32'-2"	268
D1	40	#6	STR	1'-6"	90
M1	30	#11	STR	35'-6"	5658
S1	52	#5	2	9'-6"	515
U1	6	#4	3	6'-2"	25
U2	8	#4	3	5'-6"	29
U3	32	#4	3	4'-2"	89
V1	30	#11	4	14'-11"	2378
REINFORCING STEEL				LBS.	10,920
SP-1	3	*	5	569'-7"	1782
SP-2	3	**	6	391'-11"	785
SPIRAL COLUMN REINFORCING STEEL				LBS.	2,567

* THE SP-1 SPIRAL REINFORCING STEEL SHALL BE W31 OR D-31 COLD DRAWN WIRE OR #5 PLAIN OR DEFORMED BAR

** THE SP-2 SPIRAL REINFORCING STEEL SHALL BE W20 OR D-20 COLD DRAWN WIRE OR #4 PLAIN OR DEFORMED BAR

CLASS A CONCRETE BREAKDOWN

POUR #2 (COLUMNS)	C.Y.	8.8
POUR #3 (CAP)	C.Y.	13.9
TOTAL CLASS A CONCRETE	C.Y.	22.7

DRILLED PIERS

DRILLED PIER CONCRETE POUR #1 (DRILLED PIERS)	C.Y.	30.6
3'-6" Ø DRILLED PIER IN SOIL	LIN. FT.	18.77
3'-6" Ø DRILLED PIER NOT IN SOIL	LIN. FT.	67.00
CSL TUBES	LIN. FT.	361.08

PROJECT NO. BD-5112T

GASTON COUNTY

STATION: 14+65.50 -L-

SHEET 2 OF 2

STATE OF NORTH CAROLINA
DEPARTMENT OF TRANSPORTATION
RALEIGH

SUBSTRUCTURE

BENT 1

NORTH CAROLINA PROFESSIONAL SEAL 21638 ENGINEER LAURA E. SUTTON 3/12/13

REVISIONS						SHEET NO.
NO.	BY:	DATE:	NO.	BY:	DATE:	S-19
1			3			TOTAL SHEETS
2			4			22

ASSEMBLED BY : J.P. MCCARTHA DATE : 2/28/13
CHECKED BY : L.E. SUTTON DATE : 3/7/13

DRAWN BY : DGE 03/10
CHECKED BY : MKT 03/10

18-MAR-2013 08:41
S:\DPG3\DIVISION_PROJECTS\Div_12\BD5112T\Plans\BD5112T_SD_B*_01.dgn
lsutton

STD. NO. DP_BT_30_90S_>50'

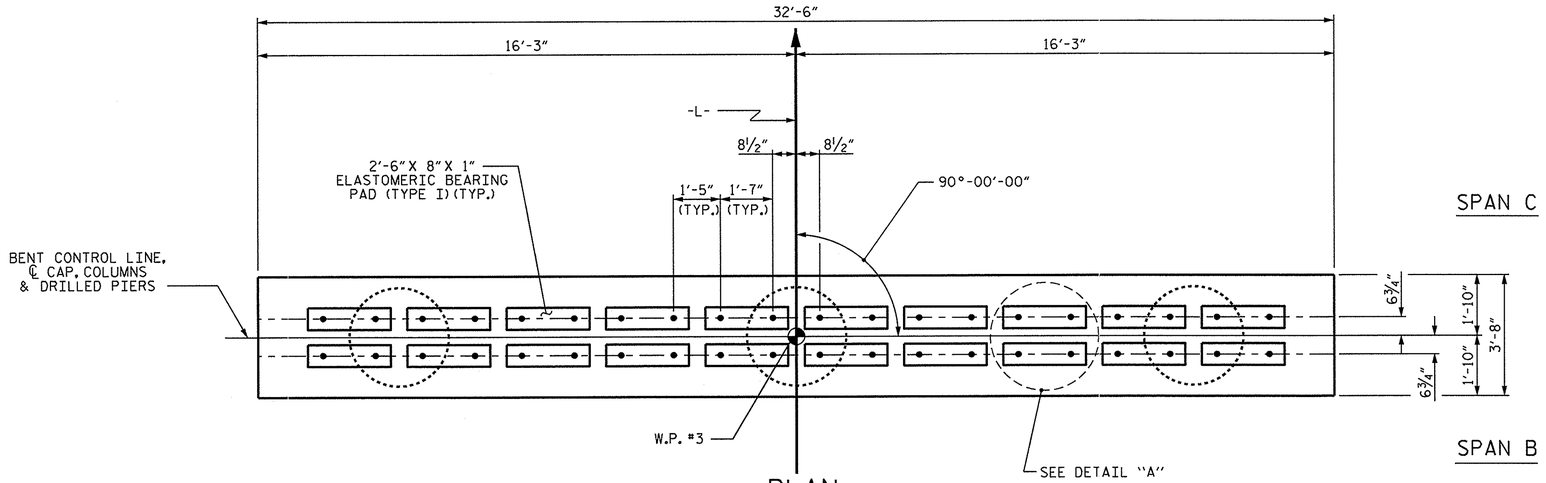

PLAN

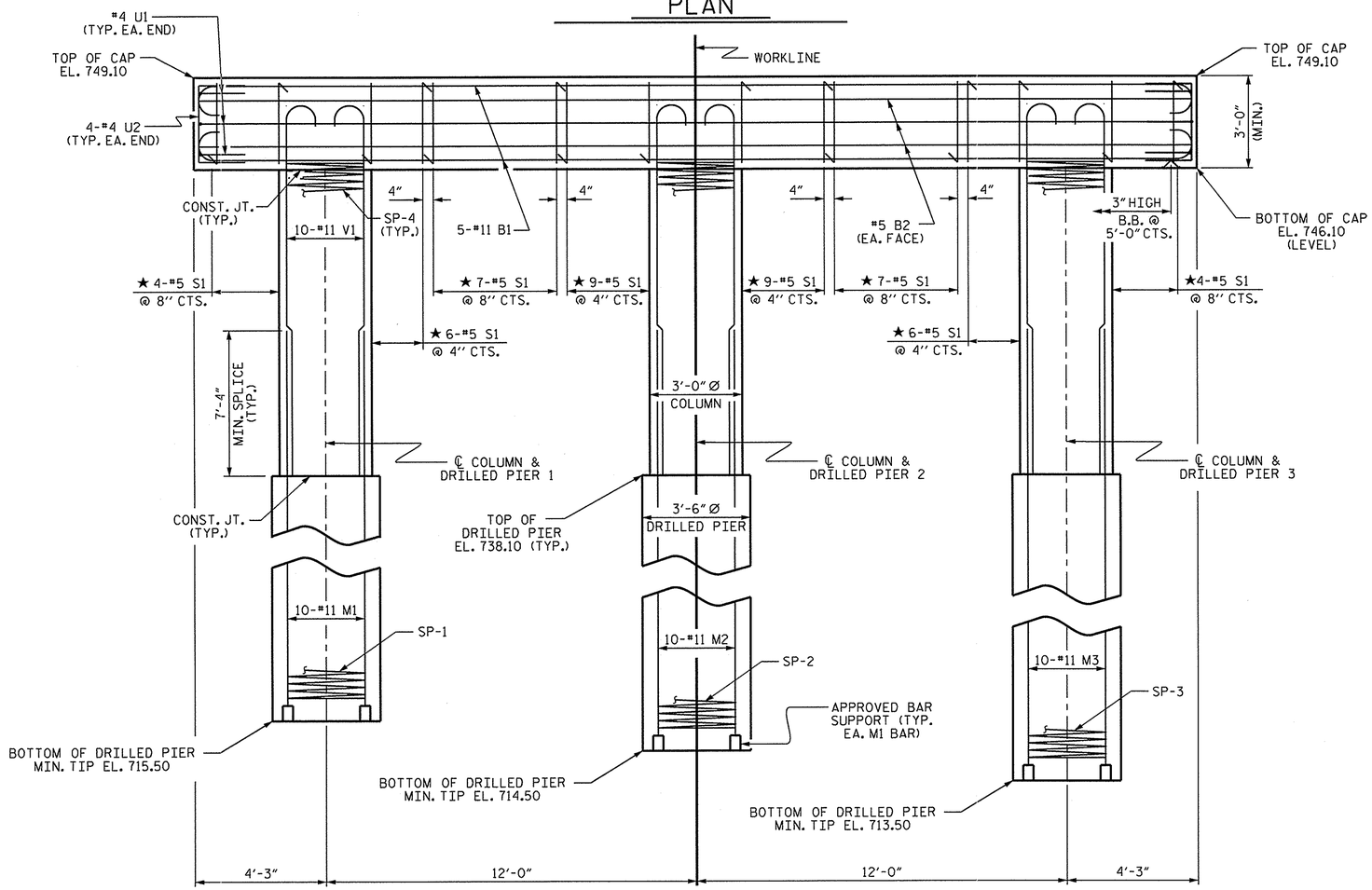

ELEVATION

DIMENSIONS & REINFORCING STEEL ARE TYPICAL FOR EACH COLUMN & DRILLED PIER UNLESS OTHERWISE NOTED.

NOTES

STIRRUPS IN CAP MAY BE SHIFTED AS NECESSARY TO CLEAR DOWELS.

HOOKS ON "V" BARS MAY BE TURNED AS NECESSARY FOR PLACING REINFORCING STEEL.

FOR DRILLED PIERS, SEE SECTION 411 OF THE STANDARD SPECIFICATIONS.

ALL STEEL IN THE DRILLED PIERS IS INCLUDED IN THE PAY ITEMS FOR "REINFORCING STEEL" AND "SPIRAL COLUMN REINFORCING STEEL."

★ INVERT ALTERNATE STIRRUPS.

THE LOCATION OF THE CONSTRUCTION JOINT IN THE DRILLED PIERS IS BASED ON AN APPROXIMATE GROUND LINE ELEVATION. IF THE CONSTRUCTION JOINT IS ABOVE THE ACTUAL GROUND LINE ELEVATION, THE CONTRACTOR SHALL PLACE THE CONSTRUCTION JOINT ONE FOOT BELOW THE GROUND LINE.

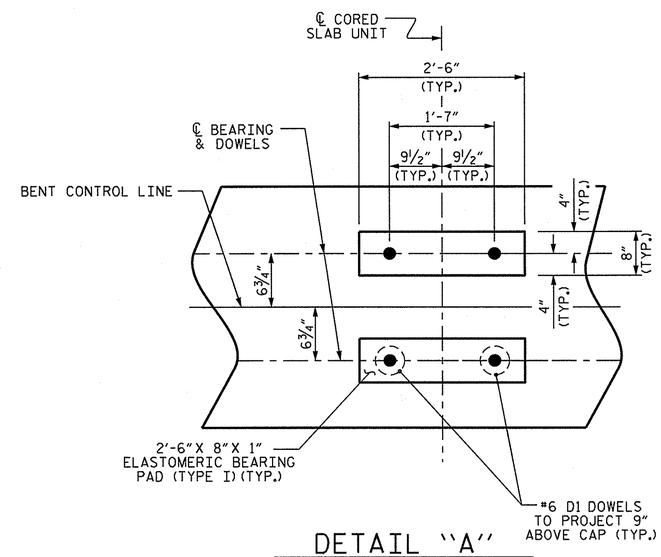

DETAIL "A"

(DIMENSIONS ARE TYPICAL EACH BEARING)

PROJECT NO. BD-5112T

GASTON COUNTY

STATION: 14+65.50 -L-

SHEET 1 OF 2

STATE OF NORTH CAROLINA
DEPARTMENT OF TRANSPORTATION
RALEIGH

SUBSTRUCTURE

BENT 2

NORTH CAROLINA PROFESSIONAL SEAL 21638 ENGINEER LAURA E. SUTTON 3/12/13

REVISIONS							SHEET NO.
NO.	BY:	DATE:	NO.	BY:	DATE:		S-20
1			3				TOTAL SHEETS
2			4				22

ASSEMBLED BY : J.P. MCCARTHA	DATE : 3/1/13
CHECKED BY : L.E. SUTTON	DATE : 3/7/13
DRAWN BY : DGE 03/10	
CHECKED BY : MKT 03/10	

18-MAR-2013 08:41
S:\DPG3\DIVISION_PROJECTS\Div_12\BD5112T\Plans\BD5112T_SD_B#_01.dgn
lsutton

STD. NO. DP_BT_30_90S_>50'

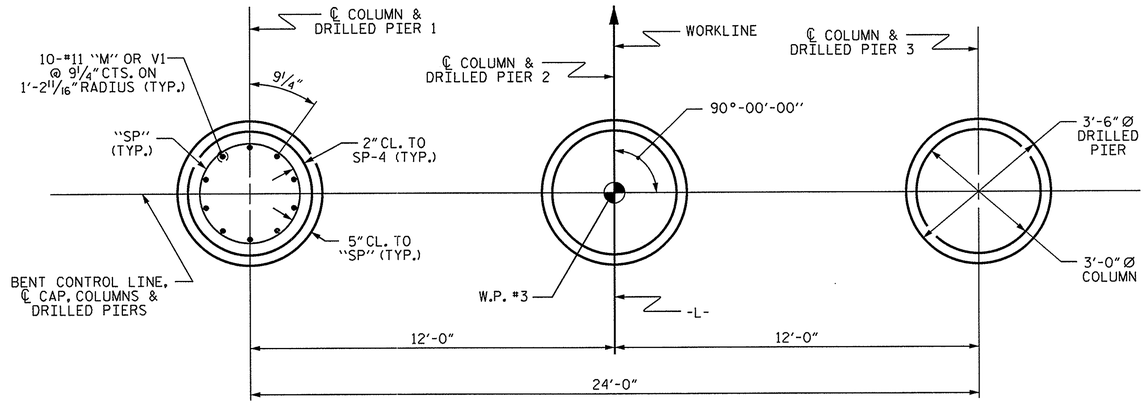

PLAN OF DRILLED PIERS & COLUMNS

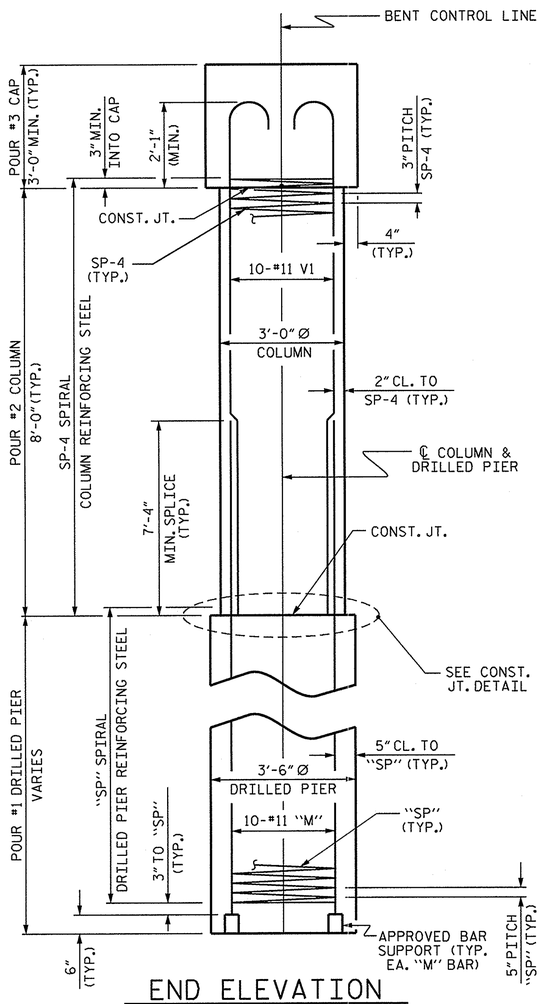

END ELEVATION

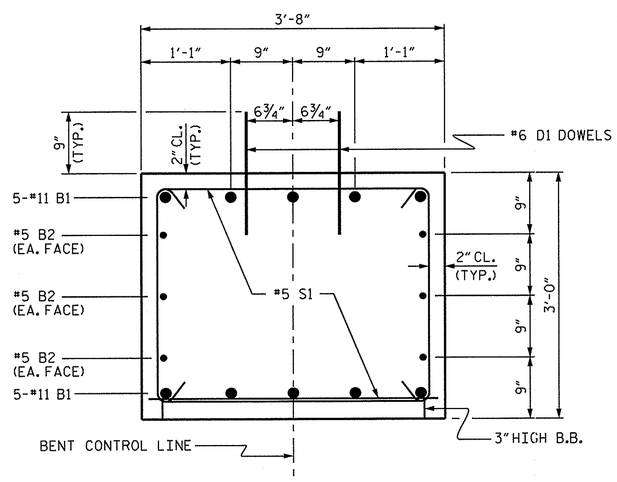

SECTION THRU CAP

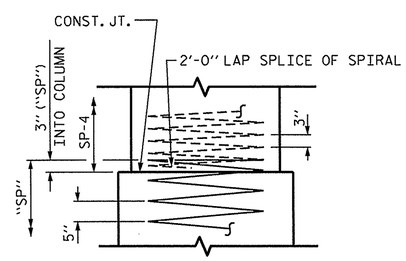

CONSTRUCTION JOINT DETAIL

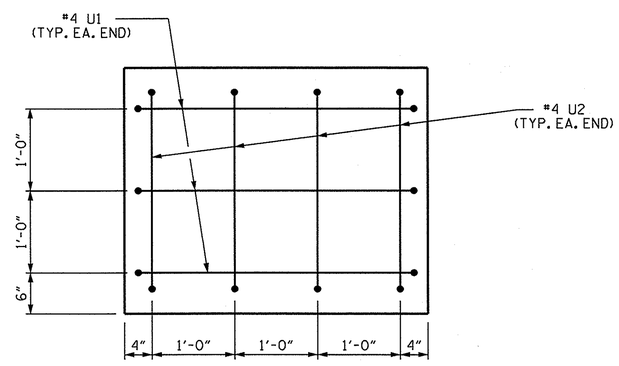

END OF CAP VIEW

(TYPICAL BOTH ENDS)

BAR TYPES

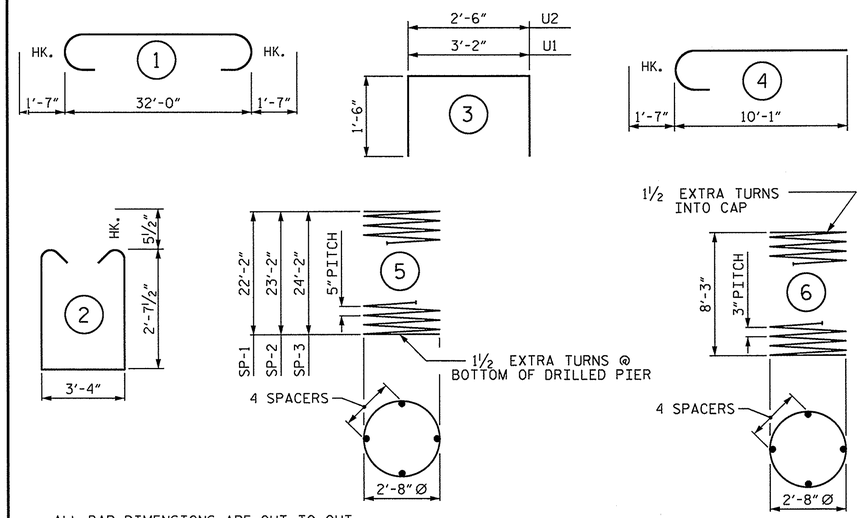

ALL BAR DIMENSIONS ARE OUT TO OUT

BILL OF MATERIAL

BENT 2

BAR	NO.	SIZE	TYPE	LENGTH	WEIGHT
B1	10	#11	1	35'-2"	1868
B2	6	#5	STR	32'-2"	201
D1	40	#6	STR	1'-6"	90
M1	10	#11	STR	29'-6"	1567
M2	10	#11	STR	30'-6"	1620
M3	10	#11	STR	31'-6"	1674
S1	52	#5	2	9'-6"	515
U1	6	#4	3	6'-2"	25
U2	8	#4	3	5'-6"	29
V1	30	#11	4	11'-8"	1860
REINFORCING STEEL				LBS.	9,449
SP-1	1	*	5	450'-4"	470
SP-2	1	*	5	470'-11"	491
SP-3	1	*	5	489'-5"	510
SP-4	3	**	6	284'-8"	570
SPIRAL COLUMN REINFORCING STEEL				LBS.	2,041

* THE SP-1, SP-2 & SP-3 SPIRAL REINFORCING STEEL SHALL BE W31 OR D-31 COLD DRAWN WIRE OR #5 PLAIN OR DEFORMED BAR

** THE SP-4 SPIRAL REINFORCING STEEL SHALL BE W20 OR D-20 COLD DRAWN WIRE OR #4 PLAIN OR DEFORMED BAR

CLASS A CONCRETE BREAKDOWN		
POUR #2 (COLUMNS)	C.Y.	6.3
POUR #3 (CAP)	C.Y.	13.2
TOTAL CLASS A CONCRETE	C.Y.	19.5

DRILLED PIERS		
DRILLED PIER CONCRETE POUR #1 (DRILLED PIERS)	C.Y.	25.2
3'-6" Ø DRILLED PIER IN SOIL	LIN. FT.	48.80
3'-6" Ø DRILLED PIER NOT IN SOIL	LIN. FT.	22.00
CSL TUBES	LIN. FT.	301.20

PROJECT NO. BD-5112T

GASTON COUNTY

STATION: 14+65.50 -L-

SHEET 2 OF 2

STATE OF NORTH CAROLINA
DEPARTMENT OF TRANSPORTATION
RALEIGH

SUBSTRUCTURE

BENT 2

NORTH CAROLINA PROFESSIONAL SEAL 21638 ENGINEER LAURA E. SUTTON 3/18/13

REVISIONS						SHEET NO.
NO.	BY:	DATE:	NO.	BY:	DATE:	S-21
1			3			TOTAL SHEETS
2			4			22

ASSEMBLED BY : J.P. MCCARTHA DATE : 3/1/13
CHECKED BY : L.E. SUTTON DATE : 3/7/13

DRAWN BY : DGE 03/10
CHECKED BY : MKT 03/10

18-MAR-2013 08:41
S:\DPG3\DIVISION_PROJECTS\Div_12\BD5112T\Plans\BD5112T_SD_B*_01.dgn
lsutton

STD. NO. DP_BT_30_90S_>50'

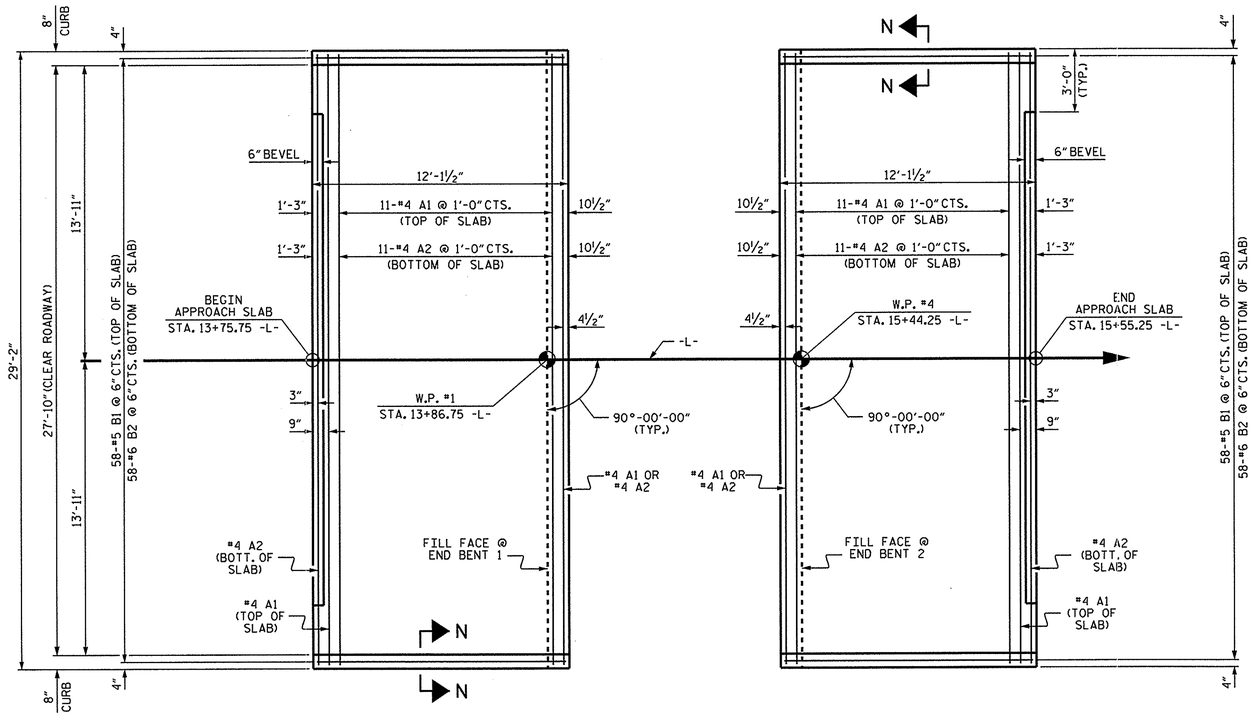

PLAN @ END BENT 1

PLAN @ END BENT 2

DIMENSIONS SHOWN ARE TYPICAL FOR BOTH APPROACH SLABS

NOTES

FOR BRIDGE APPROACH FILL INCLUDING GEOTEXTILE, 4"Ø DRAINAGE PIPE, AND #78M STONE BACKFILL, SEE ROADWAY PLANS.

GEOTEXTILE SHALL BE TYPE 1 IN ACCORDANCE WITH THE STANDARD SPECIFICATIONS SECTION 1056.

#78M STONE BACKFILL (CLASS V SELECT MATERIAL) SHALL BE IN ACCORDANCE WITH STANDARD SPECIFICATIONS SECTION 1016.

#78M STONE BACKFILL IS TO BE CONTINUOUS ALONG FILL FACE OF BACKWALL FROM OUTSIDE EDGE TO OUTSIDE EDGE OF APPROACH SLAB.

FOR THE 4"Ø DRAINAGE PIPE OUTLET(S), SEE ROADWAY STANDARD DRAWINGS.

AREA BETWEEN THE WINGWALL AND APPROACH SLAB SHALL BE GRADED TO DRAIN THE WATER AWAY FROM THE FILL FACE OF THE BRIDGE AND SHALL BE PAVED. SEE ROADWAY PLANS.

APPROACH SLAB GROOVING IS NOT REQUIRED.

BILL OF MATERIAL

APPROACH SLAB AT END BT. 1

BAR	NO.	SIZE	TYPE	LENGTH	WEIGHT
* A1	13	#4	STR	28'-10"	250
A2	13	#4	STR	28'-10"	250
* B1	58	#5	STR	11'-2"	676
B2	58	#6	STR	11'-8"	1016
REINFORCING STEEL				LBS.	1,266
* EPOXY COATED REINFORCING STEEL				LBS.	926
CLASS AA CONCRETE				C.Y.	17.1

APPROACH SLAB AT END BT. 2

BAR	NO.	SIZE	TYPE	LENGTH	WEIGHT
* A1	13	#4	STR	28'-10"	250
A2	13	#4	STR	28'-10"	250
* B1	58	#5	STR	11'-2"	676
B2	58	#6	STR	11'-8"	1016
REINFORCING STEEL				LBS.	1,266
* EPOXY COATED REINFORCING STEEL				LBS.	926
CLASS AA CONCRETE				C.Y.	18.3

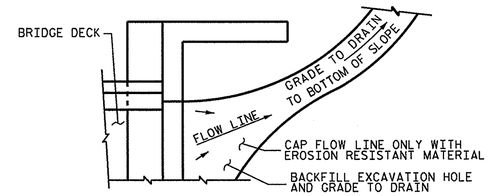

NOTE: IF THE APPROACH SLAB IS NOT CONSTRUCTED IMMEDIATELY AFTER THE BACKFILLING OF THE END BENT EXCAVATION, GRADE TO DRAIN TO THE BOTTOM OF THE SLOPE AND PROVIDE EROSION RESISTANT MATERIAL, SUCH AS FIBERGLASS ROVING OR AS DIRECTED BY THE ENGINEER TO PREVENT SOIL EROSION AND TO PROTECT THE AREA ADJACENT TO THE STRUCTURE. THE CONTRACTOR WILL BE REQUIRED TO REMOVE THESE MATERIALS PRIOR TO CONSTRUCTION OF THE APPROACH SLAB.

TEMPORARY DRAINAGE DETAIL

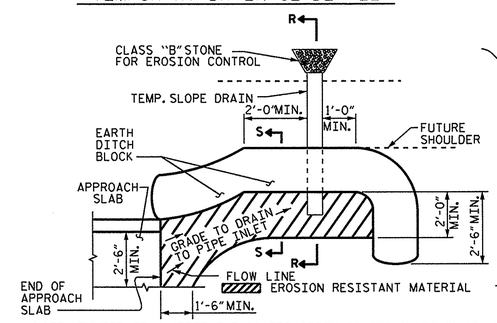

PLAN VIEW

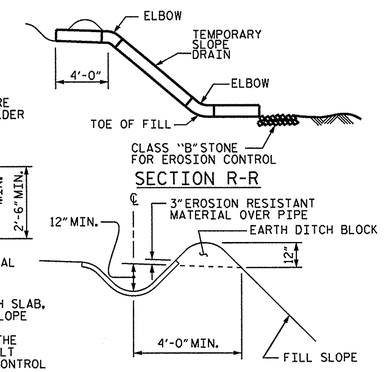

NOTE: IMMEDIATELY AFTER THE CONSTRUCTION OF THE APPROACH SLAB, THE CONTRACTOR SHALL PROVIDE TEMPORARY BERM AND SLOPE DRAIN. CONTRACTOR SHALL GRADE TO PIPE INLET AND PROVIDE EROSION RESISTANT MATERIAL AS SHOWN. THE EROSION RESISTANT MATERIAL SHALL BE EITHER 1) ASPHALT PLANT MIX, TYPE 1 OR TYPE 2, MIN. 2" DEPTH, 2) EROSION CONTROL MAT, OR 3) CONCRETE, AS DIRECTED BY THE ENGINEER. THE SLOPE DRAIN SHALL CONSIST OF A NON-PERFORATED TEMPORARY DRAINAGE PIPE, 12 INCHES IN DIAMETER.

TEMPORARY BERM AND SLOPE DRAIN DETAILS

(TO BE USED WHEN SHOULDER BERM GUTTER IS REQUIRED)

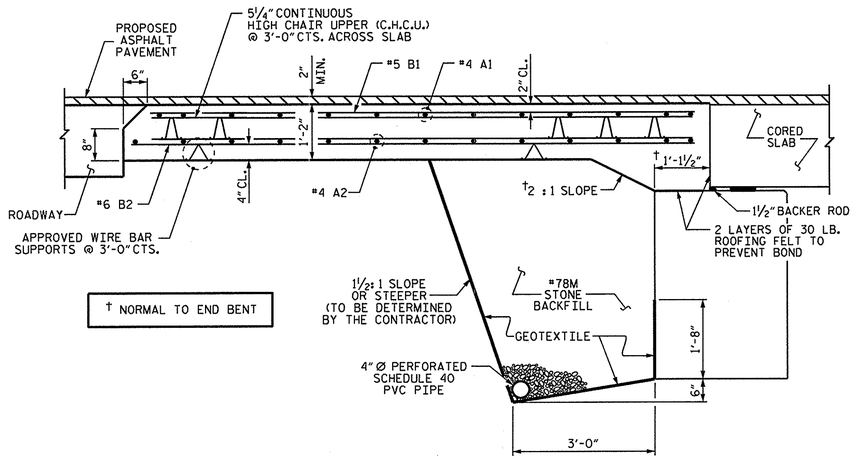

SECTION THRU SLAB

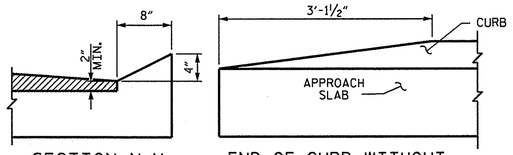

SECTION N-N

END OF CURB WITHOUT SHOULDER BERM GUTTER

CURB DETAILS

SPLICE LENGTHS		
BAR SIZE	EPOXY COATED	UNCOATED
#4	2'-0"	1'-9"
#5	2'-6"	2'-2"
#6	3'-10"	2'-7"

NORTH CAROLINA PROFESSIONAL SEAL 21638 ENGINEER LAURA E. SUTTON 3/12/13

PROJECT NO. BD-5112T

GASTON COUNTY

STATION: 14+65.50 -L-

STATE OF NORTH CAROLINA
DEPARTMENT OF TRANSPORTATION
RALEIGH

STANDARD
BRIDGE APPROACH SLAB
FOR PRESTRESSED CONCRETE
CORED SLAB UNIT
(SUB-REGIONAL TIER)
90° SKEW

REVISIONS						SHEET NO.
NO.	BY:	DATE:	NO.	BY:	DATE:	S-22
1			3			TOTAL SHEETS
2			4			22

ASSEMBLED BY : J.P. MCCARTHA DATE : 11/28/12
CHECKED BY : L.E. SUTTON DATE : 12/5/12
DRAWN BY : SHS/MAA 5-09 REV. 12-11 MAA/AAC
CHECKED BY : BCH 5-09

18-MAR-2013 08:41
S:\DPG3\DIVISION_PROJECTS\Div_12\BD5112T\Plans\BD5112T_SD_AS_01.dgn
lsutton

STD. NO. BAS_30_90S

STANDARD NOTES

DESIGN DATA:

SPECIFICATIONS	A.A.S.H.T.O. (CURRENT)
LIVE LOAD	SEE PLANS
IMPACT ALLOWANCE	SEE A.A.S.H.T.O.
STRESS IN EXTREME FIBER OF	
STRUCTURAL STEEL - AASHTO M270 GRADE 36	20,000 LBS. PER SQ. IN.
- AASHTO M270 GRADE 50W	27,000 LBS. PER SQ. IN.
- AASHTO M270 GRADE 50	27,000 LBS. PER SQ. IN.
REINFORCING STEEL IN TENSION	
GRADE 60	24,000 LBS. PER SQ. IN.
CONCRETE IN COMPRESSION	1,200 LBS. PER SQ. IN.
CONCRETE IN SHEAR	SEE A.A.S.H.T.O.
STRUCTURAL TIMBER - TREATED OR	
UNTREATED - EXTREME FIBER STRESS	1,800 LBS. PER SQ. IN.
COMPRESSION PERPENDICULAR TO GRAIN OF TIMBER	375 LBS. PER SQ. IN.
EQUIVALENT FLUID PRESSURE OF EARTH	30 LBS. PER CU. FT. (MINIMUM)

MATERIAL AND WORKMANSHIP:

EXCEPT AS MAY OTHERWISE BE SPECIFIED ON PLANS OR IN THE SPECIAL PROVISIONS, ALL MATERIAL AND WORKMANSHIP SHALL BE IN ACCORDANCE WITH THE 2012 "STANDARD SPECIFICATIONS FOR ROADS AND STRUCTURES" OF THE N. C. DEPARTMENT OF TRANSPORTATION.

STEEL SHEET PILING FOR PERMANENT OR TEMPORARY APPLICATIONS SHALL BE HOT ROLLED.

CONCRETE:

UNLESS OTHERWISE REQUIRED ON PLANS, CLASS A CONCRETE SHALL BE USED FOR ALL PORTIONS OF ALL STRUCTURES WITH THE EXCEPTION THAT: CLASS AA CONCRETE SHALL BE USED IN BRIDGE SUPERSTRUCTURES, ABUTMENT BACKWALLS, AND APPROACH SLABS; AND CLASS B CONCRETE SHALL BE USED FOR SLOPE PROTECTION AND RIP RAP.

CONCRETE CHAMFERS:

UNLESS OTHERWISE NOTED ON THE PLANS, ALL EXPOSED CORNERS ON STRUCTURES SHALL BE CHAMFERED 3/4" WITH THE FOLLOWING EXCEPTIONS: TOP CORNERS OF CURBS MAY BE ROUNDED TO 1-1/2" RADIUS WHICH IS BUILT INTO CURB FORMS; CORNERS OF TRANSVERSE FLOOR EXPANSION JOINTS SHALL BE ROUNDED WITH A 1/4" FINISHING TOOL UNLESS OTHERWISE REQUIRED ON PLANS; AND CORNERS OF EXPANSION JOINTS IN THE ROADWAY FACES AND TOPS OF CURBS AND SIDEWALKS SHALL BE ROUNDED TO A 1/4" RADIUS WITH A FINISHING STONE OR TOOL UNLESS OTHERWISE REQUIRED ON PLANS.

DOWELS:

DOWELS WHEN INDICATED ON PLANS AS FOR CULVERT EXTENSIONS, SHALL BE EMBEDDED AT LEAST 12" INTO THE OLD CONCRETE AND GROUTED INTO PLACE WITH 1:2 CEMENT MORTAR.

ALLOWANCE FOR DEAD LOAD DEFLECTION, SETTLEMENT, ETC. IN CASTING SUPERSTRUCTURES:

BRIDGES SHALL BE BUILT ON THE GRADE OR VERTICAL CURVE SHOWN ON PLANS. SLABS, CURBS AND PARAPETS SHALL CONFORM TO THE GRADE OR CURVE.

ALL DIMENSIONS WHICH ARE GIVEN IN SECTION AND ARE AFFECTED BY DEAD LOAD DEFLECTIONS ARE DIMENSIONS AT CENTER LINE OF BEARING UNLESS OTHERWISE NOTED ON PLANS. IN SETTING FORMS FOR STEEL BEAM BRIDGES AND PRESTRESSED CONCRETE GIRDER BRIDGES, ADJUSTMENTS SHALL BE MADE DUE TO THE DEAD LOAD DEFLECTIONS FOR THE ELEVATIONS SHOWN. WHERE BLOCKS ARE SHOWN OVER BEAMS FOR BUILDING UP TO THE SLAB, THE VERTICAL DIMENSIONS OF THE BLOCKS SHALL BE ADJUSTED BETWEEN BEARINGS TO COMPENSATE FOR DEAD LOAD DEFLECTIONS, VERTICAL CURVE ORDINATE, AND ACTUAL BEAM CAMBER. WHERE BOTTOM OF SLAB IS IN LINE WITH BOTTOM OF TOP FLANGES, DEPTH OF SLAB BETWEEN BEARINGS SHALL BE ADJUSTED TO COMPENSATE FOR DEAD LOAD DEFLECTION, VERTICAL CURVE ORDINATE, AND ACTUAL BEAM CAMBER.

IN SETTING FALSEWORK AND FORMS FOR REINFORCED CONCRETE SPANS, AN ALLOWANCE SHALL BE MADE FOR DEAD LOAD DEFLECTIONS, SETTLEMENT OF FALSEWORK, AND PERMANENT CAMBER WHICH SHALL BE PROVIDED FOR IN ADDITION TO THE ELEVATIONS SHOWN. AFTER REMOVAL OF THE FALSEWORK, THE FINISHED STRUCTURES SHALL CONFORM TO THE PROFILE AND ELEVATIONS SHOWN ON THE PLANS AND CONSTRUCTION ELEVATIONS FURNISHED BY THE ENGINEER.

DETAILED DRAWINGS FOR FALSEWORK OR FORMS FOR BRIDGE SUPERSTRUCTURE AND ANY STRUCTURE OR PARTS OF A STRUCTURE AS NOTED ON THE PLANS SHALL BE SUBMITTED TO THE ENGINEER FOR APPROVAL BEFORE CONSTRUCTION OF THE FALSEWORK OR FORMS IS STARTED.

REINFORCING STEEL:

ALL REINFORCING STEEL SHALL BE DEFORMED. DIMENSIONS RELATIVE TO PLACEMENT OF REINFORCING ARE TO CENTERS OF BARS UNLESS OTHERWISE INDICATED IN THE PLANS. DIMENSIONS ON BAR DETAILS ARE TO CENTERS OF BARS OR ARE OUT TO OUT AS INDICATED ON PLANS.

WIRE BAR SUPPORTS SHALL BE PROVIDED FOR REINFORCING STEEL WHERE INDICATED ON THE PLANS. WHEN BAR SUPPORT PIECES ARE PLACED IN CONTINUOUS LINES, THEY SHALL BE SO PLACED THAT THE ENDS OF THE SUPPORTING WIRES SHALL BE LAPPED TO LOCK LEGS ON ADJOINING PIECES.

STRUCTURAL STEEL:

AT THE CONTRACTOR'S OPTION, HE MAY SUBSTITUTE 7/8" Ø SHEAR STUDS FOR THE 3/4" Ø STUDS SPECIFIED ON THE PLANS. THIS SUBSTITUTION SHALL BE MADE AT THE RATE OF 3 - 7/8" Ø STUDS FOR 4 - 3/4" Ø STUDS, AND STUD SPACING CHANGES SHALL BE MADE AS NECESSARY TO PROVIDE THE SAME EQUIVALENT NUMBER OF 7/8" Ø STUDS ALONG THE BEAM AS SHOWN FOR 3/4" Ø STUDS BASED ON THE RATIO OF 3 - 7/8" Ø STUDS FOR 4 - 3/4" Ø STUDS. STUDS OF THE LENGTH SPECIFIED ON THE PLANS MUST BE PROVIDED. THE MAXIMUM SPACING SHALL BE 2'-0".

EXCEPT AT THE INTERIOR SUPPORTS OF CONTINUOUS BEAMS WHERE THE COVER PLATE IS IN CONTACT WITH BEARING PLATE, THE CONTRACTOR MAY, AT HIS OPTION, SUBSTITUTE FOR THE COVER PLATES DESIGNATED ON THE PLANS COVER PLATES OF THE EQUIVALENT AREA PROVIDED THESE PLATES ARE AT LEAST 5/16" IN THICKNESS AND DO NOT EXCEED A WIDTH EQUAL TO THE FLANGE WIDTH LESS 2" OR A THICKNESS EQUAL TO 2 TIMES THE FLANGE THICKNESS. THE SIZE OF FILLET WELDS SHALL CONFORM TO THE REQUIREMENTS OF THE CURRENT ANSI/AASHTO/AWS "BRIDGE WELDING CODE". ELECTROSLAG WELDING WILL NOT BE PERMITTED.

WITH THE SOLE EXCEPTION OF EDGES AT SURFACES WHICH BEAR ON OTHER SURFACES, ALL SHARP EDGES AND ENDS OF SHAPES AND PLATES SHALL BE SLIGHTLY ROUNDED BY SUITABLE MEANS TO A RADIUS OF APPROXIMATELY 1/16 INCH OR EQUIVALENT FLAT SURFACE AT A SUITABLE ANGLE PRIOR TO PAINTING, GALVANIZING, OR METALLIZING.

HANDRAILS AND POSTS:

METAL STANDARDS AND FACES OF THE CONCRETE END POSTS FOR THE METAL RAIL SHALL BE SET NORMAL TO THE GRADE OF THE CURB, UNLESS OTHERWISE SHOWN ON PLANS. THE METAL RAIL AND TOPS OF CONCRETE POSTS USED WITH THE ALUMINUM RAIL SHALL BE BUILT PARALLEL TO THE GRADE OF THE CURB.

METAL HANDRAILS SHALL BE IN ACCORDANCE WITH THE PLANS. RAILS SHALL BE AS MANUFACTURED FOR BRIDGE RAILING. CASTINGS SHALL BE OF A UNIFORM APPEARANCE. FINS AND OTHER DEFORMATIONS RESULTING FROM CASTING OR OTHERWISE SHALL BE REMOVED IN A MANNER SO THAT A UNIFORM COLORING OF THE COMPLETED CASTING SHALL BE OBTAINED. CASTINGS WITH DISCOLORATIONS OR OF NON-UNIFORM COLORING WILL NOT BE ACCEPTED. CERTIFIED MILL REPORTS ARE REQUIRED FOR METAL RAILS AND POSTS.

SPECIAL NOTES:

GENERALLY, IN CASE OF DISCREPANCY, THIS STANDARD SHEET OF NOTES SHALL GOVERN OVER THE SPECIFICATIONS, BUT THE REMAINDER OF THE PLANS SHALL GOVERN OVER NOTES HEREON, AND SPECIAL PROVISIONS SHALL GOVERN OVER ALL. SEE SPECIFICATIONS ARTICLE 105-4.

ENGLISH

JANUARY, 1990

STD. NO. SN