09/08/99

PROJECT: 17BP.12.R.60

CONTRACT: DL00135

See Sheet 1-A For Index of Sheets
See Sheet 1-B For Symbology

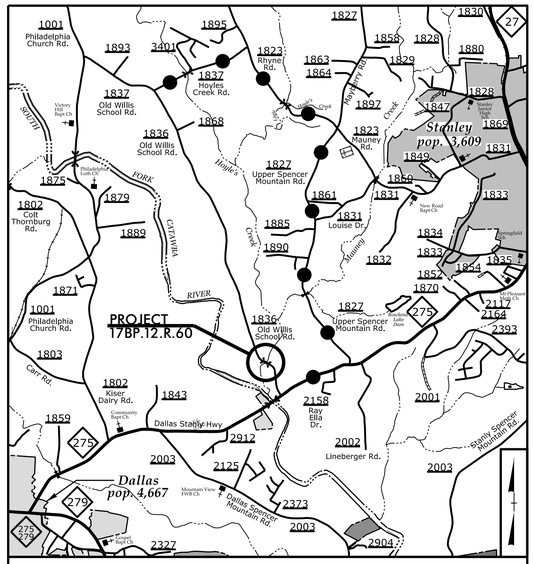

VICINITY MAP (N.T.S.)

STATE OF NORTH CAROLINA
DIVISION OF HIGHWAYS

GASTON COUNTY

STATE	STATE PROJECT REFERENCE NO.	SHEET NO.	TOTAL SHEETS
N.C.	17BP.12.R.60	1	

STATE PROJ. NO.	F.A. PROJ. NO.	DESCRIPTION
17BP.12.R.60		P.E.
17BP.12.R.60		R/W & UTILITIES
17BP.12.R.60		CONST.

LOCATION: REPLACE BRIDGE 176 OVER HOYLE'S CREEK ON SR 1836 (OLD WILLIS SCHOOL RD.)

TYPE OF WORK: GRADING, DRAINAGE, PAVING AND STRUCTURE

4

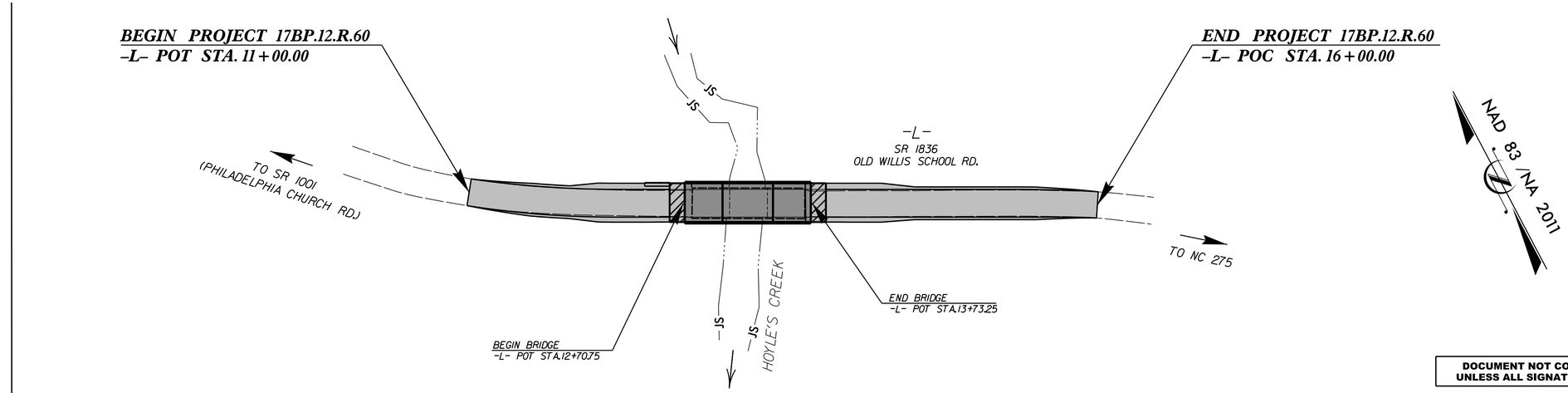

DOCUMENT NOT CONSIDERED FINAL UNLESS ALL SIGNATURES COMPLETED

NCDOT CONTACT:

STEVEN RACKLEY, PE
DIVISION BRIDGE PROGRAM MANAGER
(980) 552-4216

GRAPHIC SCALES

50 25 0 50 100
PLANS

50 25 0 50 100
PROFILE (HORIZONTAL)

10 5 0 10 20
PROFILE (VERTICAL)

DESIGN DATA

ADT 2014 = 1,200
T = 6 %
V = 45 MPH

FUNCT. CLASS = LOCAL

SUBREGIONAL TIER

PROJECT LENGTH

LENGTH ROADWAY PROJECT 17BP.12.R.60	=	0.076 mile
LENGTH STRUCTURES PROJECT 17BP.12.R.60	=	0.019 mile
TOTAL LENGTH PROJECT 17BP.12.R.60	=	0.095 mile

Prepared For:
DIVISION OF HIGHWAYS
1000 Birch Ridge Dr., Raleigh NC, 27610
By:
Weston & Sampson
WSE of North Carolina, PC
598 East Chatham Street Suite 137
Cary, NC 27511
Phone: 919.297.0220 Fax: 919.297.0221
NC License: C-4647

2018 STANDARD SPECIFICATIONS

RIGHT OF WAY DATE: OCTOBER 24, 2016

LETTING DATE: SEPTEMBER 28, 2021

KEVIN S. HUTCHENS, PE
PROJECT ENGINEER

ROBERT W. PORTER, PE
PROJECT DESIGN ENGINEER

HYDRAULICS ENGINEER
DocuSigned by: Paul Cameron
SIGNATURE: P.E.
NORTH CAROLINA PROFESSIONAL SEAL 40801 ENGINEER PAUL H. CAMERON

ROADWAY DESIGN ENGINEER
DocuSigned by: Kevin S Hutchens
SIGNATURE: P.E.
NORTH CAROLINA PROFESSIONAL SEAL 39283 ENGINEER KEVIN S. HUTCHENS

STATE OF NORTH CAROLINA DEPARTMENT OF TRANSPORTATION

8/24/2021
R:\Roadway\Proj\35076_rdy_tsh.dgn
5:05:50 PM

8/17/99

GENERAL NOTES:

2018 SPECIFICATIONS
EFFECTIVE: 01-16-2018
REVISED:

GRADING AND SURFACING OR RESURFACING AND WIDENING:

THE GRADE LINES SHOWN DENOTE THE FINISHED ELEVATION OF THE PROPOSED SURFACING AT GRADE POINTS SHOWN ON THE TYPICAL SECTIONS. WHERE NO GRADE LINES ARE SHOWN, THE PROFILES SHOWN DENOTE THE TOP ELEVATION OF THE EXISTING PAVEMENT ALONG THE CENTER LINE OF SURVEY ON WHICH THE PROPOSED RESURFACING WILL BE PLACED. GRADE LINES MAY BE ADJUSTED BY THE ENGINEER IN ORDER TO SECURE A PROPER TIE-IN.

CLEARING:

CLEARING ON THIS PROJECT SHALL BE PERFORMED TO THE LIMITS ESTABLISHED BY METHOD III.

SUPERELEVATION:

ALL CURVES ON THIS PROJECT SHALL BE SUPERELEVATED IN ACCORDANCE WITH STD. NO. 225.04 USING THE RATE OF SUPERELEVATION AND RUNOFF SHOWN ON THE PLANS. SUPERELEVATION IS TO BE REVOLVED ABOUT THE GRADE POINTS SHOWN ON THE TYPICAL SECTIONS.

SHOULDER CONSTRUCTION:

ASPHALT, EARTH, AND CONCRETE SHOULDER CONSTRUCTION ON THE HIGH SIDE OF SUPERELEVATED CURVES SHALL BE IN ACCORDANCE WITH STD. NO. 560.01

SIDE ROADS:

THE CONTRACTOR WILL BE REQUIRED TO DO ALL NECESSARY WORK TO PROVIDE SUITABLE CONNECTIONS WITH ALL ROADS, STREETS, AND DRIVES ENTERING THIS PROJECT. THIS WORK WILL BE PAID FOR AT THE CONTRACT UNIT PRICE FOR THE PARTICULAR ITEMS INVOLVED.

GUARDRAIL:

THE GUARDRAIL LOCATIONS SHOWN ON THE PLANS MAY BE ADJUSTED DURING CONSTRUCTION AS DIRECTED BY THE ENGINEER. THE CONTRACTOR SHOULD CONSULT WITH THE ENGINEER PRIOR TO ORDERING GUARDRAIL MATERIAL.

TEMPORARY SHORING:

SHORING REQUIRED FOR THE MAINTENANCE OF TRAFFIC WILL BE PAID FOR AS "EXTRA WORK" IN ACCORDANCE WITH SECTION 104-7.

END BENTS:

THE ENGINEER SHALL CHECK THE STRUCTURE END BENT PLANS, DETAILS, AND CROSS-SECTION PRIOR TO SETTING OF THE SLOPE STAKES FOR THE EMBANKMENT OR EXCAVATION APPROACHING A BRIDGE.

UTILITIES:

UTILITY OWNERS ON THIS PROJECT ARE:
POWER - DUKE ENERGY
PHONE - AT & T

ANY RELOCATION OF EXISTING UTILITIES WILL BE ACCOMPLISHED BY OTHERS.

RIGHT-OF-WAY MARKERS:

ALL RIGHT-OF-WAY MARKERS ON THIS PROJECT SHALL BE PLACED BY OTHERS.

2018 ROADWAY ENGLISH STANDARD DRAWINGS

EFF. 01-16-2018
REV.

The following Roadway Standards as appear in "Roadway Standard Drawings" Highway Design Branch - N. C. Department of Transportation - Raleigh, N. C., Dated January, 2018 are applicable to this project and by reference hereby are considered a part of these plans:

STD.NO.	TITLE
DIVISION 2 - EARTHWORK	
200.03	Method of Clearing - Method III
225.02	Guide for Grading Subgrade - Secondary and Local
225.04	Method of Obtaining Superelevation - Two Lane Pavement
DIVISION 3 - PIPE CULVERTS	
300.01	Method of Pipe Installation
310.10	Driveway Pipe Construction
DIVISION 4 - MAJOR STRUCTURES	
422.02	Bridge Approach Fills - Type II Modiefied Approach Fill
DIVISION 5 - SUBGRADE, BASES AND SHOULDERS	
560.01	Method of Shoulder Construction - High Side of Superelevated Curve - Method I
DIVISION 8 - INCIDENTALS	
840.00	Concrete Base Pad for Drainage Structures
840.25	Anchorage for Frames - Brick or Concrete or Precast
840.29	Frames and Narrow Slot Flat Grates
840.35	Traffic Bearing Grated Drop Inlet - for Cast Iron Double Frame and Grates
840.46	Traffic Bearing Precast Drainage Structure
840.66	Drainage Structure Steps
846.01	Concrete Curb, Gutter and Curb & Gutter
846.04	Drop Inlet Installation in Shoulder Berm Gutter
862.01	Guardrail Placement
862.02	Guardrail Installation
862.03	Structure Anchor Units
876.02	Guide for Rip Rap at Pipe Outlets
876.04	Drainage Ditches with Class 'B' Rip Rap

INDEX OF SHEETS

PROJECT REFERENCE NO.	SHEET NO.
17BPJ2.R.60	1-A

ROADWAY DESIGN ENGINEER

NORTH CAROLINA PROFESSIONAL SEAL 39283 ENGINEER
KEVIN S. HUNEYCUTT
8/17/2021

DOCUMENT NOT CONSIDERED FINAL UNLESS ALL SIGNATURES COMPLETED

M A Engineering Consultants, Inc.
NC License: F-0160
598 East Chatham Street Suite 137 Cary, NC 27511
Phone: 919.297.0220 Fax: 919.297.0221

8/13/2021
R:\Roadway\Proj\350176_rdy_psh01A.dgn
11:20:57 AM

12/2/2016

PROJECT REFERENCE NO.	SHEET NO.
17BP.12.R.60	1B

STATE OF NORTH CAROLINA, DIVISION OF HIGHWAYS

CONVENTIONAL PLAN SHEET SYMBOLS

Note: Not to Scale

**S.U.E. = Subsurface Utility Engineering*

BOUNDARIES AND PROPERTY:

- State Line
- County Line
- Township Line
- City Line
- Reservation Line
- Property Line
- Existing Iron Pin — EIP
- Computed Property Corner
- Property Monument — ECM
- Parcel/Sequence Number — 123
- Existing Fence Line
- Proposed Woven Wire Fence
- Proposed Chain Link Fence
- Proposed Barbed Wire Fence
- Existing Wetland Boundary — WLB
- Proposed Wetland Boundary — WLB
- Existing Endangered Animal Boundary — EAB
- Existing Endangered Plant Boundary — EPB
- Existing Historic Property Boundary — HPB
- Known Contamination Area: Soil — S
- Potential Contamination Area: Soil — S
- Known Contamination Area: Water — W
- Potential Contamination Area: Water — W
- Contaminated Site: Known or Potential

BUILDINGS AND OTHER CULTURE:

- Gas Pump Vent or U/G Tank Cap
- Sign — S
- Well — W
- Small Mine
- Foundation
- Area Outline
- Cemetery
- Building
- School
- Church
- Dam

HYDROLOGY:

- Stream or Body of Water
- Hydro, Pool or Reservoir
- Jurisdictional Stream — JS
- Buffer Zone 1 — BZ 1
- Buffer Zone 2 — BZ 2
- Flow Arrow
- Disappearing Stream
- Spring
- Wetland
- Proposed Lateral, Tail, Head Ditch — FLOW
- False Sump

RAILROADS:

- Standard Gauge — CSX TRANSPORTATION
- RR Signal Milepost — MILEPOST 35
- Switch — SWITCH
- RR Abandoned
- RR Dismantled

RIGHT OF WAY & PROJECT CONTROL:

- Secondary Horiz and Vert Control Point
- Primary Horiz Control Point
- Primary Horiz and Vert Control Point
- Exist Permanent Easment Pin and Cap
- New Permanent Easement Pin and Cap
- Vertical Benchmark
- Existing Right of Way Marker
- Existing Right of Way Line
- New Right of Way Line — RW
- New Right of Way Line with Pin and Cap — RW
- New Right of Way Line with Concrete or Granite R/W Marker — RW
- New Control of Access Line with Concrete C/A Marker — CA
- Existing Control of Access — CA
- New Control of Access — CA
- Existing Easement Line — E
- New Temporary Construction Easement — E
- New Temporary Drainage Easement — TDE
- New Permanent Drainage Easement — PDE
- New Permanent Drainage / Utility Easement — DUE
- New Permanent Utility Easement — PUE
- New Temporary Utility Easement — TUE
- New Aerial Utility Easement — AUE

ROADS AND RELATED FEATURES:

- Existing Edge of Pavement
- Existing Curb
- Proposed Slope Stakes Cut — C
- Proposed Slope Stakes Fill — F
- Proposed Curb Ramp — CR
- Existing Metal Guardrail
- Proposed Guardrail
- Existing Cable Guiderail
- Proposed Cable Guiderail
- Equality Symbol
- Pavement Removal

VEGETATION:

- Single Tree
- Single Shrub
- Hedge
- Woods Line
- Orchard
- Vineyard — Vineyard

EXISTING STRUCTURES:

MAJOR:

- Bridge, Tunnel or Box Culvert — CONC
- Bridge Wing Wall, Head Wall and End Wall — CONC WW

MINOR:

- Head and End Wall — CONC HW
- Pipe Culvert
- Footbridge
- Drainage Box: Catch Basin, DI or JB — CB
- Paved Ditch Gutter
- Storm Sewer Manhole — S
- Storm Sewer — S

UTILITIES:

POWER:

- Existing Power Pole
- Proposed Power Pole
- Existing Joint Use Pole
- Proposed Joint Use Pole
- Power Manhole — P
- Power Line Tower
- Power Transformer
- U/G Power Cable Hand Hole
- H-Frame Pole
- U/G Power Line LOS B (S.U.E.*) — P
- U/G Power Line LOS C (S.U.E.*) — P
- U/G Power Line LOS D (S.U.E.*) — P

TELEPHONE:

- Existing Telephone Pole
- Proposed Telephone Pole
- Telephone Manhole — T
- Telephone Pedestal — T
- Telephone Cell Tower
- U/G Telephone Cable Hand Hole
- U/G Telephone Cable LOS B (S.U.E.*) — T
- U/G Telephone Cable LOS C (S.U.E.*) — T
- U/G Telephone Cable LOS D (S.U.E.*) — T
- U/G Telephone Conduit LOS B (S.U.E.*) — TC
- U/G Telephone Conduit LOS C (S.U.E.*) — TC
- U/G Telephone Conduit LOS D (S.U.E.*) — TC
- U/G Fiber Optics Cable LOS B (S.U.E.*) — T FO
- U/G Fiber Optics Cable LOS C (S.U.E.*) — T FO
- U/G Fiber Optics Cable LOS D (S.U.E.*) — T FO

WATER:

- Water Manhole — W
- Water Meter
- Water Valve
- Water Hydrant
- U/G Water Line LOS B (S.U.E*) — W
- U/G Water Line LOS C (S.U.E*) — W
- U/G Water Line LOS D (S.U.E*) — W
- Above Ground Water Line — A/G Water

TV:

- TV Pedestal — C
- TV Tower
- U/G TV Cable Hand Hole — HH
- U/G TV Cable LOS B (S.U.E.*) — TV
- U/G TV Cable LOS C (S.U.E.*) — TV
- U/G TV Cable LOS D (S.U.E.*) — TV
- U/G Fiber Optic Cable LOS B (S.U.E.*) — TV FO
- U/G Fiber Optic Cable LOS C (S.U.E.*) — TV FO
- U/G Fiber Optic Cable LOS D (S.U.E.*) — TV FO

GAS:

- Gas Valve
- Gas Meter
- U/G Gas Line LOS B (S.U.E.*) — G
- U/G Gas Line LOS C (S.U.E.*) — G
- U/G Gas Line LOS D (S.U.E.*) — G
- Above Ground Gas Line — A/G Gas

SANITARY SEWER:

- Sanitary Sewer Manhole
- Sanitary Sewer Cleanout
- U/G Sanitary Sewer Line — SS
- Above Ground Sanitary Sewer — A/G Sanitary Sewer
- SS Forced Main Line LOS B (S.U.E.*) — FSS
- SS Forced Main Line LOS C (S.U.E.*) — FSS
- SS Forced Main Line LOS D (S.U.E.*) — FSS

MISCELLANEOUS:

- Utility Pole
- Utility Pole with Base
- Utility Located Object
- Utility Traffic Signal Box — S
- Utility Unknown U/G Line LOS B (S.U.E.*) — ?UTL
- U/G Tank; Water, Gas, Oil
- Underground Storage Tank, Approx. Loc. — UST
- A/G Tank; Water, Gas, Oil
- Geoenvironmental Boring
- U/G Test Hole LOS A (S.U.E.*)
- Abandoned According to Utility Records — AATUR
- End of Information — E.O.I.

STATE	STATE PROJECT REFERENCE NO.	SHEET NO.	TOTAL SHEETS
N.C.	17BP.12.R.60	RW01	

TIP PROJECT: 17BP.12.R.60

CONTRACT: DL00135

See Sheet 1-A For Index of Sheets
See Sheet 1-B For Symbology

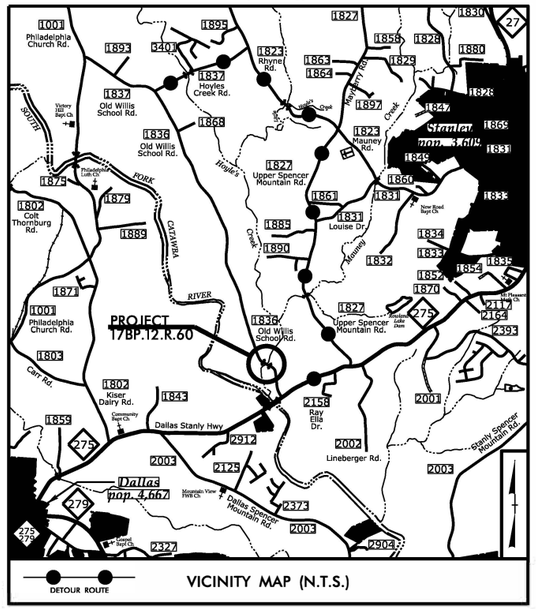

STATE OF NORTH CAROLINA
DIVISION OF HIGHWAYS

SURVEY CONTROL, EXISTING CENTERLINES, RIGHT OF WAY, EASEMENTS AND PROPERTY TIES

GASTON COUNTY

LOCATION: REPLACE BRIDGE 176 OVER HOYLE'S CREEK ON SR 1836 (OLD WILLIS SCHOOL RD.)

TYPE OF WORK: GRADING, DRAINAGE, PAVING AND STRUCTURE

4

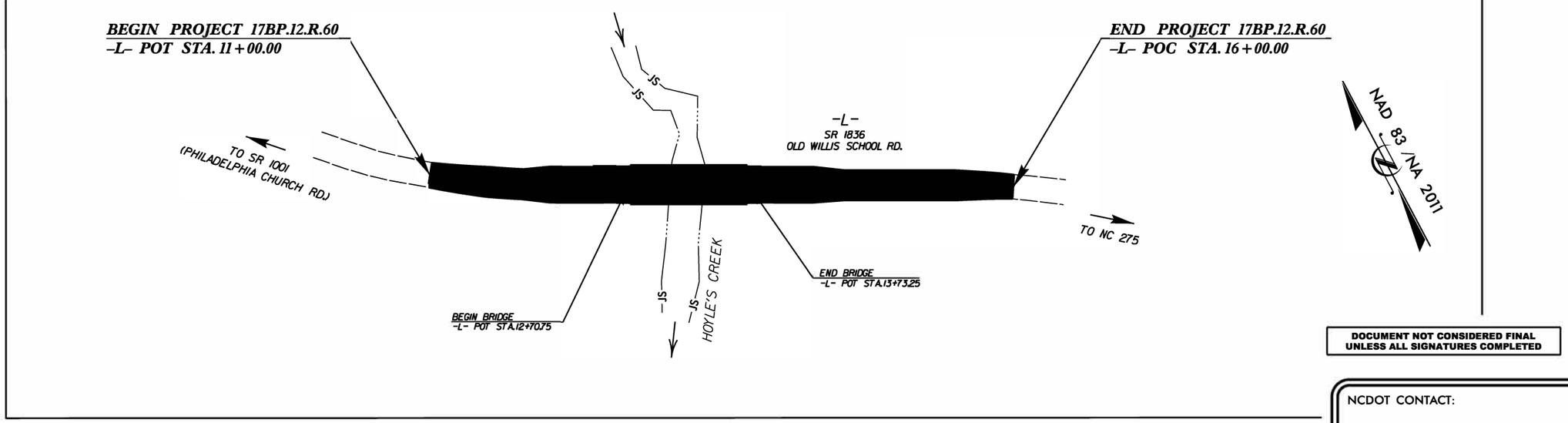

DOCUMENT NOT CONSIDERED FINAL UNLESS ALL SIGNATURES COMPLETED

NCDOT CONTACT:

STEVEN RACKLEY, PE
DIVISION BRIDGE PROGRAM MANAGER
(980) 552-4216

GRAPHIC SCALE

50 25 0 50 100
PLANS

DATUM DESCRIPTION

THE LOCALIZED COORDINATE SYSTEM DEVELOPED FOR THIS PROJECT IS BASED ON THE STATE PLANE COORDINATES ESTABLISHED BY NCDOT FOR MONUMENT "GPS 176-1"
WITH NAD 83/NSRS 2011 STATE PLANE GRID COORDINATES OF
NORTHING: 583,823.741(ft) EASTING: 1,363,446.195(ft)
ELEVATION: 652.80(ft)
THE AVERAGE COMBINED GRID FACTOR USED ON THIS PROJECT (GROUND TO GRID) IS: 0.99984643
THE N.C. LAMBERT GRID BEARING AND LOCALIZED HORIZONTAL GROUND DISTANCE FROM "GPS 176-1" TO -L- STATION 10+00.00 IS
N 20^ 05' 45.92" W 53.967(ft)
ALL LINEAR DIMENSIONS ARE LOCALIZED HORIZONTAL DISTANCES
VERTICAL DATUM USED IS NAVD 88

Prepared In the Office of:

2018 STANDARD SPECIFICATIONS

RIGHT OF WAY DATE:	*LETTING DATE:*
OCTOBER 24, 2016	SEPTEMBER 14, 2021

PROFESSIONAL LAND SURVEYOR

SIGNATURE: *Date:*

STATE OF NORTH CAROLINA DEPARTMENT OF TRANSPORTATION

10/29/18

24-AUG-2021 10:07
C:\Users\gbritton\Desktop\DL00135 WILLIS SCH RD BRDG\Plan Sheets\Survey Control Sheet\350176_ls_rw01.dgn
gbritton AT DIV12-311658

PROJECT REFERENCE NO.	SHEET NO.
17BP.12.R.60	RW02C-1
Location and Surveys	

SURVEY CONTROL SHEET

W/ EXISTING CENTERLINE ALIGNMENTS PRIOR TO CONSTRUCTION

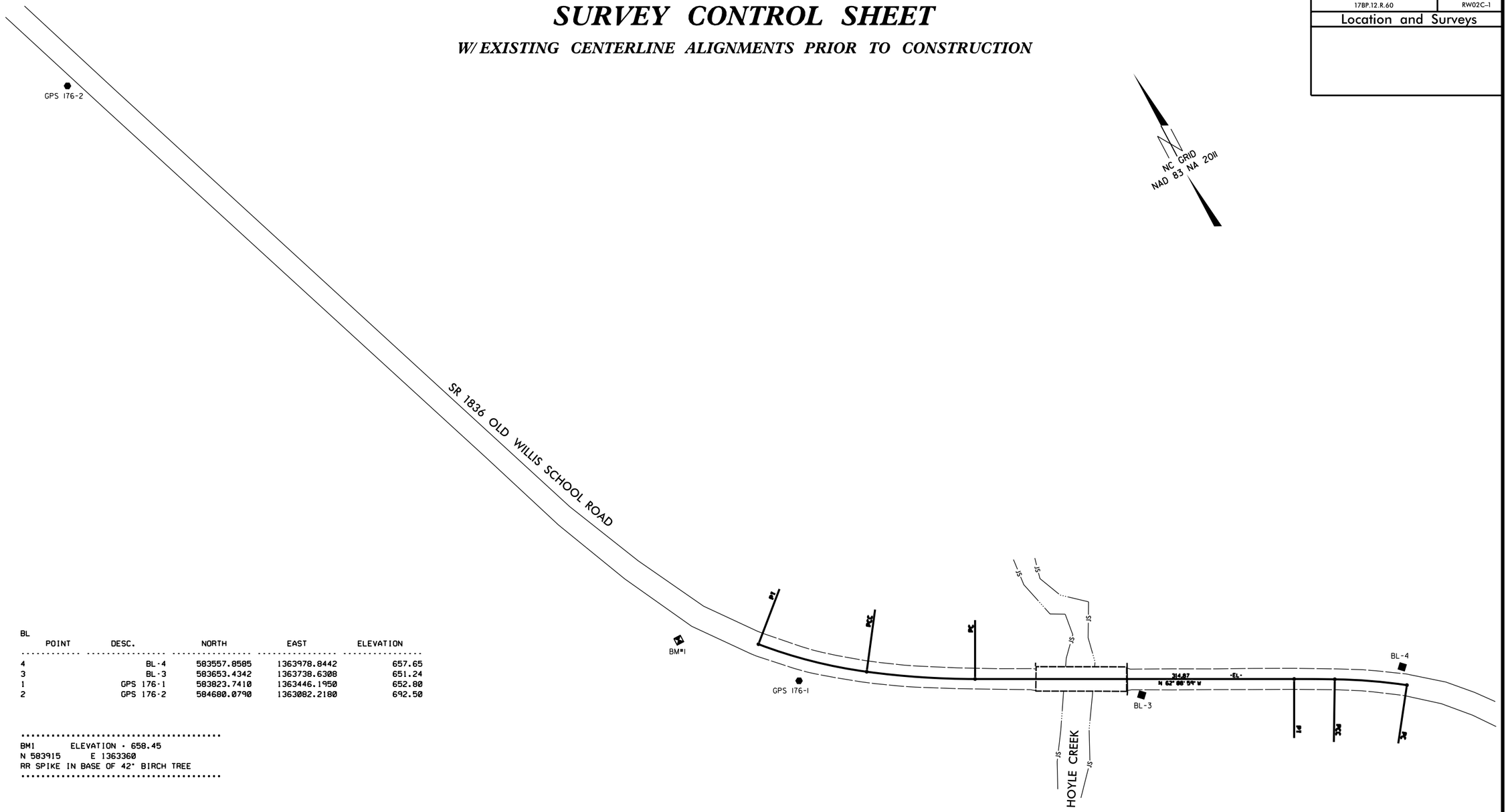

BL

POINT	DESC.	NORTH	EAST	ELEVATION
4	BL-4	583557.8585	1363978.8442	657.65
3	BL-3	583653.4342	1363738.6308	651.24
1	GPS 176-1	583823.7410	1363446.1950	652.80
2	GPS 176-2	584680.0790	1363082.2180	692.50

BM1 ELEVATION - 658.45
N 583915 E 1363360
RR SPIKE IN BASE OF 42" BIRCH TREE

EL

POINT	N	E	BEARING	DIST	DELTA	D	L	T	R
PC	583539.772	1363974.520							
CURVE			N 57°31'04.3" W	71.40	07°34'53.1"(LT)	10°36'37.2"	71.45	35.78	540.00
PCC	583578.117	1363914.289							
CURVE			N 61°43'45.1" W	40.08	00°50'28.5"(LT)	02°05'55.5"	40.08	20.04	2730.00
PT	583597.102	1363878.987							
LINE			N 62°08'59.4" W	314.87					
PC	583744.196	1363600.591							
CURVE			N 58°18'31.8" W	107.18	07°40'55.1"(RT)	07°09'43.1"	107.26	53.71	800.00
PCC	583800.502	1363509.392							
CURVE			N 47°52'33.0" W	110.21	13°11'02.5"(RT)	11°56'11.8"	110.45	55.47	480.00
PT	583874.422	1363427.652							

NOTES:

1. PROJECT CONTROL WAS ESTABLISHED USING GNSS, THE GLOBAL NAVIGATION SATELLITE SYSTEM.
2. THE SURVEY CONTROL DATA FOR THIS PROJECT HAS BEEN COMPILED FROM VARIOUS SOURCES. IF FURTHER INFORMATION REGARDING PROJECT CONTROL IS NEEDED, PLEASE CONTACT THE LOCATION AND SURVEYS UNIT.

REVISIONS

10/29/

24-AUG-2021 10:11
C:\Users\gbritton\Desktop\DL00135 WILLIS SCH RD BRDG\Plan Sheets\Survey Control Sheet\350176.ls.rw02c-1.dgn
gbritton A1 DIV12-31-1998

PROPOSED ALIGNMENT CONTROL SHEET

PROJECT REFERENCE NO.	SHEET NO.
17BP.12.R.60	RW02D-1
Location and Surveys	

L

TYPE	STATION	NORTH	EAST
PC	10+00.00	583874.4221	1363427.6523
PCC	11+10.45	583800.5021	1363509.3918
PT	12+17.71	583744.1959	1363600.5908
PC	15+32.58	583597.1023	1363878.9875
PCC	15+72.66	583578.1174	1363914.2893
PT	16+44.11	583539.7724	1363974.5203

NOTES:

1. PROJECT CONTROL WAS ESTABLISHED USING GNSS, THE GLOBAL NAVIGATION SATELLITE SYSTEM.

2. THE PROPOSED ALIGNMENT CONTROL DATA FOR THIS PROJECT HAS BEEN COMPILED FROM VARIOUS SOURCES. IF FURTHER INFORMATINO REGARDING PROJECT CONTROL IS NEEDED, PLEASE CONTACT THE LOCATION AND SURVEYS UNIT.

REVISIONS

RIGHT OF WAY CONTROL SHEET

PROJECT REFERENCE NO.	SHEET NO.
17BP.12.R.60	RW03E-1

ENTER CONSULTANT'S NAME
IN THIS BOX

PROJECT SURVEYOR

DOCUMENT NOT CONSIDERED FINAL UNLESS ALL SIGNATURES COMPLETED

ROW MARKER IRON PIN AND CAP

ALIGN	STATION	OFFSET	NORTH	EAST
L	10+75.00	-15.00	583833.6808	1363490.9238
L	10+75.00	-30.00	583845.2111	1363500.5182
L	10+75.00	15.00	583810.6201	1363471.7351
L	10+75.00	30.00	583799.0898	1363462.1408
L	11+10.45	-30.00	583824.9158	1363526.8266
L	11+10.45	30.00	583776.0884	1363491.9571
L	12+17.71	-30.00	583770.7211	1363614.6056
L	12+17.71	30.00	583717.6707	1363586.5759
L	15+32.58	30.00	583570.5771	1363864.9727
L	15+32.58	-30.00	583623.6274	1363893.0023
L	15+72.66	30.00	583551.8008	1363899.8866
L	15+72.66	-30.00	583604.4339	1363928.6921
L	16+25.00	-30.00	583575.6053	1363975.7950
L	16+25.00	-15.00	583563.2057	1363967.3541
L	16+25.00	15.00	583538.4064	1363950.4722
L	16+25.00	30.00	583526.0068	1363942.0313

PERMANENT EASEMENT MARKER IRON PIN AND CAP

ALIGN	STATION	OFFSET	NORTH	EAST
L	12+17.71	-45.00	583783.9836	1363621.6130
L	12+25.00	-72.00	583804.4511	1363640.6712
L	14+00.00	-45.00	583698.8253	1363782.7879
L	16+25.00	-47.00	583589.6582	1363985.3614

I, SURVEYOR'S NAME HERE, a Professional Land Surveyor in the state of North Carolina hereby certify to the best of my knowledge and belief that the following work item(s) (R/W Staking) performed under my responsible charge meet NCDOT Survey Standards as directed in the NCDOT Location & Surveys guidelines and procedures.

I further certify that the right of way and permanent easement points shown herein and outlined in the tables shown hereon (localized coordinates, station/offset) have been checked and are accurate representations of the right of way and permanent easement points depicted on the corresponding highway plans. I also certify that the right of way and permanent easement points shown herein have been field monumented under my supervision from existing survey control provided by others; that the depicted property data shown herein were surveyed by others; and these monuments denote the right of way and easement boundaries at the time of staking which may be subject to change due to right of way revisions (See deeds for final determination).

Witness my original signature, registration number and seal this **th day of ********, 2018.

---------- L-****
Professional Land Surveyor PLS * Seal

NOTES:

1. IF FURTHER INFORMATION REGARDING PROJECT CONTROL IS NEEDED, PLEASE CONTACT THE LOCATION AND SURVEYS UNIT.

2. PROJECT CONTROL WAS ESTABLISHED USING GNSS, THE GLOBAL NAVIGATION SATELLITE SYSTEM.

REVISIONS

PROJECT REFERENCE NO.	SHEET NO.
17BP.12.R.60	RW-4

Location and Surveys

INSERT CONSULTANT'S NAME

PROJECT SURVEYOR

DOCUMENT NOT CONSIDERED FINAL UNLESS ALL SIGNATURES COMPLETED

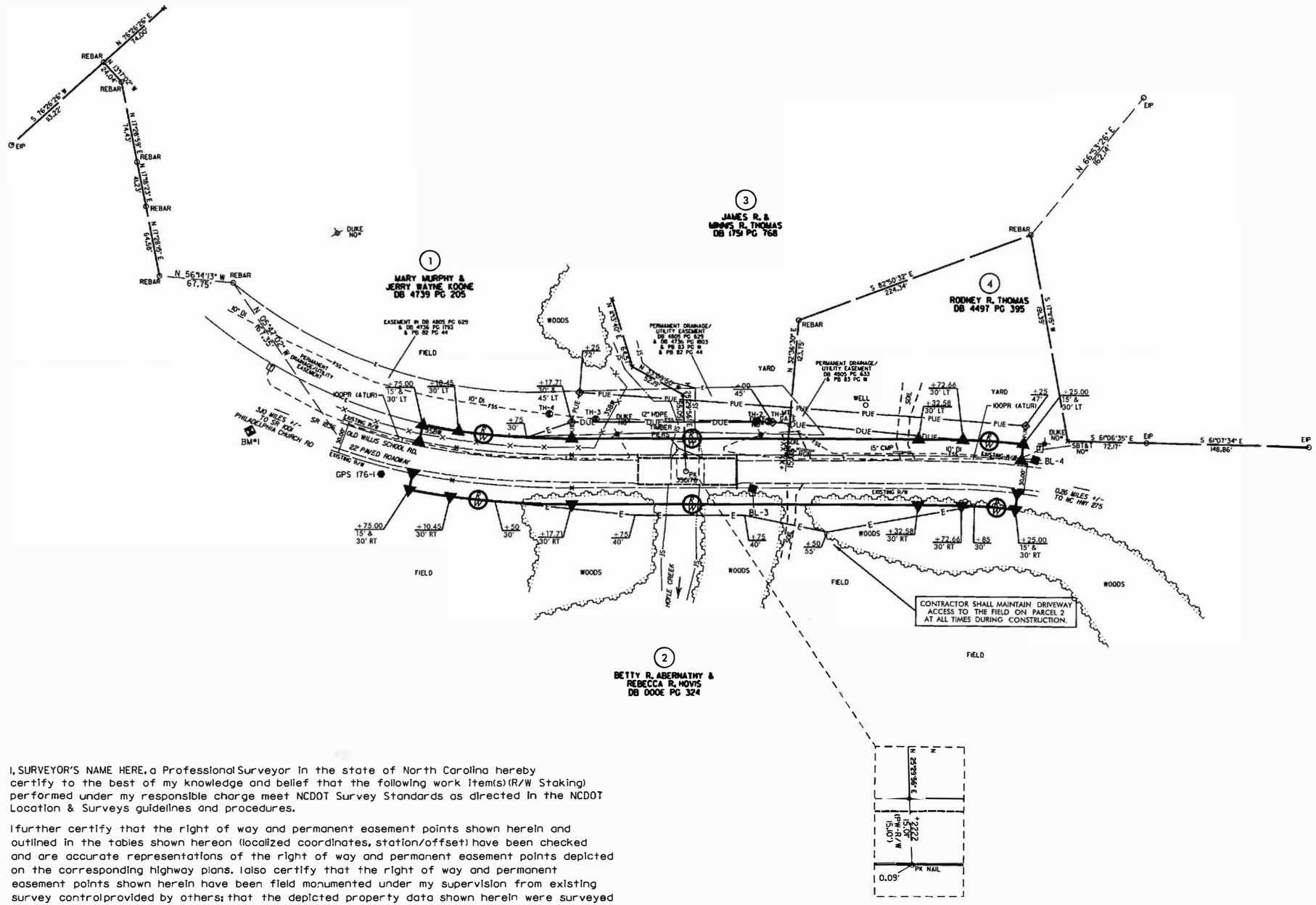

I, SURVEYOR'S NAME HERE, a Professional Surveyor in the state of North Carolina hereby certify to the best of my knowledge and belief that the following work item(s) (R/W Staking) performed under my responsible charge meet NCDOT Survey Standards as directed in the NCDOT Location & Surveys guidelines and procedures.

I further certify that the right of way and permanent easement points shown herein and outlined in the tables shown hereon (localized coordinates, station/offset) have been checked and are accurate representations of the right of way and permanent easement points depicted on the corresponding highway plans. I also certify that the right of way and permanent easement points shown herein have been field monumented under my supervision from existing survey control provided by others; that the depicted property data shown herein were surveyed by others; and these monuments denote the right of way and easement boundaries at the time of staking which may be subject to change due to right of way revisions (See deeds for final determination).

Witness my original signature, registration number and seal this **th day of *******, 2018.

Professional Land Surveyor

L-****
PLS *

Seal

NOTES:

1. IF FURTHER INFORMATION REGARDING PROJECT CONTROL IS NEEDED, PLEASE CONTACT THE LOCATION AND SURVEYS UNIT.

2. PROJECT CONTROL WAS ESTABLISHED USING GNSS, THE GLOBAL NAVIGATION SATELLITE SYSTEM.

REVISIONS

R/W REVISION 02/16/2018 RWP PARCEL 4 PROPERTY LINES REVISED. ENTIRE PROPERTY SHIFTED APPROX. 72' TO THE NORTHWEST. R/W AND EASEMENT AREAS REVISED ON PARCELS 3 & 4.
R/W REVISION 08/11/2017 RWP ADDED NOTE ON PLANS STATING TO MAINTAIN DRIVEWAY ACCESS ON PARCEL #2 AT ALL TIMES DURING CONSTRUCTION.

10/29/18

29-OCT-2018 16:12
C:\Users\srecklen\AppData\Local\Packages\Microsoft.MicrosoftEdge_8wekyb3d8bbwe\TempState\Downloads\350176_ls_rw04.dgn

PROJECT REFERENCE NO.	SHEET NO.
17BPJ2.R.60	2A-1
R/W SHEET NO.	

ROADWAY DESIGN ENGINEER

NORTH CAROLINA PROFESSIONAL SEAL 39283 ENGINEER
8/17/2020

PAVEMENT DESIGN ENGINEER

PAVEMENT DESIGN PROVIDED BY NCDOT

DOCUMENT NOT CONSIDERED FINAL UNLESS ALL SIGNATURES COMPLETED

Weston & Sampson
WSE of North Carolina, PC
598 East Chatham Street Suite 137
Phone: 919.297.0220
NC License: C-4847
Cary, NC 27511
Fax: 919.297.0221

PAVEMENT SCHEDULE

C1	PROP. APPROX. 1.5" ASPHALT CONCRETE SURFACE COURSE, TYPE S9.5C, AT AN AVERAGE RATE OF 168 Lbs PER SQUARE YARD.
C2	PROP. VAR. DEPTH ASPHALT CONCRETE SURFACE COURSE, TYPE S9.5C, AT AN AVERAGE RATE OF 112 LBS. PER SQ. YARD PER 1" DEPTH, TO BE PLACED IN LAYERS NOT LESS THAN 1.5" OR GREATER THAN 2" IN DEPTH.
D1	PROP. APPROX. 4" ASPHALT CONCRETE INTERMEDIATE COURSE, TYPE I19.0C, AT AN AVERAGE RATE OF 456 Lbs PER SQUARE YARD.
D2	PROP. VAR. DEPTH ASPHALT CONCRETE INTERMEDIATE COURSE, TYPE I19.0C, AT AN AVERAGE RATE OF 114 LBS. PER SQ. YARD PER 1" DEPTH TO BE PLACED IN LAYERS NOT LESS THAN 2.5" IN DEPTH OR GREATER THAN 4" IN DEPTH.
E1	PROP. APPROX. 5.5" ASPHALT CONCRETE BASE COURSE, TYPE B25.0C, AT AN AVERAGE RATE OF 627 Lbs PER SQUARE YARD.
E2	PROP. VAR. DEPTH ASPHALT CONCRETE BASE COURSE, TYPE B25.0C, AT AN AVERAGE RATE OF 114 LBS. PER SQ. YARD PER 1" DEPTH TO BE PLACED IN LAYERS NOT LESS THAN 3" IN DEPTH OR GREATER THAN 5.5" IN DEPTH.
R	SHOULDER BERM GUTTER
T	EARTH MATERIAL
U	EXISTING PAVEMENT
W	ASPHALT WEDGING (SEE DETAIL, THIS SHEET)

PAVEMENT EDGE SLOPES AND TRENCH SLOPES ARE 1:1 UNLESS SHOWN OTHERWISE.

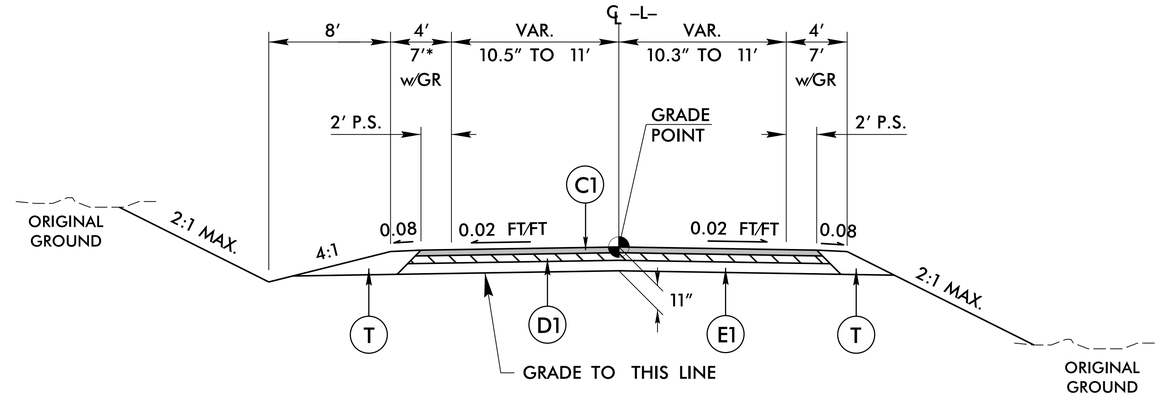

TYPICAL SECTION NO. 1

FROM –L– STA. 11+00.00 TO STA. 12+70.75 (BEGIN BRIDGE)
FROM –L– STA. 13+73.25 (END BRIDGE) TO STA. 14+25.00

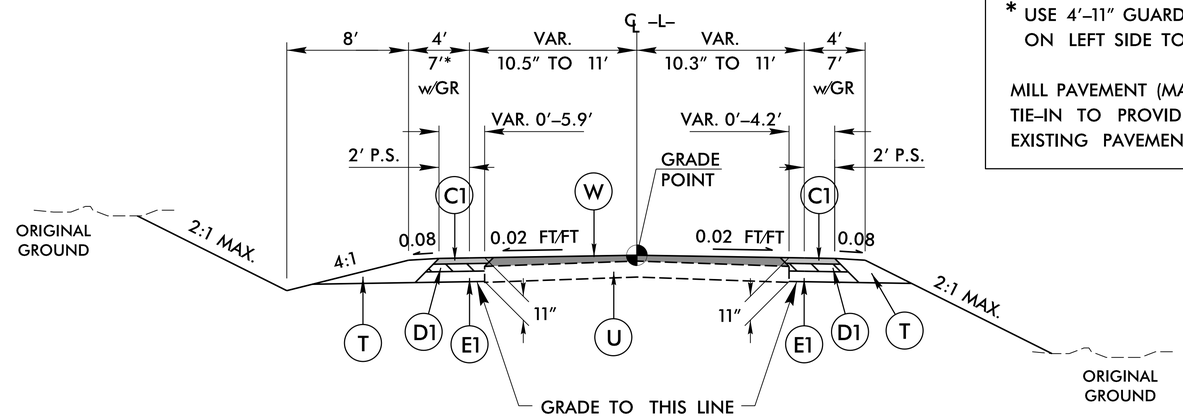

TYPICAL SECTION NO. 2

FROM –L– STA. 14+25.00 TO STA. 16+00.00

NOTES

* USE 4′–11″ GUARDRAIL OFFSET WITH 7′–11″ SHOULDER WIDTH ON LEFT SIDE TO MATCH BRIDGE RAIL OFFSET, SEE PLANS.

MILL PAVEMENT (MAX. 1.5″ DEPTH) AS NECESSARY AT EACH TIE–IN TO PROVIDE A SMOOTH TRANSITION TO THE EXISTING PAVEMENT AS DIRECTED BY THE ENGINEER.

SHOULDER BERM GUTTER DETAIL

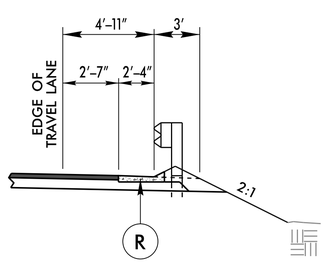

USE SHOULDER BERM GUTTER DETAIL IN CONJUNCTION WITH TYP. SEC. #1

FROM –L– STA. 12+40.00 TO 12+60.00 LT.

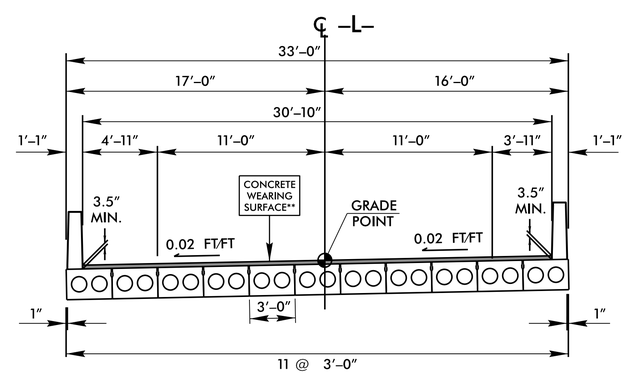

TYPICAL SECTION ON STRUCTURE

FROM –L– STA. 12+72 +/– TO STA. 13+72 +/–

** – STRUCTURE PAY ITEM

8/12/99

8/13/2021
R:\Roadway\Proj\3501176_rdy_typ.dgn
2:14:30 PM

PROJECT REFERENCE NO.	SHEET NO.
17BP.12.R.60	2C-1

DOCUMENT NOT CONSIDERED FINAL UNLESS ALL SIGNATURES COMPLETED

STATE OF NORTH CAROLINA
DEPT. OF TRANSPORTATION
DIVISION OF HIGHWAYS
RALEIGH, N.C.

ROADWAY DETAIL DRAWING FOR
GUARDRAIL INSTALLATION

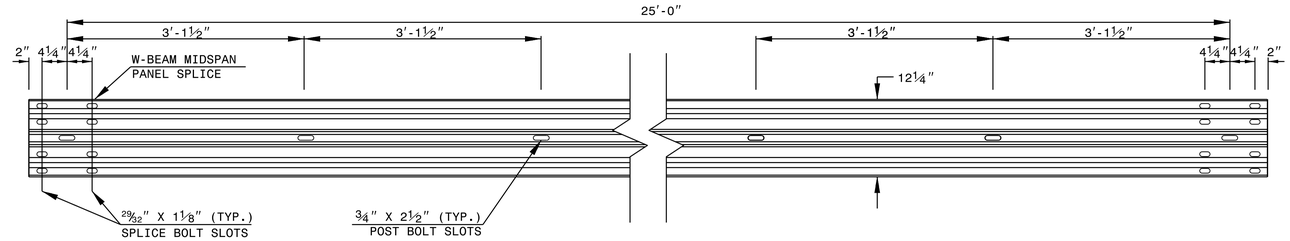

STANDARD W-BEAM GUARDRAIL

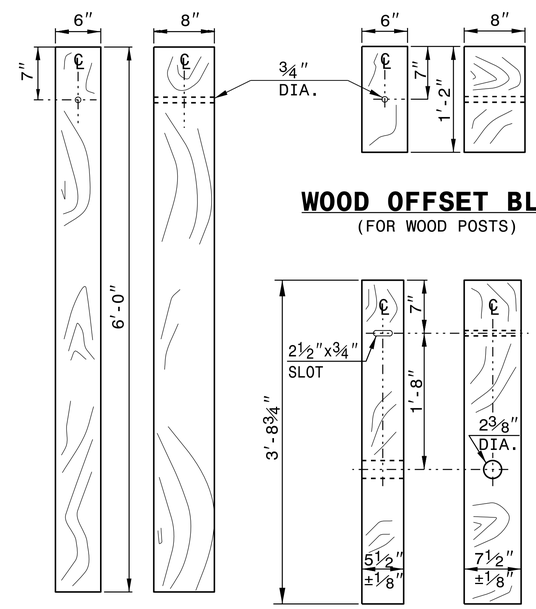

STANDARD LINE POST

WOOD OFFSET BLOCK
(FOR WOOD POSTS)

SHORT WOOD BREAKAWAY POST

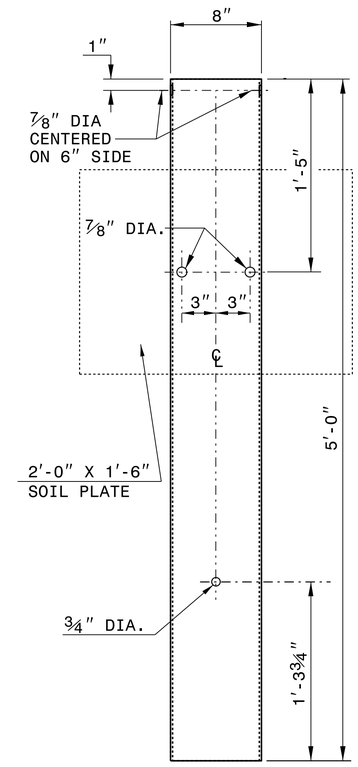

STEEL TUBE
TS 6"x8"x0.1875"

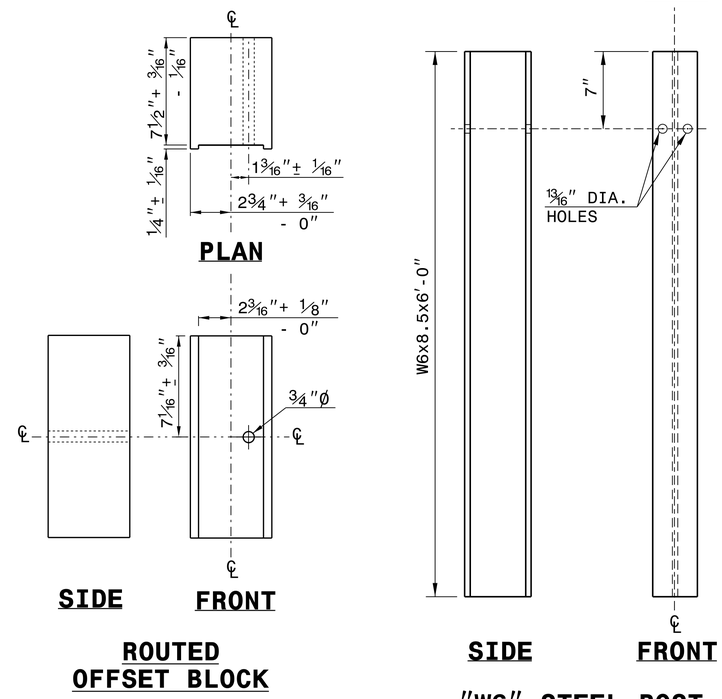

SYSTEM PARTS

SHEET 6 OF 8
862D02

STATE OF NORTH CAROLINA
DEPT. OF TRANSPORTATION
DIVISION OF HIGHWAYS
RALEIGH, N.C.

ROADWAY DETAIL DRAWING FOR
GUARDRAIL INSTALLATION

SHEET 6 OF 8
862D02

NORTH CAROLINA PROFESSIONAL SEAL 022966 ENGINEER
DocuSigned by: JOHN C. HOWERTON
8/17/2018

CONTRACTS STANDARDS AND DEVELOPMENT UNIT
Office 919-707-6950 FAX 919-250-4119

SEE TITLE BLOCK

ORIGINAL BY: J.HOWERTON DATE: 3-7-2018
MODIFIED BY: DATE:
CHECKED BY: DATE:
FILE SPEC.:

STATE OF NORTH CAROLINA
DEPT. OF TRANSPORTATION
DIVISION OF HIGHWAYS
RALEIGH, N.C.

ROADWAY DETAIL DRAWING FOR
STRUCTURE ANCHOR UNITS
GUARDRAIL ANCHOR UNIT, TYPE III
FOR ATTACHMENT TO RAIL ON BRIDGE

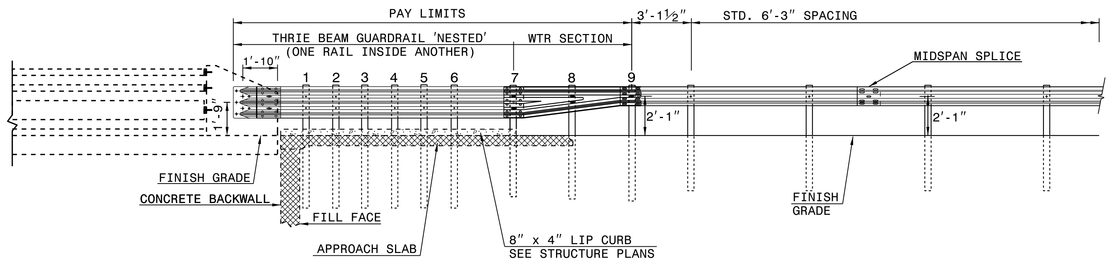

ELEVATION

NOTE:
**POST NOT REQUIRED FOR SKEW ANGLES GREATER THAN 150° OR LESS THAN 30° UNLESS OTHERWISE DIRECTED BY THE ENGINEER.
*THE DISTANCE FROM END OF BRIDGE RAIL TO CENTER LINE OF THE FIRST POST SHOULD BE 11½" IF CONCRETE BACKWALL IS NOT PRESENT.
-SHOULDER BERM GUTTER MUST BE INSTALLED TO THE LIMITS 8" x 4" LIP CURB IS SHOWN IF ANCHOR UNIT IS NOT ADJACENT TO AN APPROACH SLAB.
-MEASURE GUARDRAIL HEIGHT FROM THE TOP OF ADJACENT SURFACE (SHOULDER, BERM, OR GUTTER).
-LAP JOINTS IN THE DIRECTION OF TRAFFIC FLOW.
-SEE SHEET 3 FOR POST SECTIONS 1 THRU 9.

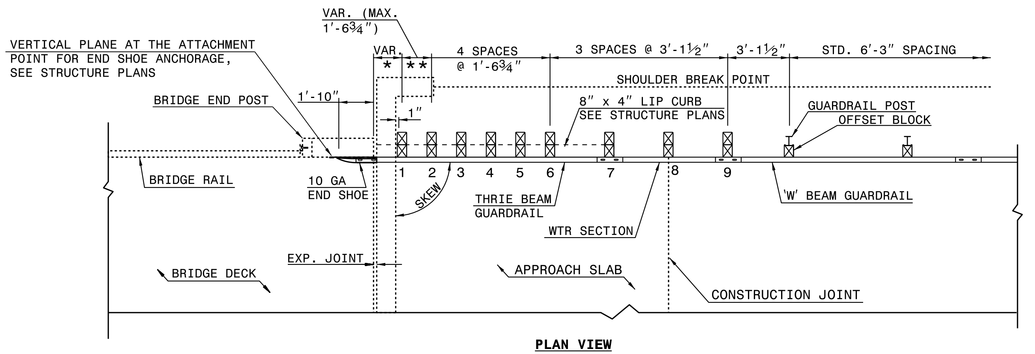

PLAN VIEW

GUARDRAIL ANCHOR UNIT, TYPE III FOR ATTACHMENT TO RAIL ON BRIDGE

SHEET 1 OF 7
862D03

STATE OF NORTH CAROLINA
DEPT. OF TRANSPORTATION
DIVISION OF HIGHWAYS
RALEIGH, N.C.

ROADWAY DETAIL DRAWING FOR
STRUCTURE ANCHOR UNITS
GUARDRAIL ANCHOR UNIT, TYPE III
FOR ATTACHMENT TO RAIL ON BRIDGE

SHEET 1 OF 7
862D03

STATE OF NORTH CAROLINA
DEPT. OF TRANSPORTATION
DIVISION OF HIGHWAYS
RALEIGH, N.C.

ROADWAY DETAIL DRAWING FOR
STRUCTURE ANCHOR UNITS
GUARDRAIL ANCHOR UNIT, TYPE III FOR ATTACHMENT TO
RAIL ON BRIDGE - SUB REGIONAL TIER

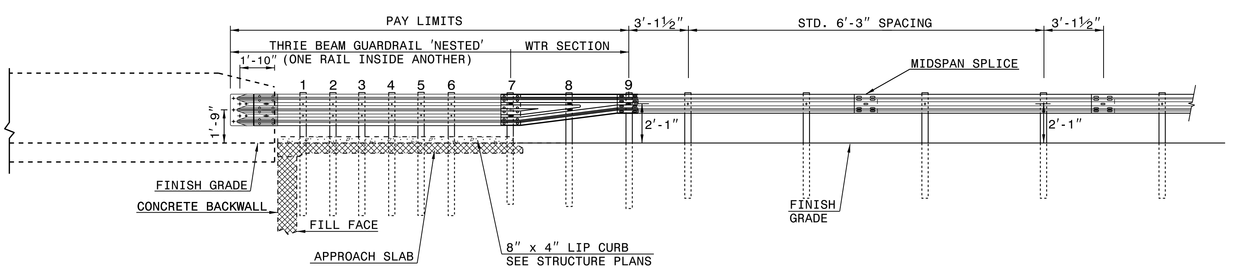

ELEVATION

NOTE:
**POST NOT REQUIRED FOR SKEW ANGLES GREATER THAN 150° OR LESS THAN 30° UNLESS OTHERWISE DIRECTED BY THE ENGINEER.
*THE DISTANCE FROM END OF BRIDGE RAIL TO CENTER LINE OF THE FIRST POST SHOULD BE 11½" IF CONCRETE BACKWALL IS NOT PRESENT.
-SHOULDER BERM GUTTER MUST BE INSTALLED TO THE LIMITS 8" x 4" LIP CURB IS SHOWN IF ANCHOR UNIT IS NOT ADJACENT TO AN APPROACH SLAB.
-MEASURE GUARDRAIL HEIGHT FROM THE TOP OF ADJACENT SURFACE (SHOULDER, BERM, OR GUTTER).
-LAP JOINTS IN THE DIRECTION OF TRAFFIC FLOW.
-SEE SHEET 3 FOR POST SECTIONS 1 THRU 9.

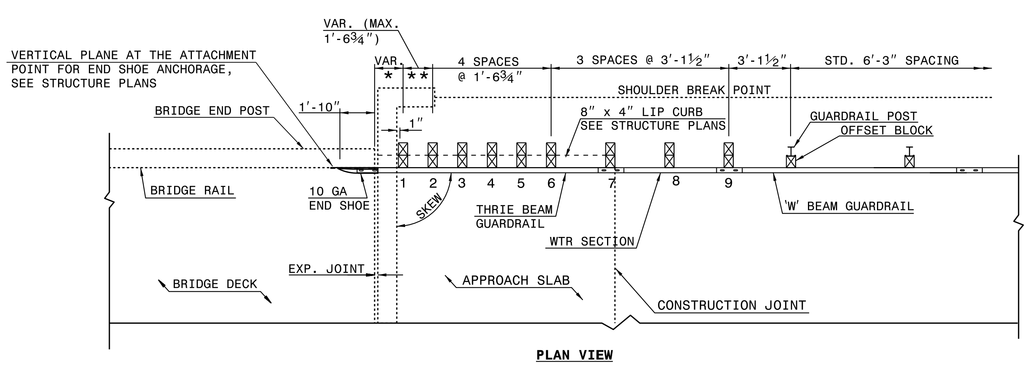

PLAN VIEW

GUARDRAIL ANCHOR UNIT, TYPE III FOR ATTACHMENT TO RAIL ON BRIDGE - SUB REGIONAL TIER

SHEET 2 OF 7
862D03

STATE OF NORTH CAROLINA
DEPT. OF TRANSPORTATION
DIVISION OF HIGHWAYS
RALEIGH, N.C.

ROADWAY DETAIL DRAWING FOR
STRUCTURE ANCHOR UNITS
GUARDRAIL ANCHOR UNIT, TYPE III FOR ATTACHMENT TO
RAIL ON BRIDGE - SUB REGIONAL TIER

SHEET 2 OF 7
862D03

SEE TITLE BLOCK

ORIGINAL BY: J. HOWERTON DATE: 06-22-12
MODIFIED BY: DATE:
CHECKED BY: DATE:
FILE SPEC.:

CONTRACT STANDARDS AND DEVELOPMENT UNIT
Office 919-707-6950 FAX 919-250-4119

DOCUMENT NOT CONSIDERED FINAL UNLESS ALL SIGNATURES COMPLETED

NORTH CAROLINA PROFESSIONAL ENGINEER SEAL 022966

PROJECT REFERENCE NO. 17BP.12.R.60
SHEET NO. 2C-2

COMPUTED BY: RWP	DATE: 8-17-2016
CHECKED BY: KSH	DATE: 1-22-2020

STATE OF NORTH CAROLINA
DIVISION OF HIGHWAYS

PROJECT REFERENCE NO.	SHEET NO.
17BP.12.R.60	3B-1

Weston & Sampson℠
WSE of North Carolina, PC
598 East Chatham Street Suite 137
Cary, NC 27511
Phone: 919.297.0220
Fax: 919.297.0221
NC License: C-4647

SUMMARY OF EARTHWORK

IN CUBIC YARDS

LOCATION	UNCLASSIFIED EXCAVATION	UNDERCUT	EMBT+%	BORROW	WASTE
-L- 11+00.00 TO 12+70.75 (BEGIN BRIDGE)	148		31		117
-L- 13+84.13 (END BRIDGE) TO 16+00.00	221		99		122
TOTAL	369		130		239
ESTIMATED LOSS DUE TO CLEARING AND GRUBBING	-10				-10
PROJECT TOTAL	359		130		229
GRAND TOTAL	359		130		229
SAY	400				
SHOULDER BORROW = 80 CY					
DRAINAGE DITCH EXCAVATION = 75 CY					
THE FOLLOWING CONTINGENCY ITEMS ARE TO BE USED AT THE DISCRETION OF THE ENGINEER:					
UNDERCUT = 50 CY					
SELECT GRANULAR MATERIAL = 50 CY					
GEOTEXTILE FOR SOIL STABILIZATION = 50 SY					

APPROXIMATE QUANTITIES ONLY. CLEARING AND GRUBBING, UNCLASSIFIED EXCAVATION, BORROW EXCAVATION, FINE GRADING, AND REMOVAL OF EXISTING PAVEMENT WILL BE PAID FOR AT THE CONTRACT LUMP SUM PRICE FOR "GRADING".

SUMMARY OF PAVEMENT REMOVAL

IN SQUARE YARDS

LOCATION	ASPHALT REMOVAL	ASPHALT BREAK-UP	CONCRETE REMOVAL	CONCRETE BREAK-UP
-L- STA. 11+00 TO 12+78 CL	410			
-L- STA. 13+67 TO 14+25 CL	133			
TOTAL	543			
SAY	550			

NOTE: Invert Elevations are for Bid Purposes only and shall not be used for project construction stakeout. See "Standard Specifications For Roads and Structures, Section 300-5".

SUB-REGIONAL & REGIONAL
LIST OF PIPES, ENDWALLS, ETC. (FOR PIPES 48" & UNDER)

STATION	LOCATION (LT,RT, OR CL)	STRUCTURE NO.		TOP ELEVATION	INVERT ELEVATION	INVERT ELEVATION	SLOPE CRITICAL	DRAINAGE PIPE (RCP, CSP, CAAP, HDPE, or PVC)												C.S. PIPE							R.C. PIPE, CLASS III (UNLESS OTHERWISE NOTED)									
SIZE								12"	15"	18"	24"	30"	36"	42"	48"	DO NOT USE RCP	DO NOT USE CSP	DO NOT USE CAAP	DO NOT USE HDPE	12"	15"	18"	24"	36"	42"	48"	15"	18"	24"	30"	36"	42"	48"			
THICKNESS OR GAUGE		FROM	TO																	.064	.064	.064	.064	.079	.109	.109										
-L- 12+45	LT	0401		651.6	647.1																															
		0401	0402		647.1	642.4			24							X																				
-L- 14+48	LT	0403																																		
-L- 15+18	LT	0404																																		
TOTAL									24																											

STATION	**" R. C. PIPE CULVERTS, CONTRACTOR DESIGN PIPE		15" SIDE DRAIN PIPE	18" SIDE DRAIN PIPE	24" SIDE DRAIN PIPE	ENDWALLS STD. 838.01, STD. 838.11 OR STD. 838.80 (UNLESS NOTED OTHERWISE) CU. YDS.		QUANTITIES FOR DRAINAGE STRUCTURES * TOTAL L.F. FOR PAY QUANTITY SHALL BE COL. 'A' + (1.3 X COL.'B')			C.B. STD. 840.01 OR STD. 840.02	FRAME, GRATES AND HOOD STANDARD 840.03 TYPE OF GRATE				CONCRETE TRANSITIONAL SECTION		D.I. STD. 840.14 OR STD. 840.15	D.I. FRAME & GRATE STD. 840.16	G.D.I. TYPE "A" STD. 840.17 OR 840.26	G.D.I. TYPE "B" STD. 840.18 OR 840.27	G.D.I. TYPE "D" STD. 840.19 OR 840.28	T.B.D.I. STD. 840.35	J.B. STD. 840.31 OR 840.32		G.D.I. (N.S.) FRAME WITH GRATE STD. 840.24	G.D.I. (N.S.) FRAME WITH TWO GRATES STD. 840.24	G.D.I. (N.S.) FRAME WITH TWO GRATES STD. 840.29	M.H. FRAME & COVER STD. 840.54						CORR. STEEL ELBOWS NO. & SIZE	CONC. COLLARS CL. "B" C.Y. STD 840.72	CONC. & BRICK PIPE PLUG, C.Y. STD. 840.71	PIPE REMOVAL LIN.FT.	REMARKS
						R.C.P.	C.S.P.	PER EACH (0' THRU 5.0')	LIN. *FT. A 5.0' THRU 10.0'	LIN. *FT. B 10.0' AND ABOVE		E	F	G		CATCH BASIN	DROP INLET																						
-L- 12+45								1															1					1											
-L- 14+48			32																																			28	
-L- 15+18			32																																			19	
TOTAL			64					1															1					1										47	

ABBREVIATIONS

C.B.	CATCH BASIN
N.D.I.	NARROW DROP INLET
D.I.	DROP INLET
G.D.I.	GRATED DROP INLET
G.D.I. (N.S.)	GRATED DROP INLET (NARROW SLOT)
J.B.	JUNCTION BOX
M.H.	MANHOLE
T.B.D.I.	TRAFFIC BEARING DROP INLET
T.B.J.B.	TRAFFIC BEARING JUNCTION BOX

"N" = DISTANCE FROM EDGE OF LANE TO FACE OF GUARDRAIL.
TOTAL SHOULDER WIDTH = DISTANCE FROM EDGE OF TRAVEL LANE TO SHOULDER BREAK POINT.
FLARE LENGTH = DISTANCE FROM LAST SECTION OF PARALLEL GUARDRAIL TO END OF GUARDRAIL.

GUARDRAIL SUMMARY

W = TOTAL WIDTH OF FLARE FROM BEGINNING OF TAPER TO END OF GUARDRAIL.
G = GATING IMPACT ATTENUATOR TYPE 350
NG = NON-GATING IMPACT ATTENUATOR TYPE 350

SURVEY LINE	BEG. STA.	END STA.	LOCATION	LENGTH			WARRANT POINT		"N" DIST. FROM E.O.L.	TOTAL SHOUL. WIDTH	FLARE LENGTH		W		ANCHORS									IMPACT ATTENUATOR TYPE 350			SINGLE FACED GUARDRAIL	REMOVE EXISTING GUARDRAIL	REMOVE AND STOCKPILE EXISTING GUARDRAIL	REMARKS
				STRAIGHT	SHOP CURVED	DOUBLE FACED	APPROACH END	TRAILING END			APPROACH END	TRAILING END	APPROACH END	TRAILING END				GREU TL-2		TYPE III				EA	G	NG				
-L-	12+02	12+72	LT	68.75				12+72	4.92'	7.92'		25'		1'				1		1										
-L-	12+03	12+72	RT	68.75			12+72		4'	7'	25'		1'					1		1										
-L-	13+72	14+29	LT	56.25			13+72		4.92'	7.92'	25'		1'					1		1										
-L-	13+72	14+29	RT	56.25				13+72	4'	7'		25'		1'				1		1										
TOTAL (LF):				250.00									TOTAL (EA)					4		4										
TOTAL DEDUCTION FOR ANCHOR UNITS (LF):				175.00									DEDUCTION PER TYPE (LF)					25.00		18.75										
TOTAL GUARDRAIL LENGTH (LF):				75.00									TOTAL DEDUCTION PER TYPE (LF)					100.00		75.00										
SAY (LF):				87.5									TOTAL DEDUCTION (LF)		175.00															

4/04/06

8/13/2021
R:\Roadway\Proj\350176_rdy_psh03B-1_sum.dgn
2:16:34 PM

PROJECT REFERENCE NO.	SHEET NO.
17BP.12.R.60	4
R/W SHEET NO.	

ROADWAY DESIGN ENGINEER — NORTH CAROLINA PROFESSIONAL SEAL 39283 — Designed by: STEVEN S. HUTCHINS — 8/19/2024

HYDRAULICS ENGINEER — NORTH CAROLINA PROFESSIONAL SEAL 40801 — Designed by: RYAN CAMERON — 8/24/2024

DOCUMENT NOT CONSIDERED FINAL UNLESS ALL SIGNATURES COMPLETED

Weston & Sampson
WSE of North Carolina, PC
598 East Chatham Street Suite 137
Phone: 919.297.0220
NC License: C-4847
Cary, NC 27511
Fax: 919.297.0221

REVISIONS

8/17/99

DETAIL E1
RIP RAP AT CHANNEL EMBANKMENT
(Not to Scale)

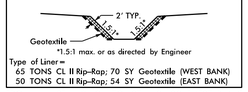

Type of Liner= 65 TONS CL II Rip-Rap; 70 SY Geotextile (WEST BANK)
50 TONS CL II Rip-Rap; 54 SY Geotextile (EAST BANK)

FROM –L– STA. 13+25 TO STA. 13+38 (WEST BANK)
FROM –L– STA. 13+64 TO STA. 13+79 (EAST BANK)

DETAIL LD1
LATERAL 'V' DITCH
(Not to Scale)

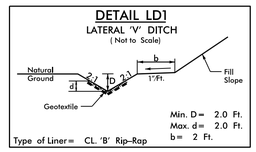

Type of Liner= CL. 'B' Rip-Rap

FROM –L– 13+35 STA. TO 14+25 STA. LT

DETAIL SD1
SPECIAL CUT DITCH
(Not to Scale)

FROM –L– 14+25 STA. TO 16+25 STA. LT

NOTE: SR 1836 IS CURRENTLY POSTED WITH A CAUTIONARY SPEED OF 30 MPH THROUGHOUT THE PROJECT LIMITS.

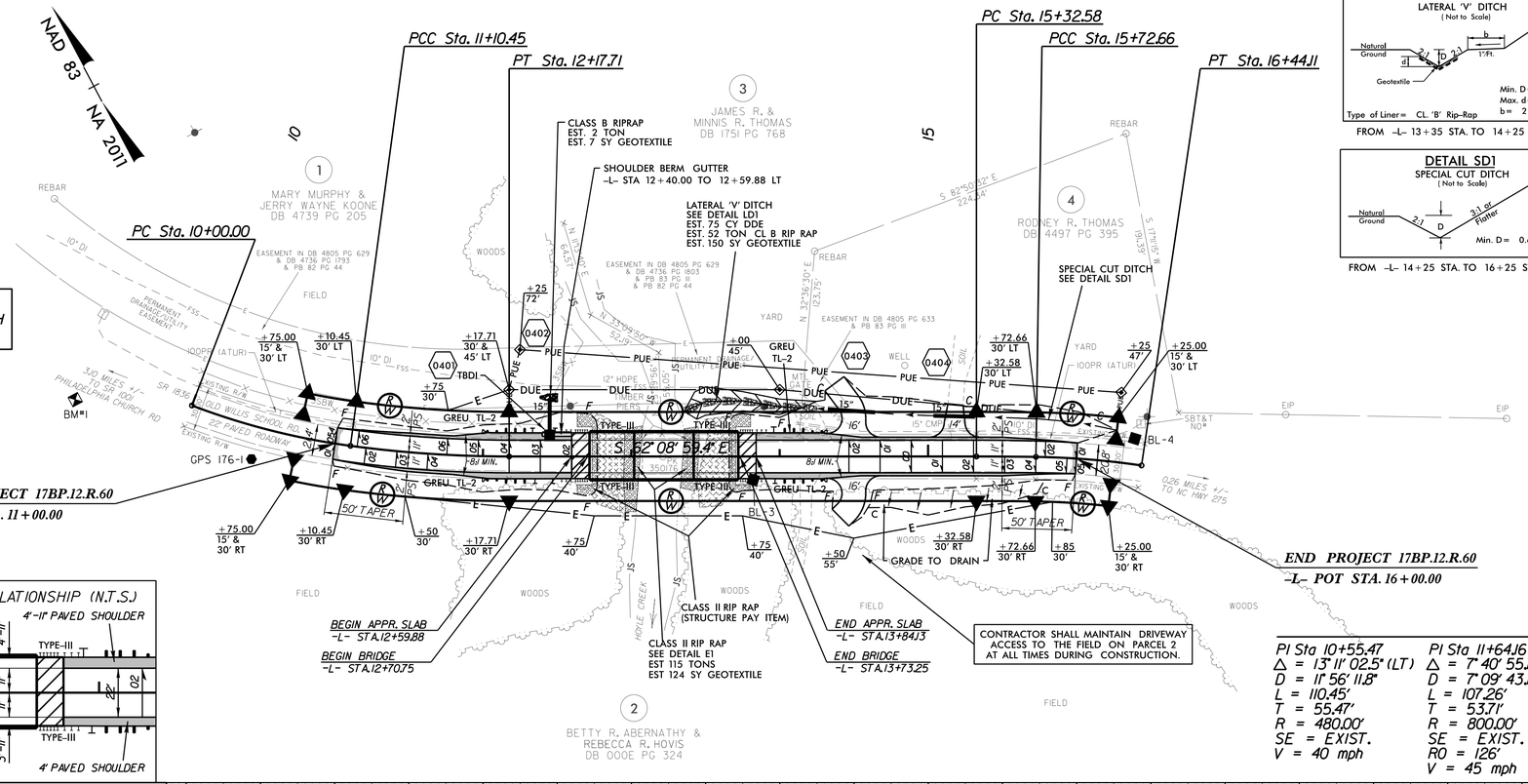

DECK DRAINS REQUIRED

24 @ 8" X 6" SLOTS
–L– 12+77.5 LT & RT
–L– 12+81.2 LT & RT
–L– 12+84.9 LT & RT
–L– 12+81.2 LT & RT
–L– 12+92.3 LT & RT
–L– 12+96.0 LT & RT
–L– 13+48.0 LT & RT
–L– 13+51.7 LT & RT
–L– 13+55.4 LT & RT
–L– 13+59.1 LT & RT
–L– 13+62.8 LT & RT
–L– 13+66.5 LT & RT

SKETCH SHOWING BRIDGE/PAVEMENT RELATIONSHIP (N.T.S.)

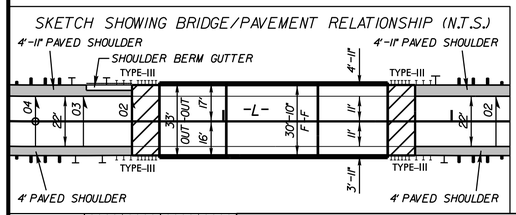

–L–

PI Sta 10+55.47	PI Sta 11+64.16	PI Sta 15+52.62	PI Sta 16+08.44
Δ = 13° 11' 02.5" (LT)	Δ = 7° 40' 55.1" (LT)	Δ = 0° 50' 28.5" (RT)	Δ = 7° 34' 53.1" (RT)
D = 11° 56' 11.8"	D = 7° 09' 43.1"	D = 2° 05' 55.6"	D = 10° 36' 37.2"
L = 110.45'	L = 107.26'	L = 40.08'	L = 71.45'
T = 55.47'	T = 53.71'	T = 20.04'	T = 35.78'
R = 480.00'	R = 800.00'	R = 2,729.97'	R = 540.00'
SE = EXIST.	SE = EXIST.	SE = EXIST.	SE = EXIST.
V = 40 mph	RO = 126' V = 45 mph	V = 35 mph	V = 30 mph

BM #1
RAILROAD SPIKE SET BASE OF 42" BIRCH
N 59° 16' 20.4" W 78.75' FROM –L– STA. 10+00.00
EL. 658.45'

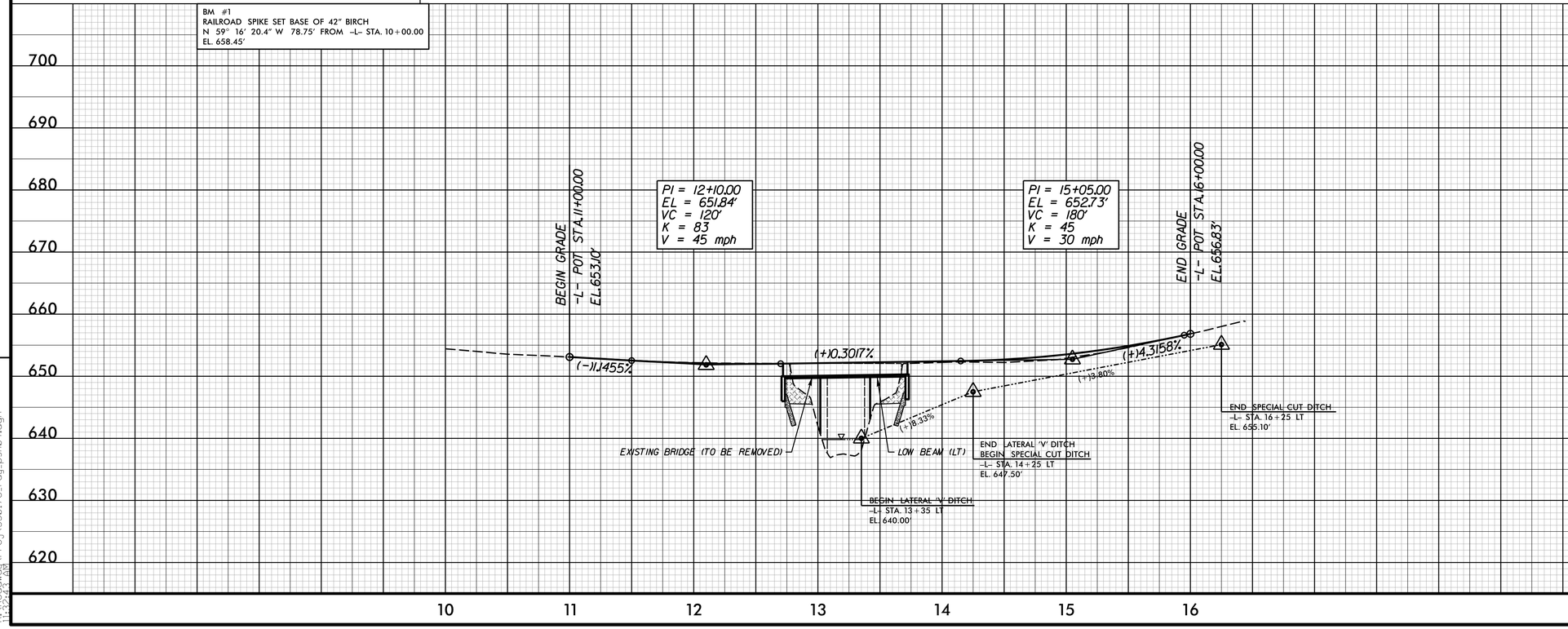

BRIDGE HYDRAULIC DATA

DESIGN DISCHARGE	= 4,000	CFS
DESIGN FREQUENCY	= 25	YRS
DESIGN HW ELEVATION	= 650.7	FT
BASE DISCHARGE	= 5,600	CFS
BASE FREQUENCY	= 100	YRS
BASE HW ELEVATION	= 652.53	FT
OVERTOPPING DISCHARGE	= 5,400	CFS
OVERTOPPING FREQUENCY	= 100(-)	YRS
OVERTOPPING ELEVATION	= 652.1	FT
DATE OF SURVEY	= OCT. 2014	
W.S. ELEVATION AT DATE OF SURVEY	= 639.8	FT

- EXCAVATION (SEE STRUCTURE PLANS)

LEFT DITCH

8/19/2021
R:\Roadway\Proj\350176_rdy_psh04.dgn
1:32.43 AM

PROJECT: 17BP.12.R.60

PROJ. REFERENCE NO.	SHEET NO.
17BP.12.R.60	TMP-1

RAMEY KEMP ASSOCIATES
5808 Faringdon Place
Raleigh, North Carolina 27609
Phone: 919-872-5115
NC License No. C-0910
www.rameykemp.com

STATE OF NORTH CAROLINA
DIVISION OF HIGHWAYS

TRANSPORTATION MANAGEMENT PLAN

GASTON COUNTY

BRIDGE NO. 176 ON SR 1836 (OLD WILLIS SCHOOL ROAD)

ROADWAY STANDARD DRAWINGS

THE FOLLOWING ROADWAY STANDARDS AS SHOWN IN "ROADWAY STANDARD DRAWINGS" - PROJECT SERVICES UNIT - N.C. DEPARTMENT OF TRANSPORTATION - RALEIGH, N.C., DATED JANUARY 2018 ARE APPLICABLE TO THIS PROJECT AND BY REFERENCE HEREBY ARE CONSIDERED A PART OF THESE PLANS:

STD. NO.	TITLE
1101.03	TEMPORARY ROAD CLOSURES
1101.11	TRAFFIC CONTROL DESIGN TABLES
1110.01	STATIONARY WORK ZONE SIGNS
1145.01	BARRICADES
1205.01	PAVEMENT MARKINGS - LINE TYPES AND OFFSETS
1205.02	PAVEMENT MARKINGS - TWO LANE AND MULTILANE ROADWAYS
1205.12	PAVEMENT MARKINGS - BRIDGES
1261.01	GUARDRAIL AND BARRIER DELINEATORS - INSTALLATION SPACING
1261.02	GUARDRAIL AND BARRIER DELINEATORS - TYPES AND MOUNTING
1262.01	GUARDRAIL END DELINEATION

INDEX OF SHEETS

LEGEND

GENERAL

- DIRECTION OF TRAFFIC FLOW
- DIRECTION OF PEDESTRIAN TRAFFIC FLOW
- EXIST. PVMT.
- NORTH ARROW
- PROPOSED PVMT.
- WORK AREA
- REMOVAL

TRAFFIC CONTROL DEVICES

- BARRICADE (TYPE III)
- CONE
- DRUM — SKINNY DRUM — TUBULAR MARKER
- TEMPORARY CRASH CUSHION
- FLASHING ARROW PANEL (TYPE C)
- FLAGGER
- LAW ENFORCEMENT
- TRUCK MOUNTED IMPACT ATTENUATOR (TMIA)
- CHANGEABLE MESSAGE SIGN

TEMPORARY SIGNING

- PORTABLE SIGN
- STATIONARY SIGN
- STATIONARY OR PORTABLE SIGN

PAVEMENT MARKERS

- CRYSTAL/CRYSTAL
- CRYSTAL/RED
- YELLOW/YELLOW

PAVEMENT MARKING SYMBOLS

- PAVEMENT MARKING SYMBOLS

DOCUMENT NOT CONSIDERED FINAL UNLESS ALL SIGNATURES COMPLETED

APPROVED: William J. Hamilton DATE: 8/9/2021

SEAL

NORTH CAROLINA PROFESSIONAL SEAL 32396 ENGINEER WILLIAM J. HAMILTON

DIVISION OF HIGHWAYS · STATE OF NORTH CAROLINA · DEPARTMENT OF TRANSPORTATION · WORK ZONE TRAFFIC CONTROL

ROADWAY STANDARD DRAWINGS, INDEX OF SHEETS & LEGEND

PROJ. REFERENCE NO.	SHEET NO.
17BP.12.R.60	TMP-2

RAMEY KEMP ASSOCIATES
5808 Faringdon Place
Raleigh, North Carolina 27609
Phone: 919-872-5115
NC License No. C-0910
www.rameykemp.com

GENERAL NOTES

CHANGES MAY BE REQUIRED WHEN PHYSICAL DIMENSIONS IN THE DETAIL DRAWING, STANDARD DETAILS AND ROADWAY DETAILS ARE NOT ATTAINABLE TO MEET FIELD CONDITIONS OR RESULT IN DUPLICATE OR UNDESIRED OVERLAPPING OF DEVICES. MODIFICATION MAY INCLUDE: MOVING, SUPPLEMENTING, COVERING, OR REMOVAL OF DEVICES AS DIRECTED BY THE ENGINEER.

THE FOLLOWING GENERAL NOTES APPLY AT ALL TIMES FOR THE DURATION OF THE CONSTRUCTION PROJECT EXCEPT WHEN OTHERWISE NOTED IN THE PLAN OR DIRECTED BY THE ENGINEER.

TRAFFIC PATTERN ALTERATIONS

A) NOTIFY THE ENGINEER TWENTY ONE (21) CALENDAR DAYS PRIOR TO ANY TRAFFIC PATTERN ALTERATION SIGNING.

SIGNING

B) INSTALL ADVANCED WORK ZONE WARNING SIGNS WHEN WORK IS WITHIN 40 FT FROM THE EDGE OF TRAVEL LANE AND NO MORE THAN THREE (3) DAYS PRIOR TO THE BEGINNING OF CONSTRUCTION.

C) PROVIDE SIGNING AND DEVICES REQUIRED TO CLOSE THE ROAD ACCORDING TO THE ROADWAY STANDARD DRAWINGS AND TRAFFIC CONTROL PLANS.

PROVIDE SIGNING REQUIRED FOR THE OFF-SITE DETOUR ROUTE AS SHOWN IN THE TRAFFIC CONTROL PLANS.

D) COVER OR REMOVE ALL SIGNS AND DEVICES REQUIRED TO CLOSE THE ROAD WHEN ROAD CLOSURE IS NOT IN OPERATION.

COVER OR REMOVE ALL SIGNS AND DEVICES REQUIRED FOR THE OFF-SITE DETOUR WHEN THE DETOUR IS NOT IN OPERATION.

E) ENSURE ALL NECESSARY SIGNING IS IN PLACE PRIOR TO ALTERING ANY TRAFFIC PATTERN.

F) PLACE TYPE III BARRICADES, WITH "ROAD CLOSED" SIGN R11-2 ATTACHED, OF SUFFICIENT LENGTH TO CLOSE ENTIRE ROAD.

PAVEMENT MARKINGS AND MARKERS

G) INSTALL PAVEMENT MARKINGS ON THE FINAL SURFACE AS FOLLOWS:

ROAD NAME	MARKING	MARKERS
SR 1836 (OLD WILLIS SCHOOL ROAD)	PAINT	NONE

H) TIE PROPOSED PAVEMENT MARKING LINES TO EXISTING PAVEMENT MARKING LINES.

I) REMOVE/REPLACE ANY CONFLICTING/DAMAGED PAVEMENT MARKINGS.

J) PASSING ZONE WILL BE DETERMINED IN THE FIELD AND MUST BE APPROVED BY THE ENGINEER.

PHASING

PHASE I

PRIOR TO ANY CONSTRUCTION OPERATIONS, PLACE AND COVER OFF-SITE DETOUR SIGNING AS SHOWN ON TMP-3 AND IN ACCORDANCE WITH RSD 1101.03 (SHEET 1 OF 9).

PHASE II

USING OFF-SITE DETOUR, UNCOVER DETOUR SIGNS, CLOSE -L- (SR 1836) TO TRAFFIC AND CONSTRUCT BRIDGE, APPROACHES AND ROADWAY UP TO AND INCLUDING FINAL LAYER OF SURFACE COURSE.

PHASE III

UPON COMPLETION OF BRIDGE, APPROACHES AND ROADWAY, PLACE FINAL PAVEMENT MARKING IN ACCORDANCE WITH RSD 1205.02 AND 1205.12. REMOVE BARRICADES AND DETOUR SIGNS AND OPEN -L- (SR 1836) TO TRAFFIC.

DOCUMENT NOT CONSIDERED FINAL UNLESS ALL SIGNATURES COMPLETED

APPROVED William J. Hamilton DATE: 8/9/2021

SEAL

NORTH CAROLINA PROFESSIONAL SEAL 32396 ENGINEER WILLIAM J. HAMILTON

DIVISION OF HIGHWAYS STATE OF NORTH CAROLINA DEPARTMENT OF TRANSPORTATION WORK ZONE TRAFFIC CONTROL

GENERAL NOTES AND PHASING

PROJ. REFERENCE NO.	SHEET NO.
17BP.12.R.60	TMP-3

RAMEY KEMP ASSOCIATES
5808 Faringdon Place
Raleigh, North Carolina 27609
Phone: 919-872-5115
NC License No. C-0910
www.rameykemp.com

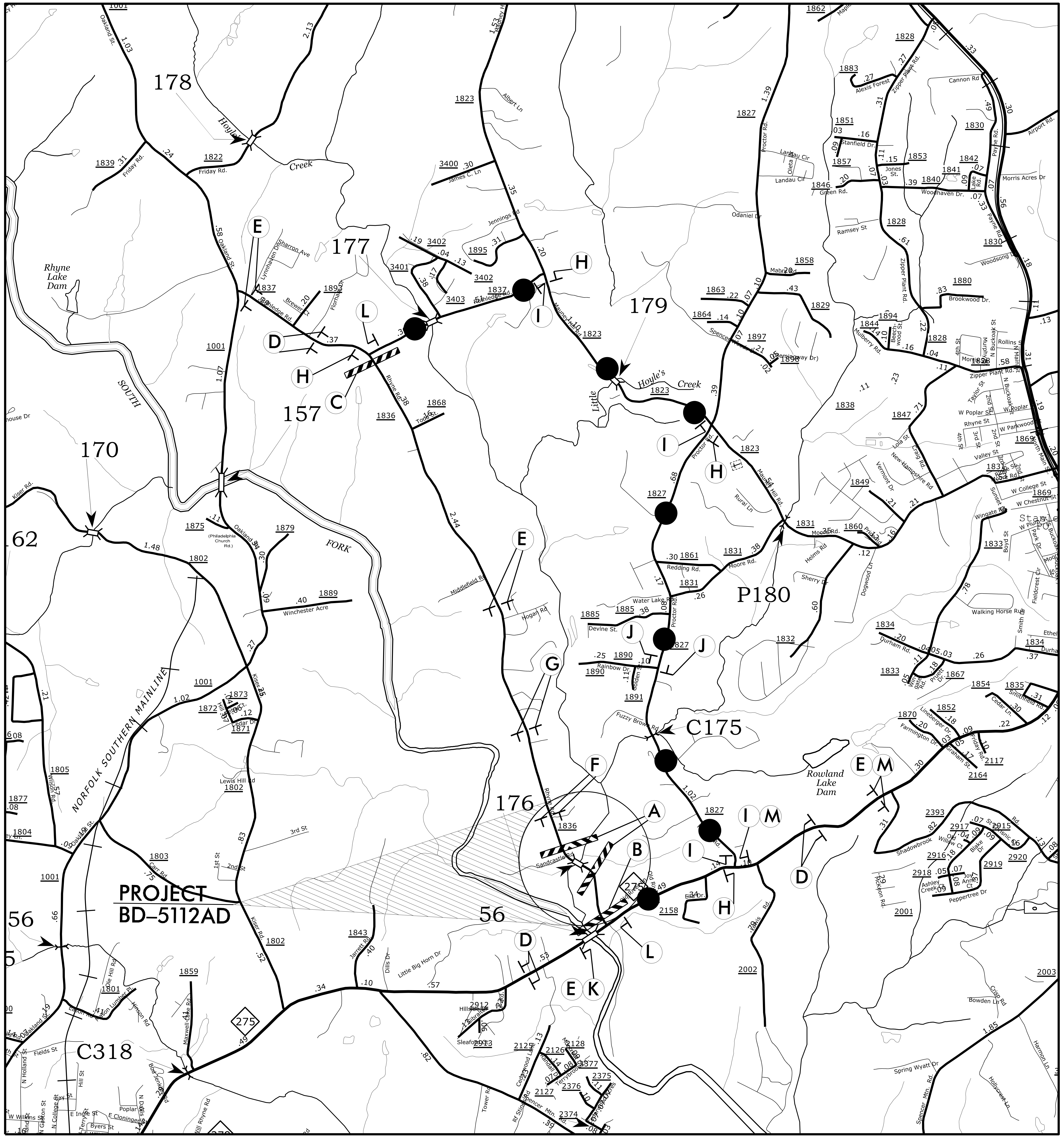

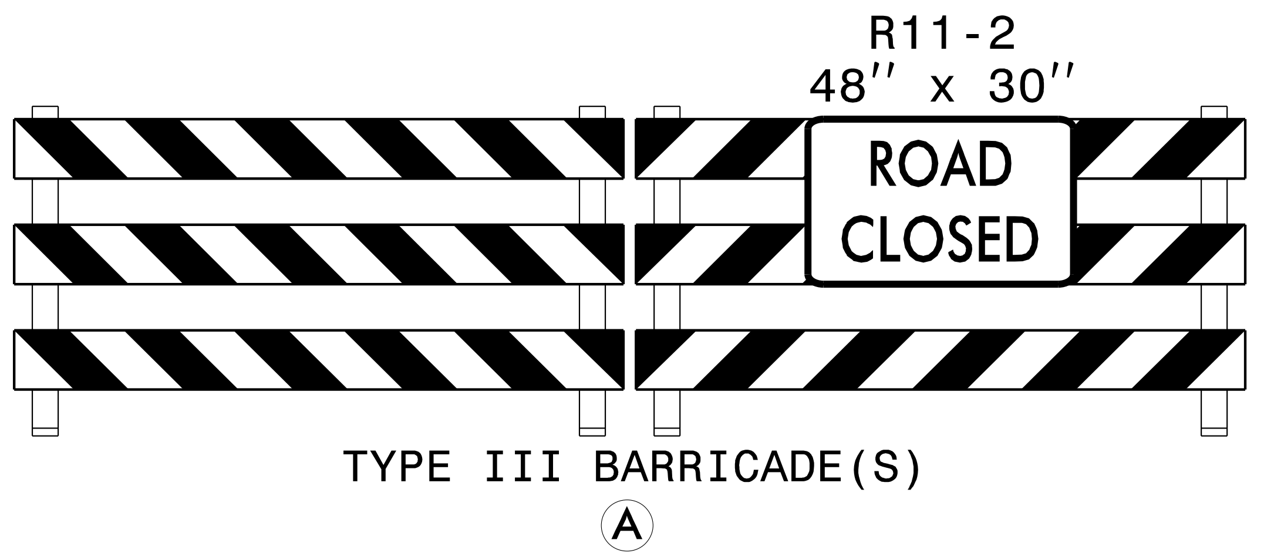

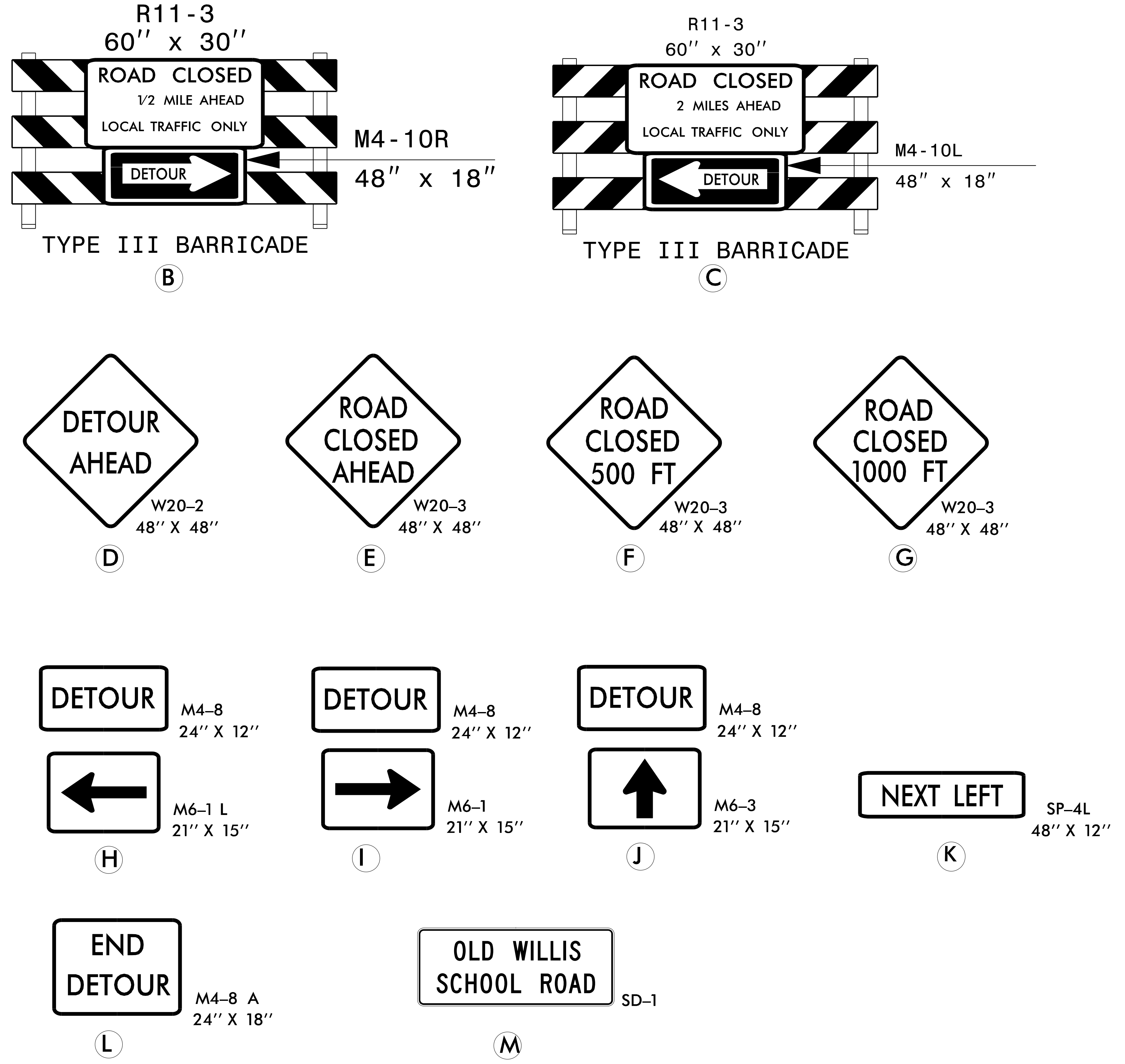

PROPOSED DETOUR

DETOUR ROUTE	●—●—●—●
DETOUR LENGTH	5 MILES

DOCUMENT NOT CONSIDERED FINAL UNLESS ALL SIGNATURES COMPLETED

DocuSigned by:
APPROVED: William J. Hamilton DATE: 8/9/2021
A0560D704648484...

SEAL

SEAL 32396
WILLIAM J. HAMILTON

DIVISION OF HIGHWAYS
STATE OF NORTH CAROLINA
DEPARTMENT OF TRANSPORTATION
WORK ZONE TRAFFIC CONTROL

DETOUR SIGNING

PROJ. REFERENCE NO.	SHEET NO.
17BP.12.R.60	TMP-4

RAMEY KEMP ASSOCIATES
5808 Faringdon Place
Raleigh, North Carolina 27609
Phone: 919-872-5115
NC License No. C-0910
www.rameykemp.com

SIGN NUMBER: SD-1
TYPE: D
QUANTITY: 1

SIGN WIDTH: 5'-0"
HEIGHT: 2'-0"
TOTAL AREA: 10.0 Sq.Ft.

BORDER TYPE: FLUSH
RECESS: 0.75"
WIDTH: 0.75"
RADII: 3.75"

NO. Z BARS:
LENGTH:

BACKG COLOR: Orange
COPY COLOR: Black

SYMBOL	X	Y	WID	HT

MAT'L: 0.125" (3.2 mm) ALUMINUM

DESIGN BY: NE BURNS
PROJECT ID: BD-5112AD

CHECKED BY: WJ HAMILTON
LOCATION: GASTON COUNTY

Sep 06, 2016
DIV: 12

USE NOTES: 1,2

1. Legend and border shall be direct applied black non-reflective sheeting.
2. Background shall be NC GRADE B fluoresent orange retroreflective sheeting.

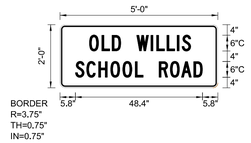

Spacing Factor is 1 unless specified otherwise

LETTER POSITIONS

Letter spacings are to start of next letter

																											Series/Size Text Length
	O	L	D		W	I	L	L	I	S																	C 2000
11.1	4.7	3.9	3.4	6	5.4	2.2	3.9	3.9	1.9	3.4	10.3																38.6
	S	C	H	O	O	L		R	O	A	D																C 2000
5.8	4.3	4.6	4.6	4.6	4.7	3.1	6	4.3	4.3	4.7	3.4	5.8															48.4

FILENAME: 870078_TC_TCP_SD-1

NORTH CAROLINA D.O.T. SIGN DETAIL

DOCUMENT NOT CONSIDERED FINAL UNLESS ALL SIGNATURES COMPLETED

APPROVED William J. Hamilton DATE: 8/9/2021
A2B6DD7D8B4B4B4...

SEAL

NORTH CAROLINA PROFESSIONAL SEAL 32396 ENGINEER WILLIAM J. HAMILTON

DIVISION OF HIGHWAYS STATE OF NORTH CAROLINA DEPARTMENT OF TRANSPORTATION WORK ZONE TRAFFIC CONTROL

SPECIAL SIGN DESIGN

PROJECT: 17BP.12.R.60

CONTRACT:

TIP NO.	SHEET NO.
17BP.12.R.60	PMP-1

APPROVED: DocuSigned by: William J. Hamilton A0560D704648484...

DATE: 8/9/2021

SEAL

NORTH CAROLINA PROFESSIONAL SEAL 32396 ENGINEER WILLIAM J. HAMILTON

DOCUMENT NOT CONSIDERED FINAL UNLESS ALL SIGNATURES COMPLETED

STATE OF NORTH CAROLINA
DEPARTMENT OF TRANSPORTATION

PAVEMENT MARKING PLAN

GASTON COUNTY

LOCATION: REPLACE EXISTING BRIDGE NO. 176 OVER HOYLE'S CREEK ON SR 1836 (OLD WILLIS SCHOOL ROAD)

ROADWAY STANDARD DRAWING

THE FOLLOWING ROADWAY STANDARDS AS APPEAR IN "ROADWAY STANDARD DRAWINGS" - PROJECT SERVICES UNIT - N.C. DEPARTMENT OF TRANSPORTATION - RALEIGH, N.C., DATED JANUARY 2018 ARE APPLICABLE TO THIS PROJECT AND BY REFERENCE HEREBY ARE CONSIDERED A PART OF THESE PLANS:

STD. NO.	TITLE
1205.01	PAVEMENT MARKINGS - LINE TYPES AND OFFSETS
1205.02	PAVEMENT MARKINGS - TWO LANE AND MULTILANE ROADWAYS
1261.01	GUARDRAIL AND BARRIER DELINEATORS - INSTALLATION SPACING
1261.02	GUARDRAIL AND BARRIER DELINEATORS - TYPES AND MOUNTING
1262.01	GUARDRAIL END DELINEATION
1264.01	OBJECT MARKERS - TYPES
1264.02	OBJECT MARKERS - INSTALLATION

GENERAL NOTES

THE FOLLOWING GENERAL NOTES APPLY AT ALL TIMES FOR THE DURATION OF THE CONSTRUCTION PROJECT, EXCEPT WHEN OTHERWISE NOTED IN THE PLAN, OR DIRECTED BY THE ENGINEER.

A) INSTALL PAVEMENT MARKINGS AND PAVEMENT MARKERS ON THE FINAL SURFACE AS FOLLOWS:

ROAD NAME	MARKING	MARKER
SR 1836	PAINT	NONE

B) TIE PROPOSED PAVEMENT MARKING LINES TO EXISTING PAVEMENT MARKING LINES.

C) REMOVE/REPLACE ANY CONFLICTING/DAMAGED PAVEMENT MARKINGS AND MARKERS.

D) REMOVE ALL EXISITNG BRIDGE MARKER SIGNS AND DISPOSE OF IN A LEGAL MANNER.

E) PLACE GUARDRAIL DELINEATORS PER NCDOT STANDARDS.

PAVEMENT MARKING DETAIL

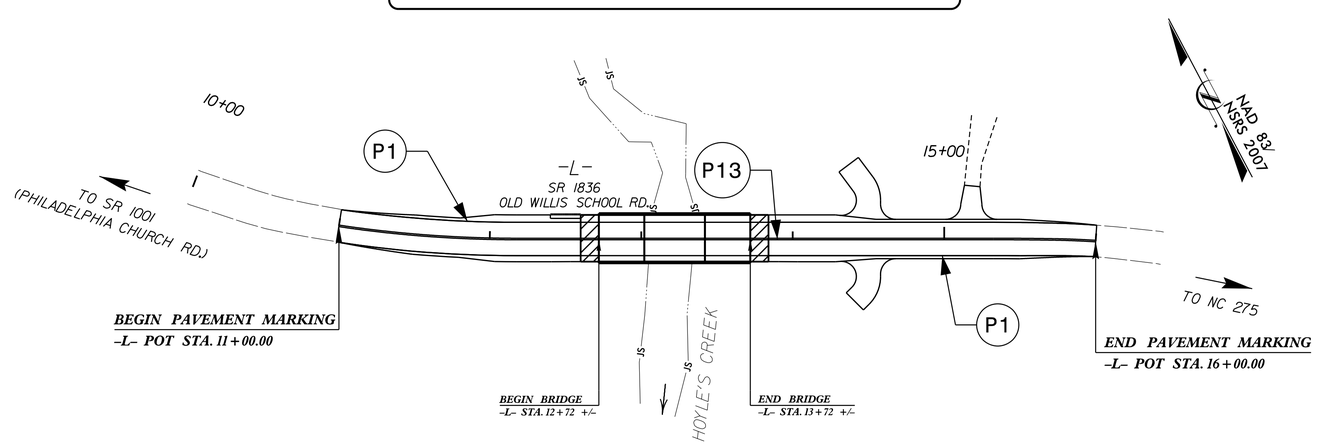

PAVEMENT MARKING SCHEDULE

SYMBOL	DESCRIPTION
PA	PAINT (4") WHITE EDGELINE
PI	PAINT (4") YELLOW DOUBLE CENTER

SUMMARY OF QUANTITIES

ITEM NO. DESC. NO.	ITEM NO. SECT. NO.	ITEM DESCRIPTION	QUANTITY	UNIT
4810000000	1205	4" WHITE EDGELINE	1000	L.F.
4810000000	1205	4" YELLOW DOUBLE CENTER	1000	L.F.

PLAN PREPARED BY: Ramey Kemp Associates

W. JASON HAMILTON, P.E., P.T.O.E. PROJECT ENGINEER

JAMES T. STIFF, E.I. PROJECT DESIGNER

RKA RAMEY KEMP ASSOCIATES
5808 Faringdon Place
Raleigh, North Carolina 27609
Phone: 919-872-5115
NC License No. C-0910
www.rameykemp.com

PROJECT: 17BP.12.R.60

CONTRACT: DL00135

EROSION AND SEDIMENT CONTROL MEASURES

Std. #	Description	Symbol
1630.03	Temporary Silt Ditch	TSD
1630.05	Temporary Diversion	TD
1605.01	Temporary Silt Fence	
1606.01	Special Sediment Control Fence	
1622.01	Temporary Berms and Slope Drains	
1630.02	Silt Basin Type B	
1633.01	Temporary Rock Silt Check Type-A	
	Temporary Rock Silt Check Type-A with Matting and Polyacrylamide (PAM)	
1633.02	Temporary Rock Silt Check Type-B	
	Wattle / Coir Fiber Wattle	SW CFW
	Wattle / Coir Fiber Wattle with Polyacrylamide (PAM)	
1634.01	Temporary Rock Sediment Dam Type-A	
1634.02	Temporary Rock Sediment Dam Type-B	
1635.01	Rock Pipe Inlet Sediment Trap Type-A	
1635.02	Rock Pipe Inlet Sediment Trap Type-B	
1630.04	Stilling Basin	
1630.06	Special Stilling Basin	
	Rock Inlet Sediment Trap:	
1632.01	Type A	A
1632.02	Type B	B
1632.03	Type C	C
	Skimmer Basin	
	Tiered Skimmer Basin	
	Infiltration Basin	

STATE OF NORTH CAROLINA
DIVISION OF HIGHWAYS

PLAN FOR PROPOSED HIGHWAY EROSION CONTROL

GASTON COUNTY

LOCATION: REPLACE BRIDGE 176 OVER HOYLE'S CREEK ON SR 1836 (OLD WILLIS SCHOOL RD.)

TYPE OF WORK: GRADING, DRAINAGE, PAVING AND STRUCTURE

STATE	STATE PROJECT REFERENCE NO.	SHEET NO.	TOTAL SHEETS
N.C.	17BP.12.R.60	EC-1	

STATE PROJ. NO.	F.A. PROJ. NO.	DESCRIPTION
17BP.12.R.60		P.E.
17BP.12.R.60		R/W & UTILITIES
17BP.12.R.60		CONST.

4

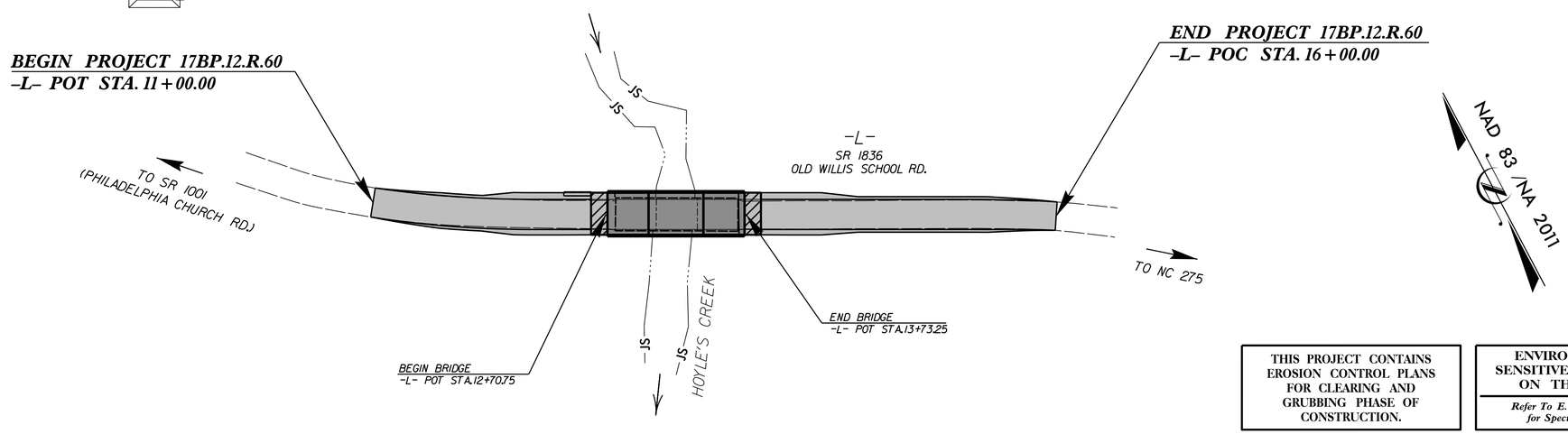

THIS PROJECT CONTAINS EROSION CONTROL PLANS FOR CLEARING AND GRUBBING PHASE OF CONSTRUCTION.

ENVIRONMENTALLY SENSITIVE AREA(S) EXIST ON THIS PROJECT

Refer To E. C. Special Provisions for Special Considerations.

THIS PROJECT HAS BEEN DESIGNED TO SENSITIVE WATERSHED STANDARDS.

HIGH QUALITY WATER(S) EXIST ON THIS PROJECT

High Quality Water Zone(s) Exist
From Sta. -L- 11+00
to Sta. -L- 16+00
Refer To E. C. Special Provisions for Special Considerations.

THIS PROJECT IS NOT WITHIN ANY MUNICIPAL BOUNDARIES.
CLEARING ON THIS PROJECT SHALL BE PERFORMED TO THE LIMITS ESTABLISHED BY METHOD III.

GRAPHIC SCALES

50 25 0 50 100
PLANS

ROADSIDE ENVIRONMENTAL UNIT
DIVISION OF HIGHWAYS
STATE OF NORTH CAROLINA

THESE EROSION AND SEDIMENT CONTROL PLANS COMPLY WITH THE REGULATIONS SET FORTH BY THE NCG-010000 GENERAL CONSTRUCTION PERMIT EFFECTIVE APRIL 1, 2019 ISSUED BY THE NORTH CAROLINA DEPARTMENT OF ENVIRONMENT AND NATURAL RESOURCES DIVISION OF WATER QUALITY.

2018 STANDARD SPECIFICATIONS

Prepared In the Office of:

Weston & Sampson
WSE of North Carolina, PC
598 East Chatham Street Suite 137
Cary, NC 27511
Phone: 919.297.0220 Fax: 919.297.0221
NC License: C-4647

for:

NCDOT DIVISION 12

NCDOT CONTACT: STEVE RACKLEY, PE
DIVISION 12 BRIDGE MANAGER

Designed by:

KEVIN S. HUTCHENS, PE — ***3635***
NAME — *LEVEL IIIA CERTIFICATION NO.*

Roadway Standard Drawings

The following roadway english standards as appear in "Roadway Standard Drawings"– Roadway Design Unit – N. C. Department of Transportation – Raleigh, N. C., dated January 2018 and the latest revison thereto are applicable to this project and by reference hereby are considered a part of these plans.

1604.01	Railroad Erosion Control Detail	1632.01	Rock Inlet Sediment Trap Type A
1605.01	Temporary Silt Fence	1632.02	Rock Inlet Sediment Trap Type B
1606.01	Special Sediment Control Fence	1632.03	Rock Inlet Sediment Trap Type C
1607.01	Gravel Construction Entrance	1633.01	Temporary Rock Silt Check Type A
1622.01	Temporary Berms and Slope Drains	1633.02	Temporary Rock Silt Check Type B
1630.01	Riser Basin	1634.01	Temporary Rock Sediment Dam Type A
1630.02	Silt Basin Type B	1634.02	Temporary Rock Sediment Dam Type B
1630.03	Temporary Silt Ditch	1635.01	Rock Pipe Inlet Sediment Trap Type A
1630.04	Stilling Basin	1635.02	Rock Pipe Inlet Sediment Trap Type B
1630.05	Temporary Diversion	1640.01	Coir Fiber Baffle
1630.06	Special Stilling Basin	1645.01	Temporary Stream Crossing
1631.01	Matting Installation		

PROJECT REFERENCE NO.	SHEET NO.
17BPJ2.R.60	EC-2

Weston & Sampson
WSE of North Carolina, PC
598 East Chatham Street Suite 137
Phone: 919.297.0220
NC License: C-4847
Cary, NC 27511
Fax: 919.297.0221

TEMPORARY ROCK SILT CHECK TYPE 'A' WITH EXCELSIOR MATTING AND POLYACRYLAMIDE (PAM)

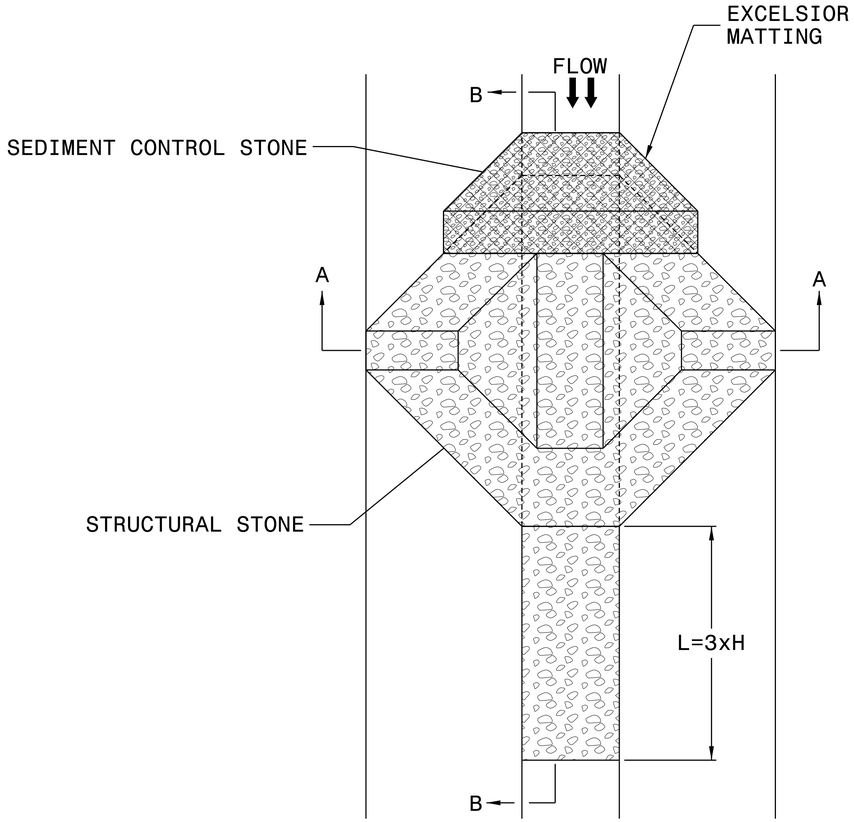

PLAN

NOTES

USE EXCELSIOR FOR MATTING MATERIAL AND ANCHOR MATTING SECTION AT TOP AND BOTTOM WITH CLASS B STONE.

PRIOR TO POLYACRYLAMIDE (PAM) APPLICATION, OBTAIN A SOIL SAMPLE FROM PROJECT LOCATION, AND FROM OFFSITE MATERIAL, AND ANALYZE FOR APPROPRIATE PAM FLOCCULANT TO BE APPLIED TO EACH ROCK SILT CHECK.

INITIALLY APPLY 4 OUNCES OF POLYACRYLAMIDE (PAM) TO TOP OF MATTING SECTION AND AFTER EVERY RAINFALL EVENT THAT EQUALS OR EXCEEDS 0.50 INCHES.

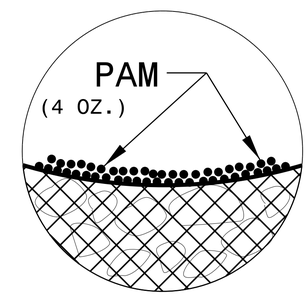

INSET A

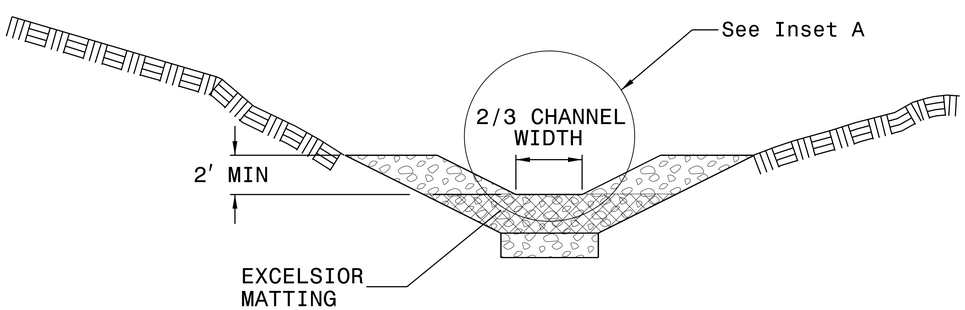

SECTION A-A

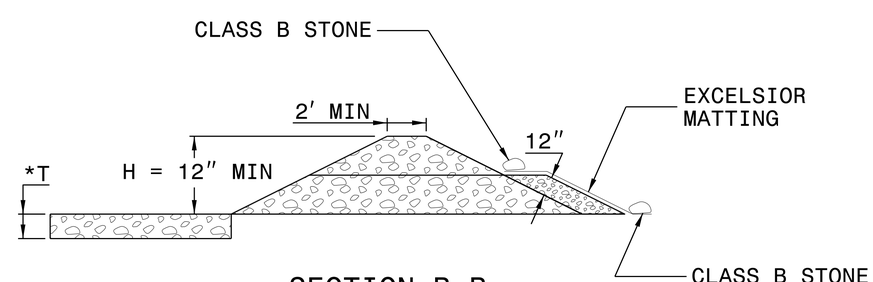

SECTION B-B

*T = 12" MIN., 18" MAX.

NOT TO SCALE

PROJECT REFERENCE NO.	SHEET NO.
17BP.12.R.60	EC-2A

Weston & Sampson
WSE of North Carolina, PC
598 East Chatham Street Suite 137
Phone: 919.297.0220
NC License: C-4847
Cary, NC 27511
Fax: 919.297.0221

WATTLE WITH POLYACRYLAMIDE (PAM) DETAIL

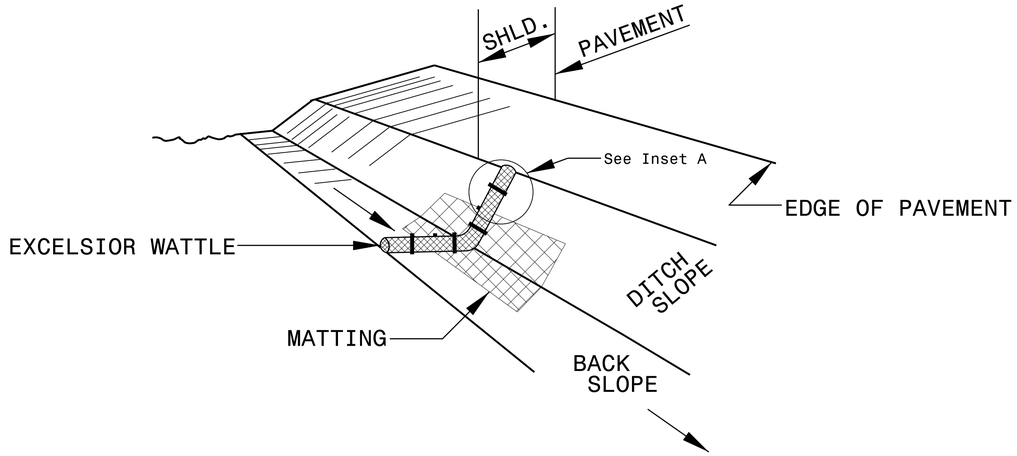

ISOMETRIC VIEW

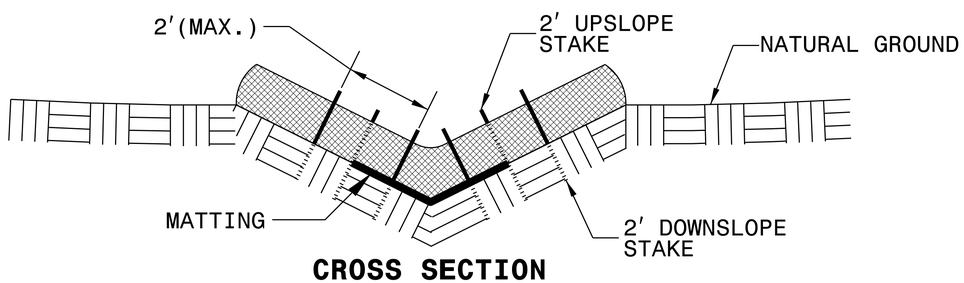

CROSS SECTION VEE DITCH

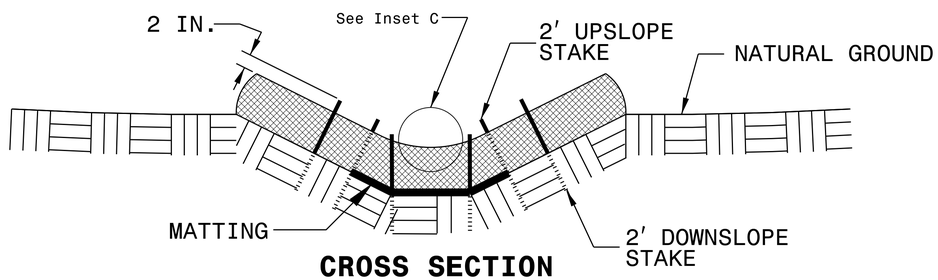

CROSS SECTION TRAPEZOIDAL DITCH

NOTES:

USE MINIMUM 12 IN. DIAMETER EXCELSIOR WATTLE.

USE 2 FT. WOODEN STAKES WITH A 2 IN. BY 2 IN. NOMINAL CROSS SECTION.

ONLY INSTALL WATTLE(S) TO A HEIGHT IN DITCH SO FLOW WILL NOT WASH AROUND WATTLE AND SCOUR DITCH SLOPES AND AS DIRECTED.

INSTALL A MINIMUM OF 2 UPSLOPE STAKES AND 4 DOWNSLOPE STAKES AT AN ANGLE TO WEDGE WATTLE TO BOTTOM OF DITCH.

PROVIDE STAPLES MADE OF 0.125 IN. DIAMETER STEEL WIRE FORMED INTO A U SHAPE NOT LESS THAN 12″ IN LENGTH.

INSTALL STAPLES APPROXIMATELY EVERY 1 LINEAR FOOT ON BOTH SIDES OF WATTLE AND AT EACH END TO SECURE IT TO THE SOIL.

INSTALL MATTING IN ACCORDANCE WITH SECTION 1631 OF THE STANDARD SPECIFICATIONS.

PRIOR TO POLYACRYLAMIDE (PAM) APPLICATION, OBTAIN A SOIL SAMPLE FROM PROJECT LOCATION, AND FROM OFFSITE MATERIAL, AND ANALYZE FOR APPROPRIATE PAM FLOCCULANT TO BE APPLIED TO EACH WATTLE.

INITIALLY APPLY 2 OUNCES OF ANIONIC OR NEUTRALLY CHARGED PAM OVER WATTLE WHERE WATER WILL FLOW AND 1 OUNCE OF PAM ON MATTING ON EACH SIDE OF WATTLE. REAPPLY PAM AFTER EVERY RAINFALL EVENT THAT IS EQUAL TO OR EXCEEDS 0.50 IN.

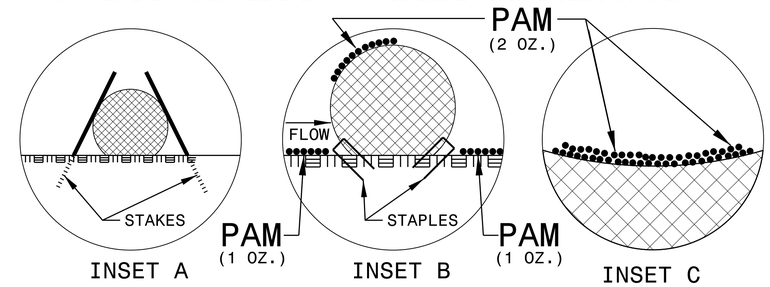

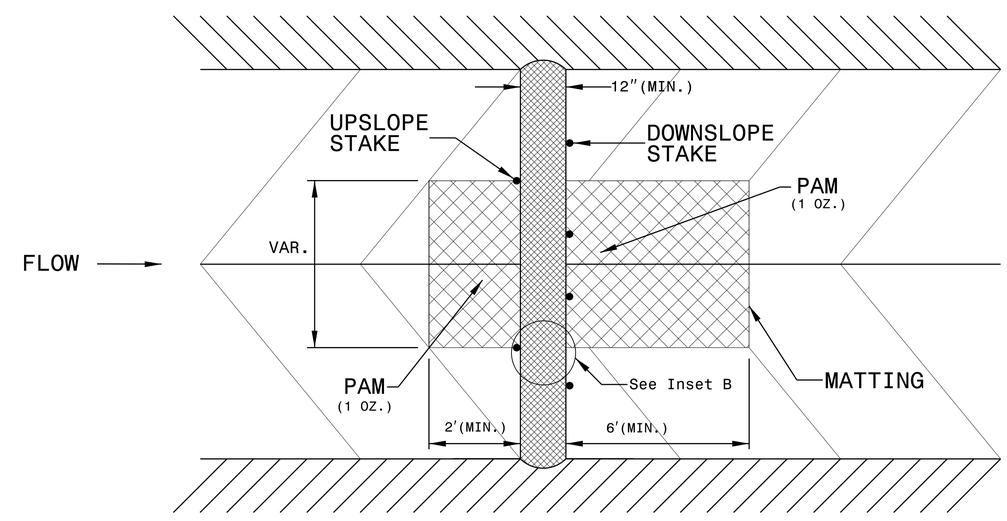

TOP VIEW

PROJECT REFERENCE NO.	SHEET NO.
17BPJ2.R.60	EC-3

Weston & Sampson
WSE of North Carolina, PC
598 East Chatham Street Suite 137 Cary, NC 27511
Phone: 919.297.0220 Fax: 919.297.0221
NC License: C-4847

DIVISION OF HIGHWAYS
STATE OF NORTH CAROLINA

SOIL STABILIZATION SUMMARY SHEET

MATTING FOR EROSION CONTROL

CONST SHEET NO.	LINE	FROM STATION	TO STATION	SIDE	ESTIMATE (SY)
4	L	14+25	16+25	LT	150
			SUBTOTAL		150
MISCELLANEOUS MATTING TO BE INSTALLED AS DIRECTED BY THE ENGINEER					1450
				TOTAL	1600
				SAY	1600

PERMANENT SOIL REINFORCEMENT MAT

CONST SHEET NO.	LINE	FROM STATION	TO STATION	SIDE	ESTIMATE (SY)
			SUBTOTAL		0
	ADDITIONAL COIR FIBER MAT TO BE INSTALLED				0
				TOTAL	0
				SAY	0

SOIL STABILIZATION TIME FRAMES

SITE DESCRIPTION	STABILIZATION TIME	TIMEFRAME EXCEPTIONS
PERIMETER DIKES, SWALES, DITCHES AND SLOPES	7 DAYS	NONE
HIGH QUALITY WATER (HQW) ZONES	7 DAYS	NONE
SLOPES STEEPER THAN 3:1	7 DAYS	IF SLOPES ARE 10' OR LESS IN LENGTH AND ARE NOT STEEPER THAN 2:1, 14 DAYS ARE ALLOWED.
SLOPES 3:1 OR FLATTER	14 DAYS	7 DAYS FOR SLOPES GREATER THAN 50' IN LENGTH.
ALL OTHER AREAS WITH SLOPES FLATTER THAN 4:1	14 DAYS	NONE, EXCEPT FOR PERIMETERS AND HQW ZONES.

PROJECT REFERENCE NO.	SHEET NO.
17BP.12.R.60	EC-4

Weston & Sampson
WSE of North Carolina, PC
598 East Chatham Street Suite 137
Phone: 919.297.0220
NC License: C-4847
Cary, NC 27511
Fax: 919.297.0221

REVISIONS

8/17/99

DETAIL E1
RIP RAP AT CHANNEL EMBANKMENT
(Not to Scale)

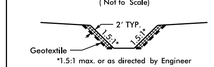

*1.5:1 max. or as directed by Engineer
Type of Liner =
65 TONS CL II Rip-Rap; 70 SY Geotextile (WEST BANK)
50 TONS CL II Rip-Rap; 54 SY Geotextile (EAST BANK)

FROM –L– STA. 13+25 TO STA. 13+38 (WEST BANK)
FROM –L– STA. 13+64 TO STA. 13+79 (EAST BANK)

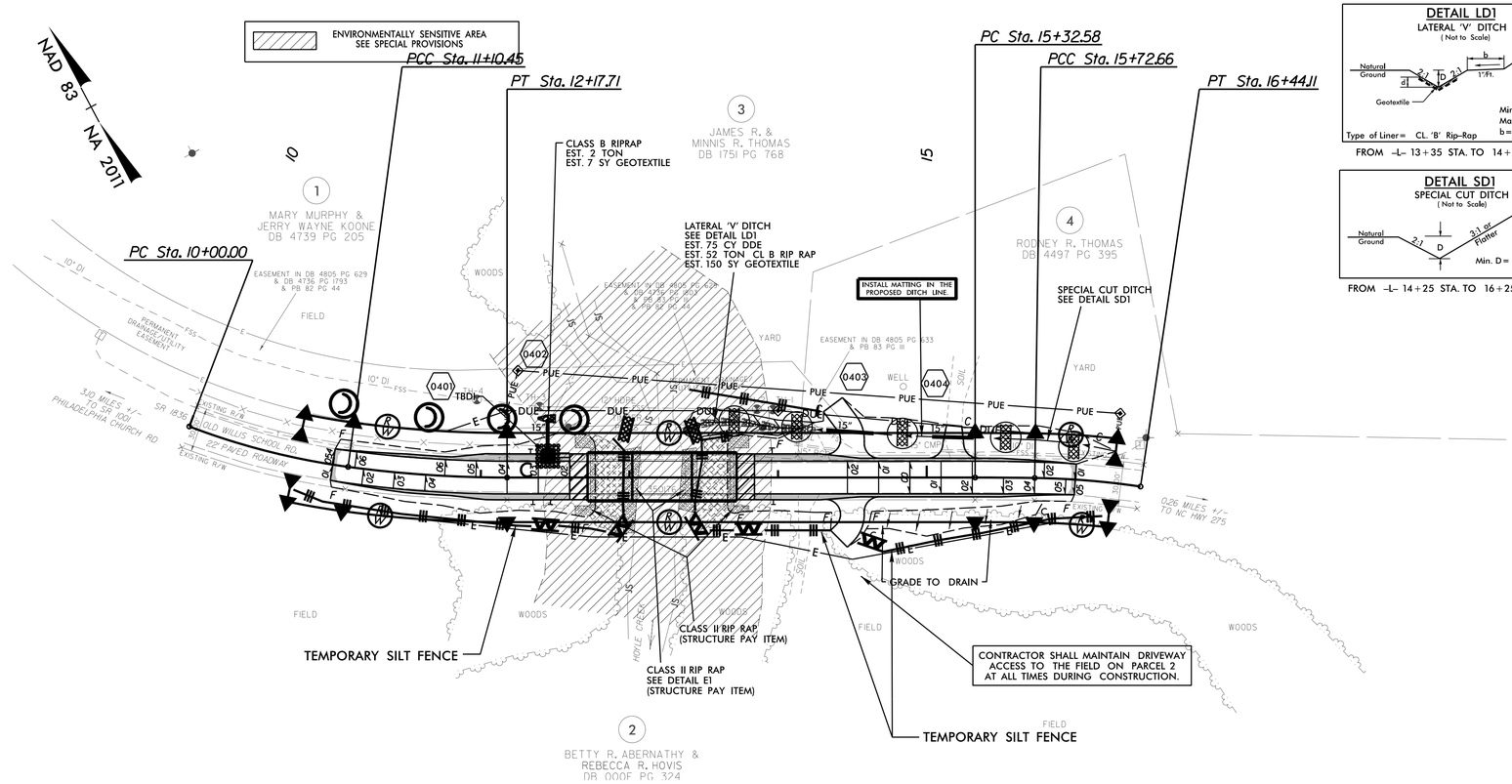

DETAIL LD1
LATERAL 'V' DITCH
(Not to Scale)

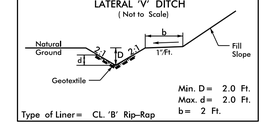

Min. D = 2.0 Ft.
Max. d = 2.0 Ft.
b = 2 Ft.
Type of Liner = CL. 'B' Rip-Rap

FROM –L– 13+35 STA. TO 14+25 STA. LT

DETAIL SD1
SPECIAL CUT DITCH
(Not to Scale)

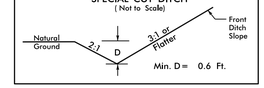

Min. D = 0.6 Ft.

FROM –L– 14+25 STA. TO 16+25 STA. LT

DECK DRAINS REQUIRED

24 @ 8" X 6" SLOTS
–L– 12+77.5 LT & RT
–L– 12+81.2 LT & RT
–L– 12+84.9 LT & RT
–L– 12+81.2 LT & RT
–L– 12+92.3 LT & RT
–L– 12+96.0 LT & RT
–L– 13+48.0 LT & RT
–L– 13+51.7 LT & RT
–L– 13+55.4 LT & RT
–L– 13+59.1 LT & RT
–L– 13+62.8 LT & RT
–L– 13+66.5 LT & RT

UTILIZE SPECIAL STILLING BASIN FOR DRILLED PIERS

NOTES: ANY DEVIATION FROM OPTIONS GIVEN WILL REQUIRE PRIOR APPROVAL BY ENGINEER.

ADDITIONAL EROSION CONTROL DEVICES MAY NEED TO BE INSTALLED AS DIRECTED BY THE ENGINEER.

8/13/2021
R:\Hydraulics\EC\350176_EC_EC04_PSH.dgn
12:28:52 AM

PROJECT REFERENCE NO.	SHEET NO.
17BP.12.R.60	EC-5

Weston & Sampson
WSE of North Carolina, PC
598 East Chatham Street Suite 137
Phone: 919.297.0220
NC License: C-4847
Cary, NC 27511
Fax: 919.297.0221

REVISIONS

8/17/99

DETAIL E1
RIP RAP AT CHANNEL EMBANKMENT
(Not to Scale)

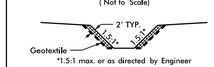

Type of Liner =
65 TONS CL II Rip-Rap; 70 SY Geotextile (WEST BANK)
50 TONS CL II Rip-Rap; 54 SY Geotextile (EAST BANK)

FROM –L– STA. 13+25 TO STA. 13+38 (WEST BANK)
FROM –L– STA. 13+64 TO STA. 13+79 (EAST BANK)

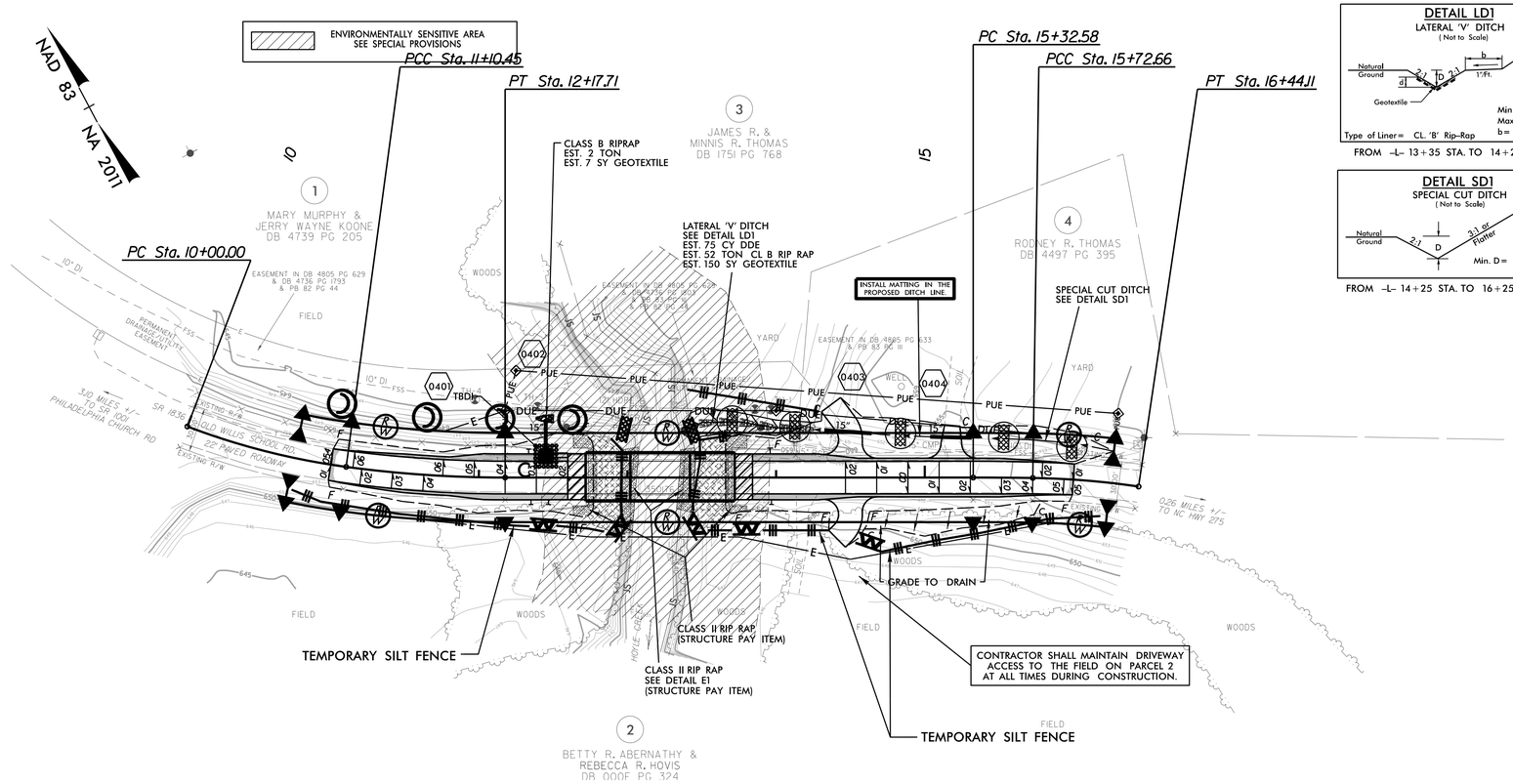

DETAIL LD1
LATERAL 'V' DITCH
(Not to Scale)

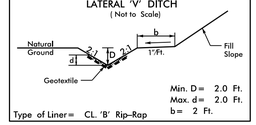

Min. D = 2.0 Ft.
Max. d = 2.0 Ft.
b = 2 Ft.
Type of Liner = CL. 'B' Rip-Rap

FROM –L– 13+35 STA. TO 14+25 STA. LT

DETAIL SD1
SPECIAL CUT DITCH
(Not to Scale)

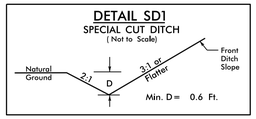

Min. D = 0.6 Ft.

FROM –L– 14+25 STA. TO 16+25 STA. LT

DECK DRAINS REQUIRED
24 @ 8" X 6" SLOTS
–L– 12+77.5 LT & RT
–L– 12+81.2 LT & RT
–L– 12+84.9 LT & RT
–L– 12+81.2 LT & RT
–L– 12+92.3 LT & RT
–L– 12+96.0 LT & RT
–L– 13+48.0 LT & RT
–L– 13+51.7 LT & RT
–L– 13+55.4 LT & RT
–L– 13+59.1 LT & RT
–L– 13+62.8 LT & RT
–L– 13+66.5 LT & RT

UTILIZE SPECIAL STILLING BASIN FOR DRILLED PIERS

NOTES: ANY DEVIATION FROM OPTIONS GIVEN WILL REQUIRE PRIOR APPROVAL BY ENGINEER.

ADDITIONAL EROSION CONTROL DEVICES MAY NEED TO BE INSTALLED AS DIRECTED BY THE ENGINEER.

8/13/2021
R:\Hydraulics\EC\350176_EC_EC04_PSH.dgn
12:28:18 AM

PROJECT REFERENCE NO.	SHEET NO.
17BP.12.R.60	EC-6

PLANTING DETAILS

SEEDLING / LINER BAREROOT PLANTING DETAIL

HEALING IN

1. Locate a healing-in site in a shady, well protected area.
2. Excavate a flat bottom trench 12 inches deep and provide drainage.

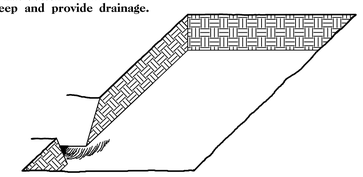

3. Backfill the trench with 2 inches well rotted sawdust. Place a 2 inch layer of well rotted sawdust at a sloping angle at one end of the trench.

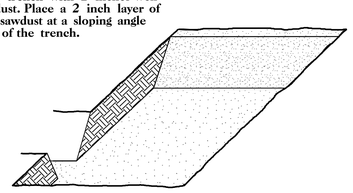

4. Place a single layer of plants against the sloping end so that the root collar is at ground level.

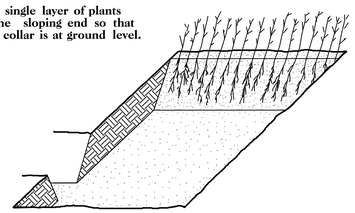

5. Place a 2 inch layer of well rotted sawdust over the roots maintaining a sloping angle.

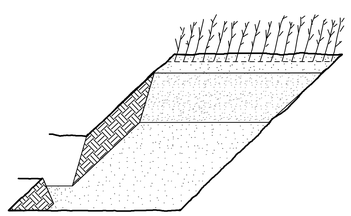

6. Repeat layers of plants and sawdust as necessary and water thoroughly.

DIBBLE PLANTING METHOD
USING THE KBC PLANTING BAR

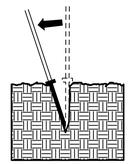

1. Insert planting bar as shown and pull handle toward planter.

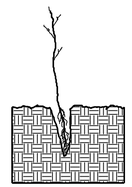

2. Remove planting bar and place seedling at correct depth.

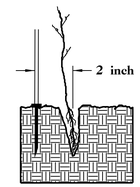

3. Insert planting bar 2 inches toward planter from seedling.

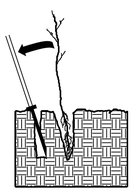

4. Pull handle of bar toward planter, firming soil at bottom.

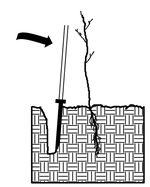

5. Push handle forward firming soil at top.

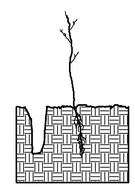

6. Leave compaction hole open. Water thoroughly.

PLANTING NOTES:

PLANTING BAG
During planting, seedlings shall be kept in a moist canvas bag or similar container to prevent the root systems from drying.

KBC PLANTING BAR
Planting bar shall have a blade with a triangular cross section, and shall be 12 inches long, 4 inches wide and 1 inch thick at center.

ROOT PRUNING
All seedlings shall be root pruned, if necessary, so that no roots extend more than 10 inches below the root collar.

REFORESTATION

☐ TREE REFORESTATION SHALL BE PLANTED 6 FT. TO 10 FT. ON CENTER, RANDOM SPACING, AVERAGING 8 FT. ON CENTER, APPROXIMATELY 680 PLANTS PER ACRE.

REFORESTATION

MIXTURE, TYPE, SIZE, AND FURNISH SHALL CONFORM TO THE FOLLOWING:

25%	LIRIODENDRON TULIPIFERA	TULIP POPLAR	12 in – 18 in BR
25%	PLATANUS OCCIDENTALIS	SYCAMORE	12 in – 18 in BR
25%	FRAXINUS PENNSYLVANICA	GREEN ASH	12 in – 18 in BR
25%	BETULA NIGRA	RIVER BIRCH	12 in – 18 in BR

REFORESTATION DETAIL SHEET

N.C.D.O.T. - ROADSIDE ENVIRONMENTAL UNIT

TIP PROJECT: 17BP.12.R.60

T.I.P. NO.	SHEET NO.
17BP.12.R.60	UO–1

NOTE:
ALL UTILITY WORK SHOWN ON THIS SHEET IS DONE BY OTHERS.
NO PAYMENT WILL BE MADE TO THE CONTRACTOR FOR UTILITY WORK SHOWN ON THIS SHEET.

STATE OF NORTH CAROLINA
DIVISION OF HIGHWAYS

UTILITIES BY OTHERS PLANS
GASTON COUNTY

LOCATION: REPLACE BRIDGE NO. 176 OVER HOYLE'S CREEK ON SR 1836 (OLD WILLIS SCHOOL RD)

TYPE OF WORK: RELOCATION OF POWER AND PHONE

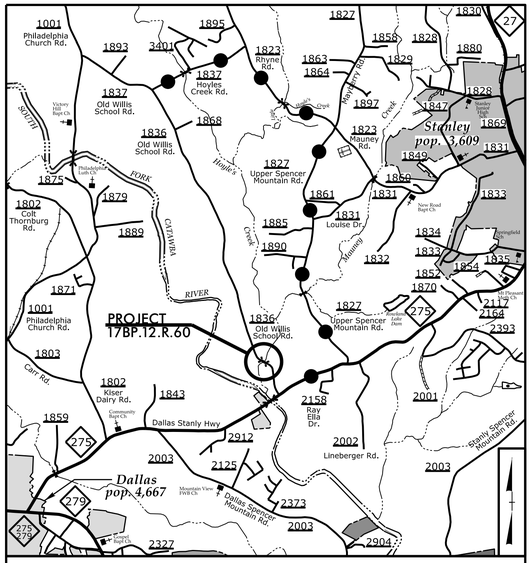

VICINITY MAP (N.T.S.)

UO–2

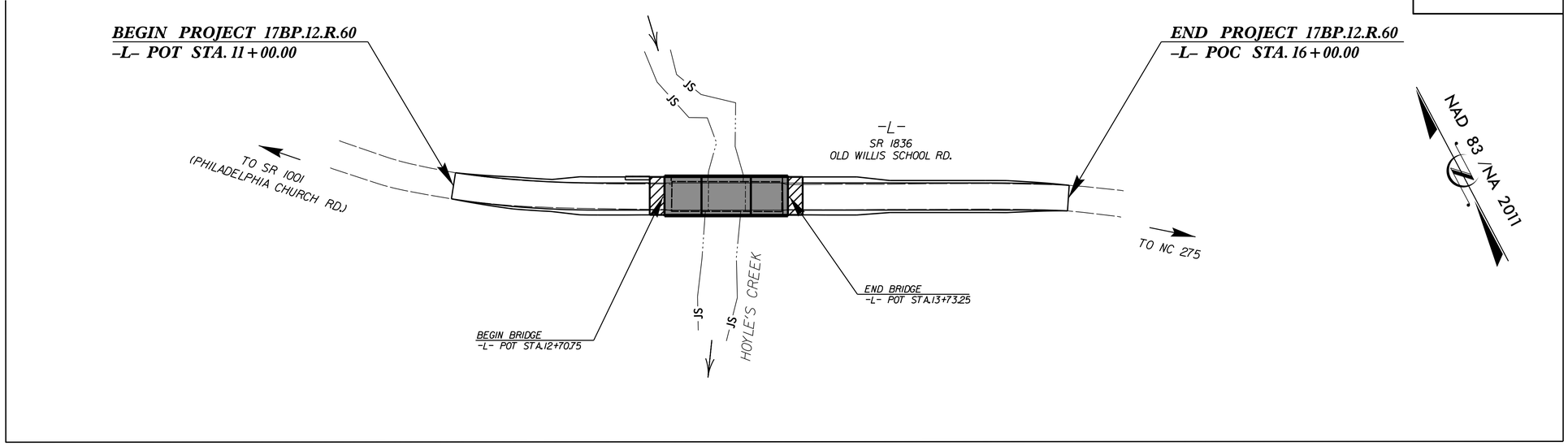

PRELIMINARY PLANS
DO NOT USE FOR CONSTRUCTION

GRAPHIC SCALES

50 25 0 50 100
PLANS

50 25 0 50 100
PROFILE (HORIZONTAL)

10 5 0 10 20
PROFILE (VERTICAL)

INDEX OF SHEETS

SHEET NO.:	DESCRIPTION:
UO–1	TITLE SHEET
UO–2	UBO PLAN SHEET

UTILITY OWNERS WITH CONFLICTS

(A) POWER – DUKE
(B) PHONE – AT&T

PREPARED IN THE OFFICE OF:

Weston & Sampson
WSE of North Carolina, PC
5986 East Chatham Street Suite 137
Cary, NC 27511
Phone: 919.297.0220 Fax: 919.297.0221
NC License: C-4647

WEBB WHITE — UTILITY PROJECT MANAGER
WARREN ANDERSON — DIVISION UTILITY COORDINATOR
CHAD DREWERY — DIVISION UTILITY ENGINEER

DIVISION OF HIGHWAYS
DIVISION 12
DIV ADDRESS:
1710 E MARION ST
SHELBY NC 28151

STEVE RACKLEY, P.E. — DIVISION 12 BRIDGE MANAGER

PROJECT REFERENCE NO.	SHEET NO.
17BP.12.R.60	UO-2

Weston & Sampson
WSE of North Carolina, PC
598 East Chatham Street Suite 137
Cary, NC 27511
Phone: 919.297.0220 Fax: 919.297.0221
NC License: C-4847

UTILITIES BY OTHERS

NOTE:
ALL PROPOSED UTILITY WORK SHOWN ON THIS SHEET WILL BE DONE BY OTHERS. NO PAYMENT WILL BE MADE TO THE CONTRACTOR FOR PROPOSED UTILITY WORK SHOWN ON THIS SHEET.

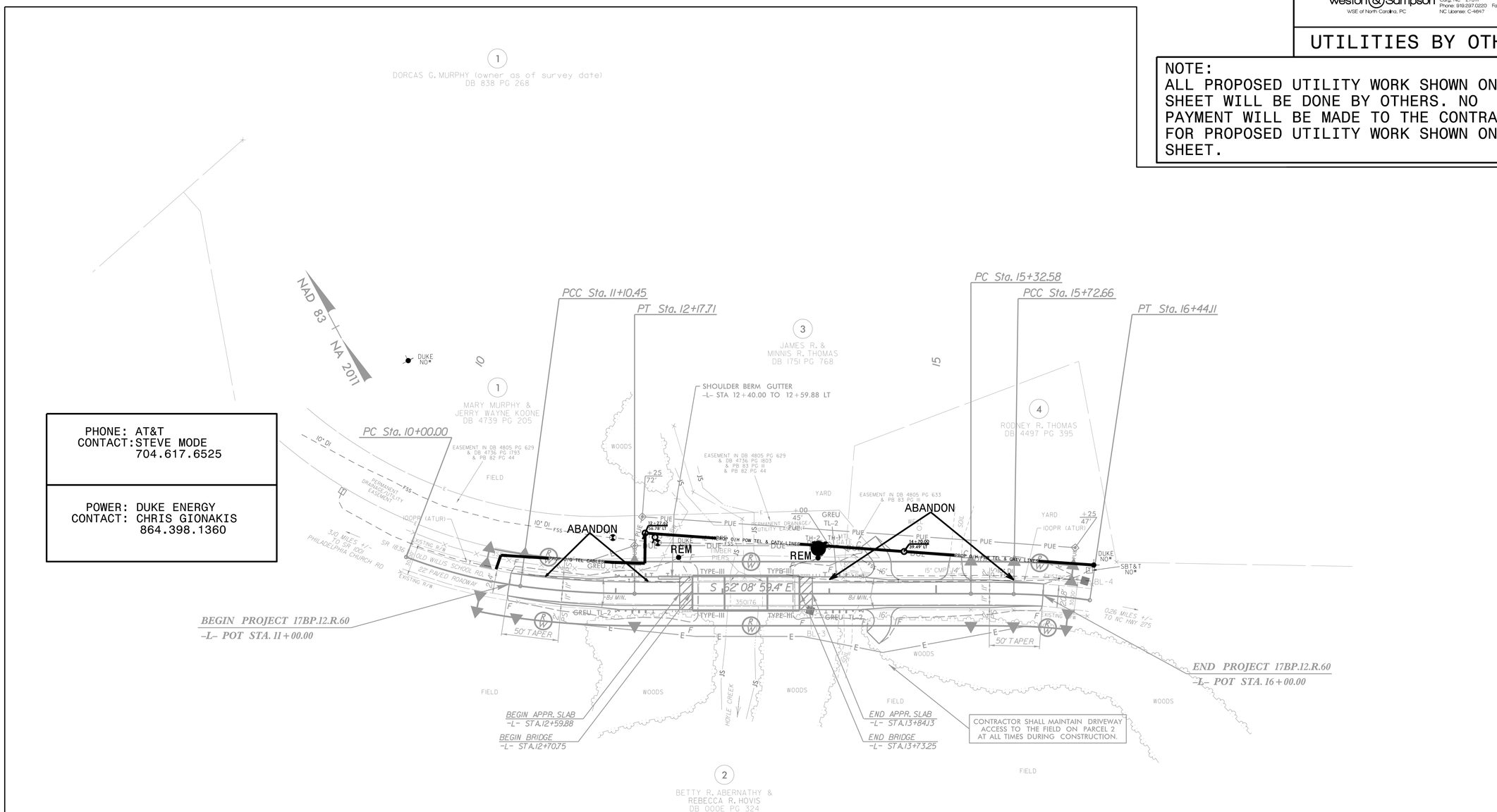

8/17/99

1/24/2020
\\wse01\Local\WSE\Projects\NC_Cargo\OldServer\Engineer\JOBS\06559\088\10800\gaston176\Utilities\UCoor14_UBD\350176_uo_psh02_Test.dgn
1:29:28 PM

PROJ. REFERENCE NO.	SHEET NO.
17BP.12.R.60	X-1A

STATE OF NORTH CAROLINA
DIVISION OF HIGHWAYS

NOTE: EMBANKMENT COLUMN DOES NOT INCLUDE BACKFILL FOR UNDERCUT.

CROSS-SECTION SUMMARY

Approximate quantities only. Unclassified excavation, borrow excavation, fine grading, clearing and grubbing, and removal of existing pavement will be paid for at the lump sum price for "Grading".

Station L	Uncl. Exc. (cu. yd.)	Embt (cu. yd.)
11+00.00	0	0
11+25.00	24	0
11+50.00	24	0
11+75.00	23	1
12+00.00	23	3
12+25.00	23	5
12+50.00	21	10
12+75.00	10	8

Station L	Uncl. Exc. (cu. yd.)	Embt (cu. yd.)
13+65.00	0	0
13+75.00	2	3
14+00.00	13	15
14+25.00	18	10
14+50.00	31	11
14+75.00	41	14
15+00.00	40	10
15+25.00	29	6
15+50.00	18	6
15+75.00	15	7
16+00.00	14	4

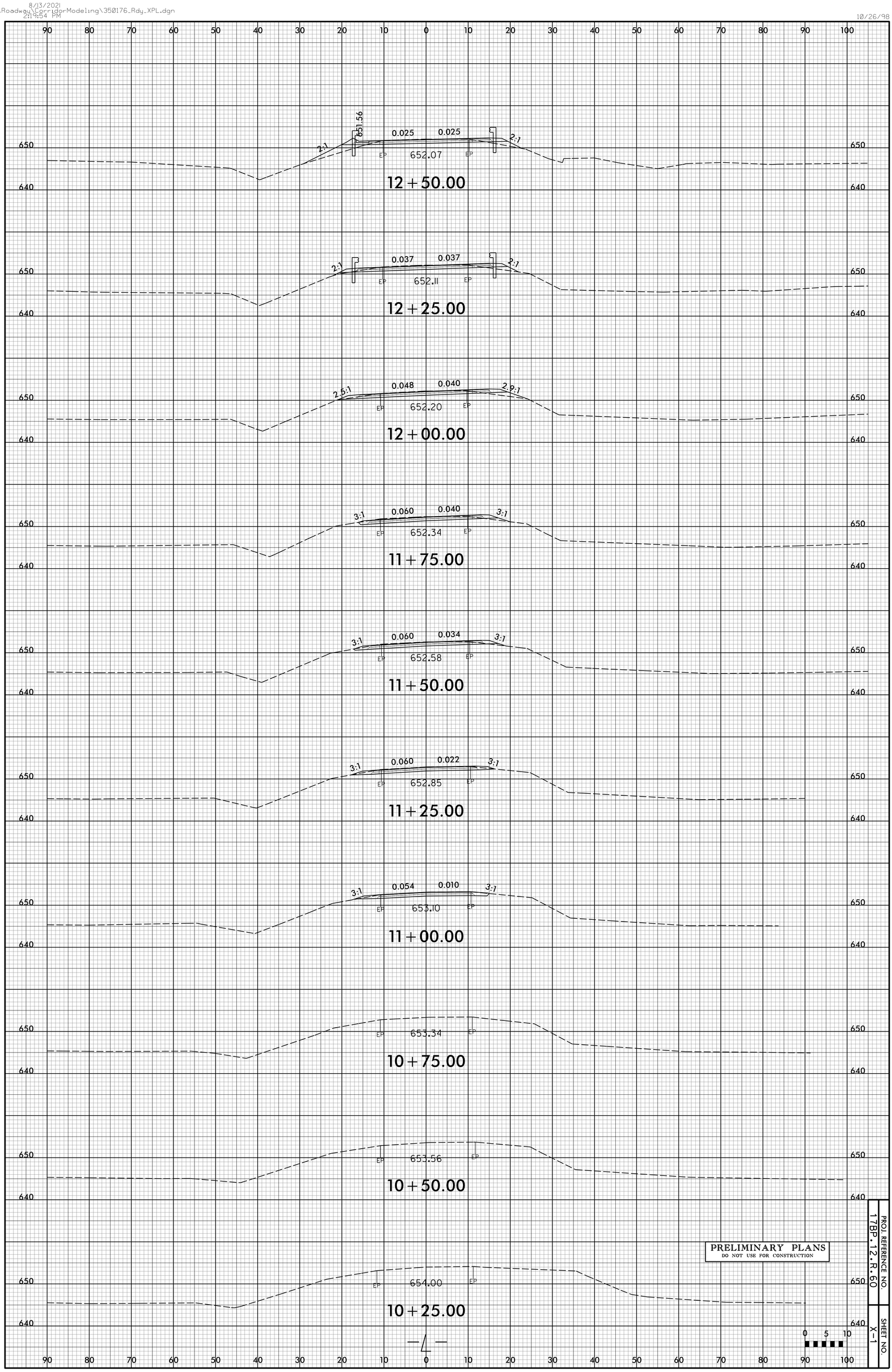

PRELIMINARY PLANS
DO NOT USE FOR CONSTRUCTION

PROJ. REFERENCE NO. 17BP.12.R.60

SHEET NO. X-1

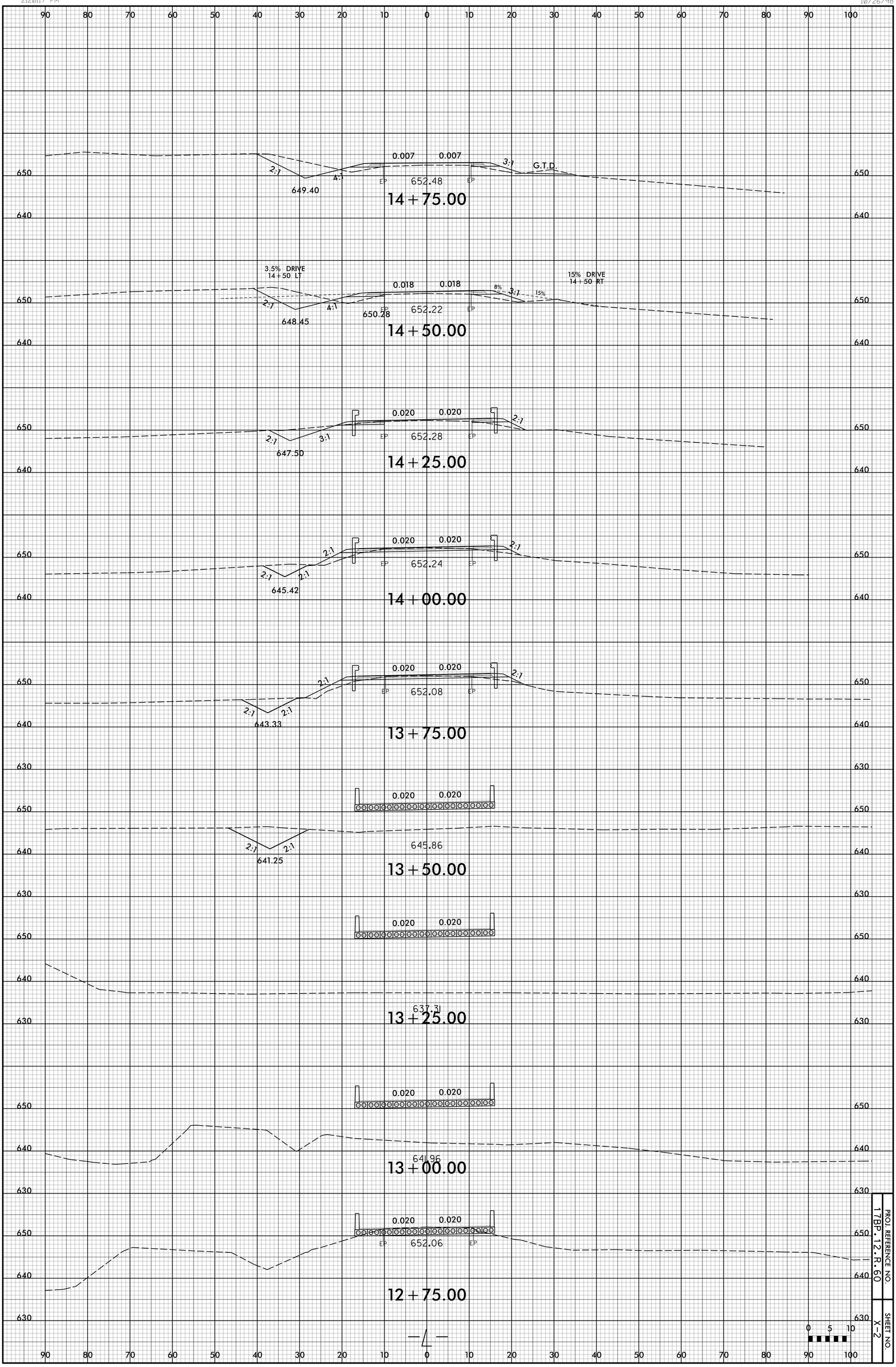

PROJ. REFERENCE NO. 17BP.12.R.60

SHEET NO. X-2

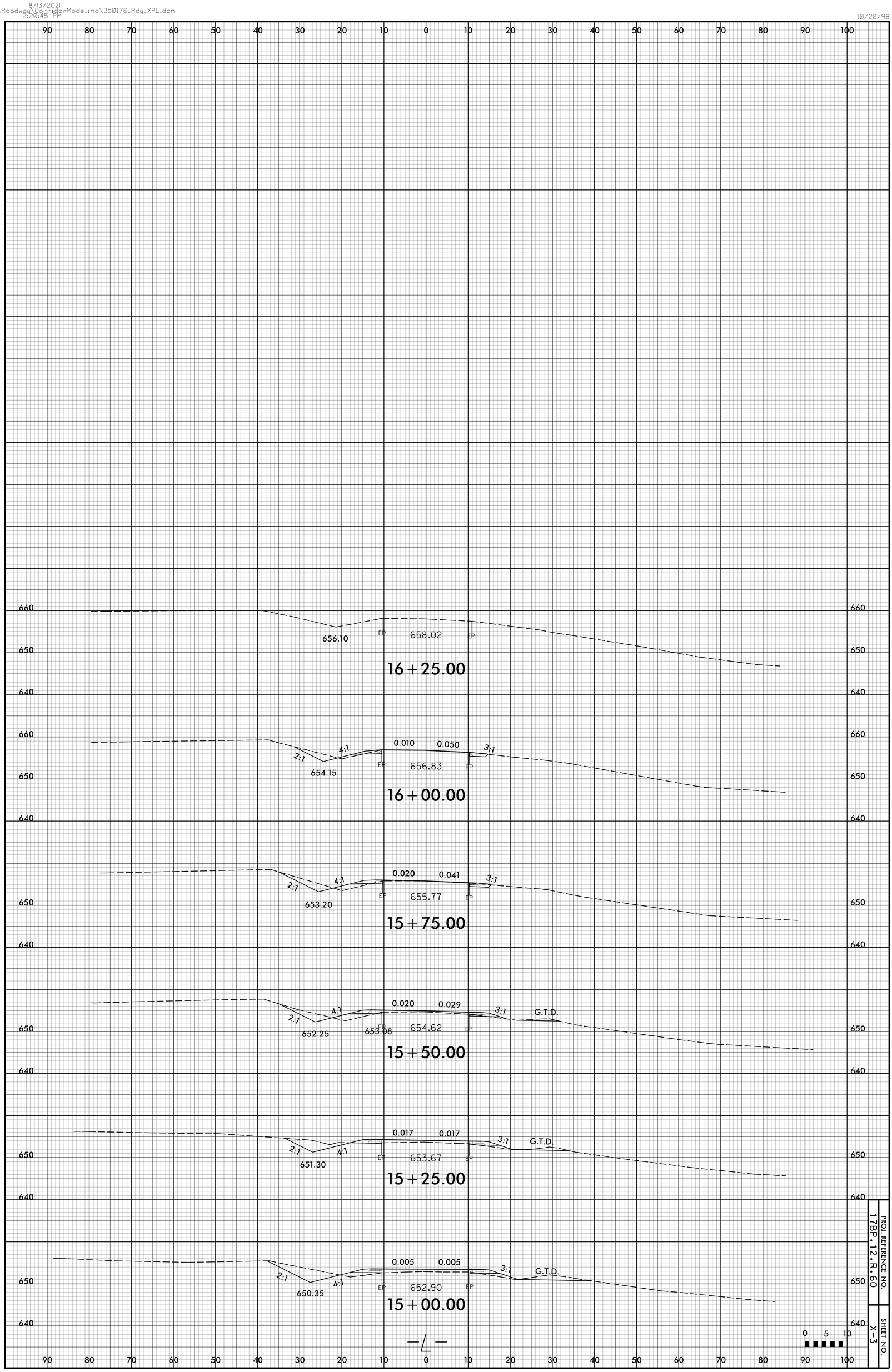

PROJ. REFERENCE NO. 17BP.12.R.60

SHEET NO. X-3

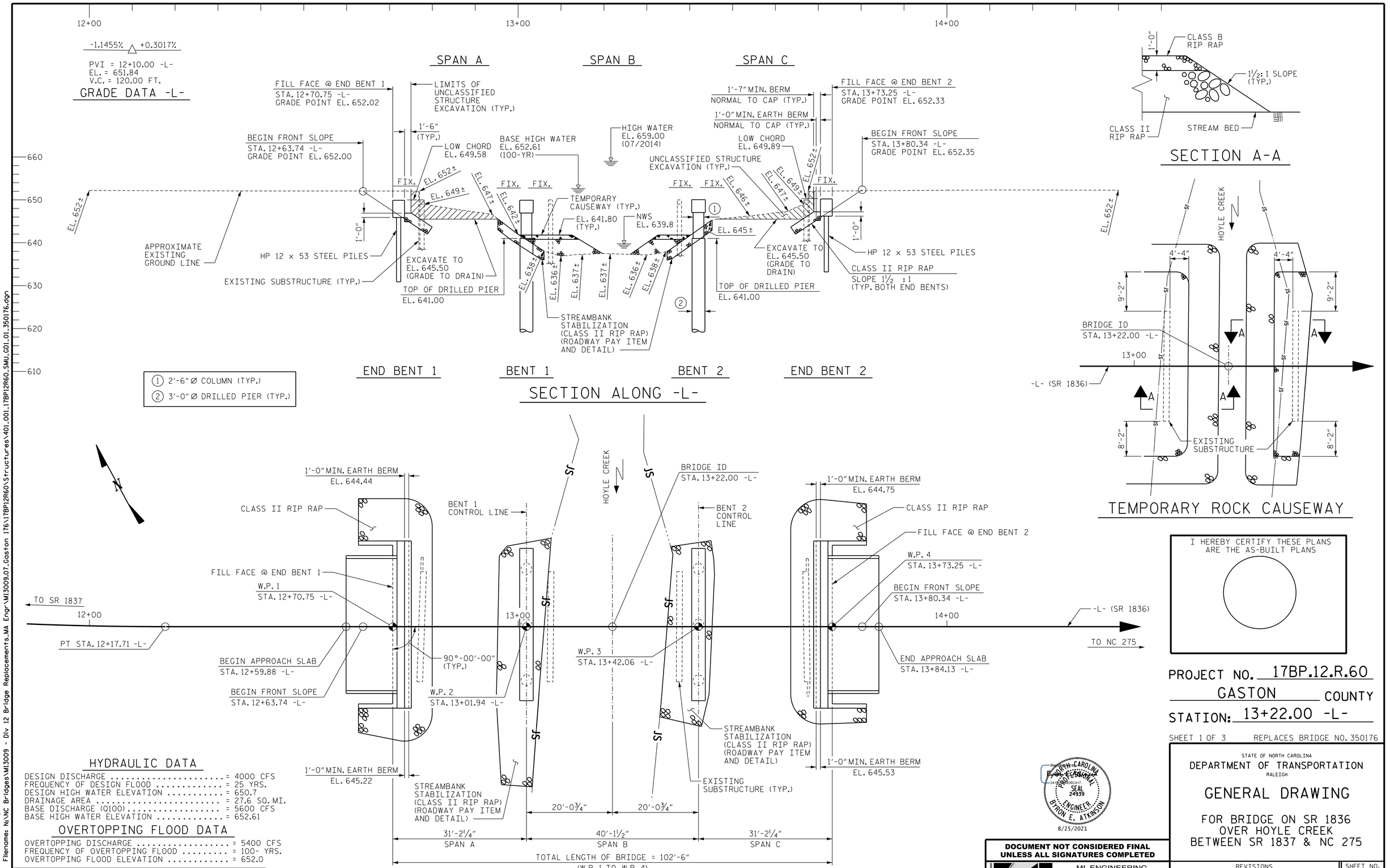

HYDRAULIC DATA

DESIGN DISCHARGE	= 4000 CFS
FREQUENCY OF DESIGN FLOOD	= 25 YRS.
DESIGN HIGH WATER ELEVATION	= 650.7
DRAINAGE AREA	= 27.6 SQ. MI.
BASE DISCHARGE (Q100)	= 5600 CFS
BASE HIGH WATER ELEVATION	= 652.61

OVERTOPPING FLOOD DATA

OVERTOPPING DISCHARGE	= 5400 CFS
FREQUENCY OF OVERTOPPING FLOOD	= 100- YRS.
OVERTOPPING FLOOD ELEVATION	= 652.0

DRAWN BY : B.E. LANNING DATE : 08/2021
CHECKED BY : B.E. ATKINSON DATE : 08/2021
DESIGN ENGINEER OF RECORD : B.E. ATKINSON DATE : 08/2021

I HEREBY CERTIFY THESE PLANS ARE THE AS-BUILT PLANS

PROJECT NO. 17BP.12.R.60
GASTON COUNTY
STATION: 13+22.00 -L-

SHEET 1 OF 3 REPLACES BRIDGE NO. 350176

STATE OF NORTH CAROLINA
DEPARTMENT OF TRANSPORTATION
RALEIGH

GENERAL DRAWING

FOR BRIDGE ON SR 1836
OVER HOYLE CREEK
BETWEEN SR 1837 & NC 275

NORTH CAROLINA PROFESSIONAL SEAL 24939 ENGINEER BYRON E. ATKINSON
8/25/2021

DOCUMENT NOT CONSIDERED FINAL UNLESS ALL SIGNATURES COMPLETED

MI ENGINEERING
1011 SCHAUB DRIVE, SUITE 100
RALEIGH, NC 27606
(919) 851-6606
FIRM PE NUMBER : P-0671

REVISIONS								SHEET NO.
NO.	BY:	DATE:	NO.	BY:	DATE:			S-1
1			3					TOTAL SHEETS
2			4					22

8/25/2021
11:12:45 AM
User: blanning
Filename: N:\NC Bridges\MI3009 - Div 12 Bridge Replacements_MA Engr\MI3009.07_Gaston 176\17BP12R60\Structures\401_001_17BP12R60_SMU_GD1_01_350176.dgn

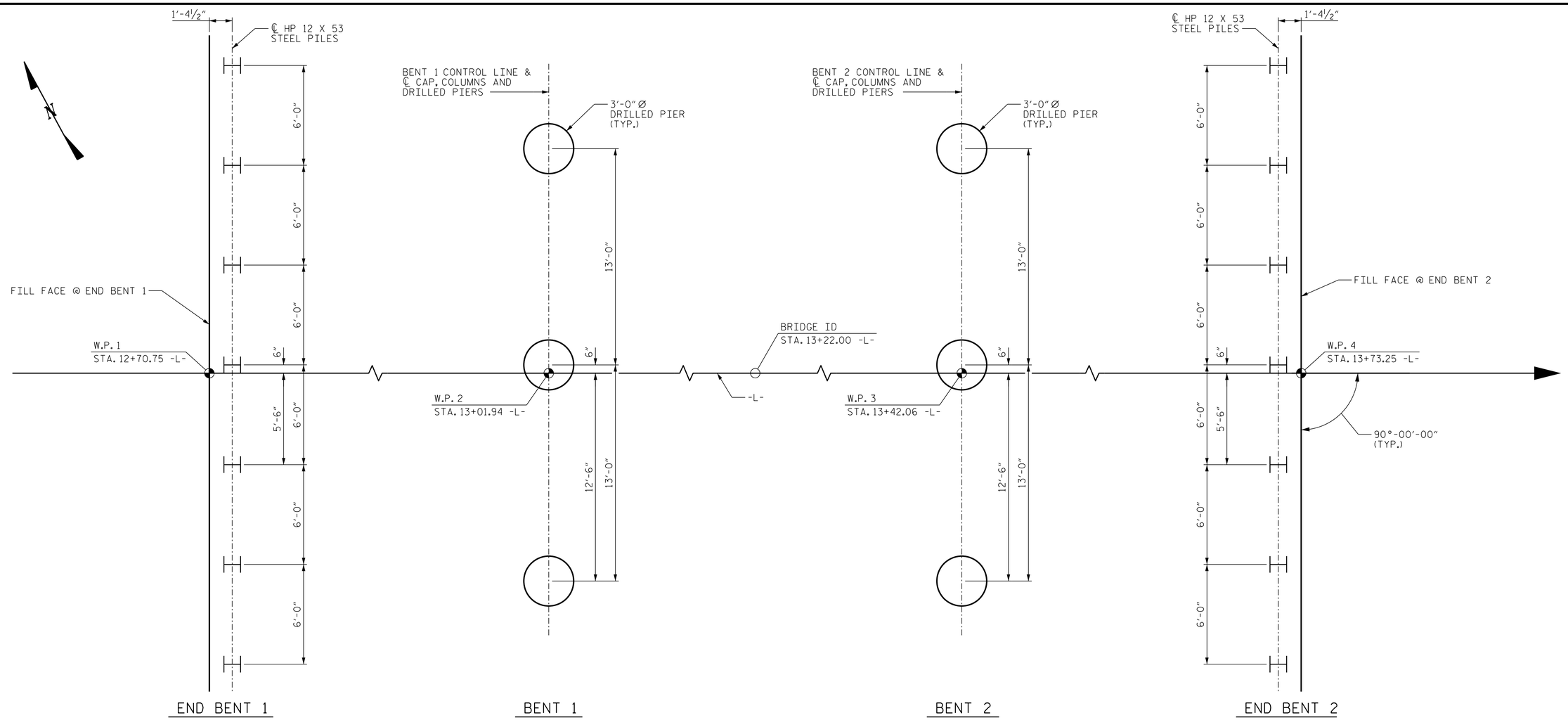

FOUNDATION LAYOUT

DIMENSIONS LOCATING END BENT PILES ARE SHOWN TO THE PILE CENTERLINE AT THE BOTTOM OF CAP.

DIMENSIONS LOCATING BENT DRILLED PIERS ARE SHOWN TO ℄ DRILLED PIERS.

FOUNDATION NOTES

FOR PILES, SEE PILES PROVISION AND SECTION 450 OF THE STANDARD SPECIFICATIONS.

PILES AT END BENT 1 AND END BENT 2 ARE DESIGNED FOR A FACTORED RESISTANCE OF 60 TONS PER PILE.

DRIVE PILES AT END BENT 1 AND END BENT 2 TO A REQUIRED DRIVING RESISTANCE OF 100 TONS PER PILE.

STEEL H-PILE POINTS ARE REQUIRED FOR STEEL H-PILES AT END BENTS 1 AND 2. FOR STEEL PILE POINTS, SEE SECTION 450 OF THE STANDARD SPECIFICATIONS.

FOR DRILLED PIERS, SEE GEOTECHNICAL SPECIAL PROVISIONS AND SECTION 411 OF THE STANDARD SPECIFICATIONS.

DRILLED PIERS AT BENT 1 ARE DESIGNED FOR A FACTORED RESISTANCE OF 275 TONS PER PIER. CHECK FIELD CONDITIONS FOR THE REQUIRED TIP RESISTANCE OF 15 TSF.

PERMANENT STEEL CASINGS ARE REQUIRED FOR DRILLED PIERS AT BENT 1. DO NOT EXTEND PERMANENT CASINGS BELOW ELEVATION 632 FT WITHOUT PRIOR APPROVAL FROM THE ENGINEER.

INSTALL DRILLED PIERS AT BENT NO. 1 TO A TIP ELEVATION NO HIGHER THAN 620 FT (LT), 611.3 FT (CT), AND 611.3 FT (RT) WITH THE REQUIRED TIP RESISTANCE AND A PENETRATION OF AT LEAST 12 FT INTO PARTIALLY WEATHER ROCK AS DEFINED BY ARTICLE 411 OF THE STANDARD SPECIFICATIONS.

THE SCOUR CRITICAL ELEVATION FOR BENT 1 IS ELEVATION 629 FT. SCOUR CRITICAL ELEVATIONS ARE USED TO MONITOR POSSIBLE SCOUR PROBLEMS DURING THE LIFE OF THE STRUCTURE.

DRILLED PIERS AT BENT 2 ARE DESIGNED FOR A FACTORED RESISTANCE OF 275 TONS PER PIER. CHECK FIELD CONDITIONS FOR THE REQUIRED TIP RESISTANCE OF 15 TSF.

PERMANENT STEEL CASINGS ARE REQUIRED FOR DRILLED PIERS AT BENT 2. DO NOT EXTEND PERMANENT CASINGS BELOW ELEVATION 636 FT WITHOUT PRIOR APPROVAL FROM THE ENGINEER.

INSTALL DRILLED PIERS AT BENT 2 TO A TIP ELEVATION NO HIGHER THAN 624 FT (LT), 615.4 FT (CT), AND 615.4 FT (RT) WITH THE REQUIRED TIP RESISTANCE AND A PENETRATION OF AT LEAST 12 FT INTO PARTIALLY WEATHER ROCK AS DEFINED BY ARTICLE 411 OF THE STANDARD SPECIFICATIONS.

THE SCOUR CRITICAL ELEVATION FOR BENT 2 IS ELEVATION 633 FT. SCOUR CRITICAL ELEVATIONS ARE USED TO MONITOR POSSIBLE SCOUR PROBLEMS DURING THE LIFE OF THE STRUCTURE.

SID INSPECTIONS MAY BE REQUIRED FOR DRILLED PIERS. THE ENGINEER WILL DETERMINE THE NEED FOR SID INSPECTIONS. FOR SID INSPECTIONS, SEE SECTION 411 OF THE STANDARD SPECIFICATIONS.

CSL TUBES ARE REQUIRED AND CSL TESTING MAY BE REQUIRED FOR DRILLED PIERS. THE ENGINEER WILL DETERMINE THE NEED FOR CSL TESTING. FOR CSL TESTING, SEE SECTION 411 OF THE STANDARD SPECIFICATIONS.

SPT IS REQUIRED FOR DRILLED PIERS AT BENTS 1 AND 2. FOR SPT TESTING, SEE SECTION 411 OF THE STANDARD SPECIFICATIONS.

TO VERIFY BEARING STRATA, STANDARD PENETRATION TESTING (SPT) IS REQUIRED FOR DRILLED PIERS AT BENT 1. TO VERIFY TOP OF THE WEATHERED ROCK AND TIP BEARING CAPACITY PERFORM SPTS AT ELEVATION 632 FT (LT), 623.3 (CT), AND 623.3 (RT) TO VERIFY TOP OF PARTIALLY WEATHERED ROCK AND AGAIN AT THE FINAL TIP ELEVATION INDICATED. FOR SPT TESTING, SEE SECTION 411 OF THE STANDARD SPECIFICATIONS.

TO VERIFY BEARING STRATA, STANDARD PENETRATION TESTING (SPT) IS REQUIRED FOR DRILLED PIERS AT BENT 2. TO VERIFY TOP OF THE WEATHERED ROCK AND TIP BEARING CAPACITY PERFORM SPTS AT ELEVATION 636 FT (LT), 627.4 (CT), AND 627.4 (RT) TO VERIFY TOP OF PARTIALLY WEATHERED ROCK AND AGAIN AT THE FINAL TIP ELEVATION INDICATED. FOR SPT TESTING, SEE SECTION 411 OF THE STANDARD SPECIFICATIONS.

PROJECT NO. 17BP.12.R.60
GASTON COUNTY
STATION: 13+22.00 -L-

SHEET 2 OF 3

NORTH CAROLINA PROFESSIONAL SEAL 24939 ENGINEER BYRON E. ATKINSON
8/25/2021

DOCUMENT NOT CONSIDERED FINAL UNLESS ALL SIGNATURES COMPLETED

MI ENGINEERING
1011 SCHAUB DRIVE, SUITE 100
RALEIGH, NC 27606
(919) 851-6606
FIRM PE NUMBER : P-0671

REVISIONS								SHEET NO.
NO.	BY:	DATE:	NO.	BY:	DATE:			S-2
1			3					TOTAL SHEETS
2			4					22

STATE OF NORTH CAROLINA
DEPARTMENT OF TRANSPORTATION
RALEIGH

GENERAL DRAWING

FOR BRIDGE ON SR 1836
OVER HOYLE CREEK
BETWEEN SR 1837 & NC 275

DRAWN BY :	B.E. LANNING	DATE :	08/2021
CHECKED BY :	B.E. ATKINSON	DATE :	08/2021
DESIGN ENGINEER OF RECORD :	B.E. ATKINSON	DATE :	08/2021

B.M. #1: RR SPIKE SET IN BASE OF 42" BIRCH, N 59°-16'-20.4" W 78.75' FROM STA. 10+00.00 -L-, EL. 658.45

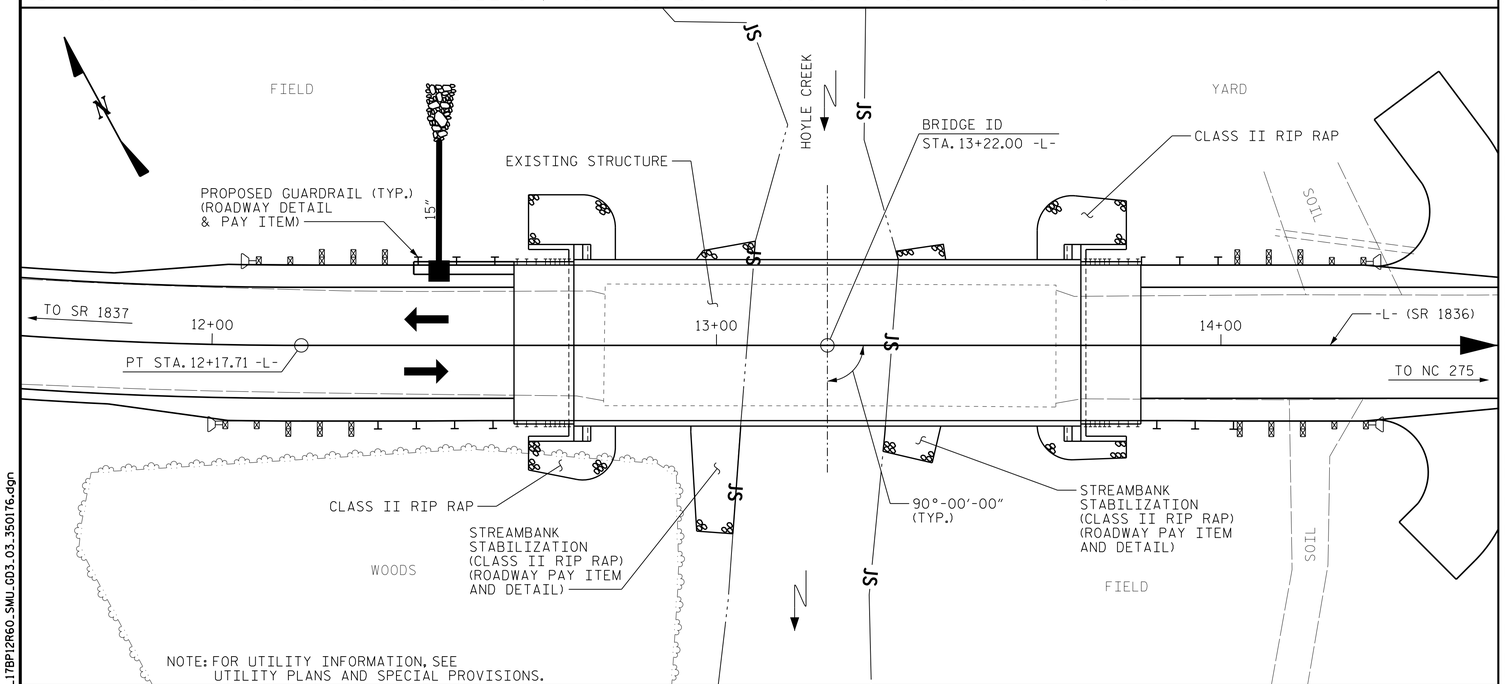

LOCATION SKETCH

NOTES

ASSUMED LIVE LOAD = HL 93 OR ALTERNATE LOADING.

THIS BRIDGE HAS BEEN DESIGNED IN ACCORDANCE WITH THE AASHTO LRFD BRIDGE DESIGN SPECIFICATIONS.

THIS BRIDGE IS LOCATED IN SEISMIC ZONE 1.

FOR OTHER DESIGN DATA AND GENERAL NOTES, SEE SHEET SN.

FOR EROSION CONTROL MEASURES, SEE EROSION CONTROL PLANS.

THE EXISTING STRUCTURE CONSISTING OF THREE SPANS (3 @ 30'-0") WITH 4" AWS DECK ON PRECAST PRESTRESSED CONCRETE CHANNELS AND A CLEAR ROADWAY WIDTH OF 24'-3" ON PRECAST PRESTRESSED CONCRETE CAP WITH TIMBER PILES AND TIMBER BULKHEADS AT END BENTS AND INTERIOR BENTS AND LOCATED AT THE SITE OF THE PROPOSED STRUCTURE SHALL BE REMOVED. THE EXISTING BRIDGE IS PRESENTLY POSTED FOR LOAD LIMIT. SHOULD THE STRUCTURAL INTEGRITY OF THE BRIDGE DETERIORATE DURING THE CONSTRUCTION OF THE PROPOSED BRIDGE, A LOAD LIMIT MAY BE POSTED AND MAY BE REDUCED AS FOUND NECESSARY DURING THE LIFE OF THE PROJECT.

THE SUBSTRUCTURE OF THE EXISTING BRIDGE INDICATED ON THE PLANS IS FROM THE BEST INFORMATION AVAILABLE. THIS INFORMATION IS SHOWN FOR THE CONVENIENCE OF THE CONTRACTOR. THE CONTRACTOR SHALL HAVE NO CLAIM WHATSOEVER AGAINST THE DEPARTMENT OF TRANSPORTATION FOR ANY DELAYS OR ADDITIONAL COST INCURRED BASED ON DIFFERENCES BETWEEN THE EXISTING BRIDGE SUBSTRUCTURE SHOWN ON THE PLANS AND THE ACTUAL CONDITIONS AT THE PROJECT SITE.

REMOVAL OF THE EXISTING BRIDGE SHALL BE PERFORMED IN A MANNER THAT PREVENTS DEBRIS FROM FALLING INTO THE WATER. THE CONTRACTOR SHALL SUBMIT DEMOLITION PLANS FOR REVIEW AND REMOVE THE BRIDGE IN ACCORDANCE WITH ARTICLE 402-2 OF THE STANDARD SPECIFICATIONS.

THE MATERIAL SHOWN IN THE CROSS-HATCHED AREA SHALL BE EXCAVATED FOR A DISTANCE UP TO OF 30 FT. EACH SIDE OF CENTERLINE ROADWAY AS DIRECTED BY THE ENGINEER. THIS WORK WILL BE PAID FOR AT THE CONTRACT LUMP SUM PRICE FOR UNCLASSIFIED STRUCTURE EXCAVATION. SEE SECTION 412 OF THE STANDARD SPECIFICATIONS.

ASPHALT WEARING SURFACE IS INCLUDED IN ROADWAY QUANTITY ON ROADWAY PLANS

THIS STRUCTURE HAS BEEN DESIGNED IN ACCORDANCE WITH "HEC 18- EVALUATING SCOUR AT BRIDGES".

FOR FALSEWORK AND FORMWORK, SEE SPECIAL PROVISIONS.

FOR SUBMITTAL OF WORKING DRAWINGS, SEE SPECIAL PROVISIONS.

FOR CRANE SAFETY, SEE SPECIAL PROVISIONS.

FOR GROUT FOR STRUCTURES, SEE SPECIAL PROVISIONS.

FOR ASBESTOS ASSESSMENT FOR BRIDGE DEMOLITION AND RENOVATION ACTIVITIES, SEE SPECIAL PROVISIONS.

AT THE CONTRACTOR'S OPTION, PRESTRESSED CONCRETE END BENT AND BENT CAPS MAY BE SUBSTITUTED IN PLACE OF THE CAST-IN-PLACE CAPS. THE CONTRACTOR SHALL COORDINATE WITH THE RESIDENT ENGINEER TO RECEIVE REVISED PLANS AND DETAILS FROM THE STRUCTURES MANAGEMENT UNIT. THE REDESIGN AND ANY ADDITIONAL MATERIALS NEEDED WILL BE AT NO ADDITIONAL COST TO THE CONTRACTOR.

AT THE CONTRACTOR'S OPTION, AND UPON REMOVAL OF THE CAUSEWAY, THE CLASS II RIP RAP USED IN THE CAUSEWAY MAY BE PLACED AS RIP RAP SLOPE PROTECTION AND STREAMBANK STABILIZATION AS DIRECTED BY THE ENGINEER. SEE SPECIAL PROVISIONS FOR CONSTRUCTION, MAINTENANCE AND REMOVAL OF TEMPORARY ACCESS AT STATION 13+22.00 -L-.

FOR FOUNDATION NOTES, SEE "GENERAL DRAWING, SHEET 2 OF 3".

TOTAL BILL OF MATERIAL

	CONSTRUCTION, MAINTENANCE AND REMOVAL OF TEMPORARY ACCESS	REMOVAL OF EXISTING STRUCTURE	ASBESTOS ASSESSMENT	3'-0" Ø DRILLED PIER IN SOIL	3'-0" Ø DRILLED PIER NOT IN SOIL	PERMANENT STEEL CASING FOR 3'-0" Ø DRILLED PIER	SID INSPECTION	SPT TESTING	CSL TESTING	UNCLASSIFIED STRUCTURE EXCAVATION	CONCRETE WEARING SURFACE	GROOVING BRIDGE FLOORS
	LUMP SUM	LUMP SUM	LUMP SUM	LIN. FT.	LIN. FT.	LIN. FT.	EACH	EACH	EACH	LUMP SUM	SQ. FT.	SQ. FT.
SUPERSTRUCTURE											3083	3424
END BENT 1										LUMP SUM		
BENT 1				47.5	33.0	27.0		3				
BENT 2				35.5	33.0	15.0		3				
END BENT 2										LUMP SUM		
TOTAL	LUMP SUM	LUMP SUM	LUMP SUM	83.0	66.0	42.0	2	6	1	LUMP SUM	3083	3424

TOTAL BILL OF MATERIAL

	CLASS A CONCRETE	BRIDGE APPROACH SLABS	REINFORCING STEEL	SPIRAL COLUMN REINFORCING STEEL	PILE DRIVING EQUIPMENT SETUP FOR HP 12 X 53 STEEL PILES	HP 12 X 53 STEEL PILES		STEEL PILE POINTS	VERTICAL CONCRETE BARRIER RAIL	RIP RAP CLASS II (2'-0" THICK)	GEOTEXTILE FOR DRAINAGE	ELASTOMERIC BEARINGS	3'-0" X 1'-9" PRESTRESSED CONCRETE CORED SLABS	
	CU. YDS.	LUMP SUM	LBS.	LBS.	EACH	NO.	LIN. FT.	EACH	LIN. FT.	TON	SQ. YDS.	LUMP SUM	NO.	LIN. FT.
SUPERSTRUCTURE		LUMP SUM							200.75			LUMP SUM	33	1100.00
END BENT 1	21.6		2636		7	7	125	7		107	120			
BENT 1	15.7		9180	1703										
BENT 2	15.9		8560	1512										
END BENT 2	21.6		2636		7	7	105	7		113	126			
TOTAL	74.8	LUMP SUM	23,012	3215	14	14	230	14	200.75	220	246	LUMP SUM	33	1100.00

PROJECT NO. 17BP.12.R.60
GASTON COUNTY
STATION: 13+22.00 -L-

SHEET 3 OF 3

STATE OF NORTH CAROLINA
DEPARTMENT OF TRANSPORTATION
RALEIGH

GENERAL DRAWING

FOR BRIDGE ON SR 1836
OVER HOYLE CREEK
BETWEEN SR 1837 & NC 275

NORTH CAROLINA PROFESSIONAL SEAL 24939 ENGINEER BYRON E. ATKINSON
8/25/2021

DOCUMENT NOT CONSIDERED FINAL
UNLESS ALL SIGNATURES COMPLETED

MI ENGINEERING
1011 SCHAUB DRIVE, SUITE 100
RALEIGH, NC 27606
(919) 851-6606
FIRM PE NUMBER : P-0671

REVISIONS						SHEET NO.
NO.	BY:	DATE:	NO.	BY:	DATE:	S-3
1			3			TOTAL SHEETS
2			4			22

DRAWN BY : B.E. LANNING DATE : 08/2021
CHECKED BY : B.E. ATKINSON DATE : 08/2021
DESIGN ENGINEER OF RECORD : B.E. ATKINSON DATE : 08/2021

8/25/2021
11:12:47 AM
User: blanning
Filename: N:\NC Bridges\WI3009 - Div 12 Bridge Replacements_MA Engr\WI3009_07_Gaston 176\17BP12R60\Structures\401_005_17BP12R60_SMU_GD3_03_3501T6.dgn

LOAD AND RESISTANCE FACTOR RATING (LRFD) SUMMARY FOR PRESTRESSED CONCRETE GIRDERS

LEVEL		VEHICLE	WEIGHT (W) (TONS)	CONTROLLING LOAD RATING	MINIMUM RATING FACTORS (RF)	TONS = W X RF	STRENGTH I LIMIT STATE											SERVICE III LIMIT STATE						COMMENT NUMBER
							LIVELOAD FACTORS	MOMENT					SHEAR					LIVELOAD FACTORS	MOMENT					
								DISTRIBUTION FACTORS (DF)	RATING FACTOR	SPAN	GIRDER LOCATION	DISTANCE FROM LEFT END OF SPAN (ft)	DISTRIBUTION FACTORS (DF)	RATING FACTOR	SPAN	GIRDER LOCATION	DISTANCE FROM LEFT END OF SPAN (ft)		DISTRIBUTION FACTORS (DF)	RATING FACTOR	SPAN	GIRDER LOCATION	DISTANCE FROM LEFT END OF SPAN (ft)	
DESIGN LOAD RATING		HL-93(Inv)	N/A	1	1.377	--	1.75	0.286	1.74	30'	EL	14.5	0.578	**1.65**	30'	EL	**2.50**	0.80	0.286	1.38	30'	EL	14.5	
		HL-93(Opr)	N/A	--	2.133	--	1.35	0.286	2.25	30'	EL	14.5	0.578	2.13	30'	EL	2.50	N/A	--	--	--	--	--	
		HS-20(Inv)	36.000	2	1.874	67.451	1.75	0.286	2.40	30'	EL	17.4	0.578	**1.87**	30'	EL	**2.50**	0.80	0.286	1.93	30'	EL	17.4	
		HS-20(Opr)	36.000	--	2.429	87.437	1.35	0.286	3.11	30'	EL	17.4	0.578	2.43	30'	EL	2.50	N/A	--	--	--	--	--	
LEGAL LOAD RATING	SV	SNSH	13.500	--	3.113	42.023	1.40	0.286	4.90	30'	EL	14.5	0.578	4.53	30'	EL	2.50	0.80	0.286	3.11	30'	EL	14.5	
		SNGARBS2	20.000	--	2.767	55.332	1.40	0.286	4.29	30'	EL	17.4	0.578	3.53	30'	EL	2.50	0.80	0.286	2.77	30'	EL	17.4	
		SNAGRIS2	22.000	--	2.811	61.848	1.40	0.286	4.36	30'	EL	17.4	0.578	3.41	30'	EL	2.50	0.80	0.286	2.81	30'	EL	17.4	
		SNCOTTS3	27.250	--	1.562	42.561	1.40	0.286	2.46	30'	EL	14.5	0.578	2.29	30'	EL	2.50	0.80	0.286	1.56	30'	EL	14.5	
		SNAGGRS4	34.925	--	1.504	52.525	1.40	0.286	2.37	30'	EL	14.5	0.578	2.12	30'	EL	2.50	0.80	0.286	1.50	30'	EL	14.5	
		SNS5A	35.550	--	1.455	51.737	1.40	0.286	2.29	30'	EL	14.5	0.578	2.25	30'	EL	2.50	0.80	0.286	1.46	30'	EL	14.5	
		SNS6A	39.950	--	1.376	54.986	1.40	0.286	2.17	30'	EL	14.5	0.578	2.12	30'	EL	2.50	0.80	0.286	1.38	30'	EL	14.5	
		SNS7B	42.000	3	1.337	56.147	1.40	0.286	2.11	30'	EL	14.5	0.578	2.16	30'	EL	2.50	0.80	0.286	1.34	30'	EL	14.5	
	TTST	TNAGRIT3	33.000	--	1.784	58.867	1.40	0.286	2.81	30'	EL	14.5	0.578	2.53	30'	EL	2.50	0.80	0.286	1.78	30'	EL	14.5	
		TNT4A	33.075	--	1.693	55.981	1.40	0.286	2.67	30'	EL	14.5	0.578	2.35	30'	EL	2.50	0.80	0.286	1.69	30'	EL	14.5	
		TNT6A	41.600	--	1.536	63.905	1.40	0.286	2.42	30'	EL	14.5	0.578	2.26	30'	EL	2.50	0.80	0.286	1.54	30'	EL	14.5	
		TNT7A	42.000	--	1.588	66.706	1.40	0.286	2.50	30'	EL	14.5	0.578	2.16	30'	EL	2.50	0.80	0.286	1.59	30'	EL	14.5	
		TNT7B	42.000	--	1.497	62.862	1.40	0.286	2.36	30'	EL	14.5	0.578	2.12	30'	EL	2.50	0.80	0.286	1.50	30'	EL	14.5	
		TNAGRIT4	43.000	--	1.549	66.614	1.40	0.286	2.44	30'	EL	14.5	0.578	2.05	30'	EL	2.50	0.80	0.286	1.55	30'	EL	14.5	
		TNAGT5A	45.000	--	1.504	67.669	1.40	0.286	2.37	30'	EL	14.5	0.578	2.20	30'	EL	2.50	0.80	0.286	1.50	30'	EL	14.5	
		TNAGT5B	45.000	--	1.469	66.127	1.40	0.286	2.29	30'	EL	17.4	0.578	**1.93**	30'	EL	**2.50**	0.80	0.286	1.47	30'	EL	14.5	

LOAD FACTORS:

DESIGN LOAD RATING FACTORS	LIMIT STATE	γ_{DC}	γ_{DW}
	STRENGTH I	1.25	1.50
	SERVICE III	1.00	1.00

NOTES:

MINIMUM RATING FACTORS ARE BASED ON THE STRENGTH I AND SERVICE III LIMIT STATES.

ALLOWABLE STRESSES FOR SERVICE III LIMIT STATE ARE AS REQUIRED FOR DESIGN.

COMMENTS:

1.
2.
3.
4.

CONTROLLING LOAD RATING

1. DESIGN LOAD RATING (HL-93)
2. DESIGN LOAD RATING (HS-20)
3. LEGAL LOAD RATING **

** SEE CHART FOR VEHICLE TYPE

GIRDER LOCATION

I - INTERIOR GIRDER
EL - EXTERIOR LEFT GIRDER
ER - EXTERIOR RIGHT GIRDER

LRFR SUMMARY

FOR SPAN 'A & C'

PROJECT NO. 17BP.12.R.60
GASTON COUNTY
STATION: 13+22.00 -L-

SHEET 1 OF 2

DocuSigned by:
8/25/2021

NORTH CAROLINA PROFESSIONAL SEAL 35647 ENGINEER ADAM A. COLE

STATE OF NORTH CAROLINA
DEPARTMENT OF TRANSPORTATION
RALEIGH

STANDARD
LRFR SUMMARY FOR 30' CORED SLAB UNIT 90° SKEW
(NON-INTERSTATE TRAFFIC)

REVISIONS						SHEET NO.
NO.	BY:	DATE:	NO.	BY:	DATE:	S-4
1			3			TOTAL SHEETS
2			4			22

DOCUMENT NOT CONSIDERED FINAL UNLESS ALL SIGNATURES COMPLETED

ASSEMBLED BY : REZA KOUCHEKI	DATE : 07/2021
CHECKED BY : H.A. LOCKLEAR	DATE : 07/2021
DRAWN BY : CVC 6/10	
CHECKED BY : DNS 6/10	

25-AUG-2021 10:26
S:\DPG3\Low Impact Projects\17BP\17BP12R60\FinalPlans\401_007_17BPR1260_SMU_LR_04_350176.dgn
aacole

STD. NO. 21LRFR1_90S_30L

LOAD AND RESISTANCE FACTOR RATING (LRFD) SUMMARY FOR PRESTRESSED CONCRETE GIRDERS

LEVEL		VEHICLE	WEIGHT (W) (TONS)	CONTROLLING LOAD RATING	MINIMUM RATING FACTORS (RF)	TONS = W X RF	STRENGTH I LIMIT STATE											SERVICE III LIMIT STATE						COMMENT NUMBER
							LIVELOAD FACTORS	MOMENT					SHEAR					LIVELOAD FACTORS	MOMENT					
								DISTRIBUTION FACTORS (DF)	RATING FACTOR	SPAN	GIRDER LOCATION	DISTANCE FROM LEFT END OF SPAN (ft)	DISTRIBUTION FACTORS (DF)	RATING FACTOR	SPAN	GIRDER LOCATION	DISTANCE FROM LEFT END OF SPAN (ft)		DISTRIBUTION FACTORS (DF)	RATING FACTOR	SPAN	GIRDER LOCATION	DISTANCE FROM LEFT END OF SPAN (ft)	
DESIGN LOAD RATING		HL-93(Inv)	N/A	1	1.251	--	1.75	0.269	1.71	40'	EL	19.5	0.553	**1.25**	40'	EL	**1.95**	0.80	0.269	1.41	40'	EL	19.5	
		HL-93(Opr)	N/A	--	1.622	--	1.35	0.269	2.21	40'	EL	19.5	0.553	1.62	40'	EL	1.95	N/A	--	--	--	--	--	
		HS-20(Inv)	36.000	2	1.450	52.187	1.75	0.269	2.14	40'	EL	19.5	0.553	**1.45**	40'	EL	**1.95**	0.80	0.269	1.77	40'	EL	19.5	
		HS-20(Opr)	36.000	--	1.879	67.649	1.35	0.269	2.77	40'	EL	19.5	0.553	1.88	40'	EL	1.95	N/A	--	--	--	--	--	
LEGAL LOAD RATING	SV	SNSH	13.500	--	3.264	44.059	1.40	0.269	4.95	40'	EL	19.5	0.553	3.89	40'	EL	1.95	0.80	0.269	3.26	40'	EL	19.5	
		SNGARBS2	20.000	--	2.714	54.276	1.40	0.269	4.07	40'	EL	23.4	0.553	2.89	40'	EL	1.95	0.80	0.269	2.71	40'	EL	19.5	
		SNAGRIS2	22.000	--	2.672	58.791	1.40	0.269	3.98	40'	EL	23.4	0.553	2.74	40'	EL	1.95	0.80	0.269	2.67	40'	EL	23.4	
		SNCOTTS3	27.250	--	1.631	44.455	1.40	0.269	2.47	40'	EL	19.5	0.553	1.95	40'	EL	1.95	0.80	0.269	1.63	40'	EL	19.5	
		SNAGGRS4	34.925	--	1.468	51.281	1.40	0.269	2.23	40'	EL	19.5	0.553	1.71	40'	EL	1.95	0.80	0.269	1.47	40'	EL	19.5	
		SNS5A	35.550	--	1.428	50.774	1.40	0.269	2.16	40'	EL	19.5	0.553	1.79	40'	EL	1.95	0.80	0.269	1.43	40'	EL	19.5	
		SNS6A	39.950	--	1.359	54.290	1.40	0.269	2.06	40'	EL	19.5	0.553	1.67	40'	EL	1.95	0.80	0.269	1.36	40'	EL	19.5	
		SNS7B	42.000	3	1.296	54.433	1.40	0.269	1.96	40'	EL	19.5	0.553	1.70	40'	EL	1.95	0.80	0.269	**1.30**	40'	EL	**19.5**	
	TTST	TNAGRIT3	33.000	--	1.672	55.182	1.40	0.269	2.53	40'	EL	19.5	0.553	1.95	40'	EL	1.95	0.80	0.269	1.67	40'	EL	19.5	
		TNT4A	33.075	--	1.694	56.019	1.40	0.269	2.57	40'	EL	19.5	0.553	1.86	40'	EL	1.95	0.80	0.269	1.69	40'	EL	19.5	
		TNT6A	41.600	--	1.436	59.758	1.40	0.269	2.18	40'	EL	19.5	0.553	1.82	40'	EL	1.95	0.80	0.269	1.44	40'	EL	19.5	
		TNT7A	42.000	--	1.473	61.859	1.40	0.269	2.23	40'	EL	19.5	0.553	1.68	40'	EL	1.95	0.80	0.269	1.47	40'	EL	19.5	
		TNT7B	42.000	--	1.506	63.246	1.40	0.269	2.28	40'	EL	19.5	0.553	1.62	40'	EL	1.95	0.80	0.269	1.51	40'	EL	19.5	
		TNAGRIT4	43.000	--	1.465	62.996	1.40	0.269	2.22	40'	EL	15.6	0.553	1.55	40'	EL	1.95	0.80	0.269	1.47	40'	EL	19.5	
		TNAGT5A	45.000	--	1.356	61.007	1.40	0.269	2.05	40'	EL	19.5	0.553	1.61	40'	EL	1.95	0.80	0.269	1.36	40'	EL	19.5	
		TNAGT5B	45.000	--	1.317	59.281	1.40	0.269	2.00	40'	EL	19.5	0.553	1.47	40'	EL	1.95	0.80	0.269	1.32	40'	EL	19.5	

LOAD FACTORS:

DESIGN LOAD RATING FACTORS	LIMIT STATE	γ_{DC}	γ_{DW}
	STRENGTH I	1.25	1.50
	SERVICE III	1.00	1.00

NOTES:

MINIMUM RATING FACTORS ARE BASED ON THE STRENGTH I AND SERVICE III LIMIT STATES.

ALLOWABLE STRESSES FOR SERVICE III LIMIT STATE ARE AS REQUIRED FOR DESIGN.

COMMENTS:

1.
2.
3.
4.

CONTROLLING LOAD RATING

1. DESIGN LOAD RATING (HL-93)
2. DESIGN LOAD RATING (HS-20)
3. LEGAL LOAD RATING **

** SEE CHART FOR VEHICLE TYPE

GIRDER LOCATION

I - INTERIOR GIRDER
EL - EXTERIOR LEFT GIRDER
ER - EXTERIOR RIGHT GIRDER

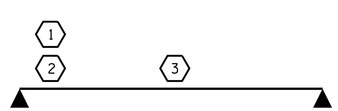

LRFR SUMMARY

FOR SPAN 'B'

PROJECT NO. 17BP.12.R.60
GASTON COUNTY
STATION: 13+22.00 -L-

SHEET 2 OF 2

DocuSigned by:
DEC5E8D1A9D7C4...
NORTH CAROLINA PROFESSIONAL SEAL 35647 ENGINEER ADAM A. COLE
8/25/2021

STATE OF NORTH CAROLINA
DEPARTMENT OF TRANSPORTATION
RALEIGH

STANDARD
LRFR SUMMARY FOR
40' CORED SLAB UNIT
90° SKEW
(NON-INTERSTATE TRAFFIC)

REVISIONS						SHEET NO.
NO.	BY:	DATE:	NO.	BY:	DATE:	S-5
1			3			TOTAL SHEETS
2			4			22

DOCUMENT NOT CONSIDERED FINAL UNLESS ALL SIGNATURES COMPLETED

ASSEMBLED BY : REZA KOUCHEKI	DATE : 07/2021
CHECKED BY : H.A. LOCKLEAR	DATE : 07/2021
DRAWN BY : CVC 6/10	
CHECKED BY : DNS 6/10	

25-AUG-2021 10:26
S:\DPG3\Low Impact Projects\17BP\17BP12R60\FinalPlans\401_009_17BPR1260_SMU_LR_05_350176.dgn
aacole

STD. NO. 21LRFR1_90S_40L

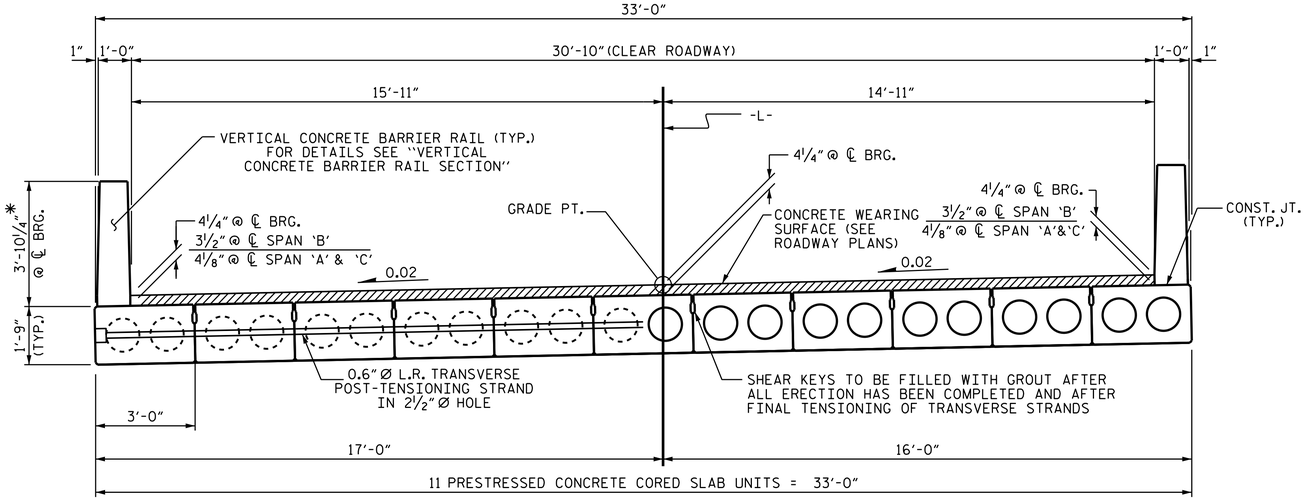

TYPICAL SECTION

THE MAXIMUM BARRIER RAIL HEIGHT AND ASPHALT THICKNESS IS SHOWN. THE HEIGHT OF THE BARRIER RAIL AND ASPHALT THICKNESS VARIES WHILE THE TOP OF THE BARRIER RAIL * FOLLOWS THE PROFILE OF THE GUTTERLINE. FOR RAIL HEIGHT DETAILS AND A CONCRETE THICKNESS SEE THE "VERTICAL CONCRETE BARRIER RAIL SECTION" DETAIL.

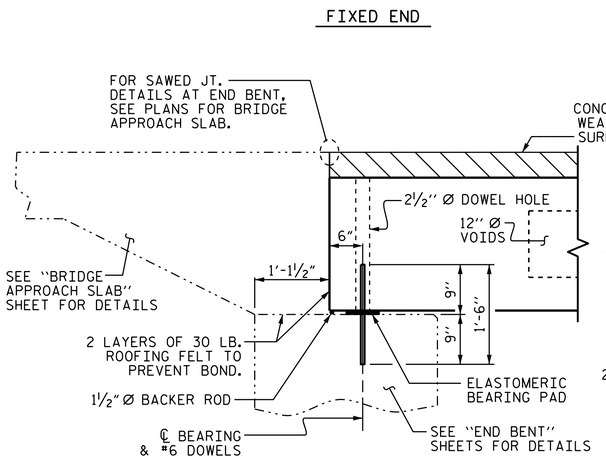

SECTION AT END BENT

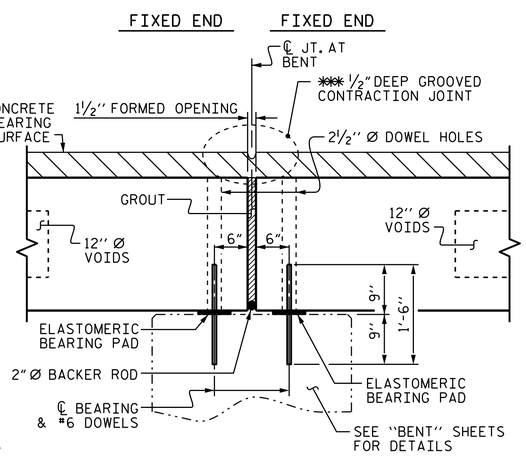

SECTION AT BENT

✱✱✱ GROOVED CONTRACTION JOINTS, ½" IN DEPTH. SHALL BE TOOLED IN THE TOP OF WEARING SURFACE AT INTERIOR BENTS WITHCONTINUOUS CONCRETE WEARING SURFACE IN ACCORDANCE WITH ARTICLE 825-10(B) OF THE STANDARD SPECIFICATIONS.

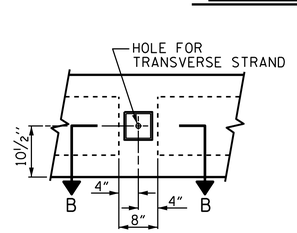

ELEVATION VIEW

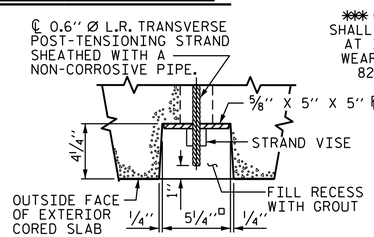

SECTION B-B

GROUTED RECESS AT END OF POST-TENSIONED STRAND OF CORED SLABS

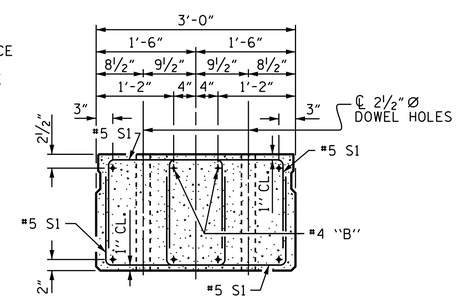

END ELEVATION

SHOWING PLACEMENT OF DOUBLE STIRRUPS AND LOCATION OF DOWEL HOLES. (STRAND LAYOUT NOT SHOWN.) INTERIOR SLAB UNIT SHOWN-EXTERIOR SLAB UNIT SIMILAR EXCEPT SHEAR KEY LOCATION.

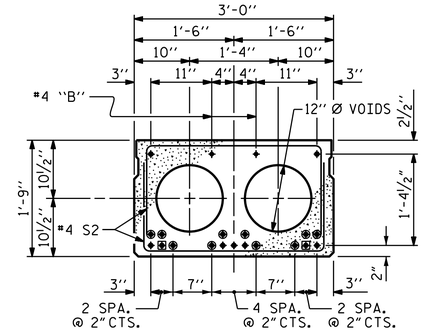

INTERIOR SLAB SECTION (30' UNIT) (SPANS 'A' & 'C')

(9 STRANDS REQUIRED)

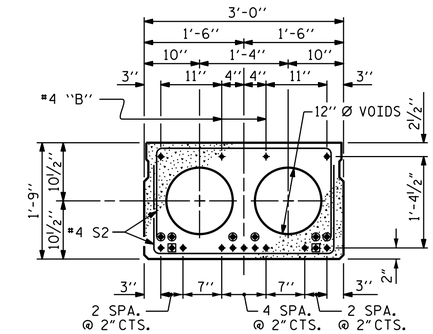

INTERIOR SLAB SECTION (40' UNIT) (SPAN 'B')

(13 STRANDS REQUIRED)

0.6" Ø LOW RELAXATION STRAND LAYOUT

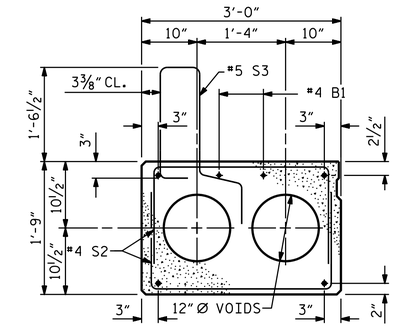

EXTERIOR SLAB SECTION

(FOR PRESTRESSED STRAND LAYOUT, SEE INTERIOR SLAB SECTION.)

◉ BOND SHALL BE BROKEN ON THESE STRANDS FOR A DISTANCE OF 2'-0" FROM END OF CORED SLAB UNIT. SEE STANDARD SPECIFICATIONS, ARTICLE 1078-7.

◉ OPTIONAL FULL LENGTH DEBONDED STRANDS. THESE STRANDS ARE NOT REQUIRED. IF THE FABRICATOR CHOOSES TO INCLUDE THESE STRANDS IN THE CORED SLAB UNIT, THE STRANDS SHALL BE DEBONDED FOR THE FULL LENGTH OF THE UNIT AT NO ADDITIONAL COST. SEE STANDARD SPECIFICATIONS, ARTICLE 1078-7.

DEBONDING LEGEND

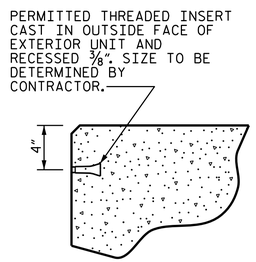

THREADED INSERT DETAIL

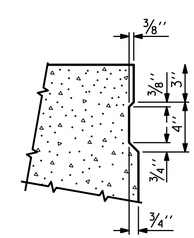

SHEAR KEY DETAIL

NOTE: OMIT SHEAR KEY ON OUTSIDE FACE OF EXTERIOR CORED SLABS.

PROJECT NO. 17BP.12.R.60

GASTON COUNTY

STATION: 13+22.00 -L-

SHEET 1 OF 6

STATE OF NORTH CAROLINA
DEPARTMENT OF TRANSPORTATION
RALEIGH

STANDARD

3'-0" X 1'-9" PRESTRESSED CONCRETE CORED SLAB UNIT

NORTH CAROLINA PROFESSIONAL SEAL 35647 ENGINEER ADAM A. COLE

8/25/2021

ASSEMBLED BY : REZA KOUCHEKI	DATE : 07/2021		
CHECKED BY : H.A. LOCKLEAR	DATE : 07/2021		
DRAWN BY : MAA 5/10	REV. 10/1/11	MAA/GM	
CHECKED BY : GM 5/10	REV. 1/15	RWW/TMG	
	REV. 12/17	MAA/THC	

DOCUMENT NOT CONSIDERED FINAL UNLESS ALL SIGNATURES COMPLETED

REVISIONS								SHEET NO.
NO.	BY:	DATE:	NO.	BY:	DATE:			S-6
1			3					TOTAL SHEETS
2			4					22

(SHT 4C) STD. NO. PCS4

25-AUG-2021 10:26
S:\DPG3\Low Impact Projects\17BP\17BP12R60\FinalPlans\401_011_17BP12R60_SMU_ CS_06_350176.dgn
aacole

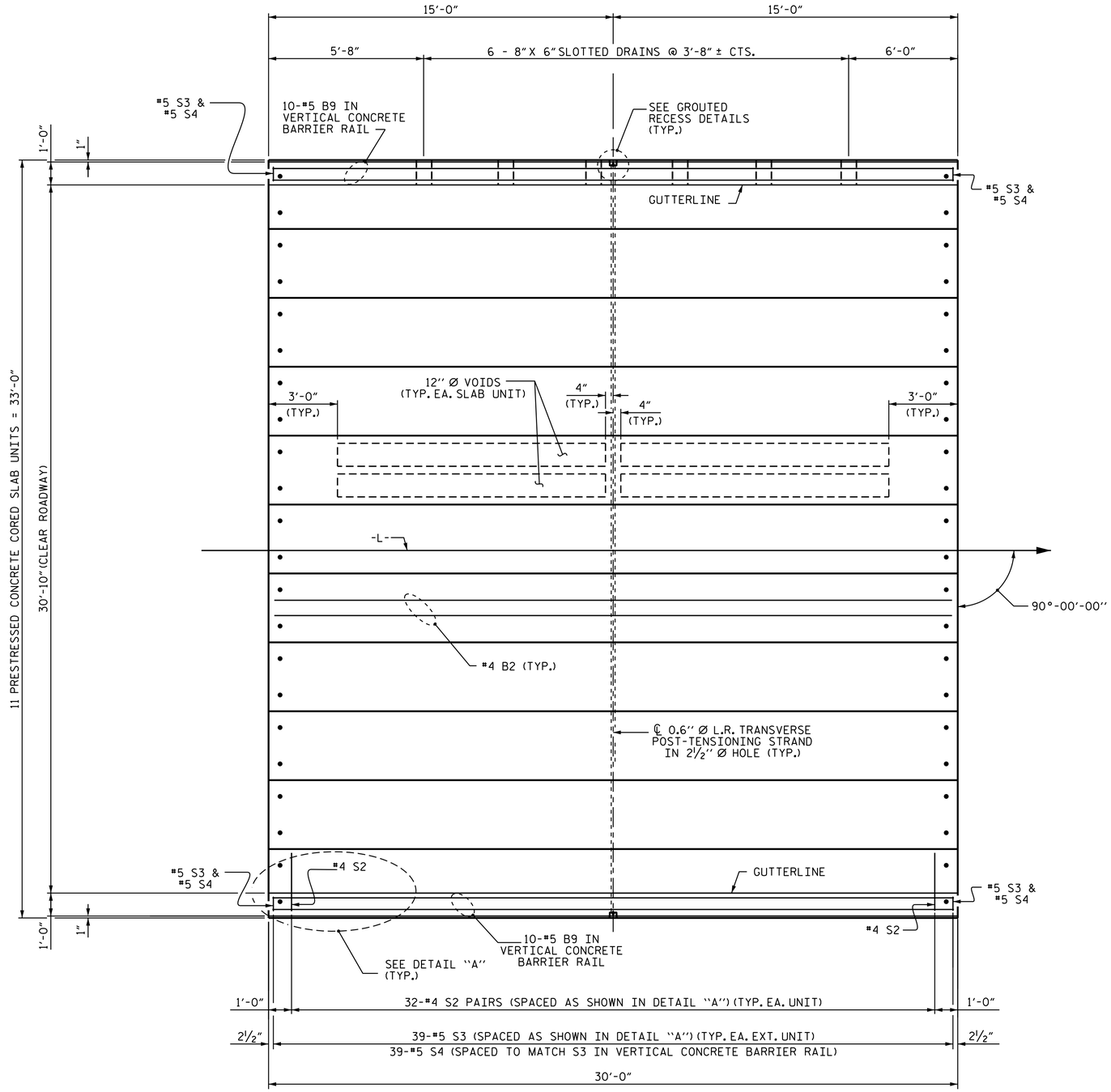

PLAN OF SPAN A

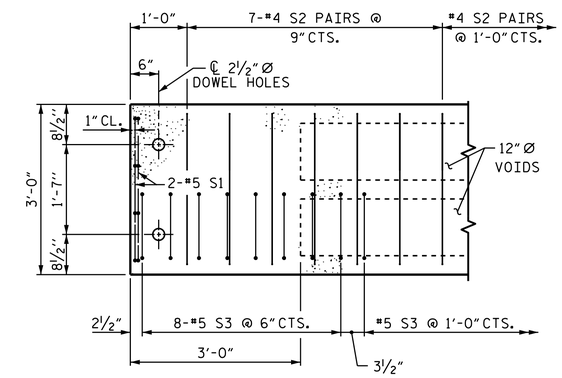

DETAIL "A"

(TYPICAL EACH END OF UNIT)
NOTE: EXTERIOR UNIT SHOWN - INTERIOR UNIT SIMILAR EXCEPT OMIT #5 S3 BARS.

PROJECT NO. 17BP.12.R.60
GASTON COUNTY
STATION: 13+22.00 -L-

SHEET 2 OF 6

STATE OF NORTH CAROLINA
DEPARTMENT OF TRANSPORTATION
RALEIGH

PLAN OF 30' UNIT 30'-10" CLEAR ROADWAY 90° SKEW

DocuSigned by:
DOCE8BBF4BA7AC8...

NORTH CAROLINA PROFESSIONAL SEAL 35647 ENGINEER ADAM A. COLE

8/25/2021

ASSEMBLED BY : REZA KOUCHEKI	DATE : 07/2021		
CHECKED BY : H.A. LOCKLEAR	DATE : 07/2021		
DRAWN BY : DGE 3/09	REV. 12/5/11	MAA/AAC	
CHECKED BY : BCH 3/09	REV. 8/14	MAA/TMG	

DOCUMENT NOT CONSIDERED FINAL UNLESS ALL SIGNATURES COMPLETED

REVISIONS						
NO.	BY:	DATE:	NO.	BY:	DATE:	
1			3			
2			4			

SHEET NO. S-7
TOTAL SHEETS 22

STD. NO. 21" PCS_33_90S_30L

25-AUG-2021 10:26
S:\DPG3\Low Impact Projects\17BP\17BP12R60\FinalPlans\401_013_17BP12R60_SMU_ CS_07_350176.dgn
aacole

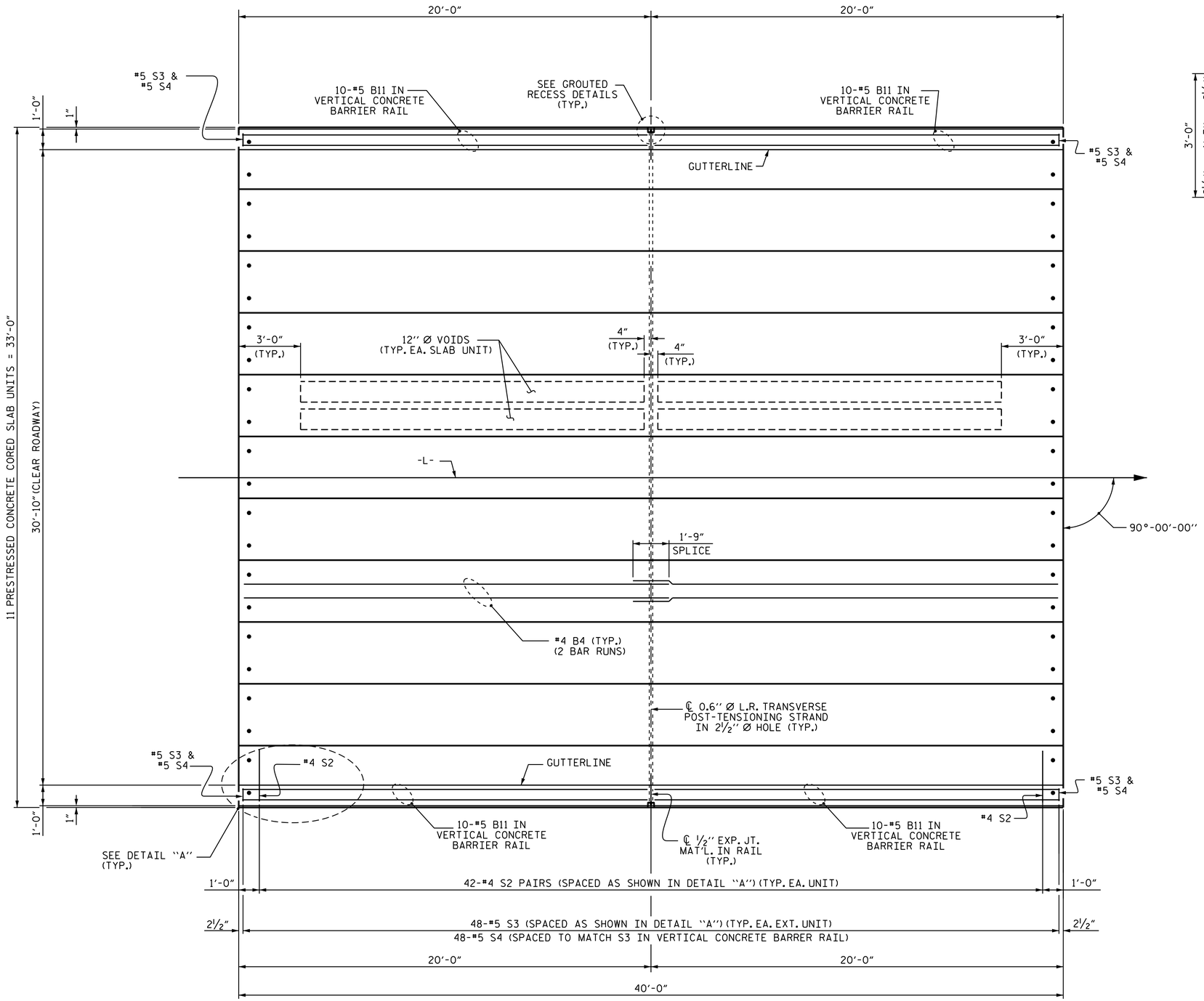

PLAN OF SPAN B

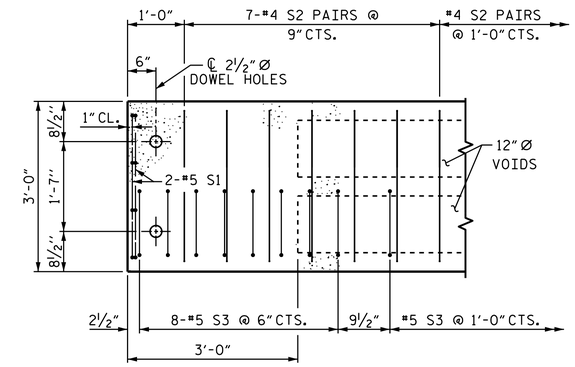

DETAIL "A"

(TYPICAL EACH END OF UNIT)
NOTE: EXTERIOR UNIT SHOWN - INTERIOR UNIT SIMILAR EXCEPT OMIT #5 S3 BARS.

PROJECT NO. 17BP.12.R.60

GASTON COUNTY

STATION: 13+22.00 -L-

SHEET 3 OF 6

DocuSigned by:
ADAM A. COLE
DocuSign Envelope ID: 4A8A7C4C-

NORTH CAROLINA PROFESSIONAL SEAL 35647 ENGINEER ADAM A. COLE

8/25/2021

STATE OF NORTH CAROLINA
DEPARTMENT OF TRANSPORTATION
RALEIGH

PLAN OF 40' UNIT
30'-10" CLEAR ROADWAY
90° SKEW

ASSEMBLED BY : REZA KOUCHEKI	DATE : 07/2021		
CHECKED BY : H.A. LOCKLEAR	DATE : 07/2021		
DRAWN BY : DGE 3/09	REV. 12/5/11	MAA/AAC	
CHECKED BY : BCH 3/09	REV. 8/14	MAA/TMG	

DOCUMENT NOT CONSIDERED FINAL UNLESS ALL SIGNATURES COMPLETED

REVISIONS						SHEET NO.
NO.	BY:	DATE:	NO.	BY:	DATE:	S-8
1			3			TOTAL SHEETS
2			4			22

25-AUG-2021 10:26
S:\DPG3\Low Impact Projects\17BP\17BP12R60\FinalPlans\401_015_17BP12R60_SMU_ CS_08_350176.dgn
aacole

STD. NO. 21" PCS_33_90S_40L

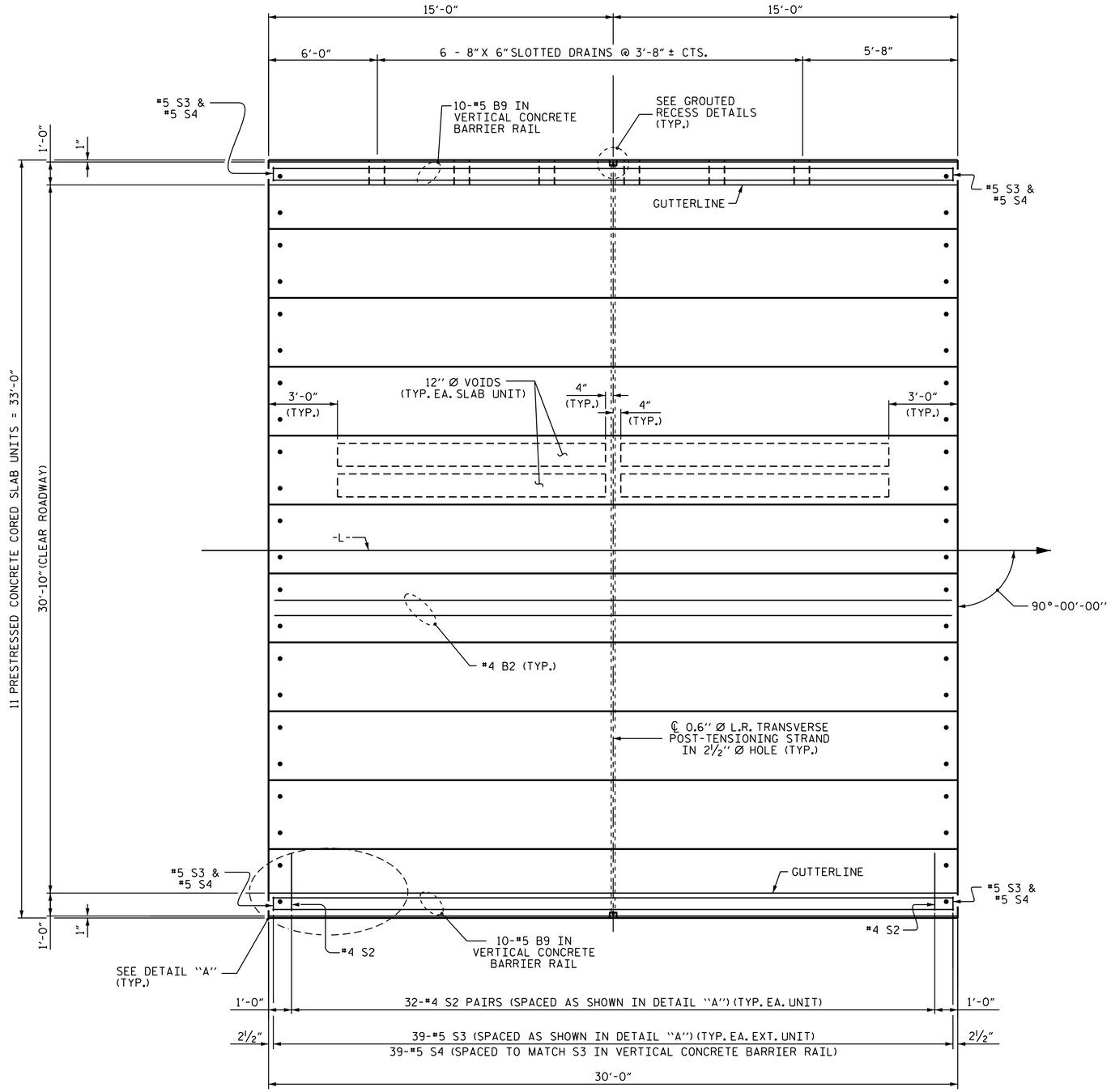

PLAN OF SPAN C

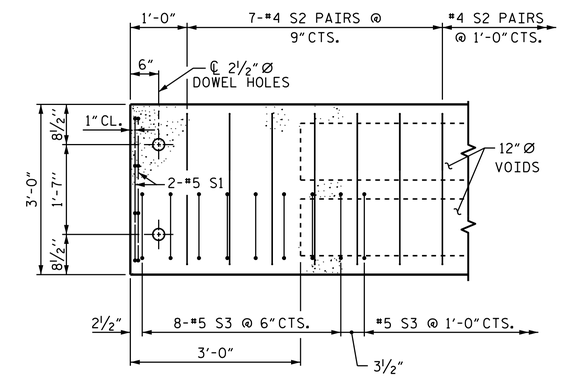

DETAIL "A"

(TYPICAL EACH END OF UNIT)
NOTE: EXTERIOR UNIT SHOWN - INTERIOR UNIT SIMILAR EXCEPT OMIT #5 S3 BARS.

PROJECT NO. 17BP.12.R.60
GASTON COUNTY
STATION: 13+22.00 -L-

SHEET 4 OF 6

STATE OF NORTH CAROLINA
DEPARTMENT OF TRANSPORTATION
RALEIGH

PLAN OF 30' UNIT 30'-10" CLEAR ROADWAY 90° SKEW

DocuSigned by: ADEA3E2A8B1A4CB...
NORTH CAROLINA PROFESSIONAL SEAL 35647 ENGINEER ADAM A. COLE
8/25/2021

DOCUMENT NOT CONSIDERED FINAL UNLESS ALL SIGNATURES COMPLETED

REVISIONS						SHEET NO.
NO.	BY:	DATE:	NO.	BY:	DATE:	S-9
1			3			TOTAL SHEETS
2			4			22

ASSEMBLED BY : REZA KOUCHEKI	DATE : 07/2021		
CHECKED BY : H.A. LOCKLEAR	DATE : 07/2021		
DRAWN BY : DGE 3/09	REV. 12/5/11	MAA/AAC	
CHECKED BY : BCH 3/09	REV. 8/14	MAA/TMG	

25-AUG-2021 10:26
S:\DPG3\Low Impact Projects\17BP\17BP12R60\FinalPlans\401_017_17BP12R60_SMU_ CS_09_350176.dgn
aacole

STD. NO. 21"PCS_33_90S_30L

THE DRAIN OPENING AT THE GUTTERLINE SHALL BE 4" X 8". THE HEIGHT OF THE BLOCKOUT IN THE VERTICAL CONCRETE BARRIER RAIL SHALL EXTEND FROM THE TOP OF THE CORED SLAB UNIT TO THE TOP OF THE DRAIN OPENING.

APPLY EPOXY PROTECTIVE COATING TO EXTERIOR FACE OF THE EXTERIOR CORED SLAB UNITS THAT REQUIRE DRAINS IN THE BARRIER RAIL.

FOR CONCRETE WEARING SURFACE, SEE SPECIAL PROVISIONS.

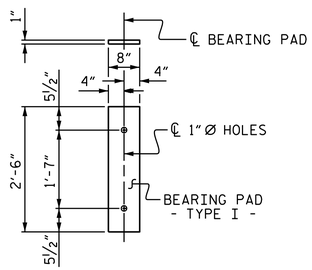

FIXED END
(TYPE I - 66 REQ'D)

ELASTOMERIC BEARING DETAILS

ELASTOMER IN ALL BEARINGS SHALL BE 50 DUROMETER HARDNESS.

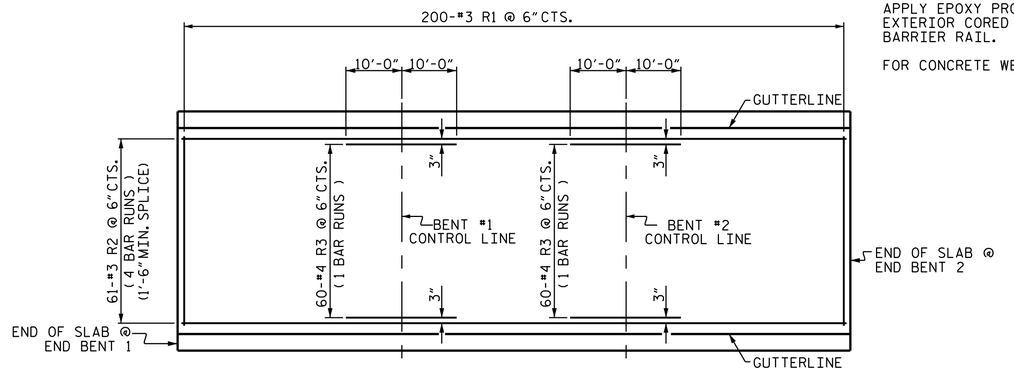

PLAN SHOWING CONCRETE WEARING SURFACE REINFORCING STEEL

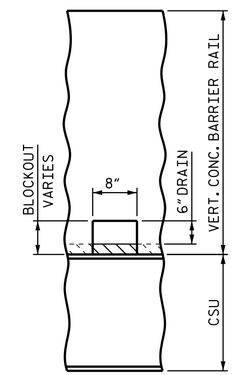

ELEVATION AT DRAIN

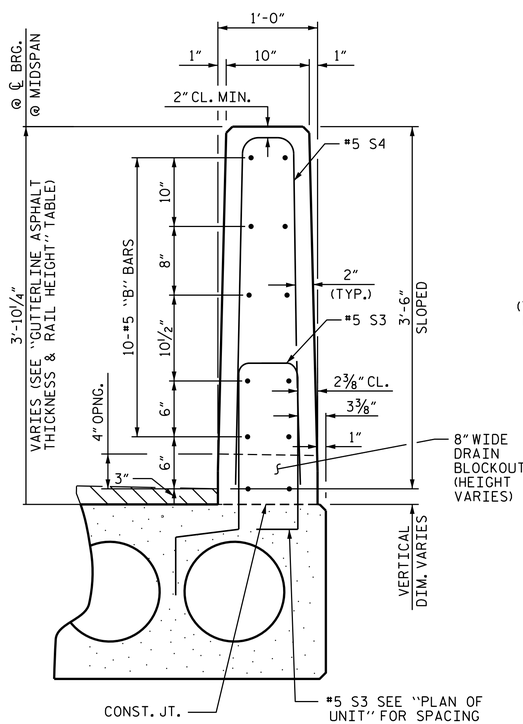

VERTICAL CONCRETE BARRIER RAIL SECTION

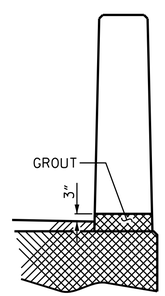

SECTION T-T
AT OPEN JOINT AT BENT
(THIS IS TO BE USED WHERE FOAM JOINT IS NOT USED)

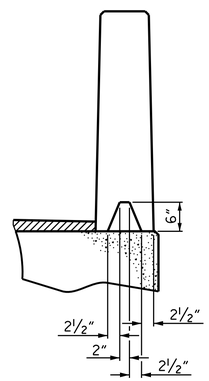

SECTION S-S
AT DAM IN OPEN JOINT
(THIS IS TO BE USED ONLY WHEN SLIP FORM IS USED)

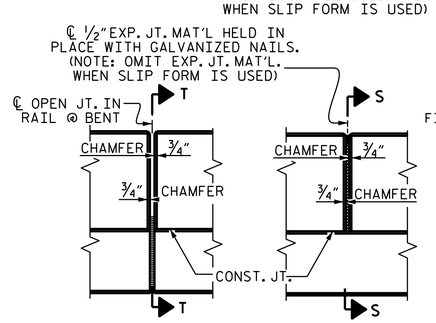

ELEVATION AT EXPANSION JOINTS

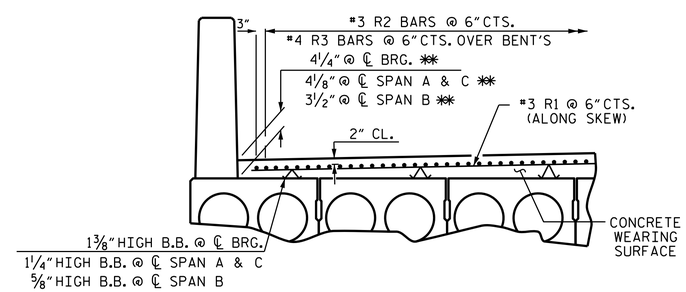

REINFORCING FOR CONCRETE WEARING SURFACE
✱✱ BASED ON PREDICTED FINAL CAMBER AND THEORETICAL GRADE LINE ELEVATIONS

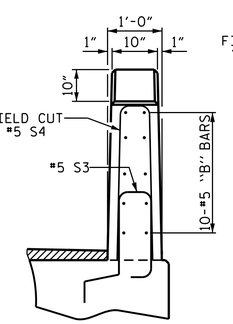

END VIEW

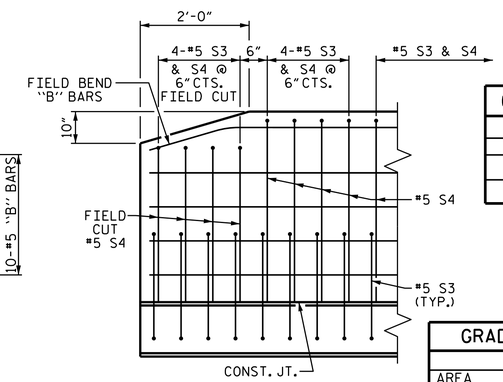

SIDE VIEW

END OF RAIL DETAILS

NOTES

ALL PRESTRESSING STRANDS SHALL BE 7-WIRE LOW RELAXATION GRADE 270 STRANDS AND SHALL CONFORM TO AASHTO M203 EXCEPT FOR SAMPLING REQUIREMENTS WHICH SHALL BE IN ACCORDANCE WITH THE STANDARD SPECIFICATIONS.

ALL REINFORCING STEEL CAST WITH THE CORED SLAB SECTIONS SHALL BE GRADE 60 AND SHALL BE INCLUDED IN THE UNIT PRICE BID FOR PRESTRESSED CONCRETE CORED SLABS.

RECESSES FOR TRANSVERSE STRANDS SHALL BE GROUTED AFTER THE TENSIONING OF THE STRANDS.

THE 2½"Ø DOWEL HOLES AT FIXED ENDS OF SLAB SECTIONS SHALL BE FILLED WITH GROUT. THE 2½"Ø DOWEL HOLES AT EXPANSION ENDS OF SLAB SECTIONS SHALL BE FILLED WITH JOINT SEALER MATERIAL TO 1½" ABOVE THE TOP OF DOWELS AND THEN FILLED WITH GROUT.

THE JOINT SEALER MATERIAL SHALL CONFORM TO THE REQUIREMENTS OF TYPE SL LOW MODULUS SILICONE SEALANT. THE 2"Ø BACKER ROD SHALL CONFORM TO THE REQUIREMENTS OF TYPE M BOND BREAKER. SEE SECTION 1028 OF THE STANDARD SPECIFICATIONS.

WHEN CORED SLABS ARE CAST, AN INTERNAL HOLD-DOWN SYSTEM SHALL BE EMPLOYED TO PREVENT VOIDS FROM RISING OR MOVING SIDEWAYS. AT LEAST SIX WEEKS PRIOR TO CASTING CORED SLABS, THE CONTRACTOR SHALL SUBMIT TO THE ENGINEER FOR REVIEW AND COMMENT, DETAILED DRAWINGS OF THE PROPOSED HOLD-DOWN SYSTEM. IN ADDITION TO STRUCTURAL DETAILS, LOCATION AND SPACING OF THE HOLD-DOWNS SHALL BE INDICATED.

WHEN A CONCRETE WEARING SURFACE IS DETAILED ON THE CORED SLAB BRIDGE TYPICAL SECTION, THE TOP SURFACE OF THE CORED SLAB UNITS SHALL HAVE A ⅜" RAKED FINISH.

THE TRANSFER OF LOAD FROM THE ANCHORAGES TO THE CORED SLAB UNIT SHALL BE DONE WHEN THE CONCRETE HAS REACHED A COMPRESSIVE STRENGTH OF NOT LESS THAN 4000 PSI.

ALL REINFORCING STEEL IN BARRIER RAILS SHALL BE EPOXY COATED.

PRESTRESSING STRANDS SHALL BE CUT FLUSH WITH THE CORED SLAB UNIT ENDS.

APPLY EPOXY PROTECTIVE COATING TO CORED SLAB UNIT ENDS.

GROOVED CONTRACTION JOINTS, ½" IN DEPTH, SHALL BE TOOLED IN ALL EXPOSED FACES OF THE BARRIER RAIL AND IN ACCORDANCE WITH ARTICLE 825-10(B) OF THE STANDARD SPECIFICATIONS. A CONTRACTION JOINT SHALL BE LOCATED AT EACH THIRD POINT BETWEEN BARRIER RAIL EXPANSION JOINTS. ONLY ONE CONTRACTION JOINT IS REQUIRED AT MIDPOINT OF BARRIER RAIL SEGMENTS LESS THAN 20 FEET IN LENGTH AND NO CONTRACTION JOINTS ARE REQUIRED FOR THOSE SEGMENTS LESS THAN 10 FEET IN LENGTH.

FLAME CUTTING OF THE TRANSVERSE POST-TENSIONING STRAND IS NOT ALLOWED.

MAINTAIN A SYMMETRIC TENSION FORCE BETWEEN EACH PAIR OF TRANSVERSE POST TENSIONING STRANDS IN THE DIAPHRAGM.

THE #4 S2 STIRRUPS MAY BE SHIFTED AS NECESSARY TO MAINTAIN 1" CLEAR TO THE GROUTED RECESS.

THE PERMITTED THREADED INSERTS ARE DETAILED AS AN OPTION FOR THE CONTRACTOR TO ATTACH FALSEWORK AND FORMWORK DURING CONSTRUCTION.

THE PERMITTED THREADED INSERTS IN THE EXTERIOR UNITS SHALL BE SIZED BY THE CONTRACTOR, SPACED AT 4'-0" CENTERS AND GALVANIZED IN ACCORDANCE WITH SECTION 1076 OF THE STANDARD SPECIFICATIONS. STAINLESS STEEL THREADED INSERTS MAY BE USED AS AN ALTERNATE.

THE PERMITTED THREADED INSERTS SHALL BE GROUTED BY THE CONTRACTOR IMMEDIATELY FOLLOWING REMOVAL OF THE FALSEWORK.

THE COST OF THE PERMITTED THREADED INSERTS SHALL BE INCLUDED IN THE PRICE BID FOR THE PRECAST UNITS.

CONCRETE RELEASE STRENGTH	
UNIT	PSI
30' UNITS	4000
40' UNITS	4000

GRADE 270 STRANDS	
	0.6"Ø L.R.
AREA (SQUARE INCHES)	0.217
ULTIMATE STRENGTH (LBS. PER STRAND)	58,600
APPLIED PRESTRESS (LBS. PER STRAND)	43,950

PROJECT NO. 17BP.12.R.60
GASTON COUNTY
STATION: 13+22.00 -L-

SHEET 5 OF 6

DocuSigned by:
ENGINEERING CONTRACTS
NORTH CAROLINA PROFESSIONAL SEAL 35647 ENGINEER ADAM A. COLE
8/25/2021

STATE OF NORTH CAROLINA
DEPARTMENT OF TRANSPORTATION
RALEIGH

STANDARD
3'-0" X 1'-9"
PRESTRESSED CONCRETE
CORED SLAB UNIT
90° SKEW

REVISIONS							SHEET NO.
NO.	BY:	DATE:	NO.	BY:	DATE:		S-10
1			3				TOTAL SHEETS
2			4				22

DOCUMENT NOT CONSIDERED FINAL UNLESS ALL SIGNATURES COMPLETED

ASSEMBLED BY : REZA KOUCHEKI	DATE : 07/2021	
CHECKED BY : H.A. LOCKLEAR	DATE : 07/2021	
DRAWN BY : DGE 5/09	REV. 5/18	MAA/THC
CHECKED BY : BCH 6/09		

25-AUG-2021 10:26
S:\DPG3\Low Impact Projects\17BP\17BP12R60\FinalPlans\401_019_17BP12R60_SMU_ CS_10_350176.dgn
gacole

STD. NO. 21' PCS3_30_60S

CORED SLABS REQUIRED

	NUMBER	LENGTH	TOTAL LENGTH
30' UNIT			
EXTERIOR C.S.	4	30'-0"	120'-0"
INTERIOR C.S.	18	30'-0"	540'-0"
TOTAL	22		660'-0"

CORED SLABS REQUIRED

	NUMBER	LENGTH	TOTAL LENGTH
40' UNIT			
EXTERIOR C.S.	2	40'-0"	80'-0"
INTERIOR C.S.	9	40'-0"	360'-0"
TOTAL	11		440'-0"

BAR TYPES

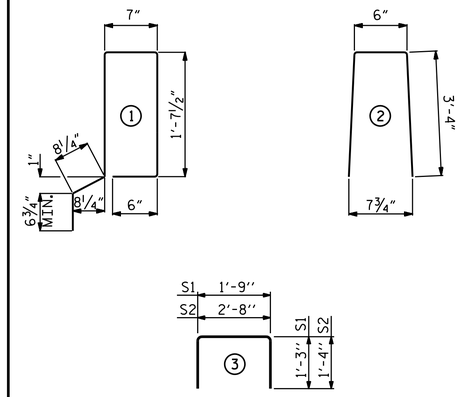

ALL BAR DIMENSIONS ARE OUT TO OUT

BILL OF MATERIAL FOR ONE 30' CORED SLAB UNIT

BAR	NUMBER	SIZE	TYPE	EXTERIOR UNIT LENGTH	EXTERIOR UNIT WEIGHT	INTERIOR UNIT LENGTH	INTERIOR UNIT WEIGHT
B2	2	#4	STR	29'-8"	40	29'-8"	40
S1	8	#5	3	4'-3"	35	4'-3"	35
S2	64	#4	3	5'-4"	228	5'-4"	228
✱ S3	39	#5	1	5'-7"	227		
REINFORCING STEEL			LBS.		303		303
✱ EPOXY COATED REINFORCING STEEL			LBS.		227		
5000 P.S.I. CONCRETE			CU. YDS.		4.4		4.4
0.6" Ø L.R. STRANDS			No.		9		9

BILL OF MATERIAL FOR ONE 40' CORED SLAB UNIT

BAR	NUMBER	SIZE	TYPE	EXTERIOR UNIT LENGTH	EXTERIOR UNIT WEIGHT	INTERIOR UNIT LENGTH	INTERIOR UNIT WEIGHT
B4	4	#4	STR	20'-9"	55	20'-9"	55
S1	8	#5	3	4'-3"	35	4'-3"	35
S2	84	#4	3	5'-4"	299	5'-4"	299
✱ S3	48	#5	1	5'-7"	280		
REINFORCING STEEL			LBS.		389		389
✱ EPOXY COATED REINFORCING STEEL			LBS.		280		
5000 P.S.I. CONCRETE			CU. YDS.		5.8		5.8
0.6" Ø L.R. STRANDS			No.		13		13

DEAD LOAD DEFLECTION AND CAMBER

	3'-0" x 1'-9"
30' CORED SLAB UNIT	0.6" Ø L.R. STRAND
CAMBER (SLAB ALONE IN PLACE)	¼" ↑
DEFLECTION DUE TO SUPERIMPOSED DEAD LOAD✱✱	⅛" ↓
FINAL CAMBER	⅛" ↑

✱✱ INCLUDES FUTURE WEARING SURFACE

BILL OF MATERIAL FOR VERTICAL CONCRETE BARRIER RAIL

BAR	BARS PER PAIR OF EXTERIOR UNITS	TOTAL NO.	SIZE	TYPE	LENGTH	WEIGHT
	30' UNIT					
✱ B9	20	40	#5	STR	29'-7"	1234
✱ S4	78	156	#5	2	7'-2"	1166
✱ EPOXY COATED REINFORCING STEEL				LBS.		2400
CLASS AA CONCRETE				CU.YDS.		15.4
TOTAL VERTICAL CONCRETE BARRIER RAIL				LN. FT.		120.50

BILL OF MATERIAL FOR VERTICAL CONCRETE BARRIER RAIL

BAR	BARS PER PAIR OF EXTERIOR UNITS	TOTAL NO.	SIZE	TYPE	LENGTH	WEIGHT
	40' UNIT					
✱ B11	40	40	#5	STR	19'-7"	817
✱ S4	96	96	#5	2	7'-2"	718
✱ EPOXY COATED REINFORCING STEEL				LBS.		1535
CLASS AA CONCRETE				CU.YDS.		10.2
TOTAL VERTICAL CONCRETE BARRIER RAIL				LN. FT.		80.25

DEAD LOAD DEFLECTION AND CAMBER

	3'-0" x 1'-9"
40' CORED SLAB UNIT	0.6" Ø L.R. STRAND
CAMBER (SLAB ALONE IN PLACE)	⅞" ↑
DEFLECTION DUE TO SUPERIMPOSED DEAD LOAD✱✱	⅛" ↓
FINAL CAMBER	¾" ↑

✱✱ INCLUDES FUTURE WEARING SURFACE

GROOVING BRIDGE FLOORS

APPROACH SLABS	650	SQ.FT.
BRIDGE DECK	2774	SQ.FT.
TOTAL	3424	SQ.FT.

BILL OF MATERIAL FOR CONCRETE WEARING SURFACE

BAR	NO.	SIZE	TYPE	LENGTH	WEIGHT
✱ R1	200	#3	STR	30'-4"	2281
✱ R2	244	#3	STR	26'-0"	2385
✱ R3	120	#4	STR	20'-0"	1603
✱ EPOXY COATED REINFORCING STEEL				LBS.	6269
CONCRETE WEARING SURFACE				SQ. FT.	3083

GUTTERLINE CONCRETE THICKNESS & RAIL HEIGHT

	CONCRETE OVERLAY THICKNESS @ MID-SPAN	RAIL HEIGHT @ MID-SPAN
30' UNIT	4⅛"	3'-10⅛"
40' UNIT	3½"	3'-9½"

PROJECT NO. 17BP.12.R.60

GASTON COUNTY

STATION: 13+22.00 -L-

SHEET 6 OF 6

DocuSigned by: 02EE5B2C8B1462...

NORTH CAROLINA PROFESSIONAL SEAL 35647 ENGINEER ADAM A. COLE

8/25/2021

STATE OF NORTH CAROLINA
DEPARTMENT OF TRANSPORTATION
RALEIGH

STANDARD
3'-0" X 1'-9"
PRESTRESSED CONCRETE
CORED SLAB UNIT
90° SKEW

REVISIONS								SHEET NO.
NO.	BY:	DATE:	NO.	BY:	DATE:			S-11
1			3					TOTAL SHEETS
2			4					22

DOCUMENT NOT CONSIDERED FINAL UNLESS ALL SIGNATURES COMPLETED

ASSEMBLED BY : REZA KOUCHEKI	DATE : 07/2021	
CHECKED BY : H.A. LOCKLEAR	DATE : 07/2021	
DRAWN BY : DGE 5/09	REV. 5/18	MAA/THC
CHECKED BY : BCH 6/09		

25-AUG-2021 10:26
S:\DPG3\Low Impact Projects\17BP\17BP12R60\FinalPlans\401_021_17BP12R60_SMU_CS_11_350176.dgn
gacole

STD. NO. 21' PCS3_30_60S

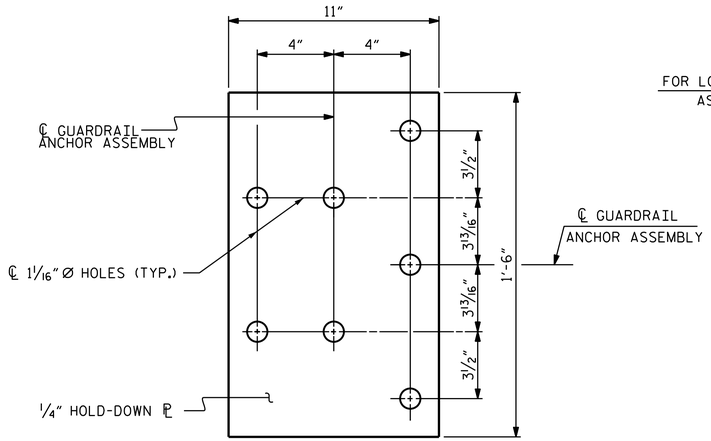

PLAN

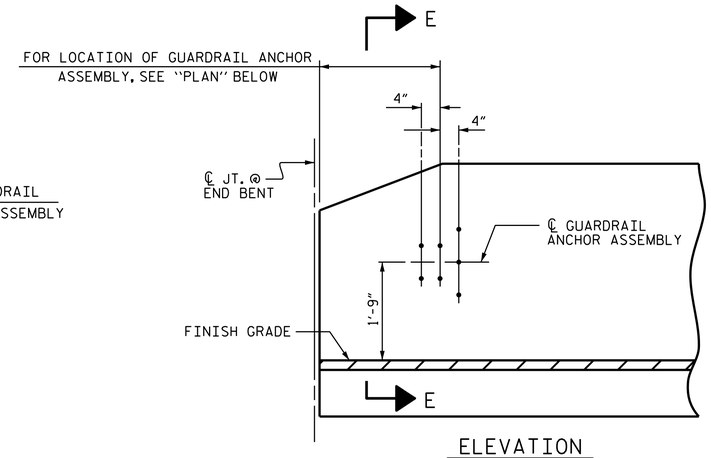

ELEVATION

NOTES

THE GUARDRAIL ANCHOR ASSEMBLY SHALL CONSIST OF A 1/4" HOLD DOWN PLATE AND 7 - 7/8" Ø BOLTS WITH NUTS AND WASHERS.

THE HOLD-DOWN PLATE SHALL CONFORM TO AASHTO M270 GRADE 36. AFTER FABRICATION, THE HOLD-DOWN PLATE SHALL BE HOT-DIP GALVANIZED IN ACCORDANCE WITH AASHTO M111.

BOLTS SHALL CONFORM TO THE REQUIREMENTS OF ASTM A307 AND NUTS SHALL CONFORM TO THE REQUIREMENTS OF AASHTO M291. BOLTS, NUTS AND WASHERS SHALL BE GALVANIZED. (AT THE CONTRACTOR'S OPTION, STAINLESS STEEL BOLTS, NUTS AND WASHERS MAY BE USED AS AN ALTERNATE FOR THE 7/8" Ø GALVANIZED BOLTS, NUTS AND WASHERS. THEY SHALL CONFORM TO OR EXCEED THE MECHANICAL REQUIREMENTS OF ASTM A307. THE USE OF THIS ALTERNATE SHALL BE APPROVED BY THE ENGINEER.)

THE GUARDRAIL ANCHOR ASSEMBLY IS REQUIRED AT ALL POINTS WHERE APPROACH GUARDRAIL IS TO BE ATTACHED TO THE END OF BARRIER RAIL. FOR POINTS OF ATTACHMENT, SEE SKETCH.

AFTER INSTALLATION, THE EXPOSED THREAD OF THE BOLT SHALL BE BURRED WITH A SHARP POINTED TOOL.

THE COST OF THE GUARDRAIL ANCHOR ASSEMBLY SHALL BE INCLUDED IN THE UNIT CONTRACT PRICE BID FOR VERTICAL CONCRETE BARRIER RAIL.

THE VERTICAL REINFORCING BARS MAY BE SHIFTED SLIGHTLY IN THE VERTICAL CONCRETE BARRIER RAIL TO CLEAR ASSEMBLY BOLTS.

THE 1 1/4" Ø HOLES SHALL BE FORMED OR DRILLED WITH A CORE BIT. IMPACT TOOLS WILL NOT BE PERMITTED. ANY CONCRETE DAMAGED BY THIS WORK SHALL BE REPAIRED TO THE SATISFACTION OF THE ENGINEER.

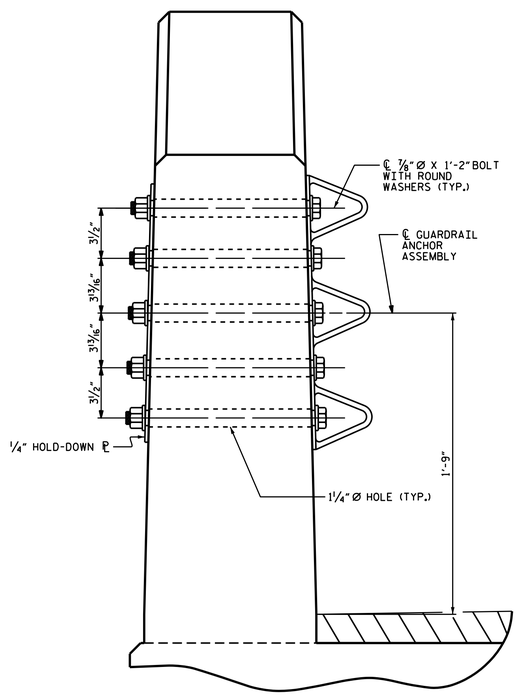

SECTION E-E

GUARDRAIL ANCHOR ASSEMBLY DETAILS

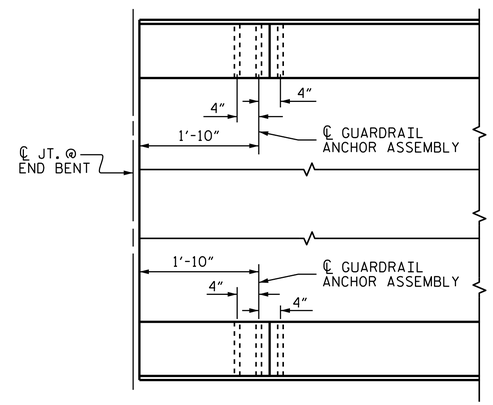

PLAN

LOCATION OF ANCHORS FOR GUARDRAIL

END BENT #1 SHOWN, END BENT #2 SIMILAR.

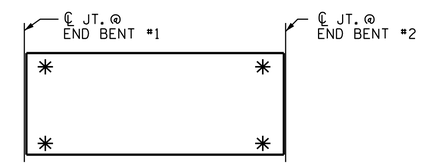

SKETCH SHOWING POINTS OF ATTACHMENT

✳ DENOTES GUARDRAIL ANCHOR ASSEMBLY

PROJECT NO. 17BP.12.R.60

GASTON COUNTY

STATION: 13+22.00 -L-

DocuSigned by:
DESIGN ENGINEER

NORTH CAROLINA PROFESSIONAL SEAL 35647 ENGINEER ADAM A. COLE

8/25/2021

STATE OF NORTH CAROLINA
DEPARTMENT OF TRANSPORTATION
RALEIGH

STANDARD
GUARDRAIL ANCHORAGE DETAILS
FOR VERTICAL CONCRETE BARRIER RAIL

ASSEMBLED BY : REZA KOUCHEKI	DATE : 07/2021
CHECKED BY : H.A. LOCKLEAR	DATE : 07/2021

DRAWN BY : MAA 5/10	REV. 1/15	MAA/TMG
CHECKED BY : GM 5/10	REV. 12/17	MAA/THC
	REV. 5/18	MAA/THC

DOCUMENT NOT CONSIDERED FINAL UNLESS ALL SIGNATURES COMPLETED

REVISIONS						
NO.	BY:	DATE:	NO.	BY:	DATE:	
1			3			
2			4			

SHEET NO. S-12

TOTAL SHEETS 22

(SHT 1) STD. NO. GRA3

25-AUG-2021 10:26
S:\DPG3\Low Impact Projects\17BP\17BP12R60\FinalPlans\401_023_17BP12R60_SMU_ GR_12_350176.dgn
aacole

NOTES

STIRRUPS IN CAP MAY BE SHIFTED AS NECESSARY TO CLEAR DOWELS.

THE CONCRETE IN THE SHADED AREA OF THE WING SHALL BE POURED AFTER THE VERTICAL CONCRETE BARRIER RAIL IS CAST IF SLIP FORMING IS USED.

FOR PILE SPLICE DETAILS, SEE SHEET 4 OF 4.

FOR WING DETAILS, SEE SHEET 3 OF 4.

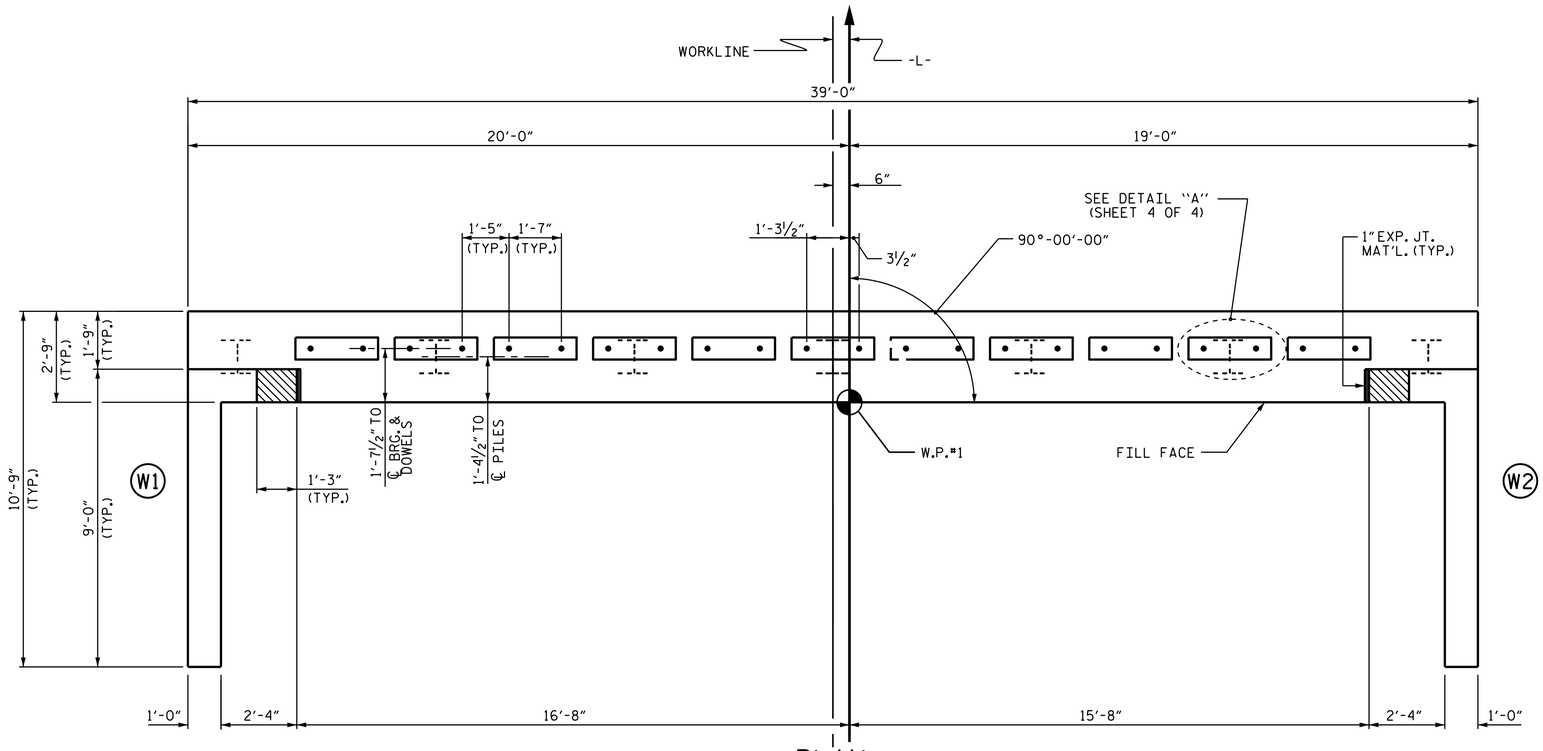

PLAN

TOP OF PILE ELEVATIONS	
1	647.48
2	647.60
3	647.72
4	647.84
5	647.96
6	648.08
7	648.20

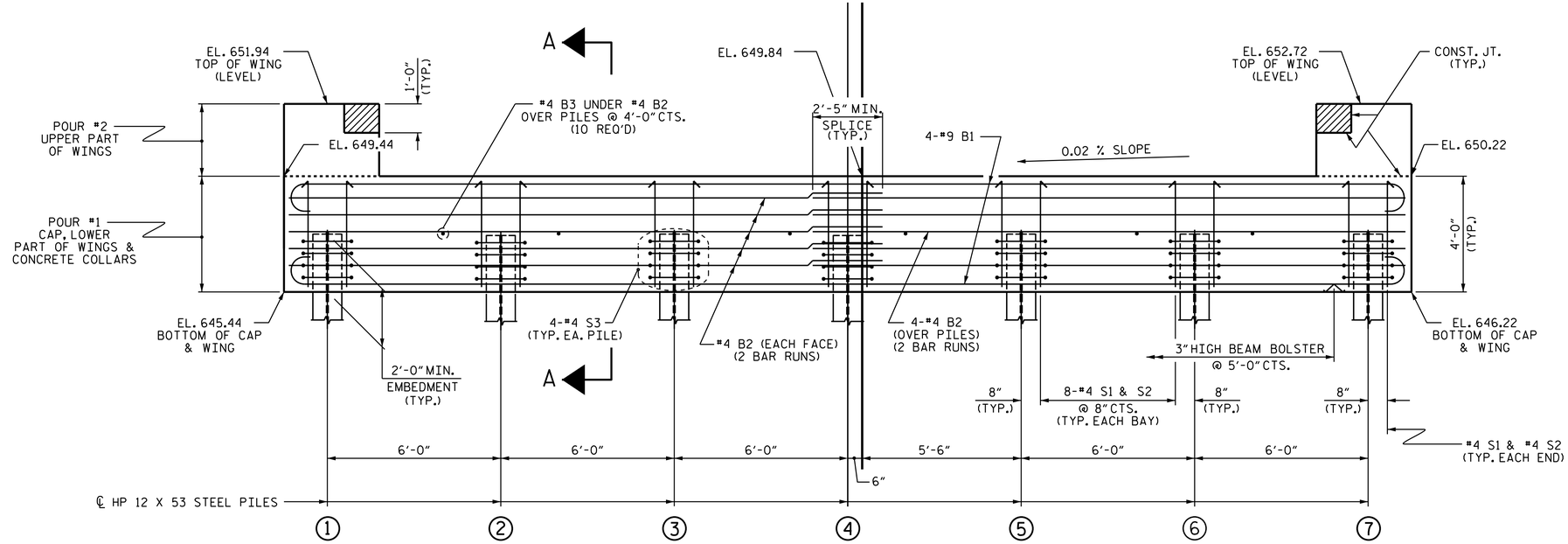

ELEVATION

WINGS NOT SHOWN FOR CLARITY.
FOR SECTION A-A, SEE SHEET 4 OF 4.
CONCRETE COLLARS FOR STEEL PILES NOT SHOWN IN PLAN AND ELEVATION VIEWS FOR CLARITY.
SEE "CORROSION PROTECTION FOR STEEL PILES DETAIL", SHEET 4 OF 4.

PROJECT NO. 17BP.12.R.60
GASTON COUNTY
STATION: 13+22.00 -L-

SHEET 1 OF 4

DocuSigned by:
DEPARTMENT OF TRANSPORTATION
NORTH CAROLINA PROFESSIONAL SEAL 35647 ENGINEER ADAM A. COLE
8/25/2021

STATE OF NORTH CAROLINA
DEPARTMENT OF TRANSPORTATION
RALEIGH

SUBSTRUCTURE

END BENT No. 1

ASSEMBLED BY : REZA KOUCHEKI	DATE : 07/2021
CHECKED BY : H.A. LOCKLEAR	DATE : 07/2021
DRAWN BY : WJH 12/11	REV. 4/15 MAA/TMG
CHECKED BY : AAC 12/11	

DOCUMENT NOT CONSIDERED FINAL UNLESS ALL SIGNATURES COMPLETED

REVISIONS						SHEET NO.
NO.	BY:	DATE:	NO.	BY:	DATE:	S-13
1			3			TOTAL SHEETS
2			4			22

25-AUG-2021 10:26
S:\DPG3\Low Impact Projects\17BP\17BP12R60\FinalPlans\401_025_17BP12R60_SMU_ E1_13_350176.dgn
aacole

STD. NO. EB_33_90S4

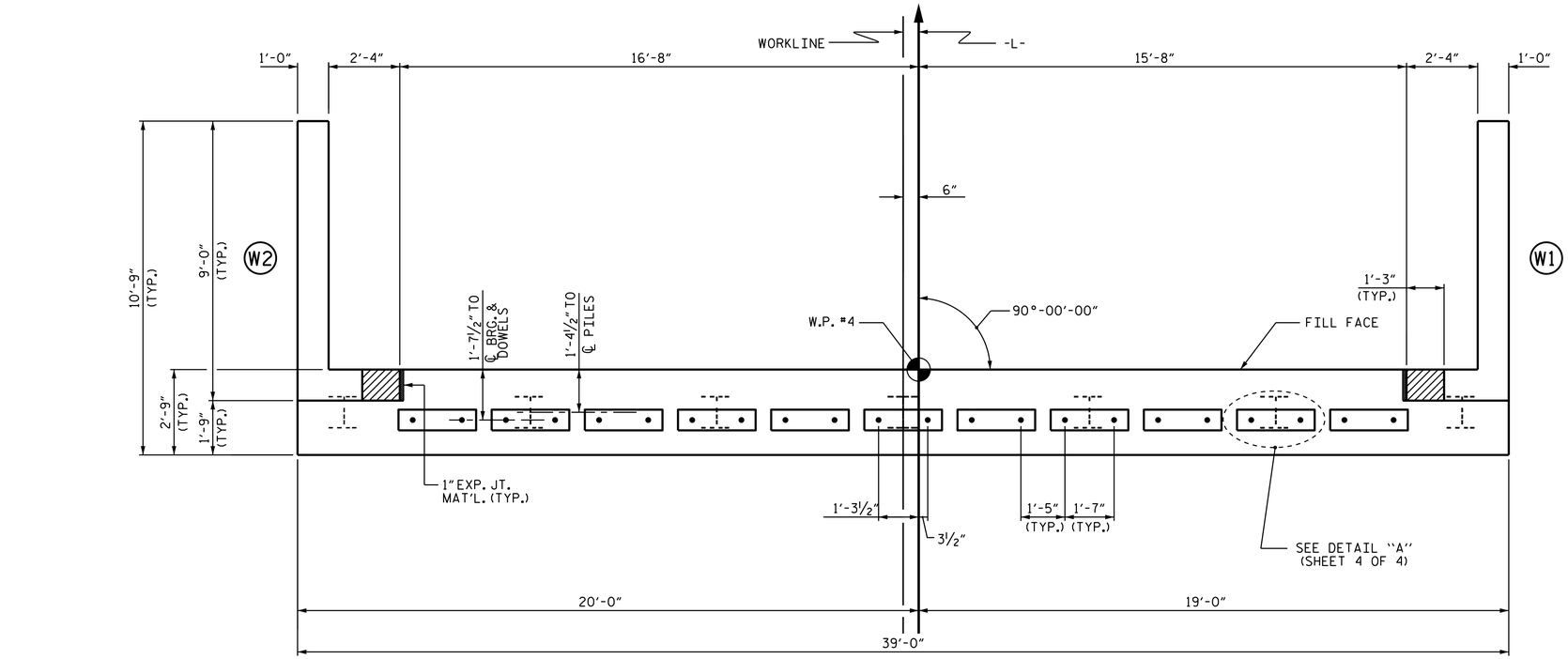

PLAN

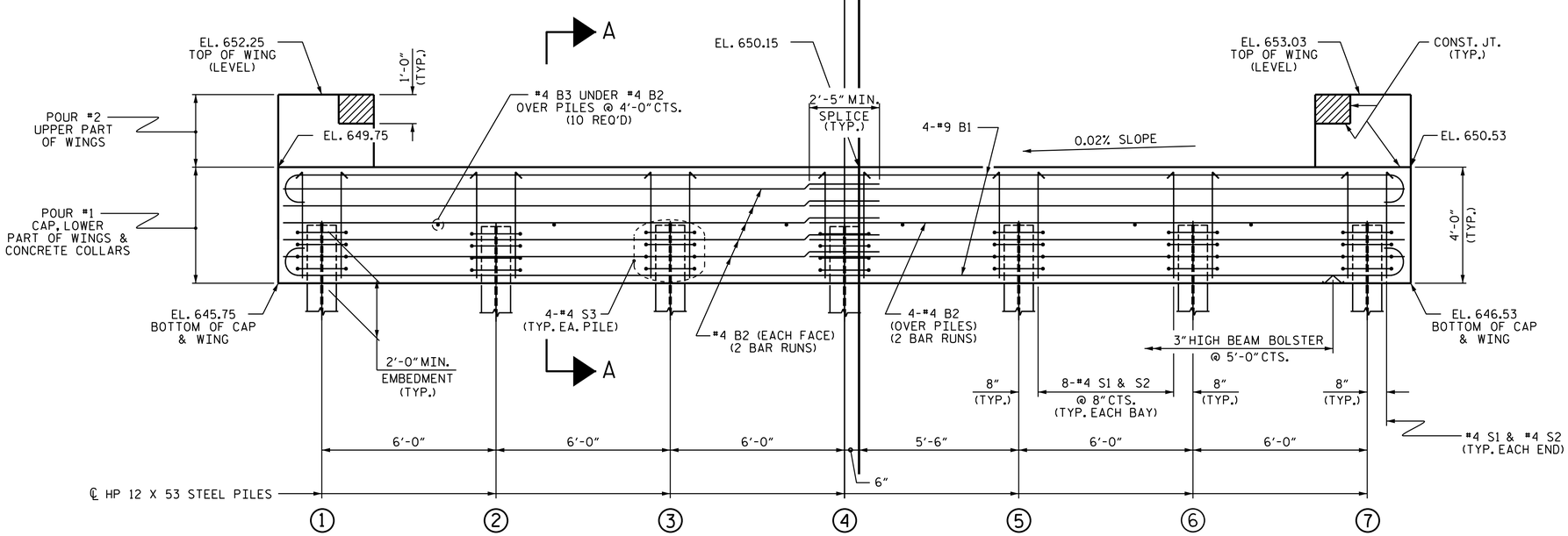

ELEVATION

WINGS NOT SHOWN FOR CLARITY.
FOR SECTION A-A, SEE SHEET 4 OF 4.
CONCRETE COLLARS FOR STEEL PILES NOT SHOWN IN PLAN AND ELEVATION VIEWS FOR CLARITY.
SEE "CORROSION PROTECTION FOR STEEL PILES DETAIL", SHEET 4 OF 4.

NOTES

STIRRUPS IN CAP MAY BE SHIFTED AS NECESSARY TO CLEAR DOWELS.

THE CONCRETE IN THE SHADED AREA OF THE WING SHALL BE POURED AFTER THE VERTICAL CONCRETE BARRIER RAIL IS CAST IF SLIP FORMING IS USED.

FOR PILE SPLICE DETAILS, SEE SHEET 4 OF 4.

FOR WING DETAILS, SEE SHEET 3 OF 4.

TOP OF PILE ELEVATIONS	
1	647.79
2	647.91
3	648.03
4	648.15
5	648.27
6	648.39
7	648.51

PROJECT NO. 17BP.12.R.60
GASTON COUNTY
STATION: 13+22.00 -L-

SHEET 2 OF 4

DocuSigned by: 02EE6385FAB874C0...
NORTH CAROLINA PROFESSIONAL SEAL 35647 ENGINEER ADAM A. COLE
8/25/2021

STATE OF NORTH CAROLINA
DEPARTMENT OF TRANSPORTATION
RALEIGH

SUBSTRUCTURE

END BENT No. 2

ASSEMBLED BY : REZA KOUCHEKI	DATE : 07/2021
CHECKED BY : H.A. LOCKLEAR	DATE : 07/2021
DRAWN BY : WJH 12/11	REV. 4/15 MAA/TMG
CHECKED BY : AAC 12/11	

DOCUMENT NOT CONSIDERED FINAL UNLESS ALL SIGNATURES COMPLETED

REVISIONS								SHEET NO.
NO.	BY:	DATE:	NO.	BY:	DATE:			S-14
1			3					TOTAL SHEETS
2			4					22

25-AUG-2021 10:26
S:\DPG3\Low Impact Projects\17BP\17BP12R60\FinalPlans\401_027_17BP12R60_SMU_ E2_14_350176.dgn
aacole

STD. NO. EB_33_90S4

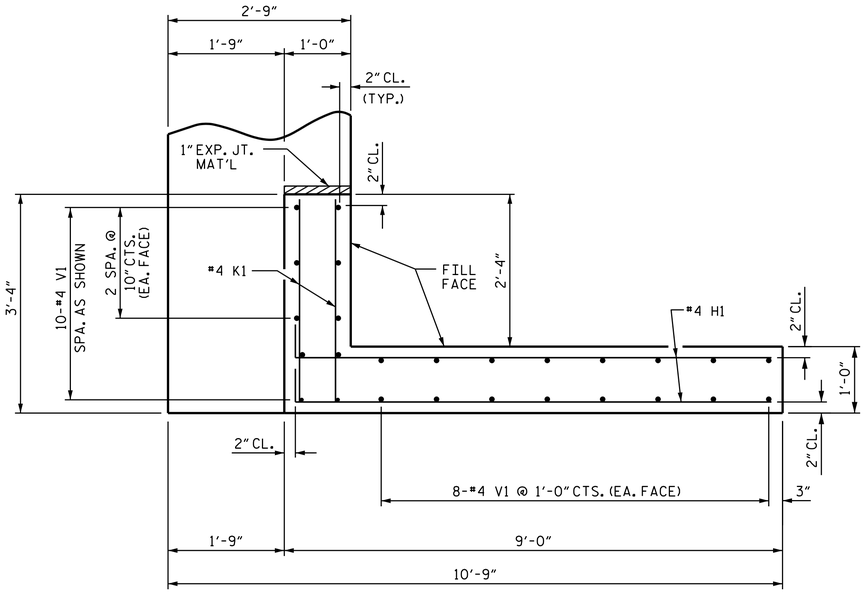

PLAN OF WING (W1)

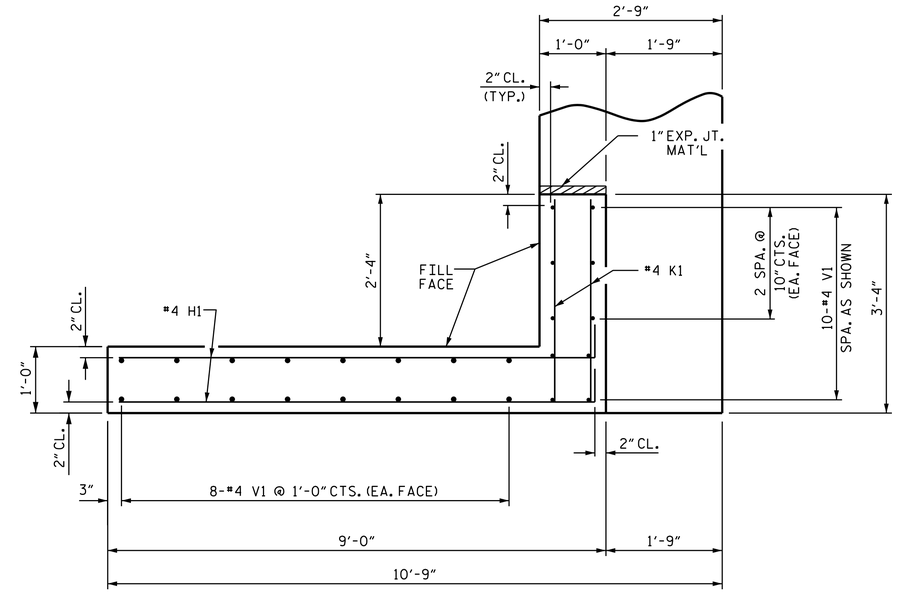

PLAN OF WING (W2)

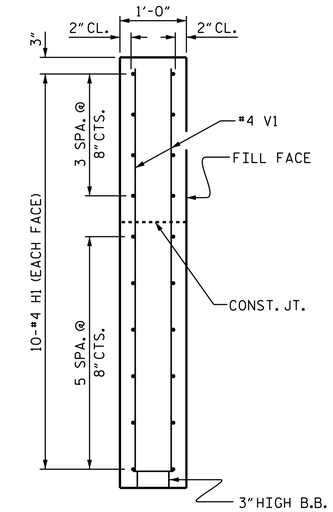

SECTION X-X

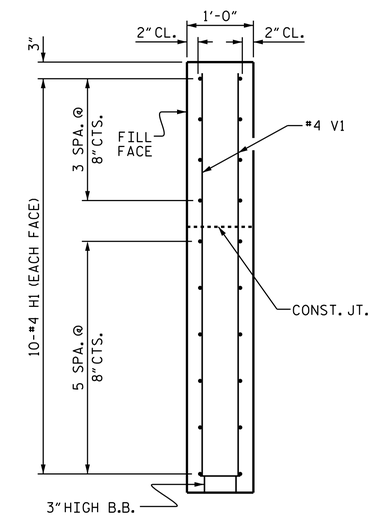

SECTION Y-Y

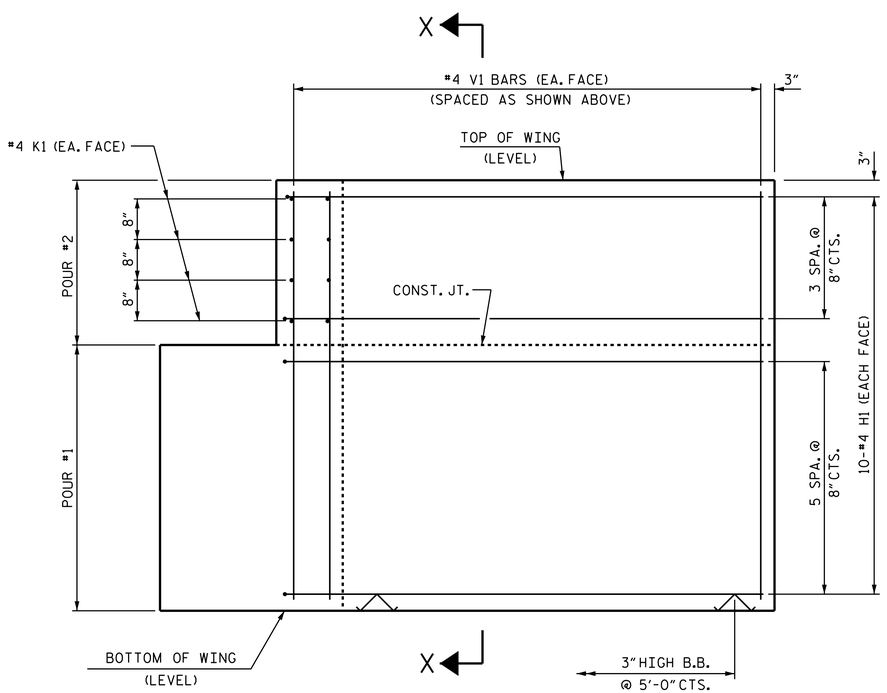

ELEVATION OF WING (W1)

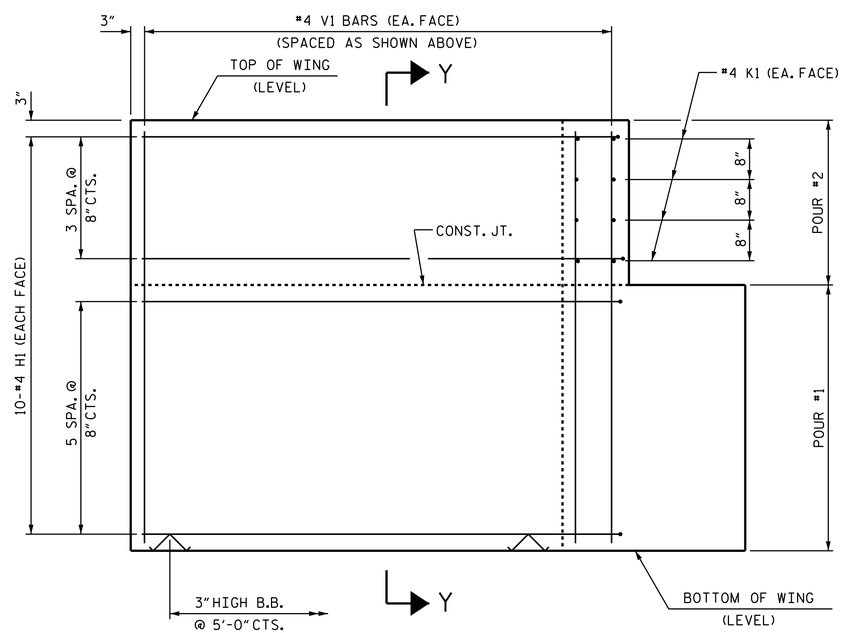

ELEVATION OF WING (W2)

WING DETAILS

PROJECT NO. 17BP.12.R.60

GASTON COUNTY

STATION: 13+22.00 -L-

SHEET 3 OF 4

DocuSigned by:
DOCERTIFICATE
NORTH CAROLINA PROFESSIONAL SEAL 35647 ENGINEER ADAM A. COLE
8/25/2021

STATE OF NORTH CAROLINA
DEPARTMENT OF TRANSPORTATION
RALEIGH

SUBSTRUCTURE

END BENT
WING DETAILS

ASSEMBLED BY : REZA KOUCHEKI	DATE : 07/2021
CHECKED BY : H.A. LOCKLEAR	DATE : 07/2021
DRAWN BY : WJH 12/11	REV. 4/15 MAA/TMG
CHECKED BY : AAC 12/11	

DOCUMENT NOT CONSIDERED FINAL UNLESS ALL SIGNATURES COMPLETED

REVISIONS						SHEET NO.
NO.	BY:	DATE:	NO.	BY:	DATE:	S-15
1			3			TOTAL SHEETS
2			4			22

25-AUG-2021 10:26
S:\DPG3\Low Impact Projects\17BP\17BP12R60\FinalPlans\401_029_17BP12R60_SMU_ E12_15_350176.dgn
aacole

STD. NO. EB_33_90S4

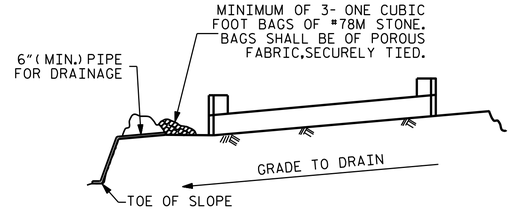

BAGGED STONE AND PIPE SHALL BE PLACED IMMEDIATELY AFTER COMPLETION OF END BENT EXCAVATION. PIPE MAY BE EITHER CONCRETE, CORRUGATED STEEL, CORRUGATED ALUMINUM ALLOY, OR CORRUGATED PLASTIC. PERFORATED PIPE WILL NOT BE ALLOWED.

BAGGED STONE SHALL REMAIN IN PLACE UNTIL THE ENGINEER DIRECTS THAT IT BE REMOVED. THE CONTRACTOR SHALL REMOVE AND DISPOSE OF SILT ACCUMULATIONS AT BAGGED STONE WHEN SO DIRECTED BY THE ENGINEER. BAGS SHALL BE REMOVED AND REPLACED WHENEVER THE ENGINEER DETERMINES THAT THEY HAVE DETERIORATED AND LOST THEIR EFFECTIVENESS.

NO SEPARATE PAYMENT WILL BE MADE FOR THIS WORK AND THE ENTIRE COST OF THIS WORK SHALL BE INCLUDED IN THE UNIT CONTRACT PRICE BID FOR THE SEVERAL PAY ITEMS.

TEMPORARY DRAINAGE AT END BENT

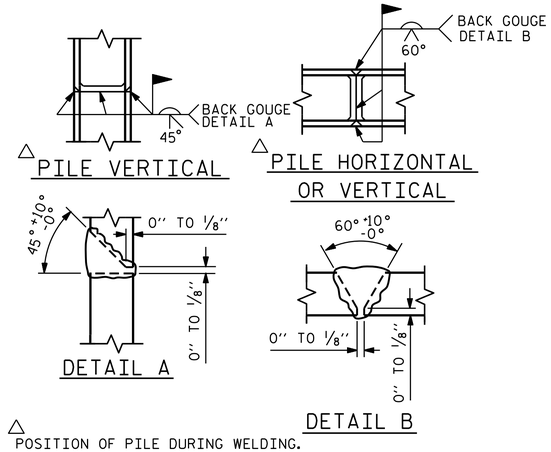

△ POSITION OF PILE DURING WELDING.

PILE SPLICE DETAILS

BAR TYPES

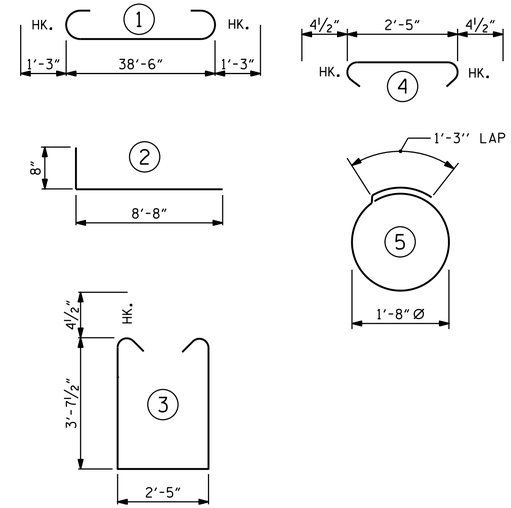

ALL BAR DIMENSIONS ARE OUT TO OUT.

END BENT No. 1	END BENT No. 2
HP 12 X 53 STEEL PILES NO: 7 LIN. FT.= 125	HP 12 X 53 STEEL PILES NO: 7 LIN. FT.= 105
PILE DRIVING EQUIPMENT SETUP FOR HP 12 X 53 STEEL PILES NO: 7	PILE DRIVING EQUIPMENT SETUP FOR HP 12 X 53 STEEL PILES NO: 7
STEEL PILE POINTS NO: 7	STEEL PILE POINTS NO: 7

BILL OF MATERIAL
FOR ONE END BENT

BAR	NO.	SIZE	TYPE	LENGTH	WEIGHT
B1	8	#9	1	41'-0"	1115
B2	28	#4	STR	20'-7"	385
B3	10	#4	STR	2'-5"	16
D1	22	#6	STR	1'-6"	50
H1	40	#4	2	9'-4"	249
K1	16	#4	STR	2'-11"	31
S1	50	#4	3	10'-5"	348
S2	50	#4	4	3'-2"	106
S3	28	#4	5	6'-6"	122
V1	52	#4	STR	6'-2"	214

REINFORCING STEEL (FOR ONE END BENT) 2636 LBS.

CLASS A CONCRETE BREAKDOWN (FOR ONE END BENT)

POUR #1 CAP, LOWER PART OF WINGS & COLLARS 19.5 C.Y.

POUR #2 UPPER PART OF WINGS 2.1 C.Y.

TOTAL CLASS A CONCRETE 21.6 C.Y.

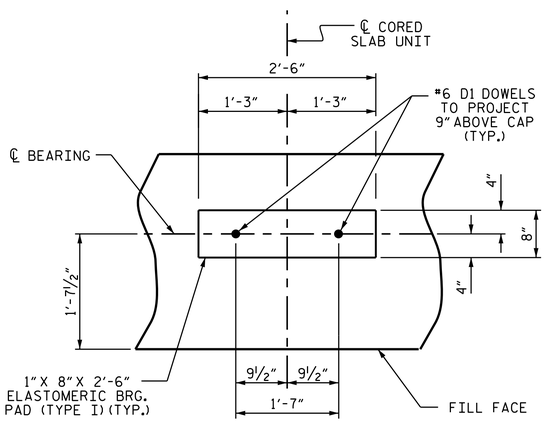

DETAIL "A"

(END BENT No. 1 SHOWN, END BENT No. 2 SIMILAR BY ROTATION)

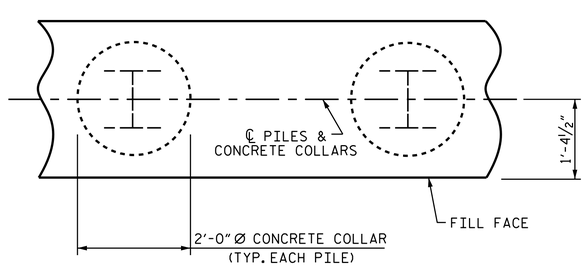

PLAN

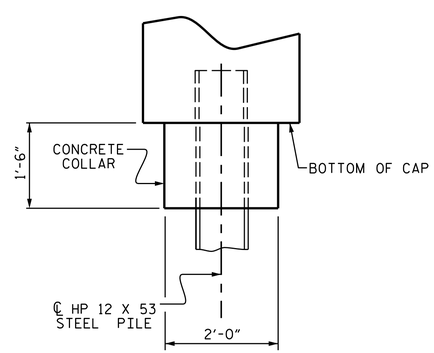

ELEVATION

CORROSION PROTECTION FOR STEEL PILES DETAIL

(END BENT No. 1 SHOWN, END BENT No. 2 SIMILAR BY ROTATION)

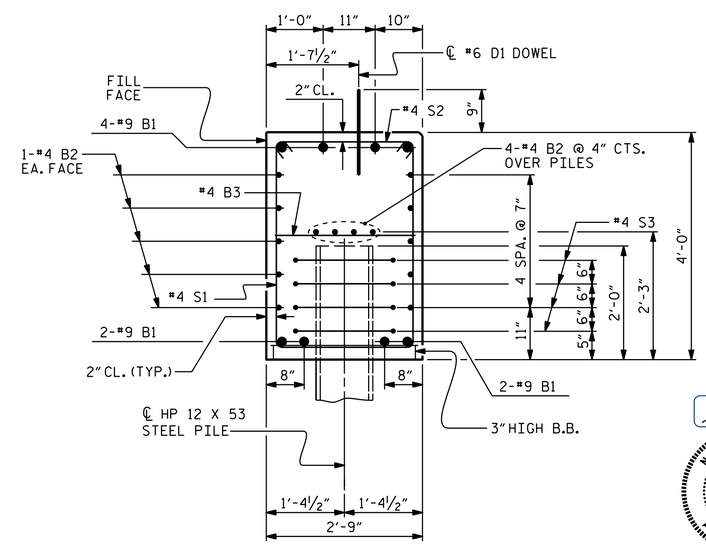

SECTION A-A

(CONCRETE COLLAR NOT SHOWN FOR CLARITY. SEE "CORROSION PROTECTION FOR STEEL PILES DETAIL.")

DocuSigned by: 02EE6355FA9874CD...

NORTH CAROLINA PROFESSIONAL SEAL 35647 ENGINEER ADAM A. COLE

8/25/2021

PROJECT NO. 17BP.12.R.60

GASTON COUNTY

STATION: 13+22.00 -L-

SHEET 4 OF 4

STATE OF NORTH CAROLINA
DEPARTMENT OF TRANSPORTATION
RALEIGH

SUBSTRUCTURE

END BENT No. 1 & 2 DETAILS

ASSEMBLED BY : REZA KOUCHEKI	DATE : 07/2021
CHECKED BY : H.A. LOCKLEAR	DATE : 07/2021
DRAWN BY : WJH 12/11	REV. 4/17 MAA/THC
CHECKED BY : AAC 12/11	

DOCUMENT NOT CONSIDERED FINAL UNLESS ALL SIGNATURES COMPLETED

REVISIONS							
NO.	BY:	DATE:	NO.	BY:	DATE:	SHEET NO.	S-16
1			3			TOTAL SHEETS	22
2			4				

25-AUG-2021 10:26
S:\DPG3\Low Impact Projects\17BP\17BP12R60\FinalPlans\401_031_17BP12R60_SMU_ E12_16_350176.dgn
gacole

STD. NO. EB_33_90S4

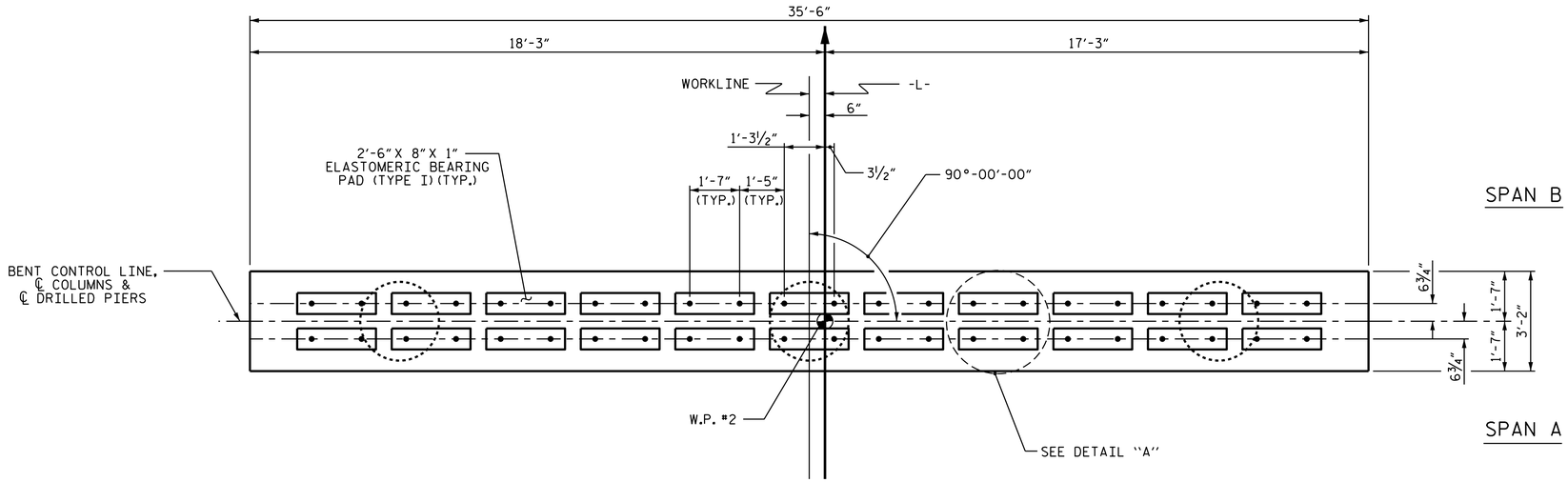

PLAN

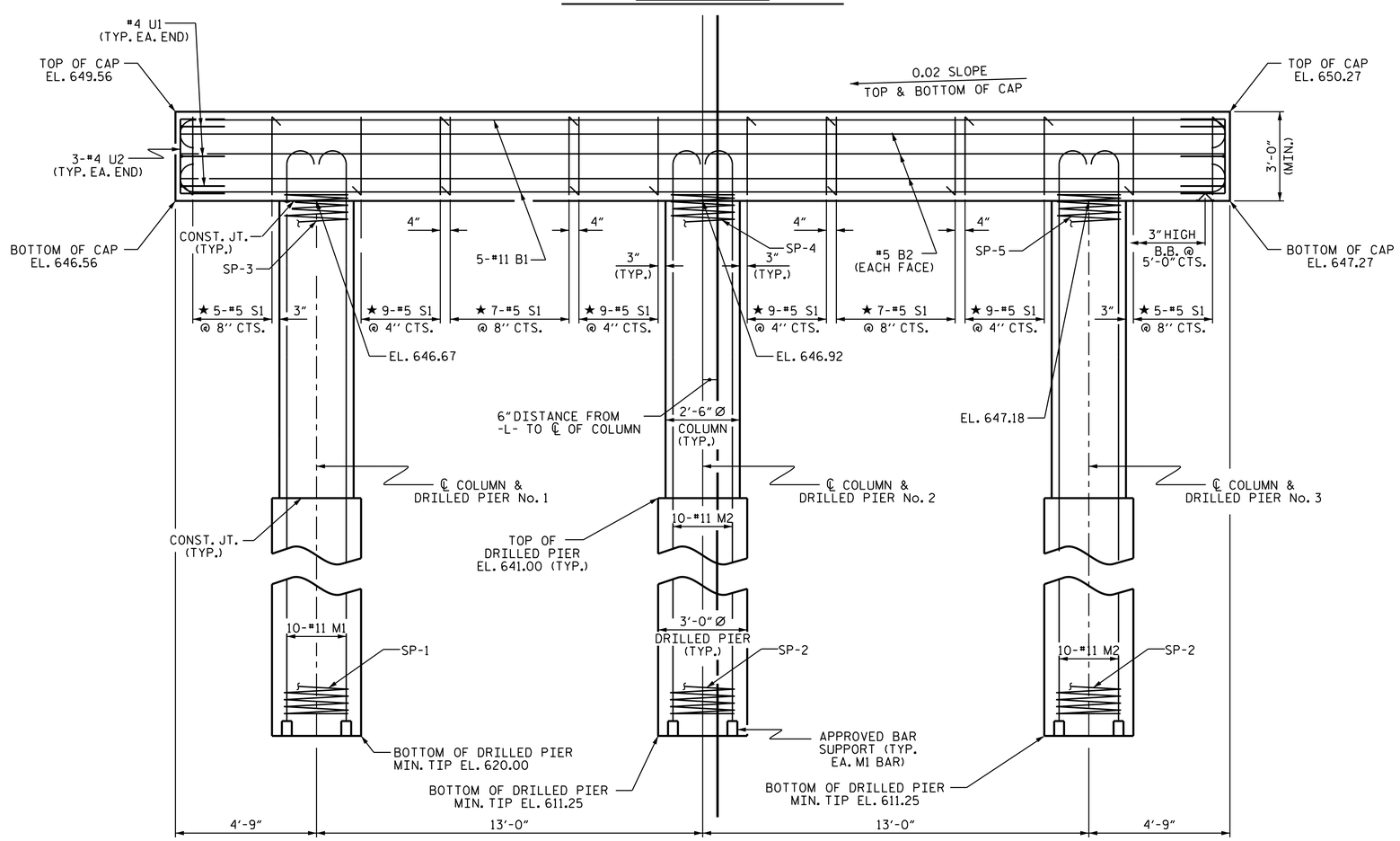

ELEVATION

DIMENSIONS & REINFORCING STEEL ARE TYPICAL FOR EACH COLUMN & DRILLED PIER UNLESS OTHERWISE NOTED.

NOTES

STIRRUPS IN CAP MAY BE SHIFTED AS NECESSARY TO CLEAR DOWELS.

HOOKS ON "V" BARS MAY BE TURNED AS NECESSARY FOR PLACING REINFORCING STEEL.

FOR DRILLED PIERS, SEE SECTION 411 OF THE STANDARD SPECIFICATIONS.

ALL STEEL IN THE DRILLED PIERS IS INCLUDED IN THE PAY ITEMS FOR "REINFORCING STEEL" AND "SPIRAL COLUMN REINFORCING STEEL."

★ INVERT ALTERNATE STIRRUPS.

THE LOCATION OF THE CONSTRUCTION JOINT IN THE DRILLED PIERS IS BASED ON AN APPROXIMATE GROUND LINE ELEVATION. IF THE CONSTRUCTION JOINT IS ABOVE THE ACTUAL GROUND LINE ELEVATION, THE CONTRACTOR SHALL PLACE THE CONSTRUCTION JOINT ONE FOOT BELOW THE GROUND LINE.

DRILLED PIERS SHALL BE TERMINATED ONE FOOT ± ABOVE NORMAL WATER SURFACE ELEVATION FOR SHAFTS LOCATED IN WATER.

THE CONTRACTOR'S ATTENTION IS CALLED TO THE FACT THAT THE LONGITUDINAL REINFORCEMENT FOR DRILLED PIERS IS DETAILED WITH 3 FEET OF EXTRA LENGTH.

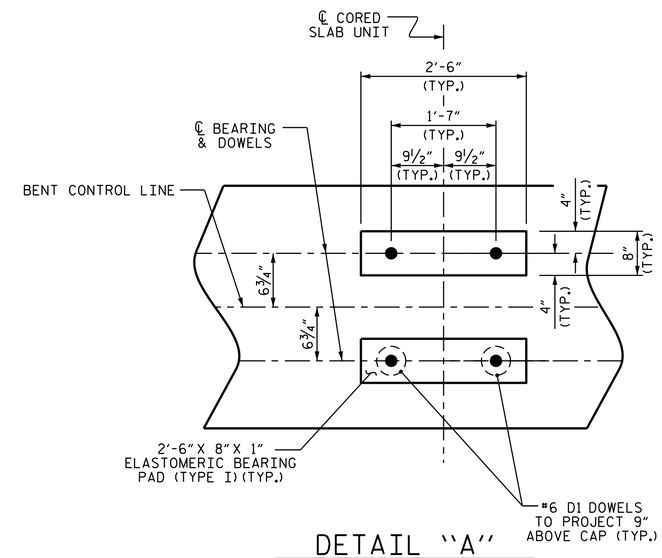

DETAIL "A"

(DIMENSIONS ARE TYPICAL EACH BEARING)

PROJECT NO. 17BP.12.R.60

GASTON COUNTY

STATION: 13+22.00 -L-

SHEET 1 OF 2

DocuSigned by: 02CE3A3C0B1D4E0...

NORTH CAROLINA PROFESSIONAL SEAL 35647 ENGINEER ADAM A. COLE

8/25/2021

STATE OF NORTH CAROLINA
DEPARTMENT OF TRANSPORTATION
RALEIGH

SUBSTRUCTURE
BENT No. 1

ASSEMBLED BY : REZA KOUCHEKI	DATE : 07/2021
CHECKED BY : H.A. LOCKLEAR	DATE : 07/2021
DRAWN BY : DGE 4/10	REV. 11/14 MAA/TMG
CHECKED BY : MKT 4/10	

DOCUMENT NOT CONSIDERED FINAL UNLESS ALL SIGNATURES COMPLETED

REVISIONS								SHEET NO.
NO.	BY:	DATE:	NO.	BY:	DATE:			S-17
1			3					TOTAL SHEETS
2			4					22

25-AUG-2021 10:26
S:\DPG3\Low Impact Projects\17BP\17BP12R60\FinalPlans\401_033_17BP12R60_SMU_ B1_17_350176.dgn
gacole

STD. NO. DP_BT_33_90S_<50'

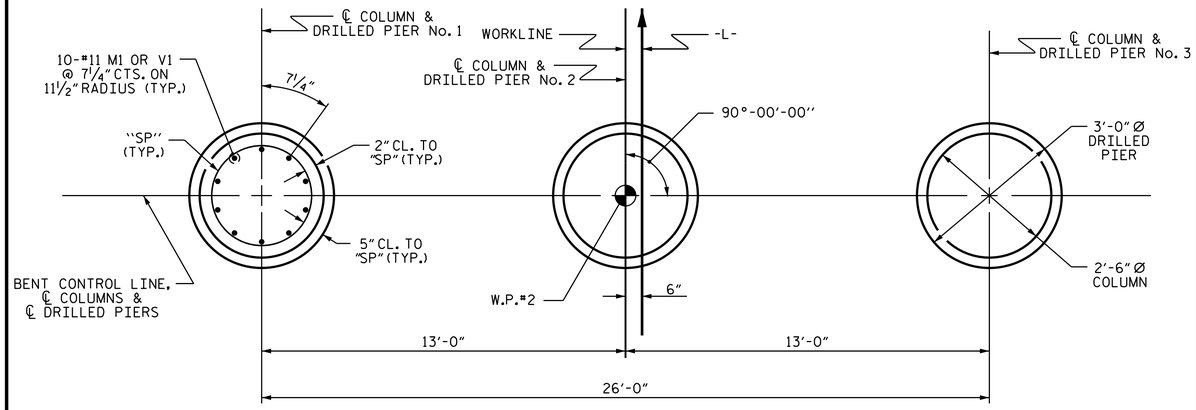

PLAN OF DRILLED PIERS & COLUMNS

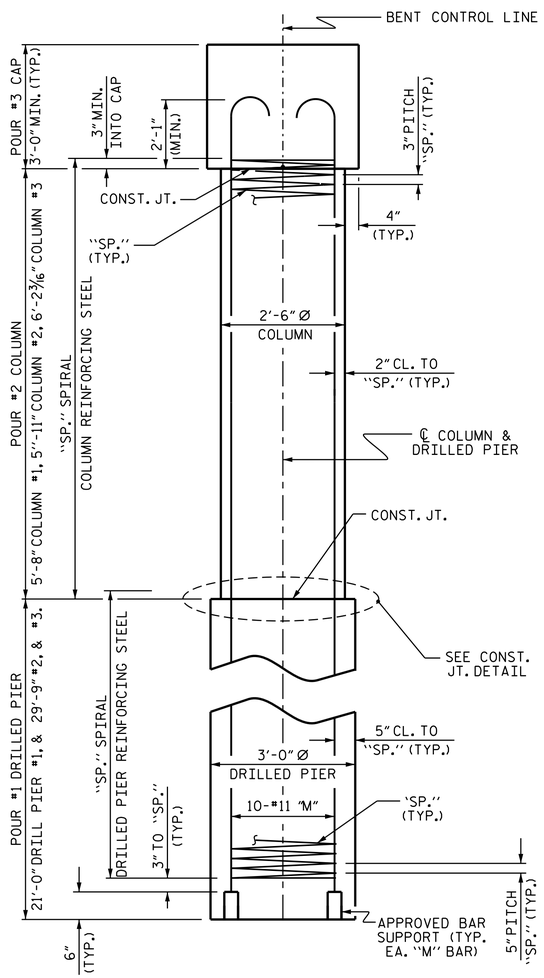

END ELEVATION

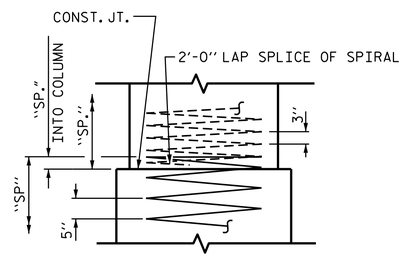

CONSTRUCTION JOINT DETAIL

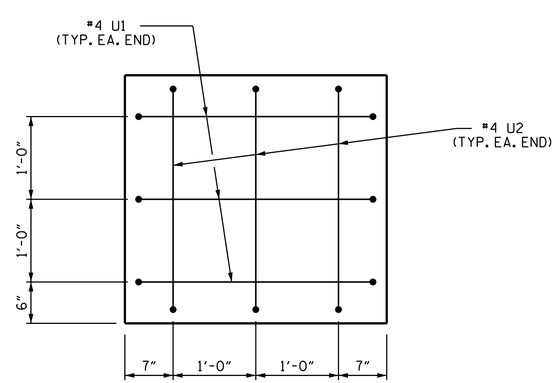

END OF CAP VIEW

(TYPICAL BOTH ENDS)

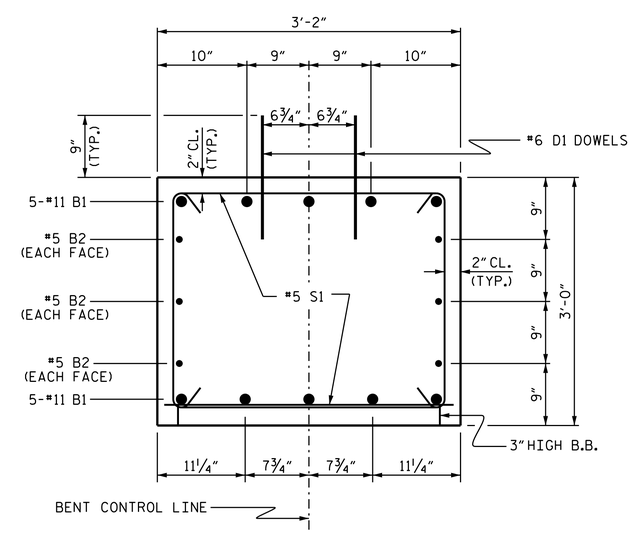

SECTION THRU CAP

BAR TYPES

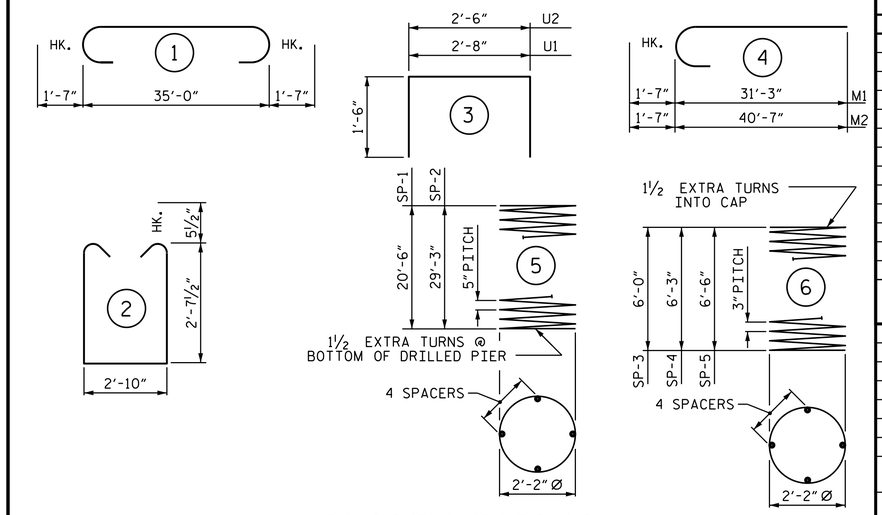

ALL BAR DIMENSIONS ARE OUT TO OUT

BILL OF MATERIAL
FOR ONE BENT

BAR	NO.	SIZE	TYPE	LENGTH	WEIGHT
B1	10	#11	1	38'-2"	2028
B2	6	#5	STR	35'-2"	220
D1	44	#6	STR	1'-6"	99
M1	10	#11	4	32'-10"	1744
M2	20	#11	4	42'-2"	4481
S1	60	#5	2	9'-0"	563
U1	6	#4	3	5'-8"	23
U2	6	#4	3	5'-6"	22

REINFORCING STEEL (FOR ONE BENT) 9180 LBS.

SP-1	1	✳	5	337'-10"	352
SP-2	2	✳	5	477'-7"	996
SP-3	1	✳✳	6	170'-5"	114
SP-4	1	✳✳	6	177'-1"	118
SP-5	1	✳✳	6	183'-9"	123

SPIRAL COLUMN REINFORCING STEEL (FOR ONE BENT) 1703 LBS.

✳ THE SP-1 & SP-2 SPIRAL REINFORCING STEELSHALL BE W31 OR D-31 COLD DRAWN WIRE OR #5 PLAIN OR DEFORMED BAR

✳✳ THE SP-3, SP-4, SP-5 SPIRAL REINFORCING STEEL SHALL BE W20 OR D-20 COLD DRAWN WIRE OR #4 PLAIN OR DEFORMED BAR

CLASS A CONCRETE BREAKDOWN (FOR ONE BENT)

POUR #2 (COLUMNS)	3.2 C.Y.
POUR #3 (CAP)	12.5 C.Y.
TOTAL CLASS A CONCRETE	15.7 C.Y.

DRILLED PIERS: (FOR ONE BENT)

DRILLED PIER CONCRETE POUR #1 (DRILLED PIERS)	21.0 C.Y.
3'-0" Ø DRILLED PIER NOT IN SOIL	33 LIN. FT.
3'-0" Ø DRILLED PIER IN SOIL	47.5 LIN. FT.
PERMANENT STEEL CASING FOR 3'-0" Ø DRILLED PIER	27 LIN. FT.
CSL TUBES	340 LIN. FT.
SID TUBES	1 EA.
SPT TESTING	3 EA.

PROJECT NO. 17BP.12.R.60

GASTON COUNTY

STATION: 13+22.00 -L-

SHEET 2 OF 2

STATE OF NORTH CAROLINA
DEPARTMENT OF TRANSPORTATION
RALEIGH

SUBSTRUCTURE

BENT No. 1

DocuSigned by: 02EE6E5B2A8F4E5...

NORTH CAROLINA PROFESSIONAL SEAL 35647 ENGINEER ADAM A. COLE

8/25/2021

ASSEMBLED BY : REZA KOUCHEKI	DATE : 07/2021		
CHECKED BY : H.A. LOCKLEAR	DATE : 07/2021		
DRAWN BY : DGE 3/10	REV. 11/14	MAA/TMG	
CHECKED BY : MKT 3/10			

DOCUMENT NOT CONSIDERED FINAL UNLESS ALL SIGNATURES COMPLETED

REVISIONS						
NO.	BY:	DATE:	NO.	BY:	DATE:	
1			3			
2			4			

SHEET NO. S-18

TOTAL SHEETS 22

25-AUG-2021 10:26
S:\DPG3\Low Impact Projects\17BP\17BP12R60\FinalPlans\401_035_17BP12R60_SMU_ B1_18_350176.dgn
aacole

STD. NO. DP_BT_33_90S_<50'

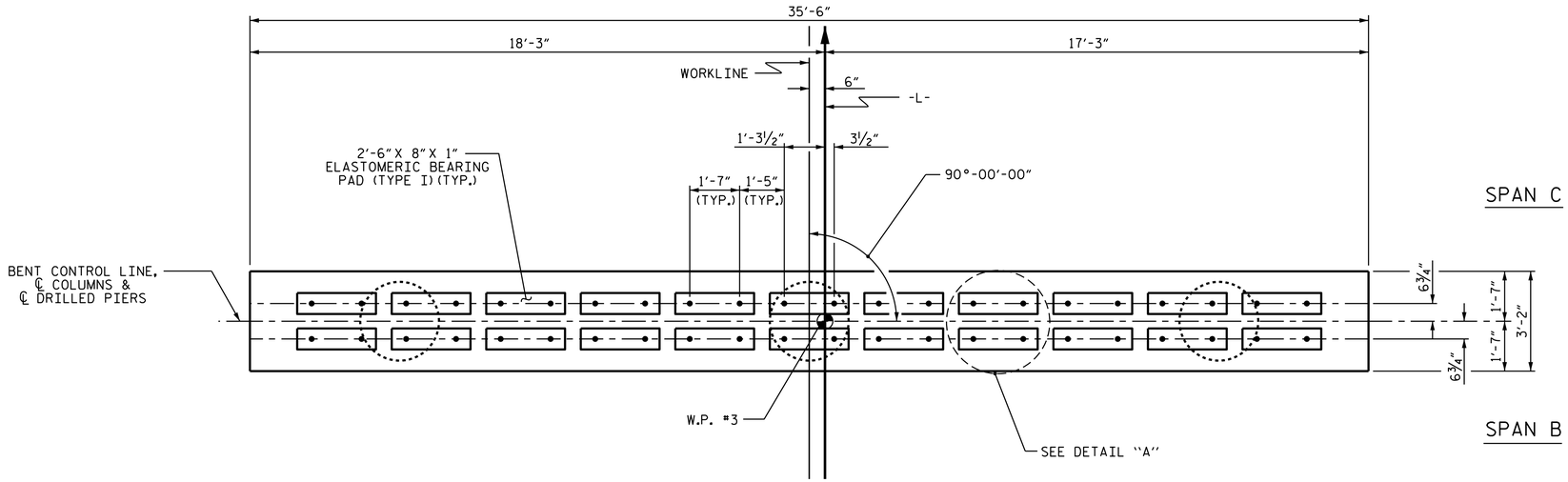

PLAN

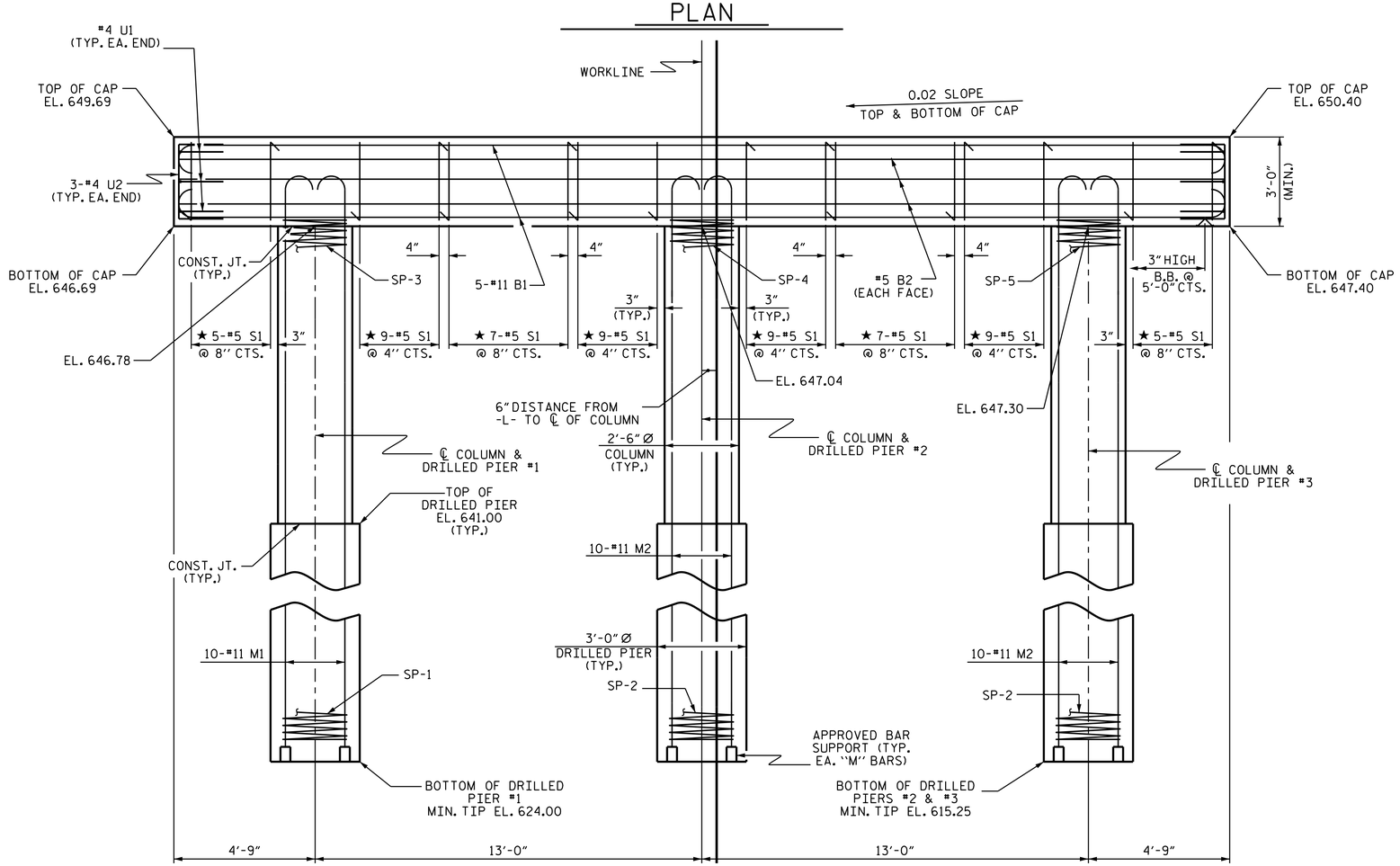

ELEVATION

DIMENSIONS & REINFORCING STEEL ARE TYPICAL FOR EACH COLUMN & DRILLED PIER UNLESS OTHERWISE NOTED.

NOTES

STIRRUPS IN CAP MAY BE SHIFTED AS NECESSARY TO CLEAR DOWELS.

HOOKS ON "V" BARS MAY BE TURNED AS NECESSARY FOR PLACING REINFORCING STEEL.

FOR DRILLED PIERS, SEE SECTION 411 OF THE STANDARD SPECIFICATIONS.

ALL STEEL IN THE DRILLED PIERS IS INCLUDED IN THE PAY ITEMS FOR "REINFORCING STEEL" AND "SPIRAL COLUMN REINFORCING STEEL."

★ INVERT ALTERNATE STIRRUPS.

THE LOCATION OF THE CONSTRUCTION JOINT IN THE DRILLED PIERS IS BASED ON AN APPROXIMATE GROUND LINE ELEVATION. IF THE CONSTRUCTION JOINT IS ABOVE THE ACTUAL GROUND LINE ELEVATION, THE CONTRACTOR SHALL PLACE THE CONSTRUCTION JOINT ONE FOOT BELOW THE GROUND LINE.

DRILLED PIERS SHALL BE TERMINATED ONE FOOT ± ABOVE NORMAL WATER SURFACE ELEVATION FOR SHAFTS LOCATED IN WATER.

THE CONTRACTOR'S ATTENTION IS CALLED TO THE FACT THAT THE LONGITUDINAL REINFORCEMENT FOR DRILLED PIERS IS DETAILED WITH 3 FEET OF EXTRA LENGTH.

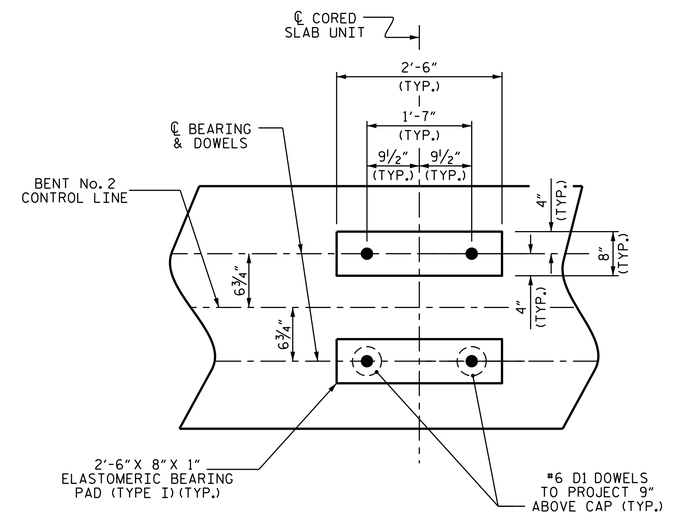

DETAIL "A"

(DIMENSIONS ARE TYPICAL EACH BEARING)

PROJECT NO. 17BP.12.R.60

GASTON COUNTY

STATION: 13+22.00 -L-

SHEET 1 OF 2

STATE OF NORTH CAROLINA
DEPARTMENT OF TRANSPORTATION
RALEIGH

SUBSTRUCTURE
BENT No. 2

NORTH CAROLINA PROFESSIONAL SEAL 031583 ENGINEER KRISHNA PRASAD SEAL

ASSEMBLED BY : REZA KOUCHEKI	DATE : 07/2021		
CHECKED BY : H.A. LOCKLEAR	DATE : 07/2021		
DRAWN BY : DGE 4/10	REV. 11/14	MAA/TMG	
CHECKED BY : MKT 4/10			

DOCUMENT NOT CONSIDERED FINAL UNLESS ALL SIGNATURES COMPLETED

REVISIONS								SHEET NO.
NO.	BY:	DATE:	NO.	BY:	DATE:			S-19
1			3					TOTAL SHEETS
2			4					22

25-AUG-2021 10:26
S:\DP63\Low Impact Projects\17BP\17BP12R60\FinalPlans\401_037_17BP12R60_SMU_ B2_19_350176.dgn
aacole

STD. NO. DP_BT_33_90S_<50'

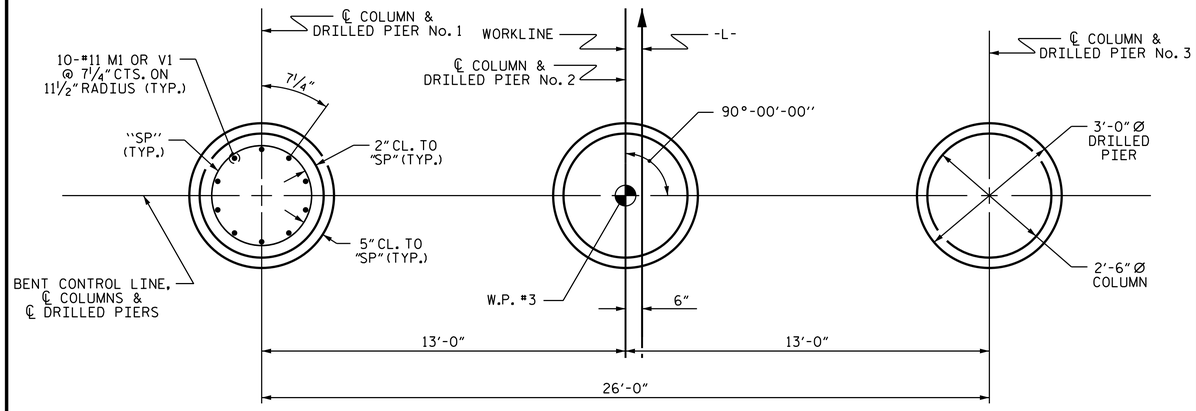

PLAN OF DRILLED PIERS & COLUMNS

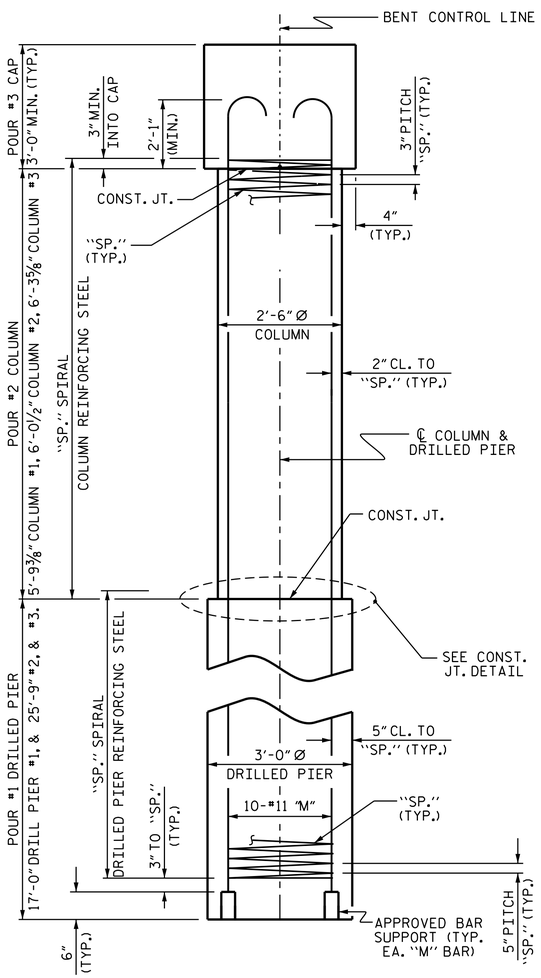

END ELEVATION

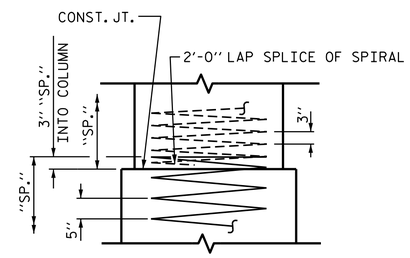

CONSTRUCTION JOINT DETAIL

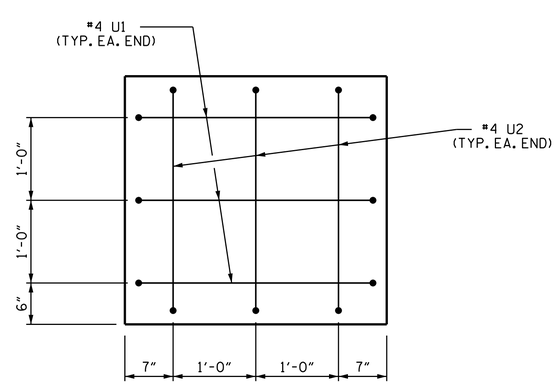

END OF CAP VIEW

(TYPICAL BOTH ENDS)

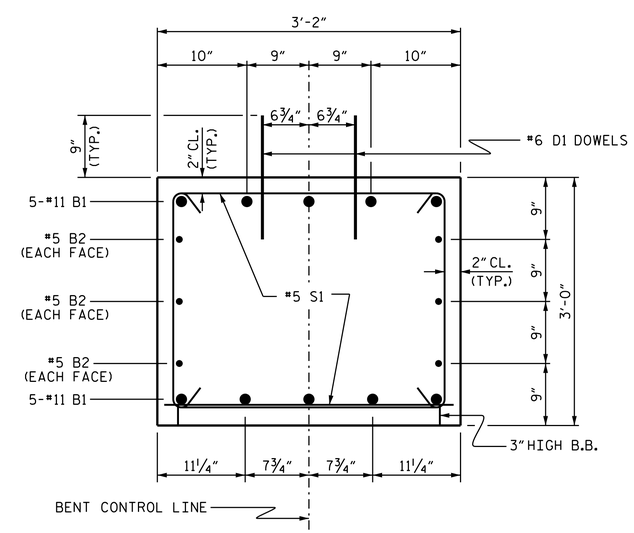

SECTION THRU CAP

BAR TYPES

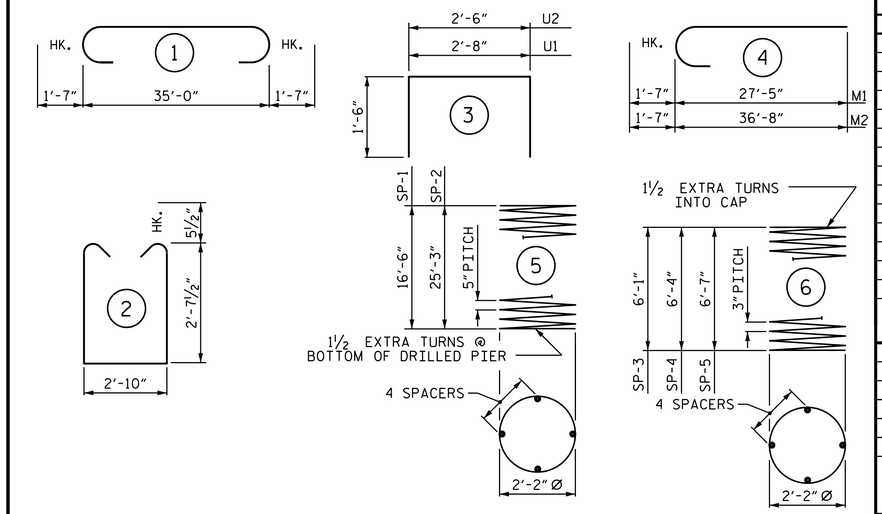

ALL BAR DIMENSIONS ARE OUT TO OUT

BILL OF MATERIAL
FOR ONE BENT

BAR	NO.	SIZE	TYPE	LENGTH	WEIGHT
B1	10	#11	1	38'-2"	2028
B2	6	#5	STR	35'-2"	220
D1	44	#6	STR	1'-6"	99
M1	10	#11	4	29'-0"	1541
M2	20	#11	4	38'-3"	4064
S1	60	#5	2	9'-0"	563
U1	6	#4	3	5'-8"	23
U2	6	#4	3	5'-6"	22

REINFORCING STEEL (FOR ONE BENT) 8560 LBS.

SP-1	1	*	5	274'-7"	286
SP-2	2	*	5	414'-5"	864
SP-3	1	**	6	173'-9"	116
SP-4	1	**	6	180'-5"	121
SP-5	1	**	6	187'-1"	125

SPIRAL COLUMN REINFORCING STEEL (FOR ONE BENT) 1512 LBS.

* THE SP-1 & SP-2 SPIRAL REINFORCING STEEL SHALL BE W31 OR D-31 COLD DRAWN WIRE OR #5 PLAIN OR DEFORMED BAR

** THE SP-3, SP-4, SP-5 SPIRAL REINFORCING STEEL SHALL BE W20 OR D-20 COLD DRAWNWIRE OR #4 PLAIN OR DEFORMED BAR

CLASS A CONCRETE BREAKDOWN (FOR ONE BENT)

POUR #2 (COLUMNS)	3.4 C.Y.
POUR #3 (CAP)	12.5 C.Y.
TOTAL CLASS A CONCRETE	15.9 C.Y.

DRILLED PIERS: (FOR ONE BENT)

DRILLED PIER CONCRETE POUR #1 (DRILLED PIERS)	18.0 C.Y.
3'-0" Ø DRILLED PIER NOT IN SOIL	33 LIN. FT.
3'-0" Ø DRILLED PIER IN SOIL	35.5 LIN. FT.
PERMANENT STEEL CASING FOR 3'-0" Ø DRILLED PIER	15 LIN. FT.
CSL TUBES	292 LIN. FT.
SID TUBES	1 EA.
SPT TESTING	3 EA.

PROJECT NO. 17BP.12.R.60

GASTON COUNTY

STATION: 13+22.00 -L-

SHEET 2 OF 2

STATE OF NORTH CAROLINA
DEPARTMENT OF TRANSPORTATION
RALEIGH

SUBSTRUCTURE

BENT No. 2

DocuSigned by: 026EE8B2A8B34E5...

NORTH CAROLINA PROFESSIONAL SEAL 35647 ENGINEER ADAM A. COLE

8/25/2021

ASSEMBLED BY : REZA KOUCHEKI	DATE : 07/2021		
CHECKED BY : H.A. LOCKLEAR	DATE : 07/2021		
DRAWN BY : DGE 3/10	REV. 11/14	MAA/TMG	
CHECKED BY : MKT 3/10			

DOCUMENT NOT CONSIDERED FINAL UNLESS ALL SIGNATURES COMPLETED

REVISIONS						SHEET NO.
NO.	BY:	DATE:	NO.	BY:	DATE:	S-20
1			3			TOTAL SHEETS
2			4			22

25-AUG-2021 10:26
S:\DPG3\Low Impact Projects\17BP\17BP12R60\FinalPlans\401_039_17BP12R60_SMU_ B2_20_350176.dgn
aacole

STD. NO. DP_BT_33_90S_<50'

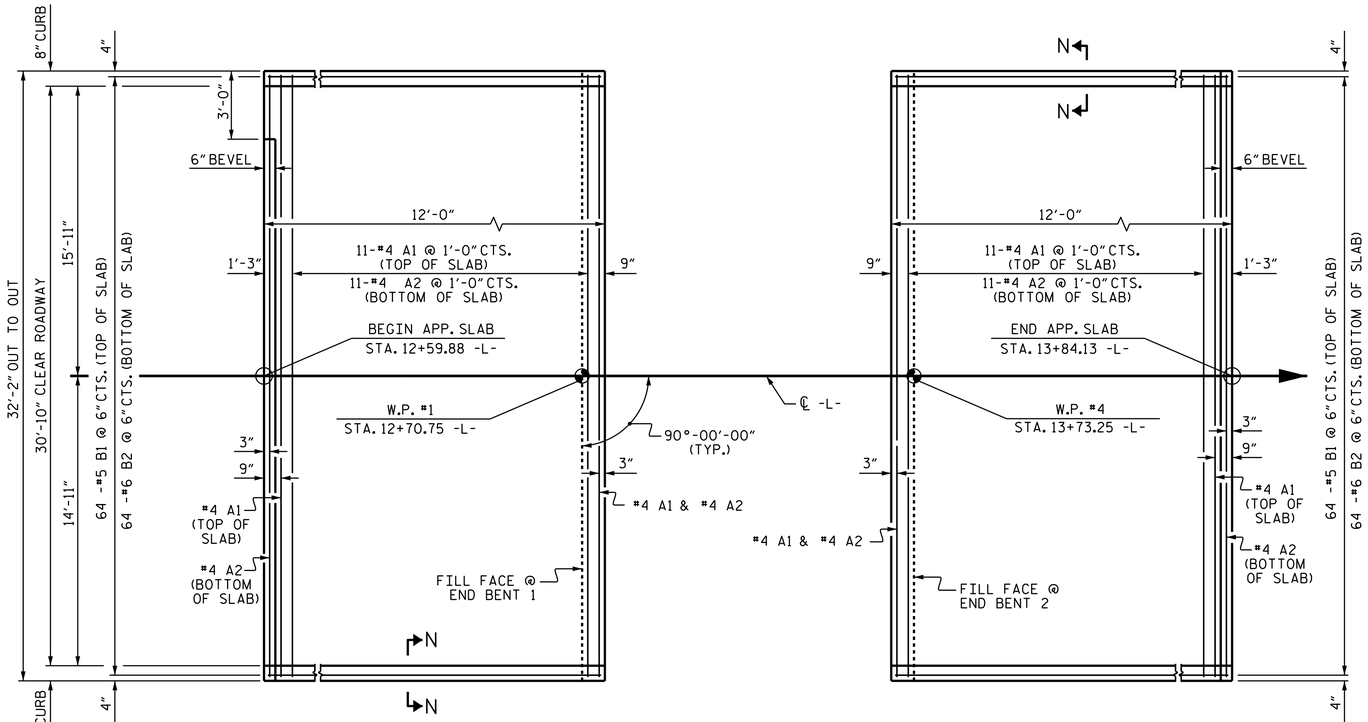

PLAN @ END BENT 1

PLAN @ END BENT 2

DIMENSIONS SHOWN ARE TYPICAL FOR BOTH APPROACH SLABS

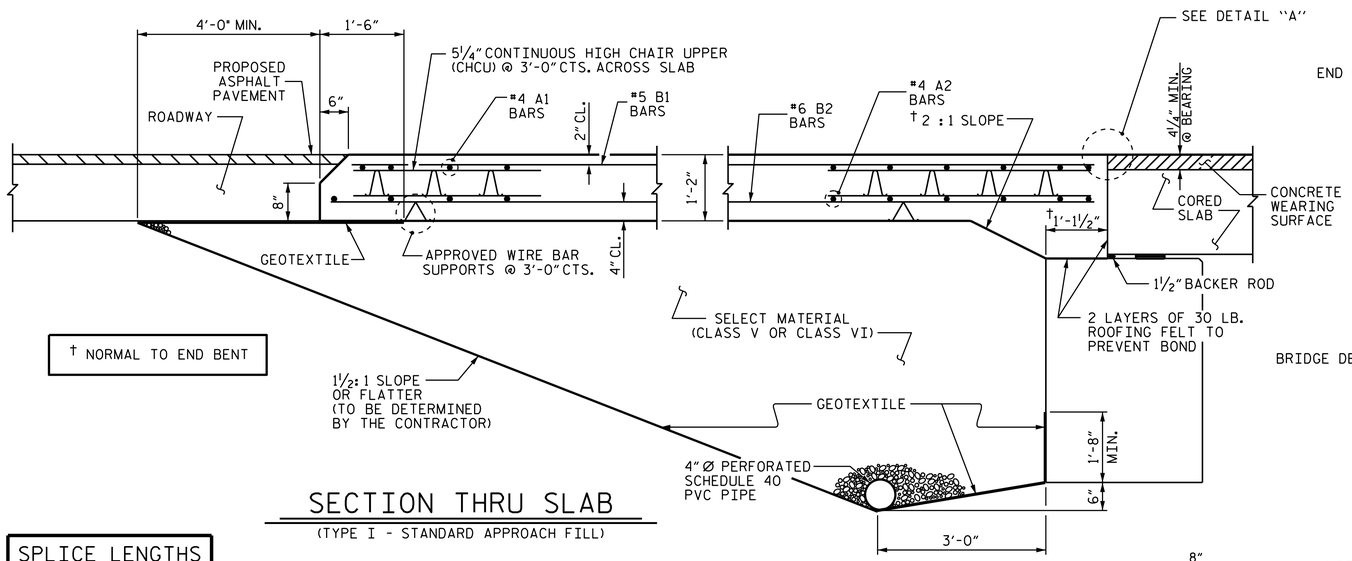

† NORMAL TO END BENT

SECTION THRU SLAB

(TYPE I - STANDARD APPROACH FILL)

SPLICE LENGTHS		
BAR SIZE	EPOXY COATED	UNCOATED
#4	1'-11"	1'-7"
#5	2'-5"	2'-0"
#6	3'-7"	2'-5"

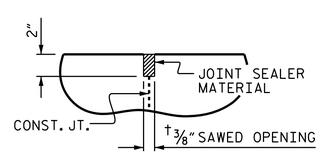

DETAIL "A"

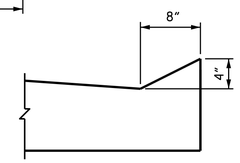

SECTION N-N

NOTES

FOR BRIDGE APPROACH FILL INCLUDING GEOTEXTILE, 4" Ø DRAINAGE PIPE, AND SELECT MATERIAL BACKFILL, SEE ROADWAY PLANS.

GEOTEXTILE SHALL BE TYPE 1 IN ACCORDANCE WITH THE STANDARD SPECIFICATIONS SECTION 1056.

SELECT MATERIAL BACKFILL (CLASS V OR CLASS VI) SHALL BE IN ACCORDANCE WITH STANDARD SPECIFICATIONS SECTION 1016.

SELECT MATERIAL BACKFILL IS TO BE CONTINUOUS ALONG FILL FACE OF BACKWALL FROM OUTSIDE EDGE TO OUTSIDE EDGE OF APPROACH SLAB.

AREA BETWEEN THE WINGWALL AND APPROACH SLAB SHALL BE GRADED TO DRAIN THE WATER AWAY FROM THE FILL FACE OF THE BRIDGE AND SHALL BE PAVED. SEE ROADWAY PLANS.

FOR THE 4" Ø DRAINAGE PIPE OUTLET(S), SEE ROADWAY STANDARD DRAWINGS.

APPROACH SLABS SHALL BE POURED AFTER CONCRETE WEARING SURFACE IS POURED.

THE JOINT OPENING AT THE APPROACH SLAB/DECK INTERFACE SHALL BE SAWED NO MORE THAN 12 HOURS AFTER THE APPROACH SLAB IS CAST. THE JOINT SHALL BE CLEANED OF ALL DEBRIS BEFORE THE SEALANT IS APPLIED. THE JOINT SEALER MATERIAL SHALL CONFORM TO THE REQUIREMENTS OF SECTION 1028-3 OF THE STANDARD SPECIFICATIONS.

BILL OF MATERIAL

APPROACH SLAB AT EB 1

BAR	NO.	SIZE	TYPE	LENGTH	WEIGHT
* A1	13	#4	STR	31'-10"	276
A2	13	#4	STR	31'-10"	276
* B1		#5	STR	11'-2"	745
B2		#6	STR	11'-8"	1121
REINFORCING STEEL				LBS.	1397
* EPOXY COATED REINFORCING STEEL				LBS.	1021
CLASS AA CONCRETE				C. Y.	18.4

APPROACH SLAB AT EB 2

BAR	NO.	SIZE	TYPE	LENGTH	WEIGHT
* A1		#4	STR	31'-10"	276
A2		#4	STR	31'-10"	276
* B1		#5	STR	11'-2"	745
B2		#6	STR	11'-8"	1121
REINFORCING STEEL				LBS.	1397
* EPOXY COATED REINFORCING STEEL				LBS.	1021
CLASS AA CONCRETE				C. Y.	18.4

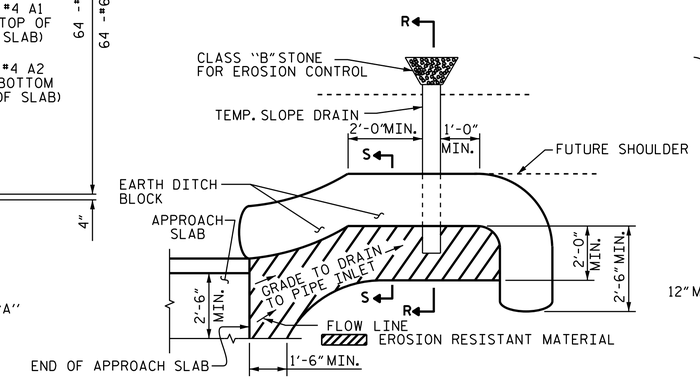

NOTE: IMMEDIATELY AFTER THE CONSTRUCTION OF THE APPROACH SLAB, THE CONTRACTOR SHALL PROVIDE TEMPORARY BERM AND SLOPE DRAIN. CONTRACTOR SHALL GRADE TO PIPE INLET AND PROVIDE EROSION RESISTANT MATERIAL AS SHOWN. THE EROSION RESISTANT MATERIAL SHALL BE EITHER 1) ASPHALT PLANT MIX, TYPE 1 OR TYPE 2, MIN. 2" DEPTH, 2) EROSION CONTROL MAT, OR 3) CONCRETE, AS DIRECTED BY THE ENGINEER. THE SLOPE DRAIN SHALL CONSIST OF A NON-PERFORATED TEMPORARY DRAINAGE PIPE, 12 INCHES IN DIAMETER.

PLAN VIEW

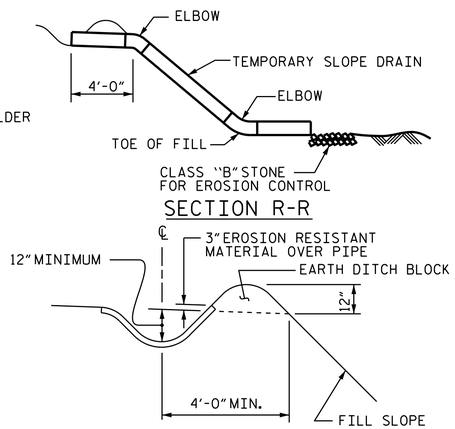

SECTION R-R

SECTION S-S

TEMPORARY BERM AND SLOPE DRAIN DETAILS

(TO BE USED WHEN SHOULDER BERM GUTTER IS REQUIRED)

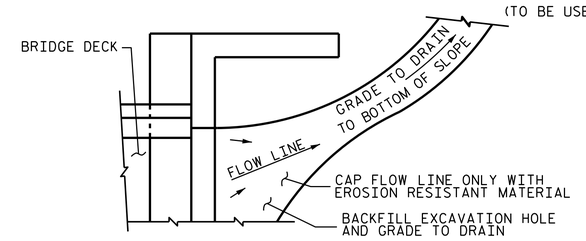

NOTE: IF THE APPROACH SLAB IS NOT CONSTRUCTED IMMEDIATELY AFTER THE BACKFILLING OF THE END BENT EXCAVATION, GRADE TO DRAIN TO THE BOTTOM OF THE SLOPE AND PROVIDE EROSION RESISTANT MATERIAL, SUCH AS FIBERGLASS ROVING OR AS DIRECTED BY THE ENGINEER TO PREVENT SOIL EROSION AND TO PROTECT THE AREA ADJACENT TO THE STRUCTURE. THE CONTRACTOR WILL BE REQUIRED TO REMOVE THESE MATERIALS PRIOR TO CONSTRUCTION OF THE APPROACH SLAB.

TEMPORARY DRAINAGE DETAIL

PROJECT NO. 17BP.12.R.60

GASTON COUNTY

STATION: 13+22.00 -L-

DocuSigned by: ADAM A. COLE
NORTH CAROLINA PROFESSIONAL SEAL 35647 ENGINEER ADAM A. COLE
8/25/2021

STATE OF NORTH CAROLINA
DEPARTMENT OF TRANSPORTATION
RALEIGH

STANDARD

BRIDGE APPROACH SLAB FOR PRESTRESSED CONCRETE CORED SLAB (SUB-REGIONAL TIER) 90 SKEW

REVISIONS						
NO.	BY:	DATE:	NO.	BY:	DATE:	
1			3			
2			4			

SHEET NO. S-21

TOTAL SHEETS 22

DOCUMENT NOT CONSIDERED FINAL UNLESS ALL SIGNATURES COMPLETED

(SHT 2)

STD. NO. BAS3

ASSEMBLED BY : REZA KOUCHEKI		DATE : 07/2021	
CHECKED BY : H.A. LOCKLEAR		DATE : 07/2021	
DRAWN BY : FCJ 6/87	REV. 12/21/11	MAA/GM	
CHECKED BY : EGA 6/87	REV. 6/13	MAA/GM	
	REV. 12/17	MAA/THC	

25-AUG-2021 10:26
S:\DPG3\Low Impact Projects\17BP\17BP12R60\FinalPlans\401_041_17BP12R60_SMU_ AS_21_350176.dgn
gacole

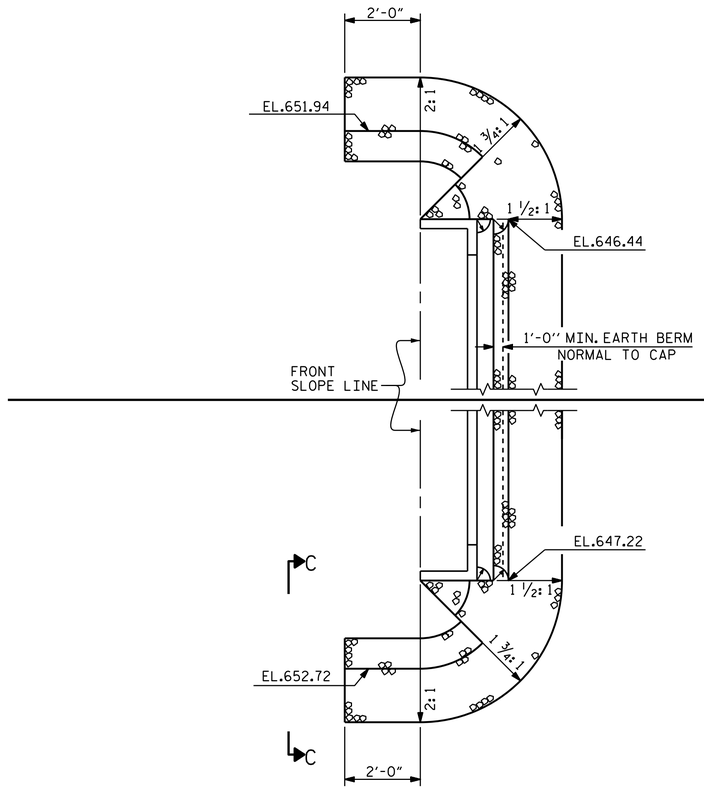

END BENT 1

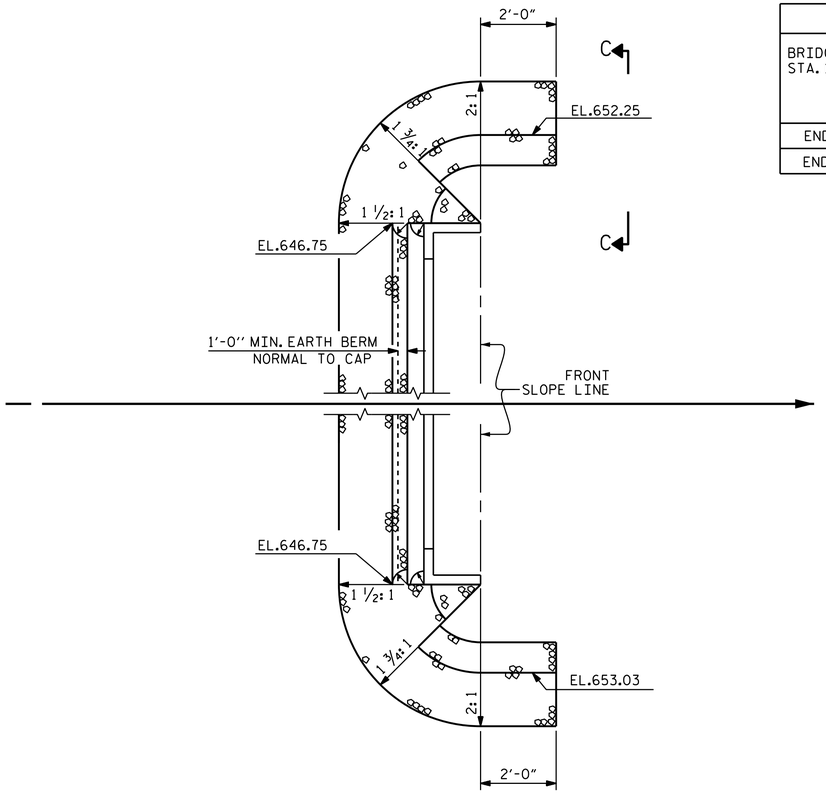

END BENT 2

ESTIMATED QUANTITIES		
BRIDGE @ STA. 13+22.00 -L-	RIP RAP CLASS II (2'-0" THICK)	GEOTEXTILE FOR DRAINAGE
	TONS	SQUARE YARDS
END BENT 1	107	120
END BENT 2	113	126

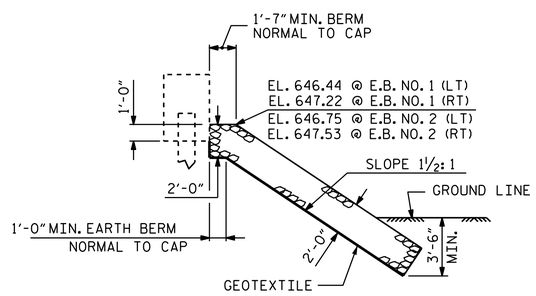

℄ SECTION

BERM RIP RAPPED

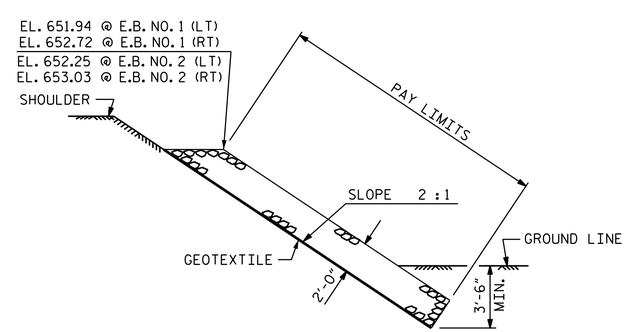

SECTION C-C

PROJECT NO. 17BP.12.R.60

GASTON COUNTY

STATION: 13+22.00 -L-

DocuSigned by:
DEFESSIONAL SEAL

NORTH CAROLINA PROFESSIONAL SEAL 35647 ENGINEER ADAM A. COLE

8/25/2021

STATE OF NORTH CAROLINA
DEPARTMENT OF TRANSPORTATION
RALEIGH

STANDARD

RIP RAP DETAILS

ASSEMBLED BY : REZA KOUCHEKI	DATE : 07/2021		
CHECKED BY : H.A. LOCKLEAR	DATE : 07/2021		
DRAWN BY : REK 1/84	REV. 10/1/11	MAA/GM	
CHECKED BY : RDU 1/84	REV. 12/21/11	MAA/GM	
	REV. 12/17	MAA/THC	

DOCUMENT NOT CONSIDERED FINAL UNLESS ALL SIGNATURES COMPLETED

REVISIONS						
NO.	BY:	DATE:	NO.	BY:	DATE:	
1			3			
2			4			

SHEET NO. S-22

TOTAL SHEETS 22

STD. NO. RR1

25-AUG-2021 10:26
S:\DPG3\Low Impact Projects\17BP\17BP12R60\Final Plans\401_043_17BP12R60_SMU_ RR_22_350176.dgn
gacole

STANDARD NOTES

DESIGN DATA:

SPECIFICATIONS	A.A.S.H.T.O. (CURRENT)
LIVE LOAD	SEE PLANS
IMPACT ALLOWANCE	SEE A.A.S.H.T.O.
STRESS IN EXTREME FIBER OF STRUCTURAL STEEL - AASHTO M270 GRADE 36	20,000 LBS. PER SQ. IN.
- AASHTO M270 GRADE 50W	27,000 LBS. PER SQ. IN.
- AASHTO M270 GRADE 50	27,000 LBS. PER SQ. IN.
REINFORCING STEEL IN TENSION - GRADE 60	24,000 LBS. PER SQ. IN.
CONCRETE IN COMPRESSION	1,200 LBS. PER SQ. IN.
CONCRETE IN SHEAR	SEE A.A.S.H.T.O.
STRUCTURAL TIMBER - TREATED OR UNTREATED EXTREME FIBER STRESS	1,800 LBS. PER SQ. IN.
COMPRESSION PERPENDICULAR TO GRAIN OF TIMBER	375 LBS. PER SQ. IN.
EQUIVALENT FLUID PRESSURE OF EARTH	30 LBS. PER CU. FT. (MINIMUM)

MATERIAL AND WORKMANSHIP:

EXCEPT AS MAY OTHERWISE BE SPECIFIED ON PLANS OR IN THE SPECIAL PROVISIONS, ALL MATERIAL AND WORKMANSHIP SHALL BE IN ACCORDANCE WITH THE 2018 "STANDARD SPECIFICATIONS FOR ROADS AND STRUCTURES" OF THE N. C. DEPARTMENT OF TRANSPORTATION.

STEEL SHEET PILING FOR PERMANENT OR TEMPORARY APPLICATIONS SHALL BE HOT ROLLED.

CONCRETE:

UNLESS OTHERWISE REQUIRED ON PLANS, CLASS A CONCRETE SHALL BE USED FOR ALL PORTIONS OF ALL STRUCTURES WITH THE EXCEPTION THAT: CLASS AA CONCRETE SHALL BE USED IN BRIDGE SUPERSTRUCTURES, ABUTMENT BACKWALLS, AND APPROACH SLABS; AND CLASS B CONCRETE SHALL BE USED FOR SLOPE PROTECTION AND RIP RAP.

CONCRETE CHAMFERS:

UNLESS OTHERWISE NOTED ON THE PLANS, ALL EXPOSED CORNERS ON STRUCTURES SHALL BE CHAMFERED ¾" WITH THE FOLLOWING EXCEPTIONS: TOP CORNERS OF CURBS MAY BE ROUNDED TO 1½" RADIUS WHICH IS BUILT INTO CURB FORMS; CORNERS OF TRANSVERSE FLOOR EXPANSION JOINTS SHALL BE ROUNDED WITH A ¼" FINISHING TOOL UNLESS OTHERWISE REQUIRED ON PLANS; AND CORNERS OF EXPANSION JOINTS IN THE ROADWAY FACES AND TOPS OF CURBS AND SIDEWALKS SHALL BE ROUNDED TO A ¼" RADIUS WITH A FINISHING STONE OR TOOL UNLESS OTHERWISE REQUIRED ON PLANS.

DOWELS:

DOWELS WHEN INDICATED ON PLANS AS FOR CULVERT EXTENSIONS, SHALL BE EMBEDDED AT LEAST 12" INTO THE OLD CONCRETE AND GROUTED INTO PLACE WITH 1:2 CEMENT MORTAR.

ALLOWANCE FOR DEAD LOAD DEFLECTION, SETTLEMENT, ETC. IN CASTING SUPERSTRUCTURES:

BRIDGES SHALL BE BUILT ON THE GRADE OR VERTICAL CURVE SHOWN ON PLANS. SLABS, CURBS AND PARAPETS SHALL CONFORM TO THE GRADE OR CURVE.

ALL DIMENSIONS WHICH ARE GIVEN IN SECTION AND ARE AFFECTED BY DEAD LOAD DEFLECTIONS ARE DIMENSIONS AT CENTER LINE OF BEARING UNLESS OTHERWISE NOTED ON PLANS. IN SETTING FORMS FOR STEEL BEAM BRIDGES AND PRESTRESSED CONCRETE GIRDER BRIDGES, ADJUSTMENTS SHALL BE MADE DUE TO THE DEAD LOAD DEFLECTIONS FOR THE ELEVATIONS SHOWN. WHERE BLOCKS ARE SHOWN OVER BEAMS FOR BUILDING UP TO THE SLAB, THE VERTICAL DIMENSIONS OF THE BLOCKS SHALL BE ADJUSTED BETWEEN BEARINGS TO COMPENSATE FOR DEAD LOAD DEFLECTIONS, VERTICAL CURVE ORDINATE, AND ACTUAL BEAM CAMBER. WHERE BOTTOM OF SLAB IS IN LINE WITH BOTTOM OF TOP FLANGES, DEPTH OF SLAB BETWEEN BEARINGS SHALL BE ADJUSTED TO COMPENSATE FOR DEAD LOAD DEFLECTION, VERTICAL CURVE ORDINATE, AND ACTUAL BEAM CAMBER.

IN SETTING FALSEWORK AND FORMS FOR REINFORCED CONCRETE SPANS, AN ALLOWANCE SHALL BE MADE FOR DEAD LOAD DEFLECTIONS, SETTLEMENT OF FALSEWORK, AND PERMANENT CAMBER WHICH SHALL BE PROVIDED FOR IN ADDITION TO THE ELEVATIONS SHOWN. AFTER REMOVAL OF THE FALSEWORK, THE FINISHED STRUCTURES SHALL CONFORM TO THE PROFILE AND ELEVATIONS SHOWN ON THE PLANS AND CONSTRUCTION ELEVATIONS FURNISHED BY THE ENGINEER.

DETAILED DRAWINGS FOR FALSEWORK OR FORMS FOR BRIDGE SUPERSTRUCTURE AND ANY STRUCTURE OR PARTS OF A STRUCTURE AS NOTED ON THE PLANS SHALL BE SUBMITTED TO THE ENGINEER FOR APPROVAL BEFORE CONSTRUCTION OF THE FALSEWORK OR FORMS IS STARTED.

REINFORCING STEEL:

ALL REINFORCING STEEL SHALL BE DEFORMED. DIMENSIONS RELATIVE TO PLACEMENT OF REINFORCING ARE TO CENTERS OF BARS UNLESS OTHERWISE INDICATED IN THE PLANS. DIMENSIONS ON BAR DETAILS ARE TO CENTERS OF BARS OR ARE OUT TO OUT AS INDICATED ON PLANS.

WIRE BAR SUPPORTS SHALL BE PROVIDED FOR REINFORCING STEEL WHERE INDICATED ON THE PLANS. WHEN BAR SUPPORT PIECES ARE PLACED IN CONTINUOUS LINES, THEY SHALL BE SO PLACED THAT THE ENDS OF THE SUPPORTING WIRES SHALL BE LAPPED TO LOCK LEGS ON ADJOINING PIECES.

STRUCTURAL STEEL:

AT THE CONTRACTOR'S OPTION, HE MAY SUBSTITUTE ⅞" Ø SHEAR STUDS FOR THE ¾" Ø STUDS SPECIFIED ON THE PLANS. THIS SUBSTITUTION SHALL BE MADE AT THE RATE OF 3 - ⅞" Ø STUDS FOR 4 - ¾" Ø STUDS, AND STUD SPACING CHANGES SHALL BE MADE AS NECESSARY TO PROVIDE THE SAME EQUIVALENT NUMBER OF ⅞" Ø STUDS ALONG THE BEAM AS SHOWN FOR ¾" Ø STUDS BASED ON THE RATIO OF 3 - ⅞" Ø STUDS FOR 4 - ¾" Ø STUDS. STUDS OF THE LENGTH SPECIFIED ON THE PLANS MUST BE PROVIDED. THE MAXIMUM SPACING SHALL BE 2'-0".

EXCEPT AT THE INTERIOR SUPPORTS OF CONTINUOUS BEAMS WHERE THE COVER PLATE IS IN CONTACT WITH BEARING PLATE, THE CONTRACTOR MAY, AT HIS OPTION, SUBSTITUTE FOR THE COVER PLATES DESIGNATED ON THE PLANS COVER PLATES OF THE EQUIVALENT AREA PROVIDED THESE PLATES ARE AT LEAST 5/16" IN THICKNESS AND DO NOT EXCEED A WIDTH EQUAL TO THE FLANGE WIDTH LESS 2" OR A THICKNESS EQUAL TO 2 TIMES THE FLANGE THICKNESS. THE SIZE OF FILLET WELDS SHALL CONFORM TO THE REQUIREMENTS OF THE CURRENT ANSI/AASHTO/AWS "BRIDGE WELDING CODE". ELECTROSLAG WELDING WILL NOT BE PERMITTED.

WITH THE SOLE EXCEPTION OF EDGES AT SURFACES WHICH BEAR ON OTHER SURFACES, ALL SHARP EDGES AND ENDS OF SHAPES AND PLATES SHALL BE SLIGHTLY ROUNDED BY SUITABLE MEANS TO A RADIUS OF APPROXIMATELY 1/16 INCH OR EQUIVALENT FLAT SURFACE AT A SUITABLE ANGLE PRIOR TO PAINTING, GALVANIZING, OR METALLIZING.

HANDRAILS AND POSTS:

METAL STANDARDS AND FACES OF THE CONCRETE END POSTS FOR THE METAL RAIL SHALL BE SET NORMAL TO THE GRADE OF THE CURB, UNLESS OTHERWISE SHOWN ON PLANS. THE METAL RAIL AND TOPS OF CONCRETE POSTS USED WITH THE ALUMINUM RAIL SHALL BE BUILT PARALLEL TO THE GRADE OF THE CURB.

METAL HANDRAILS SHALL BE IN ACCORDANCE WITH THE PLANS. RAILS SHALL BE AS MANUFACTURED FOR BRIDGE RAILING. CASTINGS SHALL BE OF A UNIFORM APPEARANCE. FINS AND OTHER DEFORMATIONS RESULTING FROM CASTING OR OTHERWISE SHALL BE REMOVED IN A MANNER SO THAT A UNIFORM COLORING OF THE COMPLETED CASTING SHALL BE OBTAINED. CASTINGS WITH DISCOLORATIONS OR OF NON-UNIFORM COLORING WILL NOT BE ACCEPTED. CERTIFIED MILL REPORTS ARE REQUIRED FOR METAL RAILS AND POSTS.

SPECIAL NOTES:

GENERALLY, IN CASE OF DISCREPANCY, THIS STANDARD SHEET OF NOTES SHALL GOVERN OVER THE SPECIFICATIONS, BUT THE REMAINDER OF THE PLANS SHALL GOVERN OVER NOTES HEREON, AND SPECIAL PROVISIONS SHALL GOVERN OVER ALL. SEE SPECIFICATIONS ARTICLE 105-4.

ENGLISH

JANUARY, 1990