TIP PROJECT: B-4575

See Sheet 1-A For Index of Sheets
See Sheet 1-B For Standard Symbology Sheet

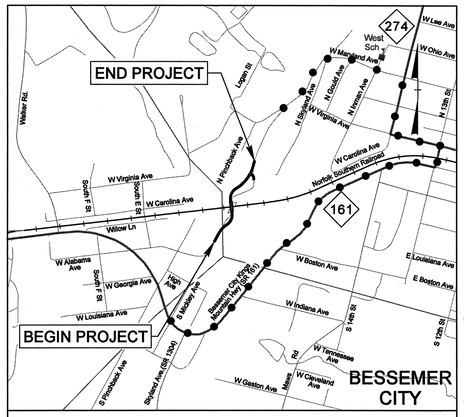

VICINITY MAP

● OFF-SITE DETOUR N.T.S.

FINAL PLANS

STATE OF NORTH CAROLINA
DIVISION OF HIGHWAYS

GASTON COUNTY

LOCATION: BRIDGE NO. 165 OVER NORFOLK SOUTHERN RAILROAD

TYPE OF WORK: GRADING, PAVING, DRAINAGE AND STRUCTURE

STATE	STATE PROJECT REFERENCE NO.	SHEET NO.	TOTAL SHEETS
N.C.	B-4575	1	

STATE PROJ. NO.	F.A. PROJ. NO.	DESCRIPTION
33779.1.1	BRZ-1202(1)	P.E.
33779.2.1	BRZ-1202(1)	R/W & UTIL.
33779.3.1	BRZ-1202(1)	CONST.

NAD 83 / NSRS 2007

4

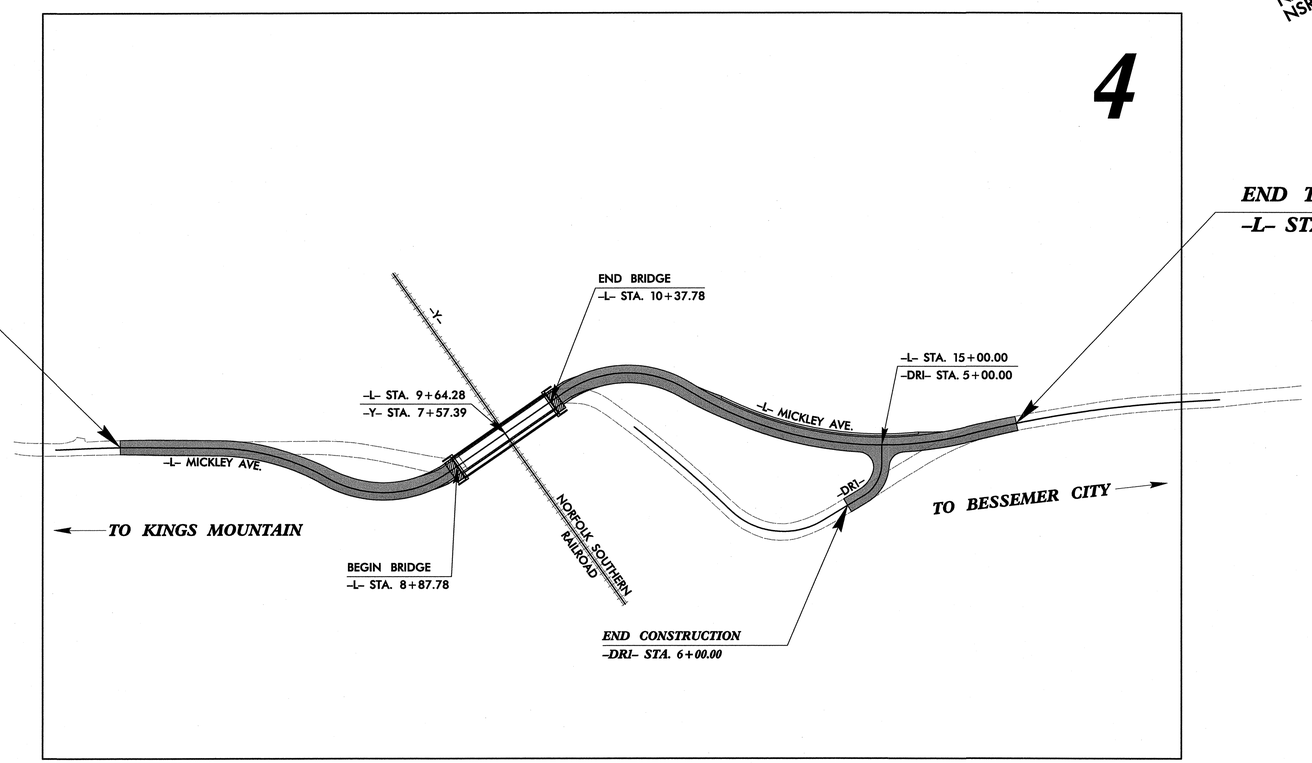

CONTRACT:

FINAL PLANS
12/29/2011

GRAPHIC SCALES

50 25 0 50 100
PLANS

50 25 0 50 100
PROFILE (HORIZONTAL)

5 2.5 0 5 10
PROFILE (VERTICAL)

DESIGN DATA

ADT 2010 = 955
ADT 2028 = 1,600
DHV = N/A
D = N/A
T = N/A
V = 25 MPH
RURAL LOCAL
SUBREGIONAL TIER

PROJECT LENGTH

LENGTH ROADWAY TIP PROJECT B-4575	=	0.21 Miles
LENGTH STRUCTURE TIP PROJECT B-4575	=	0.03 Miles
TOTAL LENGTH TIP PROJECT B-4575	=	0.24 Miles

NCDOT CONTACT: MOHAMMED MAHJOUB
Project Engineer – Roadway Design Unit

Prepared In the Office of:
STV/RALPH WHITEHEAD ASSOCIATES, INC.
1000 West Morehead St., Ste. 200, Charlotte NC, 28208
NC License Number F-0991
FOR CITY OF BESSEMER CITY

2006 STANDARD SPECIFICATIONS

RIGHT OF WAY DATE: August 21, 2009

LETTING DATE: May 1, 2011

JOSEPH A. FREEMAN, PE
PROJECT ENGINEER

MAAMOON ABDELAZIZ
PROJECT DESIGN ENGINEER

HYDRAULICS ENGINEER
NORTH CAROLINA PROFESSIONAL SEAL 029388 ENGINEER EDWARD J. VANCE
Edward J. Vance 12-29-11

ROADWAY DESIGN ENGINEER
NORTH CAROLINA PROFESSIONAL SEAL 032589 ENGINEER JOSEPH A. FREEMAN
12-29-11

CITY OF BESSEMER CITY
NORTH CAROLINA

PROJECT REFERENCE NO.	SHEET NO.
B-4575	1-A
R/W SHEET NO.	

ROADWAY DESIGN ENGINEER: NORTH CAROLINA PROFESSIONAL SEAL 032599 ENGINEER JOSEPH A. FREEMAN 12-29-11

HYDRAULICS ENGINEER: NORTH CAROLINA PROFESSIONAL SEAL 025388 ENGINEER EDWARD J. VANCE 12-29-11

STV / Ralph Whitehead Associates, Inc.
1000 West Morehead St., Ste. 200
Charlotte, NC 28208
NC License Number F-0991

INDEX OF SHEETS

1	TITLE SHEET
1-A	INDEX OF SHEETS, GENERAL NOTES, AND LIST OF STANDARD DRAWINGS
1-B	CONVENTIONAL SYMBOLS
1-C	SURVEY CONTROL SHEET
1-D	CENTERLINE COORDINATE SHEET
2 THRU 2-D	TYPICAL SECTIONS AND DETAILS
3	SUMMARY OF QUANTITIES
3-A	DRAINAGE SUMMARY SHEET
3-B	COMBO SUMMARY SHEET
4	PLAN SHEET
5	PROFILE SHEET
TCP-1 THRU TCP-4	TRAFFIC CONTROL PLANS
PM-1	PAVEMENT MARKINGS
EC-1 THRU EC-4	EROSION CONTROL SHEETS
U-1	UTILITIES BY OTHERS
W-1 THRU W-4	WATERLINE PLANS
S-1 THRU S-30	STRUCTURE PLANS
X-0 THRU X-13	CROSS-SECTIONS

GENERAL NOTES

GENERAL NOTES: 2006 SPECIFICATIONS EFFECTIVE: 07-18-06 REVISED:

A) THE GRADE LINES SHOWN DENOTE THE FINISHED ELEVATION OF THE PROPOSED SURFACING AT GRADE POINTS SHOWN ON THE TYPICAL SECTIONS. GRADE LINES MAY BE ADJUSTED AT THEIR BEGINNING AND ENDING AND AT STRUCTURES AS DIRECTED BY THE ENGINEER IN ORDER TO SECURE A PROPER TIE-IN.

B) CLEARING ON THIS PROJECT SHALL BE PERFORMED TO THE LIMITS ESTABLISHED BY METHOD II.

C) ALL CURVES ON THIS PROJECT SHALL BE SUPERELEVATED IN ACCORDANCE WITH STD. NO. 225.04 USING THE RATE OF SUPERELEVATION AND RUNOFF SHOWN ON THE PLANS. SUPERELEVATION IS TO BE REVOLVED ABOUT THE GRADE POINTS SHOWN ON THE TYPICAL SECTIONS.

D) ASPHALT, EARTH, AND CONCRETE SHOULDER CONSTRUCTION ON THE HIGH SIDE OF SUPERELEVATED CURVES SHALL BE IN ACCORDANCE WITH STD. NO. 560.01.

E) THE CONTRACTOR WILL BE REQUIRED TO DO ALL NECESSARY WORK TO PROVIDE SUITABLE CONNECTIONS WITH ALL ROADS, STREETS, AND DRIVES ENTERING THIS PROJECT. THIS WORK WILL BE PAID FOR AT THE CONTRACT UNIT PRICE FOR THE PARTICULAR ITEMS INVOLVED.

F) THE GUARDRAIL LOCATIONS SHOWN ON THE PLANS MAY BE ADJUSTED DURING CONSTRUCTION AS DIRECTED BY THE ENGINEER. THE CONTRACTOR SHOULD CONSULT WITH THE ENGINEER PRIOR TO ORDERING GUARDRAIL MATERIAL.

G) SHORING REQUIRED FOR THE MAINTENANCE OF TRAFFIC WILL BE PAID FOR AS "EXTRA WORK" IN ACCORDANCE WITH SECTION 104-7.

H) NO SUBSURFACE PLANS ARE AVAILABLE ON THIS PROJECT. THE CONTRACTOR SHOULD MAKE HIS OWN INVESTIGATION AS TO THE SUBSURFACE CONDITIONS.

I) THE ENGINEER SHALL CHECK THE STRUCTURE END BENT PLANS, DETAILS, AND CROSS-SECTION PRIOR TO SETTING OF THE SLOPE STAKES FOR THE EMBANKMENT OR EXCAVATION APPROACHING A BRIDGE.

J) UTILITY OWNERS ON THIS PROJECT ARE: DUKE ENERGY, AND CITY OF BESSEMER CITY.

K) ANY RELOCATION OF EXISTING UTILITIES WILL BE ACCOMPLISHED BY OTHERS, EXCEPT AS SHOWN ON THE PLANS.

L) ALL RIGHT-OF-WAY MARKERS ON THIS PROJECT SHALL BE PLACED BY OTHERS.

LIST OF STANDARDS

2006 ROADWAY STANDARD DRAWINGS

The following Roadway Standards as appear in "Roadway Standard Drawings" Highway Design Branch – N. C. Department of Transportation – Raleigh, N. C., Dated July 18, 2006 are applicable to this project and by reference hereby are considered a part of these plans:

DIVISION 2 – EARTHWORK

200.02	Method of Clearing – Method II
225.02	Guide for Grading Subgrade – Secondary and Local
225.04	Method of Obtaining Superelevation – Two Lane Pavement

DIVISION 3 – PIPE CULVERTS

310.02	Parallel Pipe End Section – Precast Concrete Section for 15" to 24" Pipe
310.03	Cross Pipe End Section – Precast Concrete Section for 18" to 30" Pipe
310.04	Parallel Pipe End Section – Prefabricated Steel Section for 15" to 24" Pipe
310.05	Cross Pipe End Section – Prefabricated Steel Section for 18" to 30" Pipe

DIVISION 4 – MAJOR STRUCTURES

422.10	Reinforced Bridge Approach Fills

DIVISION 5 – SUBGRADE, BASES AND SHOULDERS

560.01	Method of Shoulder Construction – High Side of Superelevated Curve – Method I

DIVISION 8 – INCIDENTALS

840.01	Brick Catch Basin – 12" thru 54" Pipe
840.02	Concrete Catch Basin – 12" thru 54" Pipe
840.03	Frame, Grates and Hood – for Use on Standard Catch Basin
840.18	Concrete Grated Drop Inlet Type 'B' – 12" thru 36" Pipe
840.22	Frames and Wide Slot Sag Grates
840.27	Brick Grated Drop Inlet Type 'B' – 12" thru 36" Pipe
840.29	Frames and Narrow Slot Flat Grates
840.35	Traffic Bearing Grated Drop Inlet – for Cast Iron Double Frame and Grates
840.45	Precast Drainage Structure
840.46	Traffic Bearing Precast Drainage Structure
840.66	Drainage Structure Steps
846.01	Concrete Curb, Gutter and Curb & Gutter
846.04	Drop Inlet Installation in Shoulder Berm Gutter
862.01	Guardrail Placement
862.02	Guardrail Installation
862.03	Structure Anchor Units
862.04	Anchoring End of Guardrail – for B-77 and B-83 Anchor Units
876.02	Guide for Rip Rap at Pipe Outlets
876.04	Drainage Ditches with Class 'B' Rip Rap

12/29/2011
R:\Roadway\Proj\B4575_RDY_psh_1A.dgn
stephess

PROJECT REFERENCE NO.	SHEET NO.
B-4575	1-B

Note: Not to Scale

****S.U.E. = Subsurface Utility Engineering***

STATE OF NORTH CAROLINA
DIVISION OF HIGHWAYS

CONVENTIONAL PLAN SHEET SYMBOLS

BOUNDARIES AND PROPERTY:

- State Line
- County Line
- Township Line
- City Line
- Reservation Line
- Property Line
- Existing Iron Pin — EIP
- Property Corner
- Property Monument — ECM
- Parcel/Sequence Number — 123
- Existing Fence Line
- Proposed Woven Wire Fence
- Proposed Chain Link Fence
- Proposed Barbed Wire Fence
- Existing Wetland Boundary — WLB
- Proposed Wetland Boundary — WLB
- Existing Endangered Animal Boundary — EAB
- Existing Endangered Plant Boundary — EPB

BUILDINGS AND OTHER CULTURE:

- Gas Pump Vent or U/G Tank Cap
- Sign — S
- Well — W
- Small Mine
- Foundation
- Area Outline
- Cemetery
- Building
- School
- Church
- Dam

HYDROLOGY:

- Stream or Body of Water
- Hydro, Pool or Reservoir
- Jurisdictional Stream — JS
- Buffer Zone 1 — BZ 1
- Buffer Zone 2 — BZ 2
- Flow Arrow
- Disappearing Stream
- Spring
- Wetland
- Proposed Lateral, Tail, Head Ditch — FLOW
- False Sump

RAILROADS:

- Standard Gauge — CSX TRANSPORTATION
- RR Signal Milepost — MILEPOST 35
- Switch — SWITCH
- RR Abandoned
- RR Dismantled

RIGHT OF WAY:

- Baseline Control Point
- Existing Right of Way Marker
- Existing Right of Way Line
- Proposed Right of Way Line — RW
- Proposed Right of Way Line with Iron Pin and Cap Marker — RW
- Proposed Right of Way Line with Concrete or Granite Marker — RW
- Existing Control of Access — CA
- Proposed Control of Access — CA
- Existing Easement Line — E
- Proposed Temporary Construction Easement — E
- Proposed Temporary Drainage Easement — TDE
- Proposed Permanent Drainage Easement — PDE
- Proposed Permanent Utility Easement — PUE
- Proposed Temporary Utility Easement — TUE
- Proposed Permanent Easement with Iron Pin and Cap Marker

ROADS AND RELATED FEATURES:

- Existing Edge of Pavement
- Existing Curb
- Proposed Slope Stakes Cut — C
- Proposed Slope Stakes Fill — F
- Proposed Wheel Chair Ramp — WCR
- Existing Metal Guardrail
- Proposed Guardrail
- Existing Cable Guiderail
- Proposed Cable Guiderail
- Equality Symbol
- Pavement Removal

VEGETATION:

- Single Tree
- Single Shrub
- Hedge
- Woods Line
- Orchard
- Vineyard — Vineyard

EXISTING STRUCTURES:

MAJOR:

- Bridge, Tunnel or Box Culvert — CONC
- Bridge Wing Wall, Head Wall and End Wall — CONC WW

MINOR:

- Head and End Wall — CONC HW
- Pipe Culvert
- Footbridge
- Drainage Box: Catch Basin, DI or JB — CB
- Paved Ditch Gutter
- Storm Sewer Manhole — S
- Storm Sewer — S

UTILITIES:

POWER:

- Existing Power Pole
- Proposed Power Pole
- Existing Joint Use Pole
- Proposed Joint Use Pole
- Power Manhole — P
- Power Line Tower
- Power Transformer
- U/G Power Cable Hand Hole — HH
- H-Frame Pole
- Recorded U/G Power Line — P
- Designated U/G Power Line (S.U.E.*) — P

TELEPHONE:

- Existing Telephone Pole
- Proposed Telephone Pole
- Telephone Manhole — T
- Telephone Booth
- Telephone Pedestal — T
- Telephone Cell Tower
- U/G Telephone Cable Hand Hole — HH
- Recorded U/G Telephone Cable — T
- Designated U/G Telephone Cable (S.U.E.*) — T
- Recorded U/G Telephone Conduit — TC
- Designated U/G Telephone Conduit (S.U.E.*) — TC
- Recorded U/G Fiber Optics Cable — T FO
- Designated U/G Fiber Optics Cable (S.U.E.*) — T FO

WATER:

- Water Manhole — W
- Water Meter
- Water Valve
- Water Hydrant
- Recorded U/G Water Line — W
- Designated U/G Water Line (S.U.E.*) — W
- Above Ground Water Line — A/G Water

TV:

- TV Satellite Dish
- TV Pedestal — C
- TV Tower
- U/G TV Cable Hand Hole — HH
- Recorded U/G TV Cable — TV
- Designated U/G TV Cable (S.U.E.*) — TV
- Recorded U/G Fiber Optic Cable — TV FO
- Designated U/G Fiber Optic Cable (S.U.E.*) — TV FO

GAS:

- Gas Valve
- Gas Meter
- Recorded U/G Gas Line — G
- Designated U/G Gas Line (S.U.E.*) — G
- Above Ground Gas Line — A/G Gas

SANITARY SEWER:

- Sanitary Sewer Manhole
- Sanitary Sewer Cleanout
- U/G Sanitary Sewer Line — SS
- Above Ground Sanitary Sewer — A/G Sanitary Sewer
- Recorded SS Forced Main Line — FSS
- Designated SS Forced Main Line (S.U.E.*) — FSS

MISCELLANEOUS:

- Utility Pole
- Utility Pole with Base
- Utility Located Object
- Utility Traffic Signal Box — S
- Utility Unknown U/G Line — ?UTL
- U/G Tank; Water, Gas, Oil
- A/G Tank; Water, Gas, Oil
- U/G Test Hole (S.U.E.*)
- Abandoned According to Utility Records — AATUR
- End of Information — E.O.I.

3/15/06
12/29/2011
r:\roadway\proj\B4575_RDY_psh_1B.dgn
stephesc

PROJECT REFERENCE NO.	SHEET NO.
B-4575	1-C
Location and Surveys	

SURVEY CONTROL SHEET

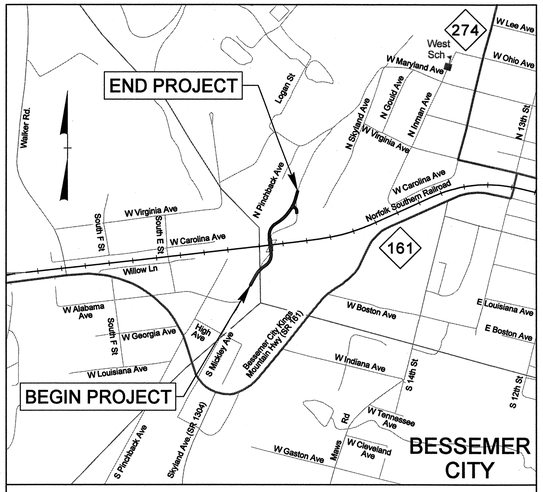

VICINITY MAP

N.T.S.

DATUM DESCRIPTION

THE LOCALIZED COORDINATE SYSTEM DEVELOPED FOR THIS PROJECT IS BASED ON THE STATE PLANE COORDINATES ESTABLISHED BY OTHERS FOR MONUMENT "B4575-2"
WITH NAD 83/NSRS 2007 STATE PLANE GRID COORDINATES OF
NORTHING: 564678.024(ft) EASTING: 1314516.574(ft)
THE AVERAGE COMBINED GRID FACTOR USED ON THIS PROJECT (GROUND TO GRID) IS: 0.99983255
THE N.C. LAMBERT GRID BEARING AND LOCALIZED HORIZONTAL GROUND DISTANCE FROM "B4575-2" TO -L- STATION 3+40.70 IS
N 31° 28′ 26.12″ E 641.9398 (ft)
ALL LINEAR DIMENSIONS ARE LOCALIZED HORIZONTAL DISTANCES
VERTICAL DATUM USED IS NAVD 88

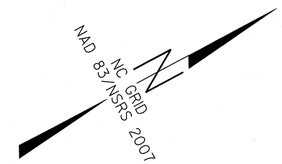

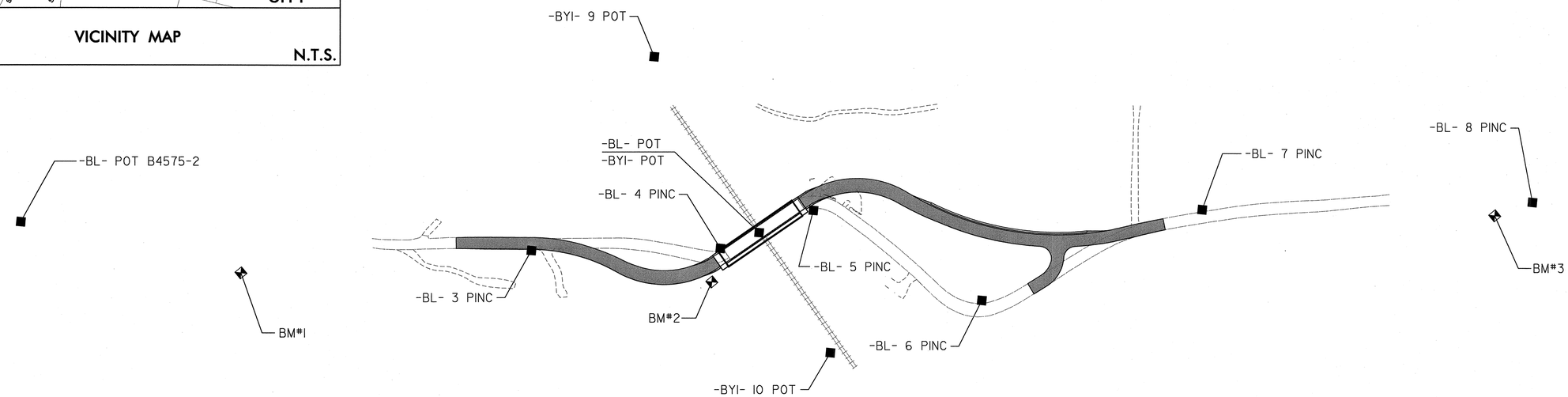

BASELINE DATA

BL

POINT	DESC.	NORTH	EAST	ELEVATION	L STATION	OFFSET
2	B4575-2	564678.0240	1314516.5740	963.14	UNKNOWN	UNKNOWN
3	BL-3	565406.8970	1314959.5940	977.80	5+51.67	11.75 RT
4	BL-4	565686.1890	1315105.0990	979.34	8+94.15	14.83 LT
21	BL=BY1	565755.4845	1315112.2511	UNKNOWN	9+62.21	0.02 RT
5	BL-5	565852.7300	1315122.2880	977.45	10+57.79	20.88 RT
6	BL-6	566029.7520	1315387.3620	978.43	13+96.38	112.47 RT
7	BL-7	566425.1040	1315426.4460	981.10	17+46.51	12.39 LT
8	BL-8	566916.9920	1315673.9600	983.21	UNKNOWN	UNKNOWN

BY1

POINT	DESC.	NORTH	EAST	ELEVATION	L STATION	OFFSET
9	BY1-9	565739.9250	1314770.2750	932.74	9+85.01	341.55 LT
22	BL=BY1	565755.4845	1315112.2511	UNKNOWN	9+62.21	0.02 RT
10	BY1-10	565766.0770	1315345.0580	931.30	9+46.70	232.56 RT

BENCHMARK DATA

****
BM#1 ELEVATION = 984.54
N 564962 E 1314764
BL STATION 8+71 64 RIGHT
RR SPIKE IN POWER POLE
****
****
BM#2 ELEVATION = 987.82
N 565647 E 1315148
BL STATION 16+53 56 RIGHT
RR SPIKE IN BASE 30" CHESTNUT OAK
****
****
BM#3 ELEVATION = 986.29
N 566851 E 1315664
BL STATION 30+39 21 RIGHT
FLANGE BOLT ON FIRE HYDRANT
****

NOTE: DRAWING NOT TO SCALE

12/29/2011
r:\roadway\proj\B4575_RDY_psh_1C.dgn
stephesc

PROJECT REFERENCE NO.	SHEET NO.
B-4575	1-D
R/W SHEET NO.	

ROADWAY DESIGN ENGINEER

NORTH CAROLINA PROFESSIONAL SEAL 032598 ENGINEER JOSEPH A. FREEMAN

12-29-11

STV / Ralph Whitehead Associates, Inc.
1000 West Morehead St., Ste. 200
Charlotte, NC 28208
NC License Number F-0991

DIVISION OF HIGHWAYS
STATE OF NORTH CAROLINA

CENTERLINE COORDINATE LIST

Point #	Chain	Station	Northing (Y)	Easting (X)
1	L	3+50.00	565233.8930	1314855.7857
2	L	4+00.00	565278.8727	1314877.6215
3	L	4+50.00	565323.2821	1314900.5906
4	L	5+00.00	565367.1814	1314924.5248
5	L	5+50.00	565411.0692	1314948.4801
6	L	6+00.00	565453.0187	1314975.5829
7	L	6+50.00	565489.8993	1315009.2585
8	L	7+00.00	565520.6821	1315048.5858
9	L	7+50.00	565552.6166	1315086.7844
10	L	8+00.00	565595.1997	1315112.5451
11	L	8+50.00	565643.8676	1315122.9550
12	L	9+00.00	565693.6635	1315119.1858
13	L	9+50.00	565743.3496	1315113.5921
14	L	10+00.00	565793.0357	1315107.9985
15	L	10+50.00	565842.7219	1315102.4048
16	L	11+00.00	565892.5130	1315102.8587
17	L	11+50.00	565939.4517	1315119.4024
18	L	12+00.00	565978.3938	1315150.3937
19	L	12+50.00	566006.4768	1315191.6469
20	L	13+00.00	566035.4519	1315232.3683
21	L	13+50.00	566068.4638	1315269.8916
22	L	14+00.00	566105.1620	1315303.8184
23	L	14+50.00	566145.1568	1315333.7885
24	L	15+00.00	566188.0234	1315359.4836
25	L	15+50.00	566233.3067	1315380.6308
26	L	16+00.00	566280.5259	1315397.0057
27	L	16+50.00	566328.8617	1315409.7903
28	L	17+00.00	566376.8703	1315423.7528
29	L	17+50.00	566424.3868	1315439.3074
30	L	18+00.00	566471.3586	1315456.4370
31	L	18+50.00	566517.7334	1315475.1225
32	L	19+00.00	566563.4602	1315495.3419
33	L	19+49.79	566608.6762	1315516.1696
34	DR1	5+00.00	566188.0190	1315359.4812
35	DR1	5+50.00	566159.3630	1315399.6054
36	DR1	6+00.00	566110.9043	1315408.8091
37	DR1	6+50.00	566060.9776	1315411.0418
38	DR1	7+00.00	566013.8629	1315395.9236
39	DR1	7+50.00	565979.7641	1315360.0681
40	DR1	8+00.00	565962.4489	1315313.2538
41	DR1	8+50.00	565945.4395	1315266.2391
42	DR1	9+00.00	565926.6685	1315219.8995
43	DR1	9+37.89	565911.5571	1315185.1484

12/29/2011
r:\roadway\proj\B4575_RDY_psh_1D.dgn
stephesc

PROJECT REFERENCE NO.	SHEET NO.
B-4575	2

ROADWAY / PAVEMENT DESIGN ENGINEER

NORTH CAROLINA PROFESSIONAL SEAL 032599 ENGINEER JOSEPH A. FREEMAN

12-29-11

STV / Ralph Whitehead Associates, Inc.
1000 West Morehead St., Ste. 200
Charlotte, NC 28208
NC License Number F-0991

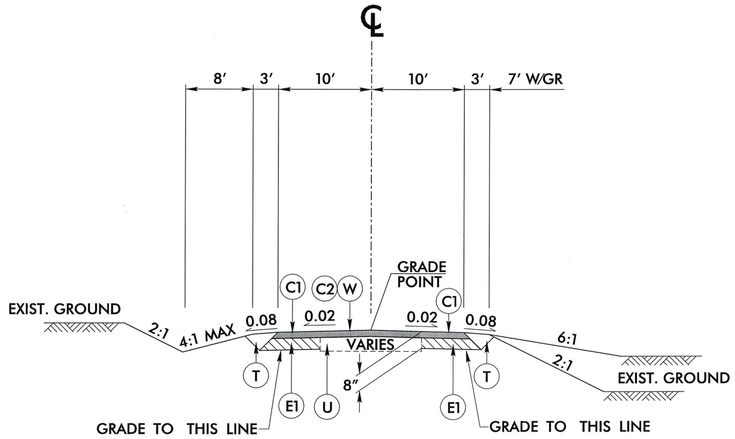

TYPICAL SECTION NO. 1

–L– STA. 4+26.00 TO STA. 6+20.00
–L– STA. 15+84.00 TO STA. 16+80.00

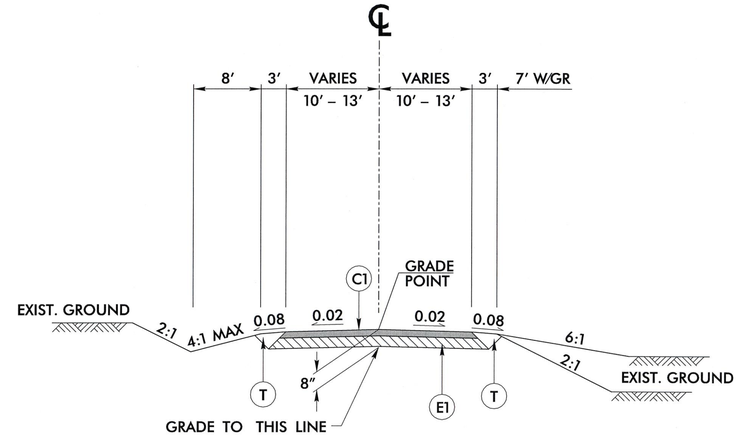

TYPICAL SECTION NO. 2

–L– STA. 6+20.00 TO STA. 8+66.62
–L– STA. 10+63.95 TO STA. 15+84.00
–DR1– STA. 5+10.00 TO STA. 6+00.00

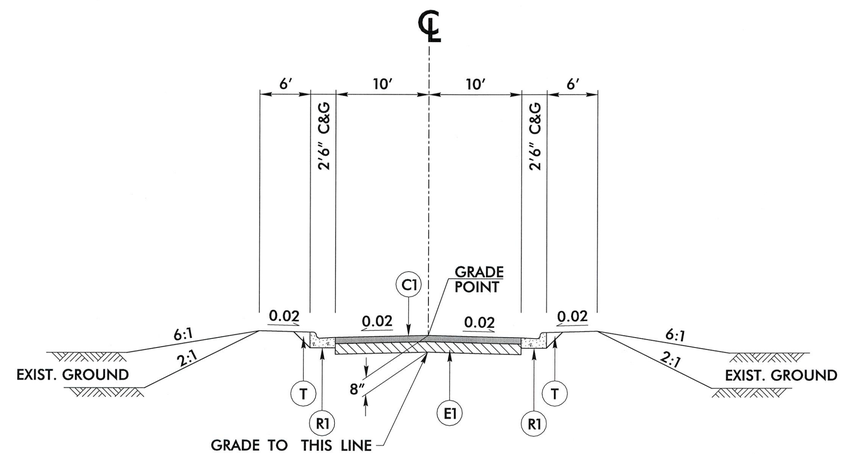

TYPICAL SECTION NO. 3

–L– STA. 8+66.62 TO STA. 8+87.78 LT & RT
–L– STA. 10+37.78 TO STA. 10+63.95 LT & RT

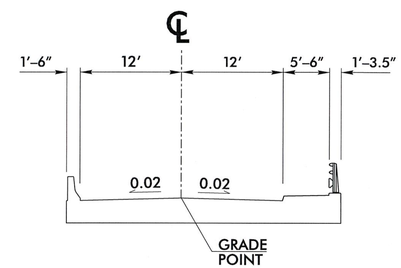

TYPICAL SECTION NO. 4

–L– STA. 8+87.78 (BEGIN BRIDGE) TO
–L– STA. 10+37.78 (END BRIDGE)

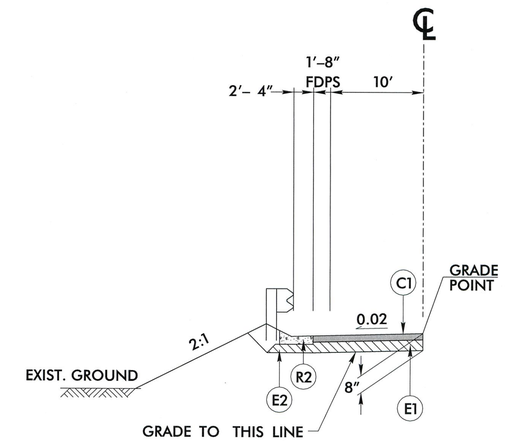

PARTIAL TYPICAL SECTION NO. 2

USE PARTIAL TYPICAL SECTION NO. 2
IN CONJUNCTION WITH T.S. NO. 2
–L– STA. 12+75.00 TO STA. 15+50.00

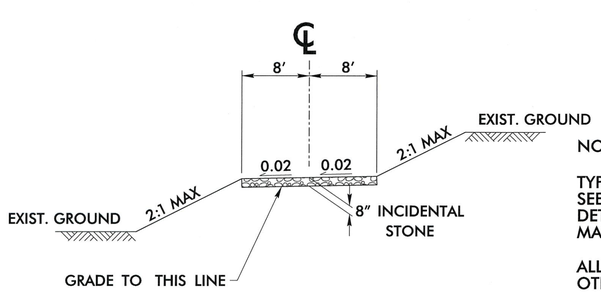

DUKE ENERGY ACCESS DRIVEWAY DETAIL

–L– STA. 6+75.00 (LT)

NOTES:

TYPICAL SECTIONS SHOWN FOR TANGENT SECTIONS ONLY. SEE PLANS AND STANDARD DRAWINGS FOR SUPERELEVATION DETAILS AND WIDENING /LANE ADDITIONS AT INTERSECTION. MAXIMUM ROLLOVER IS 6%.

ALL PAVEMENT EDGES SLOPES ARE 1:1 UNLESS SHOWN OTHERWISE.

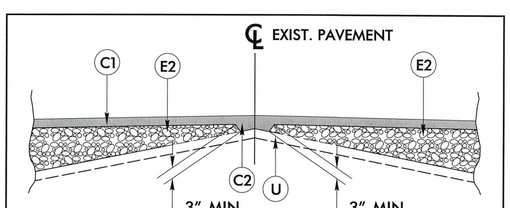

–L–
WEDGING DETAIL

PAVEMENT SCHEDULE	
C1	PROP. APPROX. 3.0″ ASPHALT CONCRETE SURFACE COURSE, TYPE S9.5B, AT AN AVERAGE RATE OF 168 LBS. PER SQ. YD. IN EACH OF TWO LAYERS.
C2	PROP. VAR. DEPTH ASPHALT CONCRETE SURFACE COURSE, TYPE S9.5B, AT AN AVERAGE RATE OF 112 LBS. PER SQ. YD. PER 1″ DEPTH. TO BE PLACED IN LAYERS NOT TO EXCEED 2″ IN DEPTH.
E1	PROP. APPROX. 5.0″ ASPHALT CONCRETE BASE COURSE, TYPE B25.0B, AT AN AVERAGE RATE OF 570 LBS. PER SQ. YD.
E2	PROP. VAR. DEPTH ASPHALT CONCRETE BASE COURSE, TYPE B25.0B, AT AN AVERAGE RATE OF 114 LBS. PER SQ. YD. PER 1″ DEPTH. TO BE PLACED IN LAYERS NOT LESS THAN 3″ IN DEPTH.
R1	2′-6″ CURB AND GUTTER
R2	SHOULDER BERM GUTTER
T	EARTH MATERIAL
U	EXISTING PAVEMENT
W	PAVEMENT WEDGING (SEE DETAIL - THIS SHEET)

6/2/99

12/29/2011
R:\Roadway\Proj\B4575_RDY_TYP.dgn
mabdelazez

PROJECT REFERENCE NO.	SHEET NO.
B-4575	2-A
R/W SHEET NO.	

ROADWAY DESIGN ENGINEER: NORTH CAROLINA PROFESSIONAL SEAL 032599 ENGINEER JOSEPH A. FREEMAN 12-29-11

HYDRAULICS ENGINEER: NORTH CAROLINA PROFESSIONAL SEAL 029388 ENGINEER EDWARD J. VANCE 12-29-11

STV / Ralph Whitehead Associates, Inc.
1000 West Morehead St. Ste. 200
Charlotte, NC 28208
NC License Number F-0991

DETAIL A
TYPICAL 'V' DITCH
(Not to Scale)

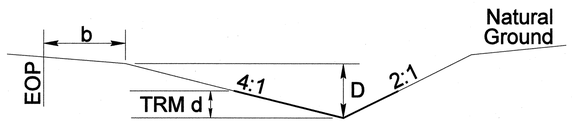

Min. D = 2.0 Ft.
Min. d= 1.5 Ft.
b= 3.0 Ft.

Detail A Permanent TRM Locations
-L- Sta. 15+22 to 15+50 (Rt)

*Notes: All typical ditches are located where special ditches are not listed. All typical and special ditches to have temporary TRM where permanent TRM is not required. All ditch dimensions shown are typical. See cross sections for ditch dimensions at specific stations.

DETAIL B
SPECIAL 'V' DITCH
(Not to Scale)

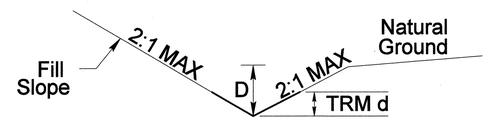

Min. D = 2.0 Ft.
Min. d= 1.5 Ft.

Detail B Special Ditch Locations
-L- Sta. 7+50 to 8+84 (Lt)
-L- Sta. 7+50 to 8+50 (Rt)
-L- Sta.11+00 to 14+62 (Rt)
-DR1- 5+25 to 6+50 (Lt)
Detail B Permanent TRM Locations
-L- Sta. 11+00 to 14+50 (Rt)
-DR1- Sta. 5+25 to 6+00 (Lt)

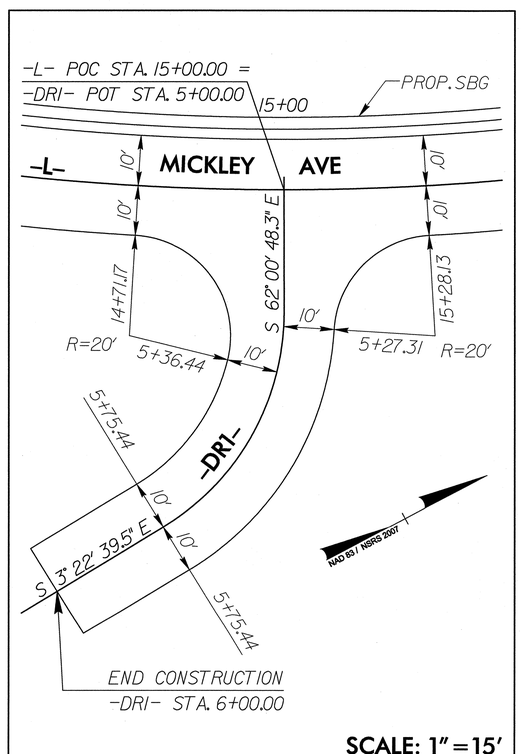

SCALE: 1" = 15'

INTERSECTION DETAIL

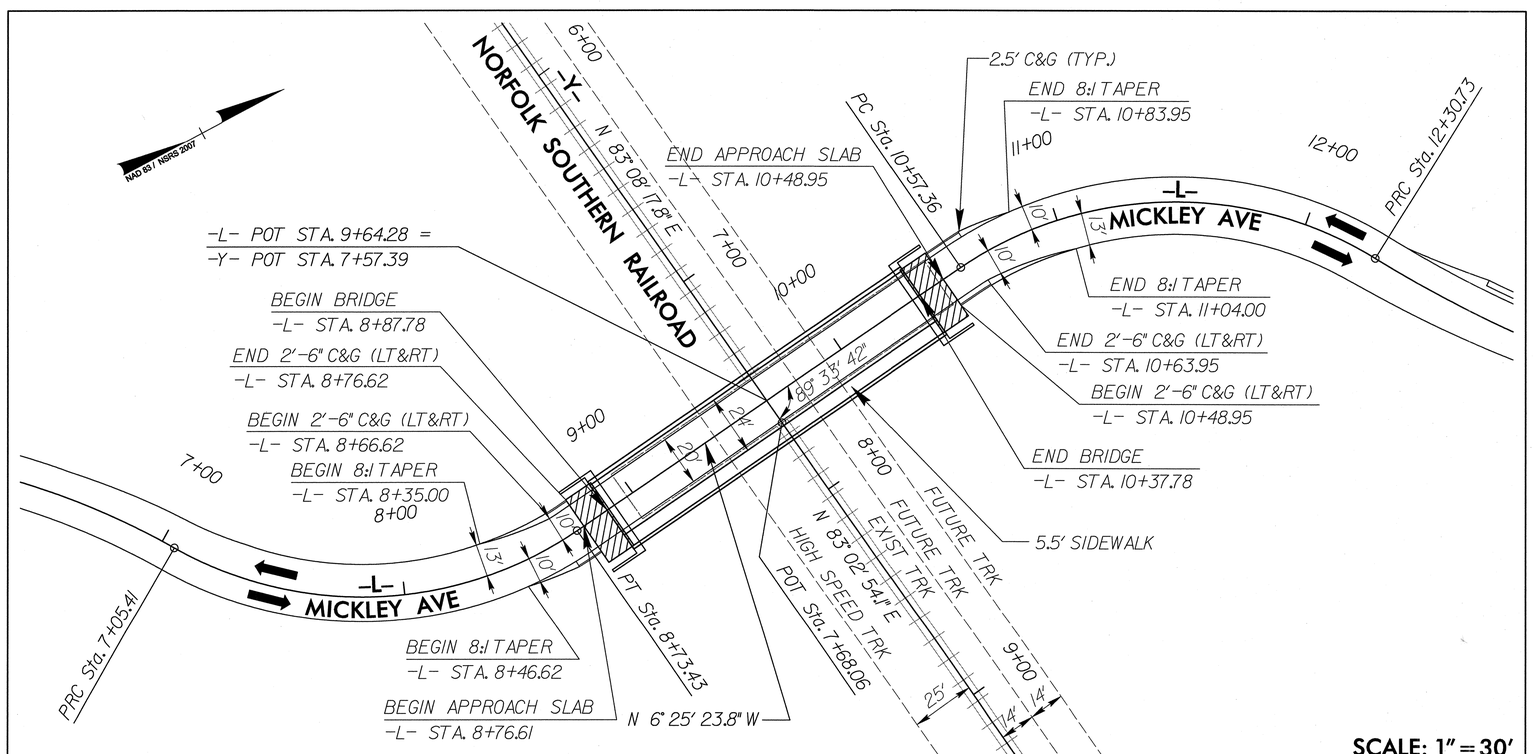

SCALE: 1" = 30'

SKETCH SHOWING BRIDGE RELATIONSHIP FOR -L- OVER NORFOLK SOUTHERN RAILROAD

8/17/99

12/29/2011
r:\roadway\proj\B4575_RDY_psh_2A.dgn
stephesc

05-NOV-2009 11:35
s:\contracts\contracts\special details\ericward\stds\06' stds to special details\30001\0300d01.dgn
jhowerton AT PS237501

5/14/99

STATE OF NORTH CAROLINA
DEPT. OF TRANSPORTATION
DIVISION OF HIGHWAYS
RALEIGH, N.C.

7-06

ENGLISH DETAIL DRAWING FOR
METHOD OF PIPE INSTALLATION
FLEXIBLE PIPE

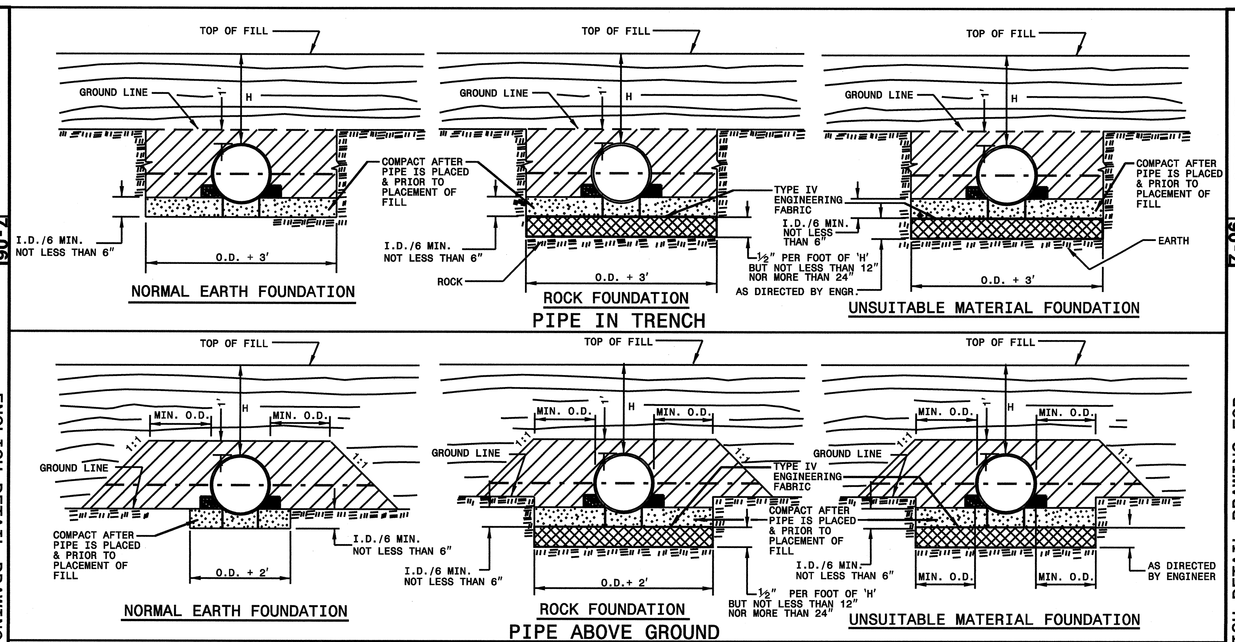

GENERAL NOTES:

I.D. = THE MAXIMUM HORIZONTAL INSIDE DIAMETER DIMENSION.

O.D. = THE MAXIMUM HORIZONTAL OUTSIDE DIAMETER DIMENSION.

H = THE FILL HEIGHT MEASURED VERTICALLY AT ANY POINT ALONG THE PIPE FROM THE TOP OF THE PIPE TO THE TOP OF THE EMBANKMENT AT THAT POINT.

TAKE CARE TO FULLY COMPACT HAUNCH ZONE OF PIPE BACKFILL.

LOOSELY PLACED SELECT MATERIAL CLASS III OR CLASS II, TYPE 1 FOR PIPE BEDDING. LEAVE SECTION DIRECTLY BENEATH PIPE UNCOMPACTED AS PIPE SEATING AND BACKFILL WILL ACCOMPLISH COMPACTION.

DO NOT OPERATE HEAVY EQUIPMENT OVER ANY PIPE CULVERT UNTIL THE PIPE CULVERT HAS BEEN PROPERLY BACKFILLED AND COVERED WITH AT LEAST 3 FEET OF APPROVED MATERIAL.

SPRINGLINE OF PIPE

SELECT BACKFILL MATERIAL CLASS III OR CLASS II, TYPE 1 ABOVE AND BELOW SPRINGLINE.

APPROVED SUITABLE LOCAL MATERIAL.

UNDISTURBED EARTH MATERIAL

SELECT MATERIAL CLASS V OR VI FOR FOUNDATION CONDITIONING. ENCAPSULATE WITH ENGINEERING FABRIC AS DIRECTED BY THE ENGINEER.

SHEET 1 OF 3
300D01

STATE OF NORTH CAROLINA
DEPT. OF TRANSPORTATION
DIVISION OF HIGHWAYS
RALEIGH, N.C.

7-06

ENGLISH DETAIL DRAWING FOR
METHOD OF PIPE INSTALLATION
RIGID PIPE

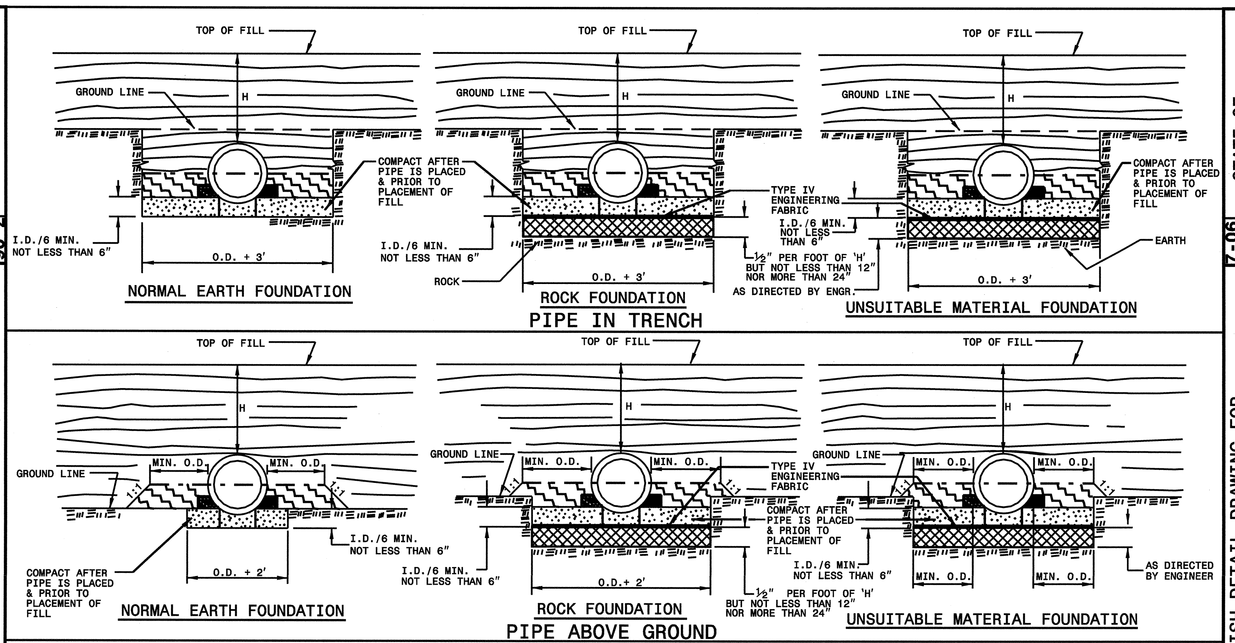

GENERAL NOTES:

I.D. = THE MAXIMUM HORIZONTAL INSIDE DIAMETER DIMENSION.

O.D. = THE MAXIMUM HORIZONTAL OUTSIDE DIAMETER DIMENSION.

H = THE FILL HEIGHT MEASURED VERTICALLY AT ANY POINT ALONG THE PIPE FROM THE TOP OF THE PIPE TO THE TOP OF THE EMBANKMENT AT THAT POINT.

TAKE CARE TO FULLY COMPACT HAUNCH ZONE OF PIPE BACKFILL.

LOOSELY PLACED SELECT MATERIAL CLASS III OR CLASS II, TYPE 1 FOR PIPE BEDDING. LEAVE SECTION DIRECTLY BENEATH PIPE UNCOMPACTED AS PIPE SEATING AND BACKFILL WILL ACCOMPLISH COMPACTION.

DO NOT OPERATE HEAVY EQUIPMENT OVER ANY PIPE CULVERT UNTIL THE PIPE CULVERT HAS BEEN PROPERLY BACKFILLED AND COVERED WITH AT LEAST 3 FEET OF APPROVED MATERIAL.

SPRINGLINE OF PIPE

SELECT BACKFILL MATERIAL CLASS III OR CLASS II, BELOW SPRINGLINE.

APPROVED SUITABLE LOCAL MATERIAL ABOVE SPRINGLINE.

UNDISTURBED EARTH MATERIAL

SELECT MATERIAL CLASS V OR VI FOR FOUNDATION CONDITIONING. ENCAPSULATE WITH ENGINEERING FABRIC AS DIRECTED BY THE ENGINEER.

SHEET 2 OF 3
300D01

PROJECT SERVICES UNIT
STANDARDS AND SPECIAL DESIGN
Office 919-250-4128 FAX 919-250-4119

SEE PLATE FOR TITLE

ORIGINAL BY: Kkempf
MODIFIED BY: DATE: 5-15-09
CHECKED BY: DATE:
FILE SPEC/ericward/stds/stdstock/s13/30001/0300d01.dgn

PROJECT REFERENCE NO. B-4575
SHEET NO. 2-B

STATE OF
NORTH CAROLINA
DEPT. OF TRANSPORTATION
DIVISION OF HIGHWAYS
RALEIGH, N.C.

7-06

ENGLISH DETAIL DRAWING FOR
METHOD OF PIPE INSTALLATION
FILL HEIGHT TABLES

SHEET 3 OF 3
300D01

FLEXIBLE PIPE

Round Corrugated Steel Pipe
2 2/3 x ½ corrugation **

Diameter (inches)	Minimum cover (inches)	Maximum Height of Cover (feet) (Ga) 16	14	12	10	8
12	12	204	256			
15	12	162	204			
18	12	135	169	239		
21	12	115	145	204		
24	12	100	126	178		
30	12	79	100	142		
36	12	65	83	117	152	
42	12	55	70	100	130	160
48	12	48	61	87	113	139
54	12		54	77	100	123
60	12			69	90	111
66	12				81	100
72	12				74	91
78	12					81
84	12					69

Round Corrugated Aluminum Pipe
2 2/3 x ½ corrugation **

Diameter (inches)	Minimum cover (inches)	Maximum Height of Cover (feet) (Ga) 16	14	12	10	8
12	12	123	155	218	281	344
15	12	98	123	174	224	275
18	12	81	102	144	187	228
21	12	69	87	123	160	195
24	12	60	76	108	139	171
27	12		67	95	123	151
30	12		60	85	111	136
36	12		50	71	92	113
42	12			60	78	96
48	12			52	68	84
54	12			46	50	74
60	12				50	62
66	12					51
72	12					41

** FOR DIFFERENT CORRUGATIONS AND ARCH PIPES REFER TO ROADWAY DESIGN MANUAL OR MANUFACTURERS SPECIFICATION.

HDPE - * (Minimum fill) 2′ for pipe diameters ≥ 12″ and ≤ 60″
* (Maximum fill) 20′ for pipe diameters ≤ 24″
17′ for pipe diameters ≥ 30″ and ≤ 60″

PVC - * (Minimum fill) 2′ for pipe diameters ≥ 12″ and ≤ 36″
* (Maximum fill) 30′ for pipe diameters ≥ 12″ and ≤ 36″

* FILL HEIGHT IS MEASURED FROM THE TOP OF THE PIPE TO THE BOTTOM OF THE PAVEMENT STRUCTURE

REFER TO THE FOLLOWING FOR PIPE SPECIFICATIONS

CSP - AASHTO M36
CAAP - AASHTO M196
HDPE - AASHTO M294
PVC - ASTM F949 or AASHTO M304

NOTES: FILL HEIGHTS SHOWN WERE CALCULATED USING AASHTO LRFD BRIDGE DESIGN SPECIFICATIONS

1′ MINIMUM COVER FOR ALL SIDE DRAIN PIPE IN ACCORDANCE WITH THE STANDARD SPECIFICATIONS

RIGID PIPE

RCP - * (Minimum fill) 1′ for Class IV & CLASS V
2′ for Class III & Class II

* (Maximum fill) 10′ - Class II pipe
20′ - Class III pipe
30′ - Class IV pipe
40′ - Class V pipe

(For fills > 40′ & < 80′ use LRFD Direct Design Method)

* FILL HEIGHT IS MEASURED FROM THE TOP OF THE PIPE TO THE BOTTOM OF THE PAVEMENT STRUCTURE

REFER TO THE FOLLOWING FOR PIPE SPECIFICATIONS

RCP - AASHTO M170

NOTES: FILL HEIGHTS SHOWN WERE CALCULATED USING AASHTO LRFD BRIDGE DESIGN SPECIFICATIONS

1′ MINIMUM COVER FOR ALL SIDE DRAIN PIPE IN ACCORDANCE WITH THE STANDARD SPECIFICATIONS

STATE OF
NORTH CAROLINA
DEPT. OF TRANSPORTATION
DIVISION OF HIGHWAYS
RALEIGH, N.C.

7-06

ENGLISH DETAIL DRAWING FOR
METHOD OF PIPE INSTALLATION
FILL HEIGHT TABLES

SHEET 3 OF 3
300D01

PROJECT SERVICES UNIT
STANDARDS AND SPECIAL DESIGN
Office 919-250-4128 FAX 919-250-4119

SEE PLATE FOR TITLE

ORIGINAL BY: KKempf DATE: 5-15-09
MODIFIED BY: DATE:
CHECKED BY: DATE:
FILE SPEC: s:\contracts\stds\stdstook\ms\30001\0300d01.dgn

PROJECT REFERENCE NO. B-4575
SHEET NO. 2-C

PROJECT REFERENCE NO.	SHEET NO.
B-4575	2-D

STATE OF
NORTH CAROLINA
DEPT. OF TRANSPORTATION
DIVISION OF HIGHWAYS
RALEIGH, N.C.

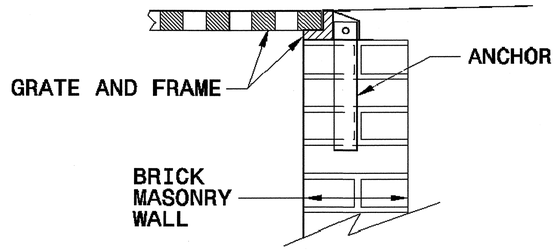

BRICK MASONRY CONSTRUCTION

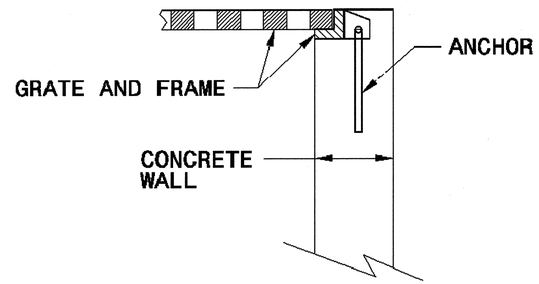

CONCRETE CONSTRUCTION

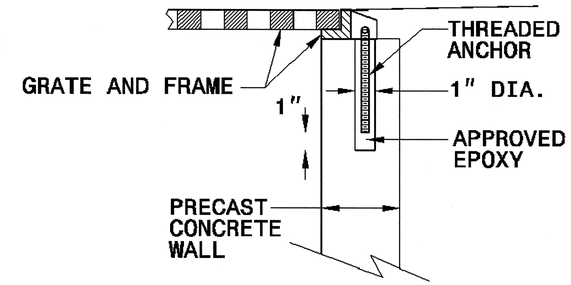

PRECAST CONCRETE CONSTRUCTION

DETAIL SHOWING ANCHORAGE OF FRAME FOR GRATED DROP INLET

NOTE:
CONSTRUCT GRATED DROP INLET TO COINCIDE WITH NORMAL OR SUPERELEVATED SHOULDER OR PAVEMENT SLOPE.

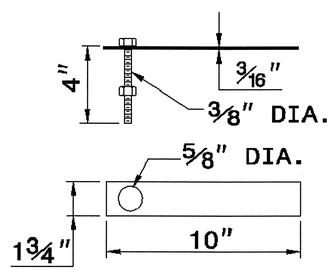

MASONRY ANCHOR
3/8" DIA. BOLT WITH PLATE

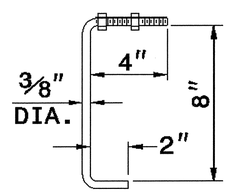

CONCRETE ANCHOR
3/8" DIA. BENT BAR

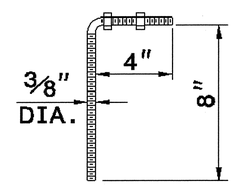

PRECAST CONCRETE ANCHOR
3/8" DIA. BENT BAR

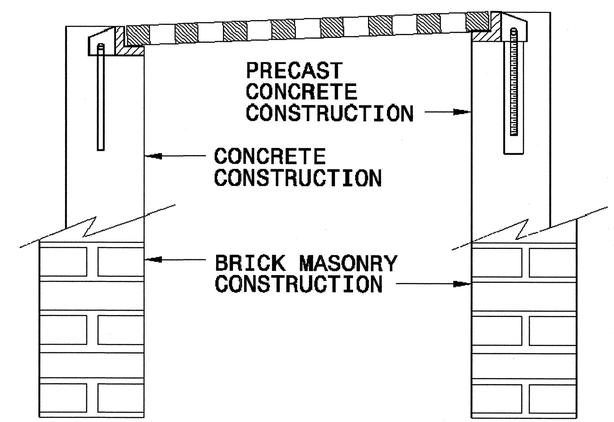

FRAME AND GRATE INSTALLATION FOR NORMAL CROWN AND SUPERELEVATED SECTIONS

ENGLISH DETAIL DRAWING FOR
ANCHORAGE FOR FRAMES
BRICK/CONCRETE/PRECAST CONCRETE

SHEET 1 OF 1
840D25

STATE OF
NORTH CAROLINA
DEPT. OF TRANSPORTATION
DIVISION OF HIGHWAYS
RALEIGH, N.C.

ENGLISH DETAIL DRAWING FOR
ANCHORAGE FOR FRAMES
BRICK/CONCRETE/PRECAST CONCRETE

SHEET 1 OF 1
840D25

PROJECT SERVICES UNIT
STANDARDS AND SPECIAL DESIGN
Office 919-250-4128 FAX 919-250-4119

SEE PLATE FOR TITLE

ORIGINAL BY:	2006 STD 840.25	DATE:	07/18/06
MODIFIED BY:	E.E. WARD	DATE:	9/25/06
CHECKED BY:		DATE:	
FILE SPEC.:			

27-SEP-2006 08:59
S:\Contracts\Spec Ent\Special Details\Driveways\Stds\06\Std to Special Details\840D25 Anchorage for Frames.dgn
Original (11 1/2x22 1/2)

PROJECT REFERENCE NO.	SHEET NO.
B-4575	3

STV / Ralph Whitehead Associates, Inc.
1000 West Morehead St., Ste. 200
Charlotte, NC 28208
NC License Number F-0991

DIVISION OF HIGHWAYS
STATE OF NORTH CAROLINA

SUMMARY OF QUANTITIES

12/29/2011
r:\roadway\proj\B4575_RDY_psh_3.dgn
stephesp

MJ11313

COMPUTED BY: Davin Morrison, PE DATE: 2/10/2010

CHECKED BY: Edward Vance, PE DATE: 2/12/2010

NORTH CAROLINA DEPARTMENT OF TRANSPORTATION
DIVISION OF HIGHWAYS

PROJECT NO.	SHEET NO.
B-4575	3-A

LIST OF PIPES, ENDWALLS, ETC. (FOR PIPES 48 INCHES & UNDER)

STATION	LOCATION (LT, RT, OR CL)'	STRUCTURE NO.		TOP ELEVATION	INVERT ELEVATION	INVERT ELEVATION	SLOPE CRITICAL	DRAINAGE PIPE (RCP, CSP, CAAP, HDPE, or PVC)											
SIZE		FROM	TO					12"	15"	18"	24"	30"	36"	42"	48"	DO NOT USE RCP	DO NOT USE CSP	DO NOT USE CAAP	DO NOT USE HDPE
-L- Sta. 10+60	LT	0401		974.10															
-L- Sta. 10+60	CL	0401	0402		970.85	970.73	0.50												
-L- Sta. 10+60	RT	0402		974.05															
-L- Sta. 10+60	RT	0402	0403		970.73	970.26	1.34		40										
-L- Sta. 11+00	RT	0403																	
-L- Sta. 13+50	RT	0404		952.95															
-L- Sta. 13+50	CL	0404	0405		944.86	928.46	9.82												
-L- Sta. 13+09	LT	0405																	
-L- Sta. 12+75	RT	0406		964.36															
-L- Sta. 12+75	RT	0406	0404		962.11	950.04	14.03		88							X			X
-L- Sta. 15+24	RT	0407		976.25															
-L- Sta. 15+24	RT	0407	0411		968.94	955.64	9.78		136								X	X	
-L- Sta. 5+57	RT	0408																	
-L- Sta. 6+08	RT	0409	0408		975.96	975.72	0.51		48										
-L- Sta. 6+08	RT	0409																	
-L- Sta. 14+00	RT	0411		957.89															
-L- Sta. 14+00	RT	0411	0404		955.64	950.04	10.00		56								X	X	
-L- Sta. 8+00	RT	0412																	
-L- Sta.8+00	RT	0412	0413		974.81	973.70	1.95												
-L- Sta. 8+00	LT	0413																	
-L- Sta. 12+80	LT	0414		973.31	970.06	938.00	40.07		80							X			X
SHEET TOTALS								0	448	0	0	0	0	0	0	0	0	0	0

STATION	C.S. PIPE								R.C. PIPE CLASS III								R.C. PIPE CLASS IV								18" R.C. PIPE (CLASS V)		
SIZE	12"	15"	18"	24"	30"	36"	42"	48"	12"	15"	18"	24"	30"	36"	42"	48"	12"	15"	18"	24"	30"	36"	42"	48"			
THICKNESS OR GAUGE	.064	.064	.064	.064	.079	.079	.109	.109																			
-L- Sta. 10+60																											
-L- Sta. 10+60																		24									
-L- Sta. 10+60																											
-L- Sta. 10+60																											
-L- Sta. 11+00																											
-L- Sta. 13+50																											
-L- Sta. 13+50																									168		
-L- Sta. 13+09																											
-L- Sta. 12+75																											
-L- Sta. 12+75																											
-L- Sta. 15+24																											
-L- Sta. 15+24																											
-L- Sta. 5+57																											
-L- Sta. 6+08																											
-L- Sta. 6+08																											
-L- Sta. 14+00																											
-L- Sta. 14+00																											
-L- Sta. 8+00																											
-L- Sta.8+00																			60								
-L- Sta. 8+00																											
-L- Sta. 12+80																											
SHEET TOTALS	0	0	0	0	0	0	0	0	0	0	0	0	0	0	0	0	0	24	60	0	0	0	0	0	168	0	0

STATION	ENDWALLS STD. 838.01 OR STD. 838.11 (UNLESS NOTED OTHERWISE) CU. YARDS R.C.P.	C.S.P.	QUANTITIES FOR DRAINAGE STRUCTURES PER EACH (0' THRU 5.0')	*TOTAL L.F. FOR PAY QUANTITY SHALL BE COL. 'A' + (1.3 X COL.'B') LIN. FT. A 5.0' THRU 10.0'	B 10.0' AND ABOVE	C.B. STD. 840.01 OR STD. 840.02	FRAME, GRATES, AND HOOD STANDARD 840.03 TYPE OF GRATE E	F	G	CONCRETE TRANSITIONAL SECTION DROP INLET	CATCH BASIN	Parallel Pipe End Section STD. 310.02 or 310.04	Cross Pipe End Section STD. 310.03 or 310.05	Conc. Grated D.I. Type 'B' Std. 840.18 or Std. 840.27	Double Frames and Wide Slot Sag Grates Std. 840.22	Double Frames and Narrow Slot Flat Grates Std. 840.29	Traffic Bearing Grated Drop Inlet Std. 840.35									DRAINAGE PIPE ELBOWS NO. & SIZE	CONC. & BRICK PIPE PLUG, C.Y. STD. 840.71	CONC. COLLARS CL. "B" C.Y. STD. 840.72	REMARKS
-L- Sta. 10+60			1			1			1																				
-L- Sta. 10+60																													
-L- Sta. 10+60			1			1		1																					
-L- Sta. 10+60																													
-L- Sta. 11+00												1																	
-L- Sta. 13+50			1	3.1										1	1														
-L- Sta. 13+50																													
-L- Sta. 13+09													1																
-L- Sta. 12+75			1											1	1														
-L- Sta. 12+75																										2 x 15"			Install rod and coupling bands on pipe.
-L- Sta. 15+24			1	2.3										1	1														
-L- Sta. 15+24																													
-L- Sta. 5+57												1																	
-L- Sta. 6+08																													
-L- Sta. 6+08												1																	
-L- Sta. 14+00			1											1	1														
-L- Sta. 14+00																													
-L- Sta. 8+00													1																
-L- Sta.8+00																													
-L- Sta. 8+00													1																
-L- Sta. 12+80			1													1	1									2 x 15"			Install rod and coupling bands for outlet pipe.
SHEET TOTALS	0	0	7	5.4	0	2	0	1	1	0	0	3	3	4	4	1	1	0	0	0	0	0	0	0	0	4	0	0	

ABBREVIATIONS

C.B.	CATCH BASIN
N.D.I.	NARROW DROP INLET
D.I.	DROP INLET
G.D.I.	GRATED DROP INLET
G.D.I.(N.S.)	(NARROW SLOT)
J.B.	JUNCTION BOX
M.H.	MANHOLE
T.B.D.I.	TRAFFIC BEARING DROP INLET
T.B.J.B.	TRAFFIC BEARING JUNCTION BOX

COMPUTED BY: MKA DATE: 12-23-10
CHECKED BY: JAF DATE: 12-23-10

PROJECT REFERENCE NO.	SHEET NO.
B-4575	3-B

STV / Ralph Whitehead Associates, Inc.
1000 West Morehead St., Ste. 200
Charlotte, NC 28208
NC License Number F-0991

STATE OF NORTH CAROLINA
DIVISION OF HIGHWAYS

SUMMARY OF EARTHWORK
IN CUBIC YARDS

CHAIN	FROM STATION	TO STATION	SIDE	UNCL. EXCAVATION	UNDERCUT	EMBT+%	BORROW	WASTE
-L-	4+26.00	8+87.78	RT & LT	5,411		143		5,268
		BEGIN BRIDGE						
SUBTOTAL SUMMARY NO. 1				5,411		143		5,268
-L-	10+37.78	16+80.00	RT & LT	1,737		23,915	22,178	
	END BRIDGE							
-DR1-	5+10.00	6+00.00	RT & LT	71		59		12
SUBTOTAL SUMMARY NO. 2				1,808		23,974	22,178	
SUBTOTAL SUMMARY 1-2				7,219		24,117	22,178	5,281
WASTE IN LIEU OF BORROW							-2,500	-2,500
LOSS DUE TO CLEARING AND GRUBBING				-1,500			1,500	
PROJECT TOTAL				5,719		24,117	21,178	2,781
ESTIMATE 5% FOR TOPSOIL ON BORROW PITS							1,059	
GRAND TOTAL				5,719		24,117	22,237	2,781
SAY				6,000			22,500	

PAVEMENT REMOVAL SUMMARY

SURVEY LINE	STATION	STATION	LOCATION LT/RT/CL	YD^2
-L-	6+29.77	6+53.60	LT	14
-L-	6+84.78	8+40.05	LT	185
			TOTAL:	199
			SAY:	210

SHOULDER BERM GUTTER SUMMARY

SURVEY LINE	STATION	STATION	LOCATION LT/RT/CL	LENGTH
-L-	12+75.00	15+50.00	LT	275
			TOTAL:	275
			SAY:	275

2'-6" CURB AND GUTTER

SURVEY LINE	STATION	STATION	LOCATION LT/RT/CL	LENGTH
-L-	8+66.62	8+76.62	LT	10
-L-	8+66.62	8+76.62	RT	10
-L-	10+48.95	10+63.95	LT	15
-L-	10+48.95	10+63.95	RT	15
			TOTAL:	50
			SAY:	50

GUARDRAIL SUMMARY

SURVEY LINE	BEG. STA.	END STA.	LOCATION	LENGTH STRAIGHT	LENGTH SHOP CURVED	LENGTH DOUBLE FACED	WARRANT POINT APPROACH END	WARRANT POINT TRAILING END	"N" DIST. FROM E.O.L.	TOTAL SHOUL. WIDTH	FLARE LENGTH APPROACH END	FLARE LENGTH TRAILING END	W APPROACH END	W TRAILING END	ANCHORS XI MOD	B77	GRAU 350	M-350	TYPE III	CAT-1	VI MOD	BIC	AT-1	IMPACT ATTENUATOR TYPE 350 EA	G	NG	CONCRETE BARRIER (ANCHORED)	REMOVE EXISTING GUARDRAIL	REMOVE AND STOCKPILE EXISTING GUARDRAIL	REMARKS
-L-	5+10.33	5+78.01	LT	68.75				POLE	2.75	5.75		50		1		1	1										21			
-L-	5+97.98	6+63.94	LT	68.75			POLE		2.75	5.75	50		1			1	1													
-L-	8+14.34	8+88.62	LT	68.75				BRIDGE	2.62	5.62		50		1		1	1													
-L-	8+25.16	8+88.62	RT	68.75			BRIDGE		7.50	10.50	50		1				1		1											
-L-	10+36.95	16+00.32	LT	568.75			BRIDGE		4.00	7.00	50		1			1	1													
-L-	10+36.95	14+68.24	RT	418.75	150.00			BRIDGE	4.00	7.00		50		1			1		1											
-DR1-	8+50.00	8+50.00	CENTER	25.00																										Add 2 terminal end sections to dead end barricade
			TOTAL:	1,287.50	150.00		ANCHOR	DEDUCTIONS		TOTAL																				
							GRAU-350	6 @ 50		300.00																				
							TYPE-III	2 @ 18.75		37.50																				
							B-77	4 @ 18.75		75.00																				
			TOTAL ANCHOR LENGTH:	412.50												4	6		2								21			
			TOTAL GUARDRAIL LENGTH:	875.00	150.00			TOTAL DEDUCTIONS =		412.50																				
			SAY:	900.00	150.00																									
			ADDITIONAL GUARDRAIL POST 5 EACH																											

"N" = DISTANCE FROM EDGE OF LANE TO FACE OF GUARDRAIL.
TOTAL SHOULDER WIDTH = DISTANCE FROM EDGE OF TRAVEL LANE TO SHOULDER BREAK POINT.
FLARE LENGTH = DISTANCE FROM LAST SECTION OF PARALLEL GUARDRAIL TO END OF GUARDRAIL.
W = TOTAL WIDTH OF FLARE FROM BEGINNING OF TAPER TO END OF GUARDRAIL.
G = GATING IMPACT ATTENUATOR TYPE 350
NG = NON-GATING IMPACT ATTENUATOR TYPE 350

12/29/2011
r:\roadway\proj\B4575_RDY_psh_3B.dgn
stephesc

8/17/99

PROJECT REFERENCE NO.	SHEET NO.
B-4575	4
R/W SHEET NO.	

ROADWAY DESIGN ENGINEER: NORTH CAROLINA PROFESSIONAL SEAL 032599 ENGINEER JOSEPH A FREEMAN — 12-29-11

HYDRAULICS ENGINEER: NORTH CAROLINA PROFESSIONAL SEAL 023388 ENGINEER EDWARD J. VANCE — 12-29-11

STV / Ralph Whitehead Associates, Inc.
1000 West Morehead St., Ste. 200
Charlotte, NC 28208
NC License Number F-0991

-L- CURVE DATA

CURVE L-1	CURVE L-2	CURVE L-3	CURVE L-4	CURVE L-5	CURVE L-6
PI Sta 4+21.52	PI Sta 6+30.84	PI Sta 7+99.47	PI Sta 11+55.18	PI Sta 14+35.38	PI Sta 17+58.41
Δ = 2° 49' 24.5" (RT)	Δ = 29° 07' 42.0" (RT)	Δ = 64° 10' 43.0" (LT)	Δ = 66° 13' 14.5" (RT)	Δ = 45° 45' 24.6" (LT)	Δ = 10° 41' 29.2" (RT)
D = 3° 49' 11.0"	D = 19° 05' 54.9"	D = 38° 11' 49.9"	D = 38° 11' 49.9"	D = 11° 48' 48.8"	D = 3° 49' 11.0"
L = 73.92'	L = 152.52'	L = 168.02'	L = 173.37'	L = 367.32'	L = 279.90'
T = 36.97'	T = 77.94'	T = 94.06'	T = 97.82'	T = 204.66'	T = 140.36'
R = 1,500.00'	R = 300.00'	R = 150.00'	R = 150.00'	R = 485.00'	R = 1,500.00'
	DS = 30mph	DS = 25mph	DS = 25mph	DS = 40mph	
	e = 5%	e = 6%	e = 6%	e = 4.2%	
	RUNOFF = 86'	RUNOFF = 103'	RUNOFF = 103'	RUNOFF = 72'	

-DRI- CURVE DATA

CURVE DRI-1	CURVE DRI-2	CURVE DRI-3
PI Sta 5+52.35	PI Sta 7+15.97	PI Sta 8+40.18
Δ = 58° 38' 08.8" (RT)	Δ = 75° 50' 51.5" (RT)	Δ = 6° 01' 35.3" (LT)
D = 114° 35' 29.6"	D = 57° 17' 44.8"	D = 4° 19' 27.2"
L = 51.17'	L = 132.38'	L = 139.37'
T = 28.08'	T = 77.91'	T = 69.75'
R = 50.00'	R = 100.00'	R = 1,325.00'

SOFT DIG LOCATIONS

MARK	STATION	OFFSET	ELEVATION	DEPTH	DESCRIPTION
1	16+37.06	32.96 LT	972.25	2.75'	1" PLASTIC GAS LINE
2	16+30.64	9.67 LT	976.83	3.17'	1" PLASTIC GAS LINE
3	16+26.67	11.48 RT	979.67	1.33'	1" PLASTIC GAS LINE

NOTE: SOFT DIG LOCATIONS FOR INFORMATION ONLY CONTACT LEE HAYES (704) 833-0390 FOR EXACT LOCATION AND ELEVATION

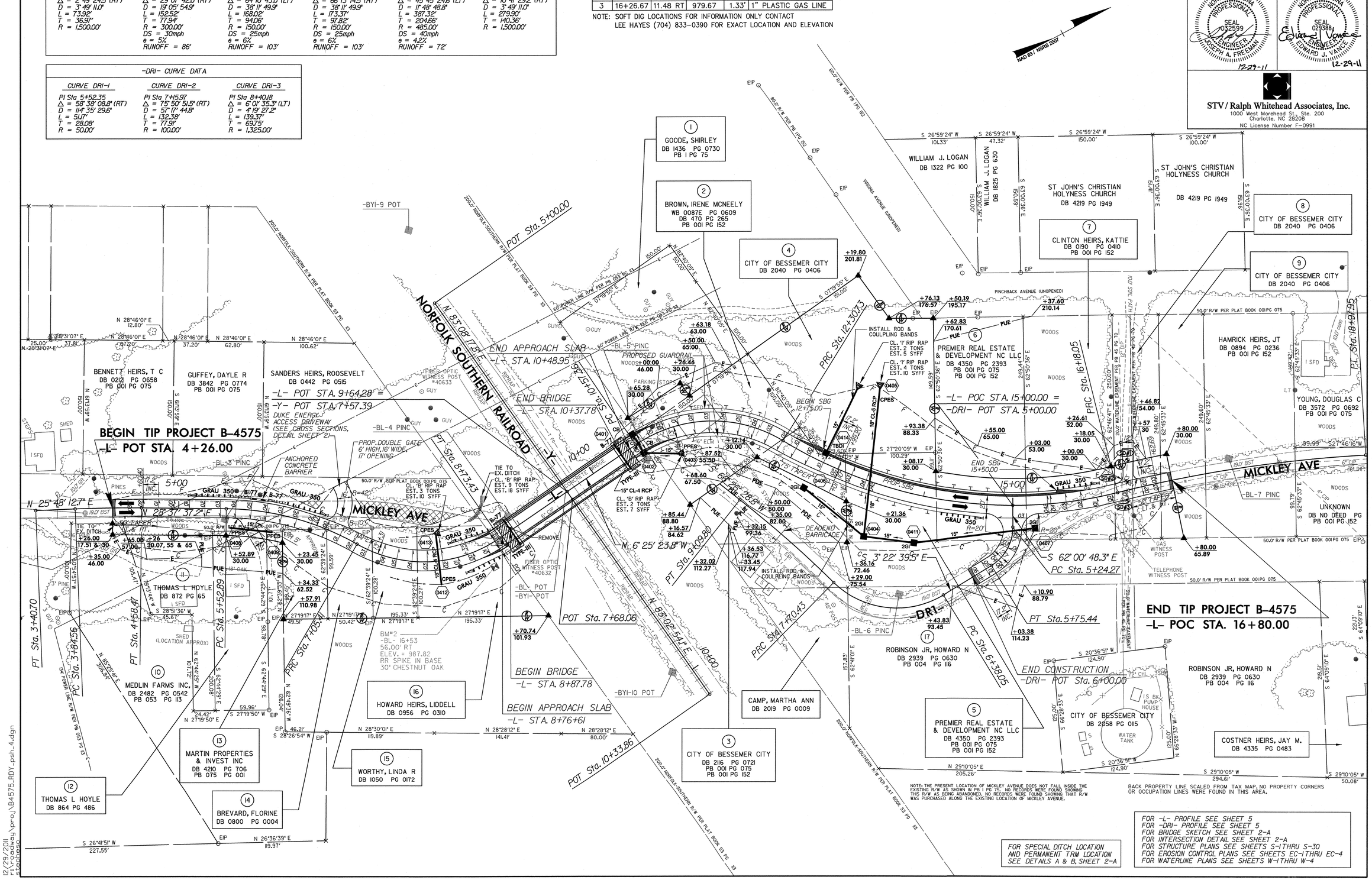

12/29/2011
R:\Roadway\proj\B4575_RDY_psh_4.dgn
stephens

STV / Ralph Whitehead Associates, Inc.
1000 West Morehead St., Ste. 200
Charlotte, NC 28208
NC License Number F-0991

PROJECT REFERENCE NO.	SHEET NO.
B-4575	5

ROADWAY DESIGN ENGINEER
NORTH CAROLINA PROFESSIONAL SEAL 032599 ENGINEER JOSEPH A. FREEMAN
12-29-11

HYDRAULICS ENGINEER
NORTH CAROLINA PROFESSIONAL SEAL 029388 ENGINEER EDWARD J. VANCIN
12-29-11

-L- MICKLEY AVE

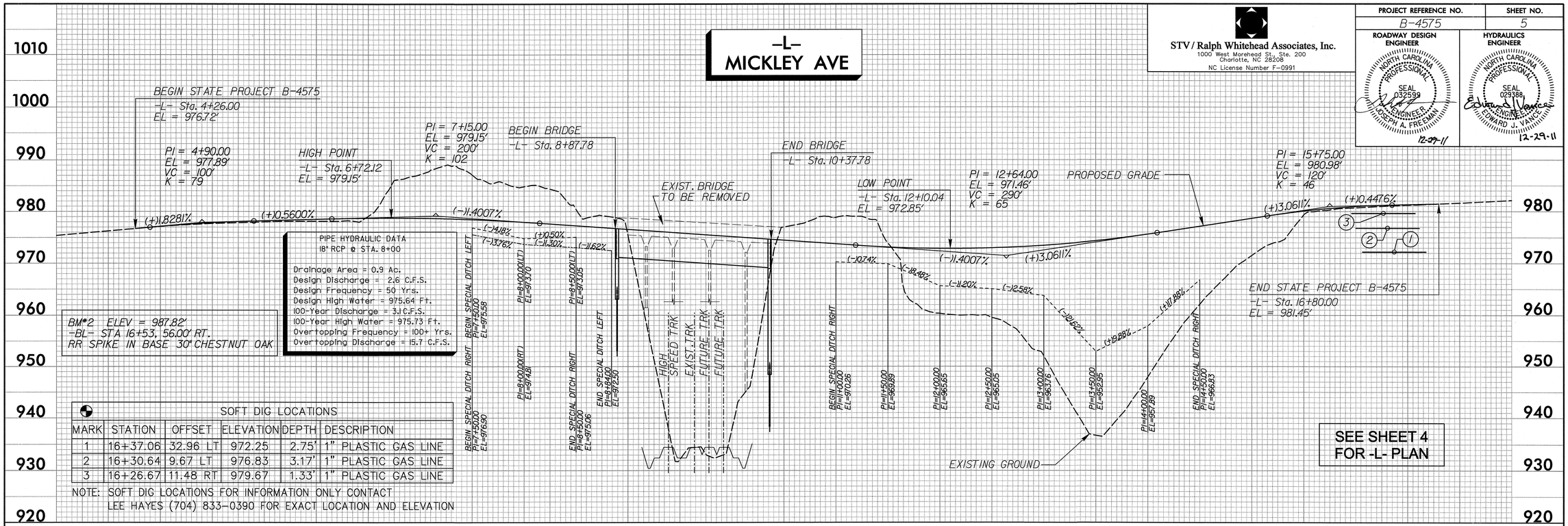

SOFT DIG LOCATIONS

MARK	STATION	OFFSET	ELEVATION	DEPTH	DESCRIPTION
1	16+37.06	32.96 LT	972.25	2.75'	1" PLASTIC GAS LINE
2	16+30.64	9.67 LT	976.83	3.17'	1" PLASTIC GAS LINE
3	16+26.67	11.48 RT	979.67	1.33'	1" PLASTIC GAS LINE

NOTE: SOFT DIG LOCATIONS FOR INFORMATION ONLY CONTACT LEE HAYES (704) 833-0390 FOR EXACT LOCATION AND ELEVATION

-DR1- DRIVEWAY

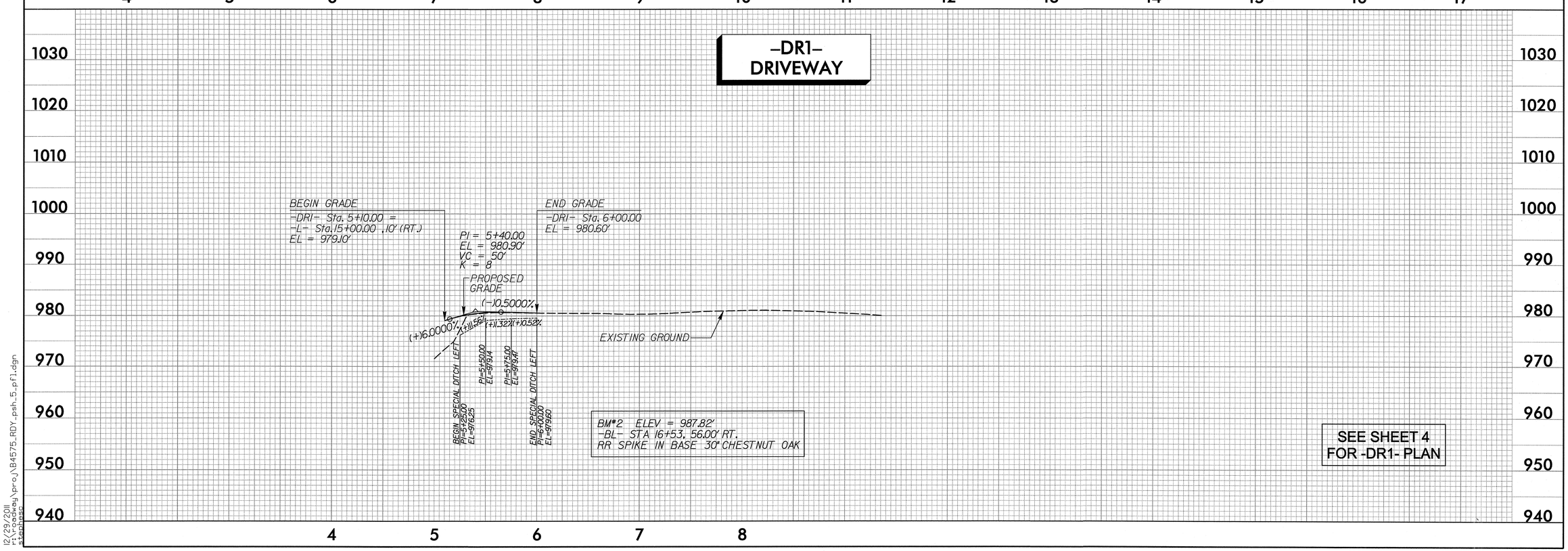

12/29/2011
I:\projects\proj\B4575_RDY_psh_5_pf1.dgn
stephesc

TIP PROJECT: B-4575

CONTRACT:

STATE OF NORTH CAROLINA
DIVISION OF HIGHWAYS

STATE PROJECT REFERENCE NO.	SHEET NO.
B-4575	TCP-1

STV/Ralph Whitehead Associates, Inc.
1000 West Morehead St., Ste. 200
Charlotte, NC 28208
NC License Number F-0991

PLAN FOR PROPOSED TRAFFIC CONTROL, MARKING & DELINEATION

GASTON COUNTY

ROADWAY STANDARD DRAWINGS

THE FOLLOWING ROADWAY STANDARDS AS APPEAR IN "ROADWAY STANDARD DRAWINGS" - PROJECT SERVICES UNIT - N.C. DEPARTMENT OF TRANSPORTATION - RALEIGH, N.C., DATED JULY 2006 ARE APPLICABLE TO THIS PROJECT AND BY REFERENCE HEREBY ARE CONSIDERED A PART OF THESE PLANS:

STD. NO.	TITLE
1101.03	TEMPORARY ROAD CLOSURES
1101.05	WORK ZONE VEHICLE ACCESSES
1101.11	TRAFFIC CONTROL DESIGN TABLES
1110.01	STATIONARY WORK ZONE SIGNS
1110.02	PORTABLE WORK ZONE SIGNS
1130.01	DRUMS
1135.01	CONES
1145.01	BARRICADES
1160.01	TEMPORARY CRASH CUSHION
1170.01	PORTABLE CONCRETE BARRIER
1180.01	SKINNY - DRUM
1205.01	PAVEMENT MARKINGS - LINE TYPES AND OFFSETS
1205.02	PAVEMENT MARKINGS - 2 LANE & MULTILANE ROADWAYS
1205.12	PAVEMENT MARKINGS - BRIDGES

INDEX OF SHEETS

SHEET NO.	TITLE
TCP-1	LIST OF APPLICABLE ROADWAY STANDARD DRAWINGS, LEGEND, INDEX OF SHEETS
TCP-2	PROJECT NOTES AND CONSTRUCTION PHASING
TCP-3	OFFSITE DETOUR
TCP-4	WORKZONE ADVANCE WARNING SIGNS

LEGEND

GENERAL

- DIRECTION OF TRAFFIC FLOW
- NORTH ARROW
- PROPOSED PVMT. --------- EXIST. PVMT.
- NEW CONSTRUCTION
- WEDGING AND WIDENING

TRAFFIC CONTROL DEVICES

- TYPE I BARRICADE
- TYPE II BARRICADE
- TYPE III BARRICADE
- CONE
- DRUM
- SKINNY DRUM
- FLASHING ARROW PANEL (TYPE C)
- STATIONARY SIGN
- PORTABLE SIGN
- STATIONARY OR PORTABLE SIGN
- CRASH CUSHION
- CHANGEABLE MESSAGE SIGN
- TRUCK MOUNTED IMPACT ATTENUATOR (TMIA)
- POLICE
- FLAGGER

FINAL
TRAFFIC CONTROL PLANS

PLAN REVIEWED BY: N.C.D.O.T. TRAFFIC CONTROL, MARKING & DELINEATION SECTION

_____ TRAFFIC CONTROL ENGINEER
_____ TRAFFIC CONTROL PROJECT ENGINEER
_____ TRAFFIC CONTROL PROJ. DESIGN ENGINEER
_____ TRAFFIC CONTROL DESIGN ENGINEER/ TECHNICIAN

APPROVED: _____
DATE: 12-29-11

SEAL

NORTH CAROLINA PROFESSIONAL SEAL 032599 ENGINEER JOSEPH A. FREEMAN

PLAN PREPARED FOR THE CITY OF BESSEMER CITY BY: STV/RALPH WHITEHEAD ASSOCIATES

JOSEPH A. FREEMAN, PE — PROJECT ENGINEER
MAAMOON ABDELAZIZ — DESIGN ENGINEER
_____ DESIGN TECHNICIAN

12/29/2011
r:\Traffic\TrafficControl\Tap\B4575_TCP_TSH.dgn
stephesc

PROJ. REFERENCE NO.	SHEET NO.
B-4575	TCP-2

STV/Ralph Whitehead Associates, Inc.
1000 West Morehead St. Ste. 200
Charlotte, NC 28208
NC License Number F-0991

PROJECT NOTES

GENERAL NOTES

CHANGES MAY BE REQUIRED WHEN PHYSICAL DIMENSIONS IN THE DETAIL DRAWINGS, STANDARD DETAILS AND ROADWAY DETAILS ARE NOT ATTAINABLE TO MEET FIELD CONDITIONS, OR RESULT IN DUPLICATE, OR UNDESIRED OVERLAPPING OF DEVICES. MODIFICATION MAY INCLUDE: MOVING, SUPPLEMENTING, COVERING OR REMOVAL OF DEVICES, AS DIRECTED BY THE ENGINEER.

THE FOLLOWING GENERAL NOTES APPLY AT ALL TIMES FOR THE DURATION OF THE CONSTRUCTION PROJECT, EXCEPT WHEN OTHERWISE NOTED IN THE PLAN, OR DIRECTED BY THE ENGINEER.

LANE AND SHOULDER CLOSURE REQUIREMENTS

A) REMOVE LANE CLOSURE DEVICES FROM THE LANE WHEN WORK IS NOT BEING PERFORMED BEHIND THE LANE CLOSURE OR WHEN A LANE CLOSURE IS NO LONGER NEEDED, OR AS DIRECTED BY THE ENGINEER.

B) WHEN PERSONNEL AND/OR EQUIPMENT ARE WORKING WITHIN 15 FT OF AN OPEN TRAVEL LANE, CLOSE THE NEAREST OPEN SHOULDER USING ROADWAY STANDARD DRAWING NO. 1101.04 UNLESS THE WORK AREA IS PROTECTED BY BARRIER OR GUARDRAIL OR A LANE CLOSURE IS INSTALLED.

C) WHEN PERSONNEL AND/OR EQUIPMENT ARE WORKING ON THE SHOULDER ADJACENT TO AN UNDIVIDED FACILITY AND WITHIN 5 FT OF AN OPEN TRAVEL LANE, CLOSE THE NEAREST OPEN TRAVEL LANE USING ROADWAY STANDARD DRAWING NO. 1101.02 UNLESS THE WORK AREA IS PROTECTED BY BARRIER OR GUARDRAIL.

WHEN PERSONNEL AND/OR EQUIPMENT ARE WORKING ON THE SHOULDER ADJACENT TO A DIVIDED FACILITY AND WITHIN 10 FT OF AN OPEN TRAVEL LANE, CLOSE THE NEAREST OPEN TRAVEL LANE USING ROADWAY STANDARD DRAWING NO. 1101.02 UNLESS THE WORK AREA IS PROTECTED BY BARRIER OR GUARDRAIL.

D) WHEN PERSONNEL AND/OR EQUIPMENT ARE WORKING WITHIN A LANE OF TRAVEL OF AN UNDIVIDED OR DIVIDED FACILITY, CLOSE THE LANE ACCORDING TO THE TRAFFIC CONTROL PLANS, ROADWAY STANDARD DRAWINGS OR AS DIRECTED BY THE ENGINEER. CONDUCT THE WORK SO THAT ALL PERSONNEL AND/OR EQUIPMENT REMAIN WITHIN THE CLOSED TRAVEL LANE.

E) PROVIDE TRAFFIC CONTROL FOR APPROPRIATE LANE CLOSURES FOR SURVEYING DONE BY THE DEPARTMENT.

PAVEMENT EDGE DROP OFF REQUIREMENTS

F) BACKFILL AT A 6:1 SLOPE UP TO THE EDGE AND ELEVATION OF EXISTING PAVEMENT IN AREAS ADJACENT TO AN OPENED TRAVEL LANE THAT HAS AN EDGE OF PAVEMENT DROP-OFF AS FOLLOWS:

BACKFILL DROP-OFFS THAT EXCEED 2 INCHES ON ROADWAYS WITH POSTED SPEED LIMITS OF 45 MPH OR GREATER.

BACKFILL DROP-OFFS THAT EXCEED 3 INCHES ON ROADWAYS WITH POSTED SPEED LIMITS LESS THAN 45 MPH.

BACKFILL WITH SUITABLE COMPACTED MATERIAL, AS APPROVED BY THE ENGINEER, AT NO EXPENSE TO THE DEPARTMENT.

G) DO NOT EXCEED A DIFFERENCE OF 2 INCHES IN ELEVATION BETWEEN OPEN LANES OF TRAFFIC FOR NOMINAL LIFTS OF 1.5 INCHES. INSTALL ADVANCE WARNING "UNEVEN LANES" SIGNS (W8-11) IN ADVANCE AND A MINIMUM OF EVERY HALF MILE THROUGHOUT THE UNEVEN AREA.

TRAFFIC PATTERN ALTERATIONS

H) NOTIFY THE ENGINEER TWENTY ONE (21) CALENDAR DAYS PRIOR TO ANY TRAFFIC PATTERN ALTERATION.

SIGNING

I) INSTALL ADVANCE WORK ZONE WARNING SIGNS WHEN WORK IS WITHIN 40 FT FROM THE EDGE OF TRAVEL LANE AND NO MORE THAN THREE (3) DAYS PRIOR TO THE BEGINNING OF CONSTRUCTION.

J) PROVIDE PERMANENT SIGNING.

K) PROVIDE SIGNING AND DEVICES REQUIRED TO CLOSE THE ROAD ACCORDING TO THE ROADWAY STANDARD DRAWINGS AND TRAFFIC CONTROL PLANS. PROVIDE SIGNING REQUIRED FOR THE OFF-SITE DETOUR ROUTE AS SHOWN IN THE TRAFFIC CONTROL PLANS.

L) ENSURE ALL NECESSARY SIGNING IS IN PLACE PRIOR TO ALTERING ANY TRAFFIC PATTERN.

TRAFFIC CONTROL DEVICES

M) SPACE CHANNELIZING DEVICES IN WORK AREAS NO GREATER IN FEET THAN TWICE THE POSTED SPEED LIMIT (MPH), EXCEPT 10 FT ON-CENTER IN RADII, AND 3 FT OFF THE EDGE OF AN OPEN TRAVELWAY, WHEN LANE CLOSURES ARE NOT IN EFFECT. WHEN SKINNY DRUMS ARE ALLOWED, REFER TO SECTION 1180 OF STANDARD SPECIFICATIONS FOR ROADS AND STRUCTURES OR AS SHOWN IN THE PLANS.

N) PLACE TYPE III BARRICADES, WITH "ROAD CLOSED" SIGN R11-2 ATTACHED, OF SUFFICIENT LENGTH TO CLOSE ENTIRE ROADWAY.

PAVEMENT MARKINGS AND MARKERS

O) INSTALL PAVEMENT MARKINGS AND PAVEMENT MARKERS ON THE FINAL SURFACE AS SHOWN IN THE PAVEMENT MARKING PLAN.

ROAD NAME	MARKING	MARKER
MICKLEY AVE	THERMOPLASTIC	NONE
MICKLEY AVE	COLD APPLIED PLASTIC, TYPE 1 (BRIDGE)	NONE

P) TIE PROPOSED PAVEMENT MARKING LINES TO EXISTING PAVEMENT MARKING LINES.

MISCELLANEOUS

Q) IN THE EVENT A TIE-IN CANNOT BE MADE IN ONE DAYS TIME, BRING THE TIE-IN AREA TO AN APPROPRIATE ROADWAY ELEVATION, AS DETERMINED BY THE ENGINEER. PLACE BLACK ON ORANGE "LOOSE GRAVEL" SIGNS (W8-7) AND BLACK ON ORANGE "PAVEMENT ENDS" SIGNS (W8-3) 100 ft AND 50 ft RESPECTIVELY IN ADVANCE OF THE UNEVEN AREAS. USE DRUMS TO DELINEATE THE EDGE OF ROADWAY ALONG UNPAVED AREAS.

CONSTRUCTION PHASING NOTES

STEP 1: PRIOR TO ANY CONSTRUCTION, INSTALL ADVANCE WARNING SIGNS IN ACCORDANCE WITH TCP-4 AND PLACE TYPE III BARRICADES FOR A TEMPORARY ROAD CLOSURE BETWEEN STATION 4+26.00 AND STATION 16+80.00.

INSTALL DETOUR SIGNS FOR OFFSITE DETOUR, IN ACCORDANCE WITH NCDOT ROADWAY STANDARD DRAWINGS 1101.03 AND TCP-3, ON MICKLEY AVENUE BY UTILIZING THE FOLLOWING ROADS: MICKLEY AVENUE, BESSMER CITY KINGS MOUNTAIN HIGHWAY (SR 161), SOUTH 13TH STREET, WEST VIRIGINA AVENUE, NORTH 14TH STREET, AND WEST MARYLAND AVENUE. COVER SIGNS PRIOR TO DETOUR USE.

(NOTE: CONTRACTOR TO MAINTAIN ACCESS TO ALL DRIVEWAYS DURING CONSTRUCTION)

STEP 2: WITH OFFSITE DETOUR IN PLACE (SEE TCP-3) AND WORKING IN A CONTINUOUS MANNER WHILE COORDINATING WITH NORFOLK SOUTHERN RAILROAD, OBLITERATE EXISTING BRIDGE, AND CONSTRUCT THE FOLLOWING:

(1) NEW BRIDGE AND PLACE WATERLINE ON NEW BRIDGE AS SHOWN PER STRUCTURE PLANS.

(2) WITH EROSION CONTROL MEASURES IN PLACE, CONSTRUCT DRAINAGE, NEW ROADWAY (-L- AND -DR1- CONNECTION), AND PLACE FINAL PAVEMENT MARKINGS (SEE SHEET PM-1).

STEP 3: UPON COMPLETION OF ALL CONSTRUCTION, REMOVE ALL DETOUR SIGNS, ADVANCE WARNING SIGNS,TRAFFIC CONTROL DEVICES, AND EROSION CONTROL MEASURES. OPEN ROADWAY TO ITS FINAL TRAFFIC PATTERN.

APPROVED: _____ DATE: 12-29-11

SEAL

NORTH CAROLINA PROFESSIONAL SEAL 032599 ENGINEER JOSEPH A. FREEMAN

PROJECT NOTES

SCALE:	NONE
DATE:	12-23-10
DWG. BY:	EDP
DESIGN BY:	EDP
REVIEWED BY:	JAF

DIVISION OF HIGHWAYS STATE OF NORTH CAROLINA DEPT. OF TRANSPORTATION TRAFFIC CONTROL

REVISIONS

CADD FILE

12/29/2011
r:\Traffic\TrafficControl\Tcp\B4575_TC_tcp2.dgn
stephesc

PROJ. REFERENCE NO.	SHEET NO.
B-4575	TCP-3

STV / Ralph Whitehead Associates, Inc.
1000 West Morehead St., Ste. 200
Charlotte, NC 28208
NC License Number F-0991

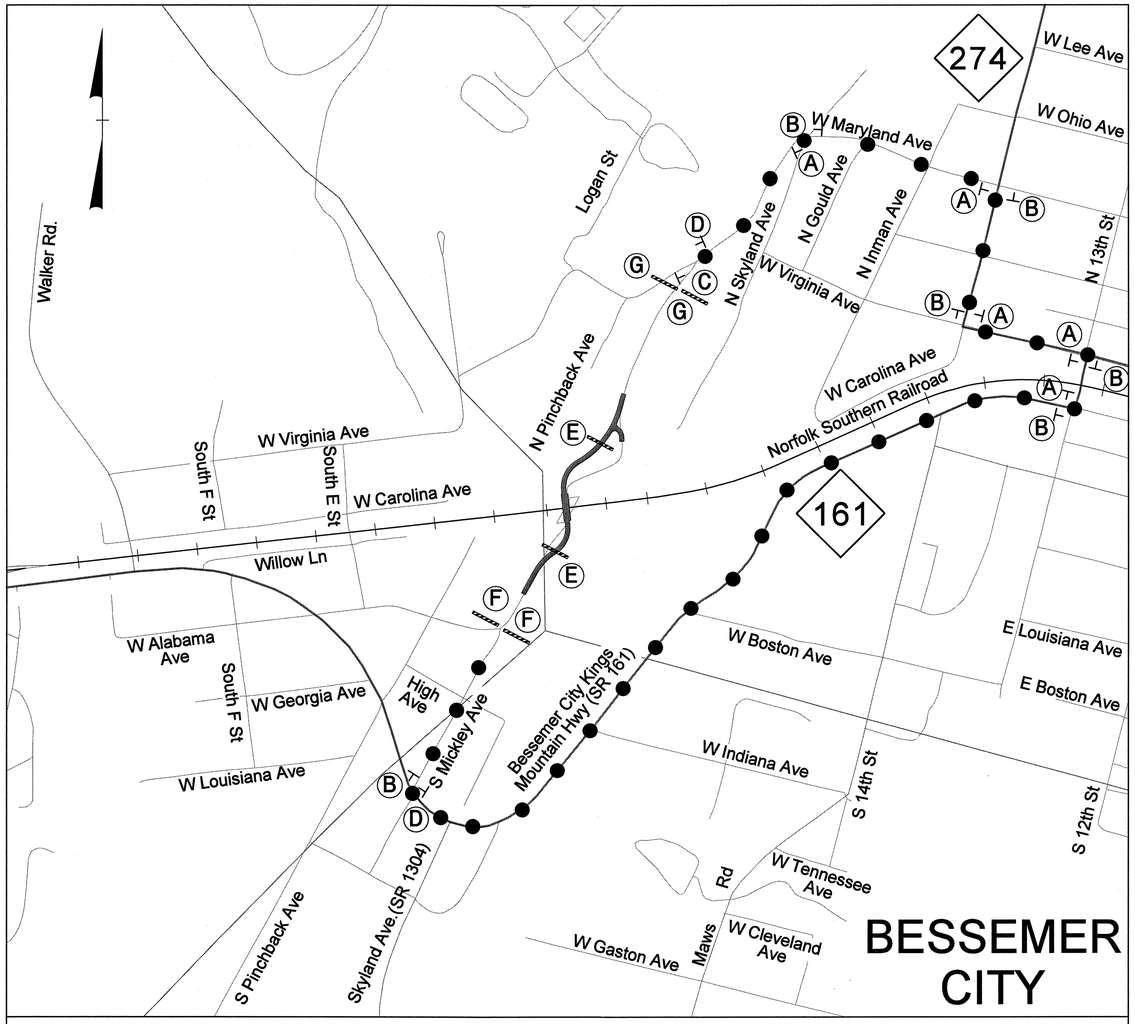

SIGN ASSEMBLY (A)

MICKLEY AVE. 74" X 18"
DETOUR M4-8 24" X 12"
M6-1 21" X 15"

SIGN ASSEMBLY (B)

MICKLEY AVE. 74" X 18"
DETOUR M4-8 24" X 12"
M6-1 L 21" X 15"

SIGN ASSEMBLY (C)

MICKLEY AVE. 74" X 18"
DETOUR M4-8 24" X 12"
M6-3 21" X 15"

SIGN ASSEMBLY (D)

MICKLEY AVE. 74" X 18"
END DETOUR M4-8 A 24" X 18"

SIGN ASSEMBLY (E)

R11-2 48" X 30"
ROAD CLOSED
TYPE III BARRICADE(S)

SIGN ASSEMBLY (F)

R11-3 60"X30"
ROAD CLOSED
XX MILES AHEAD
LOCAL TRAFFIC ONLY
DETOUR
M4-10R 48"X18"
TYPE III BARRICADE

SIGN ASSEMBLY (G)

R11-3 60"X30"
ROAD CLOSED
XX MILES AHEAD
LOCAL TRAFFIC ONLY
DETOUR
M4-10L 48"X18"
TYPE III BARRICADE

APPROVED: _____ DATE: 12-29-11

SEAL

NORTH CAROLINA PROFESSIONAL SEAL 032599 ENGINEER JOSEPH A. FREEMAN

MICKLEY AVENUE OFFSITE DETOUR

SCALE:	NONE
DATE:	12-23-10
DWG. BY:	EDP
DESIGN BY:	EDP
REVIEWED BY:	JAF

REVISIONS

CADD FILE

12/29/2011
r:\Traffic\TrafficControl\Tcp\B4575_TC_tcp3.dgn
stephesc

PROJ. REFERENCE NO.	SHEET NO.
B-4575	TCP-4

ROADWAYS INTERSECTING ALONG 2 WAY UNDIVIDED WORK ZONE (Y-LINES)

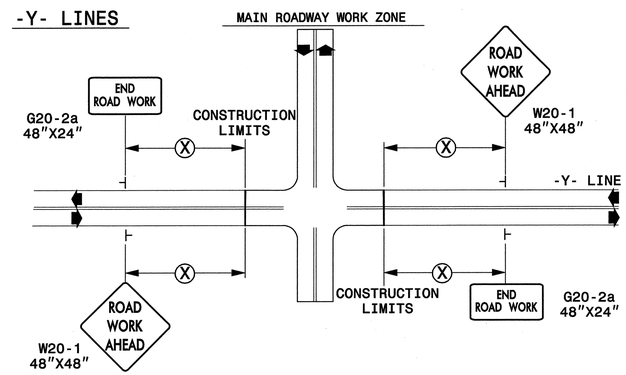

STATE OF NORTH CAROLINA
DEPT. OF TRANSPORTATION
DIVISION OF HIGHWAYS
RALEIGH, N.C.

GENERAL NOTES

- USE FLUORESCENT ORANGE SHEETING (TYPE VII OR HIGHER) ON ALL ADVANCED WORK ZONE SIGNS.
- DO NOT INSTALL ADVANCE WARNING SIGNS MORE THAN 3 DAYS PRIOR TO BEGINNING OF WORK.
- SIGNS SHOWN ARE REQUIRED FOR WORK ZONES THAT WILL REMAIN IN EFFECT OVERNIGHT. FOR SHORT-TERM DAILY MAINTENANCE TYPE OPERATIONS, THIS SIGNING APPLICATION IS OPTIONAL; MAY USE ONLY APPLICABLE ROADWAY STANDARD DRAWINGS INSTEAD. HOWEVER, IF THIS SIGNING APPLICATION IS USED, SIGNS MAY BE PORTABLE MOUNTED.
- ALL SIGN SPACING DIMENSIONS ARE APPROXIMATE, FIELD ADJUST AS NECESSARY OR AS DIRECTED.
- USE 3LB STEEL U-CHANNEL POST OR 4" X 4" WOOD POST FOR ALL WORK ZONE SIGNS. 3LB STEEL U-CHANNEL POSTS MUST MEET THE REQUIREMENTS OF STANDARD SPECIFICATION SECTION 1094-1(B), MAY BE GALVANIZED STEEL, OR MAY BE PAINTED GREEN BY THE POST MANUFACTURER. SQUARE STEEL TUBING POSTS HAVING EQUIVALENT STRENGTH OF THE 3 LB STEEL U-CHANNEL POST ARE ALSO ACCEPTABLE FOR USE. ERECT SIGNS PER ROADWAY STANDARD DRAWING 1110.01. PAYMENT FOR WOOD POSTS, 3LB STEEL U-CHANNEL AND SQUARE STEEL TUBING POSTS WITH SIGNS WILL BE MADE ACCORDING TO STANDARD SPECIFICATION "WORK ZONE SIGNS" SECTION 1110.
- WHEN NECESSARY, USE SPLICING IN ACCORDANCE WITH ROADWAY STANDARD DRAWING NO. 1110.01. REMOVE ENTIRE POST WHEN REMOVING SIGNS WITH SPLICED POSTS.
- DO NOT BACK BRACE SIGN SUPPORTS.
- ** TWO-WAY UNDIVIDED ADVANCE WARNING SIGN CONFIGURATION MAY BE USED ON URBAN MULTI-LANE FACILITIES WHERE CONDITIONS LIMIT THE USE OF DUAL MOUNTED SIGNS AS DETERMINED BY THE ENGINEER.

LEGEND

⊢ STATIONARY SIGN

DIRECTION OF TRAFFIC FLOW

DETAIL DRAWING FOR TWO-WAY UNDIVIDED WORK ZONE WARNING SIGNS

SHEET 1 OF 1

STV / Ralph Whitehead Associates, Inc.
1000 West Morehead St., Ste. 200
Charlotte, NC 28208
NC License Number F-0991

APPROVED: _____ DATE: 12-23-11

SEAL

NORTH CAROLINA PROFESSIONAL SEAL 032599 ENGINEER JOSEPH A. FREEMAN

DETAIL DRAWING FOR TWO-WAY UNDIVIDED AND URBAN FREEWAYS ADVANCED WORK ZONE WARNING SIGNS

SCALE:	NONE
DATE:	12-23-10
DWG. BY:	EDP
DESIGN BY:	EDP
REVIEWED BY:	JAF

REVISIONS

CADD FILE

12/29/2011
r:\Traffic\TrafficControl\Tcp\B4575_TC_tcp4.dgn
stephesc

8/17/99

PROJECT REFERENCE NO.	SHEET NO.
B-4575	PM-1
R/W SHEET NO.	

ROADWAY DESIGN ENGINEER

NORTH CAROLINA PROFESSIONAL SEAL 032599 ENGINEER JOSEPH A. FREEMAN

12-29-11

STV / Ralph Whitehead Associates, Inc.
1000 West Morehead St., Ste. 200
Charlotte, NC 28208
NC License Number F-0991

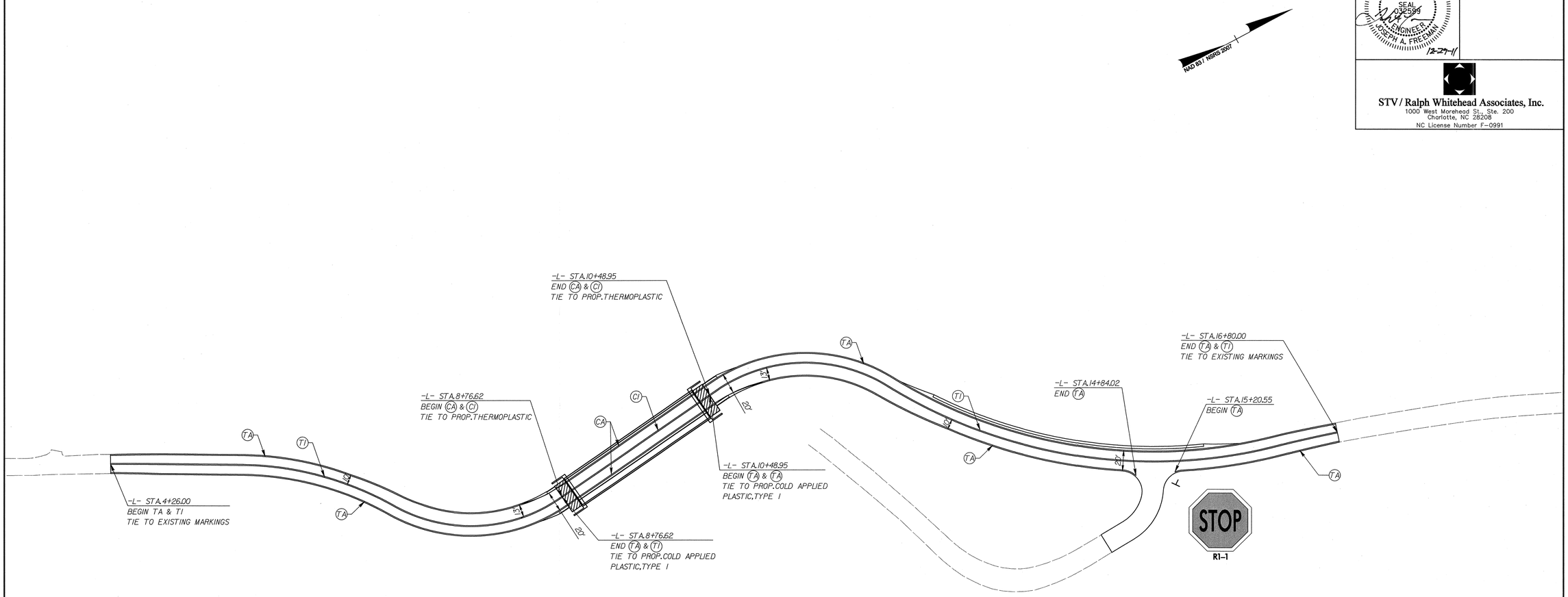

PAVEMENT MARKING SCHEDULE	
TA - THERMOPLASTIC (4" WHITE, 90 MILS)	WHITE EDGELINE
CA - COLD APPLIED PLASTIC, TYPE 1 (4" WHITE)	WHITE EDGELINE
TI - THERMOPLASTIC (4" YELLOW, 120 MILS)	DOUBLE YELLOW CENTER LINES
CI - COLD APPLIED PLASTIC, TYPE 1 (4" YELLOW)	DOUBLE YELLOW CENTER LINES

12/29/2011
r:\Traffic\TrafficControl\Tcp\B4575_RDY_PM-1.dgn
stephesc

TIP PROJECT: B-4575

See Sheet 1-A For Index of Sheets
See Sheet 1-B For Standard Symbology Sheet

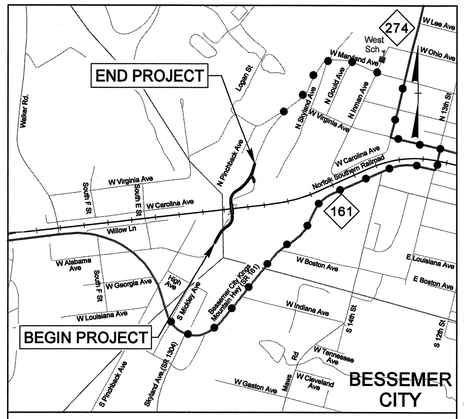

VICINITY MAP

● OFF-SITE DETOUR

N.T.S.

FINAL PLANS

STATE OF NORTH CAROLINA
DIVISION OF HIGHWAYS

GASTON COUNTY

LOCATION: BRIDGE NO. 165 OVER NORFOLK SOUTHERN RAILROAD

TYPE OF WORK: GRADING, PAVING, DRAINAGE AND STRUCTURE

STATE	STATE PROJECT REFERENCE NO.	SHEET NO.	TOTAL SHEETS
N.C.	B-4575	EC-1	4

STATE PROJ. NO.	F. A. PROJ. NO.	DESCRIPTION
33779.3.1	BRZ-1202(1)	P.E.
33779.4.1		CONST.

NAD 83 / NSRS 2007

EC-4

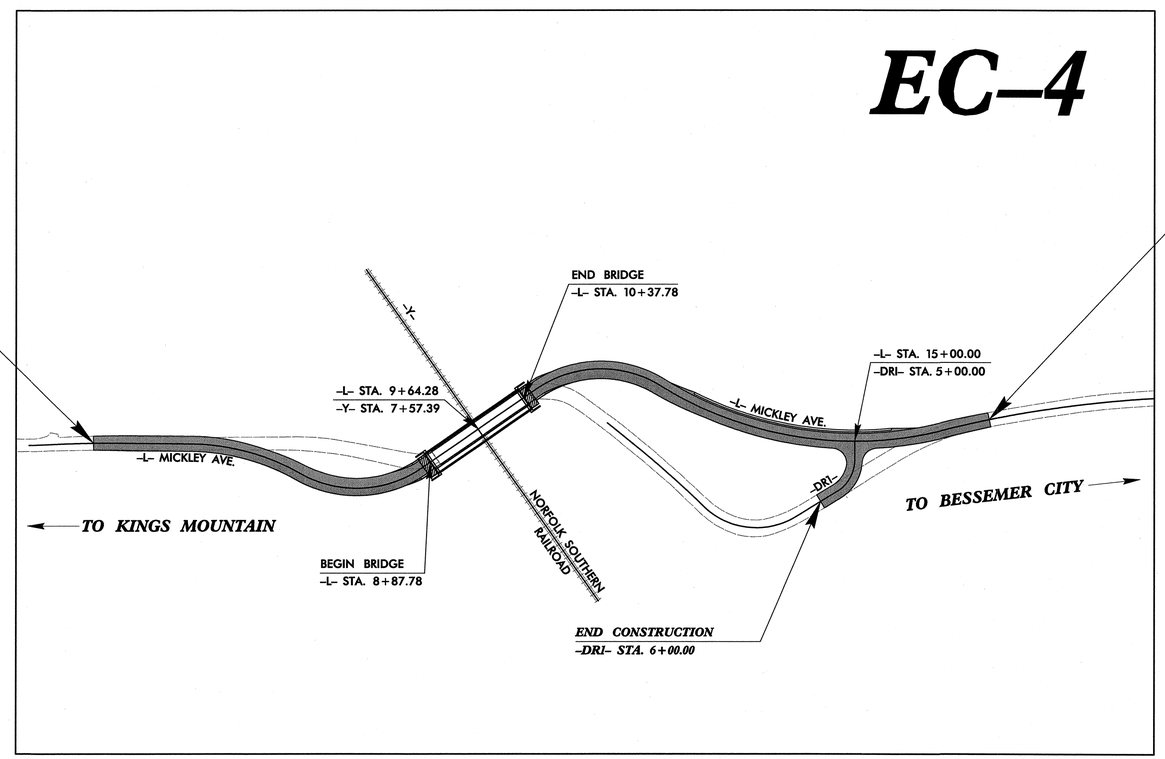

CONTRACT:

FINAL PLANS
12/29/2011

GRAPHIC SCALES

50 25 0 50 100
PLANS

50 25 0 50 100
PROFILE (HORIZONTAL)

5 2.5 0 5 10
PROFILE (VERTICAL)

DESIGN DATA

ADT 2010 = 955
ADT 2028 = 1,600
DHV = N/A
D = N/A
T = N/A
V = 25 MPH

RURAL LOCAL
SUBREGIONAL TIER

PROJECT LENGTH

LENGTH ROADWAY TIP PROJECT B-4575	=	0.21 Miles
LENGTH STRUCTURE TIP PROJECT B-4575	=	0.03 Miles
TOTAL LENGTH TIP PROJECT B-4575	=	0.24 Miles

NCDOT CONTACT: MOHAMMED MAHJOUB
Project Engineer – Roadway Design Unit

Prepared In the Office of:
STV/RALPH WHITEHEAD ASSOCIATES, INC.
1000 West Morehead St., Ste. 200, Charlotte NC, 28208
NC License Number F-0991
FOR CITY OF BESSEMER CITY

2006 STANDARD SPECIFICATIONS

RIGHT OF WAY DATE:
August 21, 2009

LETTING DATE:
May 1, 2011

JOSEPH A. FREEMAN, PE
PROJECT ENGINEER

MAAMOON ABDELAZIZ
PROJECT DESIGN ENGINEER

HYDRAULICS ENGINEER

NORTH CAROLINA PROFESSIONAL SEAL 029388 ENGINEER EDWARD J. VANCE
12-29-11

CITY OF BESSEMER CITY
NORTH CAROLINA

PROJECT REFERENCE NO.	SHEET NO.
B-4575	EC-2
R/W SHEET NO.	

HYDRAULICS ENGINEER

NORTH CAROLINA PROFESSIONAL SEAL 025881 ENGINEER EDWARD J. VANCIN

12-29-11

STV / Ralph Whitehead Associates, Inc.
1000 West Morehead St., Ste. 200
Charlotte, NC 28208
NC License Number F-0991

Project Description

The Mickley Avenue Bridge Replacement Project in Bessemer City, NC includes a re-alignment of Mickley Avenue, a new bridge over Norfolk-Southern Rail Road Tracks, new drainage, a new 12" waterline, and other improvements to bring this section of road up to current NCDOT standards. The typical roadway section has 20' of pavement with an unpaved shoulder and ditches. The terrain in the area is very hilly with gravelly well drained soils. Drainage areas and runoff to and from the project site are small.

Vegetation Plan

1. Seedbed Preparation (SP-1)
   a. Scarify or otherwise loosen the soil to a depth of not less than 5-inches.
   b. Break clods and work the top 2 to 3 inches of soil into an acceptable seedbed by the use of soil pulverizers, drags, harrows, or by other approved methods.
   c. Remove all rocks and debris 3 inches or larger prior to the application of seed and fertilizer.
   d. Apply lime and fertilizer according to soil tests or apply 4,000 lb/ac ground agriculture limestone and 1,000 lb/ac 10-10-10 fertilizer. Distribute limestone and fertilizer uniformly over the prepared seedbed at the specified rate of application and then harrow, rake, or otherwise thoroughly work or mix into the seedbed.
2. Seeding Method (SM-1)
   a. Distribute seed uniformly over the seedbed at the required rate of application with a cyclone seeder, or drop spreader.
   b. Rake seed or otherwise work so as to cover the seed with a layer of soil.
3. Mulching (MU-1)
   a. Apply 4,000 lb/ac grain straw or equivalent cover of another suitable mulch.
   b. Spread mulch uniformly by hand or by approved mechanical spreaders or blowers which will provide an acceptable application.
   c. Anchor mulch by tacking with 0.1 gal./sq. yd. asphalt, roving, or by crimping with a mulch anchor tool.
4. Mulching (MU-2) (2:1 fill slopes)
   a. Apply 4,000 - 5,000 lb/ac grain straw or equivalent cover of another suitable mulch.
   b. Spread mulch uniformly by hand or by approved mechanical spreaders or blowers which will provide an acceptable application.
   c. Anchor mulch by tacking with asphalt, roving, or by netting.
5. Mulching (MU-3) (Grass-lined Channels)
   a. Use jute, excelsior matting, synthetic matting, or other effective channel lining material to cover the bottom of channels and ditches, and staple securely.
6. Maintenance (MA-1)
   a. Refertilize in the second year unless growth is fully adequate. May be mowed once or twice a year, or as needed. Reseed, fertilize, and mulch damaged areas immediately.

Maintenance Plan

1. Contractor shall be responsible for obtaining the necessary permits and/or certifications for any Contractor furnished borrow sources and shall furnish a copy of the permits and/or certifications to the Engineer prior to performing any work on the proposed borrow source as specified in Section 203 of NCDOT's Standard Specifications for Roads and Structures, February 2006.
2. All erosion and sediment control practices will be checked for stability and operation following every run off-producing rainfall but in no case less than once a week. Any needed repairs will be made immediately to maintain all practices as designed.
3. Sediment will be removed from behind the silt fence when it becomes about 0.5 ft. deep at the fence. The silt fence will be repaired as necessary to maintain the barrier.
4. Sediment will be removed from the block and gravel inlet protection device when storage capacity has been approximately 50% filled. Gravel will be cleaned or replaced when the inlet no longer drains properly.
5. Maintain the construction entrance to prevent mud or sediment from leaving the site. This may require top dressing with 2-inch stone. Immediately remove any materials tracked onto public roadways.
6. Provide ground cover on exposed slopes within 21 calendar days following completion of any phase of grading and permanent ground cover for all disturbed areas within 15 working days or 90 calendar days following completion of construction or development, whichever periods are shorter.
7. Partially installed storm sewer protection should be installed at the end of each working day in accordance with the details.
8. Remove sediment and restore the check dam to original dimensions when the sediment has accumulated to half the design depth.
9. Remove sediment and restore original volume when sediment accumulates to about half the design volume of the ditch check.

Construction Schedule and Phasing

1. Obtain plan approval and other applicable permits.
2. Hold pre-construction meeting prior to starting construction.
3. Install perimeter silt fence.
4. Install construction entrance/exit.
5. Install all other erosion control measures required for the proposed construction activities including adding additional devices as deemed necessary to prevent erosion and control sediment on site.
6. Clear and Grub site.
7. Install culverts and riprap aprons as soon as applicable. Control sediment and erosion during construction of culverts utilizing the devices detailed on sheet EC-3.
8. Grade site. All 2:1 slopes over 5' high shall be protected by surface roughening and/or temporary soil blankets as directed by the engineer.
9. Construct drainage features. Install erosion control devices as soon as applicable in accordance with the erosion control plans. The contractor is to maintain all erosion and sediment control devices in accordance with the "Maintenance Plan" as indicated on this sheet and add additional devices as deemed necessary to maintain erosion and sediment control.
10. Backfill and grade. Vegetate & mulch immediately.
11. All erosion control practices will be inspected weekly and after all rainfall events. Needed repairs will be made immediately.
12. After site is stabilized, remove all temporary measures and install permanent vegetation on all disturbed areas.

Vegetation Plan

Area No.	Description	Season (1) Spring	Seeding Mixture: Permanent lbs/ac	Seeding Mixture: Temporary lbs/ac	Seedbed Preparation	Seeding Method	Mulch	Maintenance
1	Low Maintenance, Gentle Slopes, Average Soils	Spring or Fall	Tall fescue 80 Sericea lespedeza 20 Kobe lespedeza 10		SP-1	SM-1	MU-1	MA-1
		Summer		German millet 40				
		Winter		Rye grain 120				
2	Low Maintenance, Gentle Slopes, Average Soils	Spring or Fall	Tall fescue 80 Sericea lespedeza 20 Kobe lespedeza 10		SP-1	SM-1	MU-2	MA-1
		Summer		German millet 40				
		Winter		Rye grain 120				
3	Grass-lined Channels	Spring or Fall	Tall fescue 80 Sericea lespedeza 20 Kobe lespedeza 10		SP-1	SM-1	MU-3	MA-1
		Summer		German millet 40				
		Winter		Rye grain 120				

Note (1): Spring (Feb. 1 - Apr. 15), Summer (Apr. 15 - Aug. 20), Fall (Aug. 20 - Oct. 15), Winter (Oct. 15 - Dec 30)

From North Carolina Erosion and Sediment Control Planning and Design Manual-December, 2006

General Soils Description

Location	Map Symbol	Soil Name	Description	Permeability
Entire Disturbed Area	TaB	Tatum Gravelly Loam, 2 to 8% slopes	Parent material of weathered schist. Depth to bedrock 40 to 60 inches. Well drained, Drainage Class B. Moderate shrink/swell potential.	Good
Portion of Drainage Area	TaE	Tatum Gravely Loam, 15 to 25% slopes	Parent material of weathered argillite. Depth to bedrock 40 to 60 inches. Well drained, Drainage Class B. Moderate shrink/swell potential.	Good

Source: USGS Soil Survey of Gaston County, NC

Notes:
- Contractor is responsible for erosion and sediment control through all phases of construction.
- During construction, the contractor is to control sediment and erosion from lateral flows of side channels and/or pipes into the work area with the use of diversion ditches, check dams, and/or any other devices as detailed on sheet EC-3.
- No work is allowed outside the limits of disturbance.
- Silt fence should be installed 10 feet off the toe of fill slopes to provide space for sediment storage and maintenance.
- Seed and mat all fill slopes 3:1 or steeper.
- Inlet protection is required for all inlets located in the working area and required until the site is fully stabilized.

Disturbed Area

Approximately 4.25 acres of land on the project site.

LEGEND

- Limits of Disturbance
- Silt Fence (NCDOT STD. 1605.01)
- Gravel Construction Entrance (NCDOT STD. 1607.01)
- Temp Rock Silt Check Type 'A' NCDOT STD. 1633.01
- Temp Rock Silt Check Type 'B' (NCDOT STD. 1633.02)
- Rock Inlet Sediment Trap Type 'C' (NCDOT STD. 1632.03)

12/29/2011
r:\roadway\proj\ec\B4575_EC_psh02.dgn
stephaso

8/17/99

PROJECT REFERENCE NO.	SHEET NO.
B-4575	EC-3
R/W SHEET NO.	

HYDRAULICS ENGINEER

NORTH CAROLINA PROFESSIONAL SEAL 029388 ENGINEER EDWARD J. VANCUTSEM 12-29-11

STV / Ralph Whitehead Associates, Inc.
1000 West Morehead St., Ste. 200
Charlotte, NC 28208
NC License Number F-0991

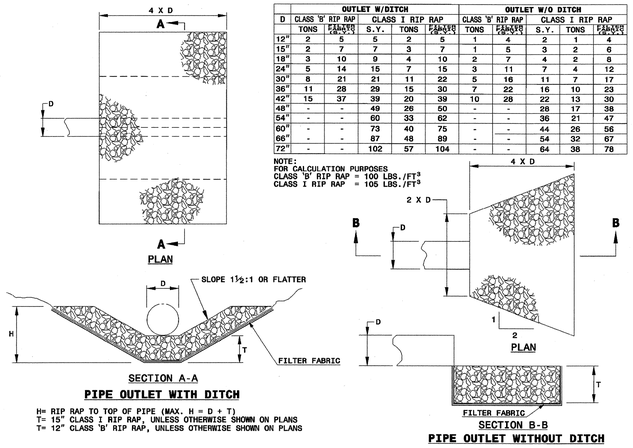

H= RIP RAP TO TOP OF PIPE (MAX. H = D + T)
T= 15" CLASS I RIP RAP, UNLESS OTHERWISE SHOWN ON PLANS
T= 12" CLASS 'B' RIP RAP, UNLESS OTHERWISE SHOWN ON PLANS

D	OUTLET W/DITCH					OUTLET W/O DITCH				
	CLASS 'B' RIP RAP		CLASS I RIP RAP			CLASS 'B' RIP RAP		CLASS I RIP RAP		
	TONS	FILTER FABRIC SQ.YD.	S.Y.	TONS	FILTER FABRIC SQ.YD.	TONS	FILTER FABRIC SQ.YD.	S.Y.	TONS	FILTER FABRIC SQ.YD.
12"	2	5	5	2	5	1	4	2	1	4
15"	2	7	7	3	7	1	5	3	2	6
18"	3	10	9	4	10	2	7	4	2	8
24"	5	14	15	7	15	3	11	7	4	12
30"	8	21	21	11	22	5	16	11	7	17
36"	11	28	29	15	30	7	22	16	10	23
42"	15	37	39	20	39	10	28	22	13	30
48"	-	-	49	26	50	-	-	28	17	38
54"	-	-	60	33	62	-	-	36	21	47
60"	-	-	73	40	75	-	-	44	26	56
66"	-	-	87	48	89	-	-	54	32	67
72"	-	-	102	57	104	-	-	64	38	78

NOTE:
FOR CALCULATION PURPOSES
CLASS 'B' RIP RAP = 100 LBS./FT^3
CLASS I RIP RAP = 105 LBS./FT^3

GUIDE FOR RIP RAP AT PIPE OUTLETS
NCDOT STD 876.02

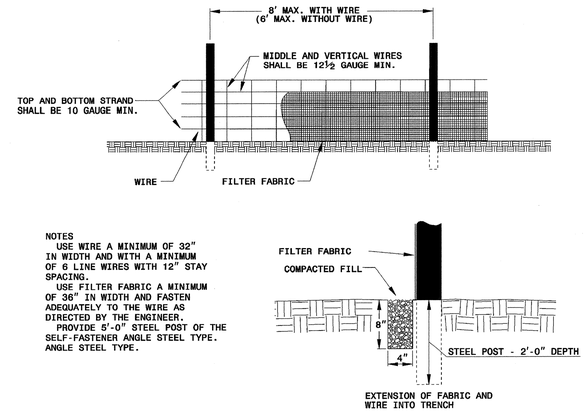

NOTES
USE WIRE A MINIMUM OF 32" IN WIDTH AND WITH A MINIMUM OF 6 LINE WIRES WITH 12" STAY SPACING.
USE FILTER FABRIC A MINIMUM OF 36" IN WIDTH AND FASTEN ADEQUATELY TO THE WIRE AS DIRECTED BY THE ENGINEER.
PROVIDE 5'-0" STEEL POST OF THE SELF-FASTENER ANGLE STEEL TYPE. ANGLE STEEL TYPE.

TEMPORARY SILT FENCE
NCDOT STD 1605.01

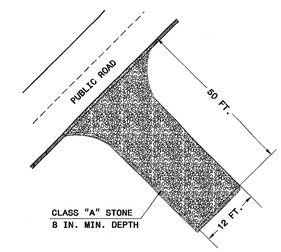

NOTES:
1. PROVIDE TURNING RADIUS SUFFICIENT TO ACCOMMODATE LARGE TRUCKS.
2. LOCATE ENTRANCE(S) TO PROVIDE FOR UTILIZATION BY ALL CONSTRUCTION VEHICLES.
3. MUST BE MAINTAINED IN A CONDITION WHICH WILL PREVENT TRACKING OR DIRECT FLOW OF MUD ONTO STREETS. PERIODIC TOPDRESSING WITH STONE WILL BE NECESSARY.
4. ANY MATERIAL TRACKED ONTO THE ROADWAY MUST BE CLEANED UP IMMEDIATELY.
5. LOCATE GRAVEL CONSTRUCTION ENTRANCE AT ALL POINTS OF INGRESS AND EGRESS UNTIL SITE IS STABILIZED. PROVIDE FREQUENT CHECKS OF THE DEVICE AND TIMELY MAINTENANCE.
6. NUMBER AND LOCATION OF CONSTRUCTION ENTRANCES TO BE DETERMINED BY THE ENGINEER.
7. USE CLASS 'A' STONE OR OTHER COARSE AGGREGATE APPROVED BY THE ENGINEER.

NOTE: PLACE FILTER FABRIC BENEATH STONE

GRAVEL CONSTRUCTION ENTRANCE
NCDOT STD 1607.01

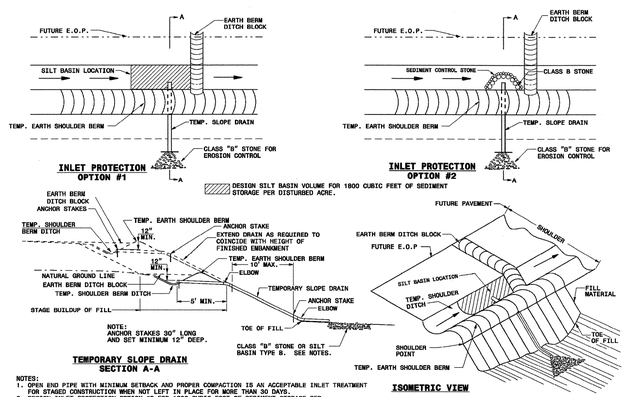

NOTES:
1. OPEN END PIPE WITH MINIMUM SETBACK AND PROPER COMPACTION IS AN ACCEPTABLE INLET TREATMENT FOR STAGED CONSTRUCTION WHEN NOT LEFT IN PLACE FOR MORE THAN 30 DAYS.
2. DESIGN INLET PROTECTION OPTION #2 FOR 1800 CUBIC FOOT OF SEDIMENT STORAGE PER DISTURBED ACRE.
3. DESIGN SILT BASINS WITH A 2:1 LENGTH TO WIDTH RATIO MINIMUM.
4. USE CLASS B STONE FOR EROSION CONTROL AT OUTLET LOCATIONS SUBJECT TO SCOURING. SILT BASINS AND/OR OTHER EROSION CONTROL DEVICES MAY ALSO BE UTILIZED TO PREVENT SCOUR AT OUTLET LOCATIONS.
5. USE MAXIMUM SLOPE DRAIN SPACING OF 200 FT.

GUIDE FOR SLOPE DRAINS
NCDOT STD. 1622.01

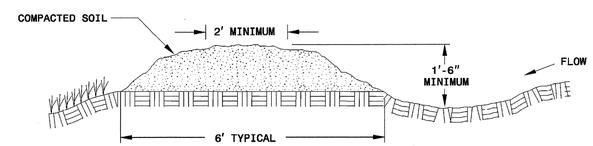

CROSS SECTIONAL VIEW

TEMP DIVERSION
NCDOT STD. 1630.05

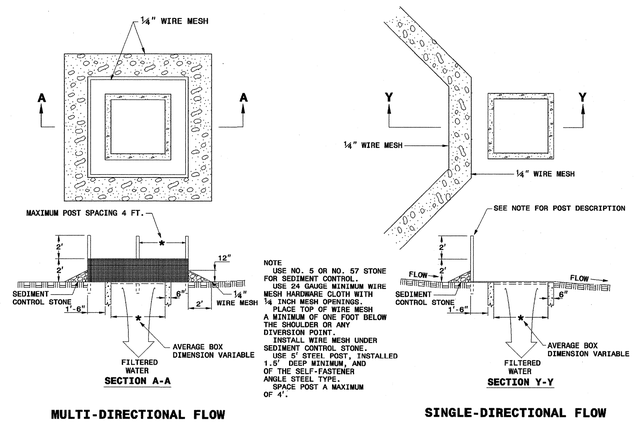

NOTE
USE NO. 5 OR NO. 57 STONE FOR SEDIMENT CONTROL.
USE 24 GAUGE MINIMUM WIRE MESH HARDWARE CLOTH WITH ¼ INCH MESH OPENINGS.
PLACE TOP OF WIRE MESH A MINIMUM OF ONE FOOT BELOW THE SHOULDER OR ANY DIVERSION POINT.
INSTALL WIRE MESH UNDER SEDIMENT CONTROL STONE.
USE 5' STEEL POST, INSTALLED 1.5' DEEP MINIMUM, AND OF THE SELF-FASTENER ANGLE STEEL TYPE.
SPACE POST A MAXIMUM OF 4'.

ROCK INLET SEDIMENT TRAP TYPE C
NCDOT STD 1632.03

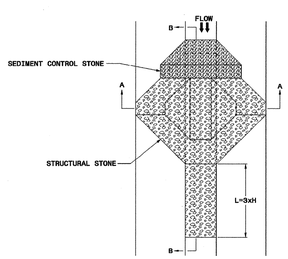

NOTE
USE CLASS 'B' EROSION CONTROL STONE FOR STRUCTURAL STONE.
USE NO. 5 OR NO. 57 STONE FOR SEDIMENT CONTROL.

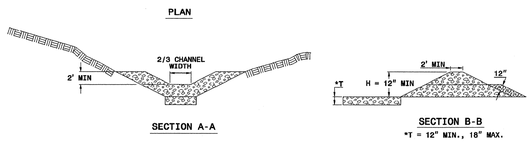

TEMP ROCK SILT CHECK TYPE 'A'
NCDOT STD 1633.01

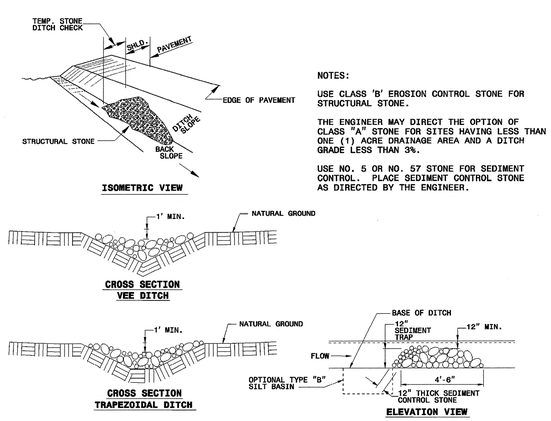

NOTES:

USE CLASS 'B' EROSION CONTROL STONE FOR STRUCTURAL STONE.

THE ENGINEER MAY DIRECT THE OPTION OF CLASS "A" STONE FOR SITES HAVING LESS THAN ONE (1) ACRE DRAINAGE AREA AND A DITCH GRADE LESS THAN 3%.

USE NO. 5 OR NO. 57 STONE FOR SEDIMENT CONTROL. PLACE SEDIMENT CONTROL STONE AS DIRECTED BY THE ENGINEER.

TEMP ROCK SILT CHECK TYPE 'B'
NCDOT STD 1633.02

Figure 6.03a Bulldozer treads create grooves perpendicular to the slope. The slope face should not be back-bladed during the final grading operation (source: Va SWCC).

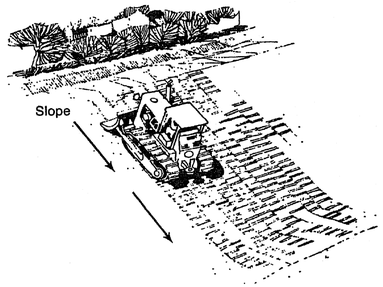

SURFACE ROUGHENING
NCDENR 6.03

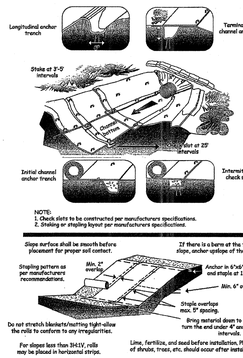

ROLLED SLOPE STABILIZATION MATTING
NCDENR 6.17

12/29/2011
r:\roadway\proj\ec\B4575_EC_psh03.dgn
stephesac

PROJECT REFERENCE NO.	SHEET NO.
B-4575	EC-4
R/W SHEET NO.	

HYDRAULICS ENGINEER

NORTH CAROLINA PROFESSIONAL SEAL 029388 ENGINEER EDWARD J. VANCE

12-29-11

STV / Ralph Whitehead Associates, Inc.
1000 West Morehead St. Ste. 200
Charlotte, NC 28208
NC License Number F-0991

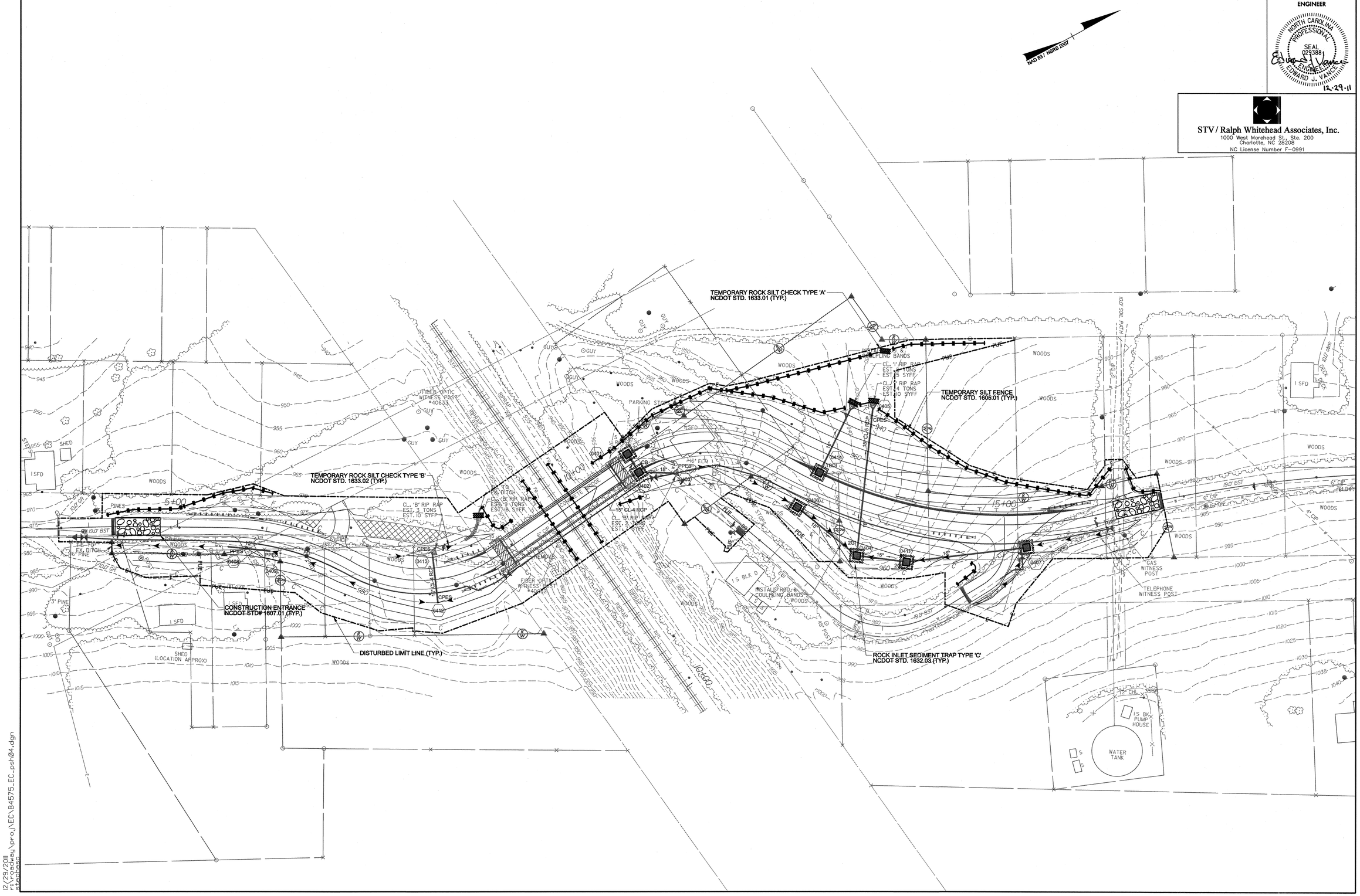

8/17/99

12/29/2011
r:\roadway\proj\EC\B4575_EC_psh04.dgn
stephesp

8/17/99

PROJECT REFERENCE NO.	SHEET NO.
B-4575	U-1
R/W SHEET NO.	

ROADWAY DESIGN ENGINEER

NORTH CAROLINA PROFESSIONAL SEAL 032599 ENGINEER JOSEPH A. FREEMAN

12-29-11

STV / Ralph Whitehead Associates, Inc.
1000 West Morehead St., Ste. 200
Charlotte, NC 28208
NC License Number F-0991

NAD 83 / NSRS 2007

Utility Owner Duke Energy No. 6+51 RT
Description Remove Pole Height ___ ft.
Attachment Heights ☒Duke Energy ___ ft. ☐Time Warner ___ ft. ☐A T & T ___ ft. ☐Other ___ ft. ☐Other ___ ft. ☐Other ___ ft.
Proposed Grade ___ ft. CUT ___ ft. FILL
Remarks Remove existing pole. Remove prior to project date of availability

Utility Owner Duke Energy No. 5+63 LT
Description Relocate Cl. 5 Pole Height ___ ft.
Attachment Heights ☒Duke Energy ___ ft. ☐Time Warner ___ ft. ☐A T & T ___ ft. ☐Other ___ ft. ☐Other ___ ft. ☐Other ___ ft.
Proposed Grade ___ ft. CUT ___ ft. FILL
Remarks Relocate 40/5 pole primary guy and anchor. Relocate prior to project date of availability

Utility Owner Duke Energy No. 5+16 LT
Description Proposed Cl. 5 Pole Height 40 ft.
Attachment Heights ☒Duke Energy ___ ft. ☐Time Warner ___ ft. ☐A T & T ___ ft. ☐Other ___ ft. ☐Other ___ ft. ☐Other ___ ft.
Proposed Grade ___ ft. CUT ___ ft. FILL
Remarks Proposed 40/5 pole primary guy and anchor location.

Utility Owner Duke Energy No. 8+77 RT
Description Remove Pole Height ___ ft.
Attachment Heights ☒Duke Energy ___ ft. ☐Time Warner ___ ft. ☐A T & T ___ ft. ☐Other ___ ft. ☐Other ___ ft. ☐Other ___ ft.
Proposed Grade ___ ft. CUT ___ ft. FILL
Remarks Remove existing pole and street light. Remove prior to project date of availability

Utility Owner Duke Energy No. 8+22 RT
Description Remove Pole Height ___ ft.
Attachment Heights ☒Duke Energy ___ ft. ☐Time Warner ___ ft. ☐A T & T ___ ft. ☐Other ___ ft. ☐Other ___ ft. ☐Other ___ ft.
Proposed Grade ___ ft. CUT ___ ft. FILL
Remarks Remove existing pole. Remove prior to project date of availability

Utility Owner Duke Energy No. 7+34 RT
Description Remove Pole Height ___ ft.
Attachment Heights ☒Duke Energy ___ ft. ☐Time Warner ___ ft. ☐A T & T ___ ft. ☐Other ___ ft. ☐Other ___ ft. ☐Other ___ ft.
Proposed Grade ___ ft. CUT ___ ft. FILL
Remarks Remove existing pole. Remove prior to project date of availability

Utility Owner Duke Energy No. 11+00 LT
Description Remove Pole Height ___ ft.
Attachment Heights ☒Duke Energy ___ ft. ☐Time Warner ___ ft. ☐A T & T ___ ft. ☐Other ___ ft. ☐Other ___ ft. ☐Other ___ ft.
Proposed Grade ___ ft. CUT ___ ft. FILL
Remarks Remove existing pole and street light

Utility Owner Duke Energy No. 10+84 LT
Description Remove Pole Height ___ ft.
Attachment Heights ☒Duke Energy ___ ft. ☐Time Warner ___ ft. ☐A T & T ___ ft. ☐Other ___ ft. ☐Other ___ ft.
Proposed Grade 3.26 ft. CUT ___ ft. FILL
Remarks Remove existing pole and street light.

Utility Owner Duke Energy No. 10+71 LT
Description Proposed Cl. 5 Pole Height 35 ft.
Attachment Heights ☒Duke Energy ___ ft. ☐Time Warner ___ ft. ☐A T & T ___ ft. ☐Other ___ ft. ☐Other ___ ft.
Proposed Grade ___ ft. CUT ___ ft. FILL
Remarks Proposed 35/5 pole and 6' arm for street light.

Utility Owner Duke Energy No. 11+89 LT
Description Proposed Cl. 4 Pole Height 45 ft.
Attachment Heights ☒Duke Energy ___ ft. ☐Time Warner ___ ft. ☐A T & T ___ ft. ☐Other ___ ft. ☐Other ___ ft.
Proposed Grade ___ ft. CUT ___ ft. FILL
Remarks Proposed 45/4 pole, primary guy & anchor and secondary guy & anchor.

Utility Owner Duke Energy No. 11+97 LT
Description Remove Pole Height ___ ft.
Attachment Heights ☒Duke Energy ___ ft. ☐Time Warner ___ ft. ☐A T & T ___ ft. ☐Other ___ ft. ☐Other ___ ft.
Proposed Grade ___ ft. CUT ___ ft. FILL
Remarks Remove existing pole

Utility Owner Duke Energy No. 13+55 RT
Description Proposed Cl. 5 Pole Height 40 ft.
Attachment Heights ☒Duke Energy ___ ft. ☐Time Warner ___ ft. ☐A T & T ___ ft. ☐Other ___ ft. ☐Other ___ ft.
Proposed Grade ___ ft. CUT ___ ft. FILL
Remarks Proposed 40/5 pole

Utility Owner Duke Energy No. 16+30 RT
Description Relocate Pole Height ___ ft.
Attachment Heights ☒Duke Energy ___ ft. ☐Time Warner ___ ft. ☐A T & T ___ ft. ☐Other ___ ft. ☐Other ___ ft.
Proposed Grade ___ ft. CUT ___ ft. FILL
Remarks Relocate existing pole primary guy and anchor.

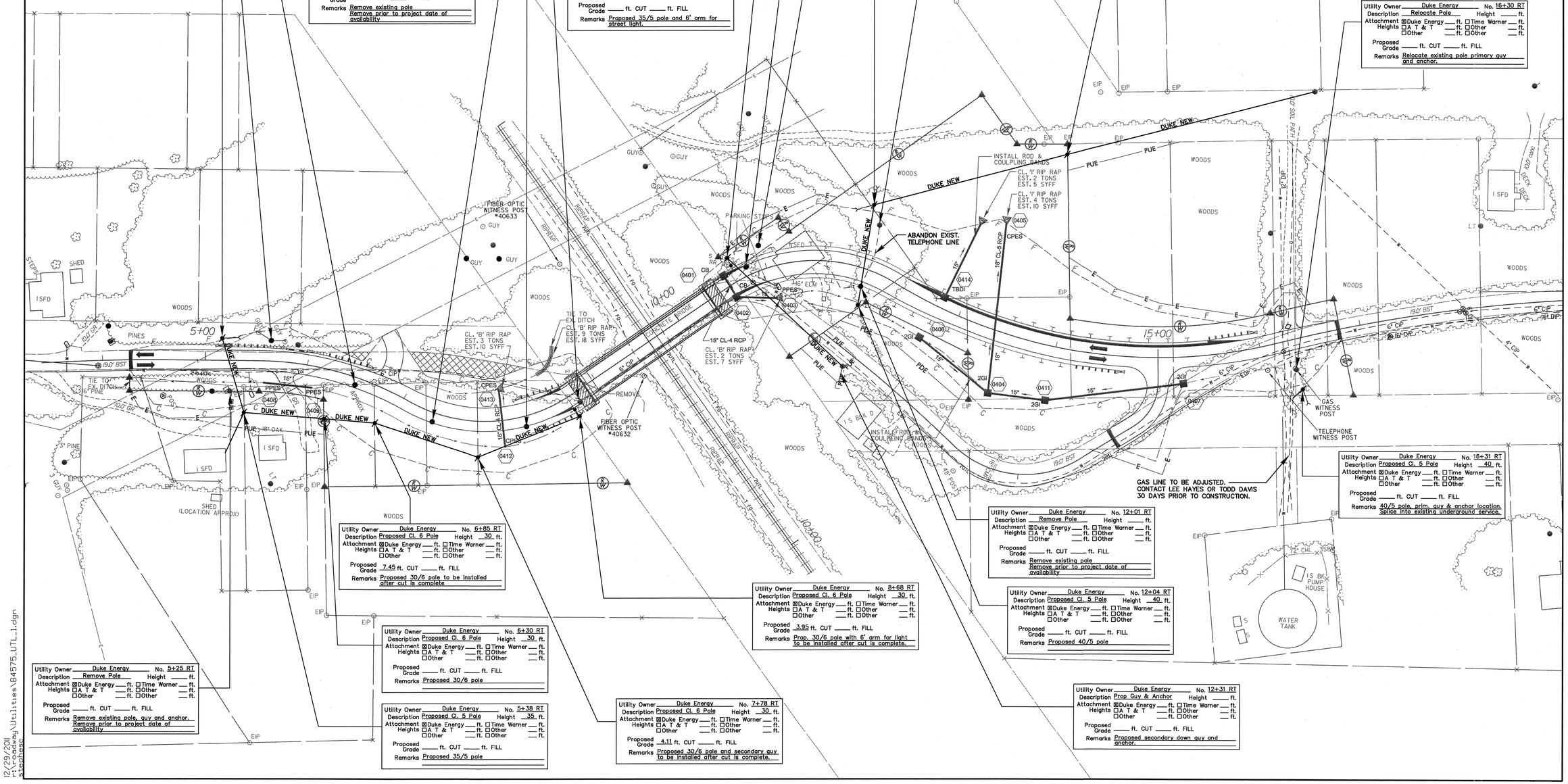

Utility Owner Duke Energy No. 6+85 RT
Description Proposed Cl. 6 Pole Height 30 ft.
Attachment Heights ☒Duke Energy ___ ft. ☐Time Warner ___ ft. ☐A T & T ___ ft. ☐Other ___ ft. ☐Other ___ ft. ☐Other ___ ft.
Proposed Grade 7.45 ft. CUT ___ ft. FILL
Remarks Proposed 30/6 pole to be installed after cut is complete

Utility Owner Duke Energy No. 12+01 RT
Description Remove Pole Height ___ ft.
Attachment Heights ☒Duke Energy ___ ft. ☐Time Warner ___ ft. ☐A T & T ___ ft. ☐Other ___ ft. ☐Other ___ ft. ☐Other ___ ft.
Proposed Grade ___ ft. CUT ___ ft. FILL
Remarks Remove existing pole. Remove prior to project date of availability

Utility Owner Duke Energy No. 16+31 RT
Description Proposed Cl. 5 Pole Height 40 ft.
Attachment Heights ☒Duke Energy ___ ft. ☐Time Warner ___ ft. ☐A T & T ___ ft. ☐Other ___ ft. ☐Other ___ ft. ☐Other ___ ft.
Proposed Grade ___ ft. CUT ___ ft. FILL
Remarks 40/5 pole, prim. guy & anchor location. Splice into existing underground service.

Utility Owner Duke Energy No. 8+68 RT
Description Proposed Cl. 6 Pole Height 30 ft.
Attachment Heights ☒Duke Energy ___ ft. ☐Time Warner ___ ft. ☐A T & T ___ ft. ☐Other ___ ft. ☐Other ___ ft. ☐Other ___ ft.
Proposed Grade 3.95 ft. CUT ___ ft. FILL
Remarks Prop. 30/6 pole with 6' arm for light to be installed after cut is complete.

Utility Owner Duke Energy No. 12+04 RT
Description Proposed Cl. 5 Pole Height 40 ft.
Attachment Heights ☒Duke Energy ___ ft. ☐Time Warner ___ ft. ☐A T & T ___ ft. ☐Other ___ ft. ☐Other ___ ft. ☐Other ___ ft.
Proposed Grade ___ ft. CUT ___ ft. FILL
Remarks Proposed 40/5 pole

Utility Owner Duke Energy No. 5+25 RT
Description Remove Pole Height ___ ft.
Attachment Heights ☒Duke Energy ___ ft. ☐Time Warner ___ ft. ☐A T & T ___ ft. ☐Other ___ ft. ☐Other ___ ft. ☐Other ___ ft.
Proposed Grade ___ ft. CUT ___ ft. FILL
Remarks Remove existing pole, guy and anchor. Remove prior to project date of availability

Utility Owner Duke Energy No. 6+30 RT
Description Proposed Cl. 6 Pole Height 30 ft.
Attachment Heights ☒Duke Energy ___ ft. ☐Time Warner ___ ft. ☐A T & T ___ ft. ☐Other ___ ft. ☐Other ___ ft. ☐Other ___ ft.
Proposed Grade ___ ft. CUT ___ ft. FILL
Remarks Proposed 30/6 pole

Utility Owner Duke Energy No. 5+38 RT
Description Proposed Cl. 5 Pole Height 35 ft.
Attachment Heights ☒Duke Energy ___ ft. ☐Time Warner ___ ft. ☐A T & T ___ ft. ☐Other ___ ft. ☐Other ___ ft. ☐Other ___ ft.
Proposed Grade ___ ft. CUT ___ ft. FILL
Remarks Proposed 35/5 pole

Utility Owner Duke Energy No. 7+78 RT
Description Proposed Cl. 6 Pole Height 30 ft.
Attachment Heights ☒Duke Energy ___ ft. ☐Time Warner ___ ft. ☐A T & T ___ ft. ☐Other ___ ft. ☐Other ___ ft. ☐Other ___ ft.
Proposed Grade 4.11 ft. CUT ___ ft. FILL
Remarks Proposed 30/6 pole and secondary guy to be installed after cut is complete.

Utility Owner Duke Energy No. 12+31 RT
Description Prop Guy & Anchor Height ___ ft.
Attachment Heights ☒Duke Energy ___ ft. ☐Time Warner ___ ft. ☐A T & T ___ ft. ☐Other ___ ft. ☐Other ___ ft. ☐Other ___ ft.
Proposed Grade ___ ft. CUT ___ ft. FILL
Remarks Proposed secondary down guy and anchor.

12/29/2011
R:\Roadway\Utilities\B4575_UTL_1.dgn
stephesc

8/17/99

PROJECT REFERENCE NO.	SHEET NO.
B-4575	W-1
R/W SHEET NO.	

HYDRAULICS ENGINEER

NORTH CAROLINA PROFESSIONAL SEAL 029388 ENGINEER EDWARD J. VANCE

Edward J. Vance

9-24-12

STV / Ralph Whitehead Associates, Inc.
1000 West Morehead St., Ste. 200
Charlotte, NC 28208
NC License Number F-0991

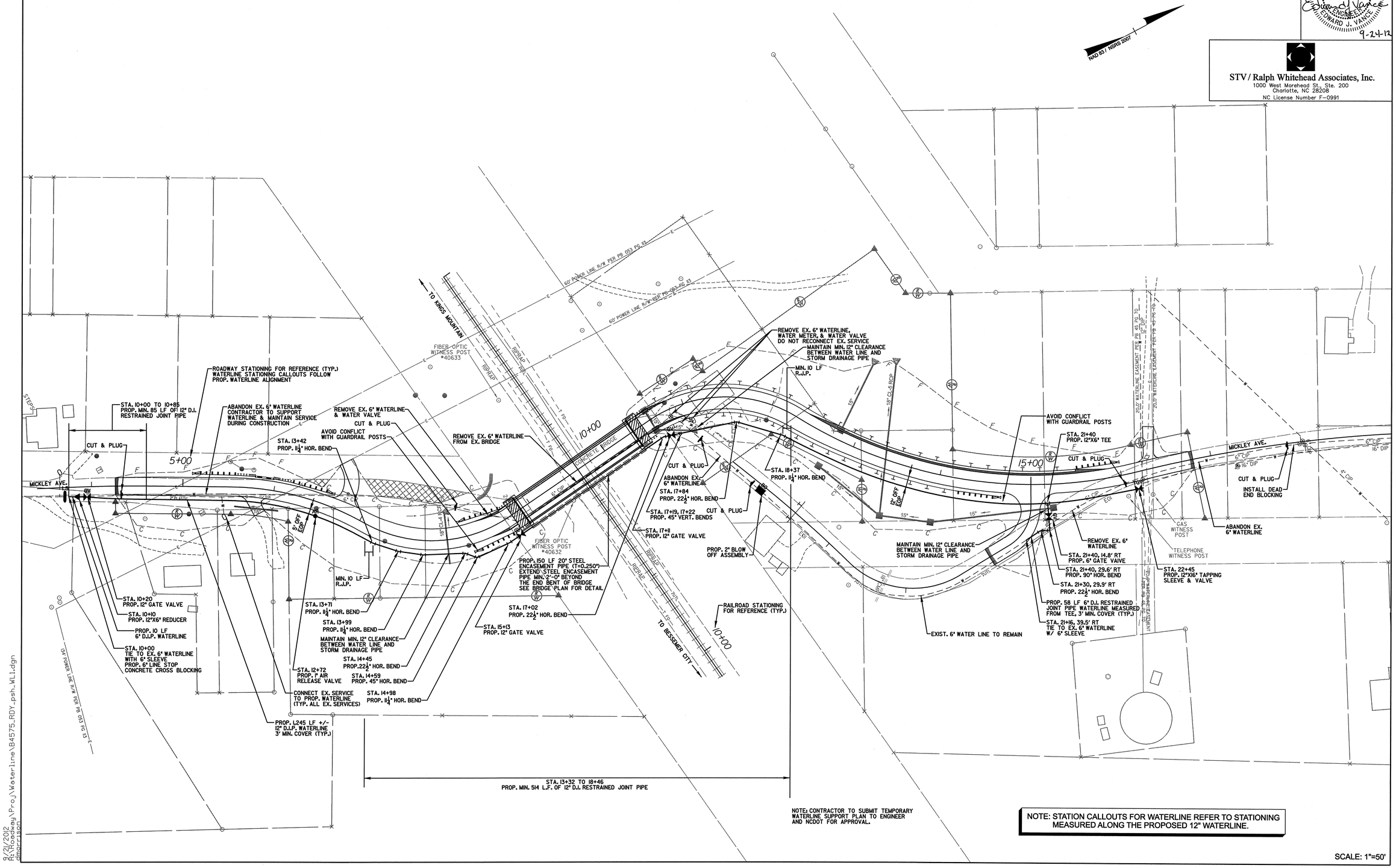

NOTE: STATION CALLOUTS FOR WATERLINE REFER TO STATIONING MEASURED ALONG THE PROPOSED 12" WATERLINE.

SCALE: 1"=50'

9/21/2012
R:\Roadway\Proj\Waterline\B4575_RDY_psh_WL1.dgn
dmorrison

STV / Ralph Whitehead Associates, Inc.
1000 West Morehead St., Ste. 200
Charlotte, NC 28208
NC License Number F-0991

PROJECT REFERENCE NO.	SHEET NO.
B-4575	W-2

HYDRAULICS ENGINEER

NORTH CAROLINA PROFESSIONAL SEAL 029388 ENGINEER EDWARD J. VANCE
9-24-12

-12"WATERLINE- MICKLEY AVE

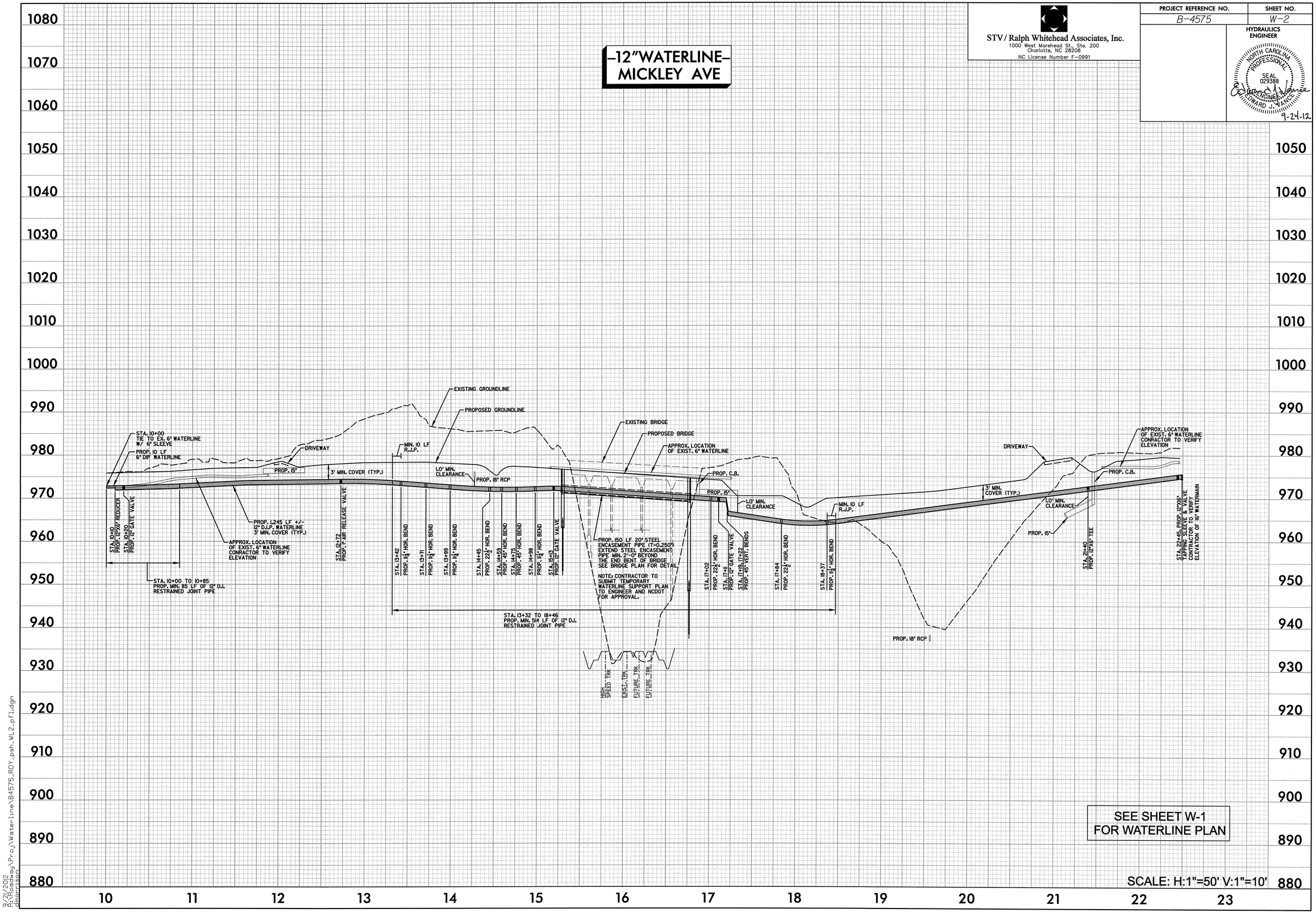

8/21/2012
R:\Hydraulics\Proj\Waterline\B4575_RDY_psh_WL2_pfl.dgn
dhorton

PROJECT REFERENCE NO.	SHEET NO.
B-4575	W-3
R/W SHEET NO.	

HYDRAULICS ENGINEER

NORTH CAROLINA PROFESSIONAL SEAL 029388 ENGINEER EDWARD J. VANCE 9-24-12

STV / Ralph Whitehead Associates, Inc.
1000 West Morehead St., Ste. 200
Charlotte, NC 28208
NC License Number F-0991

VALVE BOX ASSEMBLY INSTALLATION - 12" AND SMALLER VALVES

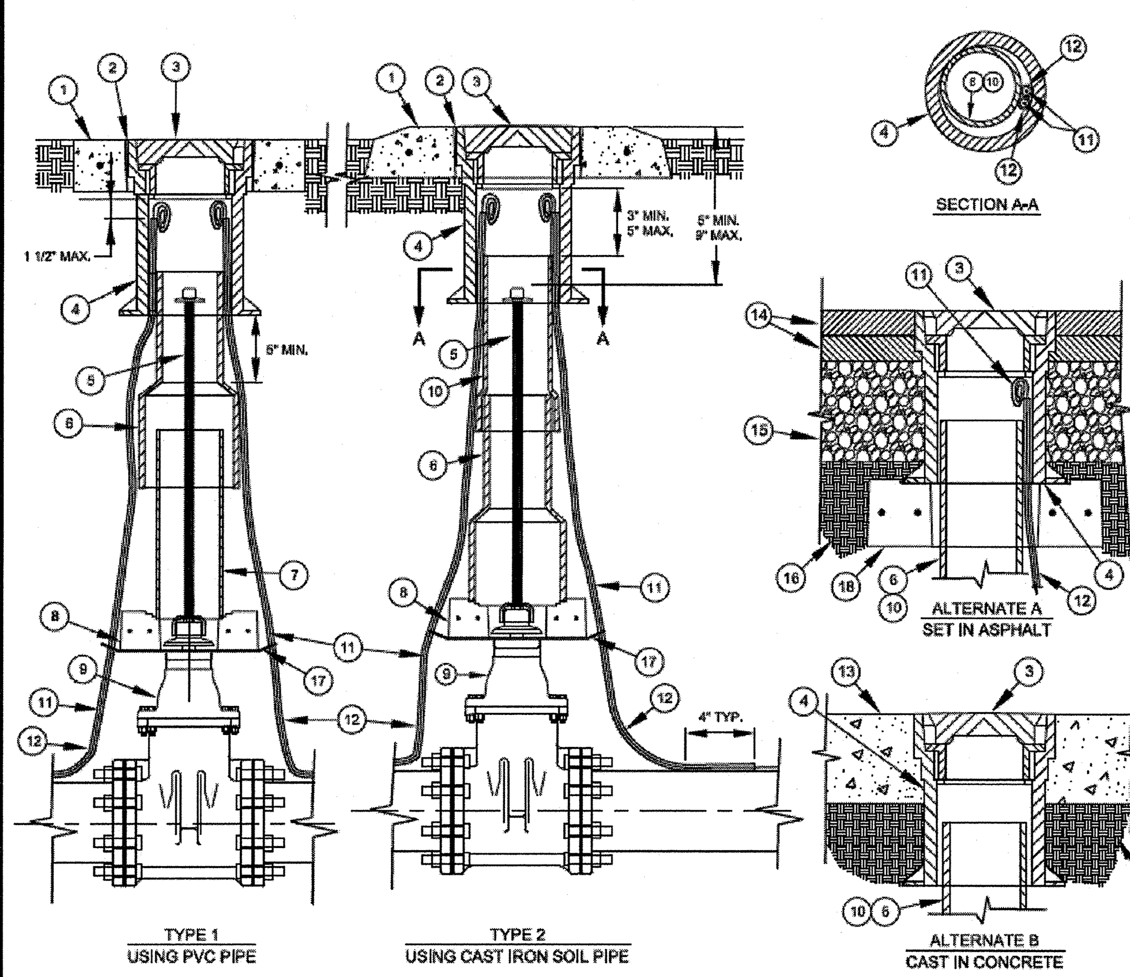

NO. DESCRIPTION
1. 18" x 18" PRECAST (OR CAST IN PLACE) CONCRETE PAD OR 24" DIAMETER PRECAST PAD.
2. NON - SHRINK GROUT - IN ANNULAR SPACE.
3. VALVE BOX COVER.
4. TOP SECTION VALVE BOX.
5. EXTENSION STEM AS REQUIRED. SEE NOTES
6. BOTTOM SECTION VALVE BOX.
7. 6" PVC PIPE (C900 OR SDR 26).
8. PRECAST CONCRETE FOOTING - TYPE II - SEE DETAIL.
9. GATE VALVE (OR BALL VALVE, AS APPLICABLE).
10. 5" DIA. CAST IRON SOIL PIPE - BELL OF PIPE WILL RECEIVE BOTTOM SECTION OF VALVE BOX.
11. AWG #12 GAUGE COPPER TRACER WIRE (THWN) WITH BLUE INSULATION, TERMINATE WITH 24 INCH EXCESS WIRE (COILED) AT METER BOX AND VALVE BOX (TYP.)
12. 1/4" OR 3/8" ID CONDUIT - SDR 9 PEX TUBING - ASTM F 876.
13. CONCRETE (ROADWAY, DRIVEWAY OR SIDEWALK)
14. ASPHALT PAVEMENT.
15. COMPACTED AGGREGATE BASE COURSE (CABC) OR ASPHALT BASE COURSE.
16. COMPACTED SUBGRADE.
17. NONWOVEN GEOTEXTILE FABRIC - 18" x 18" - 2 LAYERS - MIRAFI #140N OR CARTHAGE MILLS # FX - 40HS.
18. PRECAST CONCRETE FOOTING - TYPE I - SEE DETAIL.

NOTES:
A. CONCRETE FOOTING TO BE CENTERED OVER VALVE NUT, AND SHALL NOT BEAR ON VALVE BODY.
B. PROVIDE CLEARANCE BETWEEN VALVE FOOTING AND THE VALVE.
C. WHEN OPERATING NUT DEPTH EXCEEDS 3'-0" BELOW FINISHED GRADE, PROVIDE EXTENSION STEM WITH STANDARD 2" SQUARE OPERATING NUT IN TOP SECTION OF VALVE BOX. SEE STANDARD DETAIL.
D. VALVE BOX ASSEMBLY SHALL CONSIST OF NO MORE THAN 3 VERTICAL SECTIONS - 1 TOP SECTION, 1 - BOTTOM SECTION, AND 1 - PIPE RISER SECTION.
E. CONCRETE PADS SHALL NOT BE USED IN PAVEMENT (CONCRETE OR ASPHALT), SIDEWALKS OR DRIVEWAYS.

NO SCALE — STANDARD NO. HH — VERSION NO. V1.0 — VERSION DATE 1.14.2011
CHARLOTTE-MECKLENBURG UTILITIES — STANDARD DETAILS — WATER — CHARLOTTE

VALVE BOX - CONCRETE GRADE RINGS AND FOOTINGS (12" AND SMALLER VALVES - ONLY)

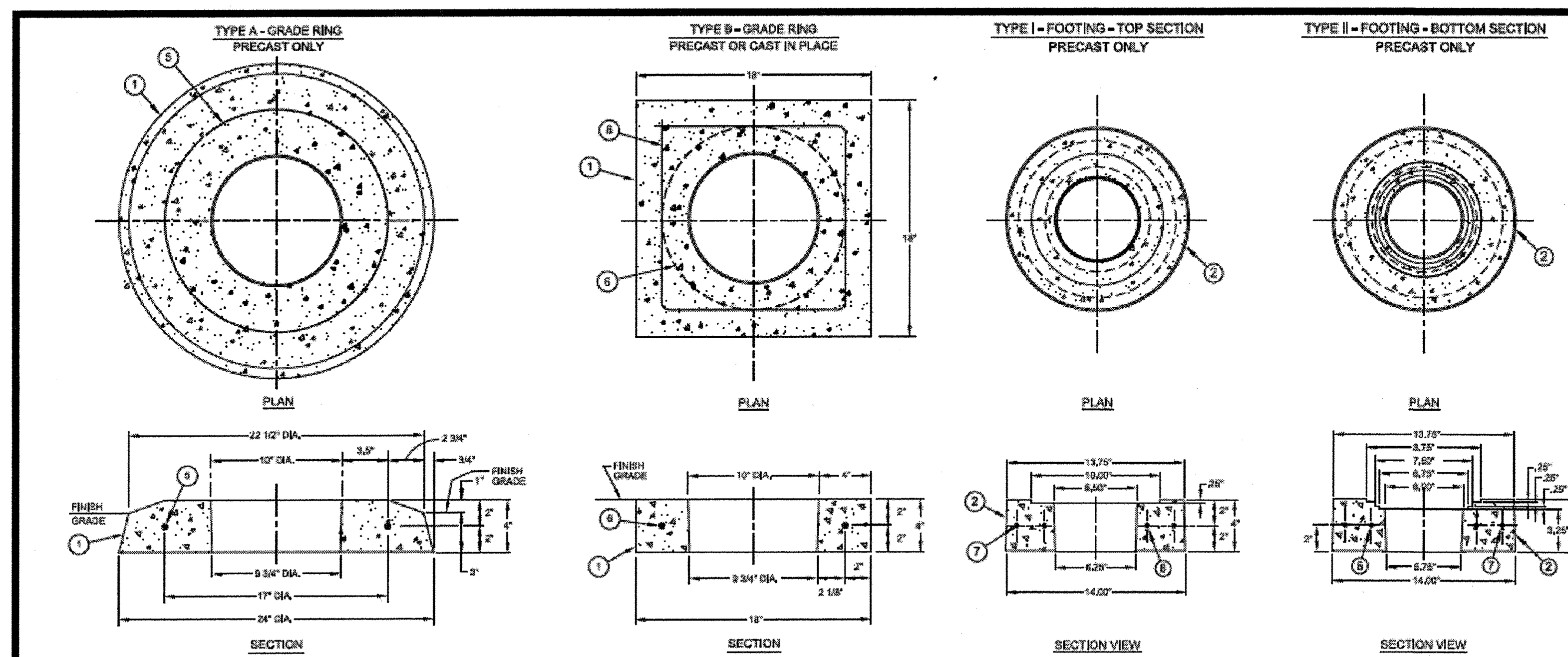

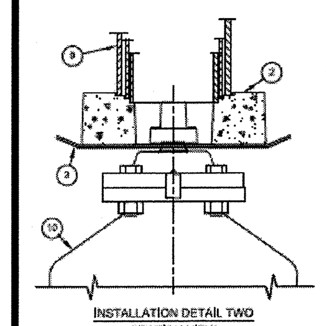

NO. DESCRIPTION
1. CONCRETE GRADE RING.
2. CONCRETE FOOTING.
3. NON WOVEN GEOTEXTILE FABRIC X 2 EACH.
4. SLIT IN FABRIC – 6 INCHES LONG, ROTATE 90 DEGREES IN SECOND LAYER OF FABRIC.
5. #4 REBAR – 17-INCH DIAMETER.
6. #4 REBAR – LENGTH = 56 INCHES, OR (ALTERNATE - 14-INCH DIAMETER).
7. #4 REBAR – 12-INCH DIAMETER.
8. #4 REBAR – 8-INCH DIAMETER.
9. VALVE BOX ASSEMBLY – (SHOWN LEFT TO RIGHT) – VALVE BOX BOTTOM SECTION, OR 6-INCH DIAMETER C900 PVC PIPE, OR 6-INCH DIAMETER SDR 26 PVC PIPE.
10. VALVE – 12-INCH OR SMALLER.
11. TOP SECTION OF VALVE BOX.

DESIGN REQUIREMENTS
a. CONCRETE – f'c = 4000 PSI (PRECAST), OR 3600 PSI (CAST-IN-PLACE).
b. STEEL REINFORCEMENT – REBARS – GRADE 60 (60,000 PSI) – ASTM A-615, OR WELDED WIRE FABRIC – ASTM A-185.
c. NON WOVEN GEOTEXTILE FABRIC – CARTHAGE MILLS #FX-40HS, MIRAFI #140N, OR APPROVED EQUAL.

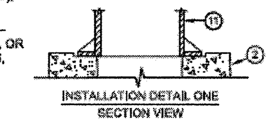

NOTES:
A. FOR PRECAST GRADE RINGS – FILL VOID BETWEEN GRADE RING AND CAST IRON VALVE BOX TOP SECTION WITH NON-SHRINK GROUT.
B. FOR CAST-IN-PLACE GRADE RINGS – TOP SECTION OF CAST IRON VALVE BOX SHALL BE CAST IN THE CONCRETE.
C. TYPE A GRADE RINGS SHALL BE REQUIRED ON ROAD SHOULDERS WITHOUT CURB.
D. TYPE I FOOTINGS SHALL BE REQUIRED IN NEW CONSTRUCTION WHEN THE CAST IRON VALVE BOX IS LOCATED DIRECTLY IN THE ASPHALT.
E. TYPE II FOOTINGS SHALL BE REQUIRED AT ALL VALVE INSTALLATIONS.
F. FOR INSTALLATION DETAIL TWO – ONLY ONE VALVE BOX ASSEMBLY (PART #9) SHALL BE REQUIRED. FOOTINGS SHALL NOT REST ON THE VALVE, AND SHALL BE CENTERED ON THE VALVE OPERATING NUT AS SHOWN.

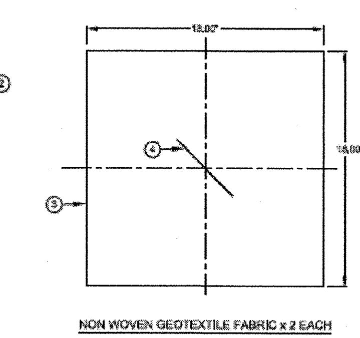

NO SCALE — STANDARD NO. MM — VERSION NO. V1.0 — VERSION DATE 11.2.2010
CHARLOTTE-MECKLENBURG UTILITIES — STANDARD DETAILS — WATER/SEWER/RECLAIM/CP — CHARLOTTE

DEAD END THRUST - WALL BLOCKING AND 2-INCH BLOW-OFF ASSEMBLY 6-INCH THROUGH 12-INCH MAINS

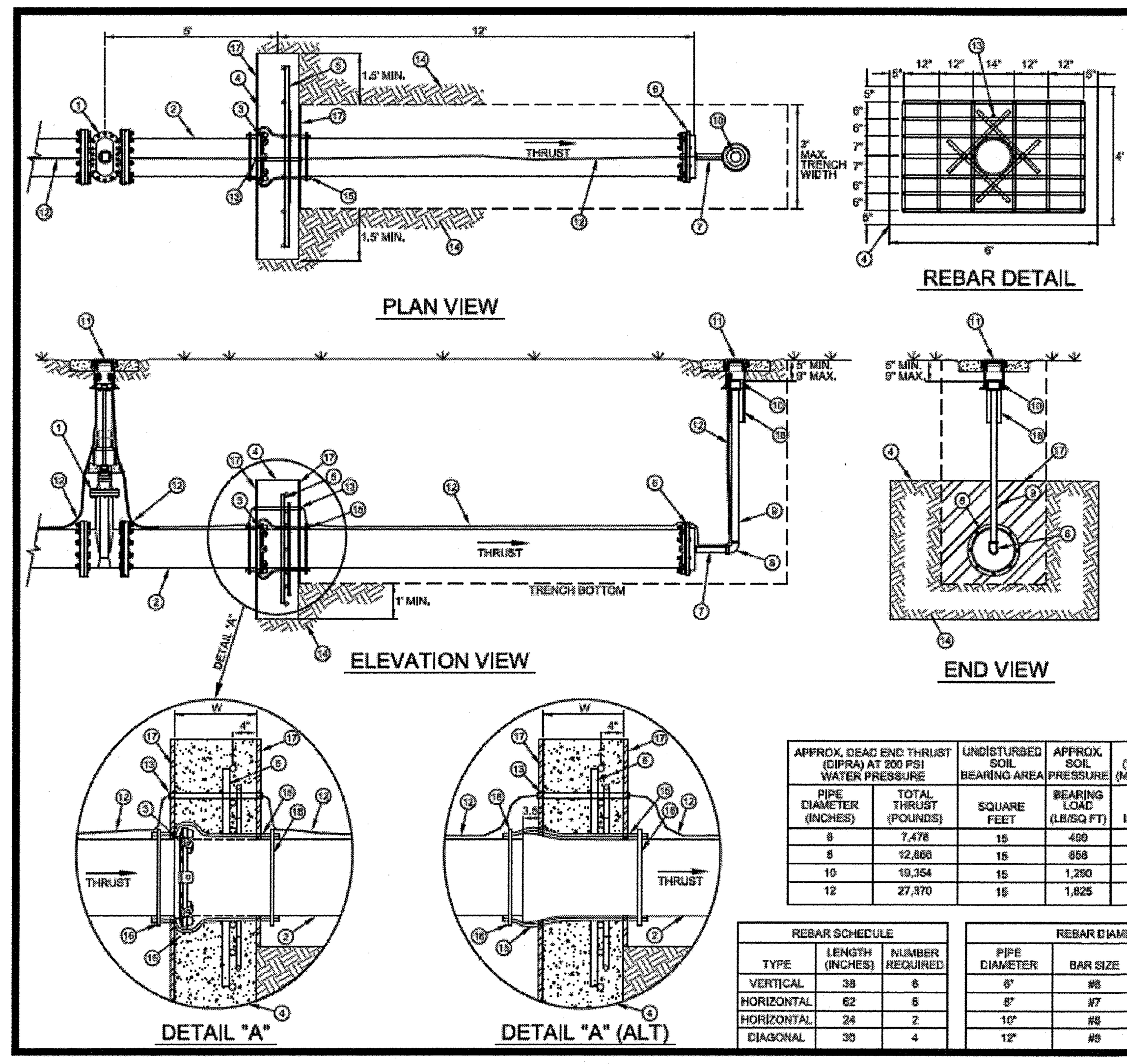

NO. DESCRIPTION
1 END OF LINE GATE VALVE (MJ X MJ)
2 DIP - (PE x PE) - REMOVE BELL - LENGTH = 17 FT - 19 FT
3 WEDGE ACTION THRUST RESTRAINT GLAND
4 CONCRETE WALL BLOCK (F'c = 3600 PSI MIN) 6 FT x 4 FT x WIDTH (W)
5 REBARS - GRADE 60 PER ASTM A615 - SEE REBAR SCHEDULES
6 MJ CAP - WITH WEDGE ACTION RESTRAINT GLAND, TAP 2" THREADED OUTLET (FNPT)
7 2" RED BRASS NIPPLE SCH 40 (MNPT x MNPT) - LENGTH = 12 INCH
8 2" RED BRASS 90° BEND (FNPT x FNPT)
9 2" RED BRASS NIPPLE SCH 40 (MNPT x MNPT) - LENGTH AS REQUIRED
10 2" GALVANIZED MALLEABLE IRON COUPLING (FNPT x FNPT)
11 STANDARD VALVE BOX ASSEMBLY - SEE DETAIL
12 AWG #12 GAUGE COPPER TRACER WIRE - WITH BLUE INSULATION (30MIL HDPE) TERMINATE WITH 24-INCH EXCESS WIRE (COILED) IN VALVE BOX (TYP.)
13 1" SCH 40 PVC ELECTRICAL CONDUIT - LENGTH AS REQUIRED
14 UNDISTURBED SOIL
15 HIGH DENSITY CROSS LAMINATED POLYETHYLENE FILM TUBE (HDCLPE) AWWA C105 - 4 MILS EACH x 2 LAYER - 8 MILS TOTAL
16 HDPE ADHESIVE TAPE OR HDPE ZIP LOCK TIES
17 PLYWOOD FORM
18 5" CAST IRON SOIL PIPE (L = 15") OR VALVE BOX BOTTOM SECTION

NOTES:
A. 12 - INCH MAINS REQUIRE THIS INSTALLATION.
B. 6 - INCH THROUGH 10 - INCH MAINS REQUIRE THIS INSTALLATION WHEN SOFT SOILS ARE ENCOUNTERED, OR WHEN REQUIRED BY THE ENGINEER.
C. WHEN DIRECTED BY THE ENGINEER, THE CONCRETE WALL BLOCK SIZE MAY BE ADJUSTED, BASED ON ACTUAL SOIL CLASSIFICATION AND PIPE DIAMETER.
D. FULLY RESTRAINED JOINT PIPE MAY BE USED IN LIEU OF THIS DETAIL - SEE RESTRAINED JOINT PIPE DETAILS.
E. ALTERNATE DETAIL "A" (USING A REVERSED BELL) MAY BE USED IN LIEU OF DETAIL "A".

NO. ALTERNATE DESCRIPTION
WHEN USING 2-INCH HDPE (IPS) BLOW-OFF PIPE WITH STAINLESS STEEL, BRASS OR BRONZE MNPT ENDS, USE THE FOLLOWING PRODUCTS:
7 2" SDR 9 HDPE (POLY) - IPS PIPE (MNPT x MNPT) - LENGTH AS REQUIRED - 12 - INCH MINIMUM.
9 2" SDR 9 HDPE (POLY) - IPS PIPE (MNPT x MNPT) - LENGTH AS REQUIRED.

APPROX. DEAD END THRUST (DIPRA) AT 200 PSI WATER PRESSURE		UNDISTURBED SOIL BEARING AREA	APPROX. SOIL PRESSURE	W (WIDTH) (MINIMUM)	CONCRETE VOLUME (APPROXIMATE)	
PIPE DIAMETER (INCHES)	TOTAL THRUST (POUNDS)	SQUARE FEET	BEARING LOAD (LB/SQ FT)	INCHES	FT³	CY
6	7,478	15	499	10	20	0.74
8	12,868	15	858	12	24	0.89
10	19,354	15	1,290	12	24	0.89
12	27,370	15	1,825	14	28	1.04

REBAR SCHEDULE

TYPE	LENGTH (INCHES)	NUMBER REQUIRED
VERTICAL	38	6
HORIZONTAL	62	6
HORIZONTAL	24	2
DIAGONAL	30	4

REBAR DIAMETER SCHEDULE

PIPE DIAMETER	BAR SIZE	TOTAL REBAR LENGTH (FT)	TOTAL REBAR WEIGHT (LB)
6"	#6	64	98
8"	#7	64	131
10"	#8	64	171
12"	#9	64	218

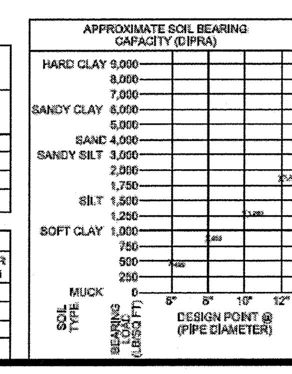

NO SCALE — STANDARD NO. DD — VERSION NO. 1.0 — VERSION DATE 8.23.2011
CHARLOTTE-MECKLENBURG UTILITIES — STANDARD DETAILS — WATER — CHARLOTTE

2-INCH BLOW OFF ASSEMBLY (DEAD END OF MAIN) WITH 2-INCH GATE VALVE 2-INCH THROUGH 12-INCH MAINS

6-INCH THROUGH 12-INCH WATER MAINS

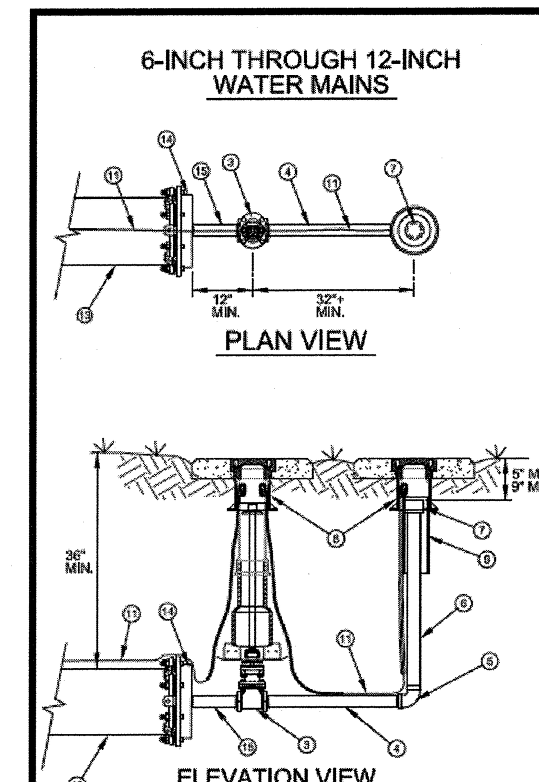

RESTRAINED PIPE LENGTH REQUIREMENTS:

PIPE DIAMETER (INCHES)	REQUIRED RESTRAINED LENGTH: BARE DIP (FEET)	POLYWRAPPED DIP (FEET)
6	189	242
8	219	312
10	284	377
12	309	441

DESIGN BASIS:
DIPRA "THRUST RESTRAINT DESIGN FOR DIP" VERSION 3.3 DATED 05/09/2003
LAYING CONDITION: TYPE 2
SOIL DESIGNATION: SILT 1
DEPTH OF COVER: 3.0 FT. MINIMUM
DESIGN PRESSURE: 200 PSI
SAFETY FACTOR: 2.0

2-INCH WATER MAINS

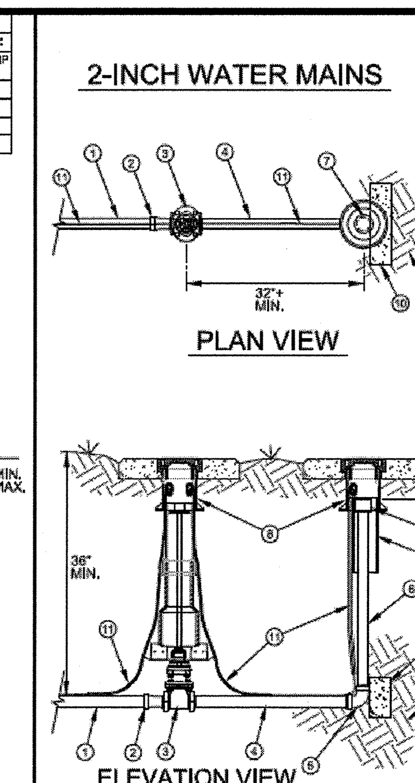

APPROX. DEAD END THRUST (DIPRA) AT 200 PSI WATER PRESSURE		UNDISTURBED SOIL BEARING AREA	APPROX. SOIL PRESSURE
PIPE DIAMETER (INCHES)	TOTAL THRUST (POUNDS)	SQUARE FEET	BEARING LOAD (LB/SQ FT)
2	724	0.89	813

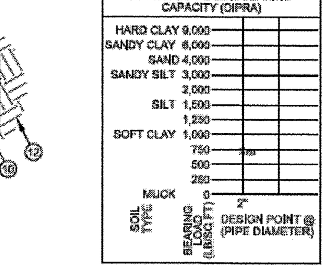

NO. DESCRIPTION
1 2-INCH DR 13.5 PVC WATER MAIN (IPS)
2 2-INCH D.I. FC 350 ADAPTOR (BELL x MNPT) - FUSION BONDED EPOXY - HARCO OR APPROVED EQUAL.
3 2-INCH GATE VALVE (FNPT x FNPT)
4 2-INCH RED BRASS NIPPLE - SCH 40 - (MNPT x MNPT), L = 30-INCH (MIN)
5 2-INCH RED BRASS 90° BEND (FNPT x FNPT)
6 2-INCH RED BRASS NIPPLE - SCH 40 - (MNPT x MNPT) - LENGTH AS REQUIRED
7 2-INCH THREADED COUPLING (FNPT x FNPT) - GALV. MALLEABLE IRON OR DUCTILE IRON (F.B.E.)
8 STANDARD VALVE BOX ASSEMBLY - SEE DETAIL
9 5-INCH CAST IRON SOIL PIPE, L = 15-INCHES, OR VALVE BOX BOTTOM SECTION
10 PRECAST CONCRETE SOLID BLOCK (16" x 8" x 4")
11 AWG #12 GAUGE COPPER TRACER WIRE WITH BLUE INSULATION (30MIL HDPE) - TERMINATE WITH 24-INCH EXCESS WIRE (COILED) IN VALVE BOX (TYP.)
12 UNDISTURBED OR COMPACTED SOIL - 100% STANDARD PROCTOR
13 DUCTILE IRON PIPE - RESTRAINED - LENGTH AS REQUIRED - SEE DETAIL
14 MJ CAP WITH WEDGE ACTION RESTRAINT GLAND, TAP 2-INCH THREADED OUTLET (FNPT)
15 2-INCH RED BRASS NIPPLE - SCH 40 (MNPT x MNPT), L = 12-INCH (MIN)

NO. ALTERNATE DESCRIPTION
WHEN USING 2-INCH SDR 9 HDPE (IPS) BLOW-OFF PIPE WITH STAINLESS STEEL, BRASS OR BRONZE MNPT ENDS, USE THE FOLLOWING PRODUCTS:
4 2-INCH SDR 9 HDPE (POLY) - IPS PIPE (MNPT x MNPT) - L = 30-INCH (MIN)
6 2-INCH SDR 9 HDPE (POLY) - IPS PIPE (MNPT x MNPT) - LENGTH AS REQ'D.
15 2-INCH SDR 9 HDPE (POLY) - IPS PIPE (MNPT x MNPT) - L = 12-INCH (MIN)

NO SCALE — STANDARD NO. NN — VERSION NO. 1.0 — VERSION DATE 8.23.2011
CHARLOTTE-MECKLENBURG UTILITIES — STANDARD DETAILS — WATER — CHARLOTTE

3/4" AND 1" DOMESTIC WATER SERVICE CONNECTION (K-1)

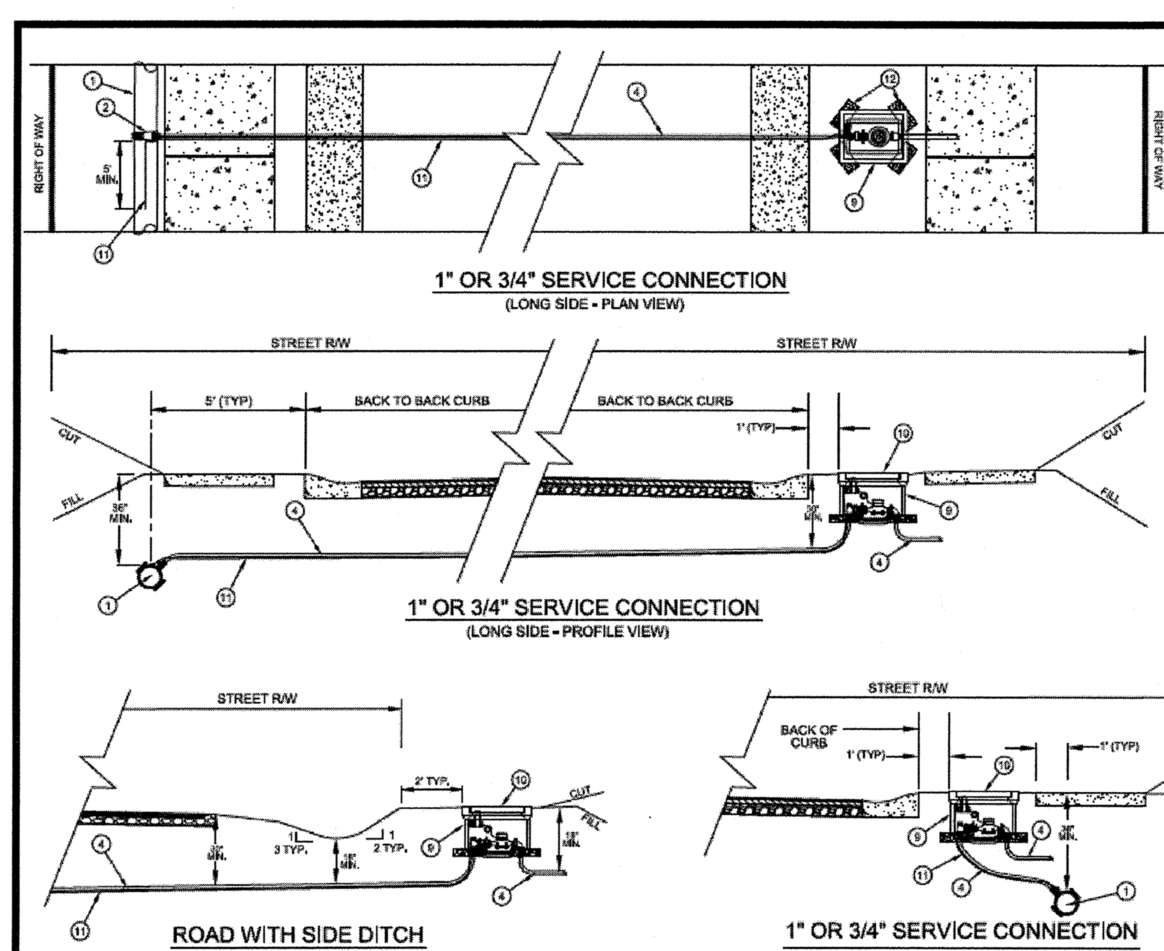

NO. DESCRIPTION
1 WATER MAIN
2 DOUBLE STRAP SERVICE SADDLE - CC (TAPER) THREAD OUTLET
3 BALL CORPORATION STOP - CC (TAPER) THREAD x CTS COMPRESSION
4 TYPE K COPPER TUBING OR SDR9 HDPE (POLY) TUBING WITH INSERT STIFFENERS
5 5/8" x 3/4" ANGLE BALL VALVE WITH LOCK WINGS - CTS COMPRESSION x YOKE STAR NUT
6 5/8" DUCTILE IRON YOKE BAR
7 5/8" METER ASSEMBLY (BY CMUD) WITH AMR TRANSMITTER
8 5/8" x 3/4" BRASS 90° YOKE STAR NUT x CTS COMPRESSION CONNECTOR
9 CONCRETE METER BOX - SEE STD. DETAILS
10 HDPE METER BOX LID WITH AMR TRANSMITTER BRACKETS
11 AWG #12 GAUGE COPPER TRACER WIRE (THWN) - WITH BLUE INSULATION - TERMINATE IN METER BOX WITH 24" EXCESS WIRE (COILED)
12 SOLID STANDARD CONCRETE BRICKS - DIAGONAL AT CORNERS - 4 EACH.

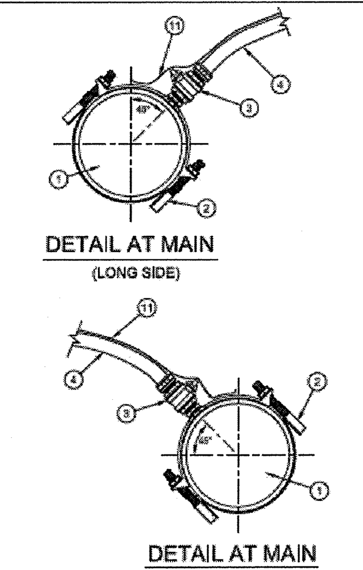

NOTE:
A. MIN. DISTANCE CENTER TO CENTER ON SERVICES OR TO BELLS OR SPIGOTS SHALL BE 3'-0" AS MEASURED ALONG THE MAIN.
B. CENTER ANGLE BALL VALVE - 90° CONNECTOR ((5) - (8)) IN METER BOX.
C. SHOWN AS 3/4" SERVICE, USE 1" COMPONENTS FOR 1" DOMESTIC WATER SERVICE.
D. TRACER WIRE IS NOT REQUIRED WITH ALL COPPER TUBING SERVICE.
E. WHEN METER BOX MUST BE PLACED IN CONCRETE, IT SHALL BE COMPLETELY IN, AND CENTERED IN CONCRETE PANEL, PER CDOT / NCDOT REQUIREMENTS.
F. CMUD MAINTENANCE ENDS WITH 90° CONNECTOR (8).

NO SCALE — STANDARD NO. K-1 — VERSION NO. 1.1 — VERSION DATE 6.13.2011
CHARLOTTE-MECKLENBURG UTILITIES — STANDARD DETAILS — WATER — CHARLOTTE

3/4" AND 1" DOMESTIC WATER SERVICE CONNECTION (K-2)

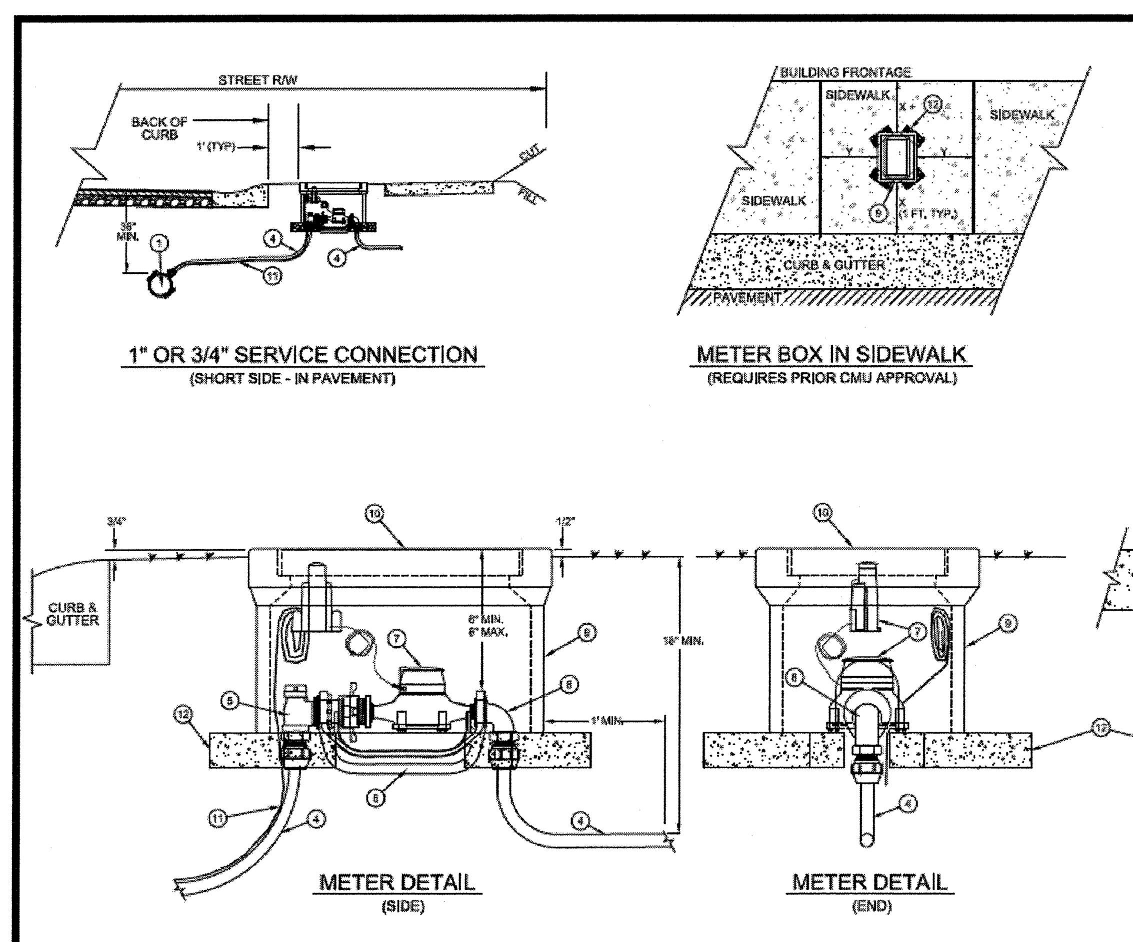

NO. DESCRIPTION
1 WATER MAIN
2 DOUBLE STRAP SERVICE SADDLE - CC (TAPER) THREAD OUTLET
3 BALL CORPORATION STOP - CC (TAPER) THREAD x CTS COMPRESSION
4 TYPE K COPPER TUBING OR SDR9 HDPE (POLY) TUBING WITH INSERT STIFFENERS
5 5/8" x 3/4" ANGLE BALL VALVE WITH LOCK WINGS - CTS COMPRESSION x YOKE STAR NUT
6 5/8" DUCTILE IRON YOKE BAR
7 5/8" METER ASSEMBLY (BY CMUD) WITH AMR TRANSMITTER
8 5/8" x 3/4" BRASS 90° YOKE STAR NUT x CTS COMPRESSION CONNECTOR
9 CONCRETE METER BOX - SEE STD. DETAILS
10 HDPE METER BOX LID WITH AMR TRANSMITTER BRACKET
11 AWG #12 GAUGE COPPER TRACER WIRE (THWN) - WITH BLUE INSULATION - TERMINATE IN METER BOX WITH 24" EXCESS WIRE (COILED)
12 SOLID STANDARD CONCRETE BRICKS - DIAGONAL AT CORNERS - 4 EACH.

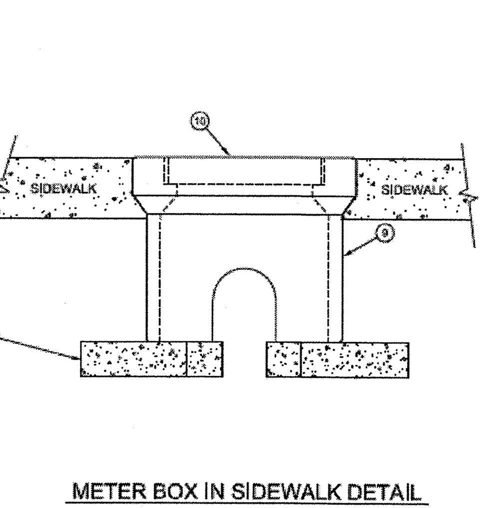

NOTE:
A. MIN. DISTANCE CENTER TO CENTER ON SERVICES OR TO BELLS OR SPIGOTS SHALL BE 3'-0" AS MEASURED ALONG THE MAIN.
B. CENTER ANGLE BALL VALVE - 90° CONNECTOR ((5) - (8)) IN METER BOX.
C. SHOWN AS 3/4" SERVICE, USE 1" COMPONENTS FOR 1" DOMESTIC WATER SERVICE.
D. TRACER WIRE IS NOT REQUIRED WITH ALL COPPER TUBING SERVICE.
E. WHEN METER BOX MUST BE PLACED IN CONCRETE, IT SHALL BE COMPLETELY IN, AND CENTERED IN CONCRETE PANEL, PER CDOT / NCDOT REQUIREMENTS.
F. CMUD MAINTENANCE ENDS WITH 90° CONNECTOR (8).

NO SCALE — STANDARD NO. K-2 — VERSION NO. 1.1 — VERSION DATE 6.13.2011
CHARLOTTE-MECKLENBURG UTILITIES — STANDARD DETAILS — WATER — CHARLOTTE

MANUAL AIR RELEASE

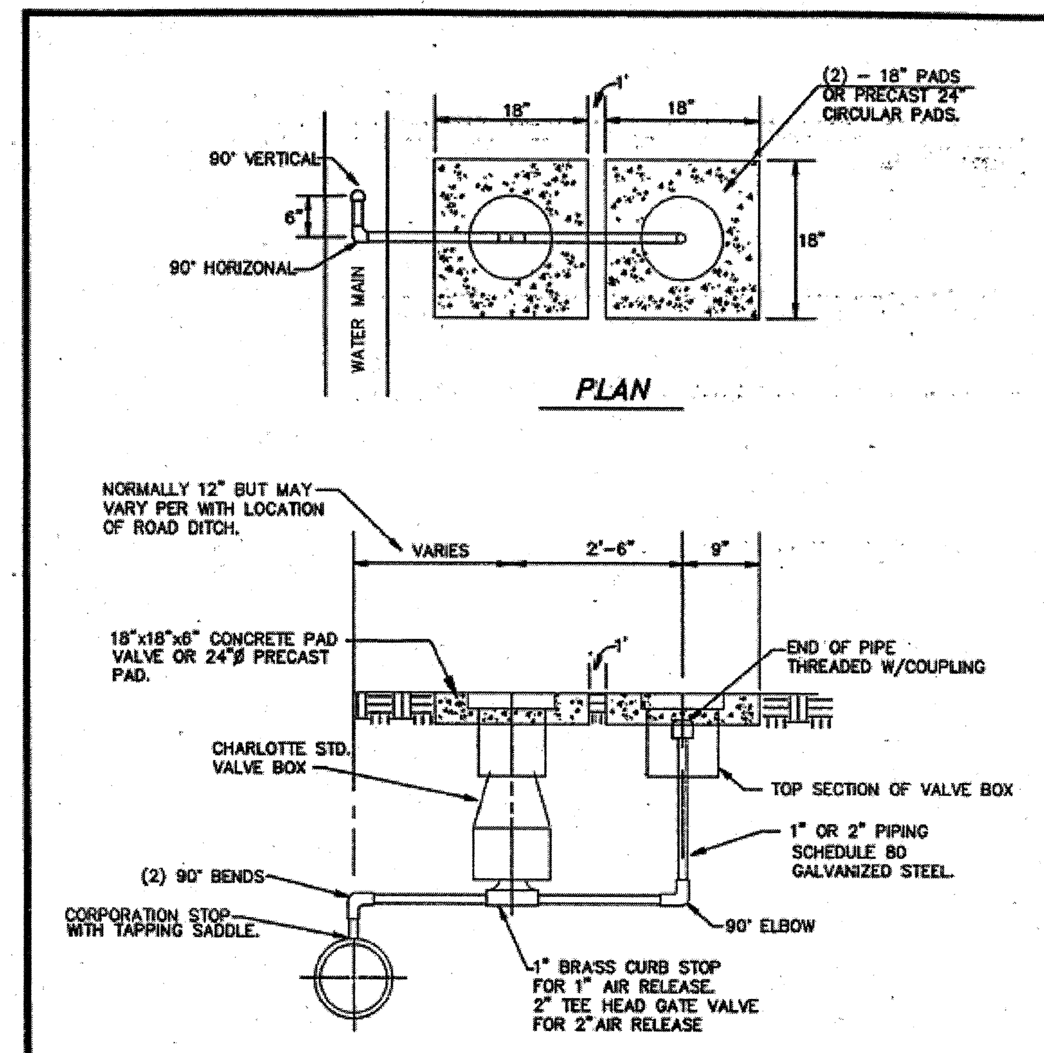

NOTES:
1. AIR VALVES TO BE INSTALLED AT ALL HIGH POINTS AS DIRECTED BY THE ENGINEER.
2. ON 12" PIPE & SMALLER, 1" ASSEMBLY REQUIRED.
3. ON 16" PIPE & LARGER, 2" ASSEMBLY REQUIRED.
4. VALVE & B.O. SHALL NOT BE PLACED IN ROAD DITCH.

CHARLOTTE–MECKLENBURG UTILITY DEPARTMENT
ENGINEERING DIVISION
CHARLOTTE, NORTH CAROLINA
STANDARD DETAIL WATER
MANUAL AIR RELEASE
Scales N.T.S. — Drawn By S.C. — Sheet 3