PROJECT REFERENCE NO.	SHEET NO.
B-4575	W-4
R/W SHEET NO.	

HYDRAULICS ENGINEER

NORTH CAROLINA PROFESSIONAL SEAL 029388 ENGINEER EDWARD J. VANCE

9-24-12

STV / Ralph Whitehead Associates, Inc.
1000 West Morehead St., Ste. 200
Charlotte, NC 28208
NC License Number F-0991

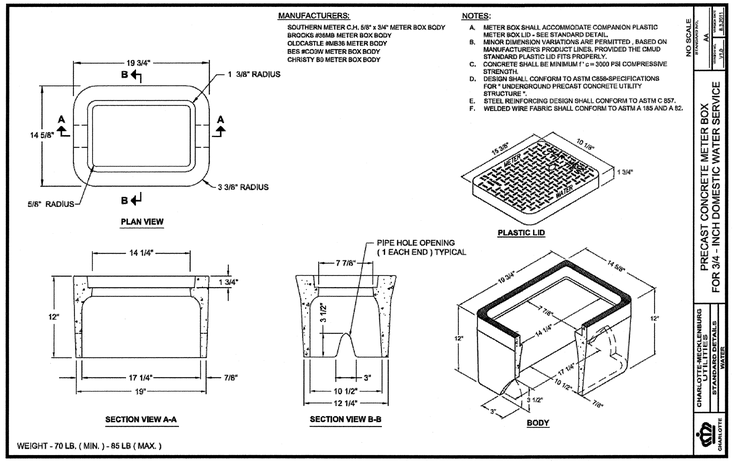

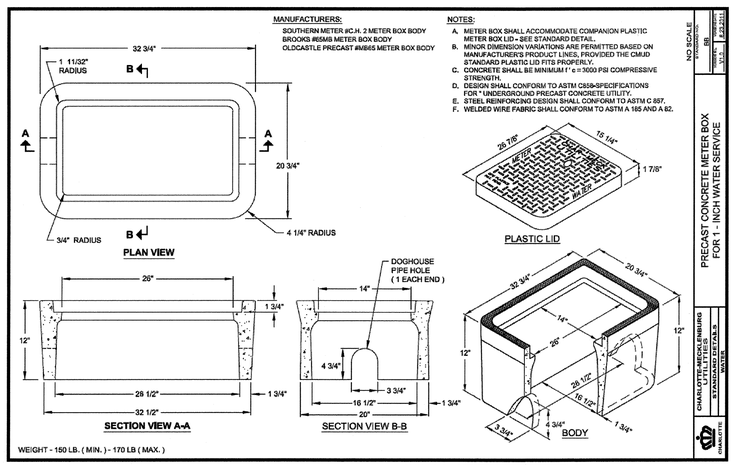

CONCRETE THRUST BLOCKING (HORIZONTAL)

PIPE DIA.	TEST PRESSURE	THRUST (T) AT FITTINGS IN POUNDS				
		TEE & DEAD ENDS	90 deg BEND	45 deg BEND	22.5 deg BEND	11.25 deg BEND
6"	200	5,656	7,996	4,328	2,208	1,108
12"	200	22,620	31,988	17,312	8,824	4,436

SOIL TYPE	SOIL BEARING CAPACITY (B) IN PSI
MUCK, PEAT, ETC.	0
SOFT CLAY	1,000
SAND	2,000
SAND & GRAVEL	3,000
SAND & GRAVEL CEMENTED W/ CLAY	4,000
HARD SHALE / ROCK	10,000

CONCRETE BLOCKING FOR CONVEX VERTICAL BENDS

PIPE DIA.	TEST PRESSURE	BEND ANGLE (deg)	CONCRETE VOLUME (cy)	CUBE SIZE (ft)	STIRRUP DIA. (in)	STIRRUP EMBMT. (in)	STIRRUP BAR #
6"	200	11.25	0.38	1.92	0.625	17	5
		22.5	0.76	2.40	0.625	17	5
		45	1.43	2.88	0.625	17	5
12"	200	11.25	1.55	2.96	0.625	17	5
		22.5	3.13	3.76	0.625	17	5
		45	5.51	4.56	0.875	24	7

DETERMINATION OF THRUST BLOCKING (HORIZONTAL) BLOCK BEARING AREA

1. DETERMINE THRUST (T) FOR TYPE OF FITTING OR JOINT AND SIZE OF PIPE FROM TABLE.
2. DETERMINE SOIL BEARING CAPACITY (B) FROM TABLE.
3. DETERMINE REQUIRED BEARING AREA (A) IN S.F. AS FOLLOWS.

A(min.) = 1.5 X (T/B)

EXAMPLE: PIPE = 12"
FITTING = 45deg BEND
SOIL = SAND & GRAVEL

A(min.) = 1.5 X (17,312/3,000) = 8.65 S.F.

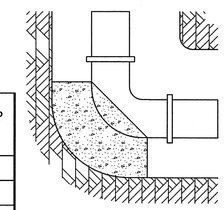

HORIZONTAL BEND

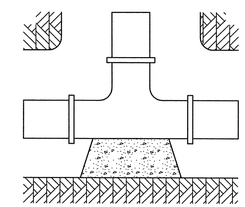

TEE

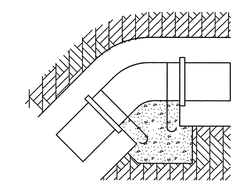

CONVEX VERTICAL BEND

CONCRETE BLOCKING LOCATIONS

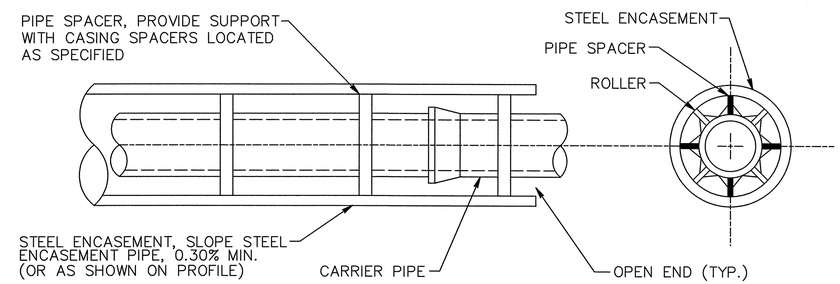

STEEL ENCASEMENT AND CARRIER PIPE

UTILITIES:

UTILITIES ARE ILLUSTRATED FOR INFORMATION PURPOSES ONLY. THE CITY WILL NOT BE HELD RESPONSIBLE FOR THE ACCURACY OF UTILITY LOCATIONS, SIZES, DEPTHS, OR FOR COMPLETENESS OF UTILITY INFORMATION.
PRIOR TO CONSTRUCTION, THE CONTRACTOR SHALL NOTIFY AND MEET WITH ALL UTILITY OWNERS, THE CITY UTILITY COORDINATOR AND CITY INSPECTOR WHOSE FACILITIES WILL BE AFFECTED TO DETERMINE UTILITY LOCATIONS. THE CONTRACTOR SHALL PROTECT ALL UTILITIES FROM DAMAGE CAUSED BY HIS OPERATIONS OR THOSE OF HIS AGENTS. THE CONTRACTOR SHALL HOLD THE CITY HARMLESS FOR ANY THIRD-PARTY INCONVENIENCE CREATED BY WORK OF HIS OWN FORCES OR THAT OF HIS AGENTS. ANY DAMAGES INCURRED SHALL BE THE CONTRACTORS FINANCIAL RESPONSIBILITY.
AS NEEDED, THE CONTRACTOR SHALL ADJUST/RELOCATE THE WATER LINES ONLY. ALL OTHER ADJUSTMENTS/RELOCATIONS WILL BE PERFORMED BY THE VARIOUS UTILITY OWNERS. THE CONTRACTOR SHALL COORDINATE WORK WITH UTILITY OWNERS SO AS NOT TO ADVERSELY AFFECT THE PROJECT SCHEDULE. THE CITY WILL NOT BE HELD RESPONSIBLE FOR ANY DELAYS OR DISRUPTIONS TO THE WORK SCHEDULE OF OTHER UTILITY OWNERS.

- FOR UTILITY LOCATES CALL NORTH CAROLINA ONE-CALL @ 1-800-632-4949.
- FOR LOCATIONS OF UTILITIES NOT MEMBERS OF NORTH CAROLINA ONE-CALL CONTACT PROJECT MANAGER & UTILITY COORDINATOR.

THE CONTRACTOR SHALL ADJUST ALL WATER VALVES, WATER METER BOXES AND WATER VAULTS TO FINISHED GRADE. WATER METERS LOCATED IN SIDEWALKS OR CONCRETE DRIVEWAYS SHALL BE INSTALLED WITHIN CONCRETE BOXES.

GAS LINES WILL BE ADJUSTED/RELOCATED AS NEEDED BY PIEDMONT NATURAL GAS. A REPRESENTATIVE OF PIEDMONT NATURAL GAS MUST BE PRESENT JUST PRIOR TO AND DURING CONSTRUCTION NEAR EXISTING GAS LINES, THE CONTRACTOR SHALL CONTACT PIEDMONT NATURAL GAS AT LEAST TWO WEEKS PRIOR TO CONSTRUCTION.

EXISTING SANITARY SEWER AND WATER LINE:

THE CONTRACTOR SHALL USE CARE WHEN WORKING AROUND SANITARY SEWERS AND WATER LINES. SHOULD THE CONTRACTOR DAMAGE EXISTING SEWER OR WATER LINES, HE SHALL IMMEDIATELY REPLACE THE LINE AT HIS EXPENSE WITH DUCTILE IRON PIPE. CONTRACTOR WILL PAY FOR ANY FINES ISSUED AS A RESULT OF DAMAGE TO WATER OR SEWER LINES BY THE CONTRACTOR. ANY DAMAGED PIPE SHALL BE REPORTED TO BESSEMER CITY IMMEDIATELY. ANY SEWER SPILLS SHALL BE REPORTED TO BESSEMER CITY IMMEDIATELY (LEE HAYES, 704-833-0390).

WATERLINE NOTES:

- CONTRACTOR TO CAREFULLY LOCATE, SUPPORT AND MAINTAIN EXISTING WATER MAINS WHERE EXPOSED.
- CONTRACTOR TO COORDINATE WITH ENGINEER AND BESSEMER CITY FOR WATERLINE VALVE SHUTOFF, CONSTRUCTION, AND TESTING. CUSTOMERS SHALL BE NOTIFIED AT LEAST 48 HOURS PRIOR TO WATER SHUTOFF.
- CONCRETE THRUST BLOCKING SHALL BE INSTALLED AT ALL TEES, BENDS, AND OTHER APURTENANCES THAT REQUIRE IT AS SHOWN ON THE BLOCKING DETAIL.
- THE PROPOSED WATERLINES MUST HAVE 3 FEET OF COVER MEASURED FROM THE TOP OF THE PIPE TO THE GROUND SURFACE.
- TYPE 1 - SHAPED BOTTOM BEDDING SHALL BE USED SUCH THAT THE PIPE BEARS UNIFORMLY UPON UNDISTURBED NATIVE EARTH. SOIL IS THEN BACKFILLED BY HAND AROUND THE PIPE AND COMPLETELY UNDER THE PIPE HAUNCHES IN UNIFORM LAYERS NOT EXCEDDING 6 INCHES IN DEPTH TO AN ELEVATION 1 FOOT ABOVE THE TOP OF THE PIPE BELL. EACH LAYER SHALL BE PLACED; THEN CAREFULLY AND UNIFORMLY TAMPED SO THAT THE PIPE IS NOT DAMAGED NOR THE ALIGNMENT DISTURBED.
  TYPE 2 - GRANULAR MATERIAL EMBEDMENT SHALL BE USED WHERE POOR, WET, ROCKY AND OR MUCKY SOIL EXISTS OR AS DIRECTED BY THE ENGINEER. THE TRENCH BOTTOM SHALL BE UNDERCUT A MINIMUM OF 6 INCHES BELOW THE PIPE BARREL GRADE AND FILLED WITH #67 STONE TO AN ELEVATION SUCH THAT THE PIPE WILL BE COMPLETELY AND UNIFORMLY BEDDED TO A VERTICAL HEIGHT OF ONE-THIRD THE OUTSIDE DIAMETER OF THE PIPE FOR THE PIPE'S ENTIRE LENGTH AND THE ENTIRE WIDTH OF THE TRENCH.
- CONTRACTOR SHALL INSPECT, TEST AND DISINFECT WATER MAINS ACCORDING TO THE CONTRACT SPECIFICATIONS AND THE SUPERVISION OF BESSEMENR CITY.

STEEL ENCASEMENT PIPE:

- STEEL CASING PIPE SHALL BE WELDED OR SEAMLESS CONSISTING OF GRADE 'B' STEEL AS SPECIFIED IN ASTM A-139.
- MINIMUM YIELD STRENGTH SHALL BE 35,000 PSI; AND PIPE THICKNESS SHALL BE AS SPECIFIED ON PLAN.
- ALL STEEL ENCASEMENT PIPE SHALL BE FINISHED WITH BEVELED ENDS PREPARED FOR FIELD WELDING OF CIRCUMFERENTIAL JOINTS. ALL BASE AT PIPE ENDS SHALL BE REMOVED.
- STEEL ENCASEMENT PIPE MUST BE APPROVED BY THE APPROPRIATE CONTROLLING AGENCY (NCDOT, NORFOLK-SOUTHERN RAILROAD, ETC.) AND THE ENGINEER PRIOR TO ORDERING.
- STEEL ENCASEMENT SHALL HAVE AN INSIDE DIAMETER LARGE ENOUGH TO FACILITATE CARRIER PIPE TYPE, BELLS AND PIPE SPACERS. STEEL ENCASEMENT SHALL EXTEND 2' MINIMUM DISTANCE PAST END BENT OF BRIDGE.
- PIPE SPACER SHALL BE IN ACCORDANCE WITH CARRIER PIPE MANUFACTURER'S RECOMMENDATIONS.

8/17/99
9/21/2012
H:\Roadway\Proj\Waterline\B4575_RDY.psh, WL4_Details.dgn

F.A PROJECT NO. BRZ-1202 (1)

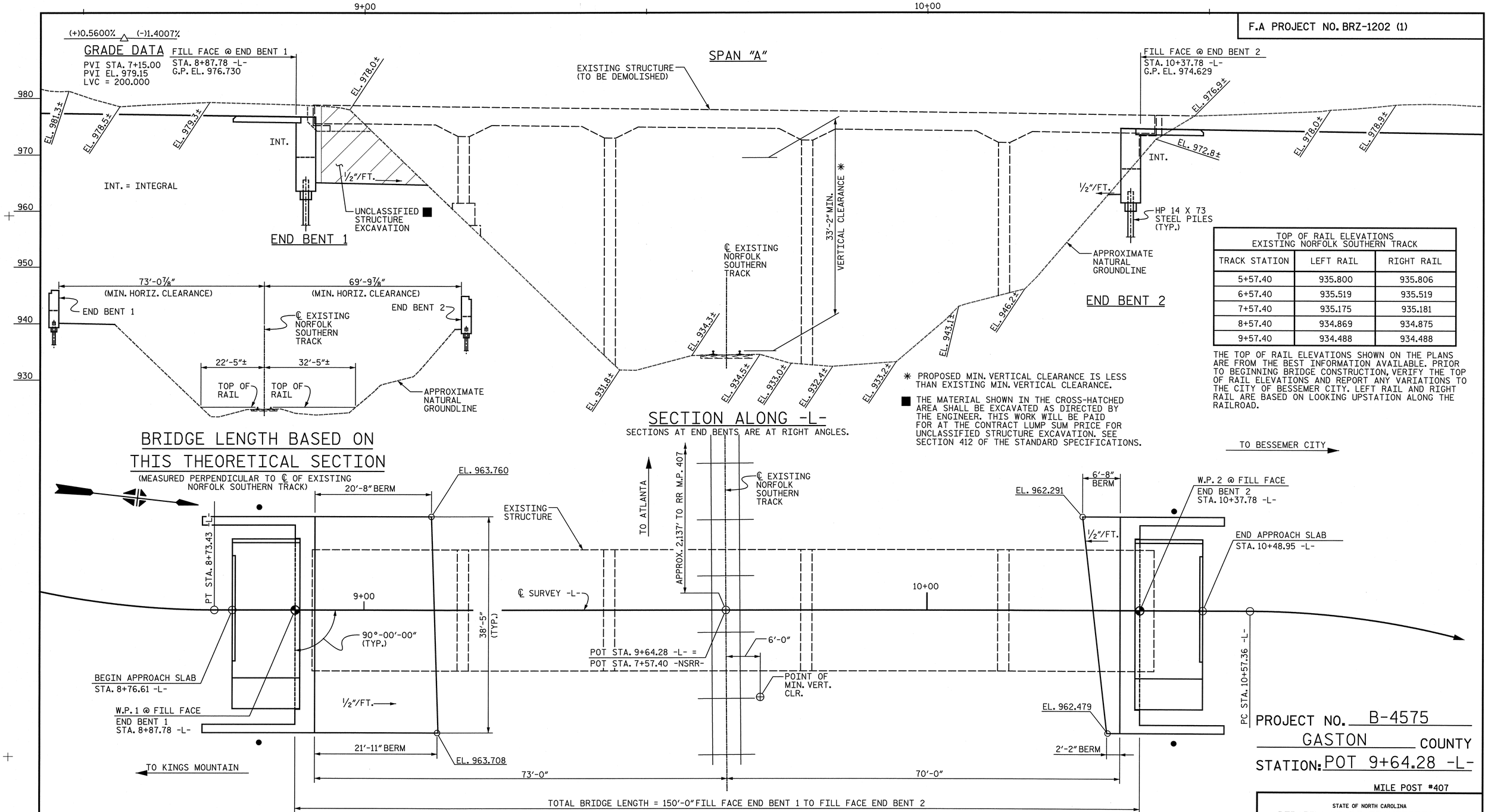

TOP OF RAIL ELEVATIONS EXISTING NORFOLK SOUTHERN TRACK		
TRACK STATION	LEFT RAIL	RIGHT RAIL
5+57.40	935.800	935.806
6+57.40	935.519	935.519
7+57.40	935.175	935.181
8+57.40	934.869	934.875
9+57.40	934.488	934.488

THE TOP OF RAIL ELEVATIONS SHOWN ON THE PLANS ARE FROM THE BEST INFORMATION AVAILABLE. PRIOR TO BEGINNING BRIDGE CONSTRUCTION, VERIFY THE TOP OF RAIL ELEVATIONS AND REPORT ANY VARIATIONS TO THE CITY OF BESSEMER CITY. LEFT RAIL AND RIGHT RAIL ARE BASED ON LOOKING UPSTATION ALONG THE RAILROAD.

* PROPOSED MIN. VERTICAL CLEARANCE IS LESS THAN EXISTING MIN. VERTICAL CLEARANCE.

■ THE MATERIAL SHOWN IN THE CROSS-HATCHED AREA SHALL BE EXCAVATED AS DIRECTED BY THE ENGINEER. THIS WORK WILL BE PAID FOR AT THE CONTRACT LUMP SUM PRICE FOR UNCLASSIFIED STRUCTURE EXCAVATION. SEE SECTION 412 OF THE STANDARD SPECIFICATIONS.

● FOR APPROXIMATE LIMITS OF UNCLASSIFIED EXCAVATION IN THESE AREAS, SEE SHEET TITLED "SLOPE PROTECTION."

PROJECT NO. B-4575
GASTON COUNTY
STATION: POT 9+64.28 -L-

MILE POST #407

STATE OF NORTH CAROLINA
DEPARTMENT OF TRANSPORTATION
RALEIGH

GENERAL DRAWING FOR BRIDGE NO. 165 ON MICKLEY AVENUE OVER NORFOLK SOUTHERN RAILROAD

NORTH CAROLINA PROFESSIONAL SEAL 028473 ENGINEER BRIAN QUIER
09-20-12

STV / Ralph Whitehead Associates, Inc.
1000 West Morehead St., Ste. 200
Charlotte, NC 28208
NC License No. F-0991

REVISIONS						
NO.	BY:	DATE:	NO.	BY:	DATE:	
1			3			
2			4			

SHEET NO. S-1
TOTAL SHEETS 30

DRAWN BY : TBQ, LGH, VJE DATE : 02-11
CHECKED BY : MLO, DBO DATE : 02-11

9/20/2012
N:\PROJ\2994\ustation\struct\Final\2nd Revised Submittal\(01)plan and elevation.dgn

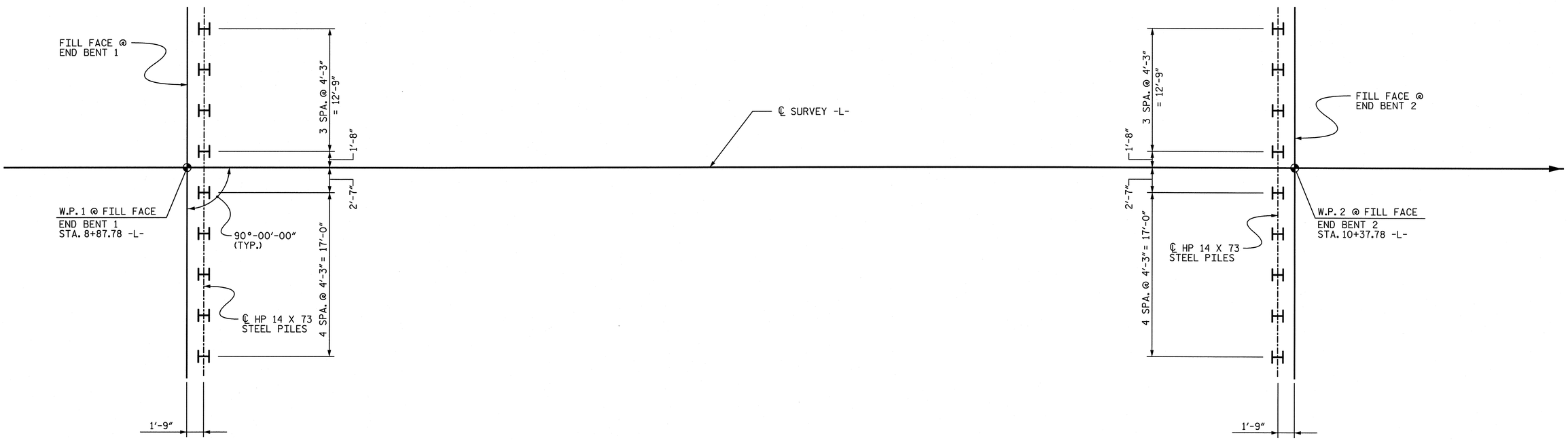

FOUNDATION LAYOUT

ALL PILES SHALL BE HP 14 X 73 STEEL PILES.

DIMENSIONS TO PILES ARE TO ℄ OF PILE.

NOTES

FOR PILES, SEE PILES PROVISIONS.

PILES AT END BENTS 1 AND 2 ARE DESIGNED FOR A FACTORED RESISTANCE OF 86 TONS PER PILE. DRIVE PILES AT END BENTS 1 AND 2 TO A REQUIRED DRIVING RESISTANCE OF 135 TONS PER PILE.

PREDRILL PILE LOCATIONS AT END BENTS 1 AND 2 TO ELEVATION 928.2 FT. WITH EQUIPMENT THAT WILL RESULT IN A MAXIMUM PREDRILLING DIAMETER OF 26 INCHES. FOR PREDRILLING FOR PILES, SEE PILES PROVISIONS.

STEEL H-PILE POINTS ARE REQUIRED FOR H-PILES AT END BENTS 1 AND 2. FOR STEEL PILE POINTS, SEE PILES PROVISIONS.

IF REFUSAL IS ENCOUNTERED DURING PREDRILLING BEFORE REACHING THE REQUIRED DRILLING DEPTH, THE ENGINEER SHOULD BE CONTACTED FOR A DETERMINATION OF ACCEPTABILITY.

AFTER THE PREDRILL HOLE IS COMPLETED, THE PILE SHOULD BE SUPPORTED AND CENTERED IN THE HOLE AND DRIVEN TO THE REQUIRED DRIVING RESISTANCE.

AFTER DRIVING THE PILE TO THE TERMINAL DRIVING RESISTANCE, THE HOLES SHOULD BE FILLED WITH EITHER CONCRETE OR FLOWABLE FILL.

TESTING PILES WITH THE PILE DRIVING ANALYZER (PDA) DURING DRIVING, RESTRIKING, OR REDRIVING MAY BE REQUIRED. THE ENGINEER WILL DETERMINE THE NEED FOR PDA TESTING. FOR PILE DRIVING ANALYZER, SEE PILES PROVISION.

PROJECT NO. B-4575

GASTON COUNTY

STATION: POT 9+64.28 -L-

NORTH CAROLINA PROFESSIONAL SEAL 028473 ENGINEER BRIAN QUERY
12-28-11

STATE OF NORTH CAROLINA
DEPARTMENT OF TRANSPORTATION
RALEIGH

FOUNDATION LAYOUT

STV / Ralph Whitehead Associates, Inc.
1000 West Morehead St., Ste. 200
Charlotte, NC 28208
NC License Number F-0991

REVISIONS								
NO.	BY:	DATE:	NO.	BY:	DATE:	SHEET NO.
1			3			S-2
2			4			TOTAL SHEETS
						30

DRAWN BY : LGH, VJE DATE : 02-11
CHECKED BY : JAD, DBO DATE : 02-11

12/28/2011
N:\PROJ\2994\ustation\struct\Final\2nd Revised Submittal\(02)foundation layout.dgn

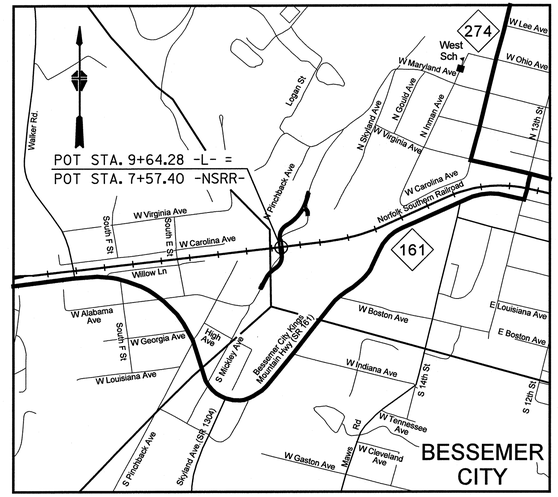

LOCATION SKETCH

TOTAL BILL OF MATERIAL

	REMOVAL OF EXISTING STRUCTURE @ STA. 9+64.28 -L-	UNCLASSIFIED STRUCTURE EXCAVATION @ STA. 9+64.28 -L-	REINFORCED CONCRETE DECK SLAB	GROOVING BRIDGE FLOORS	CLASS A CONCRETE	BRIDGE APPROACH SLABS	REINFORCING STEEL	STRUCTURAL STEEL	HP 14 X 73 STEEL PILES		STEEL PILE POINTS	PREDRILLING FOR PILES	METHOD A WATERPROOFING	THREE-BAR METAL RAIL	CONCRETE BARRIER RAIL	CHAIN LINK FENCE FOR RAILROAD PROTECTION	4" CONCRETE SLOPE PROTECTION
	LUMP SUM	LUMP SUM	SQ. FT.	SQ. FT.	CU. YDS.	LUMP SUM	LBS.	APPROX. LBS.	NO.	LIN. FT.	EA.	LIN. FT.	SQ. YDS.	LIN. FT.	LIN. FT.	LUMP SUM	SQ. YDS.
SUPERSTRUCTURE			4,808.5	3,577		LUMP SUM		245,300						140.8	148.3		
END BENT 1					34.6		6,578		9	352.1	9	314.3	8.1				264.4
END BENT 2					34.3		6,240		9	432.6	9	295.8	8.1				63.0
TOTAL	LUMP SUM	LUMP SUM	4,808.5	3,577	68.9	LUMP SUM	12,818	245,300	18	784.7	18	610.1	16.2	140.8	148.3	LUMP SUM	327.4

GENERAL NOTES

ASSUMED LIVE LOAD = HL93 OR ALTERNATE LOADING.

FOR OTHER DESIGN DATA AND GENERAL NOTES, SEE "STANDARD NOTES" SHEET.

FOR EROSION CONTROL MEASURES, SEE EROSION CONTROL PLANS.

THIS BRIDGE HAS BEEN DESIGNED IN ACCORDANCE WITH THE AASHTO LRFD BRIDGE DESIGN SPECIFICATIONS.

FOR MAINTENANCE AND PROTECTION OF RAILROAD TRAFFIC BENEATH PROPOSED STRUCTURE, SEE RAILROAD SPECIAL PROVISIONS.

THE SUBSTRUCTURE OF THE EXISTING BRIDGE INDICATED ON THE PLANS IS FROM THE BEST INFORMATION AVAILABLE. SINCE THIS INFORMATION IS SHOWN FOR THE CONVENIENCE OF THE CONTRACTOR, THE CONTRACTOR SHALL HAVE NO CLAIM WHATSOEVER AGAINST THE CITY OF BESSEMER CITY FOR ANY DELAYS OR ADDITIONAL COST INCURRED BASED ON DIFFERENCES BETWEEN THE EXISTING BRIDGE SUBSTRUCTURE SHOWN ON THE PLANS AND THE ACTUAL CONDITIONS AT THE PROJECT SITE.

THE CONTRACTOR SHALL PROVIDE INDEPENDENT ASSURANCE SAMPLES OF REINFORCING STEEL AS FOLLOWS: FOR PROJECTS REQUIRING UP TO 400 TONS OF REINFORCING STEEL, ONE 30" SAMPLE OF EACH SIZE BAR USED, AND FOR PROJECTS REQUIRING OVER 400 TONS OF REINFORCING STEEL, TWO 30" SAMPLES OF EACH SIZE BAR USED. THE BARS FROM WHICH THE SAMPLES ARE TAKEN MUST THEN BE SPLICED WITH REPLACEMENT BARS OF THE SIZE AND LENGTH OF THE SAMPLE, PLUS A MINIMUM LAP SPLICE OF THIRTY BAR DIAMETERS. PAYMENT FOR THE SAMPLES OF REINFORCEMENT STEEL SHALL BE CONSIDERED INCIDENTAL TO VARIOUS PAY ITEMS.

FOR FALSEWORK AND FORMWORK, SEE SPECIAL PROVISIONS.

FOR FALSEWORK AND FORMWORK OVER OR ADJACENT TO RAILROAD TRAFFIC, SEE RAILROAD SPECIAL PROVISIONS.

ALL FALSEWORK AND FORMS FOR CAST-IN-PLACE DECK SLAB SHALL REMAIN IN PLACE UNTIL THE INTEGRAL BACKWALL IS CAST AND CURED.

FOR SUBMITTAL OF WORKING DRAWINGS, SEE SPECIAL PROVISIONS.

NEEDLE BEAMS WILL NOT BE ALLOWED UNLESS OTHERWISE CALLED FOR ON THE PLANS OR APPROVED BY THE ENGINEER.

FOR OTHER NOTES, SEE "FOUNDATION LAYOUT" SHEET.

FOR CRANE SAFETY, SEE SPECIAL PROVISIONS.

FOR GROUT FOR STRUCTURES, SEE SPECIAL PROVISIONS.

FOR CURING CONCRETE, SEE SPECIAL PROVISIONS.

FOR FORMS FOR CONCRETE BRIDGE DECK, SEE SPECIAL PROVISIONS.

FOR UTILITY INFORMATION, SEE UTILITY PLANS AND SPECIAL PROVISIONS.

FOR PLACING LOAD ON STRUCTURE, SEE SPECIAL PROVISIONS.

THE GIRDERS SHALL BE IN PLACE AND THE INTEGRAL BACKWALL SHALL BE CAST AND FULLY CURED PRIOR TO BACKFILLING BEHIND THE END BENTS. THE CONTRACTOR MAY PROPOSE A DIFFERENT CONSTRUCTION SEQUENCE AS LONG AS SUFFICIENT BRACING IS PROVIDED FOR THE END BENT. THE PROPOSED REVISION TO THE CONSTRUCTION SEQUENCE SHALL BE PROVIDED TO THE ENGINEER FOR APPROVAL PRIOR TO CONSTRUCTION. ANY COSTS OR DELAYS ASSOCIATED WITH REVISING THE CONSTRUCTION SEQUENCE SHALL BE AT NO COST TO THE CITY OF BESSEMER CITY.

PROJECT NO. B-4575
GASTON COUNTY
STATION: POT 9+64.28 -L-

NORTH CAROLINA PROFESSIONAL SEAL 028473 ENGINEER BRIAN QUERY
12-28-11

STATE OF NORTH CAROLINA
DEPARTMENT OF TRANSPORTATION
RALEIGH

LOCATION SKETCH, GENERAL NOTES AND TOTAL BILL OF MATERIAL

STV / Ralph Whitehead Associates, Inc.
1000 West Morehead St., Ste. 200
Charlotte, NC 28208
NC License Number F-0991

REVISIONS							
NO.	BY:	DATE:	NO.	BY:	DATE:	SHEET NO.	S-3
1			3			TOTAL SHEETS	30
2			4				

DRAWN BY : BMC, LGH, VJE DATE : 02-11
CHECKED BY : JTG, DBO DATE : 02-11

12/28/2011
N:\PROJ\2994\ustation\struct\Final\2nd Revised Submittal\(03)totalbill.dgn

LOAD AND RESISTANCE FACTOR RATING (LRFR) SUMMARY FOR STEEL GIRDERS

LEVEL		VEHICLE	WEIGHT (W) (TONS)	CONTROLLING LOAD RATING (#)	MINIMUM RATING FACTORS (RF)	TONS = W x RF	STRENGTH I LIMIT STATE											SERVICE II LIMIT STATE						COMMENT NUMBER
								MOMENT					SHEAR						MOMENT					
							LIVE-LOAD FACTORS (γ_{LL})	DISTRIBUTION FACTORS (DF)	RATING FACTOR	SPAN	GIRDER LOCATION	DISTANCE FROM LEFT END OF SPAN (ft)	DISTRIBUTION FACTORS (DF)	RATING FACTOR	SPAN	GIRDER LOCATION	DISTANCE FROM LEFT END OF SPAN (ft)	LIVE-LOAD FACTORS (γ_{LL})	DISTRIBUTION FACTORS (DF)	RATING FACTOR	SPAN	GIRDER LOCATION	DISTANCE FROM LEFT END OF SPAN (ft)	
DESIGN LOAD RATING		HL-93 (INVENTORY)	N/A	1	1.43	-	1.75	0.753	1.64	A	EL	73.25	0.849	1.51	A	I	0.00	1.30	0.753	1.43	A	EL	73.25	
		HL-93 (OPERATING)	N/A		1.85	-	1.35	0.753	2.13	A	EL	73.25	0.849	1.96	A	I	0.00	1.00	0.753	1.85	A	EL	73.25	
		HS-20 (INVENTORY)	36.00	2	2.24	80.52	1.75	0.753	2.58	A	EL	73.25	0.849	2.30	A	I	0.00	1.30	0.753	2.24	A	EL	73.25	
		HS-20 (OPERATING)	36.00		2.91	104.67	1.35	0.753	3.34	A	EL	73.25	0.849	2.99	A	I	0.00	1.00	0.753	2.91	A	EL	73.25	
LEGAL LOAD RATING	SINGLE VEHICLE (SV)	SNSH	13.500		5.34	72.14	1.40	0.753	7.70	A	EL	73.25	0.849	7.32	A	I	0.00	1.30	0.753	5.34	A	EL	73.25	
		SNGARBS2	20.000		3.78	75.52	1.40	0.753	5.44	A	EL	73.25	0.849	5.07	A	I	0.00	1.30	0.753	3.78	A	EL	73.25	
		SNAGRIS2	22.000		3.49	76.77	1.40	0.753	5.03	A	EL	73.25	0.849	4.63	A	I	0.00	1.30	0.753	3.49	A	EL	73.25	
		SNCOTTS3	27.250		2.65	72.20	1.40	0.753	3.82	A	EL	73.25	0.849	3.64	A	I	0.00	1.30	0.753	2.65	A	EL	73.25	
		SNAGGRS4	34.925		2.12	74.05	1.40	0.753	3.05	A	EL	73.25	0.849	2.89	A	I	0.00	1.30	0.753	2.12	A	EL	73.25	
		SNS5A	35.550		2.09	74.45	1.40	0.753	3.02	A	EL	73.25	0.849	2.90	A	I	0.00	1.30	0.753	2.09	A	EL	73.25	
		SNS6A	39.950		1.89	75.45	1.40	0.753	2.72	A	EL	73.25	0.849	2.61	A	I	0.00	1.30	0.753	1.89	A	EL	73.25	
		SNS7B	42.000		1.80	75.50	1.40	0.753	2.59	A	EL	73.25	0.849	2.51	A	I	0.00	1.30	0.753	1.80	A	EL	73.25	
	TRUCK TRACTOR SEMI-TRAILER (TTST)	TNAGRIT3	33.000		2.29	75.72	1.40	0.753	3.30	A	EL	73.25	0.849	3.13	A	I	0.00	1.30	0.753	2.29	A	EL	73.25	
		TNT4A	33.075		2.30	75.93	1.40	0.753	3.31	A	EL	73.25	0.849	3.10	A	I	0.00	1.30	0.753	2.30	A	EL	73.25	
		TNT6A	41.600		1.85	76.81	1.40	0.753	2.66	A	EL	73.25	0.849	2.59	A	I	0.00	1.30	0.753	1.85	A	EL	73.25	
		TNT7A	42.000		1.84	77.39	1.40	0.753	2.65	A	EL	73.25	0.849	2.55	A	I	0.00	1.30	0.753	1.84	A	EL	73.25	
		TNT7B	42.000		1.87	78.45	1.40	0.753	2.69	A	EL	73.25	0.849	2.49	A	I	0.00	1.30	0.753	1.87	A	EL	73.25	
		TNAGRIT4	43.000		1.80	77.58	1.40	0.753	2.60	A	EL	73.25	0.849	2.42	A	I	0.00	1.30	0.753	1.80	A	EL	73.25	
		TNAGT5A	45.000		1.71	77.12	1.40	0.753	2.47	A	EL	73.25	0.849	2.36	A	I	0.00	1.30	0.753	1.71	A	EL	73.25	
		TNAGT5B	45.000	3	1.71	76.75	1.40	0.753	2.46	A	EL	73.25	0.849	2.31	A	I	0.00	1.30	0.753	1.71	A	EL	73.25	
FATIGUE		HL-93 (INVENTORY)	γ_{LL}=0.75		N/A																			

LOAD FACTORS:

DESIGN LOAD RATING FACTORS	LIMIT STATE	γ_{DC}	γ_{DW}
	STRENGTH I	1.25	1.50
	SERVICE II	1.00	1.00

	YEAR	ADTT
CURRENT	2010	N/A
FUTURE	2028	N/A

NOTES:

MINIMUM RATING FACTORS ARE BASED ON THE STRENGTH I AND SERVICE II LIMIT STATES.

ALLOWABLE STRESS FOR SERVICE II LIMIT STATE ARE AS REQUIRED FOR DESIGN.

(#) CONTROLLING LOAD RATING

(1) DESIGN LOAD RATING (HL-93) **

(2) DESIGN LOAD RATING (HS-20) **

(3) LEGAL LOAD RATING **

** SEE CHART FOR VEHICLE TYPE

GIRDER LOCATION

I - INTERIOR GIRDER
EL - EXTERIOR LEFT GIRDER
ER - EXTERIOR RIGHT GIRDER

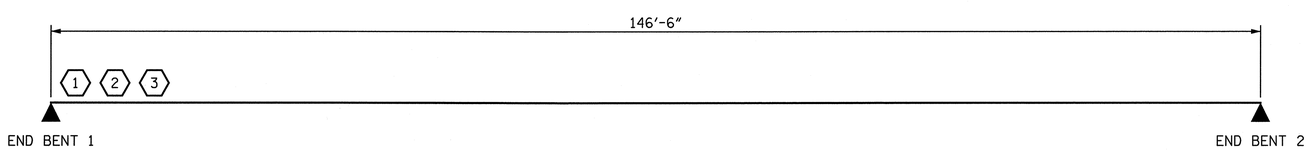

LRFR SUMMARY

PROJECT NO. B-4575
GASTON COUNTY
STATION: POT 9+64.28 -L-

STATE OF NORTH CAROLINA
DEPARTMENT OF TRANSPORTATION
RALEIGH
STANDARD

LRFR SUMMARY FOR STEEL GIRDERS
(NON-INTERSTATE TRAFFIC)

NORTH CAROLINA PROFESSIONAL SEAL 028473 ENGINEER T. BRIAN QUERY 12-28-11

STV / Ralph Whitehead Associates, Inc.
1000 West Morehead St., Ste. 200
Charlotte, NC 28208
NC License Number F-0991

REVISIONS								SHEET NO.
NO.	BY:	DATE:	NO.	BY:	DATE:			S-4
1			3					TOTAL SHEETS
2			4					30

ASSEMBLED BY : LGH, VJE DATE : 12-11
CHECKED BY : TBQ DATE : 12-11
DRAWN BY : MAA 1/08 REV. 11/12/08RR MAA/GM
CHECKED BY : GM/DI 2/08

STD. NO. LRFR3

12/28/2011
N:\PROJ\2994\ustation\struct\Final\2nd Revised Submittal\(04)lrfr summary.dgn

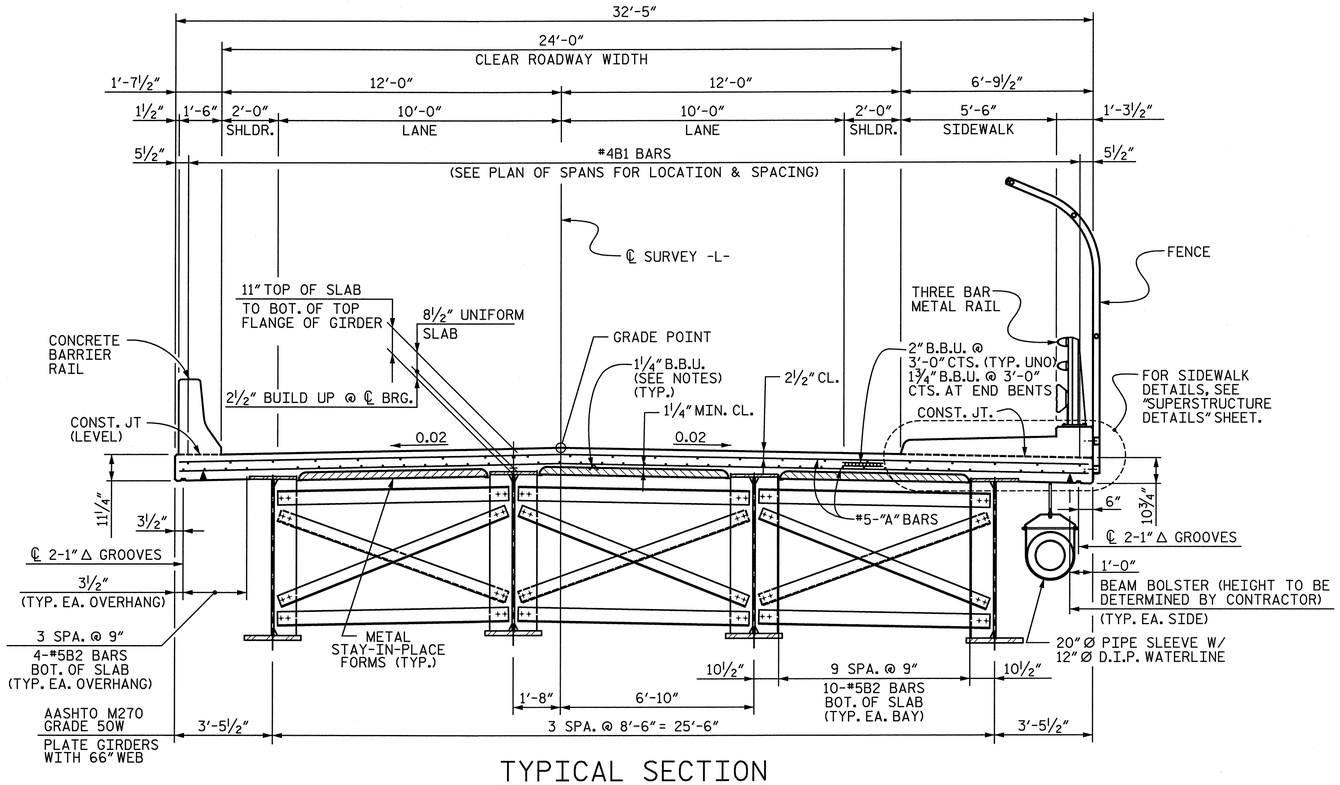

TYPICAL SECTION

(SHOWN NEAR MIDSPAN, FOR REGIONS NEAR END OF SPAN, SEE PLAN OF SPANS)

TYPICAL SECTION NOTES

PROVIDE 1¼" HIGH BEAM BOLSTERS UPPER AT 4'-0" CTS. ATOP THE METAL STAY-IN-PLACE FORMS TO SUPPORT THE BOTTOM MAT OF "A" BARS. WHEN USING REMOVABLE FORMS, PROVIDE CONTINUOUS HIGH CHAIRS FOR METAL DECK (C.H.C.M) @ 4'-0" CTS. WITH A HEIGHT TO SUPPORT THE BOTTOM MAT OF "A" BARS A CLEAR DISTANCE OF 2½" ABOVE THE TOP OF THE REMOVABLE FORM.

REINFORCING STEEL MAY BE SHIFTED SLIGHTLY OR CUT IN THE FIELD, AS NECESSARY, TO AVOID INTERFERENCE WITH THE BLOCKOUT FOR 12" Ø WATERLINE.

METAL STAY-IN-PLACE FORMS AND FALSEWORK SHALL NOT BE WELDED TO GIRDER FLANGES IN THE ZONES REQUIRING CHARPY V-NOTCH TEST. SEE "STRUCTURAL STEEL DETAILS" SHEETS.

CONCRETE IN POUR 1 SHALL REACH A STRENGTH OF 3,000 PSI BEFORE CONCRETE IS CAST IN POUR 2.

SIDEWALK AND BARRIER RAIL SHALL NOT BE CAST UNTIL ALL SLAB CONCRETE HAS BEEN CAST AND HAS REACHED A MINIMUM COMPRESSIVE STRENGTH OF 3,000 PSI.

STRUCTURAL STEEL ERECTION SHALL BE COMPLETE BEFORE FALSEWORK OR FORMS ARE PLACED ON THE UNIT.

THE CONTRACTOR MAY, WHEN NECESSARY, PROPOSE A SCHEME FOR AVOIDING INTERFERENCE BETWEEN METAL STAY-IN-PLACE FORM SUPPORTS OR FORMS AND GIRDER STIFFENER OR CONNECTOR PLATES. THE PROPOSAL SHALL BE INDICATED, AS APPROPRIATE, ON EITHER THE STEEL WORKING DRAWINGS OR THE METAL STAY-IN-PLACE FORM WORKING DRAWINGS.

GROOVED CONTRACTION JOINTS ½" IN DEPTH, SHALL BE TOOLED IN ALL EXPOSED FACES OF CONCRETE BARRIER RAIL AND SIDEWALK IN ACCORDANCE WITH ARTICLE 825-10(B) OF THE STANDARD SPECIFICATIONS. THE CONTRACTION JOINTS SHALL BE LOCATED AT A SPACING OF 8 FEET TO 10 FEET BETWEEN EXPANSION JOINTS. NO CONTRACTION JOINTS WILL BE REQUIRED FOR SEGMENTS LESS THAN 10 FEET IN LENGTH.

FOR CROSSFRAME DETAILS, SEE "STRUCTURAL STEEL DETAILS" SHEETS.

FOR CONCRETE BARRIER RAIL DETAILS, SEE "CONCRETE BARRIER RAIL" SHEET.

FOR THREE BAR METAL RAIL DETAILS, SEE "3 BAR METAL RAIL" SHEETS.

FOR FENCE DETAILS, SEE "FENCE DETAILS" SHEET.

FOR INTEGRAL BACKWALL SECTIONS, SEE "SUPERSTRUCTURE DETAILS" SHEET.

(F.F.) DENOTES FILL FACE

(O.F.) DENOTES OUTSIDE FACE

(E.F.) DENOTES EACH FACE

U.N.O. DENOTES UNLESS NOTED OTHERWISE

D.I.P. DENOTES DUCTILE IRON PIPE

THE COST OF THE SIDEWALK SHALL BE INCLUDED IN THE UNIT PRICE BID FOR "REINFORCED CONCRETE DECK SLAB." TO POURING ANY CONCRETE FOR THE DECK.

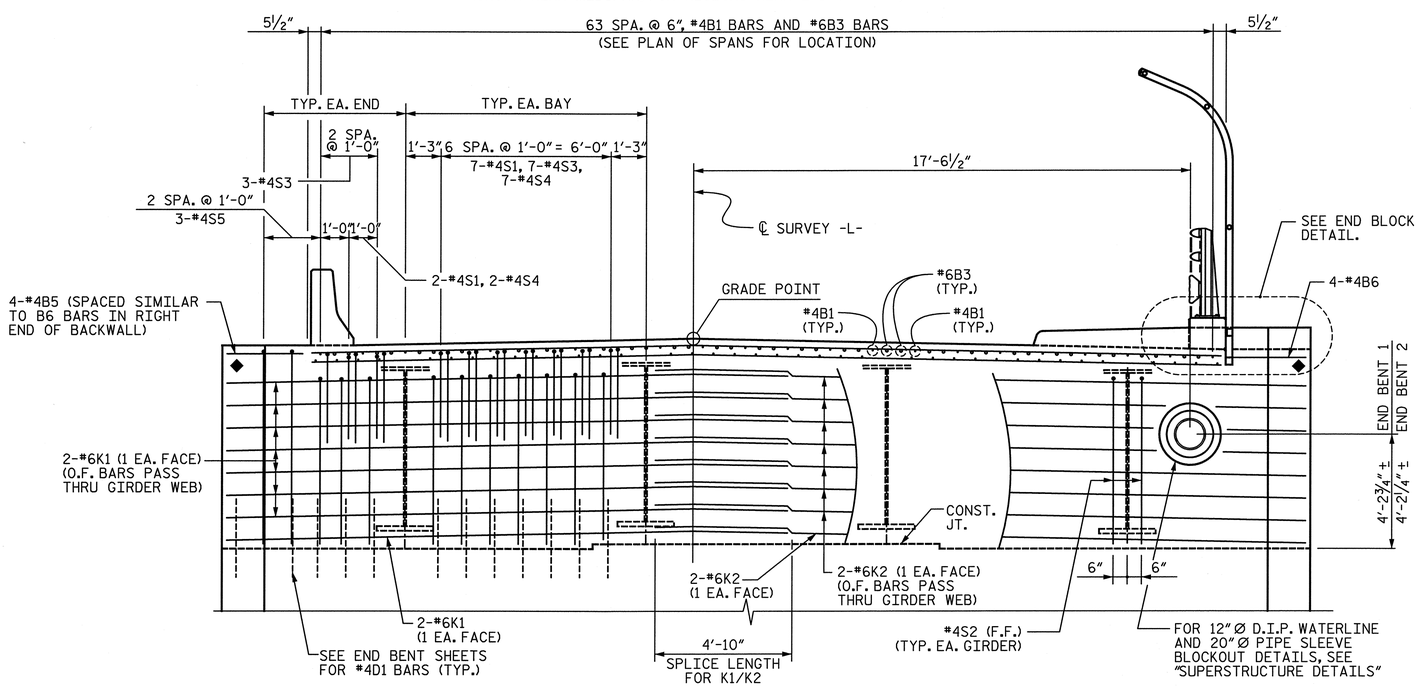

INTEGRAL BACKWALL

◆ REINFORCING IN WING WALL NOT SHOWN FOR CLARITY.

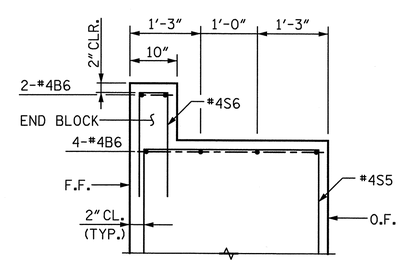

END VIEW E-E

(END BENT 1 SHOWN, END BENT 2 SIMILAR)

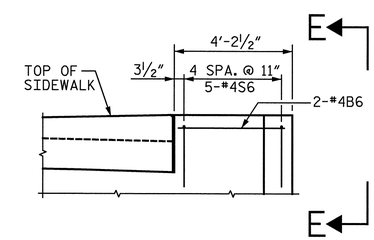

END BLOCK DETAIL

PROJECT NO. B-4575

GASTON COUNTY

STATION: POT 9+64.28 -L-

STATE OF NORTH CAROLINA
DEPARTMENT OF TRANSPORTATION
RALEIGH

TYPICAL SECTION AND INTEGRAL BACKWALL

NORTH CAROLINA PROFESSIONAL SEAL 028473 ENGINEER J. BRIAN QUERY 09-20-12

REVISIONS								SHEET NO.
NO.	BY:	DATE:	NO.	BY:	DATE:			S-5
1			3					TOTAL SHEETS
2			4					30

STV / Ralph Whitehead Associates, Inc.
1000 West Morehead St. Ste. 200
Charlotte, NC 28208
NC License No. F-0991

DRAWN BY : TBQ, LGH DATE : 11-10
CHECKED BY : JAD DATE : 12-10

9/20/2012
N:\PROJ\2994\ustation\struct\Final\2nd Revised Submittal\(05)typsection.dgn

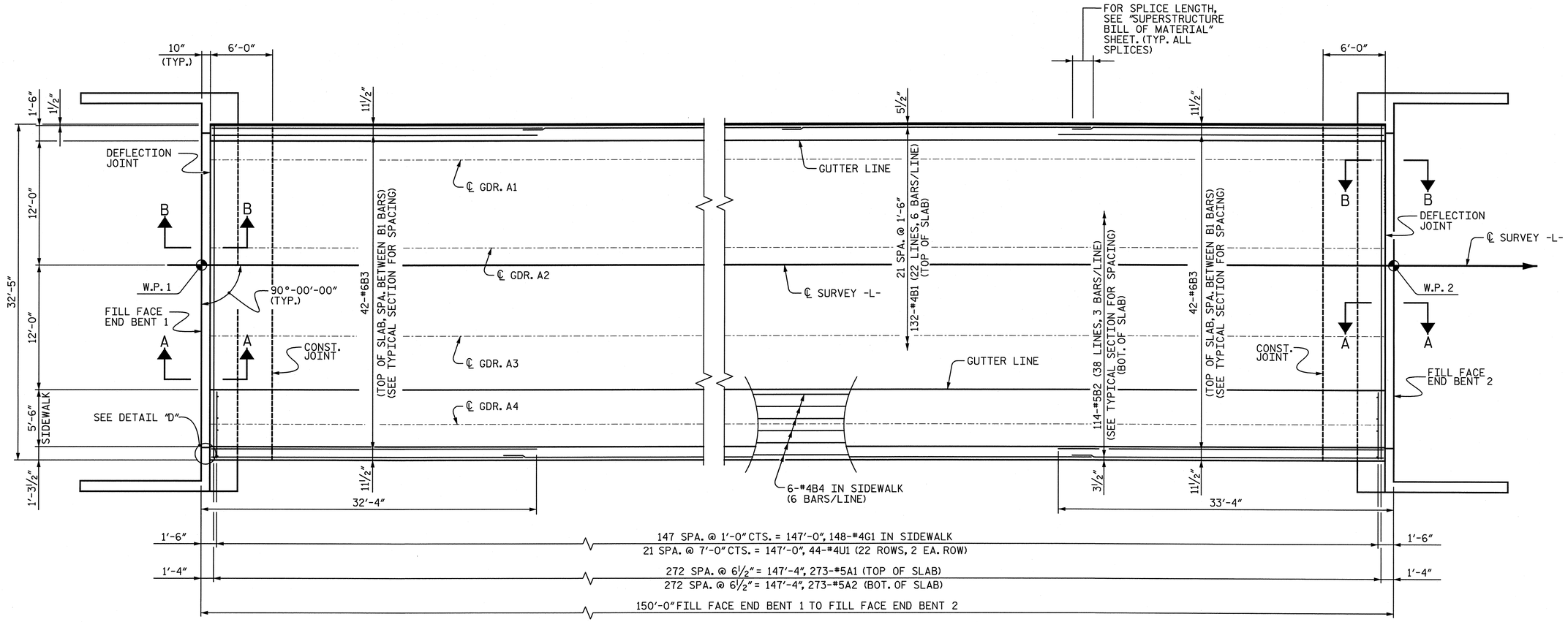

SPAN A

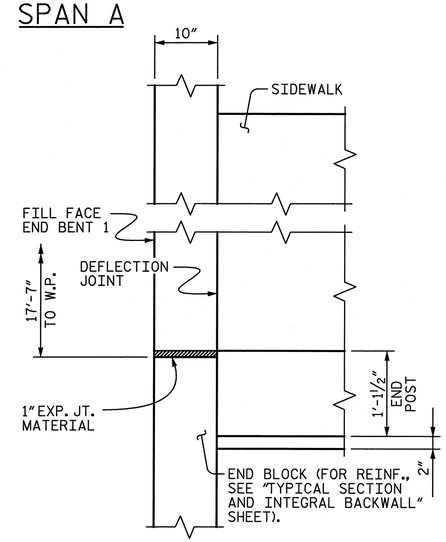

DETAIL "D"

SIDEWALK END BLOCK
(BEGIN BRIDGE SHOWN, END OF BRIDGE SIMILAR)

NOTES:

FOR CONCRETE SIDEWALK DIMENSIONS AND REINFORCEMENT, SEE SHEET TITLED "SUPERSTRUCTURE DETAILS".

FOR CONCRETE BARRIER RAIL DIMENSIONS AND REINFORCEMENT, SEE SHEET TITLED "CONCRETE BARRIER RAIL".

FOR POURING DIAGRAM, SEE SHEET TITLED "SUPERSTRUCTURE BILL OF MATERIAL".

FOR SECTIONS, SEE SHEET TITLED "SUPERSTRUCTURE DETAILS".

FOR BOTTOM "B" BAR SPACING, SEE SHEET TITLED "TYPICAL SECTION AND INTEGRAL BACKWALL".

FOR 3 BAR METAL RAIL END POST DIMENSIONS, REINFORCING BAR MARKS AND BAR SPACING, SEE SHEET TITLED "END POST DETAILS & RAIL POST SPACING".

FOR INTEGRAL BACKWALL REINFORCING, SEE SHEETS TITLED "TYPICAL SECTION AND INTEGRAL BACKWALL" AND "SUPERSTRUCTURE DETAILS".

FOR END BLOCK ELEVATIONS, SEE SHEETS TITLED "END BENT 1" AND "END BENT 2".

IF SLIP FORMING IS USED, THE END BLOCKS MAY BE POURED AFTER THE BARRIER RAIL IS CAST.

PROJECT NO. B-4575
GASTON COUNTY
STATION: POT 9+64.28 -L-

NORTH CAROLINA PROFESSIONAL SEAL 028473 ENGINEER BRIAN QUERY 12-28-11

STATE OF NORTH CAROLINA
DEPARTMENT OF TRANSPORTATION
RALEIGH

SUPERSTRUCTURE
PLAN OF SPAN

STV / Ralph Whitehead Associates, Inc.
1000 West Morehead St., Ste. 200
Charlotte, NC 28208
NC License Number F-0991

REVISIONS							
NO.	BY:	DATE:	NO.	BY:	DATE:	SHEET NO.	
1			3			S-6	
2			4			TOTAL SHEETS	
						30	

DRAWN BY : KRJ, VJE DATE : 11-10
CHECKED BY : JAD DATE : 11-10

12/28/2011
N:\PROJ\2994\station\struct\Final\2nd Revised Submittal\(06)plan of span.dgn

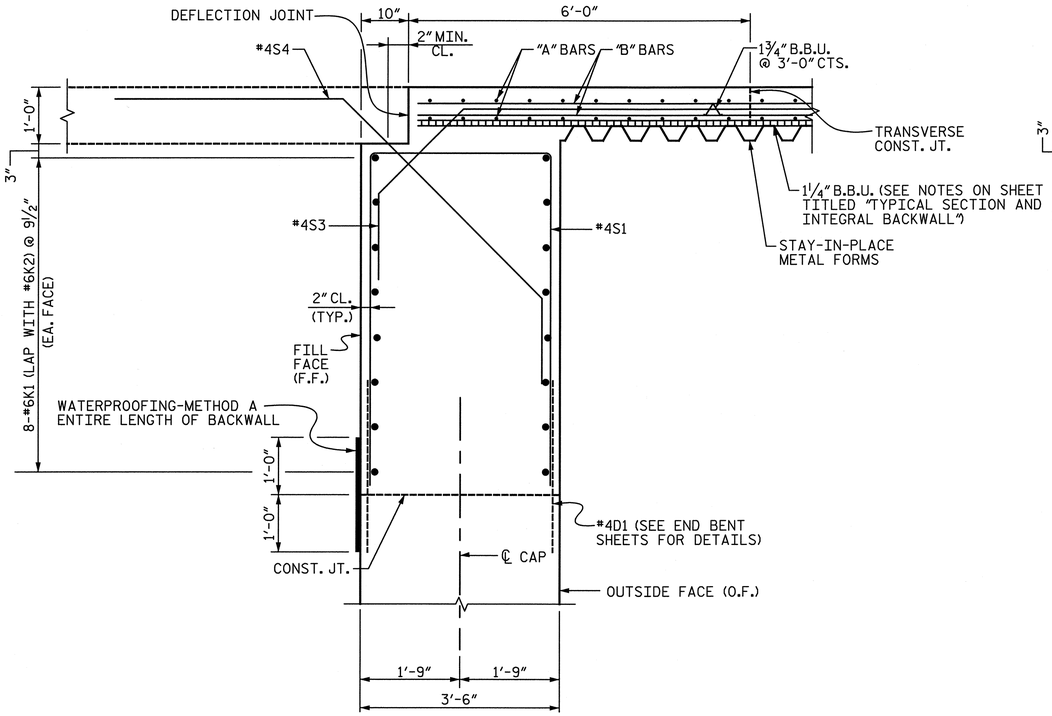

SECTION A-A

(ANCHOR BOLTS NOT SHOWN FOR CLARITY.)

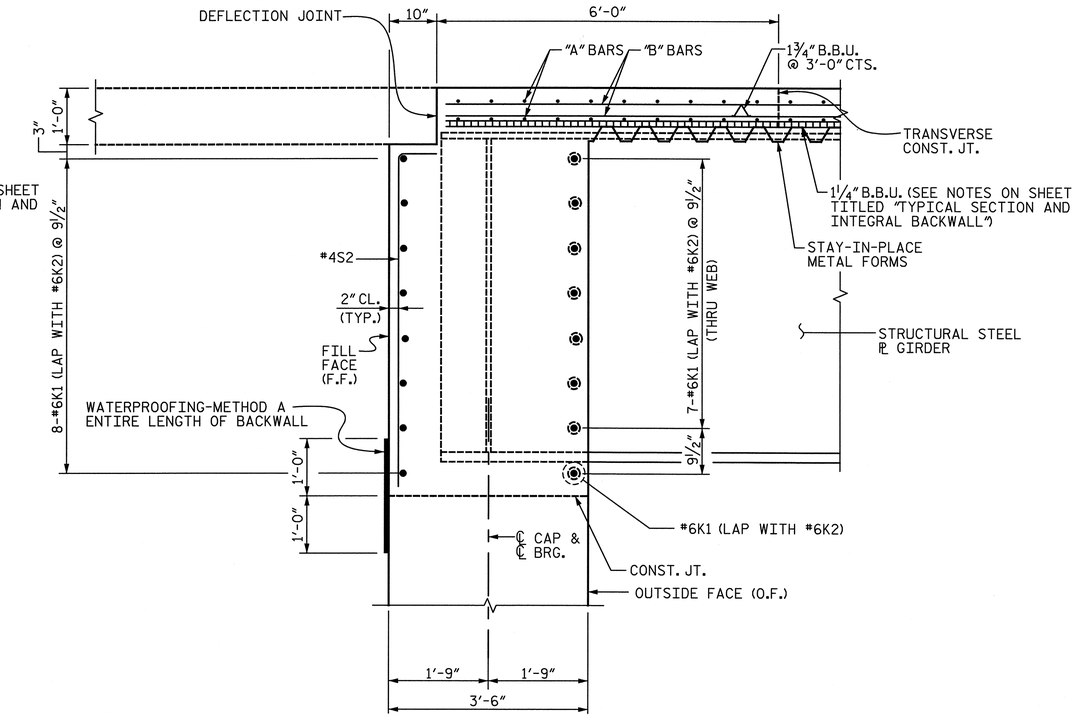

SECTION B-B

(ANCHOR BOLTS NOT SHOWN FOR CLARITY.)

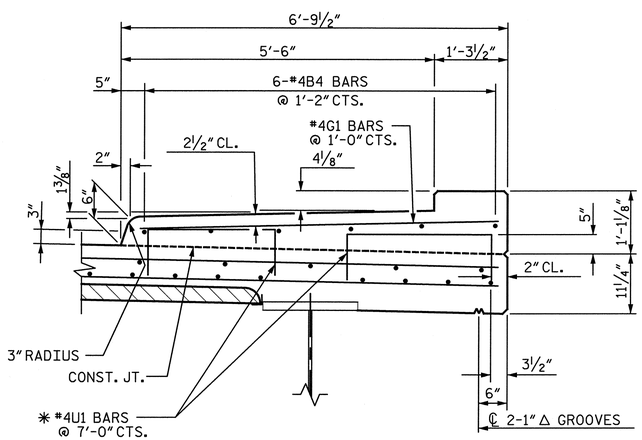

SECTION THRU SIDEWALK

✱ #4U1 BARS MAY BE PUSHED INTO GREEN CONCRETE AFTER SPAN HAS BEEN SCREEDED OFF.

NOTE: GROOVED CONTRACTION JOINTS, ½" IN DEPTH, SHALL BE TOOLED IN ALL EXPOSED FACES OF SIDEWALK IN ACCORDANCE WITH ARTICLE 825-10(B) OF THE STANDARD SPECIFICATIONS. THE CONTRACTION JOINT SHALL BE LOCATED AT A SPACING OF 8'-0" TO 10'-0" BETWEEN EXPANSION JOINTS. NO CONTRACTION JOINTS WILL BE REQUIRED FOR SEGMENTS LESS THAN 10'-0" IN LENGTH.

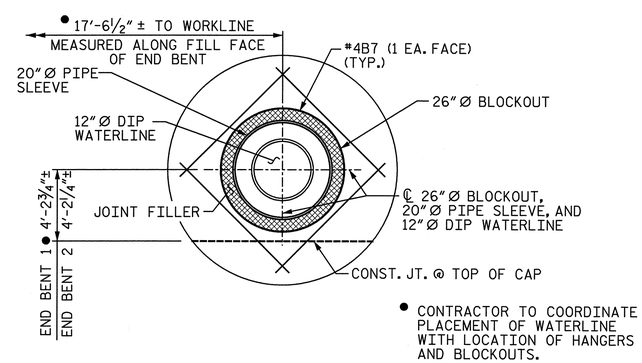

WATERLINE BLOCKOUT DETAIL

NOTES:

CENTER UTILITY IN BLOCKOUT AND FILL ANNULAR SPACE AROUND UTILITY PIPE WITH JOINT FILLER IN ACCORDANCE WITH STANDARD SPECIFICATION ARTICLE 1028-1.

REINFORCING IN BACKWALL MAY BE SHIFTED SLIGHTLY AS NECESSARY TO AVOID BLOCKOUTS.

BLOCKOUTS SHALL BE ORIENTED IN THE SAME DIRECTION AS THE ℄ SURVEY. DIMENSIONS FOR LOCATING BLOCKOUTS ARE MEASURED ALONG THE FILL FACE.

FOR WATERLINE DETAILS, SEE "WATERLINE HANGER DETAILS" SHEET.

ALL MATERIALS AND INSTALLATION FOR THE BLOCKOUT FOR THE WATERLINE SHALL BE INCLUDED IN THE UNIT PRICE BID FOR "12" DIP WATERLINE" (ROADWAY PAY ITEM).

PROJECT NO. B-4575
GASTON COUNTY
STATION: POT 9+64.28 -L-

NORTH CAROLINA PROFESSIONAL SEAL 028473 ENGINEER T. BRIAN QUERY
09-20-12

STATE OF NORTH CAROLINA
DEPARTMENT OF TRANSPORTATION
RALEIGH

SUPERSTRUCTURE DETAILS

STV / Ralph Whitehead Associates, Inc.
1000 West Morehead St., Ste. 200
Charlotte, NC 28208
NC License Number F-0991

REVISIONS								SHEET NO.
NO.	BY:	DATE:	NO.	BY:	DATE:			S-7
1			3					TOTAL SHEETS
2			4					30

DRAWN BY :	LGH, VJE	DATE :	12-10
CHECKED BY :	JAD	DATE :	12-10

9/20/2012
N:\PROJ\2994\ustation\struct\Final\2nd Revised Submittal\(07)superstructure details.dgn

NOTES:

1. SEE SHEETS TITLED "STRUCTURAL STEEL DETAILS" FOR STEEL NOTES, CHARPY V-NOTCH TESTING REQUIREMENTS AND SHOP SPLICE DETAILS.
2. ALL DIMENSIONS ON THIS SHEET ARE HORIZONTAL.
3. SHEAR CONNECTORS MAY BE MOVED SLIGHTLY, AS NECESSARY, TO AVOID INTERFERENCE WITH GIRDER SECTION CHANGES AND HOLES FOR THE BOLTED FIELD SPLICE.

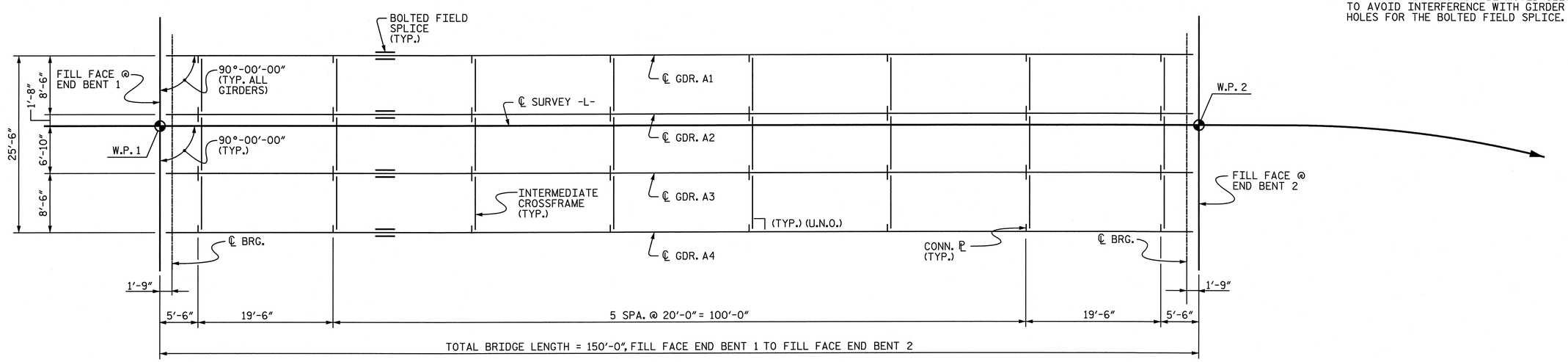

FRAMING PLAN

U.N.O. = UNLESS NOTED OTHERWISE

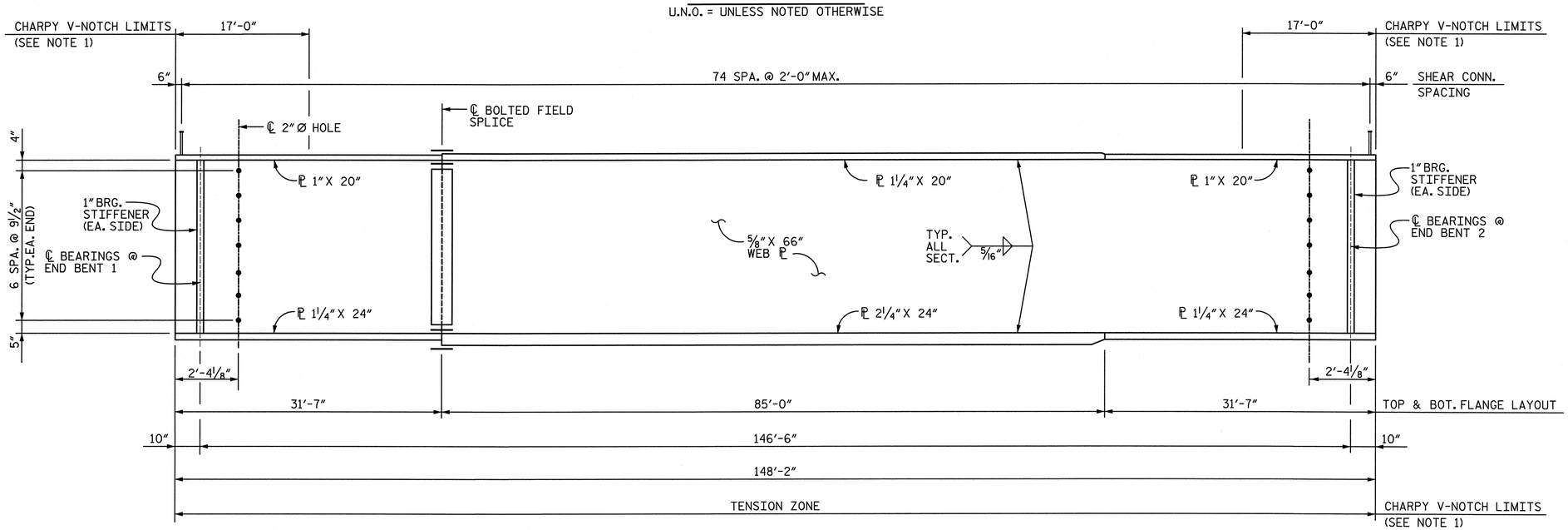

GIRDER ELEVATION

(CONNECTOR ℙ'S NOT SHOWN FOR CLARITY)

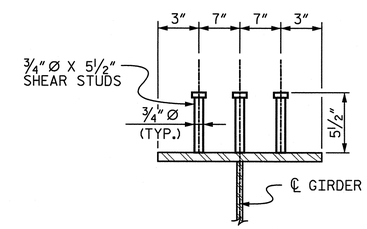

SHEAR CONNECTOR DETAIL

PROJECT NO. B-4575

GASTON COUNTY

STATION: POT 9+64.28 -L-

STATE OF NORTH CAROLINA
DEPARTMENT OF TRANSPORTATION
RALEIGH

FRAMING PLAN

NORTH CAROLINA PROFESSIONAL SEAL 028473 ENGINEER BRIAN QUERY 12-28-11

STV / Ralph Whitehead Associates, Inc.
1000 West Morehead St., Ste. 200
Charlotte, NC 28208
NC License Number F-0991

REVISIONS							SHEET NO.
NO.	BY:	DATE:	NO.	BY:	DATE:		S-8
1			3				TOTAL SHEETS
2			4				30

DRAWN BY : LGH, VJE DATE : 11-10
CHECKED BY : JAD DATE : 11-10

12/28/2011
N:\PROJ\2994\station\struct\Final\2nd Revised Submittal\(08)framing plan.dgn

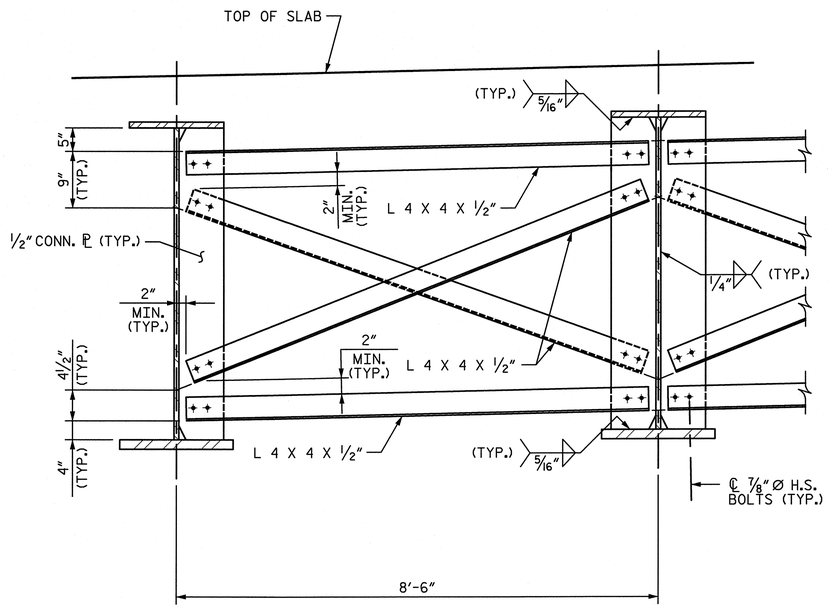

TYPICAL INTERMEDIATE CROSSFRAME

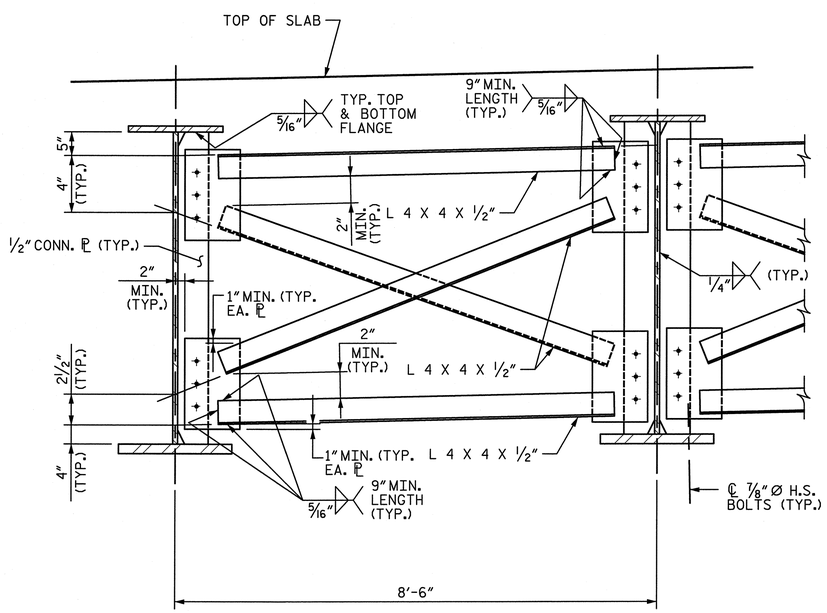

TYPICAL OPTIONAL INTERMEDIATE CROSSFRAME

NOTES:

ALL STRUCTURAL STEEL SHALL BE AASHTO M270 GRADE 50W AND PAINTED IN ACCORDANCE WITH SYSTEM 4 OF ARTICLE 442-7 OF THE STANDARD SPECIFICATIONS.

ALL DIMENSIONS SHOWN ARE HORIZONTAL OR VERTICAL, UNLESS OTHERWISE NOTED.

ALL FIELD CONNECTIONS TO BE 7/8" DIA. HIGH STRENGTH BOLTS UNLESS OTHERWISE NOTED. FOR HIGH STRENGTH BOLTS, SEE SPECIAL PROVISIONS.

BEARING STIFFENERS ARE TO BE PLACED NORMAL TO THE WEB OF THE GIRDER AND SHALL BE PLUMB.

A CHARPY V-NOTCH TEST IS REQUIRED FOR WEB PLATES, TOP FLANGE PLATES, TOP FLANGE SPLICE PLATES, BOTTOM FLANGE PLATES, BOTTOM FLANGE SPLICE PLATES, AND WEB SPLICE PLATES FOR ALL GIRDERS AS SHOWN ON PLANS AND IN ACCORDANCE WITH ARTICLE 1072-9 OF THE STANDARD SPECIFICATIONS.

FOR CHARPY V-NOTCH TEST, SEE SPECIAL PROVISIONS.

NO WELDING OF FORMS OR FALSEWORK TO THE TOP FLANGE WILL BE PERMITTED.

AT THE CONTRACTOR'S OPTION, THE DIAPHRAGM WITH THE WELDED GUSSET PLATES MAY BE USED IN LIEU OF THE DIAPHRAGM WITH BOLTED ANGLES AT NO ADDITIONAL COST TO THE DEPARTMENT.

STUDS ON THE GIRDERS MAY BE SHIFTED UP TO 1" IF NECESSARY TO CLEAR FLANGE SPLICE WELD.

ALL SURFACES OF BEARING PLATES SHALL BE SMOOTH AND STRAIGHT.

TENSION ON THE AASHTO M164 BOLTS SHALL BE CALIBRATED USING DIRECT TENSION INDICATOR WASHERS IN ACCORDANCE WITH ARTICLE 440-8 OF THE STANDARD SPECIFICATIONS. FOR DIRECT TENSION INDICATORS, SEE SPECIAL PROVISIONS.

ENDS OF GIRDERS SHALL BE IN A PLUMB POSITION AFTER THE TOTAL DEAD LOAD DEFLECTION HAS OCCURRED.

SHOP SPLICES ARE PERMITTED TO LIMIT THE MAXIMUM REQUIRED FLANGE PIECE LENGTHS TO 60 FEET AND WEB PIECE LENGTHS TO 45 FEET. PERMITTED FLANGE AND WEB SHOP SPLICES SHALL NOT BE LOCATED WITHIN 15 FEET OF MAXIMUM DEAD LOAD DEFLECTION. KEEP 2 FEET MINIMUM BETWEEN WEB AND FLANGE SHOP SPLICES. KEEP 6" MINIMUM BETWEEN CONNECTOR PLATE WELDS AND WEB OR FLANGE SHOP SPLICES.

STRUCTURAL STEEL ERECTION IN SPAN A SHALL BE COMPLETE BEFORE FALSEWORK OR FORMS ARE PLACED ON THE UNIT.

THE CONTRACTOR MAY, WHEN NECESSARY, PROPOSE A SCHEME FOR AVOIDING INTERFERENCE BETWEEN METAL STAY-IN-PLACE FORM SUPPORTS OR FORMS AND CONNECTOR PLATES. THE PROPOSAL SHALL BE INDICATED, AS APPROPRIATE, ON EITHER THE STEEL WORKING DRAWINGS OR THE METAL STAY-IN-PLACE FORM WORKING DRAWINGS.

PROJECT NO. B-4575
GASTON COUNTY
STATION: POT 9+64.28 -L-

SHEET 1 OF 2

NORTH CAROLINA PROFESSIONAL SEAL 028473 ENGINEER BRIAN QUERY 12-28-11

STATE OF NORTH CAROLINA
DEPARTMENT OF TRANSPORTATION
RALEIGH

STRUCTURAL STEEL DETAILS

STV / Ralph Whitehead Associates, Inc.
1000 West Morehead St., Ste. 200
Charlotte, NC 28208
NC License Number F-0991

REVISIONS								SHEET NO.
NO.	BY:	DATE:	NO.	BY:	DATE:			S-9
1			3					TOTAL SHEETS
2			4					30

DRAWN BY : LGH , VRE DATE : 11-10
CHECKED BY : JAD DATE : 12-10

12/28/2011
N:\PROJ\2994\ustation\struct\Final\2nd Revised Submittal\(09)struct steeldetails sheet 1.dgn

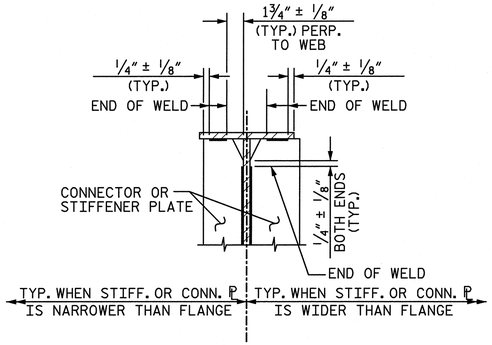

TYPICAL STIFFENER OR CONNECTOR PLATE CONNECTIONS

(TOP FLANGE SHOWN, BOTTOM FLANGE SIMILAR)

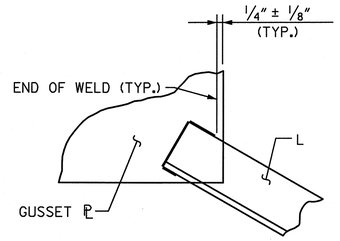

TYPICAL ANGLE TO GUSSET PLATE CONNECTION

WELD TERMINATION DETAILS

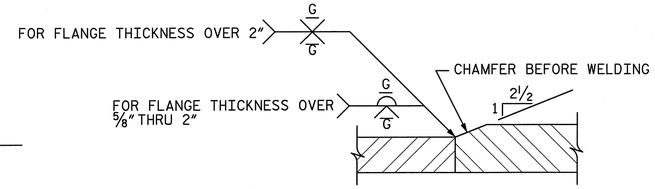

ELEVATION - FLANGE

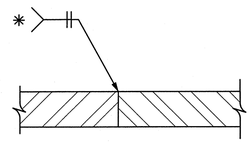

PLAN - WEB

(UNIFORM THICKNESS)

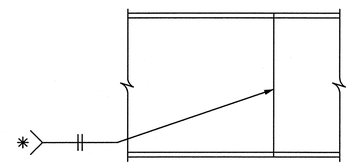

ELEVATION - WEB

SHOP SPLICE DETAILS

* THE SHOP WEB SPLICE IS TO BE GROUND SMOOTH AND FLUSH ON OUTSIDE OF EXTERIOR GIRDERS.

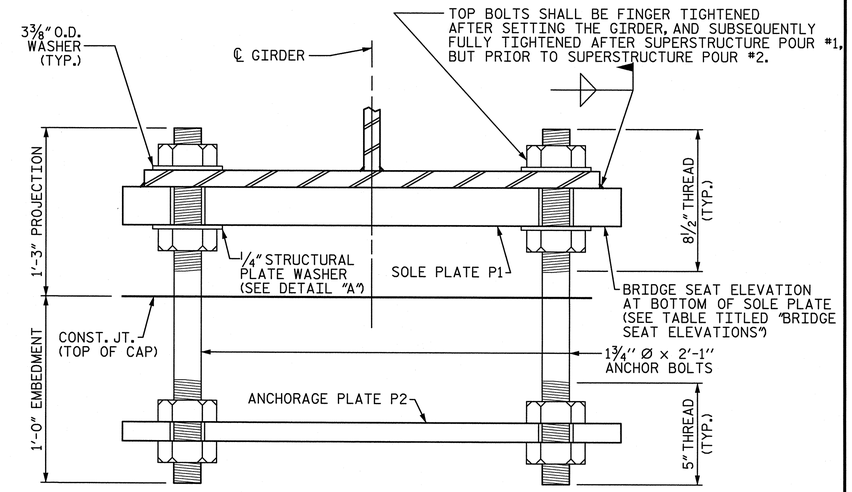

INTEGRAL

END VIEW

BRIDGE SEAT ELEVATIONS		
	END BENT 1 ELEVATION	END BENT 2 ELEVATION
GIRDER A1	969.871	967.819
GIRDER A2	970.041	967.989
GIRDER A3	969.938	967.886
GIRDER A4	969.768	967.716

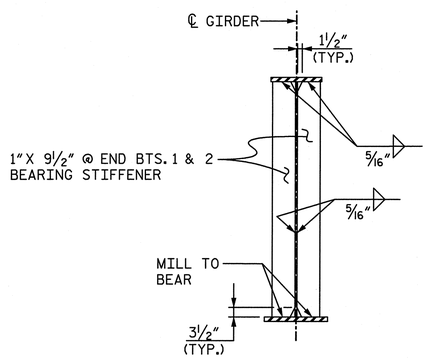

BEARING STIFFENER

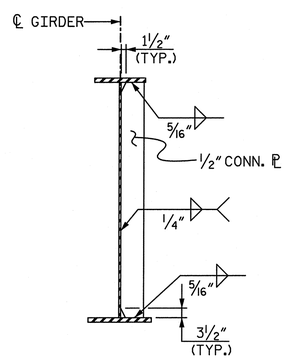

CONNECTOR ℙ DETAIL

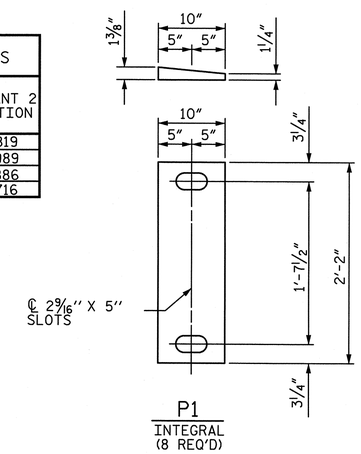

P1

INTEGRAL

(8 REQ'D)

SOLE PLATE DETAIL (P1)

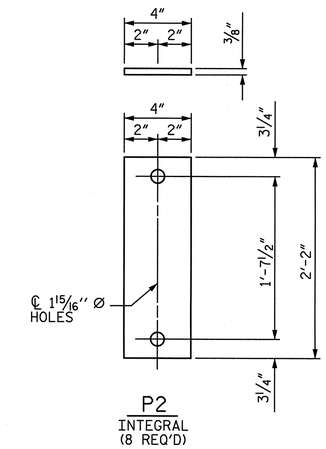

P2

INTEGRAL

(8 REQ'D)

ANCHORAGE PLATE DETAIL (P2)

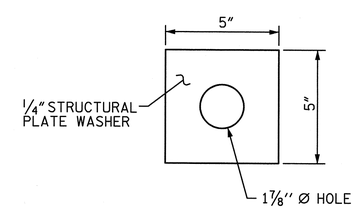

DETAIL "A"

NOTES:

ANCHOR BOLTS SHALL MEET THE REQUIREMENTS OF ASTM A449. NUTS SHALL MEET THE REQUIREMENTS OF AASHTO M291-DH OR AASHTO M292-2H. WASHERS SHALL MEET THE REQUIREMENTS OF AASHTO M293. SHOP DRAWINGS ARE NOT REQUIRED FOR ANCHOR BOLTS, NUTS AND WASHERS. SHOP INSPECTION IS REQUIRED.

FOR AASHTO M270 GRADE 50W STRUCTURAL STEEL, SOLE PLATE SHALL BE AASHTO M270 GRADE 50W AND SHALL NOT BE GALVANIZED. ANCHOR BOLTS, NUTS AND WASHERS SHALL BE GALVANIZED IN ACCORDANCE WITH THE STANDARD SPECIFICATIONS.

STRUCTURAL PLATE WASHER SHALL BE ASTM M270 GRADE 50W AND SHALL NOT BE GALVANIZED.

MATERIAL AND INSTALLATION FOR ANCHOR BOLTS, SOLE PLATES, ANCHORAGE PLATES, NUTS AND WASHERS SHALL BE INCLUDED IN THE UNIT PRICE BID FOR "STRUCTURAL STEEL". THE WEIGHTS OF THESE COMPONENTS ARE INCLUDED IN THE APPROX. LBS. OF STRUCTURAL STEEL.

MINIMUM FILLET WELD SIZE	
BASE METAL THICKNESS OF THICKER PART JOINED (T)	MINIMUM SIZE OF FILLET WELD
≤ 3/4"	1/4"
> 3/4"	5/16"

NORTH CAROLINA PROFESSIONAL SEAL 028473 ENGINEER BRIAN QUERY 12-28-11

PROJECT NO. B-4575

GASTON COUNTY

STATION: POT 9+64.28 -L-

SHEET 2 OF 2

STATE OF NORTH CAROLINA
DEPARTMENT OF TRANSPORTATION
RALEIGH

STRUCTURAL STEEL DETAILS

DRAWN BY : LGH, VJE DATE : 02-11
CHECKED BY : JAD, DBO DATE : 02-11

STV / Ralph Whitehead Associates, Inc.
1000 West Morehead St., Ste. 200
Charlotte, NC 28208
NC License Number F-0991

REVISIONS								SHEET NO.
NO.	BY:	DATE:	NO.	BY:	DATE:			S-10
1			3					TOTAL SHEETS
2			4					30

12/28/2011
N:\PROJ\2994\ustation\struct\Final\2nd Revised Submittal\(10)struct steel details sheet 2.dgn

NOTE:
OVERSIZED OR SLOTTED HOLES ARE NOT PERMITTED.

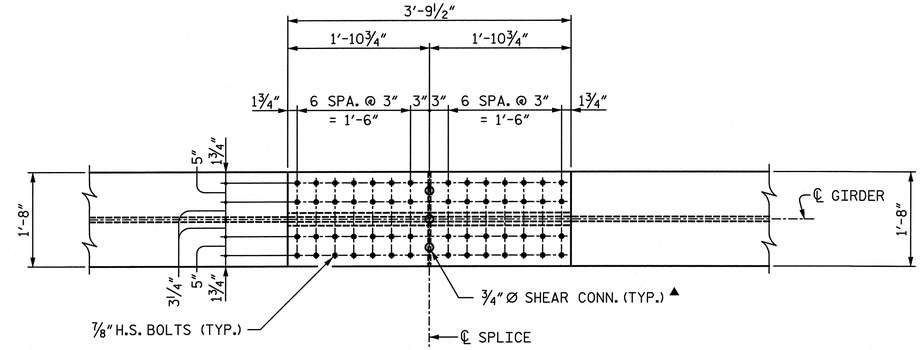

TOP FLANGE

▲ SEE SHEAR CONNECTOR DETAIL ON SHEET TITLED "FRAMING PLAN" FOR SPACING AND DETAILS.

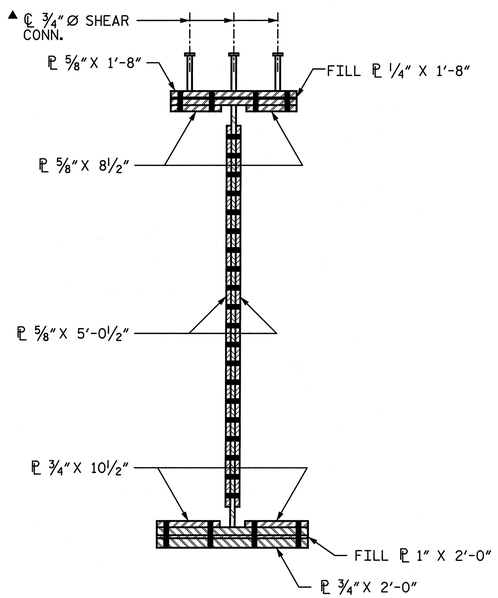

SECTION

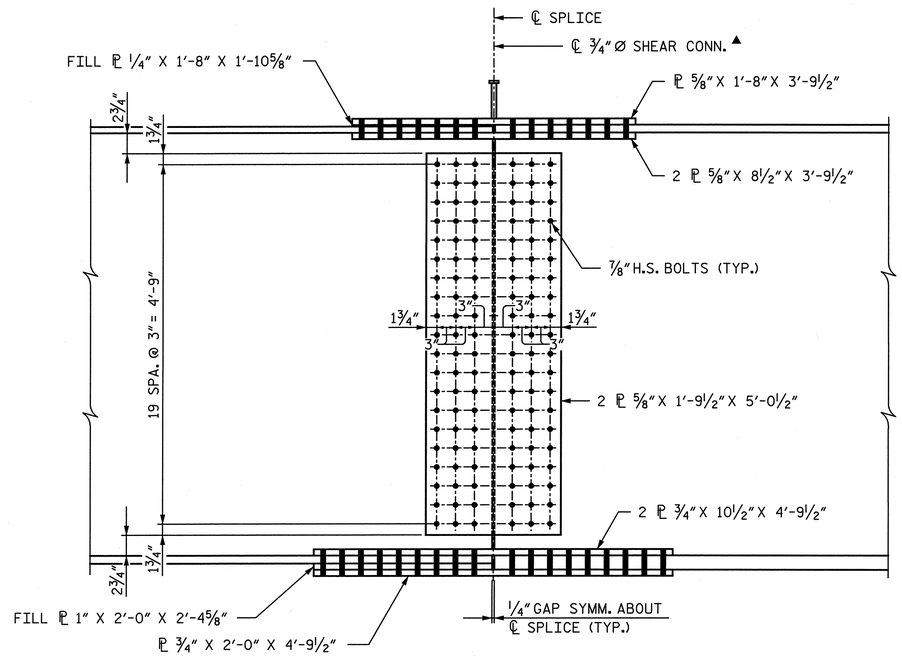

ELEVATION

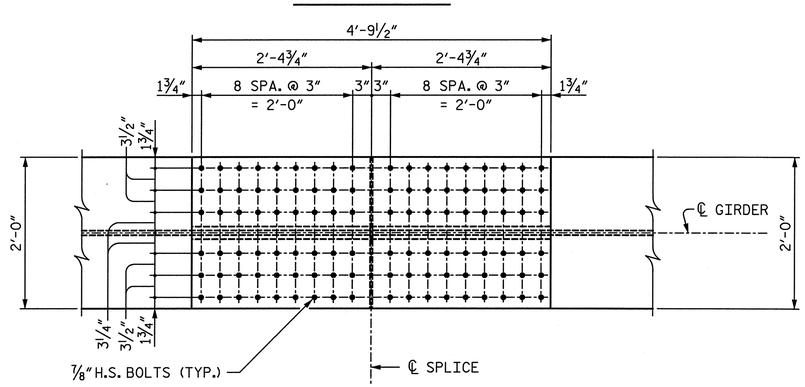

BOTTOM FLANGE

PROJECT NO. B-4575
GASTON COUNTY
STATION: POT 9+64.28 -L-

STATE OF NORTH CAROLINA
DEPARTMENT OF TRANSPORTATION
RALEIGH

SUPERSTRUCTURE BOLTED FIELD SPLICE

NORTH CAROLINA PROFESSIONAL SEAL 028473 ENGINEER BRIAN QUERY 12-28-11

STV / Ralph Whitehead Associates, Inc.
1000 West Morehead St., Ste. 200
Charlotte, NC 28208
NC License Number F-0991

REVISIONS								SHEET NO.
NO.	BY:	DATE:	NO.	BY:	DATE:			S-11
1			3					TOTAL SHEETS
2			4					30

DRAWN BY : KRJ DATE : 11-10
CHECKED BY : JAD DATE : 12-10

12/28/2011
N:\PROJ\2994\ustation\struct\Final\2nd Revised Submittal\(11)bolted field splice.dgn

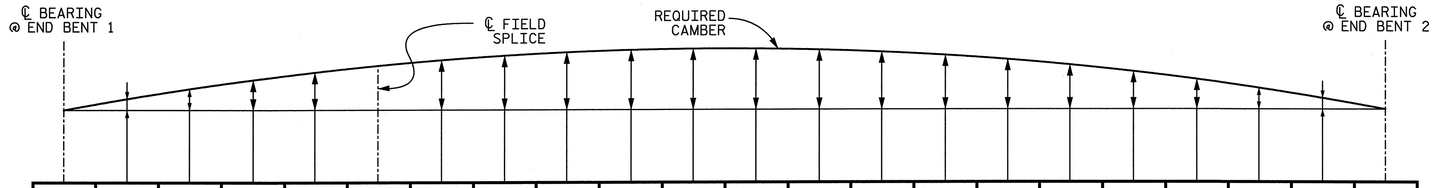

		1.00	1.01	1.02	1.03	1.04	F.S.	1.05	1.06	1.07	1.08	1.09	1.10	1.11	1.12	1.13	1.14	1.15	1.16	1.17	1.18	1.19	1.20
ALL GIRDERS	DEFLECTION DUE TO WT. OF STEEL	0.000	0.022	0.044	0.064	0.082	0.085	0.097	0.110	0.120	0.128	0.132	0.134	0.132	0.128	0.120	0.110	0.097	0.082	0.064	0.044	0.022	0.000
	DEFLECTION DUE TO WT. OF SLAB ▲	0.000	0.032	0.085	0.134	0.178	0.186	0.216	0.248	0.274	0.292	0.304	0.308	0.304	0.292	0.274	0.248	0.216	0.178	0.134	0.085	0.032	0.000
	DEFLECTION DUE TO WT. OF SUPERIMPOSED DL ●	0.000	0.017	0.033	0.047	0.061	0.063	0.072	0.082	0.089	0.095	0.098	0.100	0.098	0.095	0.089	0.082	0.072	0.061	0.047	0.033	0.017	0.000
	TOTAL DEAD LOAD DEFLECTION	0.000	0.071	0.162	0.245	0.321	0.334	0.385	0.440	0.483	0.515	0.534	0.542	0.534	0.515	0.483	0.440	0.385	0.321	0.245	0.162	0.071	0.000
	VERTICAL CURVE ORDINATE	0.000	0.000	0.000	0.000	0.000	0.000	0.000	0.000	0.000	0.000	0.000	0.000	0.000	0.000	0.000	0.000	0.000	0.000	0.000	0.000	0.000	0.000
	SUPERELEVATION ORDINATE	0.000	0.000	0.000	0.000	0.000	0.000	0.000	0.000	0.000	0.000	0.000	0.000	0.000	0.000	0.000	0.000	0.000	0.000	0.000	0.000	0.000	0.000
	REQUIRED CAMBER	0″	7/8″	1 15/16″	2 15/16″	3 7/8″	4″	4 5/8″	5 1/4″	5 13/16″	6 3/16″	6 3/8″	6 1/2″	6 3/8″	6 3/16″	5 13/16″	5 1/4″	4 5/8″	3 7/8″	2 15/16″	1 15/16″	7/8″	0″

▲ INCLUDES SLAB, BUILDUP AND STAY-IN-PLACE FORMS

● INCLUDES 3-BAR METAL RAIL, SIDEWALK AND CONCRETE BARRIER RAIL.

NOTES:

1. VALUES ARE SHOWN IN FEET, EXCEPT "REQUIRED CAMBER" WHICH IS GIVEN IN INCHES.
2. SLOPE FOR THE ZERO CAMBER BASE LINE IS CONSTANT.
3. DEFLECTIONS IN THE DOWNWARD DIRECTION ARE POSITIVE. A REQUIRED CAMBER IN THE UPWARD DIRECTION IS POSITIVE.

SCHEMATIC CAMBER ORDINATES

PROJECT NO. B-4575

GASTON COUNTY

STATION: POT 9+64.28 -L-

STATE OF NORTH CAROLINA
DEPARTMENT OF TRANSPORTATION
RALEIGH

SUPERSTRUCTURE CAMBER AND DEFLECTIONS

NORTH CAROLINA PROFESSIONAL SEAL 028473 ENGINEER T. BRIAN QUERY
12-28-11

STV / Ralph Whitehead Associates, Inc.
1000 West Morehead St., Ste. 200
Charlotte, NC 28208
NC License Number F-0991

REVISIONS						
NO.	BY:	DATE:	NO.	BY:	DATE:	
1			3			
2			4			

SHEET NO. S-12

TOTAL SHEETS 30

DRAWN BY : KRJ DATE : 11-10
CHECKED BY : JAD DATE : 12-10

12/28/2011
N:\PROJ\2994\ustation\struct\Final\2nd Revised Submittal\(12)camber and deflections.dgn

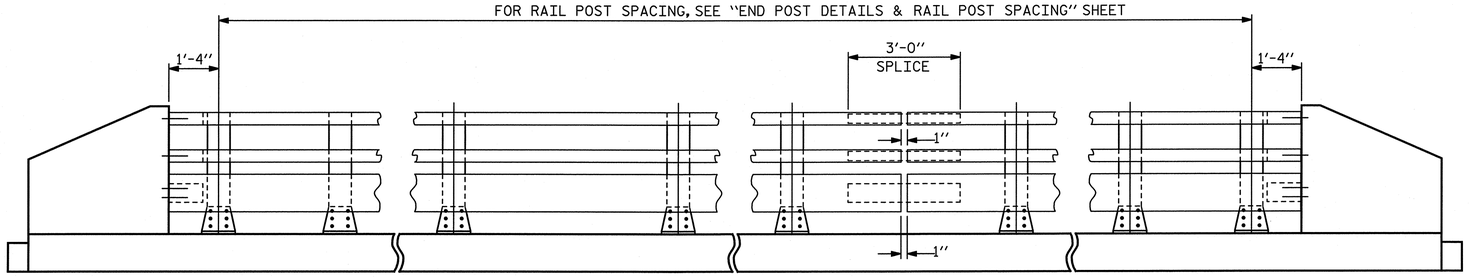

NOTE:
FOR ATTACHMENT OF METAL RAIL TO END POST, SEE "3 BAR METAL RAIL (SHEET 3 OF 3)".

ELEVATION

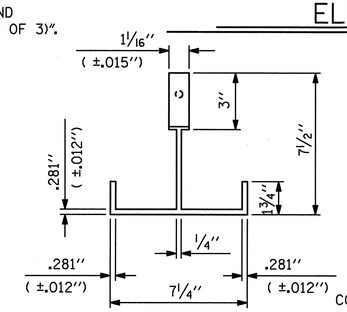

PLAN

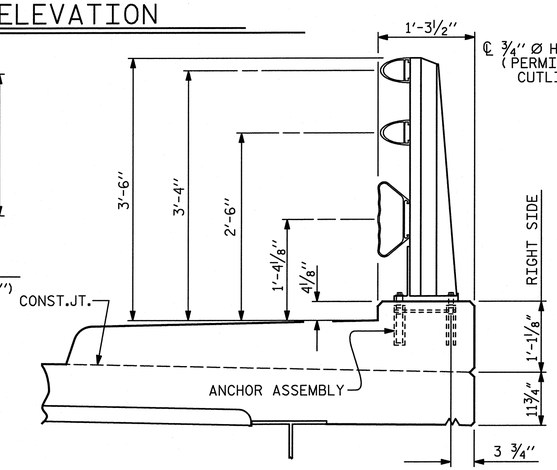

SECTION THRU RAIL

FOR ANCHOR ASSEMBLY, SEE "3 BAR METAL RAIL (SHEET 2 OF 3)".

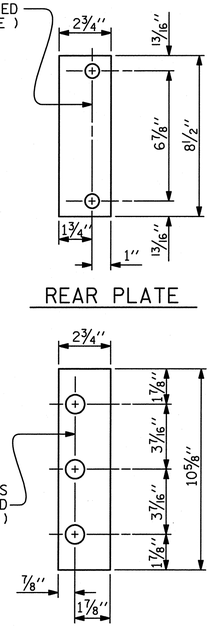

REAR PLATE

FRONT PLATE

SHIM DETAILS

NOTE :
SHIMS MAY BE CUT ALONG PERMITTED CUTLINE OR SLOTTED TO EDGE OF PLATE TO FACILITATE PLACEMENT.

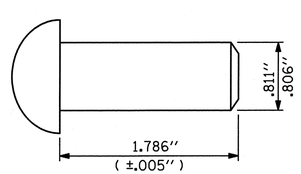

RIVET DETAIL

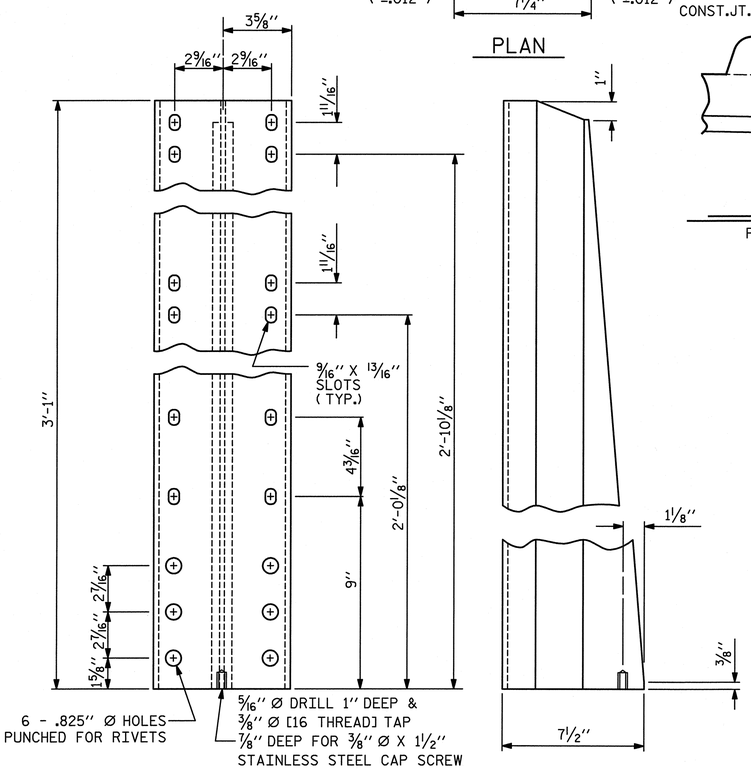

FRONT ELEVATION

SIDE ELEVATION

DETAILS OF POST

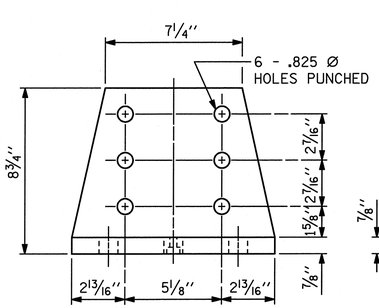

FRONT ELEVATION

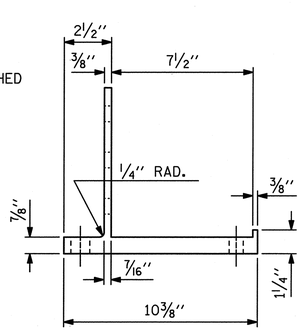

SIDE ELEVATION

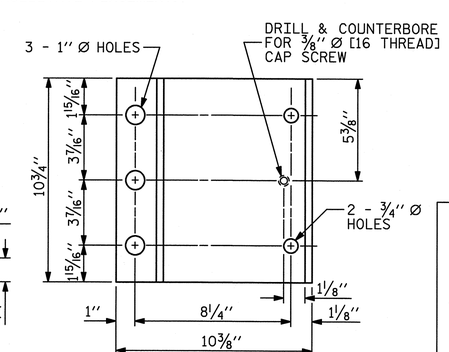

PLAN

POST BASE DETAILS

NOTES

AT THE CONTRACTOR'S OPTION, METAL RAIL MAY BE EITHER ALUMINUM OR GALVANIZED STEEL IN ACCORDANCE WITH THE REQUIREMENTS OF THE GENERAL NOTES AND THE FOLLOWING SPECIFICATIONS FOR THE ALTERNATE MATERIALS; HOWEVER, THE CONTRACTOR WILL BE REQUIRED TO USE THE SAME RAIL MATERIAL ON ALL STRUCTURES ON THE PROJECT FOR WHICH METAL RAIL IS DESIGNATED.

ALUMINUM RAILS

MATERIAL FOR POSTS, BASES AND RAILS, EXPANSION BARS AND CLAMP BARS SHALL BE ASTM B221 ALLOY 6061-T6.

MATERIAL FOR RIVETS SHALL BE ASTM B316 ALLOY 6061-T6. RIVETS SHALL BE STANDARD BUTTON HEAD AND CONE POINT COLD DRIVEN AS PER DRAWING.

THE BASE OF RAIL POSTS, OR ANY OTHER ALUMINUM SURFACE IN CONTACT WITH CONCRETE SHALL BE THOROUGHLY COATED WITH AN ALUMINUM IMPREGNATED CAULKING COMPOUND OF APPROVED QUALITY.

MATERIAL FOR SHIMS TO BE ASTM B209 ALLOY 6061-T6.

GALVANIZED STEEL RAILS

MATERIAL AND GALVANIZING ARE TO CONFORM TO THE FOLLOWING SPECIFICATIONS:

POST, POST BASES, RAILS, EXPANSION BARS AND CLAMP BARS : AASHTO M270 GRADE 36 STRUCTURAL STEEL - GALVANIZED TO AASHTO M111.

RIVETS: RIVETS SHALL MEET THE REQUIREMENTS OF ASTM A502 FOR GRADE 1 RIVETS.

THE CUT ENDS OF GALVANIZED STEEL RAILING, AFTER GRINDING SMOOTH SHALL BE GIVEN TWO COATS OF ZINC RICH PAINT MEETING THE REQUIREMENTS OF FEDERAL SPECIFICATION MIL-P-26915 USAF TYPE 1, OR OF FEDERAL SPECIFICATIONS TT-P-641.

SHIMS: SHIMS SHALL MEET THE REQUIREMENTS OF ASTM A570 FOR GRADE 33 OR A611 FOR GRADE C AND SHALL BE GALVANIZED IN ACCORDANCE WITH AASHTO M111.

RAIL CAPS: RAIL CAPS SHALL MEET THE REQUIREMENTS OF ASTM A570 FOR GRADE 33 OR A611 FOR GRADE C AND SHALL BE GALVANIZED IN ACCORDANCE WITH AASHTO M111.

GENERAL NOTES

RAILING SHALL BE CONTINUOUS FROM END POST TO END POST OF BRIDGE. EACH JOINT IN RAIL LENGTH SHALL BE SPLICED AS DETAILED. PANEL LENGTHS OF RAIL SHALL BE ATTACHED TO A MINIMUM OF THREE POSTS. PLACE ONE JOINT SPLICE JUST BEYOND THE 3RD RAIL POST FROM EACH END, TYPICALLY 14' FROM THE END. PLACE OTHER JOINTS AS NEEDED.

FOR END OF RAIL TO CLEAR FACE OF CONCRETE END POST DIMENSION, SEE "3 BAR METAL RAIL (SHEET 3 OF 3)".

CAP SCREWS SHALL BE ASTM F593 ALLOY 305 STAINLESS STEEL. WASHERS FOR RAIL ATTACHMENT SHALL MEET THE REQUIREMENTS OF ASTM F844 EXCEPT THEY SHALL BE MADE FROM ALLOY 304 STAINLESS STEEL.

CERTIFIED MILL REPORTS ARE REQUIRED FOR RAILS AND POSTS. SHOP INSPECTION IS NOT REQUIRED.

METAL RAIL POSTS SHALL BE SET NORMAL TO CURB GRADE.

METHOD OF MEASUREMENT FOR METAL RAILS: FOR LENGTH OF METAL RAILS TO BE PAID FOR, SEE THE STANDARD SPECIFICATIONS.

CURVED RAIL USAGE: WHERE RAILS ARE TO BE USED ON BRIDGES ON HORIZONTAL AND/OR VERTICAL CURVATURE THE CONTRACTOR MAY, AT HIS OPTION, HAVE THE REQUIRED CURVATURE IN THE RAIL FORMED IN THE SHOP OR IN THE FIELD. IN EITHER EVENT, THE RAIL SHALL CONFORM WITHOUT BUCKLING OR KINKING TO THE REQUIRED CURVATURE IN A UNIFORM MANNER ACCEPTABLE TO THE ENGINEER.

TO INSURE FUTURE IDENTIFICATION OF THE FABRICATOR, A PERMANENT IDENTIFYING MARK SHALL BE PLACED ON EACH POST. THE METHOD OF MARKING AND LOCATION SHALL BE SUCH THAT IT DOES NOT DETRACT FROM THE APPEARANCE OF THE POST, BUT REMAIN VISIBLE AFTER RAIL PLACEMENT.

SHIMS SHALL BE USED AS NECESSARY FOR POST ALIGNMENT.

ALLOY 6351-T5 MAY BE SUBSTITUTED FOR ALLOY 6061-T6 WHERE APPLICABLE.

MINOR VARIATIONS IN DETAILS OF METAL RAIL WILL BE CONSIDERED. DETAILS OF SUCH VARIATIONS, IF DESIRED, SHALL BE SUBMITTED FOR APPROVAL.

PAY LENGTH = 140.8 LIN.FT.

PROJECT NO. B-4575
GASTON COUNTY
STATION: POT 9+64.28 -L-

SHEET 1 OF 3

STATE OF NORTH CAROLINA
DEPARTMENT OF TRANSPORTATION
RALEIGH

STANDARD

3 BAR METAL RAIL

NORTH CAROLINA PROFESSIONAL SEAL 028473 ENGINEER BRIAN QUERY
12-28-11

ASSEMBLED BY : VJE		DATE : 11-10	
CHECKED BY : ???		DATE : 11-10	
DRAWN BY : JMB 1/88	REV. 10/17/00	RWW/LES	
CHECKED BY : GGH 1/88	REV. 5/7/03	RWW/JTE	
	REV. 5/1/06	TLA/GM	

STV / Ralph Whitehead Associates, Inc.
1000 West Morehead St., Ste. 200
Charlotte, NC 28208
NC License Number F-0991

REVISIONS						
NO.	BY:	DATE:	NO.	BY:	DATE:	
1			3			
2			4			

SHEET NO. S-13
TOTAL SHEETS 30

STD. NO. BMR5

12/28/2011
N:\PROJ\2994\ustation\struct\Final\2nd Revised Submittal\(13)3 bar metalrail1.dgn
bquery

NOTES

STRUCTURAL CONCRETE ANCHOR ASSEMBLY

THE STRUCTURAL CONCRETE ANCHOR ASSEMBLY SHALL CONSIST OF THE FOLLOWING COMPONENTS:

A. FERRULES SHALL BE MADE FROM STEEL MEETING THE REQUIREMENTS OF AASHTO M169, GRADE 12L14 AND SHALL HAVE A MINIMUM LENGTH OF THREADS OF 2" FOR ¾" FERRULES AND 1¾" FOR ⅝" FERRULES.

B. 3 - ¾" Ø X 2½" BOLTS WITH WASHERS. BOLTS SHALL CONFORM TO THE REQUIREMENTS OF ASTM A307. BOLTS AND WASHERS SHALL BE GALVANIZED. AT THE CONTRACTOR'S OPTION, STAINLESS STEEL BOLTS AND WASHERS MAY BE USED AS AN ALTERNATE FOR THE ¾" Ø X 2½" GALVANIZED BOLTS AND WASHERS. THEY SHALL CONFORM TO OR EXCEED THE MECHANICAL REQUIREMENTS OF ASTM A307. THE USE OF THIS ALTERNATE SHALL BE APPROVED BY THE ENGINEER.

C. 2 - ⅝" Ø X 2¼" BOLTS WITH WASHERS. BOLTS SHALL CONFORM TO THE REQUIREMENTS OF ASTM A307. BOLTS AND WASHERS SHALL BE GALVANIZED. AT THE CONTRACTOR'S OPTION, STAINLESS STEEL BOLTS AND WASHERS MAY BE USED AS AN ALTERNATE FOR THE ⅝" Ø X 2¼" GALVANIZED BOLTS AND WASHERS. THEY SHALL CONFORM TO OR EXCEED THE MECHANICAL REQUIREMENTS OF ASTM A307. THE USE OF THIS ALTERNATE SHALL BE APPROVED BY THE ENGINEER.

D. WIRE STRUT SHOWN IN THE CONCRETE ANCHOR ASSEMBLY DETAIL IS THE MINIMUM ALLOWABLE SIZE AND SHALL HAVE A MINIMUM TENSILE STRENGTH OF 100,000 PSI. AS AN OPTION, A 7/16" Ø WIRE STRUT WITH A MINIMUM TENSILE STRENGTH OF 90,000 PSI IS ACCEPTABLE.

E. THE METAL RAIL ANCHOR ASSEMBLIES TO BE HOT DIPPED GALVANIZED TO CONFORM TO REQUIREMENTS OF AASHTO M111.

F. THE COST OF THE METAL RAIL ANCHOR ASSEMBLY WITH BOLTS AND WASHERS COMPLETE IN PLACE SHALL BE INCLUDED IN THE PRICE BID FOR LINEAR FEET OF METAL RAIL.

G. BOLTS TO BE TIGHTENED ONE-HALF TURN WITH A WRENCH FROM A FINGER-TIGHT POSITION.

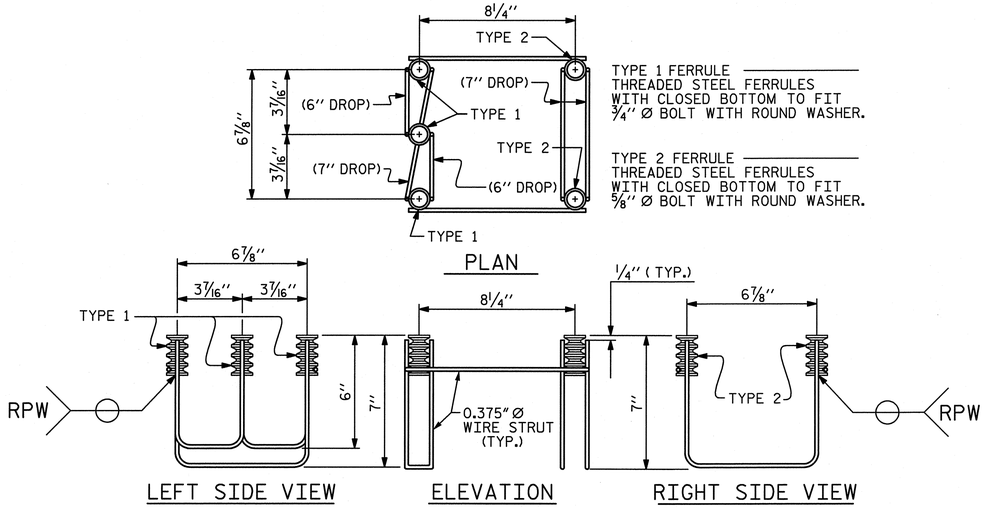

5-BOLT METAL RAIL ANCHOR ASSEMBLY

(25 ASSEMBLIES REQUIRED)

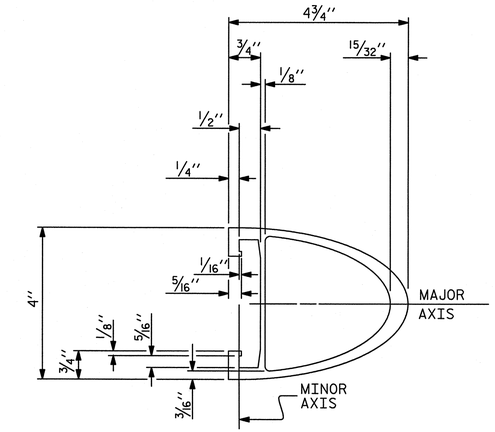

TOP & MIDDLE RAIL SECTION

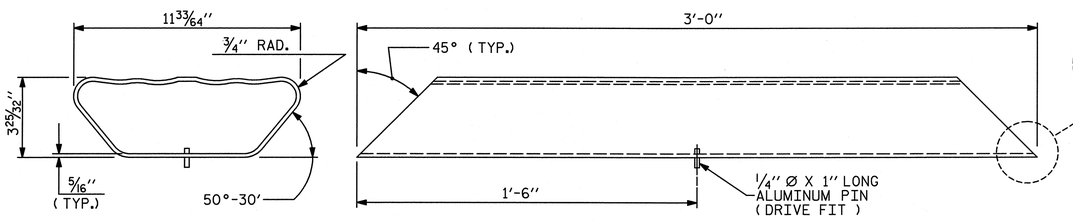

BOTTOM RAIL EXPANSION BAR

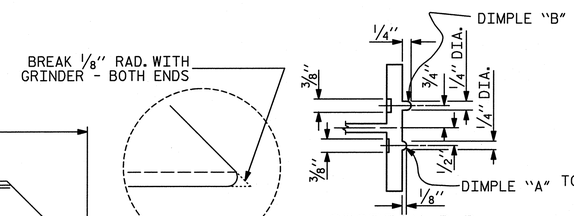

SECTION B-B

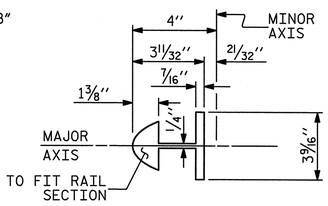

BAR SECTION

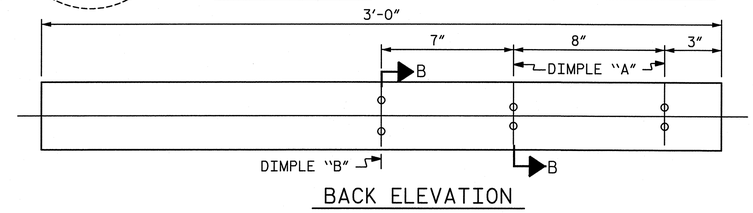

BACK ELEVATION

TOP & MIDDLE RAIL EXPANSION BAR

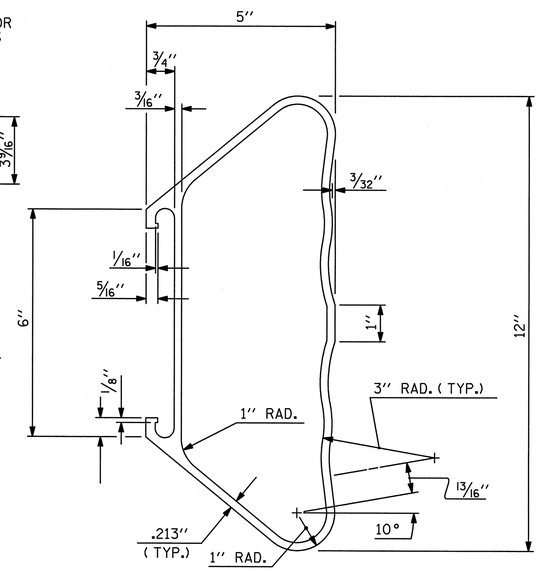

BOTTOM RAIL SECTION

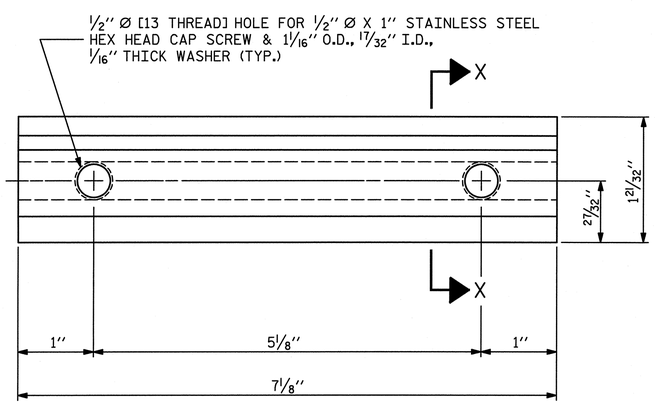

ELEVATION

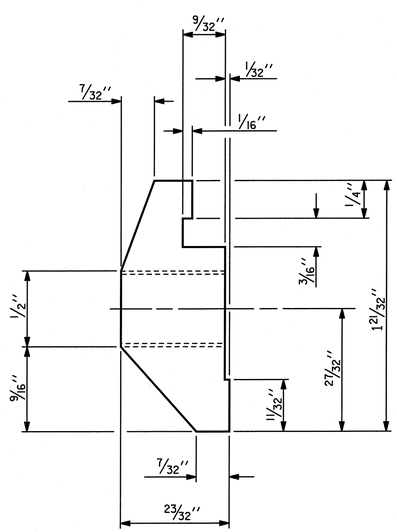

SECTION X-X

CLAMP BAR DETAIL

(6 REQUIRED PER POST)

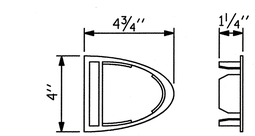

TOP & MIDDLE RAIL CAP

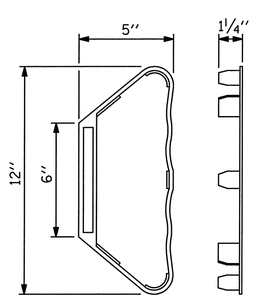

BOTTOM RAIL CAP

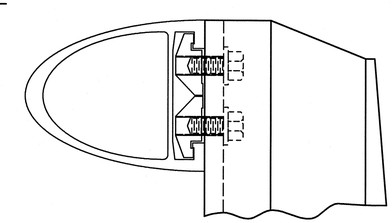

CLAMP ASSEMBLY

TOP RAIL SHOWN
(MIDDLE & BOTTOM RAIL ARE SIMILAR)

PROJECT NO. B-4575

GASTON COUNTY

STATION: POT 9+64.28 -L-

SHEET 2 OF 3

STATE OF NORTH CAROLINA
DEPARTMENT OF TRANSPORTATION
RALEIGH

STANDARD

3 BAR METAL RAIL

NORTH CAROLINA PROFESSIONAL SEAL 028473 ENGINEER BRIAN QUERY
12-28-11

ASSEMBLED BY : VJE	DATE : 02-11		
CHECKED BY : TBO, DBO	DATE : 02-11		
DRAWN BY : JMB 1/88	REV. 7/10/01	RWW/LES	
CHECKED BY : GGH 1/88	REV. 5/7/03	RWW/JTE	
	REV. 5/1/06	TLA/GM	

STV / Ralph Whitehead Associates, Inc.
1000 West Morehead St., Ste. 200
Charlotte, NC 28208
NC License Number F-0991

REVISIONS							SHEET NO.
NO.	BY:	DATE:	NO.	BY:	DATE:		S-14
1			3				TOTAL SHEETS
2			4				30

STD. NO. BMR6

12/28/2011
N:\PROJ\2994\ustation\struct\Final\2nd Revised Submittal\(14)3 bar metalrail2.dgn
bquery

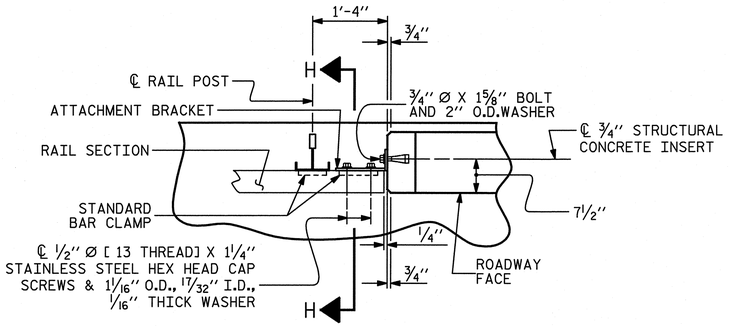

PLAN OF RAIL AND END POST

(STIFFENER ON 1/2" ℙ NOT SHOWN FOR CLARITY)

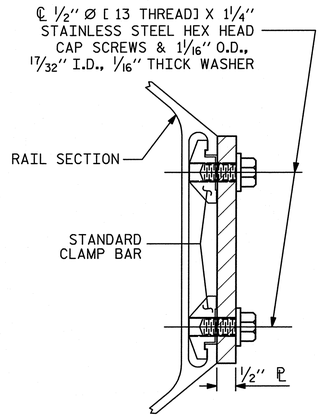

SECTION H-H

(FOR BOTTOM RAIL)

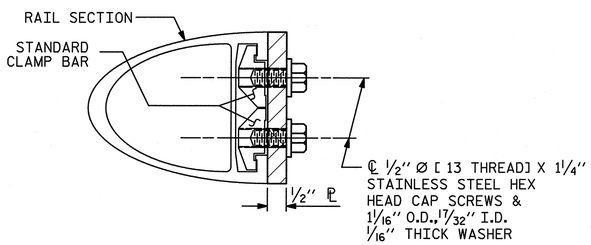

SECTION H-H

(FOR TOP & MIDDLE RAIL)

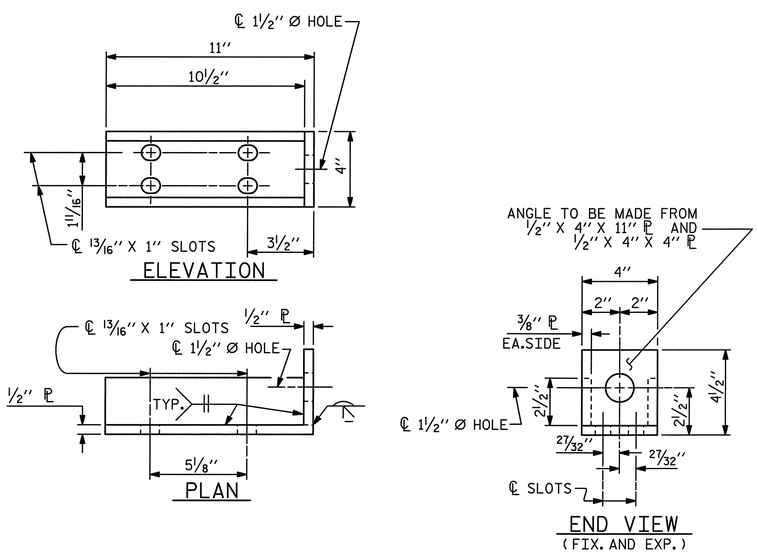

DETAILS FOR ATTACHMENT BRACKET

(TOP & MIDDLE RAIL ONLY)

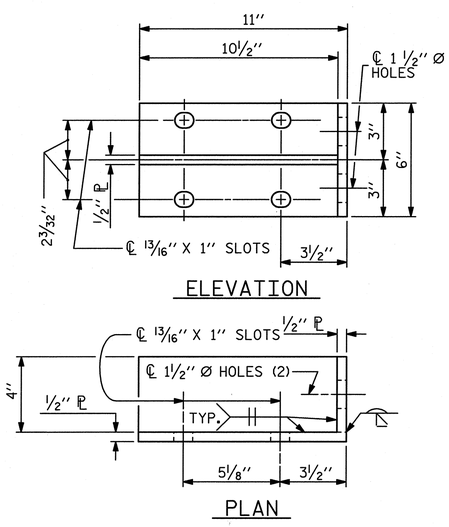

DETAILS FOR ATTACHMENT BRACKET

(BOTTOM RAIL ONLY)

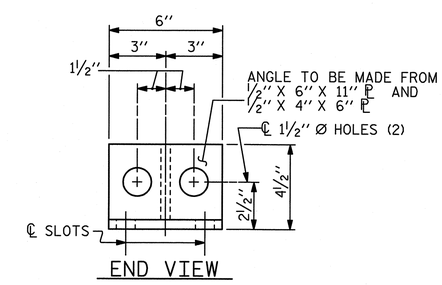

NOTES

METAL RAIL TO END POST CONNECTION

THE METAL RAIL TO END POST CONNECTION SHALL CONSIST OF THE FOLLOWING COMPONENTS:

A. 1/2" PLATES SHALL CONFORM TO AASHTO M270 GRADE 36 AND SHALL BE GALVANIZED AFTER FABRICATION.

B. 3/4" STRUCTURAL CONCRETE INSERT SHALL HAVE A WORKING LOAD SHEAR CAPACITY OF 4800 LBS. THE FERRULES SHALL ENGAGE A 3/4" Ø X 1 5/8" BOLT WITH 2" O.D. WASHER IN PLACE. THE 3/4" Ø X 1 5/8" BOLT SHALL HAVE N. C. THREADS.

C. CAP SCREWS FOR RAIL ATTACHMENT TO ANGLE SHALL CONFORM TO THE REQUIREMENTS OF ASTM F593 ALLOY 305 STAINLESS STEEL. CAP SCREWS TO BE CENTERED IN SLOTS AT 60°F. WASHERS FOR RAIL ATTACHMENT SHALL MEET THE REQUIREMENTS OF ASTM F844 EXCEPT THEY SHALL BE MADE FROM ALLOY 304 STAINLESS STEEL.

D. STANDARD CLAMP BARS SEE "3 BAR METAL RAIL (SHEET 2 OF 3)."

THE COST OF THE STANDARD CLAMP BARS AND CAP SCREWS USED IN THE METAL RAIL TO END POST CONNECTION SHALL BE INCLUDED IN THE UNIT CONTRACT PRICE BID FOR LINEAR FEET OF 3 BAR METAL RAIL.

THE 3/4" STRUCTURAL CONCRETE INSERT WITH BOLT SHALL BE ASSEMBLED IN THE SHOP.

THE COST OF THE 3/4" STRUCTURAL CONCRETE INSERT ASSEMBLY, AND THE 1/2" PLATES COMPLETE IN PLACE SHALL BE INCLUDED IN THE VARIOUS PAY ITEMS.

THE CONTRACTOR, AT HIS OPTION, MAY USE AN ADHESIVE BONDING SYSTEM IN LIEU OF THE STRUCTURAL CONCRETE INSERT EMBEDDED IN THE END POST. IF THE ADHESIVE BONDING SYSTEM IS USED, THE 3/4" Ø X 1 5/8" BOLT WITH WASHER SHALL BE REPLACED WITH A 3/4" Ø X 6 1/2" BOLT AND 2" O.D.WASHER. ALL SPECIFICATIONS THAT APPLY TO THE 3/4" Ø X 1 5/8" BOLT SHALL APPLY TO THE 3/4" Ø X 6 1/2" BOLT. FIELD TESTING OF THE ADHESIVE BONDING SYSTEM IS NOT REQUIRED.

NOTES

STRUCTURAL CONCRETE INSERT

THE STRUCTURAL CONCRETE INSERT ASSEMBLY SHALL CONSIST OF THE FOLLOWING COMPONENTS:

A. FERRULES SHALL BE MADE FROM STEEL MEETING THE REQUIREMENTS OF AASHTO M169, GRADE 12L14 AND SHALL HAVE A MINIMUM LENGTH OF THREADS OF 1 1/2".

B. 1 - 3/4" Ø X 1 5/8" BOLT WITH WASHER. BOLT SHALL CONFORM TO THE REQUIREMENTS OF ASTM A307. BOLT AND WASHER SHALL BE GALVANIZED. AT THE CONTRACTORS OPTION, STAINLESS STEEL BOLT AND WASHER MAY BE USED AS AN ALTERNATE FOR THE 3/4" Ø X 1 5/8" GALVANIZED BOLT AND WASHER. THEY SHALL CONFORM TO OR EXCEED THE MECHANICAL REQUIREMENTS OF ASTM A307. THE USE OF THIS ALTERNATE SHALL BE APPROVED BY THE ENGINEER.

C. WIRE STRUT SHOWN IN THE CONCRETE INSERT ASSEMBLY DETAIL IS THE MINIMUM ALLOWABLE SIZE AND SHALL HAVE A MINIMUM TENSILE STRENGTH OF 100,000 PSI. AS AN OPTION, A 7/16" Ø WIRE STRUT WITH A MINIMUM TENSILE STRENGTH OF 90,000 PSI IS ACCEPTABLE.

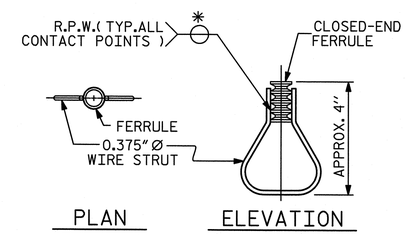

STRUCTURAL CONCRETE INSERT

* EACH WELDED ATTACHMENT OF WIRE TO FERRULE SHALL DEVELOP THE TENSILE STRENGTH OF THE WIRE.

PROJECT NO. B-4575

GASTON COUNTY

STATION: POT 9+64.28 -L-

SHEET 3 OF 3

STATE OF NORTH CAROLINA
DEPARTMENT OF TRANSPORTATION
RALEIGH

STANDARD

3 BAR METAL RAIL

NORTH CAROLINA PROFESSIONAL SEAL 028473 ENGINEER BRIAN QUERY
12-28-11

ASSEMBLED BY : VJE		DATE : 11-10	
CHECKED BY : ???		DATE : 11-10	
DRAWN BY : JMB 1/88	REV. 7/10/01	RWW/LES	
CHECKED BY : GGH 1/88	REV. 5/7/03	RWW/JTE	
	REV. 5/1/06	TLA/GM	

STV / Ralph Whitehead Associates, Inc.
1000 West Morehead St., Ste. 200
Charlotte, NC 28208
NC License Number F-0991

REVISIONS						
NO.	BY:	DATE:	NO.	BY:	DATE:	
1			3			
2			4			

SHEET NO. S-15

TOTAL SHEETS 30

STD. NO. BMR7

12/28/2011
N:\PROJ\2994\ustation\struct\Final\2nd Revised Submittal\(15)3 bar metalrail3.dgn
bquery

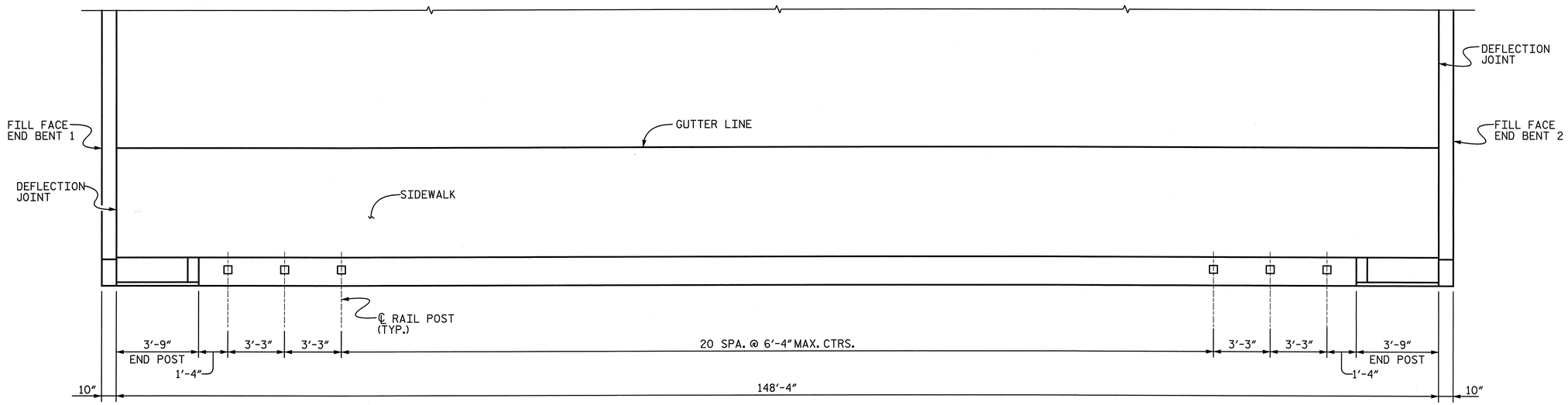

SPAN A

PLAN OF RAIL POST SPACINGS

NOTE:

PAYMENT FOR END POST MATERIAL AND LABOR SHALL BE INCLUDED IN THE SQUARE FOOT UNIT PRICE BID ITEM "REINFORCED CONCRETE DECK SLAB".

BILL FOR ONE END POST					
BAR	NO.	SIZE	TYPE	LENGTH	WEIGHT
✱ E1	2	#7	1	3'-9"	15
✱ E2	2	#7	1	4'-1"	17
✱ E3	2	#7	1	4'-7"	19
✱ E4	2	#7	1	5'-1"	21
✱ F1	4	#6	STR.	3'-5"	21
✱ F2	2	#6	STR.	2'-9"	8
✱ F3	2	#6	STR.	3'-8"	11
EPOXY COATED REINF. STEEL					112 LBS.
CLASS AA CONCRETE					0.4 CU. YDS.

✱ DENOTES EPOXY COATED REINFORCING STEEL.

BAR TYPE

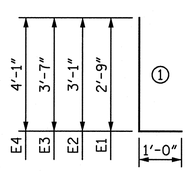

ALL BAR DIMENSIONS ARE OUT TO OUT.

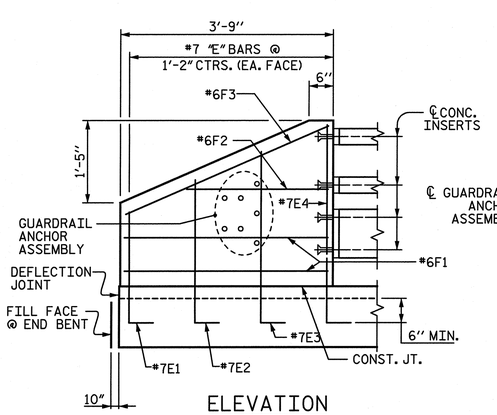

ELEVATION

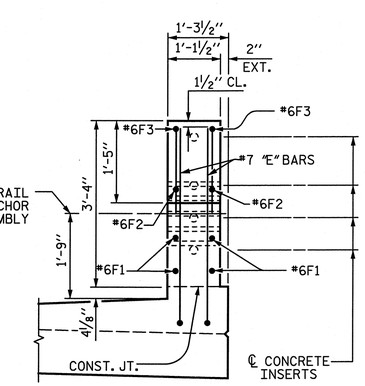

END VIEW

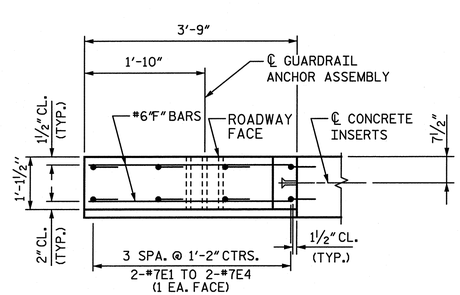

PLAN

END POST DETAILS

PROJECT NO. B-4575

GASTON COUNTY

STATION: POT 9+64.28 -L-

NORTH CAROLINA PROFESSIONAL SEAL 028473 ENGINEER BRIAN QUERY 12-28-11

STATE OF NORTH CAROLINA
DEPARTMENT OF TRANSPORTATION
RALEIGH

SUPERSTRUCTURE

END POST DETAILS & RAIL POST SPACING

DRAWN BY : VJE DATE : 11-10

CHECKED BY : JTG DATE : 11-10

STV / Ralph Whitehead Associates, Inc.
1000 West Morehead St., Ste. 200
Charlotte, NC 28208
NC License Number F-0991

REVISIONS						
NO.	BY:	DATE:	NO.	BY:	DATE:	
1			3			
2			4			

SHEET NO. S-16

TOTAL SHEETS 30

12/28/2011
N:\PROJ\2994\ustation\struct\Final\2nd Revised Submittal\(16)end post details.dgn

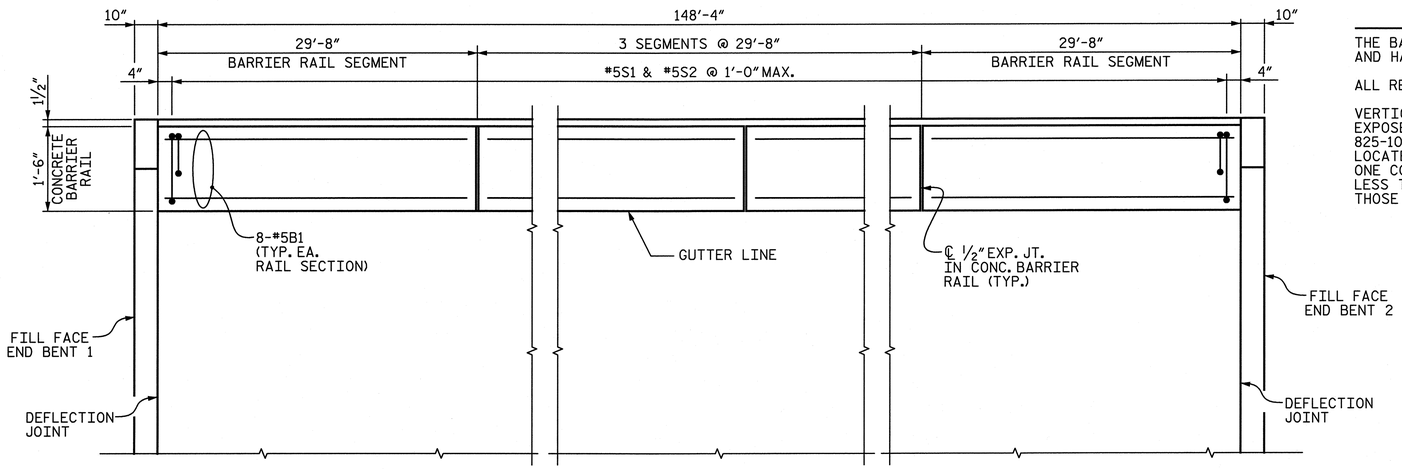

PLAN

NOTES

THE BARRIER RAIL SHALL NOT BE CAST UNTIL ALL SLAB CONCRETE HAS BEEN CAST AND HAS REACHED A MINIMUM COMPRESSIVE STRENGTH OF 3,000 PSI.

ALL REINFORCING STEEL IN BARRIER RAILS SHALL BE EPOXY COATED.

VERTICAL GROOVED CONTRACTION JOINTS, ½" IN DEPTH, SHALL BE TOOLED IN ALL EXPOSED FACES OF THE BARRIER RAIL AND IN ACCORDANCE WITH ARTICLE 825-10(B) OF THE STANDARD SPECIFICATIONS. THE CONTRACTION JOINT SHALL BE LOCATED AT EACH THIRD POINT BETWEEN BARRIER RAIL EXPANSION JOINTS. ONLY ONE CONTRACTION JOINT IS REQUIRED AT MIDPOINT OF BARRIER RAIL SEGMENTS LESS THAN 20 FEET IN LENGTH AND NO CONTRACTION JOINTS ARE REQUIRED FOR THOSE SEGMENTS LESS THAN 10 FEET IN LENGTH.

BAR TYPES

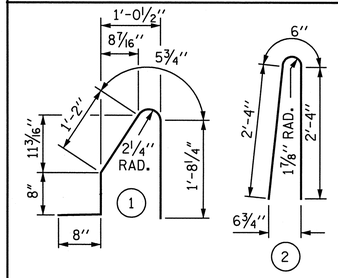

ALL BAR DIMENSIONS ARE OUT TO OUT.

BILL OF MATERIAL

FOR CONCRETE BARRIER RAIL ONLY

BAR	NO.	SIZE	TYPE	LENGTH	WEIGHT
✱ S1	150	#5	1	4'-8"	730
✱ S2	150	#5	2	5'-2"	808
✱ B1	40	#5	STR.	29'-3"	1,220

✱ EPOXY COATED

REINFORCING STEEL	2,758 LBS.
CLASS AA CONCRETE	14.9 CU. YDS.
CONCRETE BARRIER RAIL	148.3 LIN. FT.

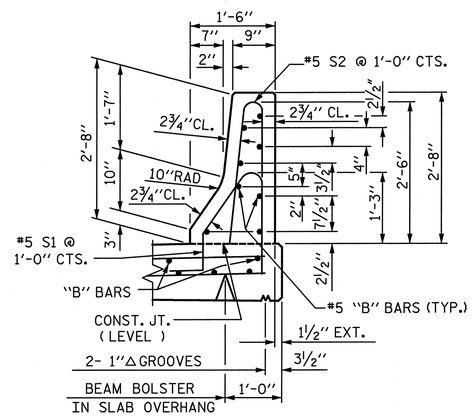

SECTION THRU RAIL

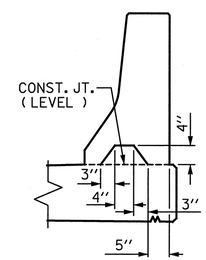

SECTION S-S

AT DAM IN OPEN JOINT
(THIS IS TO BE USED ONLY WHEN SLIP FORM IS USED)

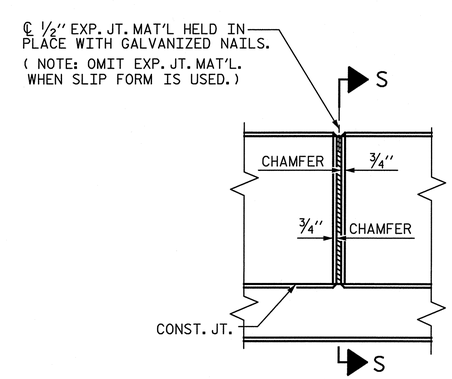

ELEVATION AT EXPANSION JOINTS

BARRIER RAIL DETAILS

PROJECT NO. B-4575

GASTON COUNTY

STATION: POT 9+64.28 -L-

STATE OF NORTH CAROLINA
DEPARTMENT OF TRANSPORTATION
RALEIGH

STANDARD

CONCRETE BARRIER RAIL

NORTH CAROLINA PROFESSIONAL SEAL 028473 ENGINEER BRIAN QUERY 12-28-11

ASSEMBLED BY :	VJE	DATE :	11-10
CHECKED BY :	JTG	DATE :	11-10
DRAWN BY : ARB	5/87	REV. 10/17/00	RWW/LES
CHECKED BY : SJD	9/87	REV. 5/7/03R	RWW/JTE
		REV. 5/1/06	TLA/GM

STV / Ralph Whitehead Associates, Inc.
1000 West Morehead St., Ste. 200
Charlotte, NC 28208
NC License Number F-0991

REVISIONS						
NO.	BY:	DATE:	NO.	BY:	DATE:	
1			3			
2			4			

SHEET NO. S-17

TOTAL SHEETS 30

STD. NO. CBR1

12/28/2011
N:\PROJ\2994\ustation\struct\Final\2nd Revised Submittal\(17)concrete barrier rail.dgn
bquery

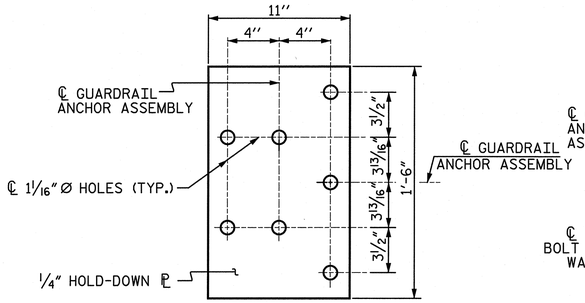

PLAN

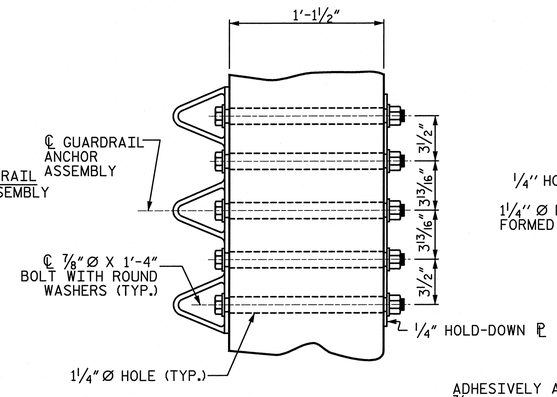

END VIEW

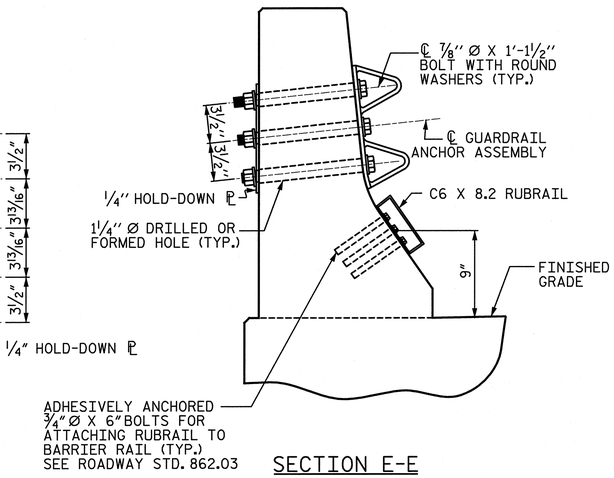

SECTION E-E

TYPE III GUARDRAIL ANCHOR ASSEMBLY DETAILS

B-77 GUARDRAIL ANCHOR ASSEMBLY DETAILS

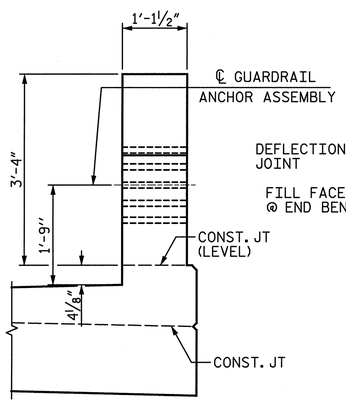

END VIEW

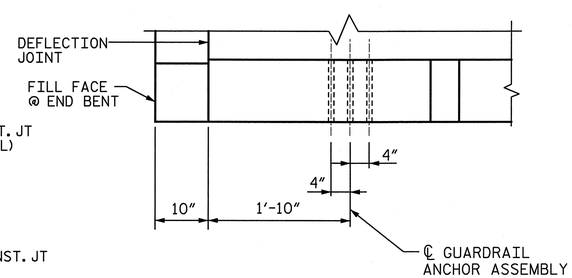

PLAN

LOCATION OF TYPE III GUARDRAIL ANCHOR AT END POST

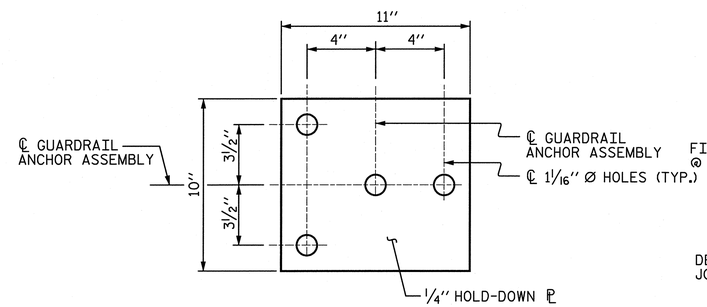

PLAN

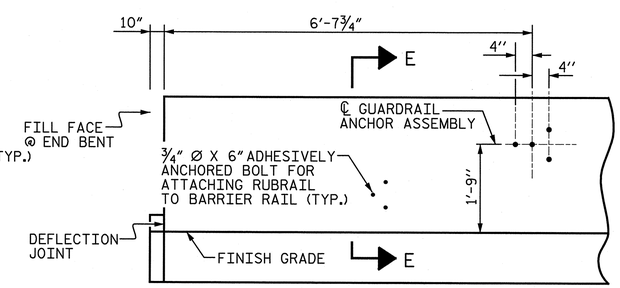

ELEVATION

FOR LOCATION OF RUBRAIL, SEE ROADWAY STD. 862.03

LOCATION OF B-77 GUARDRAIL ANCHOR ON CONCRETE BARRIER RAIL

NOTES

THE TYPE III GUARDRAIL ANCHOR ASSEMBLY SHALL CONSIST OF A 1/4'' HOLD DOWN PLATE AND 7 -7/8'' Ø BOLTS WITH NUTS AND WASHERS.

THE B-77 GUARDRAIL ANCHOR ASSEMBLY SHALL CONSIST OF A 1/4"HOLD DOWN PLATE AND 4-7/8" Ø BOLTS WITH NUTS, WASHERS RUBRAIL AND ADHESIVELY ANCHORED BOLTS.

THE HOLD-DOWN PLATES SHALL CONFORM TO AASHTO M270 GRADE 36. AFTER FABRICATION, THE HOLD-DOWN PLATES SHALL BE HOT-DIP GALVANIZED IN ACCORDANCE WITH AASHTO M111.

BOLTS SHALL CONFORM TO THE REQUIREMENTS OF ASTM A307 AND NUTS SHALL CONFORM TO THE REQUIREMENTS OF AASHTO M291. BOLTS, NUTS AND WASHERS SHALL BE GALVANIZED. AT THE CONTRACTOR'S OPTION, STAINLESS STEEL BOLTS, NUTS AND WASHERS MAY BE USED AS AN ALTERNATE FOR THE 7/8'' Ø GALVANIZED BOLTS, NUTS AND WASHERS. THEY SHALL CONFORM TO OR EXCEED THE MECHANICAL REQUIREMENTS OF ASTM A307. THE USE OF THIS ALTERNATE SHALL BE APPROVED BY THE ENGINEER.

AFTER INSTALLATION, THE EXPOSED THREAD OF THE BOLT SHALL BE BURRED WITH A SHARP POINTED TOOL.

THE COST OF THE TYPE III GUARDRAIL ANCHOR ASSEMBLIES WITH BOLTS, NUTS AND WASHERS COMPLETE IN PLACE, SHALL BE INCLUDED IN THE UNIT CONTRACT PRICE BID FOR 3-BAR METAL RAIL.

THE COST OF THE B-77 GUARDRAIL ANCHOR ASSEMBLIES WITH BOLTS, NUTS AND WASHERS COMPLETE IN PLACE, SHALL BE INCLUDED IN THE UNIT CONTRACT PRICE BID FOR CONCRETE BARRIER RAIL.

THE VERTICAL REINFORCING BARS MAY BE SHIFTED SLIGHTLY IN THE END POST TO CLEAR ASSEMBLY BOLTS.

THE 1 1/4'' Ø HOLES SHALL BE FORMED OR DRILLED WITH A CORE BIT. IMPACT TOOLS WILL NOT BE PERMITTED. ANY CONCRETE DAMAGED BY THIS WORK SHALL BE REPAIRED TO THE SATISFACTION OF THE ENGINEER.

THE C6 X 8.2 RUBRAIL IS TO BE ADHESIVELY ANCHORED TO THE RAIL USING THREE 3/4" Ø X 6" BOLTS WITH WASHERS. LEVEL ONE FIELD TESTING IS REQUIRED, AND THE YIELD LOAD OF THE 3/4" Ø BOLT IS 12 KIPS. FOR ADHESIVELY ANCHORED ANCHOR BOLTS OR DOWELS, SEE SPECIAL PROVISIONS. SEE ROADWAY STANDARD 862.03 FOR DETAILS AND LOCATION OF THE RUBRAIL.

A GUARDRAIL ANCHOR ASSEMBLY IS REQUIRED AT ALL POINTS WHERE APPROACH GUARDRAIL IS TO BE ATTACHED TO THE END OF THE PARAPET OR BARRIER RAIL. FOR POINTS OF ATTACHMENT AND ASSEMBLY LOCATION, SEE SKETCH.

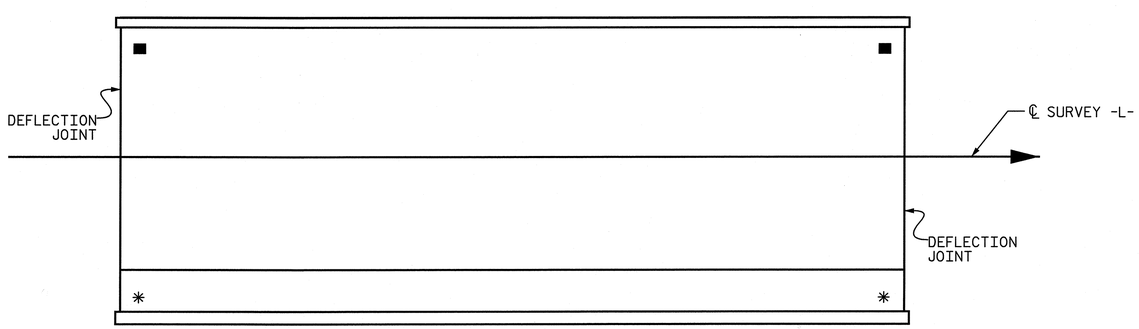

SKETCH SHOWING POINTS OF ATTACHMENT

✱ LOCATION OF TYPE III GUARDRAIL ATTACHMENT
■ LOCATION OF B-77 GUARDRAIL ATTACHMENT

PROJECT NO. B-4575
GASTON COUNTY
STATION: POT 9+64.28 -L-

NORTH CAROLINA PROFESSIONAL SEAL 028473 ENGINEER J. BRIAN QUIERT 12-28-11

STATE OF NORTH CAROLINA
DEPARTMENT OF TRANSPORTATION
RALEIGH

GUARDRAIL ANCHORAGE DETAILS

STV / Ralph Whitehead Associates, Inc.
1000 West Morehead St., Ste. 200
Charlotte, NC 28208
NC License Number F-0991

REVISIONS						SHEET NO.
NO.	BY:	DATE:	NO.	BY:	DATE:	S-18
1			3			TOTAL SHEETS
2			4			30

DRAWN BY : VJE DATE : 11-10
CHECKED BY : JTG DATE : 11-10

12/28/2011
N:\PROJ\2994\ustation\struct\Final\2nd Revised Submittal\(18)guardrailanchorage details.dgn

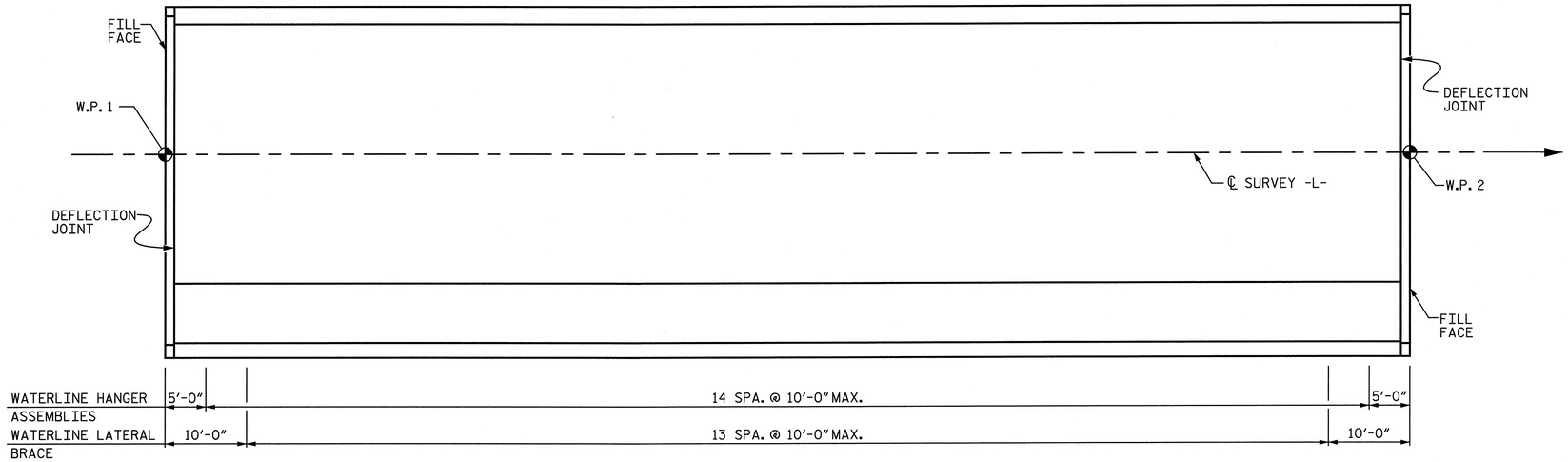

PLAN

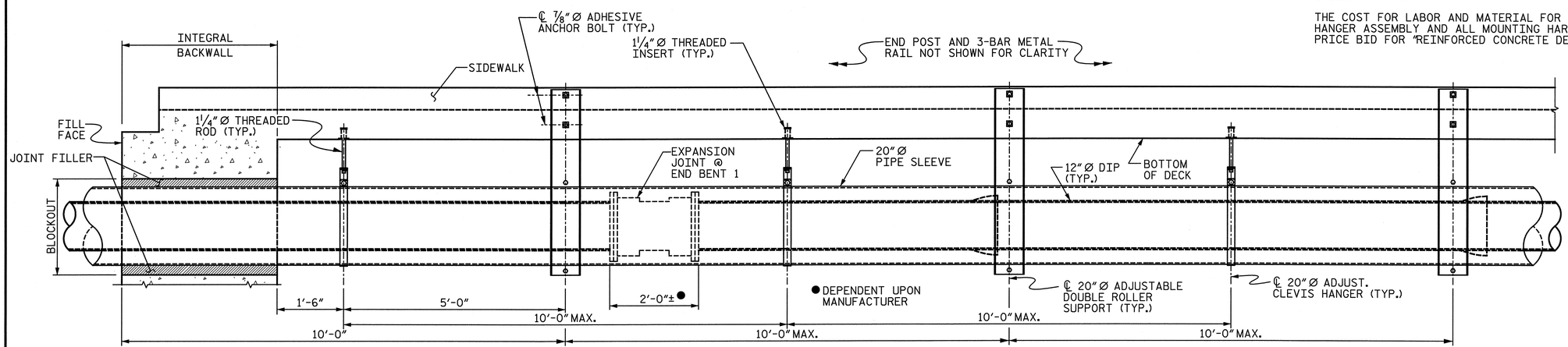

PARTIAL ELEVATION VIEW OF WATERLINE

(END BENT 1 SHOWN, END BENT 2 SIMILAR)

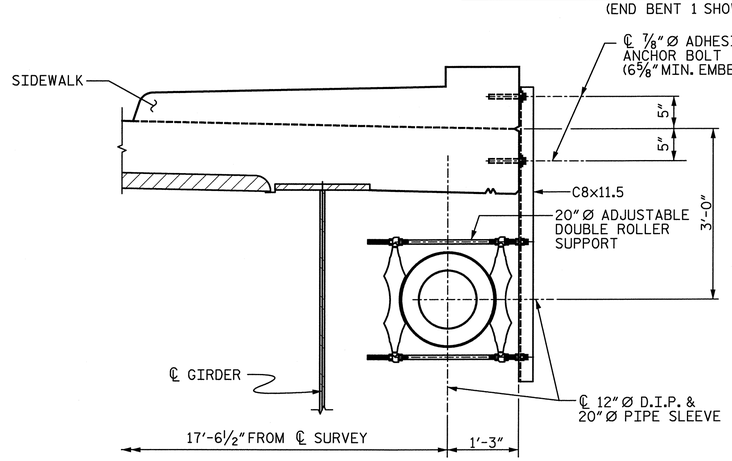

SECTION @ LATERAL BRACE

(LOOKING UPSTATION)

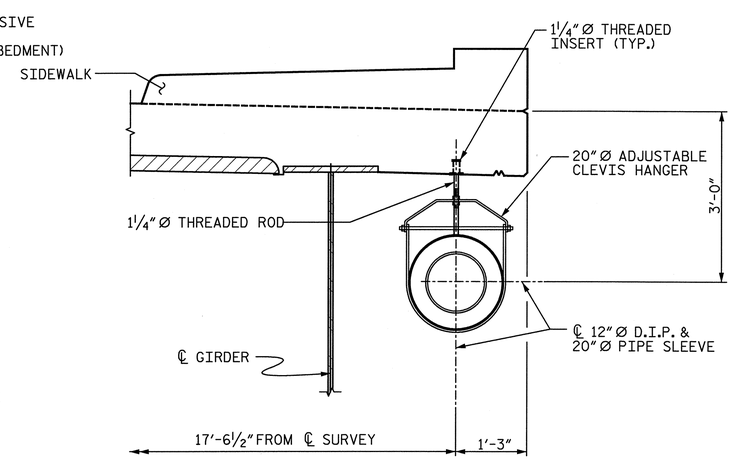

SECTION @ HANGER ASSEMBLY

(LOOKING UPSTATION)

NOTES:

WATERLINE IS RESTRAINED MECHANICAL JOINT TYPE. FOR WATERLINE REFER TO UTILITY PLANS.

ALL COMPONENTS OF WATERLINE LATERAL BRACES AND HANGER ASSEMBLIES INCLUDING BUT NOT LIMITED TO RODS, CHANNELS, NUTS, AND WASHERS SHALL BE GALVANIZED.

SEE "SUPERSTRUCTURE DETAIL" SHEET FOR WATERLINE BLOCKOUT DIMENSIONS.

NUTS SHALL CONFORM TO AASHTO M292 AS APPLICABLE OR AASHTO M291 AND WASHERS SHALL CONFORM TO ASTM F436.

CONTRACTOR SHALL SUBMIT SHOP DRAWINGS AND FINAL LAYOUT FOR WATERLINE HANGER ASSEMBLY AND LATERAL BRACES. SEE SPECIAL PROVISIONS.

THE CONTRACTOR SHALL COORDINATE PLACEMENT OF WATERLINE ASSEMBLIES AND LATERAL BRACES WITH FENCE POSTS SO THAT THERE IS A MINIMUM 1'-0" SPACING BETWEEN THE CENTERLINES OF EACH.

ADHESIVE ANCHOR SYSTEM FOR LATERAL BRACES SHALL HAVE A MINIMUM PULLOUT STRENGTH OF 8.0 KIPS. NO FIELD TESTING IS REQUIRED. FOR ADHESIVELY ANCHORED ANCHOR BOLTS OR DOWELS.

THREADED INSERTS FOR HANGER ASSEMBLIES SHALL HAVE A MINIMUM MECHANICAL ULTIMATE TENSILE STRENGTH OF 9.0 KIPS. NO FIELD TESTING IS REQUIRED. FOR THREADED INSERTS, SEE SPECIAL PROVISIONS.

THREADED RODS SHALL BE INSTALLED IN THE THREADED INSERTS IN ACCORDANCE WITH THE MANUFACTURER'S SPECIFICATIONS.

CONTRACTOR SHALL ADJUST THE DOUBLE ROLLER SUPPORT ASSEMBLY TO ENSURE A TIGHT FIT BETWEEN THE ROLLERS AND THE WATERLINE.

FOR PAYMENT OF PIPE SLEEVE, WATERLINE AND EXPANSION JOINTS IN WATERLINE, SEE UTILITY PLANS.

THE COST FOR LABOR AND MATERIAL FOR THE WATERLINE LATERAL BRACES, WATERLINE HANGER ASSEMBLY AND ALL MOUNTING HARDWARE REQUIRED SHALL BE PAID FOR IN THE UNIT PRICE BID FOR "REINFORCED CONCRETE DECK SLAB".

PROJECT NO. B-4575
GASTON COUNTY
STATION: POT 9+64.28 -L-

STATE OF NORTH CAROLINA
DEPARTMENT OF TRANSPORTATION
RALEIGH

WATERLINE HANGER DETAILS

NORTH CAROLINA PROFESSIONAL SEAL 028473 ENGINEER T. BRIAN QUERY
09-20-12

REVISIONS							SHEET NO.
NO.	BY:	DATE:	NO.	BY:	DATE:		S-19
1			3				TOTAL SHEETS
2			4				30

STV / Ralph Whitehead Associates, Inc.
1000 West Morehead St., Ste. 200
Charlotte, NC 28208
NC License Number F-0991

DRAWN BY : VJE, LGH DATE : 02-11
CHECKED BY : JTG, DBO DATE : 02-11

9/20/2012
N:\PROJ\2994\ustation\struct\Final\2nd Revised Submittal\(19)waterline Details.dgn

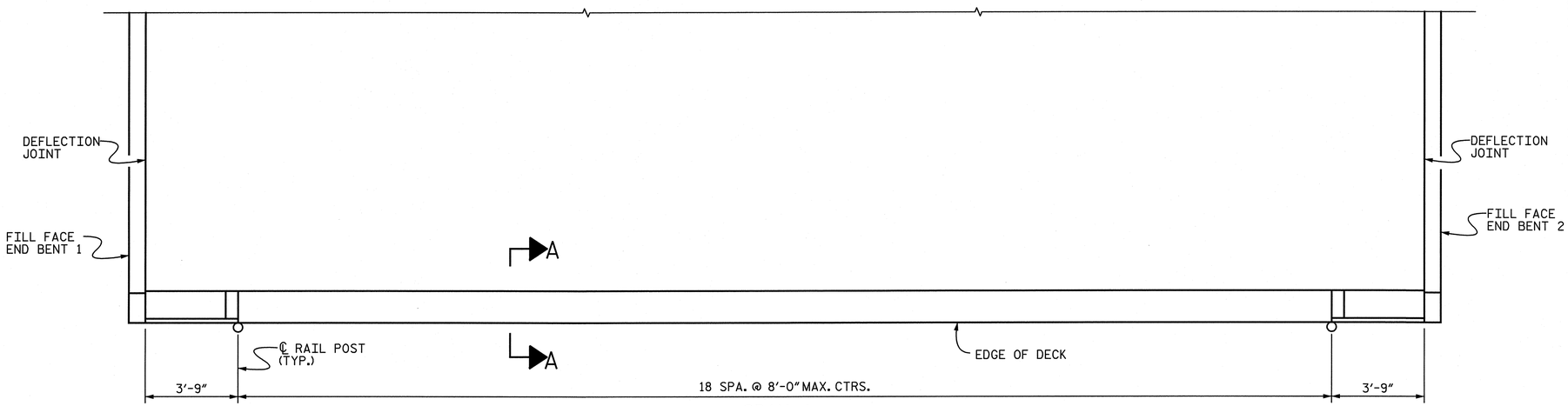

SPAN A

PLAN OF FENCE POST SPACINGS

NOTES:

1. ADHESIVE ANCHOR SYSTEM SHALL HAVE A MINIMUM PULLOUT STRENGTH OF 5.3 KIPS. NO FIELD TESTING IS REQUIRED. FOR ADHESIVELY ANCHORED ANCHOR BOLTS OR DOWELS, SEE SPECIAL PROVISIONS.
2. STEEL PIPES, ANGLES, ANCHOR BOLTS AND HARDWARE FOR FENCE SHALL BE GALVANIZED IN ACCORDANCE WITH THE STANDARD SPECIFICATIONS.
3. THE CONTRACTOR SHALL COORDINATE PLACEMENT OF THE FENCE POSTS WITH THE WATERLINE ASSEMBLIES AND LATERAL BRACES SO THAT THERE IS A MINIMUM 1'-0" SPACING BETWEEN THE CENTERLINES OF EACH.
4. FOR CHAIN LINK FENCE FOR RAILROAD PROTECTION, SEE SPECIAL PROVISIONS.

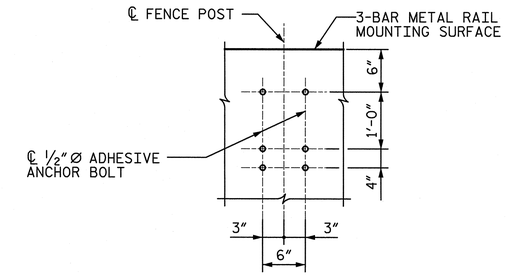

BOLT SETTING DETAIL

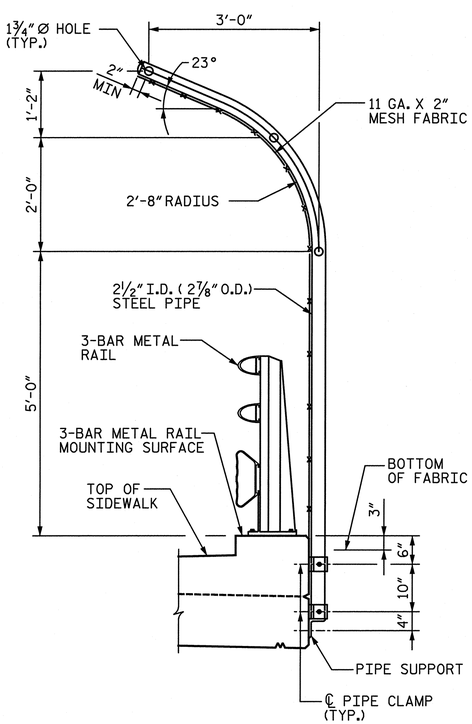

SECTION A-A

(REINFORCEMENT NOT SHOWN FOR CLARITY)

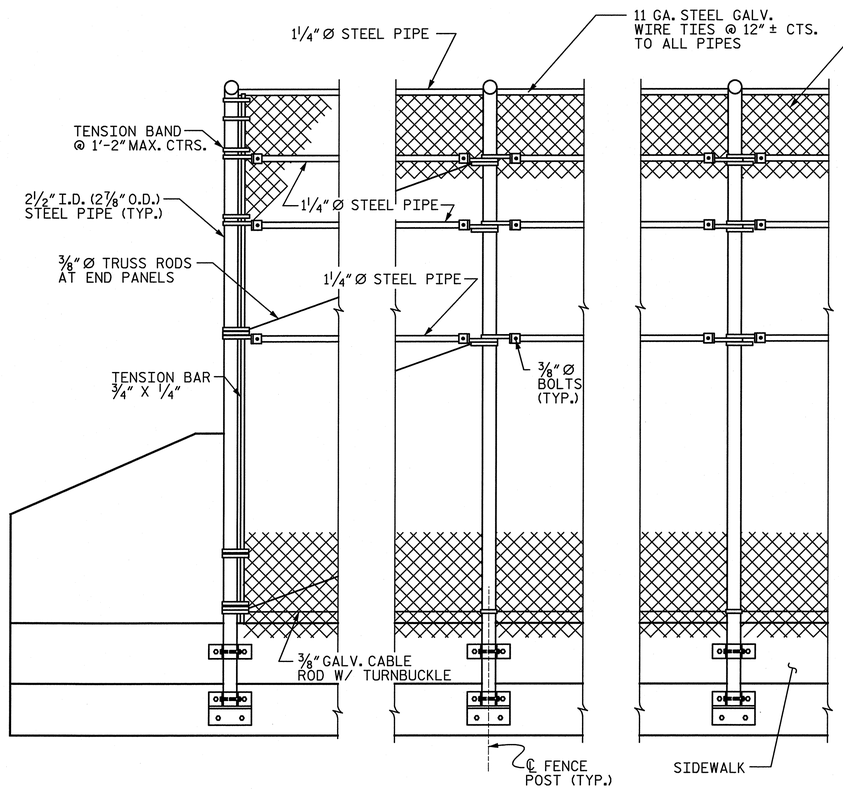

END POST ELEVATION

MIDDLE ELEVATION

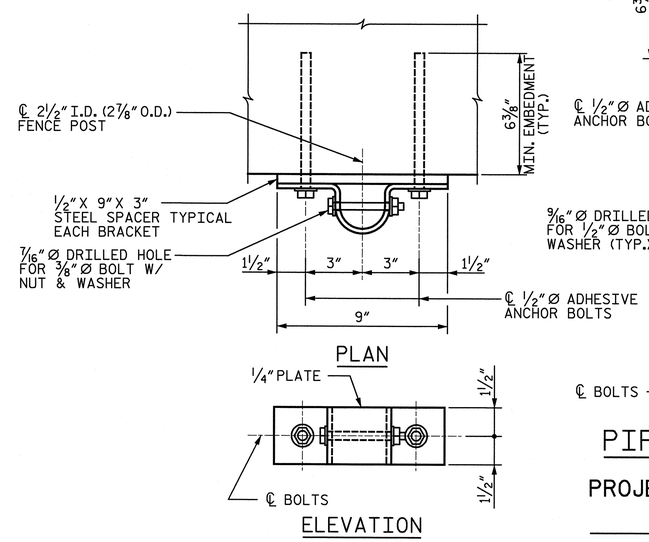

PIPE CLAMP DETAILS

(PIPE NOT SHOWN FOR CLARITY)

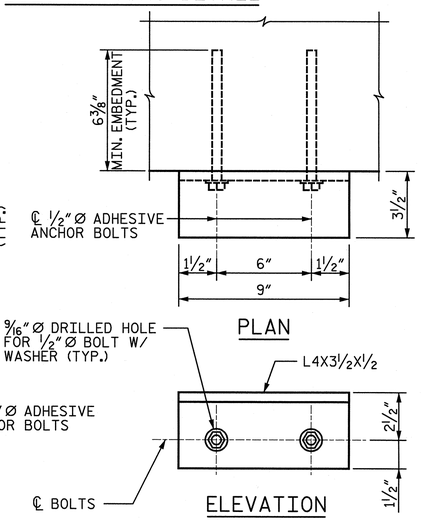

PIPE SUPPORT DETAILS

PROJECT NO. B-4575

GASTON COUNTY

STATION: POT 9+64.28 -L-

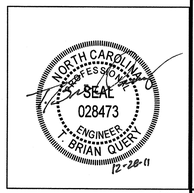

STATE OF NORTH CAROLINA
DEPARTMENT OF TRANSPORTATION
RALEIGH

FENCE DETAILS

DRAWN BY : KRJ, VJE DATE : 11-10
CHECKED BY : JTG DATE : 11-10

STV / Ralph Whitehead Associates, Inc.
1000 West Morehead St., Ste. 200
Charlotte, NC 28208
NC License Number F-0991

REVISIONS								SHEET NO.
NO.	BY:	DATE:	NO.	BY:	DATE:			S-20
1			3					TOTAL SHEETS
2			4					30

12/28/2011
N:\PROJ\2994\ustation\struct\Final\2nd Revised Submittal\(20)fence details.dgn

SUPERSTRUCTURE REINFORCING STEEL LENGTHS ARE BASED ON THE FOLLOWING MINIMUM SPLICE LENGTHS

BAR SIZE	SUPERSTRUCTURE EXCEPT APPROACH SLABS, PARAPET, AND BARRIER RAIL		APPROACH SLABS		PARAPET AND BARRIER RAIL
	EPOXY COATED	UNCOATED	EPOXY COATED	UNCOATED	
#4	2'-0"	1'-9"	2'-0"	1'-9"	2'-9"
#5	2'-6"	2'-2"	2'-6"	2'-2"	3'-5"
#6	3'-0"	2'-7"	3'-10"	2'-7"	4'-4"
#7	5'-3"	3'-6"			
#8	6'-10"	4'-7"			

GROOVING BRIDGE FLOORS

APPROACH SLABS	469	SQ.FT.
BRIDGE DECK	3,108	SQ.FT.
TOTAL	3,577	SQ.FT.

REINFORCING BAR SCHEDULE SPAN A

MARK	NO.	SIZE	TYPE	LENGTH	WEIGHT
*A1	273	#5	STR.	32'-1"	9135
A2	273	#5	STR.	32'-1"	9135
*B1	132	#4	STR.	26'-4"	2322
B2	114	#5	STR.	51'-0"	6064
*B3	84	#6	STR.	31'-4"	3953
*B4	36	#4	STR.	27'-0"	649
*B5	8	#4	STR.	3'-6"	19
*B6	12	#4	STR.	3'-10"	31
B7	8	#4	STR.	2'-10"	15
*G1	148	#4	STR.	6'-3"	618
K1	32	#6	STR.	20'-2"	969
K2	32	#6	STR.	22'-10"	1098
S1	50	#4	1	14'-7"	487
S2	16	#4	3	6'-6"	70
*S3	54	#4	2	11'-8"	421
*S4	50	#4	2	10'-1"	337
*S5	12	#4	1	16'-2"	130
*S6	10	#4	1	4'-6"	30
*U1	44	#4	1	3'-4"	98

*DENOTES EPOXY COATED BARS.

BAR TYPES

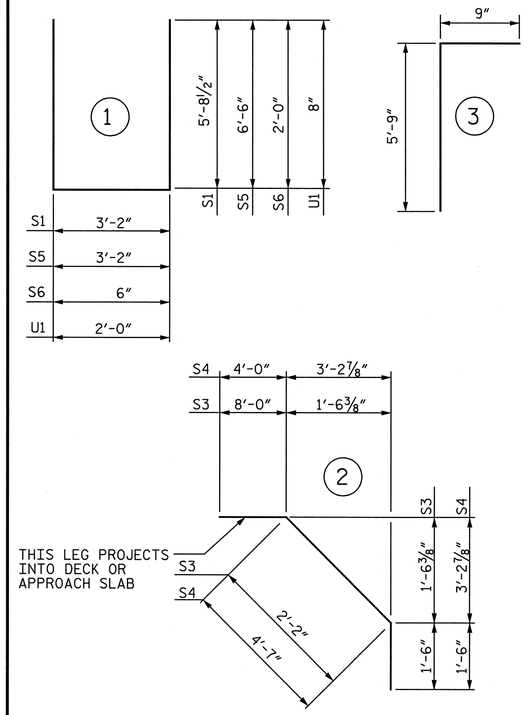

ALL BAR DIMENSIONS ARE OUT TO OUT.

SUPERSTRUCTURE BILL OF MATERIAL

	CLASS AA CONCRETE	REINFORCING STEEL	EPOXY COATED REINFORCING STEEL
	(CU. YDS.)	(LBS.)	(LBS.)
POUR 1	134.0		
POUR 2	50.8		
POUR 3	52.0		
SIDEWALK	25.9		
TOTAL **	262.7	17,838	17,743

**QUANTITIES FOR BARRIER RAIL AND END POSTS ARE NOT INCLUDED.

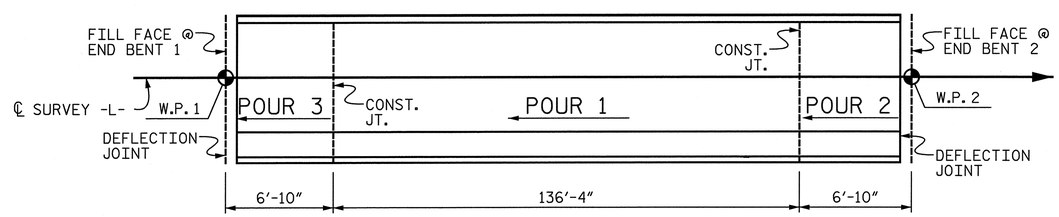

POURING DIAGRAM

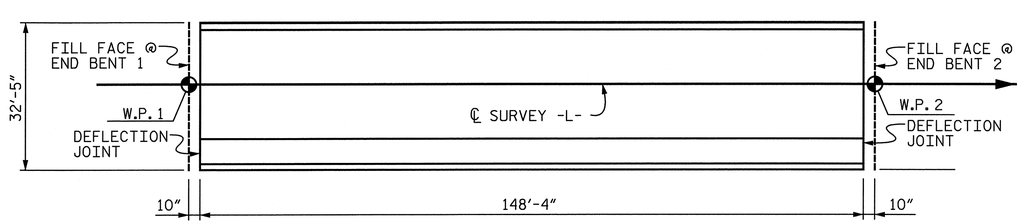

LAYOUT FOR COMPUTING AREA OF REINFORCED CONCRETE DECK SLAB (SQ. FEET = 4,808.5)

PROJECT NO. B-4575

GASTON COUNTY

STATION: POT 9+64.28 -L-

STATE OF NORTH CAROLINA
DEPARTMENT OF TRANSPORTATION
RALEIGH

STANDARD
SUPERSTRUCTURE BILL OF MATERIAL

NORTH CAROLINA PROFESSIONAL SEAL 028473 ENGINEER T. BRIAN QUERY
09-20-12

STV/Ralph Whitehead Associates, Inc.
1000 West Morehead St., Ste. 200
Charlotte, NC 28208
NC License Number F-0991

REVISIONS						SHEET NO.
NO.	BY:	DATE:	NO.	BY:	DATE:	S-21
1			3			TOTAL SHEETS
2			4			30

STD. NO. BOM2

ASSEMBLED BY : KRJ, VJE		DATE : 02-11	
CHECKED BY : JAD, DBO		DATE : 02-11	
DRAWN BY : JMB 5/87	REV. 6/1/94	EEM/GRP	
CHECKED BY : SJD 9/87	REV. 8/16/99	RWW/LES	
	REV. 5/1/06	TLA/GM	

9/20/2012
N:\PROJ\2994\ustation\struct\Final\2nd Revised Submittal\(21)superstructure bom.dgn
bquery

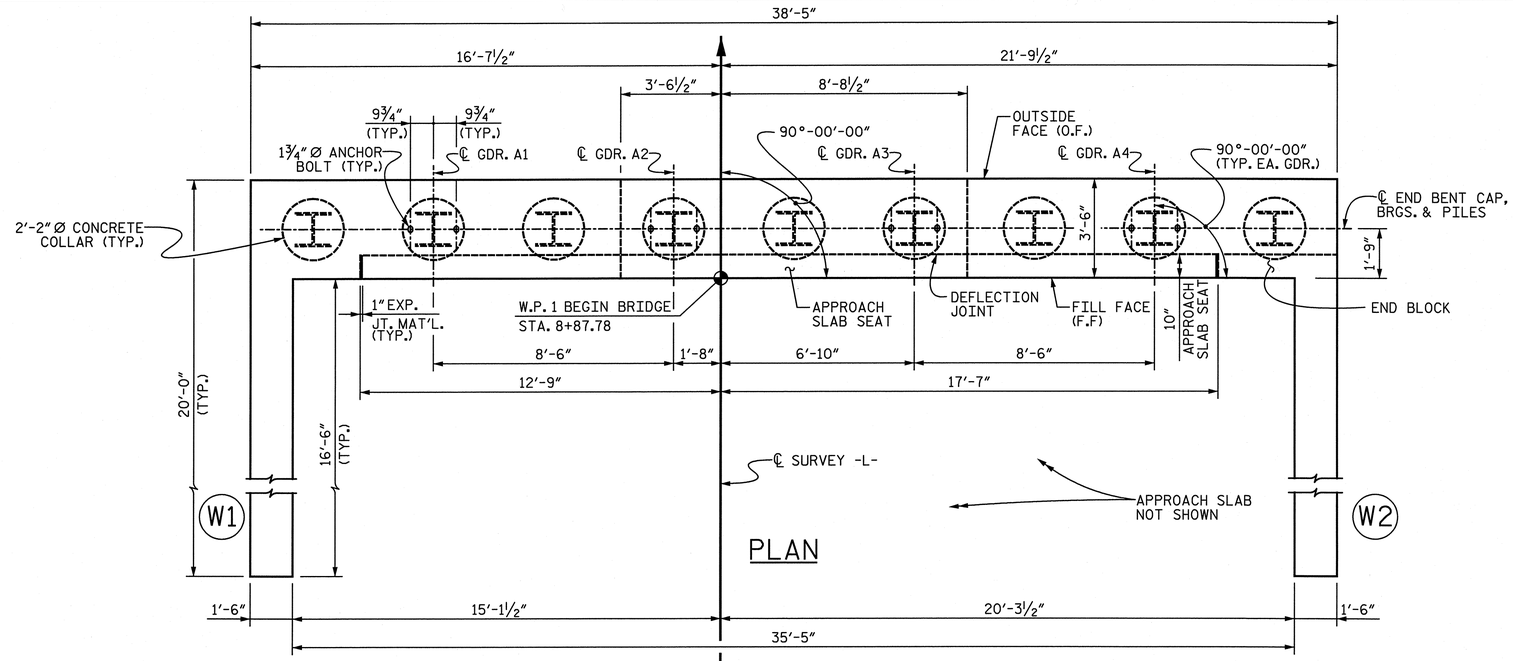

PLAN

NOTES:

FOR SECTION A-A, SEE SHEET TITLED "END BENT DETAILS".

STIRRUPS IN CAP MAY BE SHIFTED AS NECESSARY TO CLEAR ANCHOR BOLTS.

FOR INTEGRAL BACKWALL REINFORCEMENT, SEE SHEET TITLED "TYPICAL SECTION AND INTEGRAL BACKWALL".

FOR OTHER NOTES, SEE SHEET TITLED "FOUNDATION LAYOUT".

THE CONTRACTOR SHALL FIELD VERIFY THE GROUND ELEVATIONS PRIOR TO FORMING THE END BENT AND WINGS. IF THE GROUND ELEVATIONS DO NOT PERMIT A MINIMUM OF 1'-0" EMBEDMENT AT THE OUTSIDE FACE OF THE END BENT AND WINGS, THE CONTRACTOR SHALL NOTIFY THE ENGINEER.

◆ REINFORCING IN WING WALL NOT SHOWN FOR CLARITY. FOR DETAILS, SEE SHEET 2 OF 2.

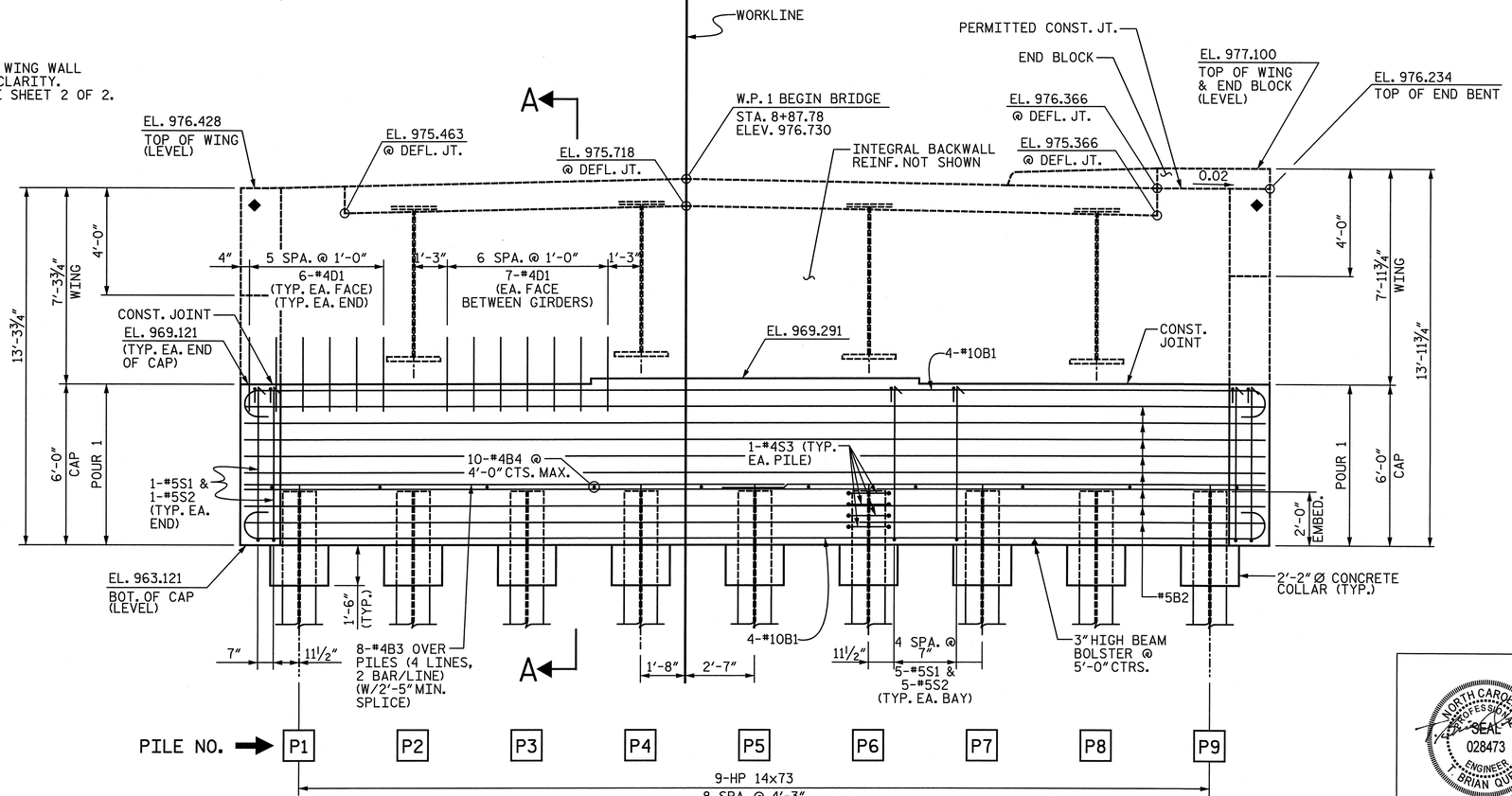

ELEVATION

(LOOKING IN THE DIRECTION OF STATIONING)

PROJECT NO. B-4575

GASTON COUNTY

STATION: POT 9+64.28 -L-

SHEET 1 OF 2

STATE OF NORTH CAROLINA
DEPARTMENT OF TRANSPORTATION
RALEIGH

END BENT 1

NORTH CAROLINA PROFESSIONAL SEAL 028473 ENGINEER BRIAN QUERY 12-28-11

REVISIONS								SHEET NO.
NO.	BY:	DATE:	NO.	BY:	DATE:			S-22
1			3					TOTAL SHEETS
2			4					30

STV / Ralph Whitehead Associates, Inc.
1000 West Morehead St., Ste. 200
Charlotte, NC 28208
NC License Number F-0991

DRAWN BY : ATH, VJE DATE : 02-11
CHECKED BY : JAD, DBO DATE : 02-11

12/28/2011
N:\PROJ\2994\ustation\struct\Final\2nd Revised Submittal\(22)end bent 1-1.dgn

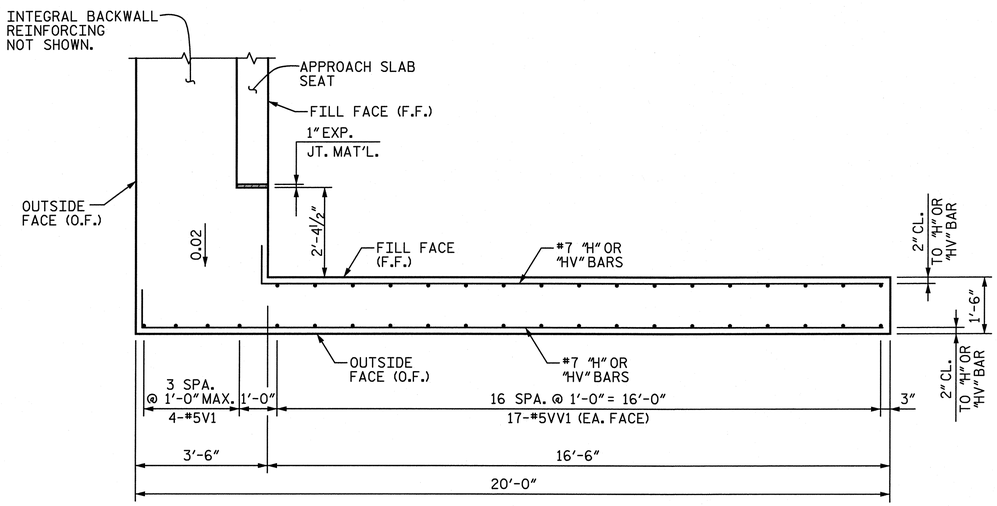

WING WALL PLAN (W1)

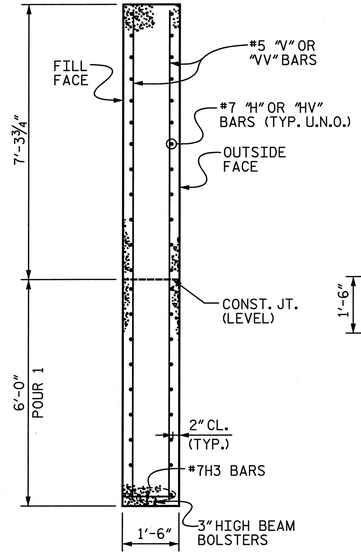

SECTION B-B
THRU WING WALL

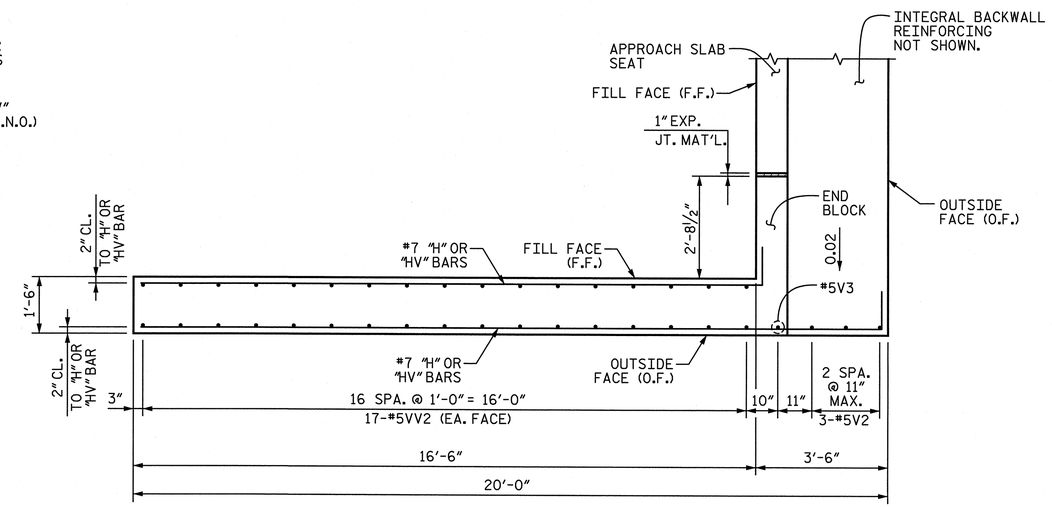

WING WALL PLAN (W2)

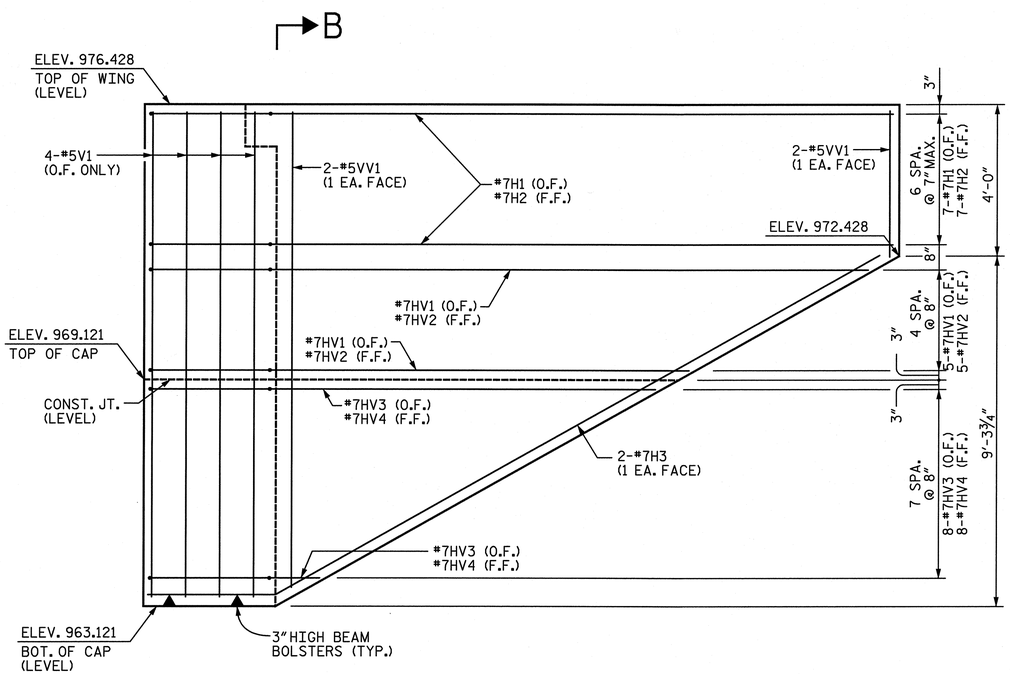

WING WALL ELEVATION (W1)

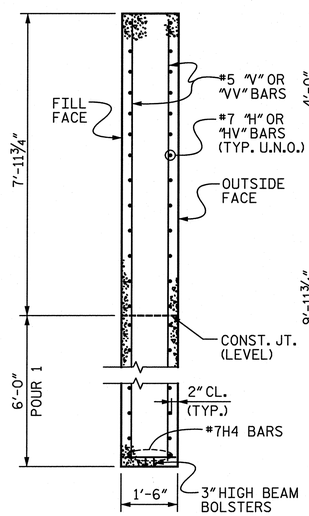

SECTION C-C
THRU WING WALL

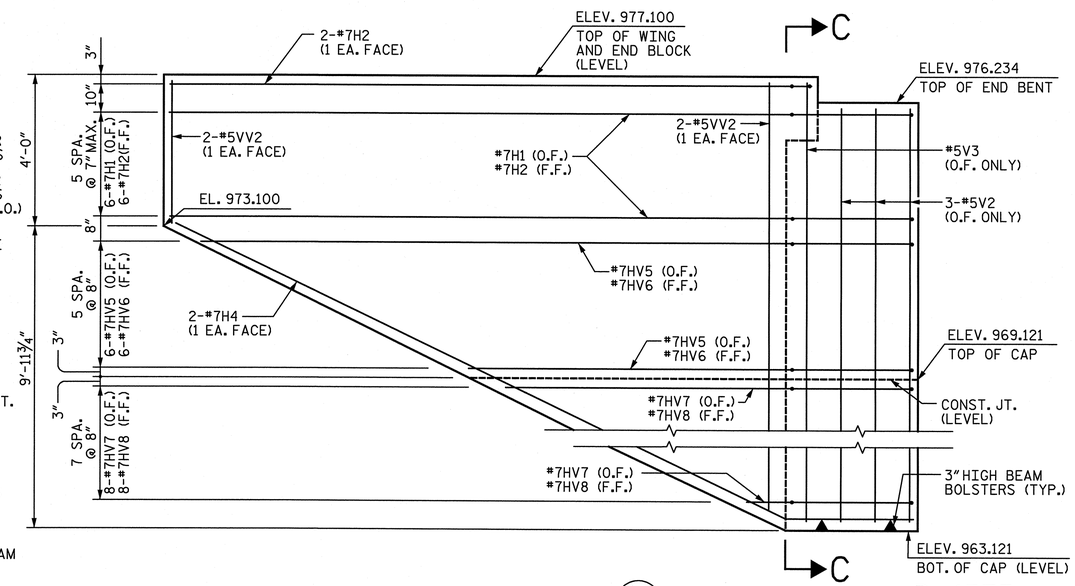

WING WALL ELEVATION (W2)

PROJECT NO. B-4575

GASTON COUNTY

STATION: POT 9+64.28 -L-

SHEET 2 OF 2

STATE OF NORTH CAROLINA
DEPARTMENT OF TRANSPORTATION
RALEIGH

END BENT 1
WING WALLS

NORTH CAROLINA PROFESSIONAL SEAL 028473 ENGINEER T. BRIAN QUERY 12-28-11

STV / Ralph Whitehead Associates, Inc.
1000 West Morehead St., Ste. 200
Charlotte, NC 28208
NC License Number F-0991

REVISIONS							SHEET NO.
NO.	BY:	DATE:	NO.	BY:	DATE:		S-23
1			3				TOTAL SHEETS
2			4				30

DRAWN BY : ATH, VJE DATE : 02-11
CHECKED BY : JAD, DBO DATE : 02-11

12/28/2011
N:\PROJ\2994\ustation\struct\Final\2nd Revised Submittal\(23)end bent 1-2.dgn

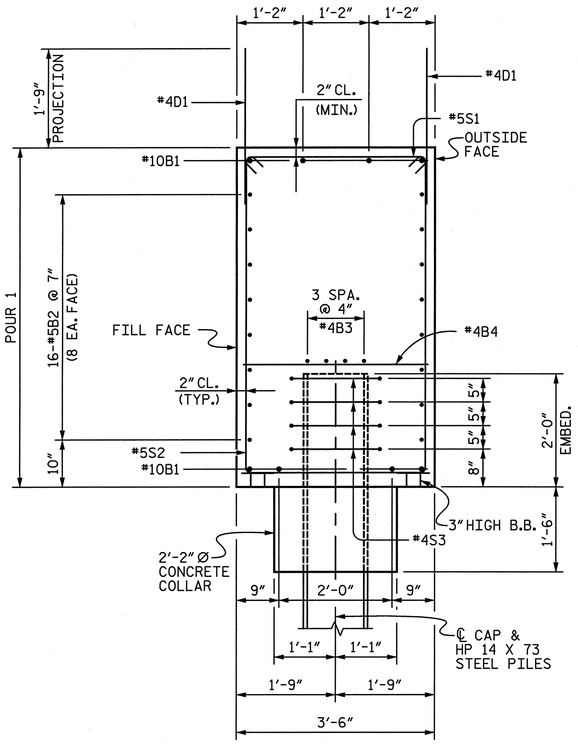

SECTION A-A

(INTEGRAL BACKWALL AND ANCHOR BOLTS NOT SHOWN FOR CLARITY.)
(END BENT 1 SHOWN, END BENT 2 SIMILAR)

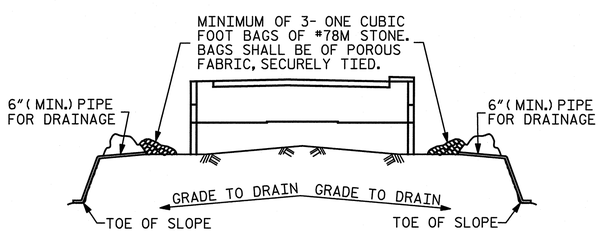

BAGGED STONE AND PIPE SHALL BE PLACED IMMEDIATELY AFTER COMPLETION OF END BENT EXCAVATION. PIPE MAY BE EITHER CONCRETE, CORRUGATED STEEL, CORRUGATED ALUMINUM ALLOY, OR CORRUGATED PLASTIC. PERFORATED PIPE WILL NOT BE ALLOWED.

BAGGED STONE SHALL REMAIN IN PLACE UNTIL THE ENGINEER DIRECTS THAT IT BE REMOVED. THE CONTRACTOR SHALL REMOVE AND DISPOSE OF SILT ACCUMULATIONS AT BAGGED STONE WHEN SO DIRECTED BY THE ENGINEER. BAGS SHALL BE REMOVED AND REPLACED WHENEVER THE ENGINEER DETERMINES THAT THEY HAVE DETERIORATED AND LOST THEIR EFFECTIVENESS.

NO SEPARATE PAYMENT WILL BE MADE FOR THIS WORK AND THE ENTIRE COST OF THIS WORK SHALL BE INCLUDED IN THE UNIT CONTRACT PRICE BID FOR THE SEVERAL PAY ITEMS.

TEMPORARY DRAINAGE AT END BENT

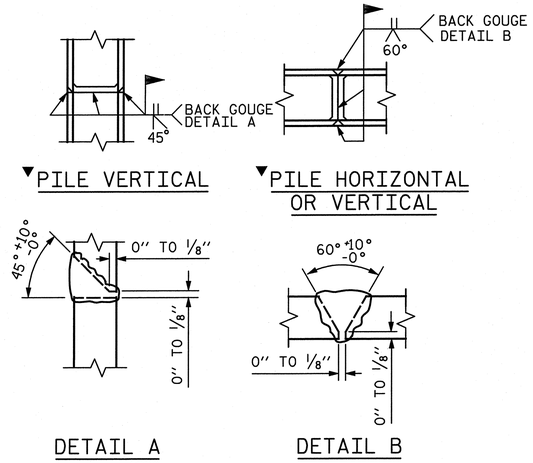

▼POSITION OF PILE DURING WELDING.

PILE SPLICE DETAILS

QUANTITIES

		END BENT 1	END BENT 2
REINFORCING STEEL	LBS.	6,578	6,240
CLASS A CONCRETE POUR 1 (CAP, COLLARS & LOWER WING) :	CU. YARDS	34.6	34.3
HP 14 X 73 STEEL PILES	(NO.)	9	9
	LIN. FEET	352.1	432.6
STEEL PILE POINTS	(NO.)	9	9
PRE-DRILLING FOR PILES	LIN. FEET	314.3	295.8

CONCRETE QUANTITY OF INTEGRAL BACKWALL AND TOP PORTION OF WINGS (NOT SHOWN) INCLUDED IN SUPERSTRUCTURE QUANTITY. SEE SHEET TITLED "SUPERSTRUCTURE BILL OF MATERIAL".

REINFORCING STEEL IN INTEGRAL BACKWALL INCLUDED IN SUPERSTRUCTURE QUANTITY. REINFORCING STEEL IN WINGS (NOT SHOWN) INCLUDED IN END BENT QUANTITY.

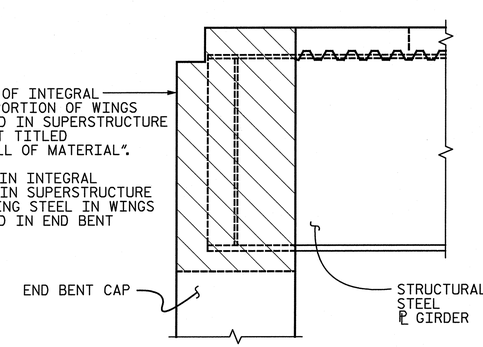

INTEGRAL BACKWALL QUANTITY DETAIL

END BENT 1 BILL OF REINFORCING

MARK	NO.	SIZE	TYPE	LENGTH	WEIGHT
B1	8	#10	1	40'-11"	1,409
B2	16	#5	STR	38'-1"	636
B3	8	#4	STR	20'-3"	108
B4	10	#4	STR	3'-2"	21
D1	66	#4	STR	2'-9"	121
H1	13	#7	4	20'-6"	545
H2	15	#7	4	17'-4"	531
H3	2	#7	8	22'-0"	90
H4	2	#7	8	22'-4"	91
HV1	5	#7	6	17'-5"	178 ▲
HV2	5	#7	6	14'-3"	146 ▲
HV3	8	#7	6	10'-0"	164 ▲
HV4	8	#7	6	6'-10"	112 ▲
HV5	6	#7	6	17'-1"	209 ▲
HV6	6	#7	6	13'-11"	171 ▲
HV7	8	#7	6	9'-8"	158 ▲
HV8	8	#7	6	6'-6"	106 ▲
S1	44	#5	3	4'-1"	187
S2	44	#5	2	15'-4"	704
S3	36	#4	5	7'-7"	182
V1	4	#5	STR	13'-2"	55
V2	3	#5	STR	12'-8"	40
V3	1	#5	STR	13'-6"	14
VV1	34	#5	7	8'-4"	294 ▲●
VV2	34	#5	7	8'-8"	306 ▲●

TOTAL REINFORCING STEEL = 6,578 lbs.

END BENT 2 BILL OF REINFORCING

MARK	NO.	SIZE	TYPE	LENGTH	WEIGHT
B1	8	#10	1	40'-11"	1,409
B2	16	#5	STR	38'-1"	636
B3	8	#4	STR	20'-3"	108
B4	10	#4	STR	3'-2"	21
D1	66	#4	STR	2'-9"	121
H1	12	#7	4	19'-0"	466
H2	14	#7	4	15'-10"	453
H3	2	#7	8	20'-9"	85
H4	2	#7	8	21'-0"	86
HV1	5	#7	6	16'-3"	166 ▲
HV2	5	#7	6	13'-1"	134 ▲
HV3	8	#7	6	9'-6"	156 ▲
HV4	8	#7	6	6'-4"	104 ▲
HV5	6	#7	6	15'-11"	195 ▲
HV6	6	#7	6	12'-9"	156 ▲
HV7	8	#7	6	9'-1"	149 ▲
HV8	8	#7	6	5'-11"	97 ▲
S1	44	#5	3	4'-1"	187
S2	44	#5	2	15'-4"	704
S3	36	#4	5	7'-7"	182
V1	4	#5	STR	12'-10"	54
V2	3	#5	STR	12'-8"	40
V3	1	#5	STR	13'-6"	14
VV1	30	#5	7	8'-1"	254 ▲●
VV2	30	#5	7	8'-5"	263 ▲●

TOTAL REINFORCING STEEL = 6,240 lbs.

▲ WEIGHT OF "HV" AND "VV" BARS IS BASED ON THE AVERAGE LENGTH OF THE BAR.

● THERE ARE TWO IDENTICAL SETS OF EACH "VV" BAR. EACH SET INCLUDES 17 BARS AT END BENT 1. EACH SET INCLUDES 15 BARS AT END BENT 2.

BAR TYPES

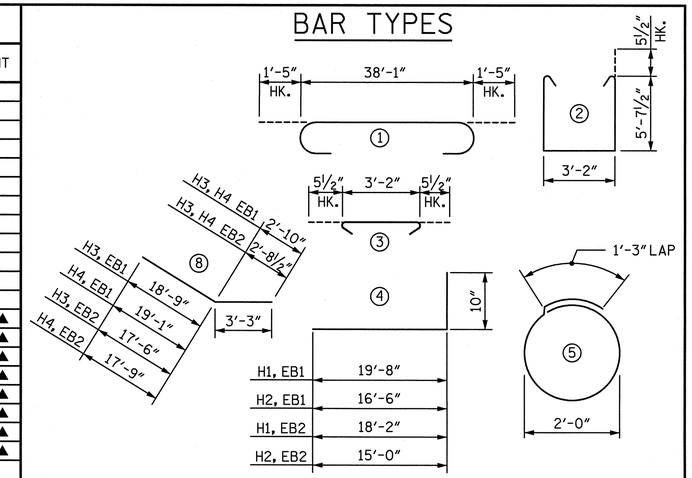

END BENT 1					END BENT 2				
MARK	A	B	C	D	MARK	A	B	C	D
HV1	16'-7"	14'-2 1/2"	18'-11 1/2"	1'-2 1/4"	HV1	15'-5"	13'-3"	17'-7"	1'-1"
HV2	13'-5"	11'-0 1/2"	15'-9 1/2"	1'-2 1/4"	HV2	12'-3"	10'-1"	14'-5"	1'-1"
HV3	9'-2 3/8"	5'-0 1/2"	13'-4 1/4"	1'-2 1/4"	HV3	8'-8 1/2"	4'-11"	12'-6"	1'-1"
HV4	6'-0 3/8"	1'-10 1/2"	10'-2 1/4"	1'-2 1/4"	HV4	5'-6 1/2"	1'-9"	9'-4"	1'-1"
HV5	16'-2 7/8"	13'-5 3/4"	19'-0"	1'-1 1/4"	HV5	15'-1"	12'-7"	17'-7"	1'-0"
HV6	13'-0 7/8"	10'-3 3/4"	15'-10"	1'-1 1/4"	HV6	11'-11"	9'-5"	14'-5"	1'-0"
HV7	8'-9 5/8"	4'-11 1/4"	12'-8"	1'-1 1/4"	HV7	8'-3"	4'-9"	11'-9"	1'-0"
HV8	5'-7 5/8"	1'-9 1/4"	9'-6"	1'-1 1/4"	HV8	5'-1"	1'-7"	8'-7"	1'-0"

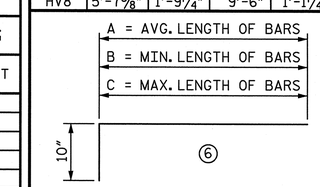

END BENT 1				
MARK	A	B	C	D
VV1	8'-3 1/2"	3'-9 1/2"	12'-9 1/2"	6 3/4" ●
VV2	8'-7 1/2"	3'-9 1/2"	13'-5 1/2"	7 1/4" ●
END BENT 2				
MARK	A	B	C	D
VV1	8'-1 3/8"	4'-9 3/4"	12'-5"	7 3/8" ●
VV2	8'-5"	3'-9"	13'-1"	8" ●

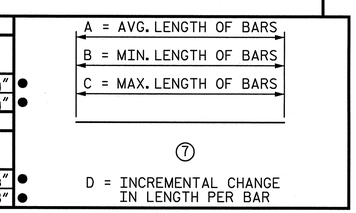

ALL BAR DIMENSIONS ARE OUT TO OUT.

PROJECT NO. B-4575
GASTON COUNTY
STATION: POT 9+64.28 -L-

STATE OF NORTH CAROLINA
DEPARTMENT OF TRANSPORTATION
RALEIGH

NORTH CAROLINA PROFESSIONAL SEAL 028473 ENGINEER BRIAN QUERY 12-28-11

END BENT DETAILS

DRAWN BY : ATH, VJE DATE : 02-11
CHECKED BY : JAD, DBO DATE : 02-11

STV / Ralph Whitehead Associates, Inc.
1000 West Morehead St., Ste. 200
Charlotte, NC 28208
NC License No. F-0991

REVISIONS							SHEET NO.
NO.	BY:	DATE:	NO.	BY:	DATE:		S-24
1			3				TOTAL SHEETS
2			4				30

12/28/2011
N:\PROJ\2994\station\struct\Final\2nd Revised Submittal\(24)end bent details.dgn

NOTES:

FOR NOTES, SEE SHEET TITLED "END BENT 1".

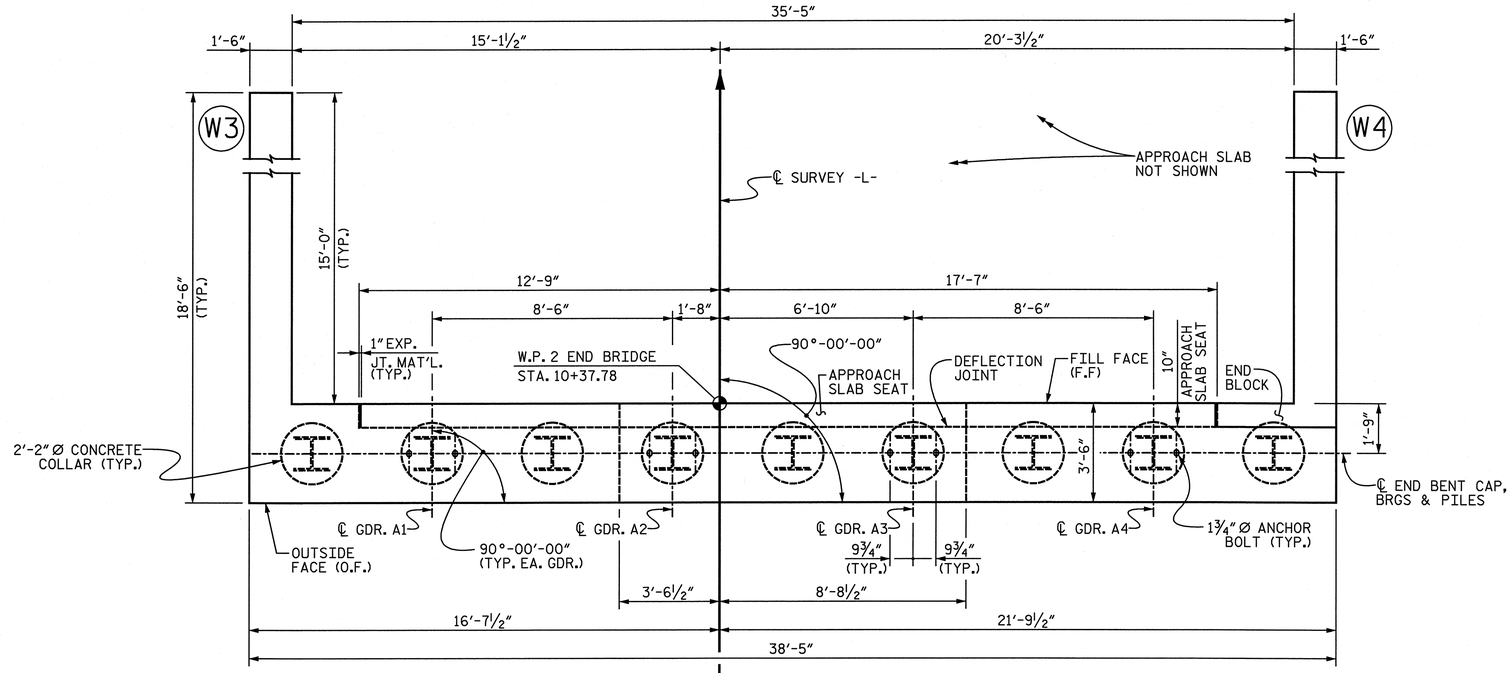

PLAN

◆ REINFORCING IN WING WALL NOT SHOWN FOR CLARITY. FOR DETAILS, SEE SHEET 2 OF 2.

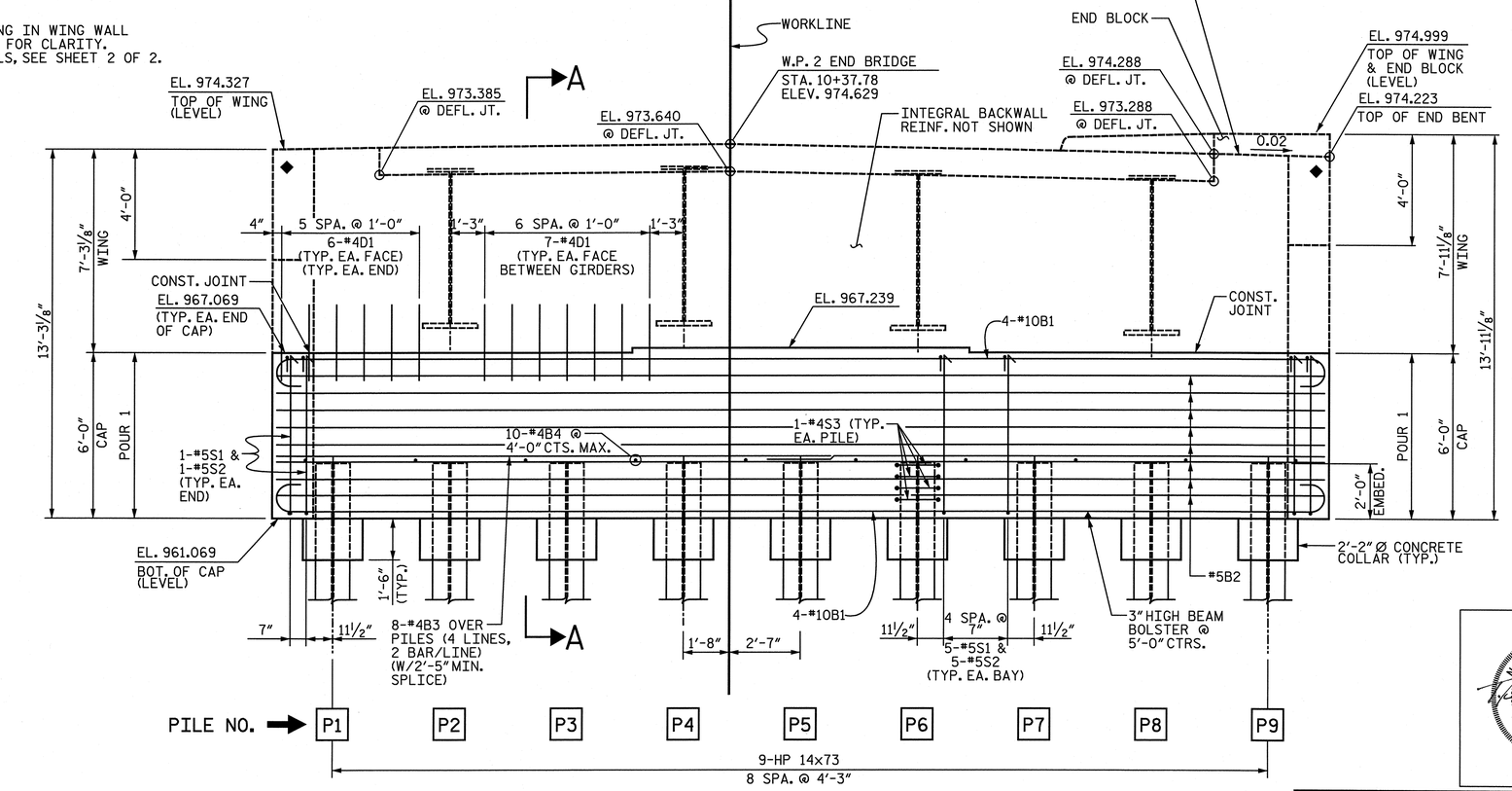

ELEVATION

(LOOKING IN THE DIRECTION OF STATIONING)

PROJECT NO. B-4575

GASTON COUNTY

STATION: POT 9+64.28 -L-

SHEET 1 OF 2

STATE OF NORTH CAROLINA
DEPARTMENT OF TRANSPORTATION
RALEIGH

END BENT 2

NORTH CAROLINA PROFESSIONAL SEAL 028473 ENGINEER BRIAN QUERY 12-28-11

REVISIONS								SHEET NO.
NO.	BY:	DATE:	NO.	BY:	DATE:			S-25
1			3					TOTAL SHEETS
2			4					30

STV / Ralph Whitehead Associates, Inc.
1000 West Morehead St., Ste. 200
Charlotte, NC 28208
NC License Number F-0991

DRAWN BY : ATH, VJE DATE : 02-11
CHECKED BY : JAD, DBO DATE : 02-11

12/28/2011
N:\PROJ\2994\location\structure\Final\2nd Revised Submittal\25end bent 2-1.dgn

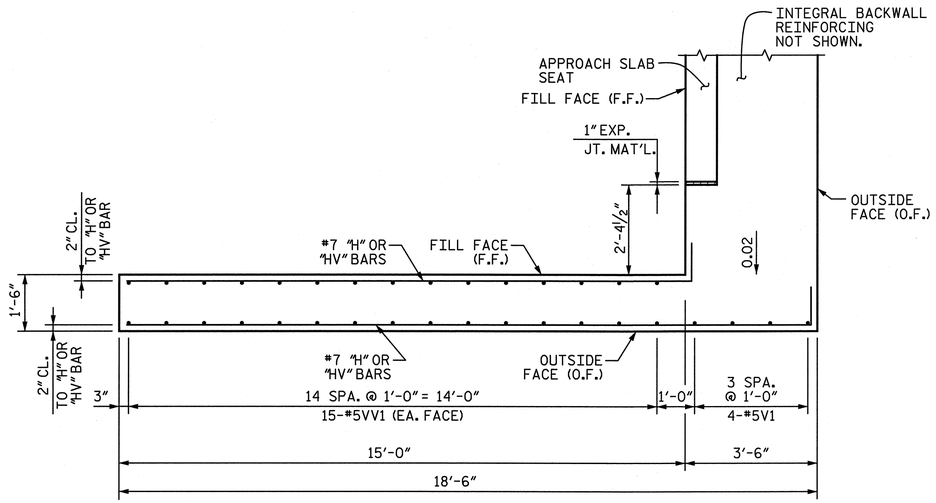

WING WALL PLAN (W3)

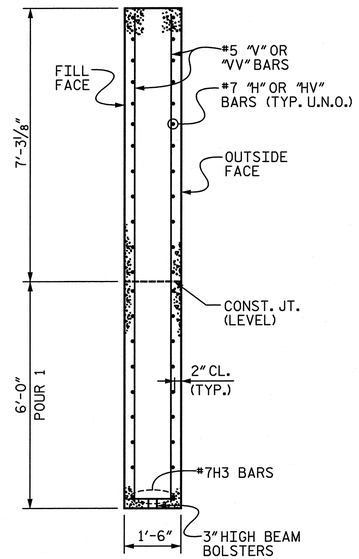

SECTION D-D
THRU WING WALL

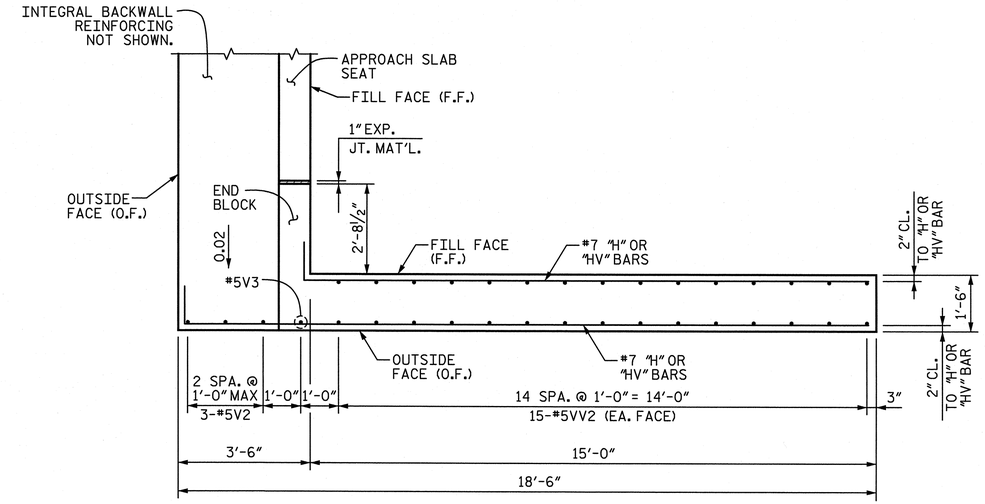

WING WALL PLAN (W4)

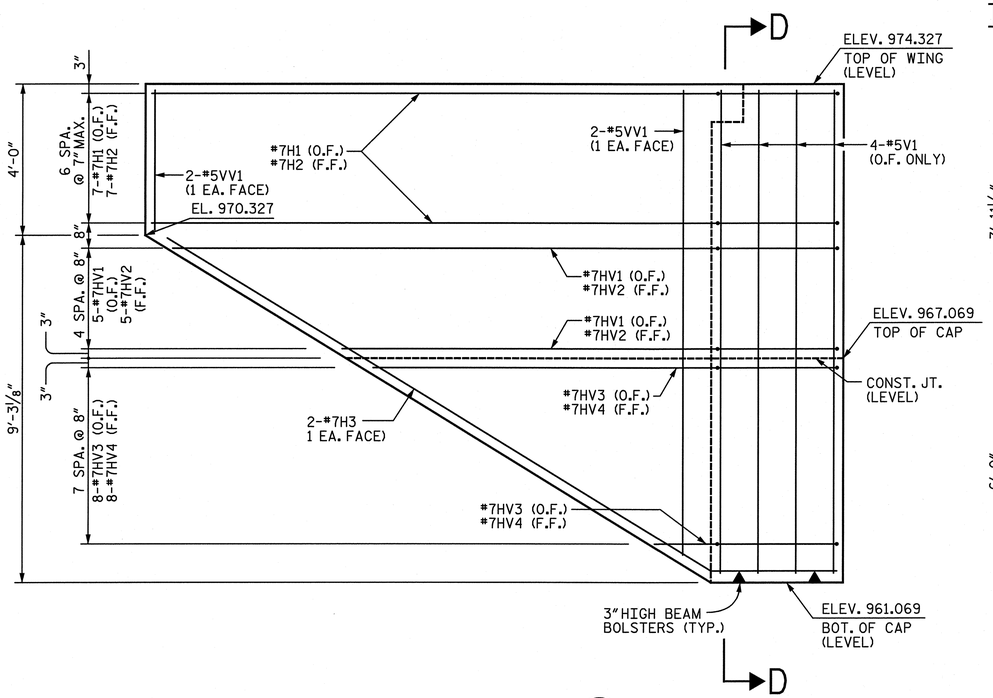

WING WALL ELEVATION (W3)

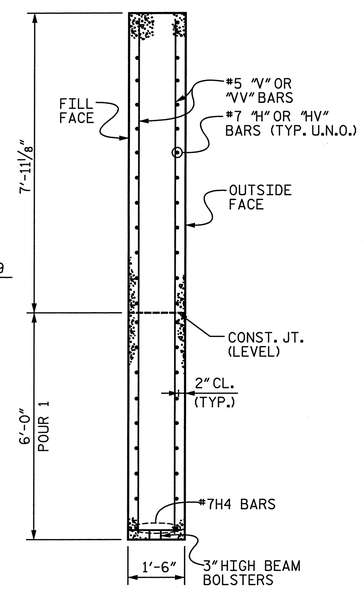

SECTION E-E
THRU WING WALL

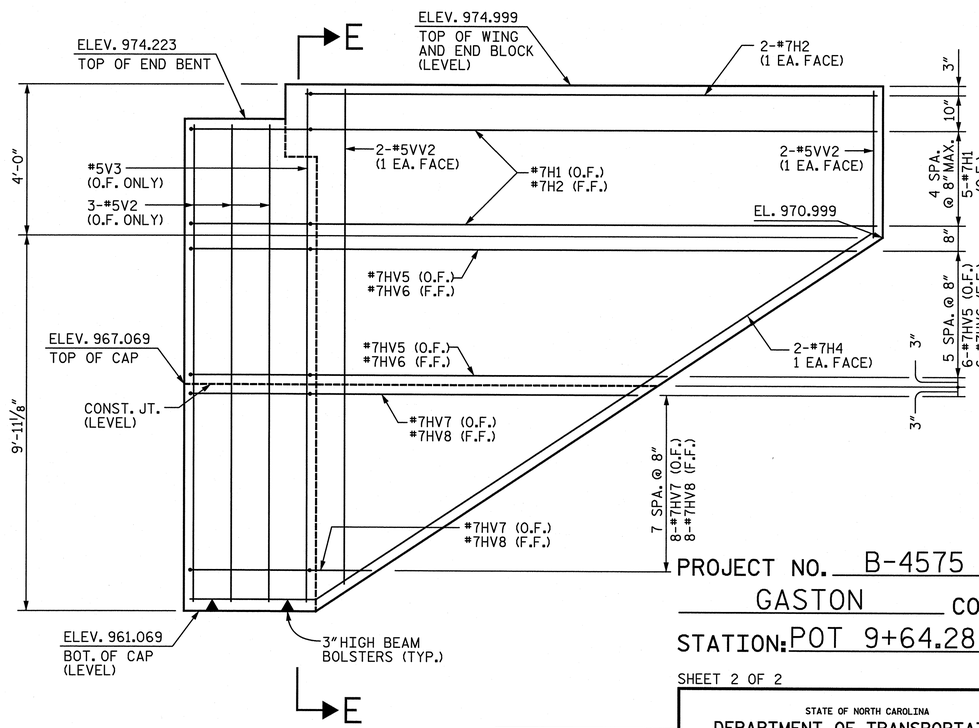

WING WALL ELEVATION (W4)

PROJECT NO. B-4575

GASTON COUNTY

STATION: POT 9+64.28 -L-

SHEET 2 OF 2

NORTH CAROLINA PROFESSIONAL SEAL 028473 ENGINEER T. BRIAN QUERY 12-28-11

STATE OF NORTH CAROLINA
DEPARTMENT OF TRANSPORTATION
RALEIGH

END BENT 2
WING WALLS

REVISIONS								SHEET NO.
NO.	BY:	DATE:	NO.	BY:	DATE:			S-26
1			3					TOTAL SHEETS
2			4					30

STV / Ralph Whitehead Associates, Inc.
1000 West Morehead St., Ste. 200
Charlotte, NC 28208
NC License Number F-0991

DRAWN BY : ATH, VJE DATE : 02-11
CHECKED BY : JAD, DBO DATE : 02-11

12/28/2011
N:\PROJ\2994\ustation\struct\Final\2nd Revised Submittal\(26)end bent 2-2.dgn

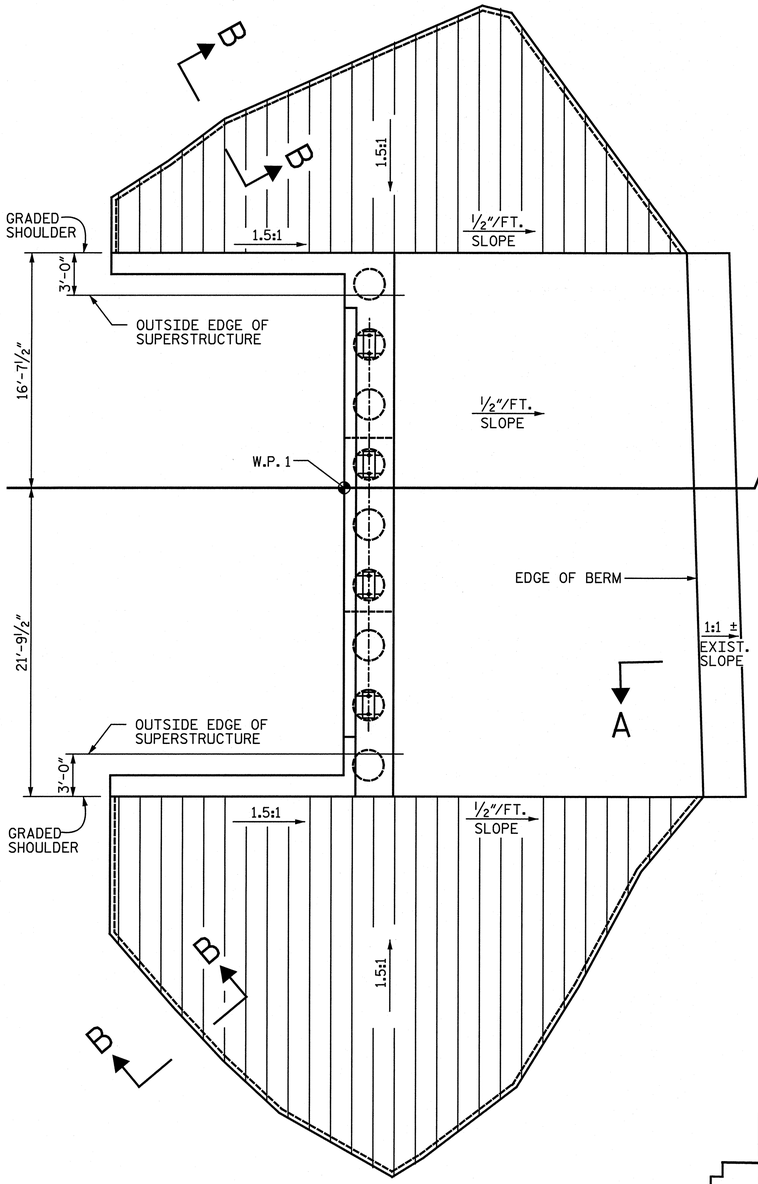

PLAN - END BENT 1
(1.5:1 SLOPE)

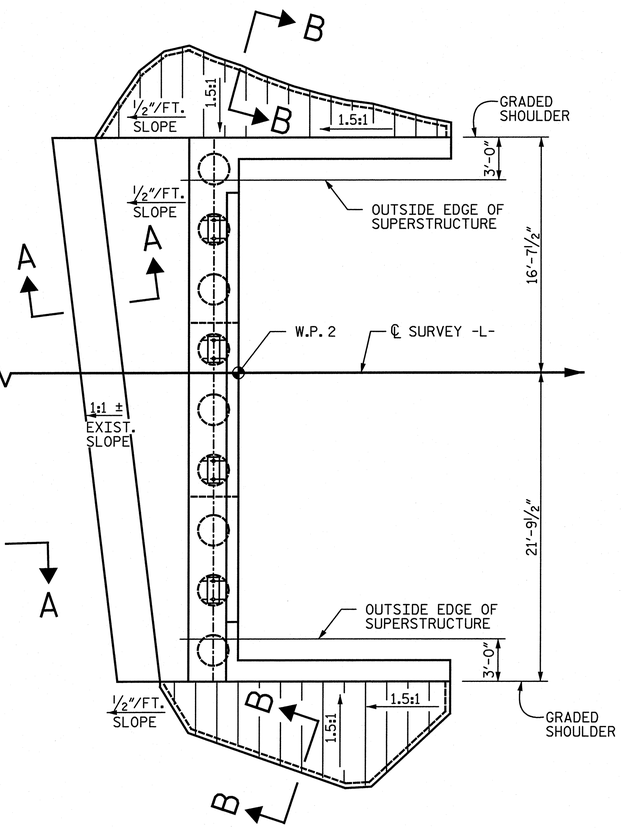

PLAN - END BENT 2
(1.5:1 SLOPE)

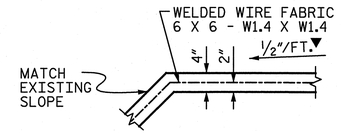

SECTION A-A
▼NORMAL TO END BENT

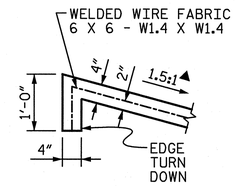

SECTION B-B
▲NORMAL TO WING

NOTES:

SLOPE PROTECTION SHALL BE PLACED UNDER THE ENDS OF THE BRIDGE AND ADJACENT TO THE WING WALLS, AS SHOWN IN THE DETAILS. STRAIGHT EDGING WILL NOT BE REQUIRED UNLESS, IN THE OPINION OF THE ENGINEER, VISUAL INSPECTION INDICATES A NEED FOR IT. METHOD OF MEASUREMENT AND BASIS OF PAYMENT SHALL BE AS PRESCRIBED IN SECTION 462 OF THE STANDARD SPECIFICATIONS. FOR BERM WIDTH, SEE GENERAL DRAWING.

SLOPE PROTECTION SHALL CONSIST OF 4" POURED-IN-PLACE CONCRETE PAVING AS SHOWN IN THE DETAILS ON THIS SHEET. CONCRETE SHALL BE CLASS "B". THE CONCRETE SURFACE SHALL BE FLOATED WITH A WOODEN FLOAT AND FINISHED. WELDED WIRE FABRIC REINFORCING SHALL BE 6 X 6 - W1.4 X W1.4, 60" WIDE. SLOPE PROTECTION SHALL BE POURED IN 5' STRIPS AS SHOWN IN THE "POURING DETAIL" WITH 2'-0" LONG #4 BARS PLACED ALONG THE SLOPE BETWEEN STRIPS AT 1'-6" MAXIMUM SPACING. SLOPE PROTECTION MAY BE POURED IN ALTERNATE 4' AND 5' STRIPS AS SHOWN IN THE "OPTIONAL POURING DETAIL" WITH ADJACENT RUNS OF WELDED WIRE FABRIC LAPPING AT LEAST 6". THE COST OF THE WELDED WIRE FABRIC AND #4 BARS, IF USED, SHALL BE INCLUDED IN THE CONTRACT UNIT PRICE BID PER SQUARE YARD FOR SLOPE PROTECTION.

IF ROCK IS ENCOUNTERED WHILE FORMING EDGE TURN DOWN, THE CONTRACTOR MAY ELECT TO FORM THE EDGE TURN DOWN TO THE TOP OF EXISTING ROCK INSTEAD. EXISTING ROCK SHALL BE CLEANED OF DEBRIS IF THIS METHOD IS USED.

SLOPE PROTECTION HAS BEEN ESTIMATED, BASED ON CONTOURS, TO SLOPE EXISTING GROUND TO THE WINGWALLS AND BERM. ACTUAL FIELD CONDITIONS MAY REQUIRE DEVIATIONS FROM THIS PLAN. ANY DEVIATIONS SHALL BE SUBMITTED TO THE ENGINEER FOR APPROVAL PRIOR TO BEGINNING CONSTRUCTION.

	QUANTITIES	
	4 INCH SLOPE PROTECTION	* WELDED WIRE FABRIC 60 INCHES WIDE
	SQUARE YARDS	APPROX. L.F.
END BENT 1	264.4	542.0
END BENT 2	63.0	131.0

* QUANTITY SHOWN IS BASED ON 5' POURS.

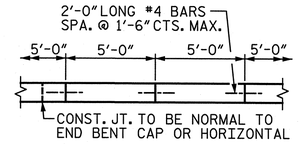

STRIP WIDTHS MAY VARY IN CURVED PORTION.

POURING DETAIL

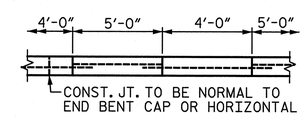

POUR A 4'-0" STRIP FIRST. STRIP WIDTHS MAY VARY IN CURVED PORTION.

OPTIONAL POURING DETAIL

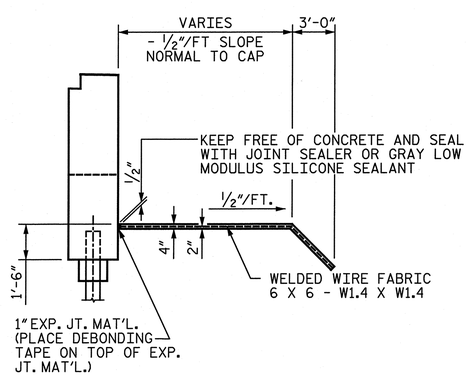

SECTION ALONG ℄ ROADWAY

PROJECT NO. B-4575
GASTON COUNTY
STATION: POT 9+64.28 -L-

STATE OF NORTH CAROLINA
DEPARTMENT OF TRANSPORTATION
RALEIGH

SLOPE PROTECTION

NORTH CAROLINA PROFESSIONAL SEAL 028473 ENGINEER T. BRIAN QUERY 12-28-11

STV / Ralph Whitehead Associates, Inc.
1000 West Morehead St., Ste. 200
Charlotte, NC 28208
NC License No. F-0991

REVISIONS								SHEET NO.
NO.	BY:	DATE:	NO.	BY:	DATE:			S-27
1			3					TOTAL SHEETS
2			4					30

DRAWN BY : ATH, VJE DATE : 02-11
CHECKED BY : JAD DATE : 02-11

12/28/2011
N:\PROJ\2994\ustation\struct\Final\2nd Revised Submittal\(27)slope protection.dgn