DocuSign Envelope ID: 63FD6DF8-C5DB-4F0F-817E-96469FD43661

09/08/99

TIP PROJECT: R-5779

CONTRACT: DM00301

See Sheet 1A For Index of Sheets
See Sheet 1B For Conventional Plan Sheet Symbols

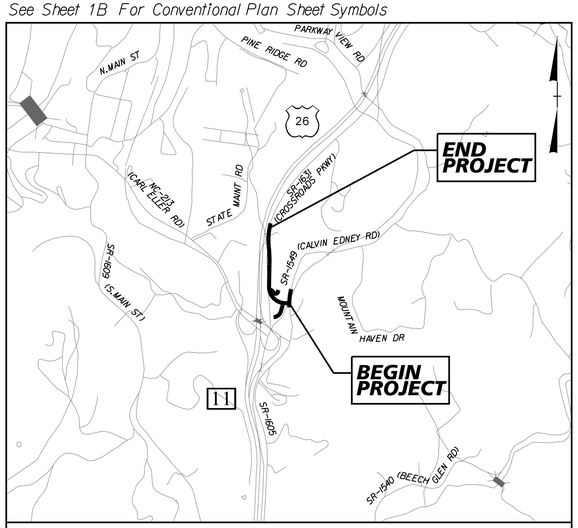

VICINITY MAP — MADISON COUNTY

STATE OF NORTH CAROLINA
DIVISION OF HIGHWAYS

MADISON COUNTY

STATE	STATE PROJECT REFERENCE NO.	SHEET NO.	TOTAL SHEETS
N.C.	R-5779	1	

STATE PROJ. NO.	F. A. PROJ. NO.	DESCRIPTION
44834.1.1	ADP-1631 (004)	PE
44834.2.1	ADP-1631 (004)	R/W, UTIL
44834.3.1	ADP-1631 (004)	CONST.

DOCUMENT NOT CONSIDERED FINAL UNLESS ALL SIGNATURES COMPLETED

LOCATION: EXTENSION OF SR 1631 (CROSSROADS PARKWAY) SOUTH TO SR 1549 (CALVIN EDNEY ROAD)

TYPE OF WORK: GRADING, DRAINAGE, PAVING, AND RETAINING WALL

NC GRID
NAD 83/NA 2011

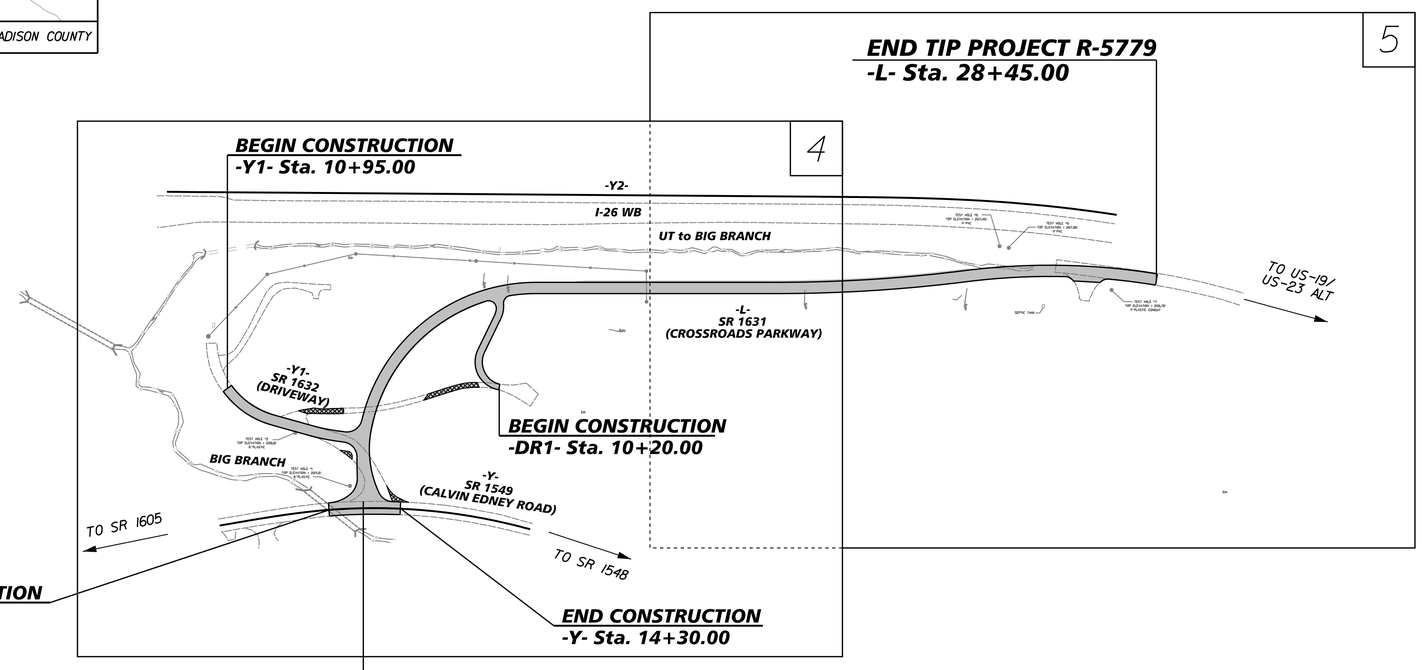

ACCESS ALONG I-26 IS FULL CONTROLLED WITH ACCESS BEING LIMITED TO INTERCHANGES.

NCDOT CONTACT: STEVE CANNON, P.E.
DIVISION 13, PROJECT DEVELOPMENT ENGINEER

GRAPHIC SCALES

50 25 0 50 100
PLANS

50 25 0 50 100
PROFILE (HORIZONTAL)

10 5 0 10 20
PROFILE (VERTICAL)

DESIGN DATA

AADT 2021 = 504
AADT 2040 = 1000
K = 8%
D = 55%
T = 6%*
V = 40 MPH
* (DUAL 5% + TTST 1%)
FUNCTIONAL CLASSIFICATION:
LOCAL
SUB-REGIONAL TIER

PROJECT LENGTH

LENGTH ROADWAY TIP PROJECT R-5779 = 0.347 MILES

TOTAL LENGTH TIP PROJECT R-5779 = 0.347 MILES

PLANS PREPARED FOR THE NCDOT BY: Kimley»Horn © 2019
NC LICENSE #F-0102
421 FAYETTEVILLE STREET, SUITE 600
RALEIGH, NORTH CAROLINA 27601
PHONE: (919) 677-2050

2018 STANDARD SPECIFICATIONS

RIGHT OF WAY DATE:
September 27, 2017

LETTING DATE:
February 17, 2021

GREGORY BREW, PE
PROJECT ENGINEER

RACHEL ABROMAITIS, PE
PROJECT DESIGN ENGINEER

STEVE CANNON, PE
DIVISION 13 PROJECT DEVELOPMENT ENGINEER

HYDRAULICS ENGINEER
NORTH CAROLINA PROFESSIONAL SEAL 038659 ENGINEER JAMES W. BLANTON
DocuSigned by: James W Blanton
SIGNATURE: 10/28/2020 P.E.

ROADWAY DESIGN ENGINEER
NORTH CAROLINA PROFESSIONAL SEAL 18903 ENGINEER GREGORY E. BREW
DocuSigned by: Gregory Brew
E569FD66DC18408...
SIGNATURE: 10/28/2020 P.E.

STATE OF NORTH CAROLINA · DEPARTMENT OF TRANSPORTATION

10/28/2020 K:\RAL_Roadway\DI\036358 - R-5779\Roadway\Proj\Plan Sheets\DI\036358_rdy_1sht.dgn

PROJECT REFERENCE NO.	SHEET NO.
R-5779	1A

ROADWAY DESIGN ENGINEER

NORTH CAROLINA PROFESSIONAL SEAL 18903 ENGINEER GREGORY E. BRENY

Digitally signed by Gregory E. Breny
Date: 2020.01.10 08:50:00 -05'00'

1/10/2020

INDEX OF SHEETS

SHEET NUMBER	DESCRIPTION
1	TITLE SHEET
1A	INDEX OF SHEETS, GENERAL NOTES, AND LIST OF STANDARDS
1B	CONVENTIONAL SYMBOLS
1C-1 THRU 1C-2	SURVEY CONTROL SHEET
1D-1	ALIGNMENT CONTROL SHEET
1E-1	RIGHT OF WAY CONTROL SHEET
2A-1 THRU 2A-3	TYPICAL SECTIONS, PAVEMENT SCHEDULE, AND MISCELLANEOUS DETAILS
2C-1	DETAIL FOR GUARDRAIL INSTALLATION
2D-1	DITCH DETAILS
3B-1	SUMMARY OF QUANTITIES SHEETS
3D-1 THRU 3D-2	DRAINAGE SUMMARY SHEETS
3G-1	GEOTECHNICAL SUMMARY SHEET
3P-1	PARCEL INDEX SHEET
4 THRU 5	PLAN SHEETS
6 THRU 7	PROFILE SHEETS
TMP-1 THRU TMP-5	TRAFFIC MANAGEMENT PLANS
PMP-1 THRU PMP-3	PAVEMENT MARKING PLANS
EC-1 THRU EC-8	EROSION CONTROL SHEETS
SIGN-1 THRU SIGN-4	SIGNING PLANS
UC-1 THRU UC-6	UTILITY CONSTRUCTION PLANS
UO-1 THRU UO-3	UTILITY BY OTHERS PLAN SHEETS
X-0	CROSS SECTION INDEX
X-1A	CROSS SECTION SUMMARY SHEET
X-1 THRU X-21	CROSS SECTIONS
W-1 THRU W-3	RETAINING WALL PLANS

GENERAL NOTES

GENERAL NOTES:

2018 SPECIFICATIONS
EFFECTIVE: 01-16-2018
REVISED:

GRADING AND SURFACING OR RESURFACING AND WIDENING:

THE GRADE LINES SHOWN DENOTE THE FINISHED ELEVATION OF THE PROPOSED SURFACING AT GRADE POINTS SHOWN ON THE TYPICAL SECTIONS. WHERE NO GRADE LINES ARE SHOWN, THE PROFILES SHOWN DENOTE THE TOP ELEVATION OF THE EXISTING PAVEMENT ALONG THE CENTER LINE OF SURVEY ON WHICH THE PROPOSED RESURFACING WILL BE PLACED. GRADE LINES MAY BE ADJUSTED BY THE ENGINEER IN ORDER TO SECURE A PROPER TIE-IN.

CLEARING:

CLEARING ON THIS PROJECT SHALL BE PERFORMED TO THE LIMITS ESTABLISHED BY METHOD III.

SUPERELEVATION:

ALL CURVES ON THIS PROJECT SHALL BE SUPERELEVATED IN ACCORDANCE WITH STD.NO.225.04 USING THE RATE OF SUPERELEVATION AND RUNOFF SHOWN ON THE PLANS. SUPERELEVATION IS TO BE REVOLVED ABOUT THE GRADE POINTS SHOWN ON THE TYPICAL SECTIONS.

SHOULDER CONSTRUCTION:

ASPHALT, EARTH, AND CONCRETE SHOULDER CONSTRUCTION ON THE HIGH SIDE OF SUPERELEVATED CURVES SHALL BE IN ACCORDANCE WITH STD.NO.560.01

BERM DITCHES:

BERM DITCHES SHALL BE CONSTRUCTED IN ACCORDANCE WITH STD.NO.240.01 AT LOCATIONS SHOWN ON THE PLANS OR AS DIRECTED BY THE ENGINEER.

SUBSURFACE DRAINS:

SUBSURFACE DRAINS SHALL BE CONSTRUCTED IN ACCORDANCE WITH STD.NO.815.02 AT LOCATIONS DIRECTED BY THE ENGINEER.

GUARDRAIL:

THE GUARDRAIL LOCATIONS SHOWN ON THE PLANS MAY BE ADJUSTED DURING CONSTRUCTION AS DIRECTED BY THE ENGINEER. THE CONTRACTOR SHOULD CONSULT WITH THE ENGINEER PRIOR TO ORDERING GUARDRAIL MATERIAL.

UTILITIES:

UTILITY OWNERS ON THIS PROJECT ARE

AT&T - TELEPHONE
TOWN OF MARS HILL - WATER/FORCEMAIN/SEWER
PSNC (DISTRIBUTION) - GAS
FRONTIER CABLE - CABLE
FRENCH BROAD ELECTRIC (DISTRIBUTION) - POWER

ANY RELOCATION OF EXISTING UTILITIES WILL BE ACCOMPLISHED BY OTHERS, EXCEPT AS SHOWN ON THE PLANS.

RIGHT-OF-WAY MARKERS:

ALL RIGHT-OF-WAY MARKERS ON THIS PROJECT SHALL BE PLACED BY OTHERS.

LIST OF 2018 ROADWAY STANDARD DRAWINGS

2018 ROADWAY ENGLISH STANDARD DRAWINGS — EFF.01-16-2018
REV.

The following Roadway Standards as appear in "Roadway Standard Drawings" Highway Design Branch - N.C. Department of Transportation - Raleigh, N.C., Dated January, 2018 are applicable to this project and by reference hereby are considered a part of these plans:

STD.NO.	TITLE
DIVISION 2 - EARTHWORK	
200.03	Method of Clearing - Method III
225.02	Guide for Grading Subgrade - Secondary and Local
225.04	Method of Obtaining Superelevation - Two Lane Pavement
225.06	Method of Grading Sight Distance at Intersections
240.01	Guide for Berm Ditch Construction
DIVISION 3 - PIPE CULVERTS	
300.01	Method of Pipe Installation
DIVISION 5 - SUBGRADE, BASES AND SHOULDERS	
560.01	Method of Shoulder Construction - High Side of Superelevated Curve - Method I
DIVISION 8 - INCIDENTALS	
815.02	Subsurface Drain
838.01	Concrete Endwall for Single and Double Pipe Culverts - 15" thru 48" Pipe 90 Skew
840.00	Concrete Base Pad for Drainage Structures
840.18	Concrete Grated Drop Inlet Type 'B' - 12" thru 36" Pipe
840.20	Frames and Wide Slot Flat Grates
840.22	Frames and Wide Slot Sag Grates
840.26	Brick Grated Drop Inlet Type 'A' - 12" thru 72" Pipe
840.27	Brick Grated Drop Inlet Type 'B' - 12" thru 36" Pipe
840.35	Traffic Bearing Grated Drop Inlet - for Cast Iron Double Frame and Grates
840.45	Precast Drainage Structure
840.46	Traffic Bearing Precast Drainage Structure
850.10	Guide for Berm Drainage Outlet - 15" and 18" Pipe
862.01	Guardrail Placement
862.02	Guardrail Installation (Special Detail for Sheet 6 of 8)
866.02	Woven Wire Fence - with Wood Post
876.01	Rip Rap In Channels
876.02	Guide for Rip Rap at Pipe Outlets

REVISIONS

1/10/2020 K:\RAL_Roadway\0110036358 - R-5779\Roadway\Proj\Plan Sheets\0110036358_rdy_tshdgn

PROJECT REFERENCE NO.	SHEET NO.
R-5779	1B

STATE OF NORTH CAROLINA, DIVISION OF HIGHWAYS

CONVENTIONAL PLAN SHEET SYMBOLS

Note: Not to Scale

**S.U.E. = Subsurface Utility Engineering*

BOUNDARIES AND PROPERTY:

- State Line
- County Line
- Township Line
- City Line
- Reservation Line
- Property Line
- Existing Iron Pin — EIP
- Computed Property Corner
- Property Monument — ECM
- Parcel/Sequence Number — 123
- Existing Fence Line
- Proposed Woven Wire Fence
- Proposed Chain Link Fence
- Proposed Barbed Wire Fence
- Existing Wetland Boundary — WLB
- Proposed Wetland Boundary — WLB
- Existing Endangered Animal Boundary — EAB
- Existing Endangered Plant Boundary — EPB
- Existing Historic Property Boundary — HPB
- Known Contamination Area: Soil — S
- Potential Contamination Area: Soil — S
- Known Contamination Area: Water — W
- Potential Contamination Area: Water — W
- Contaminated Site: Known or Potential

BUILDINGS AND OTHER CULTURE:

- Gas Pump Vent or U/G Tank Cap
- Sign — S
- Well — W
- Small Mine
- Foundation
- Area Outline
- Cemetery
- Building
- School
- Church
- Dam

HYDROLOGY:

- Stream or Body of Water
- Hydro, Pool or Reservoir
- Jurisdictional Stream — JS
- Buffer Zone 1 — BZ 1
- Buffer Zone 2 — BZ 2
- Flow Arrow
- Disappearing Stream
- Spring
- Wetland
- Proposed Lateral, Tail, Head Ditch — FLOW
- False Sump

RAILROADS:

- Standard Gauge — CSX TRANSPORTATION
- RR Signal Milepost — MILEPOST 35
- Switch — SWITCH
- RR Abandoned
- RR Dismantled

RIGHT OF WAY & PROJECT CONTROL:

- Secondary Horiz and Vert Control Point
- Primary Horiz Control Point
- Primary Horiz and Vert Control Point
- Exist Permanent Easment Pin and Cap
- New Permanent Easement Pin and Cap
- Vertical Benchmark
- Existing Right of Way Marker
- Existing Right of Way Line
- New Right of Way Line — RW
- New Right of Way Line with Pin and Cap — RW
- New Right of Way Line with Concrete or Granite R/W Marker — RW
- New Control of Access Line with Concrete C/A Marker — CA
- Existing Control of Access — CA
- New Control of Access — CA
- Existing Easement Line — E
- New Temporary Construction Easement — E
- New Temporary Drainage Easement — TDE
- New Permanent Drainage Easement — PDE
- New Permanent Drainage / Utility Easement — DUE
- New Permanent Utility Easement — PUE
- New Temporary Utility Easement — TUE
- New Aerial Utility Easement — AUE

ROADS AND RELATED FEATURES:

- Existing Edge of Pavement
- Existing Curb
- Proposed Slope Stakes Cut — C
- Proposed Slope Stakes Fill — F
- Proposed Curb Ramp — CR
- Existing Metal Guardrail
- Proposed Guardrail
- Existing Cable Guiderail
- Proposed Cable Guiderail
- Equality Symbol
- Pavement Removal

VEGETATION:

- Single Tree
- Single Shrub
- Hedge
- Woods Line
- Orchard
- Vineyard — Vineyard

EXISTING STRUCTURES:

MAJOR:

- Bridge, Tunnel or Box Culvert — CONC
- Bridge Wing Wall, Head Wall and End Wall — CONC WW

MINOR:

- Head and End Wall — CONC HW
- Pipe Culvert
- Footbridge
- Drainage Box: Catch Basin, DI or JB — CB
- Paved Ditch Gutter
- Storm Sewer Manhole — S
- Storm Sewer — S

UTILITIES:

POWER:

- Existing Power Pole
- Proposed Power Pole
- Existing Joint Use Pole
- Proposed Joint Use Pole
- Power Manhole — P
- Power Line Tower
- Power Transformer
- U/G Power Cable Hand Hole
- H-Frame Pole
- U/G Power Line LOS B (S.U.E.*) — P
- U/G Power Line LOS C (S.U.E.*) — P
- U/G Power Line LOS D (S.U.E.*) — P

TELEPHONE:

- Existing Telephone Pole
- Proposed Telephone Pole
- Telephone Manhole — T
- Telephone Pedestal — T
- Telephone Cell Tower
- U/G Telephone Cable Hand Hole
- U/G Telephone Cable LOS B (S.U.E.*) — T
- U/G Telephone Cable LOS C (S.U.E.*) — T
- U/G Telephone Cable LOS D (S.U.E.*) — T
- U/G Telephone Conduit LOS B (S.U.E.*) — TC
- U/G Telephone Conduit LOS C (S.U.E.*) — TC
- U/G Telephone Conduit LOS D (S.U.E.*) — TC
- U/G Fiber Optics Cable LOS B (S.U.E.*) — T FO
- U/G Fiber Optics Cable LOS C (S.U.E.*) — T FO
- U/G Fiber Optics Cable LOS D (S.U.E.*) — T FO

WATER:

- Water Manhole — W
- Water Meter
- Water Valve
- Water Hydrant
- U/G Water Line LOS B (S.U.E*)
- U/G Water Line LOS C (S.U.E*)
- U/G Water Line LOS D (S.U.E*)
- Above Ground Water Line — A/G Water

TV:

- TV Pedestal — C
- TV Tower
- U/G TV Cable Hand Hole — HH
- U/G TV Cable LOS B (S.U.E.*) — TV
- U/G TV Cable LOS C (S.U.E.*) — TV
- U/G TV Cable LOS D (S.U.E.*) — TV
- U/G Fiber Optic Cable LOS B (S.U.E.*) — TV FO
- U/G Fiber Optic Cable LOS C (S.U.E.*) — TV FO
- U/G Fiber Optic Cable LOS D (S.U.E.*) — TV FO

GAS:

- Gas Valve
- Gas Meter
- U/G Gas Line LOS B (S.U.E.*) — G
- U/G Gas Line LOS C (S.U.E.*) — G
- U/G Gas Line LOS D (S.U.E.*) — G
- Above Ground Gas Line — A/G Gas

SANITARY SEWER:

- Sanitary Sewer Manhole
- Sanitary Sewer Cleanout
- U/G Sanitary Sewer Line — SS
- Above Ground Sanitary Sewer — A/G Sanitary Sewer
- SS Forced Main Line LOS B (S.U.E.*) — FSS
- SS Forced Main Line LOS C (S.U.E.*) — FSS
- SS Forced Main Line LOS D (S.U.E.*) — FSS

MISCELLANEOUS:

- Utility Pole
- Utility Pole with Base
- Utility Located Object
- Utility Traffic Signal Box — S
- Utility Unknown U/G Line LOS B (S.U.E.*) — ?UTL
- U/G Tank; Water, Gas, Oil
- Underground Storage Tank, Approx. Loc. — UST
- A/G Tank; Water, Gas, Oil
- Geoenvironmental Boring
- U/G Test Hole LOS A (S.U.E.*)
- Abandoned According to Utility Records — AATUR
- End of Information — E.O.I.

REVISIONS

1/9/2020 K:\RAL_Roadway\0\I036358 - R-5779\Roadway\Proj\Plan Sheets\0\I036358_rdy_1sht.dgn

PROJECT REFERENCE NO.	SHEET NO.
R-5779	IC-1
Location and Surveys	

SURVEY CONTROL SHEET R–5779 (FINAL)

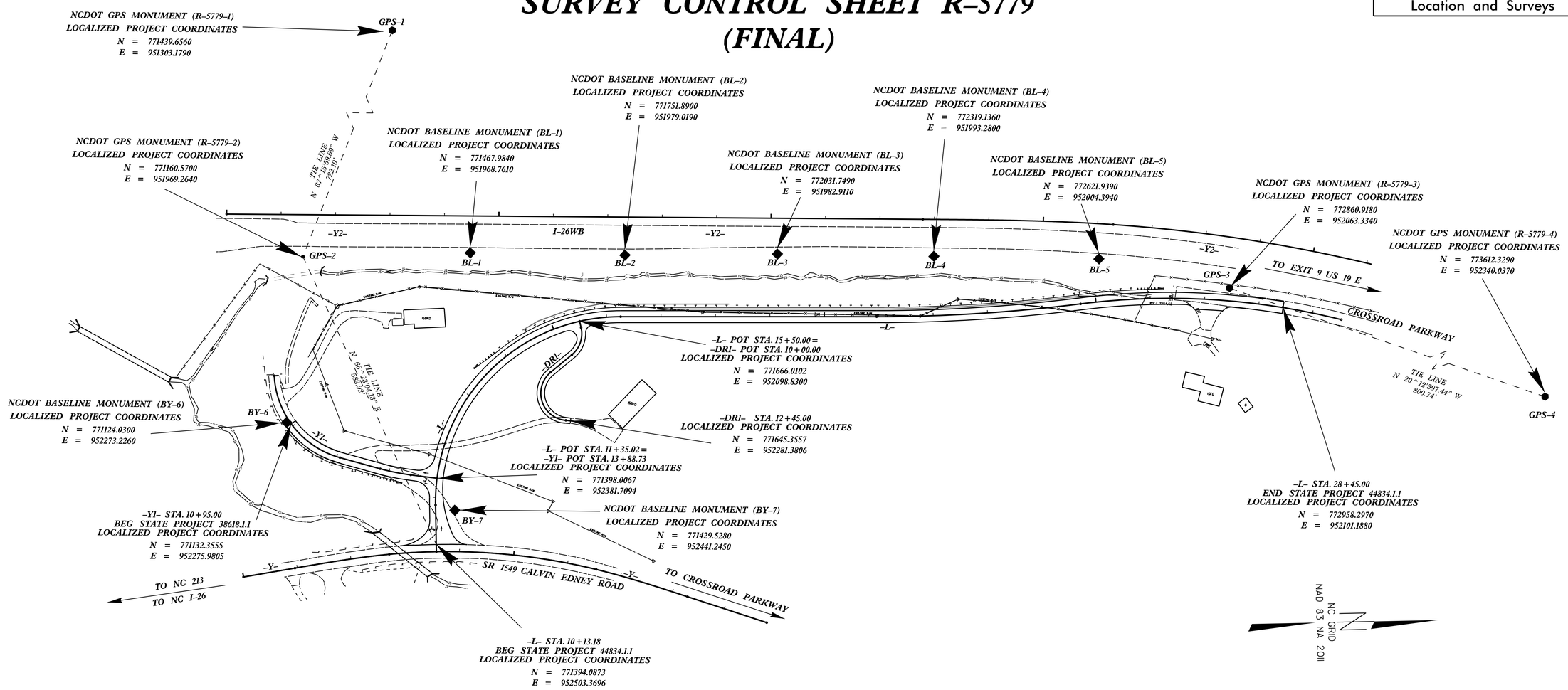

NOTES:

- INDICATES GEODETIC CONTROL MONUMENTS USED OR SET FOR HORIZONTAL AND VERTICAL PROJECT CONTROL BY THE NCDOT LOCATION AND SURVEYS UNIT. PROJECT CONTROL ESTABLISHED USING GNSS (GLOBAL NAVIGATION SATELLITE SYSTEM).

THE CONTROL DATA FOR THIS PROJECT CAN BE FOUND ELECTRONICALLY BY SELECTING PROJECT CONTROL DATA AT:
HTTPS://CONNECT.NCDOT.GOV/RESOURCES/LOCATION/

THE FILES TO BE FOUND ARE AS FOLLOWS:
R5779_LS_CONTROL.TXT

SITE CALIBRATION INFORMATION HAS NOT BEEN PROVIDED FOR THIS PROJECT. IF FURTHER INFORMATION IS NEEDED, PLEASE CONTACT THE LOCATION AND SURVEYS UNIT.

DATUM DESCRIPTION

THE LOCALIZED COORDINATE SYSTEM DEVELOPED FOR THIS PROJECT IS BASED ON THE STATE PLANE COORDINATES ESTABLISHED BY NCDOT FOR MONUMENT "R-5779-2"
WITH NAD 83/NA 2011 STATE PLANE GRID COORDINATES OF
NORTHING: 771160.5700(ft) EASTING: 951969.2640(ft)
ELEVATION: 2124.62(ft)
THE AVERAGE COMBINED GRID FACTOR USED ON THIS PROJECT (GROUND TO GRID) IS: 0.99982456
THE N.C. LAMBERT GRID BEARING AND LOCALIZED HORIZONTAL GROUND DISTANCE FROM "R-5779-2" TO -L- STATION 10+13.18 IS
N66°23'04.13"E 582.92 ft
ALL LINEAR DIMENSIONS ARE LOCALIZED HORIZONTAL DISTANCES
VERTICAL DATUM USED IS NAVD 88

NOTE: DRAWING NOT TO SCALE

REVISIONS

5/14/99

1/9/2020 K:\RAL_Roadway\01\036358 - R-5779\FinalSurvey\R5779_LS_IC-1.dgn

PROJECT REFERENCE NO.	SHEET NO.
R-5779	IC-2
Location and Surveys	

SURVEY CONTROL SHEET R-5779
(FINAL)

BL

POINT	DESC.	NORTH	EAST	ELEVATION	Y2 STATION	OFFSET
GPS2	GPS-2	771160.5700	951969.2640	2124.62	11+40.75	77.19 RT
1	BL-1	771467.9840	951968.7610	2133.01	14+48.02	67.85 RT
2	BL-2	771751.8900	951979.0190	2139.59	17+32.10	69.94 RT
3	BL-3	772031.7490	951982.9110	2146.89	20+11.96	65.78 RT
4	BL-4	772319.1360	951993.2800	2153.71	22+99.54	67.88 RT
5	BL-5	772621.9390	952004.3940	2160.78	26+06.06	64.54 RT
GPS3	GPS-3	772860.9180	952063.3340	2165.51	28+57.53	93.05 RT

GPS

POINT	DESC.	NORTH	EAST	ELEVATION	Y2 STATION	OFFSET
GPS1	GPS-1	771439.6560	951303.1790	2144.60	14+00.56	596.64 LT
GPS2	GPS-2	771160.5700	951969.2640	2124.62	11+40.75	77.19 RT
GPS3	GPS-3	772860.9180	952063.3340	2165.51	28+57.53	93.05 RT
GPS4	GPS-4	773612.3290	952340.0370	2202.33	36+92.06	123.35 RT

BY

POINT	DESC.	NORTH	EAST	ELEVATION	Y1 STATION	OFFSET
GPS2	GPS-2	771160.5700	951969.2640	2124.62	OUTSIDE PROJECT LIMITS	
6	BY6	771124.0300	952273.2260	2127.86	10+88.21	5.42 RT
7	BY-7	771429.5280	952441.2450	2129.82	OUTSIDE PROJECT LIMITS	

NOTES:

- *INDICATES GEODETIC CONTROL MONUMENTS USED OR SET FOR HORIZONTAL AND VERTICAL PROJECT CONTROL BY THE NCDOT LOCATION AND SURVEYS UNIT. PROJECT CONTROL ESTABLISHED USING GNSS (GLOBAL NAVIGATION SATELLITE SYSTEM).*

THE CONTROL DATA FOR THIS PROJECT CAN BE FOUND ELECTRONICALLY BY SELECTING PROJECT CONTROL DATA AT:
HTTPS://CONNECT.NCDOT.GOV/RESOURCES/LOCATION/

THE FILES TO BE FOUND ARE AS FOLLOWS:
R5779_LS_CONTROL.TXT

SITE CALIBRATION INFORMATION HAS NOT BEEN PROVIDED FOR THIS PROJECT. IF FURTHER INFORMATION IS NEEDED, PLEASE CONTACT THE LOCATION AND SURVEYS UNIT.

DATUM DESCRIPTION

THE LOCALIZED COORDINATE SYSTEM DEVELOPED FOR THIS PROJECT IS BASED ON THE STATE PLANE COORDINATES ESTABLISHED BY NCDOT FOR MONUMENT "R-5779-2"
WITH NAD 83/NA 2011 STATE PLANE GRID COORDINATES OF
NORTHING: 771160.5700(ft) EASTING: 951969.2640(ft)
ELEVATION: 2124.62(ft)
THE AVERAGE COMBINED GRID FACTOR USED ON THIS PROJECT (GROUND TO GRID) IS: 0.99982456
THE N.C. LAMBERT GRID BEARING AND LOCALIZED HORIZONTAL GROUND DISTANCE FROM "R-5779-2" TO -L- STATION 10+13.18 IS
N66°23'04.13"E 582.92 ft
ALL LINEAR DIMENSIONS ARE LOCALIZED HORIZONTAL DISTANCES
VERTICAL DATUM USED IS NAVD 88

NOTE: DRAWING NOT TO SCALE

REVISIONS

5/14/99

1/9/2020 K:\RAL_Roadway\01\036358 - R-5779\FinalSurvey\R5779_LS_IC-2.dgn

PROJECT REFERENCE NO.	SHEET NO.
R-5779	ID-1
Location and Surveys	

PROPOSED ALIGNMENT CONTROL SHEET

L

TYPE	STATION	NORTH	EAST
POT	10+00.00	771394.0511	952516.5486
PC	10+85.61	771394.2864	952430.9427
PT	16+25.97	771741.5141	952091.9542
PC	20+96.16	772211.5974	952101.9512
PRC	24+71.72	772586.5912	952086.4438
PT	29+54.05	773064.5614	952125.5268

Y

TYPE	STATION	NORTH	EAST
POT	10+00.00	771038.8876	952555.4891
TS	10+95.88	771133.7002	952541.2210
SC	12+70.88	771307.3134	952519.5969
CS	16+53.83	771686.8013	952555.4069
ST	18+28.82	771853.2954	952609.1222
POT	19+81.86	771997.6961	952659.8016

Y1

TYPE	STATION	NORTH	EAST
PC	10+00.00	771103.0402	952186.9916
PT	12+06.11	771220.5813	952340.0346
PC	12+82.83	771294.0640	952362.0644
PT	13+40.10	771349.9103	952374.5341
POT	13+88.73	771398.0067	952381.7094

Y2

TYPE	STATION	NORTH	EAST
POT	10+00.00	771022.1011	951888.0536
TS	22+78.69	772300.2624	951924.8288
SC	26+28.69	772649.7822	951942.0130
CS	46+03.70	774405.9632	952757.1363
ST	49+53.68	774644.6921	953012.9760
POT	56+51.97	775110.5967	953533.1121

DR1

TYPE	STATION	NORTH	EAST
POT	10+00.00	771684.8439	952288.8647
PC	10+20.00	771665.3133	952284.5572
PT	11+11.34	771631.5749	952212.9464
PC	11+84.41	771664.8720	952147.9033
PT	12+18.18	771669.3465	952115.0786
POT	12+34.79	771666.0102	952098.8030

NOTES:

1. PROJECT CONTROL WAS ESTABLISHED USING GNSS, THE GLOBAL NAVIGATION SATELLITE SYSTEM.

2. THE PROPOSED ALIGNMENT CONTROL DATA FOR THIS PROJECT HAS BEEN COMPILED FROM VARIOUS SOURCES. IF FURTHER INFORMATINO REGARDING PROJECT CONTROL IS NEEDED, PLEASE CONTACT THE LOCATION AND SURVEYS UNIT.

REVISIONS

RIGHT OF WAY CONTROL SHEET

PROJECT REFERENCE NO.	SHEET NO.
R-5779	1E-1
Location and Surveys	

ROW MARKER CONCRETE OR GRANITE-E

ALIGN	STATION	OFFSET	NORTH	EAST
L	25+21.68	29.99	772638.3291	952112.1467
L	24+71.72	30.00	772589.7033	952116.2820
L	20+96.17	29.99	772210.9633	952131.9382
L	16+25.97	30.00	771740.8762	952121.9474
L	11+67.64	30.00	771433.4703	952356.9745
L	11+74.82	-30.01	771377.2085	952334.9189
L	15+75.42	-30.00	771687.2632	952064.8768
L	20+96.16	-29.99	772212.2314	952071.9642
L	24+71.72	-30.00	772583.4791	952056.6057
L	16+25.97	-30.00	771742.1519	952061.9610

REBAR & CAP PERMANENT EASEMENT-E

ALIGN	STATION	OFFSET	NORTH	EAST
L	18+65.00	104.00	771978.2765	952201.0128
L	18+40.00	104.00	771953.2821	952200.4812
L	18+40.00	30.00	771954.8560	952126.4980
L	18+65.00	30.00	771979.8504	952127.0295
L	16+25.00	61.00	771739.4198	952152.9246
L	15+97.00	30.00	771714.4748	952122.5110
L	12+39.00	30.00	771455.6755	952295.9484
L	12+35.00	110.00	771526.4026	952333.4656
L	12+67.00	30.00	771467.8012	952273.4907
L	13+88.00	-30.00	771502.0192	952143.8625
L	14+58.13	-91.01	771538.1723	952048.0707
L	14+35.93	-111.50	771503.0518	952044.0805
L	18+40.00	44.00	771954.5584	952140.4948
L	18+65.00	36.00	771979.7228	952133.0281
L	17+54.66	104.00	771867.9654	952198.6669
L	17+69.24	30.00	771884.1086	952124.9934
L	14+29.00	-30.00	771538.3530	952118.0133
L	16+00.00	76.00	771719.7397	952168.2783
L	15+64.00	30.00	771684.5884	952125.8868
L	12+72.00	110.00	771538.3207	952311.4699
L	14+36.88	102.95	771613.4516	952227.9342
L	13+85.63	95.66	771579.5796	952242.7488
L	12+21.21	176.04	771583.3732	952367.7910
L	12+20.60	145.56	771555.1808	952356.1970

NOTES:

1. IF FURTHER INFORMATION REGARDING PROJECT CONTROL IS NEEDED, PLEASE CONTACT THE LOCATION AND SURVEYS UNIT.

2. PROJECT CONTROL WAS ESTABLISHED USING GNSS, THE GLOBAL NAVIGATION SATELLITE SYSTEM.

REVISIONS

DocuSign Envelope ID: 292C1F58-46E0-41BC-B20D-99FBD7A335D3

Kimley»Horn ©2016
P.O. BOX 33068 • RALEIGH, N.C. 27636-3068
RIGHT-OF-WAY REV.
CONST. REV.

PROJECT REFERENCE NO.	SHEET NO.
R-5779	2A-1

ROADWAY DESIGN ENGINEER
NORTH CAROLINA PROFESSIONAL SEAL 18903 ENGINEER GREGORY E. BREW
DocuSigned by: Gregory Brew
1/9/2020

PAVEMENT ENGINEER
NORTH CAROLINA PROFESSIONAL SEAL 043228 ENGINEER BRENDAN W. MENTHEY
DocuSigned by: Brendan Menthey
1/10/2020

DOCUMENT NOT CONSIDERED FINAL UNLESS ALL SIGNATURES COMPLETED

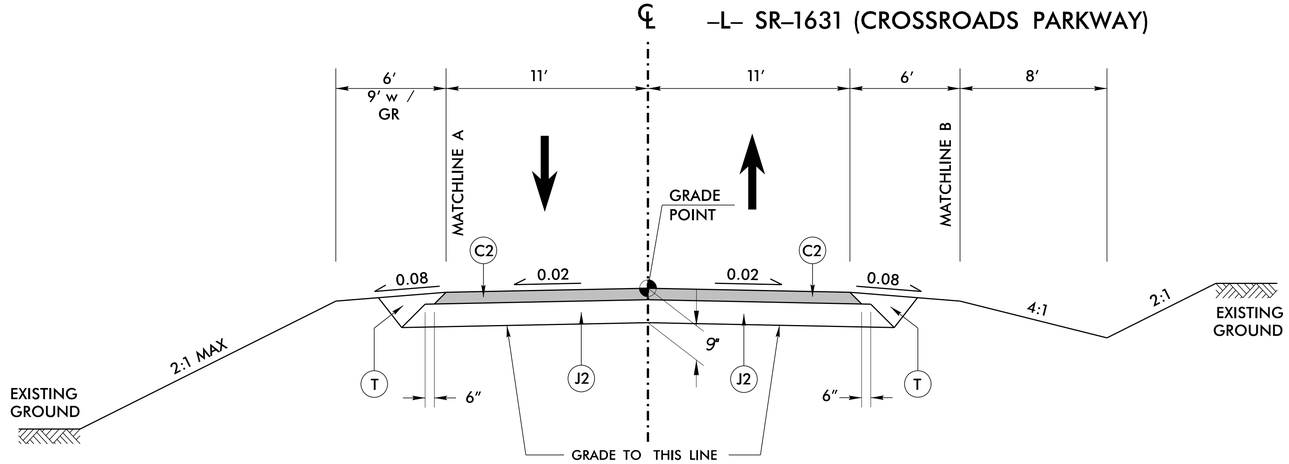

TYPICAL SECTION NO. 1
-L- 10+13.18 TO 17+20.00
-L- 24+70.00 TO 26+45.00

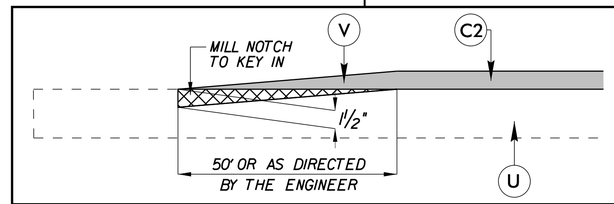

PROFILE KEY–IN DETAIL

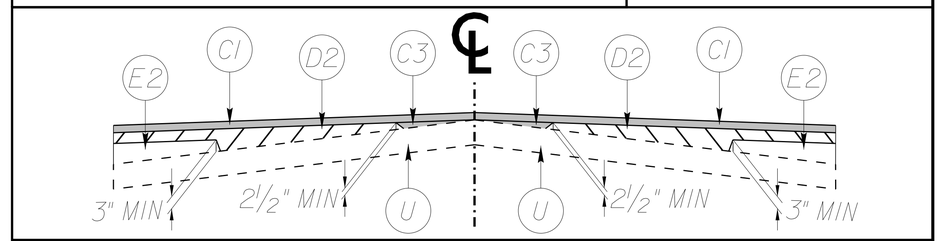

METHOD OF WEDGING

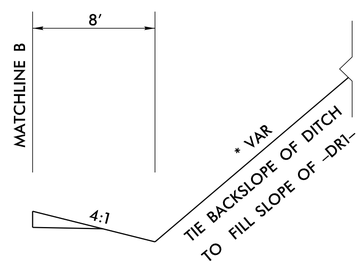

TYPICAL SECTION NO. 1A
-L- 13+50.00 TO 15+50.00 RT

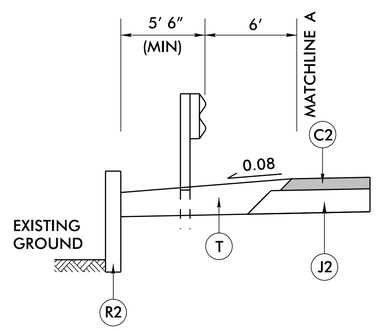

TYPICAL SECTION NO. 1B
-L- 14+20.00 TO 17+20.00 LT

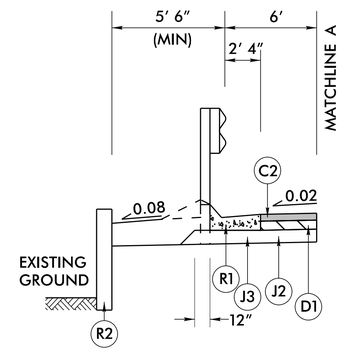

TYPICAL SECTION NO. 2A
-L- 17+20.00 TO 20+00.00 LT

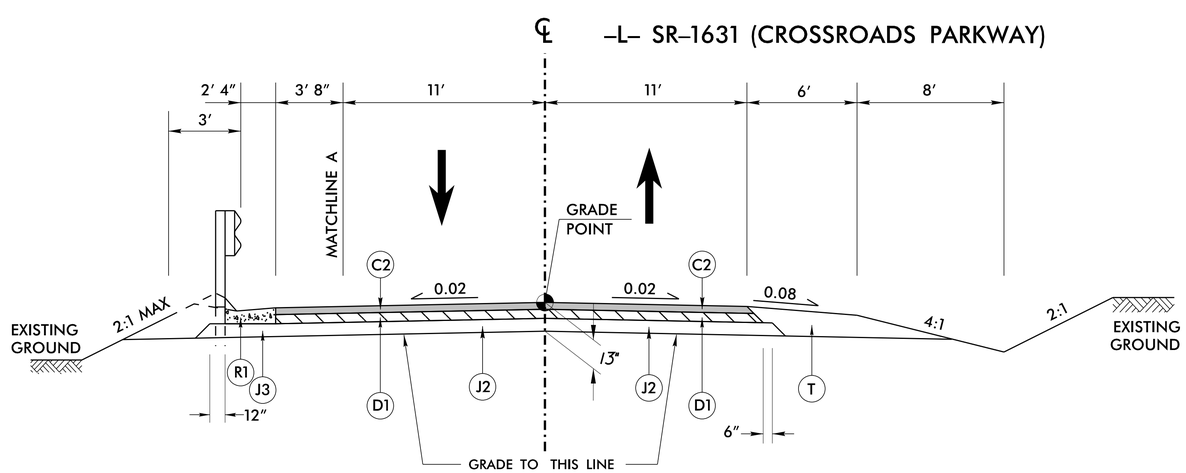

TYPICAL SECTION NO. 2
-L- 17+20.00 TO 24+70.00

PAVEMENT SCHEDULE

C1	PROP. APPROX. 1.5" ASPHALT CONCRETE SURFACE COURSE, TYPE S9.5B, AT AN AVERAGE RATE OF 168 LBS. PER SQ. YD.
C2	PROP. APPROX. 3" ASPHALT CONCRETE SURFACE COURSE, TYPE S9.5B, AT AN AVERAGE RATE OF 168 LBS. PER SQ. YD. IN EACH OF TWO LAYERS.
C3	PROP. VAR. DEPTH ASPHALT CONCRETE SURFACE COURSE, TYPE S9.5B, AT AN AVERAGE RATE OF 112 LBS. PER SQ. YD. PER 1" DEPTH TO BE PLACED IN LAYERS NOT TO EXCEED 2" IN DEPTH.
D1	PROP. APPROX. 4" ASPHALT CONCRETE INTERMEDIATE COURSE, TYPE I19.0C, AT AN AVERAGE RATE OF 456 LBS. PER SQ. YD.
D2	PROP. VAR. DEPTH ASPHALT CONCRETE INTERMEDIATE COURSE, TYPE I19.0C, AT AN AVERAGE RATE OF 114 LBS. PER SQ. YD. PER 1" DEPTH TO BE PLACED IN LAYERS NOT TO EXCEED 4" IN DEPTH OR LESS THAN 2.5" IN DEPTH.
E1	PROP. APPROX. 4" ASPHALT CONCRETE BASE COURSE, TYPE B25.0C, AT AN AVERAGE RATE OF 456 LBS. PER SQ. YD.
E2	PROPOSED VAR. DEPTH ASPHALT CONCRETE BASE COURSE, TYPE B25.0C, AT AN AVERAGE RATE OF 114 LBS. PER SQ. YD. PER 1" DEPTH TO BE PLACED IN LAYERS NOT LESS THAN 3" OR GREATER THAN 5.5" IN DEPTH.
J1	PROP. 4" AGGREGATE BASE COURSE.
J2	PROP. 6" AGGREGATE BASE COURSE.
J3	PROP. VAR. DEPTH AGGREGATE BASE COURSE.
R1	SHOULDER BERM GUTTER
R2	RETAINING WALL (SEE WALL PLANS)
T	EARTH MATERIAL.
U	EXISTING PAVEMENT
V	INCIDENTAL MILLING
V1	MILLING ASHPALT PAVEMENT 1.5" DEPTH
W	VARIABLE DEPTH ASPHALT PAVEMENT (SEE STANDARD METHOD OF WEDGING DETAIL)

REVISIONS
5/14/99
1/9/2020 K:\RAL_Roadway\011036358 - R-5779\Roadway\Proj\Plan_Sheets\011036358_rdy_typ.dgn

DocuSign Envelope ID: 292C1F58-46E0-41BC-B20D-99FBD7A335D3

Kimley»Horn ©2016
P.O. BOX 33068 • RALEIGH, N.C. 27636-3068
RIGHT-OF-WAY REV.
CONST. REV.

PROJECT REFERENCE NO.	SHEET NO.
R-5779	2A-2

ROADWAY DESIGN ENGINEER
NORTH CAROLINA PROFESSIONAL ENGINEER SEAL 18903 GREGORY E. BREW
1/9/2020

PAVEMENT ENGINEER
NORTH CAROLINA PROFESSIONAL ENGINEER SEAL 043228 BRENDAN W. MEINTHEIM
1/9/2020

DOCUMENT NOT CONSIDERED FINAL UNLESS ALL SIGNATURES COMPLETED

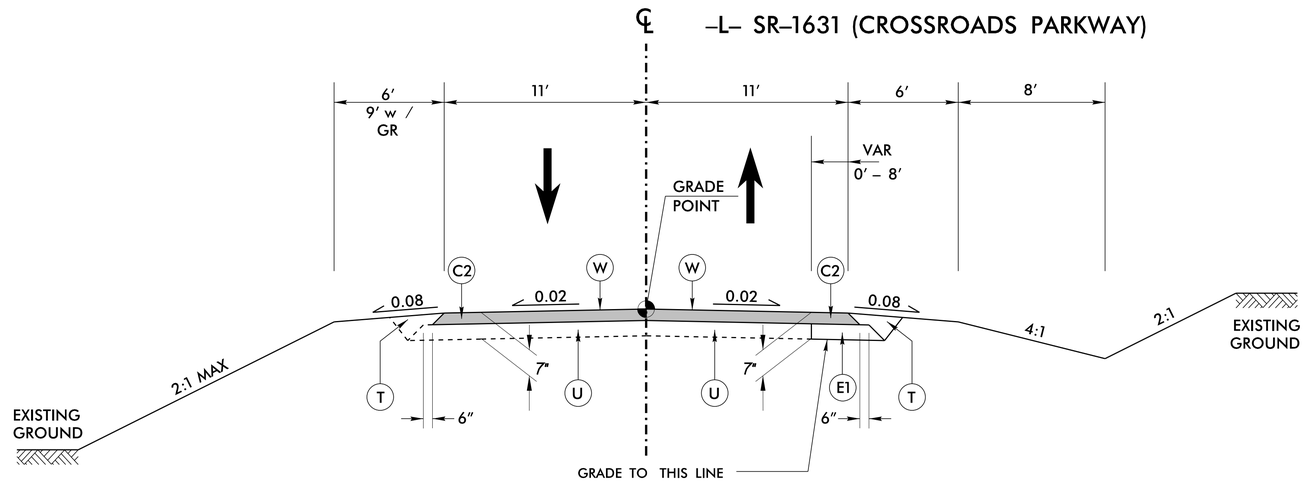

TYPICAL SECTION NO. 3
-L- 26+45.00 TO 28+45.00

* ADJUST SUPERELEVATION AS NECESSARY TO TIE TO EXIST 4% CROSS SLOPE BETWEEN –L– STA 25+45.00 TO 29+50.00

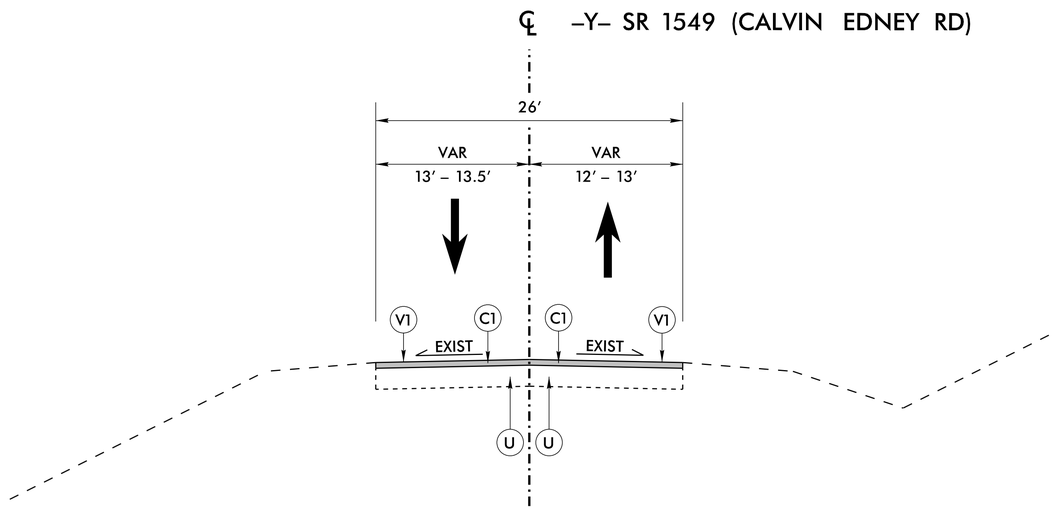

TYPICAL SECTION NO. 4
-Y- 12+90 TO 14+30

PAVEMENT SCHEDULE	
C1	1.5" TYPE S9.5B
C2	3" TYPE S9.5B
E1	4" TYPE B25.0C
T	EARTH MATERIAL.
U	EXISTING PAVEMENT
V1	MILLING 1.5" DEPTH
W	WEDGING

REVISIONS

1/9/2020 K:\RAL_Roadway\011036358 – R-5779\Roadway\Proj\Plan Sheets\011036358_rdy_typdgn 5/14/99

DocuSign Envelope ID: 292C1F58-46E0-41BC-B20D-99FBD7A335D3

Kimley»Horn ©2016
P.O. BOX 33068 • RALEIGH, N.C. 27636-3068
RIGHT-OF-WAY REV.
CONST. REV.

PROJECT REFERENCE NO.	SHEET NO.
R-5779	2A-3

ROADWAY DESIGN ENGINEER
NORTH CAROLINA PROFESSIONAL SEAL 18903 ENGINEER GREGORY E. BREWY
Designed by: Gregory E. Brewy
1/9/2020

PAVEMENT ENGINEER
NORTH CAROLINA PROFESSIONAL SEAL 043228 ENGINEER BRENDAN W. MERRITT
Designed by: Brendan W. Merritt
1/10/2020

DOCUMENT NOT CONSIDERED FINAL UNLESS ALL SIGNATURES COMPLETED

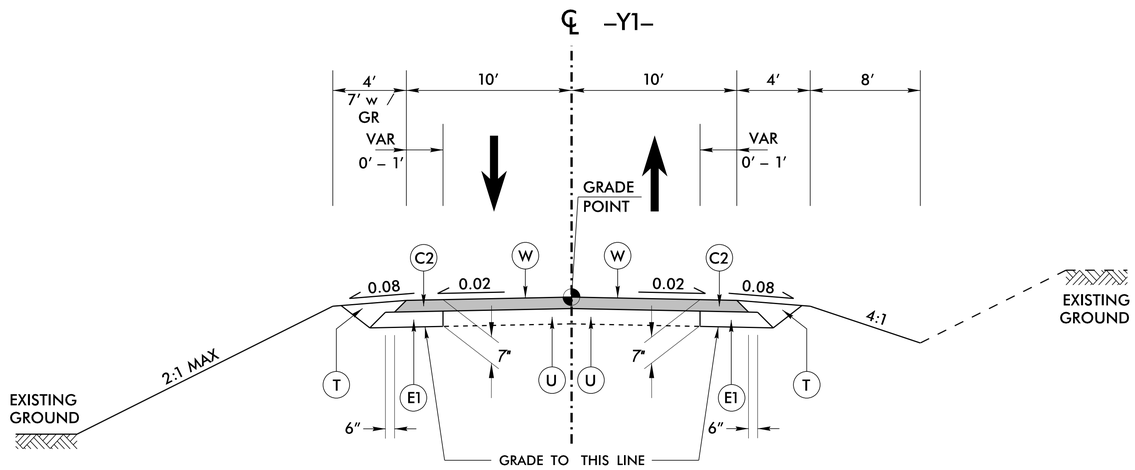

TYPICAL SECTION NO. 5
-Y1- 10+95.00 TO 11+50.00

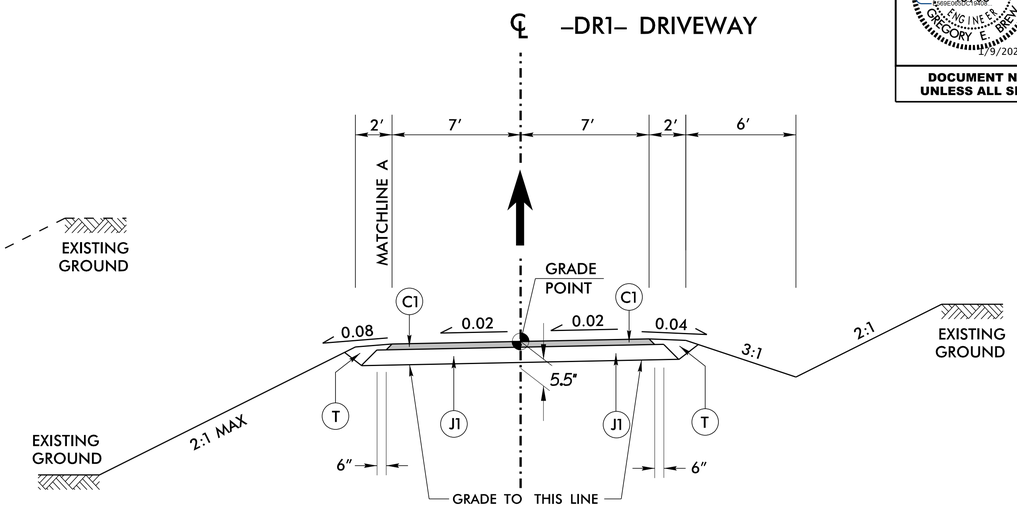

TYPICAL SECTION NO. 7
-DR1- 10+20.00 to 12+23.79

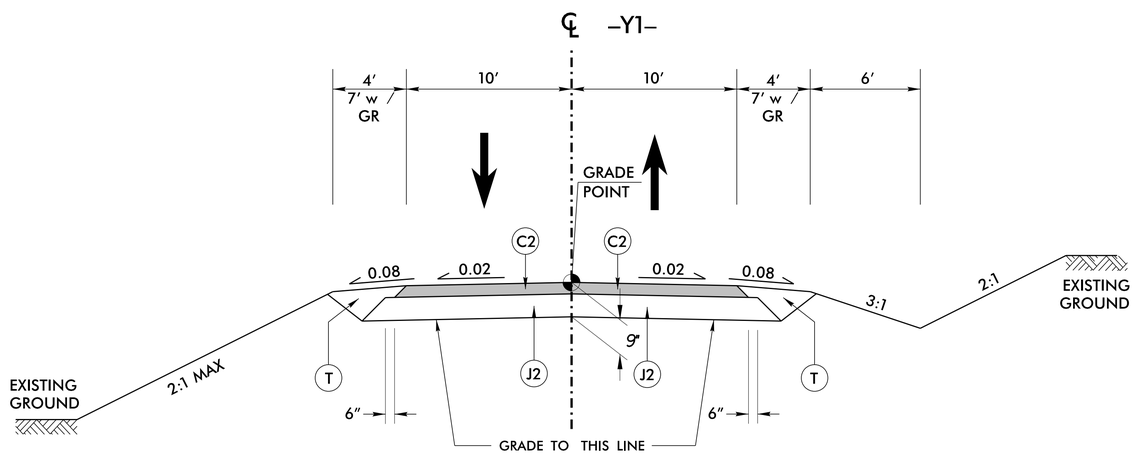

TYPICAL SECTION NO. 6
-Y1- 11+50.00 TO 13+77.73

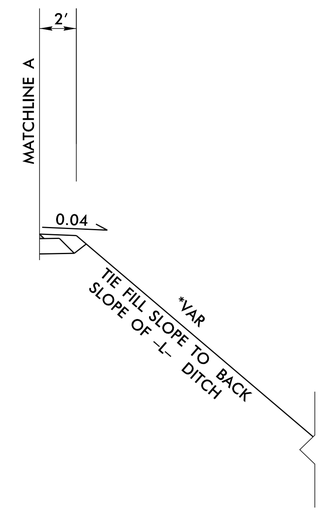

TYPICAL SECTION NO. 7A
-DR1- 10+20.00 to 11+50.00

PAVEMENT SCHEDULE

C1	1.5" TYPE S9.5B
C2	3" TYPE S9.5B
E1	4" TYPE B25.0C
J1	4" AGGREGATE BASE COURSE.
J2	6" AGGREGATE BASE COURSE.
T	EARTH MATERIAL.
U	EXISTING PAVEMENT
W	WEDGING

REVISIONS

5/14/99

1/9/2020 K:\RAL_Roadway\011036358 - R-5779\Roadway\Proj\Plan Sheets\011036358_rdy_typdgn

DocuSign Envelope ID: FC68CEAB-C431-431E-A40E-9FA89F0D9035

5/14/99

REVISIONS

Kimley»Horn ©2016
P.O. BOX 33068 • RALEIGH, N.C. 27636-3068

RIGHT-OF-WAY REV.

CONST. REV.

PROJECT REFERENCE NO.	SHEET NO.
R-5779	2D-1

DOCUMENT NOT CONSIDERED FINAL UNLESS ALL SIGNATURES COMPLETED

ROADWAY DESIGN ENGINEER

NORTH CAROLINA PROFESSIONAL SEAL 18903 ENGINEER GREGORY E. BREW

Docu Sign Envelope ID: E5A8A9BDCC1B3B...

1/10/2020

HYDRAULICS ENGINEER

NORTH CAROLINA PROFESSIONAL SEAL 19724 ENGINEER JAMES W. BLANTON

Docu Sign Envelope ID: 1A7C7A4B...

1/10/2020

DOCUMENT NOT CONSIDERED FINAL UNLESS ALL SIGNATURES COMPLETED

DETAIL 1
BERM 'V' DITCH
(Not to Scale)

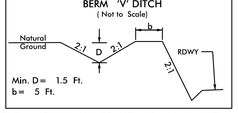

FROM STA. 12+50 TO STA. 13+00 –L– (RT)
FROM STA. 17+50 TO STA. 18+50 –L– (RT)
FROM STA. 11+50 –DR1– (RT) TO STA. 16+00 –L– (RT)

DETAIL 2
STANDARD BASE DITCH
(Not to Scale)

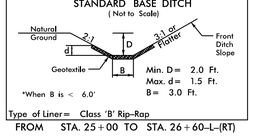

FROM STA. 25+00 TO STA. 26+60–L–(RT)

DETAIL 3
FALSE SUMP
(Not to Scale)

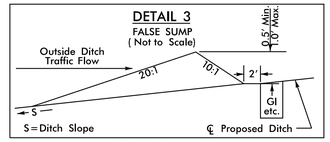

STA. 11+40 –L– (RT)
STA. 12+35 –L– (RT)
STA. 13+85 –L– (RT)
STA. 18+36 –L– (RT)

DETAIL 4
BERM 'V' DITCH W/ RIP RAP
(Not to Scale)

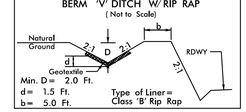

FROM STA. 16+00 TO STA. 17+50–L– (RT)
FROM STA. 18+50 TO STA. 21+00 –L– (RT)
FROM STA. 21+00 TO STA. 25+00–L– (RT)

DETAIL 5
FALSE SUMP
(Not to Scale)

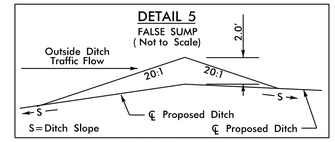

STA. 24+75 –L– (RT)

DETAIL 6
ROADSIDE CUT DITCH W/ RIP RAP
(Not to Scale)

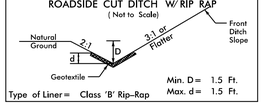

FROM STA. 10+50 TO STA. 11+55 –L– (RT)
FROM STA. 11+55 TO STA. 12+50 –L– (RT)
FROM STA. 11+55 TO STA. 14+00 –L– (LT)
FROM STA. 12+50 TO STA. 14+00 –L– (RT)
FROM STA. 10+50 TO STA. 12+00 –DR1– (RT)
FROM STA. 11+00 TO STA. 12+00 –DR1– (LT)

DETAIL 7
TOE PROTECTION
(Not to Scale)

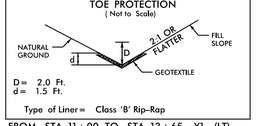

FROM STA. 11+00 TO STA. 13+65 –Y1– (LT)
FROM STA. 24+25 TO STA. 26+00 –L– (LT)

DETAIL 8
RIP RAP AT EMBANKMENT
(Not to Scale)

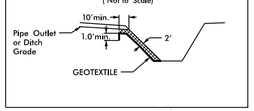

STA. 10+51 –L– (LT)
STA. 14+55 –L– (LT)
STA. 18+50 –L– (LT)

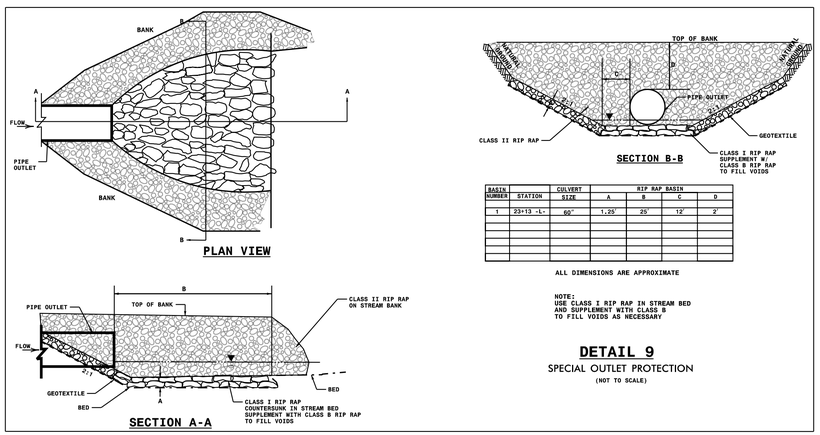

BASIN NUMBER	STATION	CULVERT SIZE	RIP RAP BASIN A	B	C	D
1	23+13 -L-	60"	1.25'	25'	12'	2'

ALL DIMENSIONS ARE APPROXIMATE

NOTE:
USE CLASS I RIP RAP IN STREAM BED AND SUPPLEMENT WITH CLASS B TO FILL VOIDS AS NECESSARY

DETAIL 9
SPECIAL OUTLET PROTECTION
(NOT TO SCALE)

1/10/2020 K:\RAL_Roadway\011036358 - R-5779\Roadway\Proj\Plan Sheets\011036358_hyd_details.dgn

Kimley»Horn ©2016
P.O. BOX 33068 • RALEIGH, N.C. 27636–3068

RIGHT–OF–WAY REV.
CONST. REV.

PROJECT REFERENCE NO.	SHEET NO.
R–5779	3B–1

DOCUMENT NOT CONSIDERED FINAL UNLESS ALL SIGNATURES COMPLETED

REVISIONS

SUMMARY OF EARTHWORK
IN CUBIC YARDS

LOCATION	UNCLASSIFIED EXCAVATION	UNDERCUT EXCAVATION	EMBANKMENT +%	BORROW	TOTAL WASTE
SECTION 1					
–L– 10+13.00 TO 15+50.00	21147		683		20464
–Y1– 10+95.00 TO 13+78.00	12		1489	1477	
–DR1– 10+20.00 TO 12+24.00	1587				
SUBTOTAL (SECTION 1)	22746		2172	1477	20464
SECTION 2					
–L– 15+50.00 TO 28+45.00	19990		3795		16195
SUBTOTAL (SECTION 2)	19990		3795		16195
TOTAL	42736		5967	1477	36659
WASTE IN LIEU OF BORROW				–1477	–1477
LOSS DUE TO CLEARING & GRUBBING	–1500				–1500
PROJECT TOTALS	41236				33682
GRAND TOTALS	41236				33682
SAY	41500				
700 CY UNCLASSIFIED USED FOR SHLD BORROW					
UNCLASSIFIED INCLUDES BENCHING IN FRONT OF RETAINING WALL					
CONTENGENCIES					
SELECT GRANULAR MATERIAL = 400 CY					
CLASS IV SUBGRADE STABILIZATION = 200 TONS					
UNDERCUT = 450 CY					
SHALLOW UNDERCUT = 100 CY					

REMOVAL OF EXISTING ASPHALT PAVEMENT

LINE	STATION	STATION	LOCATION LT/RT/CL	YD³
–L–	10+10	11+20	RT/LT	538
–L–	12+00		RT/LT	500
–Y1–	11+50	12+00	CL	125
			TOTAL:	1163
			SAY:	1170

BREAKING OF EXISTING ASPHALT PAVEMENT

LINE	STATION	STATION	LOCATION LT/RT/CL	YD³
–Y1–	12+00	13+70	CL	446
			TOTAL:	446
			SAY:	450

SUMMARY OF WOVEN WIRE FENCE

LINE	STATION	STATION	FABRIC	4" TIMBER POSTS 7'6" LONG	5" TIMBER 5" POSTS
–L–	15+75.40	26+04.38	1032.74	67	13
		TOTAL	1032.74	67	13
		SAY	1040	67	13

"N" = DISTANCE FROM EDGE OF LANE TO FACE OF GUARDRAIL.
TOTAL SHOULDER WIDTH = DISTANCE FROM EDGE OF TRAVEL LANE TO SHOULDER BREAK POINT.
FLARE LENGTH = DISTANCE FROM LAST SECTION OF PARALLEL GUARDRAIL TO END OF GUARDRAIL.
W = TOTAL WIDTH OF FLARE FROM BEGINNING OF TAPER TO END OF GUARDRAIL.
G = GATING IMPACT ATTENUATOR TYPE TL–3
NG = NON–GATING IMPACT ATTENUATOR TYPE TL–3

GUARDRAIL SUMMARY

SURVEY LINE	BEG. STA.	END STA.	LOCATION	LENGTH			WARRANT POINT		"N" DIST. FROM E.O.L.	TOTAL SHOULDER WIDTH	FLARE LENGTH		W		ANCHORS						IMPACT ATTENUATOR TYPE 350			TERMINAL SECTIONS	REMOVE EXISTING GUARDRAIL	REMOVE AND STOCKPILE EXISTING GUARDRAIL	REMARKS
				STRAIGHT	SHOP CURVED	DOUBLE FACED	APPROACH END	TRAILING END			APPROACH END	TRAILING END	APPROACH END	TRAILING END	GREU TL–2	GREU TL–3	GREU MEDIAN TL–3	TEMP GREU TL–3	CAT–1	AT–1	EA	G	NG				
–L–	13+40.59	26+24.36	LT	1283.77				26+24.00	6	9	50	50	1	1		2											
–Y1–	10+99.73	13+35.34	RT	235.61				13+35.00	4	7		50		1		1									187.5		TIE TO EXISTING GUARDRAIL
			SUBTOTAL	1519.38												3											
	LESS ANCHOR DEDUCTIONS																										
	GREU TL–3	3 @ 50'	=	150.00																							
			TOTAL	1369.38												3											
			SAY	1375																							

1/9/2020 K:\RAL_Roadway\011036358 – R–5779\Roadway\Proj\Plan Sheets\011036358_rdy_sum.dgn

DLB3932

COMPUTED BY:	DLH	DATE:	12/19/2019
CHECKED BY:	GEB	DATE:	12/19/19

NORTH CAROLINA DEPARTMENT OF TRANSPORTATION
DIVISION OF HIGHWAYS

PROJECT NO.	SHEET NO.
R-5779	3D-1

Note: Invert Elevations indicated are for Bid Purposes only and shall not be used for project construction stakeout. See "Standard Specifications For Roads and Structures, Section 300-5".

LIST OF PIPES, ENDWALLS, ETC. (FOR PIPES 48 INCHES & UNDER)

| LINE & STATION / SIZE / THICKNESS OR GAUGE | OFFSET | STRUCTURE NUMBER FROM | STRUCTURE NUMBER TO | TOP ELEVATION FT. | INVERT ELEVATION FT. | INVERT ELEVATION FT. | MINIMUM REQUIRED SLOPE % | Side Drain Pipe (RCP, CSP, CAAP, HDPE, or PVC) 12 | 15 | 18 | 24 | 30 | 36 | 42 | 48 | DO NOT USE RCP | DO NOT USE CSP | DO NOT USE CAAP | DO NOT USE HDPE | DO NOT USE PVC | C. S. PIPE 12 .064 | 15 .064 | 18 .064 | 24 .064 | 30 .079 | 36 .079 | 42 .109 | 48 .109 | R. C. PIPE CLASS III 12 | 15 | 18 | 24 | 30 | 36 | 42 | 48 | R. C. PIPE CLASS IV 12 | 15 | 18 | 24 | 30 | 36 | 42 | 48 | ENDWALLS STD. 838.01 OR STD. 838.11 (UNLESS NOTED OTHERWISE) CY | REINFORCED ENDWALLS CY | DRAINAGE STRUCTURE MASONRY CY | QUANTITIES FOR DRAINAGE STRUCTURES (NOTE: TOTAL LIN. FT. FOR PAY QUANTITY SHALL BE A + (1.3 X B)) 0' THRU 5' EACH | 5' THRU 10' A LIN. FT. | 10' AND ABOVE B LIN. FT. | C.B. STD. 840.01 OR STD. 840.02 | OPEN THROAT C.B. STD. 840.04 OR STD. 840.05 | CONCRETE BRIDGE APPROACH D.I. STD. 840.13 | D.I. STD. 840.14 OR STD. 840.15 | D.I. FRAME AND GRATES STD. 840.16 | G.D.I. TYPE "A" STD. 840.17 OR STD. 840.26 | G.D.I. TYPE "B" STD. 840.18 OR STD. 840.27 | G.D.I. TYPE "D" STD. 840.19 OR STD. 840.28 | G.D.I. (W.S. FLAT) FRAME WITH GRATE STD. 840.20 | G.D.I. (W.S. FLAT) FRAME W/ 2 GRATES STD. 840.20 | G.D.I. (W.S. SAG) FRAME W/ GRATE STD. 840.22 | G.D.I. (W.S. SAG) FRAME W/ 2 GRATES STD. 840.22 | G.D.I. (N.S. SAG) FRAME W/ GRATE STD. 840.24 | G.D.I. (N.S. SAG) FRAME W/ 2 GRATES STD. 840.24 | G.D.I. (N.S. FLAT) FRAME W/ GRATE STD. 840.29 | G.D.I. (N.S. FLAT) FRAME W/ 2 GRATES STD. 840.29 | T.B.J.B. STD. 840.34 | T.B.D.I. STD. 840.35 | T.B.D.I. FOR STEEL GRATES STD. 840.36 | 15" C.S. ELBOW | 18" C.S. ELBOW | 24" C.S. ELBOW | 30" C.S. ELBOW | 36" C.S. ELBOW | BERM DITCH OUTLET STD. 850.10 (PER EACH) | BERM DITCH OUTLET STD. 850.11 (PER EACH) | FLOWABLE FILL CY | CONCRETE COLLARS CL. "B" STD. 840.72 CY | CONCRETE AND BRICK PIPE PLUG STD. 840.71 CY | PIPE REMOVAL LIN. FT. | REMARKS |
|---|---|---|---

DLB3932

COMPUTED BY:	DLH	DATE:	12/19/2019
CHECKED BY:	GEB	DATE:	12/19/19

NORTH CAROLINA DEPARTMENT OF TRANSPORTATION
DIVISION OF HIGHWAYS

PROJECT NO.	SHEET NO.
R-5779	3D-2

Note: Invert Elevations indicated are for Bid Purposes only and shall not be used for project construction stakeout. See "Standard Specifications For Roads and Structures, Section 300-5".

LIST OF PIPES, ENDWALLS, ETC. (FOR PIPES 54 INCHES & OVER)

| LINE & STATION / SIZE / THICKNESS OR GAUGE | OFFSET | STRUCTURE NUMBER FROM | STRUCTURE NUMBER TO | TOP ELEVATION FT. | INVERT ELEVATION FT. | INVERT ELEVATION FT. | MINIMUM REQUIRED SLOPE % | Side Drain Pipe (RCP, CSP, CAAP, HDPE, or PVC) 54 | 60 | 66 | 72 | 78 | 84 | DO NOT USE RCP | DO NOT USE CSP | DO NOT USE CAAP | DO NOT USE HDPE | DO NOT USE PVC | C. S. PIPE 54 | 60 | 66 | 72 | 78 | 84 | | R. C. PIPE CLASS III 54 | 60 | 66 | 72 | 78 | 84 | | R. C. PIPE CLASS IV 54 | 60 | 66 | 72 | 78 | 84 | | ENDWALLS STD. 838.01 OR STD. 838.11 (UNLESS NOTED OTHERWISE) CY | REINFORCED ENDWALLS CY | DRAINAGE STRUCTURE MASONRY CY | QUANTITIES FOR DRAINAGE STRUCTURES (NOTE: TOTAL LIN. FT. FOR PAY QUANTITY SHALL BE A + (1.3 X B)) 0' THRU 5' EACH | A 5' THRU 10' LIN. FT. | B 10' AND ABOVE LIN. FT. | C.B. STD. 840.01 OR STD. 840.02 | FRAME, GRATES, AND HOOD STD. 840.03 GRATE TYPE E | F | G | CONCRETE TRANSITIONAL SECTION D.I. STD. 852.06 | C.B. STD. 852.05 | OPEN THROAT C.B. STD. 840.04 OR STD. 840.05 | CONCRETE BRIDGE APPROACH D.I. STD. 840.13 | D.I. STD. 840.14 OR STD. 840.15 | D.I. FRAME AND GRATES STD. 840.16 | G.D.I. TYPE "A" STD. 840.17 OR STD. 840.26 | G.D.I. TYPE "B" STD. 840.18 OR STD. 840.27 | G.D.I. TYPE "D" STD. 840.19 OR STD. 840.28 | G.D.I. (W.S. FLAT) FRAME WITH GRATE STD. 840.20 | G.D.I. (W.S. FLAT) FRAME W/ 2 GRATES STD. 840.20 | G.D.I. (W.S. SAG) FRAME W/ GRATE STD. 840.22 | G.D.I. (W.S. SAG) FRAME W/ 2 GRATES STD. 840.22 | G.D.I. (N.S. SAG) FRAME W/ GRATE STD. 840.24 | G.D.I. (N.S. SAG) FRAME W/ 2 GRATES STD. 840.24 | G.D.I. (N.S. FLAT) FRAME W/ GRATE STD. 840.29 | G.D.I. (N.S. FLAT) FRAME W/ 2 GRATES STD. 840.29 | T.B.J.B. STD. 840.34 | T.B.D.I. STD. 840.35 | T.B.D.I. FOR STEEL GRATES STD. 840.36 | 15" C.S. ELBOW | 18" C.S. ELBOW | 24" C.S. ELBOW | 30" C.S. ELBOW | 36" C.S. ELBOW | BERM DITCH OUTLET STD. 850.10 (PER EACH) | BERM DITCH OUTLET STD. 850.11 (PER EACH) | FLOWABLE FILL CY | CONCRETE COLLARS CL. "B" STD. 840.72 CY | CONCRETE AND BRICK PIPE PLUG STD. 840.71 CY | PIPE REMOVAL LIN. FT. | REMARKS |
|---|---|---|---

Kimley»Horn ©2016

P.O. BOX 33068 • RALEIGH, N.C. 27636–3068

RIGHT–OF–WAY REV.

CONST. REV.

PROJECT REFERENCE NO.	SHEET NO.
R-5779	3G-1

DOCUMENT NOT CONSIDERED FINAL UNLESS ALL SIGNATURES COMPLETED

REVISIONS

SUMMARY OF SUBSURFACE DRAINAGE

LINE	Station	Station	Location LT/RT	Drain Type* UD/BD/SD	LF
CONTINGENCY				SD	200
				TOTAL LF	200

*UD = Underdrain
*BD = Blind Drain
*SD = Subsurface Drain

SUMMARY OF AGGREGATE SUBGRADE / STABILIZATION

LINE	Station	Station	Aggregate Type* ASU(1/2) /AST	Aggregate Thickness INCHES	Shallow Undercut CY	Class IV Subgrade Stabilization TONS	Geotextile for Soil Stabilization SY	Stabilizer Aggregate TONS	Class IV Aggregate Stabilization TONS
CONTINGENCY			AST	36	100	200	400		
			TOTAL CY/TONS/SY		100	200	400**		

*ASU(1/2) = Aggregate Subgrade (Type 1 or 2)
*AST = Aggregate Stabilization

**Total tons of "Geotextile for Class IV Subgrade Stabilization" and total square yards of "Geotextile for Soil Stabilization" are only the estimated quantities for ASU(1/2)/AST and may only represent a portion of the geotextile quantity shown in the Item Sheets of the Proposal.

1/9/2020 K:\RAL_Roadway\011036358 - R-5779\Roadway\Proj\Plan Sheets\011036358_rdy_sum.dgn

PROJ. REFERENCE NO.	SHEET NO.
R-5779	3P-1

STATE OF NORTH CAROLINA
DIVISION OF HIGHWAYS

PARCEL INDEX SHEET

PARCEL No.	SHEET No.	PROPERTY OWNER NAME	DEED BOOK
1	4	JAMES D. WALLIN ESTATE	DB 127 PG 553, REF. DB 88 PG 640, DB 510 PG 413, PB 3 PG 53
2	4	RONNIE L. & JUDY E. WALLIN	DB 131 PG 381, PB 3 PG 53
3	4, 5	H & K PROPERTIES, LLC	DB 499 PG 483, PB 5 PG 722

DocuSign Envelope ID: C88CA2E9-BBC3-4042-B28A-80EAD354199F

Kimley»Horn ©2016
P.O. BOX 33068 • RALEIGH, N.C. 27636-3068

PROJECT REFERENCE NO.	SHEET NO.
R-5779	4
R/W SHEET NO.	

ROADWAY DESIGN ENGINEER: NORTH CAROLINA PROFESSIONAL SEAL 038903 ENGINEER GREGORY E. BREN — 1/9/2020

HYDRAULICS ENGINEER: NORTH CAROLINA PROFESSIONAL SEAL 030182 ENGINEER ANICE W. BLANTON — 1/10/2020

DOCUMENT NOT CONSIDERED FINAL UNLESS ALL SIGNATURES COMPLETED

NAD 83 /NA 2011

-L-
PI Sta 14+31.96
Δ = 91° 03' 38.9" (RT)
D = 16° 51' 06.1"
L = 540.37'
T = 346.35'
R = 340.00'
DS = 35
Ed = 6%

-Y1-
PI Sta 11+18.94
Δ = 71° 34' 20.9" (LT)
D = 34° 43' 29.0"
L = 206.11'
T = 118.94'
R = 165.00'
DS = 25
Ed = 9%

PI Sta 13+11.51
Δ = 8° 12' 12.2" (LT)
D = 14° 19' 26.2"
L = 57.27'
T = 28.68'
R = 400.00'
DS = 35

-Y2- POT Sta. 10+00.00

-Y1- PC Sta. 10+00.00

-Y1- PC Sta. 12+82.83

N 8° 29' 06.5" E

-Y1- PT Sta. 12+06.11

N 16° 41' 18.7" E

-Y1- PT Sta. 13+40.10

-Y- POT Sta. 10+00.00

N 8° 33' 29.1" W

-Y- SC Sta. 12+70.88

-Y- TS Sta. 10+95.88

-Y- CS Sta. 16+53.83

-Y- ST Sta. 18+28.82

-Y- POT Sta. 19+81.86

N 19° 20' 21.2" E

-L- POT Sta. 10+00.00 =
-Y- POC Sta. 13+57.69
Δ = 90°

-L- PC Sta. 10+85.61

N 89° 50' 33.0" W

-L- POC Sta. 11+35.02 =
-Y1- POT Sta. 13+88.73
Δ = 90°

-DRI- PC Sta. 11+84.41

-DRI- PT Sta. 11+11.34

N 1° 38' 53.0" E

-L- POC Sta. 15+50.00 =
-DRI- POT Sta. 12+34.79
Δ = 90°

S 78° 24' 56.7" W

-L- PT Sta. 16+25.97

N 1° 13' 05.8" E

N 62° 53' 27.7" W

-DRI- POT Sta. 10+00.00

S 12° 26' 14.9" W

-DRI- PC Sta. 10+20.00

BEGIN CONSTRUCTION
-Y1- STA 10+95.00

BEGIN CONSTRUCTION
-Y- STA 12+90.00

END CONSTRUCTION
-Y- STA 14+30.00

BEGIN TIP PROJECT R-5779
-L- POT STA 10+13.18

BEGIN CONSTRUCTION
-DR1- STA 10+20.00

MATCHLINE -L- STA 20+00.00
SEE SHEET PLAN SHEET 5

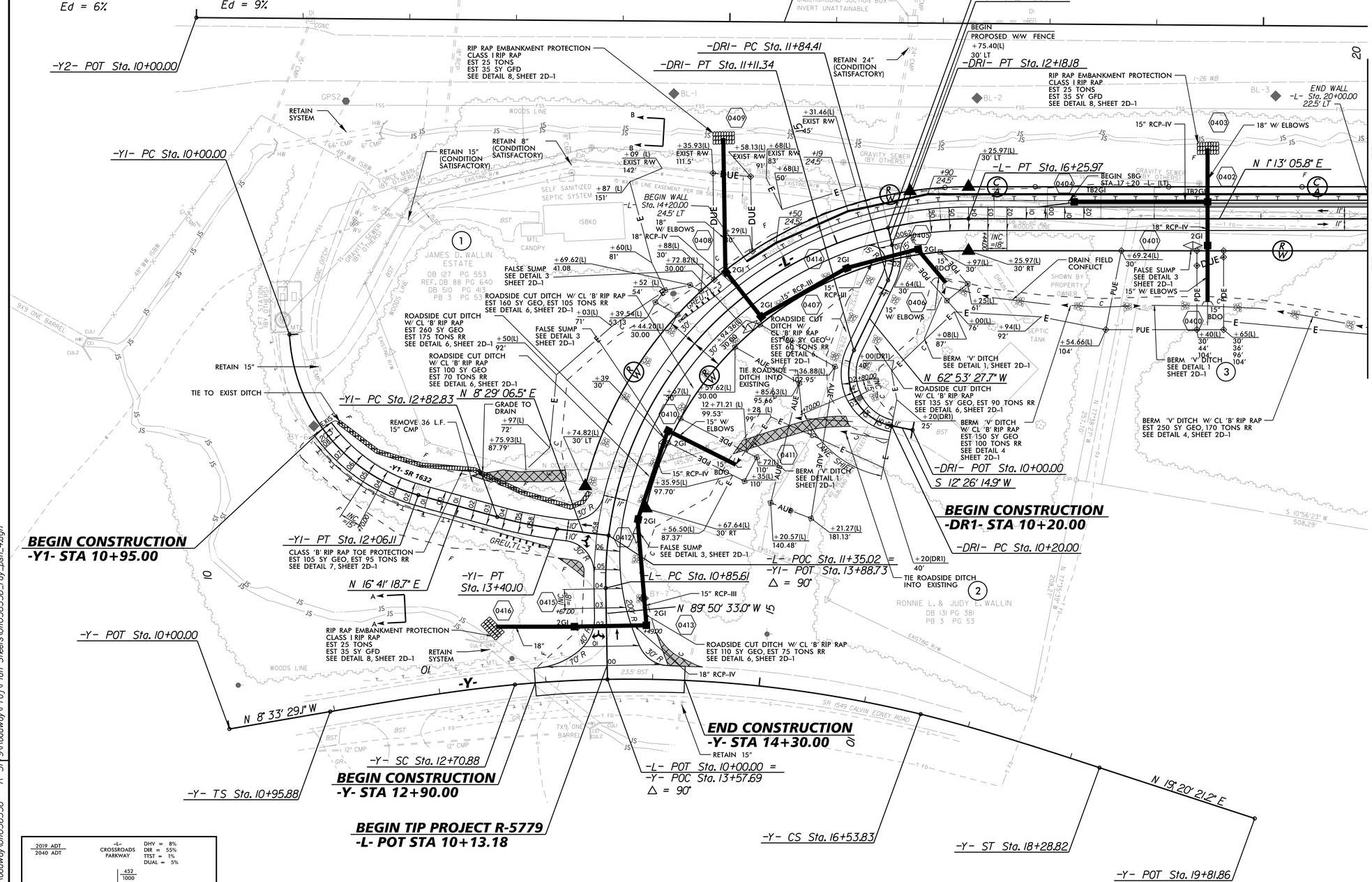

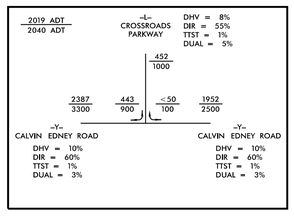

-Y-

PIs Sta 12+12.58	PI Sta 14+64.16	PIs Sta 17+12.20
Θs = 4° 22' 29.9"	Δ = 19° 08' 51.3" (RT)	Θs = 4° 22' 29.0"
Ls = 175.00'	D = 4° 59' 59.9"	Ls = 174.99'
LT = 116.70'	L = 382.95'	LT = 116.70'
ST = 58.37'	T = 193.28'	ST = 58.36'
	R = 1,145.92'	

-DRI-

PI Sta 10+84.78	PI Sta 12+01.97
Δ = 104° 40' 17.4" (RT)	Δ = 38° 41' 35.6" (LT)
D = 114° 35' 29.6"	D = 114° 35' 29.6"
L = 91.34'	L = 33.77'
T = 64.78'	T = 17.56'
R = 50.00'	R = 50.00'
DS = 15	DS = 15
Ed = 6%	Ed = 2%

PAVEMENT REMOVAL

SEE SHEET 6 FOR -L- PROFILE
SEE SHEET 7 FOR -Y1- PROFILE
SEE SHEET 7 FOR -DRI- PROFILE

REVISIONS

5/14/99

1/9/2020 K:\RAL_Roadway\011036358 - R-5779\Roadway\Proj\Plan Sheets\011036358_rdy_psh_4.dgn

DocuSign Envelope ID: C88CA2E9-BBC3-4042-B28A-80EAD354199F

5/14/99

REVISIONS

K:\RAL_Roadway\011036358 - R-5779\Roadway\Proj\Plan Sheets\011036358_rdy_psh_5.dgn

1/9/2020

Kimley»Horn ©2016

P.O. BOX 33068 • RALEIGH, N.C. 27636-3068

PROJECT REFERENCE NO.	SHEET NO.
R-5779	5
R/W SHEET NO.	

ROADWAY DESIGN ENGINEER: NORTH CAROLINA PROFESSIONAL SEAL 038703 ENGINEER GREGORY E. BREN — DocuSigned by: — 1/9/2020

HYDRAULICS ENGINEER: NORTH CAROLINA PROFESSIONAL SEAL 038703 ENGINEER ANCY W. BLANTON — DocuSigned by: — 1/10/2020

DOCUMENT NOT CONSIDERED FINAL UNLESS ALL SIGNATURES COMPLETED

NAD 83 /NA 2011

-L-

PI Sta 22+84.19
△ = 7° 10' 21.6" (LT)
D = 1° 54' 35.5"
L = 375.56'
T = 188.03'
R = 3,000.00'
DS = 75
Ed = 3%

PI Sta 27+15.69
△ = 21° 15' 28.5" (RT)
D = 4° 24' 26.5"
L = 482.33'
T = 243.97'
R = 1,300.00'
DS = 55
Ed = 4.5%

-Y2-

PIs Sta 25+12.07
Θs = 3° 30' 00.0"
Ls = 350.00'
LT = 233.38'
ST = 116.71'

PI Sta 36+57.26
△ = 39° 30' 00.7" (RT)
D = 2° 00' 00.0"
L = 1,975.01'
T = 1,028.57'
R = 2,864.79'

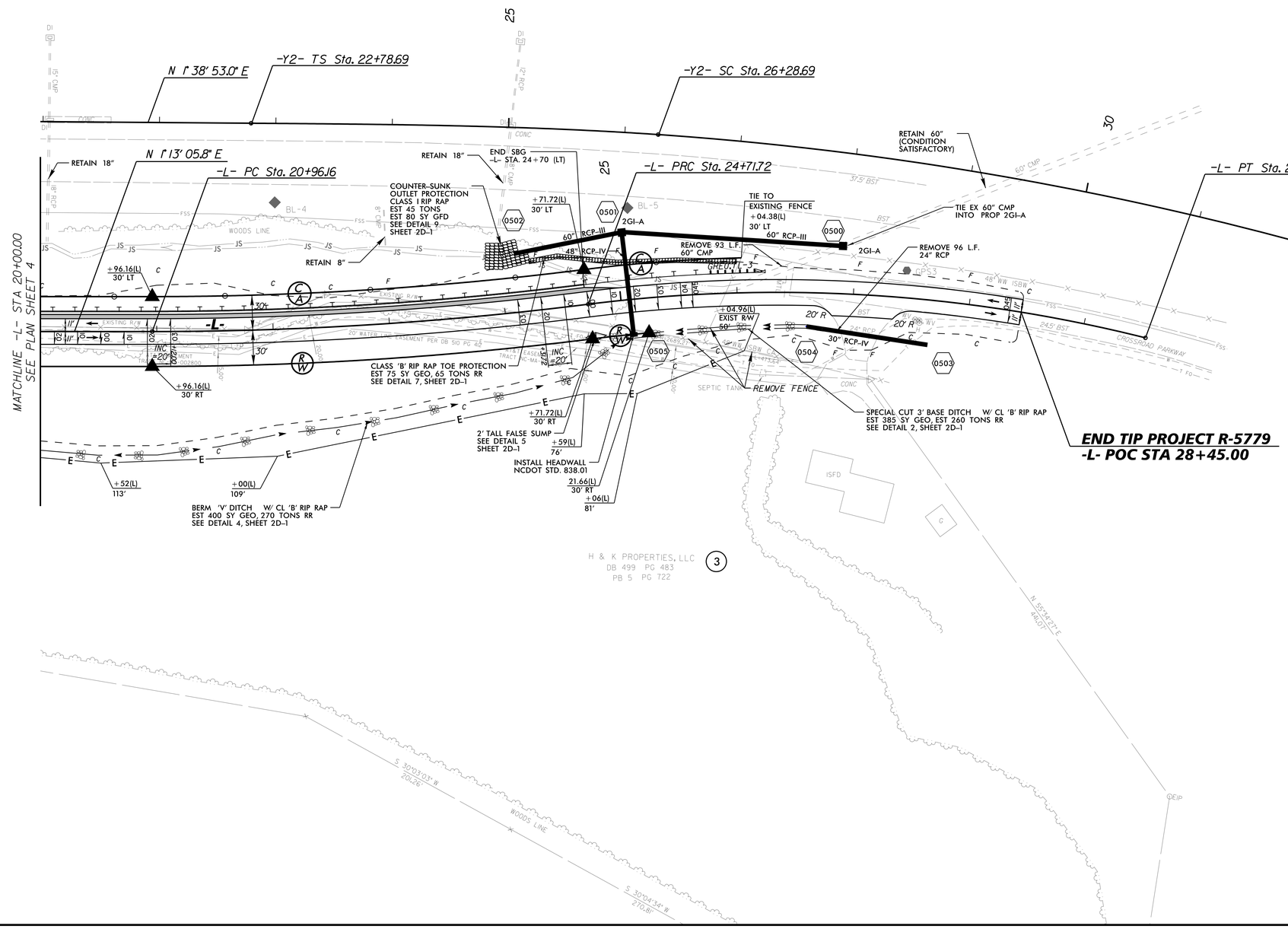

SEE SHEET 6 FOR -L- PROFILE

DocuSign Envelope ID: 7331D1F4-BC26-4D86-80C1-A9BA6C5ED779

Kimley»Horn ©2016
P.O. BOX 33068 • RALEIGH, N.C. 27636-3068

PROJECT REFERENCE NO.	SHEET NO.
R-5779	6

ROADWAY DESIGN ENGINEER: NORTH CAROLINA PROFESSIONAL SEAL 18903 ENGINEER GREGORY E. BREWY — 1/9/2020

HYDRAULICS ENGINEER: NORTH CAROLINA PROFESSIONAL SEAL 19893 ENGINEER JAMES W. BLANKENSHIP — 1/9/2020

DOCUMENT NOT CONSIDERED FINAL UNLESS ALL SIGNATURES COMPLETED

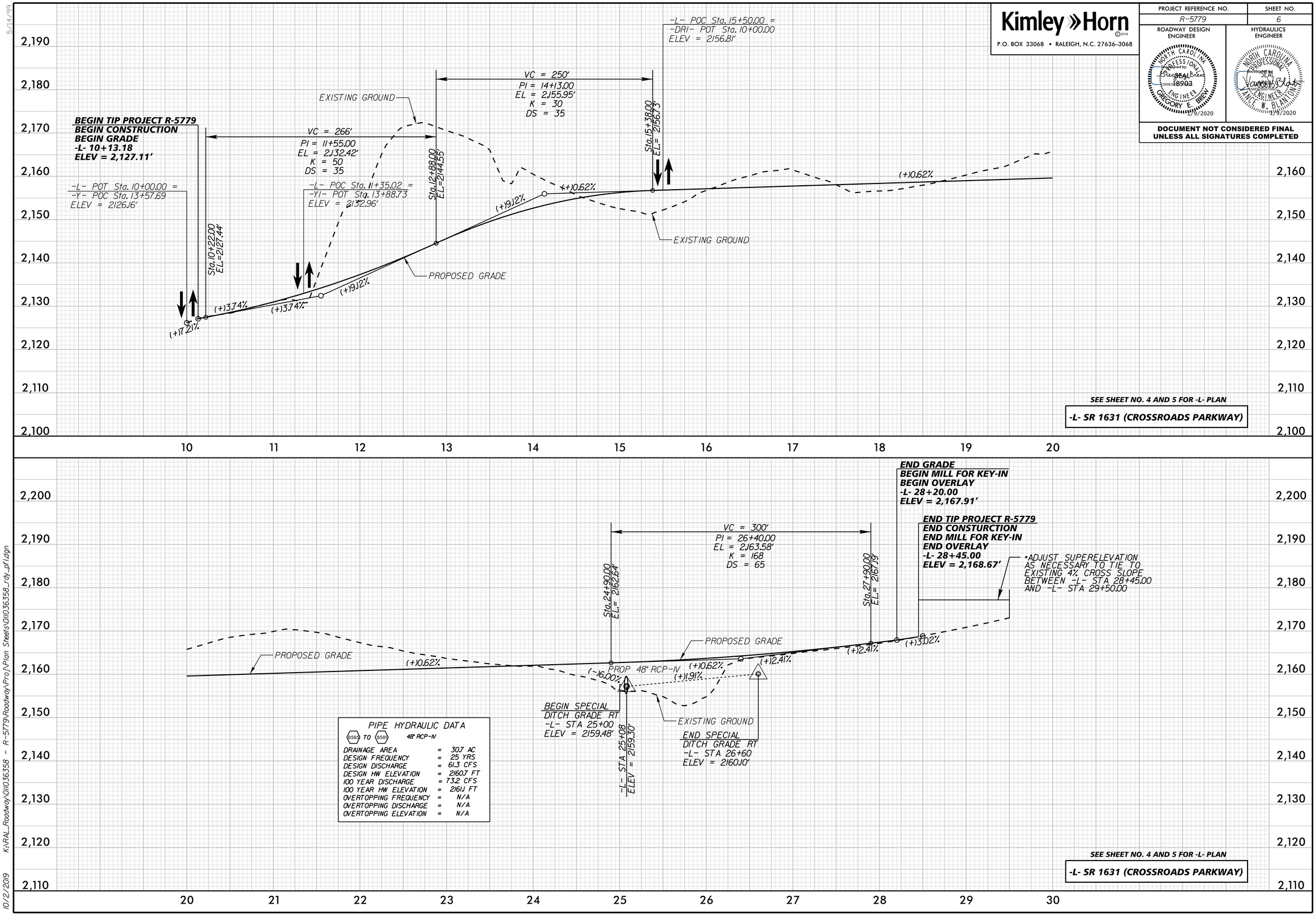

5/14/99

K:\RAL_Roadway\0110036358 - R-5779\Roadway\Proj\Plan Sheets\0110036358_rdy_pf1.dgn

10/2/2019

DocuSign Envelope ID: 7331D1F4-BC26-4D86-80C1-A9BA6C5ED779

5/14/99

Kimley»Horn ©2016
P.O. BOX 33068 • RALEIGH, N.C. 27636-3068

PROJECT REFERENCE NO.	SHEET NO.
R-5779	7

ROADWAY DESIGN ENGINEER
NORTH CAROLINA PROFESSIONAL SEAL 18903 ENGINEER GREGORY E. BREWY
DocuSigned by: 11/19/2020

HYDRAULICS ENGINEER
NORTH CAROLINA PROFESSIONAL SEAL 025602 ENGINEER JAMES W. BLANKENSHIP
DocuSigned by: 11/19/2020

DOCUMENT NOT CONSIDERED FINAL UNLESS ALL SIGNATURES COMPLETED

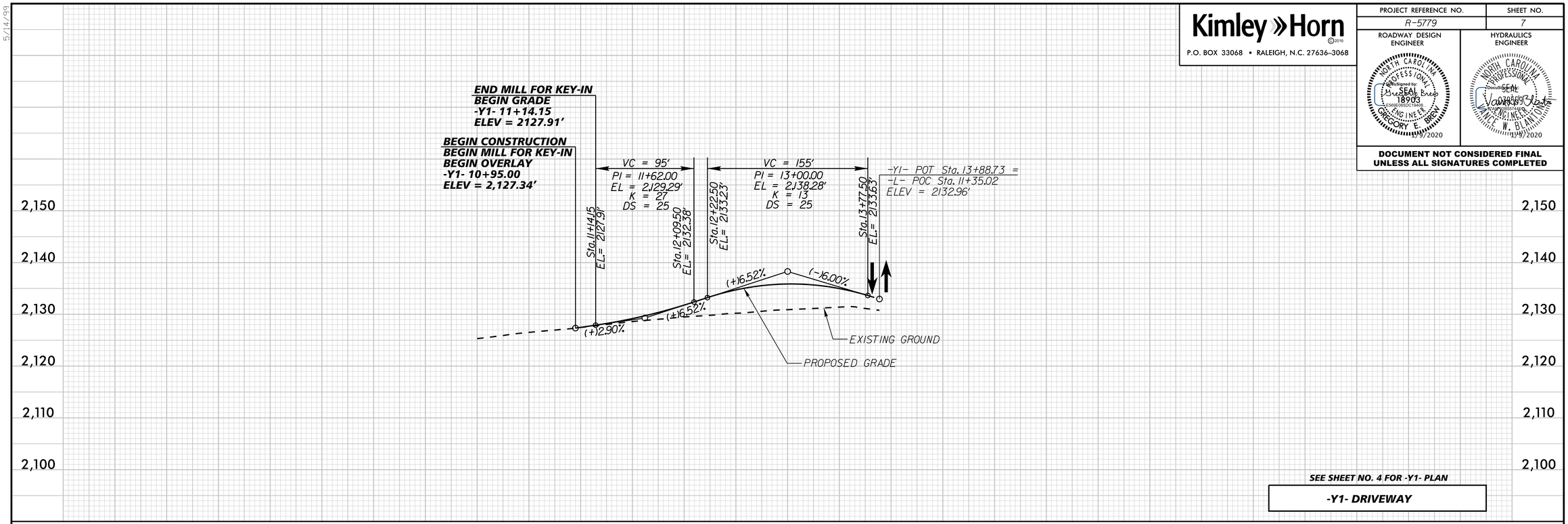

SEE SHEET NO. 4 FOR -Y1- PLAN

-Y1- DRIVEWAY

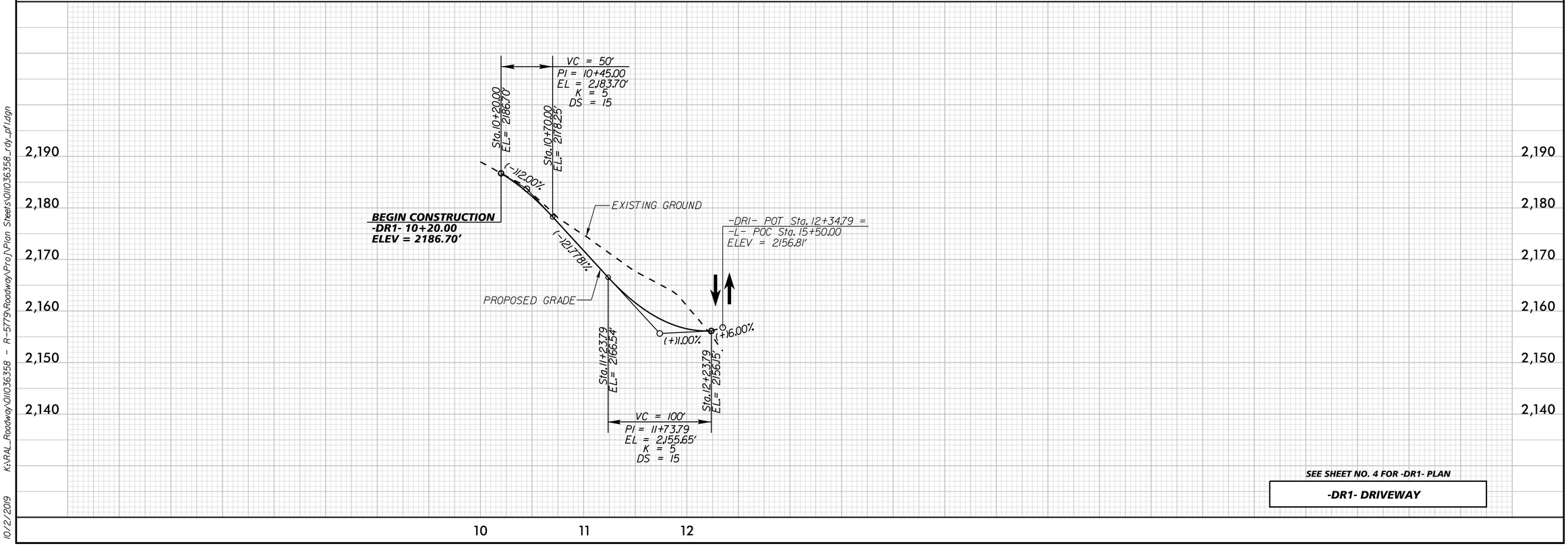

SEE SHEET NO. 4 FOR -DR1- PLAN

-DR1- DRIVEWAY

K:\RAL_Roadway\0110036358 - R-5779\Roadway\Proj\Plan Sheets\0110036358_rdy_pf1.dgn

10/2/2019

STATE OF NORTH CAROLINA
DIVISION OF HIGHWAYS

TRANSPORTATION MANAGEMENT PLAN

MADISON COUNTY

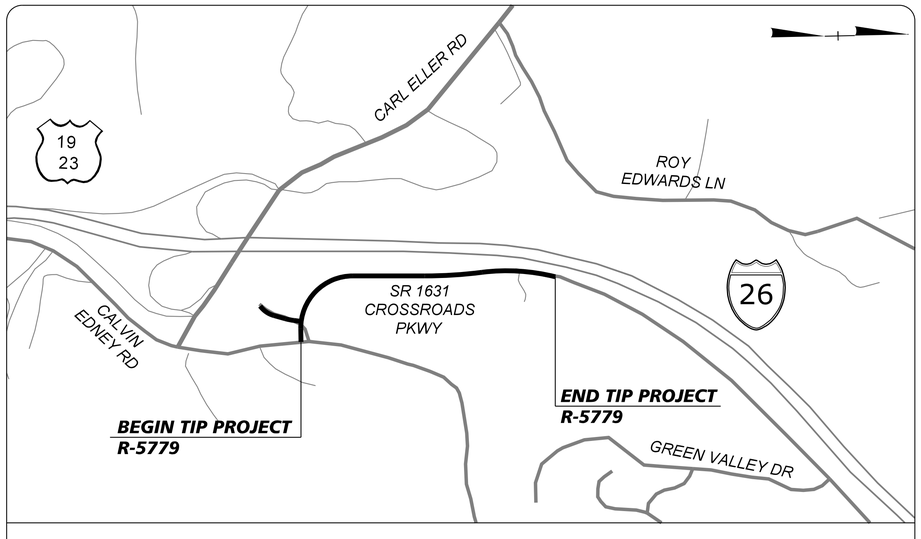

VICINITY MAP

INDEX OF SHEETS

SHEET NO.	TITLE
TMP-1	TITLE SHEET, AND INDEX OF SHEETS
TMP-1A TO TMP-1B	LIST OF APPLICABLE ROADWAY STANDARD DRAWINGS, LEGEND, TEMPORARY PAVEMENT MARKINGS MANAGEMENT STRATEGIES, GENERAL NOTES, AND PHASING
TMP-4 TO TMP-5	TRANSPORTATION MANAGEMENT DETAILS

01/09/20 DATE SUBMITTED
SUBMITTAL:
- [ ] STAGING CONCEPT
- [ ] MIDPOINT
- [ ] PRE-FINAL
- [x] FINAL

Kimley»Horn

GREGORY BREW, P.E. — TRAFFIC CONTROL PROJECT ENGINEER

EVAN PARROTT, E.I. — TRAFFIC CONTROL PROJECT DESIGN ENGINEER

SHEET NO.
TMP-1

R-5779

TIP PROJECT:

WORK ZONE SAFETY & MOBILITY
"from the MOUNTAINS to the COAST"

N.C.D.O.T. WORK ZONE TRAFFIC CONTROL
1561 MAIL SERVICE CENTER (MSC) RALEIGH, NC 27699-1561
750 N. GREENFIELD PARKWAY, GARNER, NC 27529 (DELIVERY)
PHONE: (919) 773-2800 FAX: (919) 771-2745

JOSEPH E. HUMMER — STATE TRAFFIC MANAGEMENT ENGINEER

KARMEN DAIS P.E. — TRAFFIC CONTROL PROJECT ENGINEER

SCOTT B. COATS — TRAFFIC CONTROL PROJECT DESIGN ENGINEER

DIVISION OF HIGHWAYS · STATE OF NORTH CAROLINA · DEPARTMENT OF TRANSPORTATION · WORK ZONE TRAFFIC CONTROL

APPROVED: DocuSigned by: Gregory Brew
DATE: 1/9/2020

SEAL

K:\RAL_Roadway\0\I036358 - R-5779\Traffic\TrafficControl\TCP\Sheets\0\I036358_tcp_tsh.dgn
1/9/2020

PROJ. REFERENCE NO.	SHEET NO.
R-5779	TMP-1A

ROADWAY STANDARD DRAWINGS

THE FOLLOWING ROADWAY STANDARDS AS SHOWN IN "ROADWAY STANDARD DRAWINGS" - PROJECT SERVICES UNIT - N.C. DEPARTMENT OF TRANSPORTATION - RALEIGH, N.C., DATED JANUARY 2018 ARE APPLICABLE TO THIS PROJECT AND BY REFERENCE HEREBY ARE CONSIDERED A PART OF THESE PLANS:

STD. NO.	TITLE
1101.01	WORK ZONE ADVANCE WARNING SIGNS
1101.02	TEMPORARY LANE CLOSURES
1101.03	TEMPORARY ROAD CLOSURES
1101.04	TEMPORARY SHOULDER CLOSURES
1101.05	WORK ZONE VEHICLE ACCESSES
1101.11	TRAFFIC CONTROL DESIGN TABLES
1110.01	STATIONARY WORK ZONE SIGNS
1110.02	PORTABLE WORK ZONE SIGNS
1115.01	FLASHING ARROW BOARDS
1130.01	DRUMS
1135.01	CONES
1145.01	BARRICADES - TYPE III
1150.01	FLAGGING DEVICES
1160.01	TEMPORARY CRASH CUSHION - REFLECTIVE END TREATMENT
1165.01	TRUCK MOUNTED ATTENUATOR - DELINEATION
1170.01	POSITIVE PROTECTION - PORTABLE CONCRETE BARRIER
1180.01	SKINNY DRUM
1205.01	PAVEMENT MARKINGS - LINE TYPES AND OFFSETS
1205.02	PAVEMENT MARKINGS - DIVIDED AND UNDIVIDED ROADWAYS
1205.04	PAVEMENT MARKINGS - INTERSECTIONS
1205.05	PAVEMENT MARKINGS - TURN LANES
1205.07	PAVEMENT MARKINGS - PEDESTRIAN CROSSWALKS
1205.08	PAVEMENT MARKINGS - SYMBOLS AND WORD MESSAGES
1250.01	PAVEMENT MARKER SPACING
1251.01	RAISED PAVEMENT MARKERS - PERMANENT AND TEMPORARY
1253.01	SNOWPLOWABLE RAISED PAVEMENT MARKERS
1261.01	GUARDRAIL & BARRIER DELINEATOR SPACING
1261.02	GUARDRAIL & BARRIER DELINEATOR TYPES
1262.01	GUARDRAIL END DELINEATION
1264.01	OBJECT MARKERS
1264.02	PLACEMENT OF OBJECT MARKERS

LEGEND

GENERAL

DIRECTION OF TRAFFIC FLOW

DIRECTION OF PEDESTRIAN TRAFFIC FLOW

EXIST. PVMT.

NORTH ARROW

PROPOSED PVMT.

WORK AREA

WEDGING

TRAFFIC CONTROL DEVICES

BARRICADE (TYPE III)

CONE

DRUM SKINNY DRUM TUBULAR MARKER

TEMPORARY CRASH CUSHION

FLASHING ARROW PANEL (TYPE C)

FLAGGER

LAW ENFORCEMENT

TRUCK MOUNTED IMPACT ATTENUATOR (TMIA)

CHANGEABLE MESSAGE SIGN

TEMPORARY SIGNING

PORTABLE SIGN

STATIONARY SIGN

STATIONARY OR PORTABLE SIGN

SIGNALS

EXISTING PROPOSED TEMPORARY

PAVEMENT MARKINGS

EXISTING LINES

TEMPORARY LINES

PAVEMENT MARKERS

CRYSTAL/CRYSTAL

CRYSTAL/RED

YELLOW/YELLOW

PAVEMENT MARKING SYMBOLS

PAVEMENT MARKING SYMBOLS

TEMPORARY PAVEMENT MARKING

Kimley»Horn

APPROVED: Gregory Brew DATE: 1/9/2020

E569E065DC19408...

NORTH CAROLINA PROFESSIONAL SEAL 18903 ENGINEER GREGORY E. BREW

DIVISION OF HIGHWAYS STATE OF NORTH CAROLINA DEPARTMENT OF TRANSPORTATION WORK ZONE TRAFFIC CONTROL

ROADWAY STANDARD DRAWINGS & LEGEND

K:\RAL_Roadway\0\I036358 - R-5779\Traffic\TrafficControl\TCP\Sheets\0\I036358_tcp_tshdgn

1/9/2020

PROJ. REFERENCE NO.	SHEET NO.
R-5779	TMP-1B

MANAGEMENT STRATEGIES

PROPOSED NEW ROADWAY ALONG CROSSROADS PARKWAY AND ALL OTHER SIDE STREETS WILL BE CONSTRUCTED AWAY FROM TRAFFIC WHILE MAINTAINING ACCESS TO DRIVEWAYS AT ALL POSSIBLE TIMES DURING CONSTRUCTION. ALL TIE-INS WILL BE PERFORMED USING TEMPORARY LANE CLOSURES AS REQUIRED.

GENERAL NOTES

CHANGES MAY BE REQUIRED WHEN PHYSICAL DIMENSIONS IN THE DETAIL DRAWINGS, STANDARD DETAILS, AND ROADWAY DETAILS ARE NOT ATTAINABLE TO MEET FIELD CONDITIONS OR RESULT IN DUPLICATE OR UNDESIRED OVERLAPPING OF DEVICES. MODIFICATION MAY INCLUDE: MOVING, SUPPLEMENTING, COVERING, OR REMOVAL OF DEVICES AS DIRECTED BY THE ENGINEER.

THE FOLLOWING GENERAL NOTES APPLY AT ALL TIMES FOR THE DURATION OF THE CONSTRUCTION PROJECT EXCEPT WHEN OTHERWISE NOTED IN THE PLAN, OR DIRECTED BY THE ENGINEER.

LANE AND SHOULDER CLOSURE REQUIREMENTS

A) REMOVE LANE CLOSURE DEVICES FROM THE LANE WHEN WORK IS NOT BEING PERFORMED BEHIND THE LANE CLOSURE OR WHEN A LANE CLOSURE IS NO LONGER NEEDED OR AS DIRECTED BY THE ENGINEER.

B) WHEN PERSONNEL AND/OR EQUIPMENT ARE WORKING WITHIN 15 FT OF AN OPEN TRAVEL LANE, CLOSE THE NEAREST OPEN SHOULDER USING ROADWAY STANDARD DRAWING NO. 1101.04 UNLESS THE WORK AREA IS PROTECTED BY BARRIER OR GUARDRAIL OR A LANE CLOSURE IS INSTALLED.

C) WHEN PERSONNEL AND/OR EQUIPMENT ARE WORKING ON THE SHOULDER ADJACENT TO AN UNDIVIDED FACILITY AND WITHIN 5 FT OF AN OPEN TRAVEL LANE, CLOSE THE NEAREST OPEN TRAVEL LANE USING ROADWAY STANDARD DRAWING NO. 1101.02 UNLESS THE WORK AREA IS PROTECTED BY BARRIER OR GUARDRAIL.

WHEN PERSONNEL AND/OR EQUIPMENT ARE WORKING ON THE SHOULDER ADJACENT TO A DIVIDED FACILITY AND WITHIN 10 FT OF AN OPEN TRAVEL LANE, CLOSE THE NEAREST OPEN TRAVEL LANE USING ROADWAY STANDARD DRAWING NO. 1101.02 UNLESS THE WORK AREA IS PROTECTED BY BARRIER OR GUARDRAIL.

D) WHEN PERSONNEL AND/OR EQUIPMENT ARE WORKING WITHIN A LANE OF TRAVEL OF AN UNDIVIDED OR DIVIDED FACILITY, CLOSE THE LANE ACCORDING TO THE TRAFFIC CONTROL PLANS, ROADWAY STANDARD DRAWINGS, OR AS DIRECTED BY THE ENGINEER. CONDUCT THE WORK SO THAT ALL PERSONNEL AND/OR EQUIPMENT REMAIN WITHIN THE CLOSED TRAVEL LANE.

PAVEMENT EDGE DROP OFF REQUIREMENTS

E) BACKFILL AT A 6:1 SLOPE UP TO THE EDGE AND ELEVATION OF EXISTING PAVEMENT IN AREAS ADJACENT TO AN OPENED TRAVEL LANE THAT HAS AN EDGE OF PAVEMENT DROP-OFF AS FOLLOWS:

BACKFILL DROP-OFFS THAT EXCEED 2 INCHES ON ROADWAYS WITH POSTED SPEED LIMITS OF 45 MPH OR GREATER.

BACKFILL DROP-OFFS THAT EXCEED 3 INCHES ON ROADWAYS WITH POSTED SPEED LIMITS LESS THAN 45 MPH.

BACKFILL WITH SUITABLE COMPACTED MATERIAL, AS APPROVED BY THE ENGINEER, AT NO EXPENSE TO THE DEPARTMENT.

F) DO NOT EXCEED A DIFFERENCE OF 2 INCHES IN ELEVATION BETWEEN OPEN LANES OF TRAFFIC FOR NOMINAL LIFTS OF 1.5 INCHES. INSTALL ADVANCE WARNING "UNEVEN LANES" SIGNS (W8-11) 500 FT IN ADVANCE AND A MINIMUM OF EVERY HALF MILE THROUGHOUT THE UNEVEN AREA.

TRAFFIC PATTERN ALTERATIONS

G) NOTIFY THE ENGINEER THIRTY (30) CALENDAR DAYS PRIOR TO ANY TRAFFIC PATTERN ALTERATION.

SIGNING

H) INSTALL ADVANCE WORK ZONE WARNING SIGNS WHEN WORK IS WITHIN 40 FT FROM THE EDGE OF TRAVEL LANE AND NO MORE THAN THREE (3) DAYS PRIOR TO THE BEGINNING OF CONSTRUCTION.

I) PROVIDE PERMANENT SIGNING

J) ENSURE ALL NECESSARY SIGNING IS IN PLACE PRIOR TO ALTERING ANY TRAFFIC PATTERN.

K) INSTALL BLACK ON ORANGE ''DIP'' SIGNS (W8-2) AND/OR "BUMP" SIGNS (W8-1) IN ADVANCE OF THE UNEVEN AREA, OR AS DIRECTED BY THE ENGINEER.

TRAFFIC BARRIER

L) PROTECT THE APPROACH END OF MOVABLE/PORTABLE CONCRETE BARRIER AT ALL TIMES DURING THE INSTALLATION AND REMOVAL OF THE BARRIER BY EITHER A TRUCK MOUNTED ATTENUATOR (MAXIMUM 72 HOURS) OR A TEMPORARY CRASH CUSHION.

PROTECT THE APPROACH END OF MOVABLE/PORTABLE CONCRETE BARRIER FROM ONCOMING TRAFFIC AT ALL TIMES BY A TEMPORARY CRASH CUSHION UNLESS THE APPROACH END OF MOVABLE/PORTABLE CONCRETE BARRIER IS OFFSET FROM ONCOMING TRAFFIC AS FOLLOWS: (SEE ALSO 1101.05)

POSTED SPEED LIMIT	MINIMUM OFFSET
40 OR LESS	15 FT
45 - 50	20 FT
55	25 FT
60 MPH or HIGHER	30 FT

TRAFFIC CONTROL DEVICES

M) WHEN LANE CLOSURES ARE NOT IN EFFECT SPACE CHANNELIZING DEVICES IN WORK AREAS NO GREATER IN FEET THAN TWICE THE POSTED SPEED LIMIT (MPH) EXCEPT, 10 FT ON-CENTER IN RADII, AND 3 FT OFF THE EDGE OF AN OPEN TRAVELWAY. REFER TO STANDARD SPECIFICATIONS FOR ROADS AND STRUCTURES SECTIONS 1130 (DRUMS), 1135 (CONES) AND 1180 (SKINNY DRUMS) FOR ADDITIONAL REQUIREMENTS.

N) PLACE TYPE III BARRICADES, WITH "ROAD CLOSED" SIGN R11-2 ATTACHED, OF SUFFICIENT LENGTH TO CLOSE ENTIRE ROADWAY.

MISCELLANEOUS

O) IN THE EVENT A TIE-IN CANNOT BE MADE IN ONE DAY'S TIME, BRING THE TIE-IN AREA TO AN APPROPRIATE ROADWAY ELEVATION AS DETERMINED BY THE ENGINEER. PLACE BLACK ON ORANGE "LOOSE GRAVEL" SIGNS (W8-7) AND BLACK ON ORANGE ''PAVEMENT ENDS'' SIGNS (W8-3) 200' AND 200' RESPECTIVELY IN ADVANCE OF THE UNEVEN AREAS. USE DRUMS TO DELINEATE THE EDGE OF ROADWAY ALONG UNPAVED AREAS.

LOCAL NOTES

P) CONTRACTOR TO ENSURE THAT DRIVEWAY ACCESS IS MAINTAINED TO ALL PROPERTIES ON THE PROJECT. AT ALL TIMES DURING CONSTRUCTION.

PHASING

STEP 1:
PRIOR TO BEGINNING CONSTRUCTION INSTALL ADVANCE WARNING SIGNS IN ACCORDANCE WITH NCDOT ROADWAY STANDARD DRAWING 1101.01.

STEP 2:
INSTALL SHOULDER CLOSURE ON CALVIN EDNEY RD (SR 1549) IN ACCORDANCE WITH NCDOT RSD 1101.04. PLACE TYPE III BARRICADES AS SHOWN ON SHEETS TMP-4 AND TMP-5 WHILE MAINTAINING EXISTING DRIVEWAY ACCESSES.

INSTALL SHOULDER CLOSURE ON I-26 NORTHBOUND IN ACCORDANCE WITH NCDOT RSD 1101.04 FOR CONTROLLED ACCESS FACILITIES.

STEP 3:
AWAY FROM TRAFFIC CONSTRUCT NEW LOCATION -L- CROSSROADS PKWY, NEW LOCATION -DR1-, -Y1-, AND ALL ASSOCIATED DRAINAGE AND STRUCTURES.

STEP 4:
USING TEMPORARY LANE CLOSURES IN ACCORDANCE WITH NCDOT RSD 1101.02 SHEET 1 OF 14 PERFORM ALL NECESSARY WEDGING AND TIE-INS ON -Y- CALVIN EDNEY RD.

INSTALL FINAL PAVEMENT MARKINGS, REMOVE ALL TRAFFIC CONTROL DEVICES, AND OPEN ALL LANES TO TRAFFIC.

NOTES:
- CONTRACTOR SHALL MAINTAIN DRIVEWAY ACCESS TO ALL PROPERTIES ALONG THE PROJECT DURING CONSTRUCTION

Kimley»Horn

APPROVED: Gregory Brew DATE: 1/9/2020
E59E0650DC19408...

NORTH CAROLINA PROFESSIONAL SEAL 18903 ENGINEER GREGORY E. BREW

DIVISION OF HIGHWAYS STATE OF NORTH CAROLINA DEPARTMENT OF TRANSPORTATION WORK ZONE TRAFFIC CONTROL

TRANSPORTATION OPERATIONS PLAN

K:\RAL_Roadway\0I036358 - R-5779\Traffic\TrafficControl\TCP\Sheets\0I036358_tcp_1shdgn

1/9/2020

PROJ. REFERENCE NO.	SHEET NO.
R-5779	TMP-4

NAD 83 /NA 2011

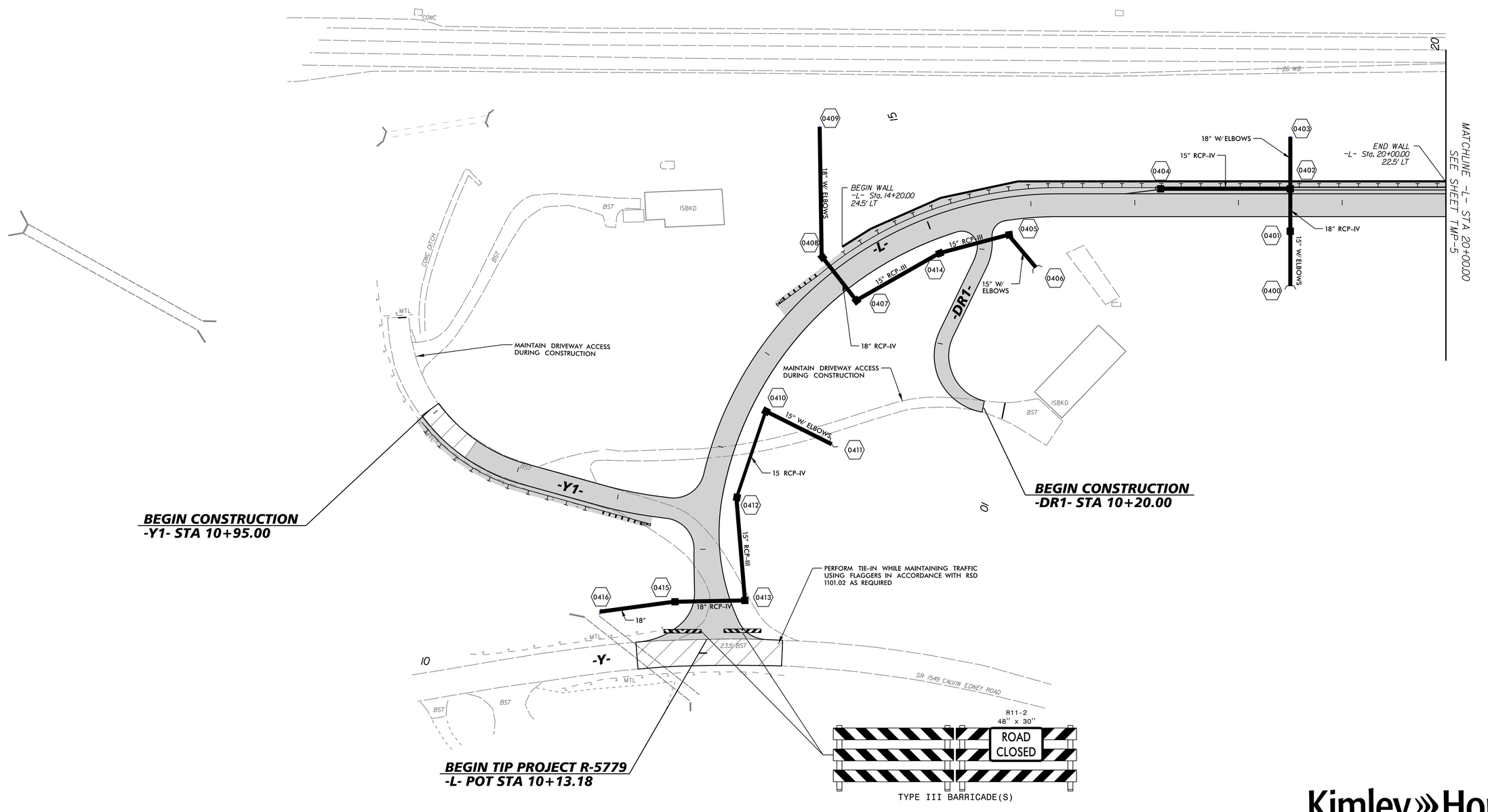

WORK AREA

WEDGING/MILLING - SEE ROADWAY PLANS

Kimley»Horn

APPROVED: Gregory Brew DATE: 1/13/2020

E569E065DC19408...

NORTH CAROLINA PROFESSIONAL SEAL 18903 ENGINEER GREGORY E. BREW

DIVISION OF HIGHWAYS · STATE OF NORTH CAROLINA · DEPARTMENT OF TRANSPORTATION · WORK ZONE TRAFFIC CONTROL

TRAFFIC MANAGEMENT DETAILS

K:\RAL_Roadway\0\I036358 - R-5779\Traffic\TrafficControl\TCP\Sheets\0\I036358_rdy_tmp_4.dgn

1/13/2020

PROJ. REFERENCE NO.	SHEET NO.
R-5779	TMP-5

NAD 83 /NA 2011

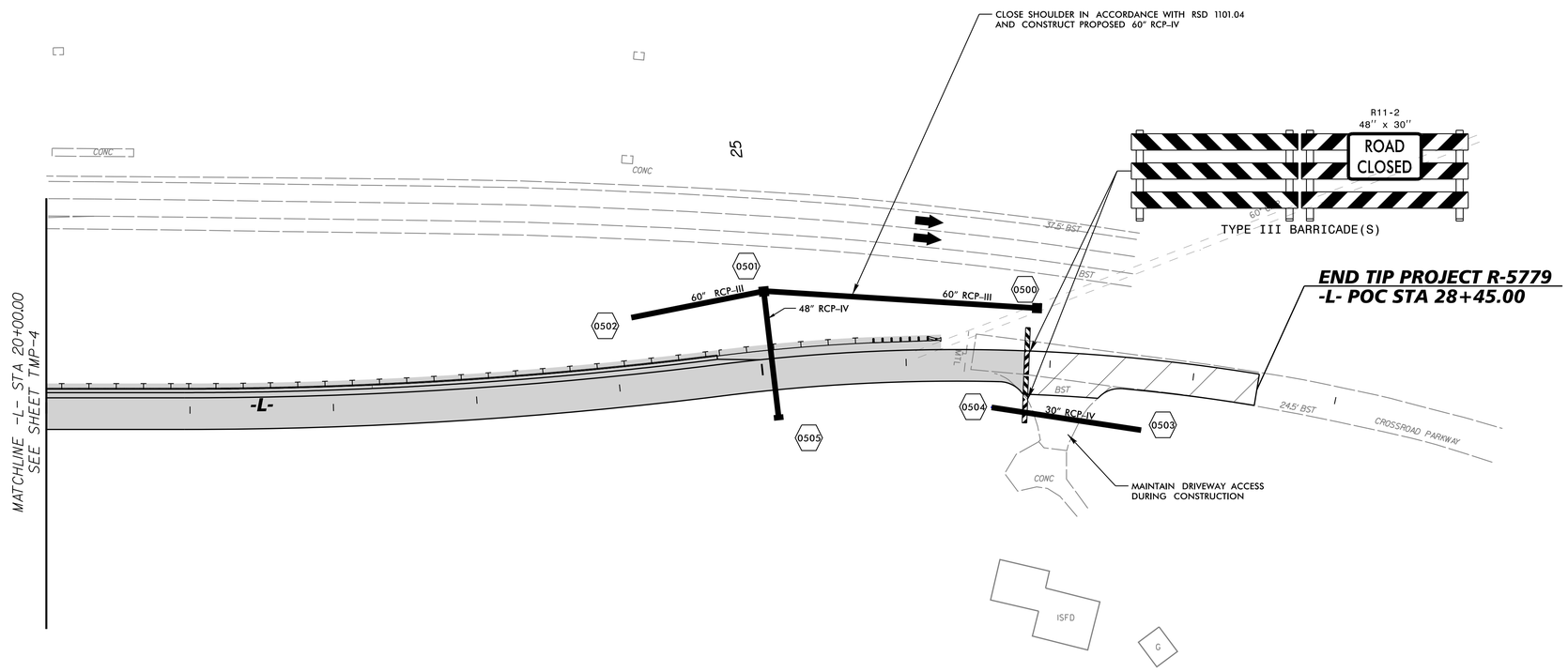

WORK AREA

WEDGING/MILLING - SEE ROADWAY PLANS

Kimley»Horn

APPROVED: Gregory Brew DATE: 1/13/2020

NORTH CAROLINA PROFESSIONAL SEAL 18903 ENGINEER GREGORY E. BREW

DIVISION OF HIGHWAYS STATE OF NORTH CAROLINA DEPARTMENT OF TRANSPORTATION WORK ZONE TRAFFIC CONTROL

TRAFFIC MANAGEMENT DETAILS

K:\RAL_Roadway\0II036358 - R-5779\Traffic\TrafficControl\TCP\Sheets\0II036358_rdy_tmp_5.dgn

1/13/2020

DocuSign Envelope ID: 336C2240-E646-4048-A2D9-67094ABE3E02

T.I.P.: R-5779

CONTRACT:

TIP NO.	SHEET NO.
R-5779	PMP-1

APPROVED: _____

DATE: _____

SEAL

1/9/2020

NORTH CAROLINA PROFESSIONAL SEAL 045215 ENGINEER RACHEL M. ABROMAITIS

DocuSigned by: Rachel Abromaitis

DOCUMENT NOT CONSIDERED FINAL UNLESS ALL SIGNATURES COMPLETED

STATE OF NORTH CAROLINA
DEPARTMENT OF TRANSPORTATION

PAVEMENT MARKING PLAN
MADISON COUNTY

LOCATION: EXTENSION OF SR 1631 (CROSSROADS PARKWAY) SOUTH TO SR 1549 (CALVIN EDNEY ROAD)

INDEX

SHEET NO.	DESCRIPTION
PMP-1	PAVEMENT MARKING PLAN TITLE AND SCHEDULE SHEET
PMP-2 THRU PMP-3	PAVEMENT MARKING DETAIL

PAVEMENT MARKING SCHEDULE

SYMBOL	DESCRIPTION
	FINAL PAVEMENT MARKINGS
	PAINT (24")
P2	WHITE STOPBAR
	PAINT (4")
PA	WHITE EDGELINE
PI	YELLOW DOUBLE CENTER

GENERAL NOTES

THE FOLLOWING GENERAL NOTES APPLY AT ALL TIMES FOR THE DURATION OF THE CONSTRUCTION PROJECT, EXCEPT WHEN OTHERWISE NOTED IN THE PLAN, OR DIRECTED BY THE ENGINEER.

A) INSTALL PAVEMENT MARKINGS ON THE FINAL SURFACE AS FOLLOWS:

ROAD NAME	MARKING
-L-	PAINT
-Y-	PAINT

B) TIE PROPOSED PAVEMENT MARKING LINES TO EXISTING PAVEMENT MARKING LINES.

C) REMOVE/REPLACE ANY CONFLICTING/DAMAGED PAVEMENT MARKINGS AND MARKERS.

D) PASSING ZONES WILL BE DETERMINED IN THE FIELD AND MUST BE APPROVED BY THE ENGINEER.

E) STOP BAR LOCATION AT NON-SIGNALIZED INTERSECTIONS MAY BE ADJUSTED AS DIRECTED BY THE ENGINEER.

ROADWAY STANDARD DRAWING

THE FOLLOWING ROADWAY STANDARDS AS APPEAR IN "ROADWAY STANDARD DRAWINGS" - PROJECT SERVICES UNIT - N.C. DEPARTMENT OF TRANSPORTATION - RALEIGH, N.C., DATED JANUARY 2018 ARE APPLICABLE TO THIS PROJECT AND BY REFERENCE HEREBY ARE CONSIDERED A PART OF THESE PLANS:

STD. NO.	TITLE
1205.01	PAVEMENT MARKINGS - LINE TYPES AND OFFSETS
1205.02	PAVEMENT MARKINGS - TWO-LANE AND MULTILANE ROADWAYS
1205.04	PAVEMENT MARKINGS - INTERSECTIONS

PLAN REVIEWED BY: N.C.D.O.T. SIGNING AND DELINEATION UNIT

_____ SIGNING & DELINEATION REGIONAL ENGINEER

_____ SIGNING & DELINEATION PROJECT DESIGN ENGINEER

DIVISION OF HIGHWAYS · STATE OF NORTH CAROLINA · DEPARTMENT OF TRANSPORTATION · WORK ZONE TRAFFIC CONTROL UNIT

PLAN PREPARED BY: Kimley-Horn and Associates

GREGORY BREW, PE — PROJECT DESIGN ENGINEER

RACHEL ABROMAITIS, PE — DESIGNER

Kimley»Horn

$FILE1$

1/9/2020

DocuSign Envelope ID: 336C2240-E646-4048-A2D9-67094ABE3E02

TIP NO.	SHEET NO.
R-5779	PMP-2

APPROVED: _____

DATE: _____

SEAL

1/9/2020

NORTH CAROLINA PROFESSIONAL SEAL 045215 ENGINEER RACHEL M. ABROMAITIS

DocuSigned by: Rachel Abromaitis 1B36039442FC436...

DOCUMENT NOT CONSIDERED FINAL UNLESS ALL SIGNATURES COMPLETED

NAD 83 / NA 2011

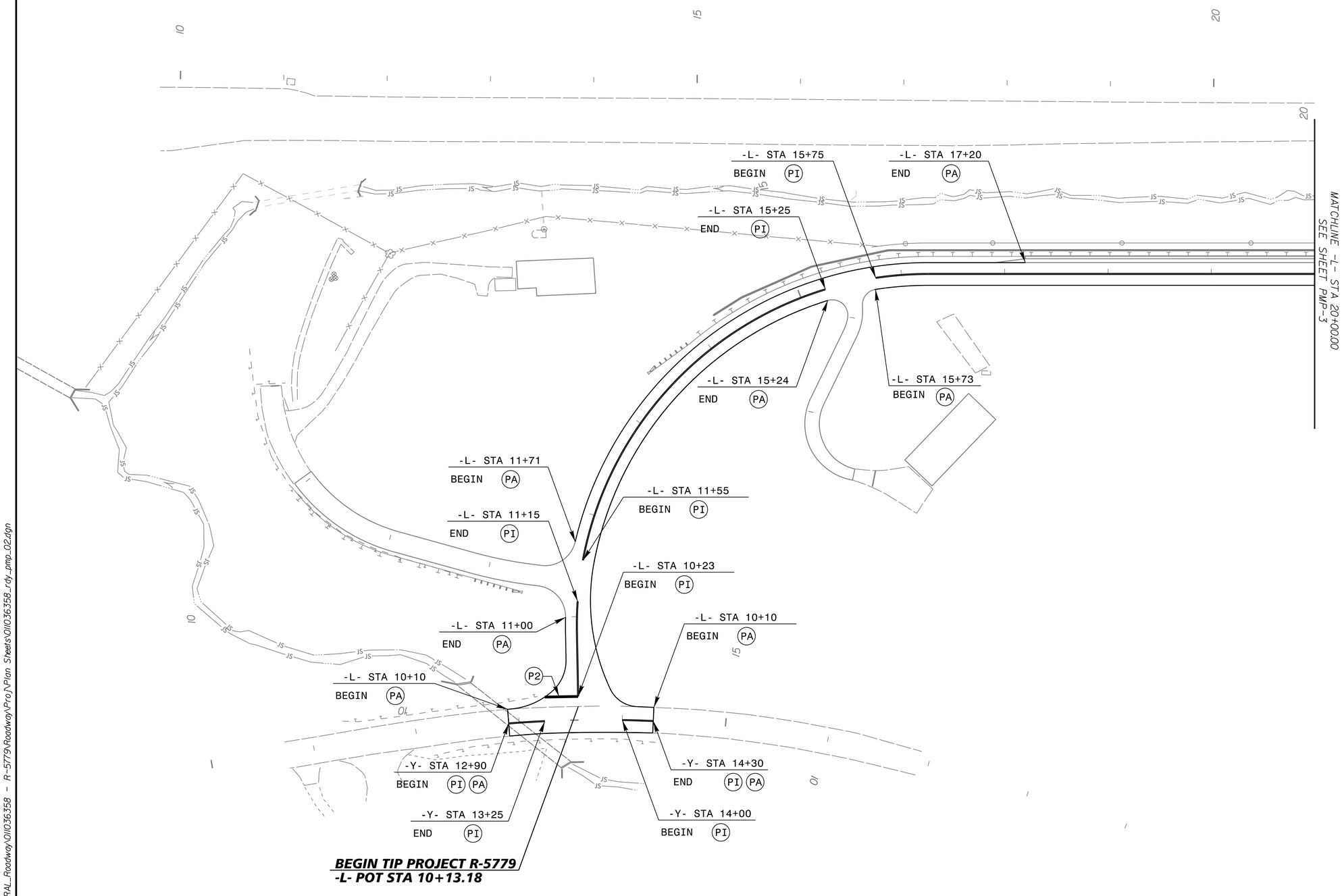

PAVEMENT MARKING LINES

P2 - PAINT (24" WHITE)	STOPBAR
PA - PAINT (4" WHITE)	EDGELINE
PI - PAINT (4" YELLOW)	DOUBLE CENTER LINE

K:\RAL_Roadway\0\I036358 - R-5779\Roadway\Proj\Plan Sheets\0\I036358_rdy_pmp_02.dgn

1/9/2020

DocuSign Envelope ID: 336C2240-E646-4048-A2D9-67094ABE3E02

TIP NO.	SHEET NO.
R-5779	PMP-3

APPROVED: _____

DATE: _____

SEAL

NORTH CAROLINA PROFESSIONAL SEAL 045215 ENGINEER RACHEL M. ABROMAITIS 1/9/2020

DocuSigned by: Rachel Abromaitis 1B36039442FC436...

DOCUMENT NOT CONSIDERED FINAL UNLESS ALL SIGNATURES COMPLETED

NAD 83 /NA 2011

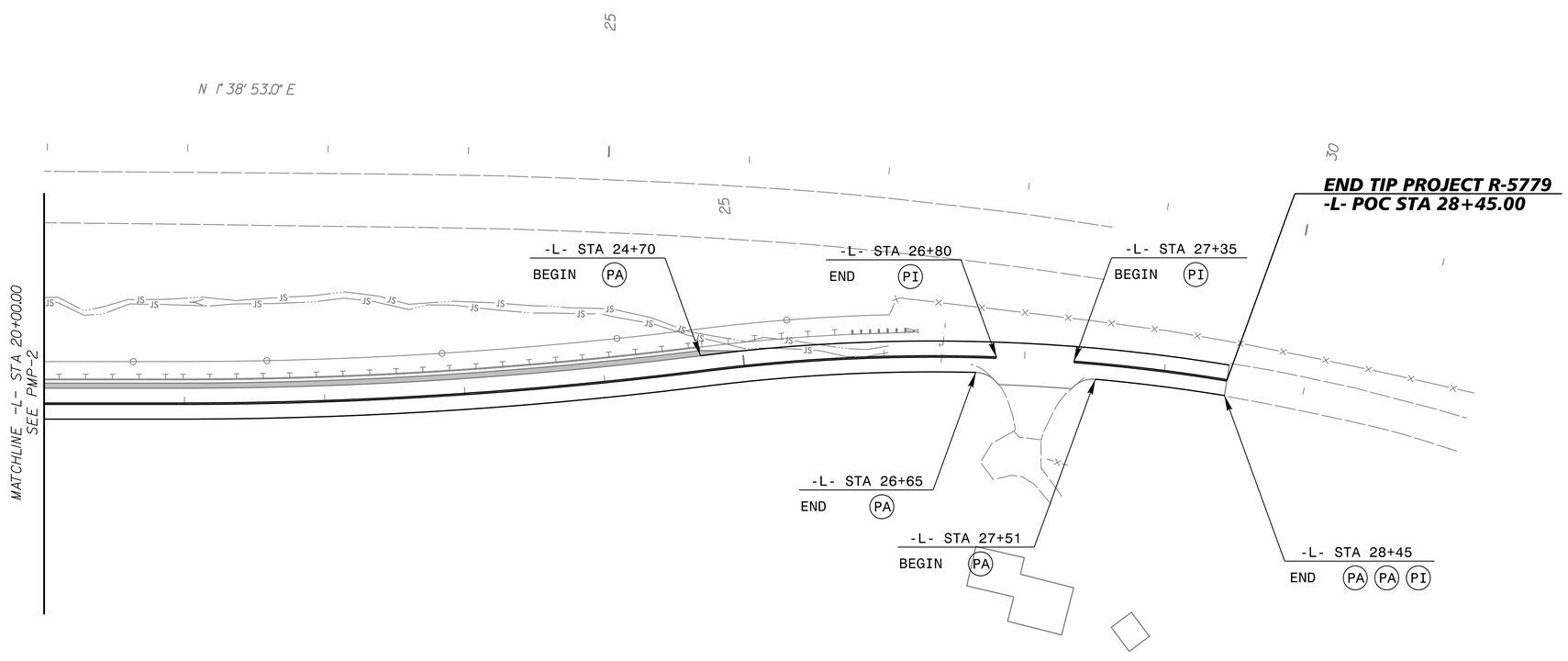

PAVEMENT MARKING LINES

P2 - PAINT (24" WHITE)	STOPBAR
PA - PAINT (4" WHITE)	EDGELINE
PI - PAINT (4" YELLOW)	DOUBLE CENTER LINE

K:\RAL_Roadway\0110036358 - R-5779\Roadway\Proj\Plan Sheets\0110036358_rdy_pmp_03.dgn

1/9/2020

TIP PROJECT: R-5779

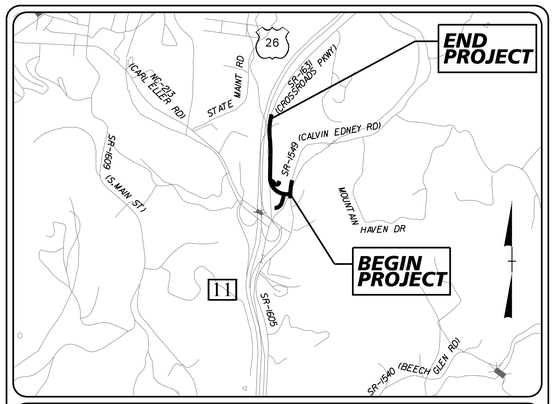

VICINITY MAP
NOT TO SCALE

STATE OF NORTH CAROLINA
DIVISION OF HIGHWAYS

PLAN FOR PROPOSED
HIGHWAY EROSION CONTROL

MADISON COUNTY

STATE	STATE PROJECT REFERENCE NO.	SHEET NO.	TOTAL SHEETS
N.C.	R-5779	EC-1	16

STATE PROJ. NO.	F. A. PROJ. NO.	DESCRIPTION
44834.1.1	ADP-1631 (004)	PE

NC GRID
NAD 83/NA 2011

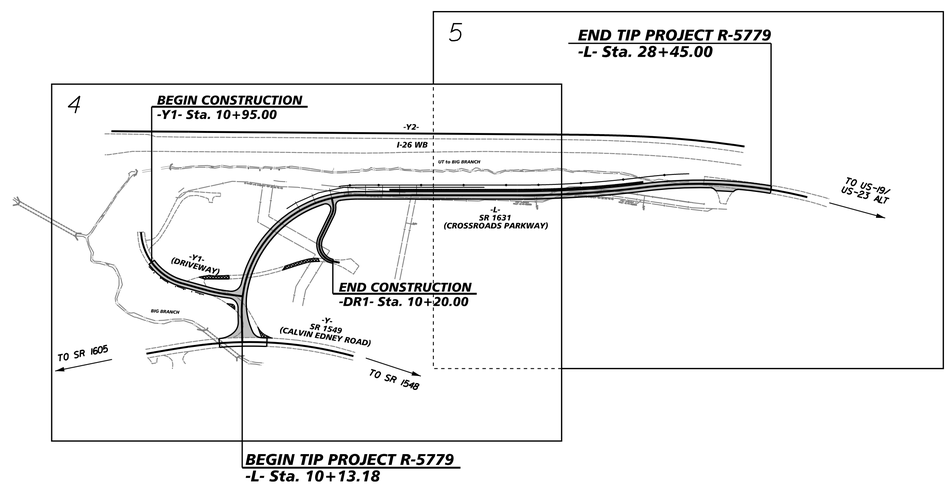

EROSION AND SEDIMENT CONTROL MEASURES

Std. #	Description	Symbol
1630.03	Temporary Silt Ditch	TSD
1630.05	Temporary Diversion	TD
1605.01	Temporary Silt Fence	
1606.01	Special Sediment Control Fence	
1622.01	Temporary Berms and Slope Drains	
1630.02	Silt Basin Type B	
1633.01	Temporary Rock Silt Check Type-A	
	Temporary Rock Silt Check Type-A with Matting and Polyacrylamide (PAM)	
1633.02	Temporary Rock Silt Check Type-B	
	Wattle / Coir Fiber Wattle	EW CW
	Wattle / Coir Fiber Wattle with Polyacrylamide (PAM)	
1634.01	Temporary Rock Sediment Dam Type-A	
1634.02	Temporary Rock Sediment Dam Type-B	
1635.01	Rock Pipe Inlet Sediment Trap Type-A	
1635.02	Rock Pipe Inlet Sediment Trap Type-B	
1630.04	Stilling Basin	
1630.06	Special Stilling Basin	
	Rock Inlet Sediment Trap:	
1632.01	Type A	A
1632.02	Type B	B
1632.03	Type C	C
	Skimmer Basin	
	Tiered Skimmer Basin	
	Infiltration Basin	

THIS PROJECT CONTAINS EROSION CONTROL PLANS FOR CLEARING AND GRUBBING PHASE OF CONSTRUCTION.

ENVIRONMENTALLY SENSITIVE AREA(S) EXIST ON THIS PROJECT

Refer To E. C. Special Provisions for Special Considerations.

DISTURBED AREA
6.55 AC

GRAPHIC SCALE

50 25 0 50 100
PLANS

THESE EROSION AND SEDIMENT CONTROL PLANS COMPLY WITH THE APPLICABLE REGULATIONS SET FORTH BY THE NCG-010000 GENERAL CONSTRUCTION PERMIT EFFECTIVE APRIL 1, 2019 AND ISSUED BY THE NORTH CAROLINA DEPARTMENT OF ENVIRONMENTAL QUALITY DIVISION OF WATER RESOURCES.

Kimley»Horn
© 2019
NC LICENSE #F-0102
P.O. BOX 33068
RALEIGH, NORTH CAROLINA 27636
PHONE: (919) 677-2000

Prepared In the Office of:

KIMLEY-HORN AND ASSOCIATES, INC.
421 FAYETTEVILLE STREET, SUITE 600
RALEIGH, NC 27601

Designed by:

VANCE BLANTON — *NAME*
3708 — *LEVEL III CERTIFICATION NO.*

Roadway Standard Drawings

The following roadway english standards as appear in "Roadway Standard Drawings"- Roadway Design Unit - N. C. Department of Transportation - Raleigh, N. C., dated January 2018 and the latest revison thereto are applicable to this project and by reference hereby are considered a part of these plans.

1604.01	Railroad Erosion Control Detail	1632.01	Rock Inlet Sediment Trap Type A
1605.01	Temporary Silt Fence	1632.02	Rock Inlet Sediment Trap Type B
1606.01	Special Sediment Control Fence	1632.03	Rock Inlet Sediment Trap Type C
1607.01	Gravel Construction Entrance	1633.01	Temporary Rock Silt Check Type A
1622.01	Temporary Berms and Slope Drains	1633.02	Temporary Rock Silt Check Type B
1630.01	Riser Basin	1634.01	Temporary Rock Sediment Dam Type A
1630.02	Silt Basin Type B	1634.02	Temporary Rock Sediment Dam Type B
1630.03	Temporary Silt Ditch	1635.01	Rock Pipe Inlet Sediment Trap Type A
1630.04	Stilling Basin	1635.02	Rock Pipe Inlet Sediment Trap Type B
1630.05	Temporary Diversion	1640.01	Coir Fiber Baffle
1630.06	Special Stilling Basin	1645.01	Temporary Stream Crossing
1631.01	Matting Installation		

SYSTEM\Wsp\sp\
MADISONCO\R-5779\TIP\
XXXXXX XX, 2017

XXXXX XX, 2017

Kimley»Horn ©2019
P.O. BOX 33068 • RALEIGH, N.C. 27636-3068

CONSTRUCTION DETAIL ENGLISH

COIR FIBER BAFFLE DETAIL

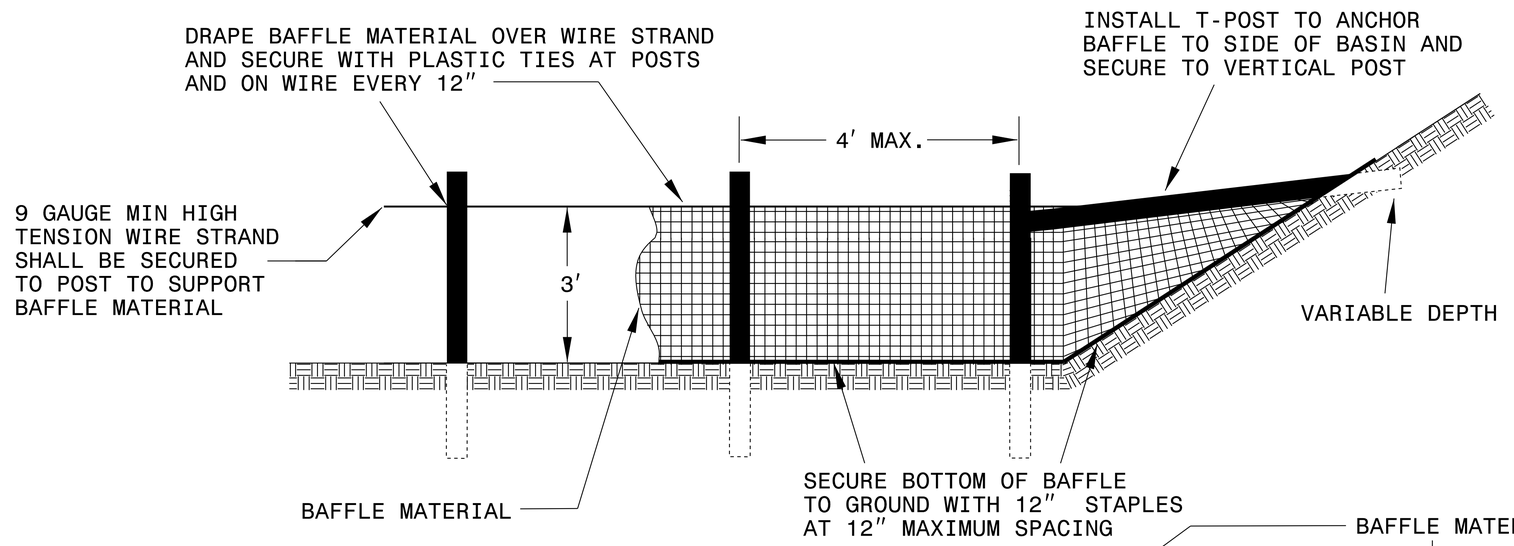

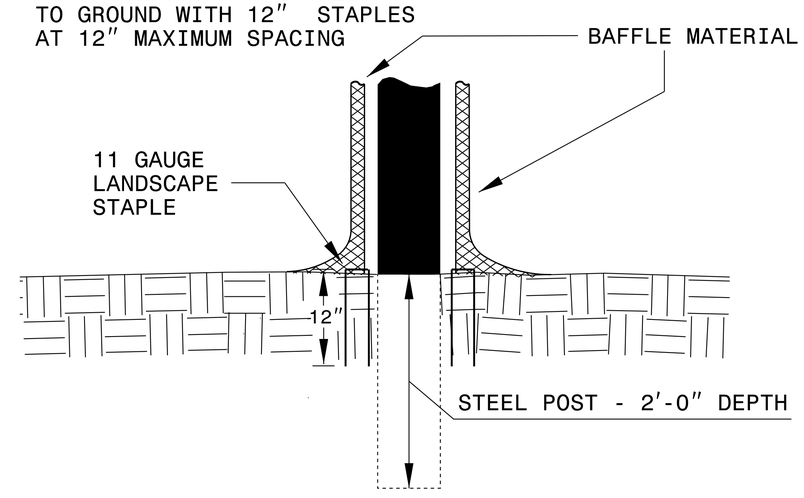

BAFFLE MATERIAL SHALL BE SECURED TO THE BOTTOM AND SIDES OF BASIN USING 12″ LANDSCAPE STAPLES

NOTES:

1. INSTALL THREE(3) COIR FIBER BAFFLES IN SILT BASINS AND SEDIMENT DAMS AT DRAINAGE OUTLETS WITH A SPACING OF ¼ THE BASIN LENGTH.

2. TWO(2) COIR FIBER BAFFLES CAN BE INSTALLED IN SILT BASINS AND DAMS LESS THAN 20 FT. IN LENGTH WITH A SPACING OF 1/3 THE BASIN LENGTH.

3. TOP HEIGHT OF COIR FIBER BAFFLES SHALL NOT BE BELOW BASE OF EMERGENCY SPILLWAY ELEVATION.

5/14/99
K:\RAL_Roadway\011036358 - R-5779\Environmental\Proj\011036358_ec_psh_details.dgn
10/2/2019

5/14/99

PROJECT REFERENCE NO.	SHEET NO.
R-5779	EC-2A

Kimley»Horn ©2019
P.O. BOX 33068 • RALEIGH, N.C. 27636-3068

COIR FIBER WATTLE DETAIL

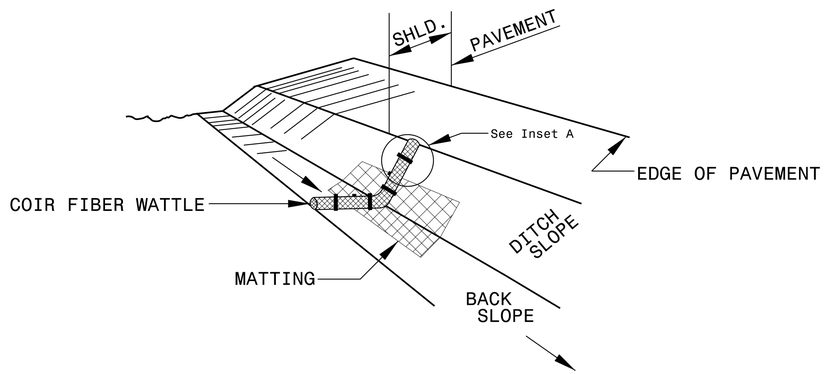

ISOMETRIC VIEW

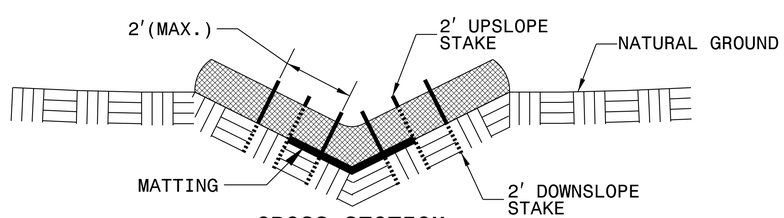

CROSS SECTION VEE DITCH

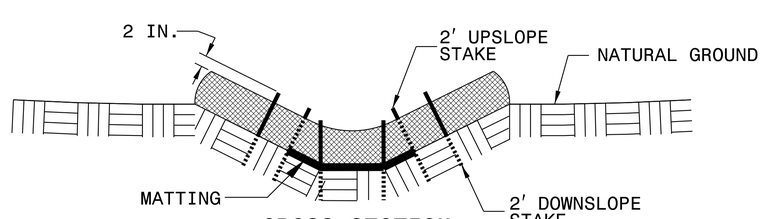

CROSS SECTION TRAPEZOIDAL DITCH

NOTES:

USE MINIMUM 12 IN. DIAMETER COIR FIBER (COCONUT FIBER) WATTLE.

USE 2 FT. WOODEN STAKES WITH A 2 IN. BY 2 IN. NOMINAL CROSS SECTION.

ONLY INSTALL WATTLE(S) TO A HEIGHT IN DITCH SO FLOW WILL NOT WASH AROUND WATTLE AND SCOUR DITCH SLOPES AND AS DIRECTED.

INSTALL A MINIMUM OF 2 UPSLOPE STAKES AND 4 DOWNSLOPE STAKES AT AN ANGLE TO WEDGE WATTLE TO BOTTOM OF DITCH.

PROVIDE STAPLES MADE OF 0.125 IN. DIAMETER STEEL WIRE FORMED INTO A U SHAPE NOT LESS THAN 12″ IN LENGTH.

INSTALL STAPLES APPROXIMATELY EVERY 1 LINEAR FOOT ON BOTH SIDES OF WATTLE AND AT EACH END TO SECURE IT TO THE SOIL.

INSTALL MATTING IN ACCORDANCE WITH SECTION 1631 OF THE STANDARD SPECIFICATIONS.

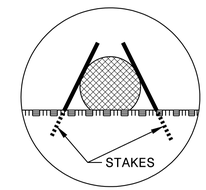

INSET A

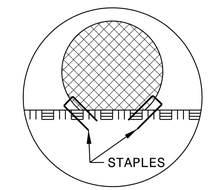

INSET B

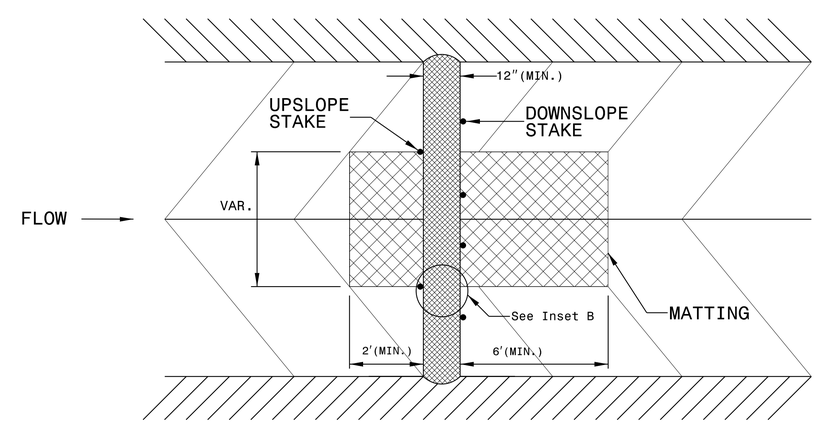

TOP VIEW

10/2/2019 K:\RAL_Roadway\011036358 - R-5779\Environmental\Proj\011036358_ec_psh_details.dgn

PROJECT REFERENCE NO.	SHEET NO.
R-5779	EC-2B

Kimley»Horn ©2019
P.O. BOX 33068 • RALEIGH, N.C. 27636-3068

MATTING INSTALLATION DETAIL

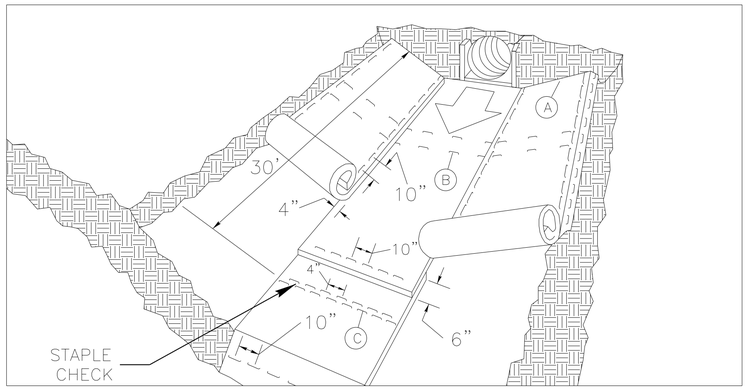

MATTING IN DITCHES

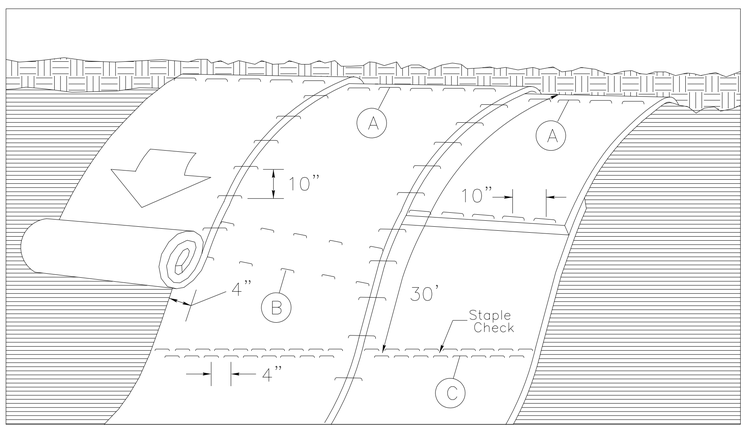

MATTING ON SLOPES

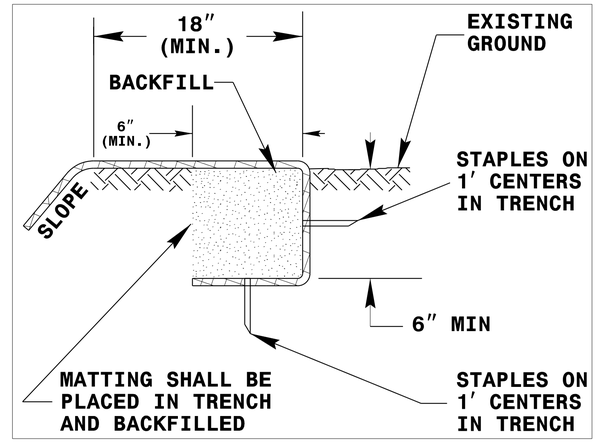

DIAGRAM A

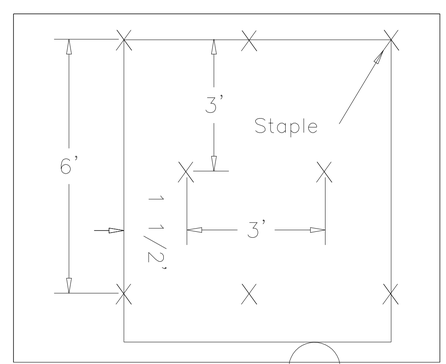

DIAGRAM B

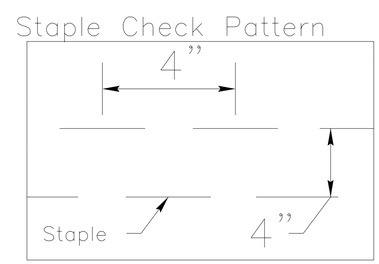

DIAGRAM C

NOTES:

THIS DETAIL APPLIES TO STRAW, EXCELSIOR, AND PERMANENT SOIL REINFORCEMENT MAT (PSRM) INSTALLATION.

STAPLES SHALL BE NO. 11 GAUGE STEEL WIRE FORMED INTO A "U" SHAPE WITH A MINIMUM THROAT WIDTH OF 1 INCH AND NOT LESS THAN 6 INCHES IN LENGTH.

NOT TO SCALE

PROJECT REFERENCE NO.	SHEET NO.
R-5779	EC-2C

Kimley»Horn ©2019
P.O. BOX 33068 • RALEIGH, N.C. 27636-3068

STORMWATER BASIN WITH SKIMMER

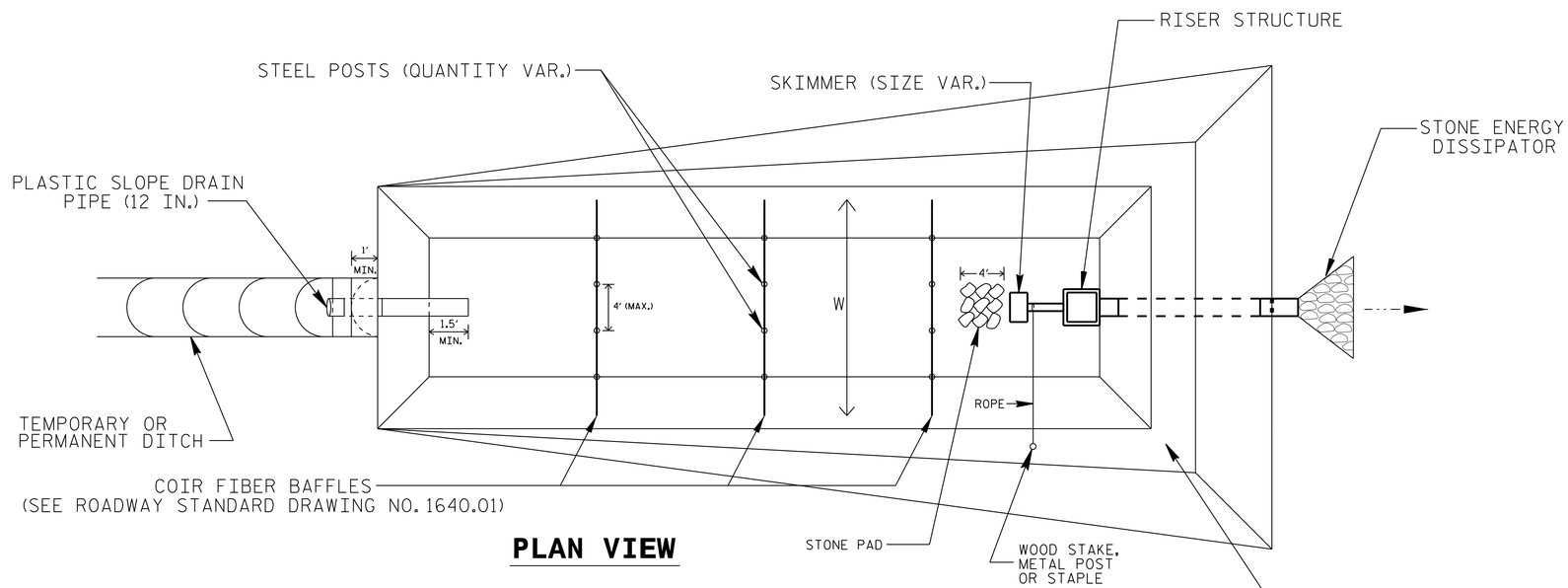

PLAN VIEW

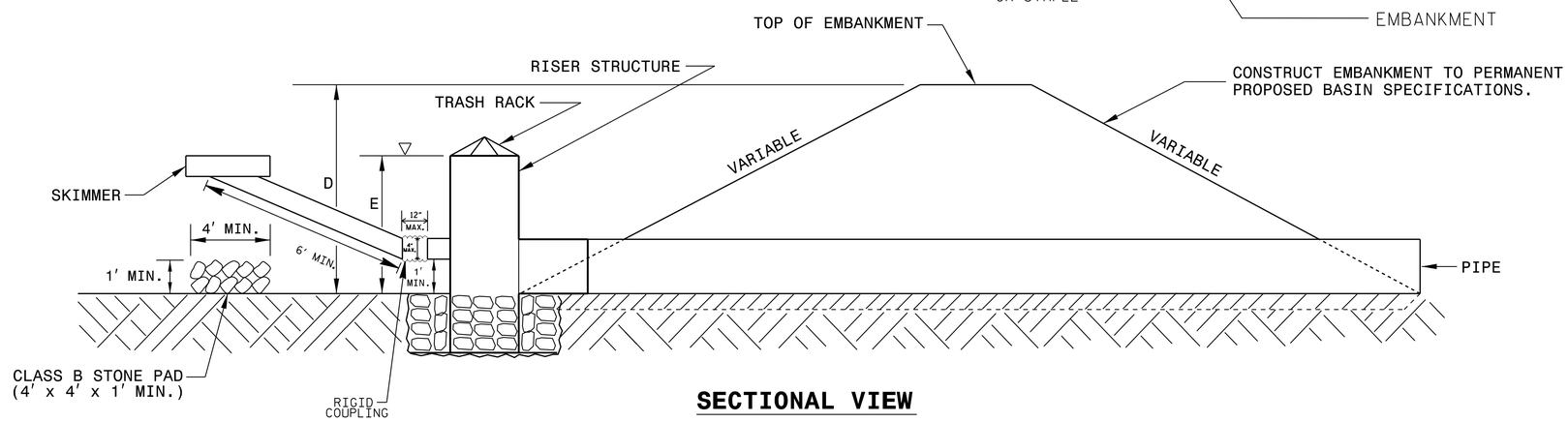

SECTIONAL VIEW

NOTES

1. SEED AND PLACE MATTING FOR EROSION CONTROL ON INTERIOR AND EXTERIOR SIDESLOPES.
2. INSTALL A MINIMUM OF 3 COIR FIBER BAFFLES IN ACCORDANCE WITH ROADWAY STD. DRAWING 1640.01.
3. INSTALL SKIMMER AND COUPLING TO RISER STRUCTURE OR DIRECTLY INTO EMBANKMENT 1 FT. FROM BOTTOM OF BASIN.
4. THE ARM PIPE SHALL HAVE A MINIMUM LENGTH OF 6 FT. BETWEEN THE SKIMMER AND COUPLING.
5. PLASTIC SLOPE DRAIN PIPE AT INLET OF BASIN MAY BE REPLACED BY FILTRATION GEOTEXTILE AS DIRECTED.
6. THE DIFFERENCE BETWEEN LENGTHS "D" AND "E" REPRESENT THE FREEBOARD AND SHOULD BE 1 FT. MINIMUM.

NOT TO SCALE

5/14/99
10/2/2019 K:\RAL_Roadway\011036358 - R-5779\Environmental\Proj\011036358_ec_psh_details.dgn

PROJECT REFERENCE NO.	SHEET NO.
R-5779	EC-2D

Kimley»Horn ©2019
P.O. BOX 33068 • RALEIGH, N.C. 27636-3068

TEMPORARY ROCK SILT CHECK TYPE 'B' DETAIL

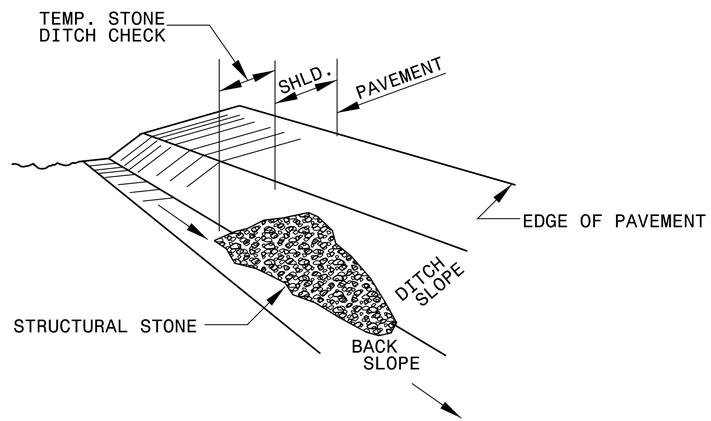

ISOMETRIC VIEW

NOTES:

USE CLASS 'B' EROSION CONTROL STONE FOR STRUCTURAL STONE.

THE ENGINEER MAY DIRECT THE OPTION OF CLASS "A" STONE FOR SITES HAVING LESS THAN ONE (1) ACRE DRAINAGE AREA AND A DITCH GRADE LESS THAN 3%.

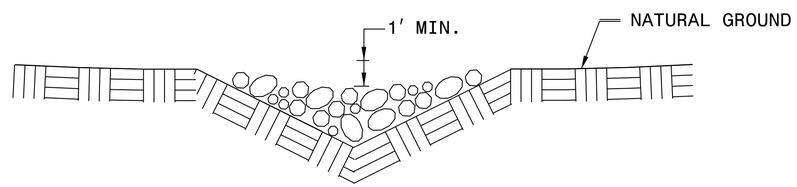

CROSS SECTION
VEE DITCH

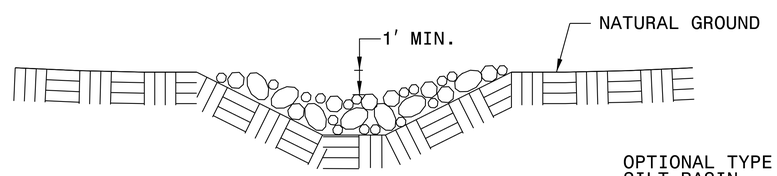

CROSS SECTION
TRAPEZOIDAL DITCH

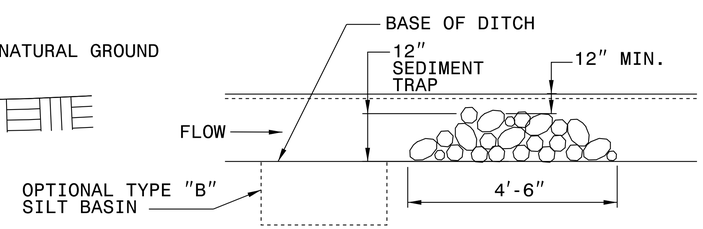

ELEVATION VIEW

PROJECT REFERENCE NO.	SHEET NO.
R-5779	EC-2E

Kimley»Horn ©2019
P.O. BOX 33068 • RALEIGH, N.C. 27636-3068

WATTLE DETAIL

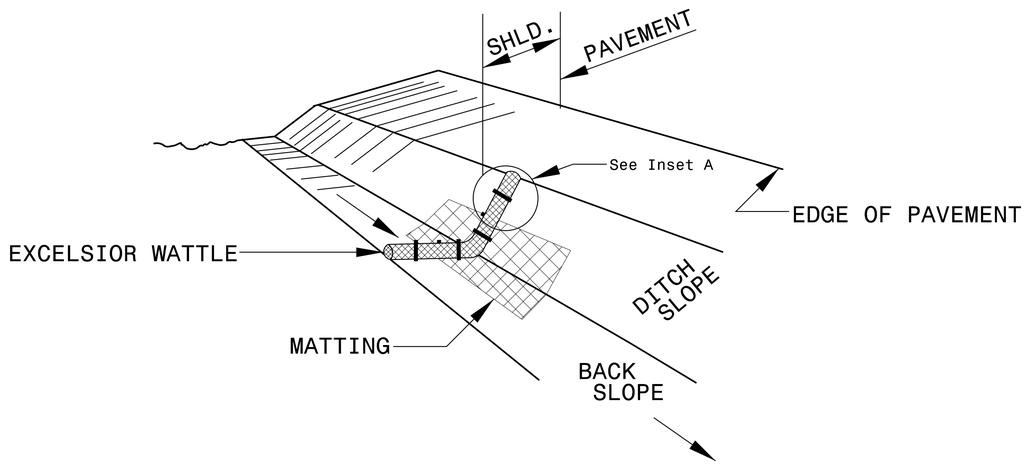

ISOMETRIC VIEW

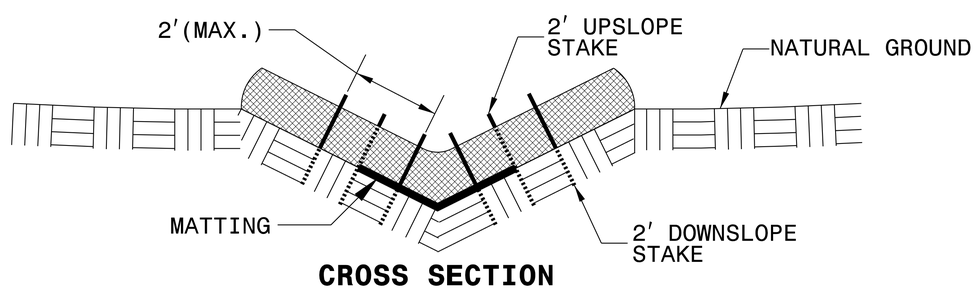

CROSS SECTION VEE DITCH

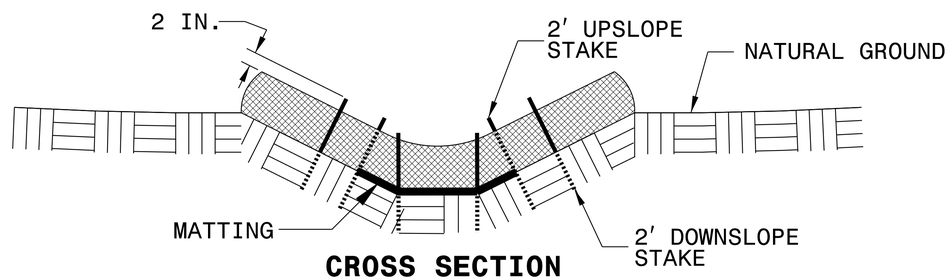

CROSS SECTION TRAPEZOIDAL DITCH

NOTES:

USE MINIMUM 12 IN. DIAMETER EXCELSIOR WATTLE.

USE 2 FT. WOODEN STAKES WITH A 2 IN. BY 2 IN. NOMINAL CROSS SECTION.

ONLY INSTALL WATTLE(S) TO A HEIGHT IN DITCH SO FLOW WILL NOT WASH AROUND WATTLE AND SCOUR DITCH SLOPES AND AS DIRECTED.

INSTALL A MINIMUM OF 2 UPSLOPE STAKES AND 4 DOWNSLOPE STAKES AT AN ANGLE TO WEDGE WATTLE TO BOTTOM OF DITCH.

PROVIDE STAPLES MADE OF 0.125 IN. DIAMETER STEEL WIRE FORMED INTO A U SHAPE NOT LESS THAN 12″ IN LENGTH.

INSTALL STAPLES APPROXIMATELY EVERY 1 LINEAR FOOT ON BOTH SIDES OF WATTLE AND AT EACH END TO SECURE IT TO THE SOIL.

INSTALL MATTING IN ACCORDANCE WITH SECTION 1631 OF THE STANDARD SPECIFICATIONS.

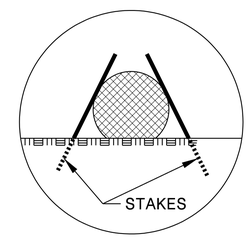

INSET A

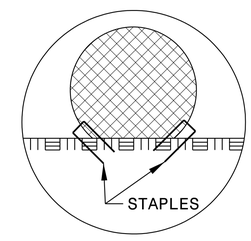

INSET B

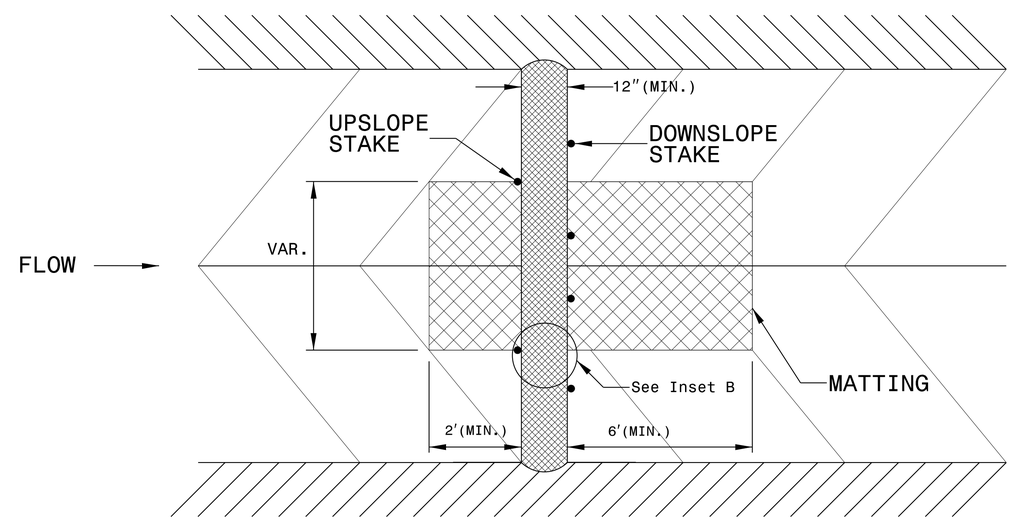

TOP VIEW

5/14/99
10/2/2019 K:\RAL_Roadway\011036358 - R-5779\Environmental\Proj\011036358_ec_psh_details.dgn

PROJECT REFERENCE NO.	SHEET NO.
R-5779	EC-2F

Kimley»Horn ©2019
P.O. BOX 33068 • RALEIGH, N.C. 27636-3068

STATE OF NORTH CAROLINA
DEPT. OF TRANSPORTATION
DIVISION OF HIGHWAYS
RALEIGH, N.C.
7-06

ENGLISH STANDARD DRAWING FOR
GRAVEL CONSTRUCTION ENTRANCE

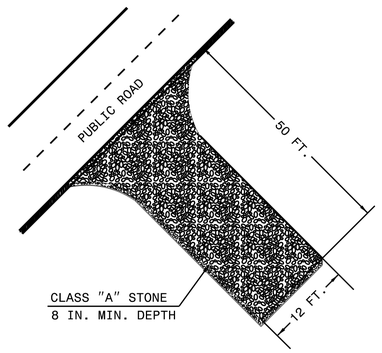

NOTES:
1. PROVIDE TURNING RADIUS SUFFICIENT TO ACCOMMODATE LARGE TRUCKS.
2. LOCATE ENTRANCE(S) TO PROVIDE FOR UTILIZATION BY ALL CONSTRUCTION VEHICLES.
3. MUST BE MAINTAINED IN A CONDITION WHICH WILL PREVENT TRACKING OR DIRECT FLOW OF MUD ONTO STREETS. PERIODIC TOPDRESSING WITH STONE WILL BE NECESSARY.
4. ANY MATERIAL TRACKED ONTO THE ROADWAY MUST BE CLEANED UP IMMEDIATELY.
5. LOCATE GRAVEL CONSTRUCTION ENTRANCE AT ALL POINTS OF INGRESS AND EGRESS UNTIL SITE IS STABILIZED. PROVIDE FREQUENT CHECKS OF THE DEVICE AND TIMELY MAINTENANCE.
6. NUMBER AND LOCATION OF CONSTRUCTION ENTRANCES TO BE DETERMINED BY THE ENGINEER.
7. USE CLASS 'A' STONE OR OTHER COARSE AGGREGATE APPROVED BY THE ENGINEER.

NOTE: PLACE FILTER FABRIC BENEATH STONE

SHEET 1 OF 1
1607.01

STATE OF NORTH CAROLINA
DEPT. OF TRANSPORTATION
DIVISION OF HIGHWAYS
RALEIGH, N.C.
7-06

ENGLISH STANDARD DRAWING FOR
GRAVEL CONSTRUCTION ENTRANCE

SHEET 1 OF 1
1607.01

STATE OF NORTH CAROLINA
DEPT. OF TRANSPORTATION
DIVISION OF HIGHWAYS
RALEIGH, N.C.
7-06

ENGLISH STANDARD DRAWING FOR
ROCK INLET SEDIMENT TRAP TYPE 'B'

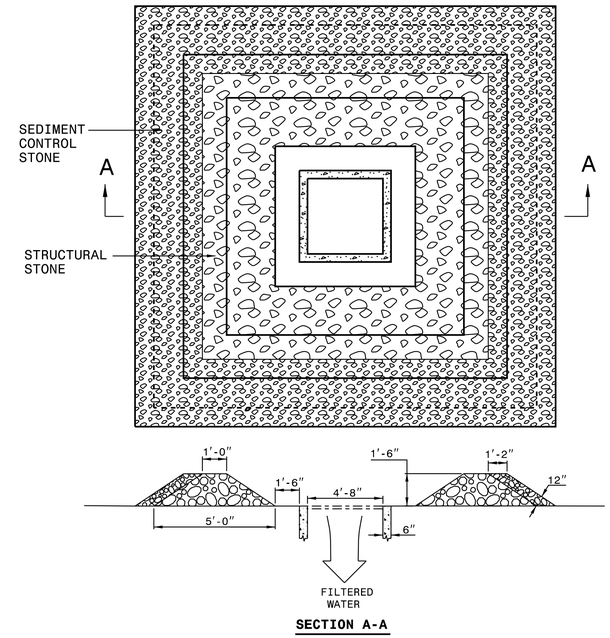

SECTION A-A

NOTE:
USE CLASS 'A' STONE FOR STRUCTURAL STONE.
USE NO. 5 OR NO. 57 STONE FOR SEDIMENT CONTROL.
DIMENSIONS SHOWN ARE MINIMUM ACCEPTABLE UNLESS OTHERWISE SPECIFIED BY THE ENGINEER.
CONSTRUCT TOP OF BERM A MINIMUM OF ONE FOOT BELOW THE SHOULDER OR ANY DIVERSION POINT.

SHEET 1 OF 1
1632.02

STATE OF NORTH CAROLINA
DEPT. OF TRANSPORTATION
DIVISION OF HIGHWAYS
RALEIGH, N.C.
7-06

ENGLISH STANDARD DRAWING FOR
ROCK INLET SEDIMENT TRAP TYPE 'B'

SHEET 1 OF 1
1632.02

STATE OF NORTH CAROLINA
DEPT. OF TRANSPORTATION
DIVISION OF HIGHWAYS
RALEIGH, N.C.
7-06

ENGLISH STANDARD DRAWING FOR
ROCK INLET SEDIMENT TRAP TYPE 'A'

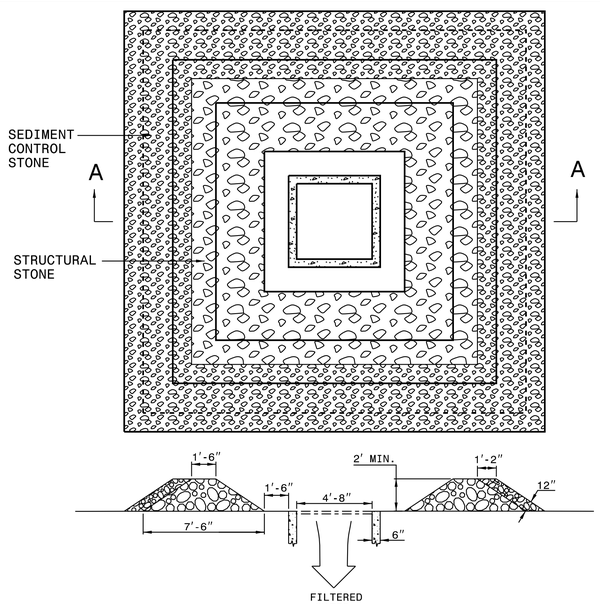

SECTION A-A

NOTE:
CLEAN SEDIMENT WHEN FULL OR AS DIRECTED BY ENGINEER.
USE NO. 5 OR NO. 57 STONE FOR SEDIMENT CONTROL.
USE CLASS 'B' STONE FOR STRUCTURAL STONE.
CONSTRUCT TOP OF BERM A MINIMUM OF ONE FOOT BELOW THE SHOULDER OR ANY DIVERSION POINT.

SHEET 1 OF 1
1632.01

STATE OF NORTH CAROLINA
DEPT. OF TRANSPORTATION
DIVISION OF HIGHWAYS
RALEIGH, N.C.
7-06

ENGLISH STANDARD DRAWING FOR
ROCK INLET SEDIMENT TRAP TYPE 'A'

SHEET 1 OF 1
1632.01

STATE OF NORTH CAROLINA
DEPT. OF TRANSPORTATION
DIVISION OF HIGHWAYS
RALEIGH, N.C.
7-06

ENGLISH STANDARD DRAWING FOR
ROCK INLET SEDIMENT TRAP TYPE 'C'

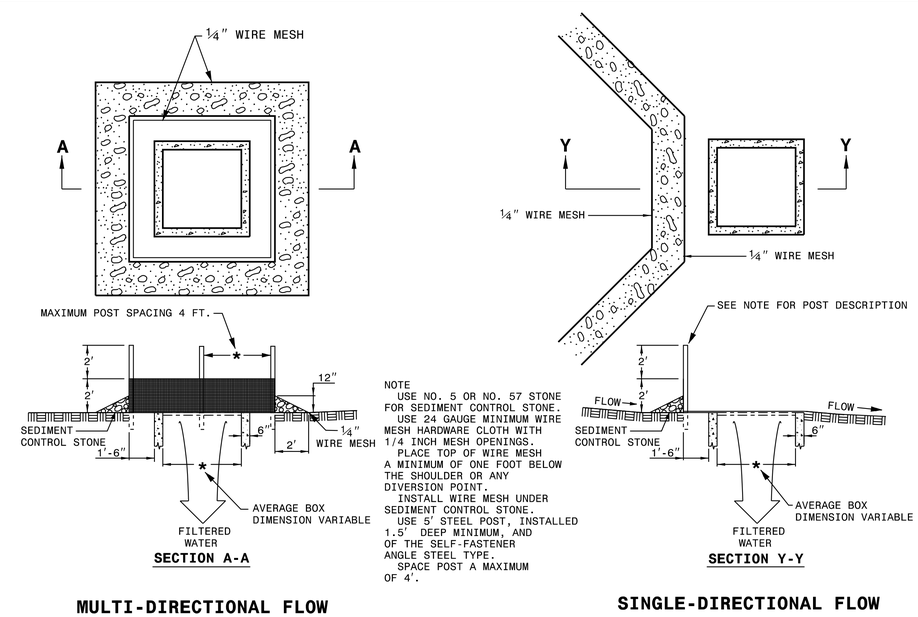

SECTION A-A

MULTI-DIRECTIONAL FLOW

NOTE
USE NO. 5 OR NO. 57 STONE FOR SEDIMENT CONTROL STONE.
USE 24 GAUGE MINIMUM WIRE MESH HARDWARE CLOTH WITH 1/4 INCH MESH OPENINGS.
PLACE TOP OF WIRE MESH A MINIMUM OF ONE FOOT BELOW THE SHOULDER OR ANY DIVERSION POINT.
INSTALL WIRE MESH UNDER SEDIMENT CONTROL STONE.
USE 5' STEEL POST, INSTALLED 1.5' DEEP MINIMUM, AND OF THE SELF-FASTENER ANGLE STEEL TYPE.
SPACE POST A MAXIMUM OF 4'.

SECTION Y-Y

SINGLE-DIRECTIONAL FLOW

SHEET 1 OF 1
1632.03

STATE OF NORTH CAROLINA
DEPT. OF TRANSPORTATION
DIVISION OF HIGHWAYS
RALEIGH, N.C.

ENGLISH STANDARD DRAWING FOR
ROCK INLET SEDIMENT TRAP TYPE 'C'

SHEET 1 OF 1
1632.03

5/14/99

10/2/2019 K:\RAL_Roadway\0\I036358 - R-5779\Environmental\Proj\0\I036358_ec_psh_details.dgn

PROJECT REFERENCE NO.	SHEET NO.
R-5779	EC-2G

Kimley»Horn ©2019

P.O. BOX 33068 • RALEIGH, N.C. 27636-3068

STATE OF NORTH CAROLINA DEPT. OF TRANSPORTATION DIVISION OF HIGHWAYS RALEIGH, N.C.

ENGLISH STANDARD DRAWING FOR

TEMPORARY SILT FENCE

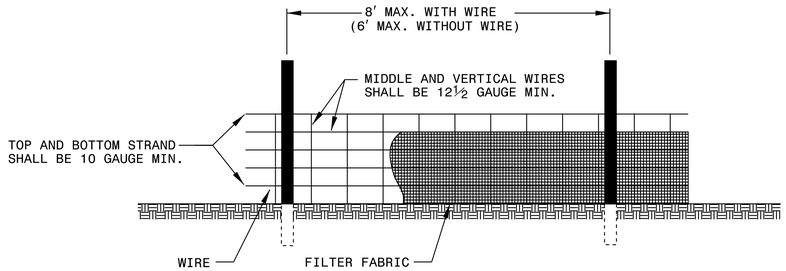

NOTES

USE WIRE A MINIMUM OF 32" IN WIDTH AND WITH A MINIMUM OF 6 LINE WIRES WITH 12" STAY SPACING.

USE FILTER FABRIC A MINIMUM OF 36" IN WIDTH AND FASTEN ADEQUATELY TO THE WIRE AS DIRECTED BY THE ENGINEER.

PROVIDE 5'-0" STEEL POST OF THE SELF-FASTENER ANGLE STEEL TYPE.

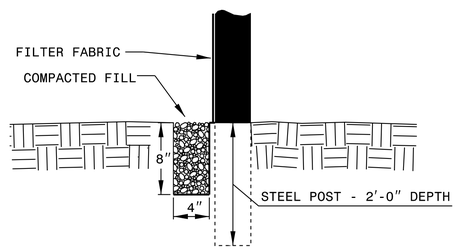

EXTENSION OF FABRIC AND WIRE INTO TRENCH

SHEET 1 OF 1

1605.01

STATE OF NORTH CAROLINA DEPT. OF TRANSPORTATION DIVISION OF HIGHWAYS RALEIGH, N.C.

ENGLISH STANDARD DRAWING FOR

TEMPORARY DIVERSION

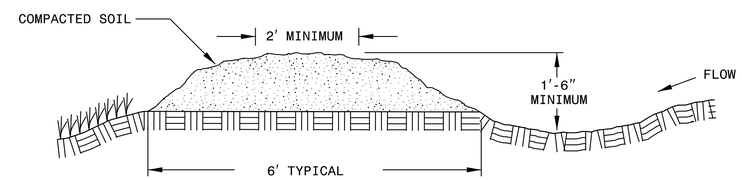

CROSS SECTIONAL VIEW

SHEET 1 OF 1

1630.05

STATE OF NORTH CAROLINA DEPT. OF TRANSPORTATION DIVISION OF HIGHWAYS RALEIGH, N.C.

ENGLISH STANDARD DRAWING FOR

SPECIAL SEDIMENT CONTROL FENCE

GENERAL NOTES:

USE NO. 5 OR NO. 57 STONE FOR SEDIMENT CONTROL STONE.

USE HARDWARE CLOTH 24 GAUGE WIRE MESH WITH 1/4 INCH MESH OPENINGS.

INSTALL 5 FT. SELF FASTENER ANGLE STEEL POST 2 FT. DEEP MINIMUM.

SPACE POST A MAXIMUM OF 3 FT.

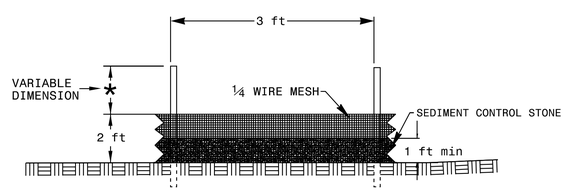

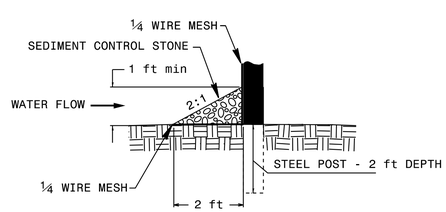

SHEET 1 OF 1

1606.01

STATE OF NORTH CAROLINA DEPT. OF TRANSPORTATION DIVISION OF HIGHWAYS RALEIGH, N.C.

ENGLISH STANDARD DRAWING FOR

TEMPORARY ROCK SILT CHECK TYPE 'A'

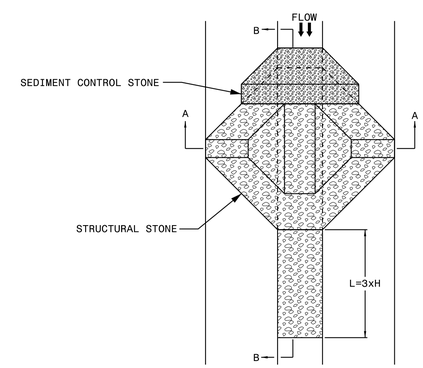

PLAN

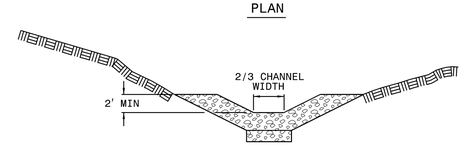

SECTION A-A

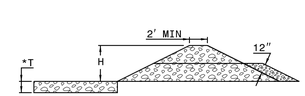

SECTION B-B

*T = 12" MIN., 18" MAX.

NOTE

USE CLASS 'B' EROSION CONTROL STONE FOR STRUCTURAL STONE.

USE NO. 5 OR NO. 57 STONE FOR SEDIMENT CONTROL STONE.

SHEET 1 OF 1

1633.01

STATE OF NORTH CAROLINA DEPT. OF TRANSPORTATION DIVISION OF HIGHWAYS RALEIGH, N.C.

ENGLISH STANDARD DRAWING FOR

TEMPORARY SILT FENCE

SHEET 1 OF 1

1605.01

STATE OF NORTH CAROLINA DEPT. OF TRANSPORTATION DIVISION OF HIGHWAYS RALEIGH, N.C.

ENGLISH STANDARD DRAWING FOR

TEMPORARY DIVERSION

SHEET 1 OF 1

1630.05

STATE OF NORTH CAROLINA DEPT. OF TRANSPORTATION DIVISION OF HIGHWAYS RALEIGH, N.C.

ENGLISH STANDARD DRAWING FOR

SPECIAL SEDIMENT CONTROL FENCE

SHEET 1 OF 1

1606.01

STATE OF NORTH CAROLINA DEPT. OF TRANSPORTATION DIVISION OF HIGHWAYS RALEIGH, N.C.

ENGLISH STANDARD DRAWING FOR

TEMPORARY ROCK SILT CHECK TYPE 'A'

SHEET 1 OF 1

1633.01

5/14/99

K:\RAL_Roadway\0\I036358 - R-5779\Environmental\Proj\0\I036358_ec_psh_details.dgn

10/2/2019

PROJECT REFERENCE NO.	SHEET NO.
R-5779	EC-2H

Kimley»Horn ©2019

P.O. BOX 33068 • RALEIGH, N.C. 27636-3068

STATE OF NORTH CAROLINA
DEPT. OF TRANSPORTATION
DIVISION OF HIGHWAYS
RALEIGH, N.C.

1-02

ENGLISH STANDARD DRAWING FOR

GUIDE FOR TEMPORARY BERMS AND SLOPE DRAIN

SHEET 1 OF 1

1622.01

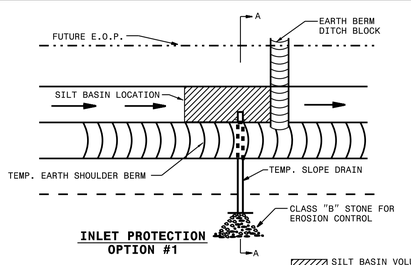

INLET PROTECTION OPTION #1

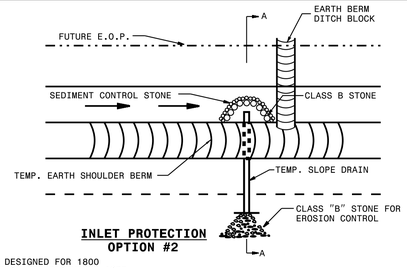

INLET PROTECTION OPTION #2

SILT BASIN VOLUME SHALL BE DESIGNED FOR 1800 CUBIC FEET OF SEDIMENT STORAGE PER DISTURBED ACRE.

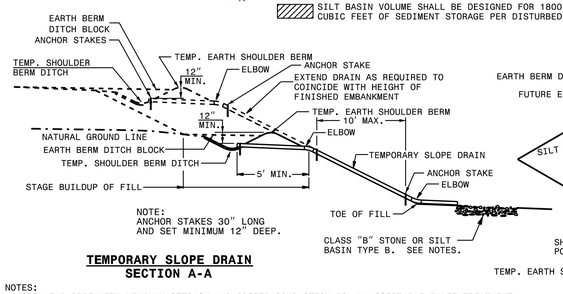

NOTE:
ANCHOR STAKES 30" LONG AND SET MINIMUM 12" DEEP.

TEMPORARY SLOPE DRAIN SECTION A-A

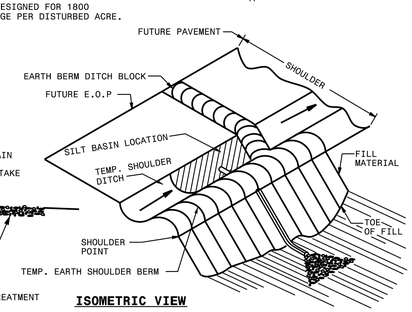

ISOMETRIC VIEW

NOTES:
1. OPEN END PIPE WITH MINIMUM SETBACK AND PROPER COMPACTION IS AN ACCEPTABLE INLET TREATMENT FOR STAGED CONSTRUCTION WHEN NOT LEFT IN PLACE FOR MORE THAN 30 DAYS.
2. DESIGN INLET PROTECTION OPTION #2 FOR 1800 CUBIC FOOT OF SEDIMENT STORAGE PER DISTURBED ACRE.
3. DESIGN SILT BASINS WITH A 2:1 LENGTH TO WIDTH RATIO MINIMUM.
4. USE CLASS B STONE FOR EROSION CONTROL AT OUTLET LOCATIONS SUBJECT TO SCOURING. SILT BASINS AND/OR OTHER EROSION CONTROL DEVICES MAY ALSO BE UTILIZED TO PREVENT SCOUR AT OUTLET LOCATIONS.
5. USE MAXIMUM SLOPE DRAIN SPACING OF 200 FT.

STATE OF NORTH CAROLINA
DEPT. OF TRANSPORTATION
DIVISION OF HIGHWAYS
RALEIGH, N.C.

1-02

ENGLISH STANDARD DRAWING FOR

GUIDE FOR TEMPORARY BERMS AND SLOPE DRAIN

SHEET 1 OF 1

1622.01

STATE OF NORTH CAROLINA
DEPT. OF TRANSPORTATION
DIVISION OF HIGHWAYS
RALEIGH, N.C.

7-06

ENGLISH STANDARD DRAWING FOR

ROCK PIPE INLET SEDIMENT TRAP TYPE 'B'

SHEET 1 OF 1

1635.02

NOTE:
USE CLASS 'A' EROSION CONTROL STON FOR STRUCTURAL STONE.
USE NO. 5 OR NO. 57 STONE FOR SEDIMENT CONTROL.
CONSTRUCT TOP OF BERM A MINIMUM OF ONE FOOT BELOW THE SHOULDER OR DIVERSION POINT.
PROVIDE A TOTAL SEDIMENT TRAP VOLUME OF 1800± CUBIC FEET PER ACRE OF DISTURBED AREA. SOME OF THE REQUIRED VOLUME MAY BE PROVIDED BY OTHER UP OR DOWNSTREAM CONTROLS.

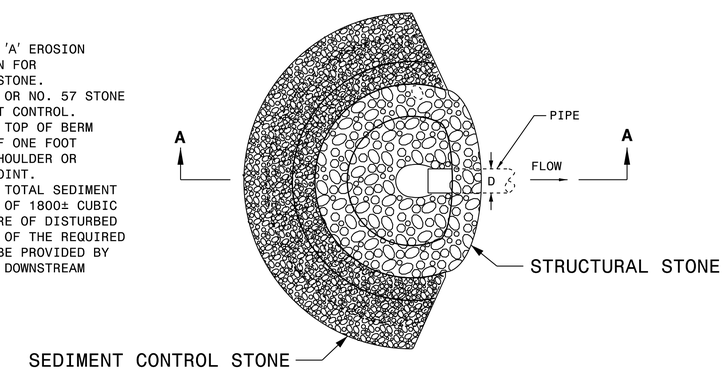

PLAN

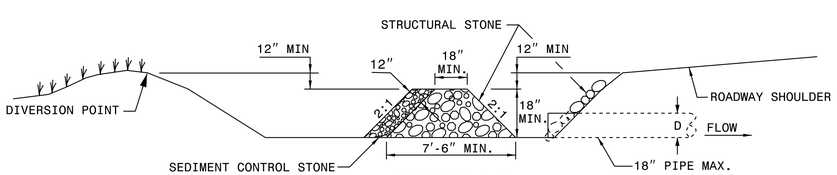

SECTION A-A

STATE OF NORTH CAROLINA
DEPT. OF TRANSPORTATION
DIVISION OF HIGHWAYS
RALEIGH, N.C.

7-06

ENGLISH STANDARD DRAWING FOR

ROCK PIPE INLET SEDIMENT TRAP TYPE 'B'

SHEET 1 OF 1

1635.02

5/14/99
10/2/2019 K:\RAL_Roadway\01\036358 - R-5779\Environmental\Proj\01\036358_ec_psh_details.dgn

E&SC PLANS	PROJECT REFERENCE NO.	SHEET NO.
	R-5779	EC-3

Kimley»Horn ©2019
P.O. BOX 33068 • RALEIGH, N.C. 27636-3068

DIVISION OF HIGHWAYS
STATE OF NORTH CAROLINA

SOIL STABILIZATION SUMMARY SHEET

MATTING FOR EROSION CONTROL

CONST SHEET NO.	LINE	FROM STATION	TO STATION	SIDE	ESTIMATE (SY)
SLOPES:					
4	-L-	11+50	15+00	RT	1830
4	-L-	12+00	13+50	LT	845
4	-L-	18+25	19+50	LT	385
4/5	-L-	16+00	25+50	RT	5900
5	-L-	23+50	25+00	LT	380
DITCHES					
4	-L/DR1-	12+00	14+00	RT/LT	85
4	-L-	18+50	24+75	RT	660
				SUBTOTAL	10085
MISCELLANEOUS MATTING TO BE INSTALLED AS DIRECTED BY THE ENGINEER					1000
				TOTAL	11085
				SAY	11100

PERMANENT SOIL REINFORCEMENT MAT

CONST SHEET NO.	LINE	FROM STATION	TO STATION	SIDE	ESTIMATE (SY)
DITCHES					
4	-L-	10+50	11+55	RT	70
4	-L-	11+55	12+50	RT	70
4	-L-	12+50	13+00	RT	35
4	-L-	12+50	13+00	RT	35
4	-DR1-	11+00	11+50	RT	30
4	-DR1-	12+00	12+11	RT	15
4	-DR1-	11+78	12+00	LT	20
4	-DR1-	11+50	12+12	RT	75
5	-L-	21+00	24+50	RT	265
5	-L-	25+00	25+08	RT	20
5	-L-	25+08	26+60	RT	315
			SUBTOTAL		950
		ADDITIONAL PSRM TO BE INSTALLED			150
				TOTAL	1100
				SAY	1100

5/14/99
10/2/2019 K:\RAL_Roadway\011036358 - R-5779\Environmental\Proj\011036358_ec_psh_details.dgn

Kimley»Horn ©2019
P.O. BOX 33068 • RALEIGH, N.C. 27636-3068

DIVISION OF HIGHWAYS
STATE OF NORTH CAROLINA

SOIL STABILIZATION TIMEFRAMES

SITE DESCRIPTION	STABILIZATION TIME	TIMEFRAME EXCEPTIONS
PERIMETER DIKES, SWALES, DITCHES AND SLOPES	7 DAYS	NONE
HIGH QUALITY WATER (HQW) ZONES	7 DAYS	NONE
SLOPES STEEPER THAN 3:1	7 DAYS	IF SLOPES ARE 10' OR LESS IN LENGTH AND ARE NOT STEEPER THAN 2:1, 14 DAYS ARE ALLOWED.
SLOPES 3:1 OR FLATTER	14 DAYS	7 DAYS FOR SLOPES GREATER THAN 50' IN LENGTH.
ALL OTHER AREAS WITH SLOPES FLATTER THAN 4:1	14 DAYS	NONE, EXCEPT FOR PERIMETERS AND HQW ZONES.

5/14/99
10/2/2019 K:\RAL_Roadway\01\036358 - R-5779\Environmental\Proj\01\036358_ec_psh_details.dgn

PROJECT REFERENCE NO.	SHEET NO.
R-5779	EC-4/CONST.4

Kimley»Horn ©2019

P.O. BOX 33068 • RALEIGH, N.C. 27636-3068

NAD 83 /NA 2011

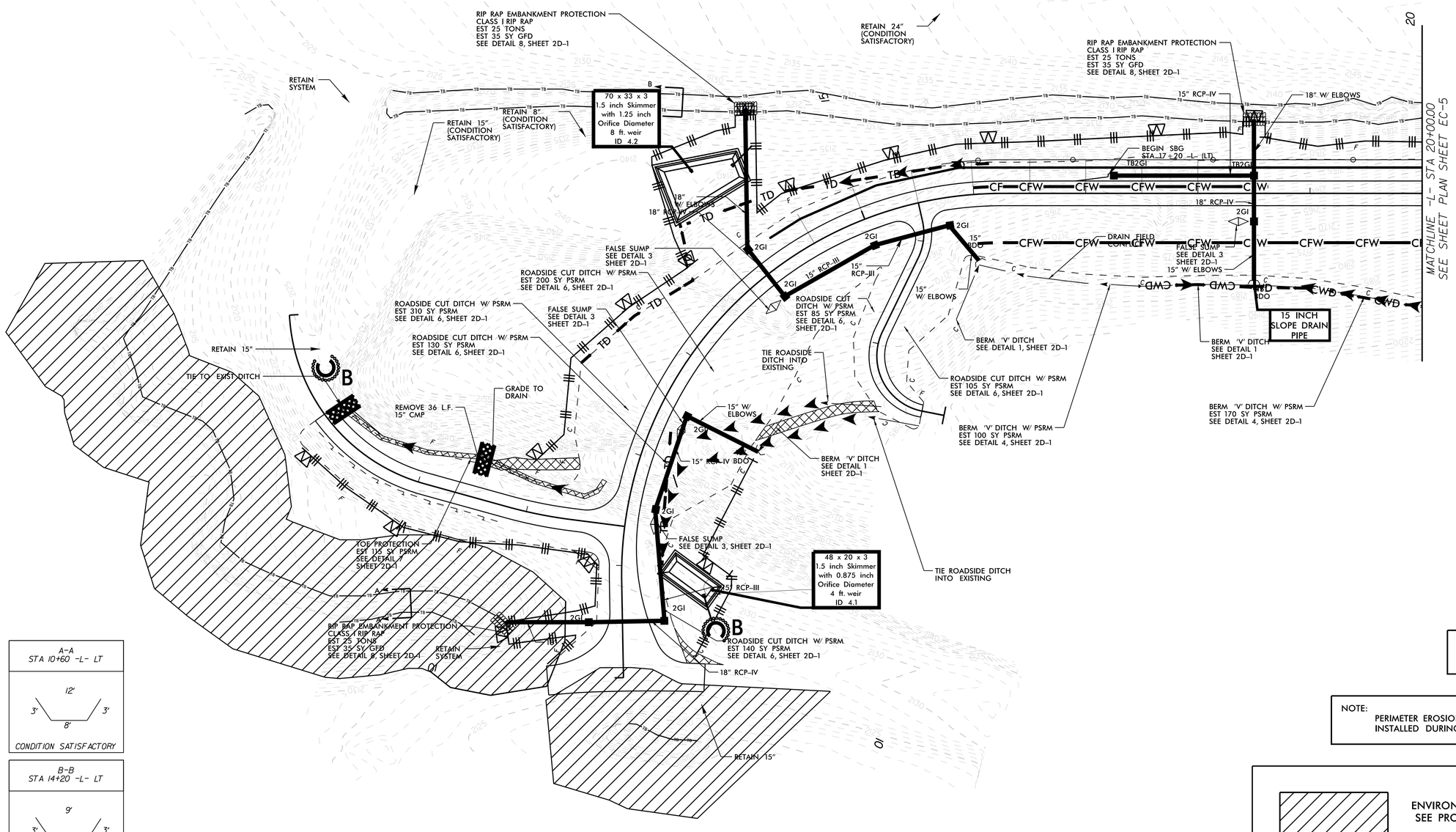

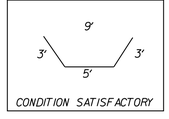

CLEARING AND GRUBBING
EROSION CONTROL FOR
CONSTRUCTION SHEET 4

NOTE:
PERIMETER EROSION CONTROL MEASURES SHALL BE INSTALLED DURING CLEARING AND GRUBBING PHASE.

ENVIRONMENTALLY SENSITIVE AREA
SEE PROJECT SPECIAL PROVISIONS

NOTES: ANY DEVIATION FROM OPTIONS GIVEN WILL REQUIRE PRIOR APPROVAL BY ENGINEER.

ADDITIONAL EROSION CONTROL DEVICES MAY NEED TO BE INSTALLED AS DIRECTED BY THE ENGINEER.

5/14/99

10/2/2019 K:\RAL_Roadway\011036358 - R-5779\Environmental\Proj\011036358_ec_psh_4.dgn

PROJECT REFERENCE NO.	SHEET NO.
R-5779	EC-5/CONST.5

Kimley»Horn ©2019

P.O. BOX 33068 • RALEIGH, N.C. 27636-3068

NAD 83 /NA 2011

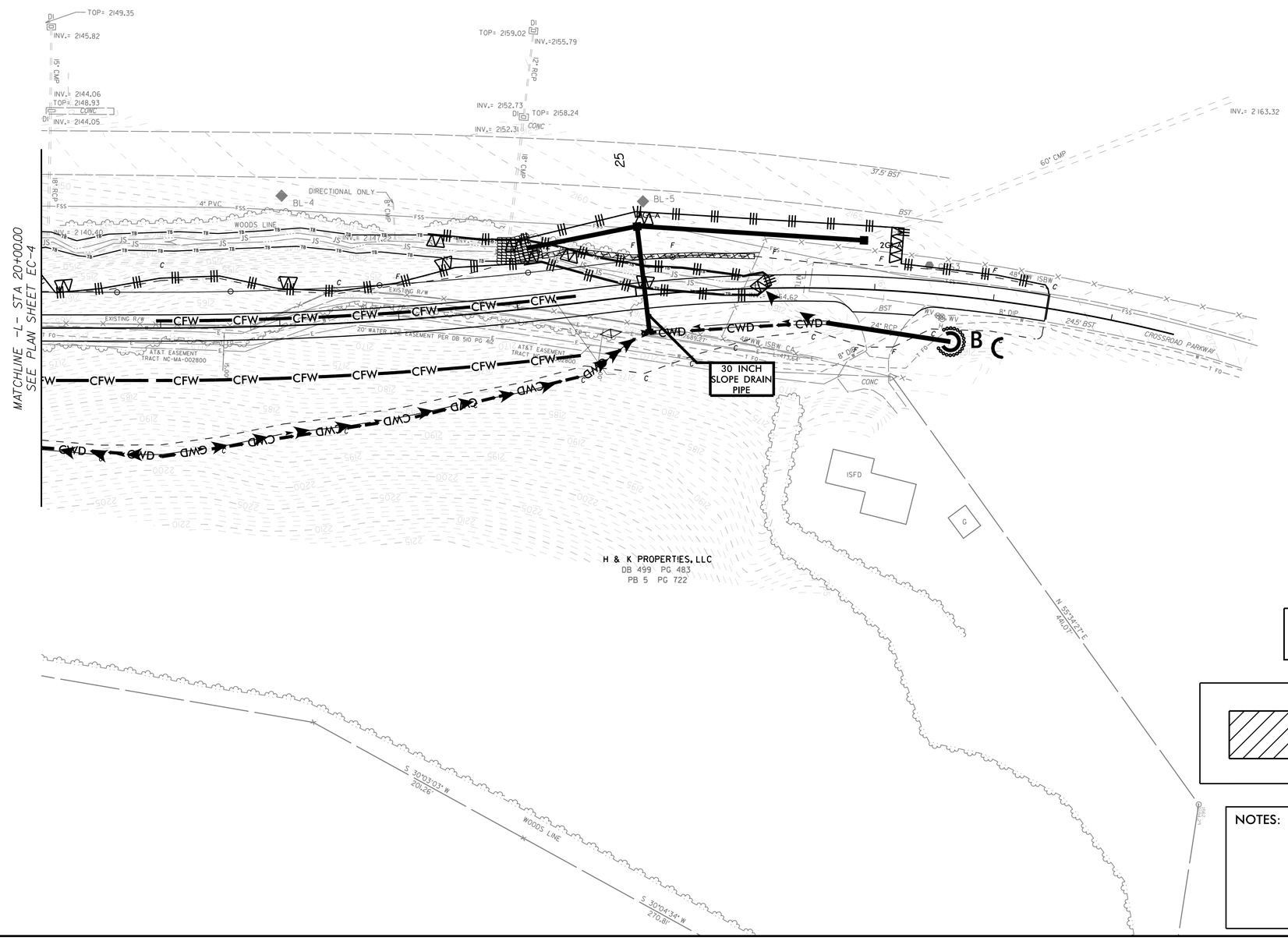

CLEARING AND GRUBBING
EROSION CONTROL FOR
CONSTRUCTION SHEET 5

NOTE:
PERIMETER EROSION CONTROL MEASURES SHALL BE INSTALLED DURING CLEARING AND GRUBBING PHASE.

ENVIRONMENTALLY SENSITIVE AREA
SEE PROJECT SPECIAL PROVISIONS

NOTES: ANY DEVIATION FROM OPTIONS GIVEN WILL REQUIRE PRIOR APPROVAL BY ENGINEER.

ADDITIONAL EROSION CONTROL DEVICES MAY NEED TO BE INSTALLED AS DIRECTED BY THE ENGINEER.

5/14/99
10/2/2019 K:\RAL_Roadway\011036358 - R-5779\Environmental\Proj\011036358_ec_psh_5.dgn

PROJECT REFERENCE NO.	SHEET NO.
R-5779	EC-6/CONST.4

Kimley»Horn ©2019

P.O. BOX 33068 • RALEIGH, N.C. 27636-3068

NAD 83 /NA 2011

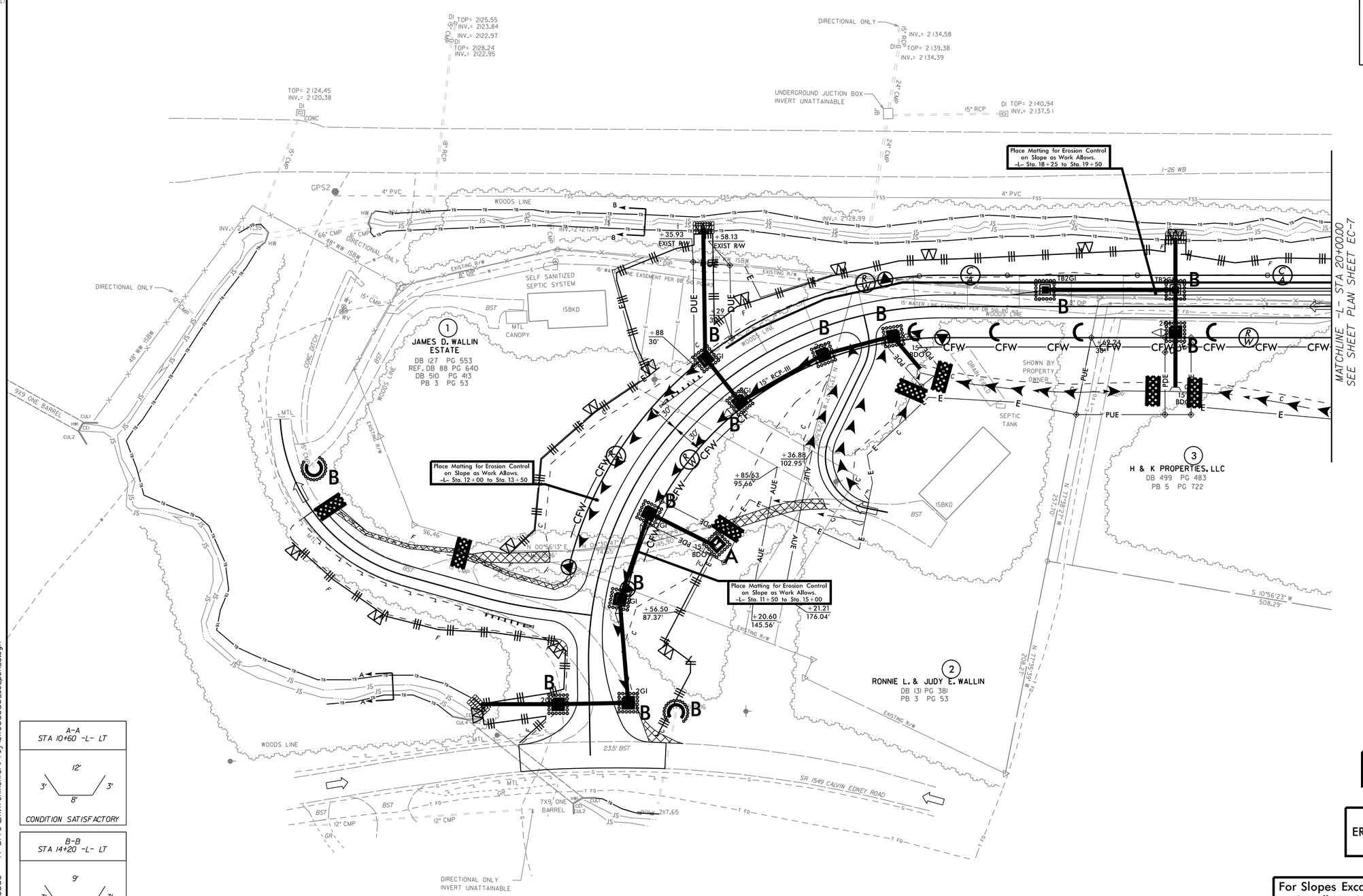

CULVERT #1
ONE BARREL

	NORTH	EAST	ELEV.
CUL1	770914.16	952186.91	2102.41
CUL2	770909.82	952194.09	2102.48
CE1	770912.12	952190.71	2111.44
HW1	770911.48	952190.68	2113.84
CUL3	770743.16	952096.80	2100.28
CUL4	770747.40	952089.51	2100.09
CE2	770745.43	952093.14	2109.19
HW2	770745.57	952093.18	2111.01

CULVERT #2
ONE BARREL

	NORTH	EAST	ELEV.
CUL1	771385.50	952557.79	2110.89
CUL2	771377.77	952562.40	2110.90
CE1	771378.97	952557.83	2117.85
HW1	771380.45	952560.37	2119.71
CUL3	771289.53	952477.12	2109.54
CUL4	771277.51	952478.54	2109.58
CE2	771285.81	952477.72	2116.55
HW2	771282.52	952478.17	2118.34

INSTALL PSRM IN THE PROPOSED DITCH LINE.

INSTALL MATTING FOR EROSION CONTROL IN THE PROPOSED DITCH LINE.

For Slopes Excavated Greater Than 10 feet Install Matting for Erosion Control on Entire Slope as Work Allows.

NOTES: ANY DEVIATION FROM OPTIONS GIVEN WILL REQUIRE PRIOR APPROVAL BY ENGINEER.

ADDITIONAL EROSION CONTROL DEVICES MAY NEED TO BE INSTALLED AS DIRECTED BY THE ENGINEER.

5/14/99

10/2/2019 K:\RAL_Roadway\011036358 - R-5779\Environmental\Proj\011036358_ec_psh_6.dgn

PROJECT REFERENCE NO.	SHEET NO.
R-5779	EC-7

Kimley»Horn ©2019

P.O. BOX 33068 • RALEIGH, N.C. 27636-3068

NAD 83 /NA 2011

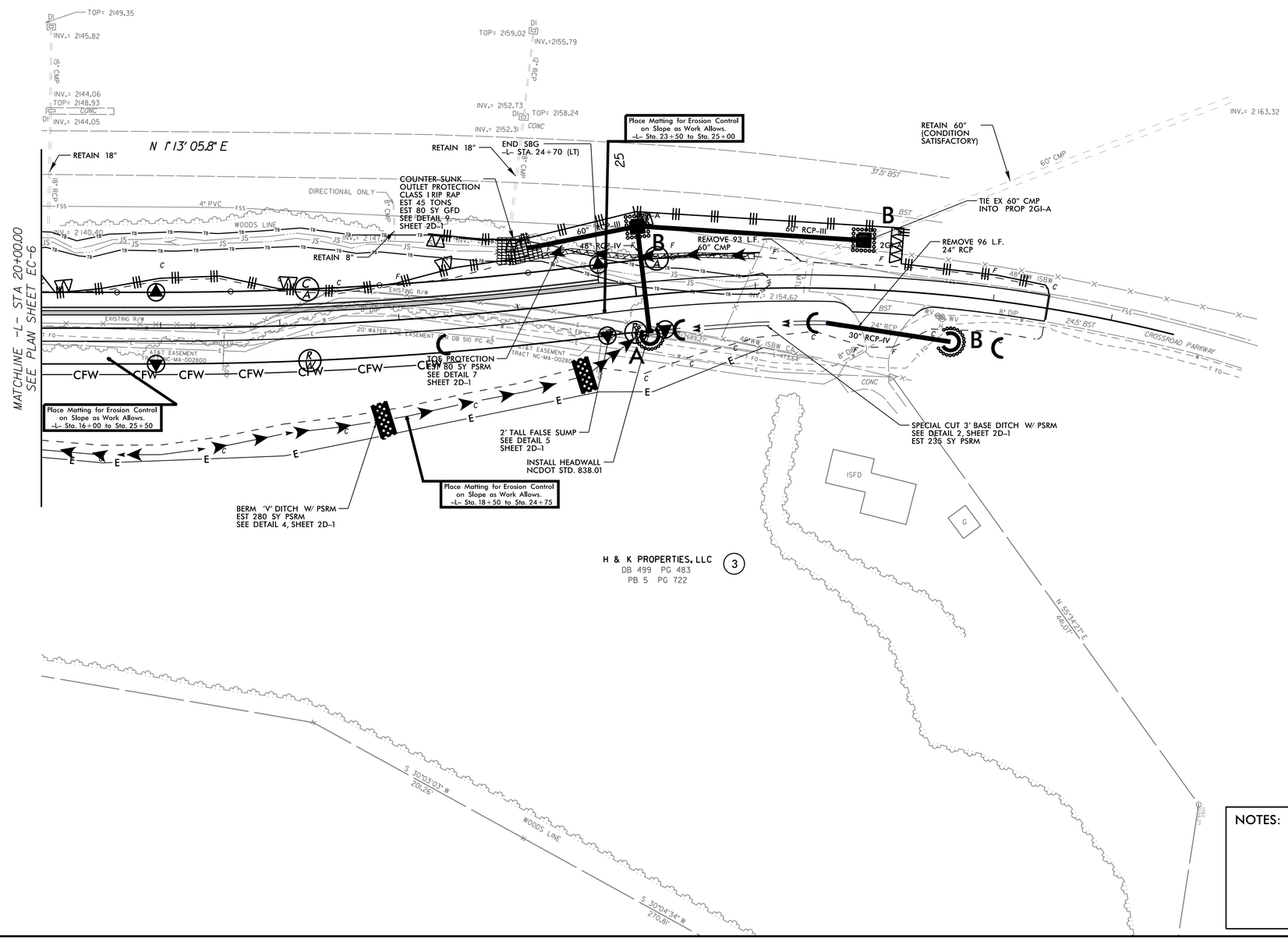

INSTALL PSRM IN THE PROPOSED DITCH LINE.

INSTALL MATTING FOR EROSION CONTROL IN THE PROPOSED DITCH LINE.

For Slopes Excavated Greater Than 10 feet Install Matting for Erosion Control on Entire Slope as Work Allows.

NOTES: ANY DEVIATION FROM OPTIONS GIVEN WILL REQUIRE PRIOR APPROVAL BY ENGINEER.

ADDITIONAL EROSION CONTROL DEVICES MAY NEED TO BE INSTALLED AS DIRECTED BY THE ENGINEER.

5/14/99

10/2/2019 K:\RAL_Roadway\011036358 - R-5779\Environmental\Proj\011036358_ec_psh_7.dgn

CULVERT CONSTRUCTION SEQUENCE

PROJECT REFERENCE NO.	SHEET NO.
R-5779	EC-8/CONST.4
R/W SHEET NO.	
ROADWAY DESIGN ENGINEER	HYDRAULICS ENGINEER

NORTH CAROLINA PROFESSIONAL SEAL 18903 ENGINEER GREGORY E. BREN

NORTH CAROLINA PROFESSIONAL SEAL 038559 ENGINEER VANCE W. BLANTON

PHASE I

CULVERT CONSTRUCTION SEQUENCE – PHASE I

1. INSTALL PERIMETER CLEARING AND GRUBBING EROSION CONTROL MEASURES
2. INSTALL OFFLINE 60" PIPE FROM #502 TO #501, STRUCTURE #502, AND 60" PIPE FROM #501 TO #502

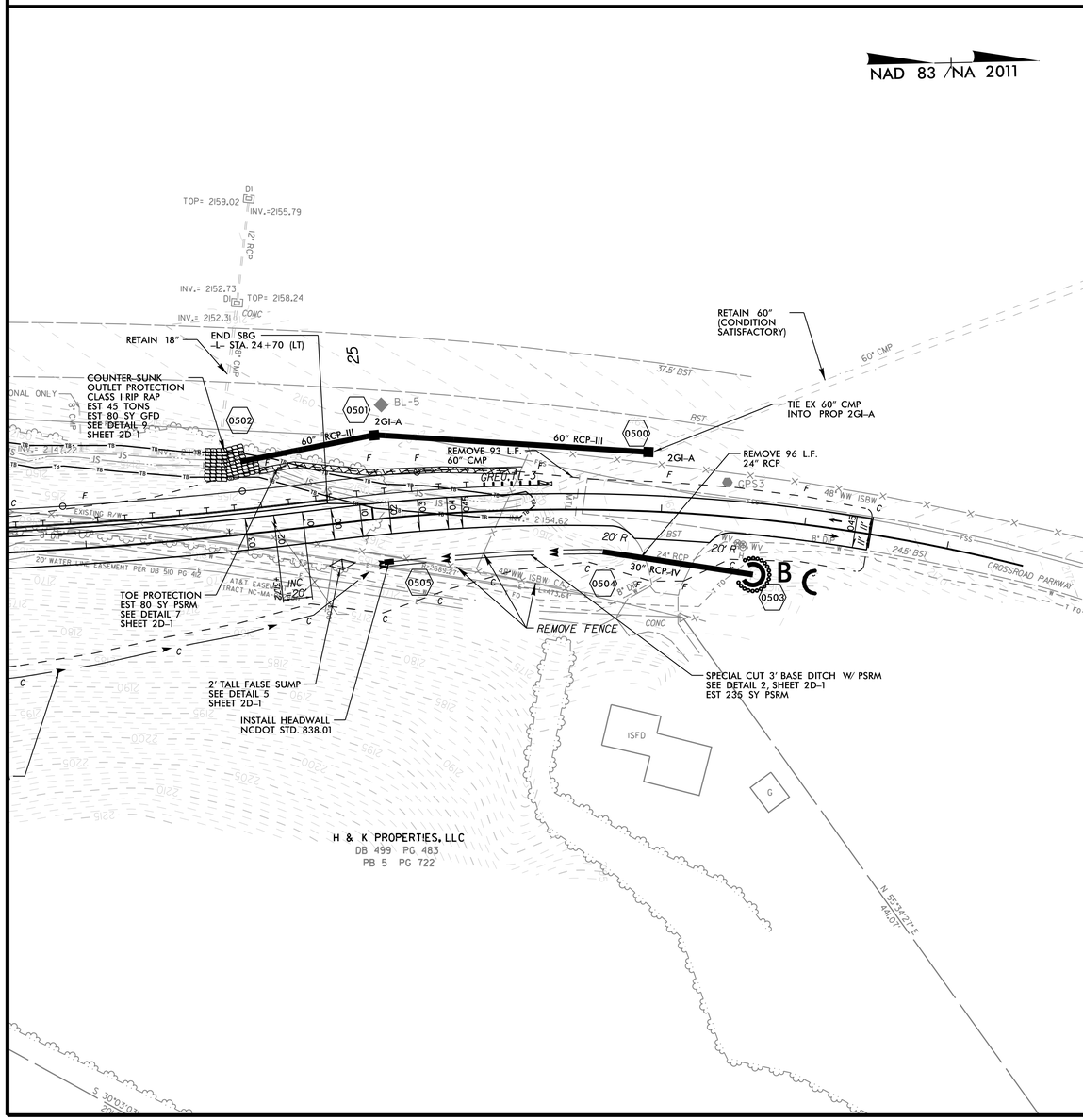

PHASE II

CULVERT CONSTRUCTION SEQUENCE – PHASE II

1. INSTALL STRUCTURE #501 WITH DIVERSION AROUND STRUCTURE DURING CONSTRUCTION, AS NECESSARY
2. INSTALL 48" PIPE FROM #505 TO #501

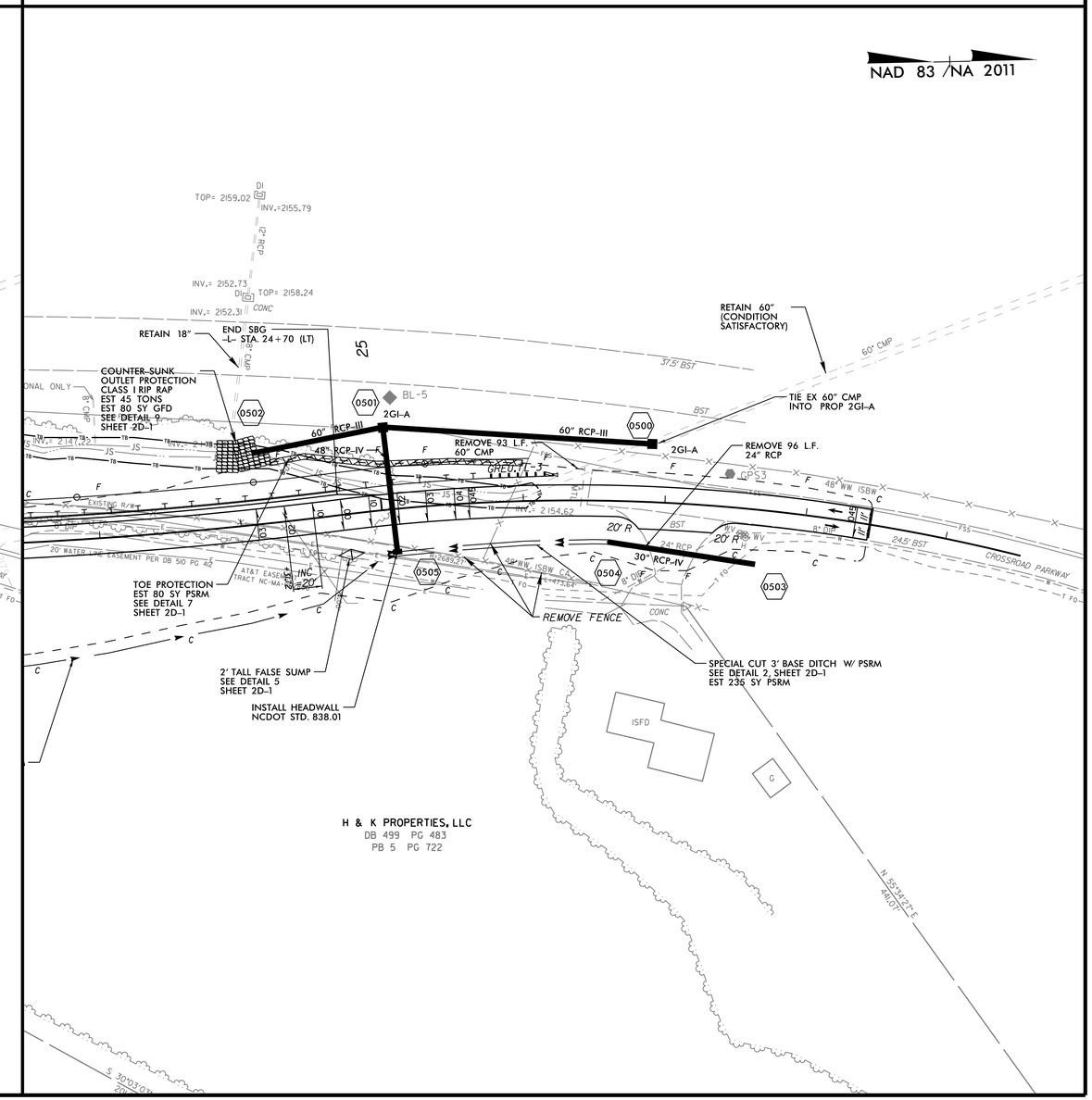

DocuSign Envelope ID: 3DB4B7ED-5E8D-49D2-9B56-25BE72BED653

T.I.P.: R-5779

CONTRACT:

TIP NO.	SHEET NO.
R-5779	SIGN-1

APPROVED: _____

DATE: _____

SEAL

1/9/2020

NORTH CAROLINA PROFESSIONAL SEAL 045215 ENGINEER RACHEL M. ABROMAITIS

DocuSigned by: Rachel Abromaitis 1B3603844E2C43B...

DOCUMENT NOT CONSIDERED FINAL UNLESS ALL SIGNATURES COMPLETED

STATE OF NORTH CAROLINA
DEPARTMENT OF TRANSPORTATION

SIGNING PLAN

MADISON COUNTY

LOCATION: EXTENSION OF SR 1631 (CROSSROADS PARKWAY) SOUTH TO SR 1549 (CALVIN EDNEY ROAD)

ROADWAY STANDARD DRAWING

THE FOLLOWING ROADWAY STANDARDS AS APPEAR IN "ROADWAY STANDARD DRAWINGS" - PROJECT SERVICES UNIT - N.C. DEPARTMENT OF TRANSPORTATION - RALEIGH, N.C., DATED JANUARY 2018 ARE APPLICABLE TO THIS PROJECT AND BY REFERENCE HEREBY ARE CONSIDERED A PART OF THESE PLANS:

STD. NO.	TITLE
903.10	GROUND MOUNTED SIGN SUPPORTS
904.10	ORIENTATION OF GROUND MOUNTED SIGNS
904.50	MOUNTING OF TYPE 'D', 'E' AND 'F' SIGNS ON 'U' CHANNEL POSTS
1264.01	OBJECT MARKERS - TYPES
1264.02	OBJECT MARKERS - INSTALLATION

GENERAL NOTES

- SIGNS FURNISHED BY STATE
- IF REMOVAL OR RELOCATION OF SIGNS ON PRIVATE STREET (NON-STATE MAINTAINED) IS REQUIRED DUE TO CONSTRUCTION, THE CONTRACTOR SHALL INFORM THE ENGINEER. THE WORK WILL BE COMPLETED BY OTHERS.
- WHEN NOT STATIONED OR DIMENSIONED ON PLANS, ALL 'E' AND 'F' SIGNS SHALL BE FIELD LOCATED BY THE ENGINEER.
- WHEN EXISTING SIGNS ARE REMOVED AND INSTALLED ON NEW SUPPORTS, THE RE-ERECTION SHALL IMMEDIATELY FOLLOW THE REMOVAL.
- THE BACKGROUND FOR TYPE E & F SIGNS SHALL BE TYPE C REFLECTIVE SHEETING.
- SEE ROADWAY PLANS FOR GUARD/GUIDE RAIL DETAILS.

SUMMARY OF QUANTITIES

ITEM NO. DESC. NO.	ITEM NO. SECT. NO.	ITEM DESCRIPTION	QUANTITY	UNIT
4025000000	901	CONTRACTOR FURNISHED, TYPE E SIGN	54	S.F.
4072000000	903	SUPPORTS, 3 LB STEEL U-CHANNEL	210	L.F.
4102000000	904	SIGN ERECTION, TYPE E	14	EA.
4155000000	907	DISPOSAL OF SIGN SYSTEM, U-CHANNEL	2	EA.

INDEX

SHEET NO.	DESCRIPTION
SIGN-1	TITLE SHEET
SIGN-2	E SIGNS
SIGN-3 THRU SIGN-4	SIGNING PLAN SHEETS

PLAN REVIEWED BY: N.C.D.O.T. SIGNING AND DELINEATION UNIT

_____ SIGNING & DELINEATION REGIONAL ENGINEER

_____ SIGNING & DELINEATION PROJECT DESIGN ENGINEER

DIVISION OF HIGHWAYS STATE OF NORTH CAROLINA DEPARTMENT OF TRANSPORTATION WORK ZONE TRAFFIC CONTROL UNIT

PLAN PREPARED BY: Kimley-Horn and Associates

GREGORY BREW, P.E. PROJECT DESIGN ENGINEER

RACHEL ABROMAITIS, P.E. DESIGNER

Kimley»Horn

$FILE1$

1/9/2020

DocuSign Envelope ID: 3DB4B7ED-5E8D-49D2-9B56-25BE72BED653

TIP NO.	SHEET NO.
R-5779	SIGN-2

APPROVED: _____

DATE: _____

SEAL

NORTH CAROLINA PROFESSIONAL SEAL 045215 ENGINEER RACHEL M. ABROMAITIS

1/9/2020

DocuSigned by: Rachel Abromaitis

DOCUMENT NOT CONSIDERED FINAL UNLESS ALL SIGNATURES COMPLETED

401 QUANTITY REQ'D _1_ W1-7 36" X 18" ONE "U" POST PER SIGN	402 QUANTITY REQ'D _2_ R2-1A 24" X 30" ONE "U" POST PER SIGN	403 QUANTITY REQ'D _1_ R1-1 36" X 36" ONE "U" POST PER SIGN	404 QUANTITY REQ'D _5_ W1-8L 18" X 24" ONE "U" POST PER SIGN	405 QUANTITY REQ'D _5_ W1-8R 18" X 24" ONE "U" POST PER SIGN MOUNTED WITH 404 IN 4_INSTALLATIONS		
						TYPE "E" SIGNS

K:\RAL_Roadway\01I036358 - R-5779\Roadway\Proj\Plan Sheets\01I036358_rdy_sgn_02.dgn

1/9/2020

DocuSign Envelope ID: 3DB4B7ED-5E8D-49D2-9B56-25BE72BED653

TIP NO.	SHEET NO.
R-5779	SIGN-3

APPROVED: _____

DATE: _____

SEAL

NORTH CAROLINA PROFESSIONAL SEAL 045215 ENGINEER RACHEL ABROMATIS 1/9/2020

DocuSigned by: Rachel Abromatis 1B36039442FC436...

DOCUMENT NOT CONSIDERED FINAL UNLESS ALL SIGNATURES COMPLETED

NAD 83 / NA 2011

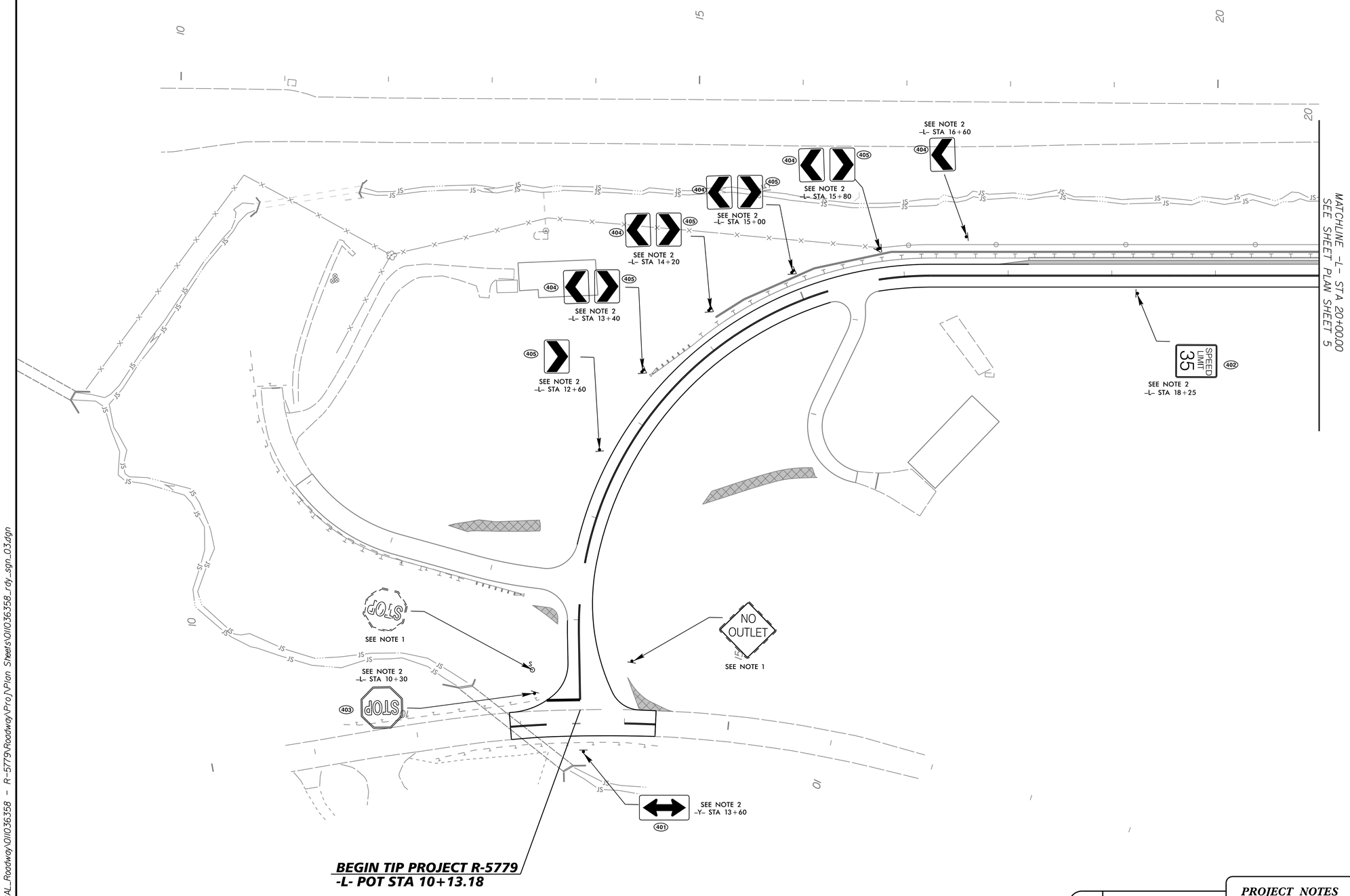

PROJECT NOTES

1. DISPOSE OF SIGN SYSTEM, U-CHANNEL
2. SIGN ERECTION, TYPE E

K:\RAL_Roadway\01\036358 - R-5779\Roadway\Proj\Plan Sheets\01\036358_rdy_sgn_03.dgn

1/9/2020

DocuSign Envelope ID: 3DB4B7ED-5E8D-49D2-9B56-25BE72BED653

TIP NO.	SHEET NO.
R-5779	SIGN-4

APPROVED: _____

DATE: _____

SEAL

1/9/2020

NORTH CAROLINA PROFESSIONAL SEAL 045215 ENGINEER RACHEL M. ALBROMAITIS

DocuSigned by: Rachel Albromaitis

DOCUMENT NOT CONSIDERED FINAL UNLESS ALL SIGNATURES COMPLETED

NAD 83 /NA 2011

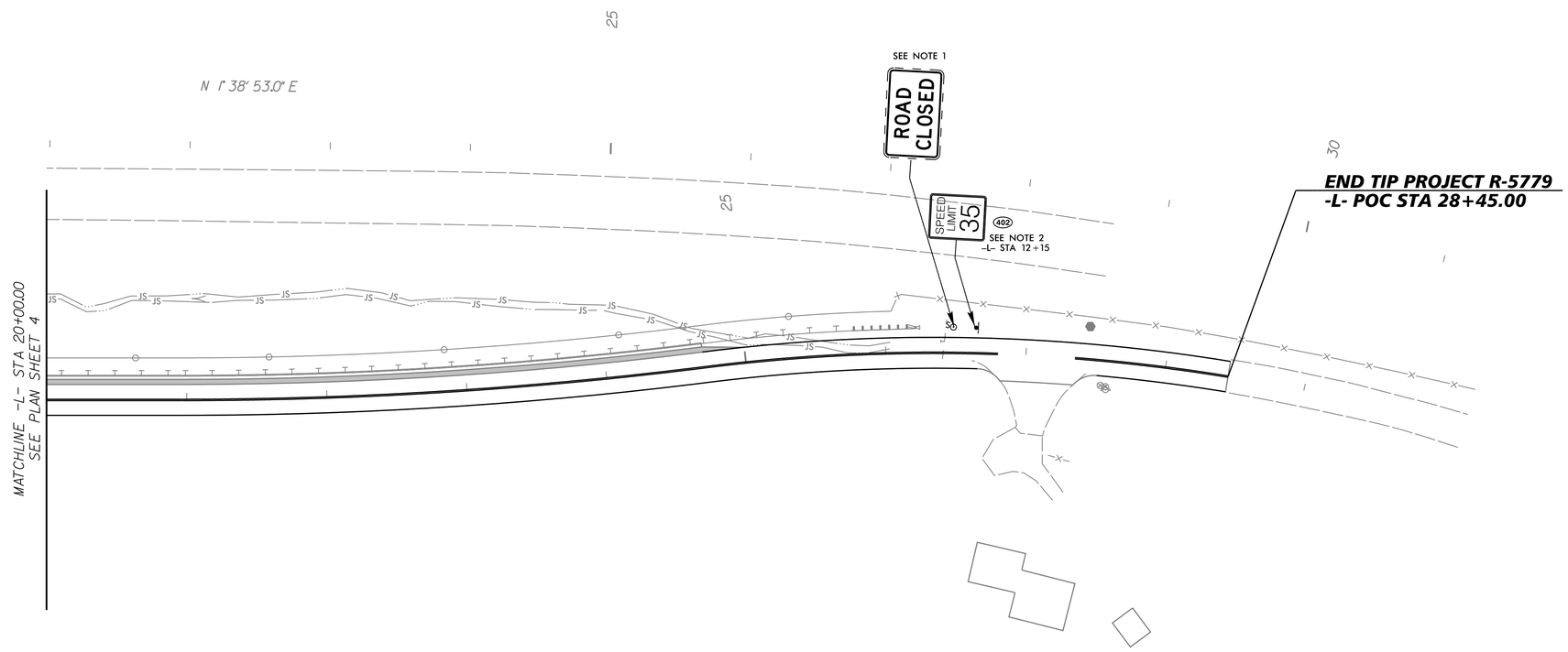

PROJECT NOTES

1. DISPOSE OF SIGN SYSTEM, U-CHANNEL
2. SIGN ERECTION, TYPE E

K:\RAL_Roadway\01\036358 - R-5779\Roadway\Proj\Plan Sheets\01\036358_rdy_sgn_04.dgn

1/9/2020

DocuSign Envelope ID: 28C4C27E-F9F9-4CE8-9593-E8969CE3EF26

09/08/99

TIP PROJECT: R-5779

CONTRACT:

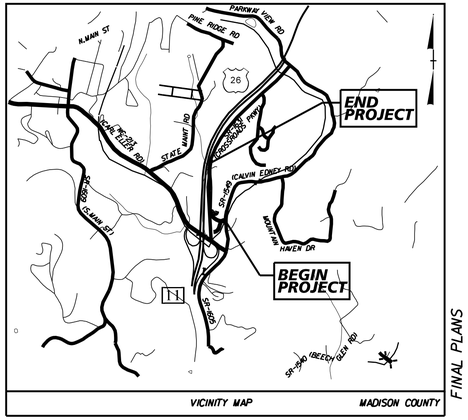

VICINITY MAP MADISON COUNTY

FINAL PLANS

THIS PROJECT IS NOT WITHIN ANY MUNICIPAL BOUNDARIES

STATE OF NORTH CAROLINA
DIVISION OF HIGHWAYS

UTILITY CONSTRUCTION PLANS MADISON COUNTY

T.I.P. NO.	SHEET NO.
R–5779	UC–1

*NOTE TO CONTRACTOR: ALL WATER MAINS SHALL BE RESTRAINED JOINT DI PIPE.

LOCATION: EXTENSION OF SR 1631 (CROSSROADS PARKWAY) SOUTH TO SR 1549 (CALVIN EDNEY ROAD)

TYPE OF WORK: UTILITY CONSTRUCTION

NC GRID
NAD 83/NA 2011

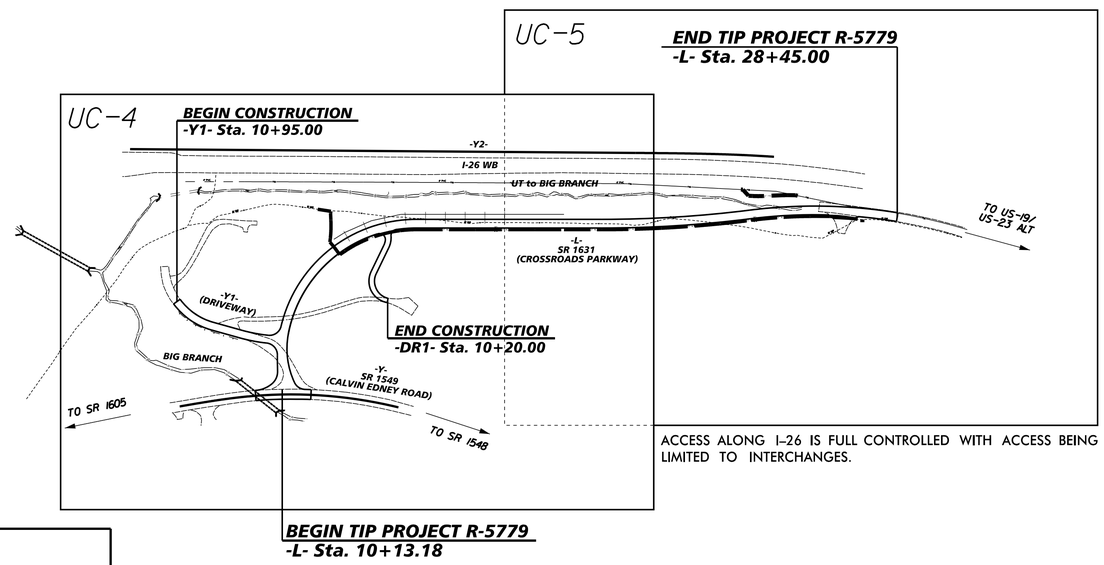

ACCESS ALONG I–26 IS FULL CONTROLLED WITH ACCESS BEING LIMITED TO INTERCHANGES.

CONTACT INFORMATION

NCDOT CONTACT: STEVE CANNON, P.E.
DIVISION 13, PROJECT DEVELOPMENT ENGINEER
(828) 251–6171

UTILITY OWNER: JASON RIDDLE
TOWN OF MARS HILL PUBLIC WORKS DIRECTOR
(828) 206–6479

DESIGN ENGINEER: DANIEL BULA, PE
KIMLEY–HORN & ASSOCIATES, INC.
200 SOUTH TRYON ST., SUITE 200
CHARLOTTE, NC 28202
(704) 409–1805
DAN.BULA@KIMLEY–HORN.COM

PRELIMINARY PLANS
DO NOT USE FOR CONSTRUCTION

DOCUMENT NOT CONSIDERED FINAL UNTIL ALL SIGNATURES ARE COMPLETED

GRAPHIC SCALES

50 25 0 50 100
PLANS

50 25 0 50 100
PROFILE (HORIZONTAL)

5 2.5 0 5 10
PROFILE (VERTICAL)

INDEX OF SHEETS

SHEET NO.:	DESCRIPTION:
UC–1	TITLE SHEET
UC–2	UTILITY SYMBOLOGY
UC–3	NOTES
UC–3A THRU UC–3B	DETAILS
UC–4 THRU UC–5	UTILITY CONSTRUCTION SHEETS
UC–6	PROFILE SHEET

WATER AND SEWER OWNERS ON PROJECT

(A) WATER – TOWN OF MARS HILL
(B) SANITARY SEWER – TOWN OF MARS HILL

PREPARED IN THE OFFICE OF

Kimley»Horn ©2017

NC LICENSE #F-0102
P.O. BOX 33068
RALEIGH, NORTH CAROLINA 27636
PHONE: (919) 677-2000

DANIEL G. BULA, PE — *CONSULTANT CONTACT #1*
NOLAN D. RANEY, PE — *CONSULTANT CONTACT #2*

SEAL

NORTH CAROLINA PROFESSIONAL SEAL 048031 ENGINEER DANIEL G. BULA
DocuSigned by: Daniel G. Bula
10/2/2019

DIVISION OF HIGHWAYS
UTILITIES UNIT
1555 MAIL SERVICES CENTER
RALEIGH NC 27699–1555
PHONE (919) 707–6690
FAX (919) 250–4151

Michael Bright, PE	*UTILITIES REGIONAL ENGINEER*
	UTILITIES ENGINEER
	UTILITIES AREA COORDINATOR
	UTILITIES COORDINATOR

USER NAME = s0mcbride
DGN = ...\R-5779_UC_01.dgn
SYSTEM = ...

DocuSign Envelope ID: 28C4C27E-F9F9-4CE8-9593-E8969CE3EF26

PROJECT REFERENCE NO.	SHEET NO.
R-5779	UC-2

STATE OF NORTH CAROLINA, DIVISION OF HIGHWAYS

CONVENTIONAL PLAN SHEET SYMBOLS

Note: Not to Scale

**S.U.E. = Subsurface Utility Engineering*

BOUNDARIES AND PROPERTY:

- State Line
- County Line
- Township Line
- City Line
- Reservation Line
- Property Line
- Existing Iron Pin — EIP
- Computed Property Corner
- Property Monument — ECM
- Parcel/Sequence Number — 123
- Existing Fence Line
- Proposed Woven Wire Fence
- Proposed Chain Link Fence
- Proposed Barbed Wire Fence
- Existing Wetland Boundary — WLB
- Proposed Wetland Boundary — WLB
- Existing Endangered Animal Boundary — EAB
- Existing Endangered Plant Boundary — EPB
- Existing Historic Property Boundary — HPB
- Known Contamination Area: Soil — S
- Potential Contamination Area: Soil — S
- Known Contamination Area: Water — W
- Potential Contamination Area: Water — W
- Contaminated Site: Known or Potential

BUILDINGS AND OTHER CULTURE:

- Gas Pump Vent or U/G Tank Cap
- Sign — S
- Well — W
- Small Mine
- Foundation
- Area Outline
- Cemetery
- Building
- School
- Church
- Dam

HYDROLOGY:

- Stream or Body of Water
- Hydro, Pool or Reservoir
- Jurisdictional Stream — JS
- Buffer Zone 1 — BZ 1
- Buffer Zone 2 — BZ 2
- Flow Arrow
- Disappearing Stream
- Spring
- Wetland
- Proposed Lateral, Tail, Head Ditch — FLOW
- False Sump

RAILROADS:

- Standard Gauge — CSX TRANSPORTATION
- RR Signal Milepost — MILEPOST 35
- Switch — SWITCH
- RR Abandoned
- RR Dismantled

RIGHT OF WAY & PROJECT CONTROL:

- Secondary Horiz and Vert Control Point
- Primary Horiz Control Point
- Primary Horiz and Vert Control Point
- Exist Permanent Easment Pin and Cap
- New Permanent Easement Pin and Cap
- Vertical Benchmark
- Existing Right of Way Marker
- Existing Right of Way Line
- New Right of Way Line — RW
- New Right of Way Line with Pin and Cap — RW
- New Right of Way Line with Concrete or Granite R/W Marker — RW
- New Control of Access Line with Concrete C/A Marker — CA
- Existing Control of Access — CA
- New Control of Access — CA
- Existing Easement Line — E
- New Temporary Construction Easement — E
- New Temporary Drainage Easement — TDE
- New Permanent Drainage Easement — PDE
- New Permanent Drainage / Utility Easement — DUE
- New Permanent Utility Easement — PUE
- New Temporary Utility Easement — TUE
- New Aerial Utility Easement — AUE

ROADS AND RELATED FEATURES:

- Existing Edge of Pavement
- Existing Curb
- Proposed Slope Stakes Cut — C
- Proposed Slope Stakes Fill — F
- Proposed Curb Ramp — CR
- Existing Metal Guardrail
- Proposed Guardrail
- Existing Cable Guiderail
- Proposed Cable Guiderail
- Equality Symbol
- Pavement Removal

VEGETATION:

- Single Tree
- Single Shrub
- Hedge
- Woods Line
- Orchard
- Vineyard — Vineyard

EXISTING STRUCTURES:

MAJOR:

- Bridge, Tunnel or Box Culvert — CONC
- Bridge Wing Wall, Head Wall and End Wall — CONC WW

MINOR:

- Head and End Wall — CONC HW
- Pipe Culvert
- Footbridge
- Drainage Box: Catch Basin, DI or JB — CB
- Paved Ditch Gutter
- Storm Sewer Manhole — S
- Storm Sewer — S

UTILITIES:

POWER:

- Existing Power Pole
- Proposed Power Pole
- Existing Joint Use Pole
- Proposed Joint Use Pole
- Power Manhole — P
- Power Line Tower
- Power Transformer
- U/G Power Cable Hand Hole
- H-Frame Pole
- U/G Power Line LOS B (S.U.E.*) — P
- U/G Power Line LOS C (S.U.E.*) — P
- U/G Power Line LOS D (S.U.E.*) — P

TELEPHONE:

- Existing Telephone Pole
- Proposed Telephone Pole
- Telephone Manhole — T
- Telephone Pedestal — T
- Telephone Cell Tower
- U/G Telephone Cable Hand Hole — HH
- U/G Telephone Cable LOS B (S.U.E.*) — T
- U/G Telephone Cable LOS C (S.U.E.*) — T
- U/G Telephone Cable LOS D (S.U.E.*) — T
- U/G Telephone Conduit LOS B (S.U.E.*) — TC
- U/G Telephone Conduit LOS C (S.U.E.*) — TC
- U/G Telephone Conduit LOS D (S.U.E.*) — TC
- U/G Fiber Optics Cable LOS B (S.U.E.*) — T FO
- U/G Fiber Optics Cable LOS C (S.U.E.*) — T FO
- U/G Fiber Optics Cable LOS D (S.U.E.*) — T FO

WATER:

- Water Manhole — W
- Water Meter
- Water Valve
- Water Hydrant
- U/G Water Line LOS B (S.U.E*) — W
- U/G Water Line LOS C (S.U.E*) — W
- U/G Water Line LOS D (S.U.E*) — W
- Above Ground Water Line — A/G Water

TV:

- TV Pedestal — C
- TV Tower
- U/G TV Cable Hand Hole — HH
- U/G TV Cable LOS B (S.U.E.*) — TV
- U/G TV Cable LOS C (S.U.E.*) — TV
- U/G TV Cable LOS D (S.U.E.*) — TV
- U/G Fiber Optic Cable LOS B (S.U.E.*) — TV FO
- U/G Fiber Optic Cable LOS C (S.U.E.*) — TV FO
- U/G Fiber Optic Cable LOS D (S.U.E.*) — TV FO

GAS:

- Gas Valve
- Gas Meter
- U/G Gas Line LOS B (S.U.E.*) — G
- U/G Gas Line LOS C (S.U.E.*) — G
- U/G Gas Line LOS D (S.U.E.*) — G
- Above Ground Gas Line — A/G Gas

SANITARY SEWER:

- Sanitary Sewer Manhole
- Sanitary Sewer Cleanout
- U/G Sanitary Sewer Line — SS
- Above Ground Sanitary Sewer — A/G Sanitary Sewer
- SS Forced Main Line LOS B (S.U.E.*) — FSS
- SS Forced Main Line LOS C (S.U.E.*) — FSS
- SS Forced Main Line LOS D (S.U.E.*) — FSS

MISCELLANEOUS:

- Utility Pole
- Utility Pole with Base
- Utility Located Object
- Utility Traffic Signal Box — S
- Utility Unknown U/G Line LOS B (S.U.E.*) — ?UTL
- U/G Tank; Water, Gas, Oil
- Underground Storage Tank, Approx. Loc. — UST
- A/G Tank; Water, Gas, Oil
- Geoenvironmental Boring
- U/G Test Hole LOS A (S.U.E.*)
- Abandoned According to Utility Records — AATUR
- End of Information — E.O.I.

REVISIONS

10/12/2009

DocuSign Envelope ID: 28C4C27E-F9F9-4CE8-9593-E8969CE3EF26

5/14/99

REVISIONS

UTILITY CONSTRUCTION

GENERAL NOTES:

1. ELEVATIONS SHOWN ARE IN FEET ABOVE MEAN SEA LEVEL.

2. LOCATIONS OF EXISTING SHOWN UTILITIES ARE APPROXIMATE.CONTRACTOR SHALL BE RESPONSIBLE FOR FIELD VERIFYING EXACT LOCATION.ORIENTATION. AND ELEVATION OF EXISTING UTILITIES PRIOR TO EXCAVATION.

3. THE CONTRACTOR SHALL NOTIFY THE ENGINEER IMMEDIATELY SHOULD ANY FIELD CONDITIONS BE ENCOUNTERED THAT VARY FROM THE INFORMATION PROVIDED IN THE CONTRACT DOCUMENTS.

4. UNLESS OTHERWISE SHOWN OR SPECIFIED.ALL WATER LINE AND SEWER FORCE MAIN TRENCH BEDDING SHALL BE PER DETAIL 3/3A.

5. BURIED TELEPHONE AND CATV CABLES (FIBER OPTICS AND CONVENTIONAL) ARE KNOWN TO VARY DUE TO INSTALLATION TECHNIQUES.THE CONTRACTOR SHALL BE FULLY RESPONSIBLE FOR COORDINATING WITH THE UTILITY COMPANY TO DETERMINE SPECIFIC CABLE LOCATIONS AND NOTIFYING THE ENGINEER OF THE EXACT ELEVATION OF THE CABLES.THE CONTRACTOR SHALL BE RESOPNSIBLE FOR ALL COSTS ASSOCIATED WITH LOCATING.RELOCTING.OR REPAIRING BURIED CABLES DAMAGED DURING CONSTRUCTION.

6. THE CONTRACTOR SHALL FURNISH AND INSTALL ALL SHEETING REQUIRED FOR UTILITY CONSTRUCTION.ALL EXCAVATIONS SHALL BE KEPT WITHIN THE DESIGNATED EASEMENT AND/OR RIGHT-OF-WAY WIDTHS.SHEETING SHALL BE INSTALLED AS REQUIRED TO PROTECT EXISTING UTILITIES.

7. NCDOT WILL FURNISH DESCRIPTION OF EASEMENTS UPON REQUEST.

8. THE CONTRACTOR SHALL RESTORE GRADE TO PRE-CONSTRUCTION CONDITION UNLESS OTHERWISE NOTED ON THE DRAWINGS.

9. CONTRACTOR SHALL PROVIDE A MEANS TO KEEP ALL NEW PIPING ISOLATED FROM EXISTING PIPING UNTIL ALL NEW PIPING HAS BEEN PRESSURE TESTED. FLUSHED.AND ACCEPTED BY THE TOWN OF MARS HILL FOR SERVICE.

10. CONTRACTOR SHALL FIELD VERIFY EXACT LOCATION.ELEVATION.ORIENTATION. DIMENSIONS.MATERIALS.ETC.OF EXISTING PIPE PRIOR TO ORDERING MATERIAL AND SHALL USE NECESSARY FITTINGS FOR THE CONNECTION.

11. THE CONTRACTOR SHALL BE RESPONSIBLE FOR COORDINATING WITH THE TOWN OF MARS HILL FOR ANY ADDITIONAL INFORMATION ON EXISTING WATER AND SEWER UTILITIES.

12. ALL PROPOSED PIPE SHALL BE RESTRAINED JOINT PIPE.IF A BEND OR FITTING IS RELOCATED BY THE CONTRACTOR FOR HIS CONVENIENCE THEN THE REQUIRED LENGTH OF RESTRAINED JOINTS SHALL BE MAINTAINED AT NO ADDITIONAL COST TO THE OWNER.IF ADDITIONAL BENDS OR FITTINGS ARE INSTALLED BY THE CONTRACTOR FOR HIS CONVENIENCE.THEN THE CONTRACTOR SHALL INSTALL THE REQUIRED LENGTH OF RESTRAINED JOINTS AS DETERMINED BY THE ENGINEER.AT NO ADDITIONAL COST TO THE OWNER.

13. ALL PRESSURIZED PIPE FITTINGS SHALL BE RESTRAINED JOINT.

14. WATER LINE AND FORCE MAIN ALIGNMENTS SHOWN ON THE DRAWINGS ARE BASED ON STANDARD FITTINGS AVAILABLE FOR DUCTILE IRON PIPE.JOINT DEFLECTIONS SHALL NOT EXCEED 75 PERCENT OF MANUFACTURER'S RECOMMENDED DEFLECTION.

15. DETECTOR TAPE SHALL BE INSTALLED ON ALL BURIED PIPE.

16. ALL MANHOLE COVERS AND VALVE BOX LIDS FOR WATER LINE SHALL READ "WATER".ALL MANHOLE COVERS AND VALVE BOX LIDS FOR SEWER LINE AND FORCE MAIN SHALL READ "SEWER".

STANDARD UTILITY NOTES:

1. ALL MATERIALS & CONSTRUCTION METHODS SHALL BE IN ACCORDANCE WITH NCDOT 2018 STANDARD SPECIFICATIONS FOR ROADS AND STRUCTURES.

2. UTILITY SEPARATION REQUIREMENTS:
   - A. A DISTANCE OF 100' SHALL BE MAINTAINED BETWEEN SANITARY SEWER & ANY PRIVATE OR PUBLIC WATER SUPPLY SOURCE SUCH AS AN IMPOUNDED RESERVOIR USED AS A SOURCE OF DRINKING WATER.IF ADEQUATE LATERAL SEPARATION CANNOT BE ACHIEVED.FERROUS SANITARY SEWER PIPE SHALL BE SPECIFIED & INSTALLED TO WATERLINE SPECIFICATIONS. HOWEVER.THE MINIMUM SEPARATION SHALL NOT BE LESS THAN 25' FROM A PRIVATE WELL OR 50' FROM A PUBLIC WELL.
   - B. WHEN INSTALLING WATER &/OR SEWER MAINS.THE HORIZONTAL SEPARATION BETWEEN UTILITIES SHALL BE 10'.IF THIS SEPARATION CANNOT BE MAINTAINED DUE TO EXISTING CONDITIONS.THE VARIATION ALLOWED IS THE WATER MAIN IN A SEPARATE TRENCH WITH THE ELEVATION OF THE WATER MAIN AT LEAST 18" ABOVE THE TOP OF THE SEWER & MUST BE APPROVED BY THE PUBLIC UTILITIES DIRECTOR. ALL DISTANCES ARE MEASURED FROM OUT'SIDE DIAMETER TO OUTSIDE DIAMETER.
   - C. WHERE IT IS IMPOSSIBLE TO OBTAIN PROPER SEPARATION.OR ANYTIME A SANITARY SEWER PASSES OVER A WATERMAIN.DIP MATERIALS OR STEEL ENCASEMENT EXTENDED 10' ON EACH SIDE OF CROSSING MUST BE SPECIFIED & INSTALLED TO WATERLINE SPECIFICATIONS.
   - D. 5.0' MINIMUM HORIZONTAL SEPARATION IS REQUIRED BETWEEN ALL SANITARY SEWER & STORM SEWER FACILITIES.UNLESS DIP MATERIAL IS SPECIFIED FOR SANITARY SEWER.
   - E. MAINTAIN 18" MIN.VERTICAL SEPARATION AT ALL WATERMAIN & RCP STORM DRAIN CROSSINGS; MAINTAIN 24" MIN.VERTICAL SEPARATION AT ALL SANITARY SEWER & RCP STORM DRAIN CROSSINGS. WHERE ADEQUATE SEPARATIONS CANNOT BE ACHIEVED.SPECIFY DIP MATERIALS & A CONCRETE CRADLE HAVING 6" MIN.CLEARANCE (PER DETAIL 8/3A).
   - F. ALL OTHER UNDERGROUND UTILITIES SHALL CROSS WATER & SEWER FACILITIES WITH 18" MIN.VERTICAL SEPARATION REQUIRED.

3. ANY NECESSARY FIELD REVISIONS ARE SUBJECT TO REVIEW & APPROVAL OF AN AMENDED PLAN &/OR PROFILE BY NCDOT AND THE TOWN OF MARS HILL PRIOR TO CONSTRUCTION.

4. CONTRACTOR SHALL MAINTAIN CONTINUOUS WATER & SEWER SERVICE TO EXISTING RESIDENCES & BUSINESSES THROUGHOUT CONSTRUCTION OF PROJECT.ANY NECESSARY SERVICE INTERRUPTIONS SHALL BE PRECEDED BY A 72 HOUR ADVANCE NOTICE TO THE TOWN OF MARS HILL.

5. 3.5' MINIMUM COVER IS REQUIRED ON ALL WATER MAINS & SEWER FORCE MAINS.

6. IT IS THE DEVELOPER'S RESPONSIBILITY TO ABANDON OR REMOVE EXISTING WATER & SEWER SERVICES NOT BEING USED IN REDEVELOPMENT OF A SITE UNLESS OTHERWISE DIRECTED BY THE TOWN OF MARS HILL.THIS INCLUDES ABANDONING TAP AT MAIN & REMOVAL OF SERVICE FROM ROW OR EASEMENT.

7. INSTALL WATER SERVICES WITH METERS LOCATED AT ROW OR WITHIN A 2'X2' WATERLINE EASEMENT IMMEDIATELY ADJACENT.

8. INSTALL 4" PVC SEWER SERVICES @ 1.0% MINIMUM GRADE WITH CLEANOUTS LOCATED AT ROW OR EASEMENT LINE & SPACED EVERY 75 LINEAR FEET MAXIMUM.

9. ALL ENVIRONMENTAL PERMITS APPLICABLE TO THE PROJECT MUST BE OBTAINED FROM NCDWQ.USACE &/OR FEMA FOR ANY RIPARIAN BUFFER. WETLAND &/OR FLOODPLAIN IMPACTS (RESPECTIVELY) PRIOR TO CONSTRUCTION.

10. NCDOT / RAILROAD ENCROACHMENT AGREEMENTS ARE REQUIRED FOR ANY UTILITY WORK (INCLUDING MAIN EXTENSIONS & SERVICE TAPS) WITHIN STATE OR RAILROAD ROW PRIOR TO CONSTRUCTION.

11. CROSS-CONNECTION CONTROL PROTECTION DEVICES ARE REQUIRED BASED ON DEGREE OF HEALTH HAZARD INVOLVED AS LISTED IN APPENDIX-B OF THE RULES GOVERNING PUBLIC WATER SYSTEMS IN NORTH CAROLINA. THESE GUIDELINES ARE THE MINIMUM REQUIREMENTS.THE DEVICES SHALL MEET AMERICAN SOCIETY OF SANITARY ENGINEERING (ASSE) STANDARDS OR BE ON THE UNIVERSITY OF SOUTHERN CALIFORNIA APPROVAL LIST.THE DEVICES SHALL BE INSTALLED AND TESTED (BOTH INITIAL AND PERIODIC TESTING THEREAFTER) IN ACCORDANCE WITH THE MANUFACTURER'S RECOMMENDATIONS OR THE LOCAL CROSS-CONNECTION CONTROL PROGRAM.WHICHEVER IS MORE STRINGENT.

PROJECT SPECIFIC NOTES:

1. ALL CONSTRUCTION TO BE IN ACCORDANCE WITH ALL TOWN OF MARS HILL AND/OR NCDOT STANDARDS AND SPECIFICATIONS.

2. ALL PROPOSED WATER LINE AND PIPE AND FITTINGS SHALL BE RESTRAINED JOINT PC 350 DUCTILE IRON PIPE.

3. ALL PROPOSED SEWER FORCE MAIN PIPE AND FITTINGS SHALL BE PROTECTO 401-LINED RESTRAINED JOINT PC 350 DUCTILE IRON PIPE.

4. A THRUST RESTRAINT DESIGN PRESSURE OF 350 PSI SHALL BE USED.

Kimley»Horn ©2018
421 FAYETTEVILLE ST, SUITE 600
RALEIGH, N.C. 27601

PROJECT REFERENCE NO.	SHEET NO.
R-5779	UC-3

DESIGNED BY: DGB
DRAWN BY: DGB
CHECKED BY: ZGP
APPROVED BY: NDR
REVISED:

NORTH CAROLINA DEPARTMENT OF TRANSPORTATION

UTILITIES ENGINEERING SEC.
PHONE:(919)707-6690
FAX:(919)250-4151

NORTH CAROLINA PROFESSIONAL SEAL 040037 ENGINEER DANIEL G. BULA
DocuSigned by: Daniel G. Bula
10/2/2019

UTILITY CONSTRUCTION PLANS ONLY

UTILITY CONSTRUCTION

10/2/2019

DocuSign Envelope ID: 28C4C27E-F9F9-4CE8-9593-E8969CE3EF26

Kimley»Horn ©2014
P.O. BOX 33068 • RALEIGH, N.C. 27636-3068

PROJECT REFERENCE NO.	SHEET NO.
R-5779	UC-3A
DESIGNED BY: DGB	
DRAWN BY: DGB	
CHECKED BY: ZGP	
APPROVED BY: NDR	
REVISED:	
NORTH CAROLINA DEPARTMENT OF TRANSPORTATION	
UTILITIES ENGINEERING SEC. PHONE:(919)707-6690 FAX:(919)250-4151	UTILITY CONSTRUCTION PLANS ONLY

NORTH CAROLINA PROFESSIONAL SEAL 049021 ENGINEER DANIEL G. BULA
DocuSign Envelope ID: 28C4C27E-F9F9-4CE8-9593-E8969CE3EF26
10/2/2019

UTILITY CONSTRUCTION

REVISIONS

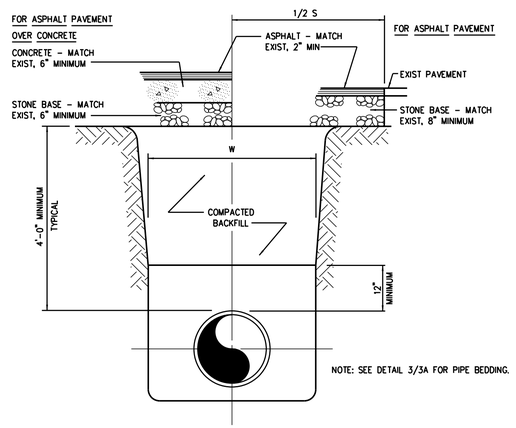

1 TYPICAL TRENCH
Not to Scale

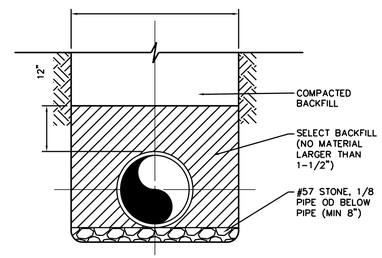

2 TYPE B BEDDING
Not to Scale

TRENCH EXCAVATION LIMITS		
INTERNAL DIAMETER OF PIPE	W WIDTH OF TRENCH	
	MAX	W=MIN
4"-6"	3'-9"	2'-0"
8"-10"	3'-9"	2'-2"
12"	3'-9"	O.D.+2'
14"-16"	4'-2"	O.D.+2'
18"	4'-4"	O.D.+2'
20",21"	4'-8"	O.D.+2'
24"	4'-11"	O.D.+2'
27"	5'-9"	O.D.+2'
30"	6'-7"	O.D.+2'
36"	7'-4"	O.D.+2'
42"	8'-2"	O.D.+2'
48"	8'-9"	O.D.+2'
54"	9'-4"	O.D.+2'
60"	9'-10"	O.D.+2'
72"	11'-0"	O.D.+2'
78"	11'-8"	O.D.+2'
84"	12'-0"	O.D.+2'
90"	12'-6"	O.D.+2'
96"	13'-0"	O.D.+2'
108"	14'-0"	O.D.+2'
DEPTH OF CUT	S MAXIMUM PAVEMENT REPLACEMENT WIDTH	
0-6'	S=W+4'	
>6-8'	S=W+8'	
>8-10'	S=W+12'	
>10-12'	S=W+16'	
>12-14'	S=W+20'	
>14-16'	S=W+24'	
>16-18'	S=W+28'	
>18'	S=W+32'	

W = TRENCH WIDTH AT BOTTOM OF PIPE. TRENCH SIDE SLOPES SHALL BE IN ACCORDANCE WITH OSHA REQUIREMENTS.

3 TRENCH EXCAVATION LIMITS
Not to Scale

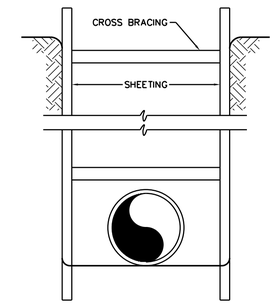

4 TYPICAL SHEETING
Not to Scale

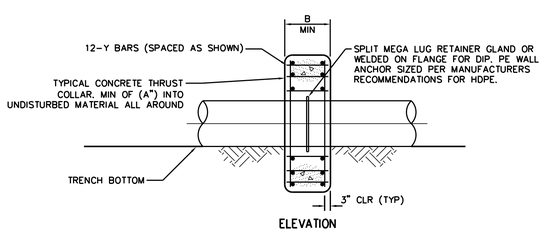

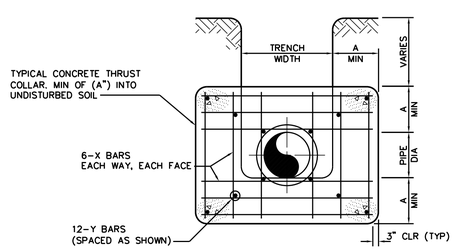

PIPE SIZE	X BARS	Y BARS	A	B
6"-36"	#5	#5	1'-4"	1'-7"
42"& >	#6	#6	1'-8"	1'-9"

5 THRUST COLLARS
Not to Scale

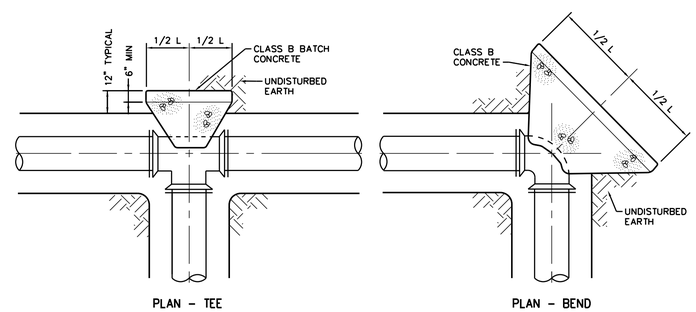

CONCRETE THRUST BLOCK SCHEDULE*									
PIPE SIZE (IN)	BEND								DESIGN PRESSURE (PSI)
	90°/TEE		45°		22 1/2°		11 1/4° & 5 5/8°		
	H	L	H	L	H	L	H	L	
6.0	2.6	5.3	1.9	3.9	1.4	2.8	1.0	2.0	350
8.0	3.5	7.0	2.5	5.1	1.8	3.7	1.3	2.6	350
10.0	4.2	8.5	3.1	6.3	2.2	4.5	1.6	3.2	350
12.0	5.0	10.1	3.7	7.5	2.6	5.3	1.9	3.8	350
14.0	5.8	11.7	4.3	8.6	3.1	6.2	2.2	4.4	350
16.0	6.6	13.3	4.9	9.8	3.5	7.0	2.5	5.0	350
18.0	7.4	14.9	5.5	11.0	3.9	7.9	2.8	5.6	350
20.0	8.2	16.5	6.1	12.2	4.3	8.7	3.1	6.2	350
24.0	9.9	19.8	7.2	14.5	5.2	10.4	3.7	7.4	350
30.0	12.2	24.5	9.0	18.0	6.4	12.9	4.5	9.1	350
36.0	14.6	29.3	10.8	21.6	7.7	15.4	5.4	10.9	350
42.0	17.0	34.0	12.5	25.0	8.9	17.9	6.3	12.7	350
48.0	19.4	38.8	14.3	28.6	10.2	20.4	7.2	14.5	350
54.0	22.0	44.0	16.2	32.4	11.5	23.1	8.2	16.4	350
60.0	23.5	47.1	17.3	34.7	12.4	24.8	8.8	17.6	350
64.0	25.1	50.2	18.4	36.9	13.2	26.4	9.3	18.7	350

* BASED ON AVERAGE SOIL PASSIVE BEARING STRENGTH OF 2000 PSF USING SF OF 1.5

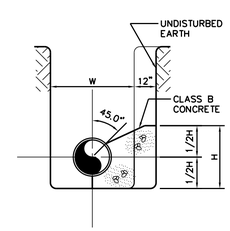

TYPICAL SECTION TEE OR BEND

6 THRUST BLOCKING
Not to Scale

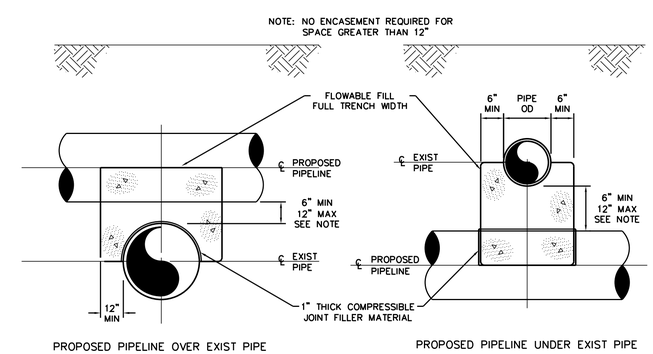

7 PROPOSED PIPE OVER/UNDER EXISTING PIPE
Not to Scale

DocuSign Envelope ID: 28C4C27E-F9F9-4CE8-9593-E8969CE3EF26

Kimley»Horn ©2014
P.O. BOX 33068 • RALEIGH, N.C. 27636-3068

PROJECT REFERENCE NO.	SHEET NO.
R-5779	UC-3B
DESIGNED BY: DGB	
DRAWN BY: DGB	
CHECKED BY: ZGP	
APPROVED BY: NDR	
REVISED:	
NORTH CAROLINA DEPARTMENT OF TRANSPORTATION	
UTILITIES ENGINEERING SEC. PHONE:(919)707-6690 FAX:(919)250-4151	UTILITY CONSTRUCTION PLANS ONLY

NORTH CAROLINA PROFESSIONAL SEAL 040031 ENGINEER DANIEL G. BULA 10/2/2019

UTILITY CONSTRUCTION

REVISIONS

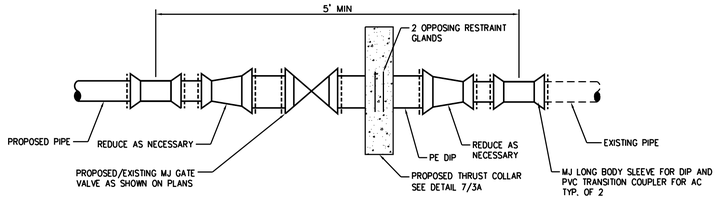

NOTES:
1. CONTRACTOR SHALL ASSEMBLE THE DIP ASSEMBLY PRIOR TO REMOVING THE EXISTING PIPE FROM SERVICE AND BEFORE CUTTING THE EXISTING PIPE. SHUT DOWN TIME OF THE EXISTING LINE SHALL BE MINIMIZED.
2. THE THRUST COLLAR SHALL BE ALLOWED TO CURE A MINIMUM OF 3 DAYS BEFORE ANY BENDS ARE ADDED OR BEFORE GATE VALVE IS CLOSED.

1 THRUST COLLAR CUT-IN
Not to Scale

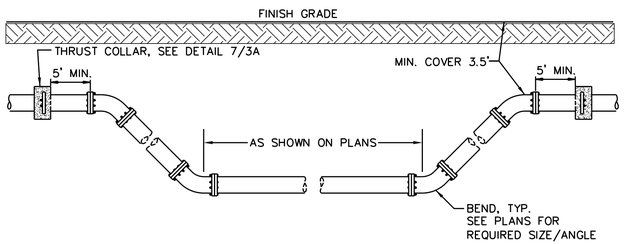

NOTES:
1. MEGALUGS OR RESTRAINED JOINT PIPE AND FITTINGS SHALL BE USED FOR ALL PIPE AND FITTINGS.
2. CONCRETE ENCASED MEGALUGS MAY BE USED IN LIEU OF THRUST COLLARS.
3. ALL PIPE AND FITTINGS BETWEEN THRUST COLLARS SHALL BE RESTRAINED.

2 VERTICAL BENDS
Not to Scale

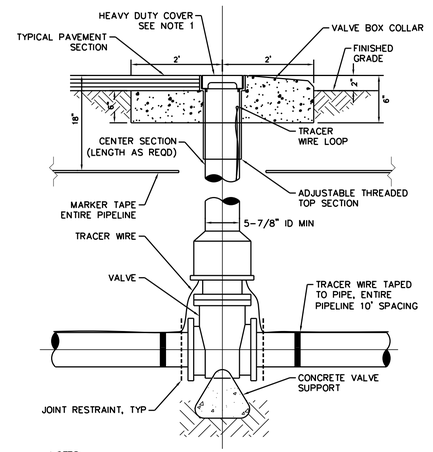

NOTES:
1. LIDS SHALL BE MARKED "WATER" OR "SEWER" AS APPLICABLE AND SHALL BE ASPHALT COATED.

5 GATE VALVE AND VALVE BOX
Not to Scale

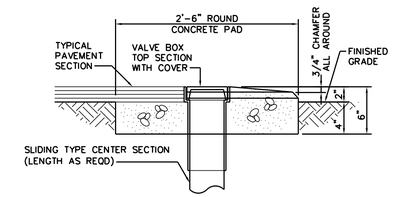

6 VALVE BOX PAD
Not to Scale

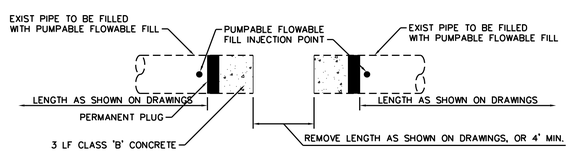

3 CUT AND PLUG EXISTING WATERLINE
Not to Scale

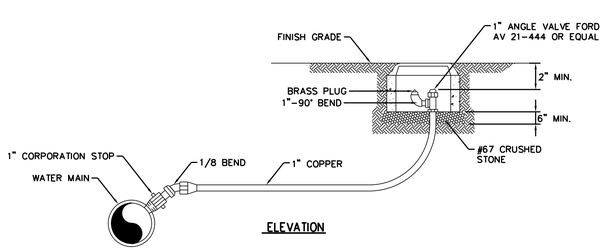

4 DISINFECTION AND SAMPLING POINT
Not to Scale

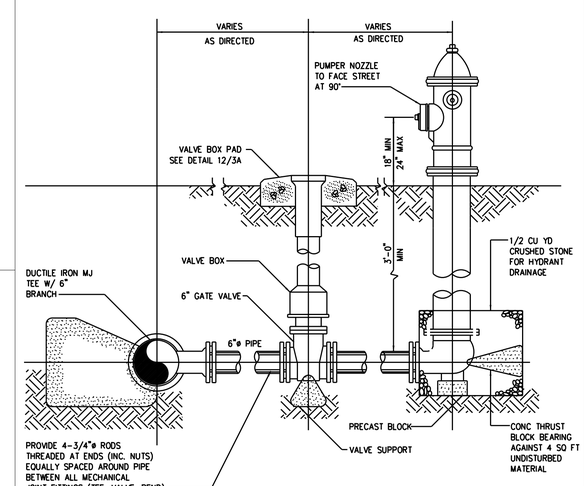

7 FIRE HYDRANT ASSEMBLY
Not to Scale

K:\RAL_Roadway\0I036358 – R-5779\Utilities\Engineering\UCVPro\280_031_0I036358_uc_details.dgn
10/2/2019

DocuSign Envelope ID: 28C4C27E-F9F9-4CE8-9593-E8969CE3EF26

Kimley»Horn ©2014
P.O. BOX 33068 • RALEIGH, N.C. 27636-3068

PROJECT REFERENCE NO.	SHEET NO.
R-5779	UC-4
DESIGNED BY: DGB	
DRAWN BY: DGB	
CHECKED BY: ZGP	
APPROVED BY: NDR	
REVISED:	
NORTH CAROLINA DEPARTMENT OF TRANSPORTATION	
UTILITIES ENGINEERING SEC. PHONE:(919)707-6690 FAX:(919)250-4151	UTILITY CONSTRUCTION PLANS ONLY

NORTH CAROLINA PROFESSIONAL SEAL 040031 ENGINEER DANIEL G. BULA
DocuSigned by: Daniel G. Bula
10/2/2019

UTILITY CONSTRUCTION

NAD 83 /NA 2011

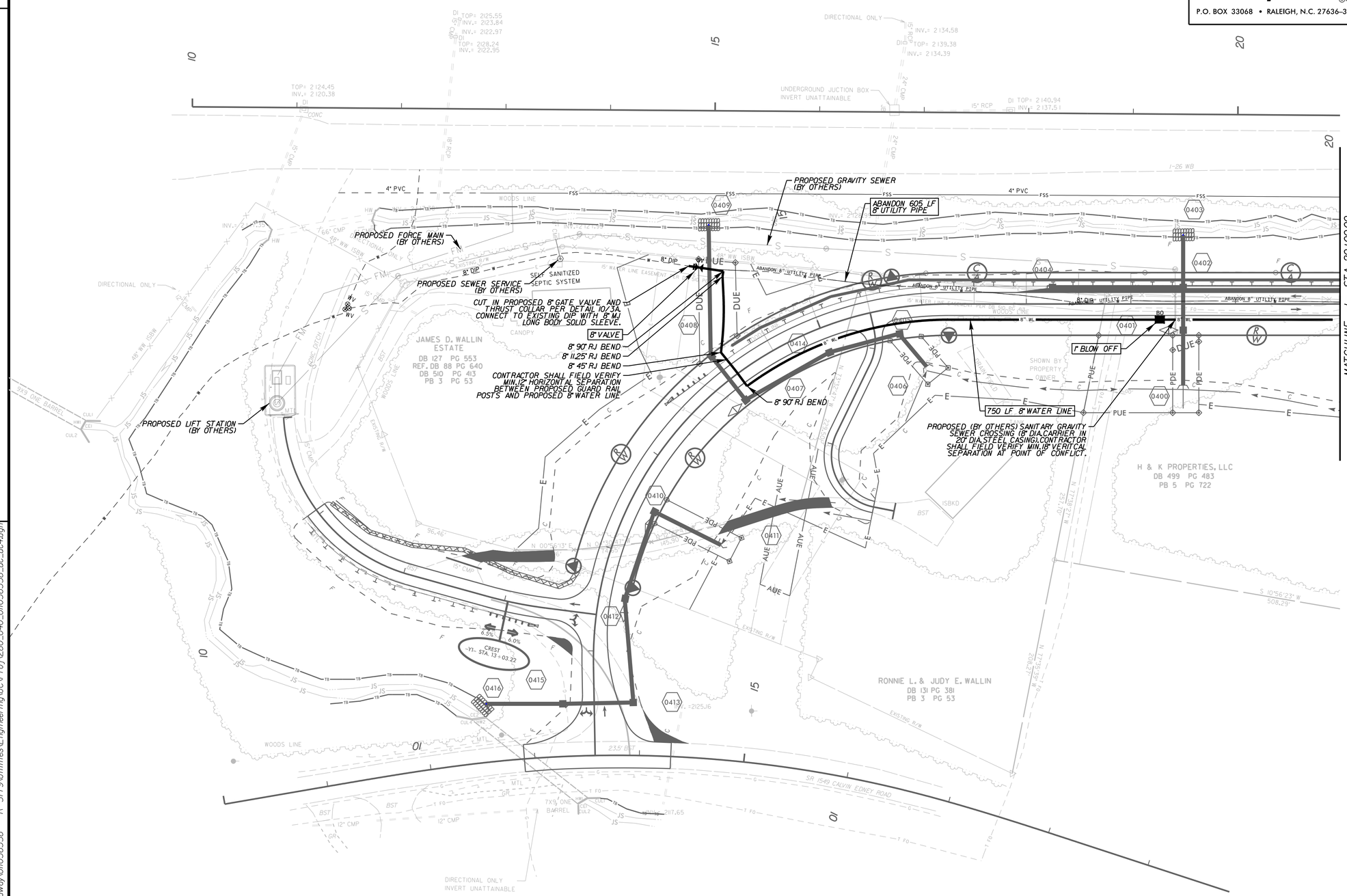

REVISIONS

K:\RAL_Roadway\011036358 - R-5779\Utilities\Engineering\UC\Proj\280_040_011036358_uc_uc4.dgn

10/2/2019

DocuSign Envelope ID: 28C4C27E-F9F9-4CE8-9593-E8969CE3EF26

REVISIONS

Kimley»Horn ©2014
P.O. BOX 33068 • RALEIGH, N.C. 27636-3068

PROJECT REFERENCE NO.	SHEET NO.
R-5779	UC-5
DESIGNED BY: DGB	
DRAWN BY: DGB	
CHECKED BY: ZGP	
APPROVED BY: NDR	
REVISED:	
NORTH CAROLINA DEPARTMENT OF TRANSPORTATION	
UTILITIES ENGINEERING SEC. PHONE:(919)707-6690 FAX:(919)250-4151	UTILITY CONSTRUCTION PLANS ONLY

NORTH CAROLINA PROFESSIONAL SEAL 026001 ENGINEER DANIEL G. BULA
DocuSigned by: Daniel G. Bula
10/2/2019

UTILITY CONSTRUCTION

NAD 83 /NA 2011

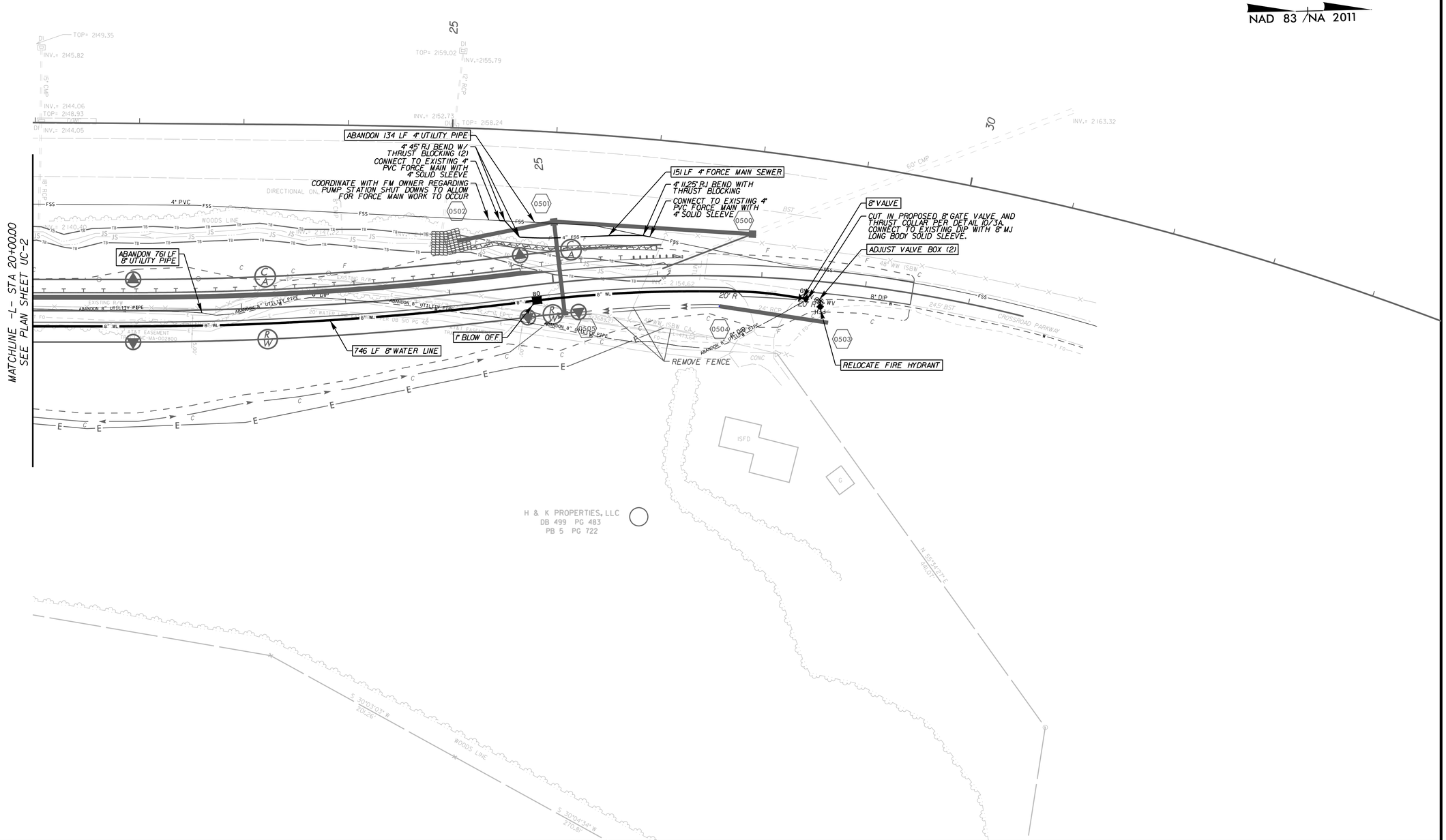

DocuSign Envelope ID: 28C4C27E-F9F9-4CE8-9593-E8969CE3EF26

5/14/99

Kimley»Horn
421 FAYETTEVILLE ST, SUITE 600
RALEIGH, N.C. 27601
© 2018

PROJECT REFERENCE NO.	SHEET NO.
R-5779	UC-6

DESIGNED BY: DGB
DRAWN BY: DGB
CHECKED BY: ZGP
APPROVED BY: NDR
REVISED:

NORTH CAROLINA DEPARTMENT OF TRANSPORTATION

UTILITIES ENGINEERING SEC.
PHONE:(919)707-6690
FAX:(919)250-4151

NORTH CAROLINA PROFESSIONAL SEAL 036731 ENGINEER DANIEL G. BULA
DocuSign Envelope ID: 28C4C27E-F9F9-4CE8-9593-E8969CE3EF26
10/2/2019

UTILITY CONSTRUCTION PLANS ONLY

UTILITY CONSTRUCTION

THE ESTIMATED QUANTITY OF DUCTILE IRON FITTINGS ON THIS PLAN SHEET IS 1182 POUNDS. THE ACTUAL QUANTITY AND TYPE OF FITTING WILL VARY BASED ON FIELD CONDITIONS.

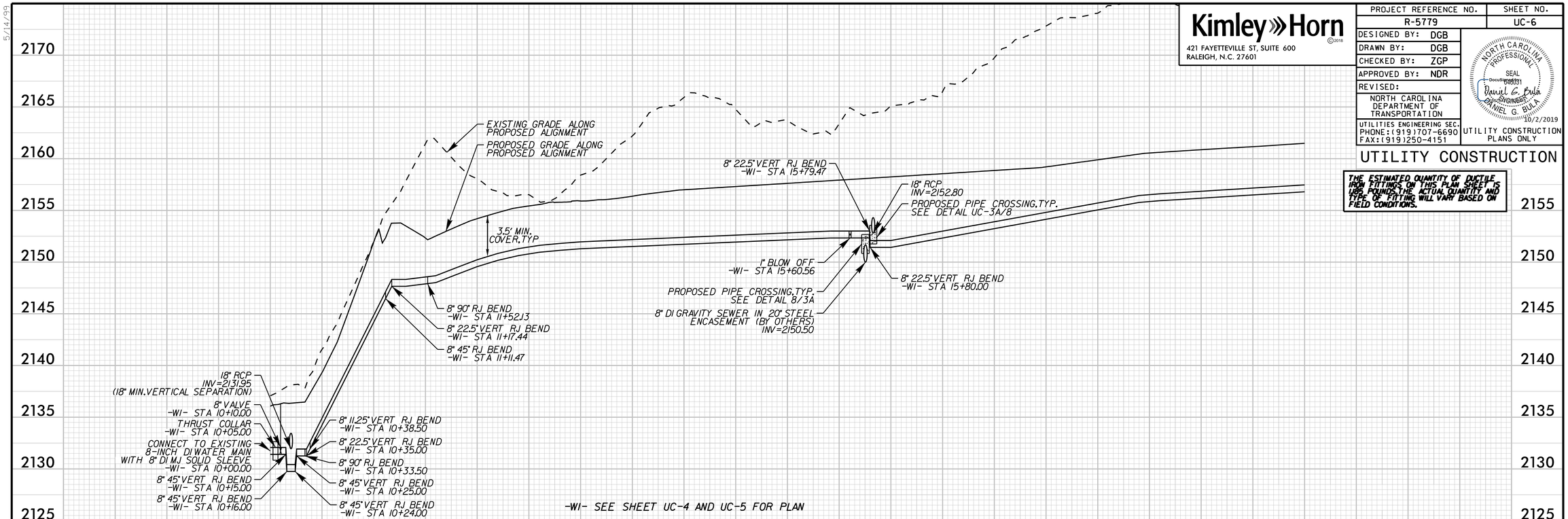

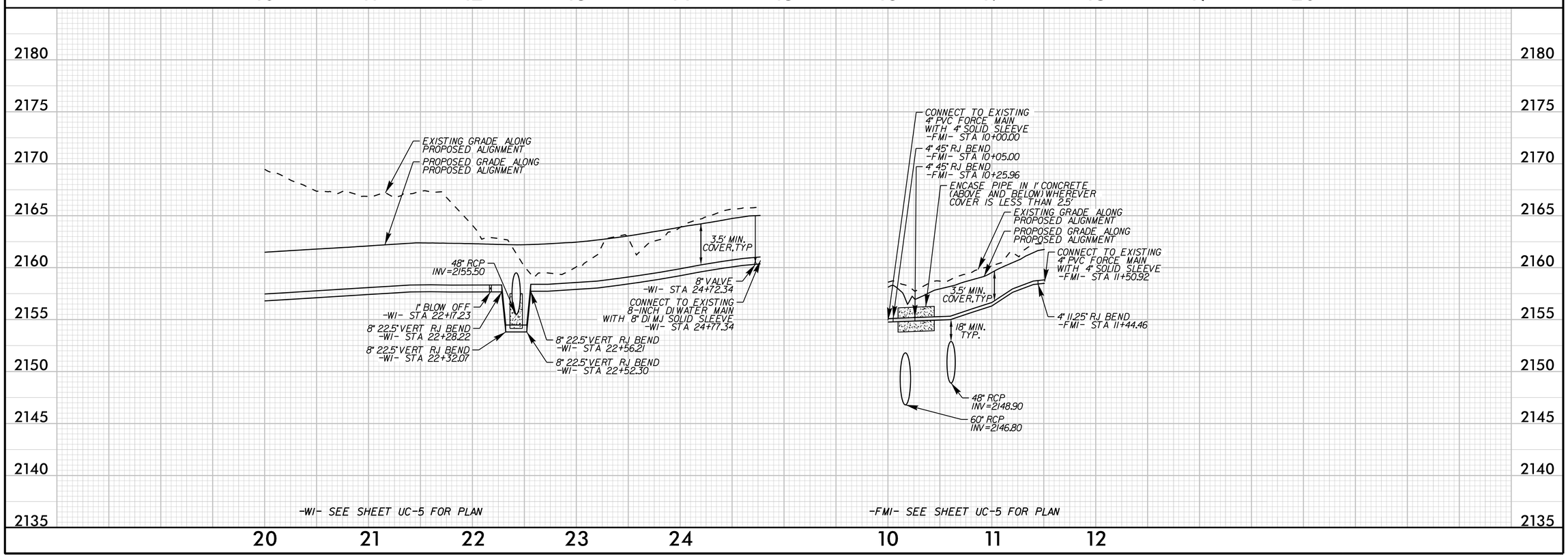

10/2/2019

PROJECT: R-5779

CONTRACT:

K:\RAL_Roadway\01I036358 - R-5779\Utilities\Engineering\UBOVPrOj\0II036358_ubo_uo1.dgn

1/15/2020

STATE OF NORTH CAROLINA
DIVISION OF HIGHWAYS

T.I.P. NO.	SHEET NO.
R-5779	UO-1

UTILITIES BY OTHERS PLANS
MADISON COUNTY

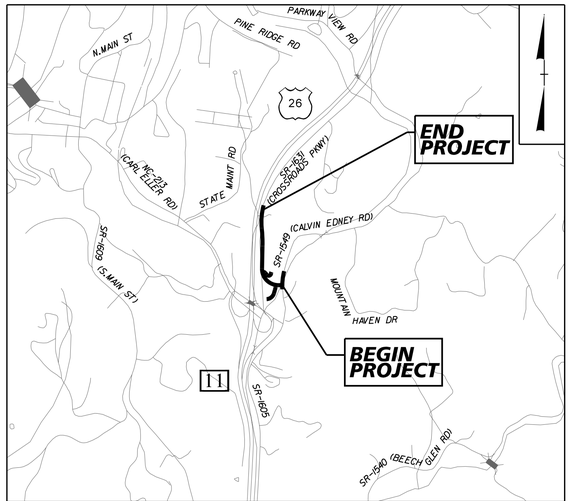

VICINITY MAP

LOCATION: EXTENSION OF SR 1631 (CROSSROADS PARKWAY) SOUTH TO SR 1549 (CALVIN EDNEY ROAD)

TYPE OF WORK: UTILITY RELOCATIONS BY OTHERS

NAD 83/
NSRS 2011

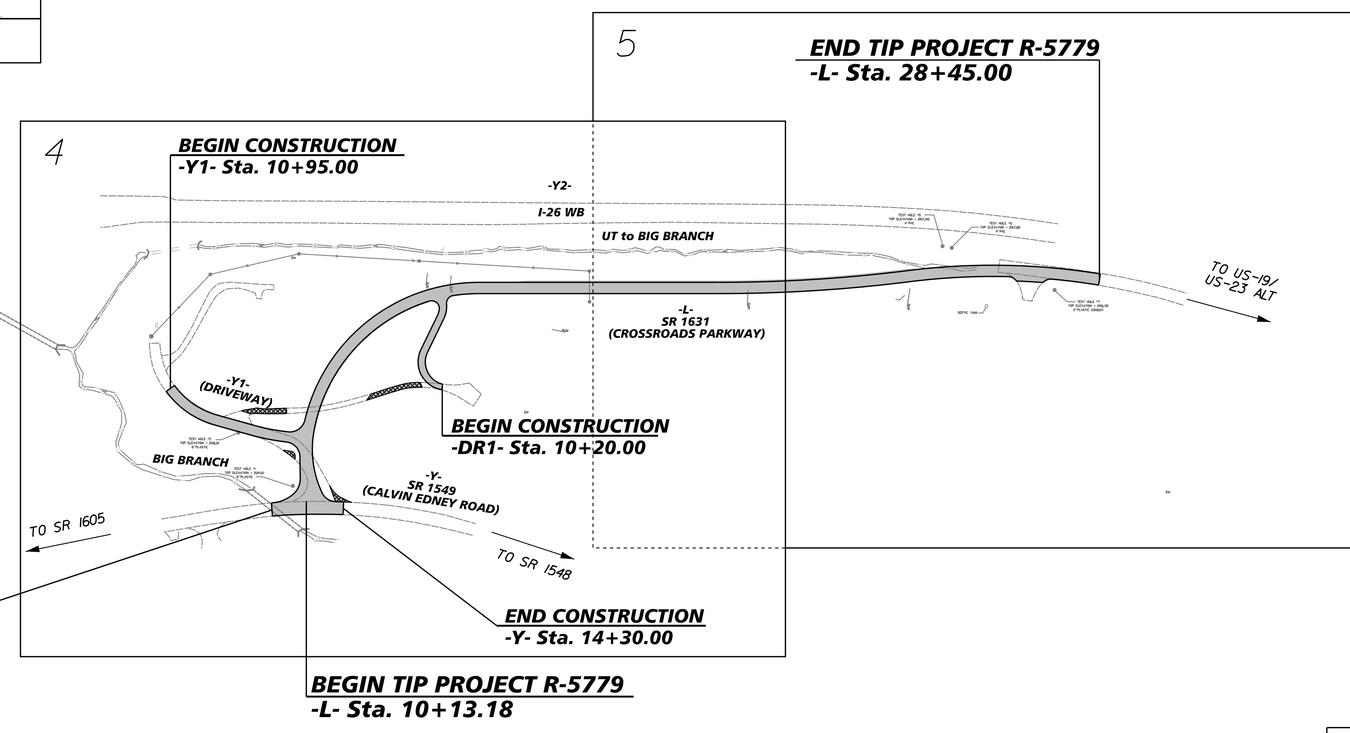

DOCUMENT NOT CONSIDERED FINAL
UNLESS ALL SIGNATURES COMPLETED

GRAPHIC SCALE

50 25 0 50 100
PLANS

INDEX OF SHEETS

SHEET NO.	DESCRIPTION
UO-1	TITLE SHEET
UO-2 THRU UO-3	UTILITY BY OTHERS PLAN SHEETS

UTILITY OWNERS ON PROJECT

(A) POWER – FRENCH BROAD ELECTRIC (DISTRIBUTION): BRENT SMATHERS 828-712-7025
(B) TELEPHONE – AT&T: MATTHEW ATKINS 706-781-4453
(C) CABLE – FRONTIER COMMUNICATIONS: MARK MARSHALL 989-858-6005
(D) CABLE – CHARTER/SPECTRUM: JOSHUA BIGGS 828-230-9250
(D) GAS – PSNC (DISTRIBUTION): MIKE LEWIS 828-670-3550
(F) WATER/FORCEMAIN/SEWER – TOWN OF MARS HILL: BRIAN BAILEY 828-206-1962

PREPARED IN THE OFFICE OF
Kimley»Horn
© 2019
NC LICENSE #F-0102
FAYETTEVILLE STREET, SUITE 600
RALEIGH, NORTH CAROLINA 27601
PHONE: (919) 677-2000

CALEB LOWMAN, P.E. CONSULTANT CONTACT #1
GREGORY BREW, P.E. CONSULTANT CONTACT #2

PREPARED FOR OFFICE OF:
HIGHWAY DIVISION 13

HIGHWAY DIVISION 13
55 ORANGE STREET
ASHEVILLE, NC 28801
PHONE (828) 250-3000
FAX (828) 251-6394

PROJECT REFERENCE NO.	SHEET NO.
R-5779	UO-2

UTILITIES BY OTHERS

NOTE:
ALL PROPOSED UTILITY WORK SHOWN ON THIS SHEET WILL BE DONE BY OTHERS. NO PAYMENT WILL BE MADE TO THE CONTRACTOR FOR PROPOSED UTILITY WORK SHOWN ON THIS SHEET.

NAD 83 /NA 2011

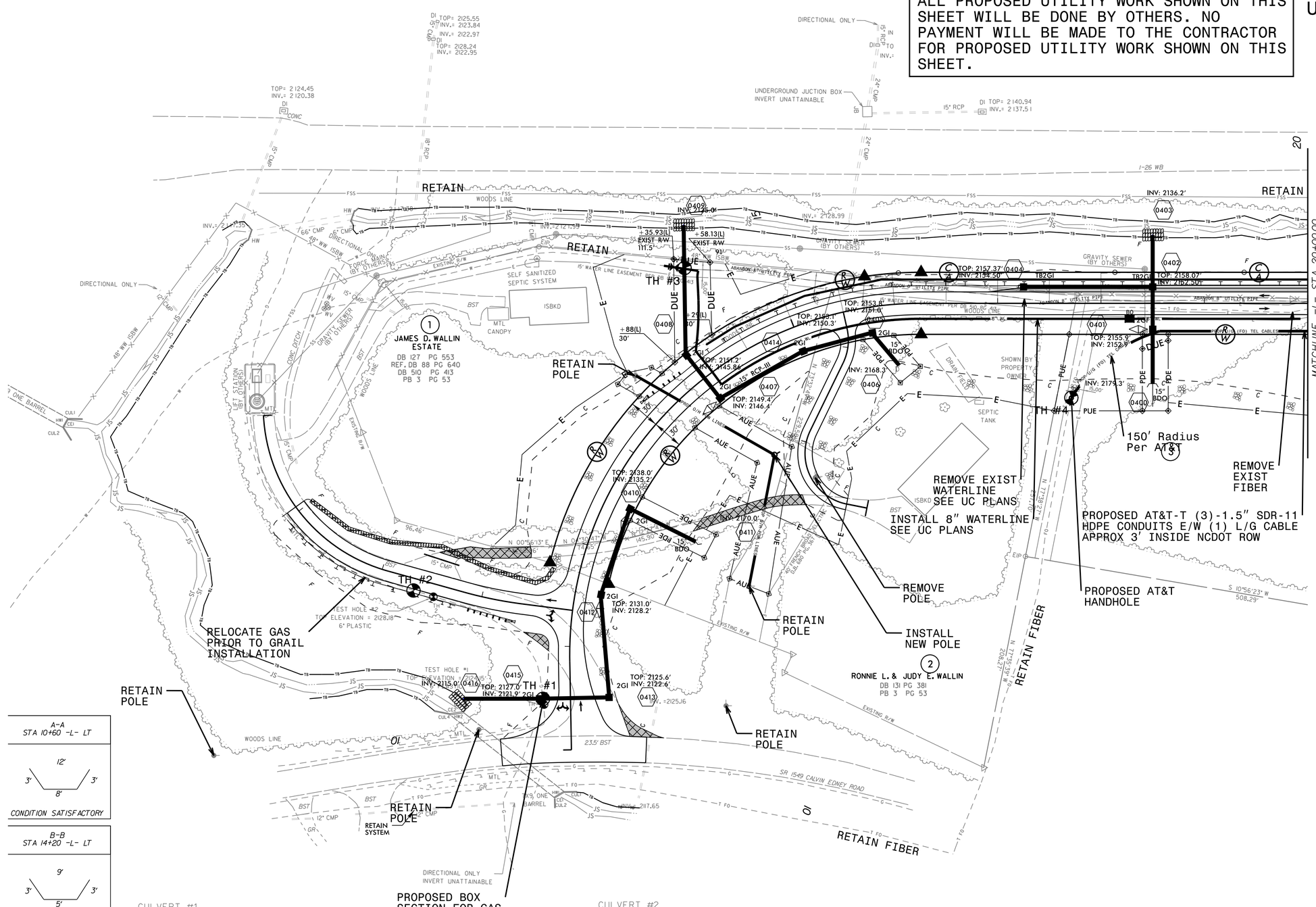

CULVERT #1
ONE BARREL

	NORTH	EAST	ELEV.
CUL1	770914.16	952186.91	2102.41
CUL2	770909.82	952194.09	2102.48
CE1	770912.12	952190.71	2111.44
HW1	770911.48	952190.68	2113.84
CUL3	770743.16	952096.80	2100.28
CUL4	770747.40	952089.51	2100.09
CE2	770745.43	952093.14	2109.19
HW2	770745.57	952093.18	2111.01

CULVERT #2
ONE BARREL

	NORTH	EAST	ELEV.
CUL1	771385.50	952557.79	2110.89
CUL2	771377.77	952562.40	2110.90
CE1	771378.97	952557.83	2117.85
HW1	771380.45	952560.37	2119.71
CUL3	771289.53	952477.12	2109.54
CUL4	771277.51	952478.54	2109.58
CE2	771285.81	952477.72	2116.55
HW2	771282.52	952478.17	2118.34

TEST HOLES

TEST HOLE #1
6" PLASTIC GAS LINE
TOP UTILITY ELEV = 2124.15'

TEST HOLE #2
6" PLASTIC GAS LINE
TOP UTILITY ELEV = 2128.18'

Kimley»Horn

K:\RAL_Roadway\011036358 - R-5779\Utilities\Engineering\UBO\Proj\011036358_ubo_uo2.dgn

1/15/2020

PROJECT REFERENCE NO.	SHEET NO.
R-5779	UO-3

UTILITIES BY OTHERS

NOTE:
ALL PROPOSED UTILITY WORK SHOWN ON THIS SHEET WILL BE DONE BY OTHERS. NO PAYMENT WILL BE MADE TO THE CONTRACTOR FOR PROPOSED UTILITY WORK SHOWN ON THIS SHEET.

NAD 83 /NA 2011

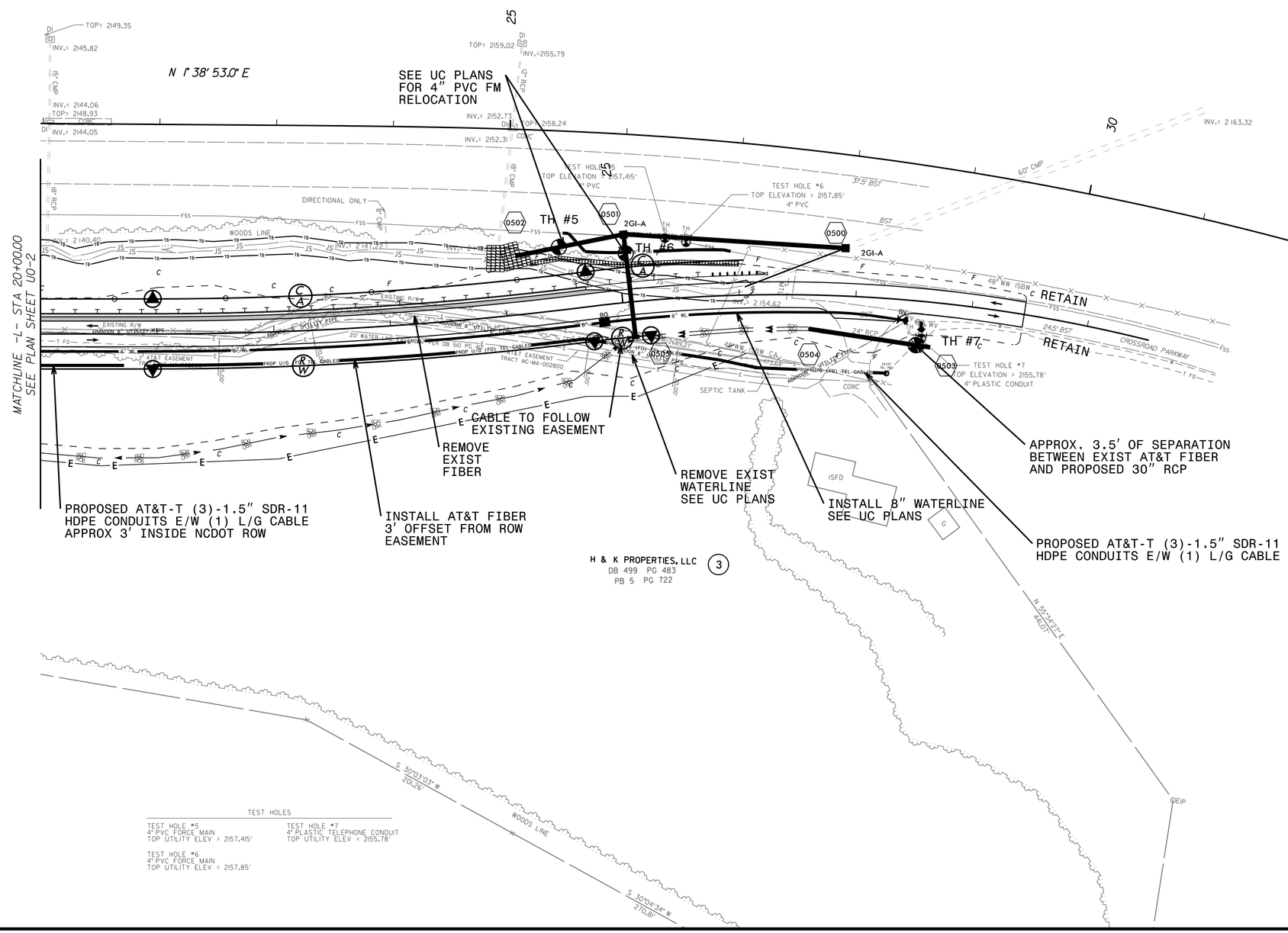

Kimley»Horn

K:\RAL_Roadway\011036358 - R-5779\Utilities\Engineering\UBO\Proj\011036358_ubo_uo3.dgn

1/9/2020

PROJ. REFERENCE NO.	SHEET NO.
R-5779	X-0

R-5779
CROSS SECTION INDEX

-L- SR 1631 (CROSSROADS PARKWAY)	X-1 THRU X-16
-Y1-	X-17 THRU X-19
-DR1- DRIVEWAY	X-20 THRU X-21

1/9/2020 K:\RAL_Roadway\0110036358 - R-5779\Roadway\XSC\0110036358_rdy_xpl_Index.dgn

STATE OF NORTH CAROLINA
DIVISION OF HIGHWAYS

PROJ. REFERENCE NO.	SHEET NO.
R-5779	X-1A

Approximate quantities only. Clearing and grubbing, unclassified excavation, fine grading, and removal of existing asphalt pavement will be paid for at the lump sum price for "Grading" (see Special Provision).

CROSS-SECTION SUMMARY

NOTE: EMBANKMENT COLUMN DOES NOT INCLUDE BACKFILL FOR UNDERCUT

* UNCLASSIFED COLUMN INCLUDES BENCHING EXCAVATION IN FRONT OF RETAINING WALL

Station	Uncl. Exc.	Embt	Station	Uncl. Exc.	Embt	Station	Uncl. Exc.	Embt	Station	Uncl. Exc.	Embt	Station	Uncl. Exc.	Embt	Station	Uncl. Exc.	Embt
* L	(cu. yd.)	(cu. yd.)	Y1	(cu. yd.)	(cu. yd.)	DR1	(cu. yd.)	(cu. yd.)		(cu. yd.)	(cu. yd.)		(cu. yd.)	(cu. yd.)		(cu. yd.)	(cu. yd.)
10+13	0	0	10+95	0	0	10+20.00	0	0									
10+50	99	7	11+00	0	1	10+50.00	37	0									
11+00	116	6	11+50	6	29	11+00.00	203	0									
11+50	228	2	12+00	6	137	11+50.00	554	0									
12+00	2027	0	12+50	0	302	12+00.00	665	0									
12+50	4994	0	13+00	0	381	12+24.00	128	0									
13+00	5773	0	13+50	0	315												
13+50	4165	0	13+78	0	130												
14+00	2286	0															
14+50	1010	50															
15+00	351	200															
15+50	98	329															
16+00	226	240															
16+50	606	71															
17+00	895	20															
17+50	909	97															
18+00	712	186															
18+50	657	166															
19+00	782	94															
19+50	1048	36															
20+00	1492	10															
20+50	1942	0															
21+00	2217	0															
21+50	2190	0															
22+00	1772	0															
22+50	1301	0															
23+00	963	11															
23+50	664	43															
24+00	493	98															
24+50	376	295															
25+00	326	537															
25+50	254	610															
26+00	113	530															
26+50	40	240															
27+00	8	14															
27+50	4	2															
28+00	0	0															
28+45	0	0															

5/14/99

REVISIONS

1/9/2020 K:\RAL_Roadway\01\036358 - R-5779\Roadway\XSC\01\036358_rdy_xpl_SUM.dgn

0 5 10	PROJ. REFERENCE NO.	SHEET NO.
	R-5779	X-1

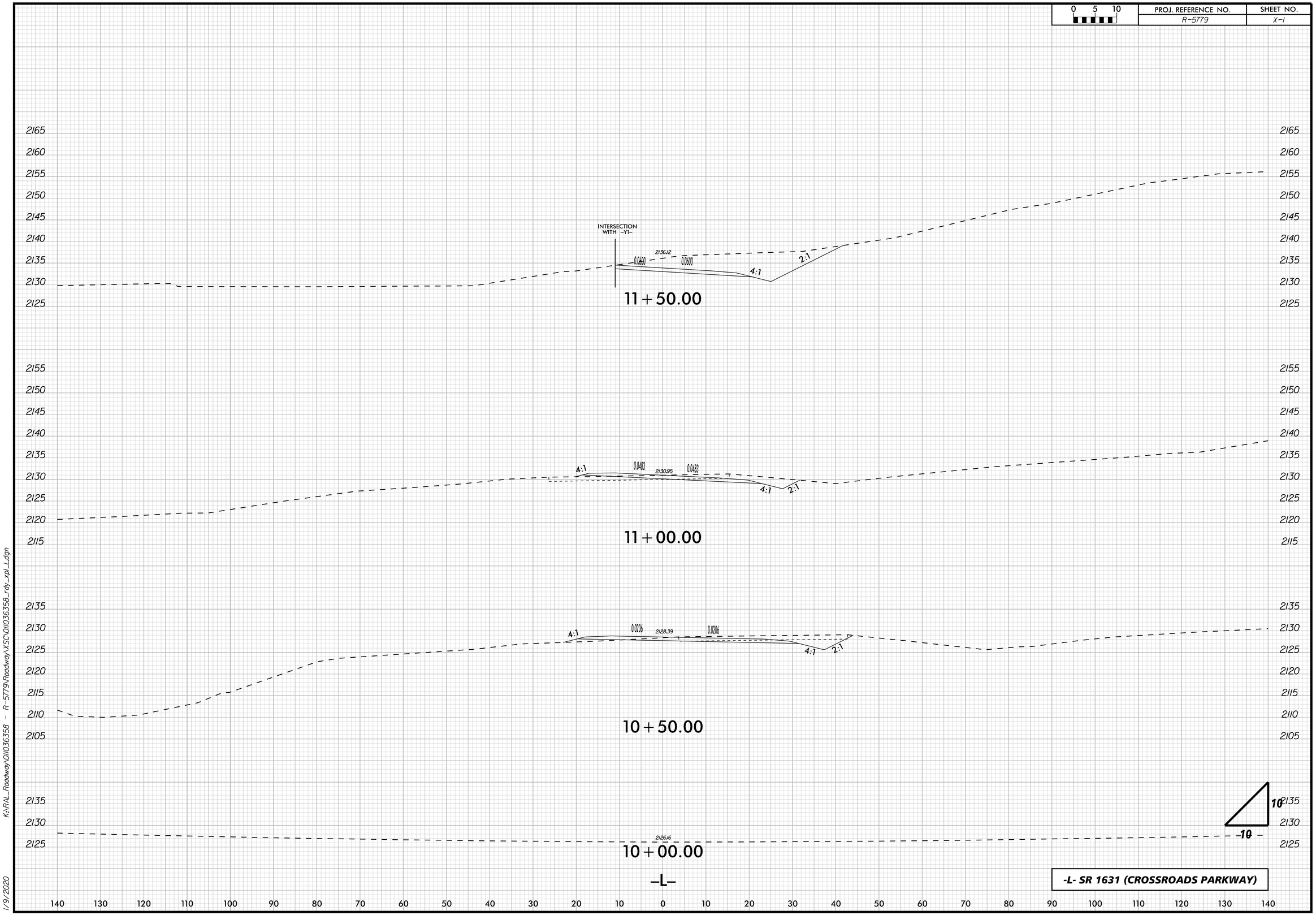

K:\RAL_Roadway\0110363 58 - R-5779\Roadway\VSC\0110363 58_rdy_xpl_L.dgn

1/9/2020

0 5 10	PROJ. REFERENCE NO.	SHEET NO.
	R-5779	X-2

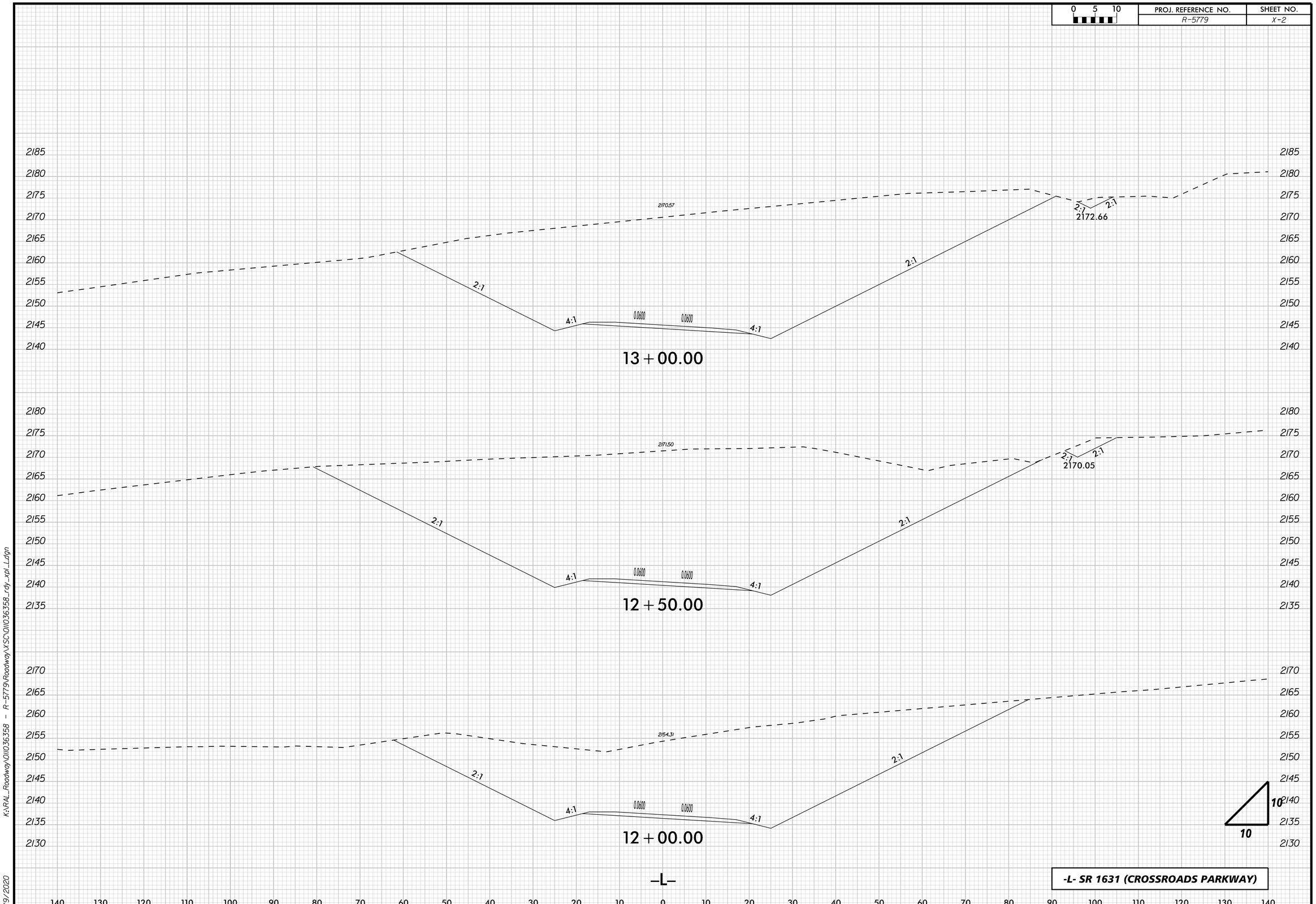

K:\RAL_Roadway\0110363 58 - R-5779\Roadway\VSC\0110363 58_rdy_xpl_L.dgn

1/9/2020

0 5 10	PROJ. REFERENCE NO.	SHEET NO.
	R-5779	X-3

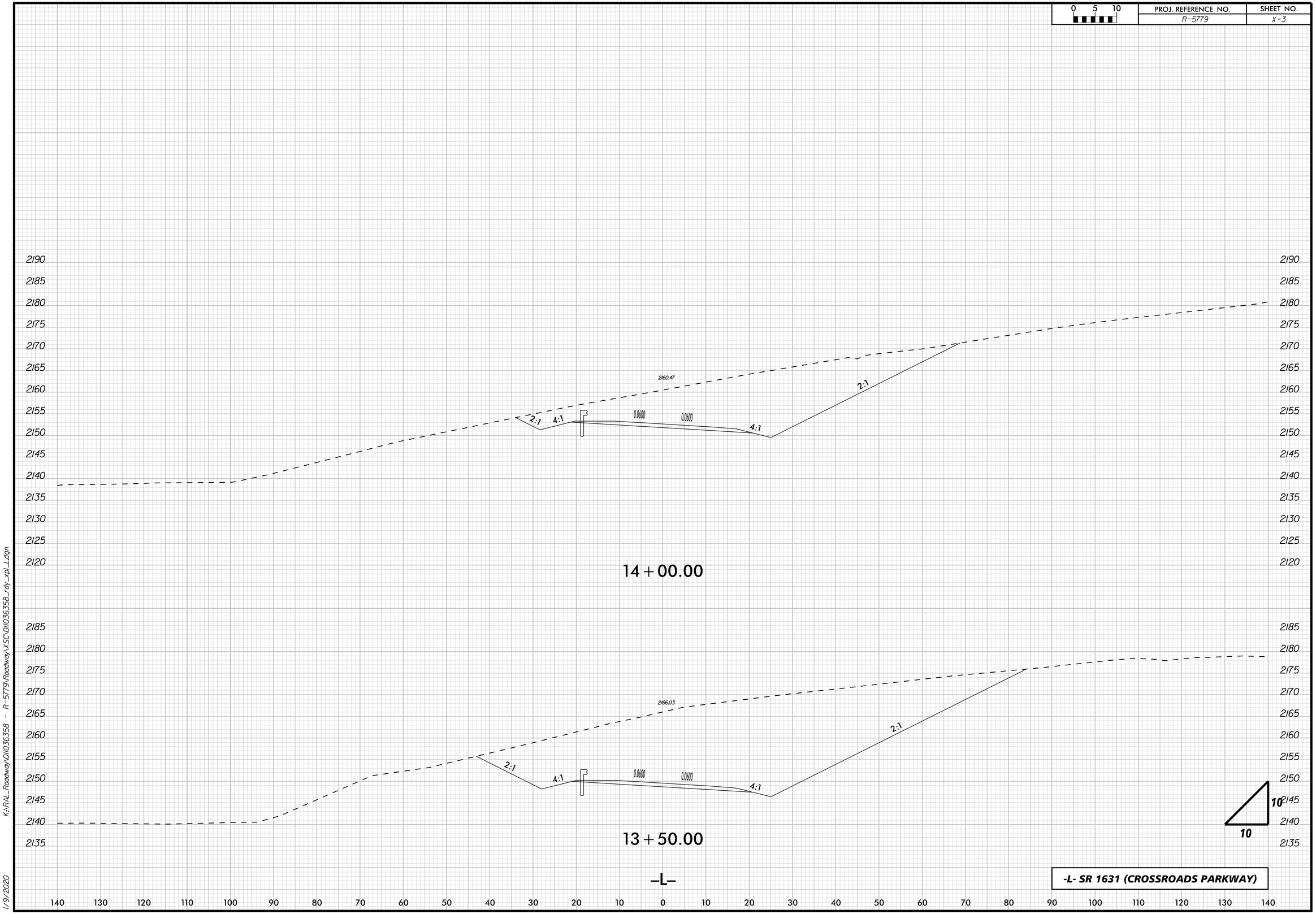

K:\RAL_Roadway\01I0036358 - R-5779\Roadway\XSC\01I0036358_rdy_xpl_L.dgn

1/9/2020

0 5 10	PROJ. REFERENCE NO.	SHEET NO.
	R-5779	X-4

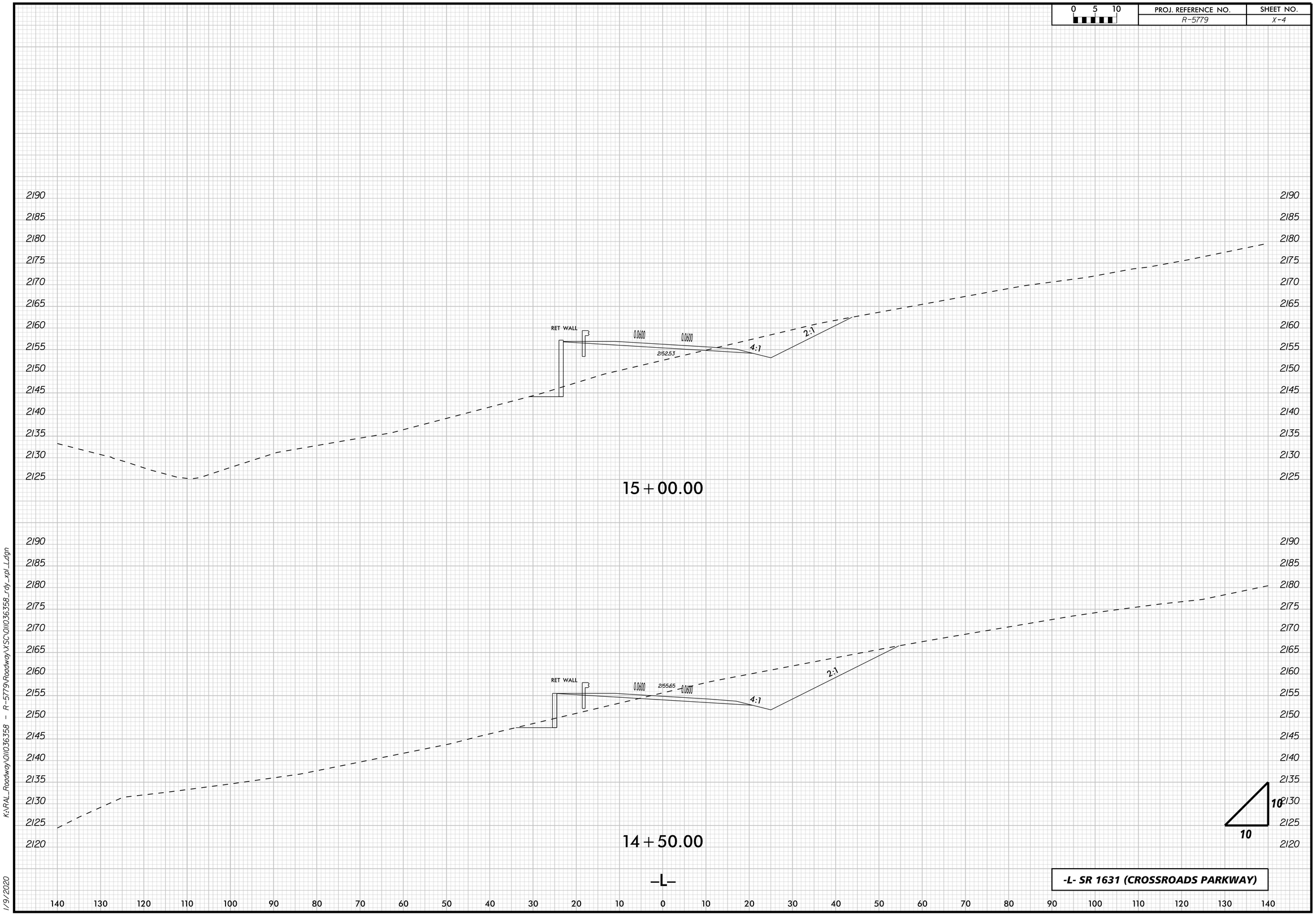

K:\RAL_Roadway\01\0036358 - R-5779\Roadway\VSC\01\0036358_rdy_xpl_L.dgn

1/9/2020

0 5 10	PROJ. REFERENCE NO.	SHEET NO.
	R-5779	X-5

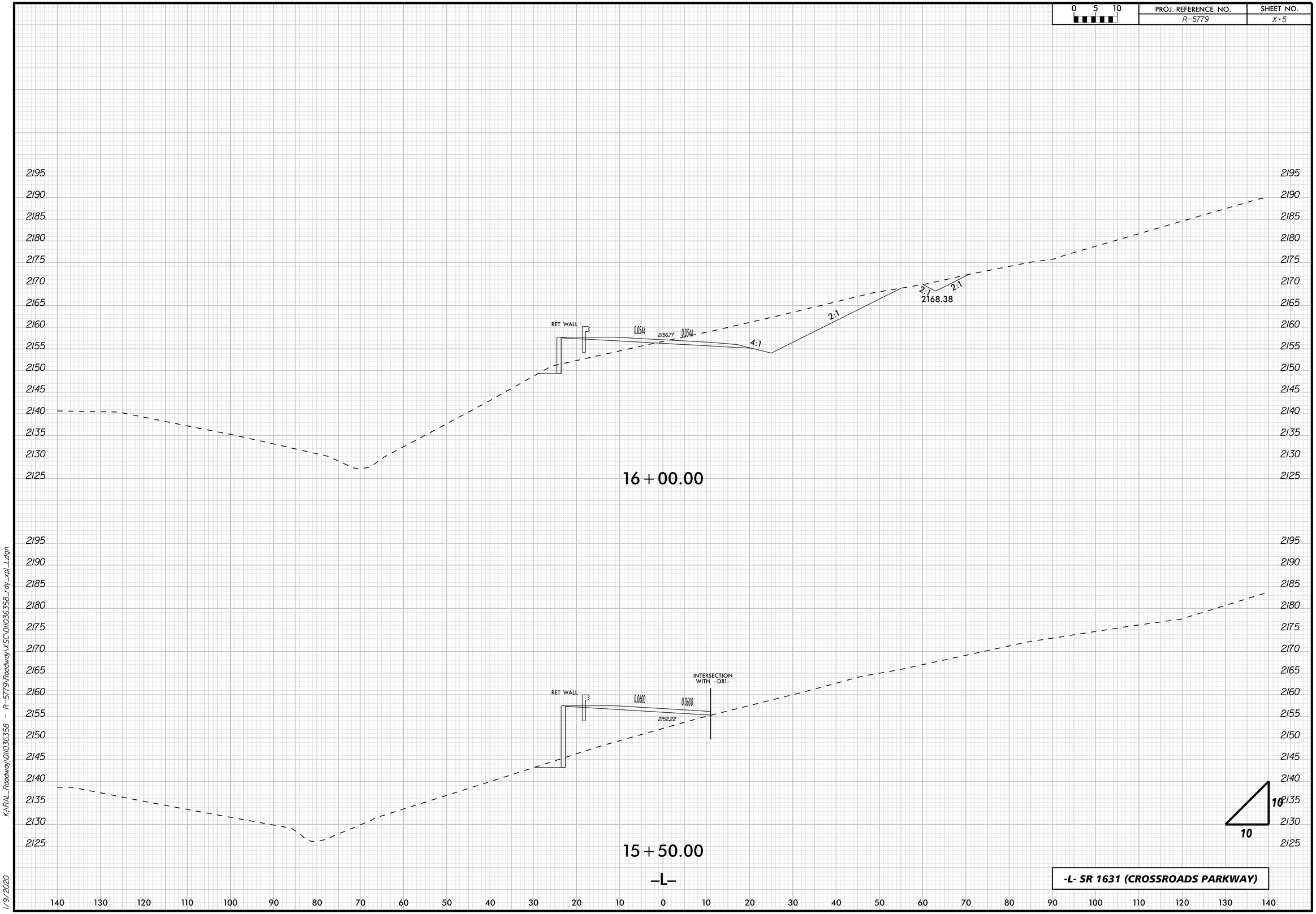

K:\RAL_Roadway\01\036358 - R-5779\Roadway\XSC\01\036358_rdy_xpl_L.dgn

1/9/2020

0 5 10	PROJ. REFERENCE NO.	SHEET NO.
	R-5779	X-6

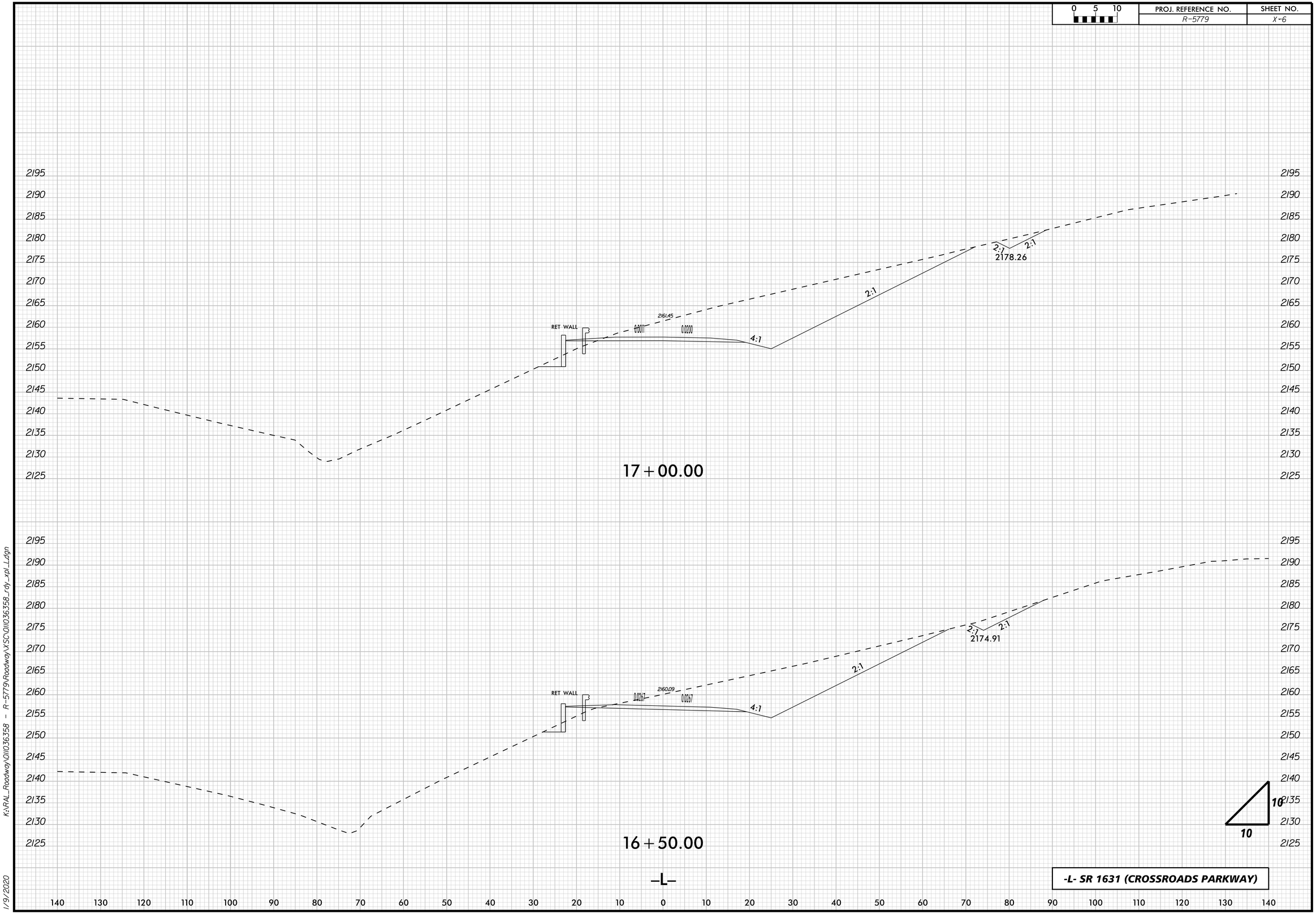

K:\RAL_Roadway\0110036358 - R-5779\Roadway\XSC\0110036358_rdy_xpl_L.dgn

1/9/2020

0 5 10	PROJ. REFERENCE NO.	SHEET NO.
	R-5779	X-7

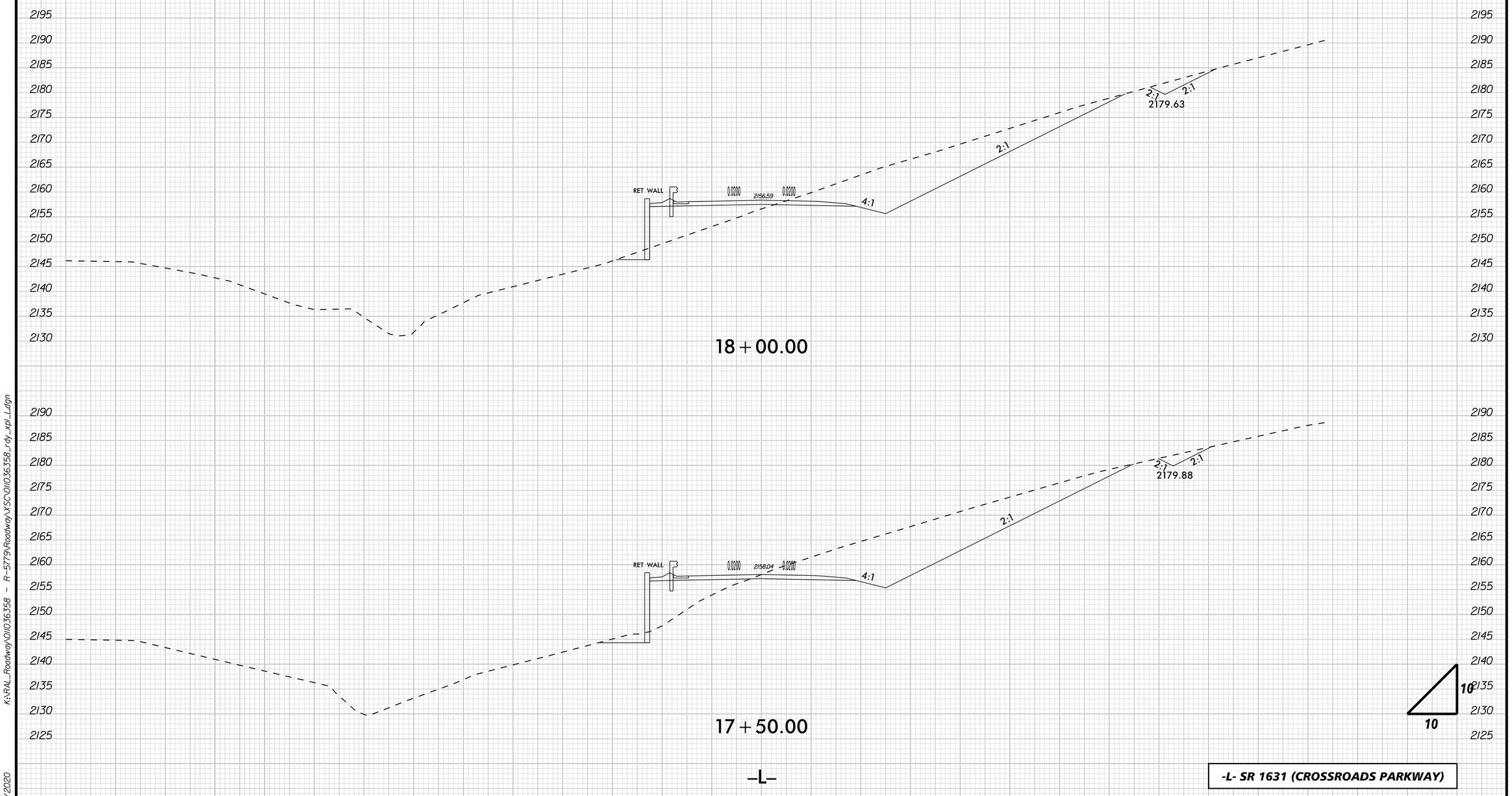

K:\RAL_Roadway\01I036358 - R-5779\Roadway\XSC\01I036358_rdy_xpl_L.dgn

1/9/2020

0 5 10	PROJ. REFERENCE NO.	SHEET NO.
	R-5779	X-8

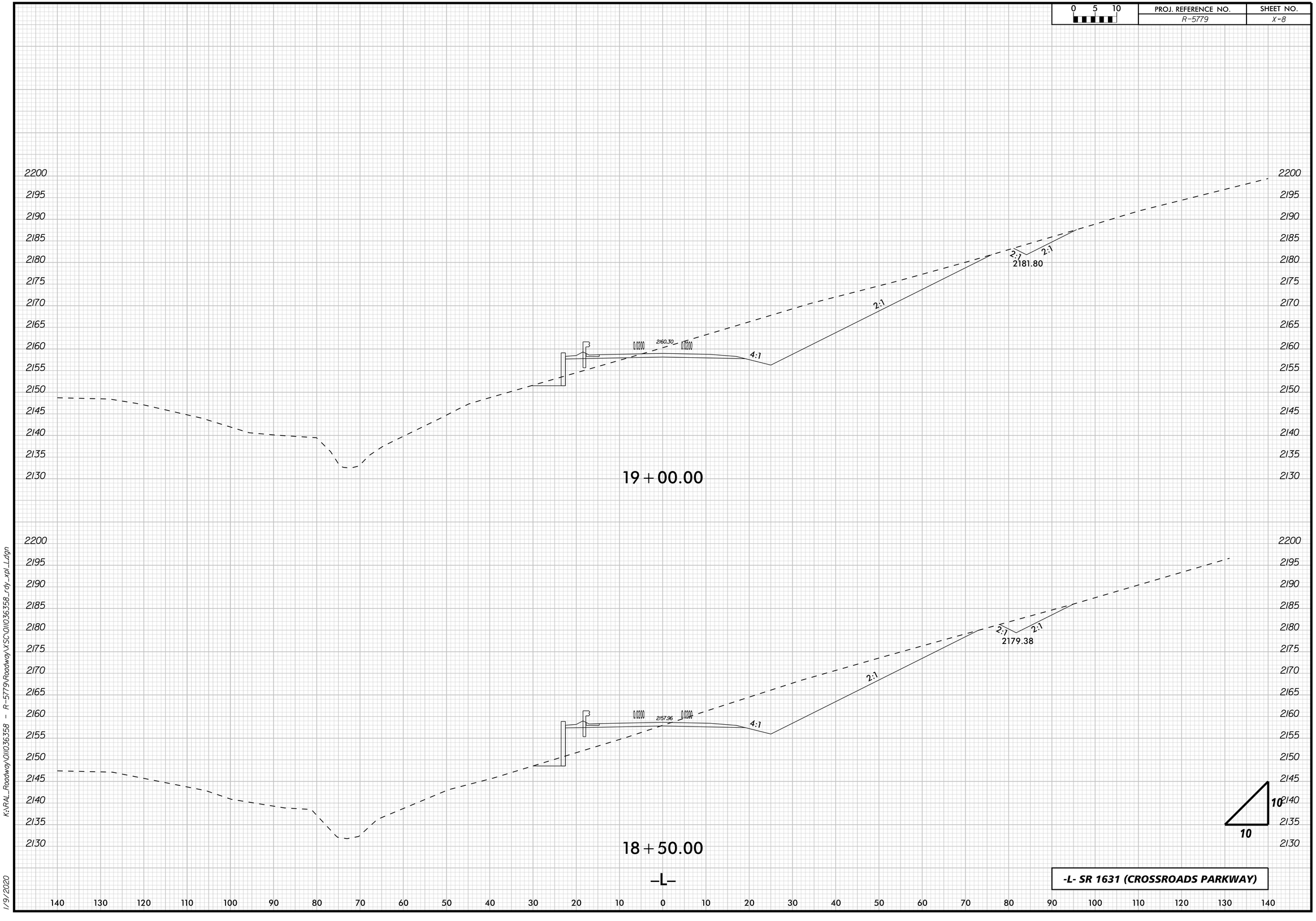

K:\RAL_Roadway\011036358 – R-5779\Roadway\XSC\011036358_rdy_xpl_L.dgn

1/9/2020

0 5 10	PROJ. REFERENCE NO.	SHEET NO.
	R-5779	X-9

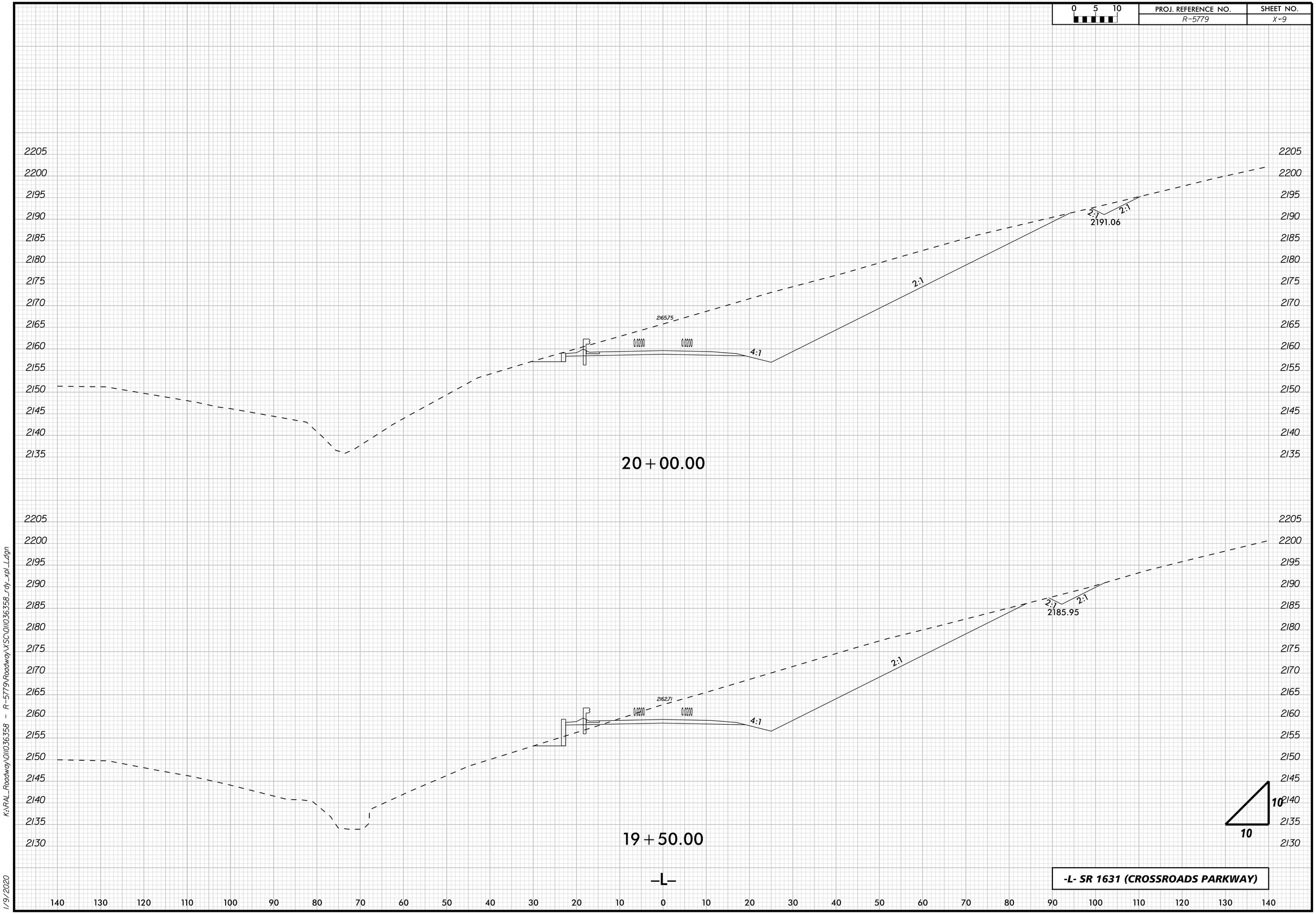

K:\RAL_Roadway\01\0036358 - R-5779\Roadway\XSC\01\0036358_rdy_xpl_L.dgn

1/9/2020

0 5 10	PROJ. REFERENCE NO.	SHEET NO.
	R-5779	X-10

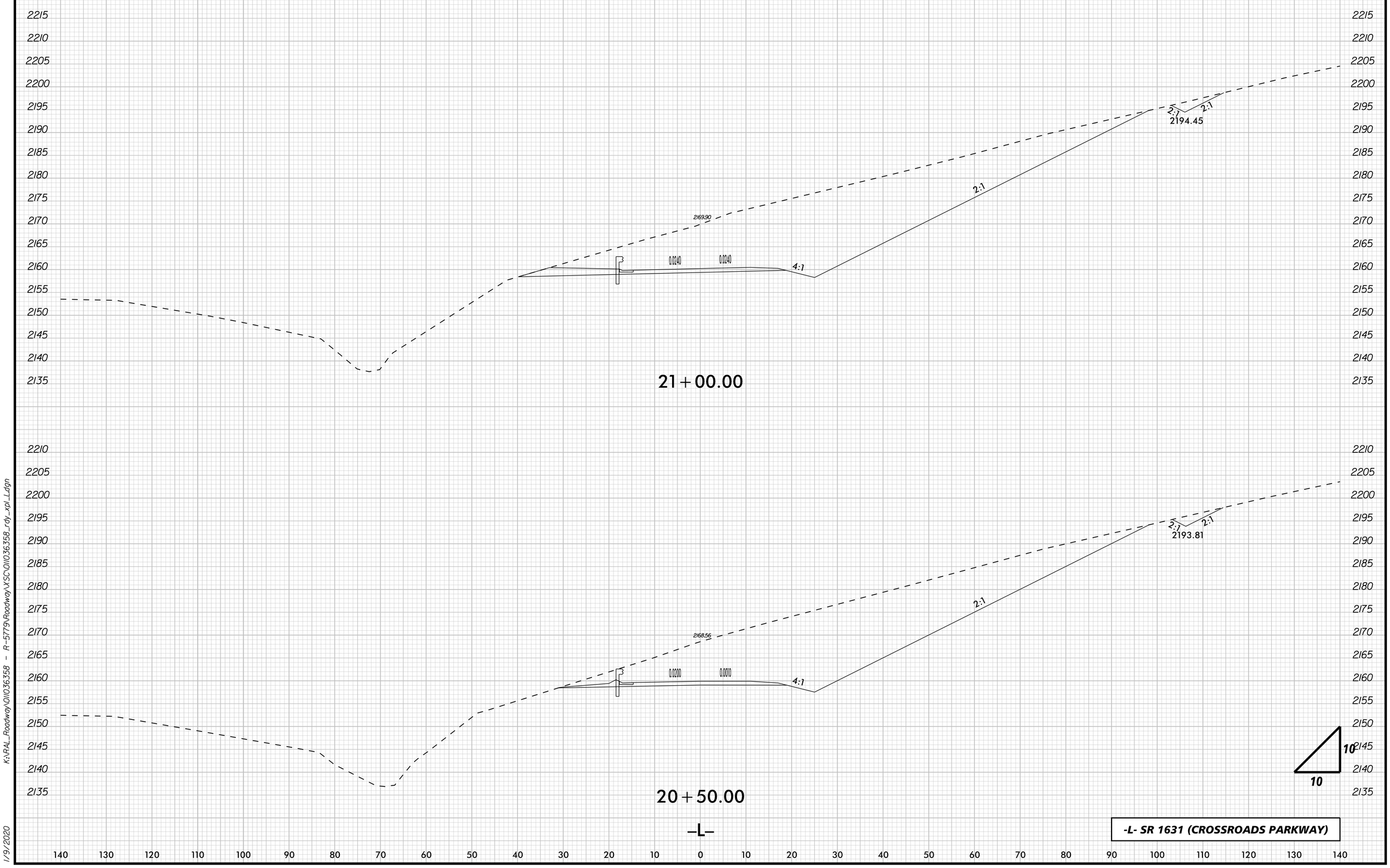

K:\RAL_Roadway\01\I036358 - R-5779\Roadway\XSC\01\I036358_rdy_xpl_L.dgn

1/9/2020

0 5 10	PROJ. REFERENCE NO.	SHEET NO.
	R-5779	X-11

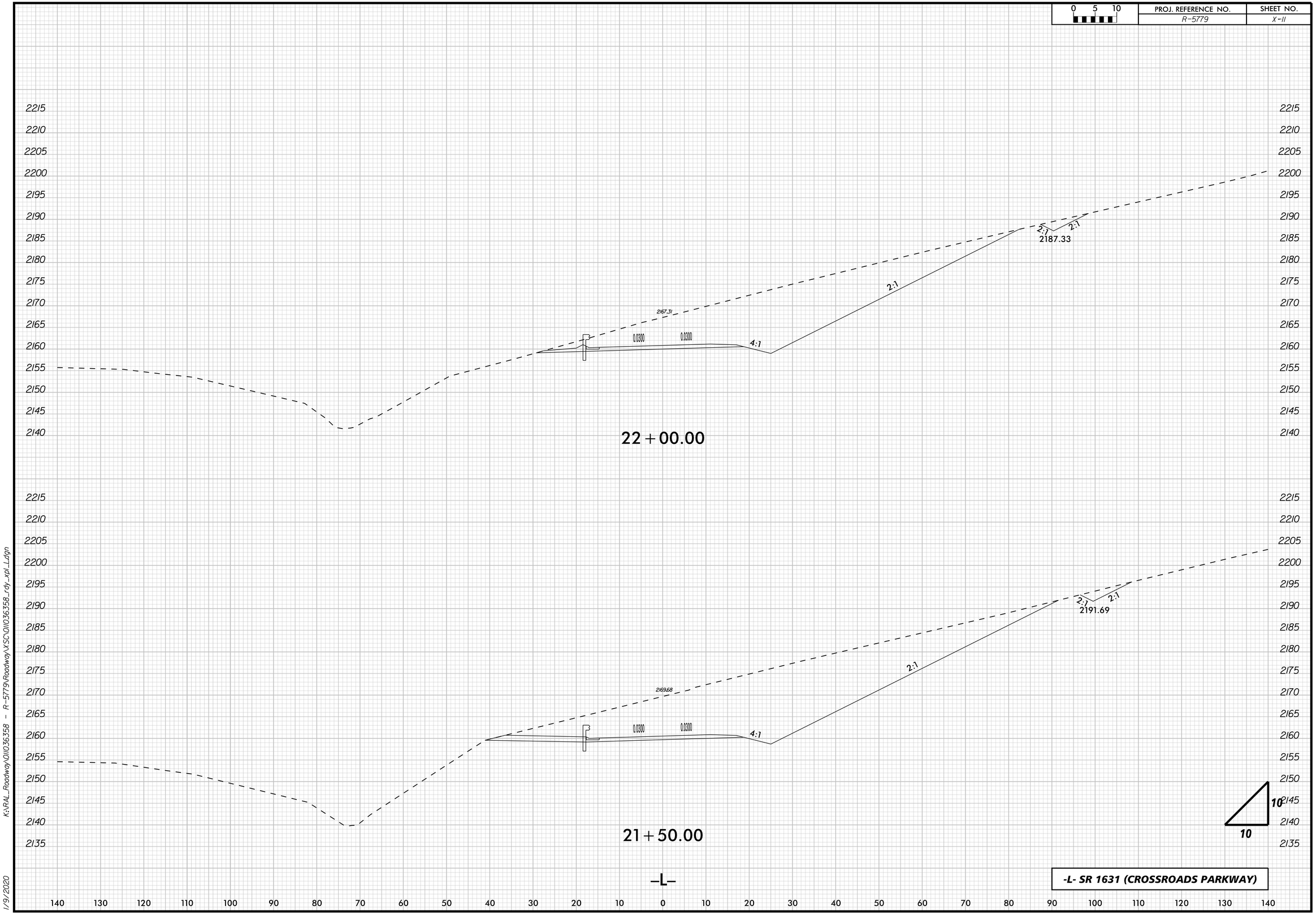

K:\RAL_Roadway\011036358 – R-5779\Roadway\XSC\011036358_rdy_xpl_L.dgn

1/9/2020

0 5 10	PROJ. REFERENCE NO.	SHEET NO.
	R-5779	X-12

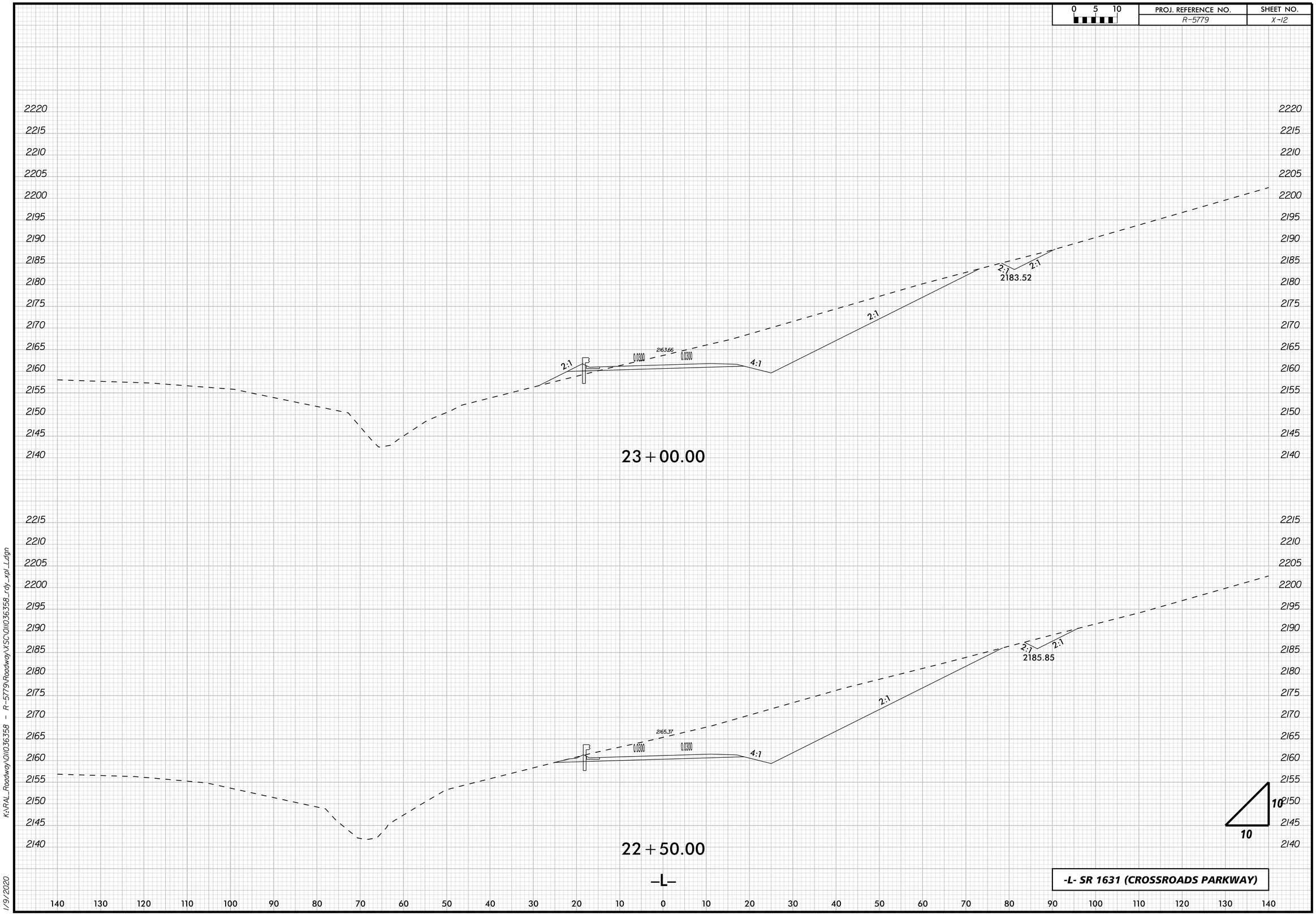

K:\RAL_Roadway\DII0036358 - R-5779\Roadway\XSC\DII0036358_rdy_xpl_L.dgn

1/9/2020

0 5 10	PROJ. REFERENCE NO.	SHEET NO.
	R-5779	X-13

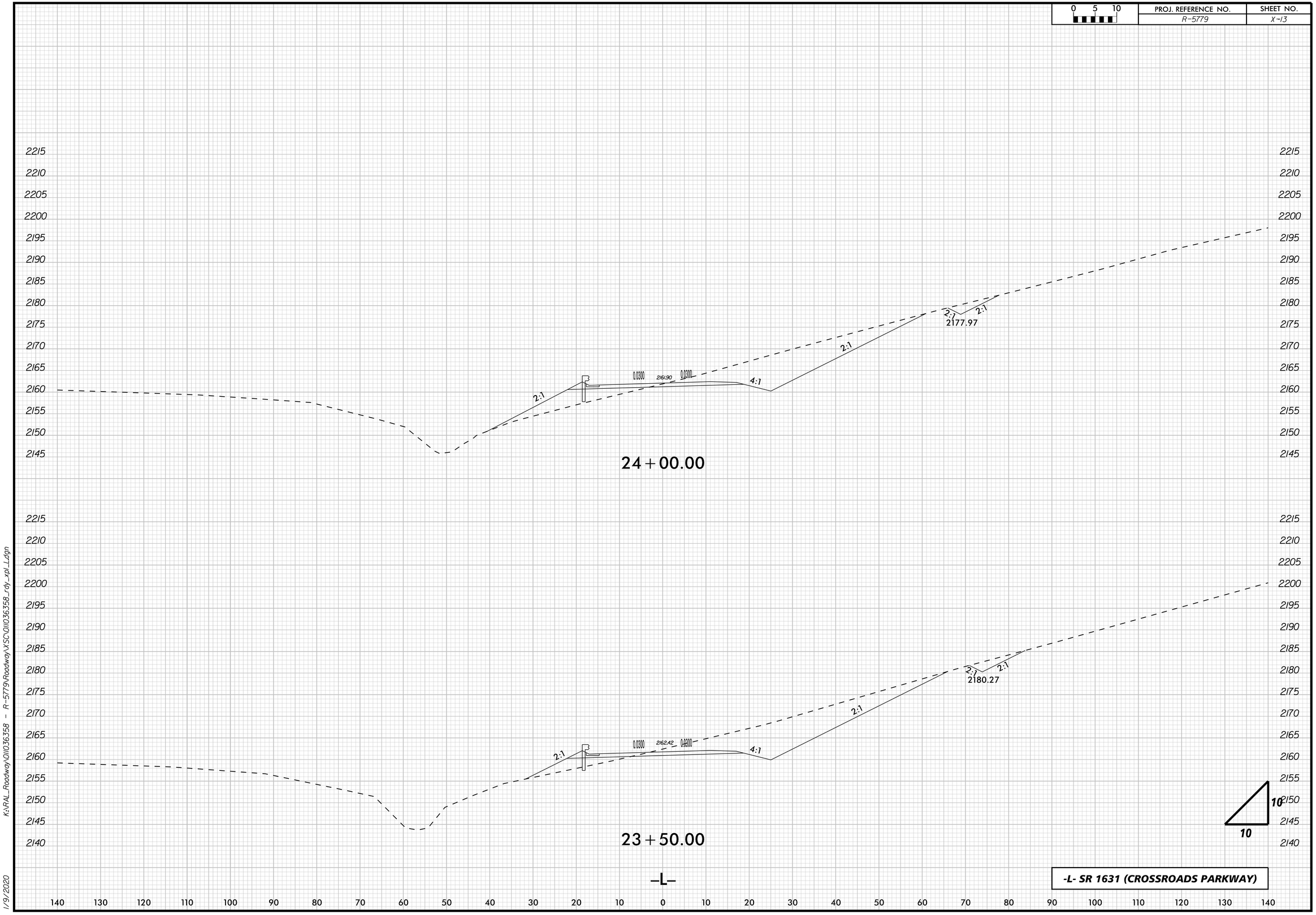

K:\RAL_Roadway\01\0036358 - R-5779\Roadway\XSC\01\0036358_rdy_xpl_L.dgn

1/9/2020

0 5 10	PROJ. REFERENCE NO.	SHEET NO.
	R-5779	X-14

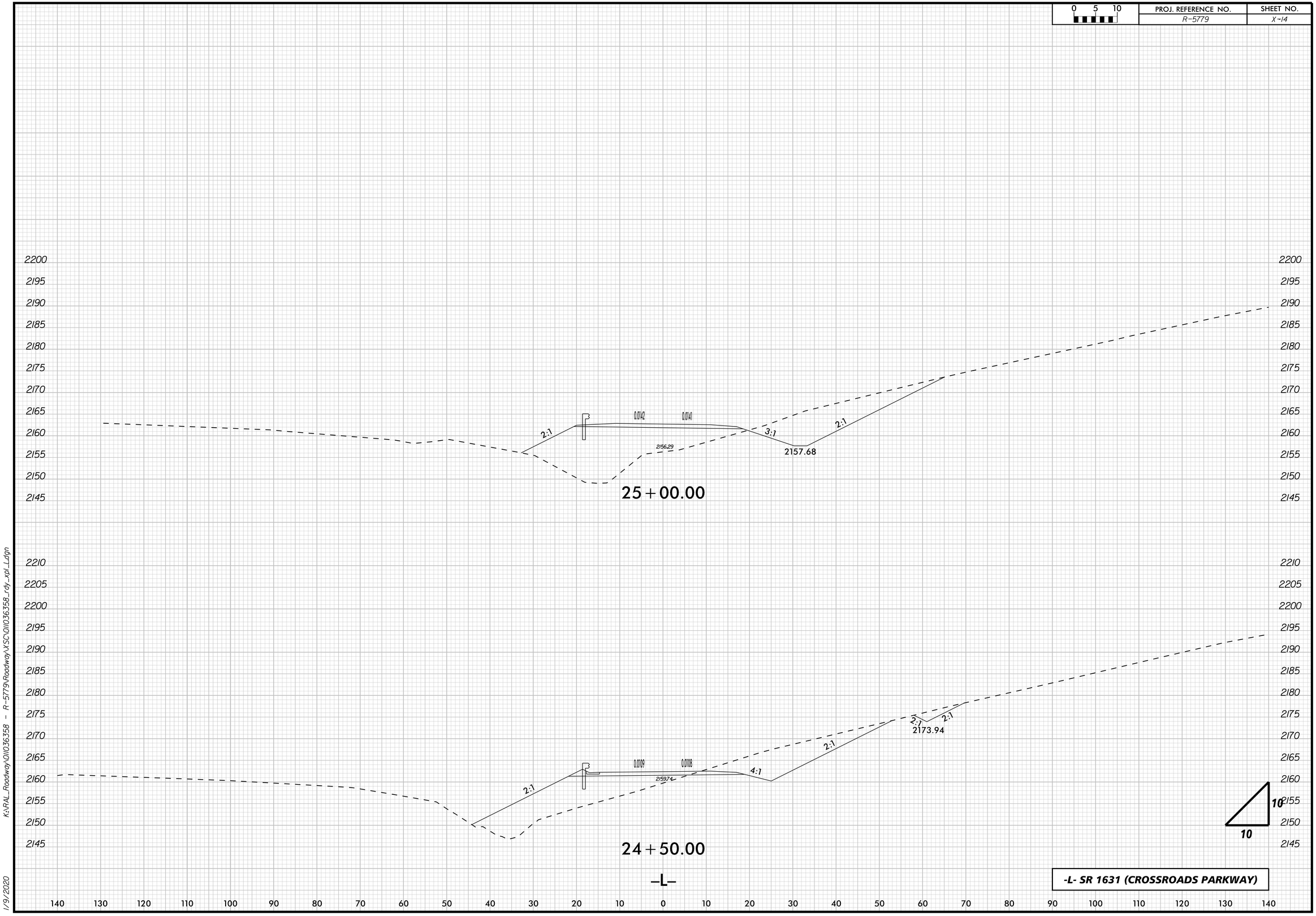

K:\RAL_Roadway\01\036358 - R-5779\Roadway\XSC\01\036358_rdy_xpl_L.dgn

1/9/2020

0 5 10	PROJ. REFERENCE NO.	SHEET NO.
	R-5779	X-15

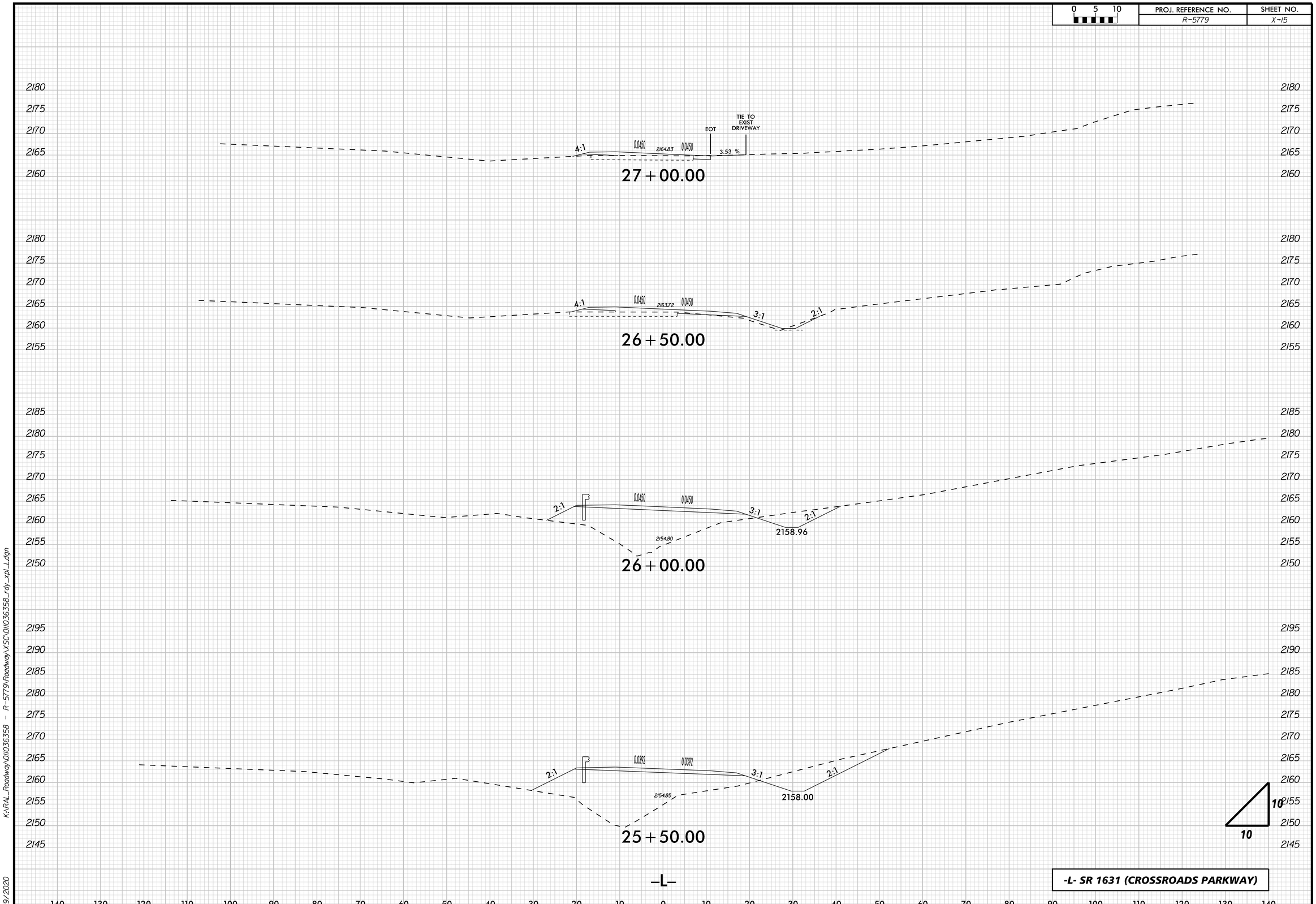

K:\RAL_Roadway\0110363 58 - R-5779\Roadway\VSC\0110363 58_rdy_xpl_L.dgn

1/9/2020

0 5 10	PROJ. REFERENCE NO.	SHEET NO.
	R-5779	X-16

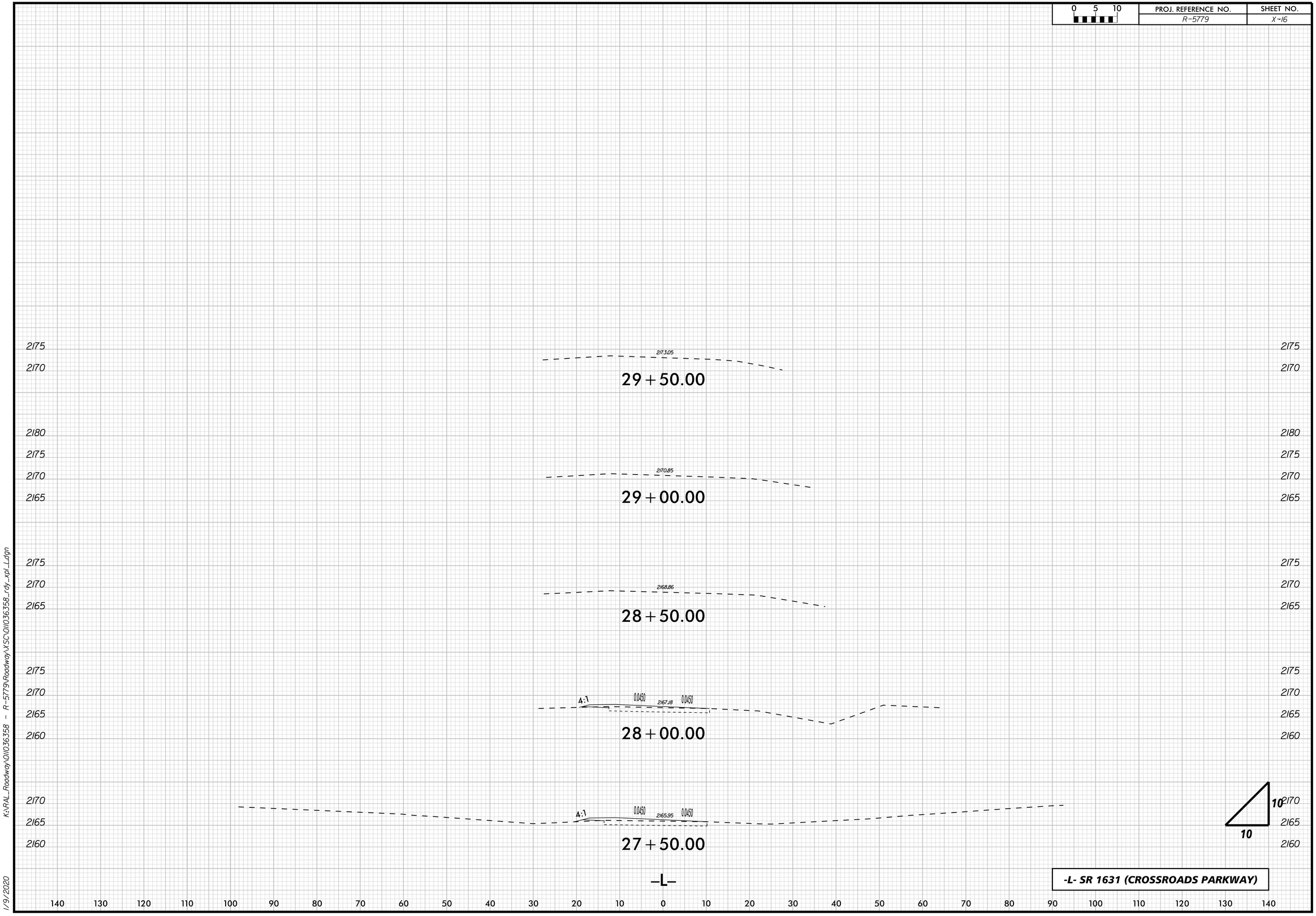

K:\RAL_Roadway\01\I036358 - R-5779\Roadway\XSC\01\I036358_rdy_xpl_L.dgn

1/9/2020

0 5 10	PROJ. REFERENCE NO.	SHEET NO.
	R-5779	X-17

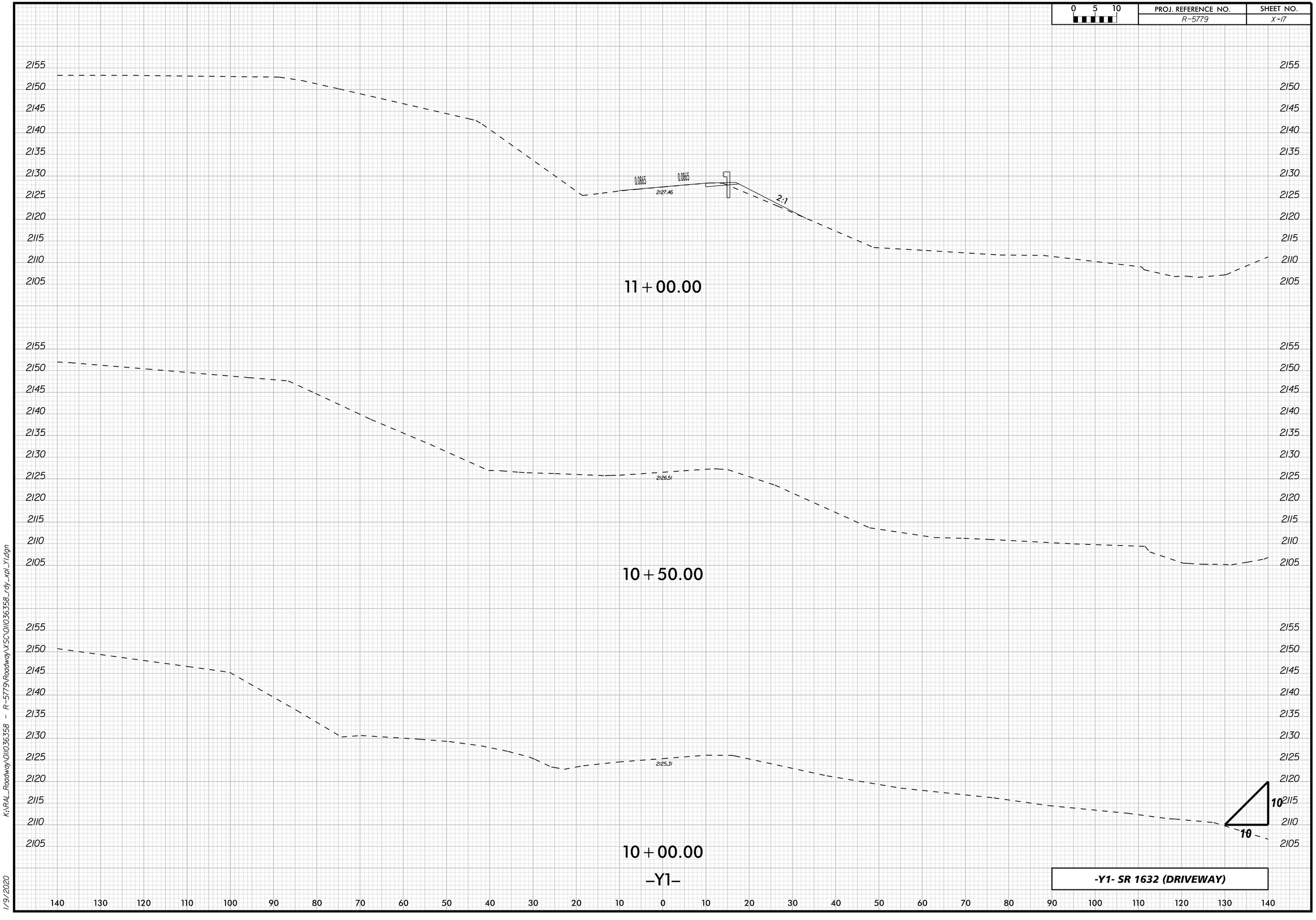

K:\RAL_Roadway\0110036358 - R-5779\Roadway\XSC\0110036358_rdy_xpl_Y1.dgn

1/9/2020

0 5 10	PROJ. REFERENCE NO.	SHEET NO.
	R-5779	X-18

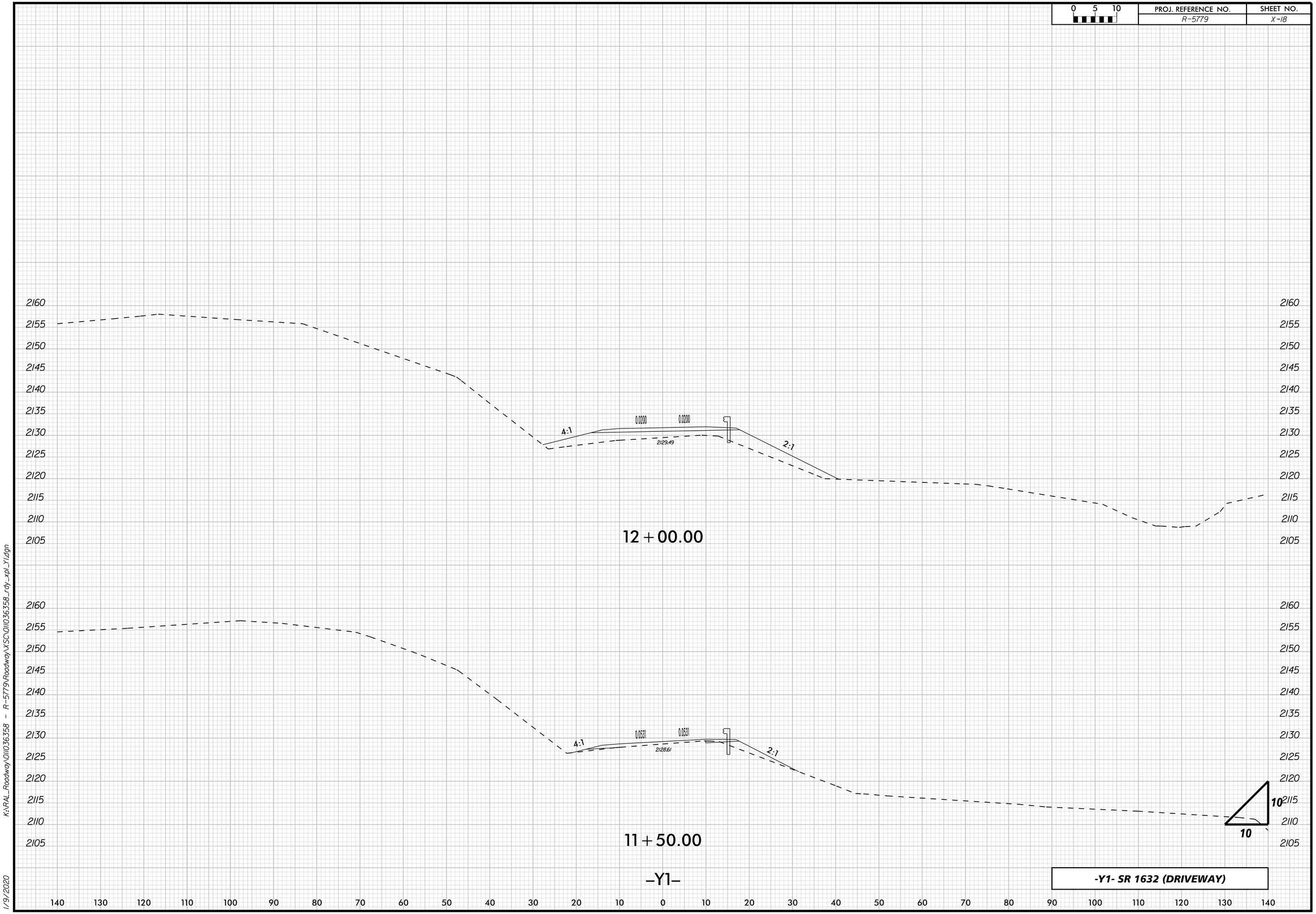

K:\RAL_Roadway\0110036358 - R-5779\Roadway\XSC\0110036358_rdy_xpl_Y1.dgn

1/9/2020

0 5 10	PROJ. REFERENCE NO.	SHEET NO.
	R-5779	X-19

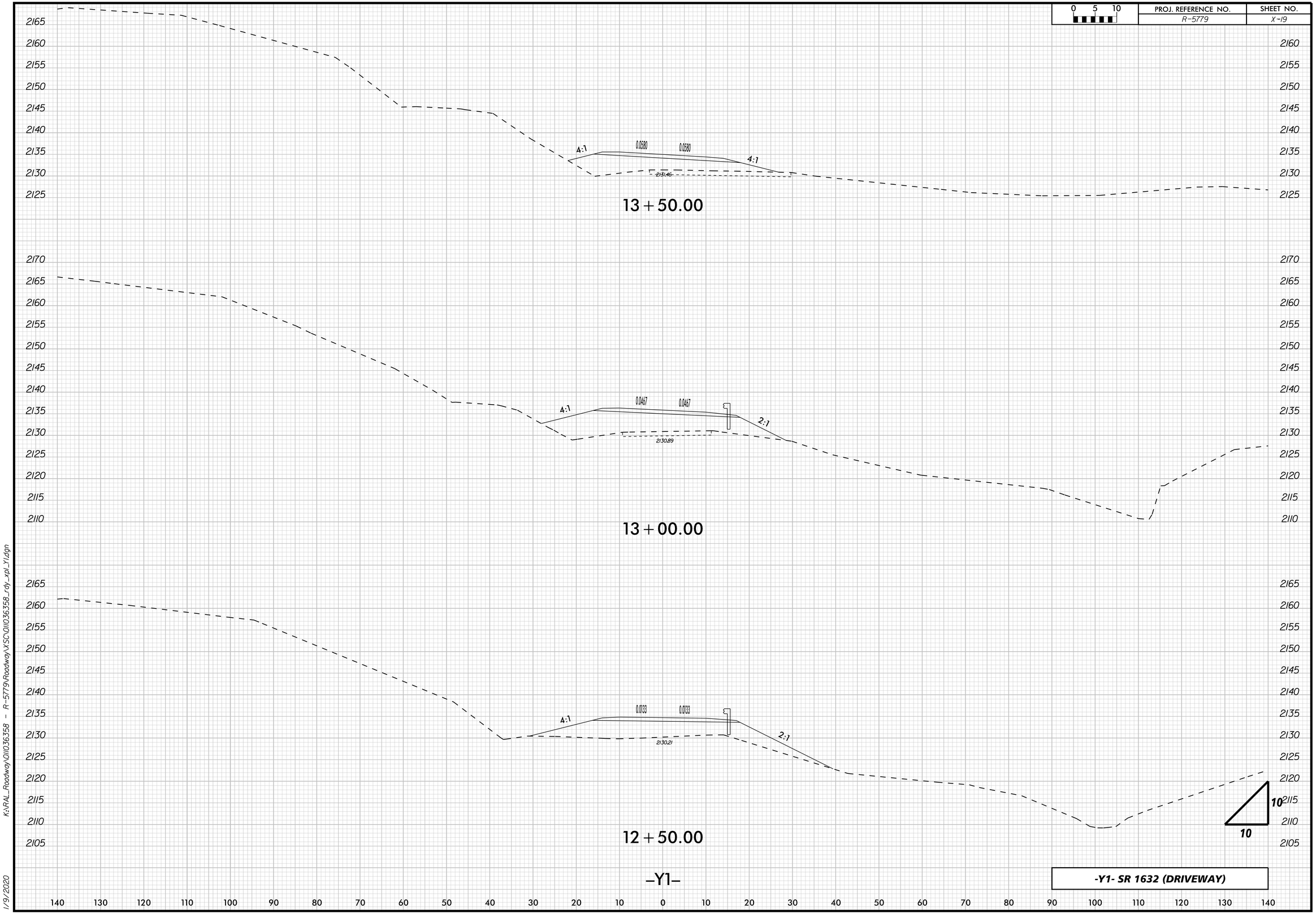

K:\RAL_Roadway\011036358 - R-5779\Roadway\XSC\011036358_rdy_xpl_Y1.dgn

1/9/2020

0 5 10	PROJ. REFERENCE NO.	SHEET NO.
	R-5779	X-20

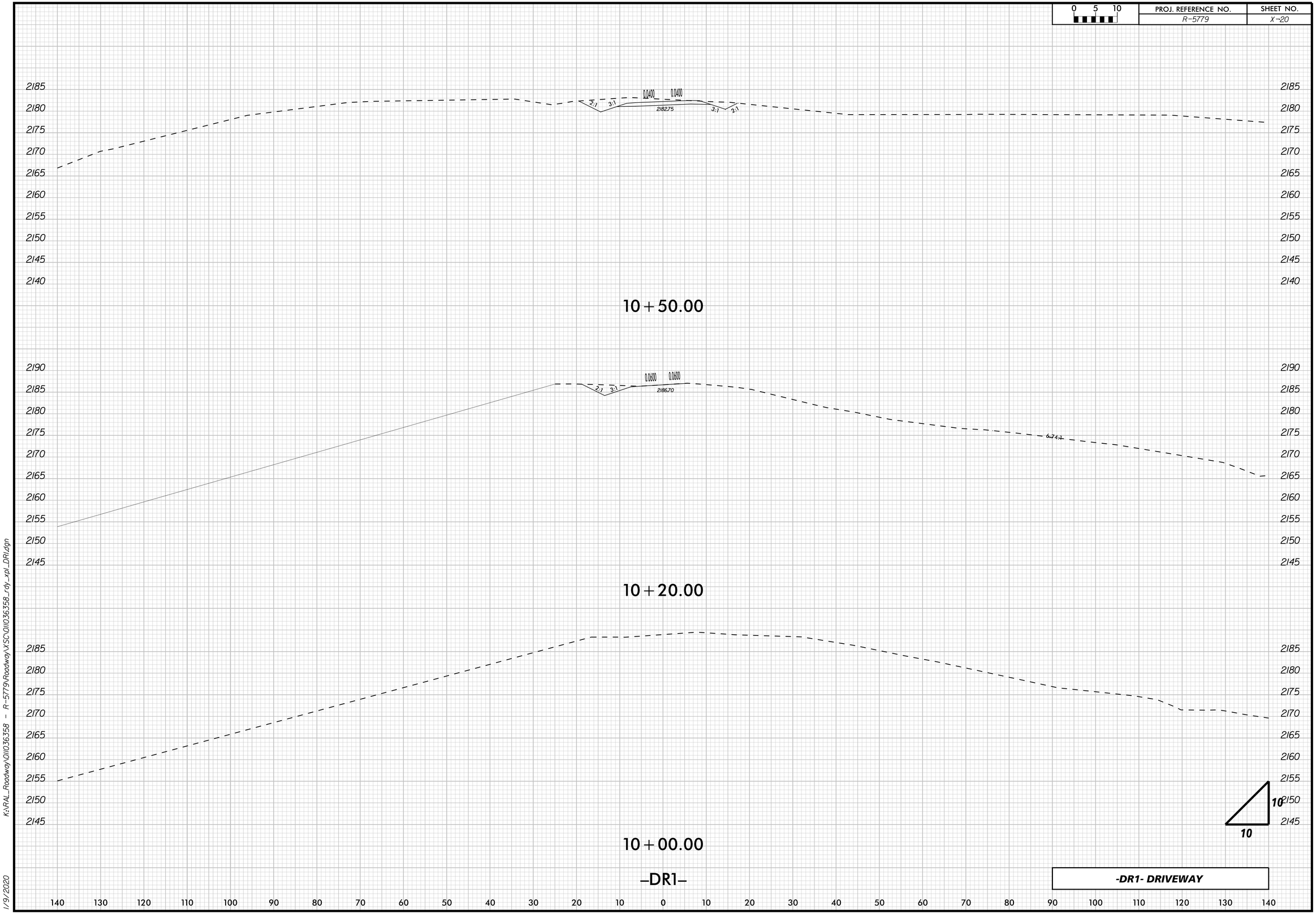

K:\RAL_Roadway\DII036358 - R-5779\Roadway\XSC\DII036358_rdy_xpl_DR1.dgn

1/9/2020

0 5 10	PROJ. REFERENCE NO.	SHEET NO.
	R-5779	X-21

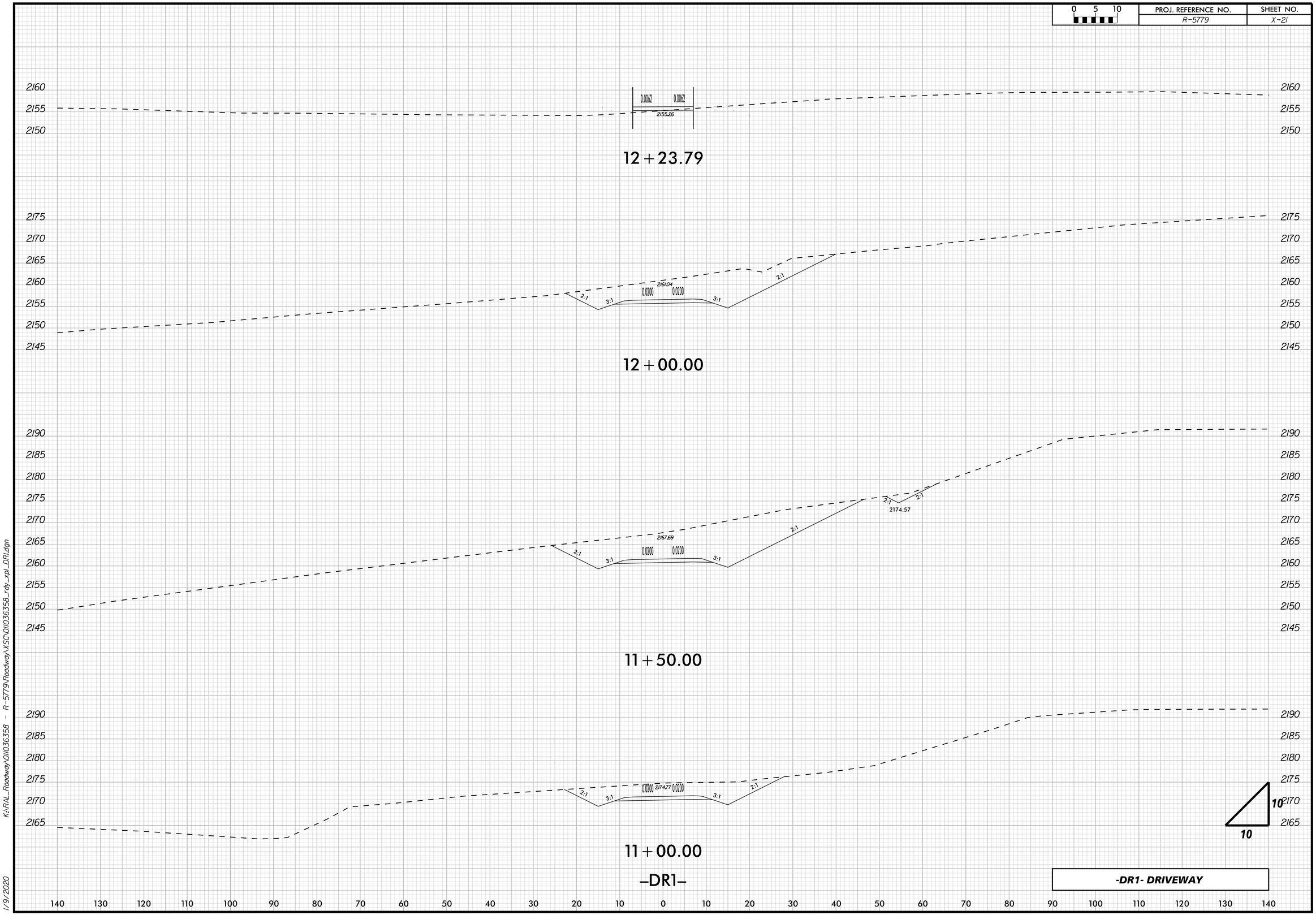

-DR1- DRIVEWAY

K:\RAL_Roadway\011036358 - R-5779\Roadway\XSC\011036358_rdy_xpl_DR1.dgn

1/9/2020

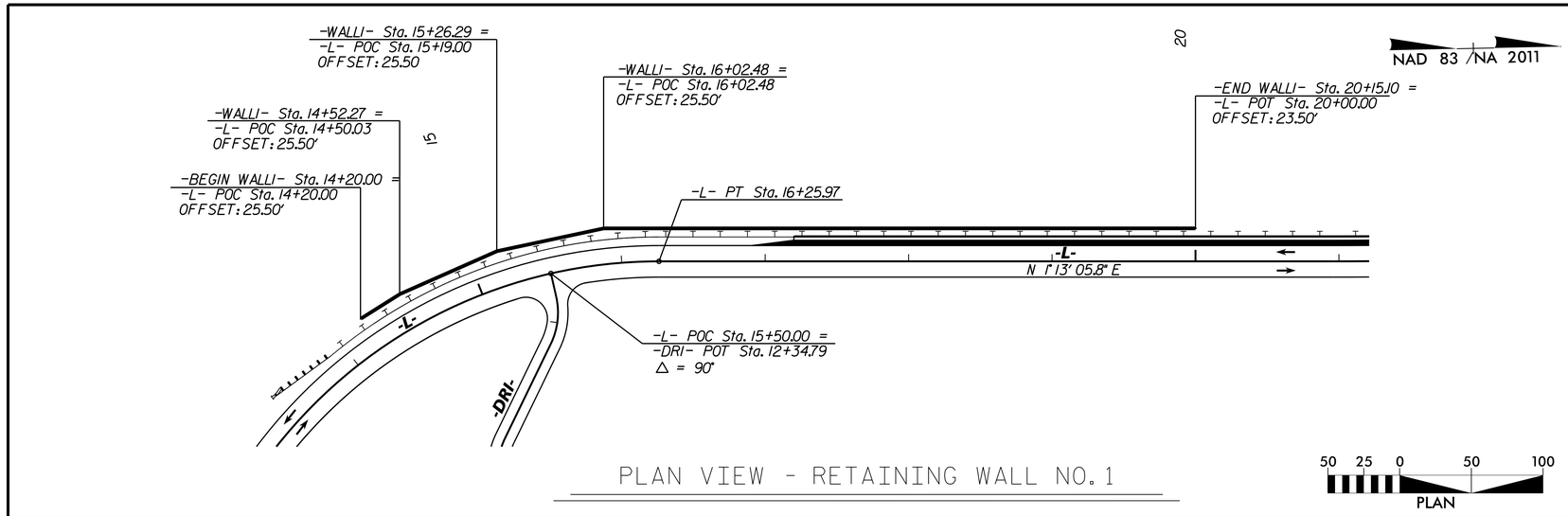

PLAN VIEW - RETAINING WALL NO. 1

GEOTECHNICAL ENGINEER	ENGINEER
NORTH CAROLINA PROFESSIONAL SEAL 031361 ENGINEER SHIPING YANG — DocuSigned by: Shiping Yang — 3/2/2018	
SIGNATURE DATE	SIGNATURE DATE

DOCUMENT NOT CONSIDERED FINAL UNLESS ALL SIGNATURES COMPLETED

FRONT SLOPE WALL EMBEDMENT		
SLOPE IN FRONT OF STRUCTURES		MINIMUM EMBEDMENT DEPTH
HORIZONTAL	FOR WALLS	H/20
	FOR ABUTMENTS	H/10
3.0H:1.0V	WALLS	H/10
2.5H:1.0V	WALLS	H/8.5
2.0H:1.0V	WALLS	H/7
1.5H:1.0V	WALLS	H/5
1.25H:1.0V	WALLS	H/4
1.0H:1.0V	WALLS	H/3

NOTE:
1) MAINTAIN A MINIMUM BENCH WIDTH OF 4.0 IN FRONT OF THE WALL FOR ITS ENTIRE LENGTH.
2) MINIMUM EMBEDMENT DEPTH OF 2 FT, UNLESS LARGER DEPTHS DICTATED BY THE ABOVE TABLE.
3) MAXIMUM SLOPE OF 2H:1V WILL BE MAINTAINED ON FRONT SLOPES FOR THE ENTIRE LENGTH OF THE WALL.
4) SUBMITT WITH THE WALL DESIGN INTERNAL, EXTERNAL, AND GLOBAL STABILITY ANALYSISES.

MSE RETAINING WALL QUANTITIES		
RETAINING WALL NO. 1	-WALL1-	✳ 6866 SQUARE FEET

✳ WALL AREA IS MEASURED USING THE DESIGN HEIGHT "H"

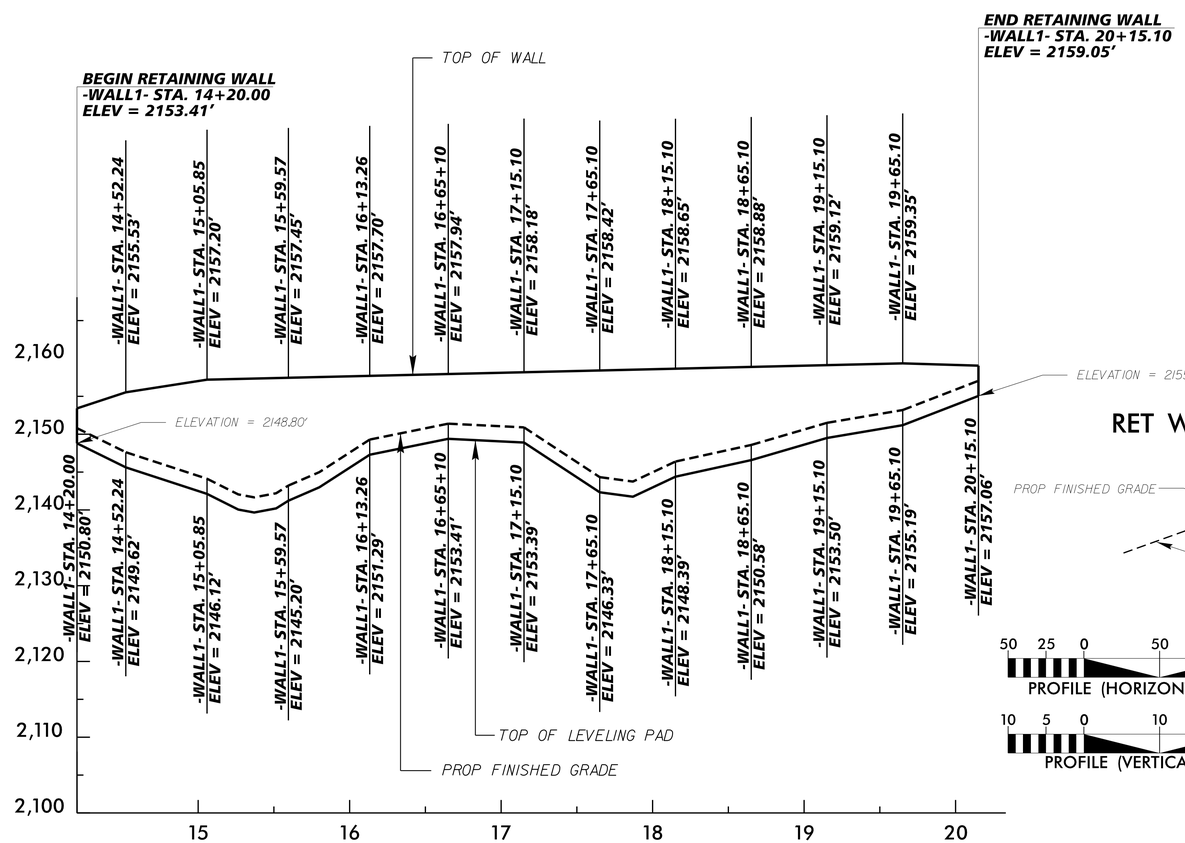

WALL ENVELOPE - RETAINING WALL NO. 1

NOTE: 1) OFFSET DIMENSIONS ARE FROM FACE OF WALL
2) THE WALL ENVELOPE DOES NOT ACCURATELY DEPICT THE ACTUAL FACE OF THE WALL

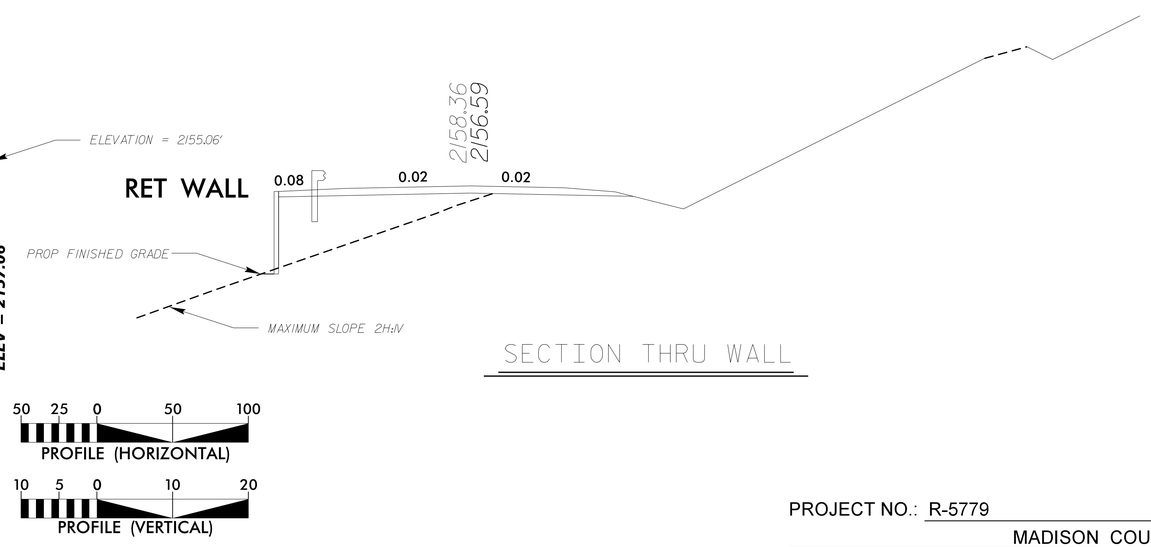

SECTION THRU WALL

PROJECT NO.: R-5779
MADISON COUNTY
STATION: RWALL1: 14+20.00 TO 20+15.10 -L-
SHEET 1 OF 3

PREPARED BY: SY	DATE: 1/25/2018
REVIEWED BY: MHS	DATE: 1/25/2018

NORTH CAROLINA DEPARTMENT OF TRANSPORTATION
DIVISION OF HIGHWAYS

GEOTECHNICAL ENGINEERING UNIT

RETAINING WALL NO. 1
MSE RETAINING WALL

REVISIONS							SHEET NO.
NO.	BY	DATE	NO.	BY	DATE		
1			3				W-1
2			4				

GEOTECHNICAL ENGINEER	ENGINEER
NORTH CAROLINA PROFESSIONAL SEAL 031361 ENGINEER SHIPING YANG DocuSigned by: Shiping Yang 3/2/2018 DOCCEEE5B2B4E5... SIGNATURE DATE	SIGNATURE DATE

DOCUMENT NOT CONSIDERED FINAL UNLESS ALL SIGNATURES COMPLETED

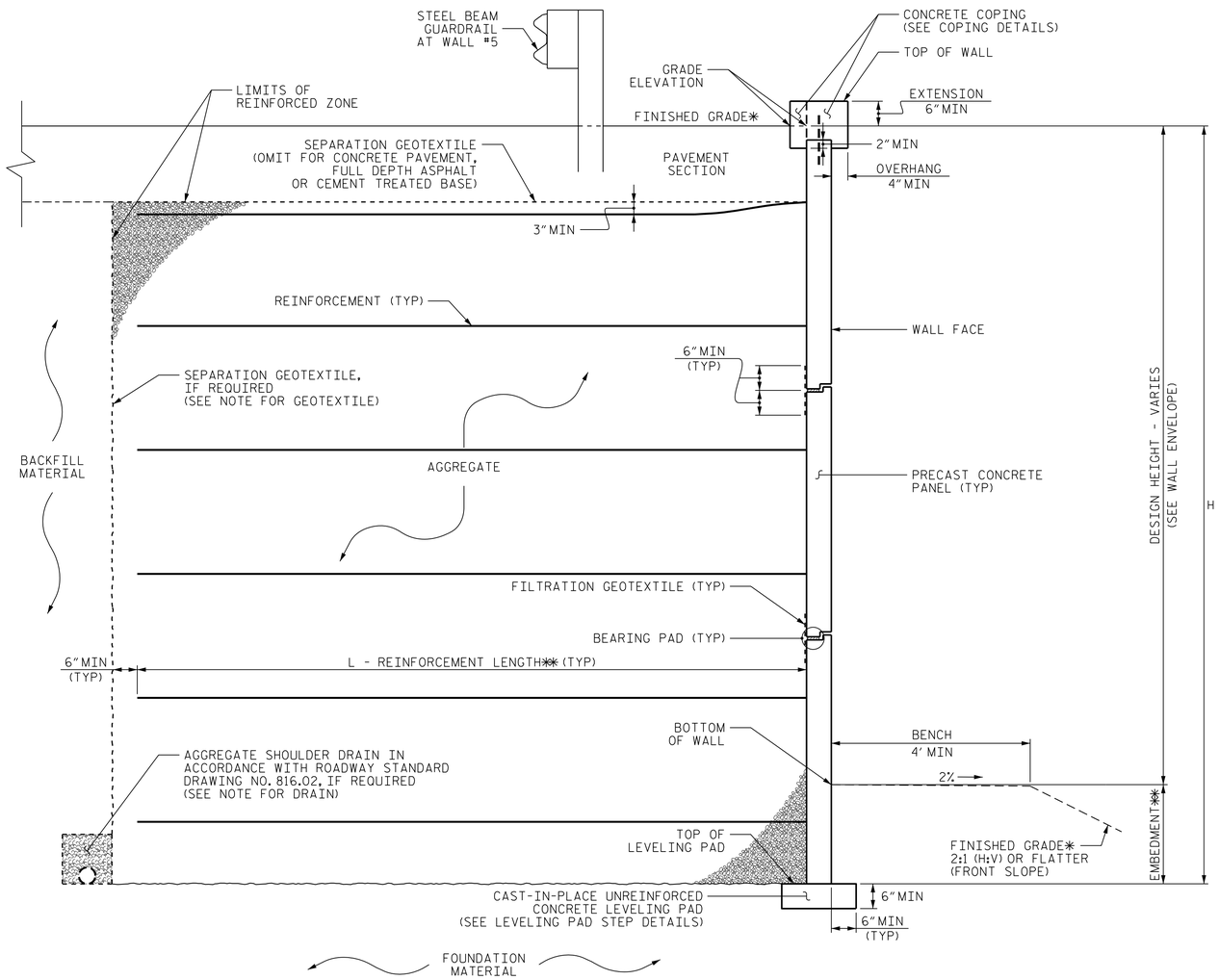

MSE WALL WITH PRECAST PANELS - TYPICAL SECTION

*SEE ROADWAY PLANS FOR FINISHED GRADE DETAILS.
**SEE MSE RETAINING WALLS PROVISION AND IF APPLICABLE, MSE WALL NOTES FOR EMBEDMENT AND REINFORCEMENT LENGTH REQUIREMENTS.

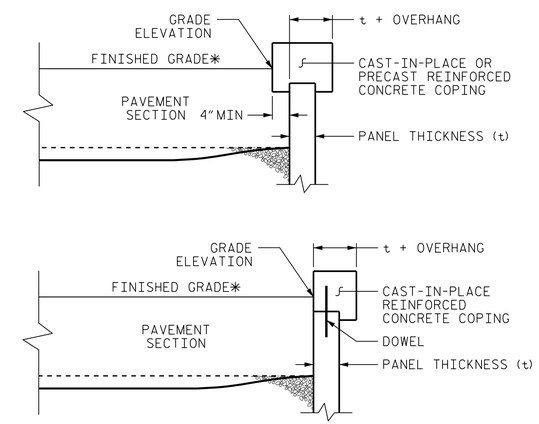

COPING DETAILS

*SEE ROADWAY PLANS FOR FINISHED GRADE DETAILS.

PROJECT NO.: R-5779
MADISON COUNTY
STATION: RWALL1: 14+20.00 TO 20+15.10 -L-
SHEET 2 OF 3

PREPARED BY: SY	DATE: 1/25/2018
REVIEWED BY: MHS	DATE: 1/25/2018

NORTH CAROLINA DEPARTMENT OF TRANSPORTATION DIVISION OF HIGHWAYS

GEOTECHNICAL ENGINEERING UNIT

RETAINING WALL NO. 1
MSE RETAINING WALL

REVISIONS							SHEET NO.
NO.	BY	DATE	NO.	BY	DATE		
1			3				W-2
2			4				

GEOTECHNICAL ENGINEER	ENGINEER
NORTH CAROLINA PROFESSIONAL SEAL 031361 ENGINEER SHIPING YANG DocuSigned by: Shiping Yang DOCCEE5B9B8A1... SIGNATURE 3/2/2018 DATE	SIGNATURE DATE

DOCUMENT NOT CONSIDERED FINAL UNLESS ALL SIGNATURES COMPLETED

NOTES:

FOR MECHANICALLY STABILIZED EARTH (MSE) RETAINING WALLS, SEE MECHANICALLY STABILIZED EARTH RETAINING WALLS PROVISION.

FOR STEEL BEAM GUARDRAIL, SEE ROADWAY PLANS AND SECTION 862 OF THE STANDARD SPECIFICATIONS FOR RETAINING WALL NO. 1.

A FENCE MAY BE REQUIRED ON TOP OF RETAINING WALL NO. 1. SEE ROADWAY PLANS FOR FENCE ATTACHMENT DETAILS.

AN ASHLAR ARCHITECTURAL FINISH IS REQUIRED FOR PRECAST CONCRETE PANELS FOR RETAINING WALL NO. 1.

CONTRACTOR'S OPTION, USE FINE AGGREGATE IN THE REINFORCED ZONE OF RETAINING WALL NO. 1.

A SEPARATION GEOTEXTILE IS REQUIRED AT THE BACK OF THE REINFORCED ZONE FOR RETAINING WALL NO. 1 IF COARSE AGGREGATE IS USED.

A DRAIN IS REQUIRED FOR RETAINING WALL NO. 1.

BEFORE BEGINNING MSE WALL DESIGN FOR RETAINING WALL NO. 1, SURVEY WALL LOCATION AND SUBMIT A REVISED WALL PROFILE VIEW (WALL ENVELOPE) FOR REVIEW. DO NOT START WALL DESIGN OR CONSTRUCTION UNTIL THE REVISED WALL ENVELOPE IS ACCEPTED.

DESIGN RETAINING WALL NO. 1 FOR THE FOLLOWING:
1) H = DESIGN HEIGHT + EMBEDMENT
2) DESIGN LIFE = 100 YEARS
3) MAXIMUM FACTORED VERTICAL PRESSURE ON FOUNDATION MATERIAL = 5,000 LB/SF
4) MINIMUM REINFORCEMENT LENGTH (L) = 0.7H OR 6 FT, WHICHEVER IS LONGER
5) MINIMUM EMBEDMENT ELEVATION = SEE WALL EMBEDMENT TABLE
6) REINFORCED ZONE AGGREGATE PARAMETERS:

AGGREGATE TYPE*	UNIT WEIGHT (γ) LB/CF	FRICTION ANGLE (ϕ) DEGREES	COHESION (c) LB/SF
COARSE	110	38	0
FINE	115	34	0
*SEE MSE RETAINING WALLS PROVISION FOR COARSE AND FINE AGGREGATE MATERIAL REQUIREMENTS.			

7) IN-SITU ASSUMED MATERIAL PARAMETERS:

MATERIAL TYPE	UNIT WEIGHT (γ) LB/CF	FRICTION ANGLE (ϕ) DEGREES	COHESION (c) LB/SF
BACKFILL	120	30	0
FOUNDATION	120	30	0

DESIGN RETAINING WALL NO. 1 FOR A LIVE LOAD (TRAFFIC) SURCHARGE.

EXISTING OR FUTURE OBSTRUCTIONS SUCH AS FOUNDATIONS, GUARDRAIL, FENCE OR HANDRAIL POSTS, PAVEMENTS, PIPES, INLETS OR UTILITIES WILL INTERFERE WITH REINFORCEMENT FOR RETAINING WALL NO. 1.

DO NOT PLACE LEVELING PAD CONCRETE, AGGREGATE OR REINFORCEMENT FOR RETAINING WALL NO. 1 UNTIL EXCAVATION DIMENSIONS AND FOUNDATION MATERIAL ARE APPROVED.

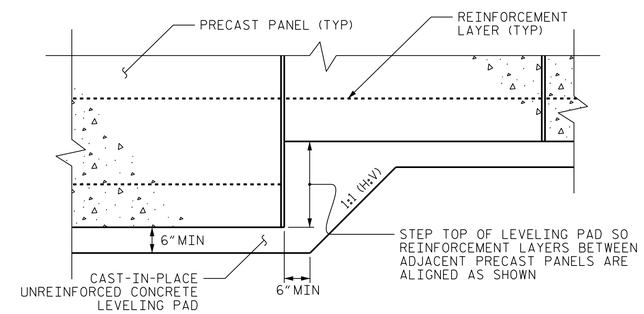

PRECAST CONCRETE PANELS

LEVELING PAD STEP DETAILS

PROJECT NO.: R-5779

MADISON COUNTY

STATION: RWALL1: 14+20.00 TO 20+15.10 -L-

PREPARED BY: SY	DATE: 1/25/2018
REVIEWED BY: MHS	DATE: 1/25/2018

NORTH CAROLINA DEPARTMENT OF TRANSPORTATION DIVISION OF HIGHWAYS

GEOTECHNICAL ENGINEERING UNIT

SHEET 3 OF 3

RETAINING WALL NO. 1
MSE RETAINING WALL

REVISIONS						SHEET NO.
NO.	BY	DATE	NO.	BY	DATE	
1			3			W-3
2			4			