PROJECT: 17BP.13.R.67

CONTRACT:

See Sheet 1-A For Index of Sheets

See Sheet 1-B For Conventional Symbols

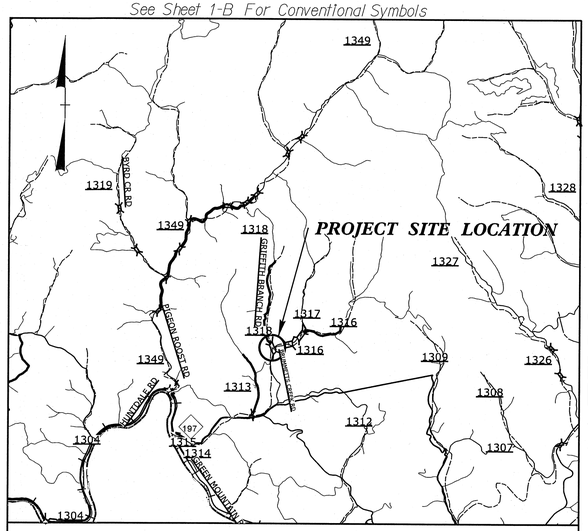

VICINITY MAP

N.T.S.

FINAL PLANS

STATE OF NORTH CAROLINA
DIVISION OF HIGHWAYS

MITCHELL COUNTY

STATE	STATE PROJECT REFERENCE NO.	SHEET NO.	TOTAL SHEETS
N.C.	17BP.13.R.67	1	
MITCHELL COUNTY #600202			

STATE PROJ. NO.	F.A. PROJ. NO.	DESCRIPTION
17BP.13.R.67		PE
17BP.13.R.67		R/W & UTILITIES
17BP.13.R.67		CONST.

LOCATION: BRIDGE NO. 600202 ON SR 1318 (GRIFFITH BRANCH ROAD) OVER BRUMMETT CREEK

TYPE OF WORK: GRADING, DRAINAGE, PAVING AND STRUCTURE

NAD 83/ NSRS 2007

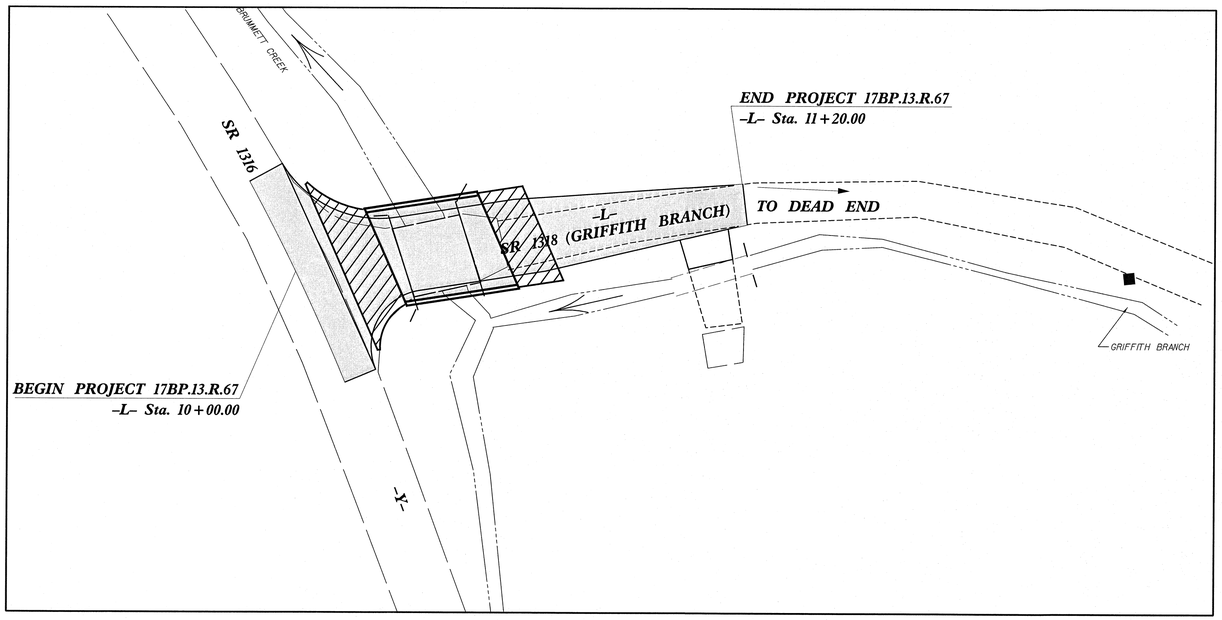

GRAPHIC SCALES

PLANS: 20 10 0 20 40

PROFILE (HORIZONTAL): 20 10 0 20 40

PROFILE (VERTICAL): 4 2 0 4 8

DESIGN DATA

ADT 2008	=	70	
ADT 2025	=	140	
DHV	=	N/A	%
D	=	N/A	%
T	=	N/A	% *
V	=	20	MPH

FUNCTIONAL CLASSIFICATION: RURAL LOCAL

PROJECT LENGTH

LENGTH ROADWAY PROJECT 17BP.13.R.67 = 0.017 mi

LENGTH STRUCTURE PROJECT 17BP.13.R.67 = 0.006 mi

TOTAL LENGTH OF PROJECT 17BP.13.R.67 = 0.023 mi

PLANS PREPARED BY:

CH ENGINEERING

3220 GLEN ROYAL RD. RALEIGH, NC 27617
TELE 919.788.0224 FAX 919.788.0232
NC LICENSE #P-0189

2012 STANDARD SPECIFICATIONS

RIGHT OF WAY DATE: 6-11-12

LETTING DATE:

PLANS PREPARED FOR:

DIVISION OF HIGHWAYS

20 Old 74
Asheville, NC 28803

THOMAS R. HEPLER, PE, PLS
PROJECT ENGINEER

ERIC M. TWEED, PE
PROJECT DESIGN ENGINEER

HYDRAULICS ENGINEER

NORTH CAROLINA PROFESSIONAL SEAL 026480 ENGINEER LARRY D. ROBINSON, JR.

SIGNATURE: 2-25-14 P.E.

ROADWAY DESIGN ENGINEER

NORTH CAROLINA PROFESSIONAL SEAL 10359 ENGINEER THOMAS R. HEPLER

SIGNATURE: 2/6/14 P.E.

DIVISION OF HIGHWAYS
STATE OF NORTH CAROLINA

STATE OF NORTH CAROLINA • DEPARTMENT OF TRANSPORTATION •

8/17/99

PROJECT REFERENCE NO.	SHEET NO.
17BP.13.R.67	1-A

ROADWAY DESIGN ENGINEER

NORTH CAROLINA PROFESSIONAL SEAL 038359 ENGINEER THOMAS R. JEFFREY

3/6/14

INDEX OF SHEETS

1	Title Sheet
1-A	Index of Sheets, Roadway Standards, General Notes
1-B	Conventional Symbols
2	Typical Sections
3	Pipe Data Sheet / Summary of Quantities
4	-L- Plan and Profile Sheets
5	-DET- Plan and Profile Sheets
TCP-1 thru TCP-2	Traffic Control Plans
EC-1 thru EC-4	Erosion Control Plans
RF-1	Reforestation Detail Sheet
X-1 thru X-2	-L- line Cross Sections
X-3 thru X-4	-DET- line Cross Sections
S-1 thru S-23	Structure Plans

GENERAL NOTES: 2012 SPECIFICATIONS
EFFECTIVE: 01-17-12

GRADING AND SURFACING:

THE GRADE LINES SHOWN DENOTE THE FINISHED ELEVATION OF THE PROPOSED SURFACING AT GRADE POINTS SHOWN ON THE TYPICAL SECTIONS. GRADE LINES MAY BE ADJUSTED AT THEIR BEGINNING AND ENDING AND AT STRUCTURES AS DIRECTED BY THE ENGINEER IN ORDER TO SECURE A PROPER TIE-IN.

CLEARING:

CLEARING ON THIS PROJECT SHALL BE PERFORMED TO THE LIMITS ESTABLISHED BY METHOD II.

SUPERELEVATION:

ALL CURVES ON THIS PROJECT SHALL BE SUPERELEVATED IN ACCORDANCE WITH STD. NO. 225.04 USING THE RATE OF SUPERELEVATION AND RUNOFF SHOWN ON THE PLANS. SUPERELEVATION IS TO BE REVOLVED ABOUT THE GRADE POINTS SHOWN ON THE TYPICAL SECTIONS.

SHOULDER CONSTRUCTION:

ASPHALT, EARTH, AND CONCRETE SHOULDER CONSTRUCTION ON THE HIGH SIDE OF SUPERELEVATED CURVES SHALL BE IN ACCORDANCE WITH STD. NO. 560.01.

SIDE ROADS:

THE CONTRACTOR WILL BE REQUIRED TO DO ALL NECESSARY WORK TO PROVIDE SUITABLE CONNECTIONS WITH ALL ROADS, STREETS, AND DRIVES ENTERING THIS PROJECT. THIS WORK WILL BE PAID FOR AT THE CONTRACT UNIT PRICE FOR THE PARTICULAR ITEMS INVOLVED.

UNDERDRAINS:

UNDERDRAINS SHALL BE CONSTRUCTED IN ACCORDANCE WITH STD. NO. 815.03 AT LOCATIONS DIRECTED BY THE ENGINEER.

STREET TURNOUT:

STREET RETURNS SHALL BE CONSTRUCTED IN ACCORDANCE WITH STD. NO. 848.04 USING THE RADII NOTED ON PLANS.

GUARDRAIL:

THE GUARDRAIL LOCATIONS SHOWN ON THE PLANS MAY BE ADJUSTED DURING CONSTRUCTION AS DIRECTED BY THE ENGINEER. THE CONTRACTOR SHOULD CONSULT WITH THE ENGINEER PRIOR TO ORDERING GUARDRAIL MATERIAL.

TEMPORARY SHORING:

SHORING REQUIRED FOR THE MAINTENANCE OF TRAFFIC WILL BE PAID FOR AS "EXTRA WORK" IN ACCORDANCE WITH SECTION 104-7.

END BENTS:

THE ENGINEER SHALL CHECK THE STRUCTURE END BENT PLANS, DETAILS, AND CROSS-SECTION PRIOR TO SETTING OF THE SLOPE STAKES FOR THE EMBANKMENT OR EXCAVATION APPROACHING A BRIDGE.

UTILITIES:

UTILITY OWNERS ON THIS PROJECT ARE FRENCH BROAD EMC, FRONTIER COMMUNICATIONS, AND COUNTRY CABLE
ANY RELOCATION OF EXISTING UTILITIES WILL BE ACCOMPLISHED BY OTHERS.
NO UTILITIES ARE ANTICIPATED TO BE IN CONFLICT WITH PROPOSED CONSTRUCTION.

RIGHT-OF-WAY MARKERS:

RIGHT-OF-WAY POINTS INDICATED IN THESE PLANS HAVE BEEN PLACED. AT THE END OF CONSTRUCTION CONTRACTOR IS RESPONSIBLE FOR PLACING CONCRETE MONUMENTS AT POINTS INDICATED ON PLANS. ANY RIGHT-OF-WAY POINTS DESTROYED DURING CONSTRUCTION SHALL BE ACCURATELY RESET BY CONTRACTOR.

EFF. 01-17-12

2012 ROADWAY STANDARD DRAWINGS

The following Roadway Standards as appear in "Roadway Standard Drawings" Highway Design Branch - N. C. Department of Transportation - Raleigh, N. C., Dated Jan 17, 2012 are applicable to this project and by reference hereby are considered a part of these plans:

STD.NO.	TITLE
DIVISION 2 - EARTHWORK	
200.03	Method of Clearing - Method II
225.02	Guide for Grading Subgrade - Secondary and Local
225.04	Method of Obtaining Superelevation - Two Lane Pavement
DIVISION 3 - PIPE CULVERTS	
300.01	Method of Pipe Installation
DIVISION 4 - BRIDGE APPROACH	
422.11	Bridge Approach Fills
DIVISION 5 - SUBGRADE, BASES AND SHOULDERS	
560.01	Method of Shoulder Construction - High Side of Superelevated Curve - Method I
DIVISION 8 - INCIDENTALS	
806.01	Concrete Right-of-Way Marker
862.02	Guardrail Installation
862.03	Structure Anchor Units
DIVISION 9 - SIGNING	
904.50	Mounting of D.E.& F Signs
DIVISION 11 - WORK ZONE TRAFFIC CONTROL	
1101.01	Work Zone Advance Warning Signs
1101.02	Temporary Lane Closures
1101.11	Traffic Control Design Tables
1110.01	Stationary Work Zone Signs
1110.02	Portable Work Zone Signs
1130.01	Drum
1135.01	Cones
1145.01	Barricades - Type III
1160.01	Temporary Crash Cushion - Reflective End Treatment
1170.01	Positive Protection - Portable Concrete Barrier
1180.01	Skinny Drum
DIVISION 12 - PAVEMENT MARKINGS, MARKERS AND DELINEATION	
1205.01	Pavement Markings - Line Types and Offsets
1205.02	Pavement Markings - Two Lane and Multilane Roadways

K3/2014
H:\Projects\Proj\600202_RDY_PSH01A.dgn
USER:RMH

04/16/11

PROJECT REFERENCE NO.	SHEET NO.
17BP.13.R.67	1-B

Note: Not to Scale

S.U.E. = Subsurface Utility Engineering

STATE OF NORTH CAROLINA
DIVISION OF HIGHWAYS

CONVENTIONAL PLAN SHEET SYMBOLS

BOUNDARIES AND PROPERTY:

- State Line
- County Line
- Township Line
- City Line
- Reservation Line
- Property Line
- Existing Iron Pin — EIP
- Property Corner
- Property Monument — ECM
- Parcel/Sequence Number — 123
- Existing Fence Line
- Proposed Woven Wire Fence
- Proposed Chain Link Fence
- Proposed Barbed Wire Fence
- Existing Wetland Boundary — WLB
- Proposed Wetland Boundary — WLB
- Existing Endangered Animal Boundary — EAB
- Existing Endangered Plant Boundary — EPB
- Known Soil Contamination: Area or Site
- Potential Soil Contamination: Area or Site

BUILDINGS AND OTHER CULTURE:

- Gas Pump Vent or U/G Tank Cap
- Sign — S
- Well — W
- Small Mine
- Foundation
- Area Outline
- Cemetery
- Building
- School
- Church
- Dam

HYDROLOGY:

- Stream or Body of Water
- Hydro, Pool or Reservoir
- Jurisdictional Stream — JS
- Buffer Zone 1 — BZ 1
- Buffer Zone 2 — BZ 2
- Flow Arrow
- Disappearing Stream
- Spring
- Wetland
- Proposed Lateral, Tail, Head Ditch — FLOW
- False Sump

RAILROADS:

- Standard Gauge — CSX TRANSPORTATION
- RR Signal Milepost — MILEPOST 35
- Switch — SWITCH
- RR Abandoned
- RR Dismantled

RIGHT OF WAY:

- Baseline Control Point
- Existing Right of Way Marker
- Existing Right of Way Line
- Proposed Right of Way Line — RW
- Proposed Right of Way Line with Iron Pin and Cap Marker — RW
- Proposed Right of Way Line with Concrete or Granite R/W Marker — RW
- Proposed Control of Access Line with Concrete C/A Marker — CA
- Existing Control of Access — CA
- Proposed Control of Access — CA
- Existing Easement Line — E
- Proposed Temporary Construction Easement — E
- Proposed Temporary Drainage Easement — TDE
- Proposed Permanent Drainage Easement — PDE
- Proposed Permanent Drainage / Utility Easement — DUE
- Proposed Permanent Utility Easement — PUE
- Proposed Temporary Utility Easement — TUE
- Proposed Aerial Utility Easement — AUE
- Proposed Permanent Easement with Iron Pin and Cap Marker

ROADS AND RELATED FEATURES:

- Existing Edge of Pavement
- Existing Curb
- Proposed Slope Stakes Cut — C
- Proposed Slope Stakes Fill — F
- Proposed Curb Ramp — CR
- Existing Metal Guardrail
- Proposed Guardrail
- Existing Cable Guiderail
- Proposed Cable Guiderail
- Equality Symbol
- Pavement Removal

VEGETATION:

- Single Tree
- Single Shrub
- Hedge
- Woods Line
- Orchard
- Vineyard — Vineyard

EXISTING STRUCTURES:

MAJOR:

- Bridge, Tunnel or Box Culvert — CONC
- Bridge Wing Wall, Head Wall and End Wall — CONC WW

MINOR:

- Head and End Wall — CONC HW
- Pipe Culvert
- Footbridge
- Drainage Box: Catch Basin, DI or JB — CB
- Paved Ditch Gutter
- Storm Sewer Manhole — S
- Storm Sewer — S

UTILITIES:

POWER:

- Existing Power Pole
- Proposed Power Pole
- Existing Joint Use Pole
- Proposed Joint Use Pole
- Power Manhole — P
- Power Line Tower
- Power Transformer
- U/G Power Cable Hand Hole
- H-Frame Pole
- Recorded U/G Power Line — P
- Designated U/G Power Line (S.U.E.*) — P

TELEPHONE:

- Existing Telephone Pole
- Proposed Telephone Pole
- Telephone Manhole — T
- Telephone Booth
- Telephone Pedestal — T
- Telephone Cell Tower
- U/G Telephone Cable Hand Hole — HH
- Recorded U/G Telephone Cable — T
- Designated U/G Telephone Cable (S.U.E.*) — T
- Recorded U/G Telephone Conduit — TC
- Designated U/G Telephone Conduit (S.U.E.*) — TC
- Recorded U/G Fiber Optics Cable — T FO
- Designated U/G Fiber Optics Cable (S.U.E.*) — T FO

WATER:

- Water Manhole — W
- Water Meter
- Water Valve
- Water Hydrant
- Recorded U/G Water Line — W
- Designated U/G Water Line (S.U.E.*) — W
- Above Ground Water Line — A/G Water

TV:

- TV Satellite Dish
- TV Pedestal — C
- TV Tower
- U/G TV Cable Hand Hole — HH
- Recorded U/G TV Cable — TV
- Designated U/G TV Cable (S.U.E.*) — TV
- Recorded U/G Fiber Optic Cable — TV FO
- Designated U/G Fiber Optic Cable (S.U.E.*) — TV FO

GAS:

- Gas Valve
- Gas Meter
- Recorded U/G Gas Line — G
- Designated U/G Gas Line (S.U.E.*) — G
- Above Ground Gas Line — A/G Gas

SANITARY SEWER:

- Sanitary Sewer Manhole
- Sanitary Sewer Cleanout
- U/G Sanitary Sewer Line — SS
- Above Ground Sanitary Sewer — A/G Sanitary Sewer
- Recorded SS Forced Main Line — FSS
- Designated SS Forced Main Line (S.U.E.*) — FSS

MISCELLANEOUS:

- Utility Pole
- Utility Pole with Base
- Utility Located Object
- Utility Traffic Signal Box — S
- Utility Unknown U/G Line — ?UTL
- U/G Tank; Water, Gas, Oil
- Underground Storage Tank, Approx. Loc.
- A/G Tank; Water, Gas, Oil
- Geoenvironmental Boring
- U/G Test Hole (S.U.E.*)
- Abandoned According to Utility Records — AATUR
- End of Information — E.O.I.

	PAVEMENT SCHEDULE
C1	PROP. APPROX. 3" ASPHALT CONCRETE SURFACE COURSE, TYPE S9.5B, AT AN AVERAGE RATE OF 168 LBS. PER SQ. YD. IN EACH OF TWO LAYERS.
C2	PROP. VARIABLE DEPTH ASPHALT CONCRETE SURFACE COURSE, TYPE S9.5B, AT AN AVERAGE RATE OF 112 LBS. PER SQ. YD. PER 1" DEPTH. TO BE PLACED IN LAYERS NOT LESS THAN 1½" OR GREATER THAN 2" IN DEPTH.
E1	PROP. APPROX. 4" ASPHALT CONCRETE BASE COURSE, TYPE B25.0B, AT AN AVERAGE RATE OF 456 LBS. PER SQ. YD.
E2	PROP. VAR. DEPTH ASPHALT CONCRETE BASE COURSE, TYPE B25.0B, AT AN AVERAGE RATE OF 114 LBS PER SQ. YD. PER 1" DEPTH TO BE PLACED IN LAYERS NOT LESS THAN 3" IN DEPTH OR GREATER THAN 5½" IN DEPTH
J1	PROP. 8" AGGREGATE BASE COURSE
J2	VARIABLE DEPTH AGGREGATE BASE COURSE
U1	EXISTING PAVEMENT
U2	EXISTING ABC
W	VARIABLE DEPTH ASPHALT PAVEMENT (SEE WEDGING DETAIL, THIS SHEET)

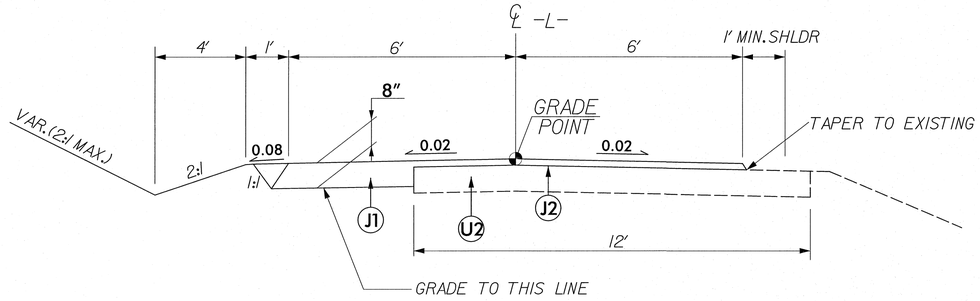

TYPICAL SECTION NO. 1

-DET- Sta. 10+09.25 TO -L- Sta. 11+15.00

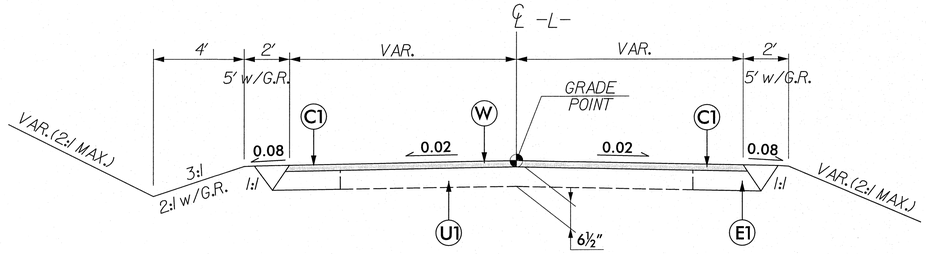

TYPICAL SECTION NO. 2

-L- Sta. 10+09.25 TO -L- Sta. 10+24.00 (BEGIN BRIDGE)

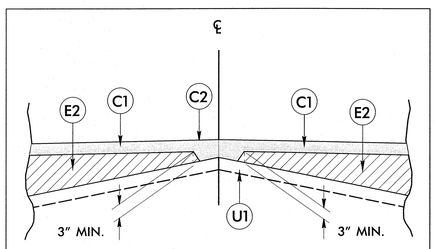

Detail Showing Method of Wedging

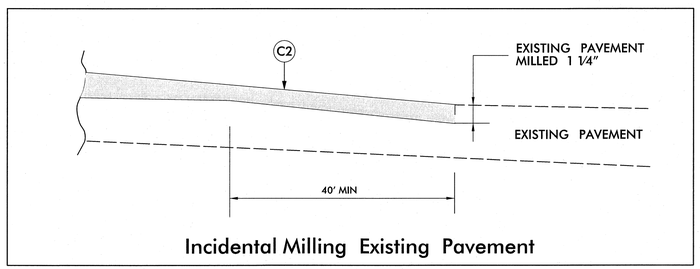

Incidental Milling Existing Pavement

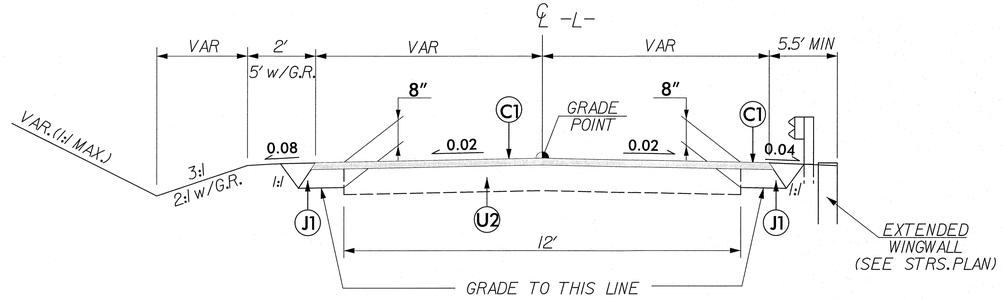

TYPICAL SECTION NO. 3

-L- Sta. 10+54.00 (END BRIDGE) TO -L- Sta. 11+20.00

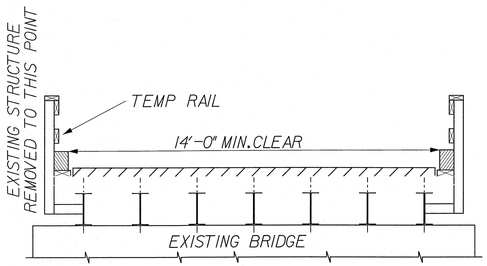

TYPICAL SECTION NO. 4A (Phase I)

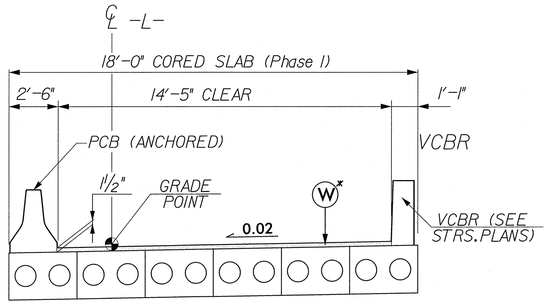

* PLACE C2 COURSE TO PROVIDE TRANSITION FROM APPROACH SLAB TO BRIDGE.

TYPICAL SECTION NO. 4B (Phase II)

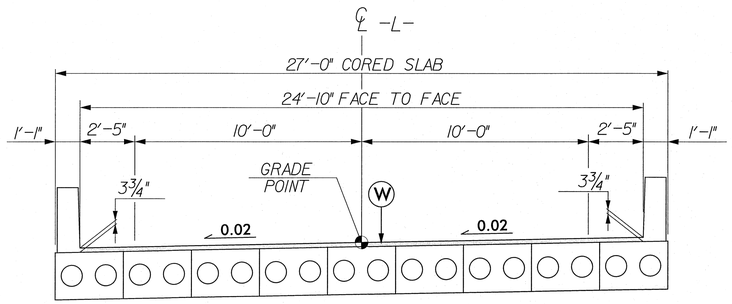

TYPICAL SECTION NO. 4

-L- Sta. 10+24.00 TO -L- Sta. 10+54.00

PROJECT REFERENCE NO.	SHEET NO.
17BP.13.R.67	2
MITCHELL COUNTY #600202	

ROADWAY DESIGN ENGINEER

PAVEMENT DESIGN ENGINEER

NORTH CAROLINA PROFESSIONAL SEAL 030359 ENGINEER THOMAS H. HYLER

2/6/14

CH ENGINEERING

3220 GLEN ROYAL RD. RALEIGH, NC 27617
TELE 919.788.0224 FAX 919.788.0232
NC LICENSE #P-0189

PROJECT NO. 17BP.13.R.67
COUNTY: MITCHELL
REPLACES BRIDGE NO. 600202

STATE OF NORTH CAROLINA
DEPARTMENT OF TRANSPORTATION
RALEIGH

BRIDGE NO. 600202
ON SR 1318
OVER BRUMMETT CREEK

6/2/99

K:\17.2014 Projects\600202-rdy-typ.dgn

6/21/00

COMPUTED BY: TLH DATE: 4–16–13
CHECKED BY: TRH 4–16–13

STATE OF NORTH CAROLINA
DIVISION OF HIGHWAYS

CH ENGINEERING
3220 GLEN ROYAL RD. RALEIGH, NC 27617
TELE 919.788.0224 FAX 919.788.0232
NC LICENSE #P-0189

PROJECT REFERENCE NO.	SHEET NO.
17BP.13.R.67	3
BRIDGE NO. 600202	

SUMMARY OF EARTHWORK

CHAIN	FROM STATION	TO STATION	SIDE	UNCL. EXCAVATION	UNDERCUT	EMBT+%	BORROW	WASTE
–L–	10+00	11+10	CENTERLINE	25		10	0	15
SUBTOTAL SUMMARY NO. 1				25		10	0	15
–DET–	10+00	10+98	CENTERLINE	81		191	110	0
SUBTOTAL SUMMARY NO. 2				81		191	110	0
SUBTOTAL SUMMARY 1–2				106		201	110	15
LOSS DUE TO CLEARING AND GRUBBING								
PROJECT TOTAL				106		201	110	15
STRUCTURE IN LIEU OF BORROW							–46	
ESTIMATE 5% FOR TOPSOIL ON BORROW PITS								
GRAND TOTAL				106		201	64	15
SAY				125			75	

NOTE: Invert Elevations are for Bid Purposes only and shall not be used for project construction stakeout.
See "Standard Specifications For Roads and Structures, Section 300–5".

LIST OF PIPES, ENDWALLS, ETC. (FOR PIPES 54" & OVER)

STATION	LOCATION (LT,RT, OR CL)	STRUCTURE NO. FROM	STRUCTURE NO. TO	TOP ELEVATION	INVERT ELEVATION	INVERT ELEVATION	SLOPE CRITICAL	HDPE SIZE	HDPE THICKNESS OR GAUGE	BITUMINOUS COATED C.S. PIPE TYPE B SIZE	BITUMINOUS COATED C.S. PIPE TYPE B SHOP ELON–GATED	BITUMINOUS COATED C.S. PIPE TYPE B THICKNESS OR GAUGE	STRUCTURAL PLATE PIPE SIZE	STRUCTURAL PLATE PIPE THICKNESS OR GAUGE	REINFORCED ENDWALLS WITH R.C. – C.Y.	REINFORCED ENDWALLS WITH C.S. – C.Y.	MASONARY DRAINAGE STRUCTURES CUBIC YARDS	SANDBAG HW S.F.	REINF. CONC. FLARED END SECTIONS NO. & SIZE	CORR. STEEL FLARED END SECTIONS NO. & SIZE	REINF. CONC. ELBOWS NO. & SIZE	CORR. STEEL ELBOWS NO. & SIZE	CONC. COLLARS CL. "B" C.Y. STD 840.72	PIPE REMOVAL LIN.FT.	REMARKS
								54" 60" 66" 72" 78" 84"		54" 60" 66" 72"			60" 66" 72"												
												.109 .138 .168		12 10 12 10 12 10											
–DET– 10+34	CL							24										80						24	TEMP PIPE WITH TEMP EW
–DET– 10+40	CL							24										80						24	TEMP PIPE WITH TEMP EW
TOTAL								48										160						48	

ABBREVIATIONS

C.B.	CATCH BASIN
N.D.I.	NARROW DROP INLET
D.I.	DROP INLET
G.D.I.	GRATED DROP INLET
G.D.I. (N.S.)	GRATED DROP INLET (NARROW SLOT)
J.B.	JUNCTION BOX
M.H.	MANHOLE
T.B.D.I.	TRAFFIC BEARING DROP INLET
T.B.J.B.	TRAFFIC BEARING JUNCTION BOX

"N" = DISTANCE FROM EDGE OF LANE TO FACE OF GUARDRAIL.
TOTAL SHOULDER WIDTH = DISTANCE FROM EDGE OF TRAVEL LANE TO SHOULDER BREAK POINT.
FLARE LENGTH = DISTANCE FROM LAST SECTION OF PARALLEL GUARDRAIL TO END OF GUARDRAIL.
W = TOTAL WIDTH OF FLARE FROM BEGINNING OF TAPER TO END OF GUARDRAIL.
G = GATING IMPACT ATTENUATOR TYPE 350
NG = NON–GATING IMPACT ATTENUATOR TYPE 350

GUARDRAIL SUMMARY

SURVEY LINE	BEG. STA.	END STA.	LOCATION	LENGTH STRAIGHT	LENGTH SHOP CURVED	LENGTH DOUBLE FACED	WARRANT POINT APPROACH END	WARRANT POINT TRAILING END	"N" DIST. FROM E.O.L.	TOTAL SHOUL. WIDTH	FLARE LENGTH APPROACH END	FLARE LENGTH TRAILING END	W APPROACH END	W TRAILING END	ANCHORS III SC	ANCHORS III	ANCHORS GRAU 350 TL–2	ANCHORS M–350	ANCHORS XIII	ANCHORS CAT–1	ANCHORS VI MOD	ANCHORS BIC	ANCHORS AT–1	IMPACT ATTENUATOR TYPE 350 EA	IMPACT ATTENUATOR TYPE 350 G	IMPACT ATTENUATOR TYPE 350 NG	SINGLE FACED GUARDRAIL	REMOVE EXISTING GUARDRAIL	REMOVE AND STOCKPILE EXISTING GUARDRAIL	REMARKS
–Y– & –L–	11+95.00	10+27.32	RIGHT	50	18.75		10+27.32		2	5	0		0		1		1													SHOP CURVED TYPE III
–Y– & –L–	10+35.00	10+20.67	LEFT	50	18.75		10+20.67		2	5	0		0		1		1													SHOP CURVED TYPE III
–L–	10+57.32	11+01.07	RIGHT	43.75				10+57.32	2	5		0		0		1														
–L–	10+50.67	10+81.92	LEFT	31.25				10+50.67	2	5		0		0		1						2								
	LESS ANCHOR DEDUCTIONS																													
		TYPE III	4 @ 18.75'	–37.50	–37.50																									
		GRAU 350 TL–2	2 @ 25'	–50																										
		AT–1	2 @ 6.25'	–12.50																										
		TOTAL		75	0.00										2	2	2						2							
		SAY		75.00	12.5										2	2	2						2							

2/25/2014
R:\Roadway\Proj\600202_RDY_SUM_PSH03.dgn
KLEDWARD

REVISIONS

CURVE DATA FOR -L-

PI Sta 11+21.17
△ = 4° 42' 11.1" (RT)
D = 16° 22' 12.8"
L = 28.73'
T = 14.37'
R = 350.00'

PI Sta 11+92.60
△ = 31° 51' 17.8" (RT)
D = 28° 38' 52.4"
L = 111.19'
T = 57.08'
R = 200.00'

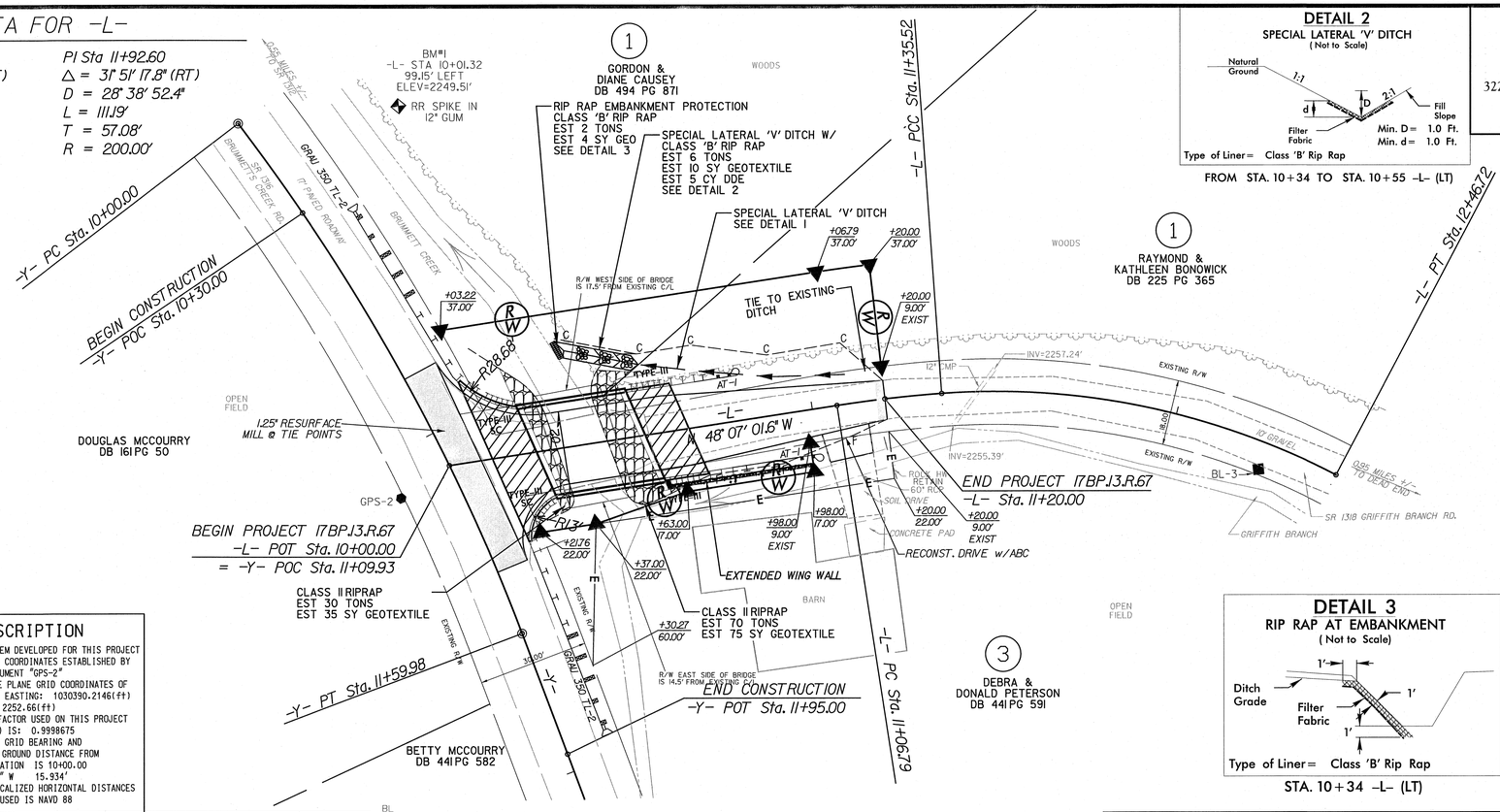

DETAIL 2
SPECIAL LATERAL 'V' DITCH
(Not to Scale)

Type of Liner = Class 'B' Rip Rap

FROM STA. 10+34 TO STA. 10+55 -L- (LT)

CH ENGINEERING
3220 GLEN ROYAL RD. RALEIGH, NC 27617
TELE 919.788.0224 FAX 919.788.0232
NC LICENSE #P-0189

PROJECT REFERENCE NO.	SHEET NO.
17BP.13.R.67	4
BRIDGE NO. 600202	

ROADWAY DESIGN ENGINEER
NORTH CAROLINA PROFESSIONAL SEAL 029859 ENGINEER MAS R. HETLER
2/6/14

HYDRAULICS ENGINEER
NORTH CAROLINA PROFESSIONAL SEAL 026480 ENGINEER LARRY D. ROBINSON, JR.
2-25-14

DETAIL 1
SPECIAL LATERAL 'V' DITCH
(Not to Scale)

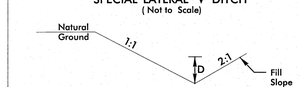

Type of Liner = None

FROM STA. 10+55 TO STA. 11+10 -L- (LT)

PARCEL NO#	R/W AREA SQ FT/AC	PUE AREA SQ FT/AC	TEMP EASEMENT AREA SQ FT/AC
1	1390.42/0.0319		
2	1725.15/0.0396		
3	572.15/0.0131		809.67/0.0186

DETAIL 3
RIP RAP AT EMBANKMENT
(Not to Scale)

Type of Liner = Class 'B' Rip Rap

STA. 10+34 -L- (LT)

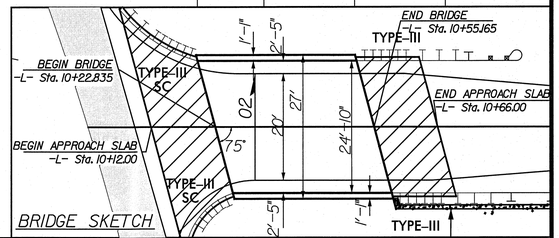

BRIDGE SKETCH

DATUM DESCRIPTION

THE LOCALIZED COORDINATE SYSTEM DEVELOPED FOR THIS PROJECT IS BASED ON THE STATE PLANE COORDINATES ESTABLISHED BY NCDOT FOR MONUMENT "GPS-2"
WITH NAD 83/NSRS 2007 STATE PLANE GRID COORDINATES OF NORTHING: 854039.8446(ft) EASTING: 1030390.2146(ft)
ELEVATION: 2252.66(ft)
THE AVERAGE COMBINED GRID FACTOR USED ON THIS PROJECT (GROUND TO GRID) IS: 0.9998675
THE N.C. LAMBERT GRID BEARING AND LOCALIZED HORIZONTAL GROUND DISTANCE FROM "GPS-2" TO -L- STATION IS 10+00.00
N 73° 41' 35.0" W 15.934'
ALL LINEAR DIMENSIONS ARE LOCALIZED HORIZONTAL DISTANCES
VERTICAL DATUM USED IS NAVD 88

BL

POINT	DESC.	NORTH	EAST	ELEVATION	-L- STATION	OFFSET
1	GPS-1	853670.9557	1030289.5122	2240.48	OUTSIDE PROJECT LIMITS	
2	GPS-2	854039.8446	1030390.2146	2252.66	OUTSIDE PROJECT LIMITS	
3	BL-3	854215.6846	1030236.3562	2262.00	12+27.50	7.48 RT

BRIDGE HYDRAULIC DATA

DESIGN DISCHARGE	= 410	CFS
DESIGN FREQUENCY	= 5	YRS
DESIGN HW ELEVATION	= 2253.4	FT
BASE DISCHARGE	= 1100	CFS
BASE FREQUENCY	= 100	YRS
BASE HW ELEVATION	= 2255.5	FT
OVERTOPPING DISCHARGE	= 625	CFS
OVERTOPPING FREQUENCY	= 10+	YRS
OVERTOPPING ELEVATION	= 2253.9	FT

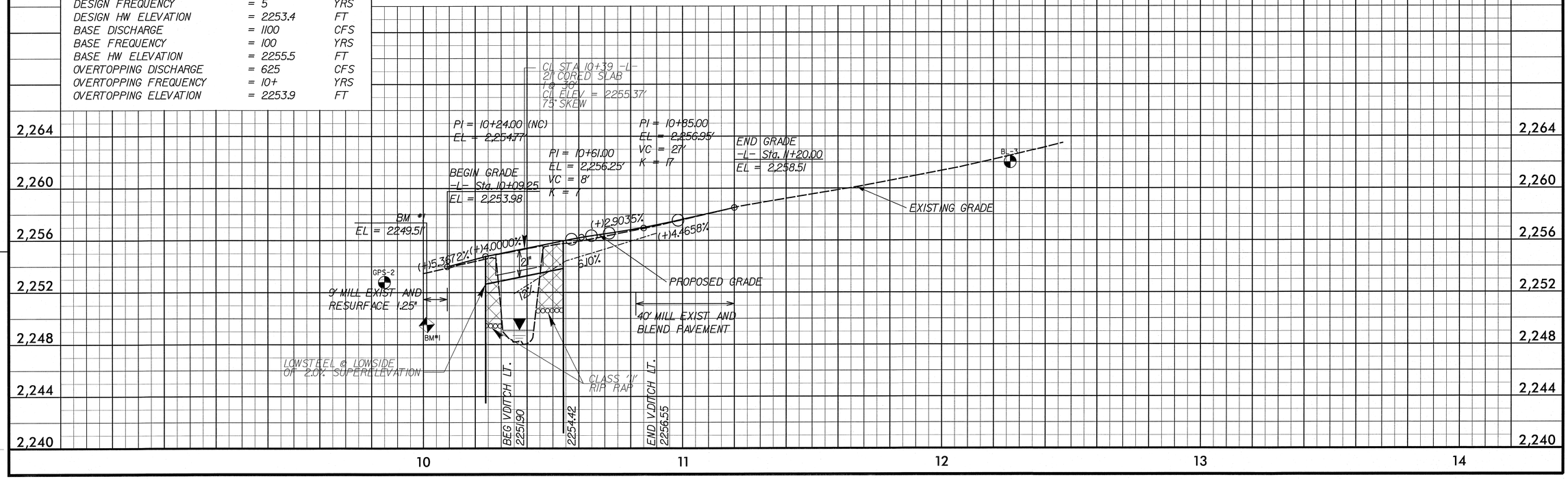

8/17/99

REVISIONS

CURVE DATA FOR -DET-

PI Sta 10+60.54
△ = 29° 01' 09.0" (RT)
D = 114° 35' 29.6"
L = 25.32'
T = 12.94'
R = 50.00'

PI Sta 10+98.82
△ = 28° 02' 11.6" (LT)
D = 114° 35' 29.6"
L = 24.47'
T = 12.48'
R = 50.00'

PI Sta 11+27.39
△ = 5° 25' 36.0" (RT)
D = 16° 22' 12.8"
L = 33.15'
T = 16.59'
R = 350.00'

PI Sta 12+01.03
△ = 35° 09' 17.8" (RT)
D = 028° 38' 52.4"
L = 111.19'
T = 57.08'
R = 200.00'

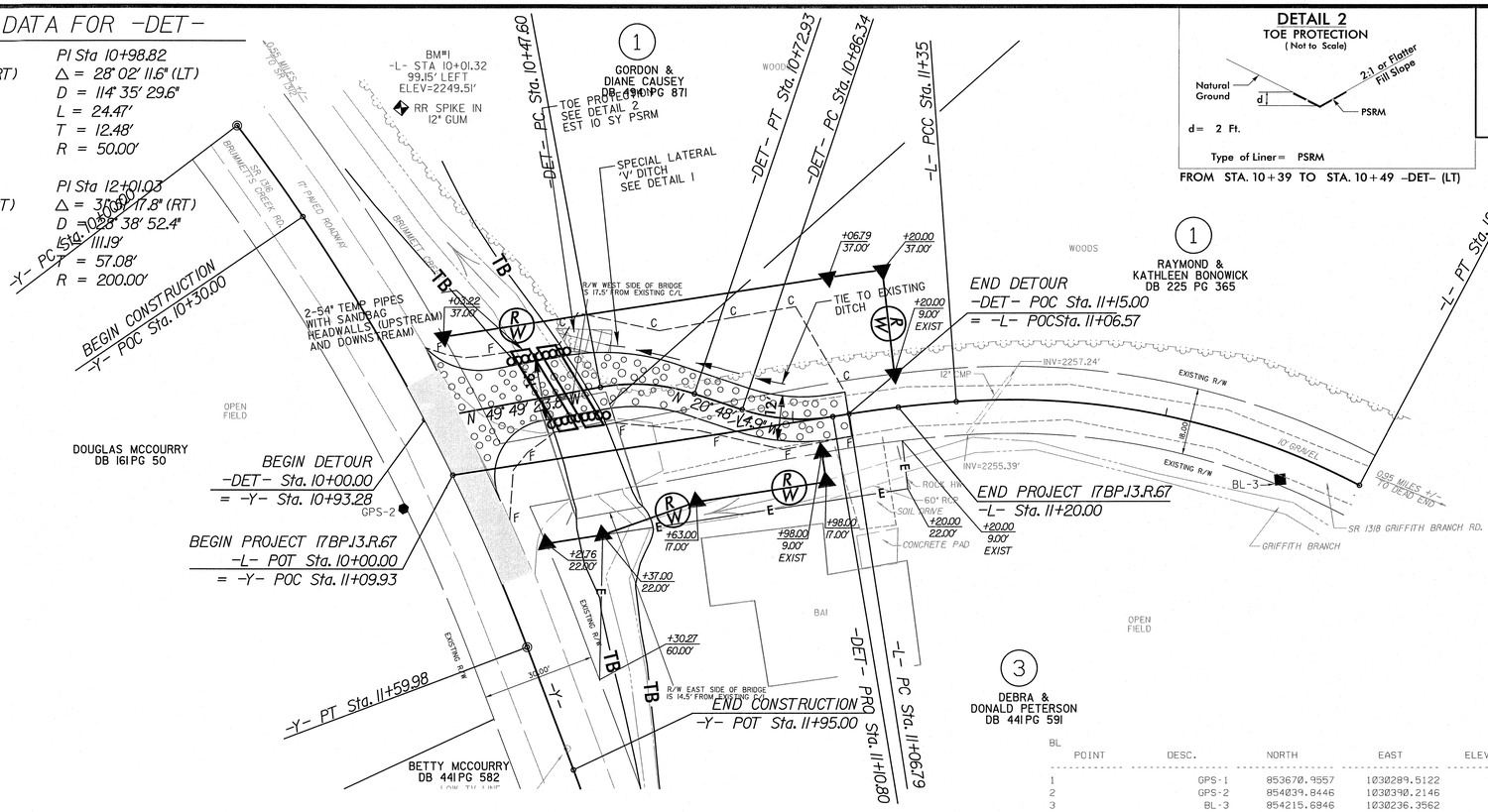

DETAIL 2
TOE PROTECTION
(Not to Scale)

d = 2 Ft.

Type of Liner = PSRM

FROM STA. 10+39 TO STA. 10+49 -DET- (LT)

CH ENGINEERING
3220 GLEN ROYAL RD. RALEIGH, NC 27617
TELE 919.788.0224 FAX 919.788.0232
NC LICENSE #P-0189

PROJECT REFERENCE NO.	SHEET NO.
17BP.13.R.67	5
BRIDGE NO. 600202	

ROADWAY DESIGN ENGINEER
NORTH CAROLINA PROFESSIONAL SEAL 026139 ENGINEER THOMAS R. KEPLER
2/6/14

HYDRAULICS ENGINEER
NORTH CAROLINA PROFESSIONAL SEAL 026480 ENGINEER HARRY D. ROBINSON, JR.
2-25-14

DETAIL 1
SPECIAL LATERAL 'V' DITCH
(Not to Scale)

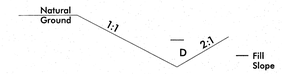

Type of Liner = None

FROM STA. 10+49 TO STA. 10+98 -DET- (LT)

POINT	DESC.	NORTH	EAST	ELEVATION	EL STATION	OFFSET
1	GPS-1	853670.9557	1030289.5122	2240.48	OUTSIDE PROJECT LIMITS	
2	GPS-2	854039.8446	1030390.2146	2252.66	OUTSIDE PROJECT LIMITS	
3	BL-3	854215.6846	1030236.3562	2262.00	10+20.22	7.48 LT

DATUM DESCRIPTION

THE LOCALIZED COORDINATE SYSTEM DEVELOPED FOR THIS PROJECT IS BASED ON THE STATE PLANE COORDINATES ESTABLISHED BY NCDOT FOR MONUMENT "GPS-2"
WITH NAD 83/NSRS 2007 STATE PLANE GRID COORDINATES OF NORTHING: 854039.8446(ft) EASTING: 1030390.2146(ft)
ELEVATION: 2252.66(ft)
THE AVERAGE COMBINED GRID FACTOR USED ON THIS PROJECT (GROUND TO GRID) IS: 0.999675
THE N.C. LAMBERT GRID BEARING AND LOCALIZED HORIZONTAL GROUND DISTANCE FROM "GPS-2" TO -L- STATION IS

ALL LINEAR DIMENSIONS ARE LOCALIZED HORIZONTAL DISTANCES
VERTICAL DATUM USED IS NAVD 88

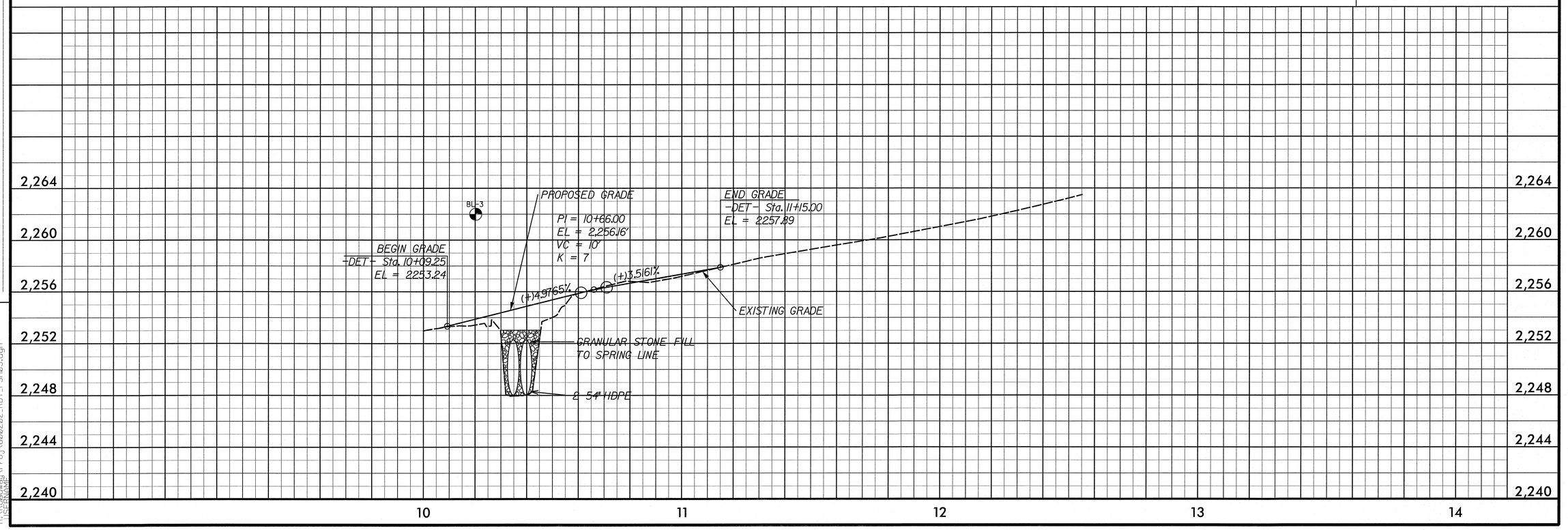

K:\7/2014
K:\Projects\Proj\600202_RDY_PSH05.dgn
USERNAME

STATE OF NORTH CAROLINA
DIVISION OF HIGHWAYS

CH ENGINEERING
3220 GLEN ROYAL RD. RALEIGH, NC 27617
TELE 919.788.0224 FAX 919.788.0232
NC LICENSE #P-0189

PROJECT REFERENCE NO.	SHEET NO.
17BP.13.R.67	TCP-1
BRIDGE NO. 600202	

ROADWAY DESIGN ENGINEER

NORTH CAROLINA PROFESSIONAL SEAL 30359 ENGINEER THOMAS R. HEFFLER
2/6/14

PLAN FOR PROPOSED TRAFFIC CONTROL, MARKING & DELINEATION

MITCHELL COUNTY

17BP.13.R.67

TIP PROJECT:

ROADWAY STANDARD DRAWINGS

THE FOLLOWING ROADWAY STANDARDS AS APPEAR IN "ROADWAY STANDARD DRAWINGS" - PROJECT SERVICES UNIT - N.C. DEPARTMENT OF TRANSPORTATION - RALEIGH, N.C., DATED JANUARY 2012 ARE APPLICABLE TO THIS PROJECT AND BY REFERENCE HEREBY ARE CONSIDERED A PART OF THESE PLANS:

STD. NO.	TITLE
904.50	MOUNTING OF TYPE 'D','E' AND 'F' SIGNS ON 'U' CHANNEL POSTS
1101.01	WORK ZONE ADVANCED WARNING SIGNS
1101.02	TEMPORARY LANE CLOSURES
1101.11	TRAFFIC CONTROL DESIGN TABLES
1110.01	STATIONARY WORK ZONE SIGNS
1110.02	PORTABLE WORK ZONE SIGNS
1130.01	DRUMS
1135.01	CONES
1145.01	BARRICADES
1160.01	TEMP. CRASH CUSHION
1170.01	PORTABLE CONCRETE BARRIER ANCHORED
1180.01	SKINNY DRUM
1205.01	PAVEMENT MARKING - LINE TYPES AND OFFSETS
1205.02	PAVEMENT MARKING - TWO LANE AND MULTILANE ROADWAYS

PHASING PLAN

PHASE I: MAINTAINING EXISTING TRAFFIC PATTERN INSTALL ADVANCED WARNING SIGNS ON -Y- AND -L- LINES. USING RSD 1101.02 REMOVE WEST SIDE OF EXISTING BRIDGE AND INSTALL TEMPORARY RAILING;(SEE TYPICAL 4A) CONSTRUCT TEMPORARY DETOUR INCLUSIVE OF TEMP STREAM CROSSING, PROVIDING A ONE-LANE 2-WAY ACCESS ACROSS STREAM.

PHASE II: INSTALL TRAFFIC CONTROL AS SHOWN ON TCP-2; SHIFT TRAFFIC ONTO TEMP DETOUR IN A ONE-LANE; TWO WAY OPERATION. REMOVE EXISTING BRIDGE, CONSTRUCT NEW BRIDGE PER TYPICAL SECTION 4B AND ROADWAY APPROACHES; INSTALL GUARDRAIL ON EAST SIDE.

PHASE III: SHIFT TRAFFIC TO NEW ROADWAY AND BRIDGE USING RSD 1101.02 CONSTRUCT TIES AT EACH END OF PROJECT.REMOVE TEMPORARY DETOUR AND COMPLETE BRIDGE CONSTRUCTION ON WEST SIDE; INSTALL GUARDRAIL ON WEST SIDE.

LEGEND

GENERAL

- DIRECTION OF TRAFFIC FLOW
- NORTH ARROW
- PROPOSED PVMT. ---------- EXIST. PVMT.
- WORK AREA
- REMOVAL OF EXISTING PAVEMENT

TRAFFIC CONTROL DEVICES

- TYPE III BARRICADE
- DRUM
- SKINNY DRUM
- STATIONARY SIGN

-PHASE I-

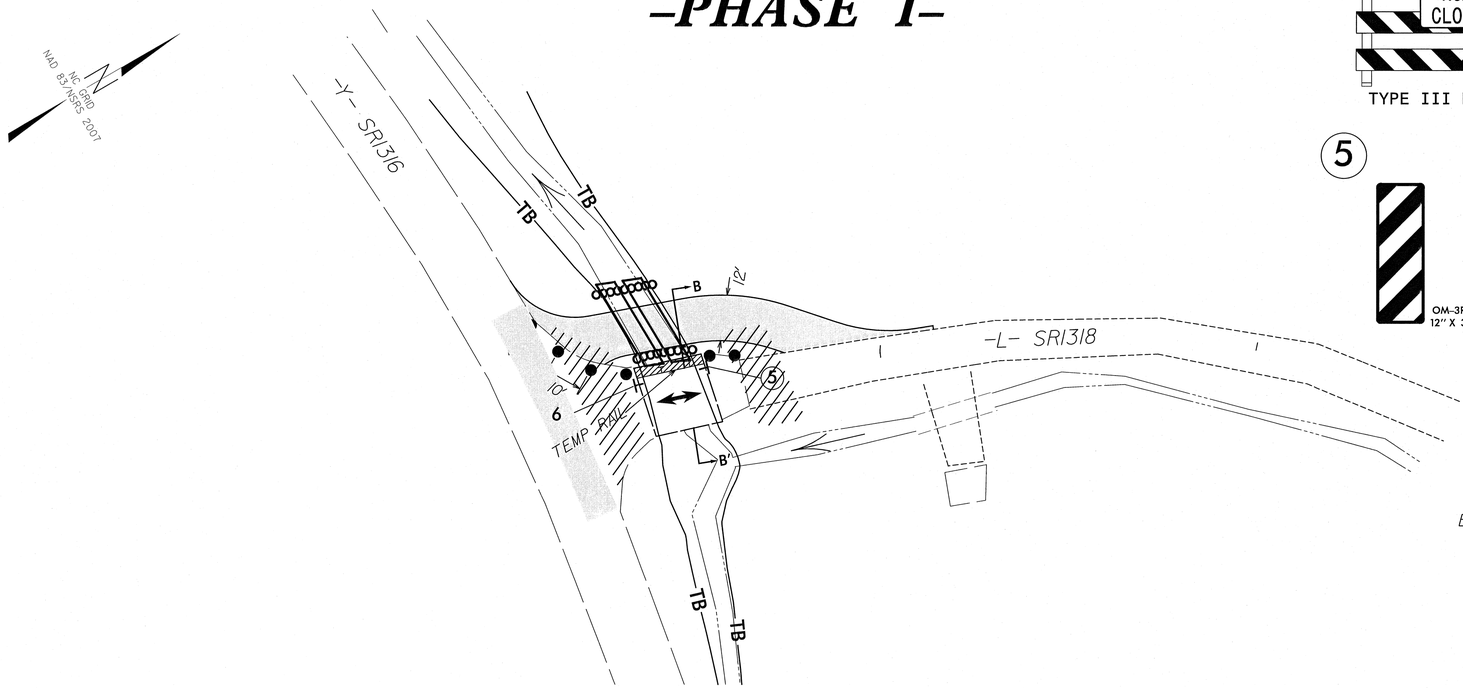

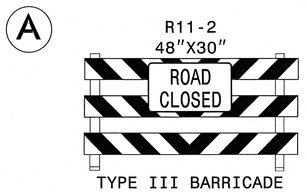



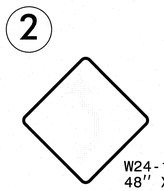

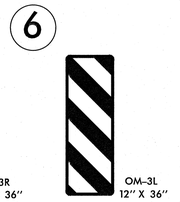

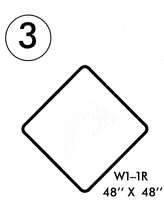

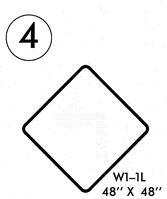

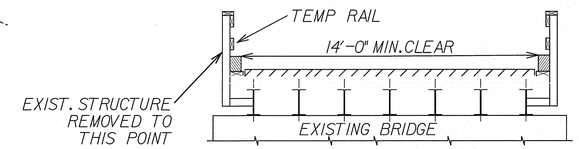

TYPICAL SECTION NO. 4A (Phase I)

SECTION B-B' -L- STA 10+40.00

1/27/2014
R:\Traffic\TrafficControl\TCP\600202_RDY_TCP-1.dgn
USERNAME

TIP PROJECT: 17BP.13.R.67

LEGEND

GENERAL

- DIRECTION OF TRAFFIC FLOW
- NORTH ARROW
- PROPOSED PVMT. ---------- EXIST. PVMT.
- WORK AREA
- REMOVAL OF EXISTING PAVEMENT

TRAFFIC CONTROL DEVICES

- TYPE III BARRICADE
- DRUM
- SKINNY DRUM
- STATIONARY SIGN
- PORTABLE CONCRETE BARRIER (ANCHORED)

(A)



TYPE III BARRICADE

(1)



W20-4
48" X 48"

(2)

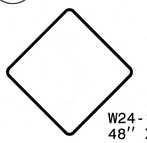

W24-1R
48" X 48"

(3)

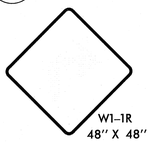

W1-1R
48" X 48"

(4)

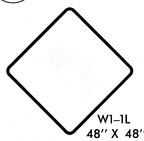

W1-1L
48" X 48"

(5)



OM-3R
12" X 36"

(6)



OM-3L
12" X 36"

–PHASE II–

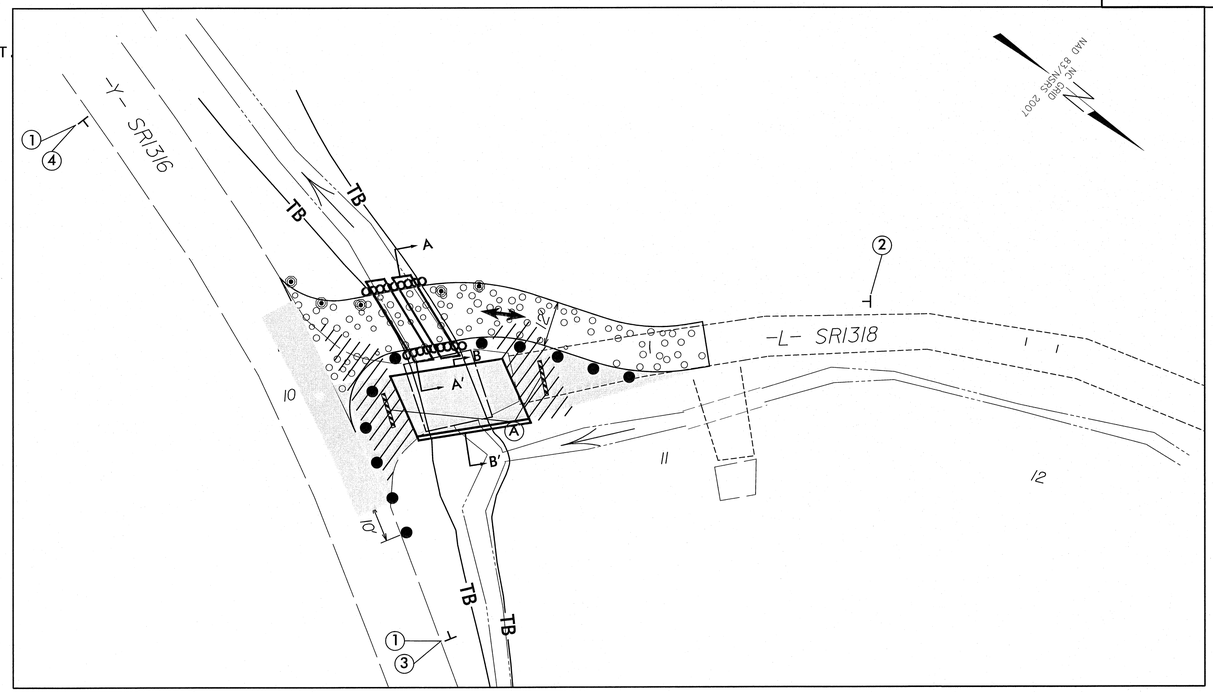

–PHASE III–

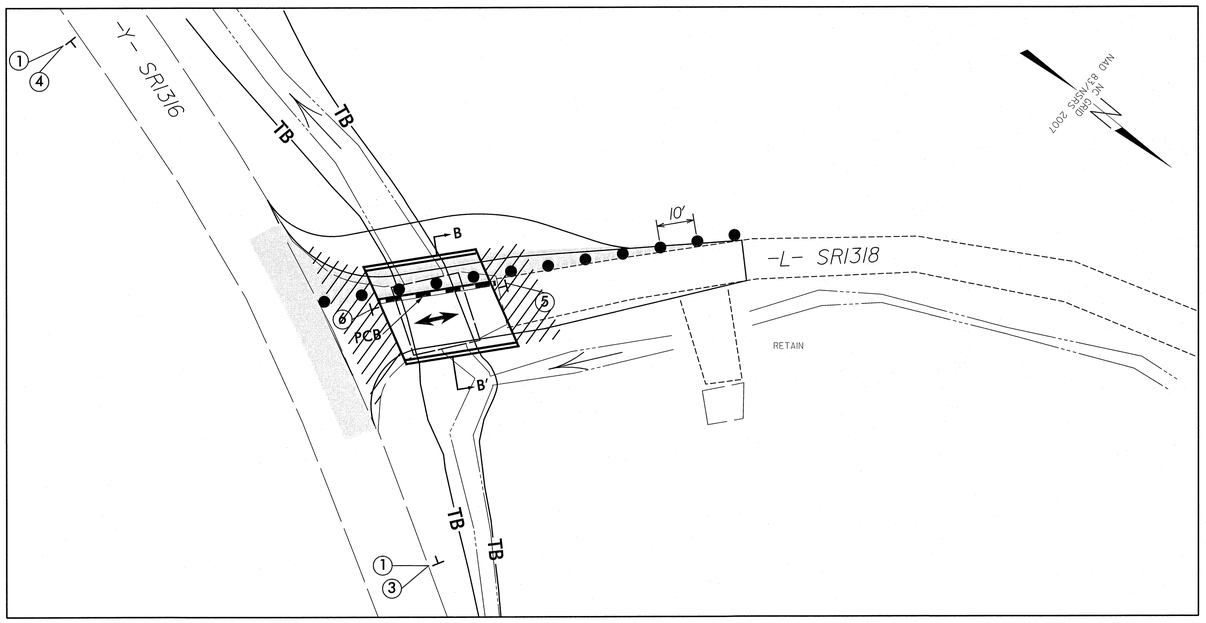

CH ENGINEERING
3220 GLEN ROYAL RD. RALEIGH, NC 27617
TELE 919.788.0224 FAX 919.788.0232
NC LICENSE #P-0189

PROJECT REFERENCE NO.	SHEET NO.
17BP.13.R.67	TCP-2
BRIDGE NO. 600202	

ROADWAY DESIGN ENGINEER

NORTH CAROLINA PROFESSIONAL SEAL 10359 ENGINEER THOMAS R. HERTER

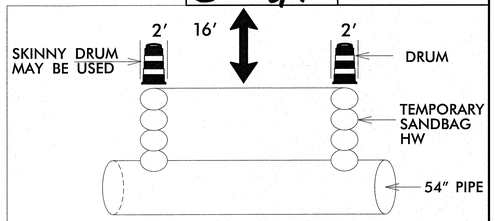

SECTION A–A' DETOUR STA 10+35.00

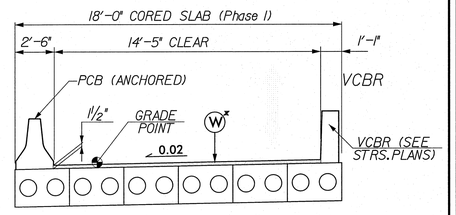

* PLACE C2 COURSE TO PROVIDE TRANSITION FROM APPROACH SLAB TO BRIDGE.

TYPICAL SECTION NO. 4B (Phase III)
SECTION B–B' –L– STA 10+40.00

1/27/2014
R:\Traffic\TrafficControl\TCP\600202_ROY_TCP-2.dgn
USERNAME

EROSION CONTROL PLAN

REVISIONS

PROJECT REFERENCE NO.	SHEET NO.
17BPJ3.R.67	E.C.-1/CONST.4
R/W SHEET NO.	
	HYDRAULICS ENGINEER

Kimley-Horn and Associates, Inc.

P.O. BOX 33068
RALEIGH, N.C. 27636-3068

RIGHT-OF-WAY REV.

CONST. REV.

CLEARING AND GRUBBING EROSION CONTROL FOR CONSTRUCTION SHEET 4

NOTES: ANY DEVIATION FROM OPTIONS GIVEN WILL REQUIRE PRIOR APPROVAL BY ENGINEER.

ADDITIONAL EROSION CONTROL DEVICES MAY NEED TO BE INSTALLED AS DIRECTED BY THE ENGINEER.

ENVIRONMENTALLY SENSITIVE AREA
SEE PROJECT SPECIAL PROVISIONS

ROADSIDE ENVIRONMENTAL UNIT
DEPARTMENT OF TRANSPORTATION
DIVISION OF HIGHWAYS
RALEIGH, N.C.

2012 STANDARD SPECIFICATIONS

THESE EROSION AND SEDIMENT CONTROL PLANS COMPLY WITH THE REGULATIONS SET FORTH BY THE NCG-010000 GENERAL CONSTRUCTION PERMIT EFFECTIVE AUGUST 3, 2011 ISSUED BY THE NORTH CAROLINA DEPARTMENT OF ENVIRONMENT AND NATURAL RESOURCES DIVISION OF WATER QUALITY.

Std. #	Description	Symbol
1605.01	Temporary Silt Fence	
1606.01	Special Sediment Control Fence	
1622.01	Temporary Berms and Slope Drains	
1630.02	Silt Basin Type B	
1630.03	Temporary Silt Ditch	TSD
1630.05	Temporary Diversion	TD
1630.06	Special Stilling Basin	
1632.03	Rock Inlet Sediment Trap Type C	
1633.01	Temporary Rock Silt Check Type-A	
	Temporary Rock Silt Check Type-A with Matting and Polyacrylamide (PAM)	
1633.02	Temporary Rock Silt Check Type-B	
	Wattle	
	Wattle with Polyacrylamide (PAM)	
1634.02	Temporary Rock Sediment Dam Type-B	
1635.01	Rock Pipe Inlet Sediment Trap Type-A	

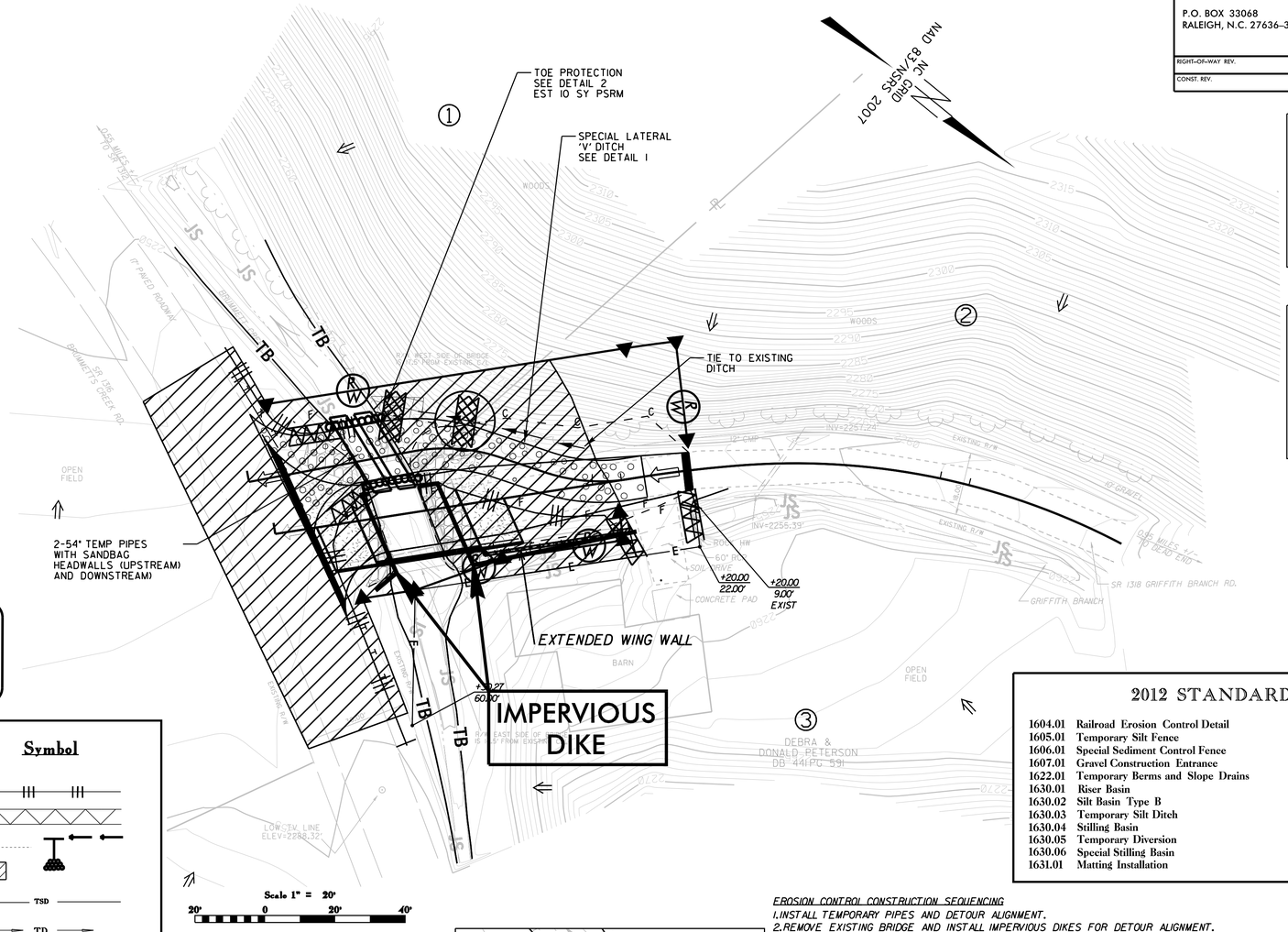

DETAIL 1
SPECIAL LATERAL 'V' DITCH
(Not to Scale)



Type of Liner= PSRM

FROM STA. 10+55 TO STA. 11+10 -L- (LT)

DETAIL 2
SPECIAL LATERAL 'V' DITCH
(Not to Scale)

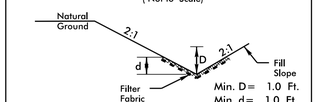

Min. D= 1.0 Ft.
Min. d= 1.0 Ft.

Type of Liner= Class 'B' Rip Rap

FROM STA. 10+34 TO STA. 10+55 -L- (LT)

DETAIL 3
RIP RAP AT EMBANKMENT
(Not to Scale)

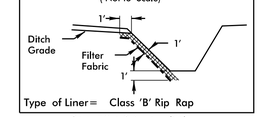

Type of Liner= Class 'B' Rip Rap

STA. 10+34 -L- (LT)

2012 STANDARD DRAWINGS

1604.01	Railroad Erosion Control Detail	1632.01	Rock Inlet Sediment Trap Type A
1605.01	Temporary Silt Fence	1632.02	Rock Inlet Sediment Trap Type B
1606.01	Special Sediment Control Fence	1632.03	Rock Inlet Sediment Trap Type C
1607.01	Gravel Construction Entrance	1633.01	Temporary Rock Silt Check Type A
1622.01	Temporary Berms and Slope Drains	1633.02	Temporary Rock Silt Check Type B
1630.01	Riser Basin	1634.01	Temporary Rock Sediment Dam Type A
1630.02	Silt Basin Type B	1634.02	Temporary Rock Sediment Dam Type B
1630.03	Temporary Silt Ditch	1635.01	Rock Pipe Inlet Sediment Trap Type A
1630.04	Stilling Basin	1635.02	Rock Pipe Inlet Sediment Trap Type B
1630.05	Temporary Diversion	1640.01	Coir Fiber Baffle
1630.06	Special Stilling Basin	1645.01	Temporary Stream Crossing
1631.01	Matting Installation		

EROSION CONTROL CONSTRUCTION SEQUENCING

1.INSTALL TEMPORARY PIPES AND DETOUR ALIGNMENT.
2.REMOVE EXISTING BRIDGE AND INSTALL IMPERVIOUS DIKES FOR DETOUR ALIGNMENT.
3.DEWATER SITE UTILIZING SPECIAL STILLING BASIN(S),EXCAVATE,CONSTRUCT FOOTINGS, AND INSTALL 18' CORED SLAB (PHASE 1),TYPICAL SECTION NO.4B,SHEET 2.
5.REMOVE TEMPORARY PIPES AND DETOUR ALIGNMENT AND REVISE IMPERVIOUS DIKES TO FINAL BRIDGE ALIGNMENT.
6.DEWATER SITE UTILIZING SPECIAL STILLING BASIN(S),EXCAVATE,CONSTRUCT FOOTINGS, AND INSTALL FINAL BRIDGE SECTION OF PROPOSED BRIDGE.
8.REMOVE IMPERVIOUS DIKES, AND SPECIAL STILLING BASIN(S), AND COMPLETE ROADWAY IMPROVEMENTS.

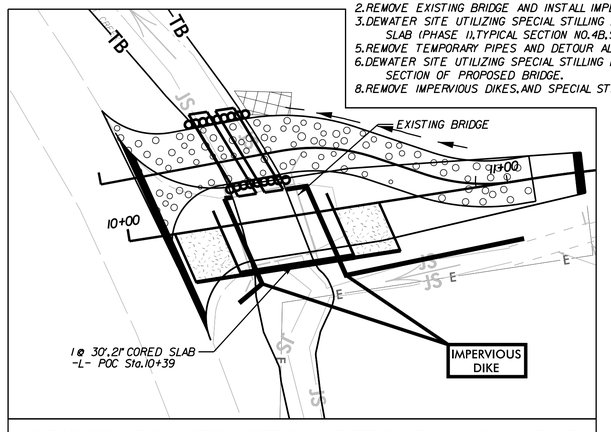

BRIDGE CONSTRUCTION-DETOUR ALIGNMENT

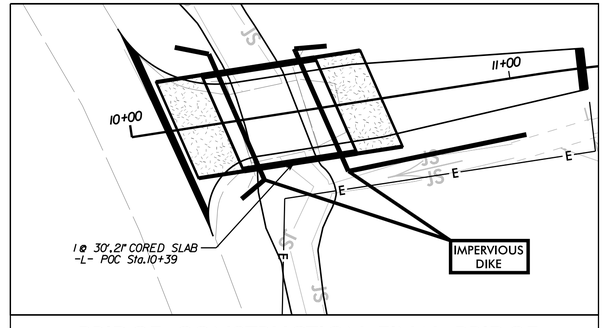

BRIDGE CONSTRUCTION-FINAL BRIDGE

EROSION CONTROL PLAN

REVISIONS

PROJECT REFERENCE NO.	SHEET NO.
17BPJ3.R.67	E.C.-2/CONST.4
R/W SHEET NO.	
	HYDRAULICS ENGINEER

Kimley-Horn and Associates, Inc.

P.O. BOX 33068
RALEIGH, N.C. 27636-3068

RIGHT-OF-WAY REV.

CONST. REV.

NOTES: ANY DEVIATION FROM OPTIONS GIVEN WILL REQUIRE PRIOR APPROVAL BY ENGINEER.

ADDITIONAL EROSION CONTROL DEVICES MAY NEED TO BE INSTALLED AS DIRECTED BY THE ENGINEER.

Vance W. Blanton
LEVEL IIIA NAME

707
LEVEL IIIA CERTIFICATION NO.

ROADSIDE ENVIRONMENTAL UNIT
DEPARTMENT OF TRANSPORTATION
DIVISION OF HIGHWAYS
RALEIGH, N.C.

2012 STANDARD SPECIFICATIONS

THESE EROSION AND SEDIMENT CONTROL PLANS COMPLY WITH THE REGULATIONS SET FORTH BY THE NCG-010000 GENERAL CONSTRUCTION PERMIT EFFECTIVE AUGUST 3, 2011 ISSUED BY THE NORTH CAROLINA DEPARTMENT OF ENVIRONMENT AND NATURAL RESOURCES DIVISION OF WATER QUALITY.

Std. #	Description	Symbol
1605.01	Temporary Silt Fence	
1606.01	Special Sediment Control Fence	
1622.01	Temporary Berms and Slope Drains	
1630.02	Silt Basin Type B	
1630.03	Temporary Silt Ditch	TSD
1630.05	Temporary Diversion	TD
1630.06	Special Stilling Basin	
1632.03	Rock Inlet Sediment Trap Type C	
1633.01	Temporary Rock Silt Check Type-A	
	Temporary Rock Silt Check Type-A with Matting and Polyacrylamide (PAM)	
1633.02	Temporary Rock Silt Check Type-B	
	Wattle	
	Wattle with Polyacrylamide (PAM)	
1634.02	Temporary Rock Sediment Dam Type-B	
1635.01	Rock Pipe Inlet Sediment Trap Type-A	

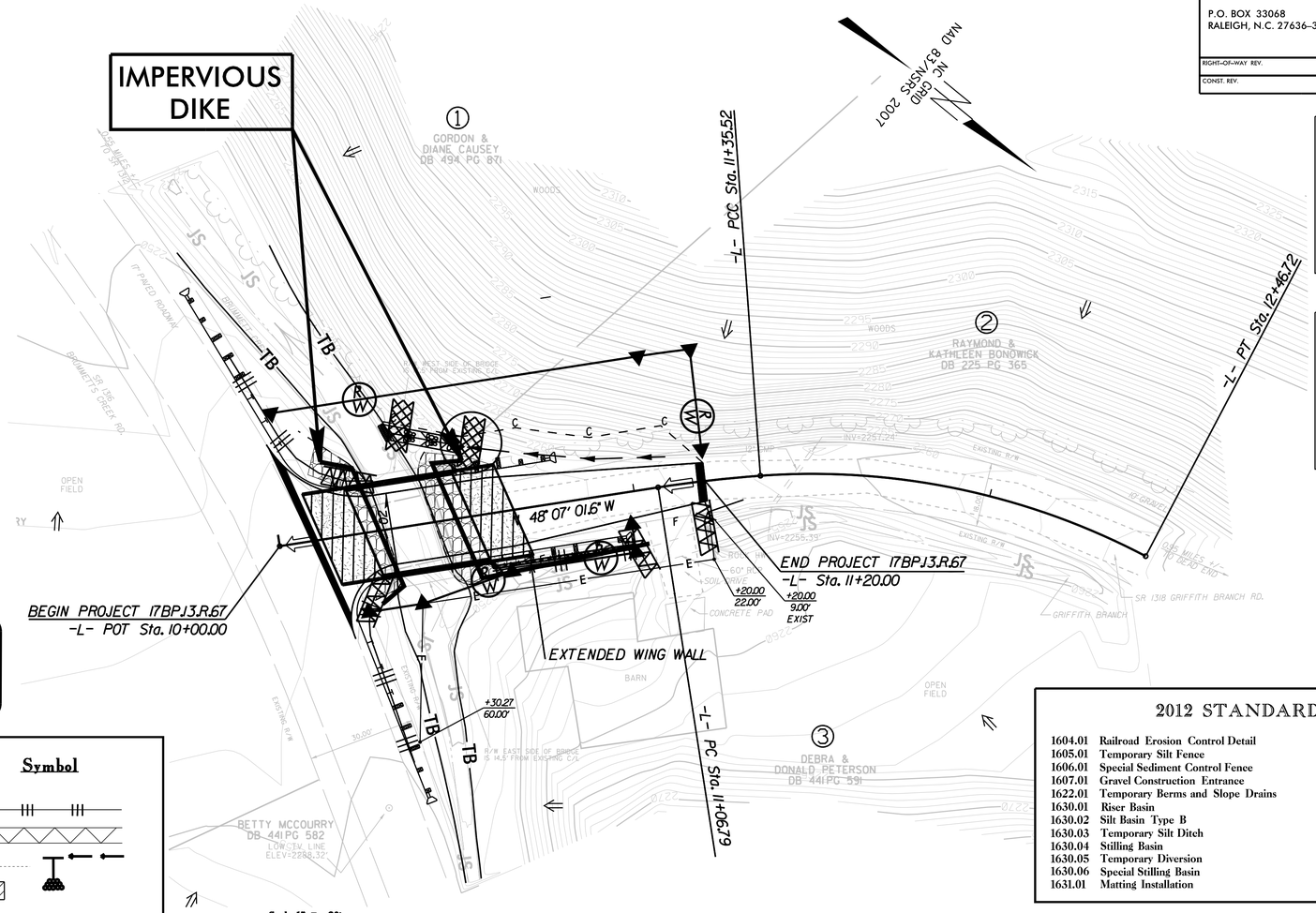

DETAIL 1
SPECIAL LATERAL 'V' DITCH
(Not to Scale)

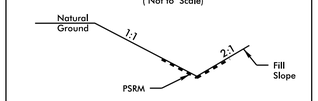

Type of Liner = PSRM

FROM STA. 10+55 TO STA. 11+10 -L- (LT)

DETAIL 2
SPECIAL LATERAL 'V' DITCH
(Not to Scale)

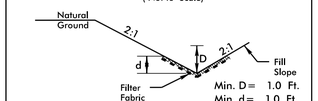

Min. D = 1.0 Ft.
Min. d = 1.0 Ft.

Type of Liner = Class 'B' Rip Rap

FROM STA. 10+34 TO STA. 10+55 -L- (LT)

DETAIL 3
RIP RAP AT EMBANKMENT
(Not to Scale)

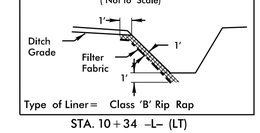

Type of Liner = Class 'B' Rip Rap

STA. 10+34 -L- (LT)

2012 STANDARD DRAWINGS

1604.01	Railroad Erosion Control Detail	1632.01	Rock Inlet Sediment Trap Type A
1605.01	Temporary Silt Fence	1632.02	Rock Inlet Sediment Trap Type B
1606.01	Special Sediment Control Fence	1632.03	Rock Inlet Sediment Trap Type C
1607.01	Gravel Construction Entrance	1633.01	Temporary Rock Silt Check Type A
1622.01	Temporary Berms and Slope Drains	1633.02	Temporary Rock Silt Check Type B
1630.01	Riser Basin	1634.01	Temporary Rock Sediment Dam Type A
1630.02	Silt Basin Type B	1634.02	Temporary Rock Sediment Dam Type B
1630.03	Temporary Silt Ditch	1635.01	Rock Pipe Inlet Sediment Trap Type A
1630.04	Stilling Basin	1635.02	Rock Pipe Inlet Sediment Trap Type B
1630.05	Temporary Diversion	1640.01	Coir Fiber Baffle
1630.06	Special Stilling Basin	1645.01	Temporary Stream Crossing
1631.01	Matting Installation		

EROSION CONTROL CONSTRUCTION SEQUENCING

1. INSTALL TEMPORARY PIPES AND DETOUR ALIGNMENT.
2. REMOVE EXISTING BRIDGE AND INSTALL IMPERVIOUS DIKES FOR DETOUR ALIGNMENT.
3. DEWATER SITE UTILIZING SPECIAL STILLING BASIN(S), EXCAVATE, CONSTRUCT FOOTINGS, AND INSTALL 18' CORED SLAB (PHASE 1), TYPICAL SECTION NO. 4B, SHEET 2.
5. REMOVE TEMPORARY PIPES AND DETOUR ALIGNMENT AND REVISE IMPERVIOUS DIKES TO FINAL BRIDGE ALIGNMENT.
6. DEWATER SITE UTILIZING SPECIAL STILLING BASIN(S), EXCAVATE, CONSTRUCT FOOTINGS, AND INSTALL FINAL BRIDGE SECTION OF PROPOSED BRIDGE.
8. REMOVE IMPERVIOUS DIKES, AND SPECIAL STILLING BASIN(S), AND COMPLETE ROADWAY IMPROVEMENTS.

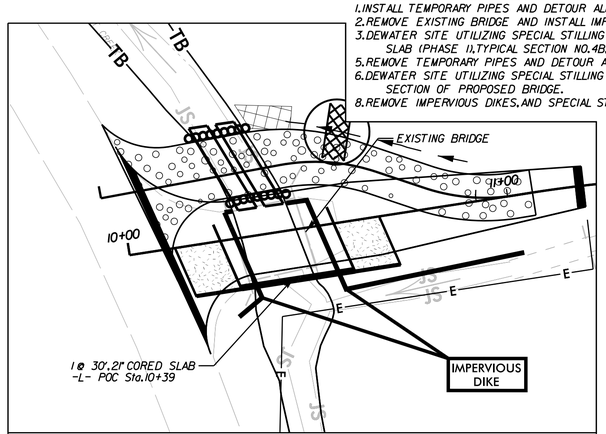

BRIDGE CONSTRUCTION–DETOUR ALIGNMENT

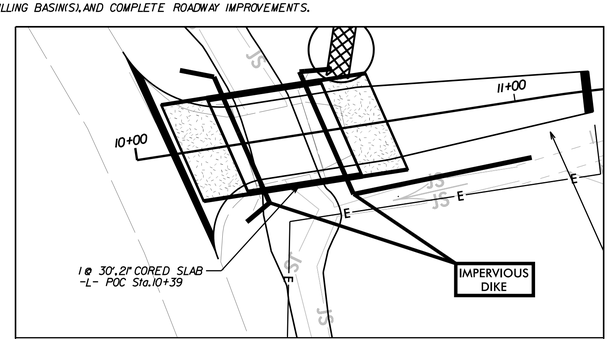

BRIDGE CONSTRUCTION–FINAL BRIDGE

PROJECT REFERENCE NO.	SHEET NO.
	EC-3

REVISIONS

DIVISION OF HIGHWAYS
STATE OF NORTH CAROLINA

SOIL STABILIZATION TIMEFRAMES

SITE DESCRIPTION	STABILIZATION TIME	TIMEFRAME EXCEPTIONS
PERIMETER DIKES, SWALES, DITCHES AND SLOPES	7 DAYS	NONE
HIGH QUALITY WATER (HQW) ZONES	7 DAYS	NONE
SLOPES STEEPER THAN 3:1	7 DAYS	IF SLOPES ARE 10' OR LESS IN LENGTH AND ARE NOT STEEPER THAN 2:1, 14 DAYS ARE ALLOWED.
SLOPES 3:1 OR FLATTER	14 DAYS	7 DAYS FOR SLOPES GREATER THAN 50' IN LENGTH.
ALL OTHER AREAS WITH SLOPES FLATTER THAN 4:1	14 DAYS	NONE, EXCEPT FOR PERIMETERS AND HQW ZONES.

COMPUTED BY: _____ DATE: _____
CHECKED BY: _____ DATE: _____

PROJECT REFERENCE NO.	SHEET NO.
17BPJ3.R.67	EC-4

TEMPORARY ROCK SILT CHECK TYPE 'A' WITH EXCELSIOR MATTING AND POLYACRYLAMIDE (PAM)

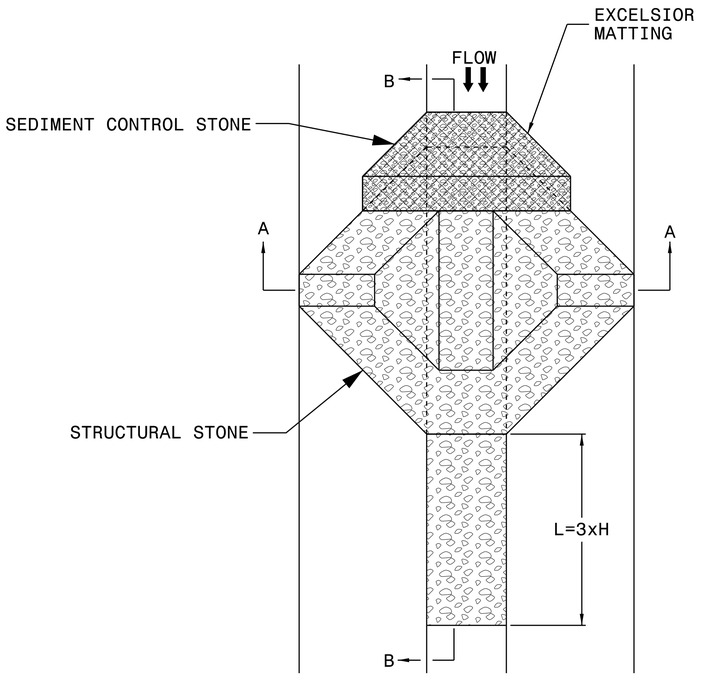

PLAN

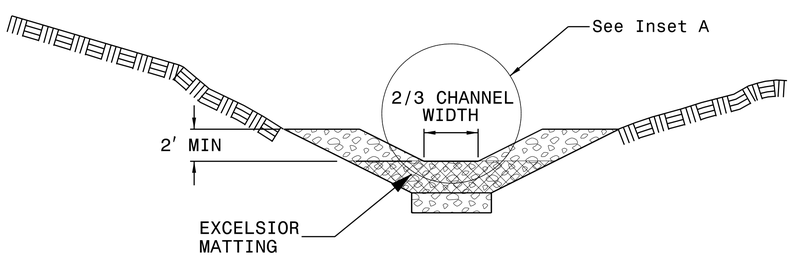

SECTION A-A

NOTES

USE EXCELSIOR FOR MATTING MATERIAL AND ANCHOR MATTING SECTION AT TOP AND BOTTOM WITH CLASS B STONE.

PRIOR TO POLYACRYLAMIDE (PAM) APPLICATION, OBTAIN A SOIL SAMPLE FROM PROJECT LOCATION, AND FROM OFFSITE MATERIAL, AND ANALYZE FOR APPROPRIATE PAM FLOCCULANT TO BE APPLIED TO EACH ROCK SILT CHECK.

INITIALLY APPLY 3.5 OUNCES OF POLYACRYLAMIDE (PAM) TO TOP OF MATTING SECTION AND AFTER EVERY RAINFALL EVENT THAT EQUALS OR EXCEEDS 0.50 INCHES.

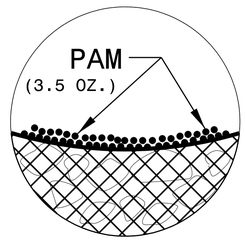

INSET A

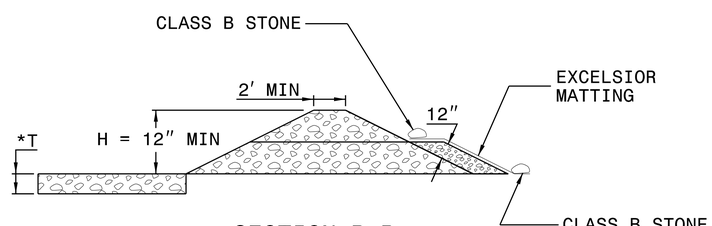

SECTION B-B

*T = 12" MIN., 18" MAX.

NOT TO SCALE

COMPUTED BY: _____ DATE: _____
CHECKED BY: _____ DATE: _____

PROJECT REFERENCE NO.	SHEET NO.
17BP.13.R.67	RF-1

PLANTING DETAILS

SEEDLING / LINER BAREROOT PLANTING DETAIL

HEALING IN

1. Locate a healing-in site in a shady, well protected area.
2. Excavate a flat bottom trench 12 inches deep and provide drainage.

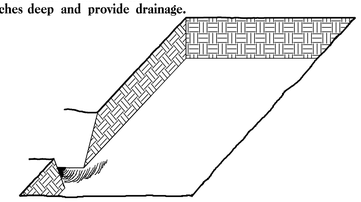

3. Backfill the trench with 2 inches well rotted sawdust. Place a 2 inch layer of well rotted sawdust at a sloping angle at one end of the trench.

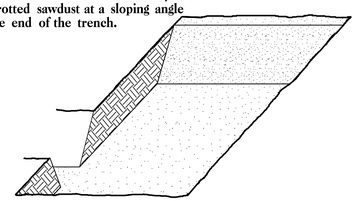

4. Place a single layer of plants against the sloping end so that the root collar is at ground level.

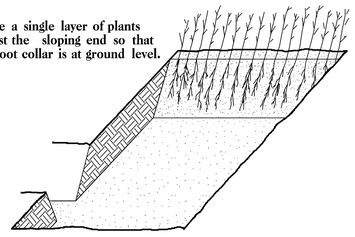

5. Place a 2 inch layer of well rotted sawdust over the roots maintaining a sloping angle.

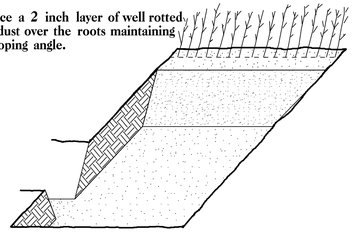

6. Repeat layers of plants and sawdust as necessary and water thoroughly.

DIBBLE PLANTING METHOD
USING THE KBC PLANTING BAR

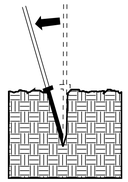

1. Insert planting bar as shown and pull handle toward planter.

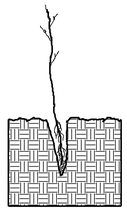

2. Remove planting bar and place seedling at correct depth.

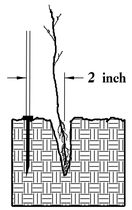

3. Insert planting bar 2 inches toward planter from seedling.

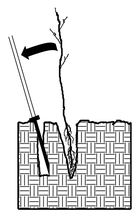

4. Pull handle of bar toward planter, firming soil at bottom.

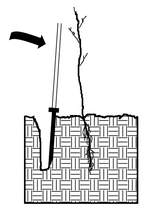

5. Push handle forward firming soil at top.

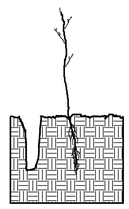

6. Leave compaction hole open. Water thoroughly.

PLANTING NOTES:

PLANTING BAG
During planting, seedlings shall be kept in a moist canvas bag or similar container to prevent the root systems from drying.



KBC PLANTING BAR
Planting bar shall have a blade with a triangular cross section, and shall be 12 inches long, 4 inches wide and 1 inch thick at center.



ROOT PRUNING
All seedlings shall be root pruned, if necessary, so that no roots extend more than 10 inches below the root collar.

REFORESTATION

☐ TREE REFORESTATION SHALL BE PLANTED 6 FT. TO 10 FT. ON CENTER, RANDOM SPACING, AVERAGING 8 FT. ON CENTER, APPROXIMATELY 680 PLANTS PER ACRE.

REFORESTATION

MIXTURE, TYPE, SIZE, AND FURNISH SHALL CONFORM TO THE FOLLOWING:

25% LIRIODENDRON TULIPIFERA	TULIP POPLAR	12in – 18in BR
25% PLATANUS OCCIDENTALIS	SYCAMORE	12in – 18in BR
25% FRAXINUS PENNSYLVANICA	GREEN ASH	12in – 18in BR
25% BETULA NIGRA	RIVER BIRCH	12in – 18in BR

REFORESTATION DETAIL SHEET

N.C.D.O.T. - ROADSIDE ENVIRONMENTAL UNIT

8/23/99

0 2.5 5	PROJ. REFERENCE NO.	SHEET NO.
	17BP.13.R.67	X-1

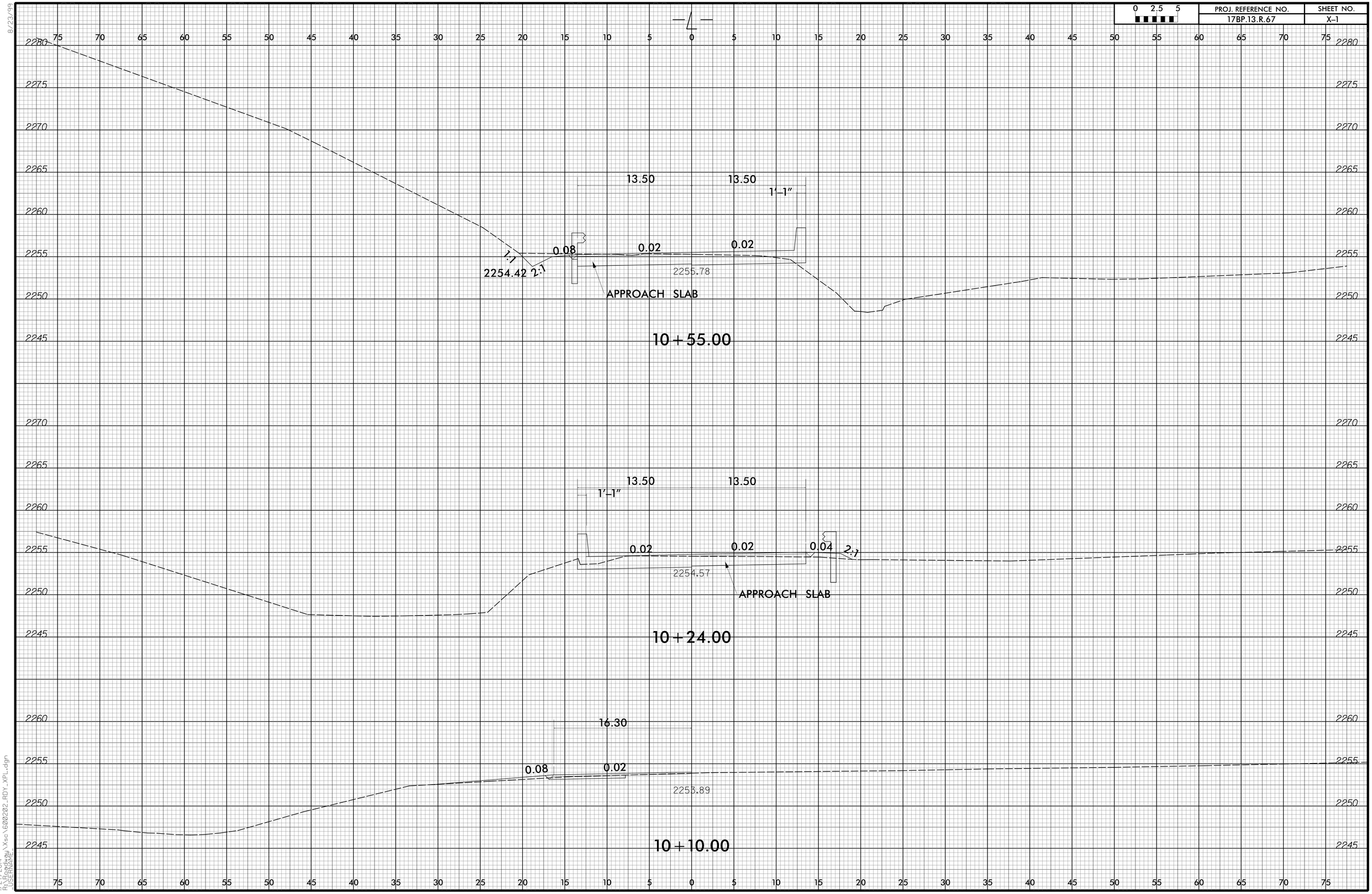

1/27/2014
R:\Projects\Xsc\600202_RDY_XPL.dgn
USERNAME

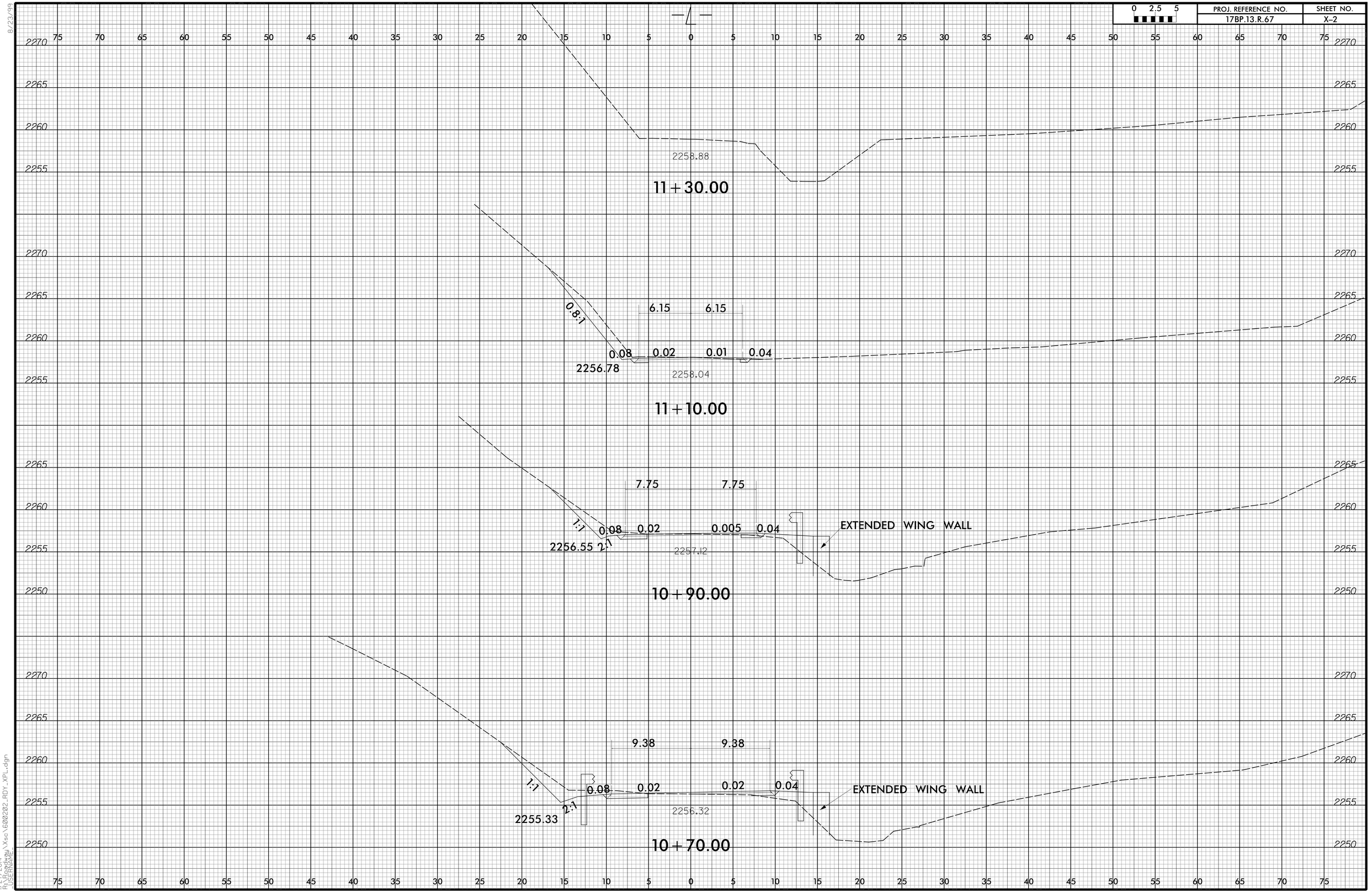

8/23/99

1/27/2014
R:\Roadway\Xsc\600202_RDY_XPL.dgn
USERNAME

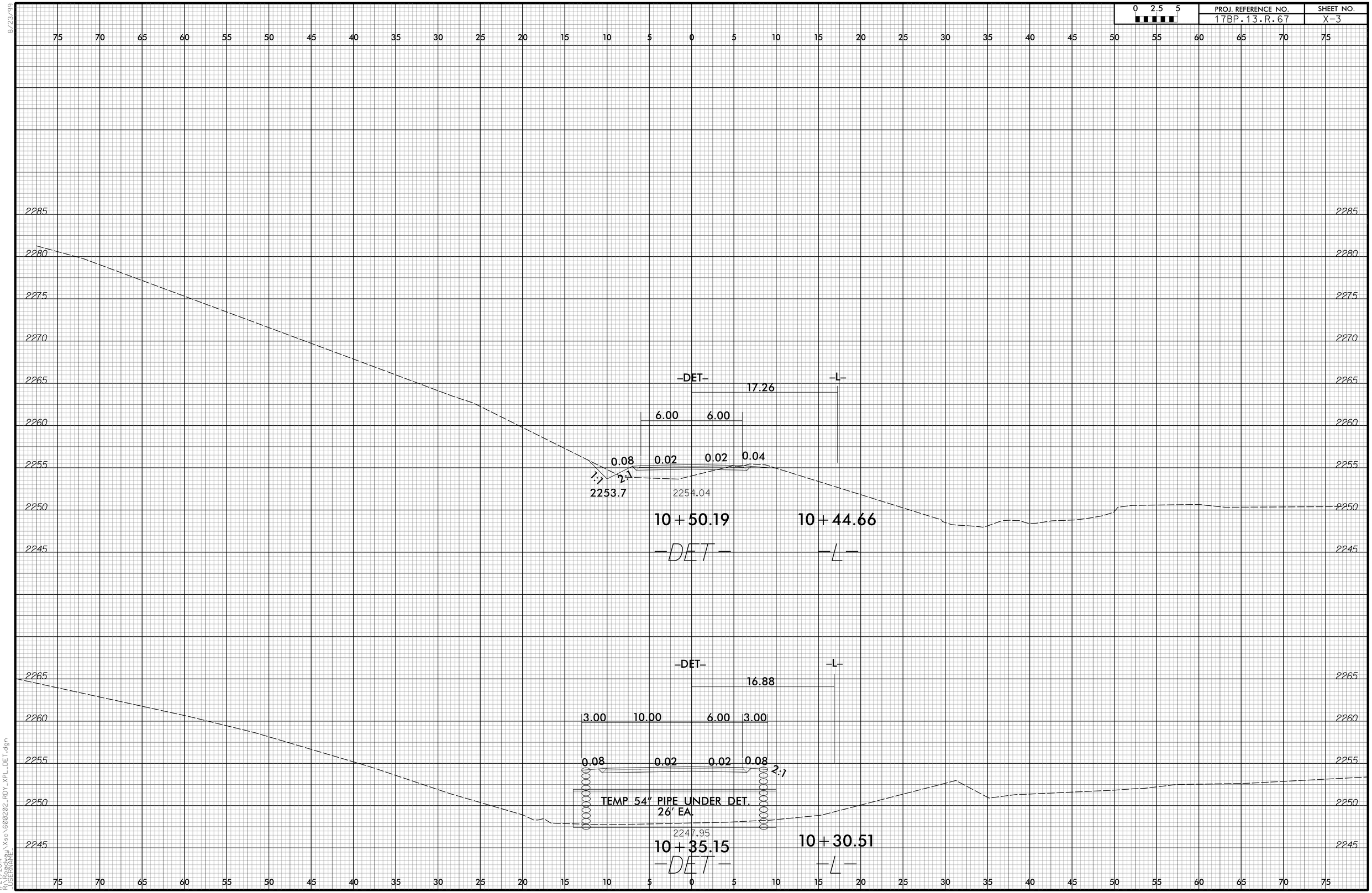

0 2.5 5
PROJ. REFERENCE NO.
17BP.13.R.67
SHEET NO.
X-3
-DET-
-L-
17.26
6.00
6.00
0.08
0.02
0.02
0.04
1:1
2:1
2253.7
2254.04
10+50.19
10+44.66
-DET-
-L-
-DET-
-L-
16.88
3.00
10.00
6.00
3.00
0.08
0.02
0.02
0.08
2:1
TEMP 54" PIPE UNDER DET.
26' EA.
2247.95
10+35.15
10+30.51
-DET-
-L-

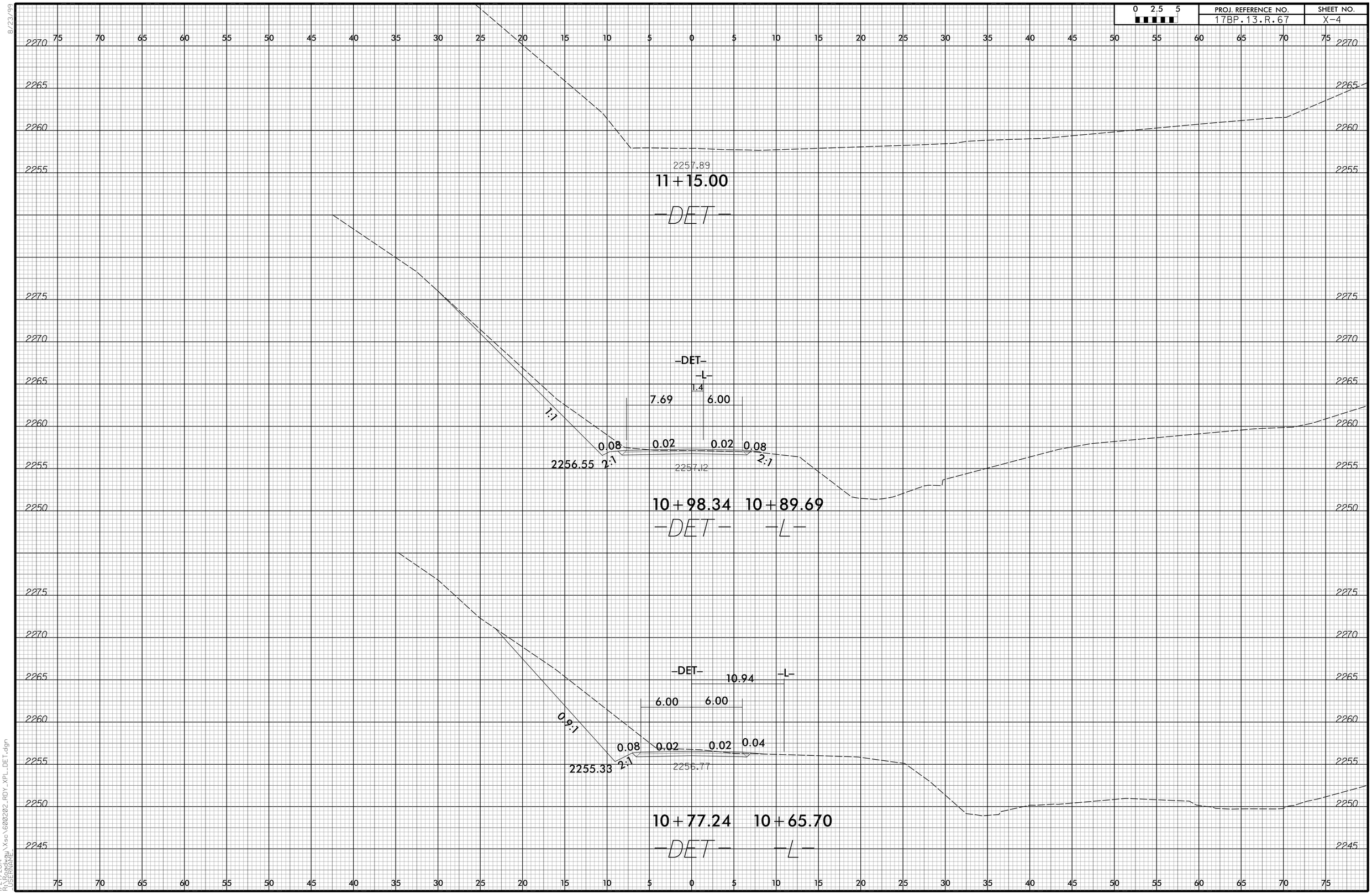

8/23/99

1/27/2014
R:\Roadway\Xsc\600202_RDY_XPL_DET.dgn
USERNAME

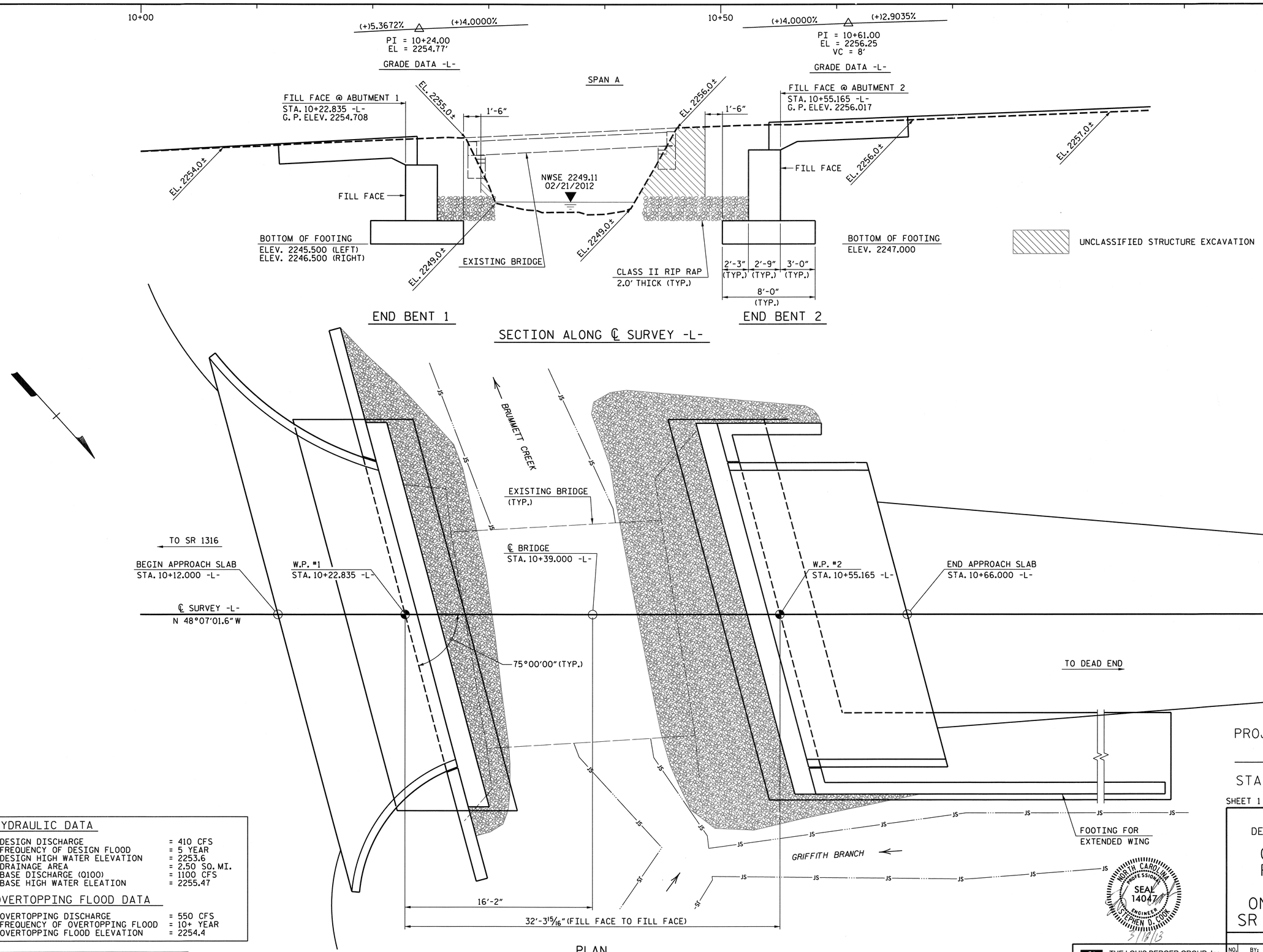

HYDRAULIC DATA

DESIGN DISCHARGE	= 410 CFS
FREQUENCY OF DESIGN FLOOD	= 5 YEAR
DESIGN HIGH WATER ELEVATION	= 2253.6
DRAINAGE AREA	= 2.50 SQ. MI.
BASE DISCHARGE (Q100)	= 1100 CFS
BASE HIGH WATER ELEATION	= 2255.47

OVERTOPPING FLOOD DATA

OVERTOPPING DISCHARGE	= 550 CFS
FREQUENCY OF OVERTOPPING FLOOD	= 10+ YEAR
OVERTOPPING FLOOD ELEVATION	= 2254.4

DRAWN BY : R. KNIGHT DATE : JUNE 2012
CHECKED BY : S. COOK DATE : JUNE 2012

NORTH CAROLINA PROFESSIONAL SEAL 14047 ENGINEER STEPHEN D COOK
3/18/13

THE LOUIS BERGER GROUP, Inc.
1001 Wade Avenue, Suite 400
Raleigh, NC 27605-3322

PROJECT NO. 17BP.13.R.67
MITCHELL COUNTY
STATION: 10+39.00 -L-

SHEET 1 OF 3 REPLACES BRIDGE #600202

STATE OF NORTH CAROLINA
DEPARTMENT OF TRANSPORTATION
RALEIGH

GENERAL DRAWING FOR BRIDGE OVER BRUMMETT CREEK ON SR 1318 BETWEEN SR 1316 AND DEAD END

REVISIONS						SHEET NO.
NO.	BY:	DATE:	NO.	BY:	DATE:	S-1
1			3			TOTAL SHEETS
2			4			23

G:\OR Projects\OR1101 - NCDOT Group 0\600202\Structures\600202_SD_GD_01.dgn
3/18/2013 1101_PDF_fullpltcfg 1101_str.tbl

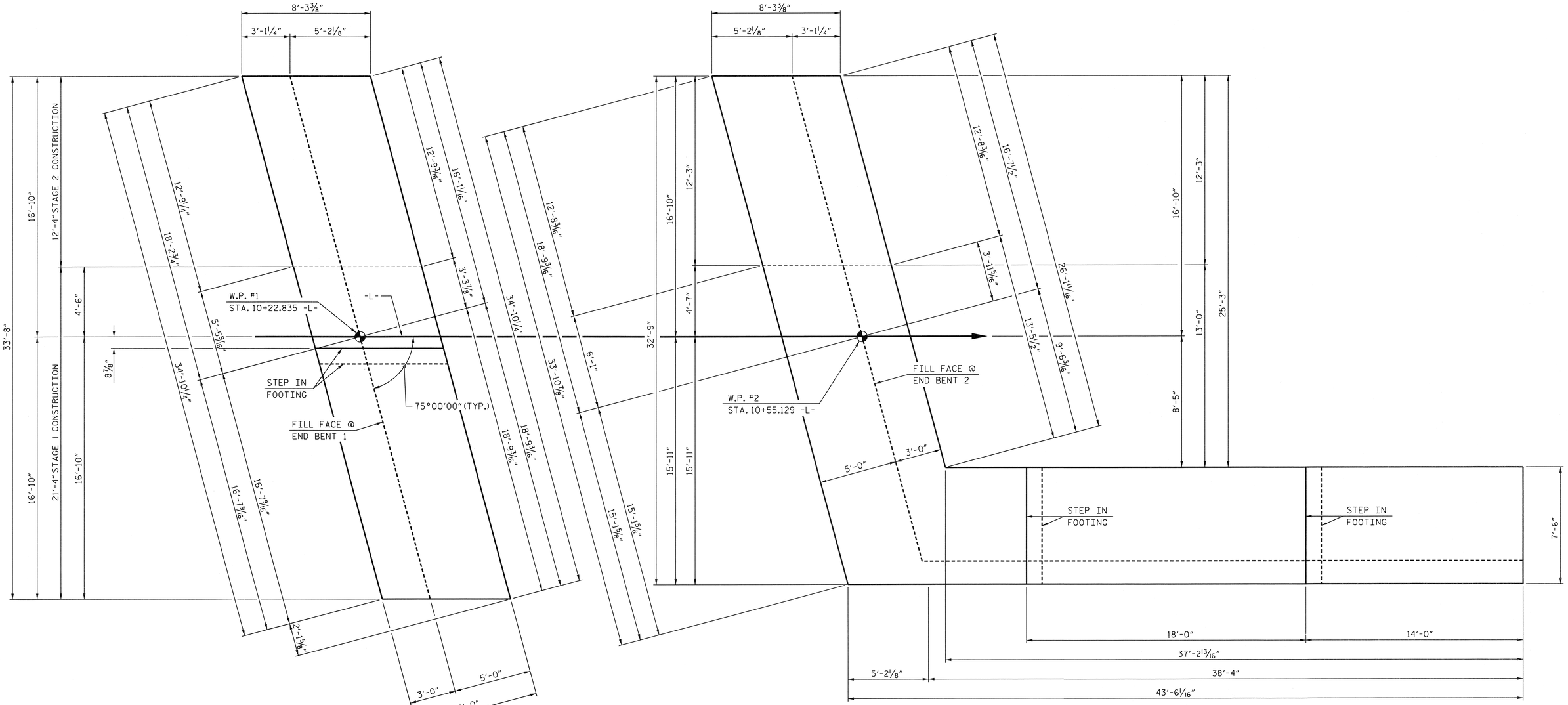

FOUNDATION LAYOUT

PROJECT NO. 17BP.13.R.67

MITCHELL COUNTY

STATION: 10+39.00 -L-

SHEET 2 OF 3

STATE OF NORTH CAROLINA
DEPARTMENT OF TRANSPORTATION
RALEIGH

GENERAL DRAWING FOR BRIDGE OVER BRUMMETT CREEK ON SR 1318 BETWEEN SR 1316 AND DEAD END

NORTH CAROLINA PROFESSIONAL SEAL 40477 ENGINEER STEPHEN D. COOK
3/18/13

THE LOUIS BERGER GROUP, Inc.
1001 Wade Avenue, Suite 400
Raleigh, NC 27605-3322

REVISIONS						SHEET NO.
NO.	BY:	DATE:	NO.	BY:	DATE:	S-2
1			3			TOTAL SHEETS
2			4			23

DRAWN BY : R. KNIGHT DATE : SEPT 2012
CHECKED BY : S. COOK DATE : SEPT 2012

G:\OR Projects\OR1101 - NCDOT Group O\600202\Structures\600202_SD_FND.dgn
3/18/2013 1101_PDF_full.pltcfg 1101_str.tbl

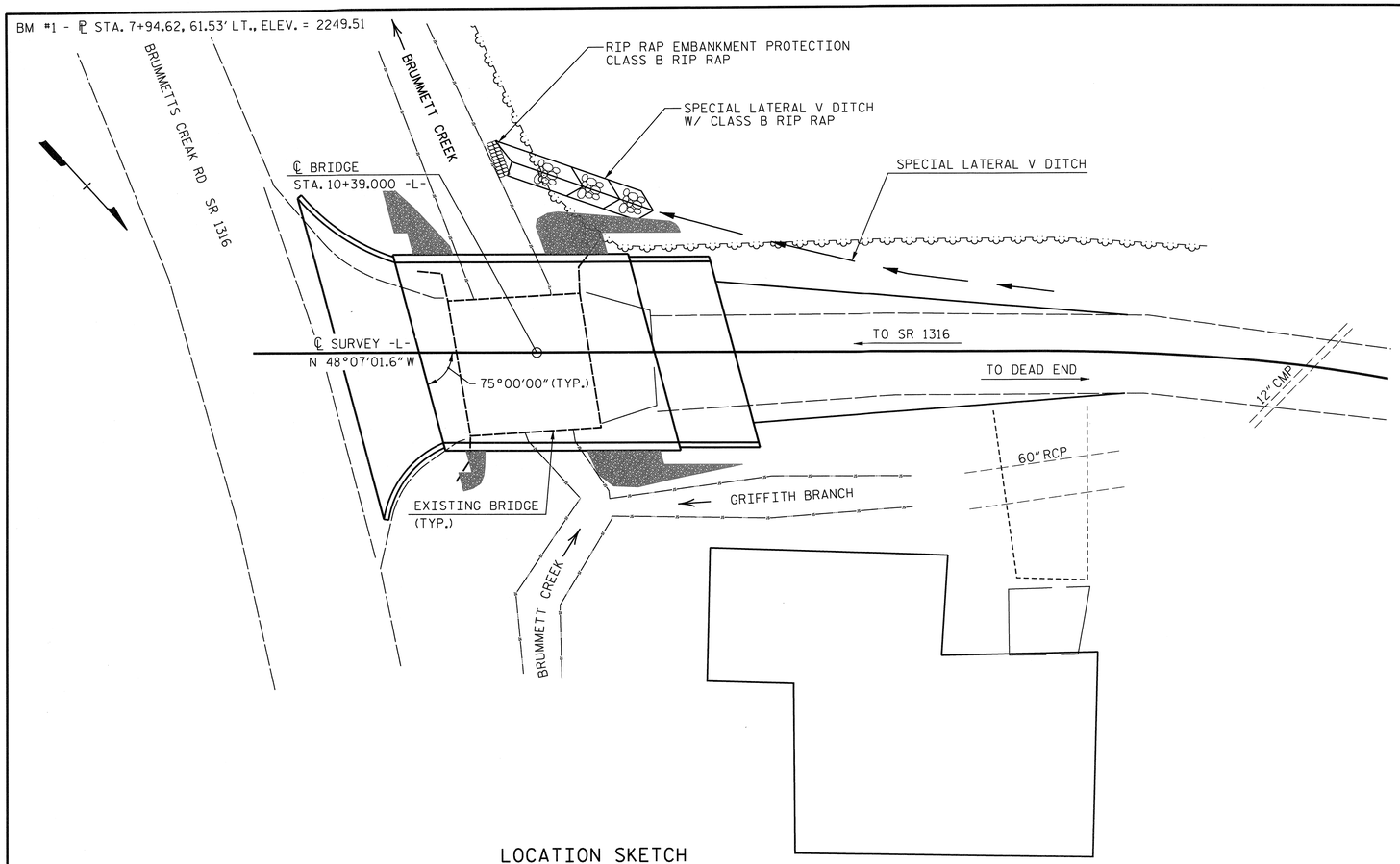

LOCATION SKETCH

NOTES

ASSUMED LIVE LOAD = HL-93 OR ALTERNATE LOADING.

FOR EROSION CONTROL MEASURES SEE EROSION CONTROL PLANS.

THIS BRIDGE HAS BEEN DESIGNED IN ACCORDANCE WITH THE AASHTO LRFD BRIDGE DESIGN SPECIFICATIONS.

REMOVAL OF THE EXISTING BRIDGE SHALL BE PERFORMED SO AS NOT TO ALLOW DEBRIS TO FALL INTO THE WATER. THE CONTRACTOR SHALL REMOVE THE BRIDGE AND SUBMIT PLANS FOR DEMOLITION IN ACCORDANCE WITH ARTICLE 402-2 OF THE STANDARD SPECIFICATIONS.

AFTER SERVING AS A TEMPORARY STRUCTURE THE EXISTING STRUCTURE CONSISTING OF ONE 18'-6" SPAN ON TIMBER FLOOR ON TIMBER END BENT CAPS SHALL BE REMOVED. THE EXISTING BRIDGE IS PRESENTLY POSTED BELOW THE LEGAL LOAD LIMIT. SHOULD THE STRUCTURAL INTEGRITY OF THE BRIDGE FURTHER DETERIORATE, THIS LOAD LIMITATION MAY BE REDUCED AS FOUND NECESSARY DURING THE LIFE OF THE PROJECT.

THE MATERIAL SHOWN IN THE CROSS-HATCHED AREA SHALL BE EXCAVATED FOR A DISTANCE OF 22 FT. EACH SIDE OF CENTERLINE ROADWAY AS DIRECTED BY THE ENGINEER. THIS WORK WILL BE PAID FOR AT THE CONTRACT LUMP SUM PRICE FOR UNCLASSIFIED STRUCTURE EXCAVATION. SEE SECTION 412 OF THE STANDARD SPECIFICATIONS.

THE SUBSTRUCTURE OF THE EXISTING BRIDGE INDICATED ON THE PLANS IS FROM THE BEST INFORMATION AVAILABLE. SINCE THIS INFORMATION IS SHOWN FOR THE CONVENIENCE OF THE CONTRACTOR, THE CONTRACTOR SHALL HAVE NO CLAIM WHATSOEVER AGAINST THE DEPARTMENT OF TRANSPORTATION FOR ANY DELAYS OR ADDITIONAL COST INCURRED BASED ON DIFFERENCES BETWEEN THE EXISTING BRIDGE SUBSTRUCTURE SHOWN ON THE PLANS AND THE ACTUAL CONDITIONS AT THE PROJECT SITE.

SEE TRAFFIC CONTROL PLANS FOR LOCATION AND PAY LIMITS OF THE ANCHORED PORTABLE CONCRETE BARRIER.

ASPHALT WEARING SURFACE IS INCLUDED IN ROADWAY QUANTITY ON ROADWAY PLANS.

THIS STRUCTURE HAS BEEN DESIGNED IN ACCORDANCE WITH HEC 18,"EVALUATING SCOUR AT BRIDGES", MAY, 2001.

FOR UTILITY INFORMATION, SEE UTILITY PLANS AND SPECIAL PROVISIONS.

FOR SUBMITTAL OF WORKING DRAWINGS, SEE SPECIAL PROVISIONS.

FOR FALSEWORK AND FORMWORK, SEE SPECIAL PROVISIONS.

FOR CRANE SAFETY, SEE SPECIAL PROVISIONS.

FOR GROUT FOR STRUCTURES, SEE SPECIAL PROVISIONS.

THIS BRIDGE IS LOCATED IN SEISMIC ZONE 1.

FOR OTHER DESIGN DATA AND NOTES SEE STANDARD NOTES SHEET.

FOUNDATION NOTES:

THE SCOUR CRITICAL ELEVATION FOR END BENT 1 AND END BENT 2 ARE THE BOTTOM OF THE FOOTING ELEVATIONS. SCOUR CRITICAL ELEVATIONS ARE USED TO MONITOR POSSIBLE SCOUR PROBLEMS DURING THE LIFE OF THE STRUCTURE.

SPREAD FOOTING AT END BENT 1 IS DESIGNED FOR A FACTORED RESISTANCE OF 5 TSF.
CHECK FIELD CONDITIONS FOR THE REQUIRED RESISTANCE OF 12 TSF JUST BEFORE PLACING CONCRETE

KEY SPREAD FOOTINGS AT END BENT 1 AND END BENT 2 AT LEAST 12 INCHES INTO WEATHERED ROCK WITH A MINIMUM THICKNESS AS SHOWN ON THE PLANS.

PIER SCOUR PROTECTION IS REQUIRED FOR SPREAD FOOTINGS AT END BENT 1 AND END BENT 2.

TOTAL BILL OF MATERIAL

	REMOVAL OF EXISTING STRUCTURE @ STA. 12+39.000 -L-	FOUNDATION EXCAVATION	UNCLASSIFIED STRUCTURE EXCAVATION	CLASS A CONCRETE	BRIDGE APPROACH SLABS	REINFORCING STEEL	VERTICAL CONCRETE BARRIER RAIL	RIP RAP CLASS II	ELASTOMERIC BEARINGS	3'-0" X 1'-9" PRESTRESSED CONCRETE CORED SLABS	
	LUMP SUM	LUMP SUM	LUMP SUM	CU. YDS.	LUMP SUM	LBS.	LIN.FT.	TONS	LUMP SUM	NO.	LIN.FT.
SUPERSTRUCTURE					LUMP SUM		60.25		LUMP SUM	9	270
END BENT NO. 1				51.2		4,290		17.2			
END BENT NO. 2		LUMP SUM	LUMP SUM	73.7		7,488		37.8			
TOTAL	LUMP SUM	LUMP SUM	LUMP SUM	124.9	LUMP SUM	11,778	60.25	55.0	LUMP SUM	9	270

DRAWN BY : R. KNIGHT DATE : JUNE 2012
CHECKED BY : S. COOK DATE : SEPT 2012

PROJECT NO. 17BP.13.R.67
MITCHELL COUNTY
STATION: 10+39.00 -L-

SHEET 3 OF 3 REPLACES BRIDGE #600202

NORTH CAROLINA PROFESSIONAL SEAL 14047 ENGINEER STEPHEN D. COOK
3/18/13

THE LOUIS BERGER GROUP, Inc.
1001 Wade Avenue, Suite 400
Raleigh, NC 27605-3322

STATE OF NORTH CAROLINA
DEPARTMENT OF TRANSPORTATION
RALEIGH

GENERAL DRAWING FOR BRIDGE OVER BRUMMETT CREEK ON SR 1318 BETWEEN SR 1316 AND DEAD END

REVISIONS						SHEET NO.
NO.	BY:	DATE:	NO.	BY:	DATE:	S-3
1			3			TOTAL SHEETS
2			4			23

G:\OR Projects\OR1101 - NCDOT Group O\600202\Structures\600202_SD_GD_02.dgn
3/18/2013 1101_PDF_fullpltcfg 1101_str.tbl

LOAD AND RESISTANCE FACTOR RATING (LRFD) SUMMARY FOR PRESTRESSED CONCRETE GIRDERS

LEVEL		VEHICLE	WEIGHT (W) (TONS)	CONTROLLING LOAD RATING	MINIMUM RATING FACTORS (RF)	TONS = W X RF	STRENGTH I LIMIT STATE										SERVICE III LIMIT STATE						COMMENT NUMBER
								MOMENT					SHEAR					MOMENT						
							LIVELOAD FACTORS	DISTRIBUTION FACTORS (DF)	RATING FACTOR	SPAN	GIRDER LOCATION	DISTANCE FROM LEFT END OF SPAN (ft)	DISTRIBUTION FACTORS (DF)	RATING FACTOR	SPAN	GIRDER LOCATION	DISTANCE FROM LEFT END OF SPAN (ft)	LIVELOAD FACTORS	DISTRIBUTION FACTORS (DF)	RATING FACTOR	SPAN	GIRDER LOCATION	DISTANCE FROM LEFT END OF SPAN (ft)	
DESIGN LOAD RATING		HL-93(Inv)	N/A	1	1.223	--	1.75	0.278	1.87	30'	EL	14.482	0.629	**1.22**	30'	EL	**1.448**	0.80	0.278	1.60	30'	EL	14.482	
		HL-93(Opr)	N/A	--	1.586	--	1.35	0.278	2.42	30'	EL	14.482	0.629	1.59	30'	EL	1.448	N/A	--	--	--	--	--	
		HS-20(Inv)	36.000	2	1.396	50.263	1.75	0.278	2.57	30'	EL	11.586	0.629	**1.4**	30'	EL	**1.448**	0.80	0.278	2.23	30'	EL	11.586	
		HS-20(Opr)	36.000	--	1.81	65.156	1.35	0.278	3.34	30'	EL	11.586	0.629	1.81	30'	EL	1.448	N/A	--	--	--	--	--	
LEGAL LOAD RATING	SV	SNSH	13.500	--	3.415	46.108	1.4	0.278	5.27	30'	EL	14.482	0.629	3.42	30'	EL	1.448	0.80	0.278	3.61	30'	EL	14.482	
		SNGARBS2	20.000	--	2.643	52.856	1.4	0.278	4.6	30'	EL	11.586	0.629	2.64	30'	EL	1.448	0.80	0.278	3.19	30'	EL	11.586	
		SNAGRIS2	22.000	--	2.546	56.012	1.4	0.278	4.68	30'	EL	11.586	0.629	2.55	30'	EL	1.448	0.80	0.278	3.25	30'	EL	11.586	
		SNCOTTS3	27.250	--	1.725	47.014	1.4	0.278	2.64	30'	EL	14.482	0.629	1.73	30'	EL	1.448	0.80	0.278	1.81	30'	EL	14.482	
		SNAGGRS4	34.925	--	1.588	55.465	1.4	0.278	2.55	30'	EL	14.482	0.629	1.59	30'	EL	1.448	0.80	0.278	1.74	30'	EL	14.482	
		SNS5A	35.550	--	1.684	59.866	1.4	0.278	2.46	30'	EL	14.482	0.629	1.68	30'	EL	1.448	0.80	0.278	1.69	30'	EL	14.482	
		SNS6A	39.950	--	1.583	63.244	1.4	0.278	2.33	30'	EL	14.482	0.629	1.58	30'	EL	1.448	0.80	0.278	1.60	30'	EL	14.482	
		SNS7B	42.000	--	1.552	65.191	1.4	0.278	2.26	30'	EL	14.482	0.629	1.62	30'	EL	1.448	0.80	0.278	1.55	30'	EL	14.482	
	TTST	TNAGRIT3	33.000	--	1.881	62.062	1.4	0.278	3.02	30'	EL	14.482	0.629	1.88	30'	EL	1.448	0.80	0.278	2.07	30'	EL	14.482	
		TNT4A	33.075	--	1.75	57.88	1.4	0.278	2.86	30'	EL	14.482	0.629	1.75	30'	EL	1.448	0.80	0.278	1.97	30'	EL	14.482	
		TNT6A	41.600	--	1.691	70.356	1.4	0.278	2.6	30'	EL	14.482	0.629	1.69	30'	EL	1.448	0.80	0.278	1.78	30'	EL	14.482	
		TNT7A	42.000	--	1.609	67.589	1.4	0.278	2.69	30'	EL	14.482	0.629	1.61	30'	EL	1.448	0.80	0.278	1.84	30'	EL	14.482	
		TNT7B	42.000	--	1.571	66.001	1.4	0.278	2.53	30'	EL	14.482	0.629	1.57	30'	EL	1.448	0.80	0.278	1.74	30'	EL	14.482	
		TNAGRIT4	43.000	--	1.52	65.345	1.4	0.278	2.62	30'	EL	14.482	0.629	1.52	30'	EL	1.448	0.80	0.278	1.80	30'	EL	14.482	
		TNAGT5A	45.000	--	1.63	73.366	1.4	0.278	2.55	30'	EL	14.482	0.629	1.63	30'	EL	1.448	0.80	0.278	1.75	30'	EL	14.482	
		TNAGT5B	45.000	3	1.431	64.38	1.4	0.278	2.45	30'	EL	11.586	0.629	**1.43**	30'	EL	**1.448**	0.80	0.278	1.69	30'	EL	11.586	

LOAD FACTORS:

DESIGN LOAD RATING FACTORS	LIMIT STATE	γ_{DC}	γ_{DW}
	STRENGTH I	1.25	1.50
	SERVICE III	1.00	1.00

NOTES:

MINIMUM RATING FACTORS ARE BASED ON THE STRENGTH I AND SERVICE III LIMIT STATES.

ALLOWABLE STRESSES FOR SERVICE III LIMIT STATE ARE AS REQUIRED FOR DESIGN.

COMMENTS:

1.
2.
3.
4.

(#) CONTROLLING LOAD RATING

(1) DESIGN LOAD RATING (HL-93)

(2) DESIGN LOAD RATING (HS-20)

(3) LEGAL LOAD RATING **

** SEE CHART FOR VEHICLE TYPE

GIRDER LOCATION

I - INTERIOR GIRDER
EL - EXTERIOR LEFT GIRDER
ER - EXTERIOR RIGHT GIRDER

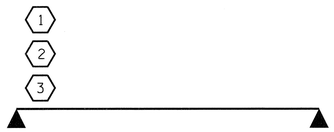

LRFR SUMMARY

FOR SPAN "A"

PROJECT NO. 17BP.13.R.67

MITCHELL COUNTY

STATION: 13+39.00 -L-



THE LOUIS BERGER GROUP, Inc.
1001 Wade Avenue, Suite 400
Raleigh, NC 27605-3322

STATE OF NORTH CAROLINA
DEPARTMENT OF TRANSPORTATION
RALEIGH

STANDARD

LRFR SUMMARY FOR 30' CORED SLAB UNIT 75° SKEW & 105° SKEW

(NON-INTERSTATE TRAFFIC)

REVISIONS						SHEET NO.
NO.	BY:	DATE:	NO.	BY:	DATE:	S-4
1			3			TOTAL SHEETS
2			4			23

ASSEMBLED BY :	R. KNIGHT	DATE : SEPT 2012
CHECKED BY :	S. COOK	DATE : SEPT 2012
DRAWN BY : CVC	6/10	
CHECKED BY : DNS	6/10	

STD. NO. 21LRFR1_75&105S_30L

G:\OR Projects\OR1101 - NCDOT Group 0\600202\Structures\600202_SD_LRFR.dgn
3/18/2013 1101_PDF_full.pltcfg 1101_str.tbl

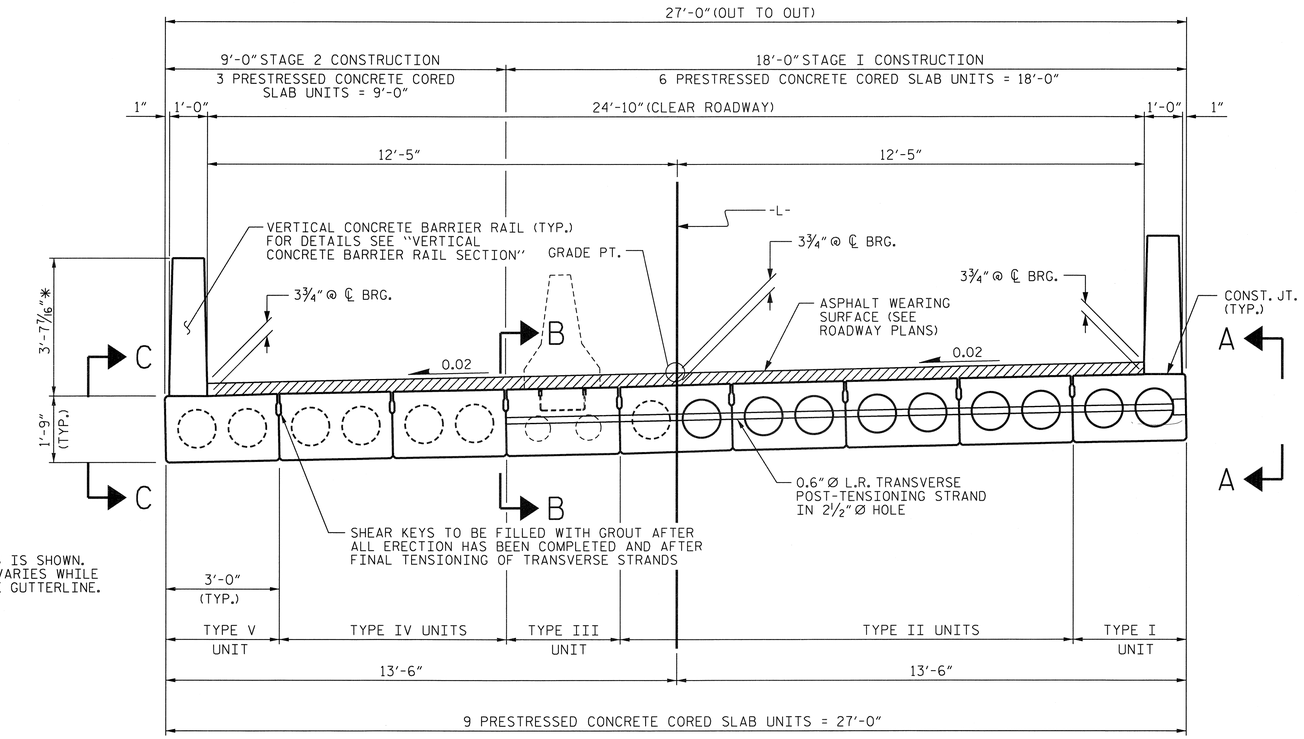

* - THE MAXIMUM BARRIER RAIL HEIGHT AND ASPHALT THICKNESS IS SHOWN. THE HEIGHT OF THE BARRIER RAIL AND ASPHALT THICKNESS VARIES WHILE THE TOP OF THE BARRIER RAIL FOLLOWS THE PROFILE OF THE GUTTERLINE. FOR RAIL HEIGHT DETAILS AND ASPHALT THICKNESS, SEE THE "VERTICAL CONCRETE BARRIER RAIL SECTION" DETAIL.

TYPICAL SECTION

(FOR SECTION "A-A", "B-B" & "C-C", SEE SHEET 2 OF 2)

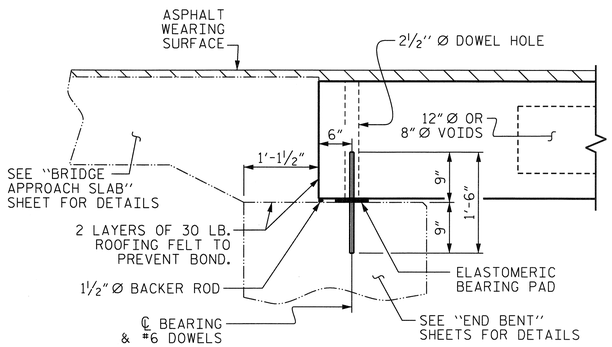

SECTION AT END BENT

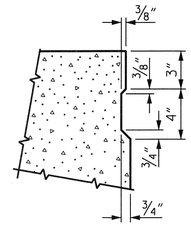

SHEAR KEY DETAIL

NOTE: OMIT SHEAR KEY ON OUTSIDE FACE OF EXTERIOR CORED SLABS.

PROJECT NO. 17BP.13.R.67

MITCHELL COUNTY

STATION: 10+39.00 -L-

SHEET 1 OF 2

STATE OF NORTH CAROLINA
DEPARTMENT OF TRANSPORTATION
RALEIGH

SUPERSTRUCTURE TYPICAL SECTION

NORTH CAROLINA PROFESSIONAL SEAL 14047 ENGINEER STEPHEN D. COOK
3/19/13

THE LOUIS BERGER GROUP, Inc.
1001 Wade Avenue, Suite 400
Raleigh, NC 27605-3322

REVISIONS						SHEET NO.
NO.	BY:	DATE:	NO.	BY:	DATE:	S-5
1			3			TOTAL SHEETS
2			4			23

ASSEMBLED BY :	R. KNIGHT	DATE : SEPT 2012	
CHECKED BY :	S. COOK	DATE : SEPT 2012	
DRAWN BY : DGE	5/09	REV. 12/11	MAA/AAC
CHECKED BY : BCH	6/09		

G:\OR Projects\OR1101 - NCDOT Group 0\600202\Structures\600202_SD_TYP01.dgn
3/18/2013 1101_PDF_full.pltcfg 1101_str.tbl

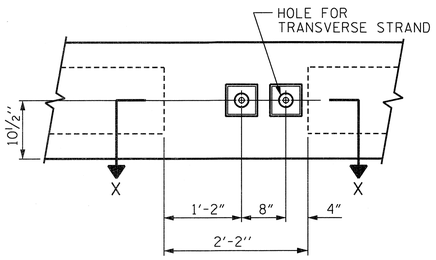

VIEW A-A

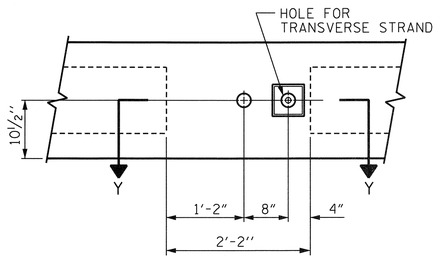

VIEW B-B

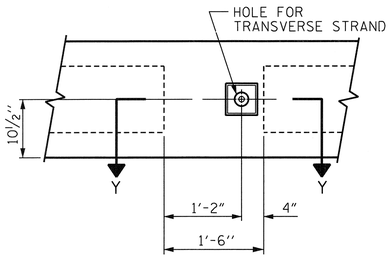

VIEW C-C

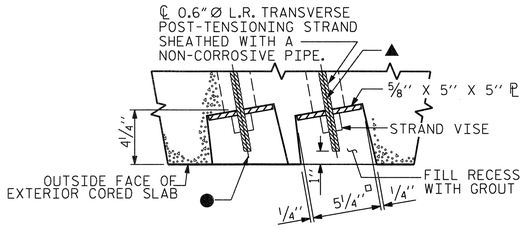

SECTION X-X

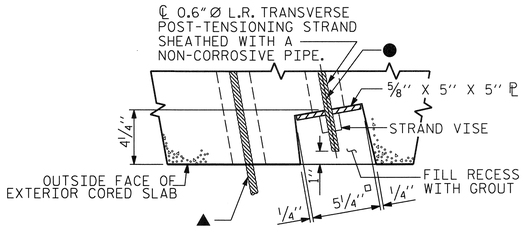

SECTION Y-Y

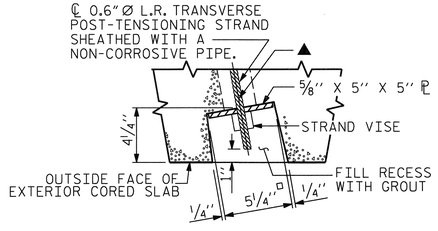

SECTION Z-Z

● ℄ 0.6"Ø H.S. TRANSVERSE POST-TENSIONING STRAND SHEATHERD WITH A NON-CORROSIVE PIPE (TO BE TENSIONED DURING STAGE 1 CONST.)

▲ ℄ 0.6"Ø H.S. TRANSVERSE POST-TENSIONING STRAND SHEATHERD WITH A NON-CORROSIVE PIPE (TO BE TENSIONED DURING STAGE 2 CONST.)

GROUTED RECESS AT END OF POST-TENSIONED STRAND OF CORED SLABS

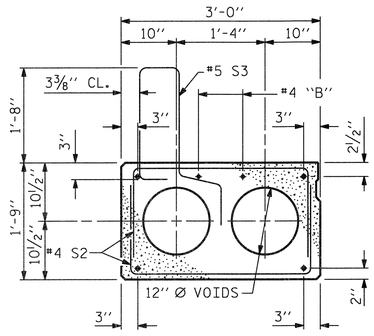

EXT. SLAB SECTION

(FOR PRESTRESSED STRAND LAYOUT, SEE INTERIOR SLAB SECTION.)

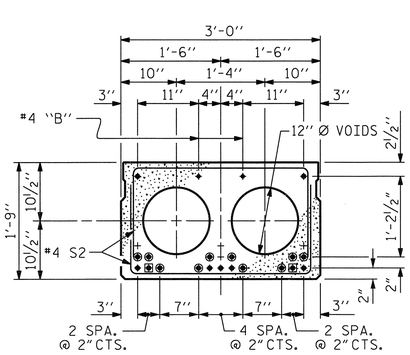

INTERIOR SLAB SECTION

(9 STRANDS REQUIRED)

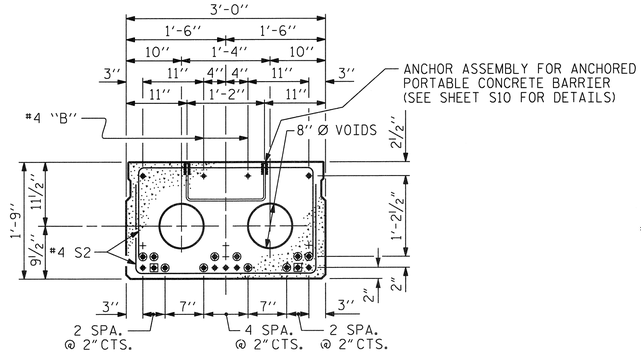

PORTABLE BARRIER SLAB SECTION

(9 STRANDS REQUIRED)

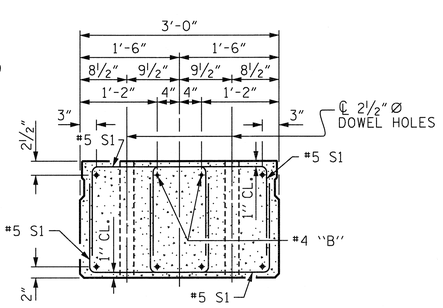

END ELEVATION

SHOWING PLACEMENT OF DOUBLE STIRRUPS AND LOCATION OF DOWEL HOLES. (STRAND LAYOUT NOT SHOWN.) INTERIOR SLAB UNIT SHOWN-EXTERIOR SLAB UNIT SIMILAR EXCEPT SHEAR KEY LOCATION.

◉ BOND SHALL BE BROKEN ON THESE STRANDS FOR A DISTANCE OF 2'-0" FROM END OF CORED SLAB UNIT. SEE STANDARD SPECIFICATIONS, ARTICLE 1078-7.

◉ OPTIONAL FULL LENGTH DEBONDED STRANDS. THESE STRANDS ARE NOT REQUIRED. IF THE FABRICATOR CHOOSES TO INCLUDE THESE STRANDS IN THE CORED SLAB UNIT, THE STRANDS SHALL BE DEBONDED FOR THE FULL LENGTH OF THE UNIT AT NO ADDITIONAL COST. SEE STANDARD SPECIFICATIONS, ARTICLE 1078-7.

DEBONDING LEGEND

PROJECT NO. 17BP.13.R.67

MITCHELL COUNTY

STATION: 10+39.00 -L-

SHEET 2 OF 2

STATE OF NORTH CAROLINA
DEPARTMENT OF TRANSPORTATION
RALEIGH

SUPERSTRUCTURE TYPICAL SECTION

NORTH CAROLINA PROFESSIONAL SEAL 14047 ENGINEER STEPHEN D. COOK
3/18/13

THE LOUIS BERGER GROUP, Inc.
1001 Wade Avenue, Suite 400
Raleigh, NC 27605-3322

REVISIONS						SHEET NO.
NO.	BY:	DATE:	NO.	BY:	DATE:	S-6
1			3			TOTAL SHEETS
2			4			23

ASSEMBLED BY :	R. KNIGHT	DATE : SEPT 2012	
CHECKED BY :	S. COOK	DATE : SEPT 2012	
DRAWN BY : DGE 5/09	REV. 12/11	MAA/AAC	
CHECKED BY : BCH 6/09			

G:\OR Projects\OR1101 - NCDOT Group 0\600202\Structures\600202_SD_TYP02.dgn
3/18/2013 1101_PDF_fullpltcfg 1101_str.tbl

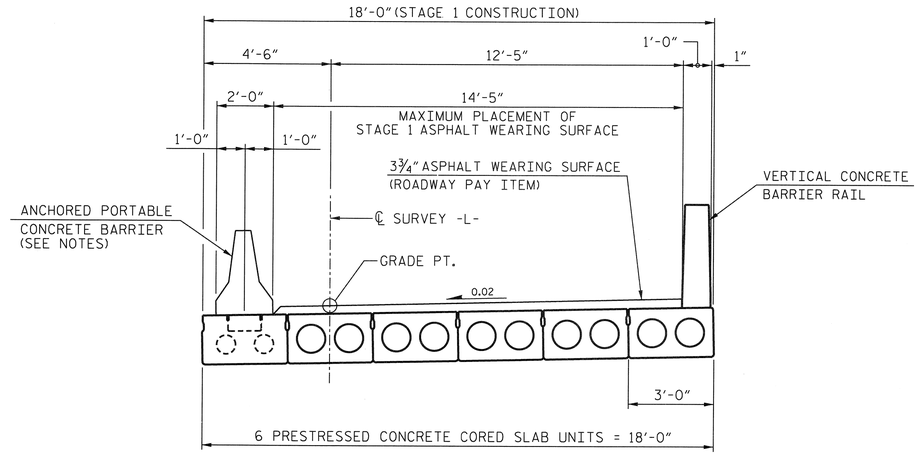

STAGE 1 CONSTRUCTION

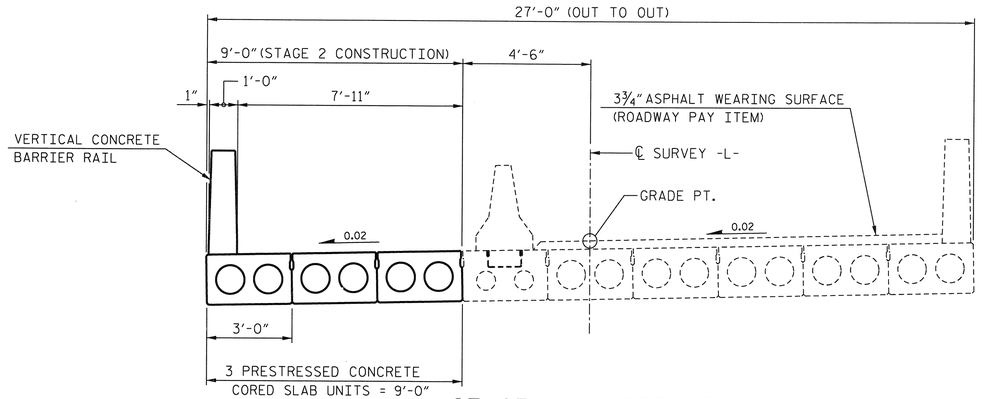

STAGE 2 CONSTRUCTION

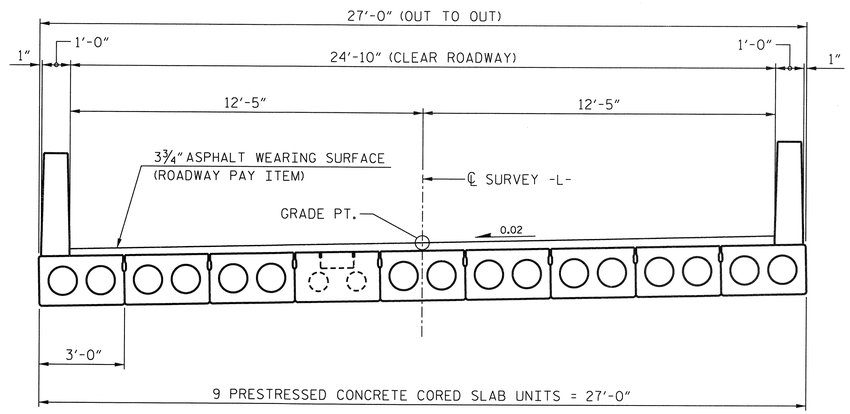

FINAL STRUCTURE

PROJECT NO. 17BP.13.R.67

MITCHELL COUNTY

STATION: 10+39.00 -L-

STATE OF NORTH CAROLINA
DEPARTMENT OF TRANSPORTATION
RALEIGH

STAGING DIAGRAM FOR BRIDGE OVER BRUMMETT CREEK ON SR 1318 BETWEEN SR 1316 AND DEAD END

NORTH CAROLINA PROFESSIONAL SEAL 14047 ENGINEER STEPHEN D. COOK

3/18/13

THE LOUIS BERGER GROUP, Inc.
1001 Wade Avenue, Suite 400
Raleigh, NC 27605-3322

REVISIONS						SHEET NO.
NO.	BY:	DATE:	NO.	BY:	DATE:	S-7
1			3			TOTAL SHEETS
2			4			23

DRAWN BY : R. KNIGHT DATE : SEPT 2012

CHECKED BY : S. COOK DATE : SEPT 2012

G:\OR Projects\OR1101 - NCDOT Group 0\600202\Structures\600202_SD_STAGE.dgn
3/18/2013 1101_PDF_full.pltcfg 1101_str.tbl

● STRAND #1 GOES THRU 6 CORED SLAB UNITS (TO BE TENSIONED DURING STAGE 1 CONSTRUCTION)

▲ STRAND #2 GOES THRU ALL 9 CORED SLAB UNITS (TO BE TENSIONED DURING STAGE 2 CONSTRUCTION)

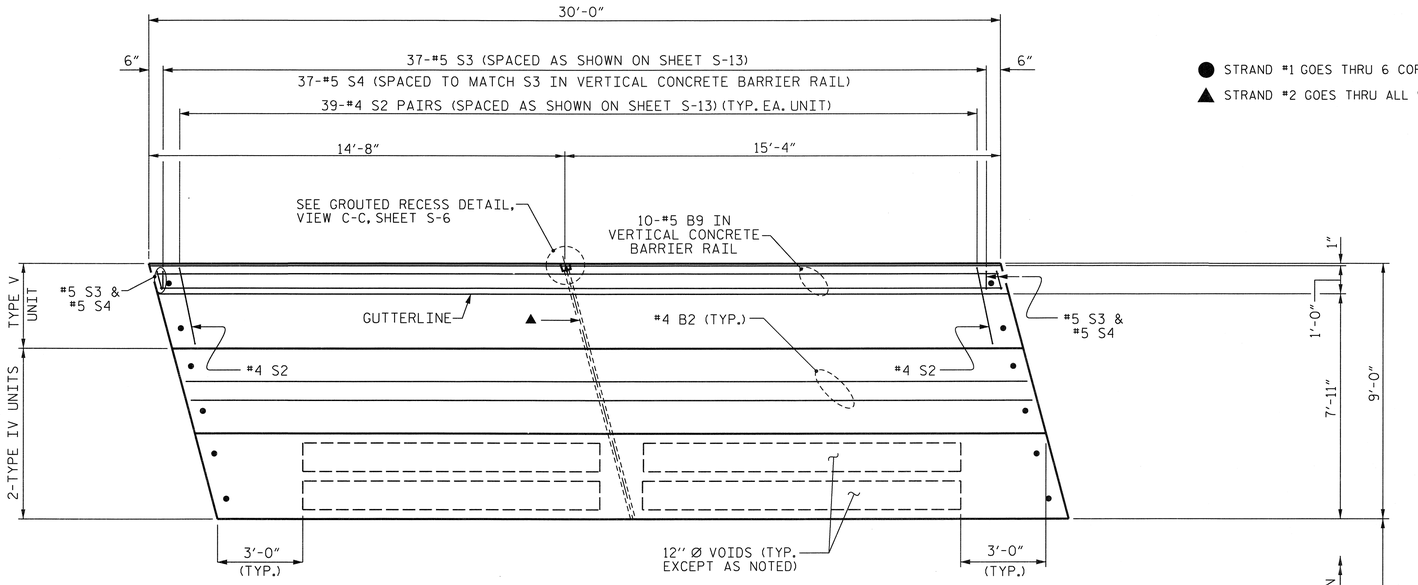

PLAN OF SPAN - STAGE 2

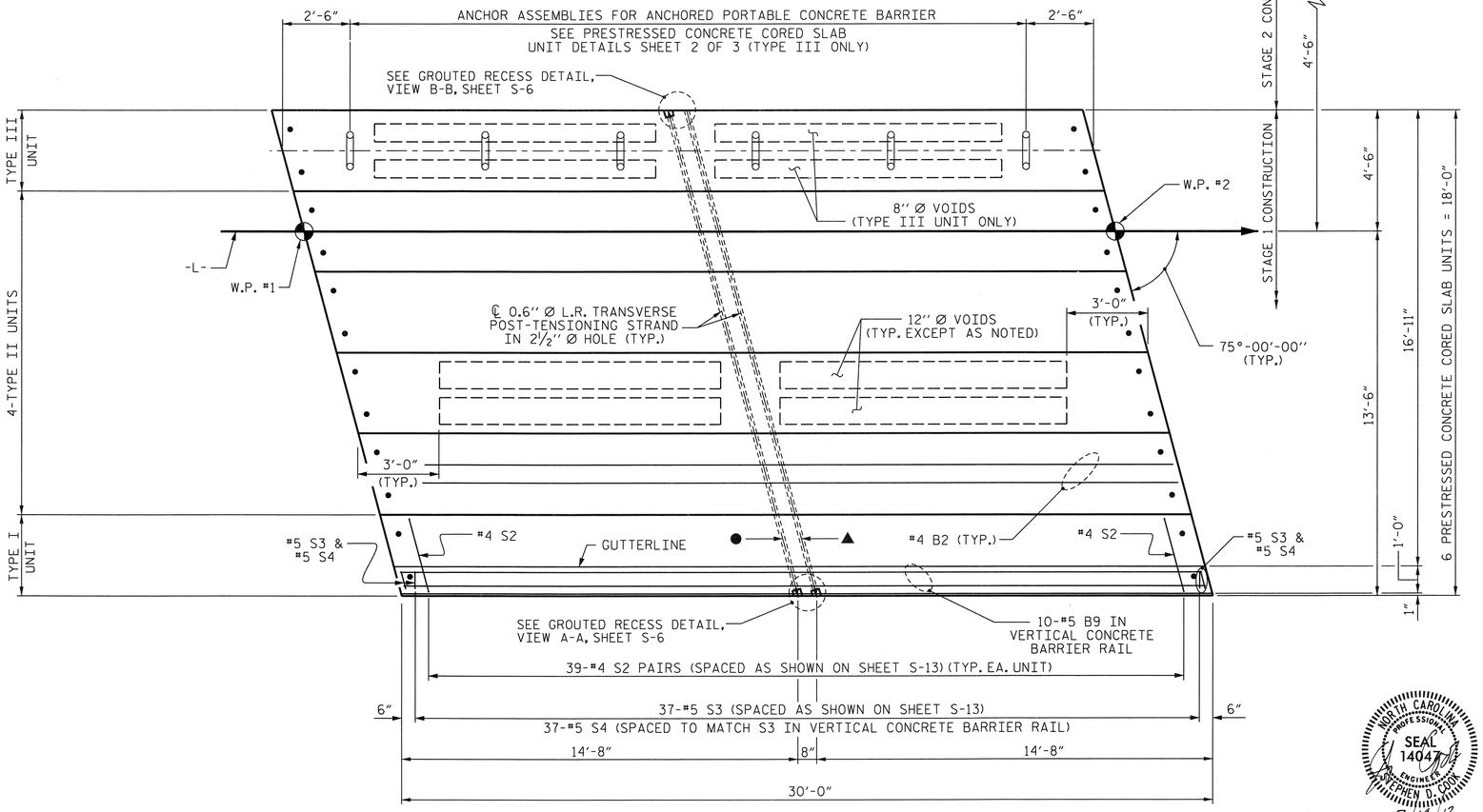

PLAN OF SPAN - STAGE 1

PROJECT NO. 17BP.13.R.67

MITCHELL COUNTY

STATION: 10+39.00 -L-

SHEET 1 OF 5

STATE OF NORTH CAROLINA
DEPARTMENT OF TRANSPORTATION
RALEIGH

PLAN OF 30' UNIT 24'-10" CLEAR ROADWAY 75° SKEW

NORTH CAROLINA PROFESSIONAL SEAL 14041 ENGINEER STEPHEN D. COOK
2/18/13

THE LOUIS BERGER GROUP, Inc.
1001 Wade Avenue, Suite 400
Raleigh, NC 27605-3322

REVISIONS						SHEET NO.
NO.	BY:	DATE:	NO.	BY:	DATE:	S-8
1			3			TOTAL SHEETS
2			4			23

DRAWN BY : J. MYA DATE : AUG 2012

CHECKED BY : S. COOK DATE : SEPT 2012

G:\OR Projects\OR1101 - NCDOT Group 0\600202\Structures\600202_SD_PCS01.dgn
3/18/2013 1101_PDF_full.pltcfg 1101_str.tbl

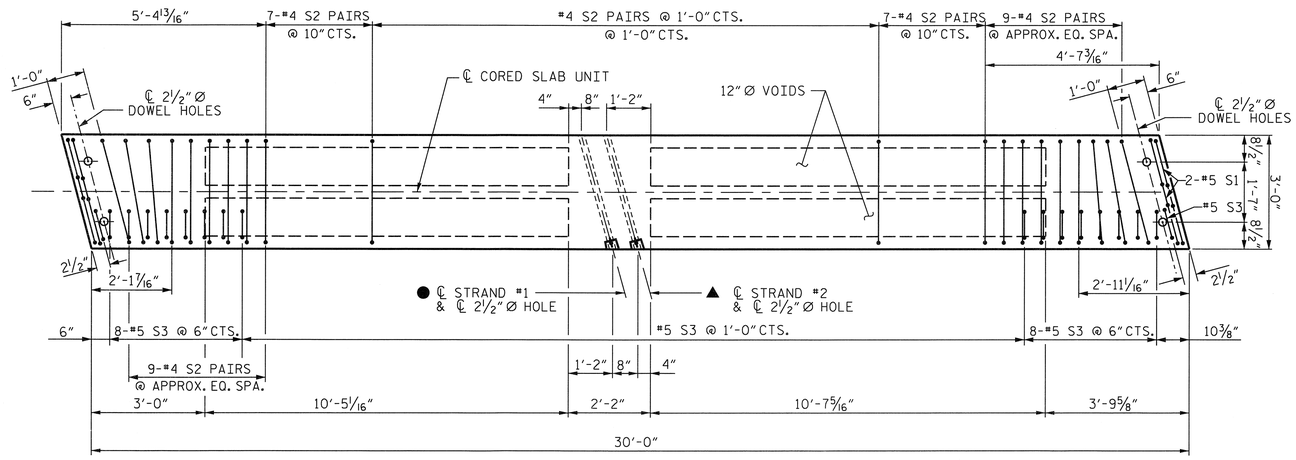

PLAN OF TYPE I CORED SLAB UNIT - STAGE 1

● STRAND #1 GOES THRU 6 CORED SLAB UNITS (TO BE TENSIONED DURING STAGE 1 CONSTRUCTION)

▲ STRAND #2 GOES THRU ALL 9 CORED SLAB UNITS (TO BE TENSIONED DURING STAGE 2 CONSTRUCTION)

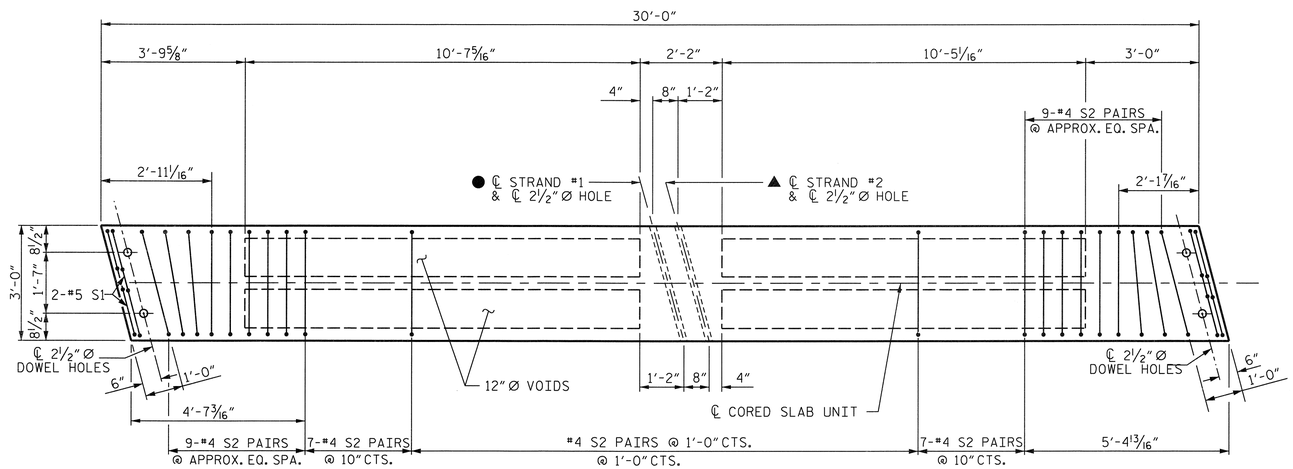

PLAN OF TYPE II CORED SLAB UNIT - STAGE 1

PROJECT NO. 17BP.13.R.67

MITCHELL COUNTY

STATION: 10+39.00 -L-

SHEET 2 OF 5

STATE OF NORTH CAROLINA
DEPARTMENT OF TRANSPORTATION
RALEIGH

3'-0" x 1'-9" PRESTRESSED CONCRETE CORED SLAB UNIT

NORTH CAROLINA PROFESSIONAL SEAL 14047 ENGINEER STEPHEN D. COOK

3/18/13

THE LOUIS BERGER GROUP, Inc.
1001 Wade Avenue, Suite 400
Raleigh, NC 27605-3322

REVISIONS						SHEET NO.
NO.	BY:	DATE:	NO.	BY:	DATE:	S-9
1			3			TOTAL SHEETS
2			4			23

DRAWN BY : R. KNIGHT DATE : JULY 2012

CHECKED BY : S. COOK DATE : JULY 2012

G:\OR Projects\OR1101 - NCDOT Group 0\600202\Structures\600202_SD_PCS02.dgn
3/18/2013 1101_PDF_fullpltcfg 1101_str.tbl

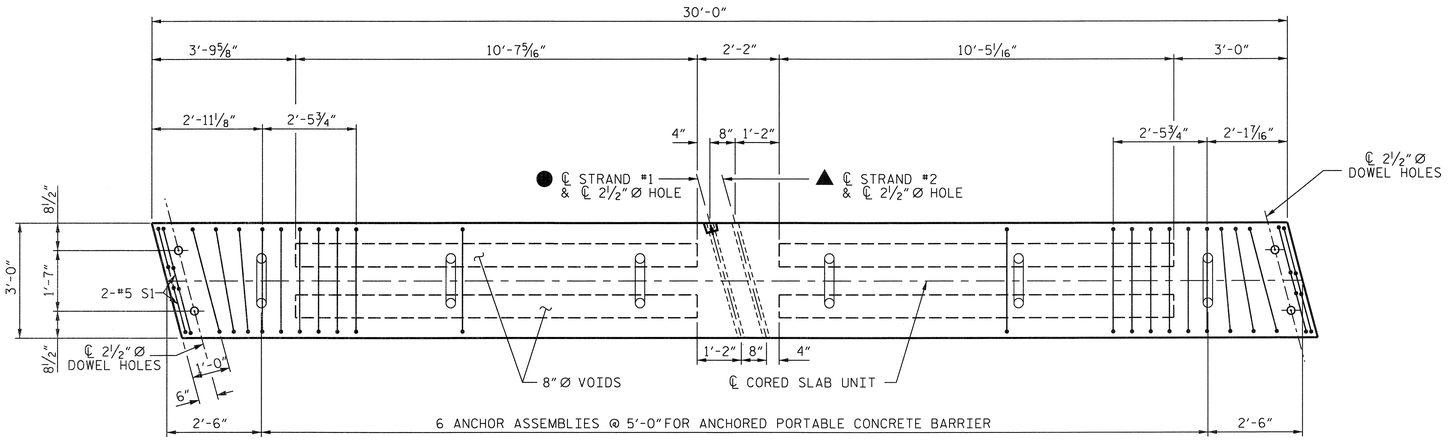

PLAN OF TYPE III CORED SLAB UNIT - STAGE 1

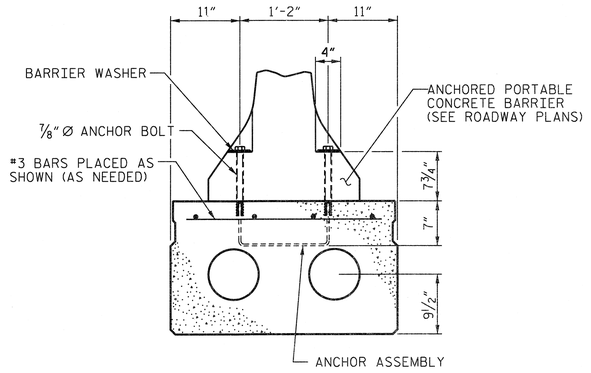

TYPE III CORED SLAB SECTION

(SHOWING PLACEMENT OF ANCHOR ASSEMBLY)

THE #3 BARS ARE INCIDENTAL AND THEIR COST SHALL BE INCLUDED IN THE PRICE BID FOR THE PRESTRESSED CONCRETE CORDED SLAB

NOTES:

● STRAND #1 GOES THRU 6 CORED SLAB UNITS (TO BE TENSIONED DURING STAGE 1 CONSTRUCTION)

▲ STRAND #2 GOES THRU ALL 9 CORED SLAB UNITS (TO BE TENSIONED DURING STAGE 2 CONSTRUCTION)

STRAND #1 AND STRAND #2 ARE 0.6"Ø H.S. TRANSVERSE POST-TENSIONED STRANDS.

THE #4S2 AND #5S3 BARS MAY BE SHIFTED SLIGHTLY IN ORDER TO MAINTAIN A 2"MINIMUM CLEARANCE TO THE 2½" HOLES.

ANCHOR ASSEMBLY NOTES:

THE ANCHOR ASSEMBLY FOR PORTABLE CONCRETE BARRIER SHALL CONSIST OF THE FOLLOWING COMPONENTS:

A. FERRULES SHALL BE MADE FROM STEEL MEETING THE REQUIREMENTS OF AASHTO M169, GRADE 12L14 AND SHALL HAVE A MINIMUM LENGTH OF THREADS OIF 2½".

B. 2-⅞"Ø x 1'-0" ANCHOR BOLTS SHALL CONFORM TO THE REQUIREMENTSOF ASTM A307. ANCHOR BOLTS SHALL BE GALVANIZED. (AT THE OPTION OF THE CONTRACTOR'S OPTION STAINLESS STEEL BOLTS MAY BE USED AS AN ALTERNATE FOR THE ⅞"Ø x 1'-0"GALVANIZED BOLTS. THEY SHALL CONFORM TO OR EXCEED THE MECHANICAL REQUIREMENTS OF ASTM A307. THE USE OF THIS ALTERNATE SHALL BE APPROVED BY THE ENGINEER.

C. WIRE STRUTS SHOWN IN THE ANCHOR ASSEMBLY DETAIL ARE MINIMUM ALLOWABLE SIZE AND SHALL HAVE A MINIMUM TENSILE STRENGTH OF 100,000 P.S.I.

ANCHOR ASSEMBLY WITH BOLTS SHALL BE ASSEMBLED IN THE SHOP. BOLT THREADS MAY BE RECUT AS NECESSARY TO INSURE FIT.

THE COST OF THE ANCHOR ASSEMBLY COMPLETE IN PLACE, SHALL BE INCLUDED, AS APPLICABLE, IN THE UNIT CONTRACT PRICE BID FOR 3'-0"x 1'-9"PRESTRESSED CONCRETE CORED SLAB OR LUMP SUM FOR THE APPROACH SLABS.

FERRULES TO BE PLUGGED DURING CASTING OF THE CORED SLAB UNITS OR POURING OF THE APPROACH SLABS AS RECOMMENDED BY THE MANUFACTURER.

AT THE CONTRACTOR'S OPTION, FERRULES WITH OPEN OR CLOSED ENDS MAY BE USED.

FOR 4"x 3½"x ½" BARRIER WASHER TO BE USED WITH THE ANCHOR ASSEMBLY, SEE ROADWAY PLANS.

PAYMENT FOR THE ANCHORED PORTABLE CONCRETE BARRIER AND BARRIER WASHER ARE INCLUDED IN THE TRAFFIC CONTROL PLANS.

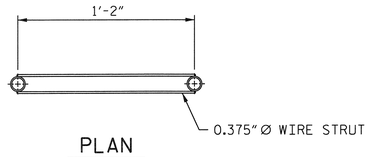

PLAN

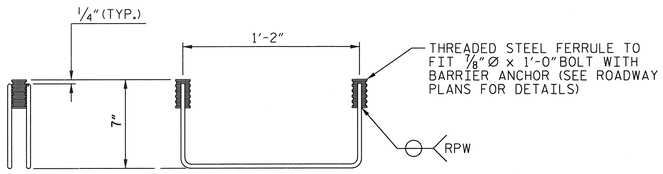

ELEVATION

ANCHOR ASSEMBLY FOR ANCHORED PORTABLE CONCRETE BARRIER

(6 ASSEMBLIES REQUIRED IN TYPE III CORED SLAB UNIT)
(4 ASSEMBLIES REQUIRED IN THE APPROACH SLABS)

NORTH CAROLINA PROFESSIONAL SEAL 14047 ENGINEER STEPHEN D. COOK
3/18/13

THE LOUIS BERGER GROUP, Inc.
1001 Wade Avenue, Suite 400
Raleigh, NC 27605-3322

DRAWN BY : R. KNIGHT DATE : JULY 2012
CHECKED BY : S. COOK DATE : AUG 2012

PROJECT NO. 17BP.13.R.67
MITCHELL COUNTY
STATION: 10+39.00 -L-

SHEET 3 OF 5

STATE OF NORTH CAROLINA
DEPARTMENT OF TRANSPORTATION
RALEIGH

3'-0"x 1'-9" PRESTRESSED CONCRETE CORED SLAB UNIT

REVISIONS						SHEET NO.
NO.	BY:	DATE:	NO.	BY:	DATE:	S-10
1			3			TOTAL SHEETS
2			4			23

G:\OR Projects\OR1101 - NCDOT Group 0\600202\Structures\600202_SD_PCS03.dgn 3/18/2013 1101_PDF_full.pltcfg 1101_str.tbl

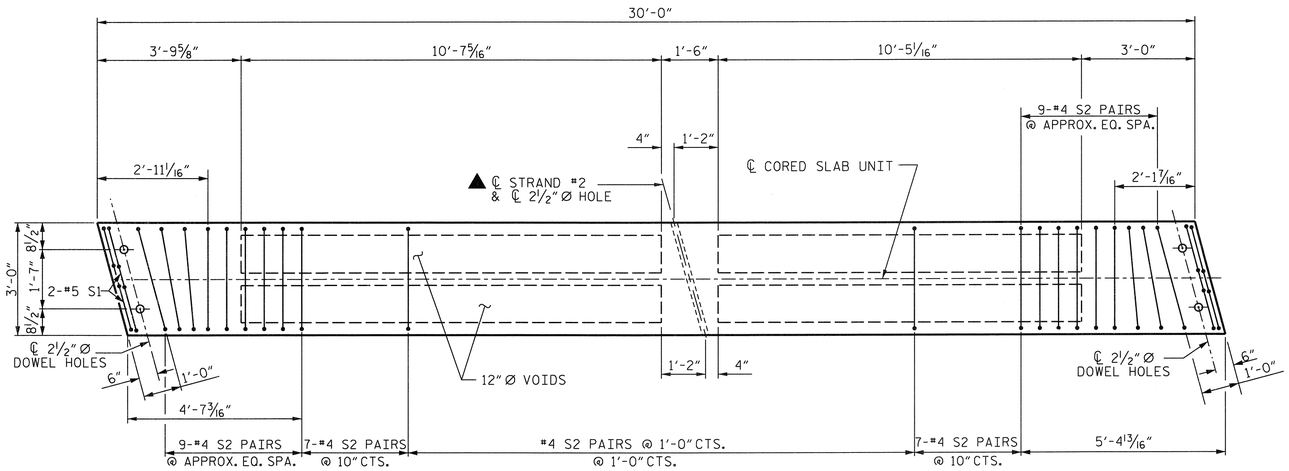

PLAN OF TYPE IV CORED SLAB UNIT - STAGE 2

▲ STRAND #2 GOES THRU ALL 9 CORED SLAB UNITS (TO BE TENSIONED DURING STAGE 2 CONSTRUCTION)

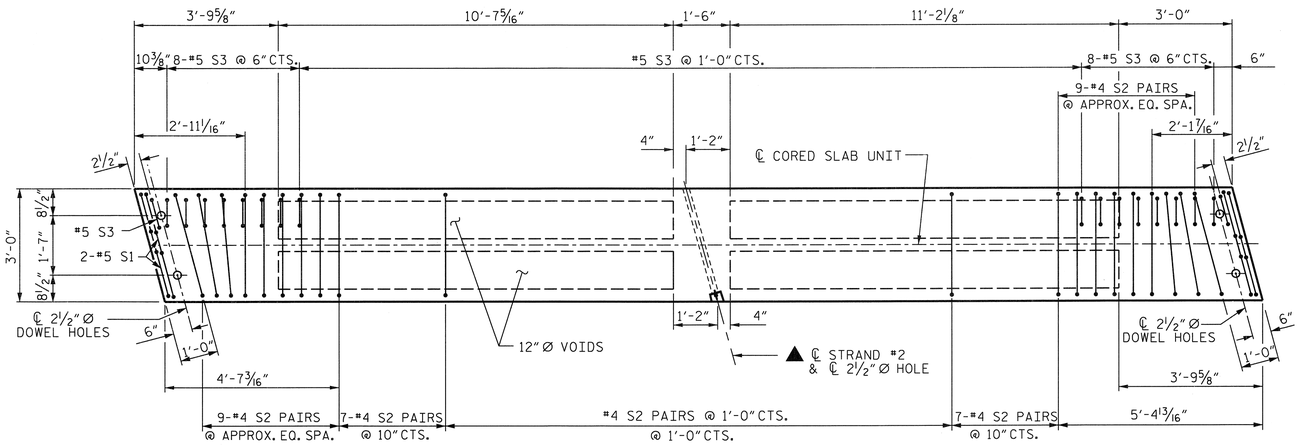

PLAN OF TYPE V CORED SLAB UNIT - STAGE 2

PROJECT NO. 17BP.13.R.67

MITCHELL COUNTY

STATION: 10+39.00 -L-

SHEET 4 OF 5

STATE OF NORTH CAROLINA
DEPARTMENT OF TRANSPORTATION
RALEIGH

3'-0" x 1'-9" PRESTRESSED CONCRETE CORED SLAB UNIT

NORTH CAROLINA PROFESSIONAL SEAL 14047 ENGINEER STEPHEN D. COOK
3/18/13

THE LOUIS BERGER GROUP, Inc.
1001 Wade Avenue, Suite 400
Raleigh, NC 27605-3322

REVISIONS						SHEET NO.
NO.	BY:	DATE:	NO.	BY:	DATE:	S-11
1			3			TOTAL SHEETS
2			4			23

DRAWN BY : R. KNIGHT DATE : JULY 2012
CHECKED BY : S. COOK DATE : JULY 2012

G:\OR Projects\OR1101 - NCDOT Group 0\600202\Structures\600202_SD_PCS04.dgn
3/18/2013 1101_PDF_full.pltcfg 1101_str.tbl

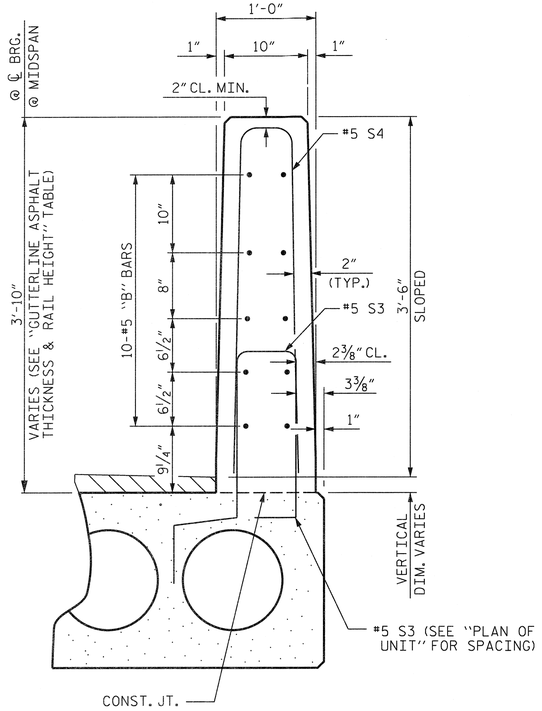

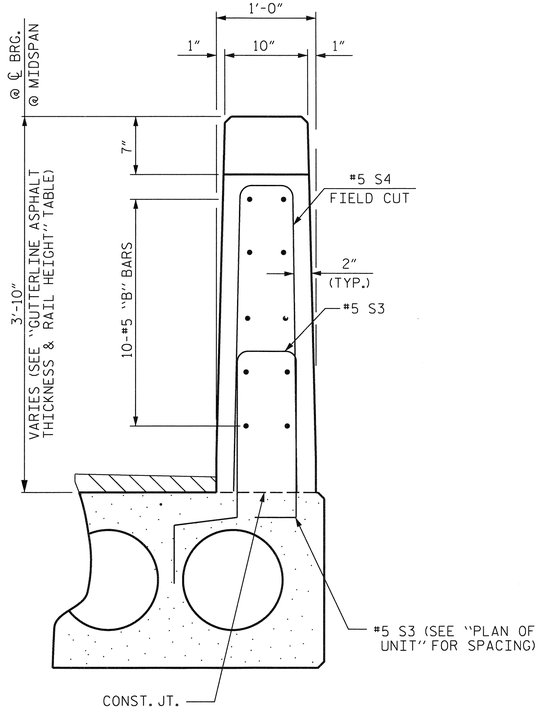

END VIEW

VERTICAL CONCRETE BARRIER RAIL SECTION

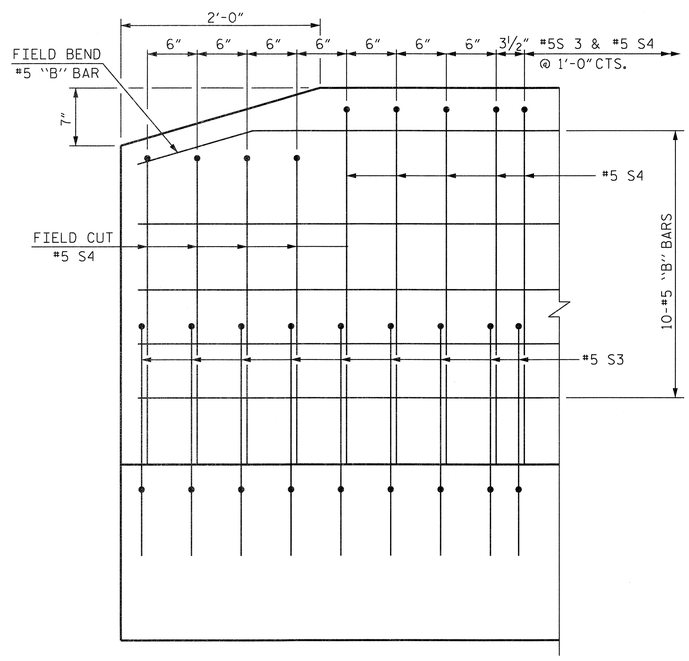

SIDE VIEW

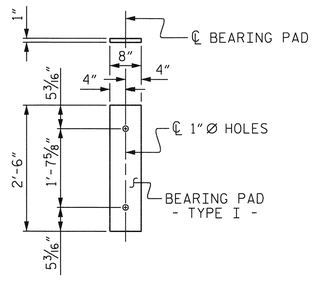

FIXED END
(TYPE I - 24 REQ'D)

ELASTOMERIC BEARING DETAILS

ELASTOMER IN ALL BEARINGS SHALL BE 50 DUROMETER HARDNESS.

BAR TYPES

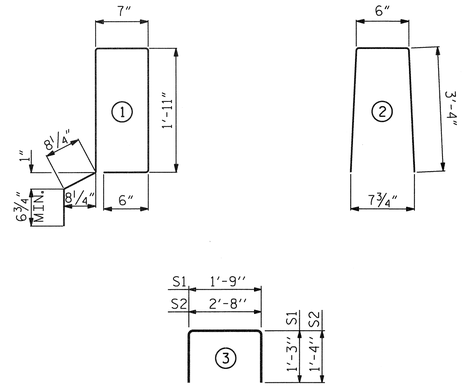

ALL BAR DIMENSIONS ARE OUT TO OUT

BILL OF MATERIAL FOR ONE 30' CORED SLAB UNIT

				EXTERIOR UNIT		INTERIOR UNIT	
BAR	NUMBER	SIZE	TYPE	LENGTH	WEIGHT	LENGTH	WEIGHT
B2	2	#4	STR	29'-7"	40	29'-7"	40
S1	8	#5	3	4'-3"	35	4'-3"	35
S2	78	#4	3	5'-4"	278	5'-4"	278
✱ S3	39	#5	1	6'-2"	251		
REINFORCING STEEL LBS.					353		353
✱EPOXY COATED REINFORCING STEEL LBS.					251		
5000 P.S.I. CONCRETE CU. YDS.					4.5		4.5
0.6"Ø L.R. STRANDS No.					9		9

NOTES

ALL PRESTRESSING STRANDS SHALL BE 7-WIRE LOW RELAXATION GRADE 270 STRANDS AND SHALL CONFORM TO AASHTO M203 EXCEPT FOR SAMPLING REQUIREMENTS WHICH SHALL BE IN ACCORDANCE WITH THE STANDARD SPECIFICATIONS.

ALL REINFORCING STEEL CAST WITH THE CORED SLAB SECTIONS SHALL BE GRADE 60 AND SHALL BE INCLUDED IN THE UNIT PRICE BID FOR PRESTRESSED CONCRETE CORED SLABS.

RECESSES FOR TRANSVERSE STRANDS SHALL BE GROUTED AFTER THE TENSIONING OF THE STRANDS.

THE 2½"Ø DOWEL HOLES AT FIXED ENDS OF SLAB SECTIONS SHALL BE FILLED WITH NON-SHRINK GROUT.

THE BACKER RODS SHALL CONFORM TO THE REQUIREMENTS OF TYPE M BOND BREAKER. SEE SECTION 1028 OF THE STANDARD SPECIFICATIONS.

WHEN CORED SLABS ARE CAST, AN INTERNAL HOLD-DOWN SYSTEM SHALL BE EMPLOYED TO PREVENT VOIDS FROM RISING OR MOVING SIDEWAYS. AT LEAST SIX WEEKS PRIOR TO CASTING CORED SLABS, THE CONTRACTOR SHALL SUBMIT TO THE ENGINEER FOR REVIEW AND COMMENT, DETAILED DRAWINGS OF THE PROPOSED HOLD-DOWN SYSTEM. IN ADDITION TO STRUCTURAL DETAILS, LOCATION AND SPACING OF THE HOLD-DOWNS SHALL BE INDICATED.

ALL REINFORCING STEEL IN THE VERTICAL CONCRETE BARRIER RAIL SHALL BE EPOXY COATED.

PRESTRESSING STRANDS SHALL BE CUT FLUSH WITH THE CORED SLAB UNIT ENDS.

APPLY EPOXY PROTECTIVE COATING TO CORED SLAB UNIT ENDS.

GROOVED CONTRACTION JOINTS, ½" IN DEPTH, SHALL BE TOOLED IN ALL EXPOSED FACES OF THE BARRIER RAIL AND IN ACCORDANCE WITH ARTICLE 825-10(B) OF THE STANDARD SPECIFICATIONS. A CONTRACTION JOINT SHALL BE LOCATED AT EACH THIRD POINT BETWEEN BARRIER RAIL EXPANSION JOINTS. ONLY ONE CONTRACTION JOINT IS REQUIRED AT MIDPOINT OF BARRIER RAIL SEGMENTS LESS THAN 20 FEET IN LENGTH AND NO CONTRACTION JOINTS ARE REQUIRED FOR THOSE SEGMENTS LESS THAN 10 FEET IN LENGTH.

TRANSVERSE POST TENSIONING OF THE CORED SLAB UNITS SHALL BE DONE IN ACCORDANCE WITH THE STANDARD SPECIFICATIONS.

THE TRANSFER OF LOAD FROM THE ANCHORAGES TO THE CORED SLAB UNIT SHALL BE DONE WHEN THE CONCRETE HAS REACHED A COMPRESSIVE STRENGTH OF NOT LESS THAN THE REQUIRED STRENGTH SHOWN IN THE "CONCRETE RELEASE STRENGTH" TABLE.

FOR GROUT FOR STRUCTURES, SEE SPECIAL PROVISIONS.

DEAD LOAD DEFLECTION AND CAMBER

	3'-0" x 1'-9"
	0.6"Ø L.R. STRAND
CAMBER (SLAB ALONE IN PLACE)	½" ↑
DEFLECTION DUE TO SUPERIMPOSED DEAD LOAD✱✱	⅛" ↓
FINAL CAMBER	⅜" ↑

✱✱ INCLUDES FUTURE WEARING SURFACE

CONCRETE RELEASE STRENGTH

UNIT	PSI
30' UNIT	4000

GRADE 270 STRANDS

	0.6"Ø L.R.
AREA (SQUARE INCHES)	0.217
ULTIMATE STRENGTH (LBS. PER STRAND)	58,600
APPLIED PRESTRESS (LBS. PER STRAND)	43,950

GUTTERLINE ASPHALT THICKNESS & RAIL HEIGHT

33'-10" CLEAR ROADWAY	ASPHALT OVERLAY THICKNESS	RAIL HEIGHT
	@ MID-SPAN	@ MID-SPAN
	SUPERED SECTION	
30' UNITS	3¾"	3'-9⅝"

CORED SLABS REQUIRED

	NUMBER	LENGTH	TOTAL LENGTH
30' UNIT			
EXTERIOR C.S.	2	30'-0"	60'-0"
INTERIOR C.S.	6	30'-0"	180'-0"
PORT. BAR. C.S.	1	30'-0"	30'-0"
TOTAL	9		270'-0"

BILL OF MATERIAL FOR VERTICAL CONCRETE BARRIER RAIL

BAR	BARS PER PAIR OF EXTERIOR UNITS	TOTAL NO.	SIZE	TYPE	LENGTH	WEIGHT
✱ B9	20		#5	STR	29'-6"	615
✱ S4	78		#5	2	7'-2"	583
✱EPOXY COATED REINFORCING STEEL				LBS.		1198
CLASS AA CONCRETE				CU.YDS.		7.9
TOTAL VERTICAL CONCRETE BARRIER RAIL				LN. FT.		60.25

PROJECT NO. 17BP.14.R.67

MITCHELL COUNTY

STATION: 10+39.00 -L-

SHEET 5 OF 5

STATE OF NORTH CAROLINA
DEPARTMENT OF TRANSPORTATION
RALEIGH

STANDARD 3'-0" X 1'-9" PRESTRESSED CONCRETE CORED SLAB UNIT 75° SKEW

NORTH CAROLINA PROFESSIONAL SEAL 14044 ENGINEER STEPHEN D. COOK
3/18/13

THE LOUIS BERGER GROUP, Inc.
1001 Wade Avenue, Suite 400
Raleigh, NC 27605-3322

REVISIONS						SHEET NO.
NO.	BY:	DATE:	NO.	BY:	DATE:	S-12
1			3			TOTAL SHEETS
2			4			23

ASSEMBLED BY :	R. KNIGHT	DATE : SEPT 2012
CHECKED BY :	S. COOK	DATE : SEPT 2012
DRAWN BY : DGE 5/09	REV. 12/11	MAA/AAC
CHECKED BY : BCH 6/09		

STD. NO. 21"PCS3_36_90S

G:\OR Projects\OR1101 - NCDOT Group 0\600202\Structures\600202_SD_PCS05.dgn
3/18/2013 1101_PDF_full.pltcfg 1101_str.tbl

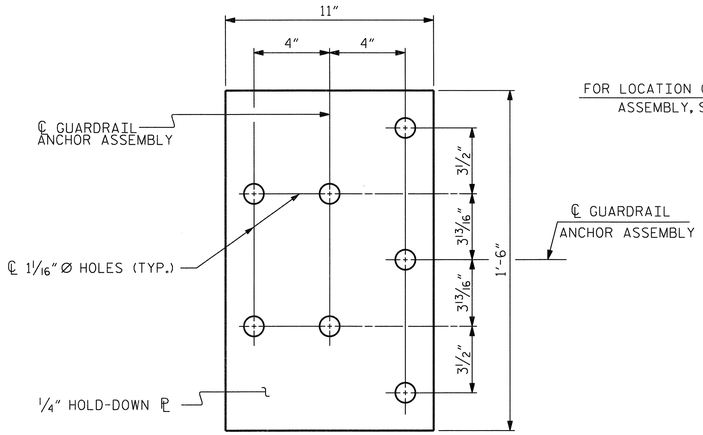

PLAN

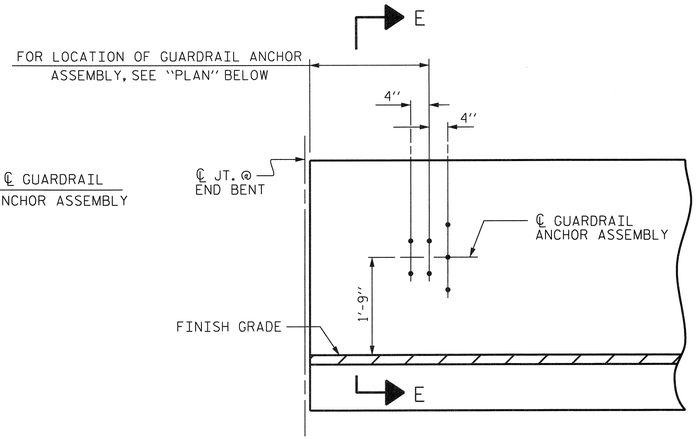

END VIEW

NOTES

THE GUARDRAIL ANCHOR ASSEMBLY SHALL CONSIST OF A 1/4" HOLD DOWN PLATE AND 7 - 7/8" Ø BOLTS WITH NUTS AND WASHERS.

THE HOLD-DOWN PLATE SHALL CONFORM TO AASHTO M270 GRADE 36. AFTER FABRICATION, THE HOLD-DOWN PLATE SHALL BE HOT-DIP GALVANIZED IN ACCORDANCE WITH AASHTO M111.

BOLTS SHALL CONFORM TO THE REQUIREMENTS OF ASTM A307 AND NUTS SHALL CONFORM TO THE REQUIREMENTS OF AASHTO M291. BOLTS, NUTS AND WASHERS SHALL BE GALVANIZED. (AT THE CONTRACTOR'S OPTION, STAINLESS STEEL BOLTS, NUTS AND WASHERS MAY BE USED AS AN ALTERNATE FOR THE 7/8" Ø GALVANIZED BOLTS, NUTS AND WASHERS. THEY SHALL CONFORM TO OR EXCEED THE MECHANICAL REQUIREMENTS OF ASTM A307. THE USE OF THIS ALTERNATE SHALL BE APPROVED BY THE ENGINEER.)

THE GUARDRAIL ANCHOR ASSEMBLY IS REQUIRED AT ALL POINTS WHERE APPROACH GUARDRAIL IS TO BE ATTACHED TO THE END OF BARRIER RAIL. FOR POINTS OF ATTACHMENT, SEE SKETCH.

AFTER INSTALLATION, THE EXPOSED THREAD OF THE BOLT SHALL BE BURRED WITH A SHARP POINTED TOOL.

THE COST OF THE GUARDRAIL ANCHOR ASSEMBLY SHALL BE INCLUDED IN THE UNIT CONTRACT PRICE BID FOR VERTICAL CONCRETE BARRIER RAIL.

THE VERTICAL REINFORCING BARS MAY BE SHIFTED SLIGHTLY IN THE VERTICAL CONCRETE BARRIER RAIL TO CLEAR ASSEMBLY BOLTS.

THE 1 1/4" Ø HOLES SHALL BE FORMED OR DRILLED WITH A CORE BIT. IMPACT TOOLS WILL NOT BE PERMITTED. ANY CONCRETE DAMAGED BY THIS WORK SHALL BE REPAIRED TO THE SATISFACTION OF THE ENGINEER.

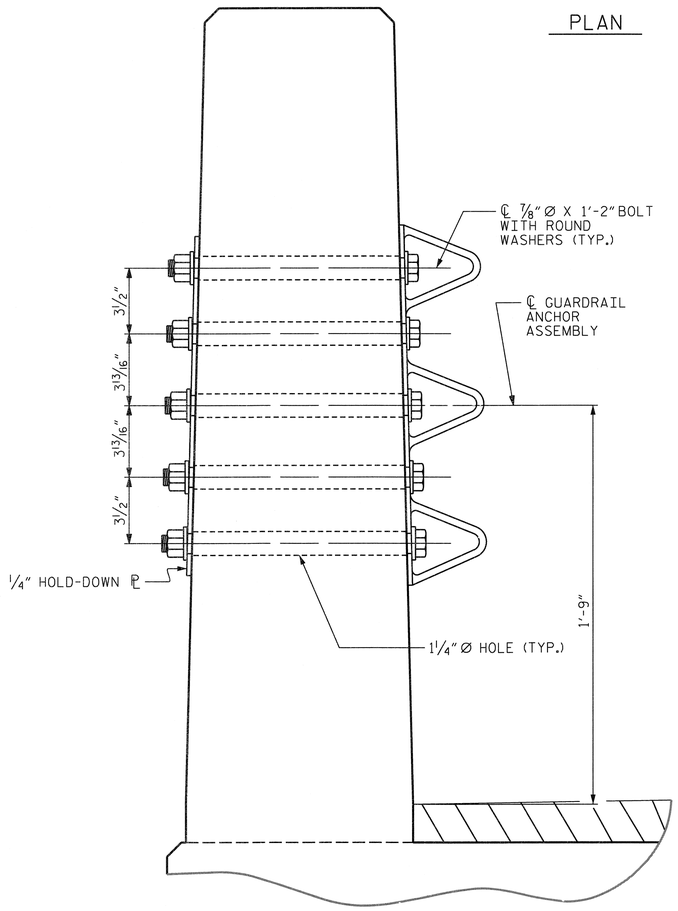

SECTION E-E

GUARDRAIL ANCHOR ASSEMBLY DETAILS

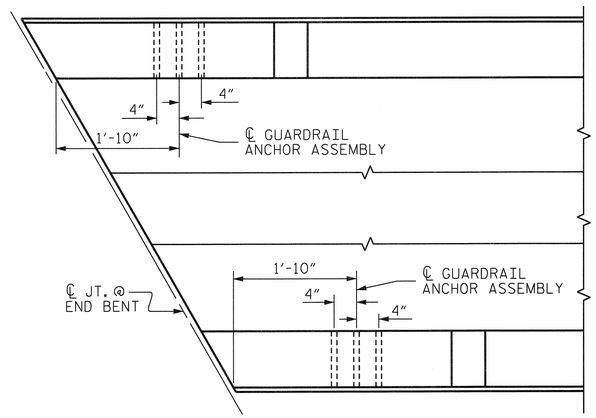

PLAN

LOCATION OF ANCHORS FOR GUARDRAIL

END BENT #1 SHOWN, END BENT #2 SIMILAR.

SKETCH SHOWING POINTS OF ATTACHMENT

* LOCATION OF GUARDRAIL ATTACHMENT

PROJECT NO. 17BP.13.R.67

MITCHELL COUNTY

STATION: 10+39.00 -L-

ASSEMBLED BY : R. KNIGHT	DATE : SEPT 2012		
CHECKED BY : S. COOK	DATE : SEPT 2012		
DRAWN BY : MAA 5/10	ADDED 5/6/10		
CHECKED BY : GM 5/10	REV. 10/1/11	MAA/GM	
	REV. 12/5/11	MAA/GM	

STATE OF NORTH CAROLINA
DEPARTMENT OF TRANSPORTATION
RALEIGH

STANDARD
GUARDRAIL ANCHORAGE FOR VERTICAL CONCRETE BARRIER RAIL

NORTH CAROLINA PROFESSIONAL SEAL 14047 ENGINEER STEPHEN D. RIDDLE

THE LOUIS BERGER GROUP, Inc.
1001 Wade Avenue, Suite 400
Raleigh, NC 27605-3322

REVISIONS						SHEET NO.
NO.	BY:	DATE:	NO.	BY:	DATE:	S-13
1			3			TOTAL SHEETS
2			4			23

(SHT 3) STD. NO. GRA3

G:\OR Projects\OR1101 - NCDOT Group 0\600202\Structures\600202_SD_GRA.dgn
3/18/2013 1101_PDF_full.pltcfg 1101_str.tbl

NOTES

STIRRUPS IN CAP MAY BE SHIFTED AS NECESSARY TO CLEAR DOWELS.

THE CONCRETE IN THE SHADED AREA OF THE WING SHALL BE POURED AFTER THE VERTICAL CONCRETE BARRIER RAIL IS CAST IF SLIP FORMING IS USED.

FOR WING DETAILS, SEE SHEET 2 OF 4.

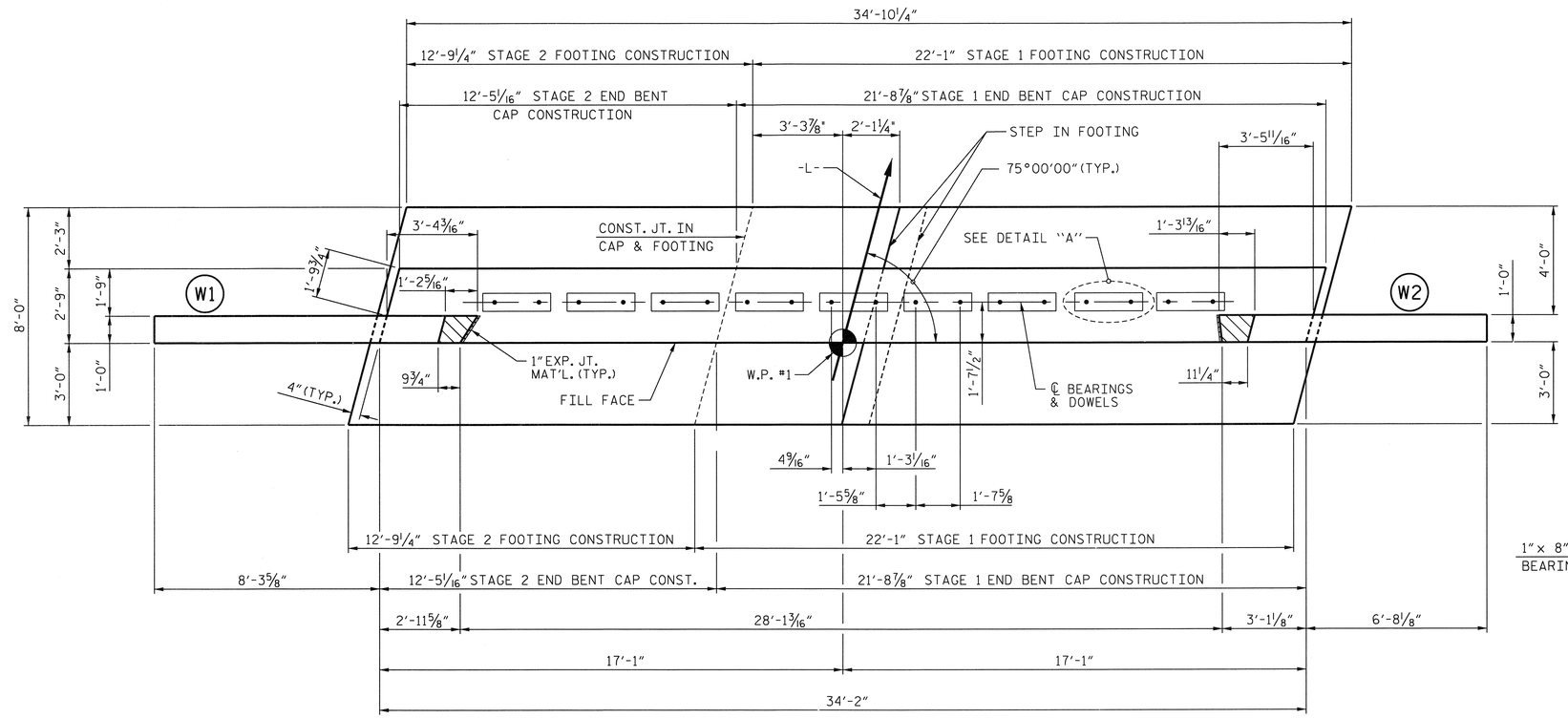

PLAN

DETAIL "A"

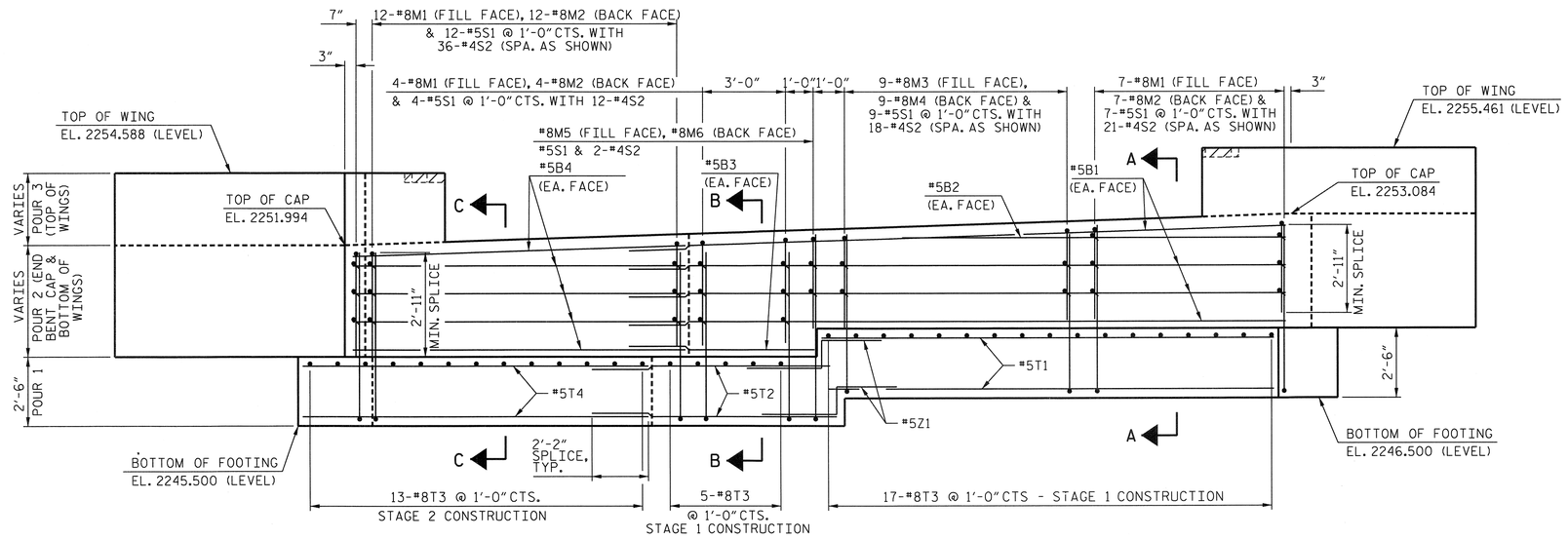

ELEVATION

PROJECT NO. 17BP.13.R.67

MITCHELL COUNTY

STATION: 10+39.00 -L-

SHEET 1 OF 4

STATE OF NORTH CAROLINA
DEPARTMENT OF TRANSPORTATION
RALEIGH

SUBSTRUCTURE END BENT 1

NORTH CAROLINA PROFESSIONAL SEAL 14047 ENGINEER STEPHEN D. COOK

3/18/13

THE LOUIS BERGER GROUP, Inc.
1001 Wade Avenue, Suite 400
Raleigh, NC 27605-3322

REVISIONS						SHEET NO.
NO.	BY:	DATE:	NO.	BY:	DATE:	S-14
1			3			TOTAL SHEETS
2			4			23

DRAWN BY : R. KNIGHT DATE : SEPT 2012
CHECKED BY : S. COOK DATE : SEPT 2012

G:\OR Projects\OR1101 - NCDOT Group 0\600202\Structures\600202_SD_EB101.dgn
3/18/2013 1101_PDF_full.pltcfg 1101_str.tbl

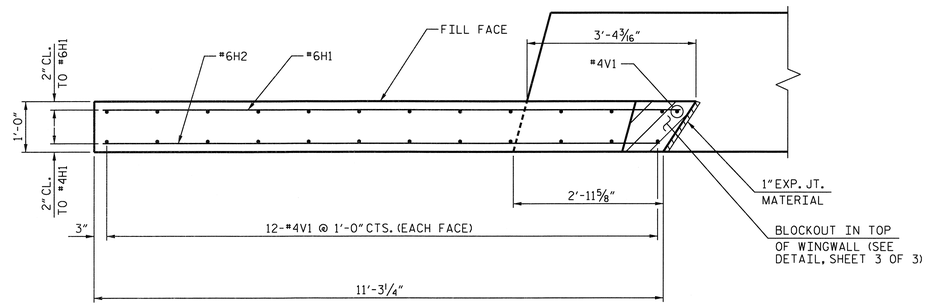

PLAN OF WING - (W1)

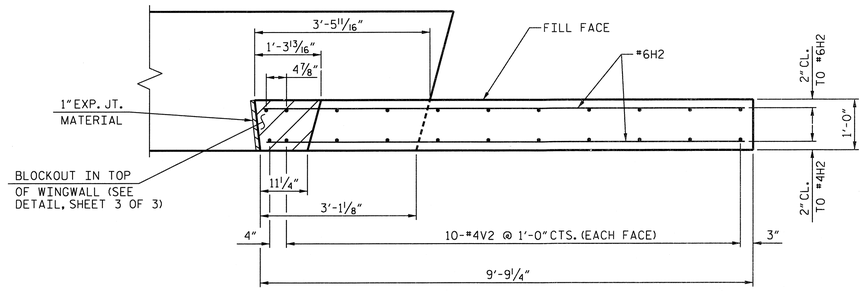

PLAN OF WING - (W2)

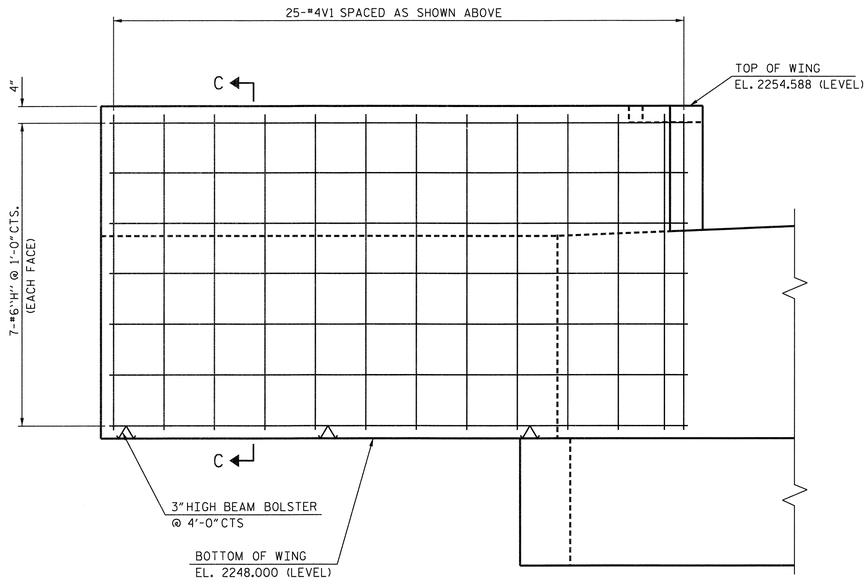

ELEVATION OF WING - (W1)

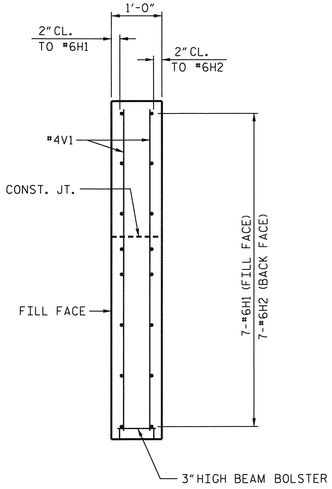

SECTION C-C

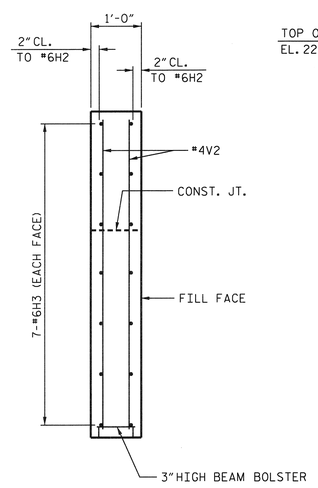

SECTION D-D

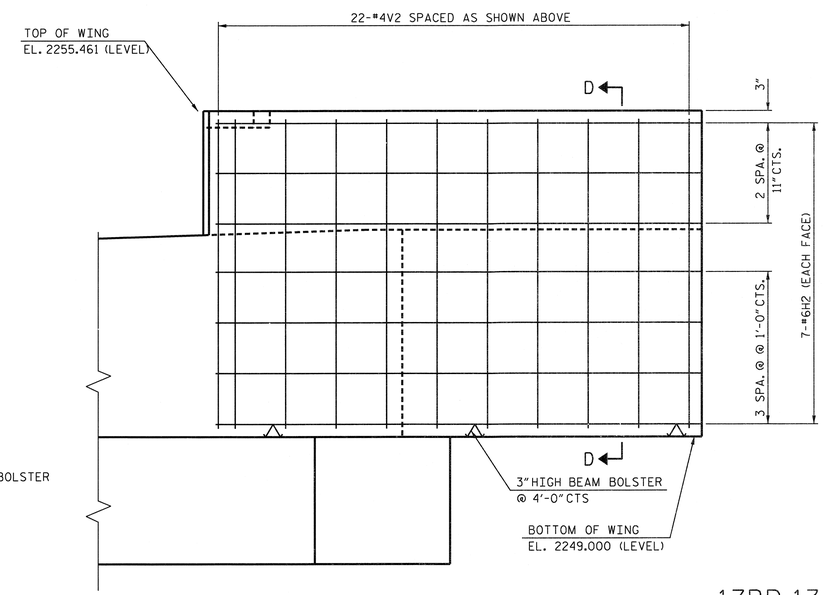

ELEVATION OF WING - (W2)

PROJECT NO. 17BP.13.R.67

MITCHELL COUNTY

STATION: 10+39.00 -L-

SHEET 2 OF 4

STATE OF NORTH CAROLINA
DEPARTMENT OF TRANSPORTATION
RALEIGH

SUBSTRUCTURE END BENT 1

NORTH CAROLINA PROFESSIONAL SEAL 14047 ENGINEER STEPHEN D. COOK
3/18/13

THE LOUIS BERGER GROUP, Inc.
1001 Wade Avenue, Suite 400
Raleigh, NC 27605-3322

REVISIONS						SHEET NO.
NO.	BY:	DATE:	NO.	BY:	DATE:	S-15
1			3			TOTAL SHEETS
2			4			23

DRAWN BY : R. KNIGHT DATE : SEPT 2012
CHECKED BY : S. COOK DATE : SEPT 2012

G:\OR Projects\OR1101 - NCDOT Group 0\600202\Structures\600202_SD_EB102.dgn
3/18/2013 1101_PDF_full_pltcfg 1101_str_tbl

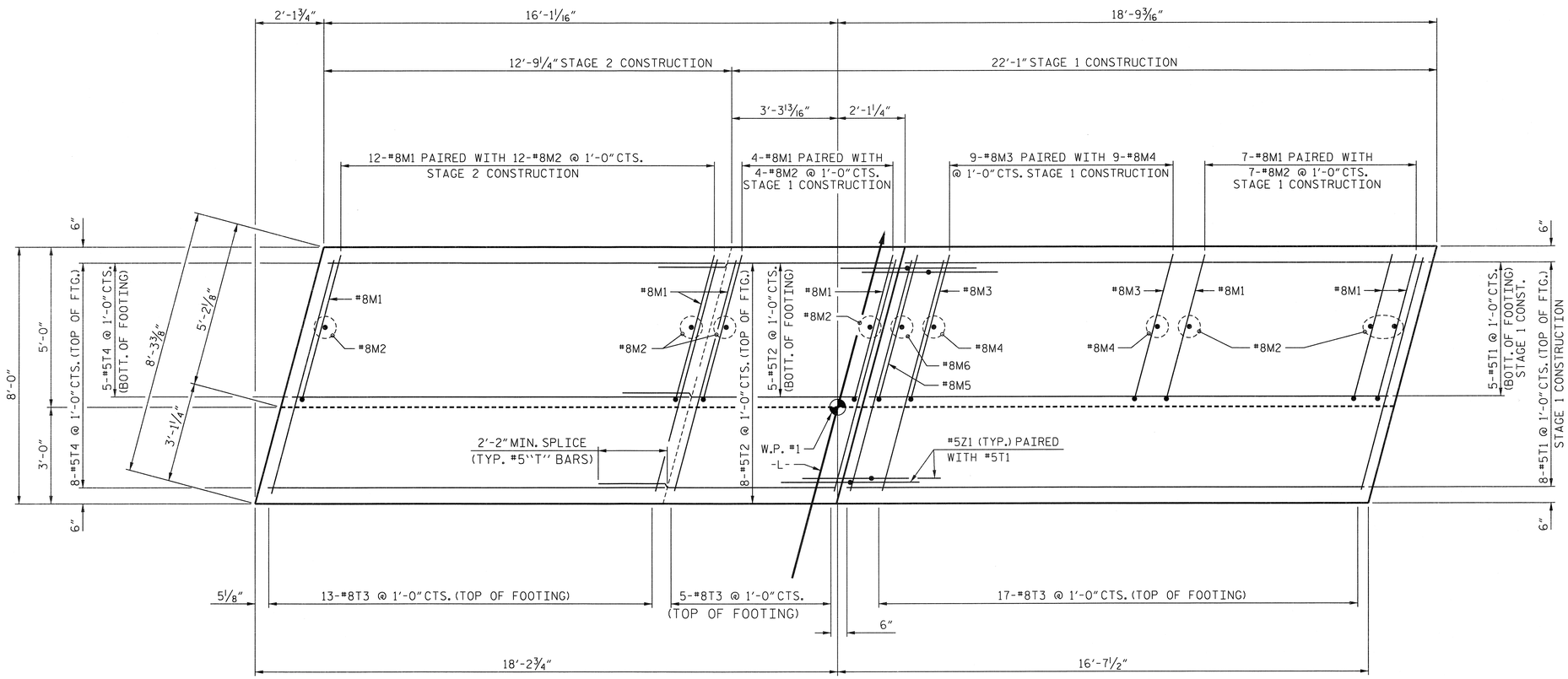

PLAN OF FOOTING

PROJECT NO. 17BP.13.R.67

MITCHELL COUNTY

STATION: 10+39.00 -L-

SHEET 3 OF 4

STATE OF NORTH CAROLINA
DEPARTMENT OF TRANSPORTATION
RALEIGH

SUBSTRUCTURE
END BENT 1

NORTH CAROLINA PROFESSIONAL SEAL 14047 ENGINEER STEPHEN D. COOK
3/19/13

THE LOUIS BERGER GROUP, Inc.
1001 Wade Avenue, Suite 400
Raleigh, NC 27605-3322

REVISIONS						SHEET NO.
NO.	BY:	DATE:	NO.	BY:	DATE:	S-16
1			3			TOTAL SHEETS
2			4			23

DRAWN BY : R. KNIGHT DATE : SEPT 2012
CHECKED BY : S. COOK DATE : SEPT 2012

G:\OR Projects\OR1101 - NCDOT Group 0\600202\Structures\600202_SD_EB103.dgn
3/18/2013 1101_PDF_fullpltcfg 1101_str.tbl

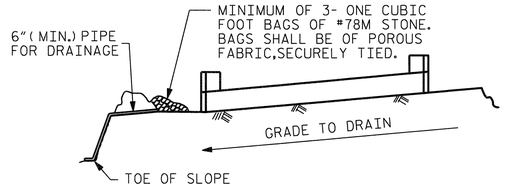

BAGGED STONE AND PIPE SHALL BE PLACED IMMEDIATELY AFTER COMPLETION OF END BENT EXCAVATION. PIPE MAY BE EITHER CONCRETE, CORRUGATED STEEL, CORRUGATED ALUMINUM ALLOY, OR CORRUGATED PLASTIC. PERFORATED PIPE WILL NOT BE ALLOWED.

BAGGED STONE SHALL REMAIN IN PLACE UNTIL THE ENGINEER DIRECTS THAT IT BE REMOVED. THE CONTRACTOR SHALL REMOVE AND DISPOSE OF SILT ACCUMULATIONS AT BAGGED STONE WHEN SO DIRECTED BY THE ENGINEER. BAGS SHALL BE REMOVED AND REPLACED WHENEVER THE ENGINEER DETERMINES THAT THEY HAVE DETERIORATED AND LOST THEIR EFFECTIVENESS.

NO SEPARATE PAYMENT WILL BE MADE FOR THIS WORK AND THE ENTIRE COST OF THIS WORK SHALL BE INCLUDED IN THE UNIT CONTRACT PRICE BID FOR THE SEVERAL PAY ITEMS.

TEMPORARY DRAINAGE AT END BENT

BAR TYPES

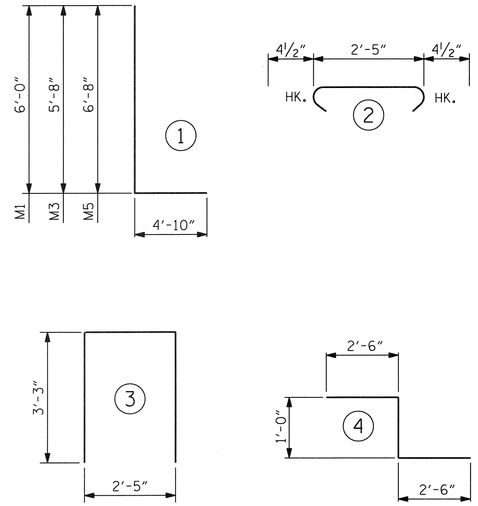

ALL BAR DIMENSIONS ARE OUT TO OUT.

BILL OF MATERIAL

STAGE 1 CONSTRUCTION

BAR	NO.	SIZE	TYPE	LENGTH	WEIGHT
B1	8	5	STR	23'-9"	198
B2	2	5	STR	10'-0"	21
B3	2	5	STR	8'-6"	18
D1	12	6	STR	1'-6"	27
H3	14	6	STR	9'-5"	198
M1	11	8	1	10'-10"	318
M2	11	8	STR	6'-0"	176
M3	9	8	1	9'-6"	228
M4	9	8	STR	5'-8"	136
M5	1	8	1	11'-6"	31
M6	1	8	STR	6'-8"	18
S1	21	5	3	8'-11"	195
S2	53	4	2	3'-2"	112
T1	13	5	STR	16'-4"	221
T2	13	5	STR	8'-6"	115
T3	22	8	STR	7'-10"	460
V2	22	4	STR	6'-1"	89
Z1	13	5	4	6'-0"	81

TOTAL REINFORCING STEEL 2,644 LBS.

CLASS A CONCRETE BREAKDOWN

POUR #1	FOOTING	17.0 C.Y.
POUR #2	CAP, LOWER PART OF WING	12.1 C.Y.
POUR #3	UPPER PART OF WING	1.6 C.Y.
TOTAL CLASS A CONCRETE		30.7 C.Y.

STAGE 2 CONSTRUCTION

BAR	NO.	SIZE	TYPE	LENGTH	WEIGHT
B4	10	5	STR	12'-2"	127
D1	6	6	STR	1'-6"	14
H1	7	6	STR	11'-5	120
H2	7	6	STR	11'-0"	116
M1	12	8	1	10'-10"	347
M2	12	8	STR	6'-0"	192
S1	12	5	2	8'-11"	112
S2	36	4	3	3'-2"	76
T3	13	8	STR	7'-10"	272
T4	13	5	STR	12'-5"	168
V1	25	4	STR	6'-2"	103

TOTAL REINFORCING STEEL 1,646 LBS.

CLASS A CONCRETE BREAKDOWN

POUR #1	FOOTING	9.8 C.Y.
POUR #2	CAP, LOWER PART OF WING	8.8 C.Y.
POUR #3	UPPER PART OF WING	1.9 C.Y.
TOTAL CLASS A CONCRETE		20.5 C.Y.

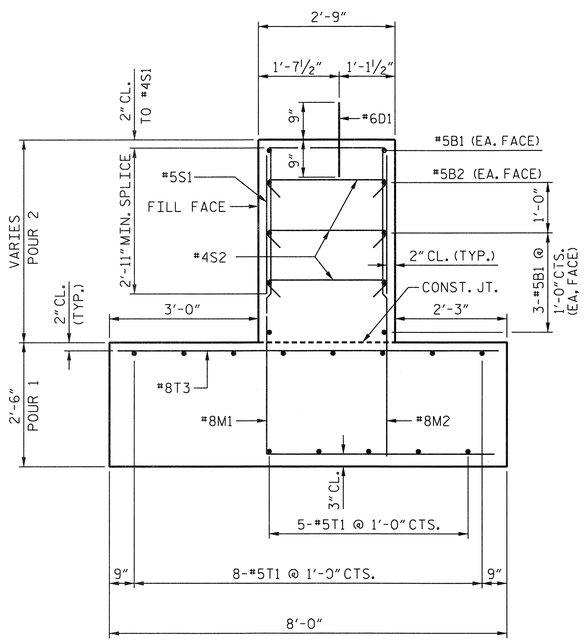

SECTION A-A

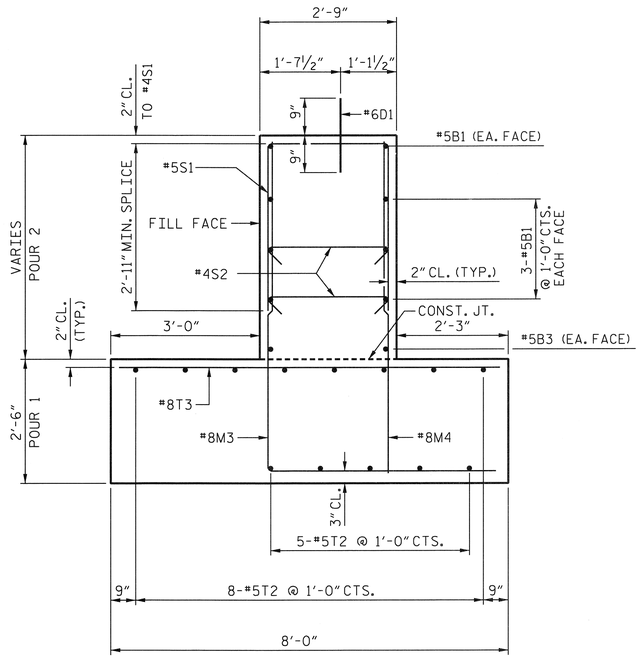

SECTION B-B

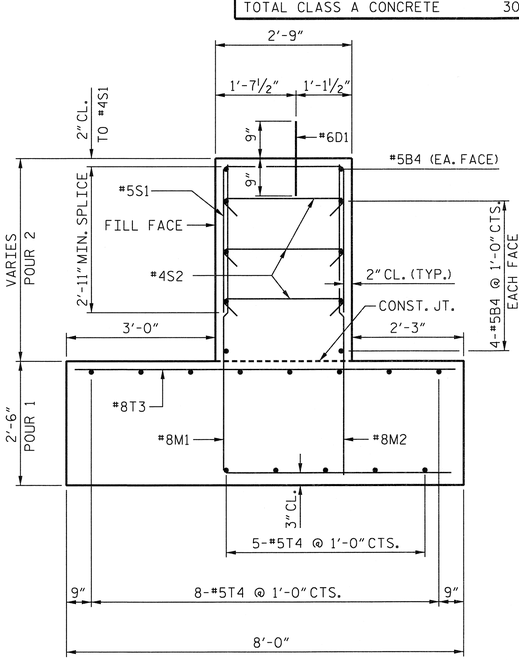

SECTION C-C

PROJECT NO. 17BP.13.R.67

MITCHELL COUNTY

STATION: 10+39.00 -L-

SHEET 4 OF 4

STATE OF NORTH CAROLINA
DEPARTMENT OF TRANSPORTATION
RALEIGH

SUBSTRUCTURE END BENT 1

NORTH CAROLINA PROFESSIONAL SEAL 14047 ENGINEER STEPHEN D. COOK
2/19/13

THE LOUIS BERGER GROUP, Inc.
1001 Wade Avenue, Suite 400
Raleigh, NC 27605-3322

REVISIONS						SHEET NO.
NO.	BY:	DATE:	NO.	BY:	DATE:	S-17
1			3			TOTAL SHEETS
2			4			23

DRAWN BY : R. KNIGHT DATE : JULY 2012
CHECKED BY : S. COOK DATE : AUG 2012

G:\OR Projects\OR1101 - NCDOT Group 0\600202\Structures\600202_SD_EB104.dgn
1101.PDF full.pltcfg 1101_str.tbl
3/18/2013

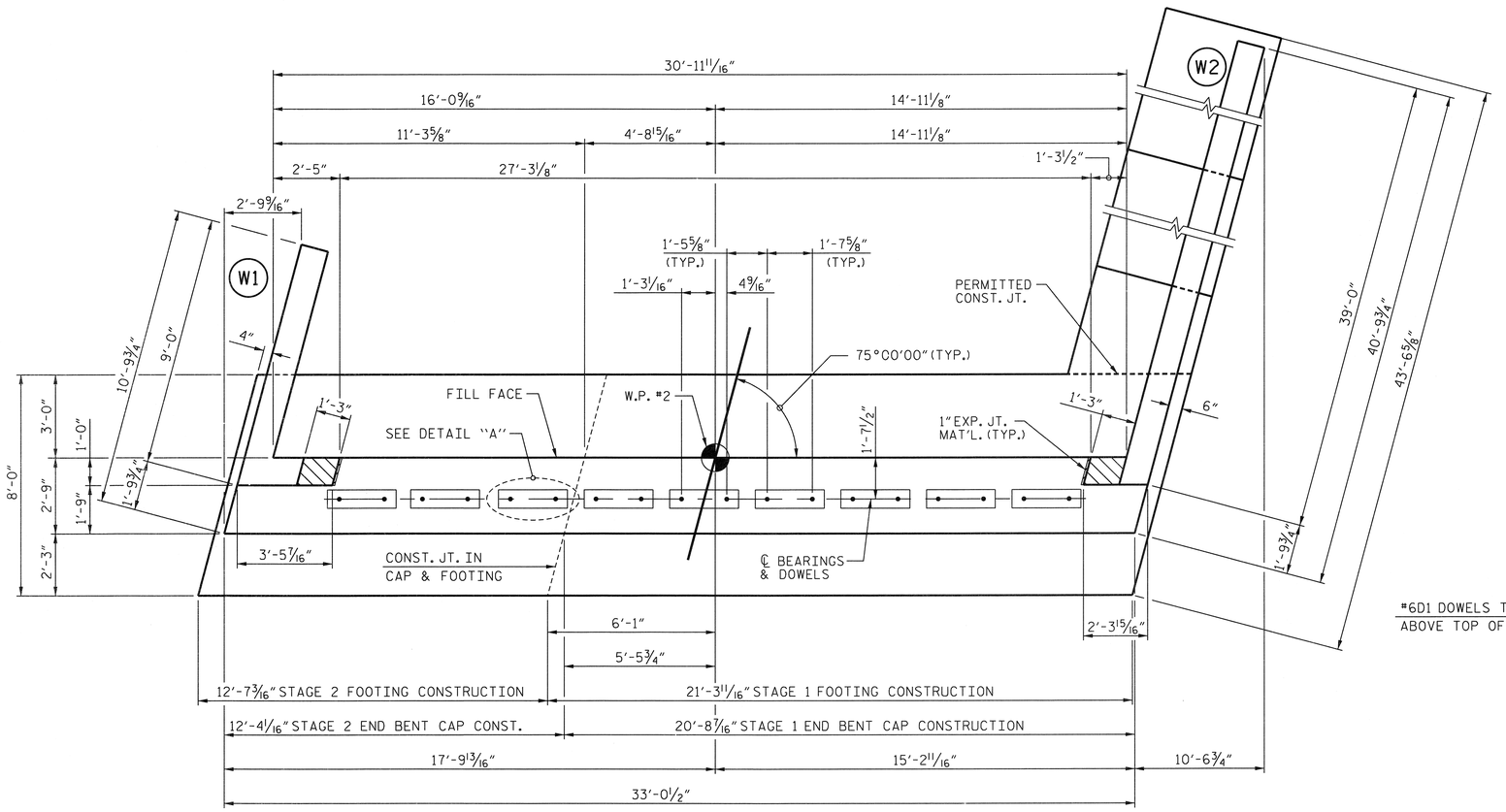

PLAN

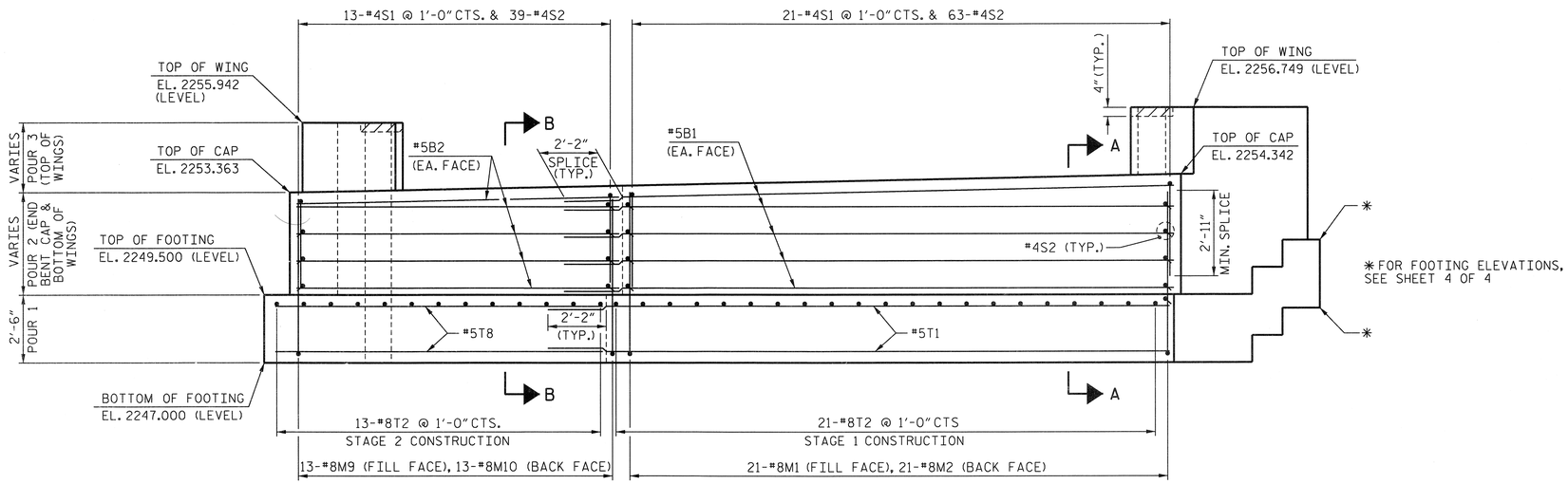

ELEVATION

* FOR FOOTING ELEVATIONS, SEE SHEET 4 OF 4

NOTES

STIRRUPS IN CAP MAY BE SHIFTED AS NECESSARY TO CLEAR DOWELS.

THE CONCRETE IN THE SHADED AREA OF THE WING SHALL BE POURED AFTER THE VERTICAL CONCRETE BARRIER RAIL IS CAST IF SLIP FORMING IS USED.

FOR WING DETAILS, SEE SHEETS 3 OF 4 & 4 OF 4.

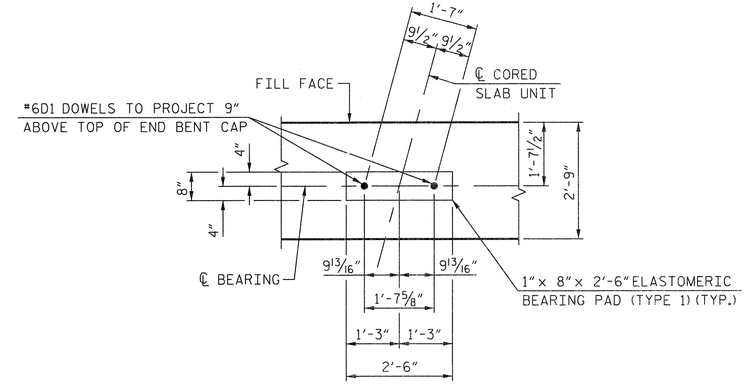

DETAIL "A"

PROJECT NO. 17BP.13.R.67

MITCHELL COUNTY

STATION: 10+39.00 -L-

SHEET 1 OF 4

STATE OF NORTH CAROLINA
DEPARTMENT OF TRANSPORTATION
RALEIGH

SUBSTRUCTURE END BENT 2

NORTH CAROLINA PROFESSIONAL SEAL 14047 ENGINEER STEPHEN D. COOK

3/18/13

THE LOUIS BERGER GROUP, Inc.
1001 Wade Avenue, Suite 400
Raleigh, NC 27605-3322

REVISIONS						SHEET NO.
NO.	BY:	DATE:	NO.	BY:	DATE:	S-18
1			3			TOTAL SHEETS
2			4			23

DRAWN BY : R. KNIGHT DATE : SEPT 2012
CHECKED BY : S. COOK DATE : SEPT 2012

G:\OR Projects\OR1101 - NCDOT Group 0\600202\Structures\600202_SD_EB201.dgn
3/18/2013 1101_PDF_fullpltcfg 1101_str.tbl

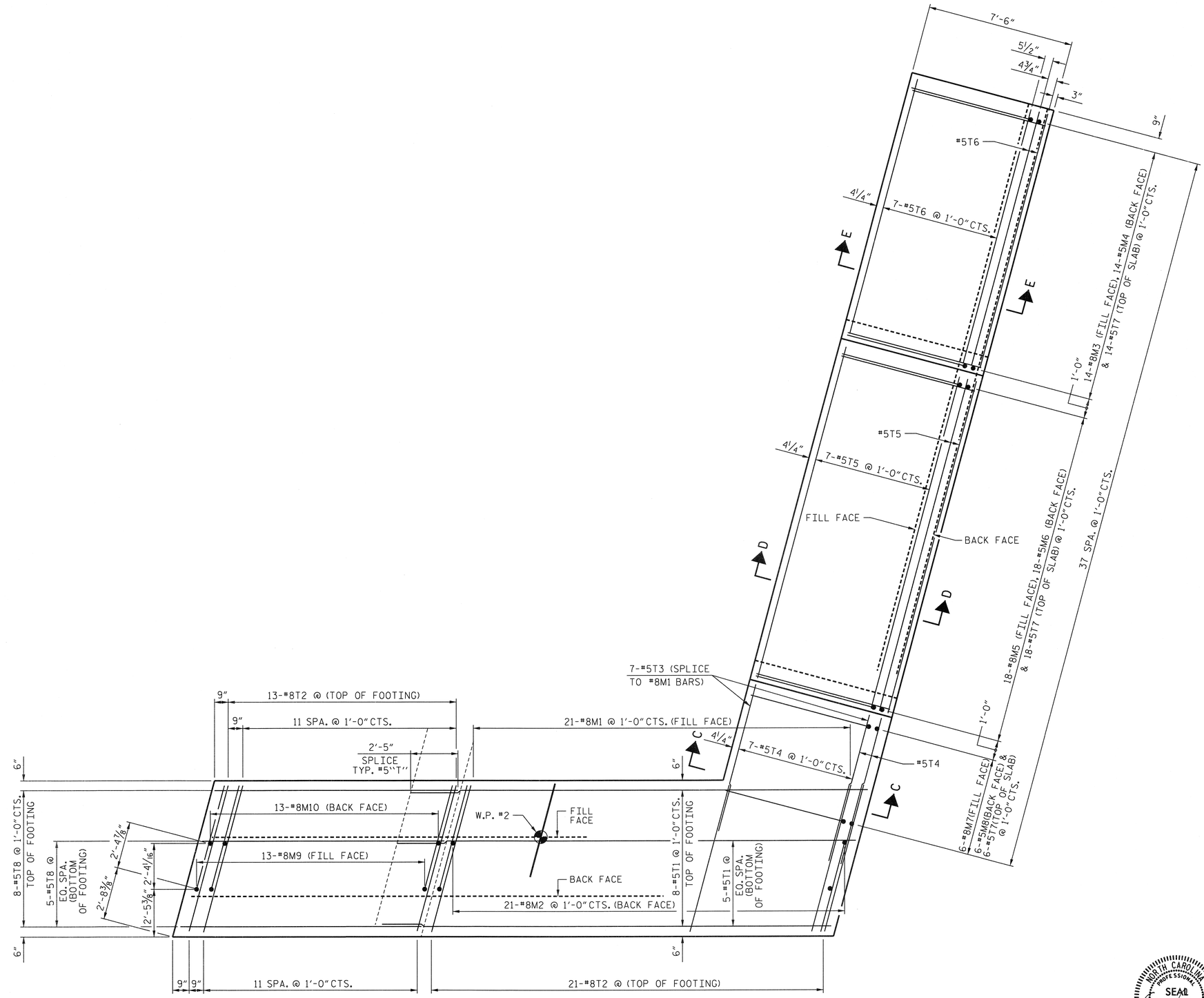

REINFORCING LAYOUT FOR FOOTING

PROJECT NO. 17BP.13.R.67

MITCHELL COUNTY

STATION: 10+39.00 -L-

SHEET 2 OF 4

STATE OF NORTH CAROLINA
DEPARTMENT OF TRANSPORTATION
RALEIGH

SUBSTRUCTURE
END BENT 2

NORTH CAROLINA PROFESSIONAL SEAL 14047 ENGINEER STEPHEN D. COOK
3/18/13

THE LOUIS BERGER GROUP, Inc.
1001 Wade Avenue, Suite 400
Raleigh, NC 27605-3322

REVISIONS						SHEET NO.
NO.	BY:	DATE:	NO.	BY:	DATE:	S-19
1			3			TOTAL SHEETS
2			4			23

DRAWN BY : R. KNIGHT DATE : SEPT 2012
CHECKED BY : S. COOK DATE : SEPT 2012

G:\OR Projects\OR1101 - NCDOT Group 0\600202\Structures\600202_SD_EB202.dgn
1101_PDF_full.pltcfg 1101_str.tbl
3/18/2013

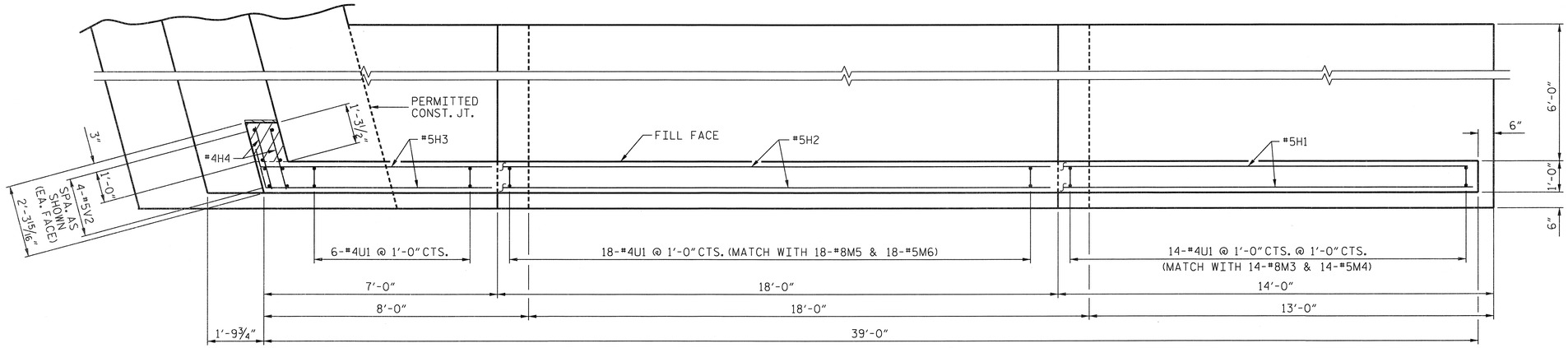

PLAN OF WING (W2)

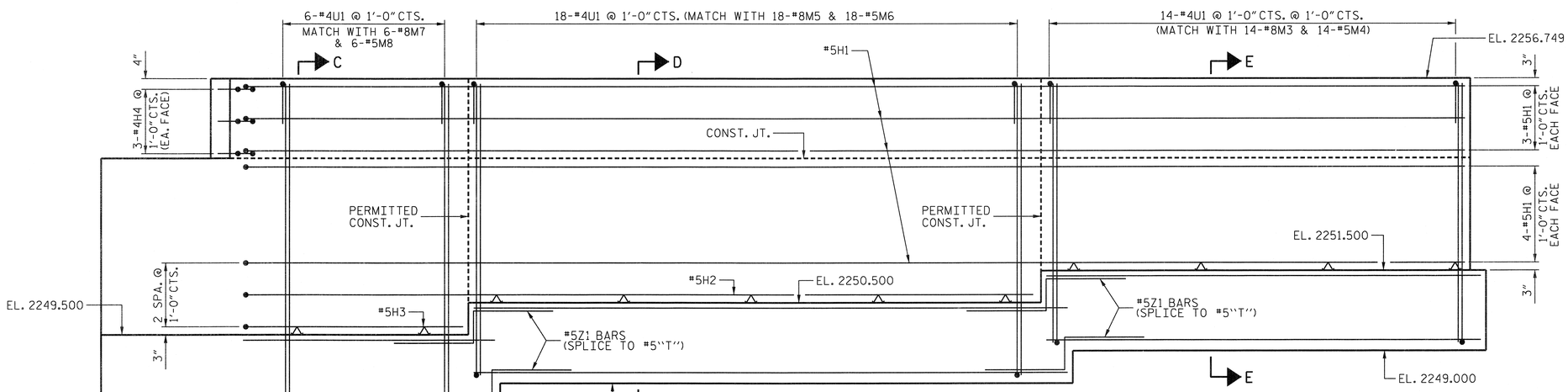

ELEVATION OF WING (W2)

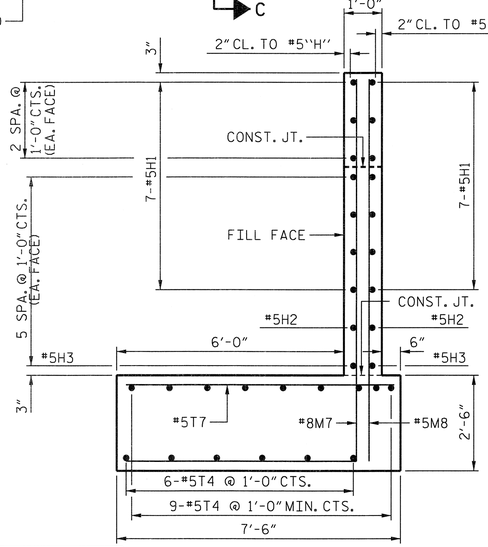

SECTION C-C

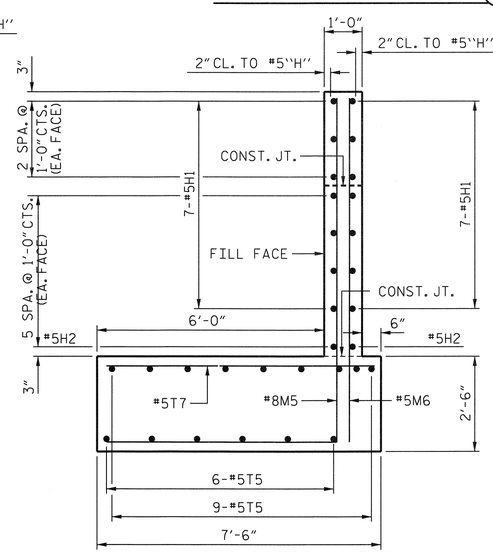

SECTION D-D

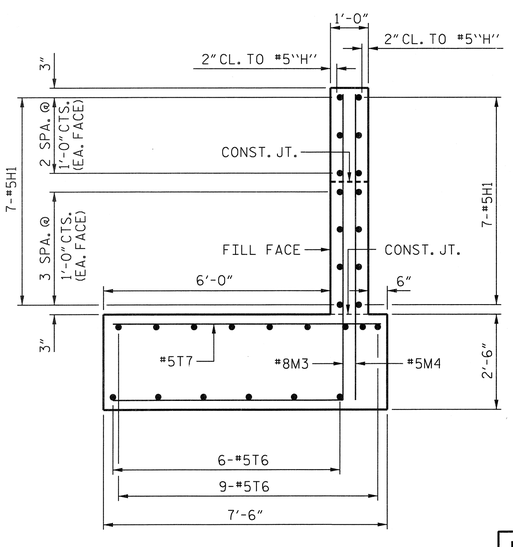

SECTION E-E

PROJECT NO. 17BP.13.R.67

MITCHELL COUNTY

STATION: 10+39.00 -L-

SHEET 3 OF 4

STATE OF NORTH CAROLINA
DEPARTMENT OF TRANSPORTATION
RALEIGH

SUBSTRUCTURE END BENT 2

NORTH CAROLINA PROFESSIONAL SEAL 14047 ENGINEER STEPHEN D. COOK 3/18/13

THE LOUIS BERGER GROUP, Inc.
1001 Wade Avenue, Suite 400
Raleigh, NC 27605-3322

REVISIONS						SHEET NO.
NO.	BY:	DATE:	NO.	BY:	DATE:	S-20
1			3			TOTAL SHEETS
2			4			23

DRAWN BY : R. KNIGHT DATE : SEPT 2012
CHECKED BY : S. COOK DATE : SEPT 2012

G:\OR Projects\OR1101 - NCDOT Group 0\600202\Structures\600202_SD_EB203.dgn
3/18/2013 1101_PDF_full.pltcfg 1101_str.tbl

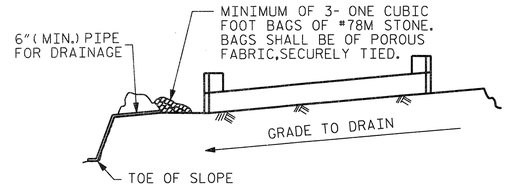

BAGGED STONE AND PIPE SHALL BE PLACED IMMEDIATELY AFTER COMPLETION OF END BENT EXCAVATION. PIPE MAY BE EITHER CONCRETE, CORRUGATED STEEL, CORRUGATED ALUMINUM ALLOY, OR CORRUGATED PLASTIC. PERFORATED PIPE WILL NOT BE ALLOWED.

BAGGED STONE SHALL REMAIN IN PLACE UNTIL THE ENGINEER DIRECTS THAT IT BE REMOVED. THE CONTRACTOR SHALL REMOVE AND DISPOSE OF SILT ACCUMULATIONS AT BAGGED STONE WHEN SO DIRECTED BY THE ENGINEER. BAGS SHALL BE REMOVED AND REPLACED WHENEVER THE ENGINEER DETERMINES THAT THEY HAVE DETERIORATED AND LOST THEIR EFFECTIVENESS.

NO SEPARATE PAYMENT WILL BE MADE FOR THIS WORK AND THE ENTIRE COST OF THIS WORK SHALL BE INCLUDED IN THE UNIT CONTRACT PRICE BID FOR THE SEVERAL PAY ITEMS.

TEMPORARY DRAINAGE AT END BENT

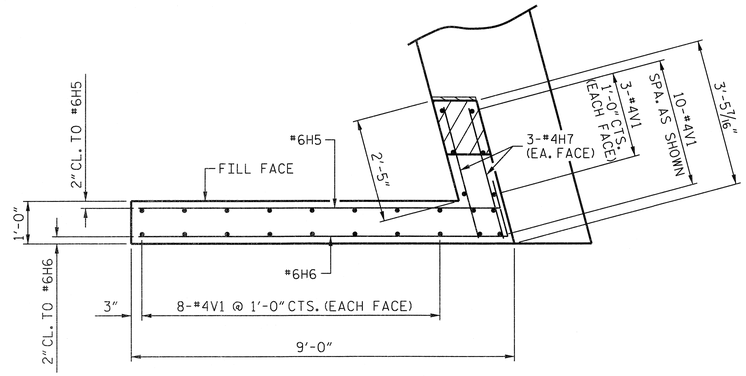

PLAN OF WING (W1)

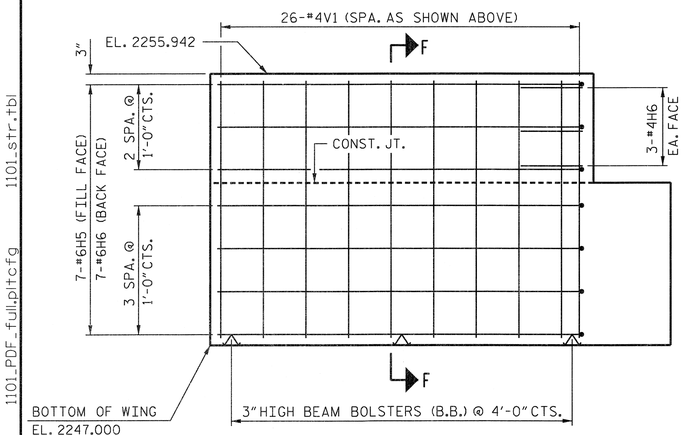

ELEVATION OF WING (W1)

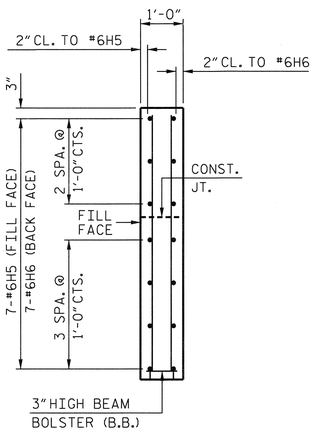

SECTION F-F

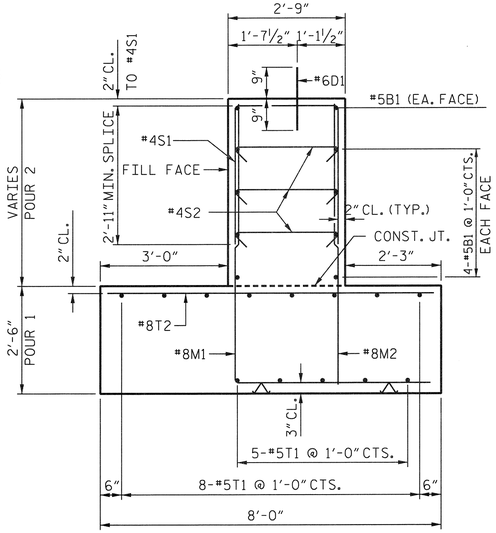

SECTION A-A

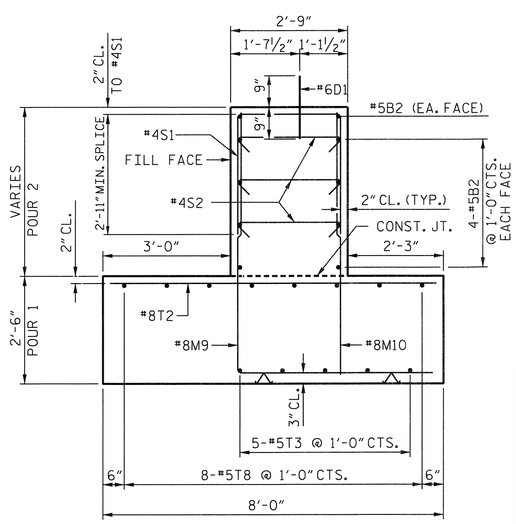

SECTION B-B

BAR TYPES

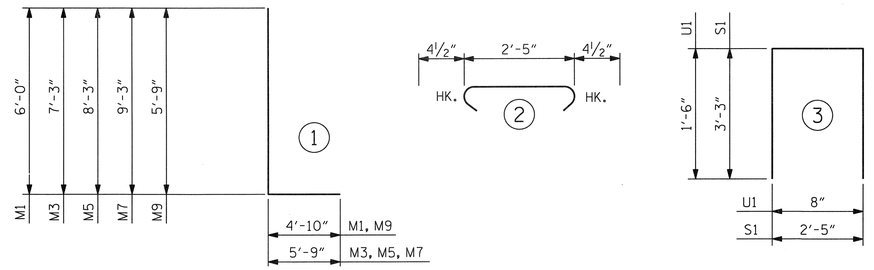

ALL BAR DIMENSIONS ARE OUT TO OUT.

BILL OF MATERIAL

STAGE 1 CONSTRUCTION

BAR	NO.	SIZE	TYPE	LENGTH	WEIGHT
B1	10	5	STR	23'-9"	248
D1	12	6	STR	1'-6"	27
H1	14	5	5	39'-3"	573
H2	2	5	5	25'-3"	53
H3	2	5	5	7'-3"	15
H4	6	4	STR	1'-11"	8
M1	21	8	1	10'-10"	607
M2	21	8	STR	6'-0"	336
M3	14	8	1	13'-0"	486
M4	14	5	STR	7'-3"	106
M5	18	8	1	14'-0"	673
M6	18	5	STR	8'-3"	155
M7	6	8	1	15'-0"	240
M8	6	5	STR	9'-3"	58
S1	21	4	3	8'-11"	125
S2	63	4	2	3'-2"	133
T1	13	5	STR	24'-0"	325
T2	21	8	STR	7'-10"	439
T3	7	5	STR	7'-2"	52
T4	15	5	STR	7'-6"	117
T5	15	5	STR	18'-0"	282
T6	15	5	STR	14'-0"	219
T7	38	5	STR	7'-0"	277
U1	38	4	3	3'-8"	93
Z1	30	5	4	6'-0"	188

TOTAL REINFORCING STEEL 5,835 LBS.

CLASS A CONCRETE BREAKDOWN

POUR #1	FOOTING	37.0 C.Y.
POUR #2	CAP, LOWER PART OF WING	14.4 C.Y.
POUR #3	UPPER PART OF WING	3.8 C.Y.
TOTAL CLASS A CONCRETE		55.2 C.Y.

STAGE 2 CONSTRUCTION

BAR	NO.	SIZE	TYPE	LENGTH	WEIGHT
B2	10	5	STR	12'-0"	125
D1	6	6	STR	1'-6"	14
H5	7	6	6	9'-1"	96
H6	7	6	6	9'-3"	97
H7	6	4	STR	3'-0"	12
M9	13	8	1	10'-7"	367
M10	13	8	STR	5'-9"	200
S1	13	4	3	8'-11"	77
S2	39	4	2	3'-2"	82
T2	13	8	STR	7'-10"	272
T8	13	5	STR	12'-3"	166
V1	26	4	STR	8'-4"	145

TOTAL REINFORCING STEEL 1,653 LBS.

CLASS A CONCRETE BREAKDOWN

POUR #1	FOOTING	9.6 C.Y.
POUR #2	CAP, LOWER PART OF WING	7.7 C.Y.
POUR #3	UPPER PART OF WING	1.2 C.Y.
TOTAL CLASS A CONCRETE		18.5 C.Y.



PROJECT NO. 17BP.13.R.67

MITCHELL COUNTY

STATION: 10+39.00 -L-

SHEET 4 OF 4

STATE OF NORTH CAROLINA
DEPARTMENT OF TRANSPORTATION
RALEIGH

SUBSTRUCTURE END BENT 2

REVISIONS						SHEET NO.
NO.	BY:	DATE:	NO.	BY:	DATE:	S-21
1			3			TOTAL SHEETS
2			4			23

THE LOUIS BERGER GROUP, Inc.
1001 Wade Avenue, Suite 400
Raleigh, NC 27605-3322

DRAWN BY : R. KNIGHT DATE : SEPT 2012
CHECKED BY : S. COOK DATE : SEPT 2012

G:\OR Projects\ORI101 - NCDOT Group 0\600202\Structures\600202_SD_EB204.dgn
3/18/2013 1101_PDF_full.pltcfg 1101_str.tbl

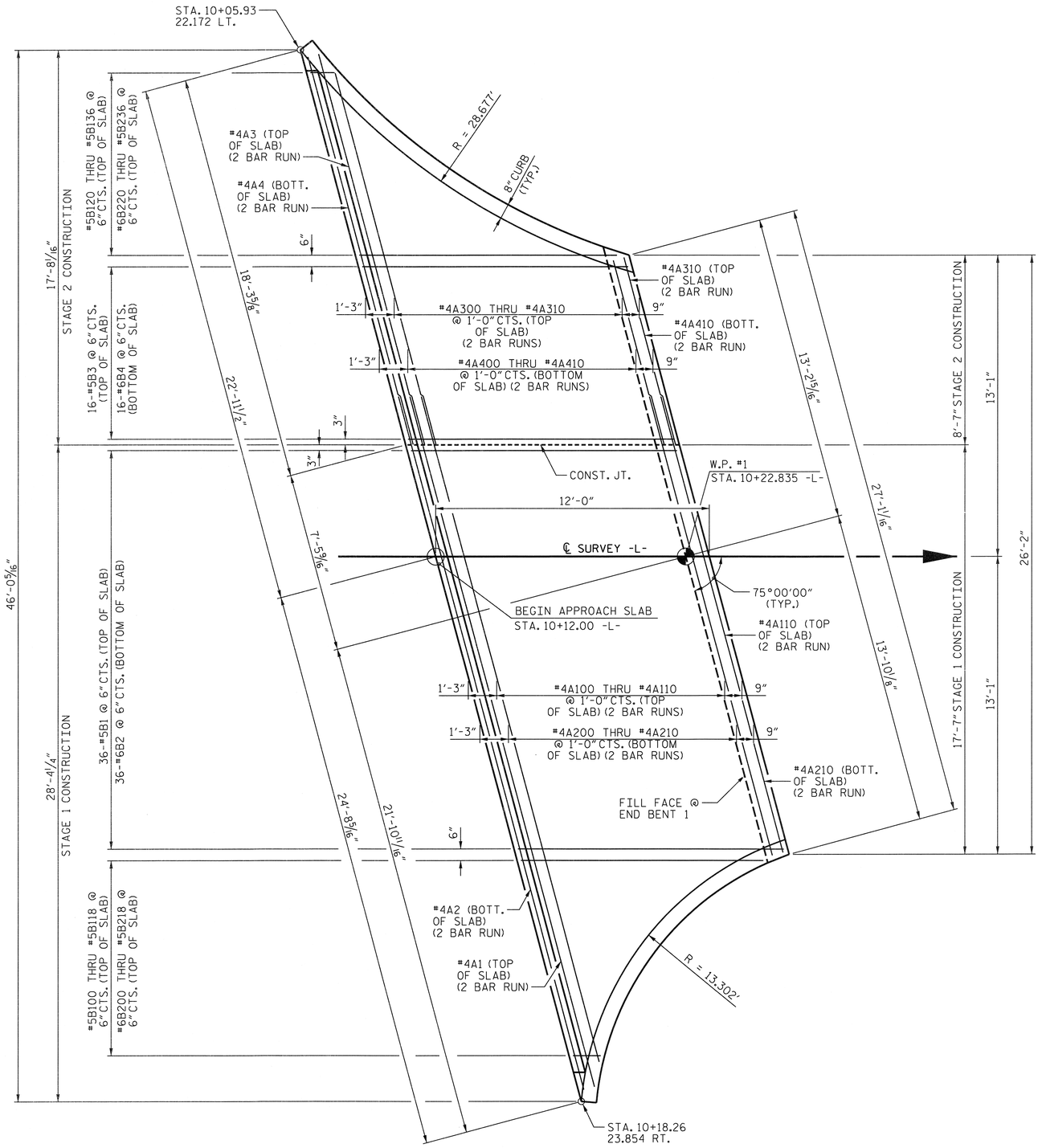

PLAN @ END BENT #1

DRAWN BY : M. HOGAN DATE : SEPT 2012
CHECKED BY : S. COOK DATE : SEPT 2012

BILL OF MATERIAL
APPROACH SLAB AT EB #1

STAGE 1 CONSTRUCTION						STAGE 2 CONSTRUCTION					
BAR	NO.	SIZE	TYPE	LENGTH	WEIGHT	BAR	NO.	SIZE	TYPE	LENGTH	WEIGHT
✳ A1	2	#4	STR	17'-8"	24	✳ A3	2	#4	STR	10'-2"	14
A2	4	#4	STR	17'-7"	47	A4	4	#4	STR	10'-0"	27
✳ A100	2	#4	STR	17'-8"	24	✳ A300	2	#4	STR	10'-2"	14
✳ A101	2	#4	STR	17'-3"	23	✳ A301	2	#4	STR	9'-10"	13
✳ A102	2	#4	STR	16'-10"	22	✳ A302	2	#4	STR	9'-3"	12
✳ A103	2	#4	STR	16'-5"	22	✳ A303	2	#4	STR	8'-10"	12
✳ A104	2	#4	STR	15'-11"	21	✳ A304	2	#4	STR	8'-4"	11
✳ A105	2	#4	STR	15'-6"	21	✳ A305	2	#4	STR	7'-11"	11
✳ A106	2	#4	STR	15'-0"	20	✳ A306	2	#4	STR	7'-6"	10
✳ A107	2	#4	STR	14'-3"	19	✳ A307	2	#4	STR	7'-0"	9
✳ A108	2	#4	STR	13'-6"	18	✳ A308	2	#4	STR	6'-6"	9
✳ A109	2	#4	STR	12'-9"	17	✳ A309	2	#4	STR	6'-1"	8
✳ A110	2	#4	STR	12'-0"	16	✳ A310	2	#4	STR	5'-5"	7
A200	2	#4	STR	17'-7"	23	A400	2	#4	STR	10'-0"	13
A201	2	#4	STR	17'-2"	23	A401	2	#4	STR	9'-7"	13
A202	2	#4	STR	16'-8"	22	A402	2	#4	STR	9'-2"	12
A203	2	#4	STR	16'-3"	22	A403	2	#4	STR	8'-9"	12
A204	2	#4	STR	15'-10"	21	A404	2	#4	STR	8'-3"	11
A205	2	#4	STR	15'-4"	20	A405	2	#4	STR	7'-9"	10
A206	2	#4	STR	14'-10"	20	A406	2	#4	STR	7'-3"	10
A207	2	#4	STR	14'-2"	19	A407	2	#4	STR	6'-10"	9
A208	2	#4	STR	13'-4"	18	A408	2	#4	STR	6'-5"	9
A209	2	#4	STR	12'-8"	17	A409	2	#4	STR	5'-11"	8
A210	2	#4	STR	11'-11"	16	A410	2	#4	STR	5'-4"	7
✳ B1	36	#5	STR	11'-1"	416	✳ B3	16	#5	STR	11'-1"	185
B2	36	#6	STR	11'-7"	626	B4	16	#6	STR	11'-7"	278
✳ B100	1	#5	STR	1'-2"	1	✳ B120	1	#5	STR	1'-2"	1
✳ B101	1	#5	STR	1'-9"	2	✳ B121	1	#5	STR	1'-10"	2
✳ B102	1	#5	STR	2'-3"	2	✳ B122	1	#5	STR	2'-5"	3
✳ B103	1	#5	STR	2'-10"	3	✳ B123	1	#5	STR	3'-3"	3
✳ B104	1	#5	STR	3'-5"	4	✳ B124	1	#5	STR	3'-8"	4
✳ B105	1	#5	STR	4'-0"	4	✳ B125	1	#5	STR	4'-3"	4
✳ B106	1	#5	STR	4'-6"	5	✳ B126	1	#5	STR	4'-11"	5
✳ B107	1	#5	STR	5'-1"	5	✳ B127	1	#5	STR	5'-7"	6
✳ B108	1	#5	STR	5'-7"	6	✳ B128	1	#5	STR	6'-3"	7
✳ B109	1	#5	STR	6'-2"	6	✳ B129	1	#5	STR	6'-11"	7
✳ B110	1	#5	STR	6'-8"	7	✳ B130	1	#5	STR	7'-6"	8
✳ B111	1	#5	STR	7'-3"	8	✳ B131	1	#5	STR	8'-2"	9
✳ B112	1	#5	STR	7'-10"	8	✳ B132	1	#5	STR	8'-10"	9
✳ B113	1	#5	STR	8'-4"	9	✳ B133	1	#5	STR	9'-5"	10
✳ B114	1	#5	STR	8'-11"	9	✳ B134	1	#5	STR	10'-0"	10
✳ B115	1	#5	STR	9'-5"	10	✳ B135	1	#5	STR	10'-8"	11
✳ B116	1	#5	STR	10'-0"	10	✳ B136	1	#5	STR	11'-1"	12
✳ B117	1	#5	STR	10'-7"	11						
✳ B118	1	#5	STR	11'-1"	12	B200	1	#6	STR	1'-2"	2
						B221	1	#6	STR	1'-10"	3
B200	1	#6	STR	1'-2"	2	B222	1	#6	STR	2'-8"	4
B201	1	#6	STR	1'-9"	3	B223	1	#6	STR	3'-6"	5
B202	1	#6	STR	2'-4"	4	B224	1	#6	STR	3'-11"	6
B203	1	#6	STR	2'-11"	4	B225	1	#6	STR	4'-6"	7
B204	1	#6	STR	3'-6"	5	B226	1	#6	STR	5'-1"	8
B205	1	#6	STR	4'-2"	6	B227	1	#6	STR	5'-11"	9
B206	1	#6	STR	4'-8"	7	B228	1	#6	STR	6'-7"	10
B207	1	#6	STR	5'-3"	8	B229	1	#6	STR	7'-2"	11
B208	1	#6	STR	5'-10"	9	B230	1	#6	STR	7'-10"	12
B209	1	#6	STR	6'-4"	10	B231	1	#6	STR	8'-6"	13
B210	1	#6	STR	6'-11"	10	B232	1	#6	STR	9'-2"	14
B211	1	#6	STR	7'-6"	11	B233	1	#6	STR	9'-9"	15
B212	1	#6	STR	8'-1"	12	B234	1	#6	STR	10'-9"	16
B213	1	#6	STR	8'-8"	13	B235	1	#6	STR	11'-2"	17
B214	1	#6	STR	9'-4"	14	B236	1	#6	STR	11'-7"	17
B215	1	#6	STR	9'-11"	15	REINFORCING STEEL LBS.					588
B216	1	#6	STR	10'-5"	16	✳ EPOXY COATED REINFORCING STEEL LBS.					426
B217	1	#6	STR	11'-1"	17						
B218	1	#6	STR	11'-7"	17	CLASS AA CONCRETE C.Y.					6.3
REINFORCING STEEL LBS.					1077						
✳ EPOXY COATED REINFORCING STEEL LBS.					785						
CLASS AA CONCRETE C.Y.					10.9						

NORTH CAROLINA PROFESSIONAL SEAL 14044 ENGINEER STEPHEN D. COOK
3/18/13

THE LOUIS BERGER GROUP, Inc.
1001 Wade Avenue, Suite 400
Raleigh, NC 27605-3322

PROJECT NO. 17BP.13.R.67
MITCHELL COUNTY
STATION: 10+39.00 -L-

SHEET 1 OF 2

STATE OF NORTH CAROLINA
DEPARTMENT OF TRANSPORTATION
RALEIGH

BRIDGE APPROACH SLAB FOR PRESTRESSED CONCRETE CORED SLAB UNIT

REVISIONS						SHEET NO.
NO.	BY:	DATE:	NO.	BY:	DATE:	S-22
1			3			TOTAL SHEETS
2			4			23

G:\OR Projects\OR1101 - NCDOT Group 0\600202\Structures\600202_SD_AS_01.dgn
3/18/2013
1101_PDF_full.pltcfg 1101_str.tbl

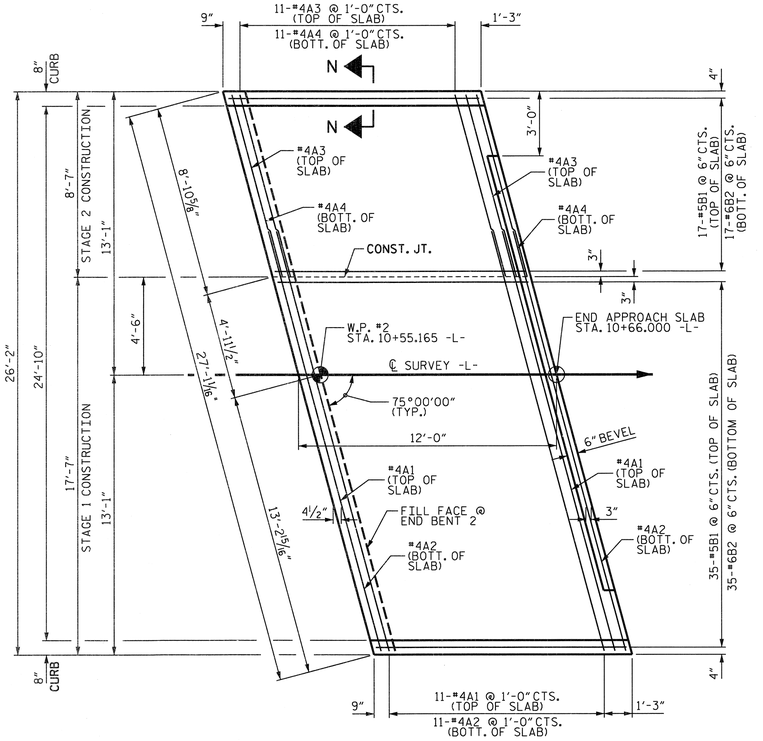

PLAN @ END BENT #2

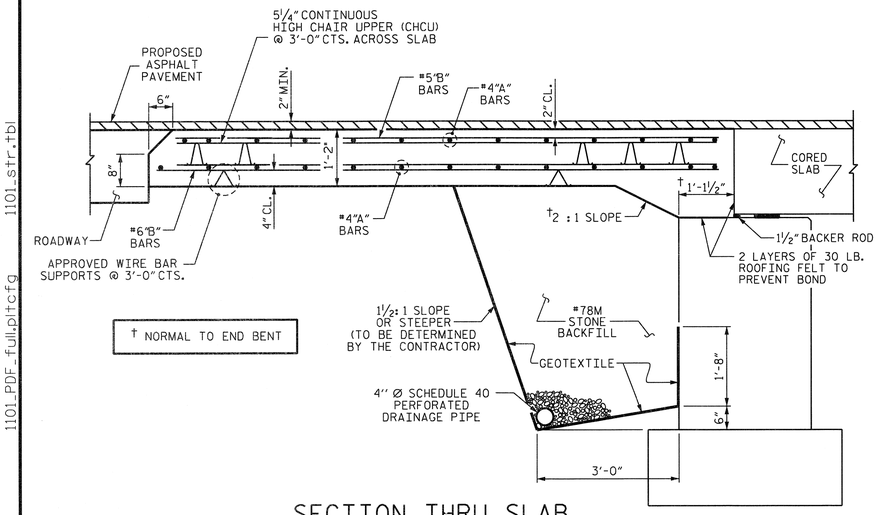

SECTION THRU SLAB

NOTES

FOR BRIDGE APPROACH FILL INCLUDING GEOTEXTILE, 4" Ø DRAINAGE PIPE, AND #78M STONE BACKFILL, SEE ROADWAY PLANS.

GEOTEXTILE SHALL BE TYPE 1IN ACCORDANCE WITH THE STANDARD SPECIFICATIONS SECTION 1056.

#78M STONE BACKFILL (CLASS V SELECT MATERIAL) SHALL BE IN ACCORDANCE WITH STANDARD SPECIFICATIONS SECTION 1016.

#78M STONE BACKFILL IS TO BE CONTINUOUS ALONG FILL FACE OF BACKWALL FROM OUTSIDE EDGE TO OUTSIDE EDGE OF APPROACH SLAB.

FOR THE 4" Ø DRAINAGE PIPE OUTLET(S), SEE ROADWAY STANDARD DRAWINGS.

AREA BETWEEN THE WINGWALL AND APPROACH SLAB SHALL BE GRADED TO DRAIN THE WATER AWAY FROM THE FILL FACE OF THE BRIDGE AND SHALL BE PAVED. SEE ROADWAY PLANS.

APPROACH SLAB GROOVING IS NOT REQUIRED.

FOR DETAILS OF ANCHOR ASSEMBLY FOR ANCHORED PORTABLE CONCRETE BARRIER IN BRIDGE APPROACH SLABS, SEE "PRESTRESSED CONCRETE SLAB UNIT DETAILS", SHEET 2 OF 3.

ANCHOR ASSEMBLIES FOR ANCHORED PORTABLE CONCRETE BARRIER IN BRIDGE APPROACH SLABS WILL BE PAID FOR UNDER LUMP SUM PRICE FOR BRIDGE APPROACH SLABS.

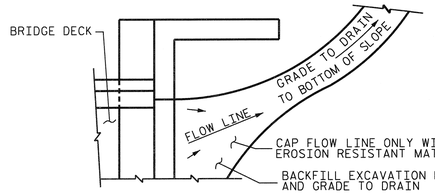

NOTE: IF THE APPROACH SLAB IS NOT CONSTRUCTED IMMEDIATELY AFTER THE BACKFILLING OF THE END BENT EXCAVATION, GRADE TO DRAIN TO THE BOTTOM OF THE SLOPE AND PROVIDE EROSION RESISTANT MATERIAL, SUCH AS FIBERGLASS ROVING OR AS DIRECTED BY THE ENGINEER TO PREVENT SOIL EROSION AND TO PROTECT THE AREA ADJACENT TO THE STRUCTURE. THE CONTRACTOR WILL BE REQUIRED TO REMOVE THESE MATERIALS PRIOR TO CONSTRUCTION OF THE APPROACH SLAB.

TEMPORARY DRAINAGE DETAIL

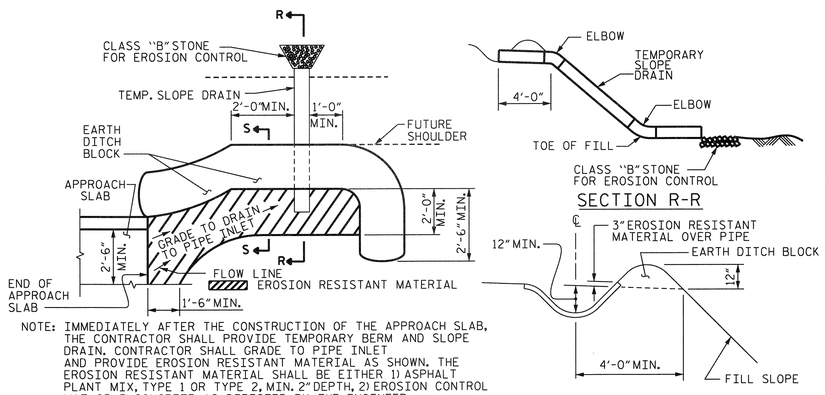

NOTE: IMMEDIATELY AFTER THE CONSTRUCTION OF THE APPROACH SLAB, THE CONTRACTOR SHALL PROVIDE TEMPORARY BERM AND SLOPE DRAIN. CONTRACTOR SHALL GRADE TO PIPE INLET AND PROVIDE EROSION RESISTANT MATERIAL AS SHOWN. THE EROSION RESISTANT MATERIAL SHALL BE EITHER 1) ASPHALT PLANT MIX, TYPE 1 OR TYPE 2, MIN. 2" DEPTH, 2) EROSION CONTROL MAT, OR 3) CONCRETE, AS DIRECTED BY THE ENGINEER. THE SLOPE DRAIN SHALL CONSIST OF A NON-PERFORATED TEMPORARY DRAINAGE PIPE, 12 INCHES IN DIAMETER.

PLAN VIEW

SECTION S-S

TEMPORARY BERM AND SLOPE DRAIN DETAILS

(TO BE USED WHEN SHOULDER BERM GUTTER IS REQUIRED)

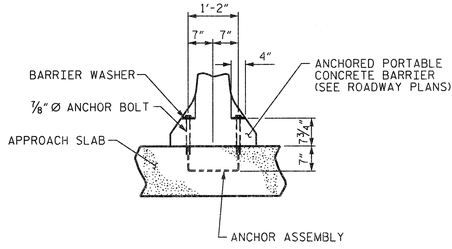

ANCHOR ASSEMBLY PLACEMENT DETAIL

SHOWING PLACEMENT OF ANCHOR ASSEMBLY

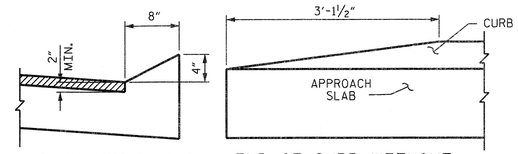

SECTION N-N

END OF CURB WITHOUT SHOULDER BERM GUTTER

CURB DETAILS

BILL OF MATERIAL					
APPROACH SLAB AT EB #2					
STAGE 1 CONSTRUCTION					
BAR	NO.	SIZE	TYPE	LENGTH	WEIGHT
* A1	13	#4	STR	20'-3"	176
A2	13	#4	STR	20'-3"	176
* B1	35	#5	STR	11'-2"	408
B2	35	#6	STR	11'-8"	613
REINFORCING STEEL				LBS.	789
* EPOXY COATED REINFORCING STEEL				LBS.	584
CLASS AA CONCRETE				C. Y.	8.8
STAGE 2 CONSTRUCTION					
BAR	NO.	SIZE	TYPE	LENGTH	WEIGHT
* A3	13	#4	STR	8'-7"	75
A4	13	#4	STR	8'-7"	75
* B1	17	#5	STR	11'-2"	198
B2	17	#6	STR	11'-8"	298
REINFORCING STEEL				LBS.	373
* EPOXY COATED REINFORCING STEEL				LBS.	273
CLASS AA CONCRETE				C. Y.	4.3

SPLICE LENGTHS		
BAR SIZE	EPOXY COATED	UNCOATED
#4	2'-0"	1'-9"
#5	2'-6"	2'-2"
#6	3'-10"	2'-7"

PROJECT NO. 17BP.13.R.67

MITCHELL COUNTY

STATION: 10+39.00 -L-

SHEET 2 OF 2

STATE OF NORTH CAROLINA
DEPARTMENT OF TRANSPORTATION
RALEIGH

STANDARD BRIDGE APPROACH SLAB FOR PRESTRESSED CONCRETE CORED SLAB UNIT (SUB-REGIONAL TIER) 90° SKEW

NORTH CAROLINA PROFESSIONAL SEAL 14047 ENGINEER STEPHEN D. COOK
3/18/13

THE LOUIS BERGER GROUP, Inc.
1001 Wade Avenue, Suite 400
Raleigh, NC 27605-3322

REVISIONS						SHEET NO.
NO.	BY:	DATE:	NO.	BY:	DATE:	S-23
1			3			TOTAL SHEETS
2			4			23

ASSEMBLED BY : M. HOGAN		DATE : SEPT 2012
CHECKED BY : S. COOK		DATE : SEPT 2012
DRAWN BY : SHS/MAA 5-09	REV. 12-11	MAA/AAC
CHECKED BY : BCH 5-09		

STD. NO. BAS_36_90S

G:\OR Projects\OR1101 - NCDOT Group 0\600202\Structures\600202_SD_AS_02.dgn
1101_PDF_full.pltcfg
1101_str.tbl
3/18/2013