09/08/99

TIP PROJECT: W-5813A

CONTRACT: DM00319

See Sheet 1A For Index of Sheets

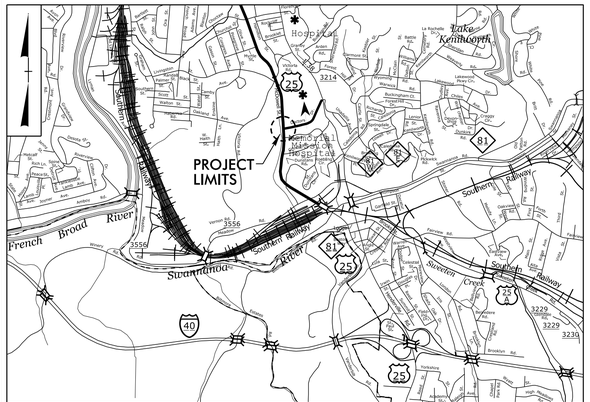

VICINITY MAP N.T.S

STATE OF NORTH CAROLINA
DIVISION OF HIGHWAYS

BUNCOMBE

STATE	STATE PROJECT REFERENCE NO.	SHEET NO.	TOTAL SHEETS
N.C.	W-5813A	1	

STATE PROJ. NO.	F. A. PROJ. NO.	DESCRIPTION
48958.3.2	0025044	CONST.

LOCATION: US-25 (MCDOWELL ST.) AT DOCTORS DR.

TYPE OF WORK: INSTALLATION OF PEDESTRIAN SIGNALS, CURB RAMPS, AND HIGH VISIBILITY CROSSWALKS

4

INCOMPLETE PLANS
DO NOT USE FOR R/W ACQUISITION

DOCUMENT NOT CONSIDERED FINAL UNLESS ALL SIGNATURES COMPLETED

GRAPHIC SCALES

10 5 0 10 20
PLANS

EFF. 01-16-2018
REV.

2018 ROADWAY ENGLISH STANDARD DRAWINGS

The following Roadway Standards as appear in "Roadway Standard Drawings" Highway Design Branch - N. C. Department of Transportation - Raleigh, N. C., Dated January, 2018 are applicable to this project and by reference hereby are considered a part of these plans:

STD.NO.	TITLE
DIVISION 6 - ASPHALT PAVEMENTS	
654.01	Pavement Repairs - For Superpave Mix Types
DIVISION 8 - INCIDENTALS	
848.05	Curb Ramp - Proposed Curb and Gutter
848.06	Curb Ramp - Existing Curb and Gutter
DIVISION 12 - PAVEMENT MARKINGS, MARKERS, AND DELINEATION	
1205.01	Pavement Markings - Line Types and Offsets
1205.04	Pavement Markings - Intersections
1205.07	Pavement Markings - Pedestrian Crosswalks

Prepared in the Office of:
DIVISION OF HIGHWAYS
55 Orange St., Asheville NC, 28801

2018 STANDARD SPECIFICATIONS

RIGHT OF WAY DATE:

LETTING DATE:
JUNE 15, 2022

PROJECT ENGINEER

PROJECT DESIGN ENGINEER

STATE OF NORTH CAROLINA • DEPARTMENT OF TRANSPORTATION

23-MAR-2022 12:58
S:\DDC\Traffic Engineering\W-5813A\Roadway\Proj\W-5813A_Rdy_tsh.dgn
wcarver AT DVI3-31482GL

PROJECT REFERENCE NO.	SHEET NO.
W-5813A	2A

PAY LIMITS FOR CURB RAMP

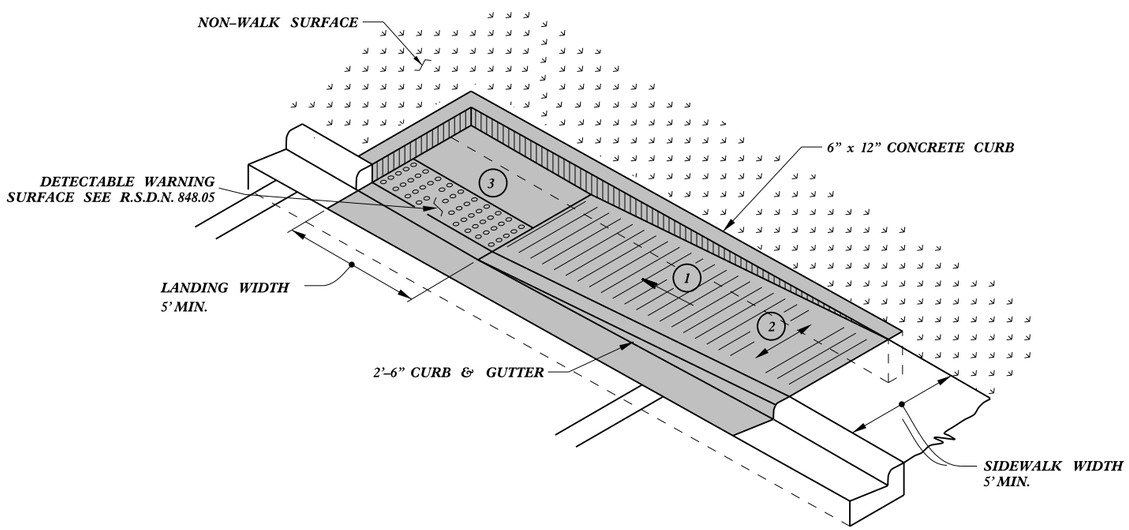

TYPE 1A

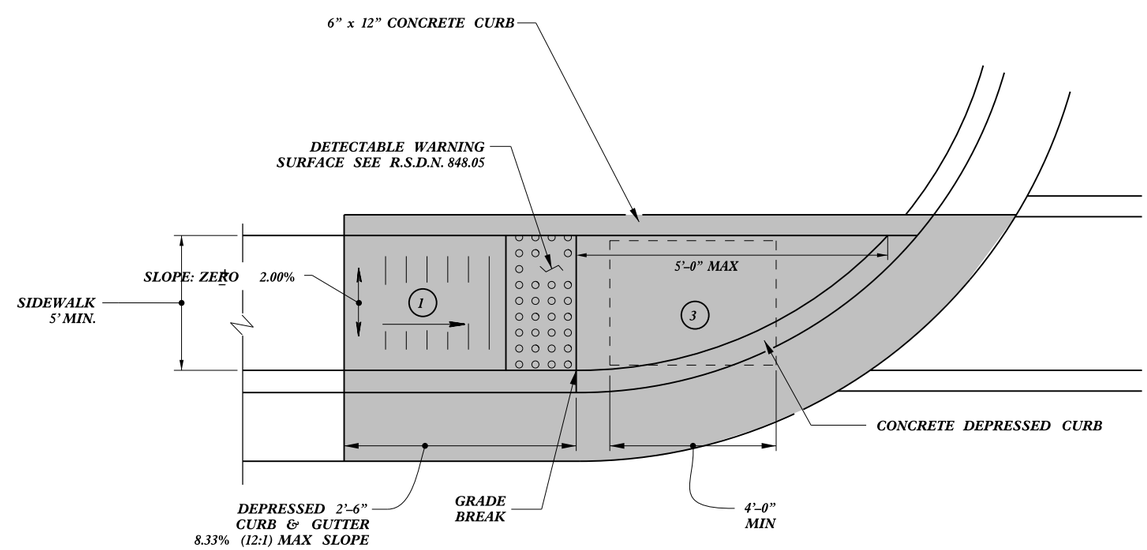

TYPE 1

1. 8.33% (12:1) MAX RAMP SLOPE
2. CROSS SLOPE: 2.00%
3. CURB RAMPS REQUIRE A (4'-0") MINIMUM LANDING WITH A MAXIMUM CROSS SLOPE AND LONGITUDINAL SLOPE OF 2.00% WHERE PEDESTRIANS PERFORM TURNING MANEUVERS. SLOPE TO DRAIN TO CURB.

REFER TO ROADWAY STANDARD DRAWING NUMBER 848.05 SHEET 3 OF 3 FOR ALL RAMP NOTES

CONTRACT STANDARDS AND DEVELOPMENT UNIT
Office 919-707-6950 FAX 919-250-4119

CURB RAMPS

Directional Ramps

ORIGINAL BY: J.S. HOWERTON DATE: 7/7/11
MODIFIED BY: DATE:
CHECKED BY: DATE:
FILE SPEC.: stds/2012CurbRamp/CurbRampDetails.dgn

5/14/99
22-MAR-2012 15:06
S:\Contracts\Special Details\jhowerton\Standard Drawings\2012 Standard Drawings\2012 Curb Ramp Special Details\Curb Ramp Details.dgn
jhowerton AT CSD23760

PROJECT REFERENCE NO.	SHEET NO.
W-5813A	2B

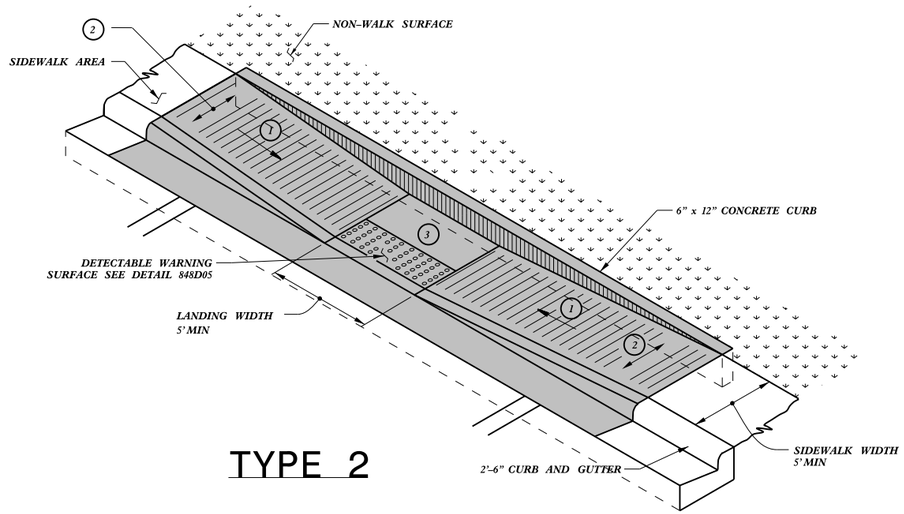

TYPE 2

PAY LIMITS FOR CURB RAMP

1. 8.33% (12:1) MAX RAMP SLOPE
2. CROSS SLOPE: 2.00%
3. CURB RAMPS REQUIRE A (4'-0") MINIMUM LANDING WITH A MAXIMUM CROSS SLOPE AND LONGITUDINAL SLOPE OF 2.00% WHERE PEDESTRIANS PERFORM TURNING MANEUVERS. SLOPE TO DRAIN TO CURB.

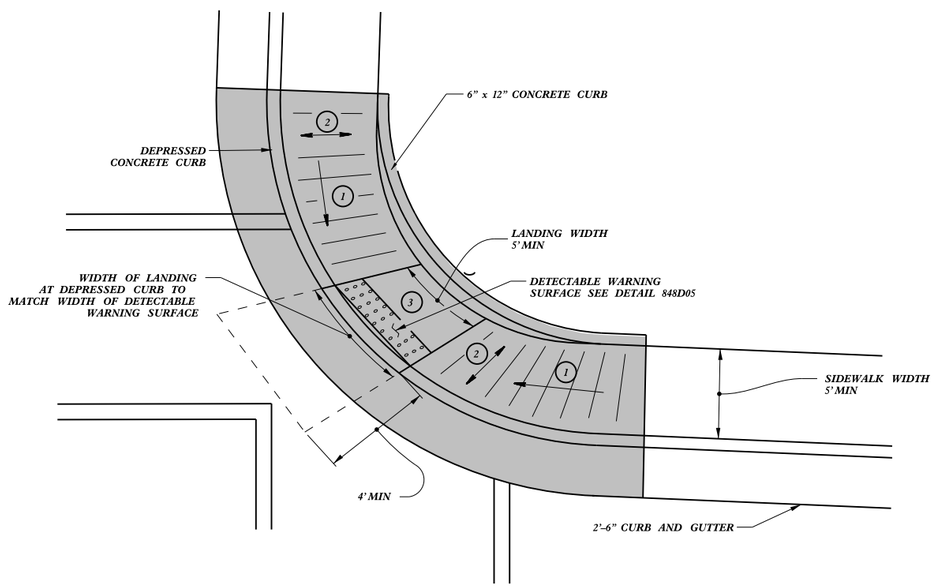

TYPE 2A

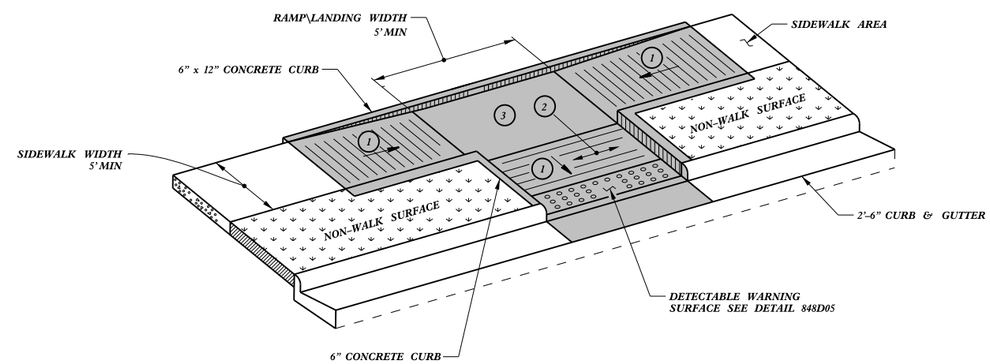

TYPE 3

REFER TO ROADWAY STANDARD DRAWING NUMBER 848.05 SHEET 3 OF 3 FOR ALL RAMP NOTES

CONTRACT STANDARDS AND DEVELOPMENT UNIT
Office 919-707-6950 FAX 919-250-4119

CURB RAMPS

Parallel Ramps

ORIGINAL BY: J.S. HOWERTON DATE: 7/7/11
MODIFIED BY: DATE:
CHECKED BY: DATE:
FILE SPEC.: stds/2012CurbRamp/CurbRampDetails.dgn

5/14/99
22-MAR-2012 15:07
S:\Contracts\Contracts\Special Details\jhowerton\Standard Drawings\2012 Standard Drawings\2012 Curb Ramp Special Details\Curb Ramp Details.dgn
jhowerton AT CSD237501

PROJECT REFERENCE NO.	SHEET NO.
W-5813A	2C

PAY LIMITS FOR CURB RAMP

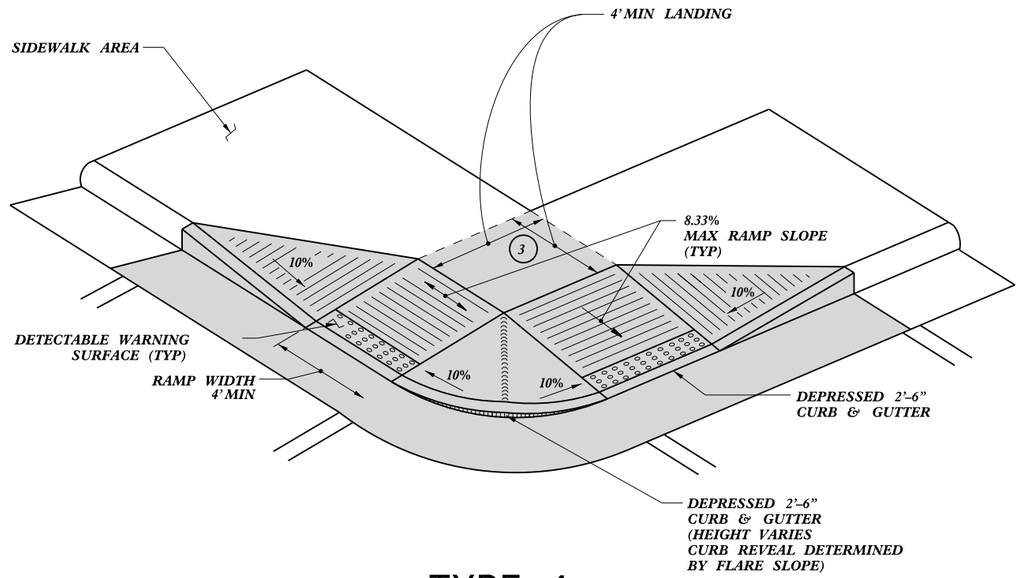

TYPE 4

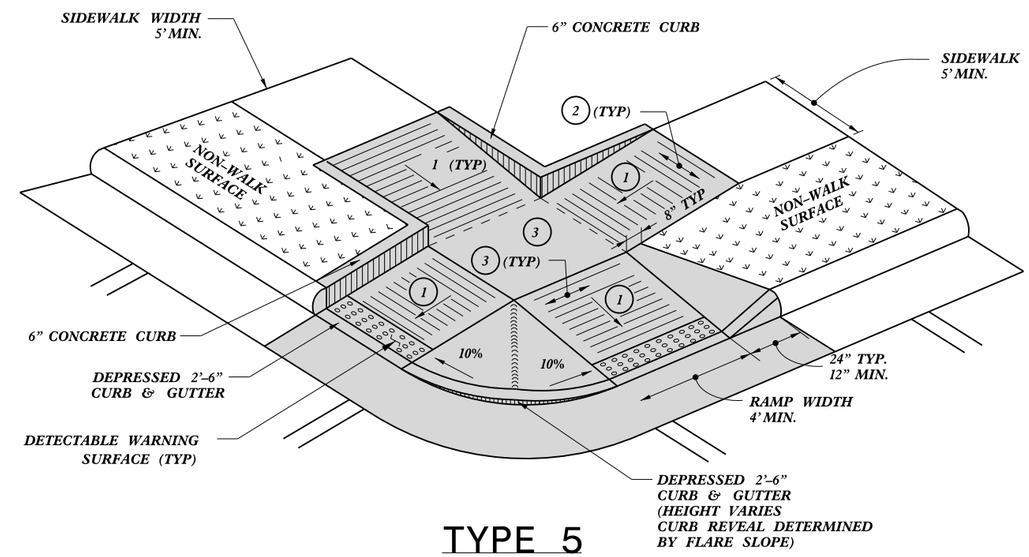

TYPE 5

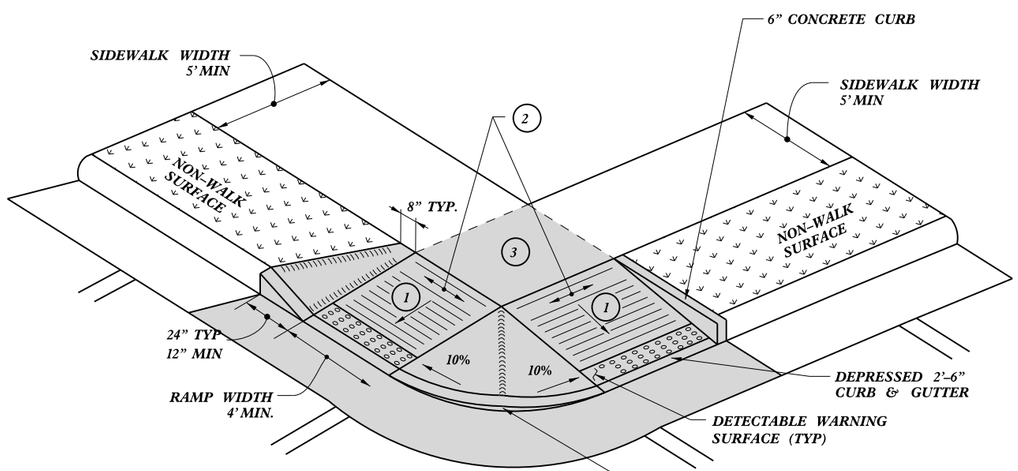

TYPE 4A

1. 8.33% (12:1) MAX RAMP SLOPE
2. CROSS SLOPE: 2.00%
3. CURB RAMPS REQUIRE A (4'-0") MINIMUM LANDING WITH A MAXIMUM CROSS SLOPE AND LONGITUDINAL SLOPE OF 2.00% WHERE PEDESTRIANS PERFORM TURNING MANEUVERS. SLOPE TO DRAIN TO CURB.

REFER TO ROADWAY STANDARD DRAWING NUMBER 848.05 SHEET 3 OF 3 FOR ALL RAMP NOTES

CONTRACT STANDARDS AND DEVELOPMENT UNIT
Office 919-707-6950 FAX 919-250-4119

CURB RAMPS

Shared Landing

ORIGINAL BY: J.S. HOWERTON DATE: 7/7/11
MODIFIED BY: DATE:
CHECKED BY: DATE:
FILE SPEC.: stds/2012CurbRamp/CurbRampDetails.dgn

5/14/99

22-MAR-2012 15:08
S:\Contracts\Special Details\Jhowerton\Standard Drawings\2012 Standard Drawings\2012 Curb Ramp Special Details\Curb Ramp Details.dgn
jhowerton AT CS0237001

5/14/99

PROJECT REFERENCE NO.	SHEET NO.
W-5813A	2D

PAY LIMITS FOR 1 CURB RAMP

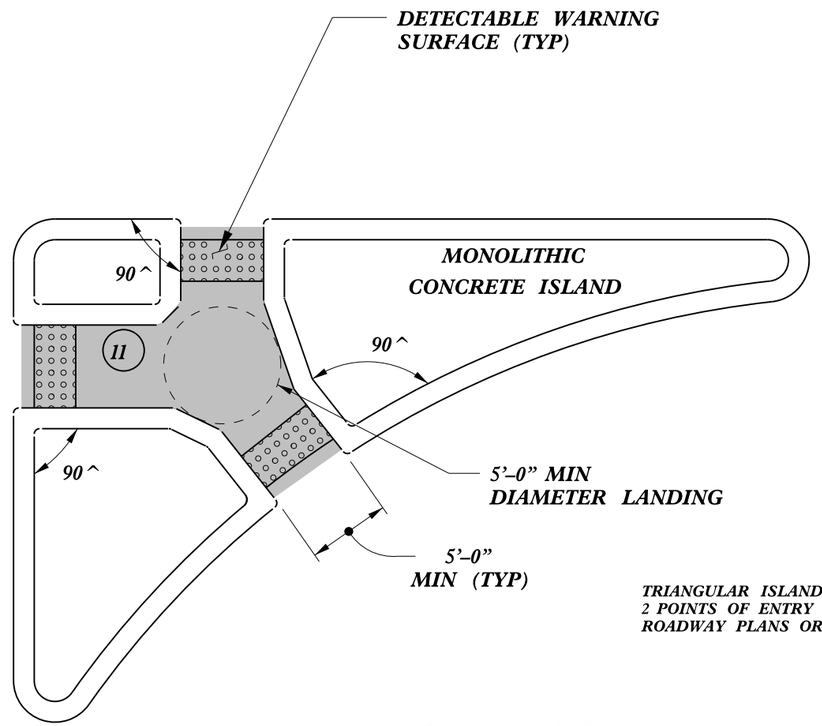

TRIANGULAR ISLANDS MAY BE CONSTRUCTED WITH ONLY 2 POINTS OF ENTRY AND EXIT AS SHOWN IN THE ROADWAY PLANS OR AS DIRECTED BY THE ENGINEER.

TRIANGULAR ISLAND WITH CUT THROUGH

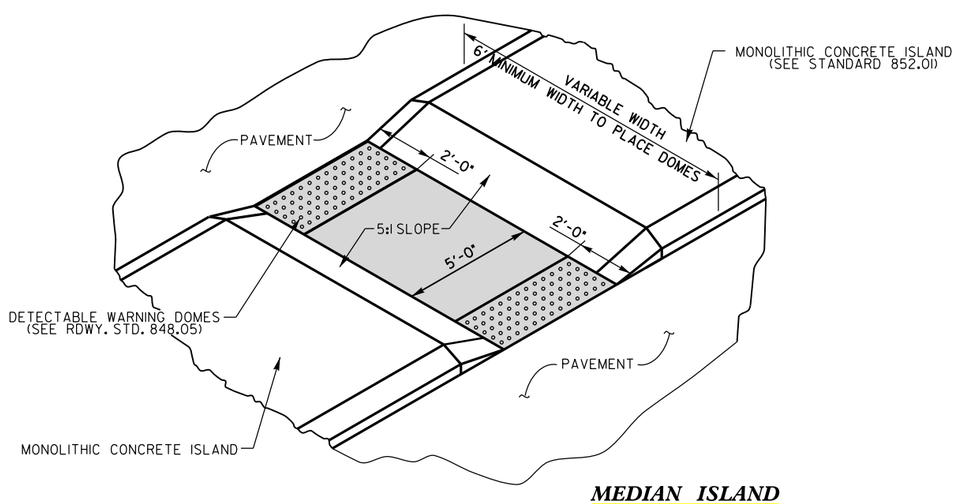

MEDIAN ISLAND WITH CUT THROUGH

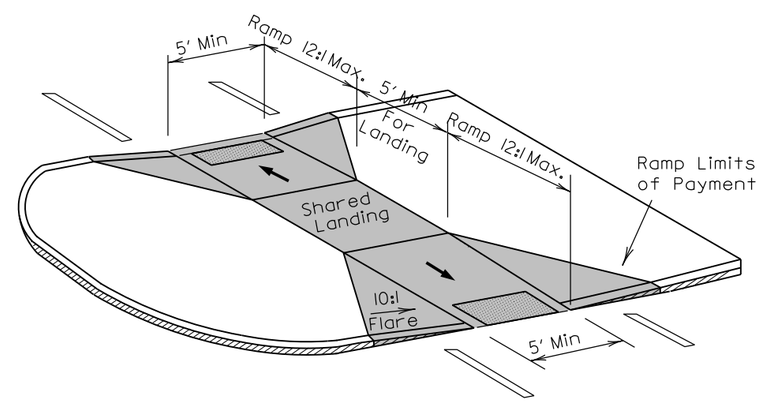

MEDIAN ISLAND CURB RAMPS

CONTRACT STANDARDS AND DEVELOPMENT UNIT
Office 919-707-6950 FAX 919-250-4119

CURB RAMPS

Median or Turn Lane Islands

ORIGINAL BY: J.S. HOWERTON DATE: 7/7/11
MODIFIED BY: DATE:
CHECKED BY: DATE:
FILE SPEC.: stds/2012CurbRamp/CurbRampDetails.dgn

$$$$$SYSTIME$$$$$
$$$$$TIME$$$$$ $$$$$DGN$$$$$$$$$$$$$$$$$$$$
$$$$$USERNAME$$$$$

PROJECT REFERENCE NO.	SHEET NO.
W-5813A	4
R/W SHEET NO.	
ROADWAY DESIGN ENGINEER	HYDRAULICS ENGINEER

DOCUMENT NOT CONSIDERED FINAL UNLESS ALL SIGNATURES COMPLETED

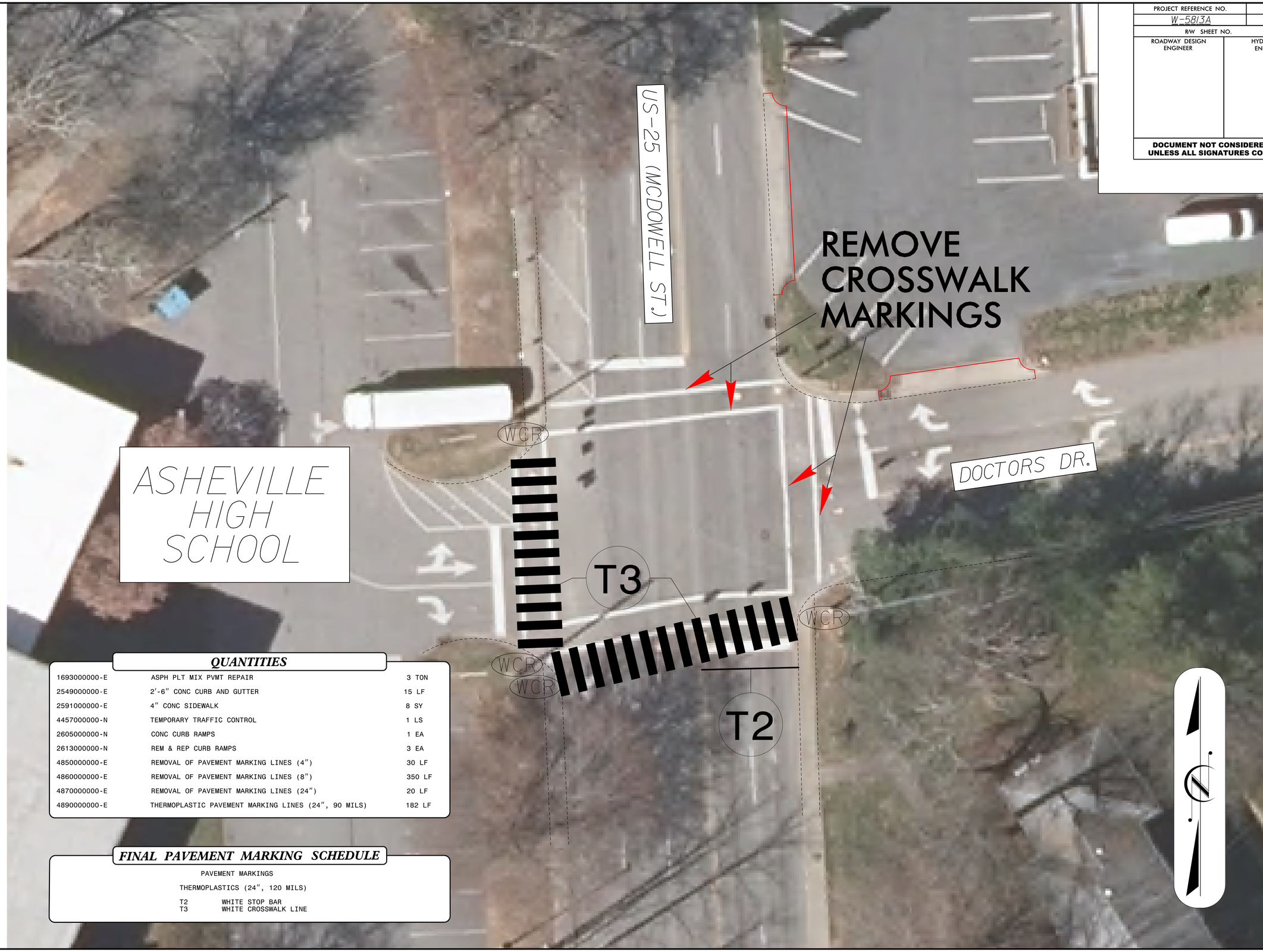

QUANTITIES

1693000000-E	ASPH PLT MIX PVMT REPAIR	3 TON
2549000000-E	2'-6" CONC CURB AND GUTTER	15 LF
2591000000-E	4" CONC SIDEWALK	8 SY
4457000000-N	TEMPORARY TRAFFIC CONTROL	1 LS
2605000000-N	CONC CURB RAMPS	1 EA
2613000000-N	REM & REP CURB RAMPS	3 EA
4850000000-E	REMOVAL OF PAVEMENT MARKING LINES (4")	30 LF
4860000000-E	REMOVAL OF PAVEMENT MARKING LINES (8")	350 LF
4870000000-E	REMOVAL OF PAVEMENT MARKING LINES (24")	20 LF
4890000000-E	THERMOPLASTIC PAVEMENT MARKING LINES (24", 90 MILS)	182 LF

FINAL PAVEMENT MARKING SCHEDULE

PAVEMENT MARKINGS

THERMOPLASTICS (24", 120 MILS)

T2	WHITE STOP BAR
T3	WHITE CROSSWALK LINE

REVISIONS

8/17/99

17-MAY-2022 12:08
S:\MDC\Traffic Engineering\W-5813A\Roadway\Plans\W-5813A_ddc_ash.dgn
wcarver AIP DIV13 330171

PROJECT REFERENCE NO.	SHEET NO.
W-5813A	Sig. 1.0

PHASING DIAGRAM

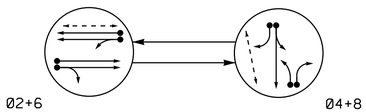

PHASING DIAGRAM DETECTION LEGEND

- DETECTED MOVEMENT
- UNDETECTED MOVEMENT (OVERLAP)
- UNSIGNALIZED MOVEMENT
- PEDESTRIAN MOVEMENT

TABLE OF OPERATION

SIGNAL FACE	PHASE 02+6	PHASE 04+8	FLASH
21,22	G	R	Y
41,42	R	G	R
61,62	G	R	Y
81,82	R	G	R
P41,P42	DW	W	DRK
P61,P62	W	DW	DRK

OASIS 2070 LOOP & DETECTOR INSTALLATION CHART

INDUCTIVE LOOPS					DETECTOR PROGRAMMING						
LOOP	SIZE (FT)	DISTANCE FROM STOPBAR (FT)	TURNS	NEW LOOP	PHASE	CALLING	EXTENSION	FULL TIME DELAY	STRETCH TIME	DELAY TIME	SYSTEM LOOP	NEW CARD
2A	6X17	61	4	-	2	Y	Y	-	-	-	-	-
4A	6X17	2	3	-	4	Y	Y	-	-	5	-	-
6A	6X16	70	3	-	6	Y	Y	-	-	-	-	-
8A	6X60	+5	2-4-2	-	8	Y	Y	-	-	3	-	-
8B	6X60	+5	2-4-2	-	8	Y	Y	-	-	10	-	-

SIGNAL FACE I.D.

All Heads L.E.D.

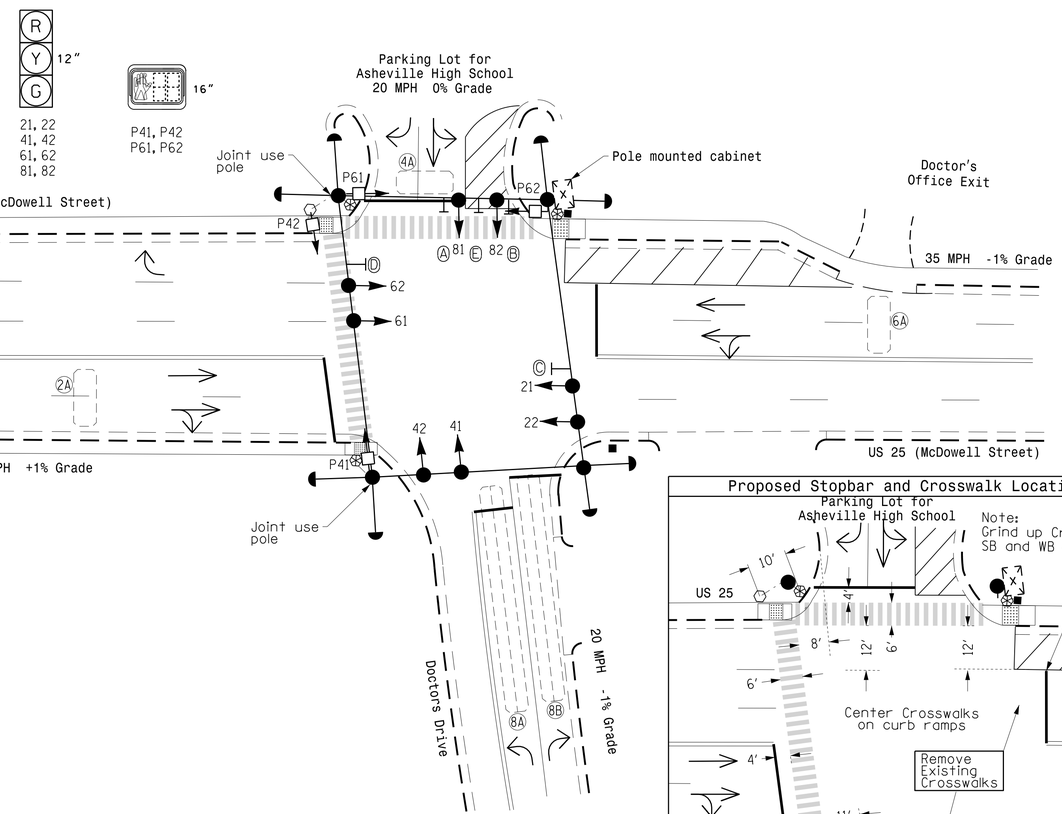

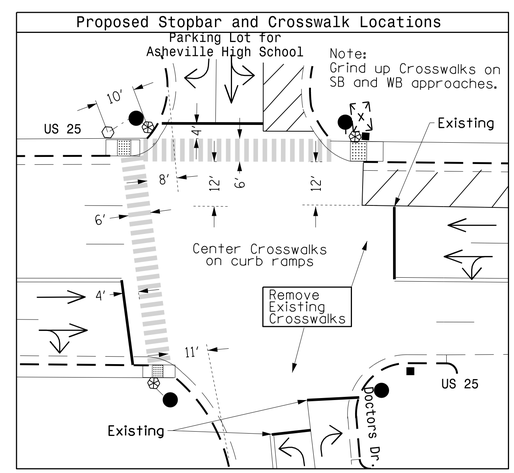

OASIS 2070 TIMING CHART

FEATURE	PHASE 2	PHASE 4	PHASE 6	PHASE 8
Min Green 1 *	10	7	10	7
Extension 1 *	3.0	2.0	3.0	2.0
Max Green 1 *	50	25	50	25
Yellow Clearance	3.9	3.0	3.9	3.0
Red Clearance	1.3	2.3	1.3	2.3
Red Revert	2.0	2.0	2.0	2.0
Walk 1 *	-	7	7	-
Don't Walk 1	-	13	10	-
Seconds Per Actuation *	-	-	-	-
Max Variable Initial *	-	-	-	-
Time Before Reduction *	-	-	-	-
Time To Reduce *	-	-	-	-
Minimum Gap	-	-	-	-
Recall Mode	MIN RECALL	-	MIN RECALL	-
Vehicle Call Memory	YELLOW	-	YELLOW	-
Dual Entry	-	ON	-	ON
Simultaneous Gap	ON	ON	ON	ON

* These values may be field adjusted. Do not adjust Min Green and Extension times for phases 2 and 6 lower than what is shown. Min Green for all other phases should not be lower than 4 seconds.

2 Phase
Fully Actuated
Asheville Signal System

NOTES

1. Refer to "Roadway Standard Drawings NCDOT" dated January 2018 and "Standard Specifications for Roads and Structures" dated January 2018.
2. Do not program signal for late night flashing operation unless otherwise directed by the Engineer.
3. Set all detector units to presence mode.
4. In the event of loop replacement, refer to the current ITS and Signals Design Manual and submit a Plan of Record to the Signal Design Section.
5. Omit "WALK" and flashing "DON'T WALK" with no pedestrian calls.
6. Program pedestrian heads to countdown the flashing "Don't Walk" time only.
7. Maximum times shown in timing chart are for free-run operation only. Coordinated signal system timing values supersede these values.

LEGEND

PROPOSED		EXISTING
	Traffic Signal Head	
	Modified Signal Head	N/A
	Sign	
	Pedestrian Signal Head With Push Button & Sign	
	Type I Pushbutton Post	
	Type II Signal Pedestal	
	Signal Pole with Guy	
	Signal Pole with Sidewalk Guy	
	Inductive Loop Detector	
	Controller & Cabinet	
	Junction Box	
	2-in Underground Conduit	
N/A	Right of Way	
	Directional Arrow	
N/A	Curb Ramp	
Ⓐ	Left Arrow "ONLY" Sign (R3-5L)	Ⓐ
Ⓑ	Right Arrow "ONLY" Sign (R3-5R)	Ⓑ
Ⓒ	No Left Turn Sign (R3-2)	Ⓒ
Ⓓ	No Right Turn Sign (R3-1)	Ⓓ
Ⓔ	"DO NOT ENTER" Sign (R5-1)	Ⓔ

Signal Upgrade

Prepared in the Offices of:
Transportation Mobility and Safety Division
STATE OF NORTH CAROLINA DEPARTMENT OF TRANSPORTATION
Signal Design Section
750 N.Greenfield Pkwy,Garner,NC 27529

US 25 (McDowell Street) at Doctors Drive / Asheville HS

Division 13 Buncombe County Asheville

PLAN DATE: February 2021 REVIEWED BY: T.J. Williams
PREPARED BY: EM Minshew REVIEWED BY:

SCALE 0 20 1"=20'

REVISIONS	INIT.	DATE

DOCUMENT NOT CONSIDERED FINAL UNLESS ALL SIGNATURES COMPLETED

SEAL
NORTH CAROLINA PROFESSIONAL SEAL 024393 ENGINEER TIMOTHY J. WILLIAMS

DocuSigned by: T. J. Williams 3/23/2021
DATE

STATE TRANSPORTATION ENGINEER
SIG. INVENTORY NO. 13-0066

22-MAR-2021 15:18
s:\13066_sig_inv_2020\mmdd.dgn
emminshew

PROJECT REFERENCE NO.	SHEET NO.
W-5813A	Sig. 1.1

EDI MODEL 2018ECLip-NC CONFLICT MONITOR PROGRAMMING DETAIL

(remove jumpers and set switches as shown)

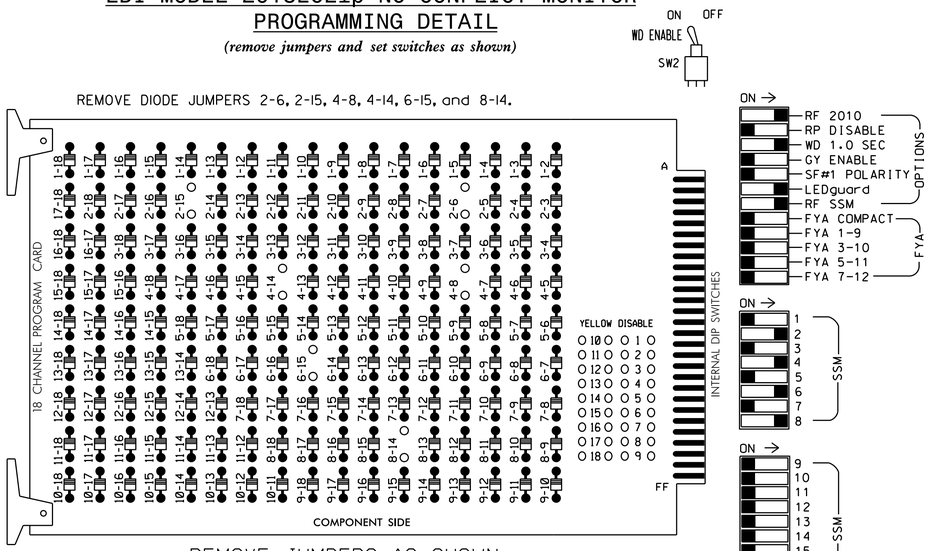

■ = DENOTES POSITION OF SWITCH

NOTES:

1. Card is provided with all diode jumpers in place. Removal of any jumper allows its channels to run concurrently.
2. Ensure jumpers SEL2-SEL5 and SEL9 are present on the monitor board.
3. Ensure that Red Enable is active at all times during normal operation.
4. Integrate monitor with Ethernet network in cabinet.

NOTES

1. To prevent "flash-conflict" problems, insert red flash program blocks for all unused vehicle load switches in the output file. The installer shall verify that signal heads flash in accordance with the Signal Plans.
2. Program phases 4 and 8 for Dual Entry.
3. Enable Simultaneous Gap-Out for all phases.
4. Program phases 2 and 6 for Start Up In Green.
5. Program phases 4 and 6 for Startup Ped Call.
6. Program phases 2 and 6 for Yellow Flash.
7. The cabinet and controller are part of the Asheville Signal System.

EQUIPMENT INFORMATION

CONTROLLER.....2070E
CABINET.....336
SOFTWARE.....ECONOLITE OASIS
CABINET MOUNT.....POLE
OUTPUT FILE POSITIONS...12
LOAD SWITCHES USED.....S2,S5,S6,S8,S9,S11
PHASES USED.....2,4,4PED,6,6PED,8
OVERLAPS.....NONE

SIGNAL HEAD HOOK-UP CHART

LOAD SWITCH NO.	S1	S2	S3	S4	S5	S6	S7	S8	S9	S10	S11	S12
CMU CHANNEL NO.	1	2	13	3	4	14	5	6	15	7	8	16
PHASE	1	2	2 PED	3	4	4 PED	5	6	6 PED	7	8	8 PED
SIGNAL HEAD NO.	NU	21,22	NU	NU	41,42	P41, P42	NU	61,62	P61, P62	NU	81,82	NU
RED		128			101			134			107	
YELLOW		129			102			135			108	
GREEN		130			103			136			109	
RED ARROW												
YELLOW ARROW												
GREEN ARROW												
✋						104			119			
🚶						106			121			

NU = Not Used

COUNTDOWN PEDESTRIAN SIGNAL OPERATION

Countdown Ped Signals are required to display timing only during Ped Clearance Interval. Consult Ped Signal Module user's manual for instructions on selecting this feature.

INPUT FILE POSITION LAYOUT

(front view)

FILE "I"	1	2	3	4	5	6	7	8	9	10	11	12	13	14
U	SLOT EMPTY	Ø2 2A	SLOT EMPTY	Ø4 4A	SLOT EMPTY	Ø6 6A	SLOT EMPTY	Ø8 8A	SLOT EMPTY	SLOT EMPTY	SLOT EMPTY	NOT USED	Ø6 PED DC ISOLATOR	FS DC ISOLATOR
L		NOT USED		NOT USED		NOT USED		Ø8 8B				Ø4 PED DC ISOLATOR	NOT USED	ST DC ISOLATOR

EX.: 1A, 2A, ETC. = LOOP NO.'S

FS = FLASH SENSE
ST = STOP TIME

INPUT FILE CONNECTION & PROGRAMMING CHART

LOOP NO.	LOOP TERMINAL	INPUT FILE POS.	PIN NO.	INPUT ASSIGNMENT NO.	DETECTOR NO.	NEMA PHASE	CALL	EXTEND	FULL TIME DELAY	STRETCH TIME	DELAY TIME
2A	TB21-3,4	I2U	39	1	2	2	Y	Y			
4A	TB21-7,8	I4U	41	3	4	4	Y	Y			5
6A	TB21-11,12	I6U	40	2	6	6	Y	Y			
8A	TB22-1,2	I8U	42	4	8	8	Y	Y			3
8B	TB24-1,2	I8L	46	8	18	8	Y	Y			10
PED PUSH BUTTONS											
P41,P42	TB24-9,10	I12L	69	31	PED 4	4 PED					
P61,P62	TB22-11,12	I13U	68	30	PED 6	6 PED					

NOTE:
INSTALL DC ISOLATORS IN INPUT FILE SLOTS I12 AND I13.

INPUT FILE POSITION LEGEND: I2L
FILE I
SLOT 2
LOWER

THIS ELECTRICAL DETAIL IS FOR
THE SIGNAL DESIGN: 13-0066
DESIGNED: February 2021
SEALED: 3/23/2021
REVISED: N/A

Electrical Detail

DOCUMENT NOT CONSIDERED FINAL UNLESS ALL SIGNATURES COMPLETED

ELECTRICAL AND PROGRAMMING DETAILS FOR:

Prepared in the Offices of:
Traffic Engineering Division, Mobility and Safety Division, Signal Management Section, Department of Transportation, State of North Carolina
750 N.Greenfield Pkwy,Garner,NC 27529

US 25 (McDowell Street)
at
Doctors Drive/Asheville HS

Division 13 Buncombe County Asheville

PLAN DATE: March 2021 REVIEWED BY:
PREPARED BY: S. Armstrong REVIEWED BY:

REVISIONS	INIT.	DATE

SEAL
NORTH CAROLINA PROFESSIONAL SEAL 036833 ENGINEER RYAN W. HOUGH

DocuSigned by: Ryan W. Hough 3/25/2021
DATE

SIG. INVENTORY NO. 13-0066

24-MAR-2021 11:15
S:\TTSSUM\ITS Signals\Workgroups\Sig Man\Projects From Signal Design\Active Projects\Armstrong\DIV Projects\13-0066 div project\13066_sample_ele.xxx.dgn
sarmstrong