PROJECT: 17BP.13.R.43

CONTRACT:

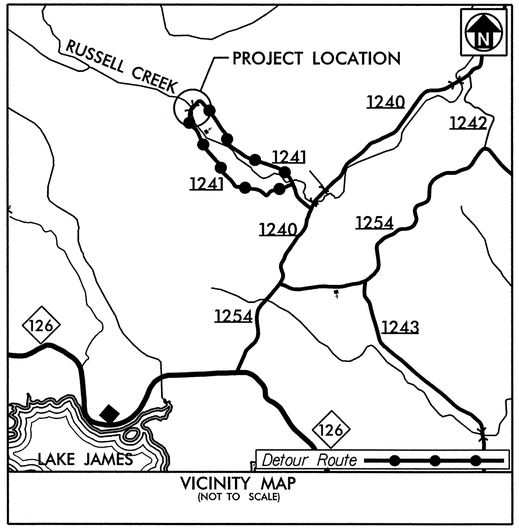

VICINITY MAP
(NOT TO SCALE)

STATE OF NORTH CAROLINA
DIVISION OF HIGHWAYS
BURKE COUNTY

STATE	STATE PROJECT REFERENCE NO.	SHEET NO.	TOTAL SHEETS
N.C.	17BP.13.R.43	1	

STATE PROJECT NO.	F.A. PROJ. NO.	DESCRIPTION
17BP.13.R.43		P.E., R/W, UTIL.
17BP.13.R.43		CONST.

LOCATION: BRIDGE NO. 320 OVER RUSSELL CREEK ON SR 1241 (ADVENTIST CIRCLE)

TYPE OF WORK: GRADING, PAVING, DRAINAGE AND STRUCTURE

MAP 1

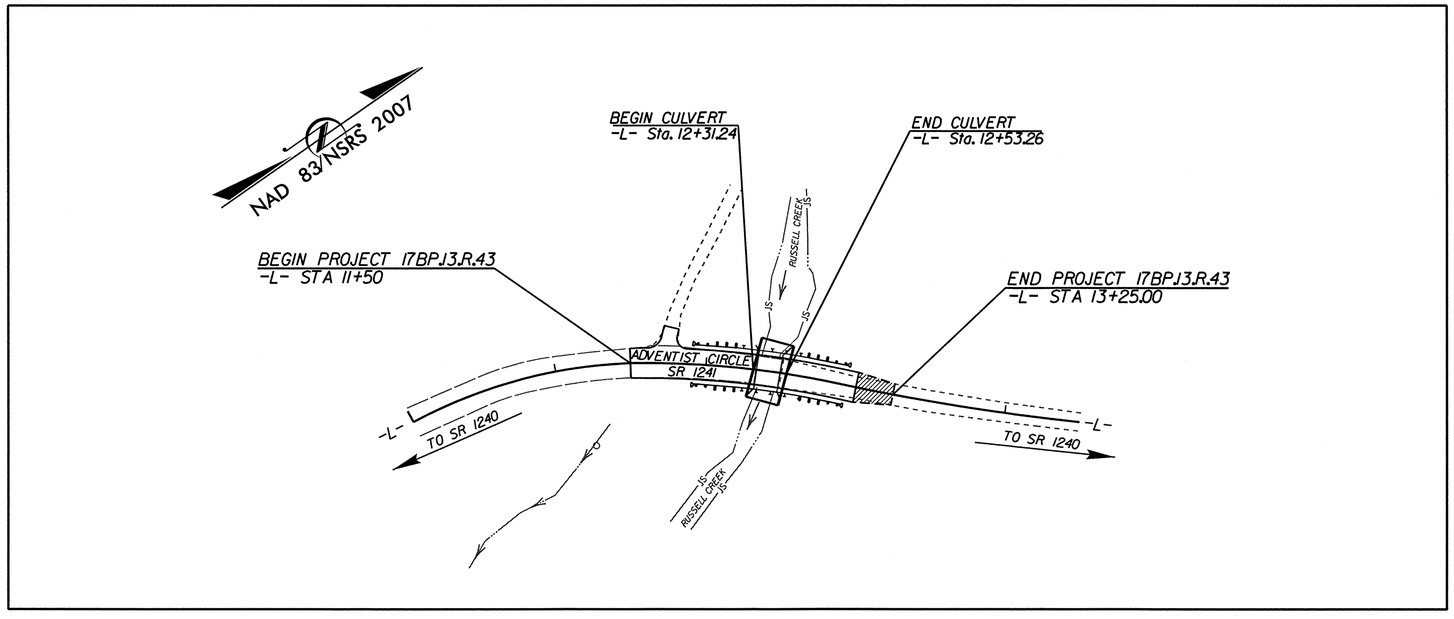

GRAPHIC SCALES

50 25 0 50 100
PLANS

50 25 0 50 100
PROFILE (HORIZONTAL)

10 5 0 10 20
PROFILE (VERTICAL)

*DESIGN EXCEPTION: HORIZONTAL CURVE

STATE OF NORTH CAROLINA DEPARTMENT OF TRANSPORTATION

DESIGN DATA

ADT 2010 = 230

V = 25 MPH

FUNC CLASS = LOCAL

PROJECT LENGTH

LENGTH ROADWAY TIP PROJECT 17BP.13.R.43	=	0.029 MILES
LENGTH STRUCTURE TIP PROJECT 17BP.13.R.43	=	0.004 MILES
TOTAL LENGTH TIP PROJECT 17BP.13.R.43	=	0.033 MILES

Prepared In the Office of Mattern & Craig for

DIVISION 13

NORTH CAROLINA DEPARTMENT OF TRANSPORTATION

2012 STANDARD SPECIFICATIONS

RIGHT-OF-WAY DATE:

LETTING DATE:

JAMES VOSO, PE
PROJECT ENGINEER

DANA BOLDEN, PE
HYDRAULICS ENGINEER

NCDOT CONTACT: PAUL SPROUSE, PE
DIVISION 13 BRIDGE PROJECT MANAGER

ROADWAY DESIGN ENGINEER

NORTH CAROLINA PROFESSIONAL SEAL 022659 ENGINEER JAMES B. VOSO P.E.

SIGNATURE:

HYDRAULICS ENGINEER

NORTH CAROLINA PROFESSIONAL SEAL 028945 ENGINEER DANA J. BOLDEN P.E.

SIGNATURE:

PLANS PREPARED BY:

Mattern & Craig
CONSULTING ENGINEERS • SURVEYORS
12 BROAD STREET
ASHEVILLE, NORTH CAROLINA
(828) 254-2201
FAX (828) 254-4562

4/11/2014
8:40:36 AM
R:\3280 NCDOT Div. 13 Bridges\320\Roadway\Proj\110320_rdg_tsh.dgn
bgross

PROJECT REFERENCE NO.	SHEET NO.
17BP.13.R.43	1-A
ROADWAY DESIGN ENGINEER	PAVEMENT DESIGN ENGINEER

PLANS PREPARED BY:

Mattern & Craig
CONSULTING ENGINEERS - SURVEYORS
12 BROAD STREET
ASHEVILLE, NORTH CAROLINA 28801
(828) 254-2201 - FAX (828) 254-4562

INDEX OF SHEETS - GENERAL NOTES - LIST OF STANDARDS

INDEX OF SHEETS

SHEET NUMBER	SHEET
1	Title Sheet
1-A	Index of Sheets, General Notes, and List of Standards
1-B	Conventional Symbols
1-C	Survey Control Sheet
2	Typical Sections, Pavement Schedule
3	Summary of Drainage Quantities, Summary of Guardrail, and Earthwork Summary
4	Plan & Profile Sheet
TMP-1 THRU TMP-2	Transportation Management Plans
PMP-01	Pavement Marking Plans
EC-1 THRU EC-6	Erosion Control Plans
X-1A	Cross-Section Summary Sheet
X-1 THRU X-2	Cross-Sections
C-1 THRU C-3	Aluminum Box Culvert

2012 ROADWAY ENGLISH STANDARD DRAWINGS

The following Roadway Standards as appear in "Roadway Standard Drawings" Highway Design Branch - N. C. Department of Transportation - Raleigh, N. C., Dated January, 2012 are applicable to this project and by reference hereby are considered a part of these plans:

STD.NO.	TITLE
DIVISION 2 - EARTHWORK	
200.02	Method of Clearing - Method II
225.02	Guide for Grading Subgrade - Secondary and Local
225.04	Method of Obtaining Superelevation - Two Lane Pavement
DIVISION 5 - SUBGRADE, BASES AND SHOULDERS	
560.01	Method of Shoulder Construction - High Side of Superelevated Curve - Method I
DIVISION 8 - INCIDENTALS	
862.01	Guardrail Placement
862.02	Guardrail Installation
862.03	Structure Anchor Units

GENERAL NOTES: 2012 SPECIFICATIONS

EFFECTIVE: 01-17-12
REVISED: 07/30/12

GRADE LINE:
GRADING AND SURFACING:

THE GRADE LINES SHOWN DENOTE THE FINISHED ELEVATION OF THE PROPOSED SURFACING AT GRADE POINTS SHOWN ON THE TYPICAL SECTIONS. GRADE LINES MAY BE ADJUSTED AT THEIR BEGINNING AND ENDING AND AT STRUCTURES AS DIRECTED BY THE ENGINEER IN ORDER TO SECURE A PROPER TIE-IN.

CLEARING:

CLEARING ON THIS PROJECT SHALL BE PERFORMED TO THE LIMITS ESTABLISHED BY METHOD II.

SUPERELEVATION:

ALL CURVES ON THIS PROJECT SHALL BE SUPERELEVATED IN ACCORDANCE WITH STD. NO. 225.04 USING THE RATE OF SUPERELEVATION AND RUNOFF SHOWN ON THE PLANS. SUPERELEVATION IS TO BE REVOLVED ABOUT THE GRADE POINTS SHOWN ON THE TYPICAL SECTIONS.

SHOULDER CONSTRUCTION:

ASPHALT, EARTH, AND CONCRETE SHOULDER CONSTRUCTION ON THE HIGH SIDE OF SUPERELEVATED CURVES SHALL BE IN ACCORDANCE WITH STD. NO. 560.01.

SIDE ROADS:

THE CONTRACTOR WILL BE REQUIRED TO DO ALL NECESSARY WORK TO PROVIDE SUITABLE CONNECTIONS WITH ALL ROADS, STREETS, AND DRIVES ENTERING THIS PROJECT. THIS WORK WILL BE PAID FOR AT THE CONTRACT UNIT PRICE FOR THE PARTICULAR ITEMS INVOLVED.

GUARDRAIL:

THE GUARDRAIL LOCATIONS SHOWN ON THE PLANS MAY BE ADJUSTED DURING CONSTRUCTION AS DIRECTED BY THE ENGINEER. THE CONTRACTOR SHOULD CONSULT WITH THE ENGINEER PRIOR TO ORDERING GUARDRAIL MATERIAL.

TEMPORARY SHORING:

SHORING REQUIRED FOR THE MAINTENANCE OF TRAFFIC WILL BE PAID FOR AS "EXTRA WORK" IN ACCORDANCE WITH SECTION 104-7.

SUBSURFACE PLANS:

SUBSURFACE PLANS ARE AVAILABLE FOR THE STRUCTURE ONLY. THE CONTRACTOR SHOULD MAKE HIS OWN INVESTIGATION AS TO THE OTHER SUBSURFACE CONDITIONS.

UTILITIES:

UTILITY OWNERS ON THIS PROJECT ARE TELICS (AT&T). ANY RELOCATION OF EXISTING UTILITIES WILL BE ACCOMPLISHED BY OTHERS, EXCEPT AS SHOWN ON THE PLANS.

RIGHT-OF-WAY MARKERS:

ALL RIGHT-OF-WAY MARKERS ON THIS PROJECT SHALL BE PLACED BY CONTRACT IN ACCORDANCE WITH SECTION 801 OF THE 2012 NORTH CAROLINA STANDARD SPECIFICATIONS FOR ROADS AND STRUCTURES.

6/2/99
8:43:30 AM
R:\3280 NCDOT Div.13 Bridges\320\Roadway\Proj\110320_rdy_typ.dgn
bgross

PROJECT REFERENCE NO.	SHEET NO.
17BPJ3,R,43	1-B

Note: Not to Scale

S.U.E. = Subsurface Utility Engineering

STATE OF NORTH CAROLINA
DIVISION OF HIGHWAYS

CONVENTIONAL PLAN SHEET SYMBOLS

BOUNDARIES AND PROPERTY:

- State Line
- County Line
- Township Line
- City Line
- Reservation Line
- Property Line
- Existing Iron Pin — EIP
- Property Corner
- Property Monument — ECM
- Parcel/Sequence Number — 123
- Existing Fence Line
- Proposed Woven Wire Fence
- Proposed Chain Link Fence
- Proposed Barbed Wire Fence
- Existing Wetland Boundary — WLB
- Proposed Wetland Boundary — WLB
- Existing High Quality Wetland Boundary — HQ WLB
- Existing Endangered Animal Boundary — EAB
- Existing Endangered Plant Boundary — EPB

BUILDINGS AND OTHER CULTURE:

- Gas Pump Vent or U/G Tank Cap
- Sign — S
- Well — W
- Small Mine
- Foundation
- Area Outline
- Cemetery
- Building
- School
- Church
- Dam

HYDROLOGY:

- Stream or Body of Water
- Hydro, Pool or Reservoir
- River Basin Buffer — RBB
- Flow Arrow
- Disappearing Stream
- Spring
- Swamp Marsh
- Proposed Lateral, Tail, Head Ditch — FLOW
- False Sump

RAILROADS:

- Standard Guage — CSX TRANSPORTATION
- RR Signal Milepost — MILEPOST 35
- Switch — SWITCH
- RR Abandoned
- RR Dismantled

RIGHT OF WAY:

- Baseline Control Point
- Existing Right of Way Marker
- Existing Right of Way Line
- Proposed Right of Way Line — RW
- Proposed Right of Way Line with Iron Pin and Cap Marker — RW
- Proposed Right of Way Line with Concrete or Granite Marker — RW
- Existing Control of Access — CA
- Proposed Control of Access — CA
- Existing Easement Line — E
- Proposed Temporary Construction Easement — E
- Proposed Temporary Drainage Easement — TDE
- Proposed Permanent Drainage Easement — PDE
- Proposed Permanent Utility Easement — PUE

ROADS AND RELATED FEATURES:

- Existing Edge of Pavement
- Existing Curb
- Proposed Slope Stakes Cut — C
- Proposed Slope Stakes Fill — F
- Proposed Wheel Chair Ramp — WCR
- Curb Cut for Future Wheel Chair Ramp — CCFR
- Existing Metal Guardrail
- Proposed Guardrail
- Existing Cable Guiderail
- Proposed Cable Guiderail
- Equaility Symbol
- Pavement Removal

VEGETATION:

- Single Tree
- Single Shrub
- Hedge
- Woods Line
- Orchard
- Vineyard — Vineyard

EXISTING STRUCTURES:

MAJOR:

- Bridge, Tunnel or Box Culvert — CONC
- Bridge Wing Wall, Head Wall and End Wall — CONC WW

MINOR:

- Head and End Wall — CONC HW
- Pipe Culvert
- Footbridge
- Drainage Box: Catch Basin, DI or JB — CB
- Paved Ditch Gutter
- Storm Sewer Manhole — S
- Storm Sewer — S

UTILITIES:

POWER:

- Existing Power Pole
- Proposed Power Pole
- Existing Joint Use Pole
- Proposed Joint Use Pole
- Power Manhole — P
- Power Line Tower
- Power Transformer
- U/G Power Cable Hand Hole — HH
- H-Frame Pole
- Recorded U/G Power Line — P
- Designated U/G Power Line (S.U.E.*) — P

TELEPHONE:

- Existing Telephone Pole
- Proposed Telephone Pole
- Telephone Manhole — T
- Telephone Booth
- Telephone Pedestal — T
- Telephone Cell Tower
- U/G Telephone Cable Hand Hole — HH
- Recorded U/G Telephone Cable — T
- Designated U/G Telephone Cable (S.U.E.*) — T
- Recorded U/G Telephone Conduit — TC
- Designated U/G Telephone Conduit (S.U.E.*) — TC
- Recorded U/G Fiber Optics Cable — T FO
- Designated U/G Fiber Optics Cable (S.U.E.*) — T FO

WATER:

- Water Manhole — W
- Water Meter
- Water Valve
- Water Hydrant
- Recorded U/G Water Line — W
- Designated U/G Water Line (S.U.E.*) — W
- Above Ground Water Line — A/G Water

TV:

- TV Satellite Dish
- TV Pedestal — C
- TV Tower
- U/G TV Cable Hand Hole — HH
- Recorded U/G TV Cable — TV
- Designated U/G TV Cable (S.U.E.*) — TV
- Recorded U/G Fiber Optic Cable — TV FO
- Designated U/G Fiber Optic Cable (S.U.E.*) — TV FO

GAS:

- Gas Valve
- Gas Meter
- Recorded U/G Gas Line — G
- Designated U/G Gas Line (S.U.E.*) — G
- Above Ground Gas Line — A/G Gas

SANITARY SEWER:

- Sanitary Sewer Manhole
- Sanitary Sewer Cleanout
- U/G Sanitary Sewer Line — SS
- Above Ground Sanitary Sewer — A/G Sanitary Sewer
- Recorded SS Forced Main Line — FSS
- Designated SS Forced Main Line (S.U.E.*) — FSS

MISCELLANEOUS:

- Utility Pole
- Utility Pole with Base
- Utility Located Object
- Utility Traffic Signal Box — S
- Utility Unknown U/G Line — ?UTL
- U/G Tank; Water, Gas, Oil
- A/G Tank; Water, Gas, Oil
- U/G Test Hole (S.U.E.*)
- Abandoned According to Utility Records — AATUR
- End of Information — E.O.I.

PROJECT REFERENCE NO.	SHEET NO.
17BP.13.R.43	1-C
R/W SHEET NO.	

SURVEY CONTROL SHEET 17BP.13.R.43

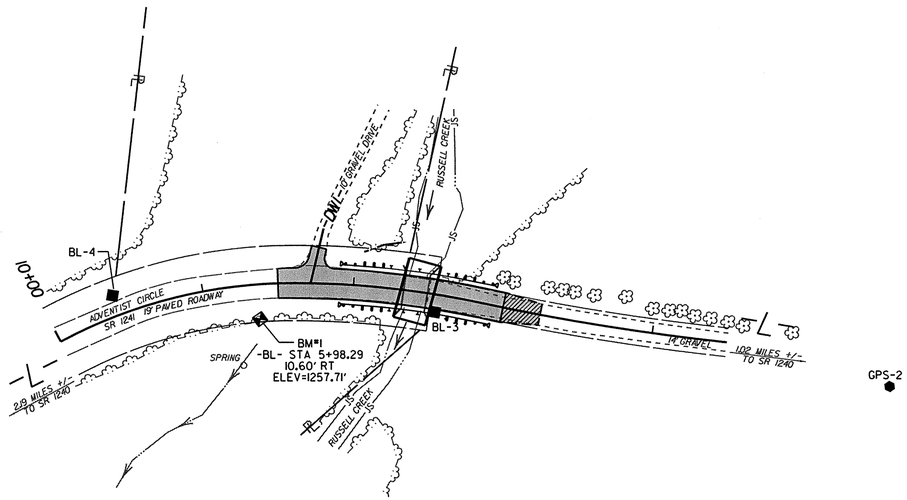

DATUM DESCRIPTION

THE LOCALIZED COORDINATE SYSTEM DEVELOPED FOR THIS PROJECT IS BASED ON THE STATE PLANE COORDINATES ESTABLISHED BY NCGS FOR MONUMENT "GPS-2"
WITH NAD 83/NSRS 2007 STATE PLANE GRID COORDINATES OF NORTHING: 766012.1233(ft) EASTING: 1152510.3459(ft)
ELEVATION: 1275.31(ft)
THE AVERAGE COMBINED GRID FACTOR USED ON THIS PROJECT (GROUND TO GRID) IS: 0.99986588
THE N.C. LAMBERT GRID BEARING AND LOCALIZED HORIZONTAL GROUND DISTANCE FROM "BL-4" TO -L- STATION 10+00 IS 45.86' - S6° 39' 7"E
ALL LINEAR DIMENSIONS ARE LOCALIZED HORIZONTAL DISTANCES
VERTICAL DATUM USED IS NAVD 88

Scale 1" = 50'

50' 0 50' 100'

STRUCTURE: 110320
COUNTY: BURKE

BL

POINT	DESC.	NORTH	EAST	ELEVATION	EL STATION	OFFSET
4	BL-4	765627.0766	1152165.1694	1256.65	10+42.91	13.68 LT
3	BL-3	765794.6390	1152296.8299	1257.83	12+55.72	11.71 RT
2	GPS-2	766012.1233	1152510.3459	1275.31	OUTSIDE PROJECT LIMITS	

BM1 ELEVATION = 1257.71'
N 765698 E 1152234
BL STATION 5+98.29 10.60' RIGHT
RR SPIKE IN 20" HICKORY

5/14/99

NCDOT Div.13 Bridges\320\Roadway\Proj\110320_ls_psh.dgn 8:45:36 AM bpross

6/2/99

PROJECT REFERENCE NO.	SHEET NO.
17BP.13.R.43	2

ROADWAY DESIGN ENGINEER

NORTH CAROLINA PROFESSIONAL SEAL 022592 ENGINEER JAMES B. VOSO

PAVEMENT DESIGN ENGINEER

NORTH CAROLINA PROFESSIONAL SEAL 022592 ENGINEER JAMES B. VOSO

PLANS PREPARED BY:

Mattern & Craig
CONSULTING ENGINEERS - SURVEYORS
82 BROAD STREET
ASHEVILLE, NORTH CAROLINA 28801
(828) 254-2201 - FAX (828) 254-4562

PAVEMENT SCHEDULE

ITEM	DESCRIPTION	ITEM	DESCRIPTION
C1	PROP. APPROX. 3" ASPHALT CONCRETE SURFACE COURSE, TYPE **SF9.5A,** AT AN AVERAGE RATE OF **165** LBS. PER SQ. YD. IN EACH OF 2 LAYERS.	T	EARTH MATERIAL.
E1	PROP. APPROX. 5" ASPHALT CONCRETE BASE COURSE, TYPE B25.0B, AT AN AVERAGE RATE OF 570 LBS. PER SQ. YD.	J1	PROP. 8" AGGREGATE BASE COURSE

NOTE: ALL PAVEMENT EDGE SLOPES ARE TO BE 1:1

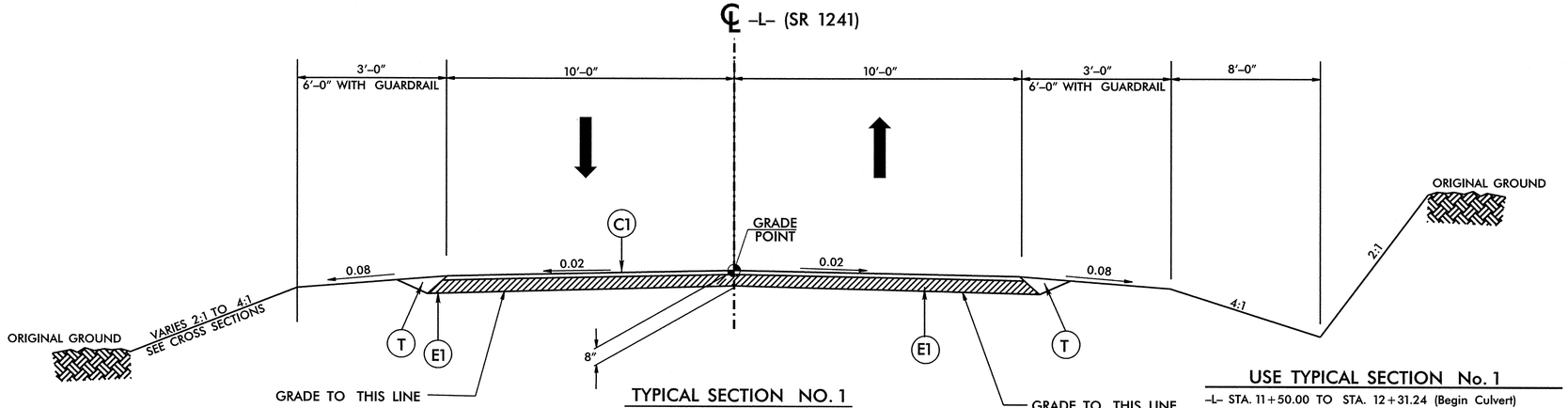

TYPICAL SECTION NO. 1

USE TYPICAL SECTION No. 1

–L– STA. 11+50.00 TO STA. 12+31.24 (Begin Culvert)
–L– STA. 12+53.26 (End Culvert) TO STA. 13+25.00

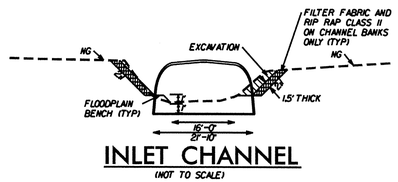

INLET CHANNEL

(NOT TO SCALE)

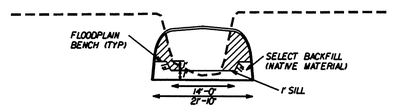

CULVERT INTERNAL CHANNEL

(NOT TO SCALE)

NOTE: PLACE SILLS ONE FOOT INSIDE OF INLET AND OUTLET OF THE CULVERT. PLACE AN ADDITIONAL SILL HALFWAY ALONG THE LENGTH OF BARREL TO HELP RETAIN BED MATERIAL. BACKFILL CULVERT WITH NATIVE BED MATERIAL SIMILAR IN SIZE TO CLASS 'B' RIP RAP. SUBSIDIZE WITH CLASS 'B' RIP RAP IF NEEDED.

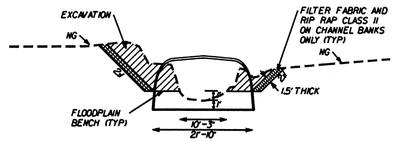

OUTLET CHANNEL

(NOT TO SCALE)

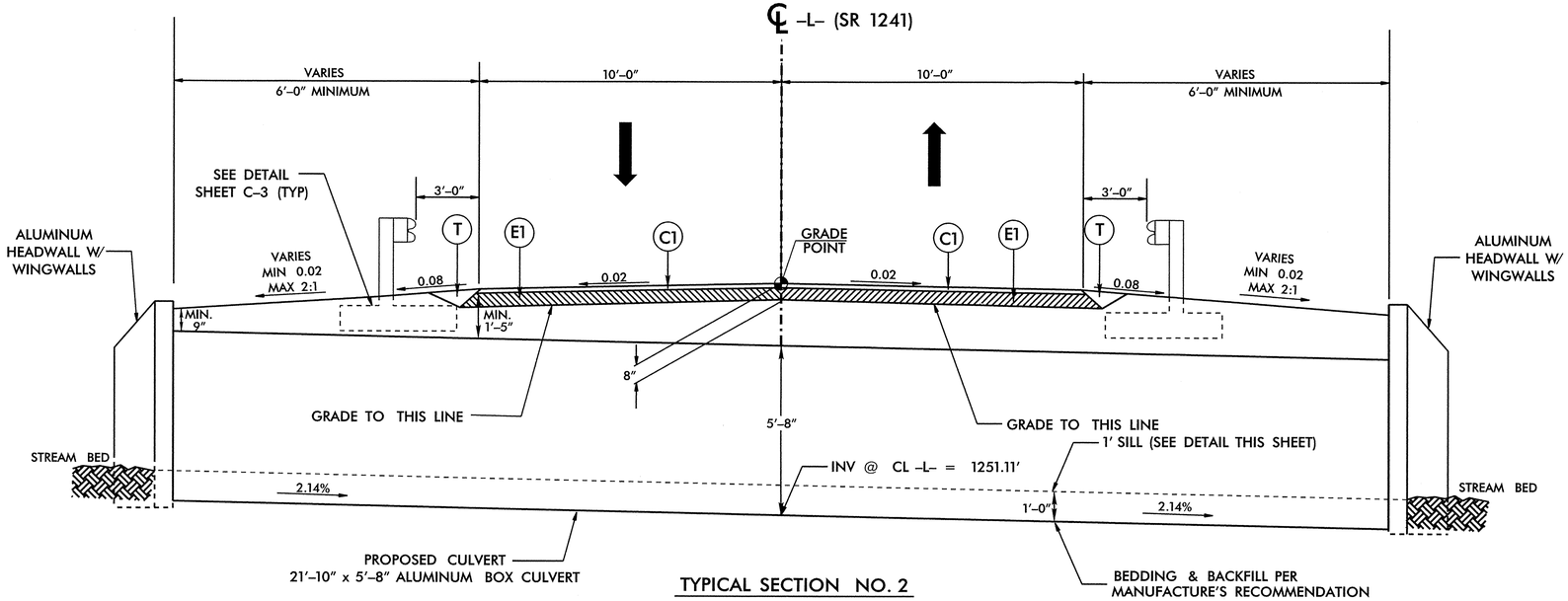

TYPICAL SECTION NO. 2

USE TYPICAL SECTION No. 2

–L– STA. 12+31.24 (Begin Culverts) TO STA. 12+53.26 (End Culverts)

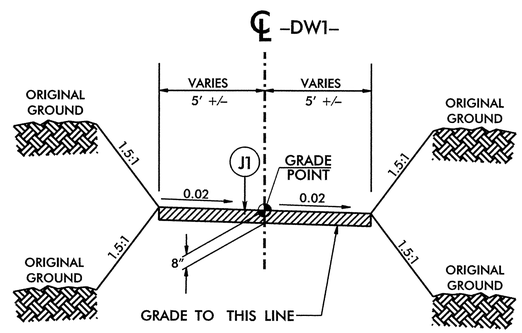

TYPICAL DRIVEWAY SECTION

–DW1– STA. 10+10.00 TO STA. 10+25.00

8:50:01 AM
R:\3280 - NCDOT Div 13 Projects\3280 Roadway\Proj\110320_rdy_typ.dgn
Projects: 17BP.13.R.43 NCDOT Div 13 Projects 3280 Roadway

6/21/00

COMPUTED BY: _____ DATE: _____
CHECKED BY: _____ DATE: _____

PROJECT REFERENCE NO.	SHEET NO.
17BPJ3.R.43	3

STATE OF NORTH CAROLINA
DIVISION OF HIGHWAYS

"N" = DISTANCE FROM EDGE OF LANE TO FACE OF GUARDRAIL.
TOTAL SHOULDER WIDTH = DISTANCE FROM EDGE OF TRAVEL LANE TO SHOULDER BREAK POINT.
FLARE LENGTH = DISTANCE FROM LAST SECTION OF PARALLEL GUARDRAIL TO END OF GUARDRAIL.
W = TOTAL WIDTH OF FLARE FROM BEGINNING OF TAPER TO END OF GUARDRAIL.
G = GATING IMPACT ATTENUATOR TYPE 350
NG = NON-GATING IMPACT ATTENUATOR TYPE 350

GUARDRAIL SUMMARY

SURVEY LINE	BEG. STA.	END STA.	LOCATION	LENGTH			WARRANT POINT		"N" DIST. FROM E.O.L.	TOTAL SHOUL. WIDTH	FLARE LENGTH		W		ANCHORS								IMPACT ATTENUATOR TYPE 350			SINGLE FACED GUARDRAIL	REMOVE EXISTING GUARDRAIL	REMOVE AND STOCKPILE EXISTING GUARDRAIL	REMARKS
				STRAIGHT	SHOP CURVED	DOUBLE FACED	APPROACH END	TRAILING END			APPROACH END	TRAILING END	APPROACH END	TRAILING END	XI MOD	XI	GRAU 350 TYPE TL-2	M-350	TYPE III	CAT-1	VI MOD	BIC	AT-1	EA	G	NG				
-L-	11+92.00	12+92.00	LT	100.00			CULVERT	CULVERT	3.00	6		31.25		0.625			2											
-L-	11+92.00	12+92.00	RT	100.00			CULVERT	CULVERT	3.00	6	31.25		0.625				2											
			TOTAL	200													4											
		DEDUCT ANCHORS	TYPE TL-2 - 25.00	-100																								
			AT-1 - 6.25																									
			TOTAL	100																								
ADDITIONAL GUARDRAIL POSTS = 10			SAY	100.00																								

LIST OF PIPES, ENDWALLS, ETC. (FOR PIPES 48" & UNDER)

| STATION | LOCATION (LT,RT, OR CL) | STRUCTURE NO. FROM | STRUCTURE NO. TO | TOP ELEVATION | INVERT ELEVATION | INVERT ELEVATION | SLOPE CRITICAL | DRAINAGE PIPE (RCP, CSP, CAAP, HDPE, or PVC) 12" | 15" | 18" | 24" | 30" | 36" | 42" | 48" | C.S. PIPE (UNLESS NOTED OTHRWISE) 12" | 15" | 18" | 24" | 30" | 36" | 42" | 48" | CLASS III R.C. PIPE (UNLESS OTHERWISE NOTED) 12" | 15" | 18" | 24" | 30" | 36" | 42" | 48" | 15" SIDE DRAIN PIPE | 18" SIDE DRAIN PIPE | 24" SIDE DRAIN PIPE | ENDWALLS STD. 838.01, STD. 838.11 OR STD. 838.80 (UNLESS NOTED OTHERWISE) CU. YDS. R.C.P. | C.S.P. | QUANTITIES FOR DRAINAGE STRUCTURES * TOTAL LF FOR PAY QUANTITY SHALL BE COL. A + (1.5 X COL. B*) PER EACH (0' THRU 5.0') | LIN. *FT. A | B 5.0' THRU 10.0' | 10.0' AND ABOVE | C.B. STD. 840.01 OR STD. 840.02 | FRAME, GRATES AND HOOD STANDARD 840.03 TYPE OF GRATE E | F | G | D.I. STD. 840.14 OR STD. 840.15 | D.I. FRAME & GRATE STD. 840.16 | G.D.I. TYPE "A" STD. 840.17 OR 840.26 | G.D.I. TYPE "B" STD. 840.18 OR 840.27 | G.D.I. TYPE "D" STD. 840.19 OR 840.28 | G.D.I. FRAME WITH GRATE STD. 840.22 | G.D.I. FRAME WITH TWO GRATES STD. 840.22 | G.D.I. (N.S.) FRAME WITH GRATE STD. 840.24 | G.D.I. (N.S.) FRAME WITH TWO GRATES STD. 840.24 | J.B. STD. 840.31 OR 840.32 | | | | | | | | CORR. STEEL ELBOWS NO. & SIZE | CONC. COLLARS CL. "B" C.Y. STD 840.72 | CONC. & BRICK PIPE PLUG, C.Y. STD. 840.71 | PIPE REMOVAL LIN.FT. | REMARKS |
|---|---|---|---|---|---|---|---|---|---|---|---|---|---|---|---|---|---|---

8/17/99

REVISIONS

PROJECT REFERENCE NO.	SHEET NO.
17BPJ3.R.43	4
R/W SHEET NO.	

ROADWAY DESIGN ENGINEER

NORTH CAROLINA PROFESSIONAL SEAL 022699 ENGINEER JAMES B. VOSO

HYDRAULICS ENGINEER

SOUTH CAROLINA PROFESSIONAL SEAL 028945 ENGINEER DONNA J. BOLDEN

Prepared in the Office of:

Mattern & Craig
CONSULTING ENGINEERS - SURVEYORS
12 BROAD STREET
ASHEVILLE, NORTH CAROLINA 28801
(828) 254-2201 - FAX (828) 254-4562

50 25 0 50 100
SCALE

DETAIL A
SPECIAL CUT DITCH
(Not to Scale)

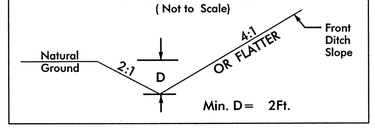

FROM -L- STA. 12+08 LT TO -L- STA. 12+30 LT

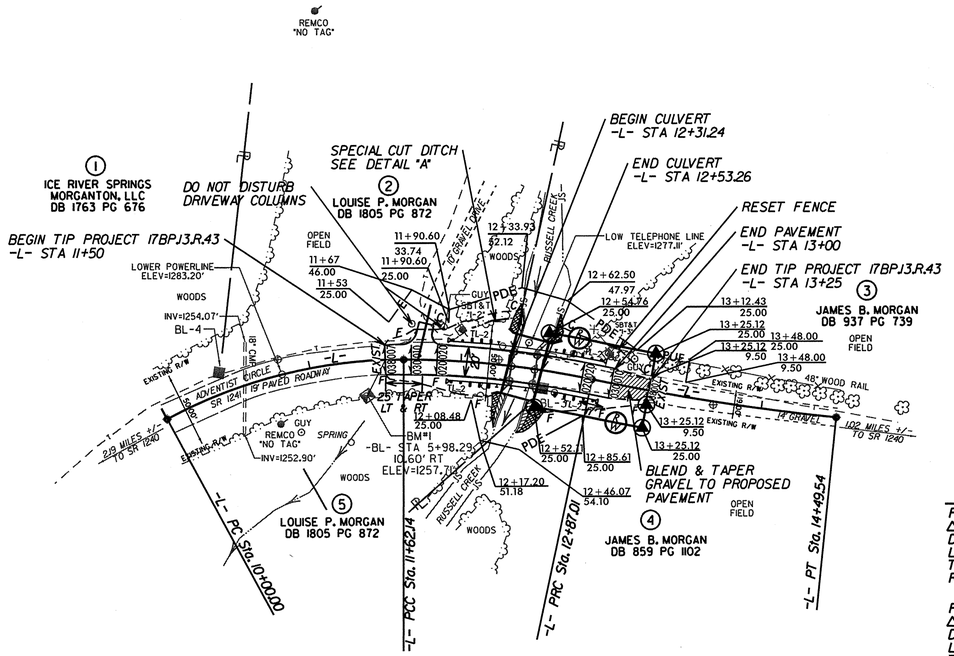

GPS-2

-L-

PI Sta 10+82.79	PI Sta 12+24.80
Δ = 28° 35' 04.5" (RT)	Δ = 11° 55' 25.2" (RT)
D = 17° 37' 46.1"	D = 9° 32' 57.5"
L = 162.14'	L = 124.86'
T = 82.79'	T = 62.66'
R = 325.00'	*R = 600.00'
	SE = NC
PI Sta 13+68.35	V = 10MPH
Δ = 6° 12' 30.4" (LT)	
D = 3° 49' 11.0"	
L = 162.54'	
T = 81.35'	
R = 1,500.00'	



STRUCTURE: 110320
COUNTY: BURKE

Scale 1" = 50'
50' 0 50' 100'

*DESIGN EXCEPTION: HORIZONTAL CURVE

BRIDGE HYDRAULIC DATA

DESIGN DISCHARGE	=	230	CFS
DESIGN FREQUENCY	=	2	YRS
DESIGN HW ELEVATION	=	1255.8	FT
BASE DISCHARGE	=	1100	CFS
BASE FREQUENCY	=	100	YRS
BASE HW ELEVATION	=	1259.69	FT
OVERTOPPING DISCHARGE	=	550	CFS
OVERTOPPING FREQUENCY	=	5 +/-	YRS
OVERTOPPING ELEVATION	=	1258.6	FT
DATE OF SURVEY	=	8-18-11	
W.S. ELEVATION AT DATE OF SURVEY	=	1254.0	FT

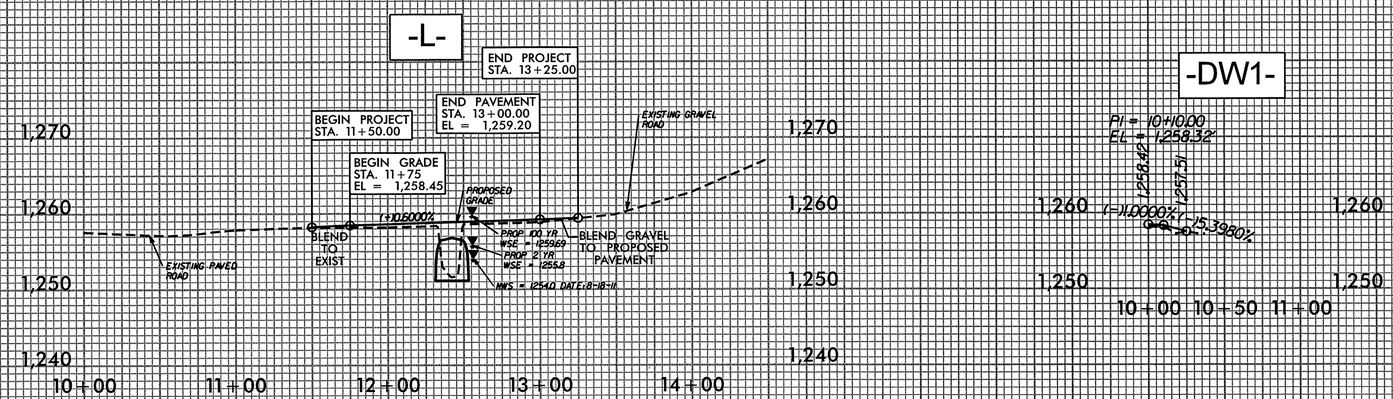

8:08:23 AM
H:\3260 NCDOT Div. 13 Bridges\320\Roadway\Prod\110320_rdy_psh.dgn
mmcgee

STATE OF NORTH CAROLINA
DIVISION OF HIGHWAYS

TRANSPORTATION MANAGEMENT PLAN

BURKE COUNTY

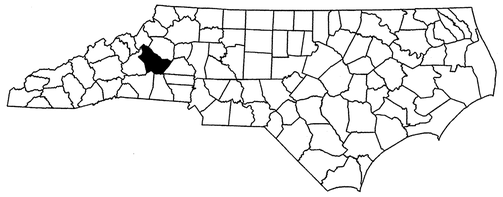

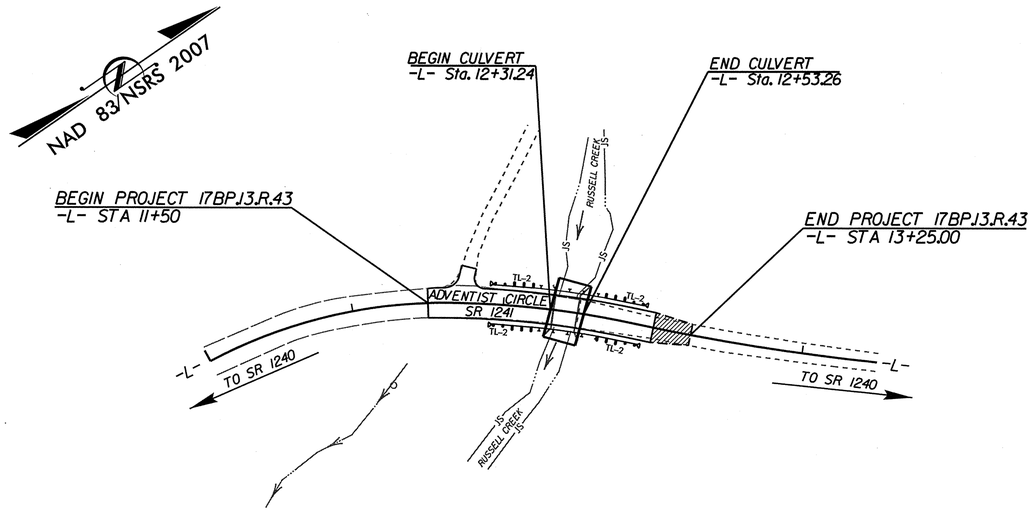

INDEX OF SHEETS

SHEET NO.	TITLE
TMP-1	TITLE SHEET, AND INDEX OF SHEETS
TMP-1A	LIST OF APPLICABLE ROADWAY STANDARD DRAWINGS, AND LEGEND
TMP-1B	TRANSPORTATION OPERATIONS PLAN: (MANAGEMENT STRATEGIES, GENERAL NOTES AND LOCAL NOTES)
TMP-2	TEMPORARY TRAFFIC CONTROL DETOUR
PMP-1	PAVEMENT MARKING PLAN

SHEET NO.
TMP-1

17BP.13.R.43

TIP PROJECT:



WORK ZONE SAFETY & MOBILITY
"from the MOUNTAINS to the COAST"

N.C.D.O.T. WORK ZONE TRAFFIC CONTROL
1561 MAIL SERVICE CENTER (MSC) RALEIGH, NC 27699-1561
750 N. GREENFIELD PARKWAY, GARNER, NC 27529 (DELIVERY)
PHONE: (919) 773-2800 FAX: (919) 771-2745

J. S. BOURNE, P.E. — *STATE TRAFFIC MANAGEMENT ENGINEER*
JAMES VOSO, P.E. — *TRAFFIC CONTROL PROJECT ENGINEER*
JASON SNAPP, P.E. — *TRAFFIC CONTROL PROJECT DESIGN ENGINEER*
BRIAN ROSS — *TRAFFIC CONTROL DESIGN ENGINEER*

DIVISION OF HIGHWAYS * STATE OF NORTH CAROLINA * DEPARTMENT OF TRANSPORTATION * WORK ZONE TRAFFIC CONTROL *

Mattern & Craig
CONSULTING ENGINEERS - SURVEYORS
12 BROAD STREET
ASHEVILLE, NORTH CAROLINA 28801
(828) 254-2201 - FAX (828) 254-4562

APPROVED: James Voso
DATE: 5/12/14

SEAL

NORTH CAROLINA PROFESSIONAL SEAL 022599 ENGINEER JAMES B. VOSO

9:09:49 AM
R:\3280 NCDOT Div. 13 Bridges\320\Traffic\TrafficControl\Roadway\110320_tc_tsh.dgn
bgross

PROJ. REFERENCE NO.	SHEET NO.
17BP.13.R.43	TMP-1A

ROADWAY STANDARD DRAWINGS

THE FOLLOWING ROADWAY STANDARDS AS SHOWN IN "ROADWAY STANDARD DRAWINGS" - PROJECT SERVICES UNIT - N.C. DEPARTMENT OF TRANSPORTATION - RALEIGH, N.C., DATED JANAUARY 2012 ARE APPLICABLE TO THIS PROJECT AND BY REFERENCE HEREBY ARE CONSIDERED A PART OF THESE PLANS:

STD. NO.	TITLE
1101.03	TEMPORARY ROAD CLOSURES
1110.01	STATIONARY WORK ZONE SIGNS
1145.01	BARRICADES
1205.01	PAVEMENT MARKINGS - LINE TYPES AND OFFSETS
1205.02	PAVEMENT MARKINGS - TWO LANE AND MULTILANE ROADWAYS
1205.12	PAVEMENT MARKINGS - BRIDGES
1261.01	GUARDRAIL AND BARRIER DELINEATORS - INSTALLATION SPACING
1261.02	GUARDRAIL AND BARRIER DELINEATORS - TYPES AND MOUNTING
1262.01	GUARDRAIL END DELINEATION

LEGEND

GENERAL

- DIRECTION OF TRAFFIC FLOW
- DIRECTION OF PEDESTRIAN TRAFFIC FLOW
- EXIST. PVMT.
- NORTH ARROW
- PROPOSED PVMT.
- WORK AREA
- REMOVAL
- USER DEFINED (IF NEEDED)
- USER DEFINED (IF NEEDED)

TRAFFIC CONTROL DEVICES

- BARRICADE (TYPE III)
- CONE
- DRUM SKINNY DRUM TUBULAR MARKER
- TEMPORARY CRASH CUSHION
- FLASHING ARROW BOARD
- FLAGGER
- LAW ENFORCEMENT
- TRUCK MOUNTED ATTENUATOR (TMA)
- CHANGEABLE MESSAGE SIGN

TEMPORARY SIGNING

- PORTABLE SIGN
- STATIONARY SIGN
- STATIONARY OR PORTABLE SIGN

SIGNALS

EXISTING PROPOSED TEMP TEMPORARY

PAVEMENT MARKINGS

- EXISTING LINES
- TEMPORARY LINES

PAVEMENT MARKERS

- CRYSTAL/CRYSTAL
- CRYSTAL/RED
- YELLOW/YELLOW

PAVEMENT MARKING SYMBOLS

PAVEMENT MARKING SYMBOLS

Mattern & Craig
CONSULTING ENGINEERS - SURVEYORS
12 BROAD STREET
ASHEVILLE, NORTH CAROLINA 28801
(828) 254-2201 - FAX (828) 254-4562

APPROVED: _____ DATE: 5/12/14

NORTH CAROLINA PROFESSIONAL SEAL 022599 ENGINEER JAMES B. VOSO

DIVISION OF HIGHWAYS · STATE OF NORTH CAROLINA · DEPARTMENT OF TRANSPORTATION · WORK ZONE TRAFFIC CONTROL

ROADWAY STANDARD DRAWINGS & LEGEND

9:12:32 AM
R:\3280 NCDOT Div.13 Bridges\320\Traffic\TrafficControl\Roadway\U0320_tc_tsh.dgn
bgross

PROJ. REFERENCE NO.	SHEET NO.
17BP.13.R.43	TMP-1B

GENERAL NOTES / LOCAL NOTES

GENERAL NOTES

CHANGES MAY BE REQUIRED WHEN PHYSICAL DIMENSIONS IN THE DETAIL DRAWINGS, STANDARD DETAILS, AND ROADWAY DETAILS ARE NOT ATTAINABLE TO MEET FIELD CONDITIONS OR RESULT IN DUPLICATE OR UNDESIRED OVERLAPPING OF DEVICES, MODIFICATION MAY INCLUDE: MOVING, SUPPLEMENTING, COVERING, OR REMOVAL OF DEVICES AS DIRECTED BY THE ENGINEER

THE FOLLOWING GENERAL NOTES APPLY AT ALL TIMES FOR THE DURATION OF THE CONSTRUCTION PROJECT, EXCEPT WHEN OTHERWISE NOTED IN THE PLAN, OR DIRECTED BY THE ENGINEER.

TRAFFIC PATTERN ALTERATIONS

A. NOTIFY THE ENGINEER TWENTY ONE (21) CALENDAR DAYS PRIOR TO ANY TRAFFIC PATTERN ALTERATION.

SIGNING

B. INSTALL ADVANCE WORK ZONE WARNING SIGNS WHEN WORK IS WITHIN 40 FT FROM THE EDGE OF TRAVEL LANE AND NO MORE THAN THREE (3) DAYS PRIOR TO THE BEGINNING OF CONSTRUCTION.

C. CONTRACTOR TO PROVIDE SIGNING AND DEVICES REQUIRED TO CLOSE THE ROAD ACCORDING TO THE ROADWAY STANDARD DRAWINGS AND TRAFFIC CONTROL PLANS.

CONTRACTOR TO PROVIDE SIGNING REQUIRED FOR THE OFF-SITE DETOUR ROUTE AS SHOWN IN THE TRAFFIC CONTROL PLANS.

D. CONTRACTOR TO COVER OR REMOVE ALL SIGNS AND DEVICES REQUIRED TO CLOSE THE ROAD WHEN ROAD CLOSURE IS NOT IN OPERATION.

CONTRACTOR TO COVER OR REMOVE ALL SIGNS AND DEVICES REQUIRED FOR THE OFF-SITE DETOUR WHEN THE DETOUR IS NOT IN OPERATION.

E. ENSURE ALL NECESSARY SIGNING IS IN PLACE PRIOR TO ALTERING ANY TRAFFIC PATTERN.

TRAFFIC CONTROL DEVICES

F. PLACE TYPE III BARRICADES, WITH "ROAD CLOSED" SIGN R11-2 ATTACHED, OF SUFFICIENT LENGTH TO CLOSE ENTIRE ROADWAY.

PAVEMENT MARKINGS AND MARKERS

G. TIE PROPOSED PAVEMENT MARKING LINES TO EXISTING PAVEMENT MARKING LINES

LOCAL NOTES

CONTRACTOR TO MAINTAIN DRIVEWAY ACCESS AT ALL TIMES.

Mattern & Craig
CONSULTING ENGINEERS • SURVEYORS
12 BROAD STREET
ASHEVILLE, NORTH CAROLINA 28801
(828) 254-2201 - FAX (828) 254-4562

APPROVED: _____ DATE: 5/12/14

NORTH CAROLINA PROFESSIONAL SEAL 022599 ENGINEER JAMES B. VOSO

DIVISION OF HIGHWAYS • STATE OF NORTH CAROLINA • DEPARTMENT OF TRANSPORTATION • WORK ZONE TRAFFIC CONTROL

TRANSPORTATION OPERATIONS PLAN

9:2:07 AM
R:\3280 NCDOT Div.13 Bridges\320\Traffic\TrafficControl\Roadway\II0320_tc_tsh.dgn
Dgross

PROJ. REFERENCE NO.	SHEET NO.
17BP.14.R.43	TMP-2

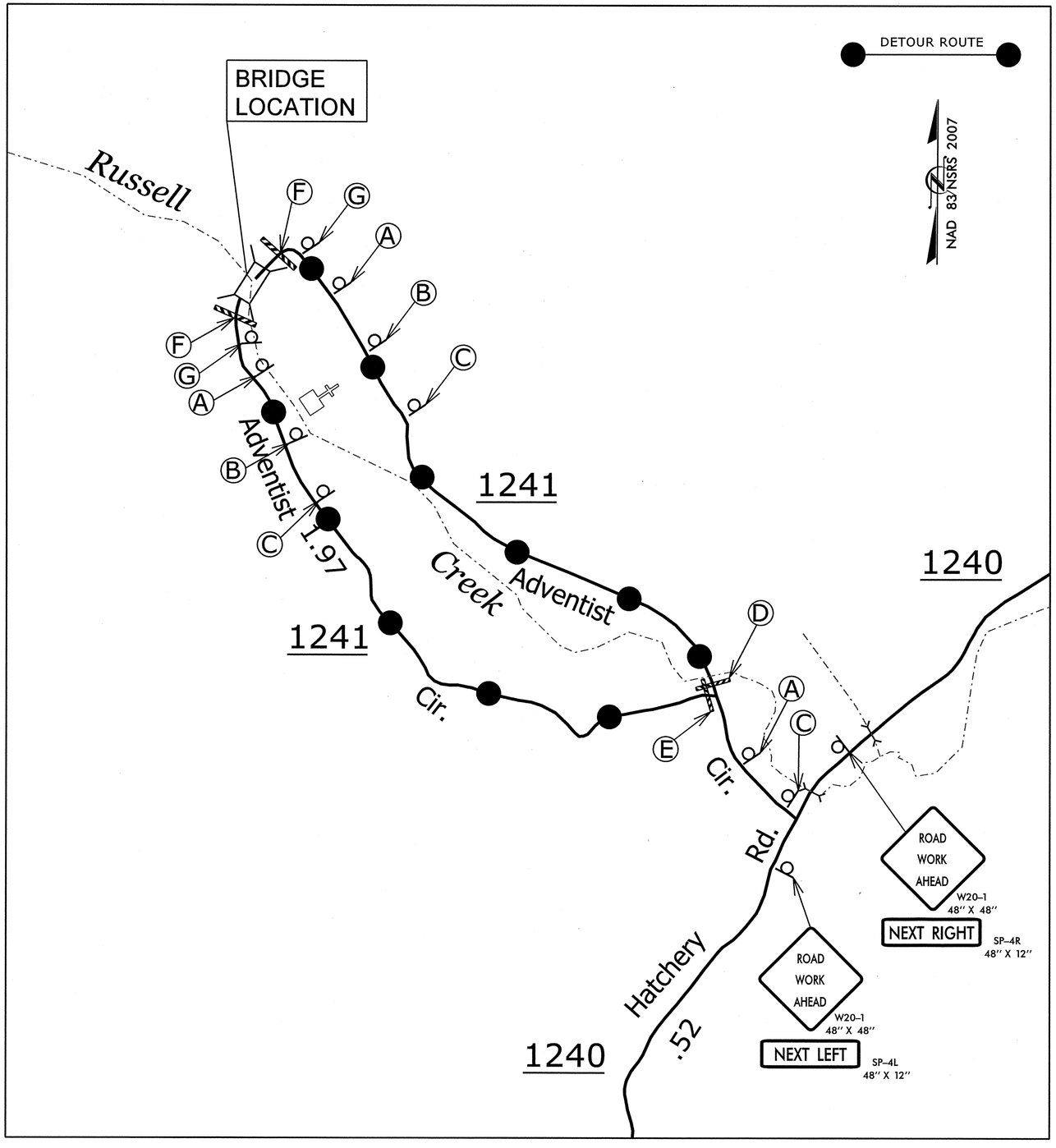

ASSEMBLY A



ASSEMBLY B



ASSEMBLY C



ASSEMBLY D

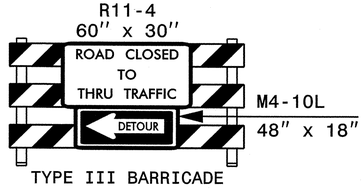

TYPE III BARRICADE

ASSEMBLY E

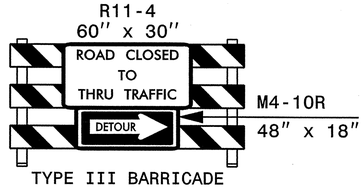

TYPE III BARRICADE

ASSEMBLY F

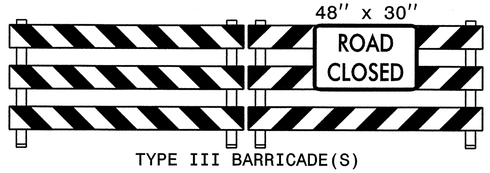

TYPE III BARRICADE(S)

ASSEMBLY G



REFER TO RSD 1101.03 FOR SIGN SPACING (SHEET 1 OF 9)

Mattern & Craig
CONSULTING ENGINEERS - SURVEYORS
12 BROAD STREET
ASHEVILLE, NORTH CAROLINA 28801
(828) 254-2201 - FAX (828) 254-4562

APPROVED: _____ DATE: 5/12/14

NORTH CAROLINA PROFESSIONAL SEAL 022599 ENGINEER JAMES B. VOSS

DIVISION OF HIGHWAYS * STATE OF NORTH CAROLINA * DEPARTMENT OF TRANSPORTATION * WORK ZONE TC CONTROL

TEMPORARY DETOUR DETAIL

PROJ. REFERENCE NO.	SHEET NO.
17BP.13.R.43	PMP-1

NAD 83/
NSRS 2007

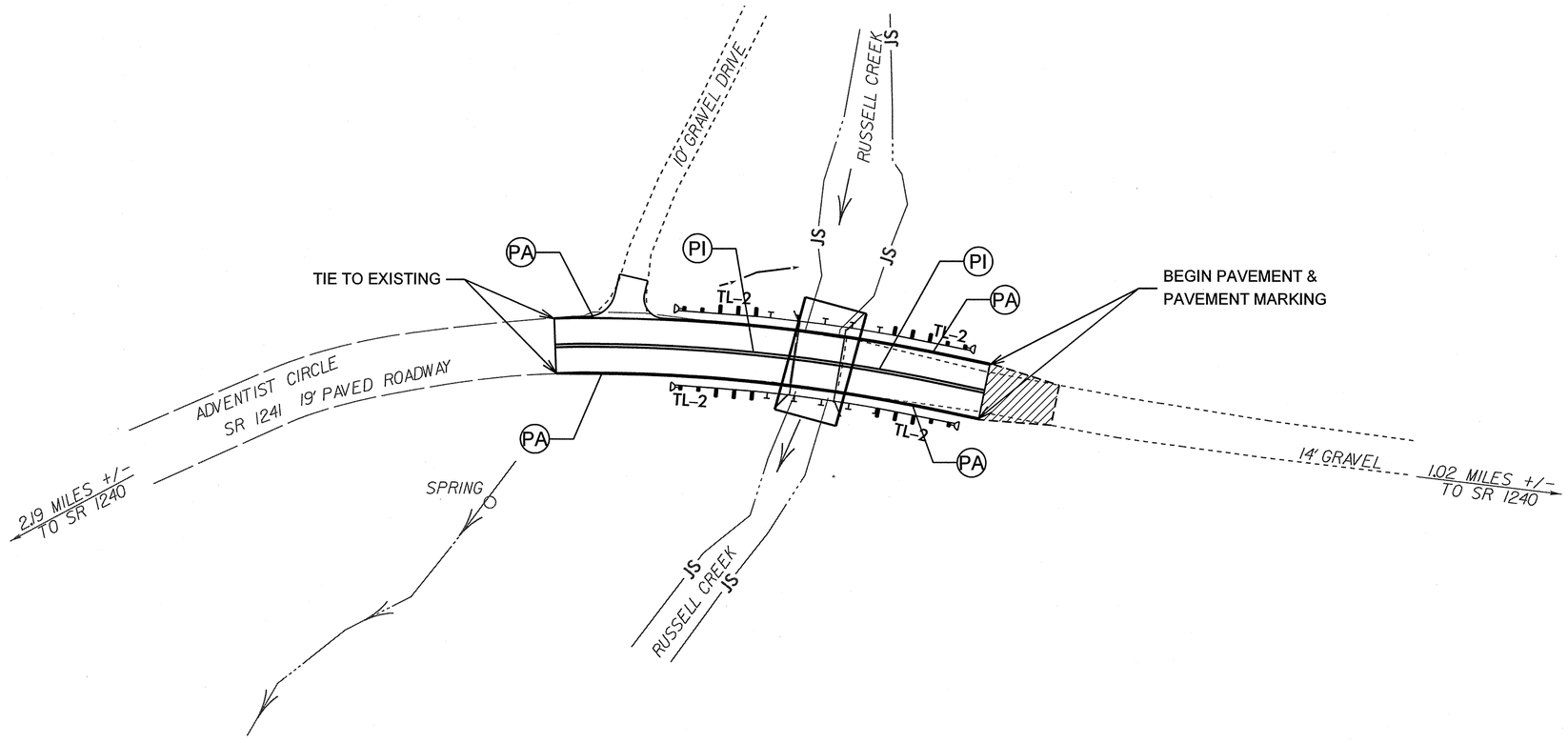

LEGEND

PA WHITE EDGELINE
PI YELLOW DOUBLE CENTER

PROJECT MARKING SCHEDULE
BRIDGE 320

SYMBOL	DESCRIPTION	PAY ITEM	PAY ITEM QUANTITY
PA	WHITE EDGELINE	PAINT (4") (DOUBLE COAT)	600 LF
PI	DOUBLE YELLOW CENTER	PAINT (4") (DOUBLE COAT)	600 LF

GRAPHIC SCALE
25' 0' 25' 50'
100'

PLANS

Mattern & Craig
CONSULTING ENGINEERS - SURVEYORS
12 BROAD STREET
ASHEVILLE, NORTH CAROLINA 28801
(828) 254-2201 - FAX (828) 254-4562

APPROVED: _____ DATE: 5/12/14

NORTH CAROLINA PROFESSIONAL SEAL 022599 ENGINEER JAMES B. VOSO

DIVISION OF HIGHWAYS * STATE OF NORTH CAROLINA * DEPARTMENT OF TRANSPORTATION * WORK ZONE TRAFFIC CONTROL

PAVEMENT MARKING PLAN

9:15:21 AM
R:\3280 NCDOT Div. 13 Bridges\320\Traffic\TrafficControl\Roadway\I0320_tc_pmp.dgn
bgross

PROJECT NO: 17BP.13.R.43

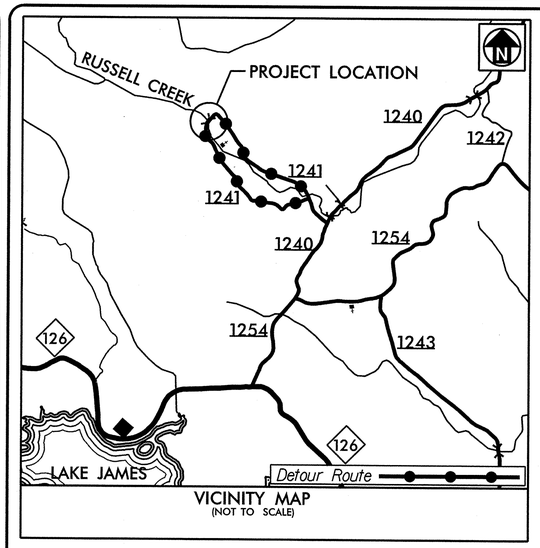

STATE OF NORTH CAROLINA
DIVISION OF HIGHWAYS

PLAN FOR PROPOSED
HIGHWAY EROSION CONTROL

BURKE COUNTY

LOCATION: BRIDGE NO. 320 OVER RUSSELL CREEK ON SR 1241

TYPE OF WORK: GRADING, DRAINAGE, PAVING, & STRUCTURE

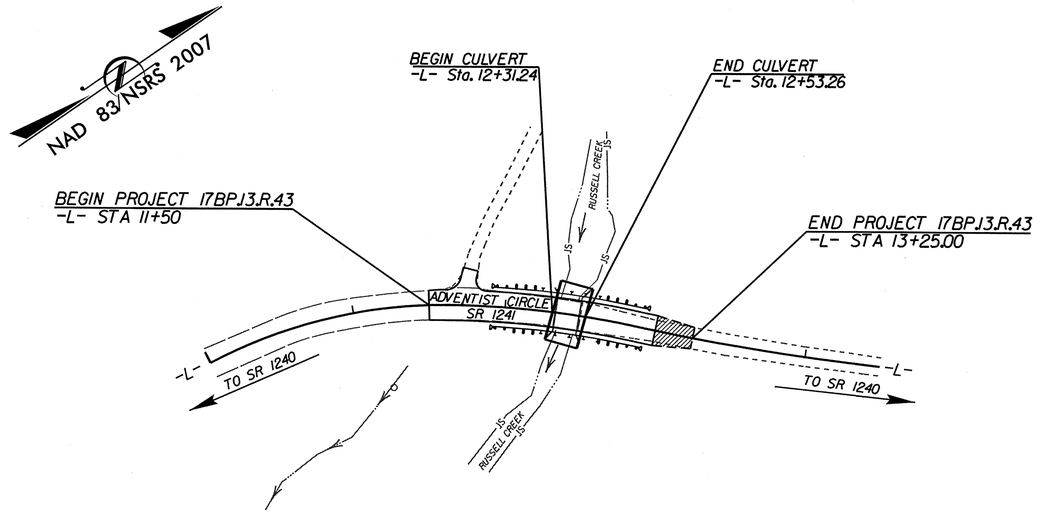

STATE	STATE PROJECT REFERENCE NO.	SHEET NO.	TOTAL SHEETS
N.C.	17BP.13.R.43	EC-1	

STATE PROJ. NO.	F. A. PROJ. NO.	DESCRIPTION

EROSION AND SEDIMENT CONTROL MEASURES

Std. #	Description	Symbol
1630.03	Temporary Silt Ditch	TSD
1630.05	Temporary Diversion	TD
1605.01	Temporary Silt Fence	
1606.01	Special Sediment Control Fence	
1622.01	Temporary Berms and Slope Drains	
1630.02	Silt Basin Type B	
1633.01	Temporary Rock Silt Check Type-A	
	Temporary Rock Silt Check Type-A with Matting and Polyacrylamide (PAM)	
1633.02	Temporary Rock Silt Check Type-B	
	Wattle / Coir Fiber Wattle	ST CPT
	Wattle / Coir Fiber Wattle with Polyacrylamide (PAM)	
1634.01	Temporary Rock Sediment Dam Type-A	
1634.02	Temporary Rock Sediment Dam Type-B	
1635.01	Rock Pipe Inlet Sediment Trap Type-A	
1635.02	Rock Pipe Inlet Sediment Trap Type-B	
1630.04	Stilling Basin	
1630.06	Special Stilling Basin	
	Rock Inlet Sediment Trap:	
1632.01	Type A	A
1632.02	Type B	B
1632.03	Type C	C
	Skimmer Basin	
	Tiered Skimmer Basin	
	Infiltration Basin	

THIS PROJECT CONTAINS EROSION CONTROL PLANS FOR CLEARING AND GRUBBING PHASE OF CONSTRUCTION.

DANA BOLDEN
LEVEL IIIA NAME

3171
LEVEL IIIA CERTIFICATION NO.

CLEARING ON THIS PROJECT SHALL BE PERFORMED TO THE LIMITS ESTABLISHED BY METHOD II

GRAPHIC SCALE

15 0 30

PLANS

ROADSIDE ENVIRONMENTAL UNIT
DIVISION OF HIGHWAYS
STATE OF NORTH CAROLINA

THESE EROSION AND SEDIMENT CONTROL PLANS COMPLY WITH THE REGULATIONS SET FORTH BY THE NCG-010000 GENERAL CONSTRUCTION PERMIT EFFECTIVE AUGUST 3, 2011 ISSUED BY THE NORTH CAROLINA DEPARTMENT OF ENVIRONMENT AND NATURAL RESOURCES DIVISION OF WATER QUALITY.

Prepared In the Office of:

Mattern & Craig
CONSULTING ENGINEERS - SURVEYORS
12 BROAD STREET
ASHEVILLE, NORTH CAROLINA 28801
(828) 254-2201 - FAX (828) 254-4562

Reviewed In the Office of:

ROADSIDE ENVIRONMENTAL UNIT
1 South Wilmington St.
Raleigh, NC 27611

2012 STANDARD SPECIFICATIONS

Roadway Standard Drawings

The following roadway english standards as appear in "Roadway Standard Drawings"– Roadway Design Unit – N. C. Department of Transportation – Raleigh, N. C., dated January 2012 and the latest revison thereto are applicable to this project and by reference hereby are considered a part of these plans.

1604.01	Railroad Erosion Control Detail	1632.01	Rock Inlet Sediment Trap Type A
1605.01	Temporary Silt Fence	1632.02	Rock Inlet Sediment Trap Type B
1606.01	Special Sediment Control Fence	1632.03	Rock Inlet Sediment Trap Type C
1607.01	Gravel Construction Entrance	1633.01	Temporary Rock Silt Check Type A
1622.01	Temporary Berms and Slope Drains	1633.02	Temporary Rock Silt Check Type B
1630.01	Riser Basin	1634.01	Temporary Rock Sediment Dam Type A
1630.02	Silt Basin Type B	1634.02	Temporary Rock Sediment Dam Type B
1630.03	Temporary Silt Ditch	1635.01	Rock Pipe Inlet Sediment Trap Type A
1630.04	Stilling Basin	1635.02	Rock Pipe Inlet Sediment Trap Type B
1630.05	Temporary Diversion	1640.01	Coir Fiber Baffle
1630.06	Special Stilling Basin	1645.01	Temporary Stream Crossing
1631.01	Matting Installation		

DOT Div. 13 Bridge 320\Environmental\Design\110320_ec_tsh.dgn
9/21/12 AM
bgross

PROJECT REFERENCE NO.	SHEET NO.
17BPJ3.R.43	EC-2
R/W SHEET NO.	

ROADWAY DESIGN ENGINEER

NORTH CAROLINA PROFESSIONAL SEAL 027593 ENGINEER JAMES B. VOSO

HYDRAULICS ENGINEER

NORTH CAROLINA PROFESSIONAL SEAL 026945 ENGINEER DANA J. BOLDEN

COIR FIBER WATTLE WITH POLYACRYLAMIDE (PAM) DETAIL

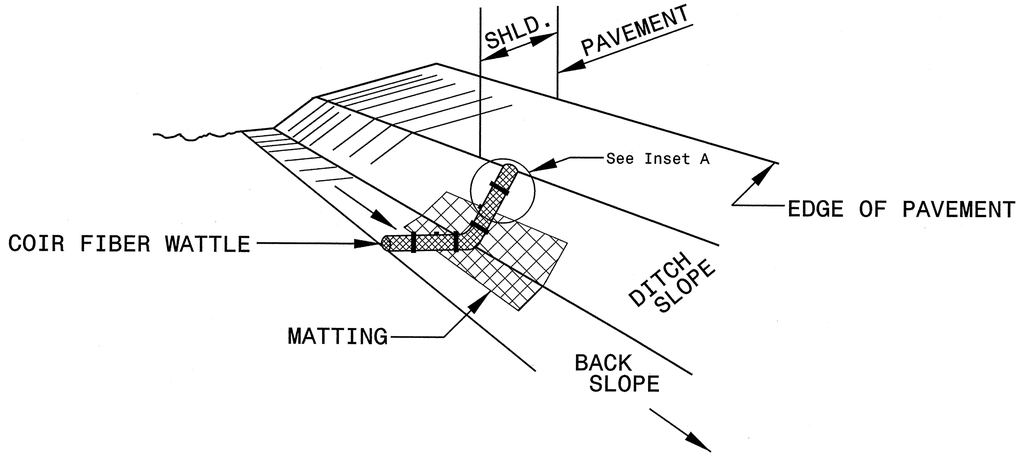

ISOMETRIC VIEW

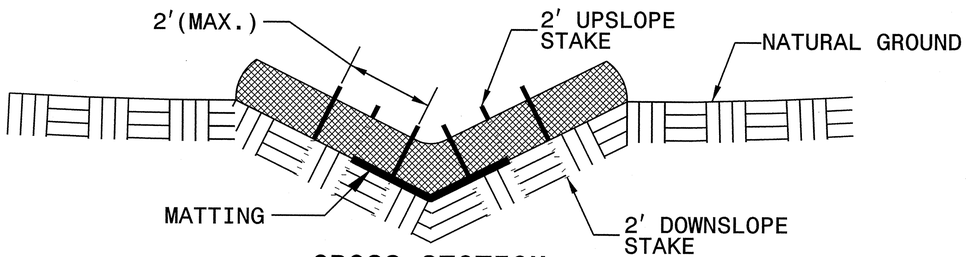

CROSS SECTION VEE DITCH

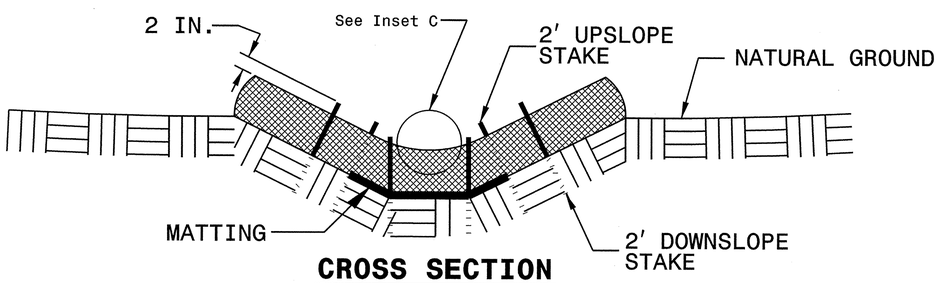

CROSS SECTION TRAPEZOIDAL DITCH

NOTES:

USE MINIMUM 12 IN. DIAMETER COIR FIBER (COCONUT FIBER) WATTLE.

USE 2 FT. WOODEN STAKES WITH A 2 IN. BY 2 IN. NOMINAL CROSS SECTION.

ONLY INSTALL WATTLE(S) TO A HEIGHT IN DITCH SO FLOW WILL NOT WASH AROUND WATTLE AND SCOUR DITCH SLOPES AND AS DIRECTED.

INSTALL A MINIMUM OF 2 UPSLOPE STAKES AND 4 DOWNSLOPE STAKES AT AN ANGLE TO WEDGE WATTLE TO BOTTOM OF DITCH.

PROVIDE STAPLES MADE OF 0.125 IN. DIAMETER STEEL WIRE FORMED INTO A U SHAPE NOT LESS THAN 12″ IN LENGTH.

INSTALL STAPLES APPROXIMATELY EVERY 1 LINEAR FOOT ON BOTH SIDES OF WATTLE AND AT EACH END TO SECURE IT TO THE SOIL.

INSTALL MATTING IN ACCORDANCE WITH SECTION 1631 OF THE STANDARD SPECIFICATIONS.

PRIOR TO POLYACRYLAMIDE (PAM) APPLICATION, OBTAIN A SOIL SAMPLE FROM PROJECT LOCATION, AND FROM OFFSITE MATERIAL, AND ANALYZE FOR APPROPRIATE PAM FLOCCULANT TO BE APPLIED TO EACH WATTLE.

INITIALLY APPLY 2 OUNCES OF ANIONIC OR NEUTRALLY CHARGED PAM OVER WATTLE WHERE WATER WILL FLOW AND 1 OUNCE OF PAM ON MATTING ON EACH SIDE OF WATTLE. REAPPLY PAM AFTER EVERY RAINFALL EVENT THAT IS EQUAL TO OR EXCEEDS 0.50 IN.

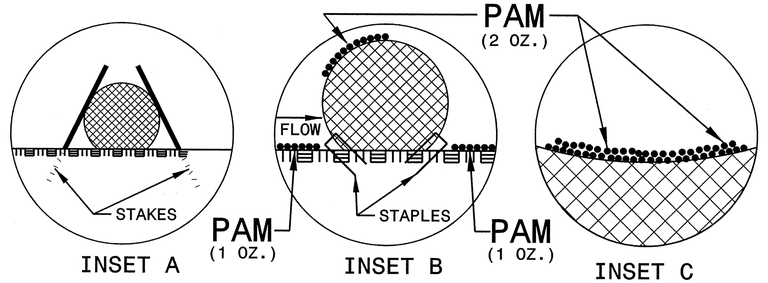

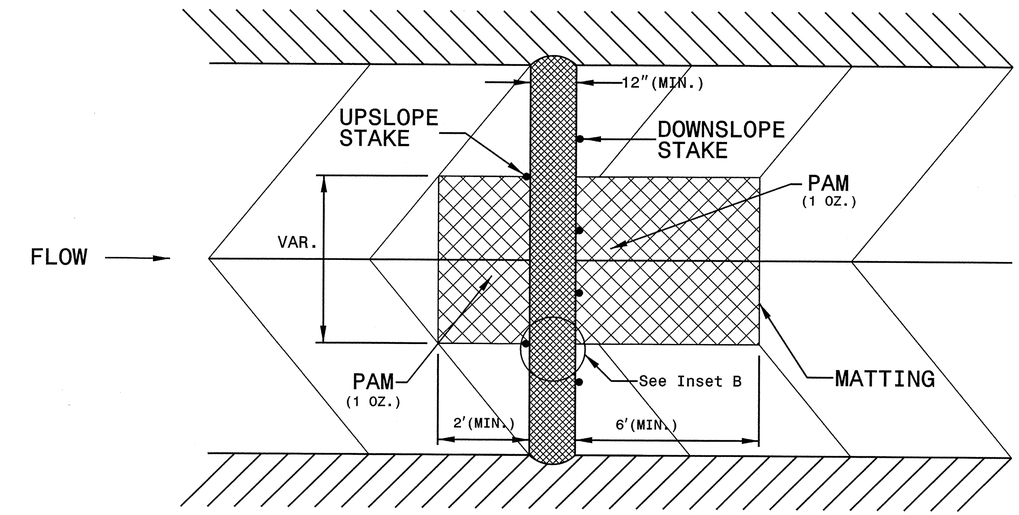

TOP VIEW

PROJECT REFERENCE NO.	SHEET NO.
17BPJ3.R.43	EC-3

DIVISION OF HIGHWAYS
STATE OF NORTH CAROLINA

SOIL STABILIZATION TIMEFRAMES

SITE DESCRIPTION	STABILIZATION TIME	TIMEFRAME EXCEPTIONS
PERIMETER DIKES, SWALES, DITCHES AND SLOPES	7 DAYS	NONE
HIGH QUALITY WATER (HQW) ZONES	7 DAYS	NONE
SLOPES STEEPER THAN 3:1	7 DAYS	IF SLOPES ARE 10' OR LESS IN LENGTH AND ARE NOT STEEPER THAN 2:1, 14 DAYS ARE ALLOWED.
SLOPES 3:1 OR FLATTER	14 DAYS	7 DAYS FOR SLOPES GREATER THAN 50' IN LENGTH.
ALL OTHER AREAS WITH SLOPES FLATTER THAN 4:1	14 DAYS	NONE, EXCEPT FOR PERIMETERS AND HQW ZONES.

PROJECT REFERENCE NO.	SHEET NO.
17BPJ3.R.43	EC-3A

ROADWAY DESIGN ENGINEER

NORTH CAROLINA PROFESSIONAL SEAL 022699 ENGINEER JAMES B. VOSO

HYDRAULICS ENGINEER

NORTH CAROLINA PROFESSIONAL SEAL 028945 ENGINEER DANA J. BOLDEN

DIVISION OF HIGHWAYS
STATE OF NORTH CAROLINA

SOIL STABILIZATION SUMMARY SHEET

MATTING FOR EROSION CONTROL

CONST SHEET NO.	LINE	FROM STATION	TO STATION	SIDE	ESTIMATE (SY)
			SUBTOTAL		0
MISCELLANEOUS MATTING TO BE INSTALLED AS DIRECTED BY THE ENGINEER					683
				TOTAL	683
				SAY	700

PROJECT REFERENCE NO.	SHEET NO.
17BPJ3.R.43	EC-4
R/W SHEET NO.	

ROADWAY DESIGN ENGINEER

NORTH CAROLINA PROFESSIONAL SEAL 022659 ENGINEER JAMES B. VOSO

HYDRAULICS ENGINEER

NORTH CAROLINA PROFESSIONAL SEAL 028945 ENGINEER DANA J. BOLDEN

DETAIL A

SPECIAL CUT DITCH

(Not to Scale)

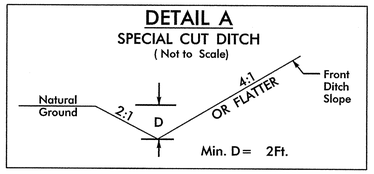

FROM -L- STA. 12+08 LT TO -L- STA. 12+30 LT

NOTES: ANY DEVIATION FROM OPTIONS GIVEN WILL REQUIRE PRIOR APPROVAL BY ENGINEER.

ADDITIONAL EROSION CONTROL DEVICES MAY NEED TO BE INSTALLED AS DIRECTED BY THE ENGINEER.

IF ANY PUMPED DEWATERING IS REQUIRED, A SPECIAL STILLING BASIN SHALL BE PROVIDED AS NEEDED

NOTE:

PLACE TEMPORARY ROCK SILT CHECKS TYPE – A AT DRAINAGE OUTLETS.

CLEARING AND GRUBBING EROSION CONTROL FOR CONSTRUCTION SHEET 4

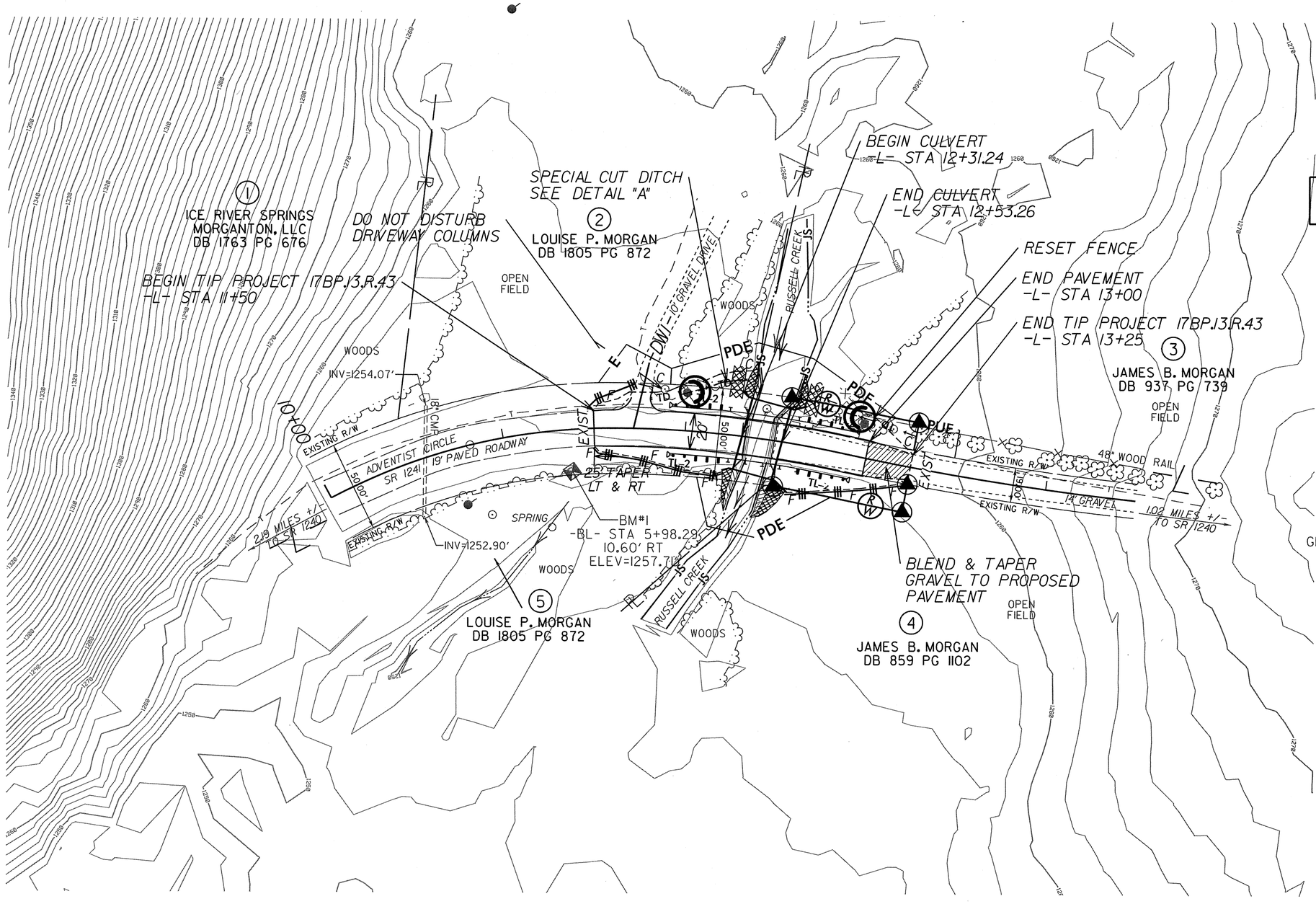

DETAIL A
SPECIAL CUT DITCH
(Not to Scale)

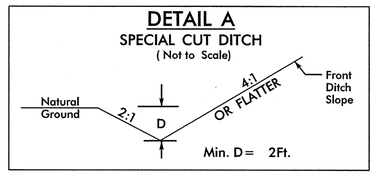

FROM -L- STA. 12+08 LT TO -L- STA. 12+30 LT

PROJECT REFERENCE NO.	SHEET NO.
17BP.13.R.43	EC-5
R/W SHEET NO.	

ROADWAY DESIGN ENGINEER

NORTH CAROLINA PROFESSIONAL SEAL 028929 ENGINEER JAMES B. VOSO

HYDRAULICS ENGINEER

NORTH CAROLINA PROFESSIONAL SEAL 028945 ENGINEER DANA J. BOLDEN

NOTES: ANY DEVIATION FROM OPTIONS GIVEN WILL REQUIRE PRIOR APPROVAL BY ENGINEER.

ADDITIONAL EROSION CONTROL DEVICES MAY NEED TO BE INSTALLED AS DIRECTED BY THE ENGINEER.

IF ANY PUMPED DEWATERING IS REQUIRED, A SPECIAL STILLING BASIN SHALL BE PROVIDED AS NEEDED

NOTE:
PLACE TEMPORARY ROCK SILT CHECKS TYPE – A AT DRAINAGE OUTLETS.

PLACE MATTING ON SLOPES FOR EROSION CONTROL AS WORK ALLOWS

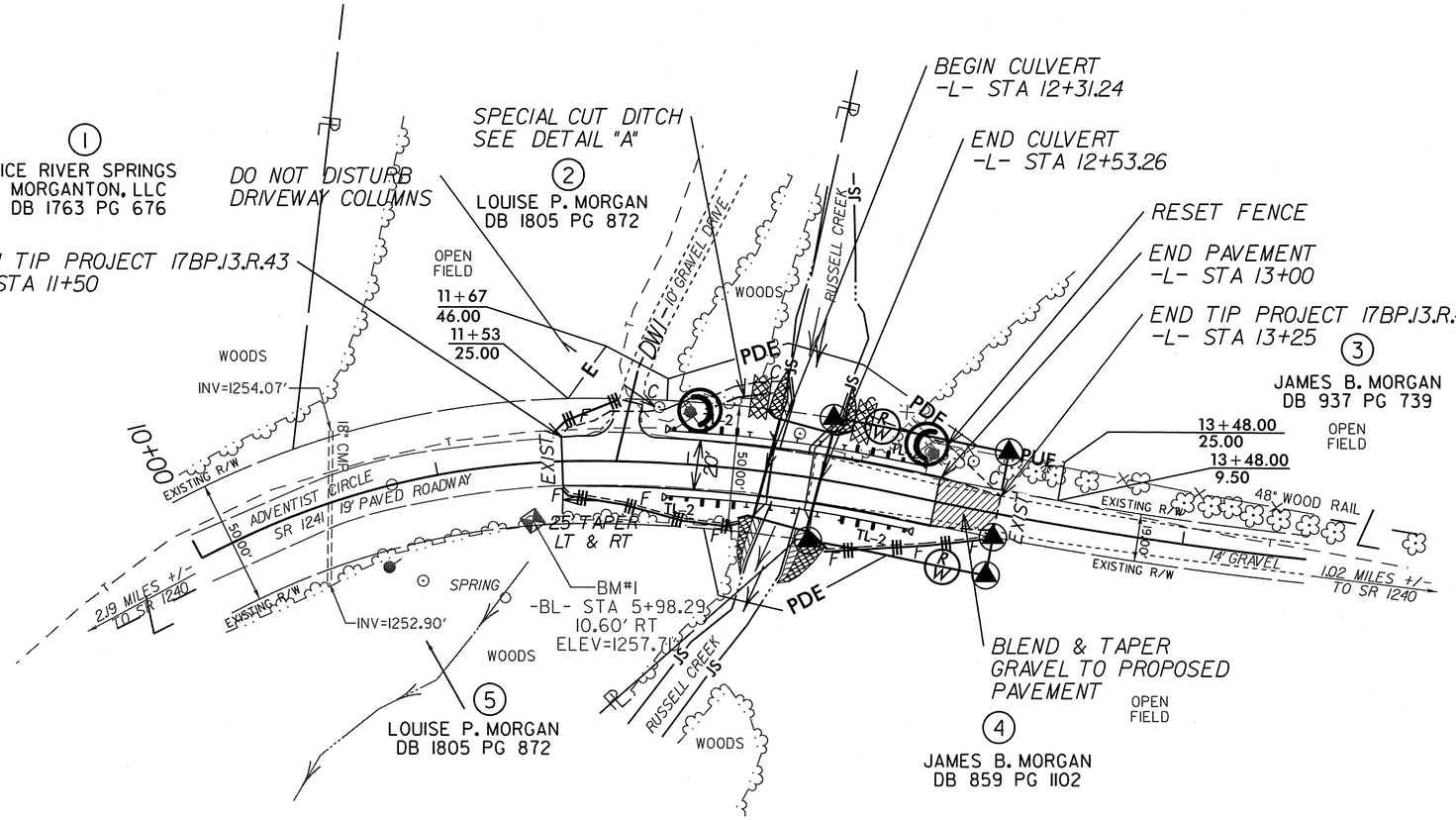

CULVERT CONSTRUCTION SEQUENCE STA. 11+10 -L-

PROJECT REFERENCE NO.	SHEET NO.
17BPJ3.R.43	EC-6
R/W SHEET NO.	

ROADWAY DESIGN ENGINEER

NORTH CAROLINA PROFESSIONAL SEAL 022283 ENGINEER JAMES B. VOSO

HYDRAULICS ENGINEER

SEAL 028945 ENGINEER DANA J. BOLDEN

1. SET UP BYPASS PUMP AND TEMPORARY PIPING ACCORDING TO THE NCDOT "BEST MANAGEMENT PRACTICES FOR CONSTRUCTION AND MAINTENANCE ACTIVITIES" MANUAL.
2. CONSTRUCT IMPERVIOUS DIKES.
3. UTILIZE SPECIAL STILL BASIN AS STILLING BASIN DURING PUMPING OPERATIONS.
4. CONSTRUCT PROPOSED CULVERT AND CHANNEL IMPROVEMENTS UP TO THE IMPERVIOUS DIKES.
5. UPON COMPLETION OF THE CONSTRUCTION, REMOVE IMPERVIOUS DIKES, BYPASS PUMP, AND TEMPORARY PIPE. COMPLETE ROADWAY AND REMAINING CHANNEL IMPROVEMENTS.

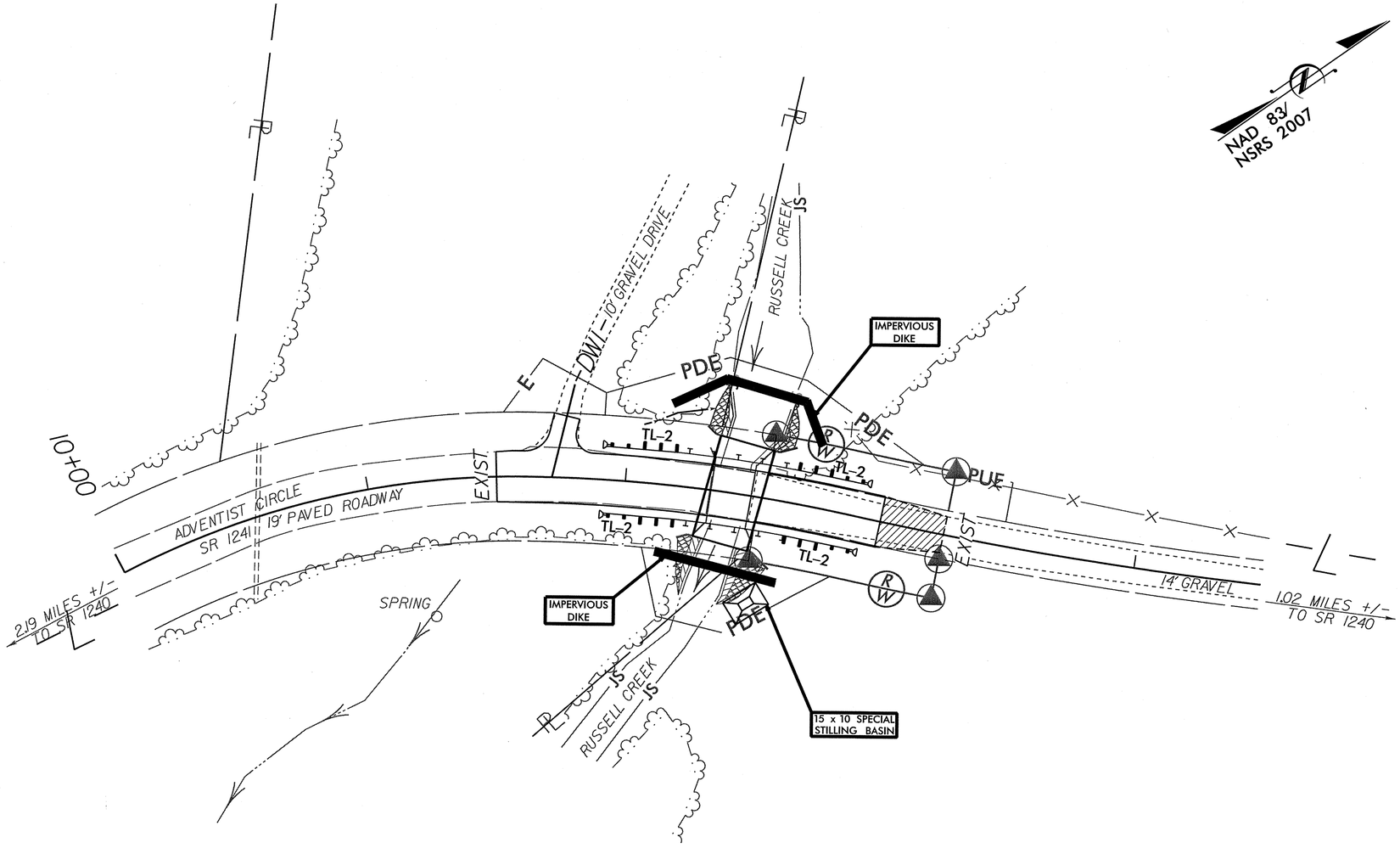

SPECIAL STILLING BASIN:

Description

This work consists of furnishing, placing, and removing special stilling basin(s) as directed. The special stilling basin shall be used to filter pumped water during construction of drilled piers, footing excavation, and/or culvert construction. The special stilling basin shall also be used for sediment storage at the outlet of temporary slope drain pipe(s).

Materials

Refer to Division 10

Item	Section
Filter Fabric for Drainage, Type 2	1056
Sediment Control Stone	1005

The filter fabric and sediment control stone shall be clean and shall not contain debris.

The special stilling basin shall be a water permeable fabric bag that traps sand, silt, and fines as sediment-laden water is pumped into it, or as runoff flows into it through the temporary slope drain pipe(s).

The special stilling basin shall be a bag constructed to a minimum size of 10* x 15* made from a nonwoven fabric. It shall have a sewn-in 8" (maximum) spout for receiving pump discharge. The bag seams shall be sewn with a double needle machine using a high strength thread. The seams shall have a minimum wide width strength as follows:

Test Method	Minimum Specifications
ASTM D-4884	60 lb/in

The fabric used to construct the bag shall be stabilized to provide resistance to ultra-violet degradation and meet the following specifications for flow rates, strength, and permeability:

Property	Test Method	Minimum Specifications
Weight	ASTM D-3776	8.0 oz/yd
Grab tensile	ASTM D-4632	200.0 lb
Puncture	ASTM D-4833	130.0 lb
Flow rate	ASTM D-4491	80.0 gal/min/sf
Permittivity	ASTM D-4491	1.2 1/sec
UV Resistance	ASTM D-4355	70.0%

Construction Methods

The Contractor shall install the special stilling basin(s), filter fabric, and stone in accordance with Standard Drawing No. 1630.06 and at locations on the plans and as directed.

The special stilling basin(s) shall be constructed such that it is portable and can be used adjacent to each drilled pier, footing, and/or culvert. Temporary slope drain pipe(s) shall be attached to the special stilling basin(s) so that the runoff in the slope drain pipe(s) flows directly into the special stilling basin(s). The special stilling basin(s) shall be placed so the incoming water flows into and through the bag without causing erosion. The neck or spout of the bag shall be tied off tightly to stop the water from flowing out of the bag without going through the walls. If applicable, the neck or spout of the silt bag shall be cut to allow for a slope drain pipe to be inserted into the special stilling basin, and tied off tightly to stop the water from flowing out of the bag.

The special stilling basin(s) shall be replaced and disposed of when it is * full of sediment or when it is impractical for the bag to filter the sediment out at a reasonable flow rate. Prior approval from the Engineer shall be received before removal and replacement.

The Contractor shall be responsible for providing a sufficient quantity of bags to contain silt from pumped effluent during construction of drilled piers, footing excavation, and/or culvert construction. A sufficient quantity of special stilling basins shall be provided to contain sediment from temporary slope drain runoff.

PROJECT REFERENCE NO.	SHEET NO.
17BP.13.R.43	X-1A

STATE OF NORTH CAROLINA
DIVISION OF HIGHWAYS

CROSS SECTION SUMMARY

LOCATION	UNCLASSIFIED EXCAVATION	EMBT+%
-L- 11+50 TO 11+75	0	6
-L- 11+75 TO 12+00	2	14
-L- 12+00 TO 12+25	6	25
-L- 12+25 TO 12+50	3	38
-L- 12+50 TO 12+75	3	35
-L- 12+75 TO 13+00	5	19
-L- 13+00 TO 13+25	2	7

Note: Embankment column does not include fill for undercut.

Approximate quantities only. Unclassified excavation, borrow excavation, shoulder borrow, fine grading, clearing and grubbing, breaking of existing pavement and removal of existing pavement will be paid for at the lump sum price for "Grading".

8:52:50 AM
R:\3280 NCDOT Div.13 Bridges\320\Roadway\Proj\110320_rdy_typ.dgn
bgross

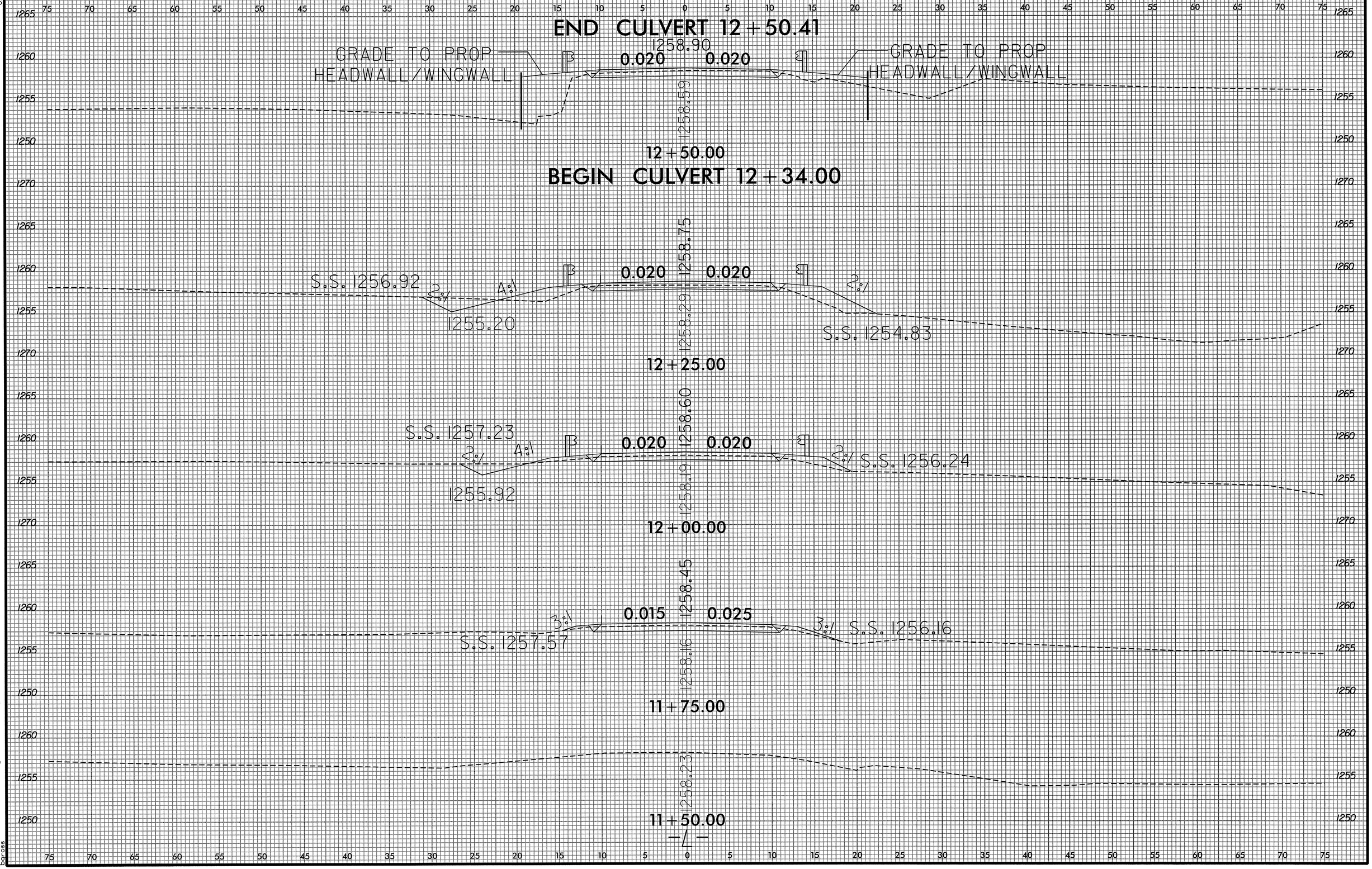

8/23/99

9:31:37 AM
R:\3280 NCDOT Div.13 Bridges\320\Roadway\XSC\110320_rdy_xpl.dgn
bgross

8/23/99

0 2.5 5	PROJ. REFERENCE NO.	SHEET NO.
	17BP.13.R.43	X-2

75 70 65 60 55 50 45 40 35 30 25 20 15 10 5 0 5 10 15 20 25 30 35 40 45 50 55 60 65 70 75

1260 1270 1265 1260 1255 1250 1265 1260 1255 1250

1259.39

13+25.00

1259.20

S.S. 1258.13 4:1 2% 0.010 0.030 3% S.S. 1257.80

1256.89

1258.83

13+00.00

1259.05

S.S. 1257.75 4:1 2% 0.020 0.020 EXTEND SHOULDER TO GRADE S.S. 1257.77

1256.37

1258.70

12+75.00

9:32:01 AM
R:\3280 NCDOT Div. 13 Bridges\320\Roadway\XSC\110320_rdy_xpl.dgn
bgross

B.M. #1: RR SPIKE IN BASE OF 20" HICKORY TREE -BL- STA. 5+98.29 10.60' RT. EL. 1257.71 NAVD 88

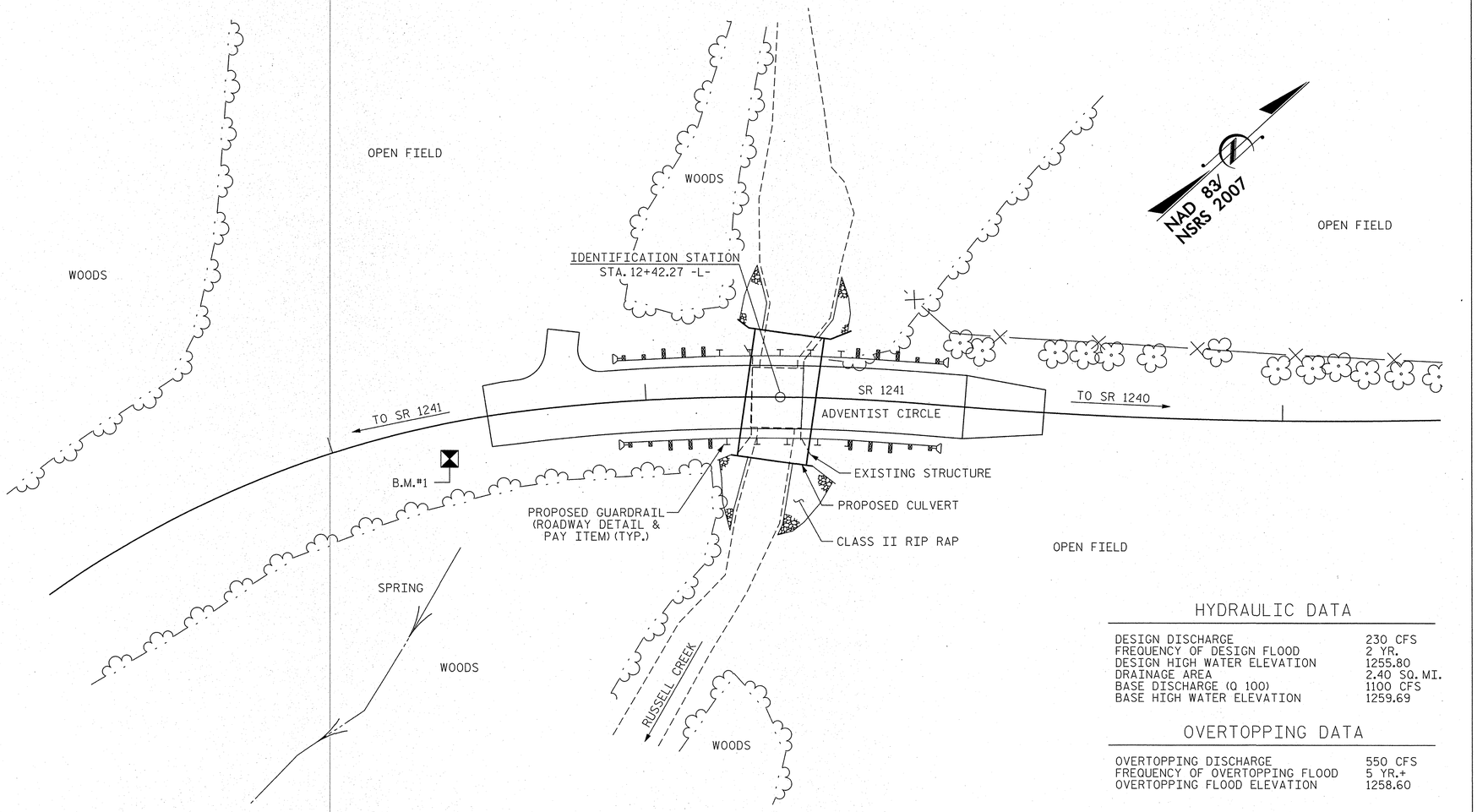

LOCATION SKETCH

HYDRAULIC DATA

DESIGN DISCHARGE	230 CFS
FREQUENCY OF DESIGN FLOOD	2 YR.
DESIGN HIGH WATER ELEVATION	1255.80
DRAINAGE AREA	2.40 SQ. MI.
BASE DISCHARGE (Q 100)	1100 CFS
BASE HIGH WATER ELEVATION	1259.69

OVERTOPPING DATA

OVERTOPPING DISCHARGE	550 CFS
FREQUENCY OF OVERTOPPING FLOOD	5 YR.+
OVERTOPPING FLOOD ELEVATION	1258.60

NO KNOWN UTILITY CONFLICTS.

NOTES:

ASSUMED LIVE LOAD = HL-93 OR ALTERNATE LOADING.

FOR EROSION CONTROL MEASURES, SEE EROSION CONTROL PLANS.

THIS STRUCTURE SHALL BE DESIGNED IN ACCORDANCE WITH THE AASHTO LRFD BRIDGE DESIGN SPECIFICATIONS.

THE EXISTING STRUCTURE CONSISTING OF 1 SPAN AT 16'-6", 19'-2" CLEAR ROADWAY WIDTH, TIMBER DECK ON TIMBER JOISTS, ON TIMBER CAPS WITH TIMBER POSTS AND CONCRETE SILLS, AT EXISTING CROSSING FOR PROPOSED STRUCTURE, SHALL BE REMOVED. THE EXISTING BRIDGE IS CURRENTLY NOT POSTED FOR LOAD LIMIT. SHOULD THE STRUCTURAL INTEGRITY OF THE BRIDGE DETERIORATE DURING CONSTRUCTION OF THE PROPOSED BRIDGE, A LOAD LIMIT MAY BE POSTED AS FOUND NECESSARY DURING THE LIFE OF THE PROJECT.

REMOVAL OF THE EXISTING BRIDGE SHALL BE PERFORMED AS NOT TO ALLOW DEBRIS TO FALL INTO THE WATER. THE CONTRACTOR SHALL REMOVE THE BRIDGE AND SUBMIT PLANS FOR DEMOLITION IN ACCORDANCE WITH ARTICLE 402-2 OF THE STANDARD SPECIFICATIONS.

THE SUBSTRUCTURE OF THE EXISTING BRIDGE INDICATED ON THE PLANS IS FROM THE BEST INFORMATION AVAILABLE. SINCE THIS INFORMATION IS SHOWN FOR THE CONVENIENCE OF THE CONTRACTOR, THE CONTRACTOR SHALL HAVE NO CLAIM WHATSOEVER AGAINST THE DEPARTMENT OF TRANSPORTATION FOR ANY DELAYS OR ADDITIONAL COSTS INCURRED BASED ON DIFFERENCES BETWEEN THE EXISTING BRIDGE SUBSTRUCTURE SHOWN ON THE PLANS AND THE ACTUAL CONDITIONS AT THE PROJECT SITE.

THE CONTRACTOR SHALL SUBMIT DESIGN CALCULATIONS AND SHOP DRAWINGS SHOWING COMPLETE DETAILS OF THE 21'-10" X 5'-8" ALUMINUM BOX CULVERT, SILLS, AND THE PREFABRICATED WINGWALLS AND HEADWALLS. THE DRAWINGS SHALL INCLUDE PLACING DRAWINGS, SPLICE DETAILS, AND CONNECTION DETAILS. DRAWINGS AND DESIGN CALCULATIONS, SIGNED AND SEALED BY A PROFESSIONAL ENGINEER REGISTERED IN THE STATE OF NORTH CAROLINA, SHALL BE SUBMITTED BY THE CONTRACTOR FOR REVIEW AND APPROVAL. THE PRICE FOR "21'-10" X 5'-8" ALUMINUM BOX CULVERT", SHALL INCLUDE SILLS, THE PREFABRICATED WINGWALLS AND HEADWALLS, CONNECTIONS, TRANSPORTATION, AND ERECTING FINISHED PRODUCT.

THE MANUFACTURER OF THE 21'-10" X 5'-8" ALUMINUM BOX CULVERT SHALL PROVIDE LOAD AND RESISTANCE FACTOR RATING (LRFD) SUMMARY PER NCDOT REQUIREMENTS.

FOR SUBMITTAL OF WORKING DRAWINGS, SEE SPECIAL PROVISIONS.

FOR FALSEWORK AND FORMWORK, SEE SPECIAL PROVISIONS.

FOR CRANE SAFETY, SEE SPECIAL PROVISIONS.

EXCAVATE ONE FOOT BELOW CULVERT AND REPLACE WITH FOUNDATION CONDITIONING MATERIAL IN ACCORDANCE WITH ARTICLE 414 OF THE STANDARD SPECIFICATIONS.

FOR ALUMINUM BOX CULVERT, SEE SPECIAL PROVISIONS.

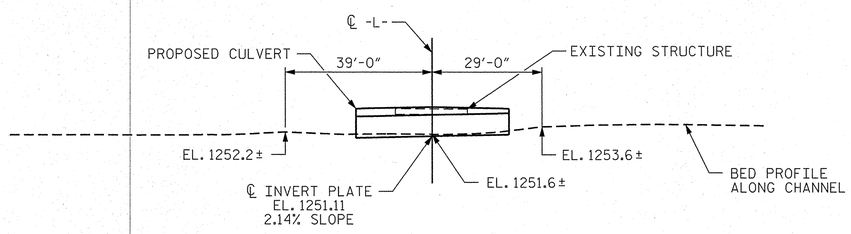

PROFILE ALONG ℄ CULVERT

TOTAL BILL OF MATERIALS

REMOVAL OF EXISTING STRUCTURE	CLASS A CONCRETE FOR MOMENT SLAB	REINFORCING STEEL FOR MOMENT SLAB	PLAIN RIP RAP CLASS II (1'-6" THICK)	GEOTEXTILE FOR DRAINAGE	21'-10" X 5'-8" ALUMINUM BOX CULVERT
LUMP SUM	CU. YDS.	LBS.	TONS	SQ. YD.	LUMP SUM
LUMP SUM	8.2	1326	32	48	LUMP SUM

PROJECT NO. 17BP.13.R.43

BURKE COUNTY

STATION: 12+42.27 -L-

SHEET 1 OF 3 REPLACES BRIDGE NO. 320

STATE OF NORTH CAROLINA
DEPARTMENT OF TRANSPORTATION
RALEIGH

21'-10" X 5'-8" ALUMINUM BOX CULVERT ON SR 1241 OVER RUSSELL CREEK BETWEEN SR 1241 AND SR 1240

REVISIONS						SHEET NO.
NO.	BY:	DATE:	NO.	BY:	DATE:	C-1
1			3			TOTAL SHEETS
2			4			3

DRAWN BY : PFC DATE : 04/14
CHECKED BY : CMT DATE : 04/14

Prepared in the Office of:
Mattern & Craig
CONSULTING ENGINEERS - SURVEYORS
12 BROAD STREET
ASHEVILLE, NORTH CAROLINA 28801
(828) 254-2201 - FAX (828) 254-4562

NORTH CAROLINA PROFESSIONAL SEAL 14309 ENGINEER STEVEN A. CAMPBELL

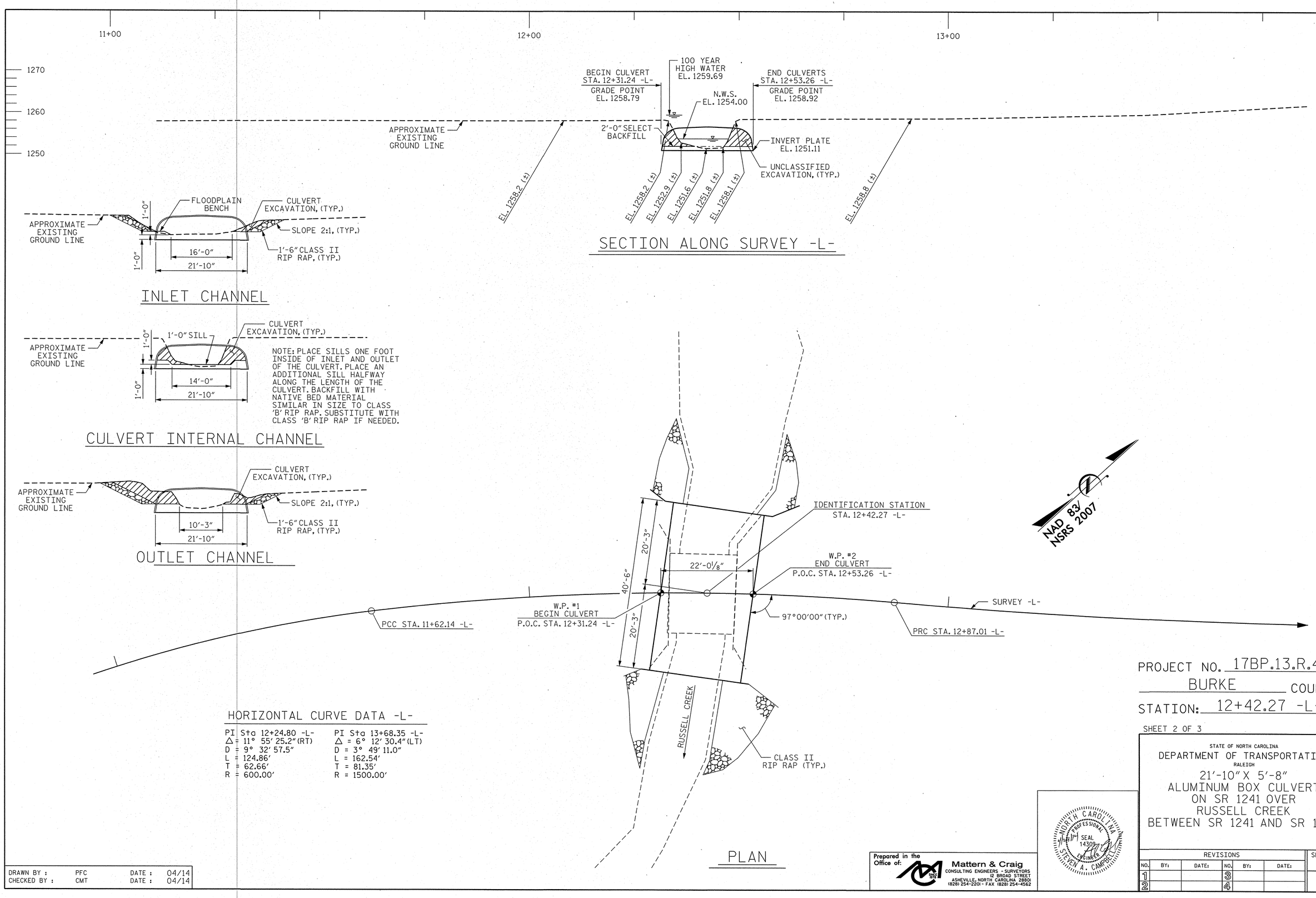

HORIZONTAL CURVE DATA -L-

PI Sta 12+24.80 -L-	PI Sta 13+68.35 -L-
△ = 11° 55' 25.2" (RT)	△ = 6° 12' 30.4" (LT)
D = 9° 32' 57.5"	D = 3° 49' 11.0"
L = 124.86'	L = 162.54'
T = 62.66'	T = 81.35'
R = 600.00'	R = 1500.00'

PROJECT NO. 17BP.13.R.43

BURKE COUNTY

STATION: 12+42.27 -L-

SHEET 2 OF 3

STATE OF NORTH CAROLINA
DEPARTMENT OF TRANSPORTATION
RALEIGH

21'-10" X 5'-8" ALUMINUM BOX CULVERT ON SR 1241 OVER RUSSELL CREEK BETWEEN SR 1241 AND SR 1240

DRAWN BY :	PFC	DATE :	04/14
CHECKED BY :	CMT	DATE :	04/14

Prepared in the Office of:
Mattern & Craig
CONSULTING ENGINEERS - SURVEYORS
12 BROAD STREET
ASHEVILLE, NORTH CAROLINA 28801
(828) 254-2201 - FAX (828) 254-4562

NORTH CAROLINA PROFESSIONAL SEAL 14309 ENGINEER STEVEN A. CAMPBELL

REVISIONS						SHEET NO.
NO.	BY:	DATE:	NO.	BY:	DATE:	C-2
1			3			TOTAL SHEETS
2			4			3

NAD 83/
NSRS 2007

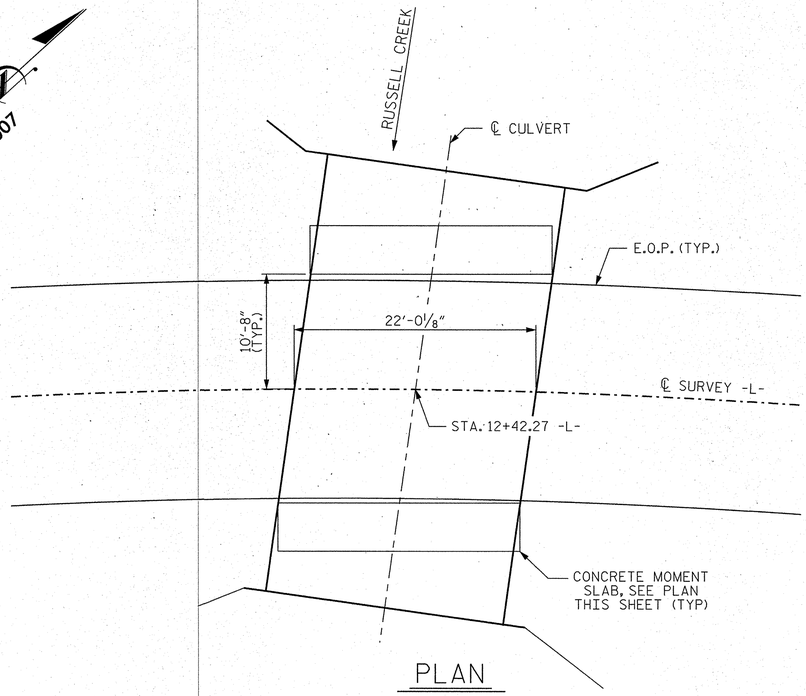

PLAN

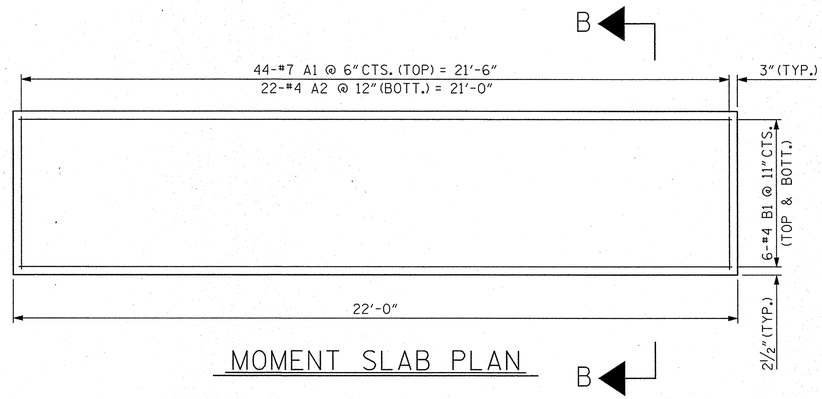

MOMENT SLAB PLAN

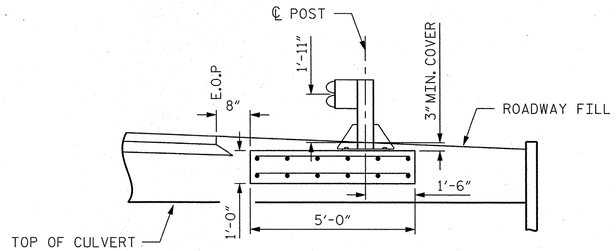

NOTES: FOR GUARDRAIL ANCHORAGE DETAILS SEE STANDARD DRAWING 862.03 SHEET 7 OF 7.

PLACE CONCRETE SLAB ON 6" MIN. (3" MIN ABOVE TOP OF CULVERTS) OF COMPACTED CLASS II TYPE 1 SELECT MATERIAL, SEE STANDARD SPECIFICATION SECTION 1016.

SECTION A-A

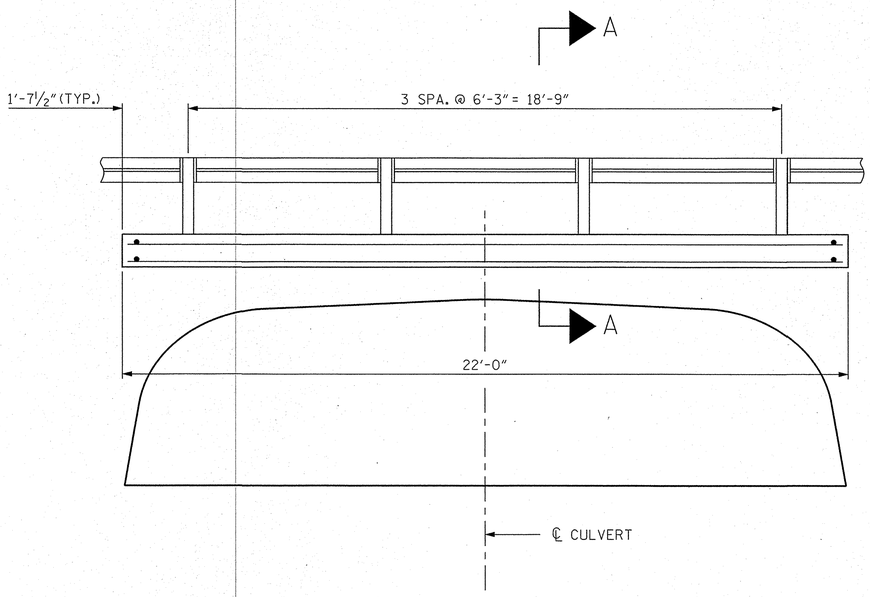

END ELEVATION

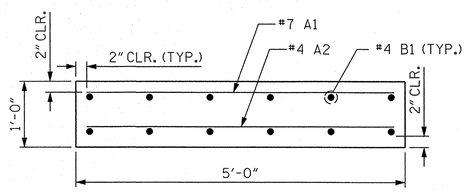

SECTION B-B

BILL OF MATERIAL
FOR ONE MOMENT SLAB (2 REQUIRED)

BAR	NO.	SIZE	TYPE	LENGTH	WEIGHT
A1	44	#7	STR	4'-8"	420
A2	22	#4	STR	4'-8"	69
B1	12	#4	STR	21'-8"	174
REINFORCING STEEL					663 LBS.
CLASS A CONCRETE					4.1 C.Y.

PROJECT NO. 17BP.13.R.43

BURKE COUNTY

STATION: 12+42.27 -L-

SHEET 3 OF 3

STATE OF NORTH CAROLINA
DEPARTMENT OF TRANSPORTATION
RALEIGH

ALUMINUM BOX CULVERT
GUARDRAIL ASSEMBLY
DETAILS

REVISIONS						SHEET NO.
NO.	BY:	DATE:	NO.	BY:	DATE:	C-3
1			3			TOTAL SHEETS
2			4			3

NORTH CAROLINA PROFESSIONAL SEAL 14309 ENGINEER STEVEN A. CAMPBELL

Prepared in the Office of:
Mattern & Craig
CONSULTING ENGINEERS - SURVEYORS
12 BROAD STREET
ASHEVILLE, NORTH CAROLINA 28801
(828) 254-2201 - FAX (828) 254-4562

DRAWN BY :	PFC	DATE :	01/14
CHECKED BY :	CMT	DATE :	01/14

$$$$$$SYSTIME$$$$$
$$$$$$$$$$$$$$$$$$$$$$$$DGN$$$$$$$$$$$$$$$$$$$$$$$$
$$$$USERNAME$$$$

PROJECT: 17BP.13.R.132

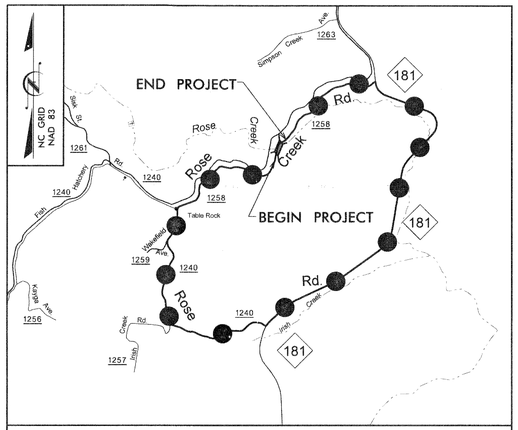

STATE OF NORTH CAROLINA
DIVISION OF HIGHWAYS

BURKE COUNTY

STATE	STATE PROJECT REFERENCE NO.	SHEET NO.	TOTAL SHEETS
N.C.	17BP.13.R.132	1	

STATE PROJ. NO.	F. A. PROJ. NO.	DESCRIPTION
17BP.13.R.132	N/A	PE
17BP.13.R.132	N/A	R/W & UTILITIES
17BP.13.R.132	N/A	CONST.

LOCATION: BRIDGE NO. 058 OVER ROSE CREEK ON SR 1258 (ROSE CREEK ROAD)

TYPE OF WORK: GRADING, DRAINAGE, PAVING, AND STRUCTURE

MAP 2

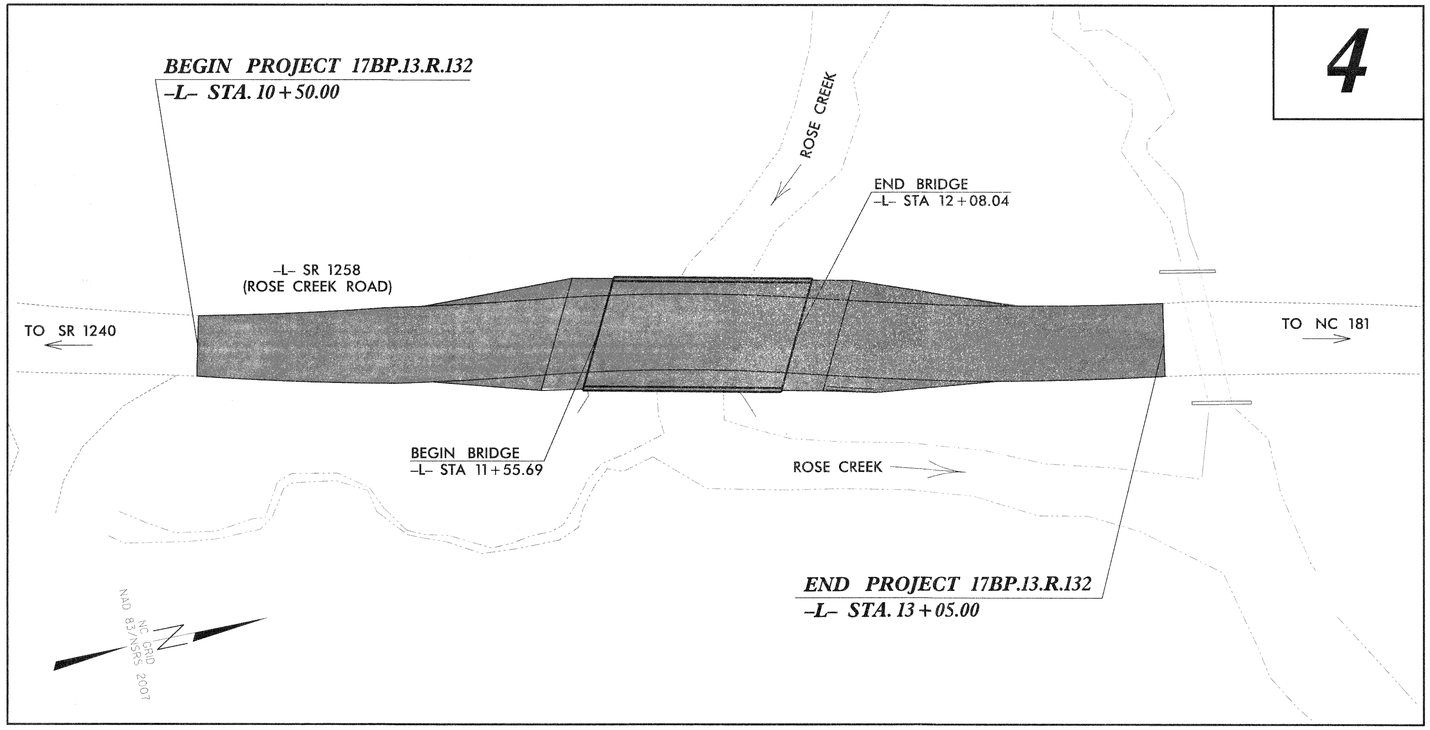

V&M
Vaughn & Melton
Consulting Engineers
Asheville, North Carolina
828-253-2796
Tri-Cities, TN 423-467-8401
Knoxville, TN 865-546-5800
Spartanburg, SC 864-574-4775
Charleston, SC 843-974-5650
Middlesboro, KY 606-248-6600
Charlotte, NC 704-357-0488
Boone, NC 828-355-9933
Atlanta, GA 770-627-3509

Copyright © 2006 Vaughn & Melton, Inc. All Rights Reserved

CONTRACT:

GRAPHIC SCALES

PLANS: 20 10 0 20 40

PROFILE (HORIZONTAL): 20 10 0 20 40

PROFILE (VERTICAL): 4 2 0 4 8

DESIGN DATA

ADT 2011 = 390

T = 1%

V = 40 MPH

FUNCT. CLASS = RURAL LOCAL
SUB-REGIONAL TIER

PROJECT LENGTH

LENGTH ROADWAY PROJECT 17BP.13.R.132 = 0.038 MI

LENGTH STRUCTURE PROJECT 17BP.13.R.132 = 0.010 MI

TOTAL LENGTH OF PROJECT 17BP.13.R.132 = 0.048 MI

Prepared in the Office of:
VAUGHN & MELTON
1318-F PATTON AVE.
ASHEVILLE NC, 28806
FOR THE NORTH CAROLINA DIVISION OF HIGHWAYS

2012 STANDARD SPECIFICATIONS

RIGHT OF WAY DATE:
JUNE 27, 2014

LETTING DATE:
MARCH 18, 2015

AARON CARVER, PE
PROJECT ENGINEER

PHIL SCHULER, PE
PROJECT DESIGN ENGINEER

NCDOT CONTACT:
PAUL SPROUSE, PE
DIVISION 13 - BRIDGE MANAGER

HYDRAULICS ENGINEER

NORTH CAROLINA PROFESSIONAL SEAL 033023 ENGINEER BRADLEY S. RIDMOUR

Bradley S Ridmour, PE 5/26/15
SIGNATURE:

ROADWAY DESIGN ENGINEER

NORTH CAROLINA PROFESSIONAL SEAL 030453 ENGINEER AARON C. CARVER

5/26/15
P.E.
SIGNATURE:

DIVISION OF HIGHWAYS STATE OF NORTH CAROLINA

STATE OF NORTH CAROLINA · DEPARTMENT OF TRANSPORTATION

V&M PROJECT #13133-01
TRANSPORTATION\13133-01\RDY\PROJECT\RLING2227SH.DGN

08/22/13

PROJECT REFERENCE NO.	SHEET NO.
17BPJ3.RJ32	1-A

ROADWAY DESIGN ENGINEER

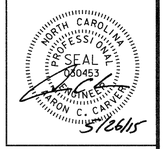

3/26/15

INDEX OF SHEETS

SHEET NUMBER	SHEET
1	TITLE SHEET
1-A	INDEX OF SHEETS, GENERAL NOTES, AND LIST OF STANDARD DRAWINGS
1-B	CONVENTIONAL SYMBOLS
2	PAVEMENT SCHEDULE, TYPICAL SECTIONS, AND WEDGING DETAILS
3-A	SUMMARY OF DRAINAGE QUANTITIES, SUMMARY OF GUARDRAIL, AND ASPHALT PAVEMENT REMOVAL SUMMARY
3-B	EARTHWORK SUMMARY
4	PLAN AND PROFILE SHEET
TMP-1 THRU TMP-2	TRAFFIC MANAGEMENT PLANS
SD-1	SPECIAL SIGN DESIGN
EC-1 THRU EC-3	EROSION CONTROL PLANS
RF-1	REFORESTATION PLAN
UO-1 THRU UO-2	UTILITY PLANS
X-0	CROSS-SECTION SUMMARY
X-1 THRU X-7	CROSS-SECTIONS
S-1 THRU S-17	STRUCTURE PLANS

GENERAL NOTES:

2012 SPECIFICATIONS
EFFECTIVE: 01-17-12

GRADE LINE:
GRADING AND SURFACING OR RESURFACING AND WIDENING:

THE GRADE LINES SHOWN DENOTE THE FINISHED ELEVATION OF THE PROPOSED SURFACING AT GRADE POINTS SHOWN ON THE TYPICAL SECTIONS. WHERE NO GRADE LINES ARE SHOWN, THE PROFILES SHOWN DENOTE THE TOP ELEVATION OF THE EXISTING PAVEMENT ALONG THE CENTER LINE OF SURVEY ON WHICH THE PROPOSED RESURFACING WILL BE PLACED. GRADE LINES MAY BE ADJUSTED BY THE ENGINEER IN ORDER TO SECURE A PROPER TIE-IN.

CLEARING:

CLEARING ON THIS PROJECT SHALL BE PERFORMED TO THE LIMITS ESTABLISHED BY METHOD II.

SUPERELEVATION:

ALL CURVES ON THIS PROJECT SHALL BE SUPERELEVATED IN ACCORDANCE WITH STD. NO. 225.04 USING THE RATE OF SUPERELEVATION AND RUNOFF SHOWN ON THE PLANS. SUPERELEVATION IS TO BE REVOLVED ABOUT THE GRADE POINTS SHOWN ON THE TYPICAL SECTIONS.

SHOULDER CONSTRUCTION:

ASPHALT, EARTH, AND CONCRETE SHOULDER CONSTRUCTION ON THE HIGH SIDE OF SUPERELEVATED CURVES SHALL BE IN ACCORDANCE WITH STD. NO. 560.01.

UNDERDRAINS:

UNDERDRAINS SHALL BE CONSTRUCTED IN ACCORDANCE WITH STD. NO. 815.03 AT LOCATIONS DIRECTED BY THE ENGINEER.

GUARDRAIL:

THE GUARDRAIL LOCATIONS SHOWN ON THE PLANS MAY BE ADJUSTED DURING CONSTRUCTION AS DIRECTED BY THE ENGINEER. THE CONTRACTOR SHOULD CONSULT WITH THE ENGINEER PRIOR TO ORDERING GUARDRAIL MATERIAL.

TEMPORARY SHORING:

SHORING REQUIRED FOR THE MAINTENANCE OF TRAFFIC WILL BE PAID FOR AS "EXTRA WORK" IN ACCORDANCE WITH SECTION 104-7.

SUBSURFACE PLANS:

SUBSURFACE PLANS ARE AVAILABLE ON THIS PROJECT.

UTILITIES:

UTILITY OWNERS ON THIS PROJECT ARE: AT&T (TELEPHONE), RUTHERFORD EMC (POWER).

RIGHT-OF-WAY MARKERS:

ALL RIGHT-OF-WAY MARKERS ON THIS PROJECT SHALL BE PLACED BY CONTRACT IN ACCORDANCE WITH SECTION 801 OF THE 2012 NORTH CAROLINA STANDARD SPECIFICATIONS FOR ROADS AND STRUCTURES.

2012 ROADWAY ENGLISH STANDARD DRAWINGS

The following Roadway Standards as appear in "Roadway Standard Drawings" Highway Design Branch - N. C. Department of Transportation - Raleigh, N. C., Dated January 17, 2012 are applicable to this project and by reference hereby are considered a part of these plans:

STD.NO.	TITLE
DIVISION 2 - EARTHWORK	
200.02	Method of Clearing - Method II
225.02	Guide for Grading Subgrade - Secondary and Local
225.04	Method of Obtaining Superelevation - Two Lane Pavement
DIVISION 3 - PIPE CULVERTS	
300.01	Method of Pipe Installation - Method 'A'
DIVISION 5 - SUBGRADE, BASES AND SHOULDERS	
560.01	Method of Shoulder Construction - High Side of Superelevated Curve - Method I
DIVISION 8 - INCIDENTALS	
840.25	Anchorage for Frames
840.29	Frames and Narrow Slot Flat Grates
840.35	Traffic Bearing Grated Drop Inlet - for Cast Iron Double Frame and Grates
840.66	Drainage Structure Steps
840.71	Concrete and Brick Pipe Plug
840.72	Pipe Collar
846.01	Concrete Curb, Gutter, and Curb & Gutter
846.04	Drop Inlet Installation in Shoulder Berm Gutter
862.01	Guardrail Placement
862.02	Guardrail Installation
876.02	Guide for Rip Rap at Pipe Outlets

SYKLINE 55555
TIME 55555
DATE 55555

3/15/06

PROJECT REFERENCE NO.	SHEET NO.
17BPJ3,RJ32	1-B

Note: Not to Scale

****S.U.E. = Subsurface Utility Engineering***

STATE OF NORTH CAROLINA
DIVISION OF HIGHWAYS

CONVENTIONAL PLAN SHEET SYMBOLS

BOUNDARIES AND PROPERTY:

- State Line
- County Line
- Township Line
- City Line
- Reservation Line
- Property Line
- Existing Iron Pin — EIP
- Property Corner
- Property Monument — ECM
- Parcel/Sequence Number — 123
- Existing Fence Line
- Proposed Woven Wire Fence
- Proposed Chain Link Fence
- Proposed Barbed Wire Fence
- Existing Wetland Boundary — WLB
- Proposed Wetland Boundary — WLB
- Existing Endangered Animal Boundary — EAB
- Existing Endangered Plant Boundary — EPB

BUILDINGS AND OTHER CULTURE:

- Gas Pump Vent or U/G Tank Cap
- Sign — S
- Well — W
- Small Mine
- Foundation
- Area Outline
- Cemetery
- Building
- School
- Church
- Dam

HYDROLOGY:

- Stream or Body of Water
- Hydro, Pool or Reservoir
- Jurisdictional Stream — JS
- Buffer Zone 1 — BZ 1
- Buffer Zone 2 — BZ 2
- Flow Arrow
- Disappearing Stream
- Spring
- Swamp Marsh
- Proposed Lateral, Tail, Head Ditch — FLOW
- False Sump

RAILROADS:

- Standard Gauge — CSX TRANSPORTATION
- RR Signal Milepost — MILEPOST 35
- Switch — SWITCH
- RR Abandoned
- RR Dismantled

RIGHT OF WAY:

- Baseline Control Point
- Existing Right of Way Marker
- Existing Right of Way Line
- Proposed Right of Way Line — RW
- Proposed Right of Way Line with Iron Pin and Cap Marker — RW
- Proposed Right of Way Line with Concrete or Granite Marker — RW
- Existing Control of Access — CA
- Proposed Control of Access — CA
- Existing Easement Line — E
- Proposed Temporary Construction Easement — E
- Proposed Temporary Drainage Easement — TDE
- Proposed Permanent Drainage Easement — PDE
- Proposed Permanent Utility Easement — PUE

ROADS AND RELATED FEATURES:

- Existing Edge of Pavement
- Existing Curb
- Proposed Slope Stakes Cut — C
- Proposed Slope Stakes Fill — F
- Proposed Wheel Chair Ramp — WCR
- Proposed Wheel Chair Ramp Curb Cut — WCC
- Curb Cut for Future Wheel Chair Ramp — CCFR
- Existing Metal Guardrail
- Proposed Guardrail
- Existing Cable Guiderail
- Proposed Cable Guiderail
- Equality Symbol
- Pavement Removal

VEGETATION:

- Single Tree
- Single Shrub
- Hedge
- Woods Line
- Orchard
- Vineyard — Vineyard

EXISTING STRUCTURES:

MAJOR:

- Bridge, Tunnel or Box Culvert — CONC
- Bridge Wing Wall, Head Wall and End Wall — CONC WW

MINOR:

- Head and End Wall — CONC HW
- Pipe Culvert
- Footbridge
- Drainage Box: Catch Basin, DI or JB — CB
- Paved Ditch Gutter
- Storm Sewer Manhole — S
- Storm Sewer — S

UTILITIES:

POWER:

- Existing Power Pole
- Proposed Power Pole
- Existing Joint Use Pole
- Proposed Joint Use Pole
- Power Manhole — P
- Power Line Tower
- Power Transformer
- U/G Power Cable Hand Hole — HH
- H–Frame Pole
- Recorded U/G Power Line — P
- Designated U/G Power Line (S.U.E.*) — P

TELEPHONE:

- Existing Telephone Pole
- Proposed Telephone Pole
- Telephone Manhole — T
- Telephone Booth
- Telephone Pedestal — T
- Telephone Cell Tower
- U/G Telephone Cable Hand Hole — HH
- Recorded U/G Telephone Cable — T
- Designated U/G Telephone Cable (S.U.E.*) — T
- Recorded U/G Telephone Conduit — TC
- Designated U/G Telephone Conduit (S.U.E.*) — TC
- Recorded U/G Fiber Optics Cable — T FO
- Designated U/G Fiber Optics Cable (S.U.E.*) — T FO

WATER:

- Water Manhole — W
- Water Meter
- Water Valve
- Water Hydrant
- Recorded U/G Water Line — W
- Designated U/G Water Line (S.U.E.*) — W
- Above Ground Water Line — A/G Water

TV:

- TV Satellite Dish
- TV Pedestal — C
- TV Tower
- U/G TV Cable Hand Hole — HH
- Recorded U/G TV Cable — TV
- Designated U/G TV Cable (S.U.E.*) — TV
- Recorded U/G Fiber Optic Cable — TV FO
- Designated U/G Fiber Optic Cable (S.U.E.*) — TV FO

GAS:

- Gas Valve
- Gas Meter
- Recorded U/G Gas Line — G
- Designated U/G Gas Line (S.U.E.*) — G
- Above Ground Gas Line — A/G Gas

SANITARY SEWER:

- Sanitary Sewer Manhole
- Sanitary Sewer Cleanout
- U/G Sanitary Sewer Line — SS
- Above Ground Sanitary Sewer — A/G Sanitary Sewer
- Recorded SS Forced Main Line — FSS
- Designated SS Forced Main Line (S.U.E.*) — FSS

MISCELLANEOUS:

- Utility Pole
- Utility Pole with Base
- Utility Located Object
- Utility Traffic Signal Box — S
- Utility Unknown U/G Line — ?UTL
- U/G Tank; Water, Gas, Oil
- A/G Tank; Water, Gas, Oil
- U/G Test Hole (S.U.E.*)
- Abandoned According to Utility Records — AATUR
- End of Information — E.O.I.

PROJECT REFERENCE NO.	SHEET NO.
17BP.13.R.132	2
ROADWAY DESIGN ENGINEER	PAVEMENT DESIGN ENGINEER
NORTH CAROLINA PROFESSIONAL SEAL 030453 ENGINEER AARON C. CARVER 5/12/15	NORTH CAROLINA PROFESSIONAL SEAL 20134 ENGINEER ROBERT M. CRISP 5-12-15

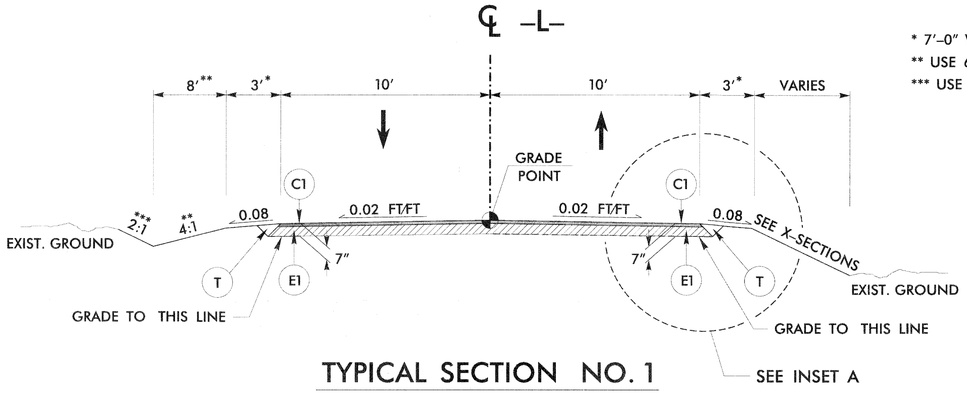

TYPICAL SECTION NO. 1

* 7'-0" WITH GUARDRAIL
** USE 6' @ 3:1, STA. 10+50 TO STA. 11+25 LT
*** USE 1.25:1, STA. 10+50 TO STA. 11+00 LT

USE TYPICAL SECTION NO. 1

-L- STA. 10+50 TO STA. 11+55.69 (BEGIN BRIDGE)
-L- STA. 12+08.04 (END BRIDGE) TO STA. 13+05

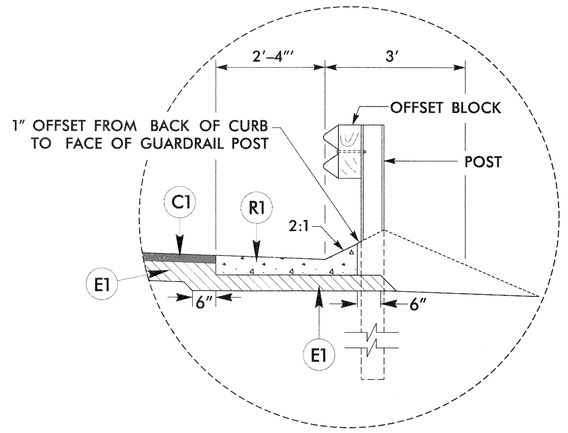

INSET A

SBG END APPROACH SLAB TO -L- STA. 12+29.60 RT

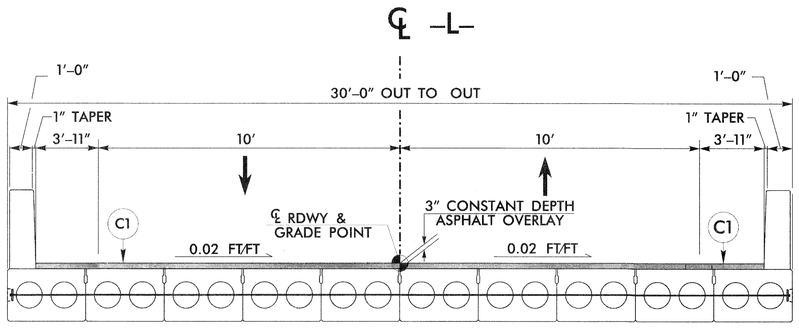

TYPICAL SECTION NO. 2

USE TYPICAL SECTION NO. 2

-L- STA. 11+55.69 (BEGIN BRIDGE) TO
-L- STA. 12+08.04 (END BRIDGE)

PAVEMENT SCHEDULE	
C1	PROP. APPROX. 3" ASPHALT CONCRETE SURFACE COURSE, TYPE S9.5B, AT AN AVERAGE RATE OF 168 LBS. PER SQ. YD. IN EACH OF TWO LAYERS.
E1	PROP. APPROX. 4" ASPHALT CONCRETE BASE COURSE, TYPE B25.0B, AT AN AVERAGE RATE OF 456 LBS. PER SQ. YD.
R	PROP. SHOULDER BERM GUTTER. NCDOT STD. DWG. 846.01
T	EARTH MATERIAL

NOTE: PAVEMENT EDGE SLOPES ARE 1:1 UNLESS SHOWN OTHERWISE

6/21/00

COMPUTED BY: PHS DATE: 02–17–14
CHECKED BY: ACC DATE: 02–17–14

STATE OF NORTH CAROLINA
DIVISION OF HIGHWAYS

PROJECT REFERENCE NO.	SHEET NO.
17BPJ3.R.J32	3–A

NOTE: Invert Elevations are for Bid Purposes only and shall not be used for project construction stakeout.
See "Standard Specifications For Roads and Structures, Section 300–5".

SUB–REGIONAL & REGIONAL
LIST OF PIPES, ENDWALLS, ETC. (FOR PIPES 48" & UNDER)

| STATION | LOCATION (LT,RT, OR CL) | STRUCTURE NO. FROM | STRUCTURE NO. TO | TOP ELEVATION | INVERT ELEVATION | INVERT ELEVATION | SLOPE CRITICAL | DRAINAGE PIPE (RCP, CSP, CAAP, HDPE, or PVC) SIZE 12" | 15" | 18" | 24" | 30" | 36" | 42" | 48" | DO NOT USE RCP | DO NOT USE CSP | DO NOT USE CAAP | DO NOT USE HDPE | C.S. PIPE THICKNESS OR GAUGE 12" | 15" | 18" | 24" | 36" | 42" | 48" | R.C. PIPE (CLASS III) 15" | 18" | 24" | 30" | 36" | 42" | 48" | R.C. PIPE (CLASS IV) 12" | 15" | 18" | 24" | 30" | 36" | 42" | 48" | *** R. C. PIPE (CLASS V) | *** R. C. PIPE CULVERTS, CONTRACTOR DESIGN PIPE | *** R. C. PIPE CULVERTS, CONTRACTOR DESIGN PIPE | 15" SIDE DRAIN PIPE | 18" SIDE DRAIN PIPE | ENDWALLS STD. 838.01, STD. 838.11 OR STD. 838.80 (UNLESS NOTED OTHERWISE) CU. YDS. R.C.P. | C.S.P. | QUANTITIES FOR DRAINAGE STRUCTURES PER EACH (0' THRU 5.0') | * TOTAL L.F. FOR PAY QUANTITY SHALL BE COL. 'A' + (1.3 X COL. 'B') LIN. *FT. A: 5.0' THRU 10.0' | B: 10.0' AND ABOVE | C.B. STD. 840.01 OR STD. 840.02 | FRAME, GRATES AND HOOD STANDARD 840.03 TYPE OF GRATE E | F | G | CONCRETE TRANSITIONAL SECTION CATCH BASIN | DROP INLET | T.B.D.I. STD. 840.35 | T.B.D.I. FRAME WITH TWO GRATES STD. 840.29 | CORR. STEEL ELBOWS NO. & SIZE | CONC. COLLARS CL. "B" C.Y. STD 840.72 | CONC. & BRICK PIPE PLUG, C.Y. STD. 840.71 | PIPE REMOVAL LIN.FT. | REMARKS |
|---|---|---

COMPUTED BY: PHS DATE: 02-17-14
CHECKED BY: ACC DATE: 02-17-14

PROJECT REFERENCE NO.	SHEET NO.
17BP.13.R.132	3-B

DIVISION OF HIGHWAYS
STATE OF NORTH CAROLINA

SUMMARY OF EARTHWORK

IN CUBIC YARDS

LOCATION	UNCLASSIFIED EXCAVATION	UNDERCUT	EMBT + %	BORROW	WASTE
SUMMARY NO.1					
–L– STA. 10 + 50.00 TO STA. 11 + 55.69 (BEG. BRIDGE)	324		31		293
SUBTOTAL SUMMARY NO.1	324		31		293
SUMMARY NO.2					
–L– STA. 12 + 08.04 (END BRIDGE) TO STA. 13 + 05.00	65		14		51
SUBTOTAL SUMMARY NO.2	65		14		51
PROJECT SUBTOTAL	389		45		344
GRAND TOTAL	389		45		344
SAY	400				

Approximate quantities only. Unclassified excavation, fine grading, and clearing and grubbing will be paid for at the contract lump sum price for "grading".

8/17/99

REVISIONS

DATUM DESCRIPTION

THE LOCALIZED COORDINATE SYSTEM DEVELOPED FOR THIS PROJECT IS BASED ON THE STATE PLANE COORDINATES ESTABLISHED BY NCGS FOR MONUMENT B4717-1 (GPS-1) WITH NAD 83/NA 2011 STATE PLANE GRID COORDINATES OF NORTHING: 776347.8961 (ft) EASTING: 1175829.3183 (ft) ELEVATION:1101.62 (ft)
THE AVERAGE COMBINED GRID FACTOR USED ON THIS PROJECT (GROUND TO GRID) IS: 0.99986319
THE N.C. LAMBERT GRID BEARING AND LOCALIZED HORIZONTAL GROUND DISTANCE FROM GPS-1 TO -L- STATION 10+50 IS 4,385.42' AT S49°34'18"W
ALL LINEAR DIMENSIONS ARE LOCALIZED HORIZONTAL DISTANCES
VERTICAL DATUM USED IS NAVD 88

DESC.	NORTH	EAST	ELEVATION
BL-1	772,912.1895	1,171,735.8728	1161.32'
BL-2	772,949.4998	1,172,156.1689	1142.98'
BL-3	773,088.3577	1,172,314.4509	1131.16'
BL-4	773,330.9848	1,172,436.5396	1117.08'
BL-5	773,650.8890	1,172,531.0537	1103.36'
BL-6	774,153.7450	1,172,634.6142	1105.01'

PROJECT REFERENCE NO.	SHEET NO.
17BP.13.R.132	4
R/W SHEET NO.	

ROADWAY DESIGN ENGINEER: NORTH CAROLINA PROFESSIONAL SEAL 030453 ENGINEER JASON C. CARVER — 5/26/15
HYDRAULICS ENGINEER: NORTH CAROLINA PROFESSIONAL SEAL 033023 ENGINEER BRADLEY S. REMMER — 5/22/15 — Bradley S Remmer, PE

SKETCH SHOWING RELATIONSHIP OF PAVEMENT WIDTH TO BRIDGE WIDTH

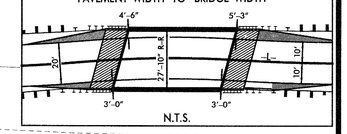

N.T.S.

-L- CURVE DATA

PI Sta 10+25.01	PI Sta 10+94.41	PI Sta 11+75.52	PI Sta 12+57.72	PI Sta 13+26.60
D = 4°03'48.7" (LT)	D = 6°03'09.0" (LT)	D = 8°24'57.6" (RT)	D = 5°47'39.4" (LT)	D = 1°37'49.0" (RT)
D = 8°07'37.4"	D = 6°49'15.3"	D = 11°27'33.0"	D = 6°21'58.3"	D = 3°28'58.9"
L = 50.00'	L = 88.73'	L = 73.44'	L = 91.02'	L = 46.81'
T = 25.01'	T = 44.41'	T = 36.79'	T = 45.55'	T = 23.40'
R = 705.00'	R = 840.00'	R = 500.00'	R = 900.00'	R = 1,645.00'
	SE = 05	SE = RC	SE = 03	
	Ro = 71'	Ro = 28.4'	Ro = 42.6'	

FULL DEPTH PAVED SHOULDER
SBG END APPR. SLAB TO 12+29.60 RT

SEE SHEETS S-1 THRU S-17 FOR STRUCTURE PLANS

Vaughn & Melton
Consulting Engineers
Asheville, North Carolina 828-253-2796
Tri-Cities, TN 423-467-8401
Knoxville, TN 865-546-5800
Spartanburg, SC 864-574-4775
Charleston, SC 843-974-5650
Middleboro, KY 606-248-6600
Charlotte, NC 704-357-0488
Boone, NC 828-355-9933
Atlanta, GA 770-627-3509

Copyright © 2006 Vaughn & Melton, Inc. All Rights Reserved

BM #1
N 772,892 E 1,171,759
ELEVATION = 1155.71
8" NAIL IN BASE OF 12" DOUBLE SOURWOOD

BM #2
N 773,758 E 1,172,559
ELEVATION = 1102.81
CHISELD "X" ON NE CORNER OF CONC. HEADWALL

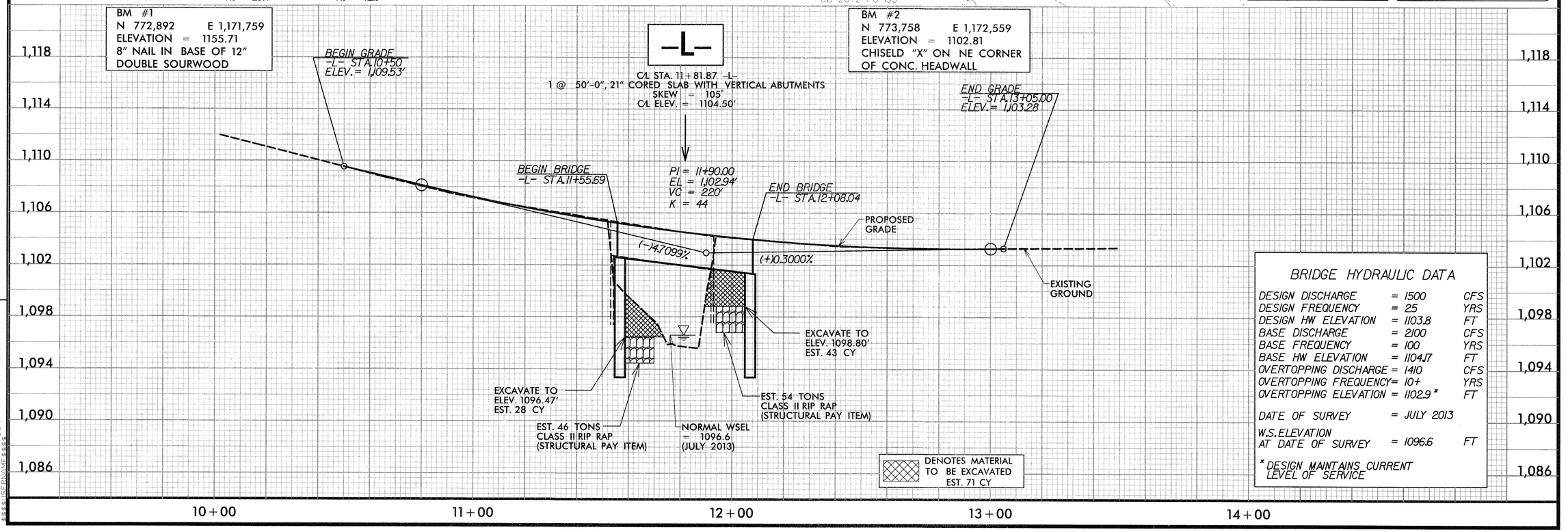

DENOTES MATERIAL TO BE EXCAVATED EST. 71 CY

BRIDGE HYDRAULIC DATA

DESIGN DISCHARGE	= 1500	CFS
DESIGN FREQUENCY	= 25	YRS
DESIGN HW ELEVATION	= 1103.8	FT
BASE DISCHARGE	= 2100	CFS
BASE FREQUENCY	= 100	YRS
BASE HW ELEVATION	= 1104.17	FT
OVERTOPPING DISCHARGE	= 1410	CFS
OVERTOPPING FREQUENCY	= 10+	YRS
OVERTOPPING ELEVATION	= 1102.9 *	FT
DATE OF SURVEY	= JULY 2013	
W.S.ELEVATION AT DATE OF SURVEY	= 1096.6	FT

* DESIGN MAINTAINS CURRENT LEVEL OF SERVICE

SYSTEM FILE: CON

STATE OF NORTH CAROLINA
DIVISION OF HIGHWAYS

TRANSPORTATION MANAGEMENT PLAN

BURKE COUNTY

DIVISION 13

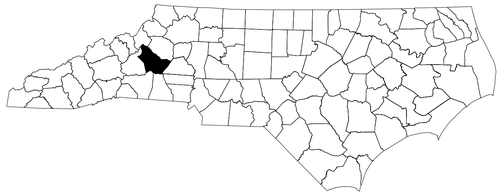

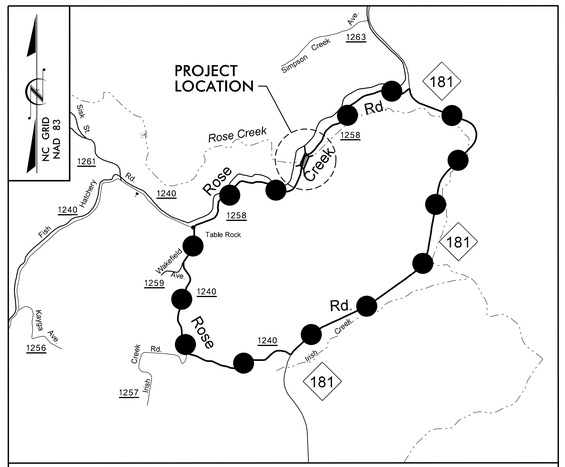

VICINITY MAP

DETOUR ROUTE

LOCATION: BRIDGE NO. 058 OVER ROSE CREEK ON SR 1258 (ROSE CREEK ROAD)

INDEX OF SHEETS

SHEET NO.	TITLE
TMP-1	TITLE SHEET, LEGEND, AND INDEX OF SHEETS
TMP-1A	LIST OF APPLICABLE ROADWAY STANDARD DRAWINGS, GENERAL NOTES,TRANSPORTATION OPERATIONS AND LOCAL NOTES.
TMP-2	TEMPORARY TRAFFIC CONTROL DETAIL, PHASING NOTES OFFSITE DETOUR SIGNING AND ROAD CLOSURE
SD-1	SPECIAL SIGN DESIGN

LEGEND

GENERAL

NORTH ARROW

TRAFFIC CONTROL DEVICES

BARRICADE (TYPE III)

TEMPORARY SIGNING

STATIONARY SIGN

SHEET NO.
TMP-1

PROJECT: 17BP.13.R.132

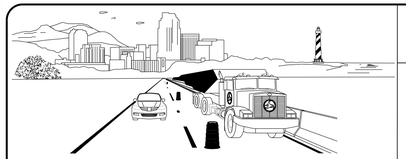

WORK ZONE SAFETY & MOBILITY
"from the MOUNTAINS to the COAST"

N.C.D.O.T. WORK ZONE TRAFFIC CONTROL
1580 MAIL SERVICE CENTER (MSC) RALEIGH, NC 27699-1580
1020 BIRCH RIDGE DRIVE, RALEIGH, NC 27610 (DELIVERY)
PHONE: (919) 250-4094 FAX: (919) 250-4098

J. S. BOURNE, P.E. — *STATE TRAFFIC MANAGEMENT ENGINEER*
LLOYD D. BROWN, P.E. — *TRAFFIC CONTROL PROJECT ENGINEER*
AARON C. CARVER, P.E. — *TRAFFIC CONTROL PROJECT DESIGN ENGINEER*
AARON C. CARVER, P.E. — *TRAFFIC CONTROL DESIGN ENGINEER*

DIVISION OF HIGHWAYS · STATE OF NORTH CAROLINA · DEPARTMENT OF TRANSPORTATION · WORK ZONE TRAFFIC CONTROL

V&M Vaughn & Melton
Consulting Engineers
Asheville, North Carolina
828-253-2796
Charlotte, NC 704-357-0488 · Boone, NC 828-355-9933
Tri-Cities, TN 423-467-8401 · Knoxville, TN 865-546-5800 · Spartanburg, SC 864-574-4775 · Charleston, SC 843-974-5650 · Middlesboro, KY 606-248-6600 · Atlanta, GA 770-627-3509

Copyright © 2006 Vaughn & Melton, Inc. All Rights Reserved

APPROVED: _____
DATE: _____

SEAL

NORTH CAROLINA PROFESSIONAL SEAL 20119 ENGINEER LLOYD D. BROWN

$$$$SYSTIME$$$$
$$$$USERNAME$$$$
$$$$DGN$$$$

PROJ. REFERENCE NO.	SHEET NO.
17BP.13.R.132	TMP-1A

ROADWAY STANDARD DRAWINGS

THE FOLLOWING ROADWAY STANDARDS AS SHOWN IN "ROADWAY STANDARD DRAWINGS" - PROJECT SERVICES UNIT - N.C. DEPARTMENT OF TRANSPORTATION - RALEIGH, N.C., DATED JANUARY 2012 ARE APPLICABLE TO THIS PROJECT AND BY REFERENCE HEREBY ARE CONSIDERED A PART OF THESE PLANS:

STD. NO.	TITLE
1101.03	TEMPORARY ROAD CLOSURES
1101.05	WORK ZONE VEHICLE ACCESSES
1101.11	TRAFFIC CONTROL DESIGN TABLES
1110.01	STATIONARY WORK ZONE SIGNS
1145.01	BARRICADES

TRANSPORTATION OPERATIONS

CONSTRUCTION

REMOVE AND REPLACE EXISTING STRUCTURE AND APPROACHES ALONG THE EXISTING ROADWAY ALIGNMENT AS SHOWN IN THE CONSTRUCTION PLANS.

TMP DESIGN PARAMETERS

TRAFFIC WILL BE DETOURED OFF-SITE DURING THE CONSTRUCTION PERIOD.

THE OFF-SITE DETOUR WILL INCLUDE SR 1240 (FISH HATCHERY RD.), NC 181, AND SR 1258 (ROSE CREEK RD.) (SEE SHEET TMP-2).

GENERAL NOTES

CHANGES MAY BE REQUIRED WHEN PHYSICAL DIMENSIONS IN THE DETAIL DRAWINGS, STANDARD DETAILS AND ROADWAY DETAILS ARE NOT ATTAINABLE TO MEET FIELD CONDITIONS, OR RESULT IN DUPLICATE, OR UNDESIRED OVERLAPPING OF DEVICES. MODIFICATION MAY INCLUDE: MOVING, SUPPLEMENTING, COVERING OR REMOVAL OF DEVICES, AS DIRECTED BY THE ENGINEER.

THE FOLLOWING GENERAL NOTES APPLY AT ALL TIMES FOR THE DURATION OF THE CONSTRUCTION PROJECT, EXCEPT WHEN OTHERWISE NOTED IN THE PLAN, OR DIRECTED BY THE ENGINEER.

TRAFFIC PATTERN ALTERATIONS

A) NOTIFY THE ENGINEER TWENTY ONE (21) CALENDAR DAYS PRIOR TO ANY TRAFFIC PATTERN ALTERATION.

SIGNING

B) PROVIDE PERMANENT SIGNING.

C) PROVIDE SIGNING AND DEVICES REQUIRED TO CLOSE THE ROAD ACCORDING TO THE ROADWAY STANDARD DRAWINGS AND TRAFFIC CONTROL PLANS.

PROVIDE SIGNING REQUIRED FOR THE OFF-SITE DETOUR ROUTE AS SHOWN IN THE TRAFFIC CONTROL PLANS.

D) COVER OR REMOVE ALL SIGNS AND DEVICES REQUIRED TO CLOSE THE ROAD WHEN ROAD CLOSURE IS NOT IN OPERATION.

COVER OR REMOVE ALL SIGNS REQUIRED FOR THE OFF-SITE DETOUR WHEN THE DETOUR IS NOT IN OPERATION.

E) ENSURE ALL NECESSARY SIGNING IS IN PLACE PRIOR TO ALTERING ANY TRAFFIC PATTERN.

TRAFFIC CONTROL DEVICES

F) PLACE TYPE III BARRICADES WITH "ROAD CLOSED" SIGN R11-2 ATTACHED OF SUFFICIENT LENGTH TO CLOSE ENTIRE ROADWAY.

LOCAL NOTES

1. EMERGENCEY VEHICLE ACCESS MUST BE MAINTAINED AT ALL TIMES.
2. NOTIFY BURKE COUNTY EMERGENCY SERVICES AND PUBLIC SCHOOLS AT LEAST 30 DAYS PRIOR TO ROAD CLOSURE.

Vaughn & Melton
Consulting Engineers
Asheville, North Carolina
828-253-2796
Charlotte, NC 704-357-0488
Boone, NC 828-355-9933
Tri-Cities, TN 423-467-8401
Knoxville, TN 865-546-5800
Spartanburg, SC 864-574-4775
Charleston, SC 843-974-5650
Middlesboro, KY 606-248-6600
Atlanta, GA 770-627-3509
Copyright © 2006 Vaughn & Melton, Inc. All Rights Reserved

APPROVED: _____ DATE: _____

SEAL

NORTH CAROLINA PROFESSIONAL SEAL 20119 ENGINEER LLOYD D. BROWN

DIVISION OF HIGHWAYS · STATE OF NORTH CAROLINA · DEPARTMENT OF TRANSPORTATION · WORK ZONE TRAFFIC CONTROL

ROADWAY STANDARD DRAWINGS, GENERAL NOTES & TRANSPORTATION OPERATIONS

$$$$SYSTIME$$$$
$$$$USERNAME$$$$

PROJ. REFERENCE NO.	SHEET NO.
17BP.13.R.132	TMP-2

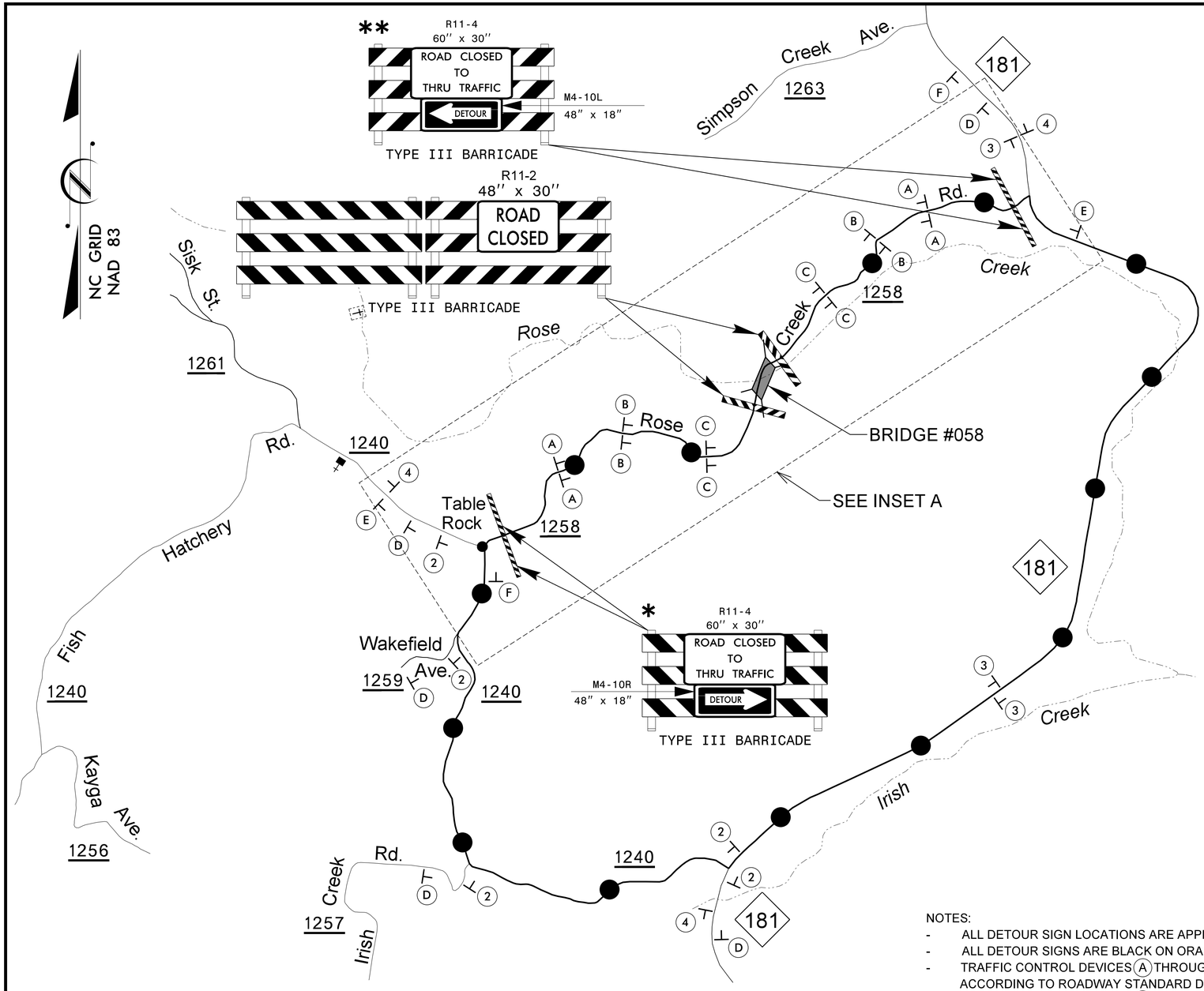

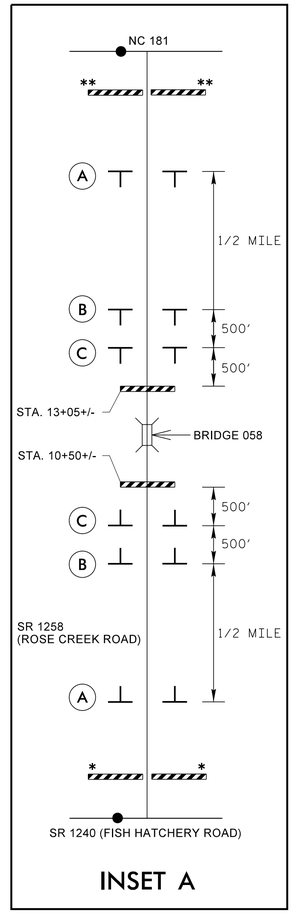

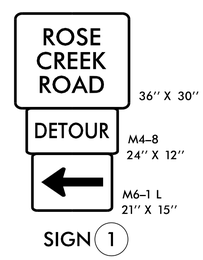

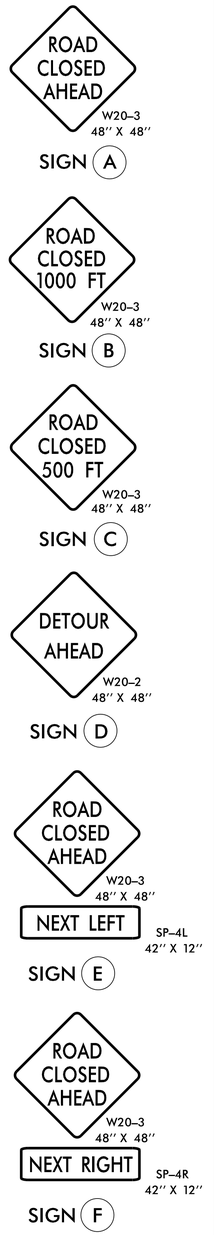

PHASING

STEP 1: - INSTALL OFF-SITE DETOUR ROUTE SIGN ASSEMBLIES FOR THE CLOSING OF SR 1258 (ROSE CREEK ROAD, -L-).

- USING ROADWAY STANDARD DRAWING NO. 1101.03, SHEETS 1 OF 9 AND 2 OF 9, CLOSE SR 1258 (ROSE CREEK ROAD, -L-) TO THRU TRAFFIC.

STEP 2: - REMOVE THE EXISTING STRUCTURE AND CONSTRUCT THE PROPOSED STRUCTURE AND ROADWAY UP TO AND INCLUDING THE FINAL LAYER OF SURFACE COURSE ON SR 1258 (ROSE CREEK ROAD, -L-) FROM STATION 10+50+/- -L- TO STATION 13+05 +/- -L-. (SEE CONSTRUCTION PLANS).

STEP 3: - REMOVE ALL TRAFFIC CONTROL DEVICES, SIGNING AND DETOUR ROUTE SIGNING.

- OPEN TO FINAL TRAFFIC PATTERN.

NOTES:
- ALL DETOUR SIGN LOCATIONS ARE APPROXIMATE.
- ALL DETOUR SIGNS ARE BLACK ON ORANGE UNLESS OTHERWISE NOTED.
- TRAFFIC CONTROL DEVICES (A) THROUGH (F) SHALL BE INSTALLED ACCORDING TO ROADWAY STANDARD DRAWING 1101.03, SHEET 1 OF 9.
- TRAFFIC CONTROL DEVICES (1) THROUGH (4) SHALL BE INSTALLED AS PER ENGINEER'S INSTRUCTIONS, AND AS SHOWN HEREON.
- SEE ROADWAY STANDARD DRAWING NO. 1101.03, SHEET 1 OF 9 AND 2 OF 9, FOR ADDITIONAL WORK ZONE SIGNS.

V&M
Vaughn & Melton
Consulting Engineers
Asheville, North Carolina
828-253-2796
Charlotte, NC 704-357-0488
Boone, NC 828-355-9933
Tri-Cities, TN 423-467-8401
Knoxville, TN 865-546-5800
Spartanburg, SC 864-574-4775
Charleston, SC 843-974-5650
Middlesboro, KY 606-248-6600
Atlanta, GA 770-627-3509

Copyright © 2006 Vaughn & Melton, Inc. All Rights Reserved

APPROVED:_____ DATE:_____

SEAL

NORTH CAROLINA PROFESSIONAL SEAL 20119 ENGINEER LOYD D. BROWN

DIVISION OF HIGHWAYS · STATE OF NORTH CAROLINA · DEPARTMENT OF TRANSPORTATION · WORK ZONE TRAFFIC CONTROL

TEMPORARY TRAFFIC CONTROL DETAIL, PHASING NOTES, OFFSITE DETOUR SIGNING AND ROAD CLOSURE

$$$$$SYSTIME$$$$$
$$$$$

PROJ. REFERENCE NO.	SHEET NO.
17BP.13.R.132	SD-1

SIGN NUMR: ROSE CREEK ROAD
TYPE: D Ground
QUANTITY: 1

BACKG. COLOR: Orange
COPY COLOR: RGB(0,0,0)

DESIGN BY: WCC
PROJECT ID: 17BP.13.R.132

CHK BY: LBD
DIV: 13

STD #: STD
DATE: June 3, 2014

SIGN WIDTH: 3′-0″
HEIGHT: 2′-6″
TOTAL AREA: 7.5 Sq.Ft.

MAT′L: 0.063 in.(1.6 mm) ALUMINUM

BORDER TYPE: FLUSH
RECESS: 0.47″
WIDTH: 0.63″
RADII: 1.5″

NO. Z BARS:
LENGTH: in.

SYMBOL	X	Y	WID	HT

USE NOTES: 1,3,4,6

1. Legend and border shall be direct applied encapsulated lens reflective sheeting.
2. Legend and border shall be direct applied enclosed lens reflective sheeting.
3. Shields shall be encapsulated lens reflective sheeting on 0.8mm aluminum and demountable.
4. Background shall be encapsulated lens reflective sheeting.
5. Background shall be enclosed lens reflective sheeting.
6. Center arrows vertically on sign.

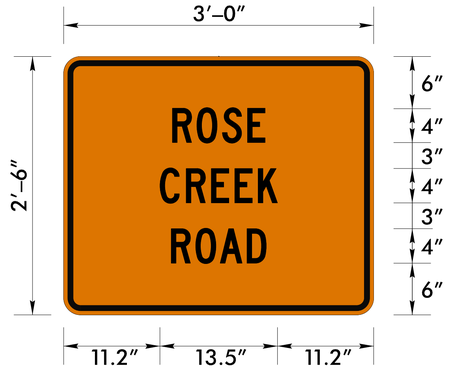

BORDER
R = 1.5″
TH = 0.63″
IN = 0.47″

Panel Style: construction_guide.ssi
M.U.T.C.D.: 2009 Edition

Letter spacings are to start of next letter

							Series/Size Text Length
	R	O	S	E			C 2000/4
12.6	2.8	3.0	2.9	2.1	12.6		10.8
	C	R	E	E	K		C 2000/4
11.2	3.0	2.9	2.7	2.7	2.3	11.2	13.6
	R	O	A	D			C 2000/4
12.5	2.8	2.8	3.1	2.3	12.5		11

Spacing Factor is 1 unless specified otherwise

FILENAME: GS40_ENGL

$$$$$SYSTIME$$$$
$$$$$$$$$$$$$$$$$$$$$$$$$$$$$$$$
$$$$$USERNAME$$$$

Vaughn & Melton
Consulting Engineers
Asheville, North Carolina
828-253-2796
Charlotte, NC 704-357-0488
Boone, NC 828-355-9933
Tri-Cities, TN 423-467-8401
Knoxville, TN 865-546-5800
Spartanburg, SC 864-574-4775
Charleston, SC 843-974-5650
Middlesboro, KY 606-248-6600
Atlanta, GA 770-627-3509

Copyright © 2006 Vaughn & Melton, Inc. All Rights Reserved

APPROVED: _____ DATE: _____

SEAL

NORTH CAROLINA PROFESSIONAL SEAL 20119 ENGINEER LLOYD D. BROWN

DIVISION OF HIGHWAYS · STATE OF NORTH CAROLINA · DEPARTMENT OF TRANSPORTATION · WORK ZONE TRAFFIC CONTROL

SPECIAL SIGN DESIGN

EROSION CONTROL PLAN

PROJECT REFERENCE NO.	SHEET NO.
17BP.13.R.132	EC-1/CONS-4

Vaughn & Melton
Consulting Engineers
Asheville, North Carolina 828-253-2796
Charlotte, North Carolina 704-357-0488
Tri-Cities, Tennessee 423-467-8401
Knoxville, Tennessee 865 546-5800
Middlesboro, Kentucky 606-248-6600
Spartanburg, South Carolina 864-574-4775

Copyright 2013 Vaughn & Melton, Inc.

THESE EROSION AND SEDIMENT CONTROL PLANS COMPLY WITH THE REGULATIONS SET FORTH BY THE NCG-010000 GENERAL CONSTRUCTION PERMIT EFFECTIVE AUGUST 3, 2011 ISSUED BY THE NORTH CAROLINA DEPARTMENT OF ENVIRONMENT AND NATURAL RESOURCES DIVISION OF WATER QUALITY.

Place Matting for Erosion Control on Slope as Work Allows.

CLEARING AND GRUBBING EROSION CONTROL FOR CONSTRUCTION SHEET 4

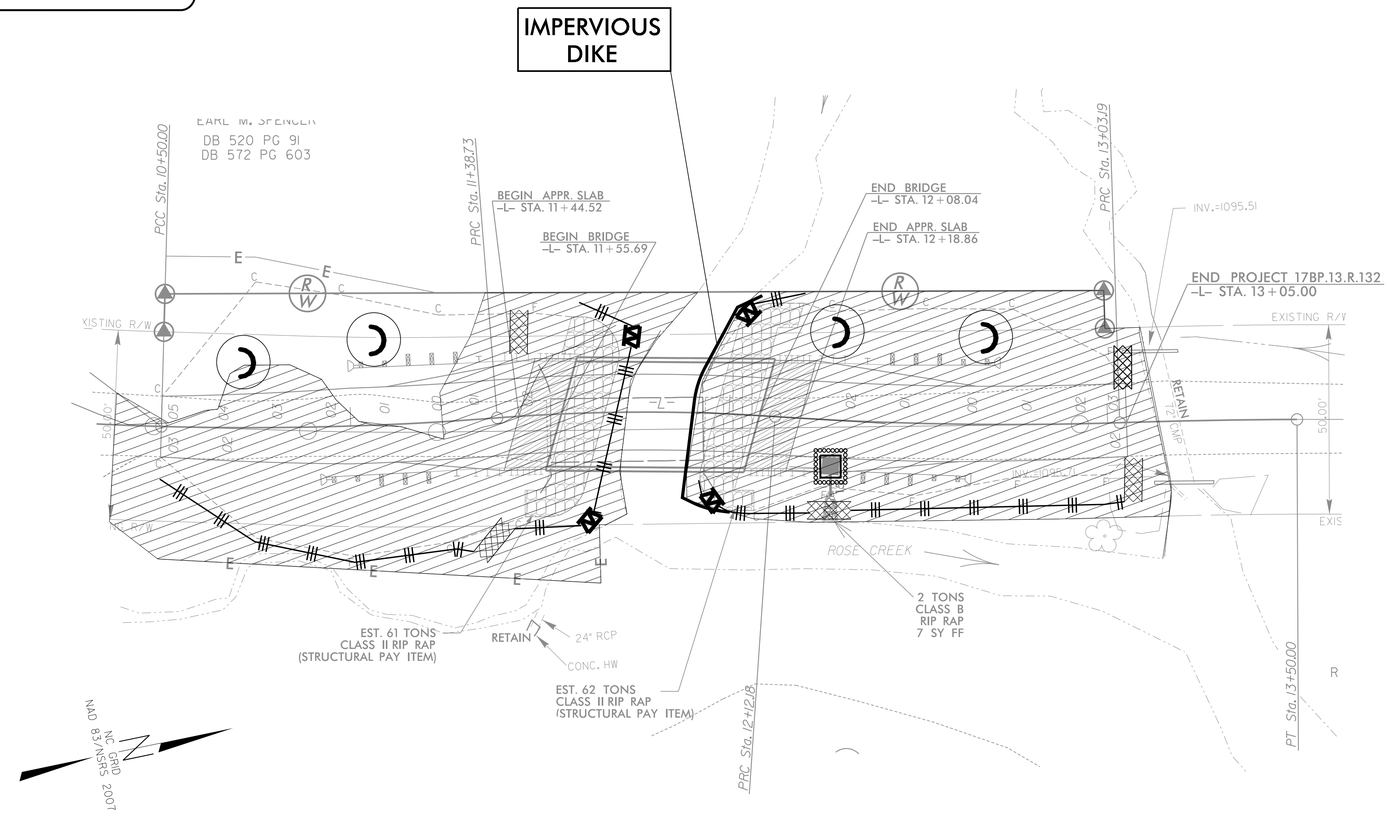

ENVIRONMENTALLY SENSITIVE AREA
SEE PROJECT SPECIAL PROVISIONS

Std. #	Description	Symbol
1605.01	Temporary Silt Fence	
1606.01	Special Sediment Control Fence	W
1632.03	Rock Inlet Sediment TrapType C	
1633.01	Temporary Rock Silt Check Type-A	
1633.01	Wattle / Coir Fiber Wattle	– EW–
	with Polyacrylamide (PAM)	

NOTES: ANY DEVIATION FROM OPTIONS GIVEN WILL REQUIRE PRIOR APPROVAL BY ENGINEER.

ADDITIONAL EROSION CONTROL DEVICES MAY NEED TO BE INSTALLED AS DIRECTED BY THE ENGINEER.

ROADSIDE ENVIRONMENTAL UNIT
DEPARTMENT OF TRANSPORTATION
DIVISION OF HIGHWAYS
RALEIGH, N.C.

2012 STANDARD SPECIFICATIONS

Level III–A: Designer of Erosion and Sediment Control Plans

MICHAEL CLARK
Date Issued: June 5, 2013
Date Expires: December 31, 2016
Certification Number: 3376

2012 STANDARD DRAWINGS

1604.01	Railroad Erosion Control Detail	1632.01	Rock Inlet Sediment Trap Type A
1605.01	Temporary Silt Fence	1632.02	Rock Inlet Sediment Trap Type B
1606.01	Special Sediment Control Fence	1632.03	Rock Inlet Sediment Trap Type C
1607.01	Gravel Construction Entrance	1633.01	Temporary Rock Silt Check Type A
1622.01	Temporary Berms and Slope Drains	1633.02	Temporary Rock Silt Check Type B
1630.01	Riser Basin	1634.01	Temporary Rock Sediment Dam Type A
1630.02	Silt Basin Type B	1634.02	Temporary Rock Sediment Dam Type B
1630.03	Temporary Silt Ditch	1635.01	Rock Pipe Inlet Sediment Trap Type A
1630.04	Stilling Basin	1635.02	Rock Pipe Inlet Sediment Trap Type B
1630.05	Temporary Diversion	1640.01	Coir Fiber Baffle
1630.06	Special Stilling Basin	1645.01	Temporary Stream Crossing
1631.01	Matting Installation		

PROJECT NO. 17BP.13.R.132
COUNTY: BURKE
STATION: 11+56.74 -L-
REPLACES BRIDGE NO. 58

STATE OF NORTH CAROLINA
DEPARTMENT OF TRANSPORTATION
RALEIGH

STRUCTURE #58 ON SR 1258 OVER ROSE CREEK

REVISIONS						SHEET NO.
NO.	BY	DATE	NO.	BY	DATE	EC-1
1			3			TOTAL SHEETS
2			4			

PROJECT REFERENCE NO.	SHEET NO.
17BP.13.R.132	EC-2
RW SHEET NO.	
ROADWAY DESIGN ENGINEER	HYDRAULICS ENGINEER

STATE OF NORTH CAROLINA
DIVISION OF HIGHWAYS

SOIL STABILIZATION TIMEFRAMES

SITE DESCRIPTION	STABILIZATION TIME	TIMEFRAME EXCEPTIONS
PERIMETER DIKES, SWALES, DITCHES, AND SLOPES	7 DAYS	NONE
HIGH QUALITY WATER (HQW) ZONES	7 DAYS	NONE
SLOPES STEEPER THAN 3:1	7 DAYS	IF SLOPES ARE 10' OR LESS IN LENGTH AND ARE NOT STEEPER THAN 2:1, 14 DAYS ARE ALLOWED.
SLOPES 3:1 OR FLATTER	14 DAYS	7 DAYS FOR SLOPES GREATER THAN 50' IN LENGTH.
ALL OTHER AREAS WITH SLOPES FLATTER THAN 4:1	14 DAYS	NONE, EXCEPT FOR PERIMETERS AND HQW ZONES.

PROJECT REFERENCE NO.	SHEET NO.
17BPJ3.R.J32	EC-2A

DIVISION OF HIGHWAYS
STATE OF NORTH CAROLINA

SOIL STABILIZATION SUMMARY SHEET

MATTING FOR EROSION CONTROL

CONST SHEET NO.	LINE	FROM STATION	TO STATION	SIDE	ESTIMATE (SY)
4	L	10+60	11+50	LT	165
4	L	12+25	12+75	LT	115
			SUBTOTAL		280
MISCELLANEOUS MATTING TO BE INSTALLED AS DIRECTED BY THE ENGINEER					800**
				TOTAL	1080
				SAY	1100
	**EROSION CONTROL MATTING TO BE PLACED ON ALL DISTURBED SLOPES				

PERMANENT SOIL REINFORCEMENT MAT

CONST SHEET NO.	LINE	FROM STATION	TO STATION	SIDE	ESTIMATE (SY)
			SUBTOTAL		
		ADDITIONAL PSRM TO BE INSTALLED			
				TOTAL	
				SAY	

PROJECT REFERENCE NO.	SHEET NO.
17BP.13.R.132	EC-3
R/W SHEET NO.	
ROADWAY DESIGN ENGINEER	HYDRAULICS ENGINEER

WATTLE WITH POLYACRYLAMIDE DETAIL

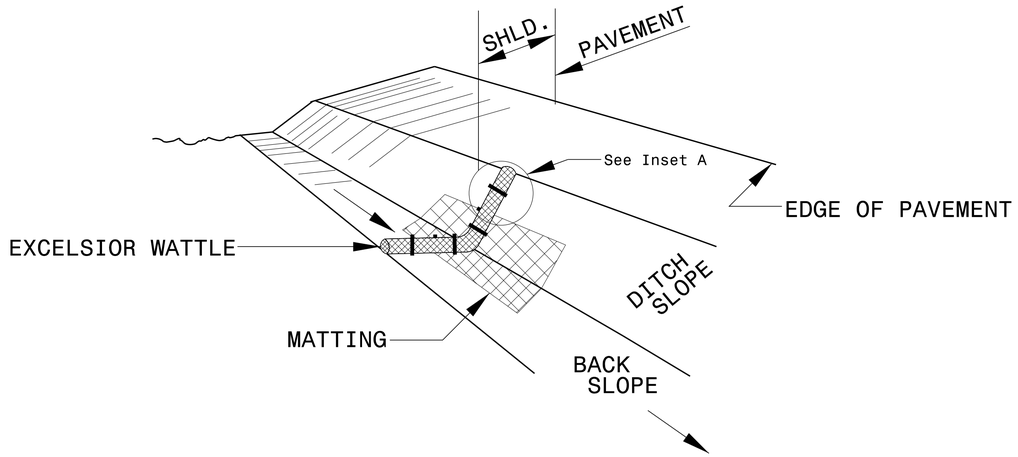

ISOMETRIC VIEW

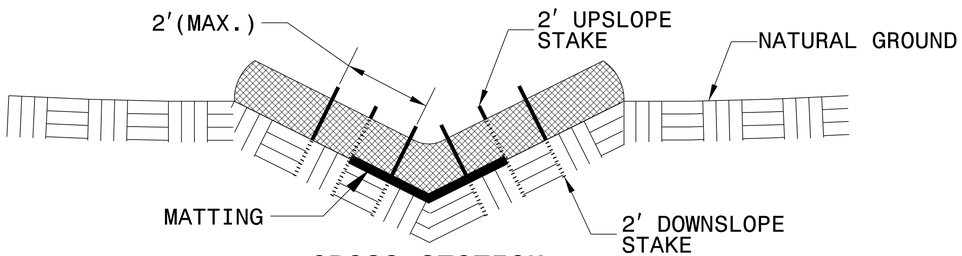

CROSS SECTION VEE DITCH

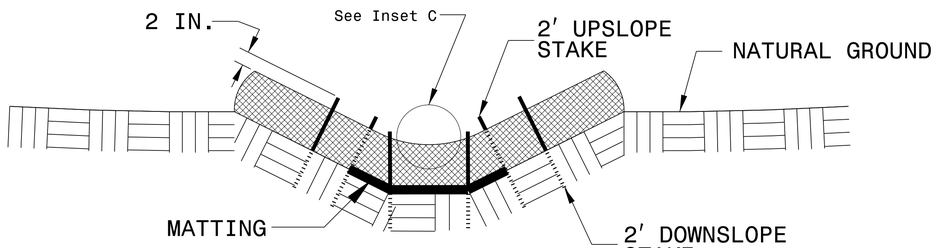

CROSS SECTION TRAPEZOIDAL DITCH

NOTES:

USE MINIMUM 12 IN. DIAMETER EXCELSIOR WATTLE.

USE 2 FT. WOODEN STAKES WITH A 2 IN. BY 2 IN. CROSS SECTION.

ONLY INSTALL WATTLE(S) TO A HEIGHT IN DITCH SO FLOW WILL NOT WASH AROUND WATTLE AND SCOUR DITCH SLOPES AND AS DIRECTED.

INSTALL A MINIMUM OF 2 UPSLOPE STAKES AND 4 DOWNSLOPE STAKES AT AN ANGLE TO WEDGE WATTLE TO BOTTOM OF DITCH.

PROVIDE STAPLES MADE OF 0.125 IN. DIAMETER STEEL WIRE FORMED INTO A U SHAPE NOT LESS THAN 12″ IN LENGTH.

INSTALL STAPLES APPROXIMATELY EVERY 1 LINEAR FOOT ON BOTH SIDES OF WATTLE AND AT EACH END TO SECURE IT TO THE SOIL.

INSTALL MATTING IN ACCORDANCE WITH SECTION 1631 OF THE STANDARD SPECIFICATIONS.

PRIOR TO POLYACRYLAMIDE (PAM) APPLICATION, OBTAIN A SOIL SAMPLE FROM PROJECT LOCATION, AND FROM OFFSITE MATERIAL, AND ANALYZE FOR APPROPRIATE PAM FLOCCULANT TO BE APPLIED TO EACH WATTLE.

INITIALLY APPLY 3.5 OUNCES OF ANIONIC OR NEUTRALLY CHARGED POLYACRYLAMIDE (PAM) OVER WATTLE WHERE WATER WILL FLOW AND AFTER EVERY RAINFALL EVENT THAT IS EQUAL TO OR EXCEEDS 0.50 IN.

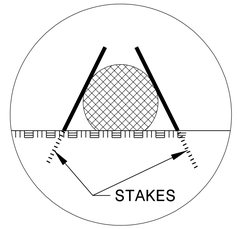

INSET A

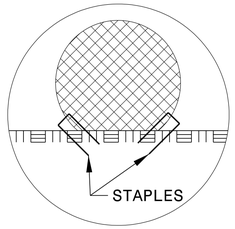

INSET B

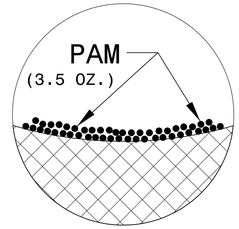

INSET C

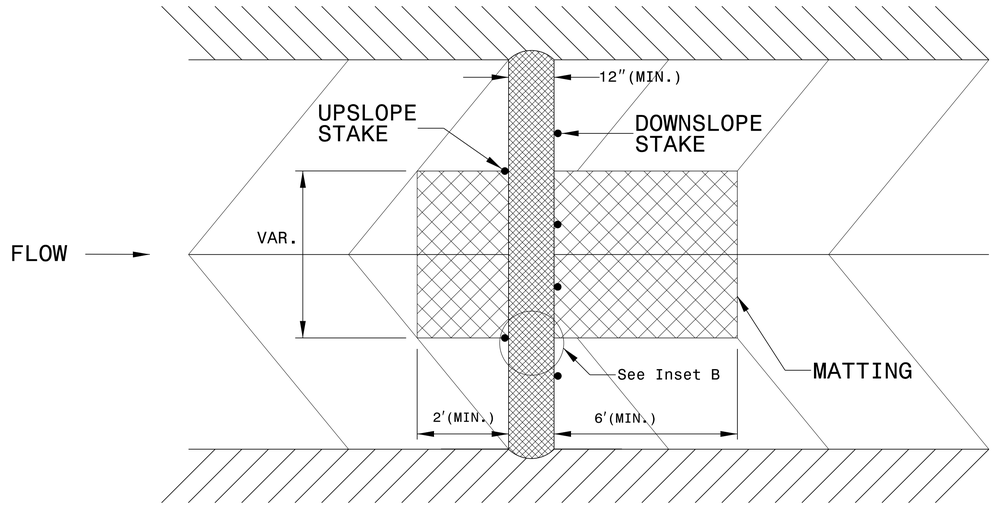

TOP VIEW

STATE	STATE PROJECT REFERENCE NO.	SHEET NO.	TOTAL SHEETS
N.C.	17BP.13.R.132	RF-1	
STATE PROJ. NO.	F. A. PROJ. NO.	DESCRIPTION	

PLANTING DETAILS

SEEDLING / LINER BAREROOT PLANTING DETAIL

HEALING IN

1. Locate a healing-in site in a shady, well protected area.

2. Excavate a flat bottom trench 12 inches deep and provide drainage.

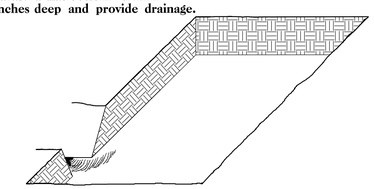

3. Backfill the trench with 2 inches well rotted sawdust. Place a 2 inch layer of well rotted sawdust at a sloping angle at one end of the trench.

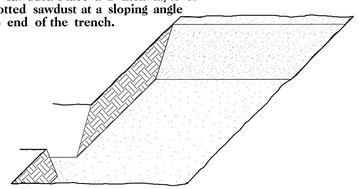

4. Place a single layer of plants against the sloping end so that the root collar is at ground level.

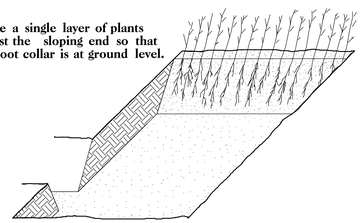

5. Place a 2 inch layer of well rotted sawdust over the roots maintaining a sloping angle.

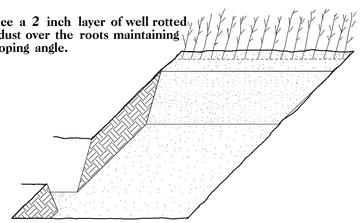

6. Repeat layers of plants and sawdust as necessary and water thoroughly.

DIBBLE PLANTING METHOD
USING THE KBC PLANTING BAR

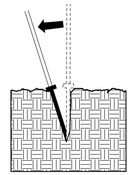

1. Insert planting bar as shown and pull handle toward planter.

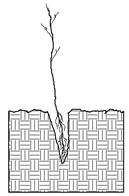

2. Remove planting bar and place seedling at correct depth.

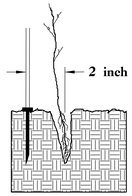

3. Insert planting bar 2 inches toward planter from seedling.

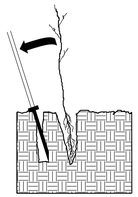

4. Pull handle of bar toward planter, firming soil at bottom.

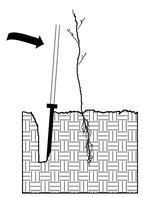

5. Push handle forward firming soil at top.

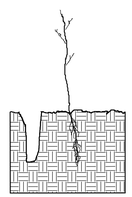

6. Leave compaction hole open. Water thoroughly.

PLANTING NOTES:

PLANTING BAG
During planting, seedlings shall be kept in a moist canvas bag or similar container to prevent the root systems from drying.



KBC PLANTING BAR
Planting bar shall have a blade with a triangular cross section, and shall be 12 inches long, 4 inches wide and 1 inch thick at center.



ROOT PRUNING
All seedlings shall be root pruned, if necessary, so that no roots extend more than 10 inches below the root collar.

REFORESTATION

☐ TREE REFORESTATION SHALL BE PLANTED 6 FT. TO 10 FT. ON CENTER, RANDOM SPACING, AVERAGING 8 FT. ON CENTER, APPROXIMATELY 680 PLANTS PER ACRE.

REFORESTATION

MIXTURE, TYPE, SIZE, AND FURNISH SHALL CONFORM TO THE FOLLOWING:

25% LIRIODENDRON TULIPIFERA	TULIP POPLAR	12 in – 18 in BR
25% PLATANUS OCCIDENTALIS	SYCAMORE	12 in – 18 in BR
25% FRAXINUS PENNSYLVANICA	GREEN ASH	12 in – 18 in BR
25% BETULA NIGRA	RIVER BIRCH	12 in – 18 in BR

REFORESTATION DETAIL SHEET

N.C.D.O.T. - ROADSIDE ENVIRONMENTAL UNIT

11/25/13

PROJECT: 17BP.13.R.132

CONTRACT:

V&M PROJECT #31336-06
TRANSPORTATION\31336-06\UTILITIES\UO-1.DGN

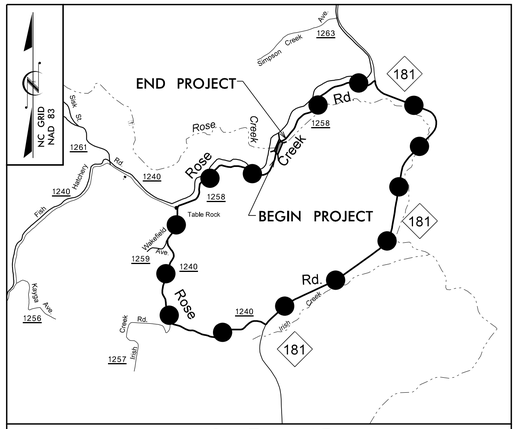

STATE OF NORTH CAROLINA
DIVISION OF HIGHWAYS

UTILITIES BY OTHERS PLANS
BURKE COUNTY

T.I.P. NO.	SHEET NO.
17BP.13.R.132	UO–1

LOCATION: BRIDGE NO. 58 OVER ROSE CREEK ON SR 1258 (ROSE CREEK ROAD)

TYPE OF WORK: UNDERGROUND TELEPHONE

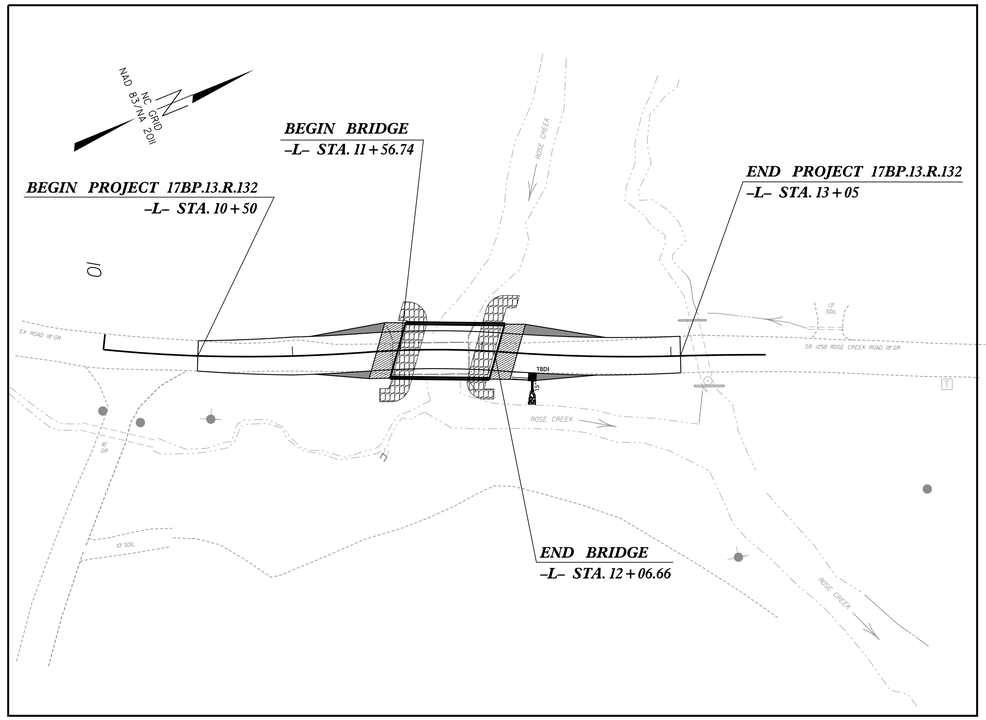

Vaughn & Melton
Consulting Engineers
Asheville, North Carolina
828-253-2796
Tri-Cities, TN 423-467-8401
Knoxville, TN 865-546-5800
Spartanburg, SC 864-574-4775
Charleston, SC 843-974-5650
Middlesboro, KY 606-248-6600
Charlotte, NC 704-357-0488
Boone, NC 828-355-9933
Atlanta, GA 770-627-3509

Copyright © 2006 Vaughn & Melton, Inc. All Rights Reserved

GRAPHIC SCALES

30 15 0 30 60
PLANS

INDEX OF SHEETS

SHEET NO.	*DESCRIPTION*
UO–1	*TITLE SHEET*
UO–2	*UTILITIES BY OTHERS PLAN SHEET*

UTILITY OWNERS ON PROJECT

(1) POWER – RUTHERFORD EMC

(2) TELEPHONE – AT&T

PLANS PREPARED BY:

Vaughn & Melton
Consulting Engineers
1318-F PATTON AVE.
Asheville, NC 28806
828-253-2796

PREPARED FOR THE OFFICE OF:
DIVISION OF HIGHWAYS
UTILITIES ENGINEERING SECTION
1591 MAIL SERVICES CENTER
RALEIGH NC 27699-1591
PHONE (919) 250-4128
FAX (919) 250-4119

Roger Worthington, P.E.	*UTILITIES SECTION ENGINEER*
Xxxxx Xxxxx, P.E.	*UTILITIES SQUAD LEADER PROJECT ENGINEER*
Lynn A. Mann, P.G.	*UTILITIES PROJECT DESIGNER*

11/25/13

PROJECT: 17BP.13.R.132

CONTRACT:

Vaughn & Melton
Consulting Engineers
Asheville, North Carolina
828-253-2796
Tri-Cities, TN 423-467-8401
Knoxville, TN 865-546-5800
Spartanburg, SC 864-574-4775
Charleston, SC 843-974-5650
Middlesboro, KY 606-248-6600
Charlotte, NC 704-357-0488
Boone, NC 828-355-9933
Atlanta, GA 770-627-3509

Copyright © 2006 Vaughn & Melton, Inc. All Rights Reserved

PROJECT REFERENCE NO.	SHEET NO.
17BP.13.R.132	U0-2

UTILITIES BY OTHERS

NOTE:
ALL PROPOSED UTILITY WORK SHOWN ON THIS SHEET WILL BE DONE BY OTHERS

NAD 83/NA 2011 NC GRID

10 11 12 13

ROSE CREEK

1
EARL M. SPENCER
DB 520 PG 91
DB 572 PG 603

2
JACQUELINE S. FUENTES
DB 2028 PG 819
DB 2072 PG 133

3
MARILYN G. SPENCER
DB 589 PG 261

ROBERT SHELLENBARGER & KRISTINE SHELLENBARGER
DB 1620 PG 777

BEGIN BRIDGE
–L– STA. 11+56.74

END BRIDGE
–L– STA. 12+06.66

BEGIN PROJECT
17BP.13.R.132
–L– STA. 10+50

END PROJECT
17BP.13.R.132
–L– STA. 13+05

ABANDON UNDERGROUND TELEPHONE

ABANDON UNDERGROUND TELEPHONE

LINES ATTACHED TO BRIDGE

PROP U/G TEL CABLES

NEW AT&T BORE, MINIMUM 5' BELOW CREEK BED & CUT AREAS

REMC NO#

REMC NO#

WATER POINT FOR FD

ABANDONED

ABANDONED

ABANDONED

MTL TOWER

LP TANK

ISFD

SR 1258 ROSE CREEK ROAD 18' GR

EXISTING R/W

RETAIN

CONC. WALKWAY

48" CHL

24" RCP

15" SDL

18" SDL

6" PVC

GRAU 350 TYPE TL-2

TYPE-III

TBDI

WOODS

PLANTED TREES AND SHRUBS

EIP

ROSE CREEK

V&M PROJECT #31336-06
TRANSPORTATION\31336-06\UTILITIES\U0-2.DGN

COMPUTED BY: PHS	DATE: 02-17-14
CHECKED BY: ACC	DATE: 02-17-14

PROJECT REFERENCE NO.	SHEET NO.
17BPJ3,RJ32	X-0

DIVISION OF HIGHWAYS
STATE OF NORTH CAROLINA



CROSS SECTION SUMMARY

IN CUBIC YARDS

-L- LOCATION	UNCLASSIFIED EXCAVATION	EMBT
10+50	0	0
10+75	58	2
11+00	119	2
11+25	95	2
11+50	42	17
11+55.69 BEGIN BRIDGE	10	4
12+08.04 END BRIDGE	0	0
12+25	9	6
12+50	15	7
12+75	21	3
13+00	19	1
13+05	1	0

NOTE: EMBANKMENT COLUMN DOES NOT INCLUDE BACKFILL FOR UNDERCUT.

Approximate quantities only. Unclassified excavation, fine grading, and clearing and grubbing will be paid for at the contract lump sum price for "grading".

8/23/99

0 2.5 5	PROJ. REFERENCE NO.	SHEET NO.
	17BP.13.R.132	X-1

BURKE #058

1155

1150

1145

1140

1135

1130

1125

1120

1115

1110

1105

1110.81

10+25.00

$$$$$SYSTIME$$$$$
$$$$$SUN$$$$$

PROJ. REFERENCE NO.	SHEET NO.
17BP.13.R.132	X-2

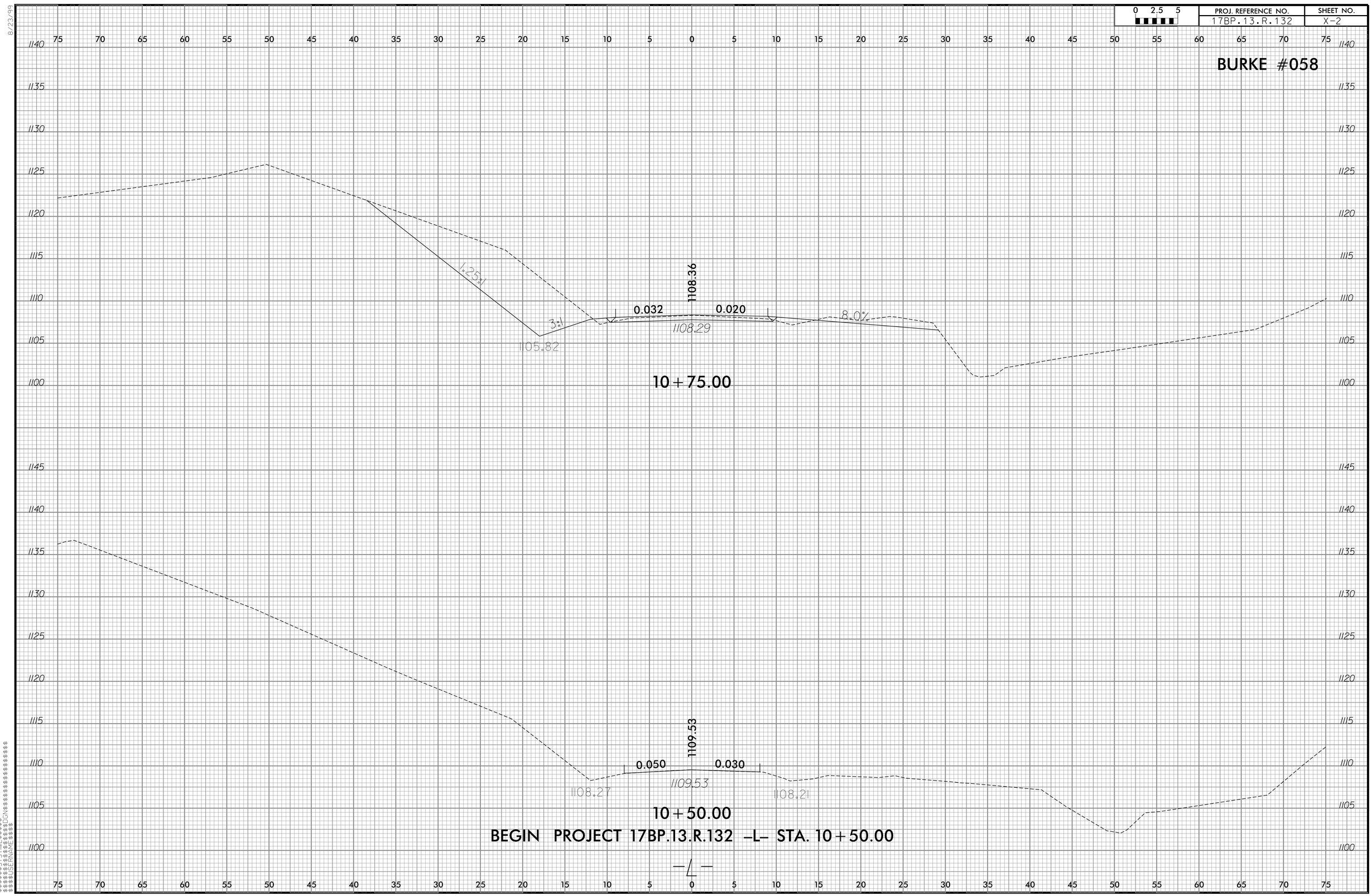

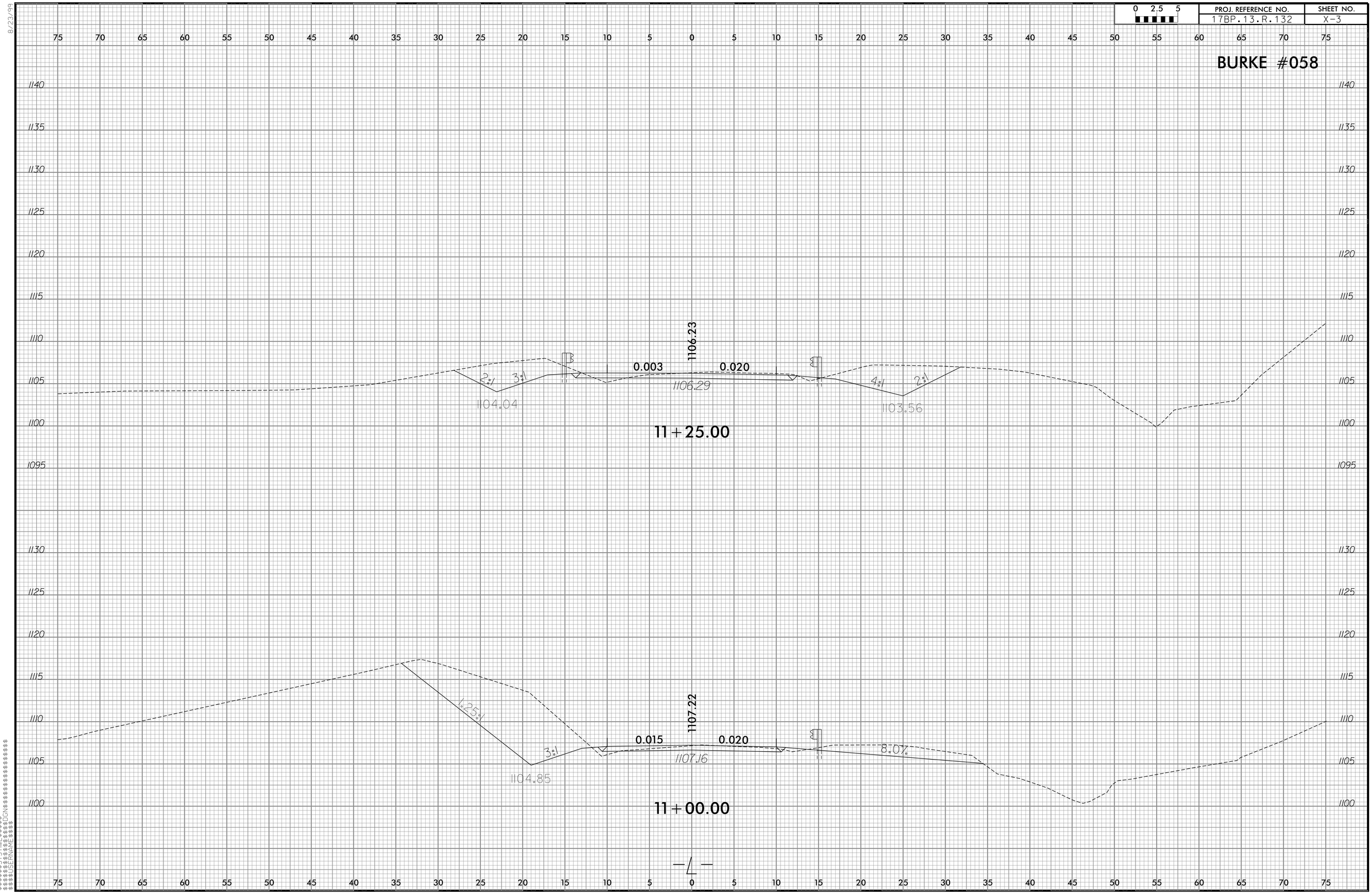

0 2.5 5
PROJ. REFERENCE NO.
17BP.13.R.132
SHEET NO.
X-3
BURKE #058
1106.23
0.003
0.020
2:1
3:1
1106.29
4:1
2:1
1104.04
1103.56
11+25.00
1107.22
1.25:1
0.015
0.020
3:1
1107.16
8.0%
1104.85
11+00.00
-L-

8/23/99

0 2.5 5	PROJ. REFERENCE NO.	SHEET NO.
	17BP.13.R.132	X-4

BURKE #058

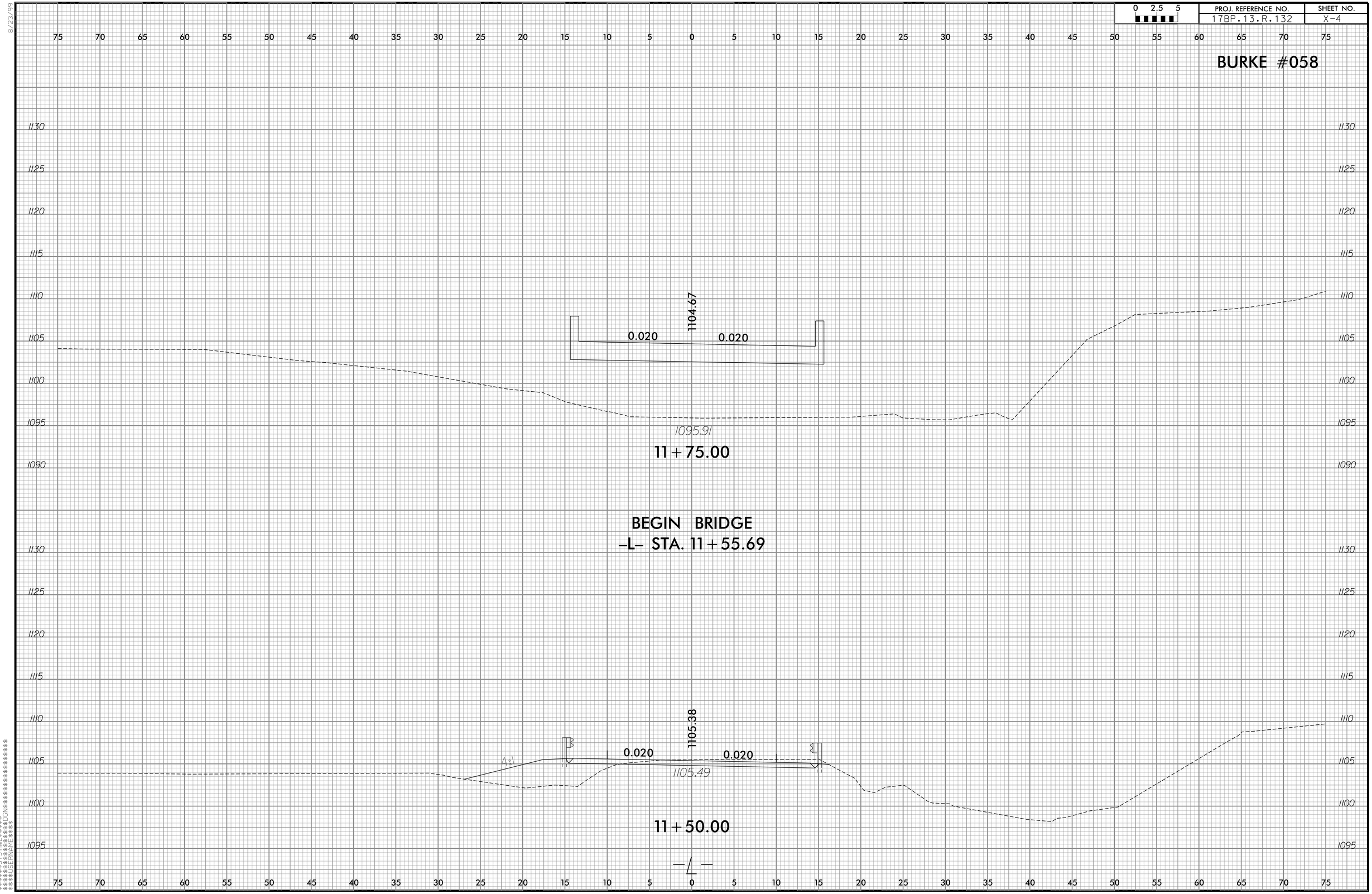

$$$$$$SYSTIME$$$$$$
$$$$$$FILENAME$$$$$$
$$$$$$USER$$$$$$
$$$$$$$$$$$$$$$$$$

8/23/99

0 2.5 5	PROJ. REFERENCE NO.	SHEET NO.
	17BP.13.R.132	X-5

BURKE #058

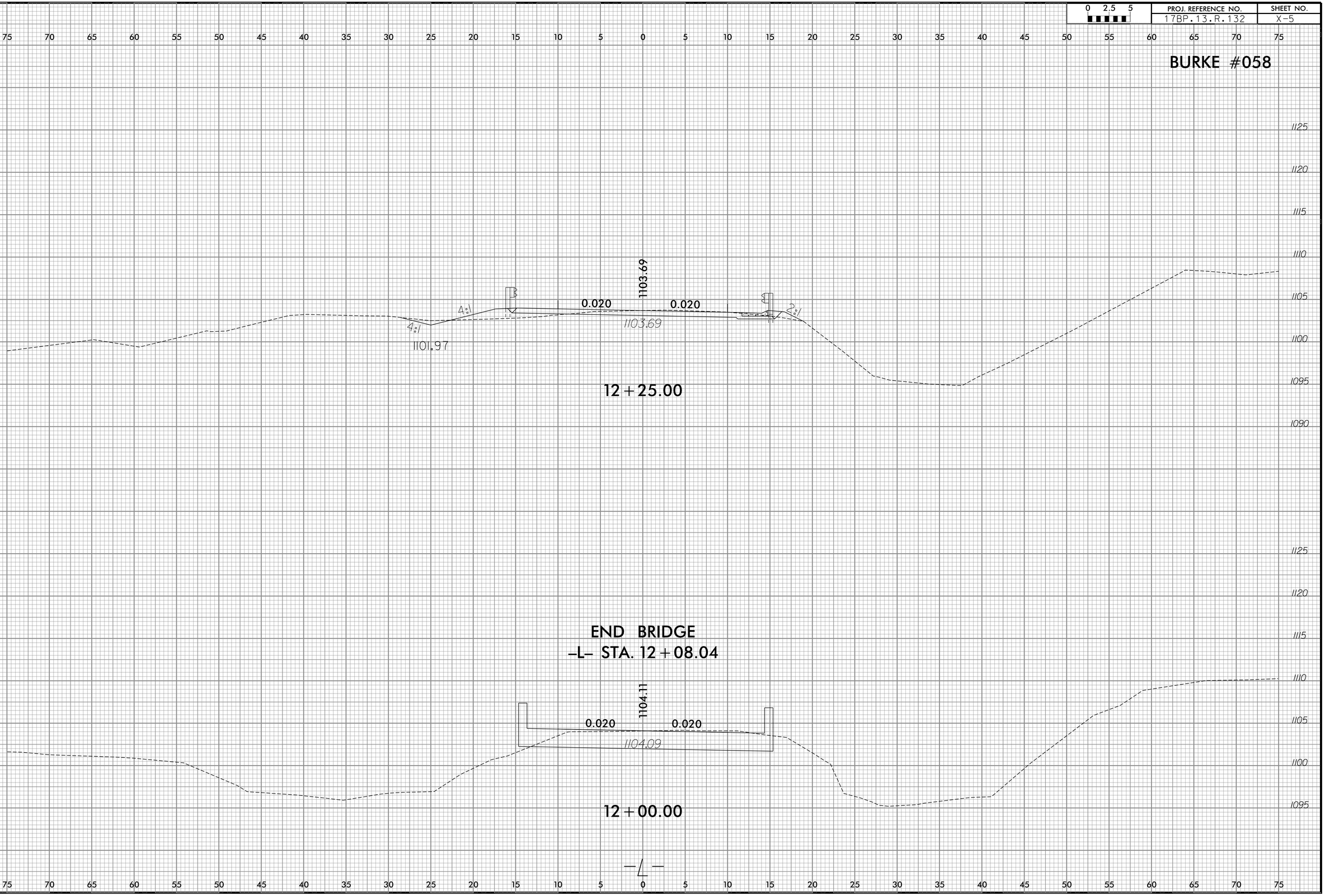

$$$$$SYSTIME$$$$$
$$$$$FILENAME$$$$$
$$$$$USER$$$$$

8/23/99

0 2.5 5	PROJ. REFERENCE NO.	SHEET NO.
	17BP.13.R.132	X-6

BURKE #058

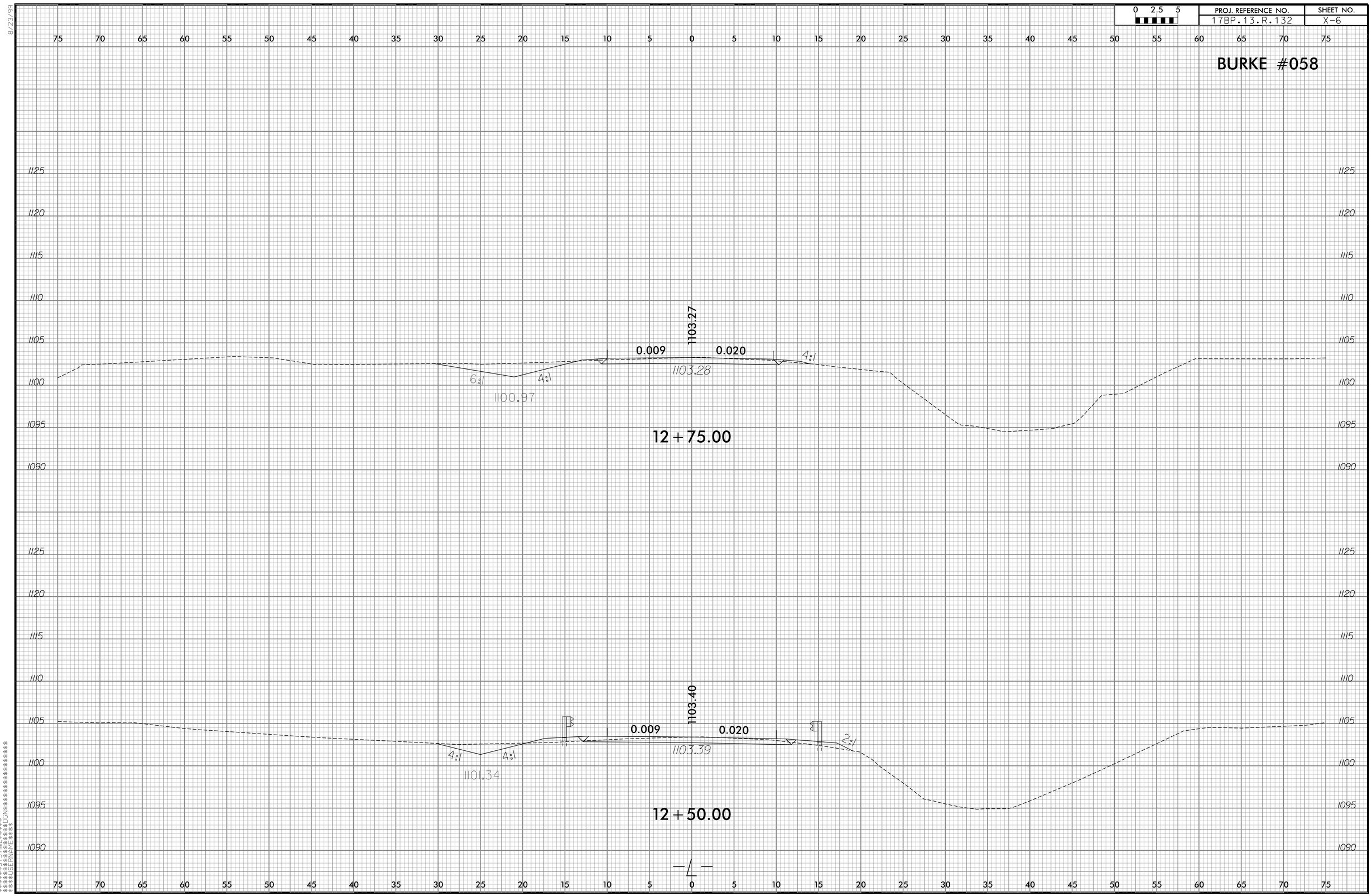

$$$$ SYSTIME $$$$
$$$$ SYSDATE $$$$
$$$$ SYSFRAME $$$$

8/23/99

0 2.5 5	PROJ. REFERENCE NO.	SHEET NO.
	17BP.13.R.132	X-7

BURKE #058

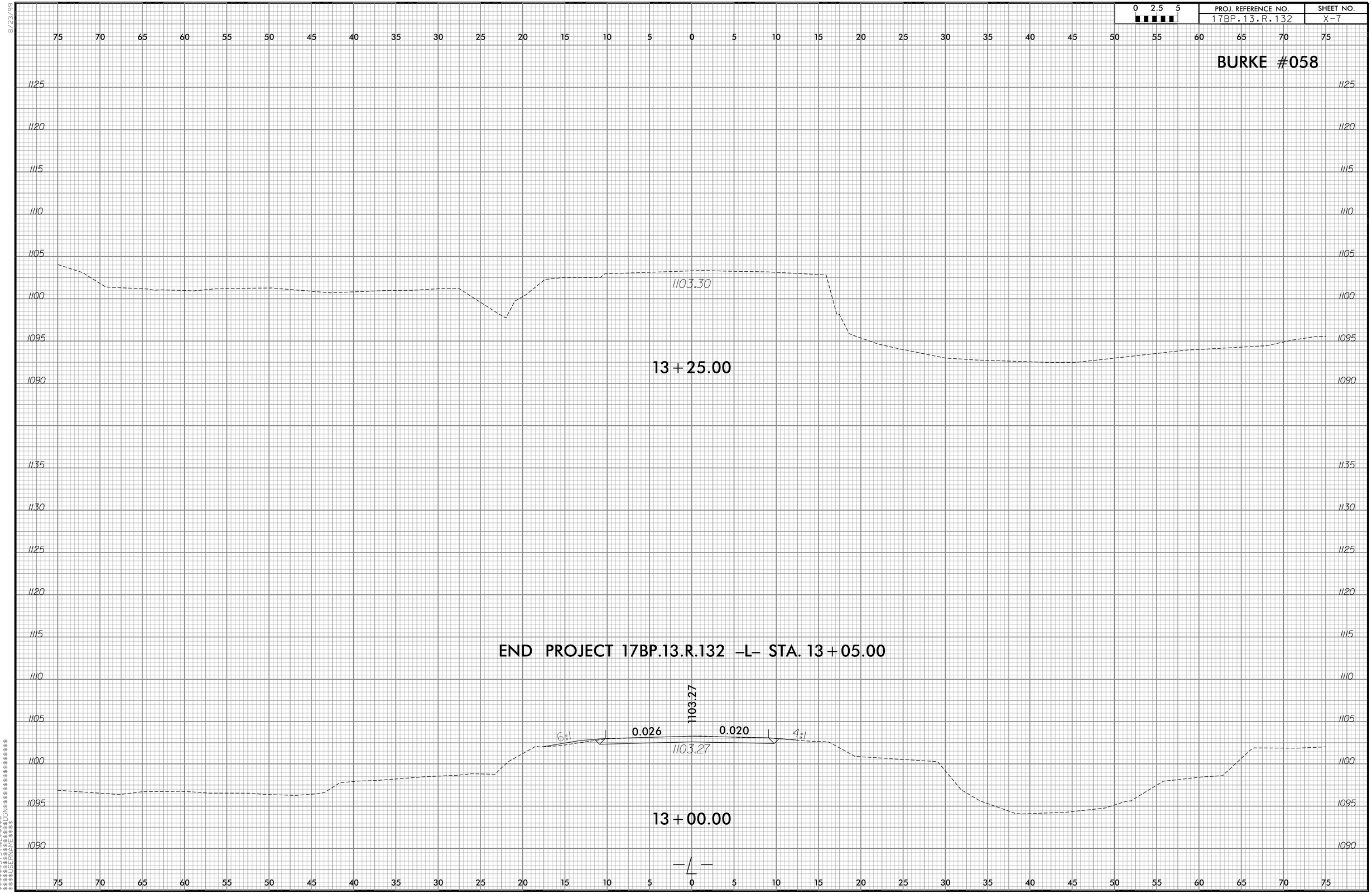

$$$$$SYSTIME$$$$$
$$$$$FILENAME$$$$$
$$$$$RUN$$$$$

TIP NO: 17BP.13.R.132

CONTRACT:

STATE	STATE PROJECT REFERENCE NO.	SHEET NO.	TOTAL SHEETS
N.C.	17BP.13.R.132	0	00

STATE PROJ. NO.	F. A. PROJ. NO.	DESCRIPTION
17BP.13.R.132	N/A	PE
17BP.13.R.132	N/A	R/W & UTILITIES
17BP.13.R.132	N/A	CONST.

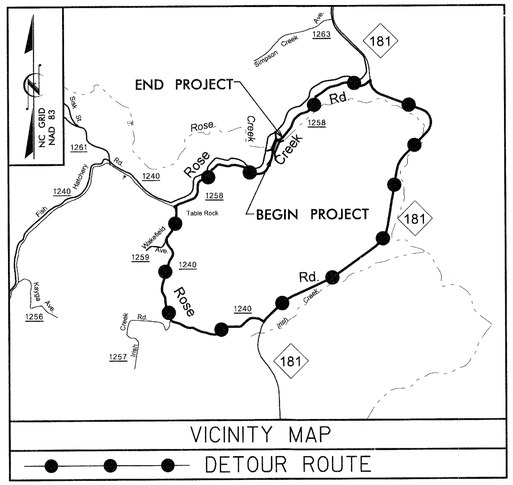

STATE OF NORTH CAROLINA

DIVISION OF HIGHWAYS

BURKE COUNTY

LOCATION: BRIDGE NO. 058 OVER ROSE CREEK ON SR 1258 (ROSE CREEK ROAD)

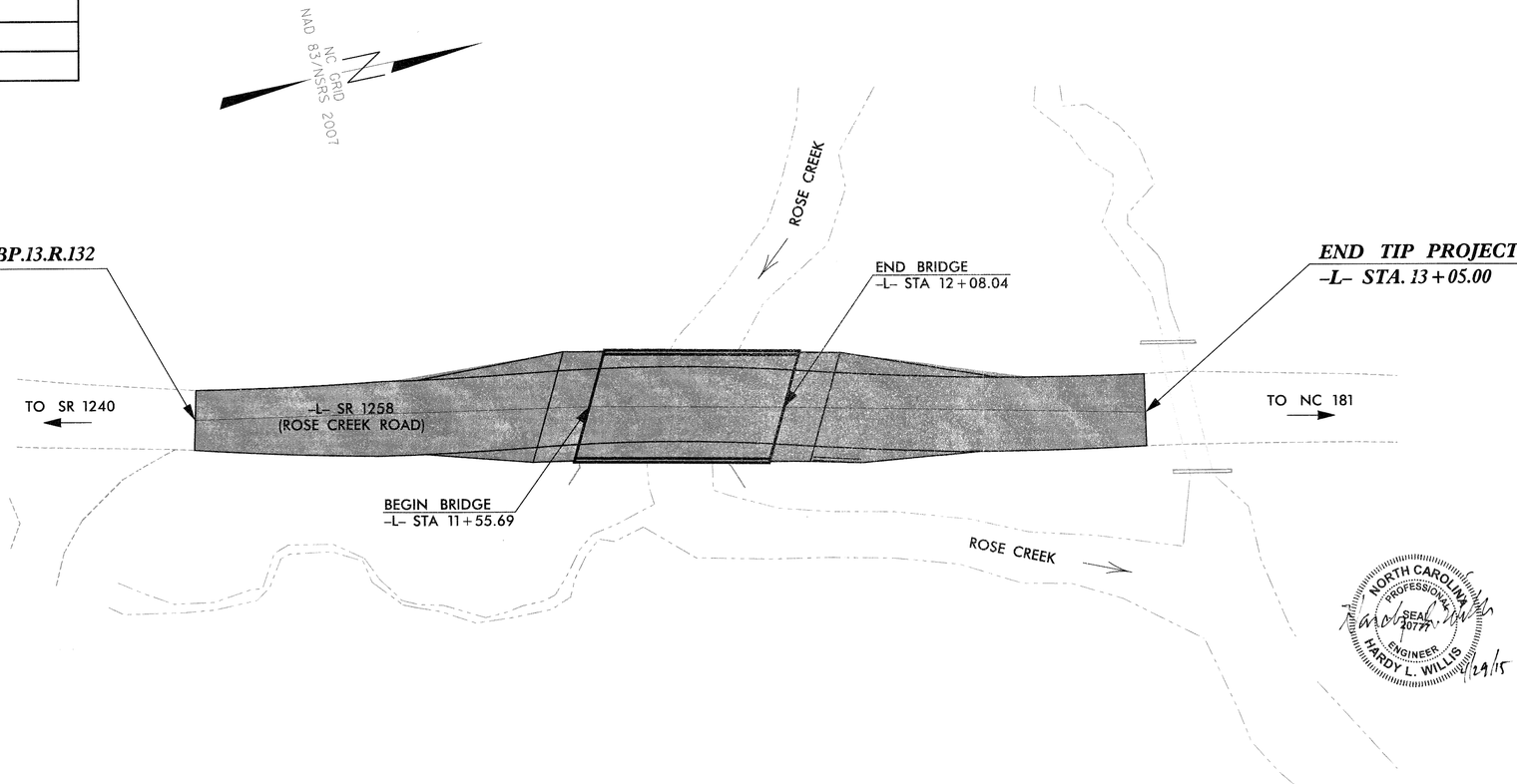

STRUCTURE

NORTH CAROLINA PROFESSIONAL SEAL 20777 ENGINEER HARDY L. WILLIS 12/29/15

V&M Vaughn & Melton
Consulting Engineers
Asheville, North Carolina 828-253-2796
Tri-Cities, TN 423-467-8401
Knoxville, TN 865-546-5800
Spartanburg, SC 864-574-4775
Charleston, SC 843-974-5650
Middlesboro, KY 606-248-6600
Charlotte, NC 704-357-0488
Boone, NC 828-355-9933
Atlanta, GA 770-627-3509

Copyright © 2006 Vaughn & Melton, Inc. All Rights Reserved

STATE OF NORTH CAROLINA DEPARTMENT OF TRANSPORTATION

DESIGN DATA

ADT 2011 = 390

T = 1%
V = 40 MPH

FUNCT. CLASS = RURAL LOCAL
SUB-REGIONAL TIER

PROJECT LENGTH

LENGTH ROADWAY TIP PROJECT 17BP.13.R.132 = 0.038 MI
LENGTH STRUCTURE TIP PROJECT 17BP.13.R.132 = 0.010 MI
TOTAL LENGTH OF TIP PROJECT 17BP.13.R.132 = 0.048 MI

Prepared In the Office of:
VAUGHN & MELTON
1318-F PATTON AVE.
ASHEVILLE NC, 28806
FOR THE NORTH CAROLINA DIVISION OF HIGHWAYS

2012 STANDARD SPECIFICATIONS

LETTING DATE :

HARDY L. WILLIS, PE
PROJECT ENGINEER

RYAN SHIPMAN, EI
PROJECT DESIGN ENGINEER

STRUCTURES MANAGEMENT UNIT
1000 BIRCH RIDGE DR.
RALEIGH, N.C. 27610

DIVISION OF HIGHWAYS
STATE OF NORTH CAROLINA

PAUL SPROUSE *P.E.*
STATE DESIGN ENGINEER

DEPARTMENT OF TRANSPORTATION
FEDERAL HIGHWAY ADMINISTRATION

APPROVED
DIVISION ADMINISTRATOR *DATE*

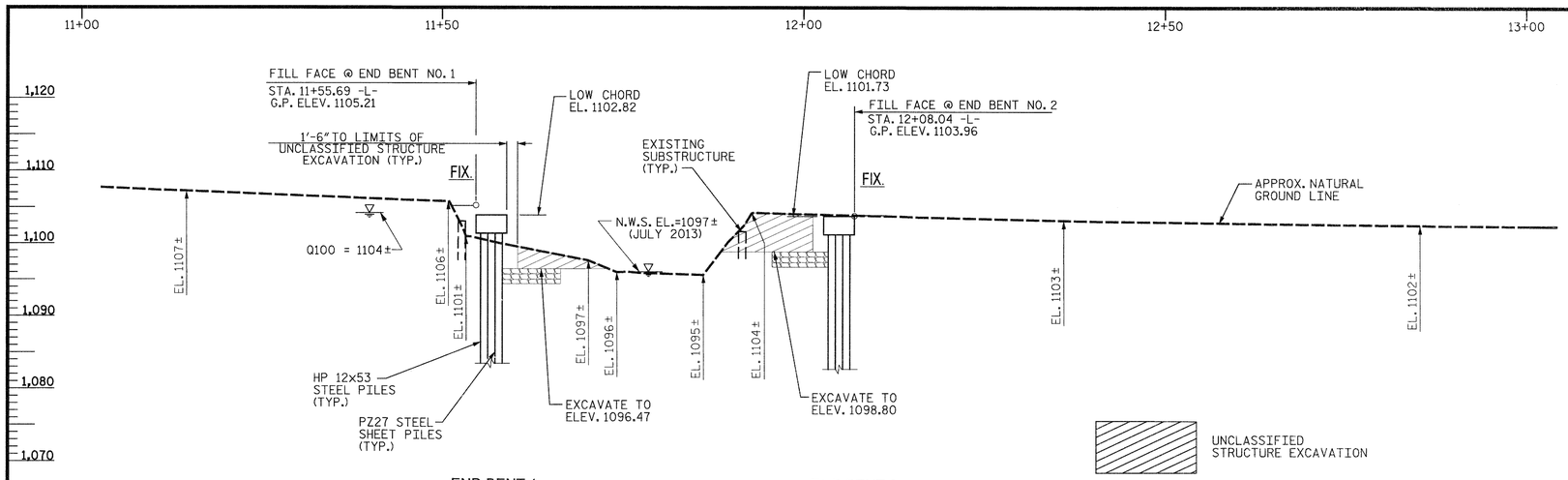

SECTION ALONG ℄ SURVEY -L-

SECTIONS AT END BENTS AND BENT ARE AT RIGHT ANGLES.

PI = 11+90.00
EL = 1,102.94'
VC = 220'

(-)4.7099%

(+)0.3000%

GRADE DATA -L-

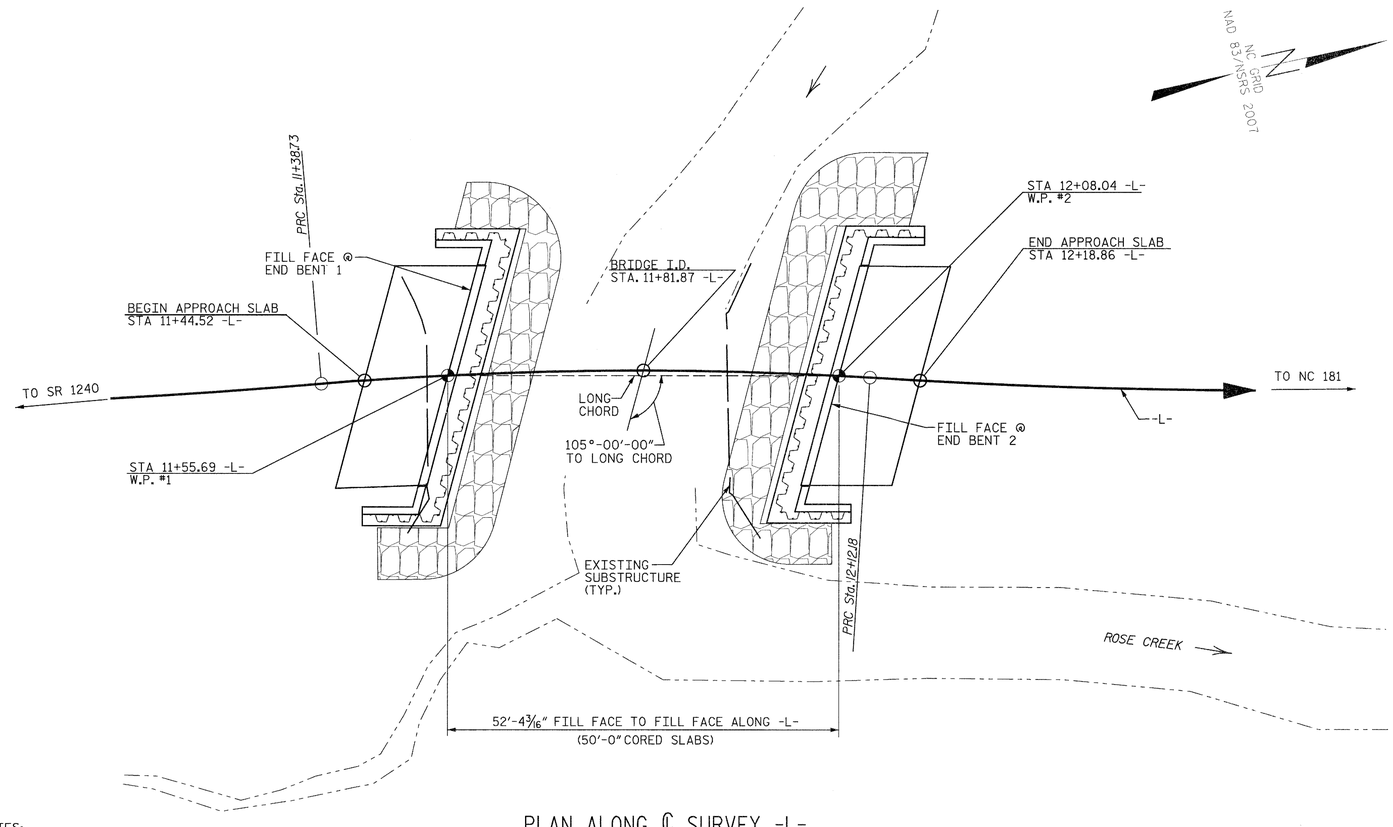

PLAN ALONG ℄ SURVEY -L-

NOTES:
END BENTS AND BENTS ARE PARALLEL.
PILES NOT SHOWN IN PLAN VIEW FOR CLARITY.
CORED SLABS ARE PARALLEL TO LONG CHORD.

PI Sta 11+75.52	PI Sta 12+57.72
△ = 8° 24' 57.6" (RT)	△ = 5° 47' 39.4" (LT)
D = 11° 27' 33.0"	D = 6° 21' 58.3"
L = 73.44'	L = 91.02'
T = 36.79'	T = 45.55'
R = 500.00'	R = 900.00'

HORIZONTAL CURVE DATA -L-

I HEREBY CERTIFY THAT THESE PLANS ARE THE AS-BUILT PLANS.

NORTH CAROLINA PROFESSIONAL SEAL 20777 ENGINEER HARDY L. WILLIS 4/29/15

Vaughn & Melton
Consulting Engineers
Asheville, North Carolina 828-253-2796
Charlotte, North Carolina 704-357-0488
Tri-Cities, Tennessee 423-467-8401
Knoxville, Tennessee 865-546-5600
Middlesboro, Kentucky 606-248-6600
Spartanburg, South Carolina 864-574-4775

Copyright © 2006 Vaughn & Melton, Inc. All Rights Reserved

PROJECT NO. 17BP.13.R.132
BURKE COUNTY
STATION: 11+81.87 -L-
SHEET 1 OF 3 REPLACES BRIDGE NO. 58

STATE OF NORTH CAROLINA
DEPARTMENT OF TRANSPORTATION
RALEIGH

GENERAL DRAWING

FOR BRIDGE ON SR 1258
(ROSE CREEK ROAD)
OVER ROSE CREEK
BETWEEN NC 181 AND SR 1240

DWN. BY: AW	DATE: 01/15	
CHKD. BY: HLW	DATE: 01/15	
DES. EGR. OF RECORD: RTS	DATE: 01/15	

REVISIONS					
NO.	BY:	DATE:	NO.	BY:	DATE:
1			3		
2			4		

SHEET NO. S-1
TOTAL SHEETS 16

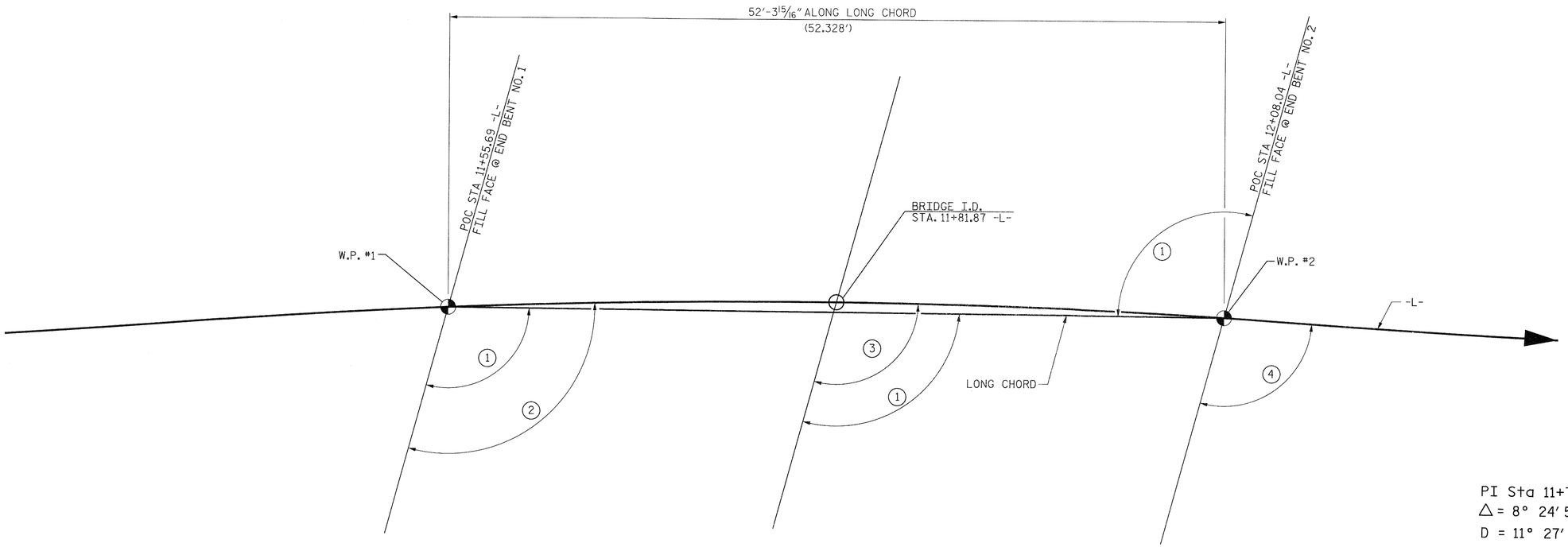

PI Sta 11+75.52
△ = 8° 24' 57.6" (RT)
D = 11° 27' 33.0"
L = 73.44'
T = 36.79'
R = 500.00'

HORIZONTAL CURVE DATA -L-

LONG CHORD LAYOUT

END BENTS ARE PARALLEL.

(1) 105°00'00" TO LONG CHORD

(2) 107°59'58" TAN TO CURVE, ℄ SURVEY -L-

(3) 105°00'00" TAN TO CURVE, ℄ SURVEY -L-

(4) 102°00'02" TAN TO CURVE, ℄ SURVEY -L-

NORTH CAROLINA PROFESSIONAL SEAL 20727 ENGINEER HARDY L. WILLIS
4/29/15

V&M Vaughn & Melton
Consulting Engineers
Asheville, North Carolina 828-253-2796
Charlotte, North Carolina 704-357-0488
Tri-Cities, Tennessee 423-467-8401
Knoxville, Tennessee 865-546-5800
Middlesboro, Kentucky 606-248-6600
Spartanburg, South Carolina 864-574-4775
Copyright © 2006 Vaughn & Melton, Inc. All Rights Reserved

PROJECT NO. 17BP.13.R.132
BURKE COUNTY
STATION: 11+81.87 -L-

SHEET 2 OF 3

STATE OF NORTH CAROLINA
DEPARTMENT OF TRANSPORTATION
RALEIGH

LONG CHORD LAYOUT
FOR BRIDGE ON SR 1258
(ROSE CREEK ROAD)
OVER ROSE CREEK
BETWEEN NC 181 AND SR 1240

DWN. BY: AW	DATE: 01/15				
CHKD. BY: HLW	DATE: 01/15				
DES. EGR. OF RECORD: RTS	DATE: 01/15				

REVISIONS					
NO.	BY:	DATE:	NO.	BY:	DATE:
1			3		
2			4		

SHEET NO. S-2
TOTAL SHEETS 16

BM #2 - N 773757.68, E 1172559.19, -L- STA 13+12.00, 16.40' RT., ELEV. 1102.81., CHISELED "X" IN NE CORNER OF CONC. HEADWALL.

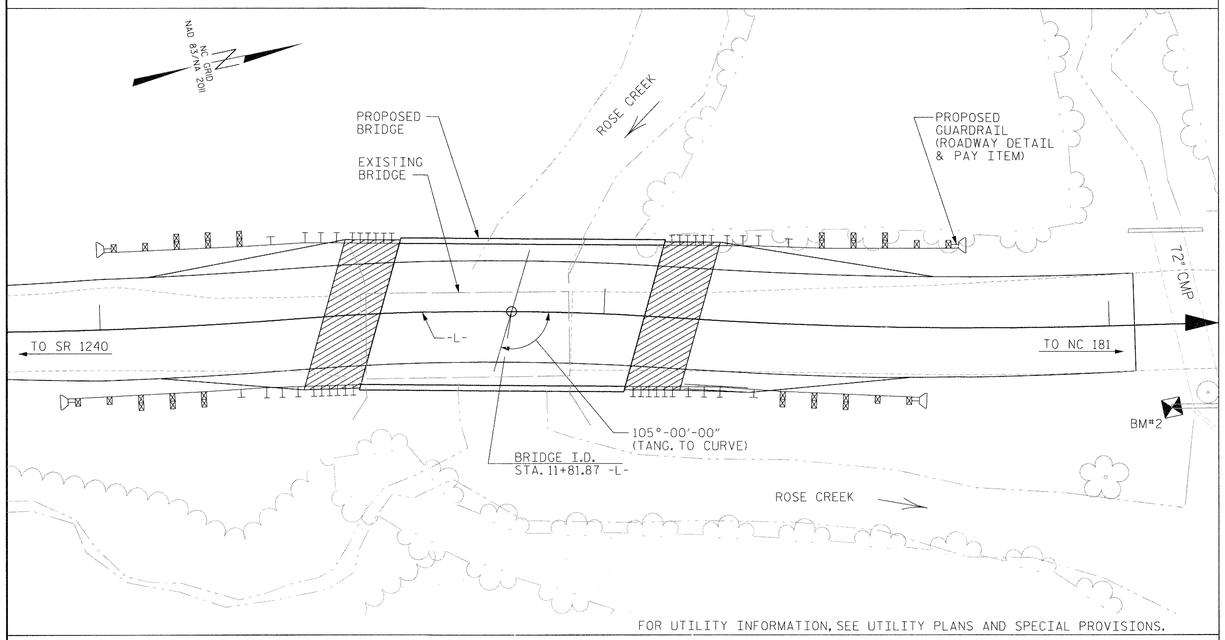

LOCATION SKETCH

BRIDGE HYDRAULIC DATA

DESIGN DISCHARGE	= 1500	CFS
DESIGN FREQUENCY	= 25	YRS
DESIGN HW ELEVATION	= 1103.8	FT
BASE DISCHARGE	= 2100	CFS
BASE FREQUENCY	= 100	YRS
BASE HW ELEVATION	= 1104.17	FT
OVERTOPPING DISCHARGE	= 1410	CFS
OVERTOPPING FREQUENCY	= 10+	YRS
OVERTOPPING ELEVATION	= 1102.9	FT
DATE OF SURVEY	= JULY 2013	
W.S. ELEVATION AT DATE OF SURVEY	= 1096.6	FT
DRAINAGE AREA	= 6.01	SQ. MI.

GENERAL NOTES:

ASSUMED LIVE LOAD = HL-93 OR ALTERNATE LOADING.

THIS BRIDGE HAS BEEN DESIGNED IN ACCORDANCE WITH THE REQUIREMENTS OF THE AASHTO LRFD BRIDGE DESIGN SPECIFICATIONS.

THIS BRIDGE IS LOCATED IN SEISMIC ZONE 1.

FOR OTHER DESIGN DATA AND GENERAL NOTES, SEE SHEET SN.

FOR EROSION CONTROL MEASURES, SEE EROSION CONTROL PLANS.

THE EXISTING STRUCTURE, CONSISTING OF A ONE SPAN, 40'-6" LONG TIMBER DECK ON STEEL GIRDER FLOOR BEAM SYSTEM ON TIMBER CAPS/ TIMBER POSTS AND SILLS, END BENTS, AND LOCATED AT THE PROPOSED STRUCTURE, SHALL BE REMOVED.

REMOVAL OF THE EXISTING BRIDGE SHALL BE PERFORMED SO AS NOT TO ALLOW DEBRIS TO FALL INTO THE WATER. THE CONTRACTOR SHALL REMOVE THE BRIDGE AND SUBMIT PLANS FOR DEMOLITION IN ACCORDANCE WITH ARTICLE 402-2 OF THE STANDARD SPECIFICATIONS.

THE SUBSTRUCTURE OF THE EXISTING BRIDGE INDICATED ON THE PLANS IS FROM THE BEST INFORMATION AVAILABLE. SINCE THIS INFORMATION IS SHOWN FOR THE CONVENIENCE OF THE CONTRACTOR, THE CONTRACTOR SHALL HAVE NO CLAIM WHATSOEVER AGAINST THE DEPARTMENT OF TRANSPORTATION FOR ANY DELAYS OR ADDITIONAL COST INCURRED BASED ON DIFFERENCES BETWEEN THE EXISTING BRIDGE SUBSTRUCTURE SHOWN ON THE PLANS AND THE ACTUAL CONDITIONS AT THE PROJECT SITE.

THIS STRUCTURE HAS BEEN DESIGNED IN ACCORDANCE WITH "HEC 18-EVALUATING SCOUR AT BRIDGES".

FOR SUBMITTAL OF WORKING DRAWINGS, SEE SPECIAL PROVISIONS.

FOR FALSEWORK AND FORMWORK, SEE SPECIAL PROVISIONS.

FOR CRANE SAFETY, SEE SPECIAL PROVISIONS.

FOR GROUT FOR STRUCTURES, SEE SPECIAL PROVISIONS.

THE MATERIAL SHOWN IN THE CROSS-HATCHED AREA SHALL BE EXCAVATED FOR A DISTANCE OF 25 FT. EACH SIDE OF CENTERLINE ROADWAY AS DIRECTED BY THE ENGINEER. THIS WORK WILL BE PAID FOR AT THE CONTRACT LUMP SUM PRICE FOR UNCLASSIFIED STRUCTURE EXCAVATION. SEE SECTION 412 OF THE STANDARD SPECIFICATIONS.

ASPHALT WEARING SURFACE IS INCLUDED IN ROADWAY QUANTITY ON ROADWAY PLANS.

INASMUCH AS THE PAINT SYSTEM ON THE EXISTING STRUCTURAL STEEL CONTAINS LEAD, THE CONTRACTOR'S ATTENTION IS DIRECTED TO ARTICLE 107-1 OF THE STANDARD SPECIFICATIONS. ANY COSTS RESULTING FROM COMPLIANCE WITH APPLICABLE STATE OR FEDERAL REGULATIONS PERTAINING TO HANDLING OF MATERIALS CONTAINING LEAD BASED PAINT SHALL BE INCLUDED IN THE BID PRICE FOR "REMOVAL OF EXISTING STRUCTURE AT STATION 11+81.87 -L-."

FOUNDATION RECOMMENDATION NOTES:

FOR PILES, SEE SECTION 450 OF THE STANDARD SPECIFICATIONS.

PILES AT END BENT NO. 1 AND END BENT NO. 2 ARE DESIGNED FOR A FACTORED RESISTANCE OF 85 TONS PER PILE.

DRIVE PILES AT END BENT NO. 1 AND END BENT NO. 2 TO A REQUIRED DRIVING RESISTANCE OF 145 TONS PER PILE.

IT HAS BEEN ESTIMATED THAT A HAMMER WITH AN EQUIVALENT RATED ENERGY IN THE RANGE OF 15,000 TO 30,000 FT-LBS PER BLOW WILL BE REQUIRED TO DRIVE PILES AT END BENT NO. 1 AND END BENT NO. 2. THIS ESTIMATED ENERGY RANGE DOES NOT RELEASE THE CONTRACTOR FROM PROVIDING DRIVING EQUIPMENT IN ACCORDANCE WITH SUBARTICLE 450-3(D)(2) OF THE STANDARD SPECIFICATIONS.

CONCRETE IS REQUIRED TO FILL HOLES TO THE TOP OF WEATHERED ROCK FOR PILE EXCAVATION AT END BENT NO. 1 AND END BENT NO. 2. FILL HOLES ABOVE TOP OF WEATHERED ROCK WITH EXCAVATABLE FLOWABLE FILL.

PILE EXCAVATION IS REQUIRED TO INSTALL PILES AT END BENT NO. 1. EXCAVATE HOLES AT PILE LOCATIONS TO ELEVATION 1,087 FT. (LT) AND ELEVATION 1,091 FT. (RT) AND HAVE AT LEAST 5 FEET OF PENETRATION INTO WEATHERED ROCK OR ROCK. SEE SECTION 450 OF THE STANDARD SPECIFICATIONS.

PILE EXCAVATION IS REQUIRED TO INSTALL PILES AT END BENT NO. 2. EXCAVATE HOLES AT PILE LOCATIONS TO ELEVATION 1,090 FT. AND HAVE AT LEAST 5 FEET OF PENETRATION INTO WEATHERED ROCK OR ROCK. SEE SECTION 450 OF THE STANDARD SPECIFICATIONS.

FOR STEEL SHEET PILES, SEE SECTION 1084 OF THE STANDARD SPECIFICATIONS.

PZ 27 SHEETING IS TO BE DRIVEN IN FRONT (STREAM SIDE) OF THE HP 12 X 53 PILES AT END BENT NO. 1 AND END BENT NO. 2 AS SHOWN IN THE STRUCTURE PLANS.

SHEET PILES SHALL BE DRIVEN TO REFUSAL AT END BENT NO. 1. REFUSAL IS ESTIMATED AT ELEVATION 1,092 FT. (LT) AND 1,097 FT. (RT) FOR END BENT NO. 1.

SHEET PILES SHALL BE DRIVEN TO REFUSAL AT END BENT NO. 2. REFUSAL IS ESTIMATED AT ELEVATION 1,095.5 FT. FOR END BENT NO. 2.

THE SCOUR CRITICAL ELEVATION FOR END BENT NO. 1 IS 1,090.0 FT. (LT) AND 1,095.0 FT. (RT). FOR END BENT NO. 2, THE SCOUR CRITICAL ELEVATION IS 1,093.5 FT. SCOUR CRITICAL ELEVATIONS ARE USED TO MONITOR POSSIBLE SCOUR PROBLEMS DURING THE LIFE OF THE STRUCTURE.

TOTAL BILL OF MATERIAL

	REMOVAL OF EXISTING STRUCTURE	UNCLASSIFIED STRUCTURE EXCAVATION	PILE EXCAVATION IN SOIL	PILE EXCAVATION NOT IN SOIL	CLASS A CONCRETE	BRIDGE APPROACH SLABS	REINFORCING STEEL	HP 12 X 53 STEEL PILES		STEEL SHEET PILES	VERTICAL CONCRETE BARRIER RAIL	RIP RAP CLASS II (2'-0" THICK)	GEOTEXTILE FOR DRAINAGE	ELASTOMERIC BEARINGS	3'-0" x 1'-9" PRESTRESSED CONCRETE CORED SLAB UNIT	
	LUMP SUM	LUMP SUM	LIN. FT.	LIN. FT.	CU. YARDS	LUMP SUM	LBS.	NO.	LIN. FT.	SQ. FT.	LIN. FT.	TONS	SQ. YARDS	LUMP SUM	NO.	LIN. FT.
SUPERSTRUCTURE						LUMP SUM					100.0			LUMP SUM	10	500.0
END BENT 1		LUMP SUM	35	30	21.0		2509	5	75.0	389		46	51			
END BENT 2		LUMP SUM	25	30	21.0		2509	5	75.0	269		54	60			
TOTAL	LUMP SUM	LUMP SUM	60	60	42.0	LUMP SUM	5018	10	150.0	658	100.0	100	111	LUMP SUM	10	500.0

NORTH CAROLINA PROFESSIONAL SEAL 20744 ENGINEER HARDY L. WILLIS 5/26/15

Vaughn & Melton
Consulting Engineers
Charlotte, North Carolina 704-357-0488
Tri-Cities, Tennessee 423-467-8401
Knoxville, Tennessee 865-546-5800
Asheville, North Carolina 828-253-2796
Middlesboro, Kentucky 606-248-6600
Spartanburg, South Carolina 864-574-4775

Copyright © 2006 Vaughn & Melton, Inc. All Rights Reserved

PROJECT NO. 17BP.13.R.132

BURKE COUNTY

STATION: 11+81.87 -L-

SHEET 3 OF 3

STATE OF NORTH CAROLINA
DEPARTMENT OF TRANSPORTATION
RALEIGH

GENERAL DRAWING

FOR BRIDGE ON SR 1258
(ROSE CREEK ROAD)
OVER ROSE CREEK
BETWEEN NC 181 AND SR 1240

DWN. BY: AW	DATE: 01/15	REVISIONS				SHEET NO.
CHKD. BY: HLW	DATE: 01/15	NO.	BY:	DATE:	NO. BY: DATE:	S-3
DES. EGR. OF RECORD: RTS	DATE: 01/15	1			3	TOTAL SHEETS
		2			4	16

LOAD AND RESISTANCE FACTOR RATING (LRFD) SUMMARY FOR PRESTRESSED CONCRETE GIRDERS

LEVEL		VEHICLE	WEIGHT (W) (TONS)	CONTROLLING LOAD RATING	MINIMUM RATING FACTORS (RF)	TONS = W X RF	STRENGTH I LIMIT STATE										SERVICE III LIMIT STATE						COMMENT NUMBER
								MOMENT					SHEAR					MOMENT						
							LIVELOAD FACTORS	DISTRIBUTION FACTORS (DF)	RATING FACTOR	SPAN	GIRDER LOCATION	DISTANCE FROM LEFT END OF SPAN (ft)	DISTRIBUTION FACTORS (DF)	RATING FACTOR	SPAN	GIRDER LOCATION	DISTANCE FROM LEFT END OF SPAN (ft)	LIVELOAD FACTORS	DISTRIBUTION FACTORS (DF)	RATING FACTOR	SPAN	GIRDER LOCATION	DISTANCE FROM LEFT END OF SPAN (ft)	
DESIGN LOAD RATING		HL-93(Inv)	N/A	1	1.070	--	1.75	0.277	1.41	50′	EL	24.5	0.619	**1.07**	50′	EL	1.6	0.80	0.277	2.20	50′	EL	24.5	
		HL-93(Opr)	N/A	--	1.380	--	1.35	0.277	1.83	50′	EL	24.5	0.619	1.38	50′	EL	1.6	N/A	--	--	--	--	24.5	
		HS-20(Inv)	36.000	2	1.270	45.720	1.75	0.277	1.75	50′	EL	24.5	0.619	**1.27**	50′	EL	1.6	0.80	0.277	2.72	50′	EL	24.5	
		HS-20(Opr)	36.000	--	1.650	59.400	1.35	0.277	2.27	50′	EL	24.5	0.619	1.65	50′	EL	1.6	N/A	--	--	--	--	24.5	
LEGAL LOAD RATING	SV	SNSH	13.500	--	3.610	48.735	1.4	0.277	4.45	50′	EL	24.5	0.619	3.61	50′	EL	1.6	0.80	0.277	5.55	50′	EL	24.5	
		SNGARBS2	20.000	--	2.620	52.400	1.4	0.277	3.51	50′	EL	24.5	0.619	2.62	50′	EL	1.6	0.80	0.277	4.38	50′	EL	24.5	
		SNAGRIS2	22.000	--	2.460	54.120	1.4	0.277	3.41	50′	EL	24.5	0.619	2.46	50′	EL	1.6	0.80	0.277	4.25	50′	EL	24.5	
		SNCOTTS3	27.250	--	1.800	49.050	1.4	0.277	2.22	50′	EL	24.5	0.619	1.80	50′	EL	1.6	0.80	0.277	2.76	50′	EL	24.5	
		SNAGGRS4	34.925	--	1.540	53.785	1.4	0.277	1.93	50′	EL	24.5	0.619	1.54	50′	EL	1.6	0.80	0.277	2.40	50′	EL	24.5	
		SNS5A	35.550	--	1.580	56.169	1.4	0.277	1.88	50′	EL	24.5	0.619	1.58	50′	EL	1.6	0.80	0.277	2.34	50′	EL	24.5	
		SNS6A	39.950	--	1.470	58.727	1.4	0.277	1.77	50′	EL	24.5	0.619	1.47	50′	EL	1.6	0.80	0.277	2.21	50′	EL	24.5	
		SNS7B	42.000	--	1.460	61.320	1.4	0.277	1.68	50′	EL	24.5	0.619	1.46	50′	EL	1.6	0.80	0.277	2.09	50′	EL	24.5	
	TTST	TNAGRIT3	33.000	--	1.720	56.760	1.4	0.277	2.16	50′	EL	24.5	0.619	1.72	50′	EL	1.6	0.80	0.277	2.69	50′	EL	24.5	
		TNT4A	33.075	--	1.660	54.905	1.4	0.277	2.17	50′	EL	24.5	0.619	1.66	50′	EL	1.6	0.80	0.277	2.71	50′	EL	24.5	
		TNT6A	41.600	--	1.590	66.144	1.4	0.277	1.81	50′	EL	24.5	0.619	1.59	50′	EL	1.6	0.80	0.277	2.26	50′	EL	24.5	
		TNT7A	42.000	--	1.490	62.580	1.4	0.277	1.84	50′	EL	24.5	0.619	1.49	50′	EL	1.6	0.80	0.277	2.29	50′	EL	24.5	
		TNT7B	42.000	--	1.400	58.800	1.4	0.277	1.92	50′	EL	24.5	0.619	1.40	50′	EL	1.6	0.80	0.277	2.39	50′	EL	24.5	
		TNAGRIT4	43.000	--	1.350	58.050	1.4	0.277	1.82	50′	EL	24.5	0.619	1.35	50′	EL	1.6	0.80	0.277	2.27	50′	EL	24.5	
		TNAGT5A	45.000	--	1.370	61.650	1.4	0.277	1.70	50′	EL	24.5	0.619	1.37	50′	EL	1.6	0.80	0.277	2.12	50′	EL	24.5	
		TNAGT5B	45.000	3	1.290	58.050	1.4	0.277	1.67	50′	EL	24.5	0.619	**1.29**	50′	EL	1.6	0.80	0.277	2.07	50′	EL	24.5	

LOAD FACTORS:

DESIGN LOAD RATING FACTORS	LIMIT STATE	γ_{DC}	γ_{DW}
	STRENGTH I	1.25	1.50
	SERVICE III	1.00	1.00

NOTES:

MINIMUM RATING FACTORS ARE BASED ON THE STRENGTH I AND SERVICE III LIMIT STATES.

ALLOWABLE STRESSES FOR SERVICE III LIMIT STATE ARE AS REQUIRED FOR DESIGN.

COMMENTS:

1.

2.

3.

4.

⟨#⟩ CONTROLLING LOAD RATING

⟨1⟩ DESIGN LOAD RATING (HL-93)

⟨2⟩ DESIGN LOAD RATING (HS-20)

⟨3⟩ LEGAL LOAD RATING **

** SEE CHART FOR VEHICLE TYPE

GIRDER LOCATION

I - INTERIOR GIRDER
EL - EXTERIOR LEFT GIRDER
ER - EXTERIOR RIGHT GIRDER

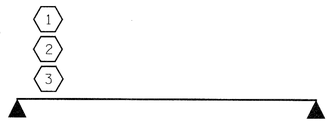

LRFR SUMMARY

FOR SPAN 'A'



V&M
Vaughn & Melton
Consulting Engineers
Asheville, North Carolina 828-253-2796
Charlotte, North Carolina 704-357-0488
Tri-Cities, Tennessee 423-467-8401
Knoxville, Tennessee 865-546-5800
Middlesboro, Kentucky 606-248-6600
Spartanburg, South Carolina 864-574-4775
Copyright © 2006 Vaughn & Melton, Inc. All Rights Reserved

PROJECT NO. 17BP.13.R.132

BURKE COUNTY

STATION: 11+81.87 -L-

STATE OF NORTH CAROLINA
DEPARTMENT OF TRANSPORTATION
RALEIGH

LRFR SUMMARY FOR 50′ CORED SLAB UNIT 105° SKEW
(NON-INTERSTATE TRAFFIC)

DWN. BY: AW	DATE: 01/15	REVISIONS	SHEET NO. S-4
CHKD. BY: HLW	DATE: 01/15	NO. 1 BY: DATE: NO. 3 BY: DATE:	TOTAL SHEETS 16
DES. EGR. OF RECORD: RTS	DATE: 01/15	NO. 2 BY: DATE: NO. 4 BY: DATE:	

STD. NO. 21LRFR1_75&105S_50L

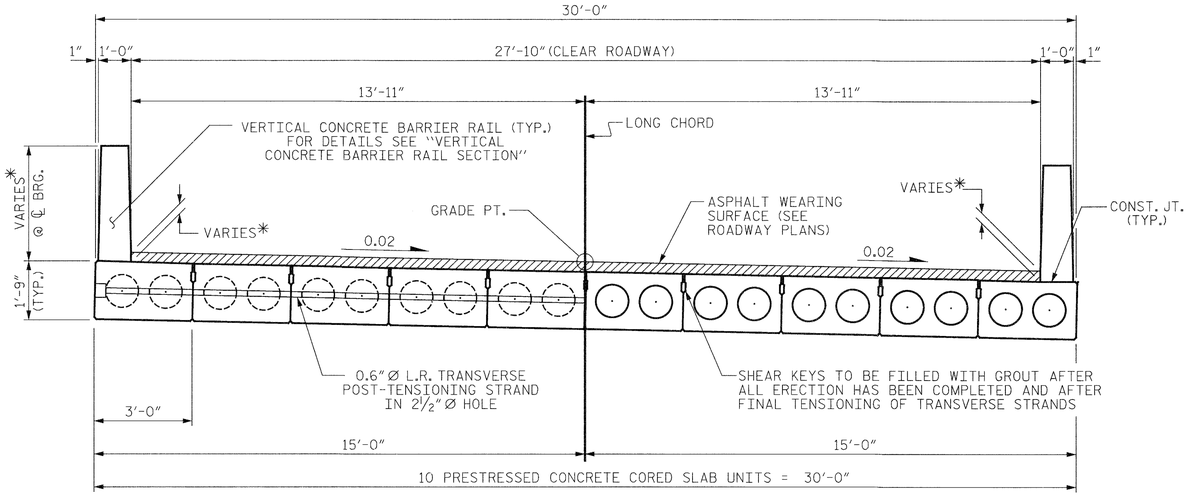

HALF SECTION AT INTERMEDIATE DIAPHRAGMS

HALF SECTION THROUGH VOIDS

TYPICAL SECTION

*-THE HEIGHT OF THE BARRIER RAIL AND ASPHALT THICKNESS VARIES WHILE THE TOP OF THE BARRIER RAIL FOLLOWS THE PROFILE OF THE GUTTERLINE. FOR RAIL HEIGHT DETAILS AND ASPHALT THICKNESS SEE THE "GUTTERLINE ASPHALT THICKNESS & RAIL HEIGHT" TABLE SHEET 3 OF 3.

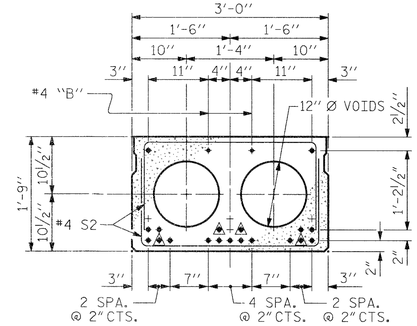

INTERIOR SLAB SECTION (50' UNIT)

(19 STRANDS REQUIRED)

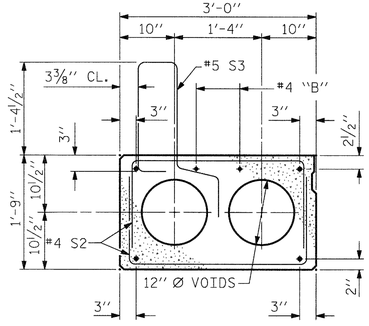

EXT. SLAB SECTION

(FOR PRESTRESSED STRAND LAYOUT, SEE INTERIOR SLAB SECTION.)

0.6" Ø LOW RELAXATION STRAND LAYOUT

▲ BOND SHALL BE BROKEN ON THESE STRANDS FOR A DISTANCE OF 6'-0" FROM END OF CORED SLAB UNIT. SEE STANDARD SPECIFICATIONS, ARTICLE 1078-7.

◉ BOND SHALL BE BROKEN ON THESE STRANDS FOR A DISTANCE OF 2'-0" FROM END OF CORED SLAB UNIT. SEE STANDARD SPECIFICATIONS, ARTICLE 1078-7.

◉ OPTIONAL FULL LENGTH DEBONDED STRANDS. THESE STRANDS ARE NOT REQUIRED. IF THE FABRICATOR CHOOSES TO INCLUDE THESE STRANDS IN THE CORED SLAB UNIT, THE STRANDS SHALL BE DEBONDED FOR THE FULL LENGTH OF THE UNIT AT NO ADDITIONAL COST. SEE STANDARD SPECIFICATIONS, ARTICLE 1078-7.

DEBONDING LEGEND

FIXED END

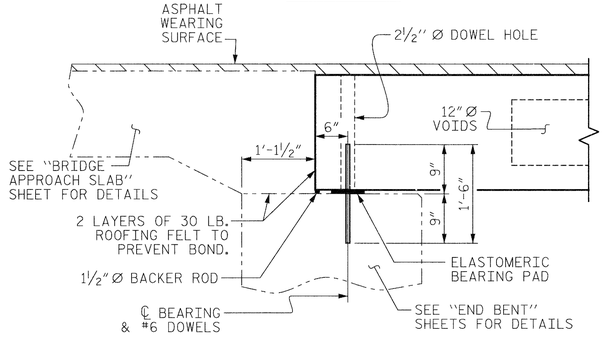

SECTION AT END BENT

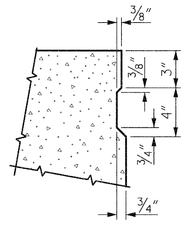

SHEAR KEY DETAIL

NOTE: OMIT SHEAR KEY ON OUTSIDE FACE OF EXTERIOR CORED SLABS.

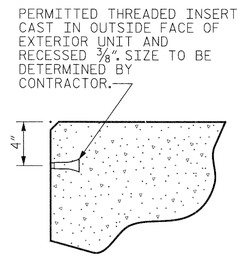

THREADED INSERT DETAIL

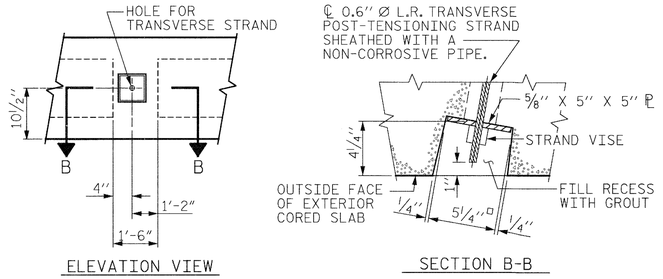

ELEVATION VIEW

SECTION B-B

GROUTED RECESS AT END OF POST-TENSIONED STRAND OF CORED SLABS

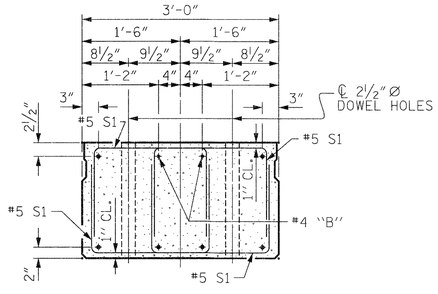

END ELEVATION

SHOWING PLACEMENT OF DOUBLE STIRRUPS AND LOCATION OF DOWEL HOLES. (STRAND LAYOUT NOT SHOWN.) INTERIOR SLAB UNIT SHOWN-EXTERIOR SLAB UNIT SIMILAR EXCEPT SHEAR KEY LOCATION.

PROJECT NO. 17BP.13.R.132

BURKE COUNTY

STATION: 11+81.87 -L-

SHEET 1 OF 3

STATE OF NORTH CAROLINA
DEPARTMENT OF TRANSPORTATION
RALEIGH

STANDARD

3'-0" X 1'-9" PRESTRESSED CONCRETE CORED SLAB UNIT 105° SKEW

NORTH CAROLINA PROFESSIONAL SEAL 027711 ENGINEER HARDY L. WILLIS 4/29/15

REVISIONS						SHEET NO.
NO.	BY:	DATE:	NO.	BY:	DATE:	S-5
1			3			TOTAL SHEETS
2			4			16

ASSEMBLED BY :	AW	DATE :	01/15
CHECKED BY :	HLW	DATE :	01/15
DRAWN BY : DGE	5/09	REV. 12/11	MAA/AAC
CHECKED BY : BCH	6/09	REV. 8/14	MAA/TMG

STD. NO. 21"PCS2_30_105S

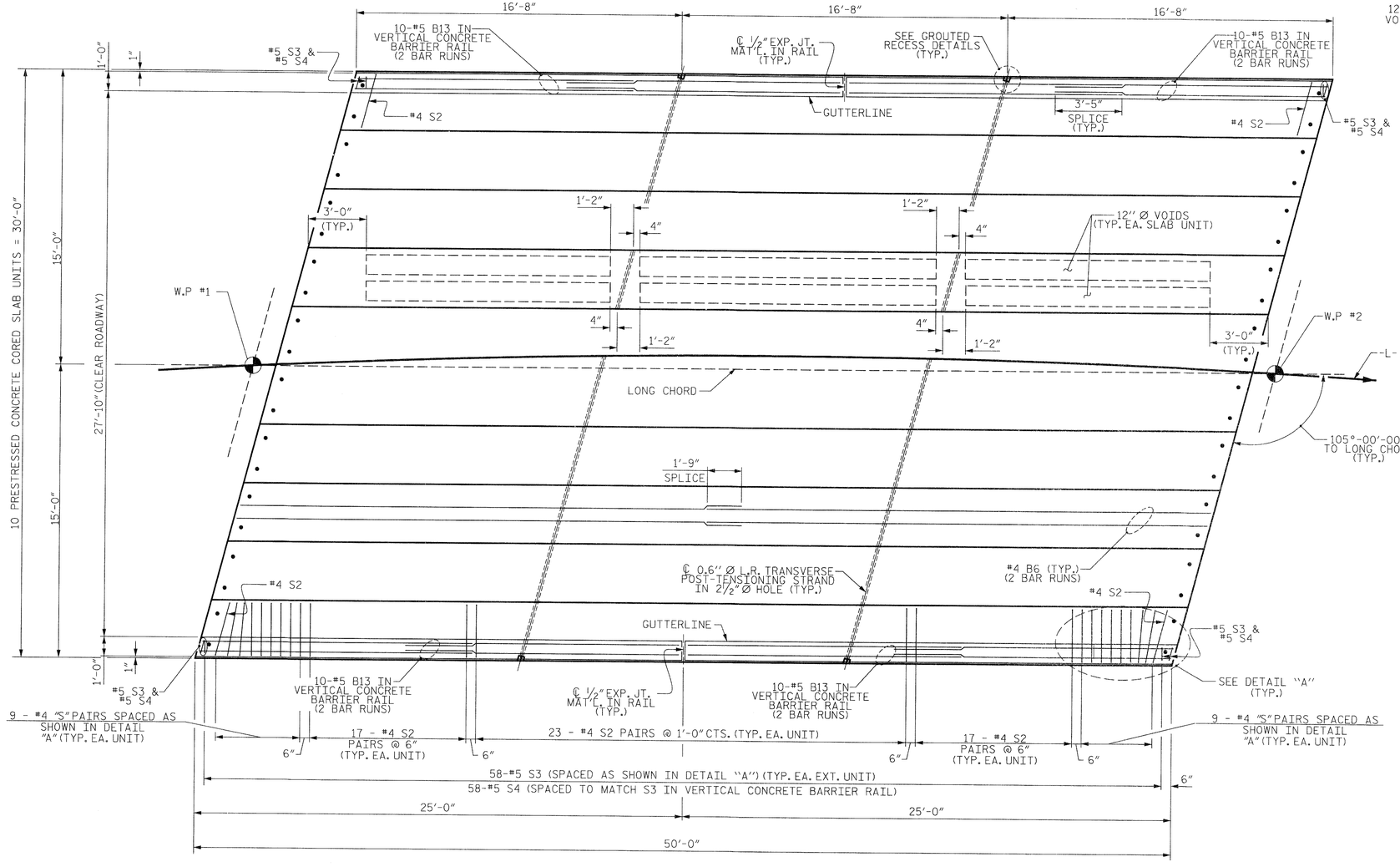

PLAN OF UNIT

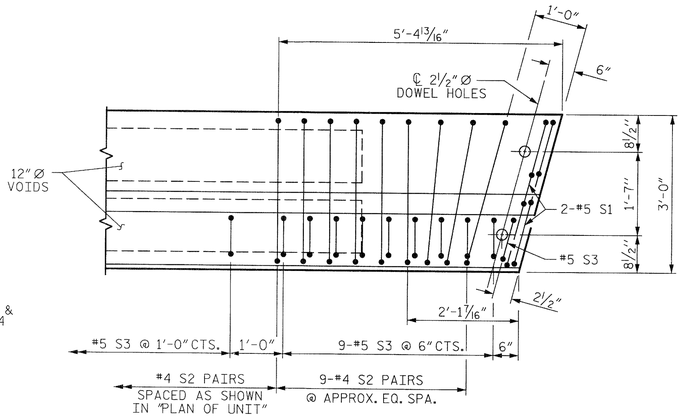

DETAIL "A"

(SIMILAR EACH END OF UNIT)
NOTE: EXTERIOR UNIT SHOWN - INTERIOR UNIT SIMILAR EXCEPT OMIT #5 S3 BARS.

ASSEMBLED BY :	AW	DATE :	01/15
CHECKED BY :	HLW	DATE :	01/15
DRAWN BY : DGE 5/09	REV. 12/5/11		MAA/AAC
CHECKED BY: BCH 6/09	REV. 8/14		MAA/TMG

$$$$$$SYSTIME$$$$$
$$$$$$$$$$$$$$$$$$$$$$$$$$DGN$$$$$$$$$$$$$$$$$$$$$$$$
$$$$USERNAME$$$$

NORTH CAROLINA PROFESSIONAL SEAL 20774 ENGINEER HARDY L. WILLIS
4/24/15

PROJECT NO. 17BP.13.R.132
BURKE COUNTY
STATION: 11+81.87 -L-

SHEET 2 OF 3

STATE OF NORTH CAROLINA
DEPARTMENT OF TRANSPORTATION
RALEIGH

PLAN OF 50' UNIT
27'-10" CLEAR ROADWAY
105° SKEW

REVISIONS						SHEET NO.
NO.	BY:	DATE:	NO.	BY:	DATE:	S-6
1			3			TOTAL SHEETS
2			4			16

STD. NO. 21"PCS_30_105S_50L

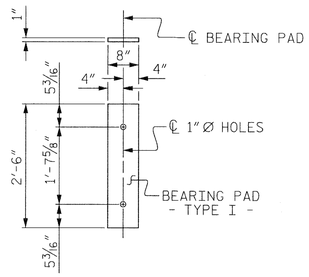

FIXED END
(TYPE I - 20 REQ'D)

ELASTOMERIC BEARING DETAILS

ELASTOMER IN ALL BEARINGS SHALL BE 50 DUROMETER HARDNESS.

BILL OF MATERIAL FOR VERTICAL CONCRETE BARRIER RAIL

BAR	BARS PER PAIR OF EXTERIOR UNITS	TOTAL NO.	SIZE	TYPE	LENGTH	WEIGHT
	50' UNIT					
✳B13	80		#5	STR	14'-2"	1182
✳S4	120		#5	2	7'-2"	897
✳EPOXY COATED REINFORCING STEEL				LBS.		2079
CLASS AA CONCRETE				CU.YDS.		12.8
TOTAL VERTICAL CONCRETE BARRIER RAIL				LN. FT.		100.00

BILL OF MATERIAL FOR ONE 50' CORED SLAB UNIT

				EXTERIOR UNIT		INTERIOR UNIT	
BAR	NUMBER	SIZE	TYPE	LENGTH	WEIGHT	LENGTH	WEIGHT
B6	4	#4	STR	25'-9"	69	25'-9"	69
S1	8	#5	3	4'-3"	35	4'-3"	35
S2	150	#4	3	5'-4"	534	5'-4"	534
✳S3	60	#5	1	5'-9"	360		
REINFORCING STEEL LBS.					638		638
✳EPOXY COATED REINFORCING STEEL LBS.					360		
7000 P.S.I. CONCRETE CU. YDS.					7.3		7.3
0.6"Ø L.R. STRANDS No.					19		19

BAR TYPES

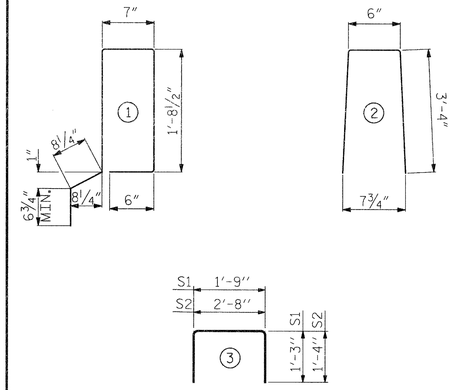

ALL BAR DIMENSIONS ARE OUT TO OUT

CORED SLABS REQUIRED

	NUMBER	LENGTH	TOTAL LENGTH
50' UNIT			
EXTERIOR C.S.	2	50'-0"	100'-0"
INTERIOR C.S.	8	50'-0"	400'-0"
TOTAL	10		500'-0"

DEAD LOAD DEFLECTION AND CAMBER

	3'-0" x 1'-9"
50' CORED SLAB UNIT	0.6"Ø L.R. STRAND
CAMBER (SLAB ALONE IN PLACE)	1 3/16" ↑
DEFLECTION DUE TO SUPERIMPOSED DEAD LOAD✳✳	3/8" ↓
FINAL CAMBER	1 3/16" ↑

✳✳ INCLUDES FUTURE WEARING SURFACE

NOTES

ALL PRESTRESSING STRANDS SHALL BE 7-WIRE LOW RELAXATION GRADE 270 STRANDS AND SHALL CONFORM TO AASHTO M203 EXCEPT FOR SAMPLING REQUIREMENTS WHICH SHALL BE IN ACCORDANCE WITH THE STANDARD SPECIFICATIONS.

ALL REINFORCING STEEL CAST WITH THE CORED SLAB SECTIONS SHALL BE GRADE 60 AND SHALL BE INCLUDED IN THE UNIT PRICE BID FOR PRESTRESSED CONCRETE CORED SLABS.

RECESSES FOR TRANSVERSE STRANDS SHALL BE GROUTED AFTER THE TENSIONING OF THE STRANDS.

THE 2½" Ø DOWEL HOLES AT FIXED ENDS OF SLAB SECTIONS SHALL BE FILLED WITH NON-SHRINK GROUT.

THE BACKER RODS SHALL CONFORM TO THE REQUIREMENTS OF TYPE M BOND BREAKER. SEE SECTION 1028 OF THE STANDARD SPECIFICATIONS.

WHEN CORED SLABS ARE CAST, AN INTERNAL HOLD-DOWN SYSTEM SHALL BE EMPLOYED TO PREVENT VOIDS FROM RISING OR MOVING SIDEWAYS. AT LEAST SIX WEEKS PRIOR TO CASTING CORED SLABS, THE CONTRACTOR SHALL SUBMIT TO THE ENGINEER FOR REVIEW AND COMMENT, DETAILED DRAWINGS OF THE PROPOSED HOLD-DOWN SYSTEM. IN ADDITION TO STRUCTURAL DETAILS, LOCATION AND SPACING OF THE HOLD-DOWNS SHALL BE INDICATED.

ALL REINFORCING STEEL IN THE VERTICAL CONCRETE BARRIER RAIL SHALL BE EPOXY COATED.

PRESTRESSING STRANDS SHALL BE CUT FLUSH WITH THE CORED SLAB UNIT ENDS.

APPLY EPOXY PROTECTIVE COATING TO CORED SLAB UNIT ENDS.

GROOVED CONTRACTION JOINTS, ½" IN DEPTH, SHALL BE TOOLED IN ALL EXPOSED FACES OF THE BARRIER RAIL AND IN ACCORDANCE WITH ARTICLE 825-10(B) OF THE STANDARD SPECIFICATIONS. A CONTRACTION JOINT SHALL BE LOCATED AT EACH THIRD POINT BETWEEN BARRIER RAIL EXPANSION JOINTS. ONLY ONE CONTRACTION JOINT IS REQUIRED AT MIDPOINT OF BARRIER RAIL SEGMENTS LESS THAN 20 FEET IN LENGTH AND NO CONTRACTION JOINTS ARE REQUIRED FOR THOSE SEGMENTS LESS THAN 10 FEET IN LENGTH.

FLAME CUTTING OF THE TRANSVERSE POST-TENSIONING STRAND IS NOT ALLOWED.

THE TRANSFER OF LOAD FROM THE ANCHORAGES TO THE CORED SLAB UNIT SHALL BE DONE WHEN THE CONCRETE HAS REACHED A COMPRESSIVE STRENGTH OF NOT LESS THAN THE REQUIRED STRENGTH SHOWN IN THE "CONCRETE RELEASE STRENGTH" TABLE.

FOR GROUT FOR STRUCTURES, SEE SPECIAL PROVISIONS.

THE PERMITTED THREADED INSERTS ARE DETAILED AS AN OPTION FOR THE CONTRACTOR TO ATTACH FALSEWORK AND FORMWORK DURING CONSTRUCTION.

THE PERMITTED THREADED INSERTS IN THE EXTERIOR UNITS SHALL BE SIZED BY THE CONTRACTOR, SPACED AT 4'-0" CENTERS AND GALVANIZED IN ACCORDANCE WITH SECTION 1076 OF THE STANDARD SPECIFICATIONS. STAINLESS STEEL THREADED INSERTS MAY BE USED AS AN ALTERNATE.

THE PERMITTED THREADED INSERTS SHALL BE GROUTED BY THE CONTRACTOR IMMEDIATELY FOLLOWING REMOVAL OF THE FALSEWORK.

THE COST OF THE PERMITTED THREADED INSERTS SHALL BE INCLUDED IN THE PRICE BID FOR THE PRECAST UNITS.

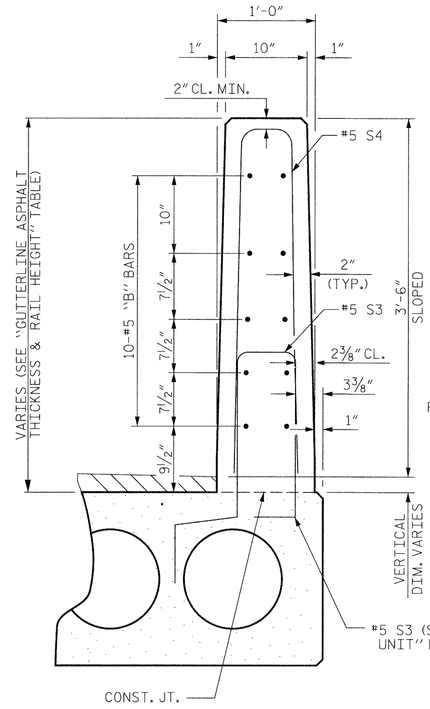

VERTICAL CONCRETE BARRIER RAIL SECTION

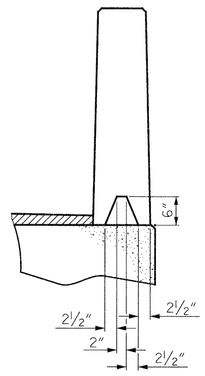

SECTION S-S
AT DAM IN OPEN JOINT
(THIS IS TO BE USED ONLY WHEN SLIP FORM IS USED)

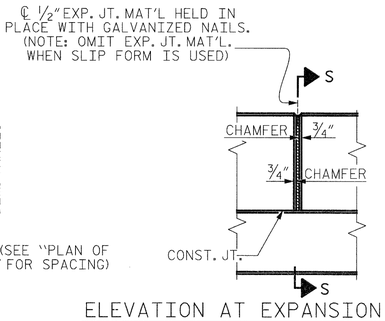

ELEVATION AT EXPANSION JOINTS

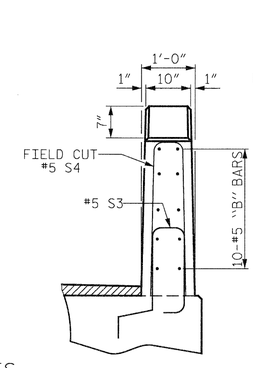

END VIEW

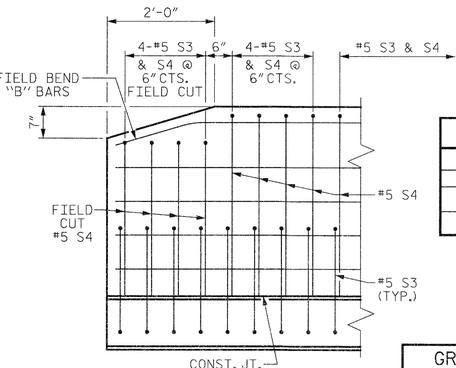

SIDE VIEW

END OF RAIL DETAILS

CONCRETE RELEASE STRENGTH

UNIT	PSI
50' UNITS	4900

GUTTERLINE ASPHALT THICKNESS & RAIL HEIGHT

	ASPHALT OVERLAY THICKNESS		RAIL HEIGHT	
	LEFT GUTTER LINE	RIGHT GUTTER LINE	LEFT GUTTER LINE	RIGHT GUTTER LINE
BRG. AT END BENT #1	2¾"	3¾"	3'-8¾"	3'-9¾"
MID SPAN	1 9/16"	2 9/16"	3'-7 9/16"	3'-8 9/16"
BRG. AT END BENT #2	3¾"	2¾"	3'-9¾"	3'-8¾"

GRADE 270 STRANDS

	0.6"Ø L.R.
AREA (SQUARE INCHES)	0.217
ULTIMATE STRENGTH (LBS. PER STRAND)	58,600
APPLIED PRESTRESS (LBS. PER STRAND)	43,950



PROJECT NO. 17BP.13.R.132
BURKE COUNTY
STATION: 11+81.87 -L-

SHEET 3 OF 3

STATE OF NORTH CAROLINA
DEPARTMENT OF TRANSPORTATION
RALEIGH

STANDARD
3'-0" X 1'-9"
PRESTRESSED CONCRETE
CORED SLAB UNIT
105° SKEW

REVISIONS						SHEET NO.
NO.	BY:	DATE:	NO.	BY:	DATE:	S-7
1			3			TOTAL SHEETS
2			4			16

ASSEMBLED BY : AW		DATE : 01/15	
CHECKED BY : HLW		DATE : 01/15	
DRAWN BY : DGE 5/09	REV. 12/11	MAA/AAC	
CHECKED BY : BCH 6/09	REV. 8/14	MAA/TMG	

$$$$$$SYSTIME$$$$$$
$$$$$$$$$$$$$$$$$$$$$$DGN$$$$$$$$$$$$$$$$$$$$$$$$
$$$$USERNAME$$$$

STD. NO. 21"PCS3_30_105S

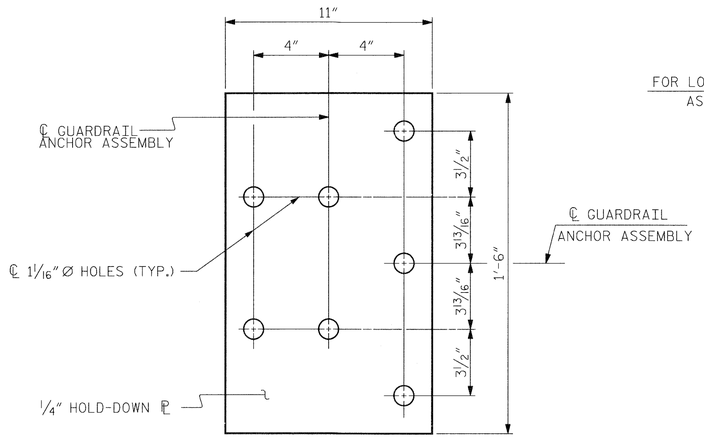

PLAN

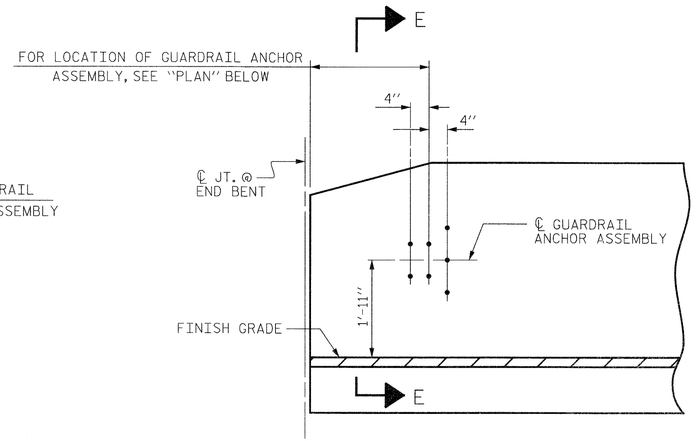

ELEVATION

NOTES

THE GUARDRAIL ANCHOR ASSEMBLY SHALL CONSIST OF A 1/4″ HOLD DOWN PLATE AND 7 - 7/8″ Ø BOLTS WITH NUTS AND WASHERS.

THE HOLD-DOWN PLATE SHALL CONFORM TO AASHTO M270 GRADE 36. AFTER FABRICATION, THE HOLD-DOWN PLATE SHALL BE HOT-DIP GALVANIZED IN ACCORDANCE WITH AASHTO M111.

BOLTS SHALL CONFORM TO THE REQUIREMENTS OF ASTM A307 AND NUTS SHALL CONFORM TO THE REQUIREMENTS OF AASHTO M291. BOLTS, NUTS AND WASHERS SHALL BE GALVANIZED. (AT THE CONTRACTOR'S OPTION, STAINLESS STEEL BOLTS, NUTS AND WASHERS MAY BE USED AS AN ALTERNATE FOR THE 7/8″ Ø GALVANIZED BOLTS, NUTS AND WASHERS. THEY SHALL CONFORM TO OR EXCEED THE MECHANICAL REQUIREMENTS OF ASTM A307. THE USE OF THIS ALTERNATE SHALL BE APPROVED BY THE ENGINEER.)

THE GUARDRAIL ANCHOR ASSEMBLY IS REQUIRED AT ALL POINTS WHERE APPROACH GUARDRAIL IS TO BE ATTACHED TO THE END OF BARRIER RAIL. FOR POINTS OF ATTACHMENT, SEE SKETCH.

AFTER INSTALLATION, THE EXPOSED THREAD OF THE BOLT SHALL BE BURRED WITH A SHARP POINTED TOOL.

THE COST OF THE GUARDRAIL ANCHOR ASSEMBLY SHALL BE INCLUDED IN THE UNIT CONTRACT PRICE BID FOR VERTICAL CONCRETE BARRIER RAIL.

THE VERTICAL REINFORCING BARS MAY BE SHIFTED SLIGHTLY IN THE VERTICAL CONCRETE BARRIER RAIL TO CLEAR ASSEMBLY BOLTS.

THE 1 1/4″ Ø HOLES SHALL BE FORMED OR DRILLED WITH A CORE BIT. IMPACT TOOLS WILL NOT BE PERMITTED. ANY CONCRETE DAMAGED BY THIS WORK SHALL BE REPAIRED TO THE SATISFACTION OF THE ENGINEER.

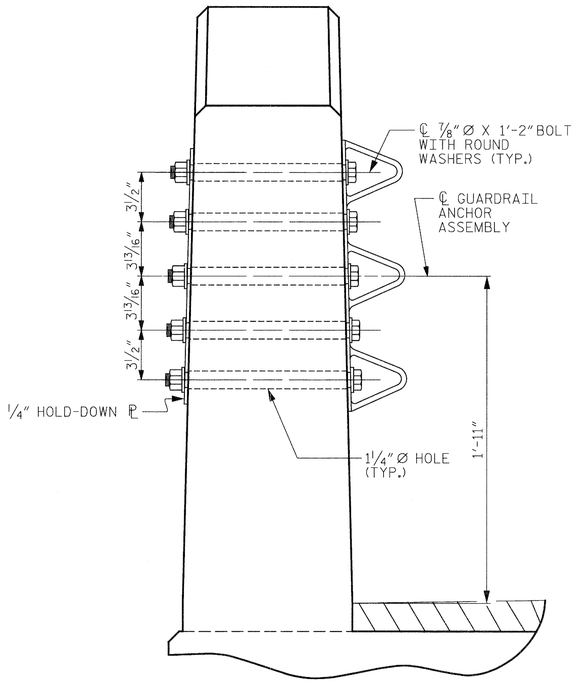

SECTION E-E

GUARDRAIL ANCHOR ASSEMBLY DETAILS

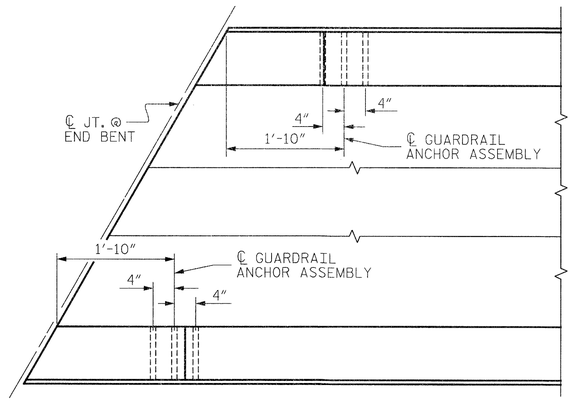

PLAN

LOCATION OF ANCHORS FOR GUARDRAIL

END BENT #1 SHOWN, END BENT #2 SIMILAR.

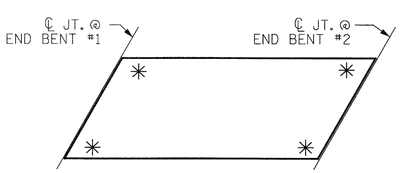

SKETCH SHOWING POINTS OF ATTACHMENT

✳ DENOTES GUARDRAIL ANCHOR ASSEMBLY

PROJECT NO. 17BP.13.R.132

BURKE COUNTY

STATION: 11+81.87 -L-

ASSEMBLED BY : AW	DATE : 01/15
CHECKED BY : HLW	DATE : 01/15
DRAWN BY : MAA 5/10	REV. 10/1/11 MAA/GM
CHECKED BY : GM 5/10	REV. 12/5/11 MAA/GM
	REV. 6/13 MAA/GM

NORTH CAROLINA PROFESSIONAL SEAL 20777 ENGINEER HARDY L. WILLIS 4/29/15

STATE OF NORTH CAROLINA
DEPARTMENT OF TRANSPORTATION
RALEIGH

STANDARD
GUARDRAIL ANCHORAGE FOR VERTICAL CONCRETE BARRIER RAIL

REVISIONS						SHEET NO.
NO.	BY:	DATE:	NO.	BY:	DATE:	S-8
1			3			TOTAL SHEETS
2			4			16

(SHT 2) STD. NO. GRA3

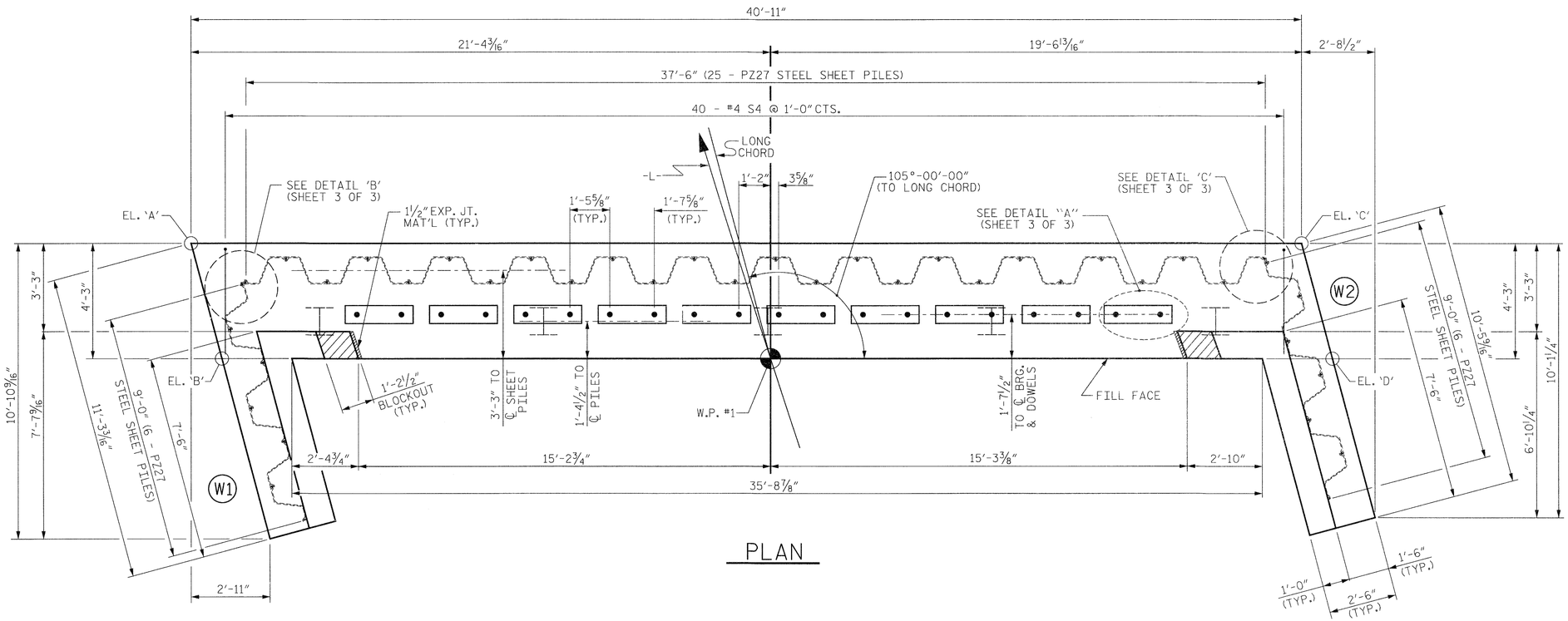

PLAN

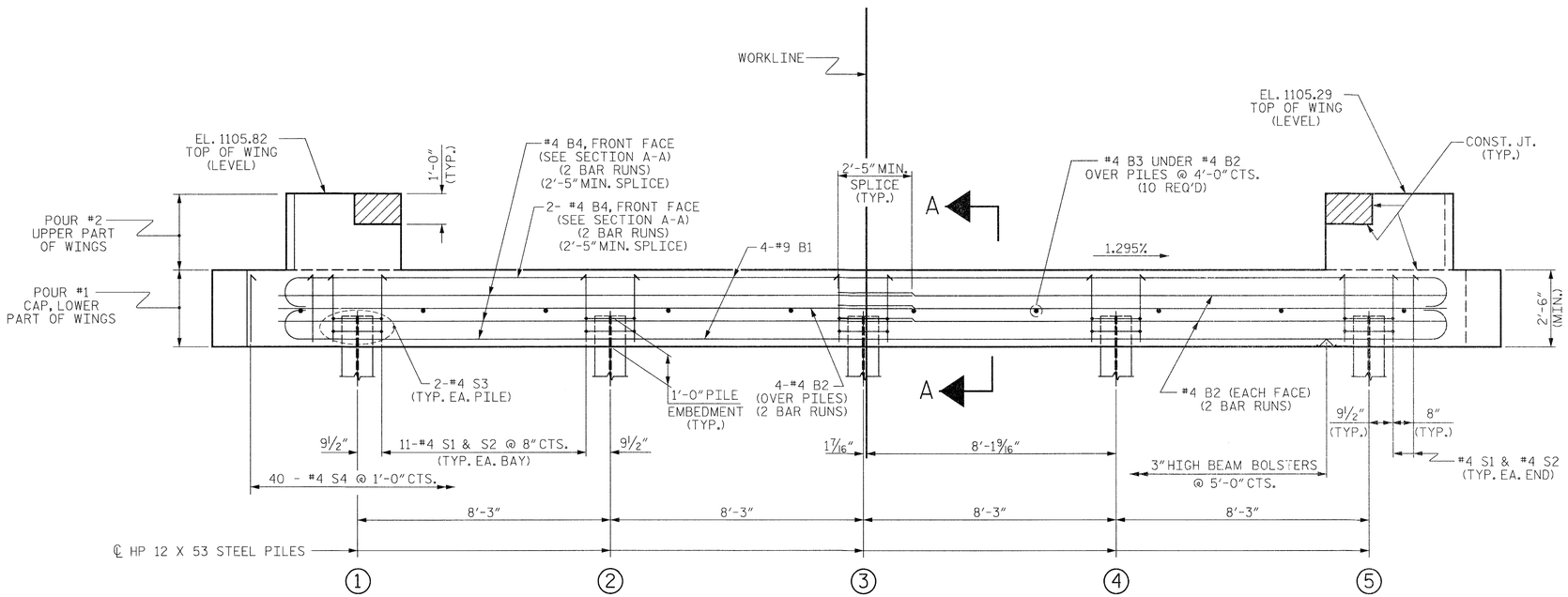

ELEVATION

WINGS NOT SHOWN FOR CLARITY.
FOR SECTION A-A, SEE SHEET 3 OF 3.
STEEL PILES NOT SHOWN FOR CLARITY.

NOTES

STIRRUPS IN CAP MAY BE SHIFTED AS NECESSARY TO CLEAR DOWELS.

THE CONCRETE IN THE SHADED AREA OF THE WING SHALL BE POURED AFTER THE VERTICAL CONCRETE BARRIER RAIL IS CAST IF SLIP FORMING IS USED.

FOR PILE SPLICE DETAILS, SEE SHEET 3 OF 3.

FOR WING DETAILS, SEE SHEET 2 OF 3.

TOP OF PILE ELEVATIONS	
1	1101.65
2	1101.54
3	1101.44
4	1101.33
5	1101.22

	TOP OF CAP ELEVATIONS	BOTTOM OF CAP ELEVATIONS
A	1103.26	1100.76
B	1103.36	1100.86
C	1102.73	1100.23
D	1102.83	1100.33

NORTH CAROLINA PROFESSIONAL SEAL 037111 ENGINEER HARDY L. WILLIS 4/29/15

PROJECT NO. 17BP.13.R.132

BURKE COUNTY

STATION: 11+81.87 -L-

SHEET 1 OF 3

STATE OF NORTH CAROLINA
DEPARTMENT OF TRANSPORTATION
RALEIGH

SUBSTRUCTURE

END BENT No. 1

Vaughn & Melton
Consulting Engineers
Asheville, North Carolina 828-253-2796
Charlotte, North Carolina 704-357-0488
Tri-Cities, Tennessee 423-467-8403
Knoxville, Tennessee 865-546-5800
Middlesboro, Kentucky 606-248-6600
Spartanburg, South Carolina 864-574-4175

Copyright © 2006 Vaughn & Melton, Inc. All Rights Reserved

DWN. BY: AW DATE: 01/15
CHKD. BY: HLW DATE: 01/15
DES. EGR. OF RECORD: RTS DATE: 01/15

REVISIONS						SHEET NO.
NO.	BY:	DATE:	NO.	BY:	DATE:	S-9
1			3			TOTAL SHEETS
2			4			16

STD. NO. EB_30_105S

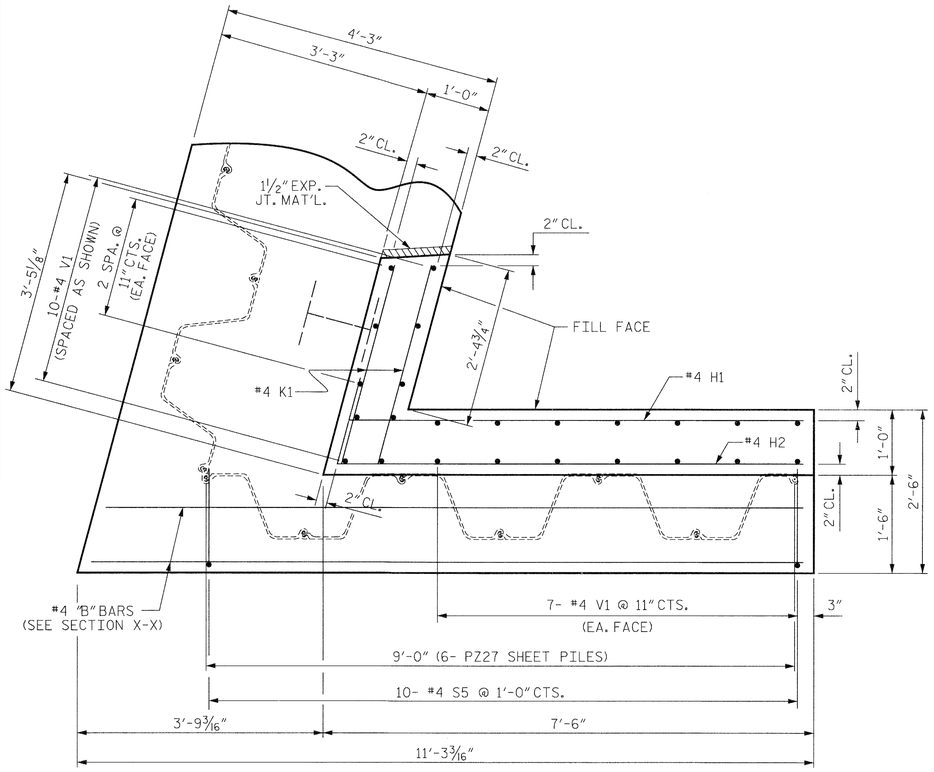

PLAN OF WING (W1)

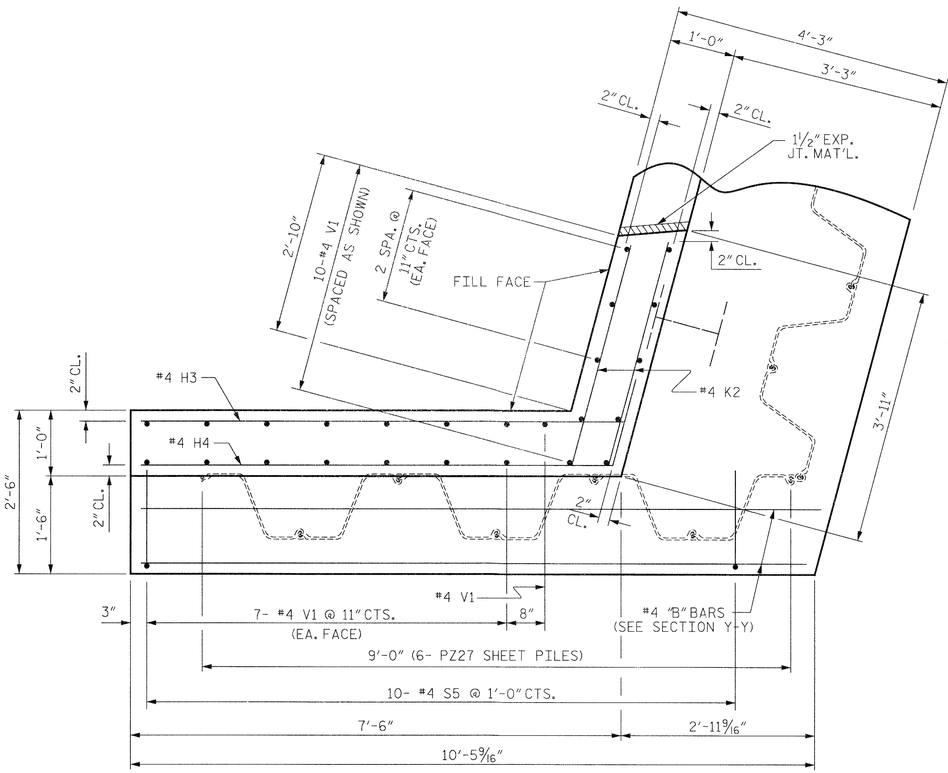

PLAN OF WING (W2)

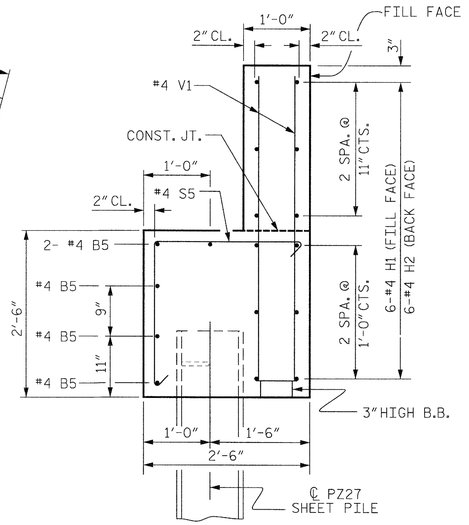

SECTION X-X

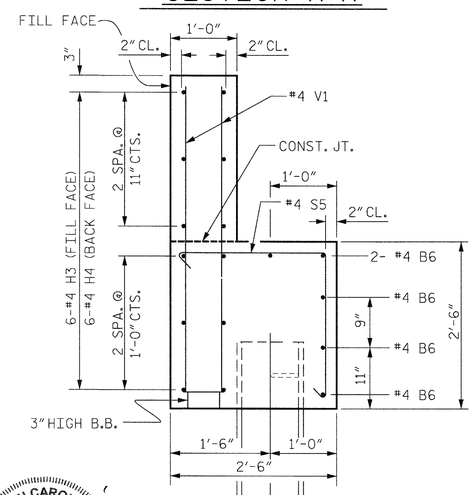

SECTION Y-Y

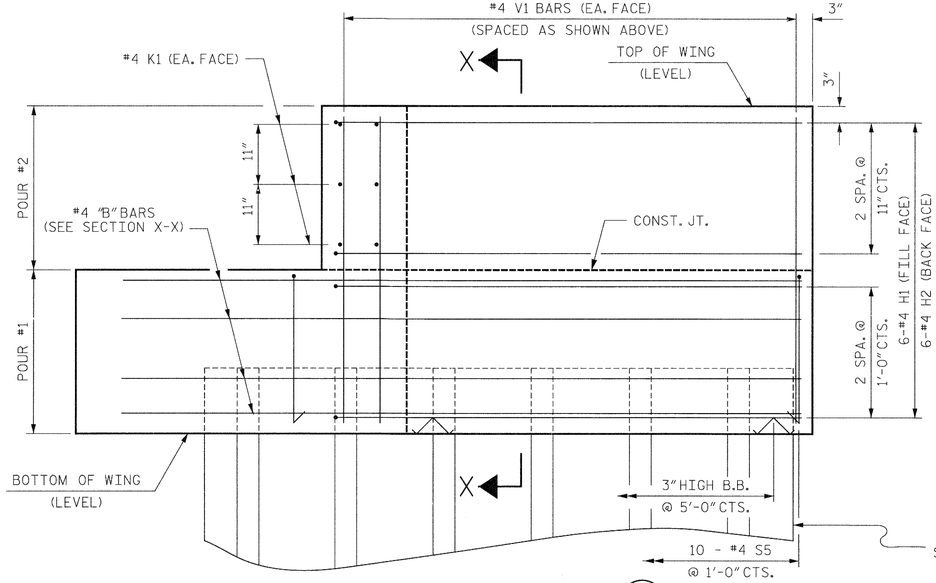

ELEVATION OF WING (W1)

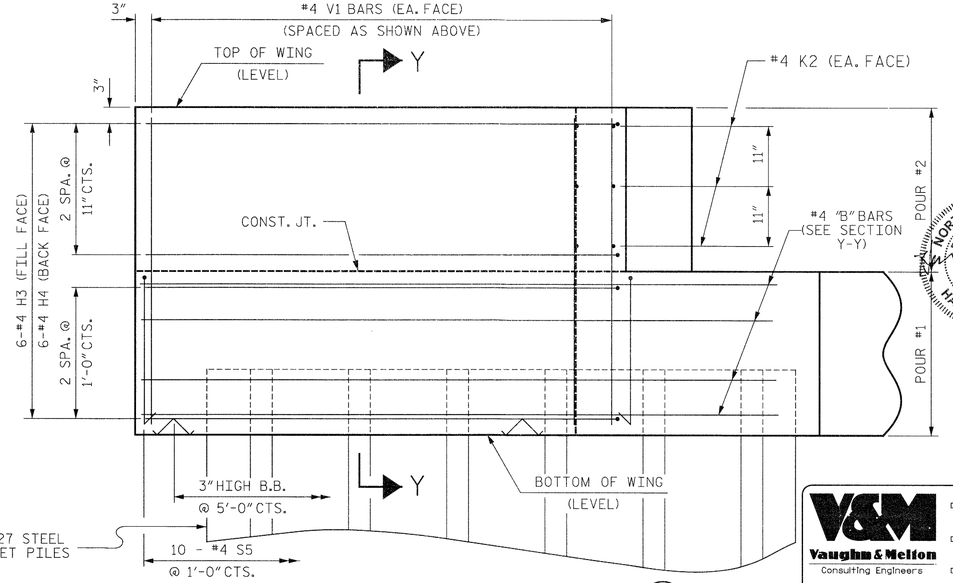

ELEVATION OF WING (W2)

WING DETAILS

ASSEMBLED BY :	AW	DATE :	01/15
CHECKED BY :	HLW	DATE :	01/15
DRAWN BY :	DGE	03/10	
CHECKED BY :	MKT	03/10	

DWN. BY: AW	DATE: 01/15	
CHKD. BY: HLW	DATE: 01/15	
DES. EGR. OF RECORD: RTS	DATE: 01/15	

REVISIONS						SHEET NO.
NO.	BY:	DATE:	NO.	BY:	DATE:	S-10
1			3			TOTAL SHEETS
2			4			16

V&M Vaughn & Melton Consulting Engineers
Asheville, North Carolina 828-253-2796
Charlotte, North Carolina 704-357-0486
Tri-Cities, Tennessee 423-467-8401
Knoxville, Tennessee 865-546-5800
Middlesboro, Kentucky 606-248-6600
Spartanburg, South Carolina 864-574-4775
Copyright © 2006 Vaughn & Melton, Inc. All Rights Reserved

NORTH CAROLINA PROFESSIONAL SEAL 20777 ENGINEER HARDY L. WILLIS 4/24/15

STATE OF NORTH CAROLINA
DEPARTMENT OF TRANSPORTATION
RALEIGH

SUBSTRUCTURE
END BENT No. 1
WING DETAILS

PROJECT NO. 17BP.13.R.132
BURKE COUNTY
STATION: 11+81.87 -L-

SHEET 2 OF 3

STD. NO. EB_30_105S

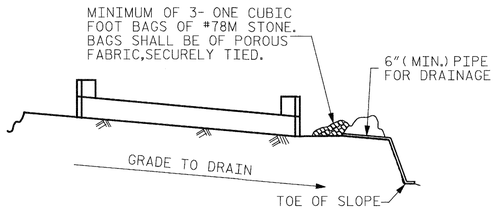

BAGGED STONE AND PIPE SHALL BE PLACED IMMEDIATELY AFTER COMPLETION OF END BENT EXCAVATION. PIPE MAY BE EITHER CONCRETE, CORRUGATED STEEL, CORRUGATED ALUMINUM ALLOY, OR CORRUGATED PLASTIC. PERFORATED PIPE WILL NOT BE ALLOWED.

BAGGED STONE SHALL REMAIN IN PLACE UNTIL THE ENGINEER DIRECTS THAT IT BE REMOVED. THE CONTRACTOR SHALL REMOVE AND DISPOSE OF SILT ACCUMULATIONS AT BAGGED STONE WHEN SO DIRECTED BY THE ENGINEER. BAGS SHALL BE REMOVED AND REPLACED WHENEVER THE ENGINEER DETERMINES THAT THEY HAVE DETERIORATED AND LOST THEIR EFFECTIVENESS.

NO SEPARATE PAYMENT WILL BE MADE FOR THIS WORK AND THE ENTIRE COST OF THIS WORK SHALL BE INCLUDED IN THE UNIT CONTRACT PRICE BID FOR THE SEVERAL PAY ITEMS.

TEMPORARY DRAINAGE AT END BENT

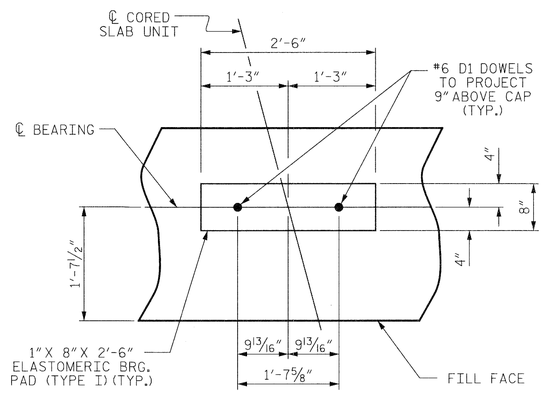

DETAIL "A"

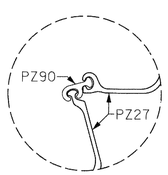

DETAIL "B"

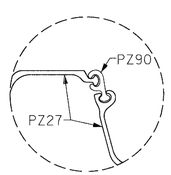

DETAIL "C"

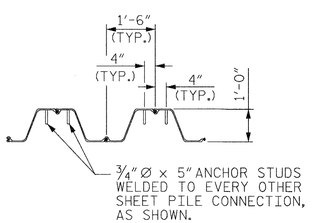

ANCHOR STUD DETAIL

SHEET PILE CONNECTION DETAILS

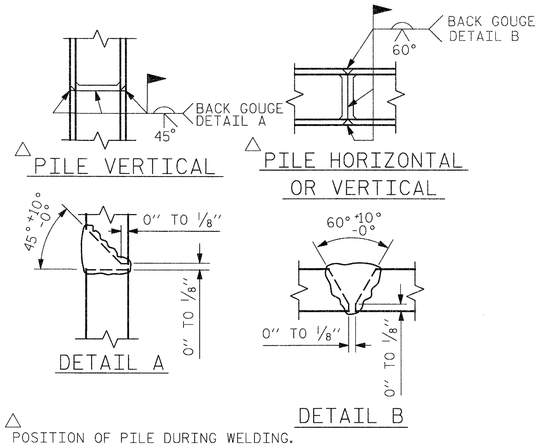

△ POSITION OF PILE DURING WELDING.

PILE SPLICE DETAILS

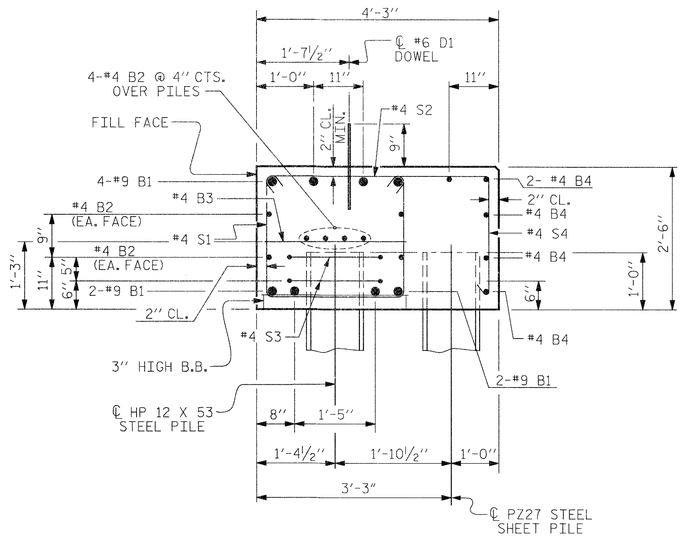

SECTION A-A

BAR TYPES

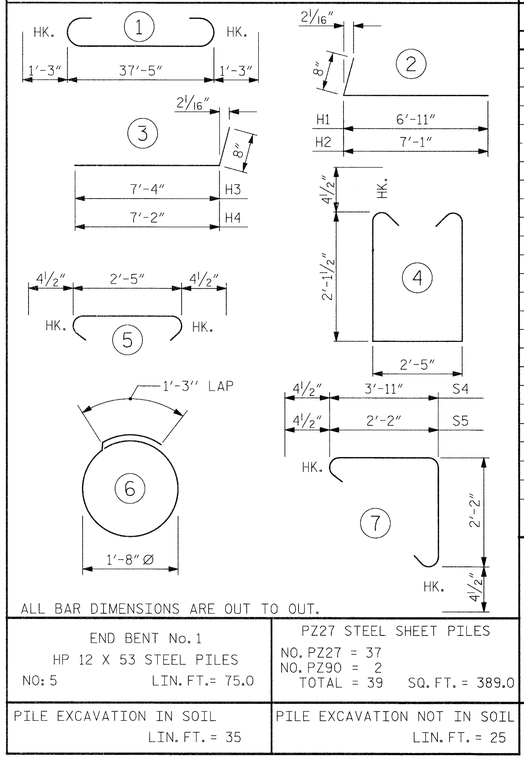

ALL BAR DIMENSIONS ARE OUT TO OUT.

END BENT No. 1
HP 12 X 53 STEEL PILES
NO: 5 LIN. FT.= 75.0

PZ27 STEEL SHEET PILES
NO. PZ27 = 37
NO. PZ90 = 2
TOTAL = 39 SQ. FT. = 389.0

PILE EXCAVATION IN SOIL
LIN. FT. = 35

PILE EXCAVATION NOT IN SOIL
LIN. FT. = 25

BILL OF MATERIAL
FOR END BENT NO. 1

BAR	NO.	SIZE	TYPE	LENGTH	WEIGHT
B1	8	#9	1	39'-11"	1086
B2	16	#4	STR	19'-11"	213
B3	10	#4	STR	2'-5"	16
B4	10	#4	STR	21'-5"	143
B5	5	#4	STR	10'-1"	34
B6	5	#4	STR	10'-6"	35
D1	20	#6	STR	1'-6"	45
H1	6	#4	2	7'-7"	30
H2	6	#4	2	7'-9"	31
H3	6	#4	3	8'-0"	32
H4	6	#4	3	7'-10"	31
K1	6	#4	STR	3'-1"	12
K2	6	#4	STR	3'-5"	14
S1	48	#4	4	7'-5"	238
S2	48	#4	5	3'-2"	102
S3	10	#4	6	6'-6"	43
S4	40	#4	7	6'-10"	183
S5	20	#4	7	5'-1"	68
V1	49	#4	STR	4'-8"	153

REINFORCING STEEL (FOR ONE END BENT) 2509 LBS.

CLASS A CONCRETE BREAKDOWN (FOR ONE END BENT)

POUR #1 CAP, LOWER PART OF WINGS 19.1 C.Y.

POUR #2 UPPER PART OF WINGS 1.9 C.Y.

TOTAL CLASS A CONCRETE 21.0 C.Y.

PROJECT NO. 17BP.13.R.132

BURKE COUNTY

STATION: 11+81.87 -L-

SHEET 3 OF 3

STATE OF NORTH CAROLINA
DEPARTMENT OF TRANSPORTATION
RALEIGH

SUBSTRUCTURE

END BENT No. 1 DETAILS

ASSEMBLED BY : AW	DATE : 01/15
CHECKED BY : HLW	DATE : 01/15
DRAWN BY : DGE 03/10	
CHECKED BY : MKT 03/10	

REVISIONS						SHEET NO.
NO.	BY:	DATE:	NO.	BY:	DATE:	S-11
1			3			TOTAL SHEETS
2			4			16

NORTH CAROLINA PROFESSIONAL SEAL 29977 ENGINEER HARDY L. WILLIS 4/29/15

STD. NO. EB_30_105S

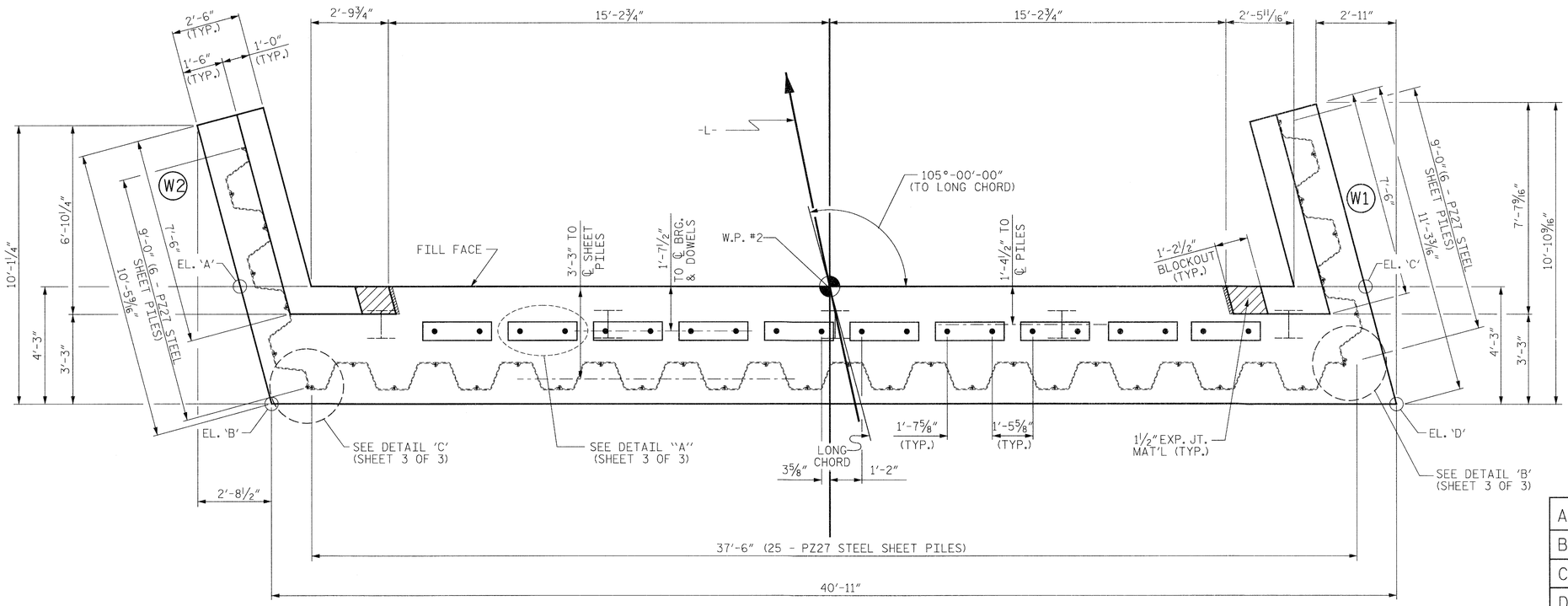

PLAN

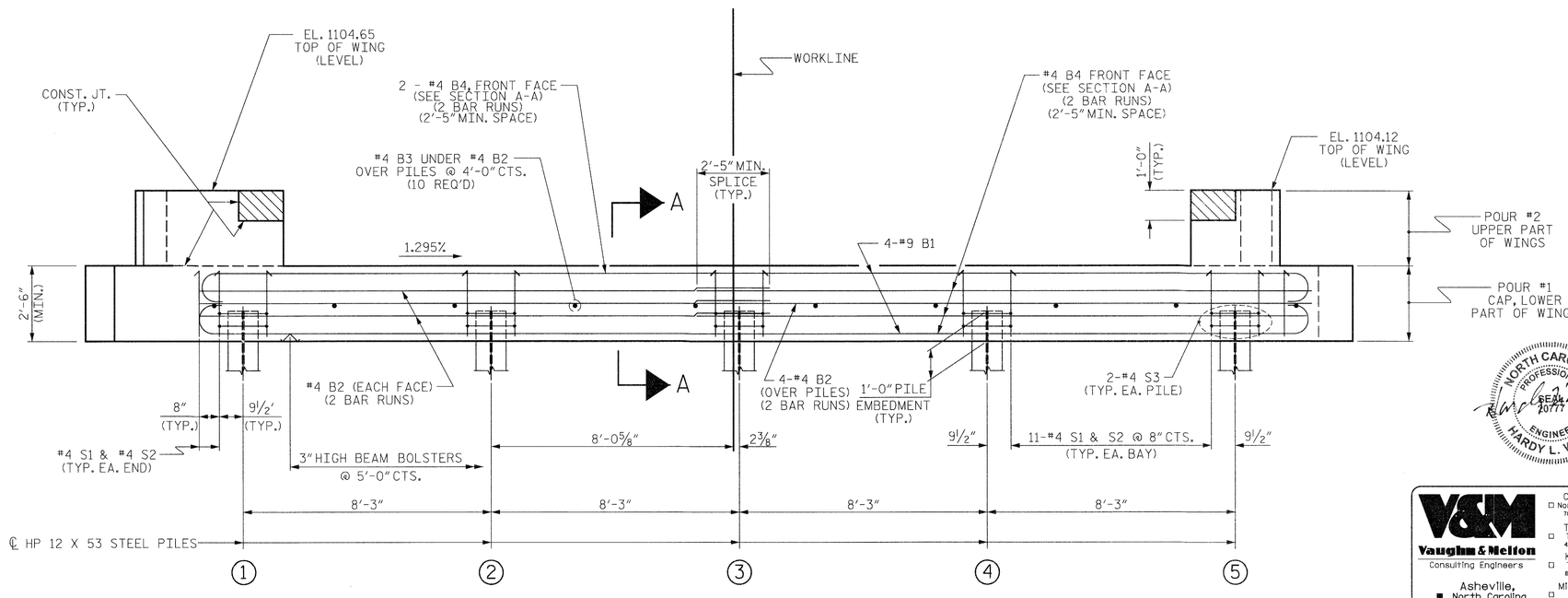

ELEVATION

WINGS NOT SHOWN FOR CLARITY.
FOR SECTION A-A, SEE SHEET 3 OF 3.
STEEL PILES NOT SHOWN FOR CLARITY.

NOTES

STIRRUPS IN CAP MAY BE SHIFTED AS NECESSARY TO CLEAR DOWELS.

THE CONCRETE IN THE SHADED AREA OF THE WING SHALL BE POURED AFTER THE VERTICAL CONCRETE BARRIER RAIL IS CAST IF SLIP FORMING IS USED.

FOR PILE SPLICE DETAILS, SEE SHEET 4 OF 4.

FOR WING DETAILS, SEE SHEET 3 OF 4.

	TOP OF CAP ELEVATIONS	BOTTOM OF CAP ELEVATIONS
A	1102.11	1099.61
B	1102.21	1099.71
C	1101.58	1099.08
D	1101.68	1099.18

TOP OF PILE ELEVATIONS	
①	1100.60
②	1100.49
③	1100.39
④	1100.28
⑤	1100.17

PROJECT NO. 17BP.13.R.132

BURKE COUNTY

STATION: 11+81.87 -L-

SHEET 1 OF 3

NORTH CAROLINA PROFESSIONAL SEAL 20777 ENGINEER HARDY L. WILLIS 1/29/15

Vaughn & Melton
Consulting Engineers
Asheville, North Carolina 828-253-2796
Charlotte, North Carolina 704-357-0488
Tri-Cities, Tennessee 423-467-8401
Knoxville, Tennessee 865-546-5800
Middlesboro, Kentucky 606-248-6600
Spartanburg, South Carolina 864-574-4775

Copyright © 2006 Vaughn & Melton, Inc. All Rights Reserved

STATE OF NORTH CAROLINA
DEPARTMENT OF TRANSPORTATION
RALEIGH

SUBSTRUCTURE

END BENT No. 2

DWN. BY: AW	DATE: 01/15	
CHKD. BY: HLW	DATE: 01/15	
DES. EGR. OF RECORD: RTS	DATE: 01/15	

REVISIONS					
NO.	BY:	DATE:	NO.	BY:	DATE:
1			3		
2			4		

SHEET NO. S-12

TOTAL SHEETS 16

STD. NO. EB_30_105S

$$$$$$$SYSTIME$$$$$
$$$$$$$$$$$$$$$$$$$$$$$$$DGN$$$$$$$$$$$$$$$$$$$$$$$$
$$$$USERNAME$$$$

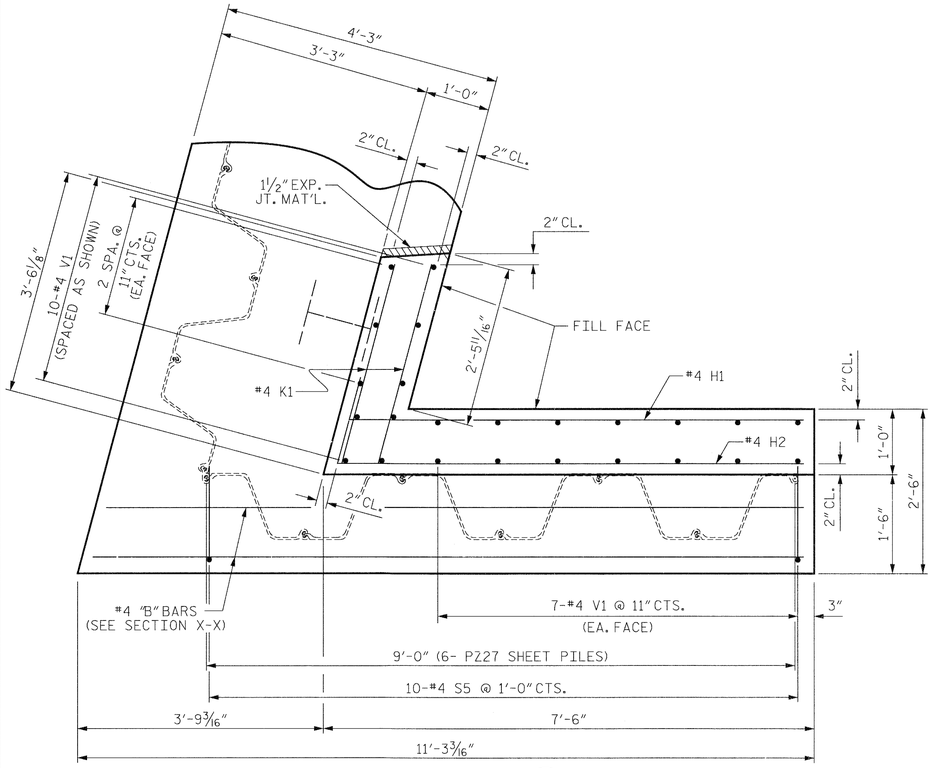

PLAN OF WING (W1)

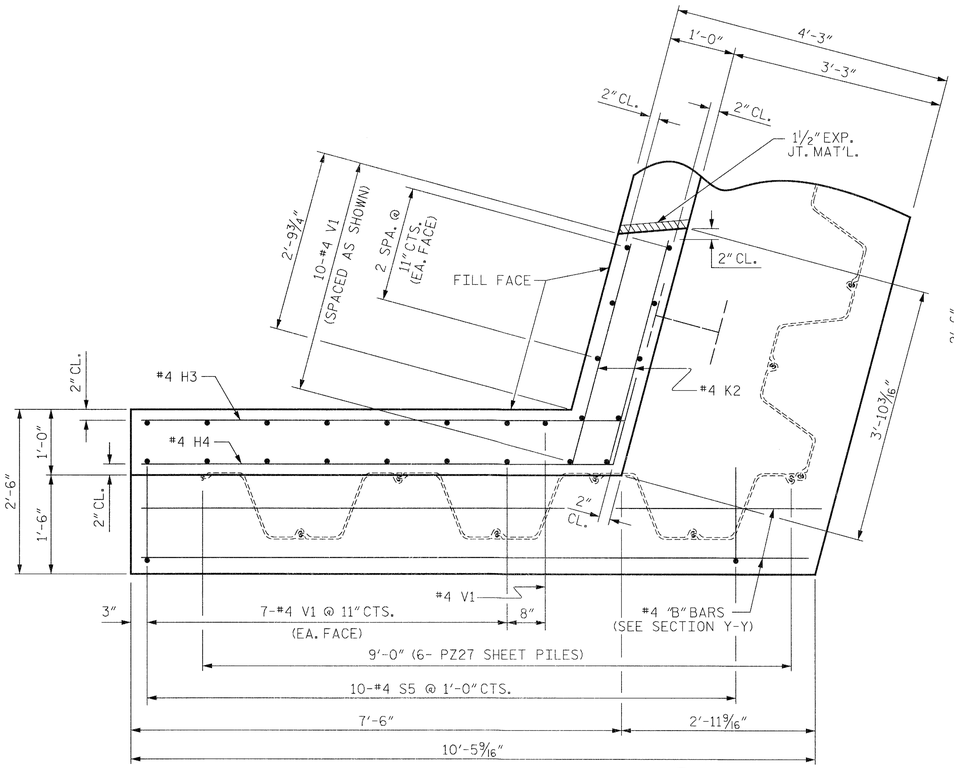

PLAN OF WING (W2)

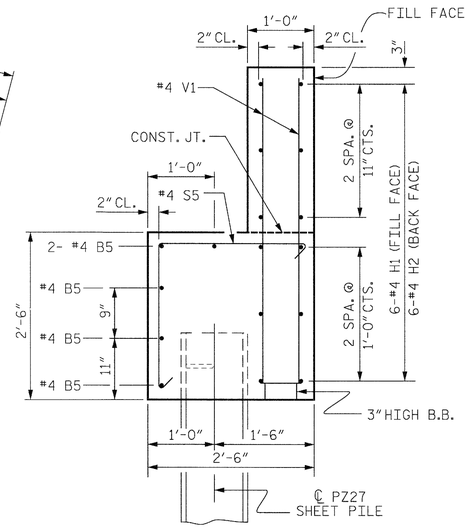

SECTION X-X

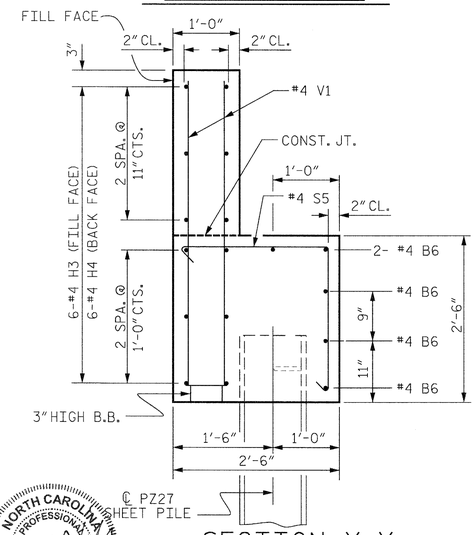

SECTION Y-Y

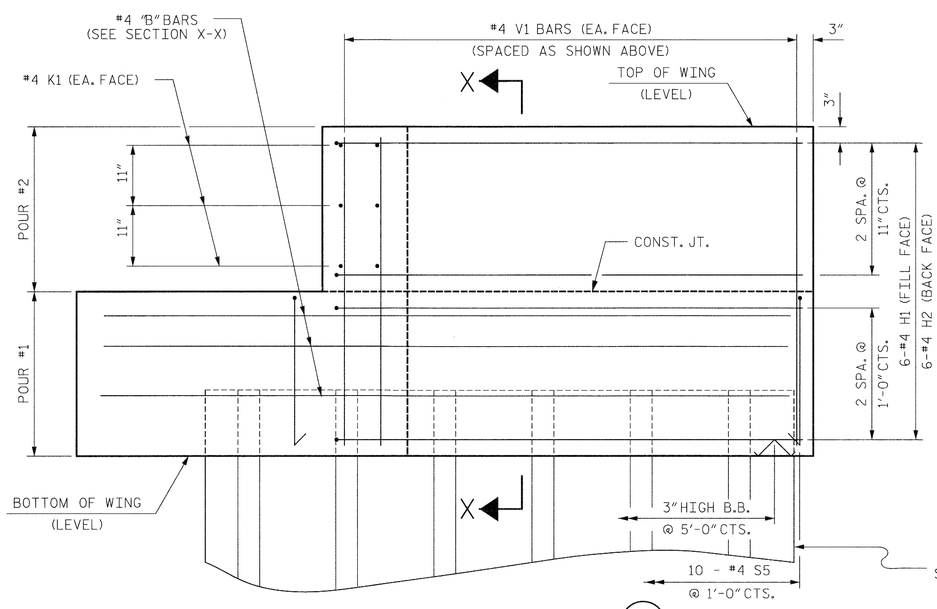

ELEVATION OF WING (W1)

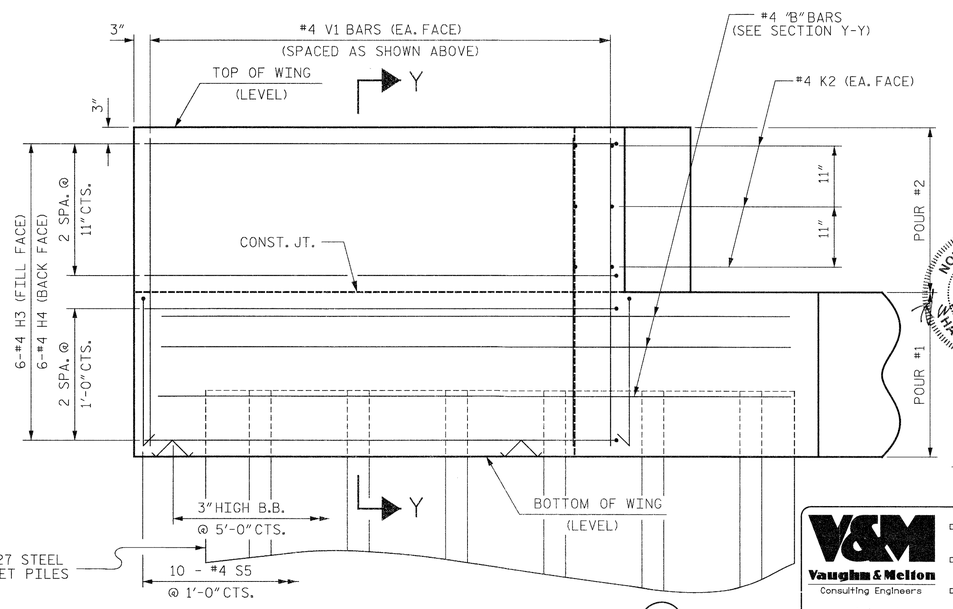

PZ27 STEEL SHEET PILES

ELEVATION OF WING (W2)

WING DETAILS

NORTH CAROLINA PROFESSIONAL SEAL 20477 ENGINEER HARDY L. WILLIS 4/29/15

V&M Vaughn & Melton Consulting Engineers
Asheville, North Carolina 828-253-2796
Charlotte, North Carolina 704-357-0488
Tri-Cities, Tennessee 423-467-8400
Knoxville, Tennessee 865-546-5800
Middlesboro, Kentucky 606-248-6600
Spartanburg, South Carolina 864-574-4775
Copyright © 2006 Vaughn & Melton, Inc. All Rights Reserved

PROJECT NO. 17BP.13.R.132
BURKE COUNTY
STATION: 11+81.87 -L-

SHEET 2 OF 3

STATE OF NORTH CAROLINA
DEPARTMENT OF TRANSPORTATION
RALEIGH

SUBSTRUCTURE
END BENT No. 2
WING DETAILS

ASSEMBLED BY :	AW	DATE :	01/15
CHECKED BY :	HLW	DATE :	01/15
DRAWN BY :	DGE 03/10		
CHECKED BY :	MKT 03/10		

DWN. BY: AW	DATE: 01/15	
CHKD. BY: HLW	DATE: 01/15	
DES. EGR. OF RECORD: RTS	DATE: 01/15	

REVISIONS						SHEET NO.
NO.	BY:	DATE:	NO.	BY:	DATE:	S-13
1			3			TOTAL SHEETS
2			4			16

STD. NO. EB_30_105S

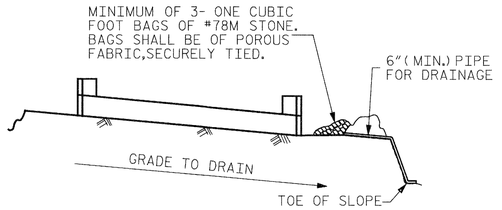

BAGGED STONE AND PIPE SHALL BE PLACED IMMEDIATELY AFTER COMPLETION OF END BENT EXCAVATION. PIPE MAY BE EITHER CONCRETE, CORRUGATED STEEL, CORRUGATED ALUMINUM ALLOY, OR CORRUGATED PLASTIC. PERFORATED PIPE WILL NOT BE ALLOWED.

BAGGED STONE SHALL REMAIN IN PLACE UNTIL THE ENGINEER DIRECTS THAT IT BE REMOVED. THE CONTRACTOR SHALL REMOVE AND DISPOSE OF SILT ACCUMULATIONS AT BAGGED STONE WHEN SO DIRECTED BY THE ENGINEER. BAGS SHALL BE REMOVED AND REPLACED WHENEVER THE ENGINEER DETERMINES THAT THEY HAVE DETERIORATED AND LOST THEIR EFFECTIVENESS.

NO SEPARATE PAYMENT WILL BE MADE FOR THIS WORK AND THE ENTIRE COST OF THIS WORK SHALL BE INCLUDED IN THE UNIT CONTRACT PRICE BID FOR THE SEVERAL PAY ITEMS.

TEMPORARY DRAINAGE AT END BENT

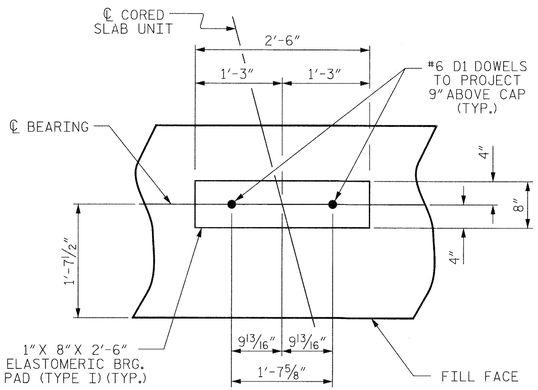

DETAIL "A"

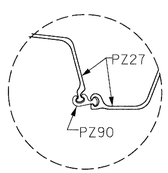

DETAIL "B"

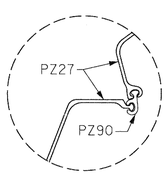

DETAIL "C"

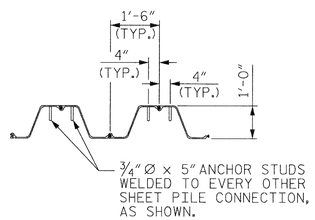

ANCHOR STUD DETAIL

SHEET PILE CONNECTION DETAILS

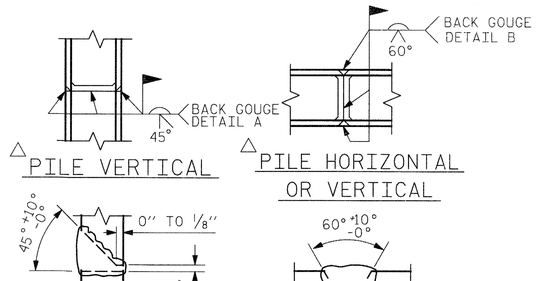

△ PILE VERTICAL

△ PILE HORIZONTAL OR VERTICAL

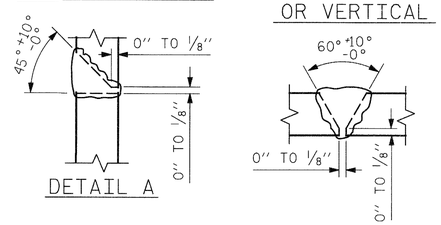

DETAIL A

DETAIL B

△ POSITION OF PILE DURING WELDING.

PILE SPLICE DETAILS

SCALE- 7/16" = 1'-0"

BAR TYPES

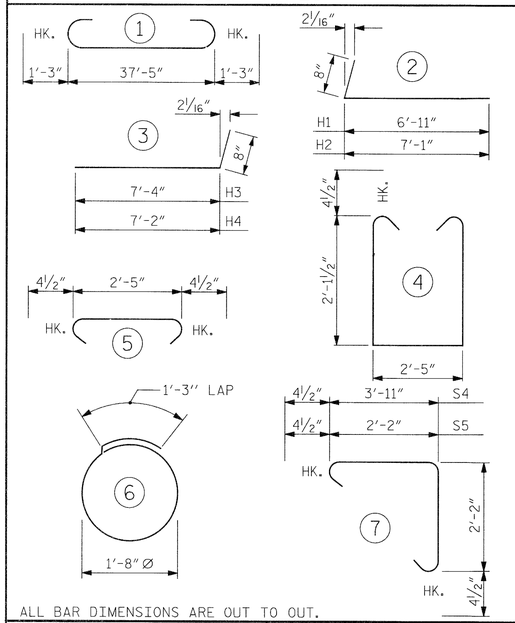

ALL BAR DIMENSIONS ARE OUT TO OUT.

END BENT No. 2	PZ27 STEEL SHEET PILES
HP 12 X 53 STEEL PILES	NO. PZ27 = 37
NO: 5 LIN. FT.= 75.0	NO. PZ90 = 2
	TOTAL = 39 SQ. FT. = 269.0
PILE EXCAVATION IN SOIL	PILE EXCAVATION NOT IN SOIL
LIN. FT. = 30	LIN. FT. = 30

BILL OF MATERIAL

FOR END BENT NO. 2

BAR	NO.	SIZE	TYPE	LENGTH	WEIGHT
B1	8	#9	1	39'-11"	1086
B2	16	#4	STR	19'-11"	213
B3	10	#4	STR	2'-5"	16
B4	10	#4	STR	21'-5"	143
B5	5	#4	STR	10'-1"	34
B6	5	#4	STR	10'-6"	35
D1	20	#6	STR	1'-6"	45
H1	6	#4	2	7'-7"	30
H2	6	#4	2	7'-9"	31
H3	6	#4	3	8'-0"	32
H4	6	#4	3	7'-10"	31
K1	6	#4	STR	3'-1"	12
K2	6	#4	STR	3'-5"	14
S1	48	#4	4	7'-5"	238
S2	48	#4	5	3'-2"	102
S3	10	#4	6	6'-6"	43
S4	40	#4	7	6'-10"	183
S5	20	#4	7	5'-1"	68
V1	49	#4	STR	4'-8"	153

REINFORCING STEEL (FOR ONE END BENT) 2509 LBS.

CLASS A CONCRETE BREAKDOWN (FOR ONE END BENT)

POUR #1	CAP, LOWER PART OF WINGS	19.1 C.Y.
POUR #2	UPPER PART OF WINGS	1.9 C.Y.
TOTAL CLASS A CONCRETE		21.0 C.Y.

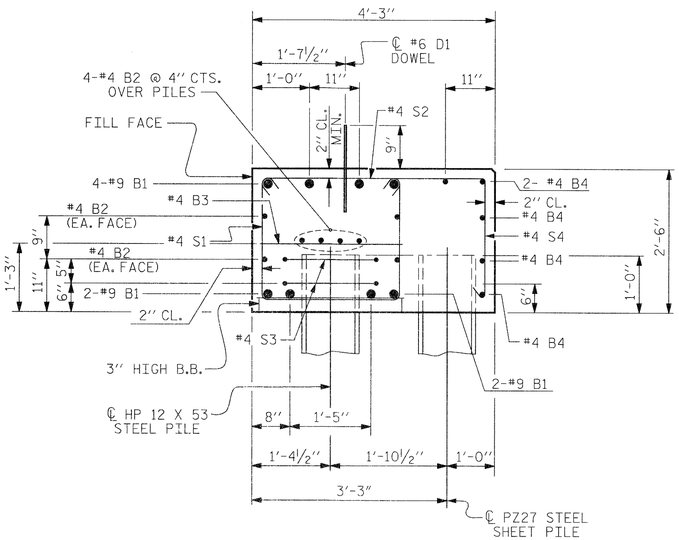

SECTION A-A

PROJECT NO. 17BP.13.R.132

BURKE COUNTY

STATION: 11+81.87 -L-

SHEET 3 OF 3

STATE OF NORTH CAROLINA
DEPARTMENT OF TRANSPORTATION
RALEIGH

SUBSTRUCTURE

END BENT No. 2 DETAILS

NORTH CAROLINA PROFESSIONAL SEAL 030724 ENGINEER HARDY L. WILLIS 11/29/15

REVISIONS						SHEET NO.
NO.	BY:	DATE:	NO.	BY:	DATE:	S-14
1			3			TOTAL SHEETS
2			4			16

ASSEMBLED BY :	AW	DATE :	01/15
CHECKED BY :	HLW	DATE :	01/15
DRAWN BY :	DGE	03/10	
CHECKED BY :	MKT	03/10	

$$$$$$$SYSTIME$$$$$
$$$$$$$$$$$$$$$$$$$$$$$$$$DGN$$$$$$$$$$$$$$$$$$$$$$$$$
$$$$USERNAME$$$$

STD. NO. EB_30_105S

NOTES :

FOR BERM WIDTH DIMENSIONS, SEE GENERAL DRAWING.

PLACE RIP RAP ON ALL EXCAVATED AREAS.

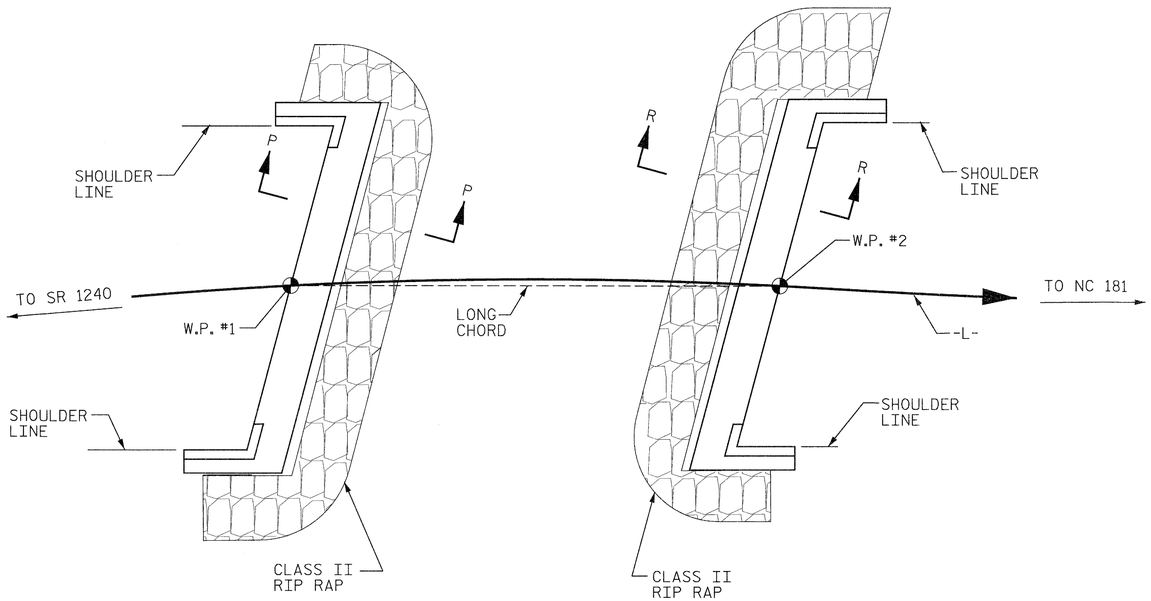

END BENT NO. 1

END BENT NO. 2

ESTIMATED QUANTITIES		
BRIDGE @ STA. 11+81.87	RIP RAP CLASS II (2'-0" THICK)	GEOTEXTILE FOR DRAINAGE
	TONS	SQUARE YARDS
END BENT 1	46	51
END BENT 2	54	60

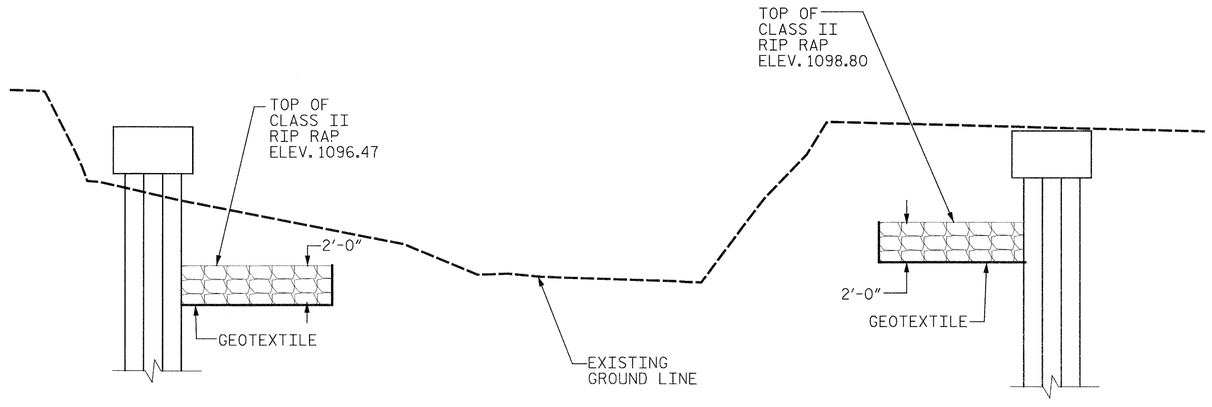

SECTION P-P

SECTION R-R

PROJECT NO. 17BP.13.R.132

BURKE COUNTY

STATION: 11+81.87 -L-

STATE OF NORTH CAROLINA
DEPARTMENT OF TRANSPORTATION
RALEIGH

RIP RAP DETAILS

NORTH CAROLINA PROFESSIONAL SEAL 20777 ENGINEER HARDY L. WILLIS
4/29/15

ASSEMBLED BY : AW	DATE : 01/15
CHECKED BY : RTS	DATE : 01/15
DRAWN BY : REK 1/84	REV. 5/1/06R TLA/GM
CHECKED BY : RDU 1/84	REV. 10/1/11 MAA/GM
	REV. 12/21/11 MAA/GM

REVISIONS						SHEET NO.
NO.	BY:	DATE:	NO.	BY:	DATE:	S-15
1			3			TOTAL SHEETS
2			4			16

STD. NO. RR1

$$$$$$SYSTIME$$$$$
$$$$$$$$$$$$$$$$$$$$$$$$DGN$$$$$$$$$$$$$$$$$$$$$$$$
$$$$USERNAME$$$$

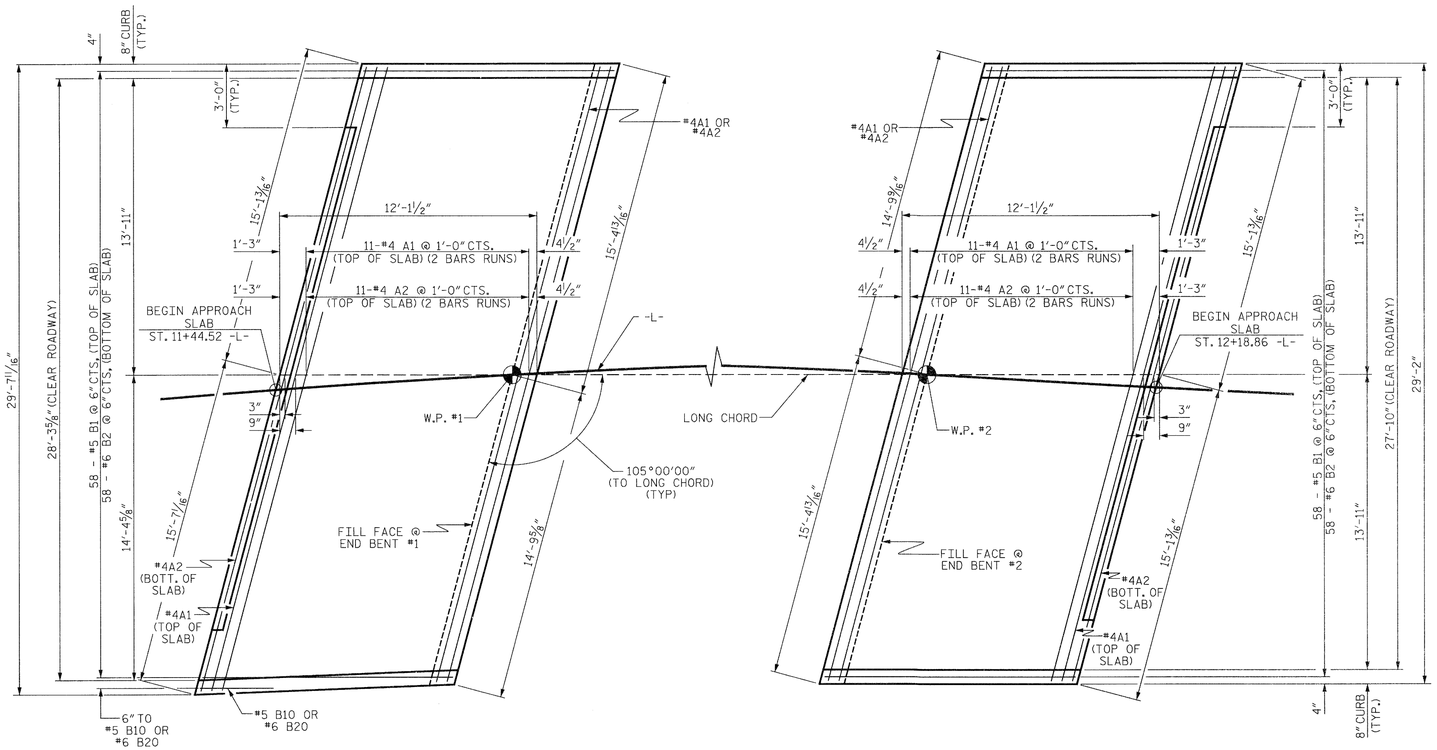

PLAN @ END BENT #1

PLAN @ END BENT #2

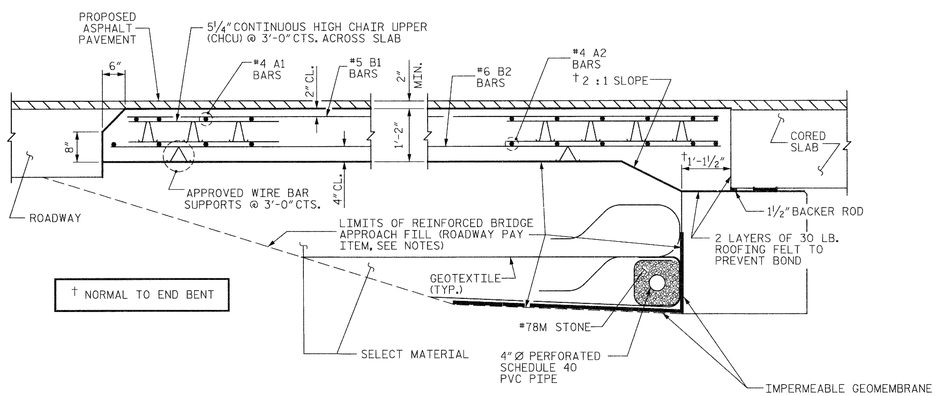

SECTION THRU SLAB

NOTES

FOR REINFORCED BRIDGE APPROACH FILL INCLUDING GEOTEXTILE, IMPERMEABLE GEOMEMBRANE, 4" Ø DRAINAGE PIPE, #78M STONE, AND SELECT MATERIAL, SEE ROADWAY PLANS.

AREA BETWEEN THE WINGWALL AND APPROACH SLAB SHALL BE GRADED TO DRAIN THE WATER AWAY FROM THE FILL FACE OF THE BRIDGE AND SHALL BE PAVED. SEE ROADWAY PLANS.

APPROACH SLAB GROOVING IS NOT REQUIRED.

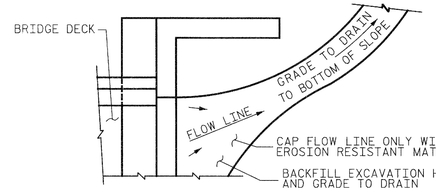

NOTE: IF THE APPROACH SLAB IS NOT CONSTRUCTED IMMEDIATELY AFTER THE BACKFILLING OF THE END BENT EXCAVATION, GRADE TO DRAIN TO THE BOTTOM OF THE SLOPE AND PROVIDE EROSION RESISTANT MATERIAL, SUCH AS FIBERGLASS ROVING OR AS DIRECTED BY THE ENGINEER TO PREVENT SOIL EROSION AND TO PROTECT THE AREA ADJACENT TO THE STRUCTURE. THE CONTRACTOR WILL BE REQUIRED TO REMOVE THESE MATERIALS PRIOR TO CONSTRUCTION OF THE APPROACH SLAB.

TEMPORARY DRAINAGE DETAIL

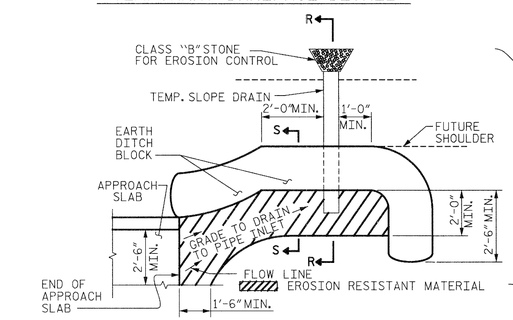

NOTE: IMMEDIATELY AFTER THE CONSTRUCTION OF THE APPROACH SLAB, THE CONTRACTOR SHALL PROVIDE TEMPORARY BERM AND SLOPE DRAIN. CONTRACTOR SHALL GRADE TO PIPE INLET AND PROVIDE EROSION RESISTANT MATERIAL AS SHOWN. THE EROSION RESISTANT MATERIAL SHALL BE EITHER 1) ASPHALT PLANT MIX, TYPE 1 OR TYPE 2, MIN. 2" DEPTH, 2) EROSION CONTROL MAT, OR 3) CONCRETE, AS DIRECTED BY THE ENGINEER. THE SLOPE DRAIN SHALL CONSIST OF A NON-PERFORATED TEMPORARY DRAINAGE PIPE, 12 INCHES IN DIAMETER.

PLAN VIEW

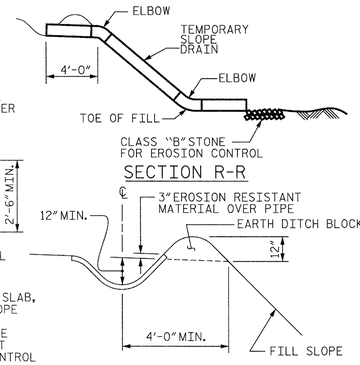

SECTION R-R

SECTION S-S

TEMPORARY BERM AND SLOPE DRAIN DETAILS

(TO BE USED WHEN SHOULDER BERM GUTTER IS REQUIRED)

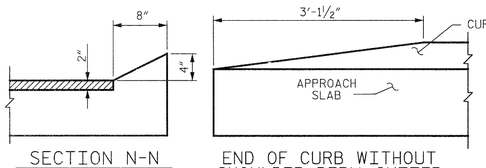

SECTION N-N

END OF CURB WITHOUT SHOULDER BERM GUTTER

CURB DETAILS

SPLICE LENGTHS		
BAR SIZE	EPOXY COATED	UNCOATED
#4	2'-0"	1'-9"
#5	2'-6"	2'-2"
#6	3'-10"	2'-7"

BILL OF MATERIAL

APPROACH SLAB AT EB #1

BAR	NO.	SIZE	TYPE	LENGTH	WEIGHT
✳ A1	26	#4	STR	16'-4"	284
A2	26	#4	STR	16'-1"	279
✳ B1	58	#5	STR	11'-1"	670
B2	58	#6	STR	11'-7"	1009
✳ B10	1	#5	STR	3'-5"	4
B20	1	#6	STR	3'-5"	5
REINFORCING STEEL				LBS.	1293
✳ EPOXY COATED REINFORCING STEEL				LBS.	958
CLASS AA CONCRETE				C.Y.	16.9

APPROACH SLAB AT EB #2

BAR	NO.	SIZE	TYPE	LENGTH	WEIGHT
✳ A1	26	#4	STR	16'-0"	277
A2	26	#4	STR	15'-10"	274
✳ B1	58	#5	STR	11'-1"	670
B2	58	#6	STR	11'-7"	1009
REINFORCING STEEL				LBS.	1283
✳ EPOXY COATED REINFORCING STEEL				LBS.	947
CLASS AA CONCRETE				C.Y.	16.9

PROJECT NO. 17BP.13.R.132

BURKE COUNTY

STATION: 11+81.87 -L-

STATE OF NORTH CAROLINA
DEPARTMENT OF TRANSPORTATION
RALEIGH

STANDARD BRIDGE APPROACH SLAB FOR PRESTRESSED CONCRETE CORED SLAB UNIT (SUB-REGIONAL TIER) 105° SKEW

NORTH CAROLINA PROFESSIONAL SEAL 20277 ENGINEER HARDY L. WILLIS 4/29/15

REVISIONS						SHEET NO.
NO.	BY:	DATE:	NO.	BY:	DATE:	S-16
1			3			TOTAL SHEETS
2			4			16

ASSEMBLED BY :	AW	DATE :	01/15
CHECKED BY :	RTS	DATE :	01/15
DRAWN BY : SHS/MAA 5-09	REV. 12-11		MAA/AAC
CHECKED BY : BCH 5-09			

$$$$$$SYSTIME$$$$$$
$$$$$$$$$$$$$$$$$$$$$$$$DGN$$$$$$$$$$$$$$$$$$$$$$$$
$$$$USERNAME$$$$

STD. NO. BAS_30_105S

STANDARD NOTES

DESIGN DATA:

SPECIFICATIONS	A.A.S.H.T.O. (CURRENT)
LIVE LOAD	SEE PLANS
IMPACT ALLOWANCE	SEE A.A.S.H.T.O.
STRESS IN EXTREME FIBER OF	
STRUCTURAL STEEL - AASHTO M270 GRADE 36	20,000 LBS. PER SQ. IN.
- AASHTO M270 GRADE 50W	27,000 LBS. PER SQ. IN.
- AASHTO M270 GRADE 50	27,000 LBS. PER SQ. IN.
REINFORCING STEEL IN TENSION	
GRADE 60	24,000 LBS. PER SQ. IN.
CONCRETE IN COMPRESSION	1,200 LBS. PER SQ. IN.
CONCRETE IN SHEAR	SEE A.A.S.H.T.O.
STRUCTURAL TIMBER - TREATED OR	
UNTREATED - EXTREME FIBER STRESS	1,800 LBS. PER SQ. IN.
COMPRESSION PERPENDICULAR TO GRAIN OF TIMBER	375 LBS. PER SQ. IN.
EQUIVALENT FLUID PRESSURE OF EARTH	30 LBS. PER CU. FT. (MINIMUM)

MATERIAL AND WORKMANSHIP:

EXCEPT AS MAY OTHERWISE BE SPECIFIED ON PLANS OR IN THE SPECIAL PROVISIONS, ALL MATERIAL AND WORKMANSHIP SHALL BE IN ACCORDANCE WITH THE 2012 "STANDARD SPECIFICATIONS FOR ROADS AND STRUCTURES" OF THE N. C. DEPARTMENT OF TRANSPORTATION.

STEEL SHEET PILING FOR PERMANENT OR TEMPORARY APPLICATIONS SHALL BE HOT ROLLED.

CONCRETE:

UNLESS OTHERWISE REQUIRED ON PLANS, CLASS A CONCRETE SHALL BE USED FOR ALL PORTIONS OF ALL STRUCTURES WITH THE EXCEPTION THAT: CLASS AA CONCRETE SHALL BE USED IN BRIDGE SUPERSTRUCTURES, ABUTMENT BACKWALLS, AND APPROACH SLABS; AND CLASS B CONCRETE SHALL BE USED FOR SLOPE PROTECTION AND RIP RAP.

CONCRETE CHAMFERS:

UNLESS OTHERWISE NOTED ON THE PLANS, ALL EXPOSED CORNERS ON STRUCTURES SHALL BE CHAMFERED 3/4" WITH THE FOLLOWING EXCEPTIONS: TOP CORNERS OF CURBS MAY BE ROUNDED TO 1-1/2" RADIUS WHICH IS BUILT INTO CURB FORMS; CORNERS OF TRANSVERSE FLOOR EXPANSION JOINTS SHALL BE ROUNDED WITH A 1/4" FINISHING TOOL UNLESS OTHERWISE REQUIRED ON PLANS; AND CORNERS OF EXPANSION JOINTS IN THE ROADWAY FACES AND TOPS OF CURBS AND SIDEWALKS SHALL BE ROUNDED TO A 1/4" RADIUS WITH A FINISHING STONE OR TOOL UNLESS OTHERWISE REQUIRED ON PLANS.

DOWELS:

DOWELS WHEN INDICATED ON PLANS AS FOR CULVERT EXTENSIONS, SHALL BE EMBEDDED AT LEAST 12" INTO THE OLD CONCRETE AND GROUTED INTO PLACE WITH 1:2 CEMENT MORTAR.

ALLOWANCE FOR DEAD LOAD DEFLECTION, SETTLEMENT, ETC. IN CASTING SUPERSTRUCTURES:

BRIDGES SHALL BE BUILT ON THE GRADE OR VERTICAL CURVE SHOWN ON PLANS. SLABS, CURBS AND PARAPETS SHALL CONFORM TO THE GRADE OR CURVE.

ALL DIMENSIONS WHICH ARE GIVEN IN SECTION AND ARE AFFECTED BY DEAD LOAD DEFLECTIONS ARE DIMENSIONS AT CENTER LINE OF BEARING UNLESS OTHERWISE NOTED ON PLANS. IN SETTING FORMS FOR STEEL BEAM BRIDGES AND PRESTRESSED CONCRETE GIRDER BRIDGES, ADJUSTMENTS SHALL BE MADE DUE TO THE DEAD LOAD DEFLECTIONS FOR THE ELEVATIONS SHOWN. WHERE BLOCKS ARE SHOWN OVER BEAMS FOR BUILDING UP TO THE SLAB, THE VERTICAL DIMENSIONS OF THE BLOCKS SHALL BE ADJUSTED BETWEEN BEARINGS TO COMPENSATE FOR DEAD LOAD DEFLECTIONS, VERTICAL CURVE ORDINATE, AND ACTUAL BEAM CAMBER. WHERE BOTTOM OF SLAB IS IN LINE WITH BOTTOM OF TOP FLANGES, DEPTH OF SLAB BETWEEN BEARINGS SHALL BE ADJUSTED TO COMPENSATE FOR DEAD LOAD DEFLECTION, VERTICAL CURVE ORDINATE, AND ACTUAL BEAM CAMBER.

IN SETTING FALSEWORK AND FORMS FOR REINFORCED CONCRETE SPANS, AN ALLOWANCE SHALL BE MADE FOR DEAD LOAD DEFLECTIONS, SETTLEMENT OF FALSEWORK, AND PERMANENT CAMBER WHICH SHALL BE PROVIDED FOR IN ADDITION TO THE ELEVATIONS SHOWN. AFTER REMOVAL OF THE FALSEWORK, THE FINISHED STRUCTURES SHALL CONFORM TO THE PROFILE AND ELEVATIONS SHOWN ON THE PLANS AND CONSTRUCTION ELEVATIONS FURNISHED BY THE ENGINEER.

DETAILED DRAWINGS FOR FALSEWORK OR FORMS FOR BRIDGE SUPERSTRUCTURE AND ANY STRUCTURE OR PARTS OF A STRUCTURE AS NOTED ON THE PLANS SHALL BE SUBMITTED TO THE ENGINEER FOR APPROVAL BEFORE CONSTRUCTION OF THE FALSEWORK OR FORMS IS STARTED.

REINFORCING STEEL:

ALL REINFORCING STEEL SHALL BE DEFORMED. DIMENSIONS RELATIVE TO PLACEMENT OF REINFORCING ARE TO CENTERS OF BARS UNLESS OTHERWISE INDICATED IN THE PLANS. DIMENSIONS ON BAR DETAILS ARE TO CENTERS OF BARS OR ARE OUT TO OUT AS INDICATED ON PLANS.

WIRE BAR SUPPORTS SHALL BE PROVIDED FOR REINFORCING STEEL WHERE INDICATED ON THE PLANS. WHEN BAR SUPPORT PIECES ARE PLACED IN CONTINUOUS LINES, THEY SHALL BE SO PLACED THAT THE ENDS OF THE SUPPORTING WIRES SHALL BE LAPPED TO LOCK LEGS ON ADJOINING PIECES.

STRUCTURAL STEEL:

AT THE CONTRACTOR'S OPTION, HE MAY SUBSTITUTE 7/8" Ø SHEAR STUDS FOR THE 3/4" Ø STUDS SPECIFIED ON THE PLANS. THIS SUBSTITUTION SHALL BE MADE AT THE RATE OF 3 - 7/8" Ø STUDS FOR 4 - 3/4" Ø STUDS, AND STUD SPACING CHANGES SHALL BE MADE AS NECESSARY TO PROVIDE THE SAME EQUIVALENT NUMBER OF 7/8" Ø STUDS ALONG THE BEAM AS SHOWN FOR 3/4" Ø STUDS BASED ON THE RATIO OF 3 - 7/8" Ø STUDS FOR 4 - 3/4" Ø STUDS. STUDS OF THE LENGTH SPECIFIED ON THE PLANS MUST BE PROVIDED. THE MAXIMUM SPACING SHALL BE 2'-0".

EXCEPT AT THE INTERIOR SUPPORTS OF CONTINUOUS BEAMS WHERE THE COVER PLATE IS IN CONTACT WITH BEARING PLATE, THE CONTRACTOR MAY, AT HIS OPTION, SUBSTITUTE FOR THE COVER PLATES DESIGNATED ON THE PLANS COVER PLATES OF THE EQUIVALENT AREA PROVIDED THESE PLATES ARE AT LEAST 5/16" IN THICKNESS AND DO NOT EXCEED A WIDTH EQUAL TO THE FLANGE WIDTH LESS 2" OR A THICKNESS EQUAL TO 2 TIMES THE FLANGE THICKNESS. THE SIZE OF FILLET WELDS SHALL CONFORM TO THE REQUIREMENTS OF THE CURRENT ANSI/AASHTO/AWS "BRIDGE WELDING CODE". ELECTROSLAG WELDING WILL NOT BE PERMITTED.

WITH THE SOLE EXCEPTION OF EDGES AT SURFACES WHICH BEAR ON OTHER SURFACES, ALL SHARP EDGES AND ENDS OF SHAPES AND PLATES SHALL BE SLIGHTLY ROUNDED BY SUITABLE MEANS TO A RADIUS OF APPROXIMATELY 1/16 INCH OR EQUIVALENT FLAT SURFACE AT A SUITABLE ANGLE PRIOR TO PAINTING, GALVANIZING, OR METALLIZING.

HANDRAILS AND POSTS:

METAL STANDARDS AND FACES OF THE CONCRETE END POSTS FOR THE METAL RAIL SHALL BE SET NORMAL TO THE GRADE OF THE CURB, UNLESS OTHERWISE SHOWN ON PLANS. THE METAL RAIL AND TOPS OF CONCRETE POSTS USED WITH THE ALUMINUM RAIL SHALL BE BUILT PARALLEL TO THE GRADE OF THE CURB.

METAL HANDRAILS SHALL BE IN ACCORDANCE WITH THE PLANS. RAILS SHALL BE AS MANUFACTURED FOR BRIDGE RAILING. CASTINGS SHALL BE OF A UNIFORM APPEARANCE. FINS AND OTHER DEFORMATIONS RESULTING FROM CASTING OR OTHERWISE SHALL BE REMOVED IN A MANNER SO THAT A UNIFORM COLORING OF THE COMPLETED CASTING SHALL BE OBTAINED. CASTINGS WITH DISCOLORATIONS OR OF NON-UNIFORM COLORING WILL NOT BE ACCEPTED. CERTIFIED MILL REPORTS ARE REQUIRED FOR METAL RAILS AND POSTS.

SPECIAL NOTES:

GENERALLY, IN CASE OF DISCREPANCY, THIS STANDARD SHEET OF NOTES SHALL GOVERN OVER THE SPECIFICATIONS, BUT THE REMAINDER OF THE PLANS SHALL GOVERN OVER NOTES HEREON, AND SPECIAL PROVISIONS SHALL GOVERN OVER ALL. SEE SPECIFICATIONS ARTICLE 105-4.

ENGLISH

JANUARY, 1990

PROJECT: 17BP.13.R.134

CONTRACT:

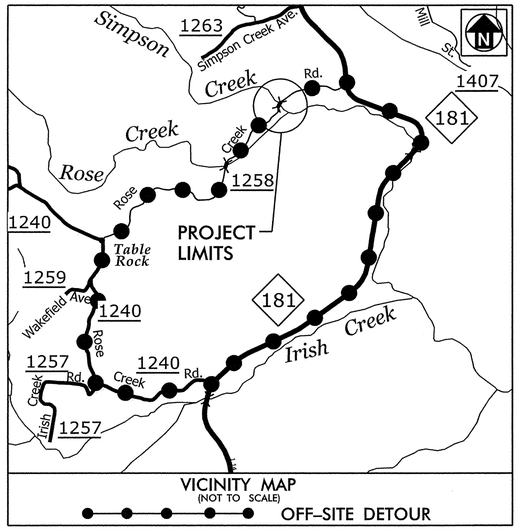

STATE OF NORTH CAROLINA
DIVISION OF HIGHWAYS

BURKE COUNTY

STATE	STATE PROJECT REFERENCE NO.	SHEET NO.	TOTAL SHEETS
N.C.	17BP.13.R.134	1	

STATE PROJECT NO.	F.A. PROJ. NO.	DESCRIPTION
17BP.13.R.134		PE, RW, UTIL

LOCATION: BRIDGE NO. 131 OVER SIMPSON CREEK ON SR 1258 (ROSE CREEK ROAD)

TYPE OF WORK: GRADING, PAVING, DRAINAGE AND STRUCTURE

MAP 3

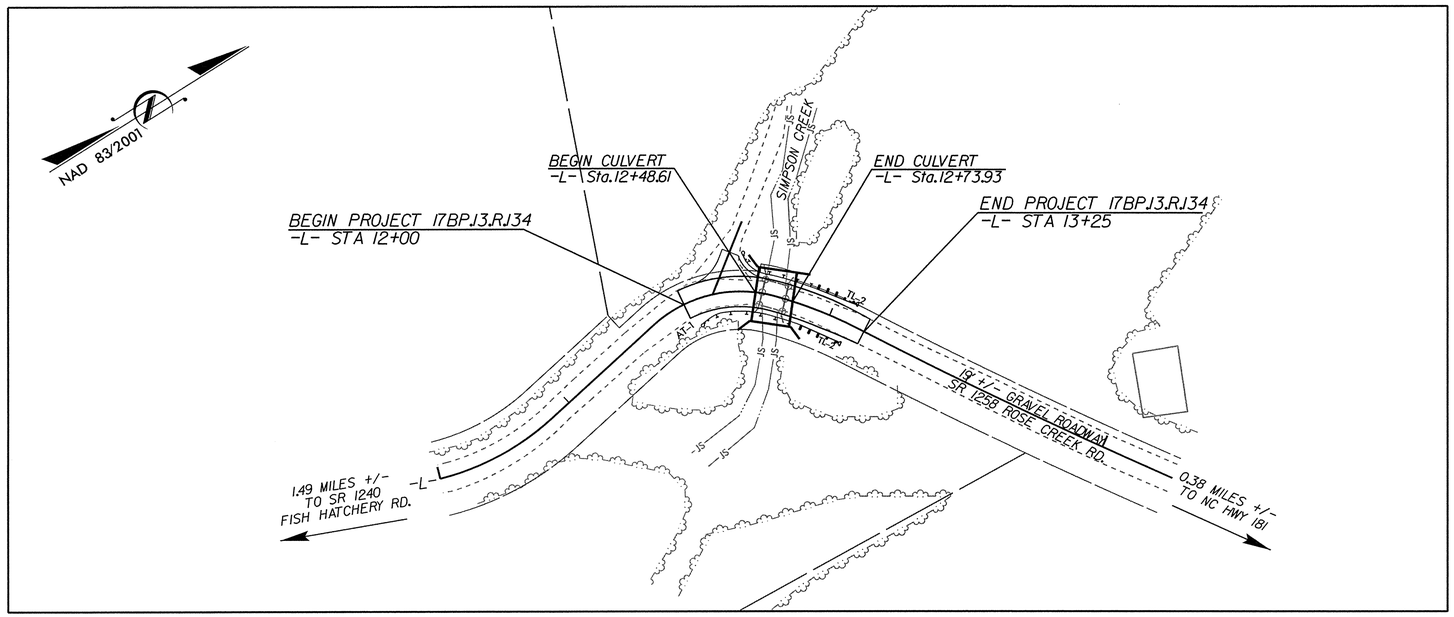

GRAPHIC SCALES

50 25 0 50 100
PLANS

50 25 0 50 100
PROFILE (HORIZONTAL)

10 5 0 10 20
PROFILE (VERTICAL)

STATE OF NORTH CAROLINA DEPARTMENT OF TRANSPORTATION

DESIGN DATA

ADT 2000 = 170

V = 15 MPH

FUNCTIONAL CLASS = LOCAL

PROJECT LENGTH

LENGTH ROADWAY TIP PROJECT 17BP.13.R.134	=	0.019 MILES
LENGTH STRUCTURE TIP PROJECT 17BP.13.R.134	=	0.005 MILES
TOTAL LENGTH TIP PROJECT 17BP.13.R.134	=	0.024 MILES

Prepared In the Office of Mattern & Craig for

DIVISION 13

NORTH CAROLINA DEPARTMENT OF TRANSPORTATION

2012 STANDARD SPECIFICATIONS

RIGHT-OF-WAY DATE: _____

LETTING DATE: _____

JAMES VOSO, PE
PROJECT ENGINEER

MICHAEL HOMEWOOD, PE
HYDRAULICS ENGINEER

NCDOT CONTACT: PAUL SPROUSE, PE
PROJECT ENGINEER

ROADWAY DESIGN ENGINEER

NORTH CAROLINA PROFESSIONAL SEAL 022599 ENGINEER JAMES B. VOSO

SIGNATURE: J. Voso

HYDRAULICS ENGINEER

NORTH CAROLINA PROFESSIONAL SEAL 036336 ENGINEER MICHAEL B. HOMEWOOD

SIGNATURE: Michael B. Homewood 12/12/2014

PLANS PREPARED BY:

Mattern & Craig
SINCE 1973
CONSULTING ENGINEERS • SURVEYORS
FIRM LICENSE No. C-1154
12 BROAD STREET
ASHEVILLE, NORTH CAROLINA 28801
(828) 254-2201
FAX (828) 254-4562

11/4/2015
10:45:49 AM
R:\3382\13\Roadway\Proj\110131_rdy_tsh.dgn
bgross

PROJECT REFERENCE NO.	SHEET NO.
17BP.13.R.134	1-A
ROADWAY DESIGN ENGINEER	PAVEMENT DESIGN ENGINEER



PLANS PREPARED BY:
Mattern & Craig
CONSULTING ENGINEERS • SURVEYORS
FIRM LICENSE No. C-1154
12 BROAD STREET
ASHEVILLE, NORTH CAROLINA 28801
(828) 254-2201
FAX (828) 254-4562

INDEX OF SHEETS – GENERAL NOTES – LIST OF STANDARDS

INDEX OF SHEETS

SHEET NUMBER	SHEET
1	Title Sheet
1–A	Index of Sheets, General Notes, and List of Standards
1–B	Conventional Symbols
1–C	Survey Control Sheet
2	Typical Sections, Pavement Schedule
3	Summary of Drainage Quantities, Summary of Guardrail, and Earthwork Summary
4	Plan & Profile Sheet
TMP–1 THRU TMP–2	Transportation Management Plans
PMP–01	Pavement Marking Plans
EC–1 THRU RF–1	Erosion Control Plans
X–1A	Cross–Section Summary Sheet
X–1 THRU X–3	Cross–Sections
C–1 THRU C–3	Aluminum Box Culvert

2012 ROADWAY ENGLISH STANDARD DRAWINGS

The following Roadway Standards as appear in "Roadway Standard Drawings" Highway Design Branch – N. C. Department of Transportation – Raleigh, N. C., Dated January, 2012 are applicable to this project and by reference hereby are considered a part of these plans:

STD.NO.	TITLE
DIVISION 2 – EARTHWORK	
200.02	Method of Clearing – Method II
225.02	Guide for Grading Subgrade – Secondary and Local
225.04	Method of Obtaining Superelevation – Two Lane Pavement
DIVISION 3 – PIPE CULVERTS	
300.01	Method of Pipe Installation
310.10	Driveway Pipe Construction
DIVISION 5 – SUBGRADE, BASES AND SHOULDERS	
560.01	Method of Shoulder Construction – High Side of Superelevated Curve – Method I
DIVISION 8 – INCIDENTALS	
806.01	Concrete Right–of–Way Marker
862.01	Guardrail Placement
862.02	Guardrail Installation
862.03	Structure Anchor Units

GENERAL NOTES: 2012 SPECIFICATIONS
EFFECTIVE: 01–17–12
REVISED: 07/30/12

GRADE LINE:
GRADING AND SURFACING:

THE GRADE LINES SHOWN DENOTE THE FINISHED ELEVATION OF THE PROPOSED SURFACING AT GRADE POINTS SHOWN ON THE TYPICAL SECTIONS. GRADE LINES MAY BE ADJUSTED AT THEIR BEGINNING AND ENDING AND AT STRUCTURES AS DIRECTED BY THE ENGINEER IN ORDER TO SECURE A PROPER TIE–IN.

CLEARING:

CLEARING ON THIS PROJECT SHALL BE PERFORMED TO THE LIMITS ESTABLISHED BY METHOD II.

SUPERELEVATION:

ALL CURVES ON THIS PROJECT SHALL BE SUPERELEVATED IN ACCORDANCE WITH STD. NO. 225.04 USING THE RATE OF SUPERELEVATION AND RUNOFF SHOWN ON THE PLANS. SUPERELEVATION IS TO BE REVOLVED ABOUT THE GRADE POINTS SHOWN ON THE TYPICAL SECTIONS.

SHOULDER CONSTRUCTION:

ASPHALT, EARTH, AND CONCRETE SHOULDER CONSTRUCTION ON THE HIGH SIDE OF SUPERELEVATED CURVES SHALL BE IN ACCORDANCE WITH STD. NO. 560.01.

SIDE ROADS:

THE CONTRACTOR WILL BE REQUIRED TO DO ALL NECESSARY WORK TO PROVIDE SUITABLE CONNECTIONS WITH ALL ROADS, STREETS, AND DRIVES ENTERING THIS PROJECT. THIS WORK WILL BE PAID FOR AT THE CONTRACT UNIT PRICE FOR THE PARTICULAR ITEMS INVOLVED.

GUARDRAIL:

THE GUARDRAIL LOCATIONS SHOWN ON THE PLANS MAY BE ADJUSTED DURING CONSTRUCTION AS DIRECTED BY THE ENGINEER. THE CONTRACTOR SHOULD CONSULT WITH THE ENGINEER PRIOR TO ORDERING GUARDRAIL MATERIAL.

TEMPORARY SHORING:

SHORING REQUIRED FOR THE MAINTENANCE OF TRAFFIC WILL BE PAID FOR AS "EXTRA WORK" IN ACCORDANCE WITH SECTION 104–7.

SUBSURFACE PLANS:

SUBSURFACE PLANS ARE AVAILABLE FOR THE STRUCTURE ONLY. THE CONTRACTOR SHOULD MAKE HIS OWN INVESTIGATION AS TO THE OTHER SUBSURFACE CONDITIONS.

UTILITIES:

UTILITY OWNERS ON THIS PROJECT ARE TELICS (AT&T). ANY RELOCATION OF EXISTING UTILITIES WILL BE ACCOMPLISHED BY OTHERS, EXCEPT AS SHOWN ON THE PLANS.

RIGHT–OF–WAY MARKERS:

ALL RIGHT–OF–WAY MARKERS ON THIS PROJECT SHALL BE PLACED BY CONTRACT.

6/2/99
12:51:07 PM
R:\3382\131\Roadway\Proj\110131_rdy_typ.dgn

PROJECT REFERENCE NO.	SHEET NO.
17BPJ3,RJ34	1-B

Note: Not to Scale

**S.U.E. = Subsurface Utility Engineering*

STATE OF NORTH CAROLINA
DIVISION OF HIGHWAYS

CONVENTIONAL PLAN SHEET SYMBOLS

BOUNDARIES AND PROPERTY:

- State Line
- County Line
- Township Line
- City Line
- Reservation Line
- Property Line
- Existing Iron Pin — EIP
- Property Corner
- Property Monument — ECM
- Parcel/Sequence Number — 123
- Existing Fence Line
- Proposed Woven Wire Fence
- Proposed Chain Link Fence
- Proposed Barbed Wire Fence
- Existing Wetland Boundary — WLB
- Proposed Wetland Boundary — WLB
- Existing High Quality Wetland Boundary — HQ WLB
- Existing Endangered Animal Boundary — EAB
- Existing Endangered Plant Boundary — EPB

BUILDINGS AND OTHER CULTURE:

- Gas Pump Vent or U/G Tank Cap
- Sign — S
- Well — W
- Small Mine
- Foundation
- Area Outline
- Cemetery
- Building
- School
- Church
- Dam

HYDROLOGY:

- Stream or Body of Water
- Hydro, Pool or Reservoir
- River Basin Buffer — RBB
- Flow Arrow
- Disappearing Stream
- Spring
- Swamp Marsh
- Proposed Lateral, Tail, Head Ditch — FLOW
- False Sump

RAILROADS:

- Standard Guage — CSX TRANSPORTATION
- RR Signal Milepost — MILEPOST 35
- Switch — SWITCH
- RR Abandoned
- RR Dismantled

RIGHT OF WAY:

- Baseline Control Point
- Existing Right of Way Marker
- Existing Right of Way Line
- Proposed Right of Way Line — RW
- Proposed Right of Way Line with Iron Pin and Cap Marker — RW
- Proposed Right of Way Line with Concrete or Granite Marker — RW
- Existing Control of Access — CA
- Proposed Control of Access — CA
- Existing Easement Line — E
- Proposed Temporary Construction Easement — E
- Proposed Temporary Drainage Easement — TDE
- Proposed Permanent Drainage Easement — PDE
- Proposed Permanent Utility Easement — PUE

ROADS AND RELATED FEATURES:

- Existing Edge of Pavement
- Existing Curb
- Proposed Slope Stakes Cut — C
- Proposed Slope Stakes Fill — F
- Proposed Wheel Chair Ramp — WCR
- Curb Cut for Future Wheel Chair Ramp — CCFR
- Existing Metal Guardrail
- Proposed Guardrail
- Existing Cable Guiderail
- Proposed Cable Guiderail
- Equaility Symbol
- Pavement Removal

VEGETATION:

- Single Tree
- Single Shrub
- Hedge
- Woods Line
- Orchard
- Vineyard — Vineyard

EXISTING STRUCTURES:

MAJOR:

- Bridge, Tunnel or Box Culvert — CONC
- Bridge Wing Wall, Head Wall and End Wall — CONC WW

MINOR:

- Head and End Wall — CONC HW
- Pipe Culvert
- Footbridge
- Drainage Box: Catch Basin, DI or JB — CB
- Paved Ditch Gutter
- Storm Sewer Manhole — S
- Storm Sewer — S

UTILITIES:

POWER:

- Existing Power Pole
- Proposed Power Pole
- Existing Joint Use Pole
- Proposed Joint Use Pole
- Power Manhole — P
- Power Line Tower
- Power Transformer
- U/G Power Cable Hand Hole — HH
- H-Frame Pole
- Recorded U/G Power Line — P
- Designated U/G Power Line (S.U.E.*) — P

TELEPHONE:

- Existing Telephone Pole
- Proposed Telephone Pole
- Telephone Manhole — T
- Telephone Booth
- Telephone Pedestal — T
- Telephone Cell Tower
- U/G Telephone Cable Hand Hole — HH
- Recorded U/G Telephone Cable — T
- Designated U/G Telephone Cable (S.U.E.*) — T
- Recorded U/G Telephone Conduit — TC
- Designated U/G Telephone Conduit (S.U.E.*) — TC
- Recorded U/G Fiber Optics Cable — T FO
- Designated U/G Fiber Optics Cable (S.U.E.*) — T FO

WATER:

- Water Manhole — W
- Water Meter
- Water Valve
- Water Hydrant
- Recorded U/G Water Line — W
- Designated U/G Water Line (S.U.E.*) — W
- Above Ground Water Line — A/G Water

TV:

- TV Satellite Dish
- TV Pedestal — C
- TV Tower
- U/G TV Cable Hand Hole — HH
- Recorded U/G TV Cable — TV
- Designated U/G TV Cable (S.U.E.*) — TV
- Recorded U/G Fiber Optic Cable — TV FO
- Designated U/G Fiber Optic Cable (S.U.E.*) — TV FO

GAS:

- Gas Valve
- Gas Meter
- Recorded U/G Gas Line — G
- Designated U/G Gas Line (S.U.E.*) — G
- Above Ground Gas Line — A/G Gas

SANITARY SEWER:

- Sanitary Sewer Manhole
- Sanitary Sewer Cleanout
- U/G Sanitary Sewer Line — SS
- Above Ground Sanitary Sewer — A/G Sanitary Sewer
- Recorded SS Forced Main Line — FSS
- Designated SS Forced Main Line (S.U.E.*) — FSS

MISCELLANEOUS:

- Utility Pole
- Utility Pole with Base
- Utility Located Object
- Utility Traffic Signal Box — S
- Utility Unknown U/G Line — ?UTL
- U/G Tank; Water, Gas, Oil
- A/G Tank; Water, Gas, Oil
- U/G Test Hole (S.U.E.*)
- Abandoned According to Utility Records — AATUR
- End of Information — E.O.I.

PROJECT REFERENCE NO.	SHEET NO.
17BP.13.R.134	1-C

SURVEY CONTROL SHEET 17BP.13.R.134

6/2/99

30 15 0 30 60
SCALE

NAD 83/
NSRS 2007

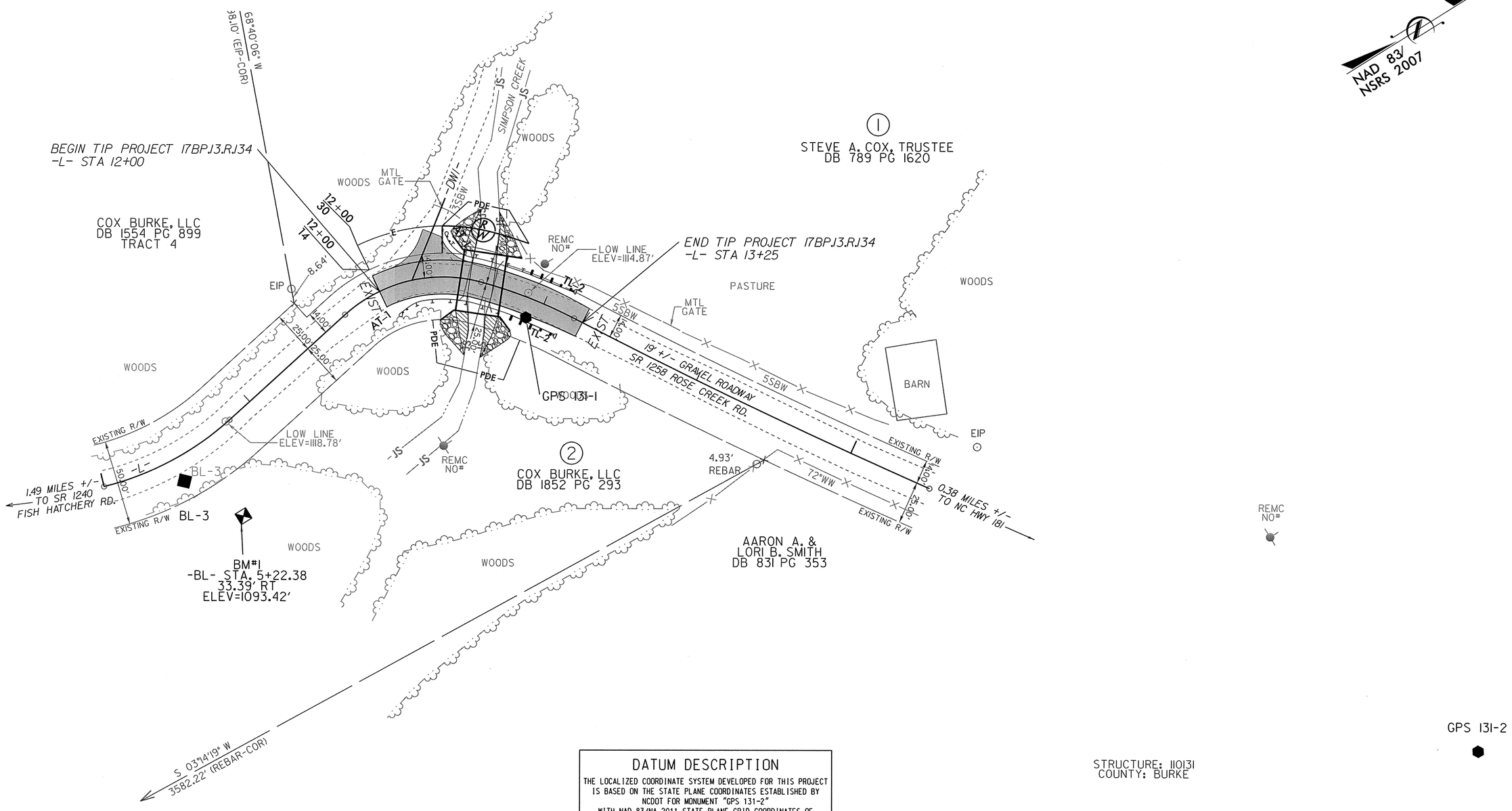

DATUM DESCRIPTION

THE LOCALIZED COORDINATE SYSTEM DEVELOPED FOR THIS PROJECT IS BASED ON THE STATE PLANE COORDINATES ESTABLISHED BY NCDOT FOR MONUMENT "GPS 131-2"
WITH NAD 83/NA 2011 STATE PLANE GRID COORDINATES OF
NORTHING: 776259.760(ft) EASTING: 1174756.785(ft)
ELEVATION: 1102.04(ft)
THE AVERAGE COMBINED GRID FACTOR USED ON THIS PROJECT (GROUND TO GRID) IS: 0.99953042
THE N.C. LAMBERT GRID BEARING AND
LOCALIZED HORIZONTAL GROUND DISTANCE FROM
"GPS BL-3" TO -L- STATION 10+00.00 IS
S 27°59'09" W - 47.1489'
ALL LINEAR DIMENSIONS ARE LOCALIZED HORIZONTAL DISTANCES
VERTICAL DATUM USED IS NAVD 88

STRUCTURE: 110131
COUNTY: BURKE

BL

POINT	DESC.	NORTH	EAST	ELEVATION	EL STATION	OFFSET
3	BL-3	775700.0945	1174222.1236	1096.34	10+43.33	14.14 RT
1	GPS 131-1	775920.4254	1174246.4906	1090.03	12+93.16	11.36 RT
2	GPS 131-2	776259.7600	1174756.7850	1102.04	OUTSIDE PROJECT LIMITS	

BM#1 ELEVATION = 1093.42'
N 775719 E 1174258
BL STATION 5+22.38 33.39' RIGHT
RR SPIKE IN BASE OF 18" POPLAR

10:32:01 AM
R:\3382\131\Roadway\Proj\110131_ts_psh.dgn
bgross

6/2/99

PROJECT REFERENCE NO.	SHEET NO.
17BPJ3.RJ34	2

ROADWAY DESIGN ENGINEER

PAVEMENT DESIGN ENGINEER



PLANS PREPARED BY:
Mattern & Craig
CONSULTING ENGINEERS • SURVEYORS
FIRM LICENSE No. C-1154
12 BROAD STREET
ASHEVILLE, NORTH CAROLINA 28801
(828) 254-2201
FAX (828) 254-4562

PAVEMENT SCHEDULE

ITEM	DESCRIPTION	ITEM	DESCRIPTION
C1	PROP. APPROX. 3" ASPHALT CONCRETE SURFACE COURSE, TYPE S9.5B, AT AN AVERAGE RATE OF 168 LBS. PER SQ. YD. IN EACH OF 2 LAYERS.	T	EARTH MATERIAL.
E1	PROP. APPROX. 5" ASPHALT CONCRETE BASE COURSE, TYPE B25.0B, AT AN AVERAGE RATE OF 570 LBS. PER SQ. YD.	J1	PROP. 8" AGGREGATE BASE COURSE

NOTE: ALL PAVEMENT EDGE SLOPES ARE TO BE 1:1

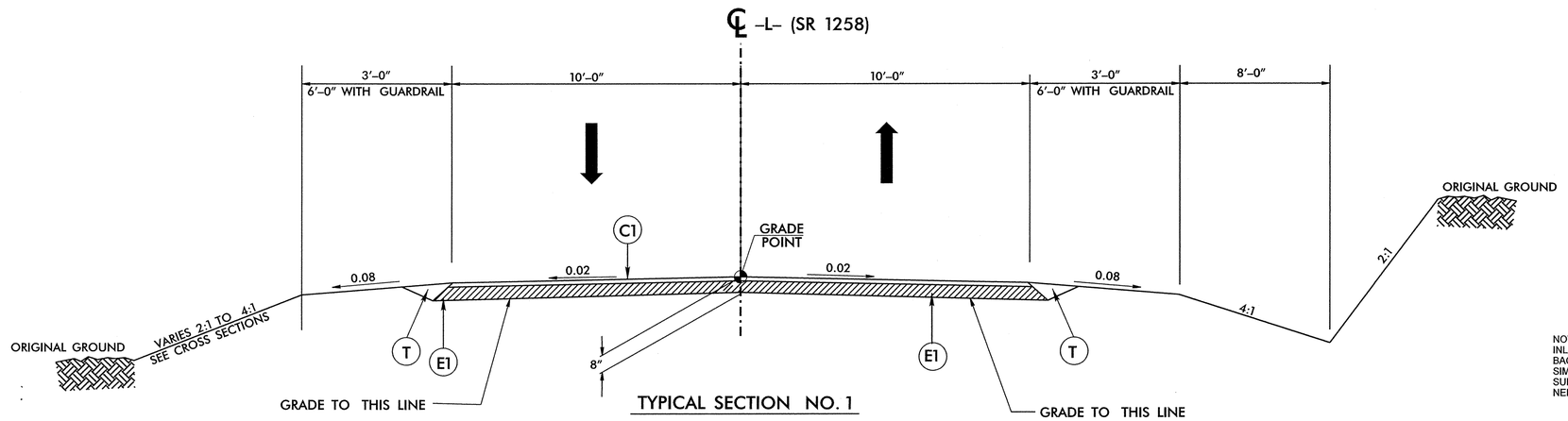

TYPICAL SECTION NO. 1

USE TYPICAL SECTION No. 1

–L– STA. 12+00.00 TO STA. 12+48.61 (Begin Culvert)
–L– STA. 12+73.93 (End Culvert) TO STA. 13+25.00

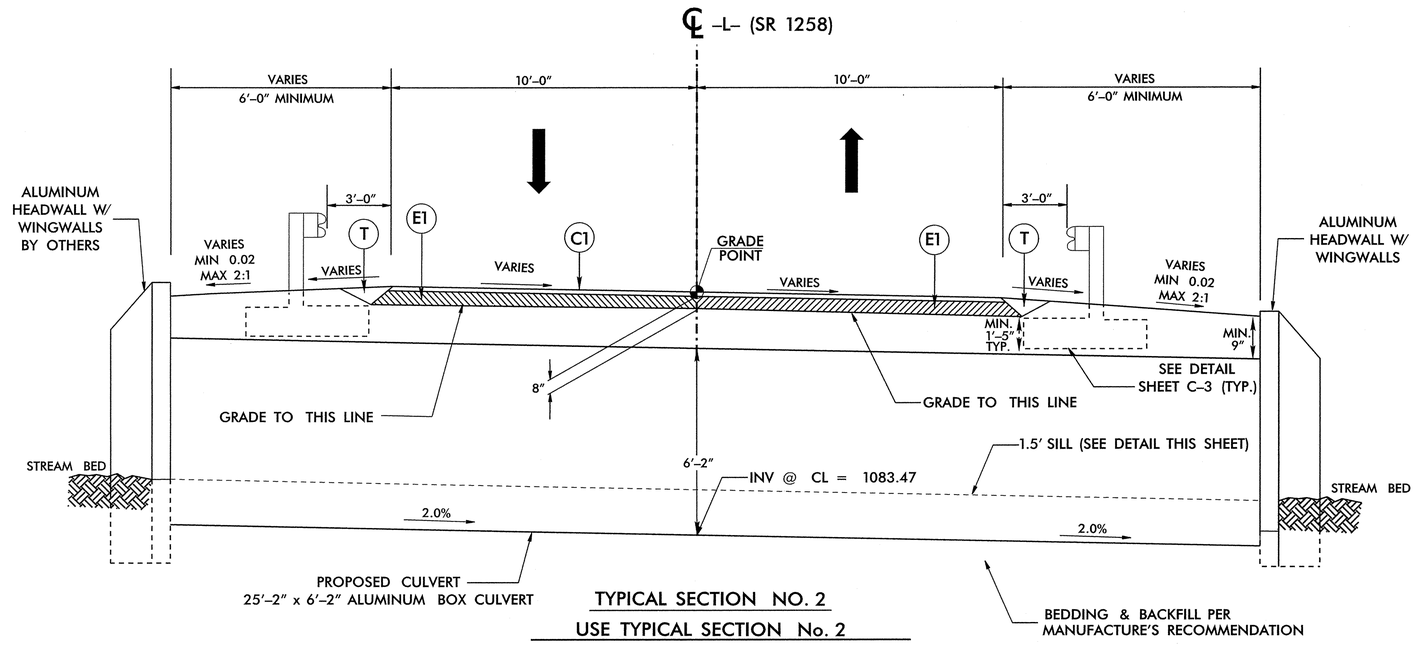

TYPICAL SECTION NO. 2

USE TYPICAL SECTION No. 2

–L– STA. 12+48.61 (Begin Culvert) TO STA. 12+73.93 (End Culvert)

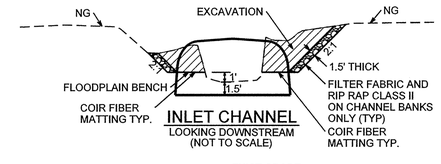

INLET CHANNEL
LOOKING DOWNSTREAM
(NOT TO SCALE)

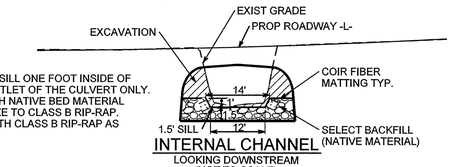

NOTE: PLACE SILL ONE FOOT INSIDE OF INLET AND OUTLET OF THE CULVERT ONLY. BACKFILL WITH NATIVE BED MATERIAL SIMILAR IN SIZE TO CLASS B RIP-RAP. SUBSIDIZE WITH CLASS B RIP-RAP AS NEEDED.

INTERNAL CHANNEL
LOOKING DOWNSTREAM
(NOT TO SCALE)

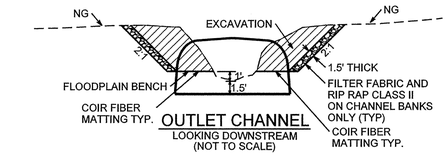

OUTLET CHANNEL
LOOKING DOWNSTREAM
(NOT TO SCALE)

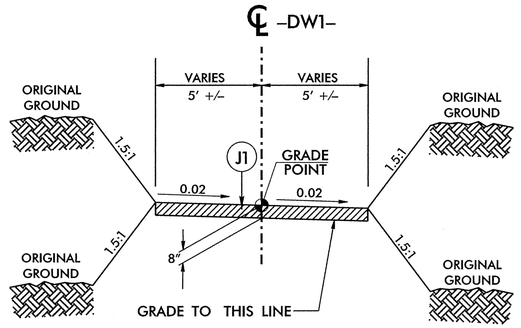

TYPICAL DRIVEWAY SECTION

–DW1– STA. 10+10.00 TO STA. 10+30.00

10:33:34 AM
R:\3382\131\Roadway\Proj\181231_rdy_typ.dgn
pprass 11/23/2018 B4195 HDT_TYP.DGN

6/21/08

COMPUTED BY: BGR DATE: 9-22-14
CHECKED BY: JBV DATE: 9-26-14

PROJECT REFERENCE NO.	SHEET NO.
17BPJ3.R.134	3

STATE OF NORTH CAROLINA
DIVISION OF HIGHWAYS

"N" = DISTANCE FROM EDGE OF LANE TO FACE OF GUARDRAIL.
TOTAL SHOULDER WIDTH = DISTANCE FROM EDGE OF TRAVEL LANE TO SHOULDER BREAK POINT.
FLARE LENGTH = DISTANCE FROM LAST SECTION OF PARALLEL GUARDRAIL TO END OF GUARDRAIL.
W = TOTAL WIDTH OF FLARE FROM BEGINNING OF TAPER TO END OF GUARDRAIL.
G = GATING IMPACT ATTENUATOR TYPE 350
NG = NON-GATING IMPACT ATTENUATOR TYPE 350

GUARDRAIL SUMMARY

SURVEY LINE	BEG. STA.	END STA.	LOCATION	LENGTH			WARRANT POINT		"N" DIST. FROM E.O.L.	TOTAL SHOUL. WIDTH	FLARE LENGTH		W		ANCHORS									IMPACT ATTENUATOR TYPE 350			SINGLE FACED GUARDRAIL	REMOVE EXISTING GUARDRAIL	REMOVE AND STOCKPILE EXISTING GUARDRAIL	REMARKS
				STRAIGHT	SHOP CURVED	DOUBLE FACED	APPROACH END	TRAILING END			APPROACH END	TRAILING END	APPROACH END	TRAILING END	XI MOD	XI	GRAU 350 TYPE TL-2	M-350	TYPE III	CAT-1	VI MOD	BIC	AT-1	EA	G	NG				
-L-	12+40.00	13+15.00	LT	75	12.5		CULVERT	CULVERT	3.00	6		31.25		0.625			1					1							
-L-	11+70.00	13+15.00	RT	130			CULVERT	CULVERT	3.00	6	31.25	31.25	0.625				2												
			TOTAL	205																									
			DEDUCT ANCHORS	TYPE TL-2 -3@25.00																									
				AT-1 -1@6.25																									
			TOTAL	123.5	12.5																								
ADDITIONAL GUARDRAIL POSTS = 10			SAY	125.0	12.5																								

LIST OF PIPES, ENDWALLS, ETC. (FOR PIPES 48" & UNDER)

| STATION | LOCATION (LT,RT, OR CL) | STRUCTURE NO. FROM | STRUCTURE NO. TO | TOP ELEVATION | INVERT ELEVATION | INVERT ELEVATION | SLOPE CRITICAL | DRAINAGE PIPE (RCP, CSP, CAAP, HDPE, or PVC) SIZE 12" | 15" | 18" | 24" | 30" | 36" | 42" | 48" | C.S. PIPE (UNLESS NOTED OTHRWISE) THICKNESS OR GAUGE 12" | 15" | 18" | 24" | 30" | 36" | 42" | 48" | CLASS III R.C. PIPE (UNLESS OTHERWISE NOTED) SIZE 12" | 15" | 18" | 24" | 30" | 36" | 42" | 48" | 15" SIDE DRAIN PIPE | 18" SIDE DRAIN PIPE | 24" SIDE DRAIN PIPE | ENDWALLS STD. 838.01, STD. 838.11 OR STD. 838.80 (UNLESS NOTED OTHERWISE) CU. YDS. R.C.P. | C.S.P. | QUANTITIES FOR DRAINAGE STRUCTURES * TOTAL L.F. FOR PAY QUANTITY SHALL BE COL. 'A' + (1.3 X COL. 'B') LIN. FT. PER EACH (0' THRU 5.0') | A 5.0' THRU 10.0' | B 10.0' AND ABOVE | C.B. STD. 840.01 OR STD. 840.02 | FRAME, GRATES AND HOOD STANDARD 840.03 TYPE OF GRATE E | F | G | D.I. STD. 840.14 OR STD. 840.15 | D.I. FRAME & GRATE STD. 840.16 | G.D.I. TYPE "A" STD. 840.17 OR 840.26 | G.D.I. TYPE "B" STD. 840.18 OR 840.27 | G.D.I. TYPE "D" STD. 840.19 OR 840.28 | G.D.I. FRAME WITH GRATE STD. 840.22 | G.D.I. FRAME WITH TWO GRATES STD. 840.22 | G.D.I. (N.S.) FRAME WITH GRATE STD. 840.24 | G.D.I. (N.S.) FRAME WITH TWO GRATES STD. 840.24 | J.B. STD. 840.31 OR 840.32 | CORR. STEEL ELBOWS NO. & SIZE | CONC. COLLARS CL. "B" C.Y. STD. 840.72 | CONC. & BRICK PIPE PLUG, C.Y. STD. 840.71 | PIPE REMOVAL LIN.FT. | REMARKS |
|---|---|---|---|---|---|---|---|---|---|---|---|---|---|---|---|---|---|---

PROJECT REFERENCE	SHEET NO.
17BP.13.R.134	4

ROADWAY DESIGN ENGINEER

NORTH CAROLINA PROFESSIONAL SEAL 032399 ENGINEER JAMES B. VOSO

HYDRAULICS ENGINEER

NORTH CAROLINA PROFESSIONAL SEAL 036336 ENGINEER MICHAEL S. HONEYCUTT

Prepared in the Office of:

Mattern & Craig
SINCE 1978
CONSULTING ENGINEERS • SURVEYORS
FIRM LICENSE No. C-1154
12 BROAD STREET
ASHEVILLE, NORTH CAROLINA 28801
(828) 254-2201
FAX (828) 254-4562

VERTICAL SCALE 5' 0 5' 10'

HORIZONTAL SCALE 25' 0 25' 50'

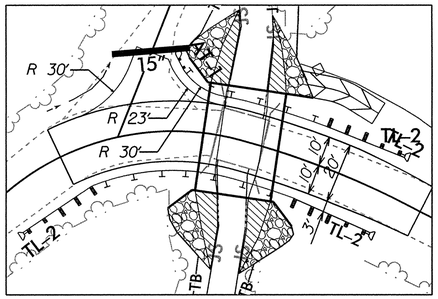

SKETCH SHOWING THE RELATIONSHIP OF THE PAVEMENT TO THE CULVERT

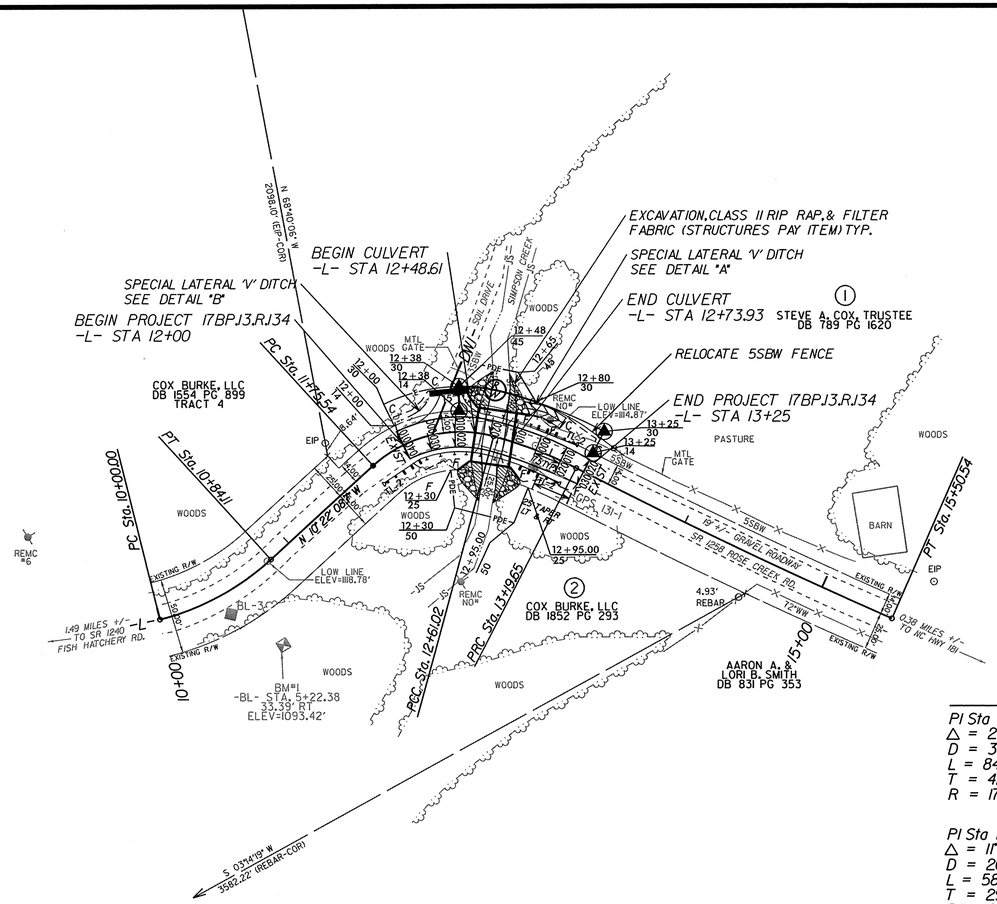

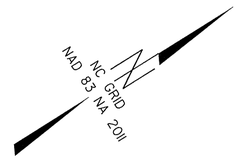

DETAIL A
SPECIAL LATERAL 'V' DITCH
(Not to Scale)

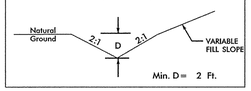

FROM -L- STA. 12+70 LT TO STA. 13+00 LT

DETAIL B
SPECIAL LATERAL 'V' DITCH
(Not to Scale)



FROM -L- STA. 12+00 LT TO STA. 12+25 LT

BRIDGE HYDRAULIC DATA

DESIGN DISCHARGE	=	240	CFS
DESIGN FREQUENCY	=	2	YRS
DESIGN HW ELEVATION	=	1089.2	FT
BASE DISCHARGE	=	1200	CFS
BASE FREQUENCY	=	100	YRS
BASE HW ELEVATION	=	1092.42	FT
OVERTOPPING DISCHARGE	=	440	CFS
OVERTOPPING FREQUENCY	=	5	YRS
OVERTOPPING ELEVATION	=	1091.0	FT
DATE OF SURVEY	=	9-14-11	
W.S.ELEVATION AT DATE OF SURVEY	=	1086.7	FT

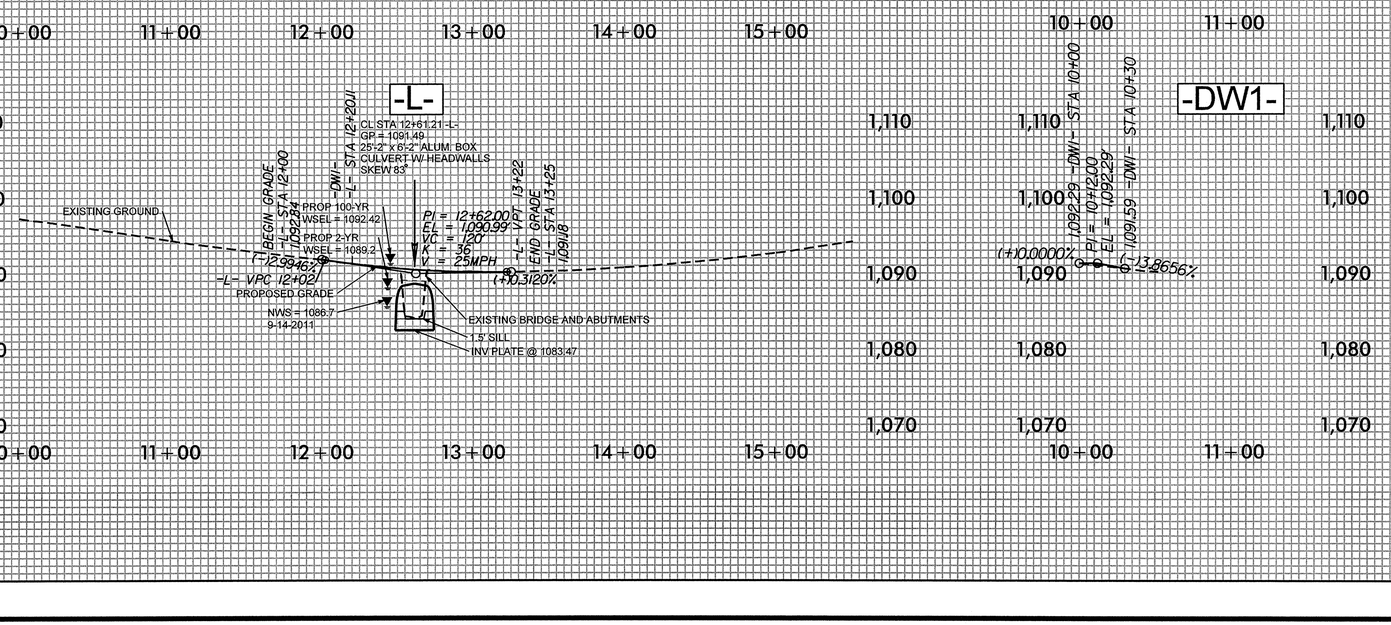

11/10/2015
01:43 PM
R:\3382\131\Roadway\Proj\110131_rdy_psh.dgn
bolcas

STATE OF NORTH CAROLINA
DIVISION OF HIGHWAYS

TRANSPORTATION MANAGEMENT PLAN

BURKE COUNTY

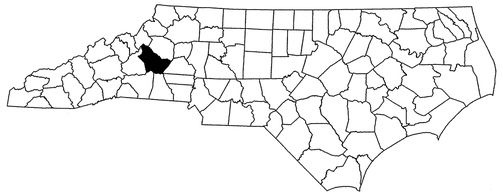

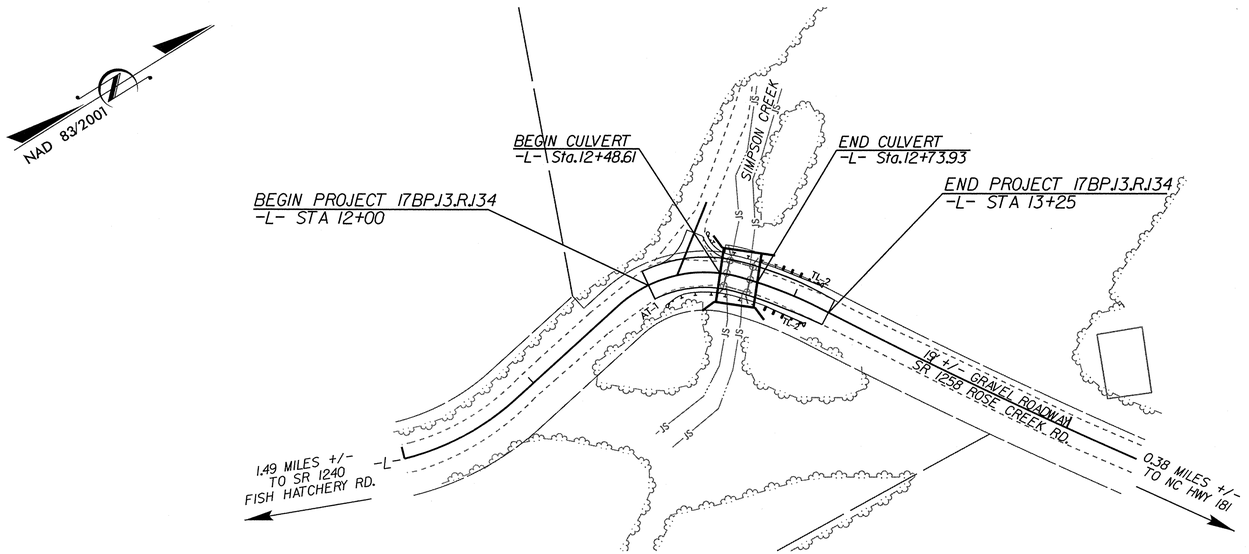

INDEX OF SHEETS

SHEET NO.	TITLE
TMP-1	TITLE SHEET, AND INDEX OF SHEETS
TMP-1A	LIST OF APPLICABLE ROADWAY STANDARD DRAWINGS, AND LEGEND
TMP-1B	TRANSPORTATION OPERATIONS PLAN: (MANAGEMENT STRATEGIES, GENERAL NOTES AND LOCAL NOTES)
TMP-2	TEMPORARY TRAFFIC CONTROL DETOUR
PMP-1	PAVEMENT MARKING PLAN

SHEET NO.
TMP-1

17BP.13.R.134

TIP PROJECT:



WORK ZONE SAFETY & MOBILITY
"from the MOUNTAINS to the COAST"

N.C.D.O.T. WORK ZONE TRAFFIC CONTROL
1561 MAIL SERVICE CENTER (MSC) RALEIGH, NC 27699-1561
750 N. GREENFIELD PARKWAY, GARNER, NC 27529 (DELIVERY)
PHONE: (919) 773-2800 FAX: (919) 771-2745

J. S. BOURNE, P.E. — *STATE TRAFFIC MANAGEMENT ENGINEER*
JAMES VOSO, P.E. — *TRAFFIC CONTROL PROJECT ENGINEER*
JAMES VOSO, P.E. — *TRAFFIC CONTROL PROJECT DESIGN ENGINEER*
BRIAN ROSS — *TRAFFIC CONTROL DESIGN ENGINEER*

DIVISION OF HIGHWAYS * STATE OF NORTH CAROLINA * DEPARTMENT OF TRANSPORTATION * WORK ZONE TRAFFIC CONTROL *

Mattern & Craig
SINCE 1976
CONSULTING ENGINEERS • SURVEYORS
FIRM LICENSE No. C-1154
12 BROAD STREET
ASHEVILLE, NORTH CAROLINA 28801
(828) 254-2201
FAX (828) 254-4562

APPROVED: _____
DATE: 12/2/15

SEAL

NORTH CAROLINA PROFESSIONAL SEAL 022599 ENGINEER JAMES B. VOSO

9:50:17 AM
R:\3382\N3\Traffic\TrafficControl\Roadway\110131_tc_tsh.dgn
bgross

PROJ. REFERENCE NO.	SHEET NO.
17BP.13.R.134	TMP-1A

ROADWAY STANDARD DRAWINGS

THE FOLLOWING ROADWAY STANDARDS AS SHOWN IN "ROADWAY STANDARD DRAWINGS" - PROJECT SERVICES UNIT - N.C. DEPARTMENT OF TRANSPORTATION - RALEIGH, N.C., DATED JANAUARY 2012 ARE APPLICABLE TO THIS PROJECT AND BY REFERENCE HEREBY ARE CONSIDERED A PART OF THESE PLANS:

STD. NO.	TITLE
1101.03	TEMPORARY ROAD CLOSURES
1110.01	STATIONARY WORK ZONE SIGNS
1145.01	BARRICADES
1205.01	PAVEMENT MARKINGS - LINE TYPES AND OFFSETS
1205.02	PAVEMENT MARKINGS - TWO LANE AND MULTILANE ROADWAYS
1205.12	PAVEMENT MARKINGS - BRIDGES
1261.01	GUARDRAIL AND BARRIER DELINEATORS - INSTALLATION SPACING
1261.02	GUARDRAIL AND BARRIER DELINEATORS - TYPES AND MOUNTING
1262.01	GUARDRAIL END DELINEATION

LEGEND

GENERAL

DIRECTION OF TRAFFIC FLOW

DIRECTION OF PEDESTRIAN TRAFFIC FLOW

EXIST. PVMT.

NORTH ARROW

PROPOSED PVMT.

WORK AREA

REMOVAL

USER DEFINED (IF NEEDED)

USER DEFINED (IF NEEDED)

TRAFFIC CONTROL DEVICES

BARRICADE (TYPE III)

CONE

DRUM SKINNY DRUM TUBULAR MARKER

TEMPORARY CRASH CUSHION

FLASHING ARROW BOARD

FLAGGER

LAW ENFORCEMENT

TRUCK MOUNTED ATTENUATOR (TMA)

CHANGEABLE MESSAGE SIGN

TEMPORARY SIGNING

PORTABLE SIGN

STATIONARY SIGN

STATIONARY OR PORTABLE SIGN

SIGNALS

EXISTING PROPOSED TEMPORARY

PAVEMENT MARKINGS

EXISTING LINES

TEMPORARY LINES

PAVEMENT MARKERS

CRYSTAL/CRYSTAL

CRYSTAL/RED

YELLOW/YELLOW

PAVEMENT MARKING SYMBOLS

PAVEMENT MARKING SYMBOLS

Mattern & Craig
CONSULTING ENGINEERS • SURVEYORS
FIRM LICENSE No. C-1154
12 BROAD STREET
ASHEVILLE, NORTH CAROLINA 28801
(828) 254-2201
FAX (828) 254-4562

APPROVED: _____ DATE: 12/2/15

NORTH CAROLINA PROFESSIONAL SEAL 022599 ENGINEER JAMES B. VOSS

DIVISION OF HIGHWAYS * STATE OF NORTH CAROLINA * DEPARTMENT OF TRANSPORTATION * WORK ZONE TRAFFIC CONTROL

ROADWAY STANDARD DRAWINGS & LEGEND

9:50:53 AM
R:\3382\13\Traffic\TrafficControl\Roadway\1101l_tc_tsh.dgn
bgross

PROJ. REFERENCE NO.	SHEET NO.
17BP.13.R.134	TMP-1B

GENERAL NOTES / LOCAL NOTES

GENERAL NOTES

CHANGES MAY BE REQUIRED WHEN PHYSICAL DIMENSIONS IN THE DETAIL DRAWINGS, STANDARD DETAILS, AND ROADWAY DETAILS ARE NOT ATTAINABLE TO MEET FIELD CONDITIONS OR RESULT IN DUPLICATE OR UNDESIRED OVERLAPPING OF DEVICES, MODIFICATION MAY INCLUDE: MOVING, SUPPLEMENTING, COVERING, OR REMOVAL OF DEVICES AS DIRECTED BY THE ENGINEER

THE FOLLOWING GENERAL NOTES APPLY AT ALL TIMES FOR THE DURATION OF THE CONSTRUCTION PROJECT, EXCEPT WHEN OTHERWISE NOTED IN THE PLAN, OR DIRECTED BY THE ENGINEER.

TRAFFIC PATTERN ALTERATIONS

A. NOTIFY THE ENGINEER TWENTY ONE (21) CALENDAR DAYS PRIOR TO ANY TRAFFIC PATTERN ALTERATION.

SIGNING

B. INSTALL ADVANCE WORK ZONE WARNING SIGNS WHEN WORK IS WITHIN 40 FT FROM THE EDGE OF TRAVEL LANE AND NO MORE THAN THREE (3) DAYS PRIOR TO THE BEGINNING OF CONSTRUCTION.

C. CONTRACTOR TO PROVIDE SIGNING AND DEVICES REQUIRED TO CLOSE THE ROAD ACCORDING TO THE ROADWAY STANDARD DRAWINGS AND TRAFFIC CONTROL PLANS.

CONTRACTOR TO PROVIDE SIGNING REQUIRED FOR THE OFF-SITE DETOUR ROUTE AS SHOWN IN THE TRAFFIC CONTROL PLANS.

D. CONTRACTOR TO COVER OR REMOVE ALL SIGNS AND DEVICES REQUIRED TO CLOSE THE ROAD WHEN ROAD CLOSURE IS NOT IN OPERATION.

CONTRACTOR TO COVER OR REMOVE ALL SIGNS AND DEVICES REQUIRED FOR THE OFF-SITE DETOUR WHEN THE DETOUR IS NOT IN OPERATION.

E. ENSURE ALL NECESSARY SIGNING IS IN PLACE PRIOR TO ALTERING ANY TRAFFIC PATTERN.

TRAFFIC CONTROL DEVICES

F. PLACE TYPE III BARRICADES, WITH "ROAD CLOSED" SIGN R11-2 ATTACHED, OF SUFFICIENT LENGTH TO CLOSE ENTIRE ROADWAY.

PAVEMENT MARKINGS AND MARKERS

G. TIE PROPOSED PAVEMENT MARKING LINES TO EXISTING PAVEMENT MARKING LINES

LOCAL NOTES

CONTRACTOR TO MAINTAIN DRIVEWAY ACCESS AT ALL TIMES.

Mattern & Craig
CONSULTING ENGINEERS • SURVEYORS
FIRM LICENSE No. C-1154
12 BROAD STREET
ASHEVILLE, NORTH CAROLINA 28801
(828) 254-2201
FAX (828) 254-4562

APPROVED: _____ DATE: 12/1/15

NORTH CAROLINA PROFESSIONAL SEAL 022699 ENGINEER JAMES B. VOSO

DIVISION OF HIGHWAYS * STATE OF NORTH CAROLINA * DEPARTMENT OF TRANSPORTATION * WORK ZONE TRAFFIC CONTROL *

TRANSPORTATION OPERATIONS PLAN

9:51:18 AM
R:\3382\13\Traffic\TrafficControl\Roadway\1l013l_tc_tsh.dgn
bgross

PROJ. REFERENCE NO.	SHEET NO.
17BP.13.R.134	TMP-2

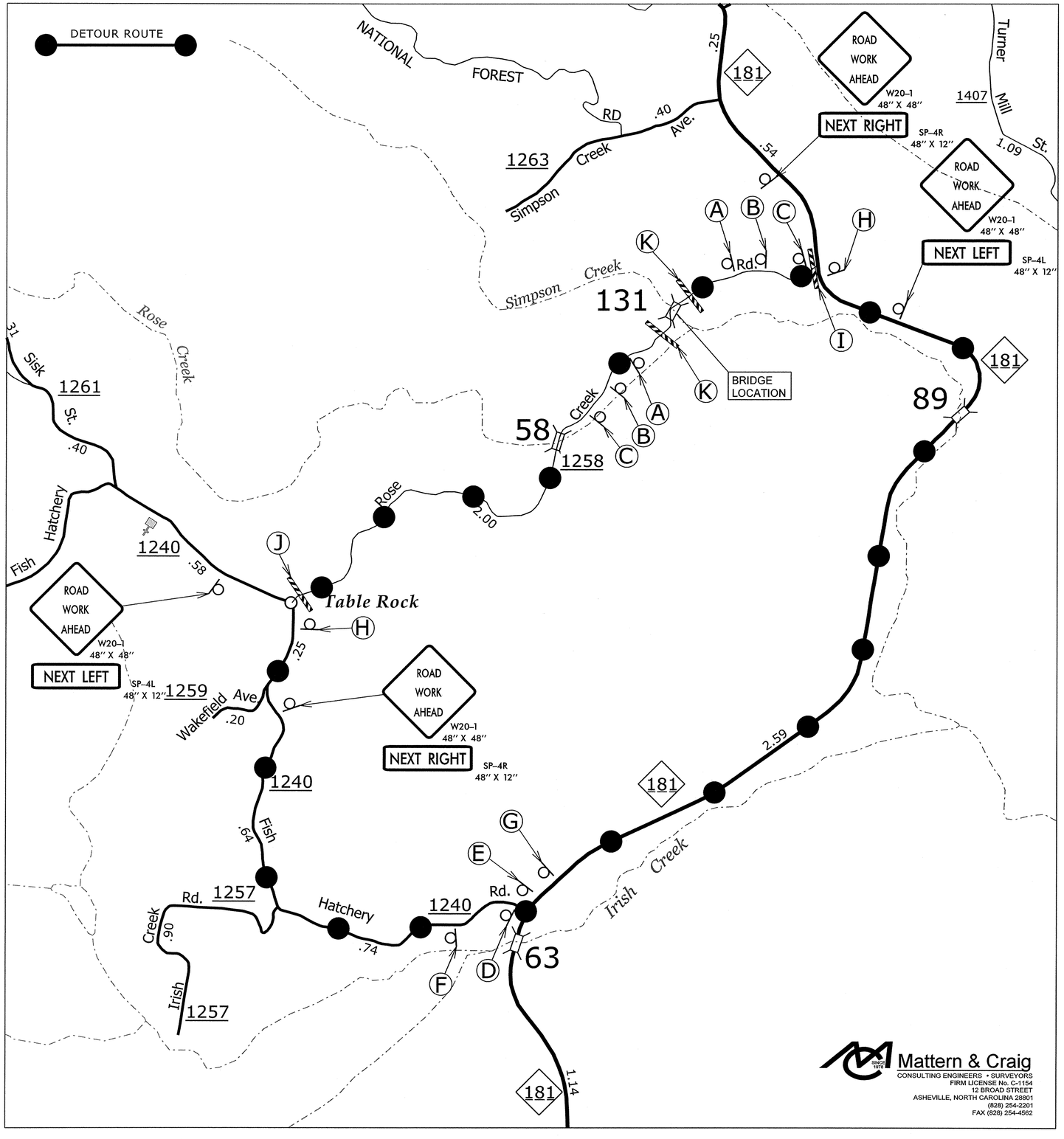

Mattern & Craig
CONSULTING ENGINEERS • SURVEYORS
FIRM LICENSE No. C-1154
12 BROAD STREET
ASHEVILLE, NORTH CAROLINA 28801
(828) 254-2201
FAX (828) 254-4562

ASSEMBLY A



ASSEMBLY B



ASSEMBLY C



ASSEMBLY D

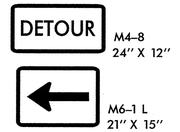

ASSEMBLY E

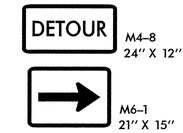

ASSEMBLY F

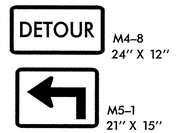

ASSEMBLY G

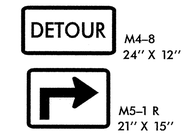

ASSEMBLY H



ASSEMBLY I

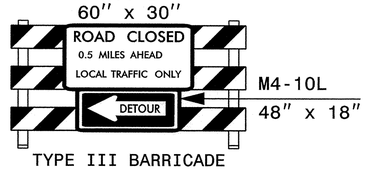

ASSEMBLY J

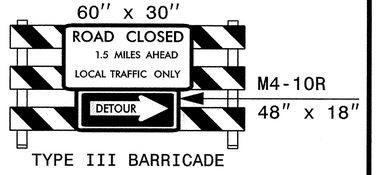

ASSEMBLY K

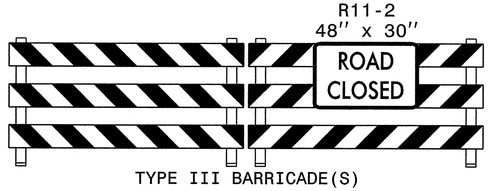

REFER TO RSD 1101.03 FOR SIGN SPACING (SHEET 1 OF 9)

APPROVED: _____ DATE: 12/2/13

NORTH CAROLINA PROFESSIONAL SEAL 022599 ENGINEER JAMES B. VOSO

DIVISION OF HIGHWAYS * STATE OF NORTH CAROLINA * DEPARTMENT OF TRANSPORTATION * WORK ZONE TRAFFIC CONTROL

TEMPORARY DETOUR DETAIL

PROJ. REFERENCE NO.	SHEET NO.
17BP.13.R.134	PMP-1

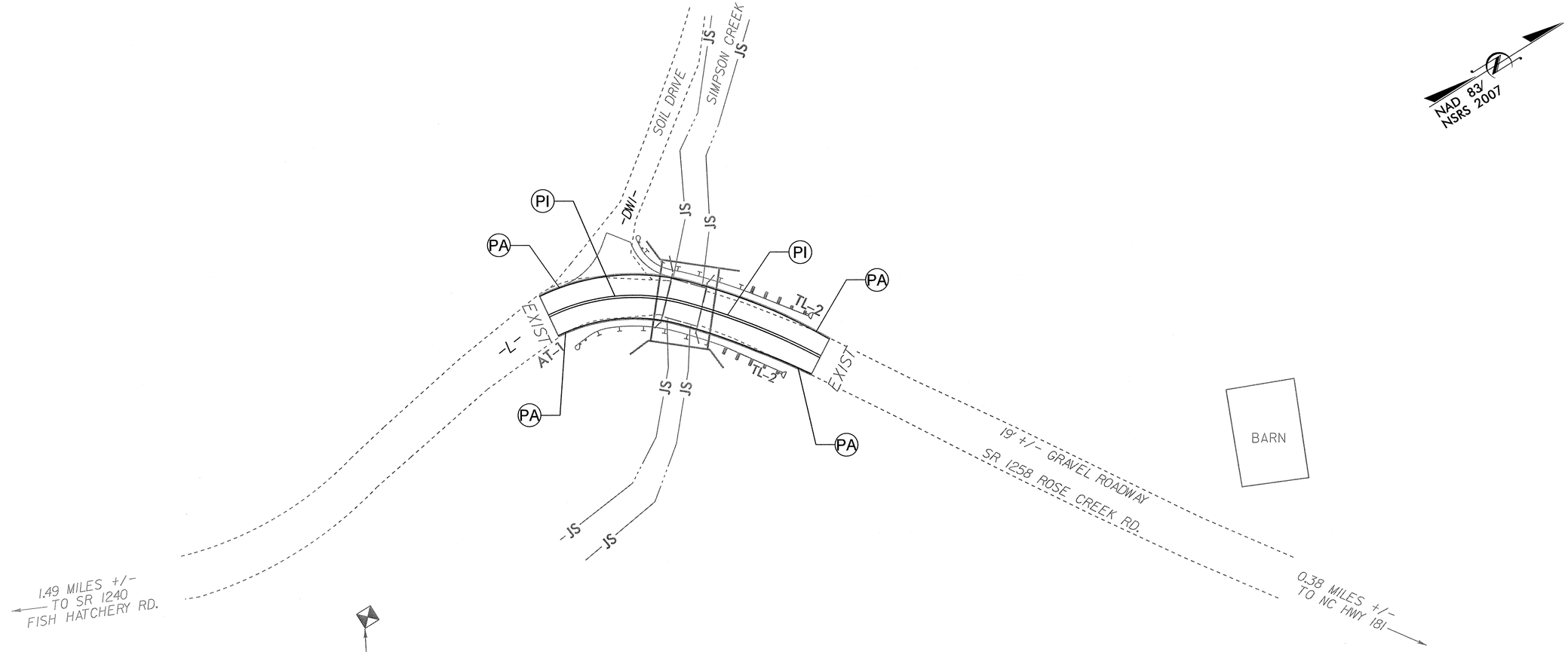

LEGEND

PA WHITE EDGELINE
PI YELLOW DOUBLE CENTER

PROJECT MARKING SCHEDULE
BRIDGE 110131

SYMBOL	DESCRIPTION	PAY ITEM	PAY ITEM QUANTITY
PA	WHITE EDGELINE	PAINT (4") DOUBLE COAT	500 LF
PI	DOUBLE YELLOW CENTER	PAINT (4") DOUBLE COAT	250 LF

GRAPHIC SCALE
25' 0' 25' 50'
100'

PLANS

Mattern & Craig
CONSULTING ENGINEERS • SURVEYORS
FIRM LICENSE No. C-1154
12 BROAD STREET
ASHEVILLE, NORTH CAROLINA 28801
(828) 254-2201
FAX (828) 254-4562

APPROVED: _____ DATE: 12/2/15

NORTH CAROLINA PROFESSIONAL SEAL 022599 ENGINEER JAMES B. VOSO

DIVISION OF HIGHWAYS * STATE OF NORTH CAROLINA * DEPARTMENT OF TRANSPORTATION * WORK ZONE TRAFFIC CONTROL

PAVEMENT MARKING PLAN

9:54:49 AM
R:\3382\13\Traffic\TrafficControl\Roadway\110131tc_pmp.dgn
bgross

PROJECT NO: 17BP.13.R.134

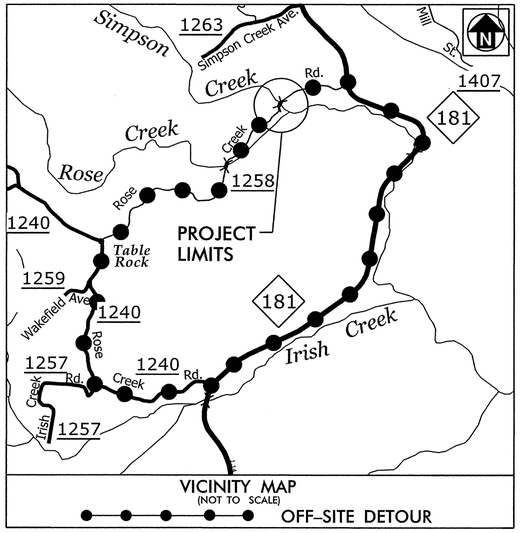

STATE OF NORTH CAROLINA
DIVISION OF HIGHWAYS

PLAN FOR PROPOSED
HIGHWAY EROSION CONTROL

BURKE COUNTY

LOCATION: BRIDGE NO. 131 OVER SIMPSON CREEK
ON SR 1258 ROSE CREEK ROAD
TYPE OF WORK: GRADING, DRAINAGE, PAVING, & STRUCTURE

NAD 83/2001

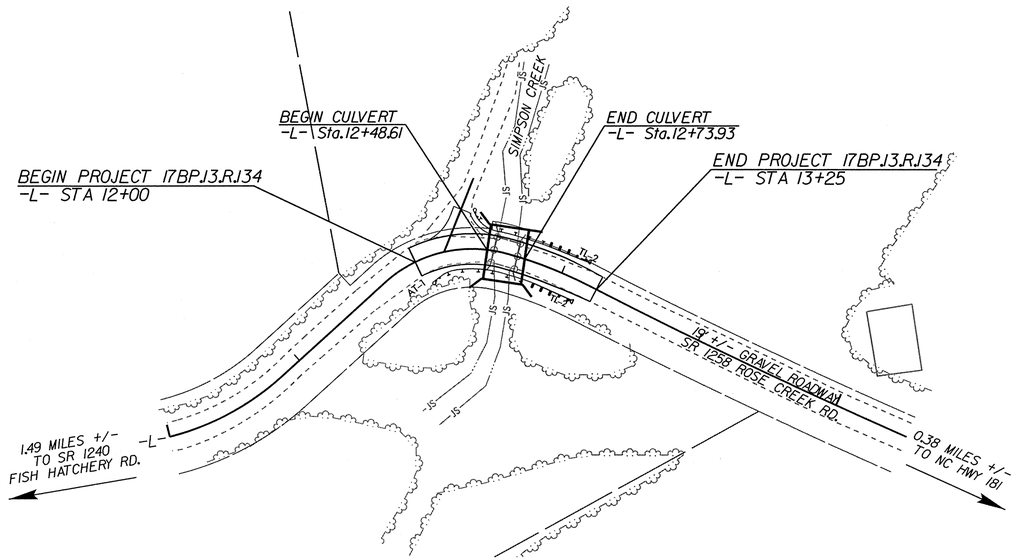

STATE	STATE PROJECT REFERENCE NO.	SHEET NO.	TOTAL SHEETS
N.C.	17BP.13.R.134	EC-1	

STATE PROJ. NO.	F. A. PROJ. NO.	DESCRIPTION

EROSION AND SEDIMENT CONTROL MEASURES

Std. #	Description	Symbol
1630.03	Temporary Silt Ditch	TSD
1630.05	Temporary Diversion	TD
1605.01	Temporary Silt Fence	
1606.01	Special Sediment Control Fence	
1622.01	Temporary Berms and Slope Drains	
1630.02	Silt Basin Type B	
1633.01	Temporary Rock Silt Check Type-A	
	Temporary Rock Silt Check Type-A with Matting and Polyacrylamide (PAM)	
1633.02	Temporary Rock Silt Check Type-B	
	Wattle / Coir Fiber Wattle	SW CFW
	Wattle / Coir Fiber Wattle with Polyacrylamide (PAM)	
1634.01	Temporary Rock Sediment Dam Type-A	
1634.02	Temporary Rock Sediment Dam Type-B	
1635.01	Rock Pipe Inlet Sediment Trap Type-A	
1635.02	Rock Pipe Inlet Sediment Trap Type-B	
1630.04	Stilling Basin	
1630.06	Special Stilling Basin	
	Rock Inlet Sediment Trap:	
1632.01	Type A	A
1632.02	Type B	B
1632.03	Type C	C
	Skimmer Basin	
	Tiered Skimmer Basin	
	Infiltration Basin	

THIS PROJECT CONTAINS EROSION CONTROL PLANS FOR CLEARING AND GRUBBING PHASE OF CONSTRUCTION.

THIS PROJECT HAS BEEN DESIGNED TO SENSITIVE WATERSHED STANDARDS.

ENVIRONMENTALLY SENSITIVE AREA(S) EXIST ON THIS PROJECT

Refer To E. C. Special Provisions for Special Considerations.

DANA BOLDEN
LEVEL IIIA NAME

3171
LEVEL IIIA CERTIFICATION NO.

CLEARING ON THIS PROJECT SHALL BE PERFORMED TO THE LIMITS ESTABLISHED BY METHOD II

GRAPHIC SCALE

15 0 30

PLANS

ROADSIDE ENVIRONMENTAL UNIT
DIVISION OF HIGHWAYS
STATE OF NORTH CAROLINA

THESE EROSION AND SEDIMENT CONTROL PLANS COMPLY WITH THE REGULATIONS SET FORTH BY THE NCG-010000 GENERAL CONSTRUCTION PERMIT EFFECTIVE AUGUST 3, 2011 ISSUED BY THE NORTH CAROLINA DEPARTMENT OF ENVIRONMENT AND NATURAL RESOURCES DIVISION OF WATER QUALITY.

Prepared In the Office of:

Mattern & Craig
SINCE 1976
CONSULTING ENGINEERS • SURVEYORS
FIRM LICENSE No. C-1154
12 BROAD STREET
ASHEVILLE, NORTH CAROLINA 28801
(828) 254-2201
FAX (828) 254-4562

Reviewed In the Office of:

ROADSIDE ENVIRONMENTAL UNIT
1 South Wilmington St.
Raleigh, NC 27611

2012 STANDARD SPECIFICATIONS

Roadway Standard Drawings

The following roadway english standards as appear in "Roadway Standard Drawings"– Roadway Design Unit – N. C. Department of Transportation – Raleigh, N. C., dated January 2012 and the latest revison thereto are applicable to this project and by reference hereby are considered a part of these plans.

1604.01	Railroad Erosion Control Detail	1632.01	Rock Inlet Sediment Trap Type A
1605.01	Temporary Silt Fence	1632.02	Rock Inlet Sediment Trap Type B
1606.01	Special Sediment Control Fence	1632.03	Rock Inlet Sediment Trap Type C
1607.01	Gravel Construction Entrance	1633.01	Temporary Rock Silt Check Type A
1622.01	Temporary Berms and Slope Drains	1633.02	Temporary Rock Silt Check Type B
1630.01	Riser Basin	1634.01	Temporary Rock Sediment Dam Type A
1630.02	Silt Basin Type B	1634.02	Temporary Rock Sediment Dam Type B
1630.03	Temporary Silt Ditch	1635.01	Rock Pipe Inlet Sediment Trap Type A
1630.04	Stilling Basin	1635.02	Rock Pipe Inlet Sediment Trap Type B
1630.05	Temporary Diversion	1640.01	Coir Fiber Baffle
1630.06	Special Stilling Basin	1645.01	Temporary Stream Crossing
1631.01	Matting Installation		

R:\3382\131\Environmental\Design\t10131_ec_tsh.dgn
10/07/12 AM
Microstation

PROJECT REFERENCE NO.	SHEET NO.
17BP.13.RJ34	EC-2
R/W SHEET NO.	
ROADWAY DESIGN ENGINEER	HYDRAULICS ENGINEER

TEMPORARY ROCK SILT CHECK TYPE 'A' WITH EXCELSIOR MATTING AND POLYACRYLAMIDE (PAM)

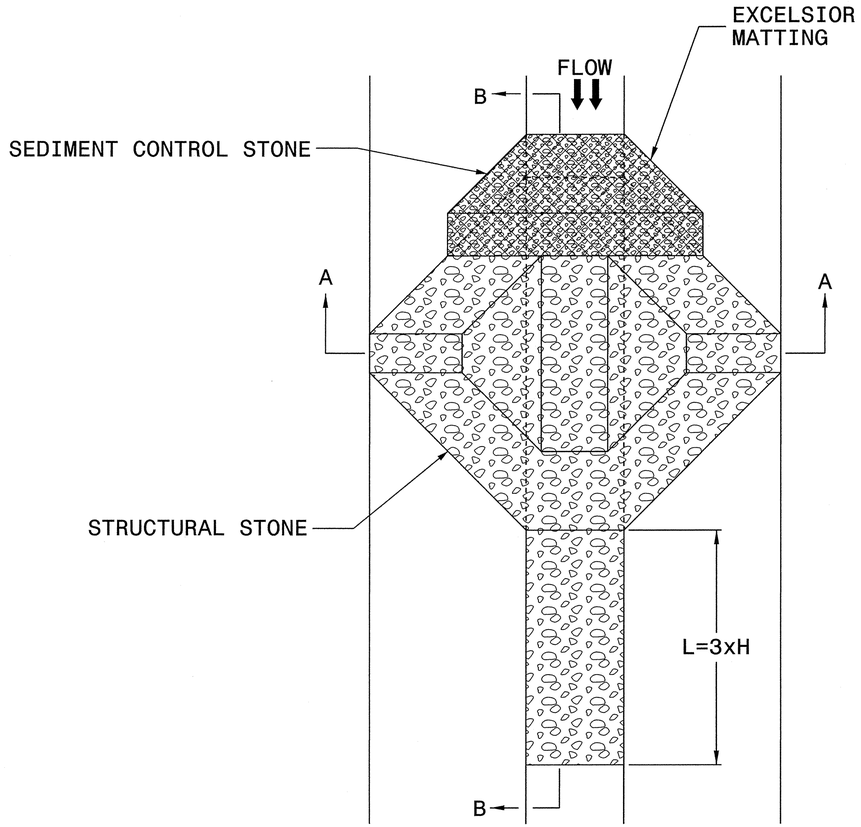

PLAN

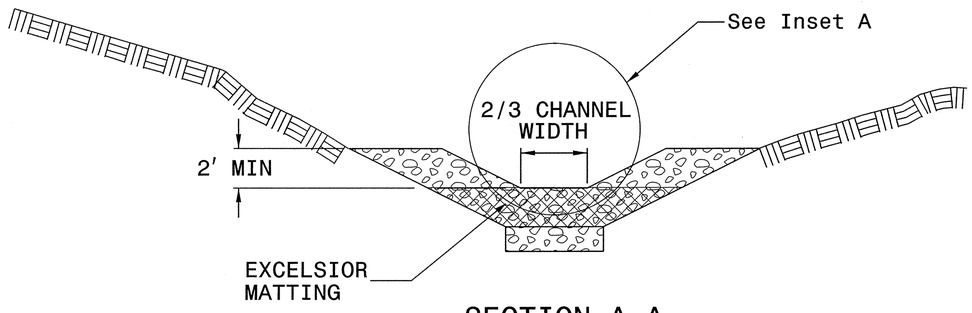

SECTION A-A

NOTES

USE EXCELSIOR FOR MATTING MATERIAL AND ANCHOR MATTING SECTION AT TOP AND BOTTOM WITH CLASS B STONE.

PRIOR TO POLYACRYLAMIDE (PAM) APPLICATION, OBTAIN A SOIL SAMPLE FROM PROJECT LOCATION, AND FROM OFFSITE MATERIAL, AND ANALYZE FOR APPROPRIATE PAM FLOCCULANT TO BE APPLIED TO EACH ROCK SILT CHECK.

INITIALLY APPLY 3.5 OUNCES OF POLYACRYLAMIDE (PAM) TO TOP OF MATTING SECTION AND AFTER EVERY RAINFALL EVENT THAT EQUALS OR EXCEEDS 0.50 INCHES.

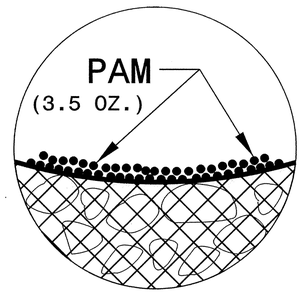

INSET A

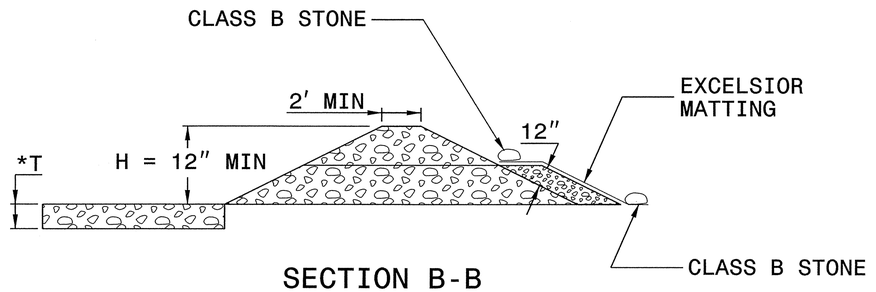

SECTION B-B

*T = 12" MIN., 18" MAX.

NOT TO SCALE

PROJECT REFERENCE NO.	SHEET NO.
17BP.13.RI34	EC-3

DIVISION OF HIGHWAYS
STATE OF NORTH CAROLINA

SOIL STABILIZATION TIMEFRAMES

SITE DESCRIPTION	STABILIZATION TIME	TIMEFRAME EXCEPTIONS
PERIMETER DIKES, SWALES, DITCHES AND SLOPES	7 DAYS	NONE
HIGH QUALITY WATER (HQW) ZONES	7 DAYS	NONE
SLOPES STEEPER THAN 3:1	7 DAYS	IF SLOPES ARE 10' OR LESS IN LENGTH AND ARE NOT STEEPER THAN 2:1, 14 DAYS ARE ALLOWED.
SLOPES 3:1 OR FLATTER	14 DAYS	7 DAYS FOR SLOPES GREATER THAN 50' IN LENGTH.
ALL OTHER AREAS WITH SLOPES FLATTER THAN 4:1	14 DAYS	NONE, EXCEPT FOR PERIMETERS AND HQW ZONES.

PROJECT REFERENCE NO.	SHEET NO.
17BPJ3.RJ34	EC-3A
ROADWAY DESIGN ENGINEER	HYDRAULICS ENGINEER

DIVISION OF HIGHWAYS
STATE OF NORTH CAROLINA

SOIL STABILIZATION SUMMARY SHEET

MATTING FOR EROSION CONTROL

CONST SHEET NO.	LINE	FROM STATION	TO STATION	SIDE	ESTIMATE (SY)
EC-4	-L-	12+70	13+00	LT	45
EC-4	-L-	12+00	12+25	LT	30
			SUBTOTAL		75
MISCELLANEOUS MATTING TO BE INSTALLED AS DIRECTED BY THE ENGINEER					213
				TOTAL	288
				SAY	300

PERMANENT SOIL REINFORCEMENT MAT

CONST SHEET NO.	LINE	FROM STATION	TO STATION	SIDE	ESTIMATE (SY)
			SUBTOTAL		0
		ADDITIONAL PSRM TO BE INSTALLED			0
				TOTAL	0
				SAY	0

PROJECT REFERENCE NO.	SHEET NO.
I7BP.I3.R.I34	EC-4
R/W SHEET NO.	
ROADWAY DESIGN ENGINEER	HYDRAULICS ENGINEER

DETAIL A
SPECIAL LATERAL 'V' DITCH
(Not to Scale)

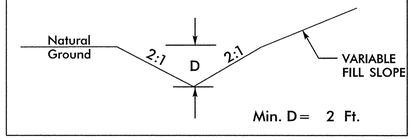

FROM –L– STA. 12+70 LT TO STA. 13+00 LT

DETAIL B
SPECIAL LATERAL 'V' DITCH
(Not to Scale)

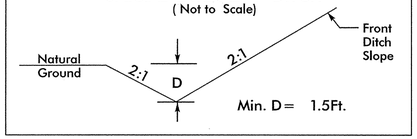

FROM –L– STA. 12+00 LT TO STA. 12+25 LT

NOTES: ANY DEVIATION FROM OPTIONS GIVEN WILL REQUIRE PRIOR APPROVAL BY ENGINEER.

ADDITIONAL EROSION CONTROL DEVICES MAY NEED TO BE INSTALLED AS DIRECTED BY THE ENGINEER.

IF ANY PUMPED DEWATERING IS REQUIRED, A SPECIAL STILLING BASIN SHALL BE PROVIDED AS NEEDED

CLEARING AND GRUBBING EROSION CONTROL FOR CONSTRUCTION SHEET 4

NOTE:
PLACE TEMPORARY ROCK SILT CHECKS TYPE – A AT DRAINAGE OUTLETS.

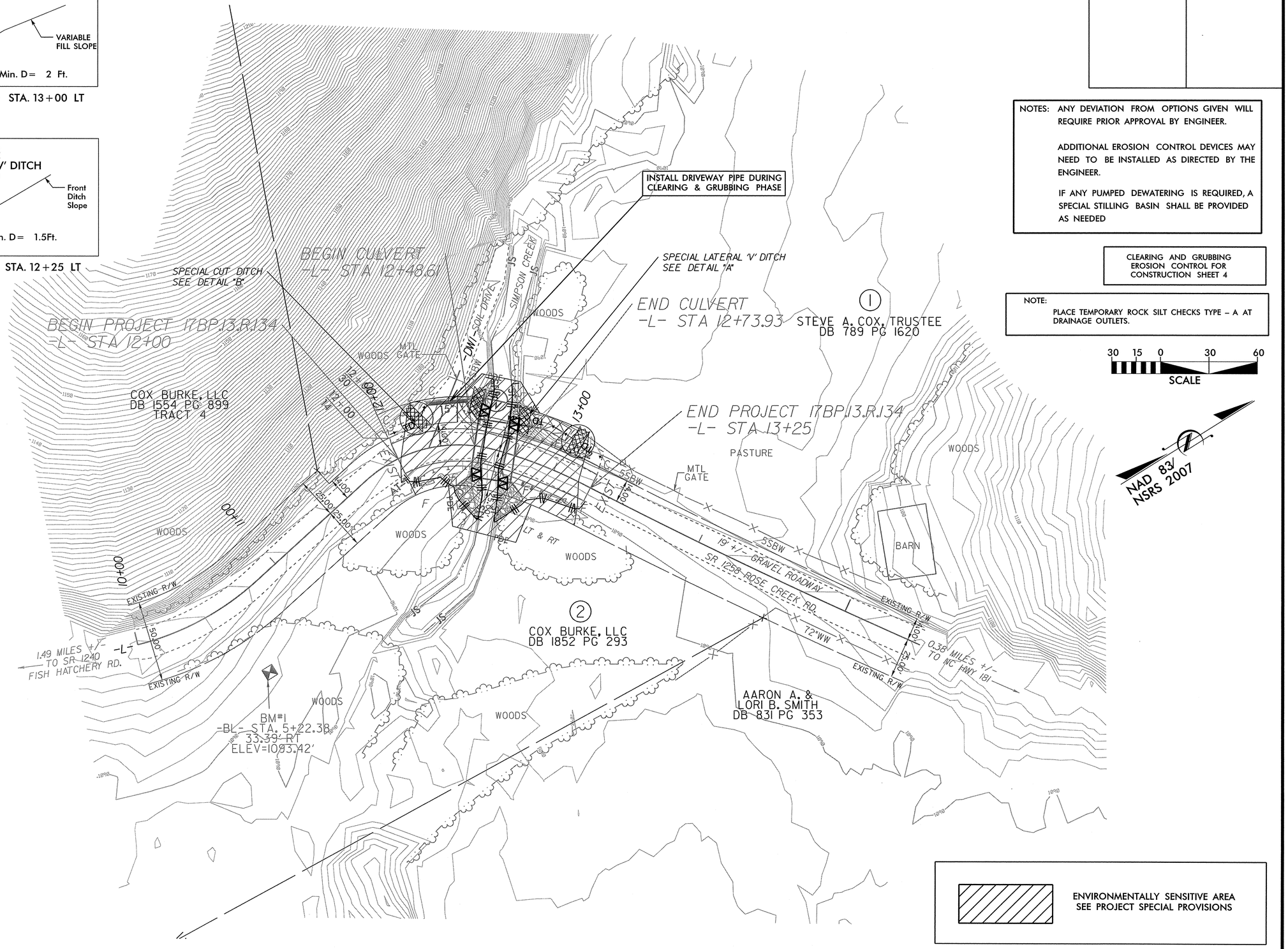
INSTALL DRIVEWAY PIPE DURING CLEARING & GRUBBING PHASE
SPECIAL LATERAL 'V' DITCH SEE DETAIL "A"
SPECIAL CUT DITCH SEE DETAIL "B"
BEGIN CULVERT -L- STA 12+48.61
END CULVERT -L- STA 12+73.93
BEGIN PROJECT I7BP.I3.R.I34 -L- STA 12+00
END PROJECT I7BP.I3.R.I34 -L- STA 13+25
SIMPSON CREEK
-DW1-SOIL DRIVE
WOODS
WOODS GATE
MTL
PASTURE
MTL GATE
BARN
WOODS
WOODS
WOODS

PROJECT REFERENCE NO.	SHEET NO.
17BPJ3.RJ34	EC-5
R/W SHEET NO.	
ROADWAY DESIGN ENGINEER	HYDRAULICS ENGINEER

DETAIL A
SPECIAL LATERAL 'V' DITCH
(Not to Scale)

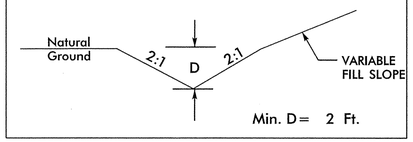

FROM –L– STA. 12+70 LT TO STA. 13+00 LT

DETAIL B
SPECIAL LATERAL 'V' DITCH
(Not to Scale)

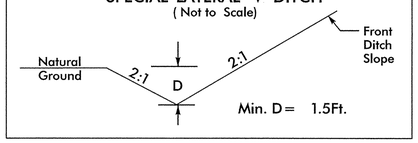

FROM –L– STA. 12+00 LT TO STA. 12+25 LT

NOTES: ANY DEVIATION FROM OPTIONS GIVEN WILL REQUIRE PRIOR APPROVAL BY ENGINEER.

ADDITIONAL EROSION CONTROL DEVICES MAY NEED TO BE INSTALLED AS DIRECTED BY THE ENGINEER.

IF ANY PUMPED DEWATERING IS REQUIRED, A SPECIAL STILLING BASIN SHALL BE PROVIDED AS NEEDED

Place Matting for Erosion Control on Slope as Work Allows.

NOTE:
PLACE TEMPORARY ROCK SILT CHECKS TYPE – A AT DRAINAGE OUTLETS.

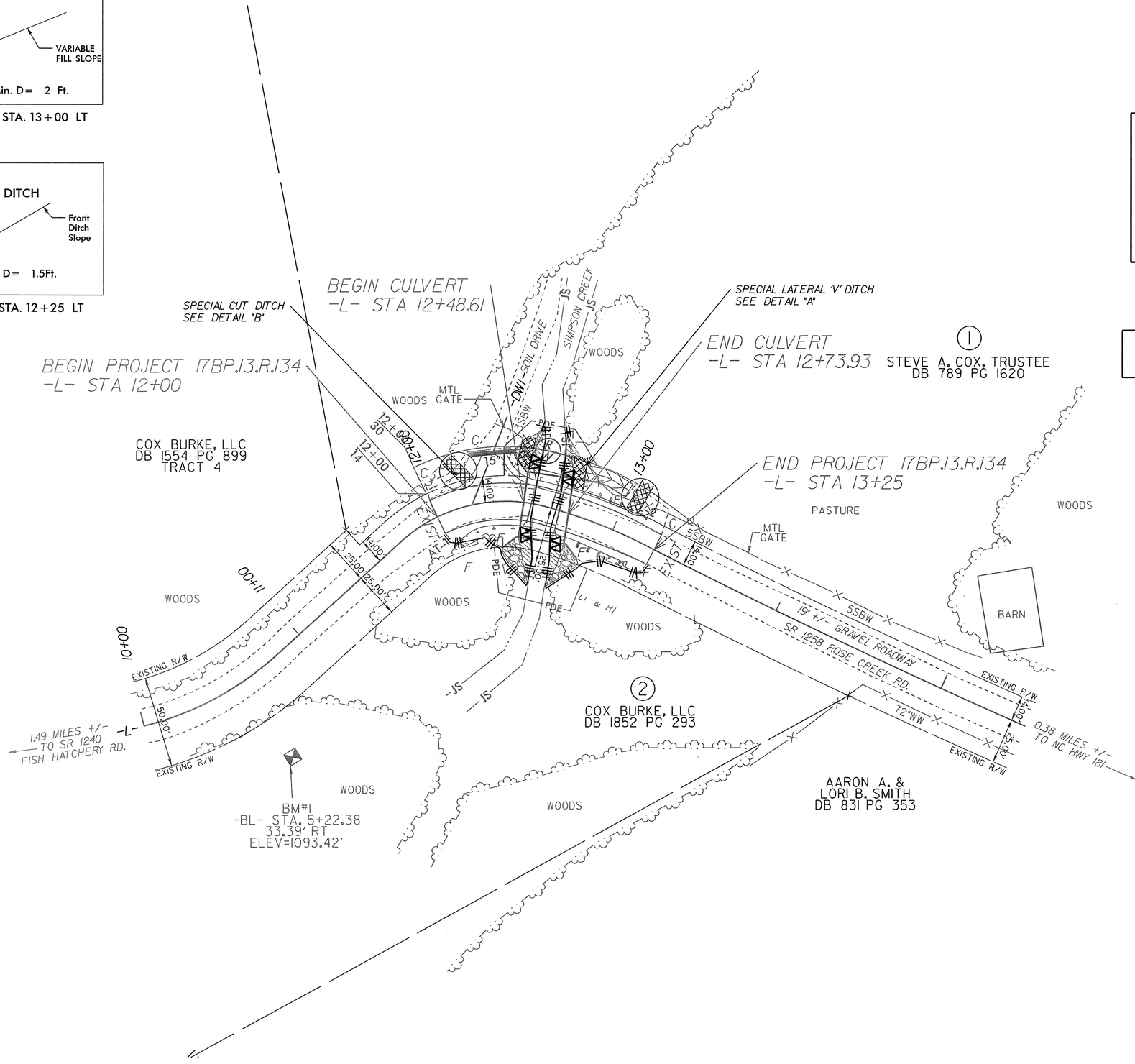

30 15 0 30 60
SCALE

NAD 83/
NSRS 2007

PROJECT REFERENCE NO.	SHEET NO.
17BP.13.R.134	EC-6
R/W SHEET NO.	
ROADWAY DESIGN ENGINEER	HYDRAULICS ENGINEER

CULVERT CONSTRUCTION SEQUENCE STA. 12+61.27 -L-

1. SET UP BYPASS PUMP AND TEMPORARY PIPING ACCORDING TO THE NCDOT "BEST MANAGEMENT PRACTICES FOR CONSTRUCTION AND MAINTENANCE ACTIVITIES" MANUAL.
2. CONSTRUCT IMPERVIOUS DIKES.
3. UTILIZE SPECIAL STILLING BASIN AS STILLING BASIN DURING PUMPING OPERATIONS.
4. CONSTRUCT PROPOSED CULVERT AND CHANNEL IMPROVEMENTS UP TO THE IMPERVIOUS DIKES.
5. UPON COMPLETION OF THE CONSTRUCTION, REMOVE IMPERVIOUS DIKES, BYPASS PUMP, AND TEMPORARY PIPE. COMPLETE ROADWAY AND REMAINING CHANNEL IMPROVEMENTS.

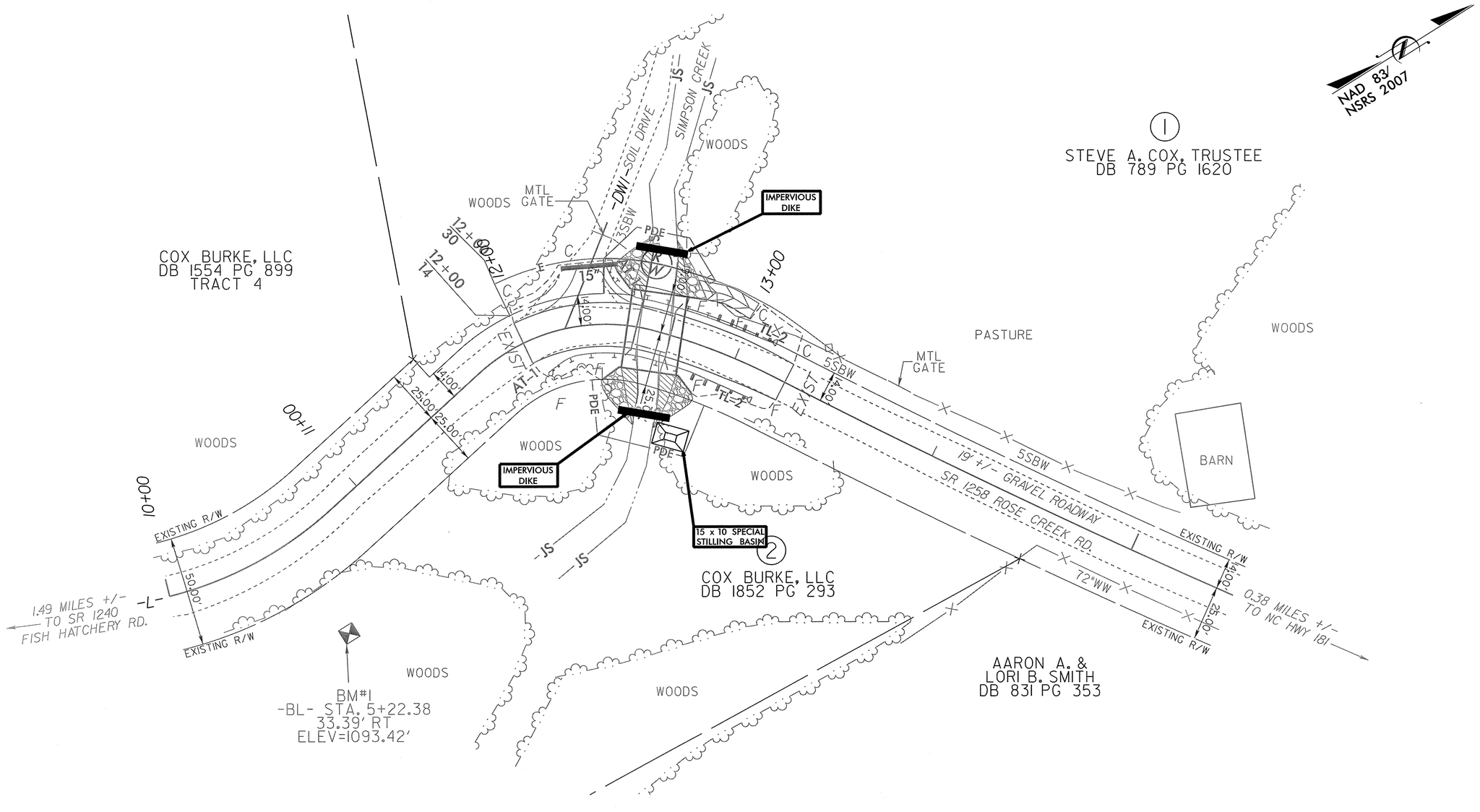

STATE	STATE PROJECT REFERENCE NO.	SHEET NO.	TOTAL SHEETS
N.C.	17BP.13.R.134	RF-1	
STATE PROJ. NO.	F. A. PROJ. NO.	DESCRIPTION	

PLANTING DETAILS

SEEDLING / LINER BAREROOT PLANTING DETAIL

HEALING IN

1. Locate a healing-in site in a shady, well protected area.
2. Excavate a flat bottom trench 12 inches deep and provide drainage.

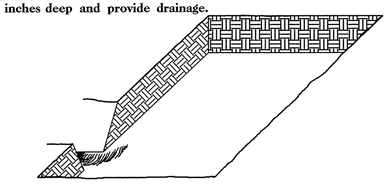

3. Backfill the trench with 2 inches well rotted sawdust. Place a 2 inch layer of well rotted sawdust at a sloping angle at one end of the trench.

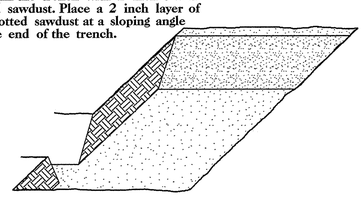

4. Place a single layer of plants against the sloping end so that the root collar is at ground level.

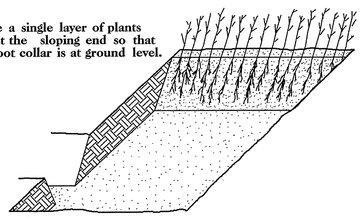

5. Place a 2 inch layer of well rotted sawdust over the roots maintaining a sloping angle.

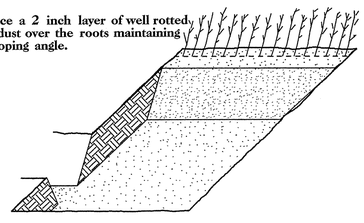

6. Repeat layers of plants and sawdust as necessary and water thoroughly.

DIBBLE PLANTING METHOD USING THE KBC PLANTING BAR

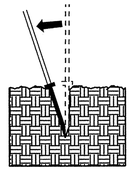

1. Insert planting bar as shown and pull handle toward planter.

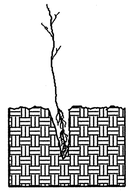

2. Remove planting bar and place seedling at correct depth.

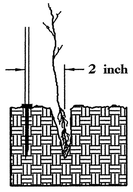

3. Insert planting bar 2 inches toward planter from seedling.

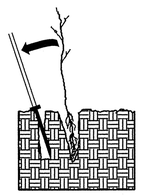

4. Pull handle of bar toward planter, firming soil at bottom.

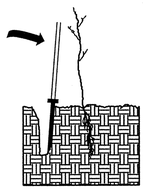

5. Push handle forward firming soil at top.

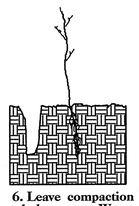

6. Leave compaction hole open. Water thoroughly.

PLANTING NOTES:

PLANTING BAG
During planting, seedlings shall be kept in a moist canvas bag or similar container to prevent the root systems from drying.



KBC PLANTING BAR
Planting bar shall have a blade with a triangular cross section, and shall be 12 inches long, 4 inches wide and 1 inch thick at center.



ROOT PRUNING
All seedlings shall be root pruned, if necessary, so that no roots extend more than 10 inches below the root collar.

REFORESTATION

☐ TREE REFORESTATION SHALL BE PLANTED 6 FT. TO 10 FT. ON CENTER, RANDOM SPACING, AVERAGING 8 FT. ON CENTER, APPROXIMATELY 680 PLANTS PER ACRE.

REFORESTATION

MIXTURE, TYPE, SIZE, AND FURNISH SHALL CONFORM TO THE FOLLOWING:

25% LIRIODENDRON TULIPIFERA	TULIP POPLAR	12 in – 18 in BR
25% PLATANUS OCCIDENTALIS	SYCAMORE	12 in – 18 in BR
25% FRAXINUS PENNSYLVANICA	GREEN ASH	12 in – 18 in BR
25% BETULA NIGRA	RIVER BIRCH	12 in – 18 in BR

REFORESTATION DETAIL SHEET

N.C.D.O.T. - ROADSIDE ENVIRONMENTAL UNIT

STATE OF NORTH CAROLINA
DIVISION OF HIGHWAYS

CROSS SECTION SUMMARY

LOCATION	UNCLASSIFIED EXCAVATION	EMBT + %
-L- 12+00 TO 12+25	16	2
-L- 12+25 TO 12+50	14	11
-L- 12+50 TO 12+75	13	31
-L- 12+75 TO 13+00	24	24
-L- 13+00 TO 13+25	26	6
TOTALS	93	74

Note: Embankment column does not include fill for undercut.

Approximate quantities only. Unclassified excavation, borrow excavation, shoulder borrow, fine grading, clearing and grubbing, breaking of existing pavement and removal of existing pavement will be paid for at the lump sum price for "Grading".

6/2/99
10:14:20 AM
R:\3382\131\Roadway\Proj\110131_rdy_typ.dgn
bpross

8/23/99

0 2.5 5

PROJ. REFERENCE NO.	SHEET NO.
17BP.13.R.127	X-1

75 70 65 60 55 50 45 40 35 30 25 20 15 10 5 0 5 10 15 20 25 30 35 40 45 50 55 60 65 70 75

2645
2640
2635
2630
2625
2620
2615
2610
2605
2600
2595
2590

EXISTING GROUND
(TYP.)

2597.25

12+00.00

—℄—

75 70 65 60 55 50 45 40 35 30 25 20 15 10 5 0 5 10 15 20 25 30 35 40 45 50 55 60 65 70 75

3:38:38 PM
R:\3382\167\Roadway\XSC\990167_rdy_xp1.dgn
bgross

8/23/99

0 2.5 5

PROJ. REFERENCE NO.	SHEET NO.
17BP.13.R.127	X-2

75 70 65 60 55 50 45 40 35 30 25 20 15 10 5 0 5 10 15 20 25 30 35 40 45 50 55 60 65 70 75

2640 2640

2635 2635

2630 2630

2625 2625

2620 2620

2615 2615

2610 2610

2605 2605

2600 2600

2595 2595

2590 2590

TIE TO EXISTING DITCH
AT BEGIN PROJECT

3' SHLDR
(TYP.)

2597.75

0.025 0.005

3:1

S.S. 2594.02

2597.75

2%

1.5:1

S.S. 2598.10

2596.70

12+25.00

—L—

75 70 65 60 55 50 45 40 35 30 25 20 15 10 5 0 5 10 15 20 25 30 35 40 45 50 55 60 65 70 75

12:36:09 PM
R:\3382\167\Roadway\XSC\990167_rdy_xp1.dgn
bgross

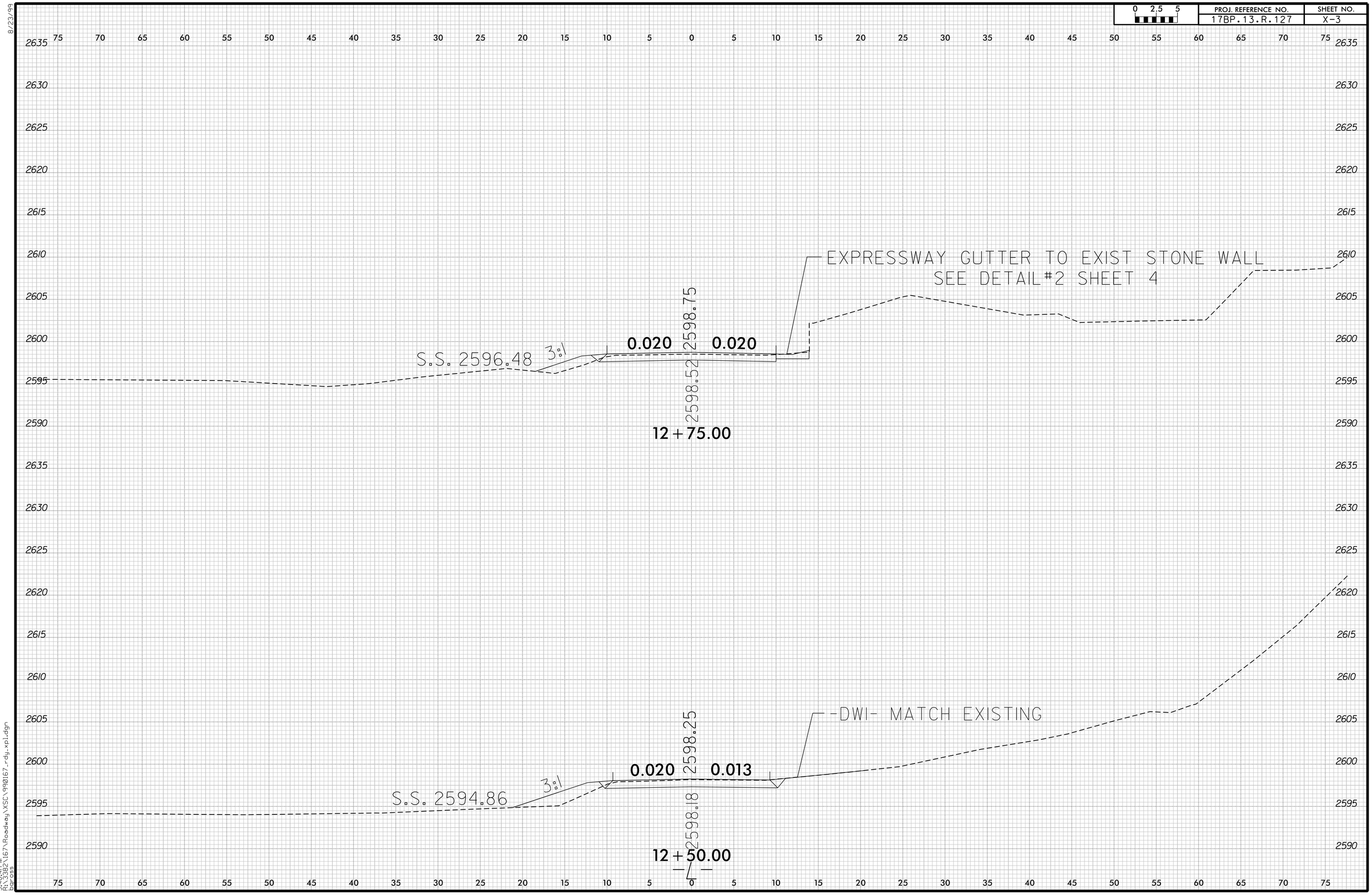

8/23/99
3:40:41 PM
R:\3382\167\Roadway\XSC\990167_rdy_xp1.dgn
bgross

75 70 65 60 55 50 45 40 35 30 25 20 15 10 5 0 5 10 15 20 25 30 35 40 45 50 55 60 65 70 75

2615 2610 2605 2600 2595

SEE STD 862.03 FOR
ANCHORAGE OF GUARDRAIL
POST TO CULVERT

PRPOSED CULVERT
HEADWALL

END CULVERT
–L– STA 13+71.89

EXPRESSWAY GUTTER TO EXIST STONE WALL
SEE DETAIL #2 SHEET 4

0.020 2599.84 0.020

2599.32

13+50.00

2615 2610 2605 2600 2595 2625 2620 2615 2610 2605 2600 2595 2590

BEGIN CULVERT
–L– STA 13+49.69

EXPRESSWAY GUTTER TO EXIST STONE WALL
SEE DETAIL #2 SHEET 4

S.S. 2598.46 5:1

0.020 2599.56 0.020

2599.18

13+25.00

EXPRESSWAY GUTTER TO EXIST STONE WALL
SEE DETAIL #2 SHEET 4

S.S. 2598.66 3:1

0.020 2599.20 0.020

2598.85

13+00.00

75 70 65 60 55 50 45 40 35 30 25 20 15 10 5 0 5 10 15 20 25 30 35 40 45 50 55 60 65 70 75

8/23/99

0 2.5 5	PROJ. REFERENCE NO.	SHEET NO.
	17BP.13.R.127	X-5

75 70 65 60 55 50 45 40 35 30 25 20 15 10 5 0 5 10 15 20 25 30 35 40 45 50 55 60 65 70 75

2615 2610 2605 2600 2595 2590

3' SHLDR (TYP.)

S.S. 2600.33

3%

2%

2598.37

0.020 2600.81 0.020

3%/S.S. 2599.42

14+50.00

FEATHER PVMT OVERLAY OVER 5LF OF EXISTING PARKING AREA

0.020 2600.44 0.020

2%/S.S. 2598.40

2600.40

14+25.00

FEATHER PVMT OVERLAY OVER 5LF OF EXISTING PARKING AREA

6' SHLDR @ GUARDRAIL (TYP.)

0.020 2600.19 0.020

2%/S.S. 2598.16

2600.00

14+00.00

FEATHER PVMT OVERLAY OVER 5LF OF EXISTING PARKING AREA

PROPOSED CULVERT HEADWALL

0.020 2600.03 0.020

2599.62

13+75.00

3:43:01 PM
R:\3382\167\Roadway\XSC\990167_rdy_xp1.dgn
bgross

8/23/99

0 2.5 5	PROJ. REFERENCE NO.	SHEET NO.
	17BP.13.R.127	X-6

75 70 65 60 55 50 45 40 35 30 25 20 15 10 5 0 5 10 15 20 25 30 35 40 45 50 55 60 65 70 75

2625
2620
2615
2610
2605
2600
2595

S.S. 2600.08
3:1
2%/2599.46
2601.89
0.020
2601.84
0.020
2%/S.S. 2600.89

15+00.00

S.S. 2600.68
2%
3:1
2598.86
2601.29
0.020
2601.32
0.020
2%/ S.S. 2600.08

14+75.00

12:37:56 PM
R:\3382\167\Roadway\XSC\990167-rdy_xpl.dgn
bgross

8/23/99

0 2.5 5

PROJ. REFERENCE NO.	SHEET NO.
17BP.13.R.127	X-7

75 70 65 60 55 50 45 40 35 30 25 20 15 10 5 0 5 10 15 20 25 30 35 40 45 50 55 60 65 70 75

2635
2630
2625
2620
2615
2610
2605
2600
2595

2603.37

15+50.00

TIE TO EXISTING DITCH
AT THE END OF PROJECT

S.S. 2600.74

2602.59

0.030 0.020

3% S.S. 2601.84

2602.59

15+25.00 —℄—

75 70 65 60 55 50 45 40 35 30 25 20 15 10 5 0 5 10 15 20 25 30 35 40 45 50 55 60 65 70 75

12:38:23 PM
R:\3382\167\Roadway\XSC\990167-rdy-xp1.dgn
bgross

B.M. #1: RR SPIKE IN BASE OF 18" POPLAR 49.61' RT OF -L- STA 10+59.33 EL. 1093.42 NAVD 88

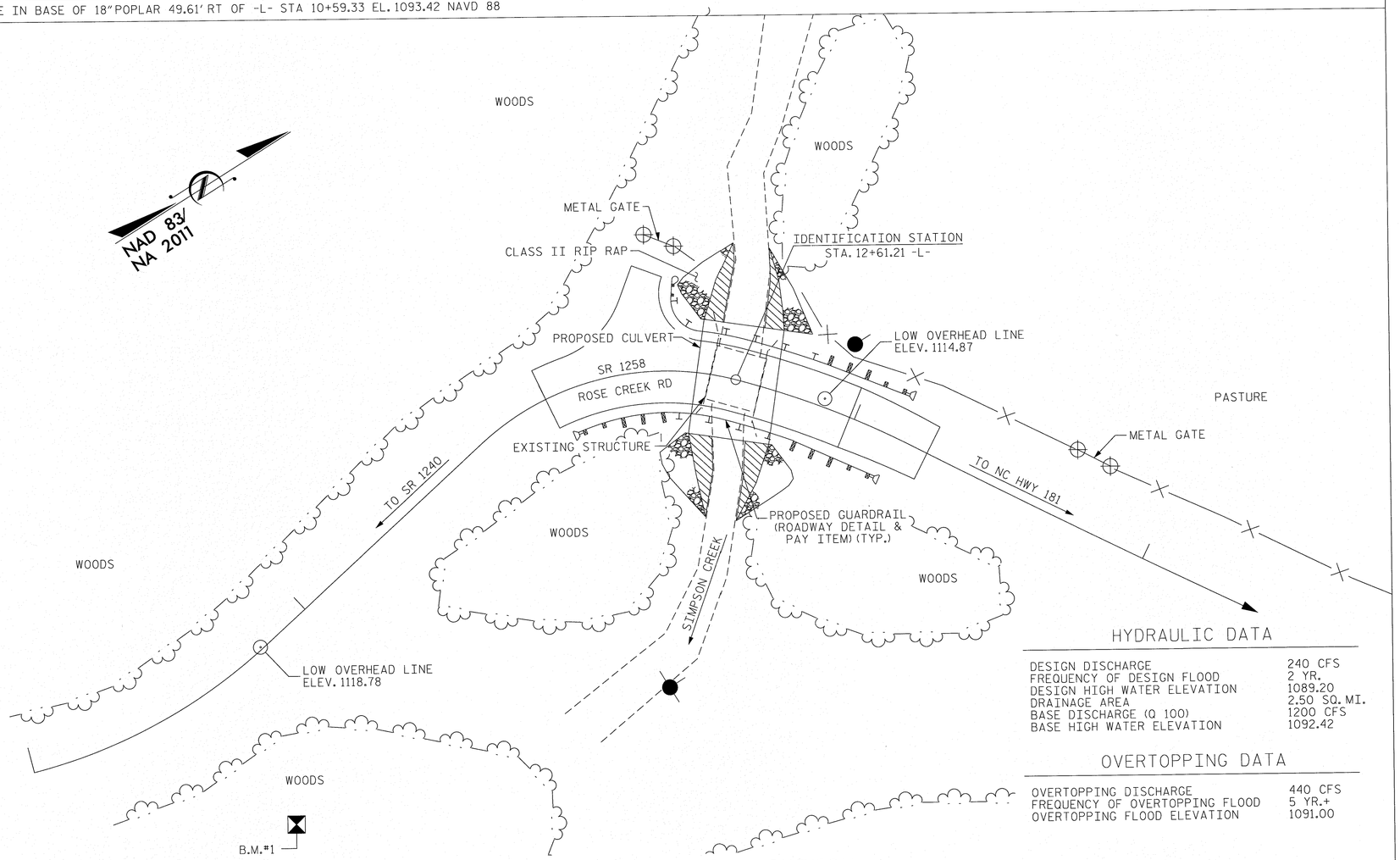

LOCATION SKETCH

HYDRAULIC DATA

DESIGN DISCHARGE	240 CFS
FREQUENCY OF DESIGN FLOOD	2 YR.
DESIGN HIGH WATER ELEVATION	1089.20
DRAINAGE AREA	2.50 SQ. MI.
BASE DISCHARGE (Q 100)	1200 CFS
BASE HIGH WATER ELEVATION	1092.42

OVERTOPPING DATA

OVERTOPPING DISCHARGE	440 CFS
FREQUENCY OF OVERTOPPING FLOOD	5 YR.+
OVERTOPPING FLOOD ELEVATION	1091.00

NO KNOWN UTILITY CONFLICTS

NOTES:

ASSUMED LIVE LOAD = HL-93 OR ALTERNATE LOADING.

FOR EROSION CONTROL MEASURES, SEE EROSION CONTROL PLANS.

THIS STRUCTURE SHALL BE DESIGNED IN ACCORDANCE WITH THE AASHTO LRFD BRIDGE DESIGN SPECIFICATIONS.

THE EXISTING STRUCTURE CONSISTING OF 1 SPAN AT 16'-6", 17'-2" CLEAR ROADWAY WIDTH, TIMBER DECK ON TIMBER JOISTS, ON TIMBER CAPS WITH TIMBER POSTS AND CONCRETE SILLS, AT EXISTING CROSSING FOR PROPOSED STRUCTURE, SHALL BE REMOVED. THE EXISTING BRIDGE IS CURRENTLY POSTED FOR LOAD LIMIT. SHOULD THE STRUCTURAL INTEGRITY OF THE BRIDGE DETERIORATE DURING CONSTRUCTION OF THE PROPOSED BRIDGE, THE LOAD LIMIT MAY BE REDUCED AS FOUND NECESSARY DURING THE LIFE OF THE PROJECT.

REMOVAL OF THE EXISTING BRIDGE SHALL BE PERFORMED AS NOT TO ALLOW DEBRIS TO FALL INTO THE WATER. THE CONTRACTOR SHALL REMOVE THE BRIDGE AND SUBMIT PLANS FOR DEMOLITION IN ACCORDANCE WITH ARTICLE 402-2 OF THE STANDARD SPECIFICATIONS.

THE SUBSTRUCTURE OF THE EXISTING BRIDGE INDICATED ON THE PLANS IS FROM THE BEST INFORMATION AVAILABLE. SINCE THIS INFORMATION IS SHOWN FOR THE CONVENIENCE OF THE CONTRACTOR, THE CONTRACTOR SHALL HAVE NO CLAIM WHATSOEVER AGAINST THE DEPARTMENT OF TRANSPORTATION FOR ANY DELAYS OR ADDITIONAL COSTS INCURRED BASED ON DIFFERENCES BETWEEN THE EXISTING BRIDGE SUBSTRUCTURE SHOWN ON THE PLANS AND THE ACTUAL CONDITIONS AT THE PROJECT SITE.

THE CONTRACTOR SHALL SUBMIT DESIGN CALCULATIONS AND SHOP DRAWINGS SHOWING COMPLETE DETAILS OF THE 25'-2" x 6'-2" ALUMINUM BOX CULVERT, SILLS, AND THE PREFABRICATED WINGWALLS AND HEADWALLS. THE DRAWINGS SHALL INCLUDE PLACING DRAWINGS, SPLICE DETAILS, AND CONNECTION DETAILS. DRAWINGS AND DESIGN CALCULATIONS, SIGNED AND SEALED BY A PROFESSIONAL ENGINEER REGISTERED IN THE STATE OF NORTH CAROLINA, SHALL BE SUBMITTED BY THE CONTRACTOR FOR REVIEW AND APPROVAL. THE PRICE FOR 25'-2" x 6'-2" ALUMINUM BOX CULVERT", SHALL INCLUDE SILLS, THE PREFABRICATED WINGWALLS AND HEADWALLS, CONNECTIONS, TRANSPORTATION, AND ERECTING FINISHED PRODUCT.

THE MANUFACTURER OF THE 25'-2" x 6'-2" ALUMINUM BOX CULVERT SHALL PROVIDE LOAD AND RESISTANCE FACTOR RATING (LRFD) SUMMARY PER NCDOT REQUIREMENTS.

FOR ALUMINUM BOX CULVERT, SEE SPECIAL PROVISIONS.

FOR SUBMITTAL OF WORKING DRAWINGS, SEE SPECIAL PROVISIONS.

FOR FALSEWORK AND FORMWORK, SEE SPECIAL PROVISIONS.

FOR CRANE SAFETY, SEE SPECIAL PROVISIONS.

THIS BRIDGE IS LOCATED IN SEISMIC ZONE 1.

ASPHALT WEARING SURFACE IS INCLUDED IN THE ROADWAY QUANTITY ON ROADWAY PLANS.

EXCAVATE ONE FOOT BELOW CULVERT AND REPLACE WITH FOUNDATION CONDITIONING MATERIAL IN ACCORDANCE WITH ARTICLE 414 OF THE STANDARD SPECIFICATIONS.

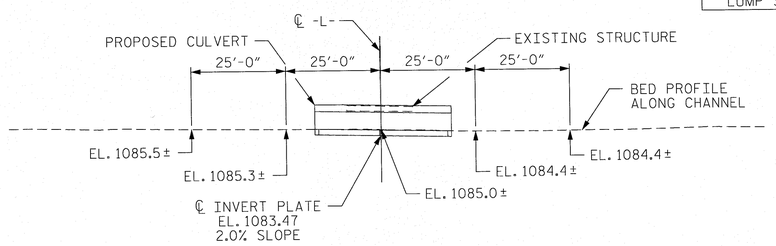

PROFILE ALONG ℄ CULVERT

TOTAL BILL OF MATERIALS

REMOVAL OF EXISTING STRUCTURE	CLASS A CONCRETE FOR MOMENT SLAB	REINFORCING STEEL FOR MOMENT SLAB	PLAIN RIP RAP CLASS II (1'-6" THICK)	GEOTEXTILE FOR DRAINAGE	25'-2"X 6'-2" ALUMINUM BOX CULVERT
LUMP SUM	CU. YDS.	LBS.	TONS	SQ. YD.	LUMP SUM
LUMP SUM	10.6	1720	101	101	LUMP SUM

I HEREBY CERTIFY THESE ARE THE AS-BUILT PLANS

Prepared in the Office of:
Mattern & Craig
CONSULTING ENGINEERS • SURVEYORS
FIRM LICENSE No. C-1154
12 BROAD STREET
ASHEVILLE, NORTH CAROLINA 28801
(828) 254-2201 - FAX (828) 254-4662

NORTH CAROLINA PROFESSIONAL SEAL 14309 ENGINEER STEVEN A. CAMPBELL 11/6/15

PROJECT NO. 17BP.13.R.134
BURKE COUNTY
STATION: 12+61.21 -L-

SHEET 1 OF 3 REPLACES BRIDGE NO. 131

STATE OF NORTH CAROLINA
DEPARTMENT OF TRANSPORTATION
RALEIGH

ALUMINUM BOX CULVERT
ON SR 1258 OVER
SIMPSON CREEK BETWEEN
NC HWY 181 AND SR 1240

REVISIONS						SHEET NO.
NO.	BY:	DATE:	NO.	BY:	DATE:	C-1
1			3			TOTAL SHEETS
2			4			3

DRAWN BY : MLF DATE : 11/15
CHECKED BY : CMT DATE : 11/15

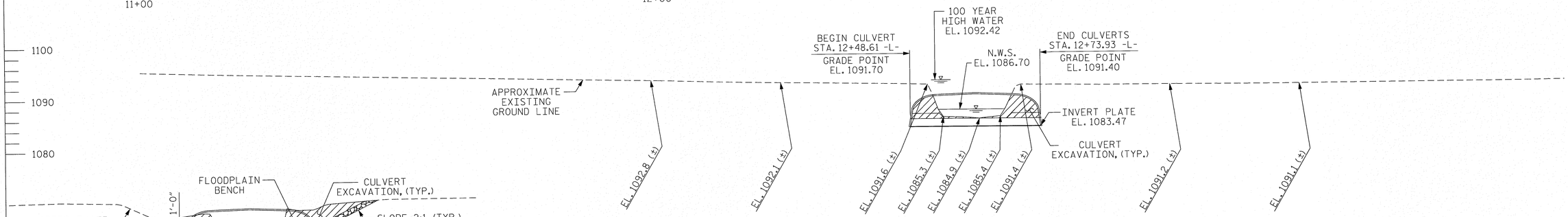

SECTION ALONG SURVEY -L-

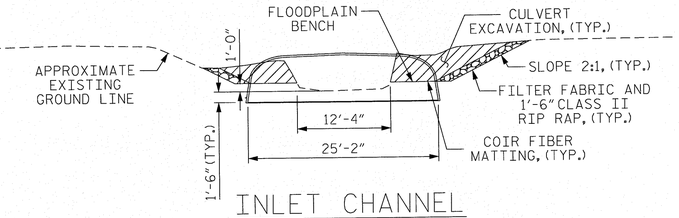

INLET CHANNEL

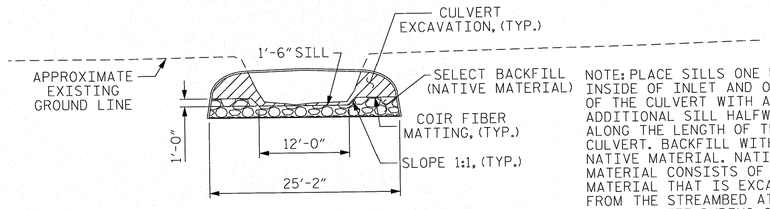

CULVERT INTERNAL CHANNEL

NOTE: PLACE SILLS ONE FOOT INSIDE OF INLET AND OUTLET OF THE CULVERT WITH AN ADDITIONAL SILL HALFWAY ALONG THE LENGTH OF THE CULVERT. BACKFILL WITH NATIVE MATERIAL. NATIVE MATERIAL CONSISTS OF MATERIAL THAT IS EXCAVATED FROM THE STREAMBED AT THE PROJECT SITE DURING CULVERT CONSTRUCTION.
NATIVE MATERIAL IS SUBJECT TO APPROVAL BY THE ENGINEER AND MAY BE SUBJECTED TO PERMIT CONDITIONS.

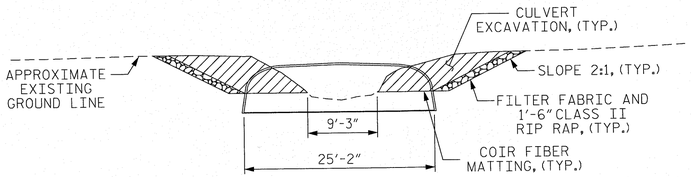

OUTLET CHANNEL

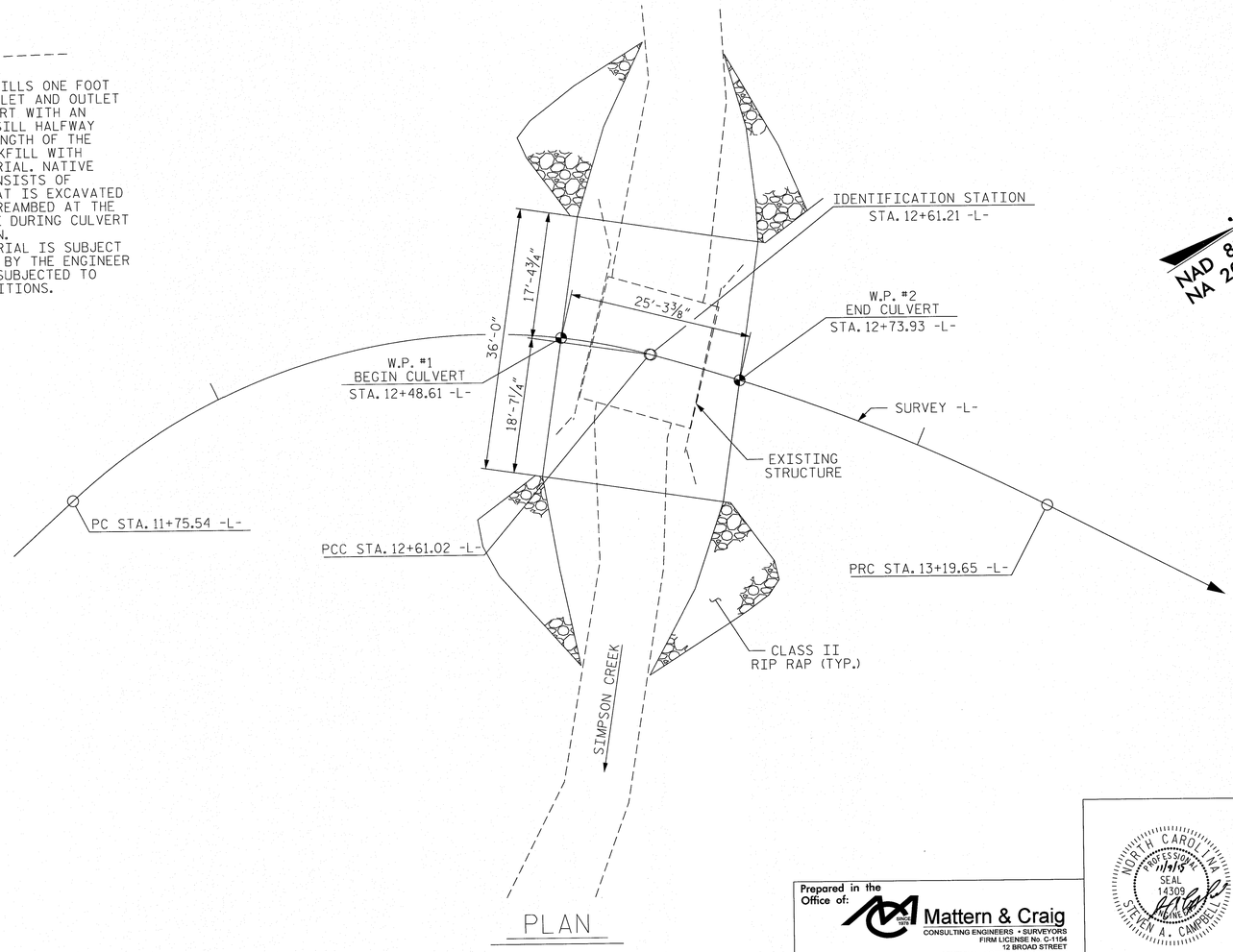

PLAN

NAD 83/ NA 2011

HORIZONTAL CURVE DATA -L-

PI Sta 10+42.93
Δ = 28° 20′ 47.5″ (LT)
D = 33° 42′ 12.2″
L = 84.11′
T = 42.93′
R = 170.00′

PI Sta 12+22.29
Δ = 57° 37′ 20.4″ (RT)
D = 67° 24′ 24.5″
L = 85.48′
T = 46.75′
R = 85.00′

PI Sta 12+90.44
Δ = 11° 59′ 48.5″ (RT)
D = 20° 27′ 46.0″
L = 58.63′
T = 29.42′
R = 280.00′

PI Sta 14+35.13
Δ = 3° 28′ 52.7″ (LT)
D = 1° 30′ 28.0″
L = 230.89′
T = 115.48′
R = 3800.00′

PROJECT NO. 17BP.13.R.134
BURKE COUNTY
STATION: 12+61.21 -L-

SHEET 2 OF 3

STATE OF NORTH CAROLINA
DEPARTMENT OF TRANSPORTATION
RALEIGH

ALUMINUM BOX CULVERT ON SR 1258 OVER SIMPSON CREEK BETWEEN NC HWY 181 AND SR 1240

REVISIONS						SHEET NO.
NO.	BY:	DATE:	NO.	BY:	DATE:	C-2
1			3			TOTAL SHEETS
2			4			3

Prepared in the Office of:
Mattern & Craig
CONSULTING ENGINEERS • SURVEYORS
FIRM LICENSE No. C-1154
12 BROAD STREET
ASHEVILLE, NORTH CAROLINA 28801
(828) 254-2201 - FAX (828) 254-4662

NORTH CAROLINA PROFESSIONAL 11/9/15 SEAL 14309 ENGINEER STEVEN A. CAMPBELL

DRAWN BY : MLF DATE : 11/15
CHECKED BY : CMT DATE : 11/15

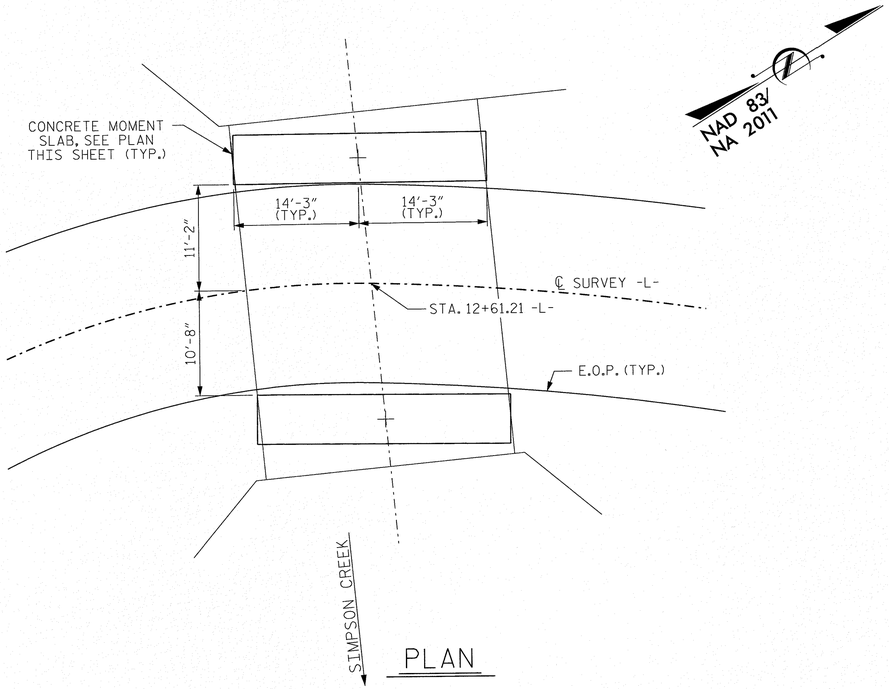

PLAN

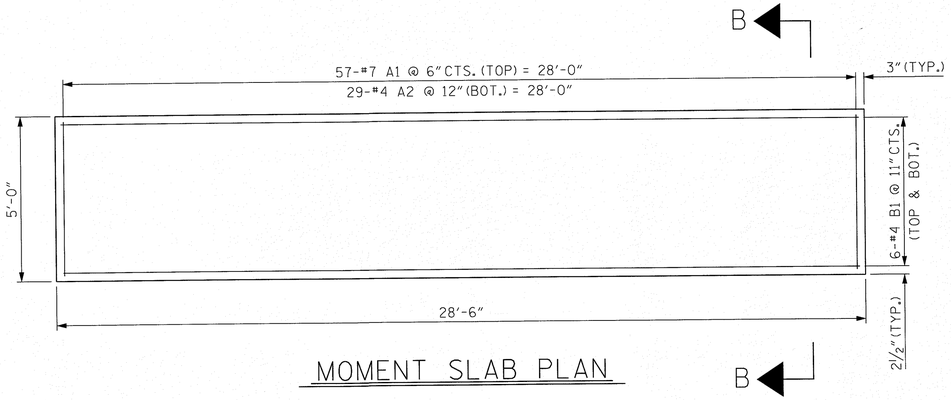

MOMENT SLAB PLAN

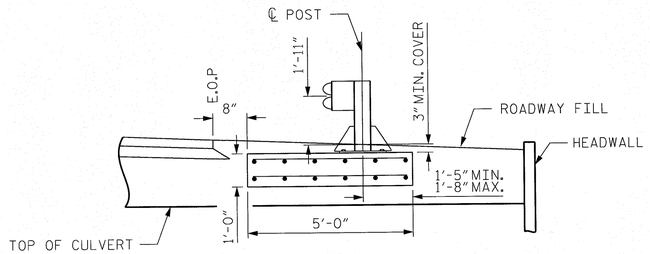

NOTES: FOR GUARDRAIL ANCHORAGE DETAILS SEE ROADWAY STANDARD DRAWING 862.03 SHEET 7 OF 7.

PLACE CONCRETE MOMENT SLAB ON 6"MIN. (3"MIN ABOVE TOP OF CULVERTS) OF COMPACTED CLASS II TYPE 1 SELECT MATERIAL, SEE STANDARD SPECIFICATION SECTION 1016.

SECTION A-A

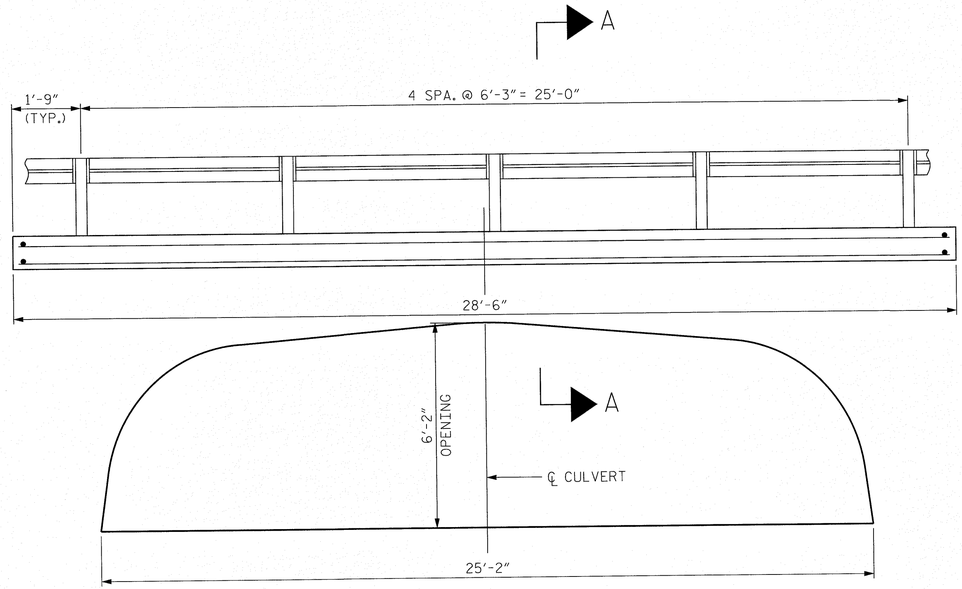

END ELEVATION

BILL OF MATERIAL FOR ONE MOMENT SLAB (2 REQUIRED)					
BAR	NO.	SIZE	TYPE	LENGTH	WEIGHT
A1	57	#7	STR	4'-8"	544
A2	29	#4	STR	4'-8"	91
B1	12	#4	STR	28'-0"	225
REINFORCING STEEL					860 LBS.
CLASS A CONCRETE					5.3 C.Y.

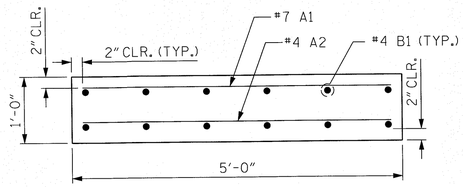

SECTION B-B

PROJECT NO. 17BP.13.R.134

BURKE COUNTY

STATION: 12+61.21 -L-

SHEET 3 OF 3

STATE OF NORTH CAROLINA
DEPARTMENT OF TRANSPORTATION
RALEIGH

ALUMINUM BOX CULVERT GUARDRAIL ASSEMBLY DETAILS

REVISIONS						SHEET NO.
NO.	BY:	DATE:	NO.	BY:	DATE:	C-3
1			3			TOTAL SHEETS
2			4			3

Prepared in the Office of:
Mattern & Craig
CONSULTING ENGINEERS • SURVEYORS
FIRM LICENSE No. C-1154
12 BROAD STREET
ASHEVILLE, NORTH CAROLINA 28801
(828) 254-2201 - FAX (828) 254-4562

NORTH CAROLINA PROFESSIONAL SEAL 14309 ENGINEER STEVEN A. CAMPBELL 11/3/15

ASSEMBLED BY : MLF DATE : 11/15
CHECKED BY : CMT DATE : 11/15