PROJECT: 17BP.13.R.40

CONTRACT:

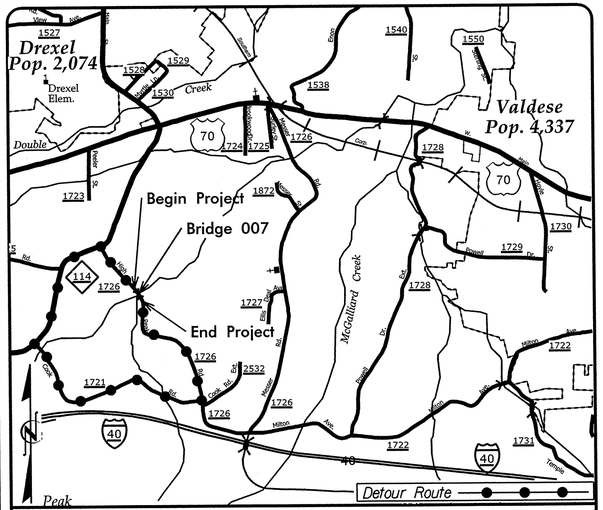

VICINITY MAP

See Sheet 1-A For Index of Sheets
See Sheet 1-B For Conventional Symbols

STATE OF NORTH CAROLINA
DIVISION OF HIGHWAYS
BURKE COUNTY

STATE	STATE PROJECT REFERENCE NO.	SHEET NO.	TOTAL SHEETS
N.C.	17BP.13.R.40	1	

STATE PROJECT NO.	F. A. PROJ. NO.	DESCRIPTION
17BP.13.R.40		P.E., R/W, UTIL.
17BP.13.R.40		CONST.

LOCATION: BRIDGE NO. 007 OVER MCGALLIARD CREEK TRIB 2 ON SR 1726 (HIGH PEAK RD.)

TYPE OF WORK: GRADING, PAVING, DRAINAGE AND STRUCTURE

MAP 1

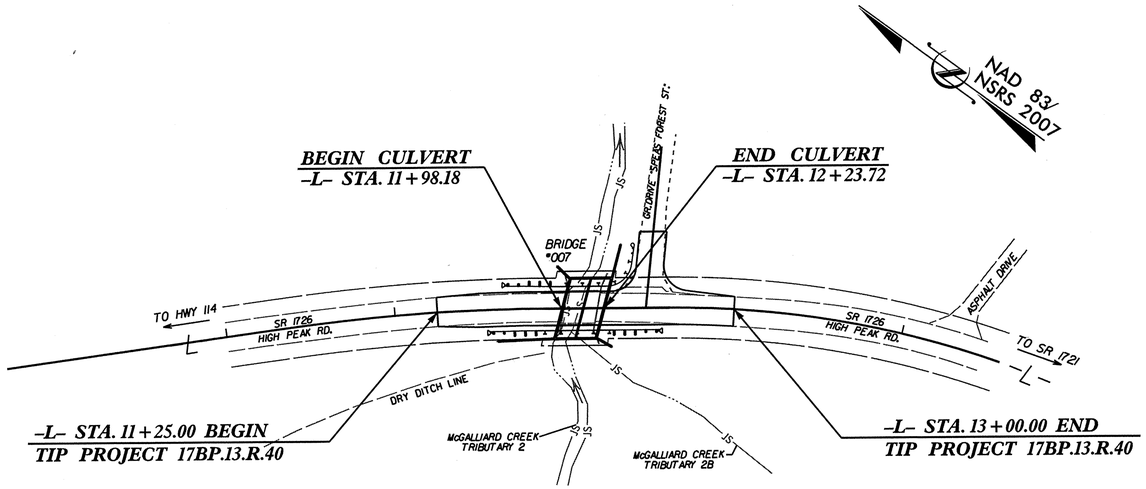

GRAPHIC SCALES

50 25 0 50 100
PLANS

50 25 0 50 100
PROFILE (HORIZONTAL)

10 5 0 10 20
PROFILE (VERTICAL)

STATE OF NORTH CAROLINA DEPARTMENT OF TRANSPORTATION

DESIGN DATA

ADT 2010 = 810

V = 40 MPH

FUNC CLASS =
LOCAL
SUBREGIONAL TIER

PROJECT LENGTH

LENGTH ROADWAY TIP PROJECT 17BP.13.R.40	=	0.028 MILES
LENGTH STRUCTURE TIP PROJECT 17BP.13.R.40	=	0.005 MILES
TOTAL LENGTH TIP PROJECT 17BP.13.R.40	=	0.033 MILES

Prepared in the Office of Mattern & Craig for
DIVISION 13
NORTH CAROLINA DEPARTMENT OF TRANSPORTATION

2012 STANDARD SPECIFICATIONS

R.O.W. DATE: _____

LETTING DATE: _____

JAMES VOSO, PE
PROJECT ENGINEER

DANA BOLDEN, PE
HYDRAULICS ENGINEER

NCDOT CONTACT: PAUL SPROUSE, PE
DIVISION 13 BRIDGE PROJECT MANAGER

ROADWAY DESIGN ENGINEER

NORTH CAROLINA PROFESSIONAL SEAL 022599 ENGINEER JAMES B. VOSO

SIGNATURE:

HYDRAULICS ENGINEER

NORTH CAROLINA PROFESSIONAL SEAL 028345 ENGINEER DANA J. BOLDEN

SIGNATURE:

PLANS PREPARED BY:

Mattern & Craig
CONSULTING ENGINEERS • SURVEYORS
12 BROAD STREET
ASHEVILLE, NORTH CAROLINA
(828) 254-2201
FAX (828) 254-4562

4/14/2014
9:05:44 AM
R:\3280 NCDOT Div. 13 Bridges\007\Roadway\Proj\11007_rdy_tsh.dgn
bgross

6/2/99

PROJECT REFERENCE NO.	SHEET NO.
17BPJ3.R.40	1-A

ROADWAY DESIGN ENGINEER

NORTH CAROLINA PROFESSIONAL SEAL 042259 ENGINEER JAMES B. VOSO

PAVEMENT DESIGN ENGINEER

NORTH CAROLINA PROFESSIONAL SEAL 042259 ENGINEER JAMES B. VOSO

PLANS PREPARED BY:

Mattern & Craig
CONSULTING ENGINEERS - SURVEYORS
12 BROAD STREET
ASHEVILLE, NORTH CAROLINA 28801
(828) 254-2201 - FAX (828) 254-4562

INDEX OF SHEETS – GENERAL NOTES – LIST OF STANDARDS

INDEX OF SHEETS

SHEET NUMBER	SHEET
1	Title Sheet
1–A	Index of Sheets, General Notes, and List of Standards
1–B	Conventional Symbols
1–C	Survey Control Sheet
2	Typical Sections, Pavement Schedule
3	Summary of Drainage Quantities, Summary of Guardrail, and Earthwork Summary
4	Plan & Profile Sheet
TMP–1 THRU TMP–2	Transportation Management Plans
PMP–01	Pavement Marking Plan
EC–1 THRU RF–1	Erosion Control Plans
UC–1 THUR UC–2	Utility Construction Plans
UO–1 THRU UO–2	Utilities By Others Plans
X–1A	Cross–Section Summary Sheet
X–1 THRU X–2	Cross–Sections
TS–01	Structure Plans Title Sheet
S–01 THRU SN	Structure Plans

2012 ROADWAY ENGLISH STANDARD DRAWINGS

The following Roadway Standards as appear in "Roadway Standard Drawings" Highway Design Branch – N. C. Department of Transportation – Raleigh, N. C., Dated January, 2012 are applicable to this project and by reference hereby are considered a part of these plans:

STD.NO.	TITLE
DIVISION 2	– EARTHWORK
200.02	Method of Clearing – Method II
225.02	Guide for Grading Subgrade – Secondary and Local
225.04	Method of Obtaining Superelevation – Two Lane Pavement
DIVISION 3	– PIPE CULVERTS
300.01	Method of Pipe Installation
DIVISION 5	– SUBGRADE, BASES AND SHOULDERS
560.01	Method of Shoulder Construction – High Side of Superelevated Curve – Method I
DIVISION 6	– ASPHALT BASES AND PAVEMENTS
654.01	Pavement Repairs
DIVISION 8	– INCIDENTALS
862.01	Guardrail Placement
862.02	Guardrail Installation
876.02	Guide for Rip Rap at Pipe Outlets
876.03	Structural Anchor Units

GENERAL NOTES: 2012 SPECIFICATIONS

EFFECTIVE: 01–17–12
REVISED: 07/30/12

GRADE LINE:
GRADING AND SURFACING:

THE GRADE LINES SHOWN DENOTE THE FINISHED ELEVATION OF THE PROPOSED SURFACING AT GRADE POINTS SHOWN ON THE TYPICAL SECTIONS. GRADE LINES MAY BE ADJUSTED AT THEIR BEGINNING AND ENDING AND AT STRUCTURES AS DIRECTED BY THE ENGINEER IN ORDER TO SECURE A PROPER TIE–IN.

CLEARING:

CLEARING ON THIS PROJECT SHALL BE PERFORMED TO THE LIMITS ESTABLISHED BY METHOD II.

SUPERELEVATION:

ALL CURVES ON THIS PROJECT SHALL BE SUPERELEVATED IN ACCORDANCE WITH STD. NO. 225.04 USING THE RATE OF SUPERELEVATION AND RUNOFF SHOWN ON THE PLANS. SUPERELEVATION IS TO BE REVOLVED ABOUT THE GRADE POINTS SHOWN ON THE TYPICAL SECTIONS.

SHOULDER CONSTRUCTION:

ASPHALT, EARTH, AND CONCRETE SHOULDER CONSTRUCTION ON THE HIGH SIDE OF SUPERELEVATED CURVES SHALL BE IN ACCORDANCE WITH STD. NO. 560.01.

SIDE ROADS:

THE CONTRACTOR WILL BE REQUIRED TO DO ALL NECESSARY WORK TO PROVIDE SUITABLE CONNECTIONS WITH ALL ROADS, STREETS, AND DRIVES ENTERING THIS PROJECT. THIS WORK WILL BE PAID FOR AT THE CONTRACT UNIT PRICE FOR THE PARTICULAR ITEMS INVOLVED.

GUARDRAIL:

THE GUARDRAIL LOCATIONS SHOWN ON THE PLANS MAY BE ADJUSTED DURING CONSTRUCTION AS DIRECTED BY THE ENGINEER. THE CONTRACTOR SHOULD CONSULT WITH THE ENGINEER PRIOR TO ORDERING GUARDRAIL MATERIAL.

TEMPORARY SHORING:

SHORING REQUIRED FOR THE MAINTENANCE OF TRAFFIC WILL BE PAID FOR AS "EXTRA WORK" IN ACCORDANCE WITH SECTION 104–7.

SUBSURFACE PLANS:

SUBSURFACE PLANS ARE AVAILABLE FOR THE STRUCTURE ONLY. THE CONTRACTOR SHOULD MAKE HIS OWN INVESTIGATION AS TO THE OTHER SUBSURFACE CONDITIONS.

UTILITIES:

UTILITY OWNERS ON THIS PROJECT ARE TELICS (AT&T), DUKE ENERGY, AND PIEDMONT GAS. ANY RELOCATION OF EXISTING UTILITIES WILL BE ACCOMPLISHED BY OTHERS, EXCEPT AS SHOWN ON THE PLANS.

RIGHT–OF–WAY MARKERS:

ALL RIGHT–OF–WAY MARKERS ON THIS PROJECT SHALL BE PLACED BY CONTRACT IN ACCORDANCE WITH SECTION 801 OF THE 2012 NORTH CAROLINA STANDARD SPECIFICATIONS FOR ROADS AND STRUCTURES.

H:\Proj\11007_rdy_typ.dgn
11/30/15 AM
User: NCDOT Div.13 Bridges\007\Roadway
PDF Creator: PDFCreator

PROJECT REFERENCE NO.	SHEET NO.
17BPJ3.R.40	1-B

Note: Not to Scale

**S.U.E. = Subsurface Utility Engineering*

STATE OF NORTH CAROLINA
DIVISION OF HIGHWAYS

CONVENTIONAL PLAN SHEET SYMBOLS

BOUNDARIES AND PROPERTY:

- State Line
- County Line
- Township Line
- City Line
- Reservation Line
- Property Line
- Existing Iron Pin — EIP
- Property Corner
- Property Monument — ECM
- Parcel/Sequence Number — 123
- Existing Fence Line
- Proposed Woven Wire Fence
- Proposed Chain Link Fence
- Proposed Barbed Wire Fence
- Existing Wetland Boundary — WLB
- Proposed Wetland Boundary — WLB
- Existing High Quality Wetland Boundary — HQ WLB
- Existing Endangered Animal Boundary — EAB
- Existing Endangered Plant Boundary — EPB

BUILDINGS AND OTHER CULTURE:

- Gas Pump Vent or U/G Tank Cap
- Sign — S
- Well — W
- Small Mine
- Foundation
- Area Outline
- Cemetery
- Building
- School
- Church
- Dam

HYDROLOGY:

- Stream or Body of Water
- Hydro, Pool or Reservoir
- River Basin Buffer — RBB
- Flow Arrow
- Disappearing Stream
- Spring
- Swamp Marsh
- Proposed Lateral, Tail, Head Ditch — FLOW
- False Sump

RAILROADS:

- Standard Guage — CSX TRANSPORTATION
- RR Signal Milepost — MILEPOST 35
- Switch — SWITCH
- RR Abandoned
- RR Dismantled

RIGHT OF WAY:

- Baseline Control Point
- Existing Right of Way Marker
- Existing Right of Way Line
- Proposed Right of Way Line — RW
- Proposed Right of Way Line with Iron Pin and Cap Marker — RW
- Proposed Right of Way Line with Concrete or Granite Marker — RW
- Existing Control of Access — CA
- Proposed Control of Access — CA
- Existing Easement Line — E
- Proposed Temporary Construction Easement — E
- Proposed Temporary Drainage Easement — TDE
- Proposed Permanent Drainage Easement — PDE
- Proposed Permanent Utility Easement — PUE

ROADS AND RELATED FEATURES:

- Existing Edge of Pavement
- Existing Curb
- Proposed Slope Stakes Cut — C
- Proposed Slope Stakes Fill — F
- Proposed Wheel Chair Ramp — WCR
- Curb Cut for Future Wheel Chair Ramp — CCFR
- Existing Metal Guardrail
- Proposed Guardrail
- Existing Cable Guiderail
- Proposed Cable Guiderail
- Equaility Symbol
- Pavement Removal

VEGETATION:

- Single Tree
- Single Shrub
- Hedge
- Woods Line
- Orchard
- Vineyard — Vineyard

EXISTING STRUCTURES:

MAJOR:

- Bridge, Tunnel or Box Culvert — CONC
- Bridge Wing Wall, Head Wall and End Wall — CONC WW

MINOR:

- Head and End Wall — CONC HW
- Pipe Culvert
- Footbridge
- Drainage Box: Catch Basin, DI or JB — CB
- Paved Ditch Gutter
- Storm Sewer Manhole — S
- Storm Sewer — S

UTILITIES:

POWER:

- Existing Power Pole
- Proposed Power Pole
- Existing Joint Use Pole
- Proposed Joint Use Pole
- Power Manhole — P
- Power Line Tower
- Power Transformer
- U/G Power Cable Hand Hole — HH
- H-Frame Pole
- Recorded U/G Power Line — P
- Designated U/G Power Line (S.U.E.*) — P

TELEPHONE:

- Existing Telephone Pole
- Proposed Telephone Pole
- Telephone Manhole — T
- Telephone Booth
- Telephone Pedestal — T
- Telephone Cell Tower
- U/G Telephone Cable Hand Hole — HH
- Recorded U/G Telephone Cable — T
- Designated U/G Telephone Cable (S.U.E.*) — T
- Recorded U/G Telephone Conduit — TC
- Designated U/G Telephone Conduit (S.U.E.*) — TC
- Recorded U/G Fiber Optics Cable — T FO
- Designated U/G Fiber Optics Cable (S.U.E.*) — T FO

WATER:

- Water Manhole — W
- Water Meter
- Water Valve
- Water Hydrant
- Recorded U/G Water Line — W
- Designated U/G Water Line (S.U.E.*) — W
- Above Ground Water Line — A/G Water

TV:

- TV Satellite Dish
- TV Pedestal — C
- TV Tower
- U/G TV Cable Hand Hole — HH
- Recorded U/G TV Cable — TV
- Designated U/G TV Cable (S.U.E.*) — TV
- Recorded U/G Fiber Optic Cable — TV FO
- Designated U/G Fiber Optic Cable (S.U.E.*) — TV FO

GAS:

- Gas Valve
- Gas Meter
- Recorded U/G Gas Line — G
- Designated U/G Gas Line (S.U.E.*) — G
- Above Ground Gas Line — A/G Gas

SANITARY SEWER:

- Sanitary Sewer Manhole
- Sanitary Sewer Cleanout
- U/G Sanitary Sewer Line — SS
- Above Ground Sanitary Sewer — A/G Sanitary Sewer
- Recorded SS Forced Main Line — FSS
- Designated SS Forced Main Line (S.U.E.*) — FSS

MISCELLANEOUS:

- Utility Pole
- Utility Pole with Base
- Utility Located Object
- Utility Traffic Signal Box — S
- Utility Unknown U/G Line — ?UTL
- U/G Tank; Water, Gas, Oil
- A/G Tank; Water, Gas, Oil
- U/G Test Hole (S.U.E.*)
- Abandoned According to Utility Records — AATUR
- End of Information — E.O.I.

PROJECT REFERENCE NO.	SHEET NO.
17BP.13.R.40	1-C
R/W SHEET NO.	

Prepared in the Office of:

Mattern & Craig
CONSULTING ENGINEERS - SURVEYORS
12 BROAD STREET
ASHEVILLE, NORTH CAROLINA 28801
(828) 254-2201 - FAX (828) 254-4562

50 25 0 50 100
SCALE

SURVEY CONTROL SHEET 17BP.13.R.40

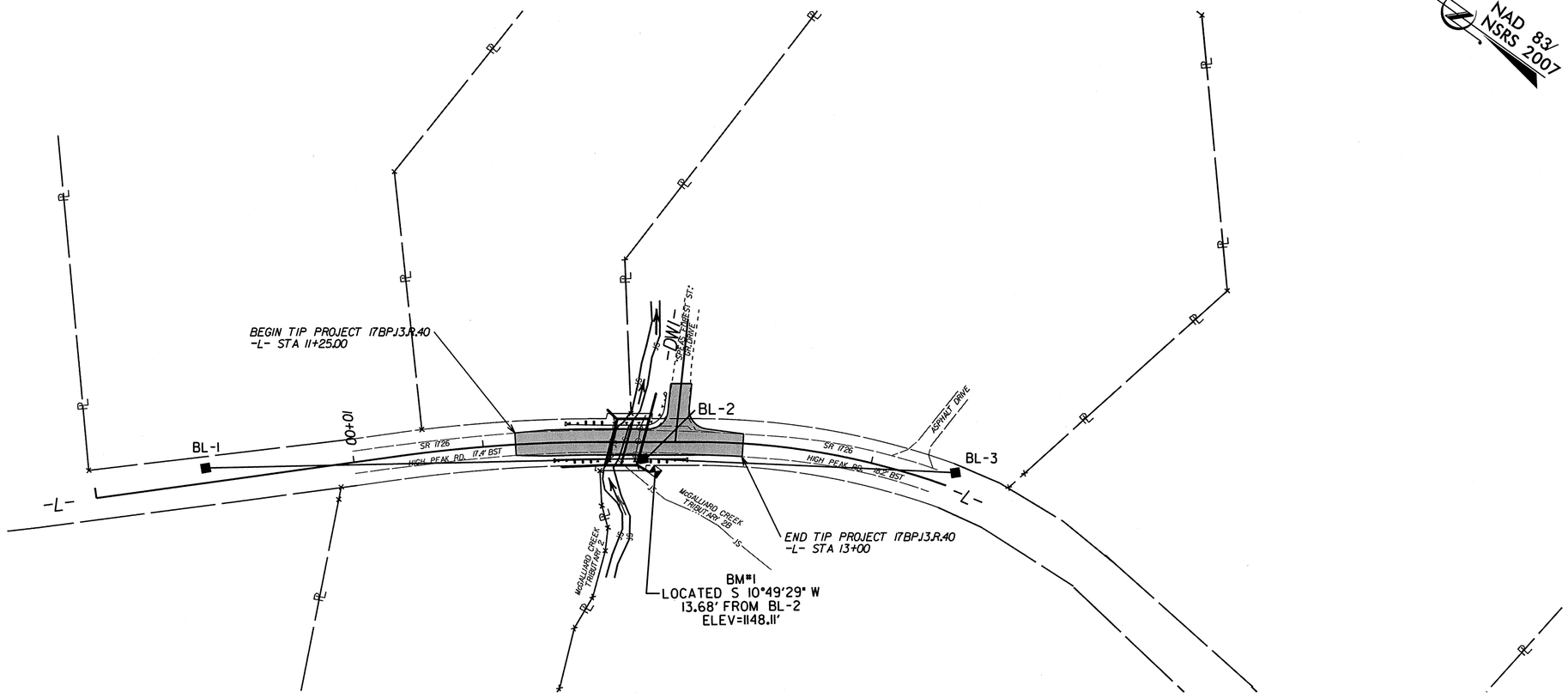

DATUM DESCRIPTION

THE LOCALIZED COORDINATE SYSTEM DEVELOPED FOR THIS PROJECT IS BASED ON THE STATE PLANE COORDINATES ESTABLISHED BY NCGS FOR MONUMENT "11-0007 BL-2"
WITH NAD 83/NSRS 2007 STATE PLANE GRID COORDINATES OF
NORTHING: 733650.0750(ft) EASTING: 1227893.1380(ft)
ELEVATION: 1148.80(ft)
THE AVERAGE COMBINED GRID FACTOR USED ON THIS PROJECT (GROUND TO GRID) IS: 0.99985873
THE N.C. LAMBERT GRID BEARING AND LOCALIZED HORIZONTAL GROUND DISTANCE FROM "11-0007 BL-2" TO -L- STATION 10+00 IS
114.0972' - S38°31'40"E
ALL LINEAR DIMENSIONS ARE LOCALIZED HORIZONTAL DISTANCES
VERTICAL DATUM USED IS NAVD 88

STRUCTURE: 11-0007
COUNTY: BURKE

Scale 1" = 50'
50' 0 50' 100'

BL

POINT	DESC.	NORTH	EAST	ELEVATION	EL STATION	OFFSET
1	BL-1	733916.9490	1227688.0020	1161.29	OUT OF PROJECT LIMIT	
2	BL-2	733650.0750	1227893.1380	1148.80	12+36.71	12.76 LT
3	BL-3	733450.2198	1228026.5537	1161.33	OUT OF PROJECT LIMIT	

BM1 ELEVATION = 1148.11'
N 733636.64 E 1227890.57
BL STATION 7+30.54 9.60' LEFT
RR SPIKE IN 14" BLACK WALNUT TREE

5/14/99

9:26:41 AM
NCDOT Div.13 Bridges\007\Roadway\Proj\11007_ls_psh.dgn
bgross

6/2/99

PROJECT REFERENCE NO.	SHEET NO.
17.BPJ3.R.40	2

ROADWAY DESIGN ENGINEER

PAVEMENT DESIGN ENGINEER





PLANS PREPARED BY:

Mattern & Craig
CONSULTING ENGINEERS - SURVEYORS
12 BROAD STREET
ASHEVILLE, NORTH CAROLINA 28801
(828) 254-2201 - FAX (828) 254-4562

PAVEMENT SCHEDULE

ITEM	DESCRIPTION	ITEM	DESCRIPTION
C1	PROP. APPROX. 3" ASPHALT CONCRETE SURFACE COURSE, TYPE SF9.5A, AT AN AVERAGE RATE OF 165 LBS. PER SQ. YD. IN EACH OF 2 LAYERS.	T	EARTH MATERIAL.
E1	PROP. APPROX. 5" ASPHALT CONCRETE BASE COURSE, TYPE B25.0B, AT AN AVERAGE RATE OF 570 LBS. PER SQ. YD.	J1	PROP. 8" AGGREGATE BASE COURSE

NOTE: ALL PAVEMENT EDGE SLOPES ARE TO BE 1:1

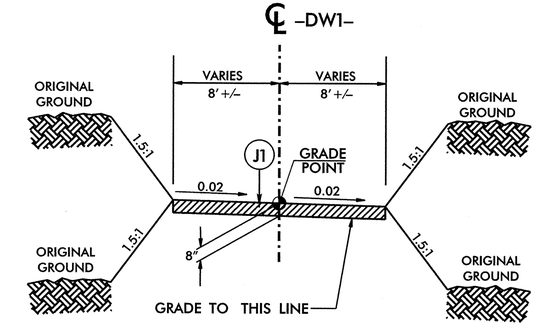

TYPICAL DRIVEWAY SECTION

-DW1- STA. 10+10.00 TO STA. 10+45

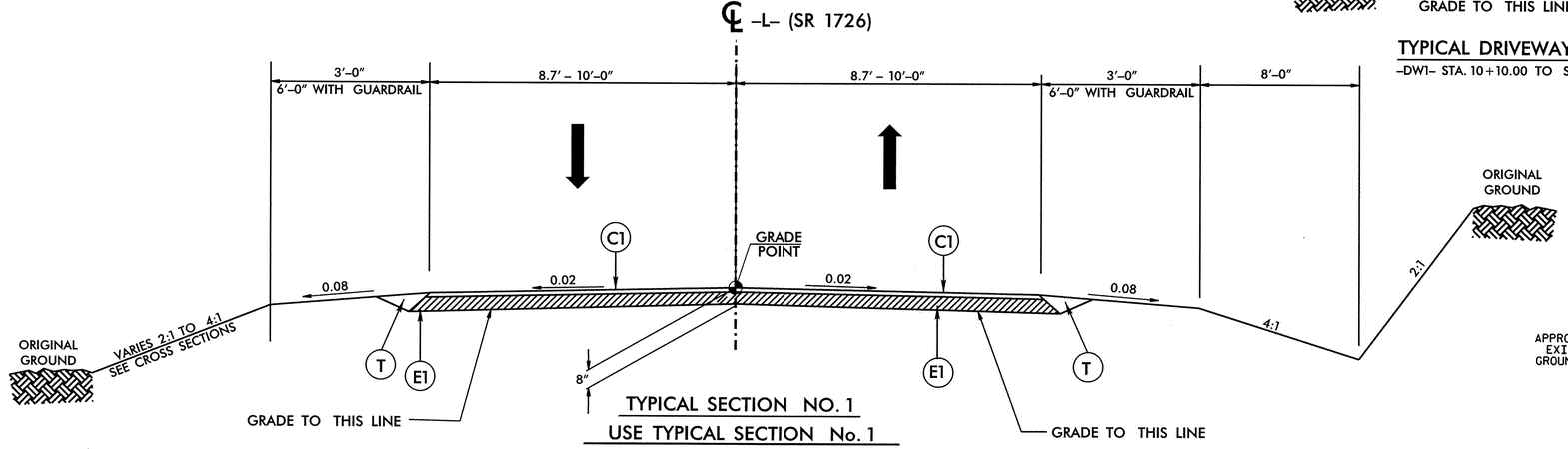

TYPICAL SECTION NO. 1

USE TYPICAL SECTION No. 1

-L- STA. 11+25.00 TO STA. 11+98.18 (Begin Culvert)
-L- STA. 12+23.72 (End Culvert) TO STA. 13+00.00

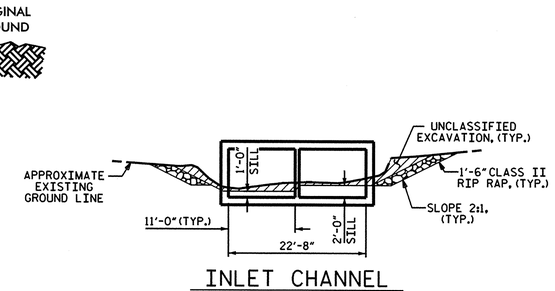

INLET CHANNEL

LOOKING DOWNSTREAM

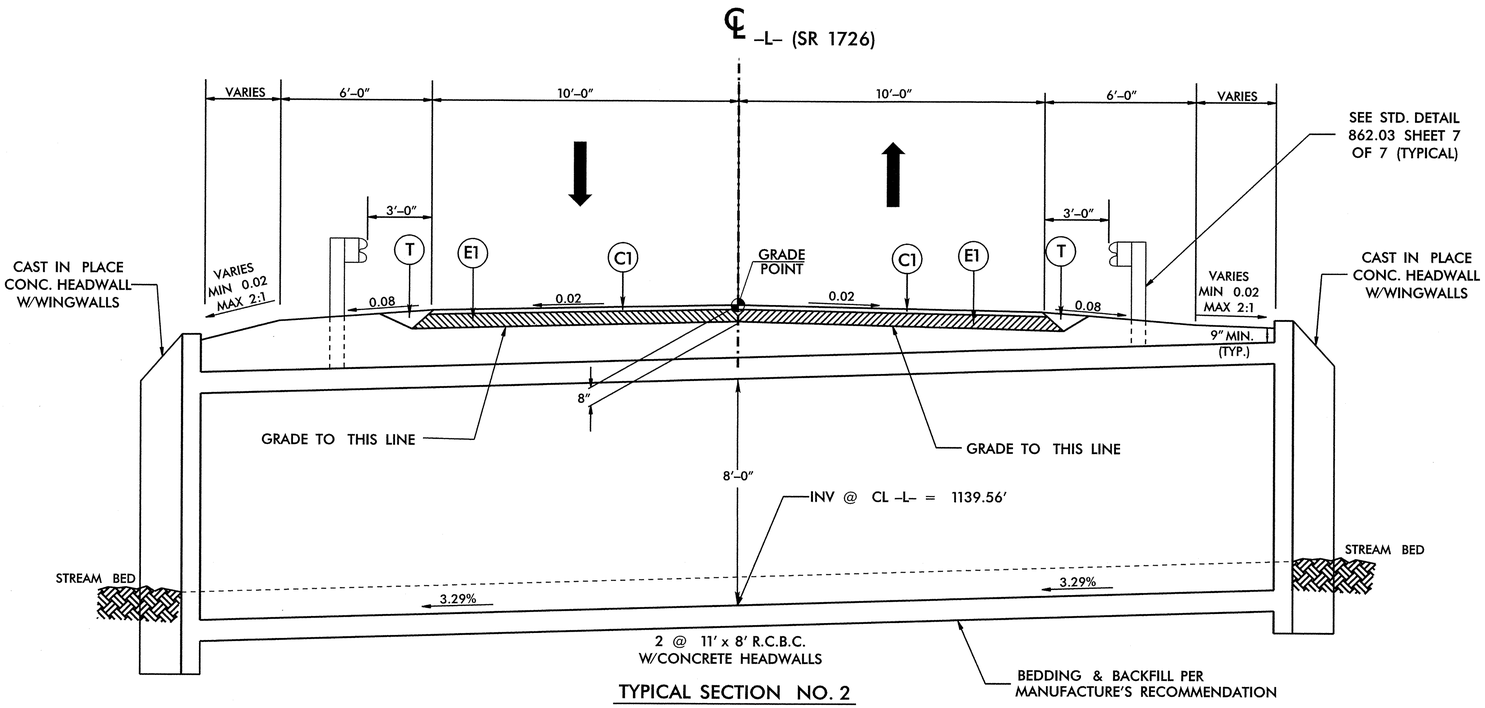

TYPICAL SECTION NO. 2

USE TYPICAL SECTION No. 2

-L- STA. 11+98.18 (Begin Culvert) TO STA. 12+23.72 (End Culvert)

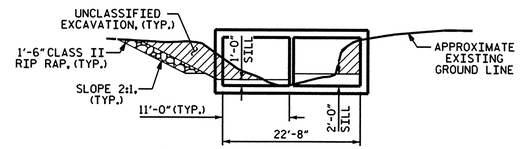

OUTLET CHANNEL

LOOKING DOWNSTREAM

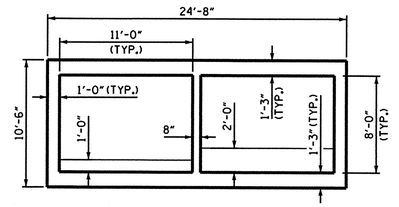

RIGHT ANGLE SECTION OF CONCRETE BOX CULVERT

NOTE:
PLACE SILLS ONE FOOT INSIDE OF INLET AND OUTLET OF BOTH BARRELS. PLACE TWO ADDITIONAL EVENLY SPACED SILLS IN LOW FLOW BARREL. BACKFILL WITH NATURAL BED MATERIAL SIMILAR IN SIZE TO CLASS 'B' RIP RAP. SUBSTITUTE WITH CLASS 'B' RIP RAP IF NEEDED.

8:40:20 AM
R:\3260 (NCDOT Dw\12 Roadway\00 Roadway\Proj\11007_rdy_typ.dgn
Proposed 11/2007 DRW/TB/ASB/BCS WIP/JBV

6/21/00

COMPUTED BY: BGR DATE: 12-19-12
CHECKED BY: JBV DATE: 12-19-12

PROJECT REFERENCE NO.	SHEET NO.
17BPJ4.R.40	3

"N" = DISTANCE FROM EDGE OF LANE TO FACE OF GUARDRAIL.
TOTAL SHOULDER WIDTH = DISTANCE FROM EDGE OF TRAVEL LANE TO SHOULDER BREAK POINT.
FLARE LENGTH = DISTANCE FROM LAST SECTION OF PARALLEL GUARDRAIL TO END OF GUARDRAIL.
W = TOTAL WIDTH OF FLARE FROM BEGINNING OF TAPER TO END OF GUARDRAIL.
G = GATING IMPACT ATTENUATOR TYPE 350
NG = NON-GATING IMPACT ATTENUATOR TYPE 350

STATE OF NORTH CAROLINA
DIVISION OF HIGHWAYS

GUARDRAIL SUMMARY

SURVEY LINE	BEG. STA.	END STA.	LOCATION	LENGTH: STRAIGHT	LENGTH: SHOP CURVED	LENGTH: DOUBLE FACED	WARRANT POINT: APPROACH END	WARRANT POINT: TRAILING END	"N" DIST. FROM E.O.L.	TOTAL SHOUL. WIDTH	FLARE LENGTH: APPROACH END	FLARE LENGTH: TRAILING END	W: APPROACH END	W: TRAILING END	ANCHORS: XI MOD	XI	GRAU 350 TYPE TL-2	M-350	TYPE III	CAT-1	VI MOD	BIC	AT-1	IMPACT ATTENUATOR TYPE 350: EA	G	NG	SINGLE FACED GUARDRAIL	REMOVE EXISTING GUARDRAIL	REMOVE AND STOCKPILE EXISTING GUARDRAIL	REMARKS
-L-	11+65	12.41	LT	65	35		CULVERT	CULVERT	3.00	6	31.25	N/A	0.625	N/A			1						1							
-L-	11+55	12+55	RT	100			CULVERT	CULVERT	3.00	6	31.25	31.25	0.625	0.625			2													
			TOTAL	165													3						1							
			DEDUCT ANCHORS																											
			GRAU 350 TYPE TL-2 - 25.00	-75																										
			AT-1 - 6.25		-6.25																									
			TOTAL	90	28.75																									
ADDITIONAL GUARDRAIL POSTS = 10			SAY	100	37.5												3						1							

LIST OF PIPES, ENDWALLS, ETC. (FOR PIPES 48" & UNDER)

| STATION | LOCATION (LT,RT, OR CL) | STRUCTURE NO. FROM | STRUCTURE NO. TO | TOP ELEVATION | INVERT ELEVATION | INVERT ELEVATION | SLOPE CRITICAL | DRAINAGE PIPE (RCP, CSP, CAAP, HDPE, or PVC): 12" | 15" | 18" | 24" | 30" | 36" | 42" | 48" | C.S. PIPE (UNLESS NOTED OTHRWISE): 12" | 15" | 18" | 24" | 30" | 36" | 42" | 117" x 79" C.S. PIPE ARCH | CLASS III R.C. PIPE (UNLESS OTHERWISE NOTED): 12" | 15" | 18" | 24" | 30" | 36" | 42" | 48" | 15" SIDE DRAIN PIPE | 18" SIDE DRAIN PIPE | 24" SIDE DRAIN PIPE | ENDWALLS: STD. 838.01, STD. 838.11 OR STD. 838.80 (UNLESS NOTED OTHERWISE) CU. YDS. R.C.P. | ENDWALLS: STD. 838.01, STD. 838.11 OR STD. 838.80 (UNLESS NOTED OTHERWISE) CU. YDS. C.S.P. | QUANTITIES FOR JUNCTION BOX STRUCTURES * TOTAL L.F. FOR PAY QUANTITY STA. (LT COL. + X + (1.3 X COL. B') PER EACH (0' THRU 5.0') | LIN. FT. A: 5.0' THRU 10.0' | LIN. FT. B: 10.0' AND ABOVE | C.B. STD. 840.01 OR STD. 840.02 | FRAME, GRATES AND HOOD STANDARD 840.03 TYPE OF GRATE E | F | G | D.I. STD. 840.14 OR STD. 840.15 | D.I. FRAME & GRATE STD. 840.16 | G.D.I. TYPE "A" STD. 840.17 OR 840.26 | G.D.I. TYPE "B" STD. 840.18 OR 840.27 | G.D.I. TYPE "D" STD. 840.19 OR 840.28 | G.D.I. FRAME WITH GRATE STD. 840.22 | G.D.I. FRAME WITH TWO GRATES STD. 840.22 | G.D.I. (N.S.) FRAME WITH GRATE STD. 840.24 | G.D.I. (N.S.) FRAME WITH TWO GRATES STD. 840.24 | J.B. STD. 840.31 OR 840.32 | CORR. STEEL ELBOWS NO. & SIZE | CONC. COLLARS CL. "B" C.Y. STD. 840.72 | CONC. & BRICK PIPE PLUG, C.Y. STD. 840.71 | PIPE REMOVAL LIN.FT. | REMARKS |
|---|---|---|---|---|---|---|---|---|---|---|---|---|---|---|---|---|---|---

PROJECT REFERENCE NO.	SHEET NO.
17BPJ3.R.40	4
R/W SHEET NO.	

ROADWAY DESIGN ENGINEER

NORTH CAROLINA PROFESSIONAL SEAL 026599 ENGINEER JAMES B. VOSO

HYDRAULICS ENGINEER

NORTH CAROLINA PROFESSIONAL SEAL 028545 ENGINEER 5-12-11 DANIEL J. GOLDEN

Prepared in the Office of:

Mattern & Craig
CONSULTING ENGINEERS - SURVEYORS
12 BROAD STREET
ASHEVILLE, NORTH CAROLINA 28801
(828) 254-2201 - FAX (828) 254-4562

50 25 0 50 100
SCALE

REVISIONS

8/17/99

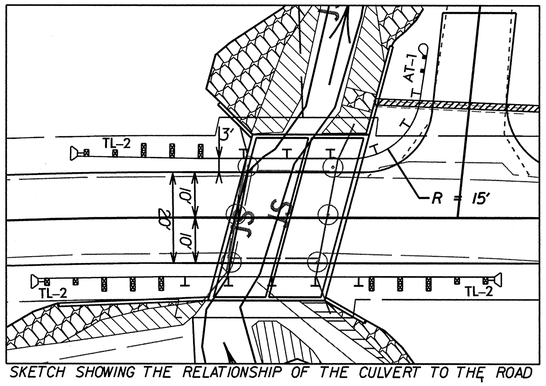

SKETCH SHOWING THE RELATIONSHIP OF THE CULVERT TO THE ROAD

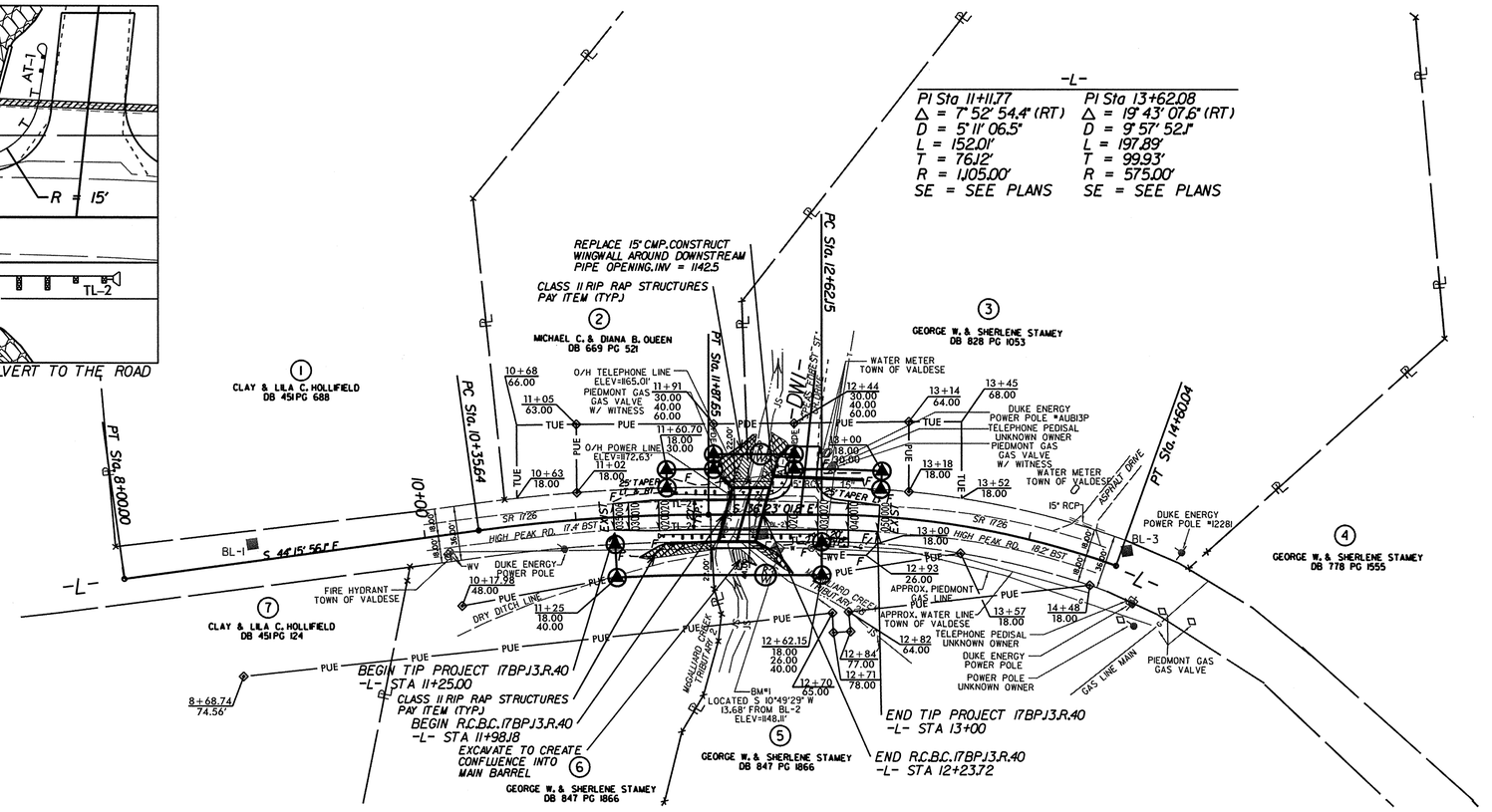

BRIDGE HYDRAULIC DATA

DESIGN DISCHARGE	= 650	CFS
DESIGN FREQUENCY	= 25	YRS
DESIGN HW ELEVATION	= 1146.5	FT
BASE DISCHARGE	= 950	CFS
BASE FREQUENCY	= 100	YRS
BASE HW ELEVATION	= 1147.72	FT
OVERTOPPING DISCHARGE	= 1475	CFS
OVERTOPPING FREQUENCY	= 500+	YRS
OVERTOPPING ELEVATION	= 1150.0	FT
DATE OF SURVEY	= 11-5-09	
W.S. ELEVATION AT DATE OF SURVEY	= 1141.24	FT

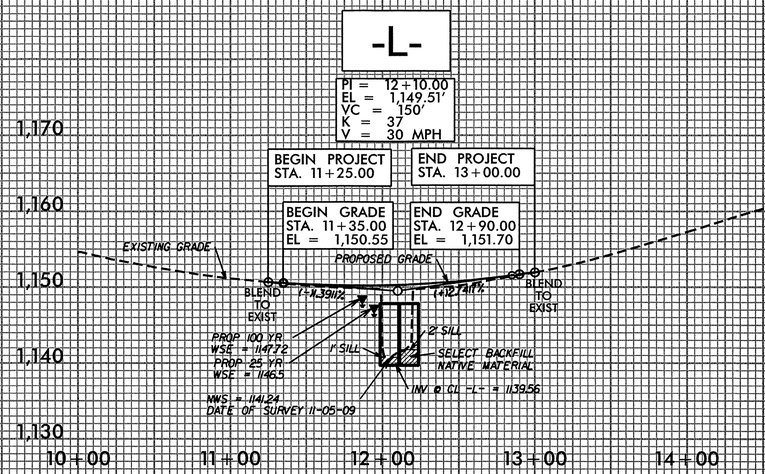

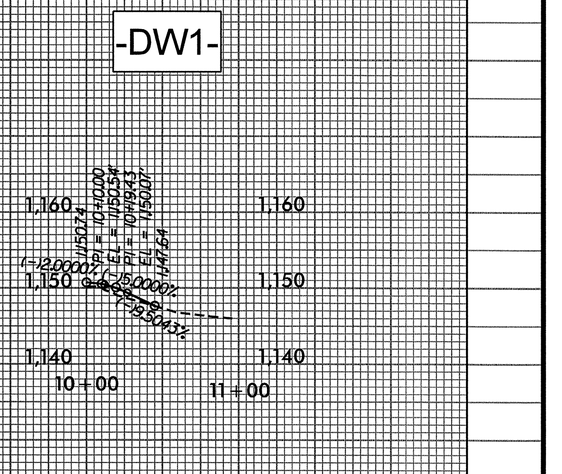

10/04/25 AM
R:\3300 NCDOT Div. 13 Bridges\007\Roadway\Pr-dy\11007_r-dy_psh.dgn

STATE OF NORTH CAROLINA
DIVISION OF HIGHWAYS

TRANSPORTATION MANAGEMENT PLAN

BURKE COUNTY

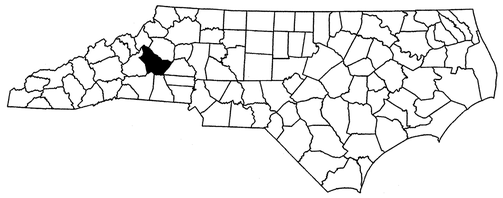

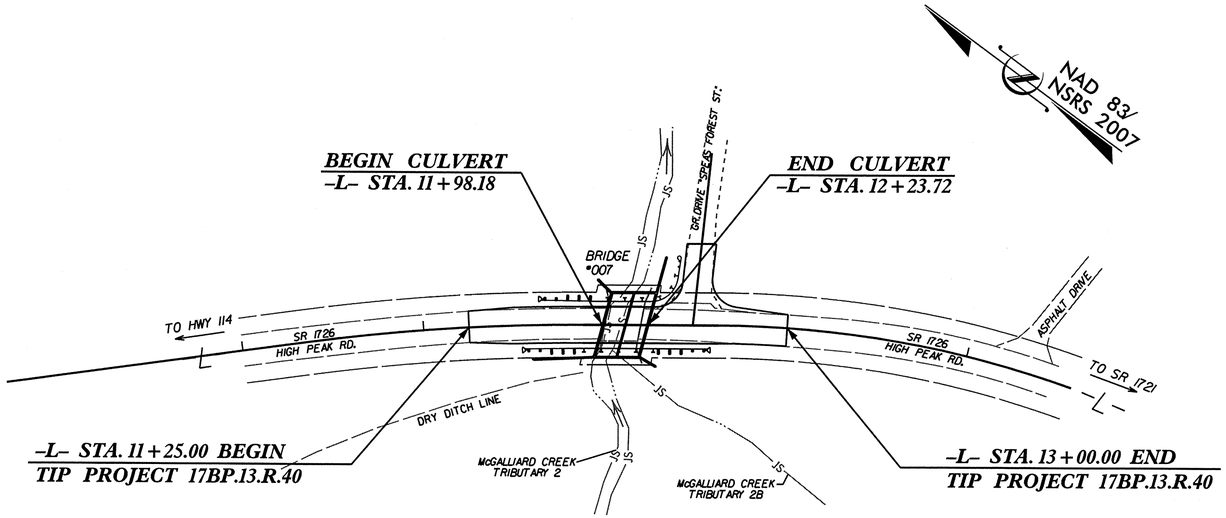

INDEX OF SHEETS

SHEET NO.	TITLE
TMP-1	TITLE SHEET, AND INDEX OF SHEETS
TMP-1A	LIST OF APPLICABLE ROADWAY STANDARD DRAWINGS, AND LEGEND
TMP-1B	TRANSPORTATION OPERATIONS PLAN: (MANAGEMENT STRATEGIES, GENERAL NOTES AND LOCAL NOTES)
TMP-2	TEMPORARY TRAFFIC CONTROL DETOUR
PMP-1	PAVEMENT MARKING PLAN

SHEET NO.
TMP-1

17BP.13.R.40

TIP PROJECT:



WORK ZONE SAFETY & MOBILITY
"from the MOUNTAINS to the COAST"

N.C.D.O.T. WORK ZONE TRAFFIC CONTROL
1561 MAIL SERVICE CENTER (MSC) RALEIGH, NC 27699-1561
750 N. GREENFIELD PARKWAY, GARNER, NC 27529 (DELIVERY)
PHONE: (919) 773-2800 FAX: (919) 771-2745

J. S. BOURNE, P.E. — *STATE TRAFFIC MANAGEMENT ENGINEER*
JAMES VOSO, P.E. — *TRAFFIC CONTROL PROJECT ENGINEER*
JASON SNAPP, P.E. — *TRAFFIC CONTROL PROJECT DESIGN ENGINEER*
BRIAN ROSS — *TRAFFIC CONTROL DESIGN ENGINEER*

DIVISION OF HIGHWAYS * STATE OF NORTH CAROLINA * DEPARTMENT OF TRANSPORTATION * WORK ZONE TRAFFIC CONTROL

Mattern & Craig
CONSULTING ENGINEERS - SURVEYORS
12 BROAD STREET
ASHEVILLE, NORTH CAROLINA 28801
(828) 254-2201 - FAX (828) 254-4562

APPROVED: James Voso
DATE: 5/12/14

SEAL

NORTH CAROLINA PROFESSIONAL SEAL 022599 ENGINEER JAMES B. VOSO

10:05:25 AM
R:\3280 NCDOT Div.13 Bridges\007\Traffic\TrafficControl\Roadway\I007_tc_tsh.dgn
Dgross

PROJ. REFERENCE NO.	SHEET NO.
17BP.13.R.40	TMP-1A

ROADWAY STANDARD DRAWINGS

THE FOLLOWING ROADWAY STANDARDS AS SHOWN IN "ROADWAY STANDARD DRAWINGS" - PROJECT SERVICES UNIT - N.C. DEPARTMENT OF TRANSPORTATION - RALEIGH, N.C., DATED JANAUARY 2012 ARE APPLICABLE TO THIS PROJECT AND BY REFERENCE HEREBY ARE CONSIDERED A PART OF THESE PLANS:

STD. NO.	TITLE
1101.03	TEMPORARY ROAD CLOSURES
1110.01	STATIONARY WORK ZONE SIGNS
1145.01	BARRICADES
1205.01	PAVEMENT MARKINGS - LINE TYPES AND OFFSETS
1205.02	PAVEMENT MARKINGS - TWO LANE AND MULTILANE ROADWAYS
1205.12	PAVEMENT MARKINGS - BRIDGES
1261.01	GUARDRAIL AND BARRIER DELINEATORS - INSTALLATION SPACING
1261.02	GUARDRAIL AND BARRIER DELINEATORS - TYPES AND MOUNTING
1262.01	GUARDRAIL END DELINEATION

LEGEND

GENERAL

- DIRECTION OF TRAFFIC FLOW
- DIRECTION OF PEDESTRIAN TRAFFIC FLOW
- EXIST. PVMT.
- NORTH ARROW
- PROPOSED PVMT.
- WORK AREA
- REMOVAL
- USER DEFINED (IF NEEDED)
- USER DEFINED (IF NEEDED)

TRAFFIC CONTROL DEVICES

- BARRICADE (TYPE III)
- CONE
- DRUM SKINNY DRUM TUBULAR MARKER
- TEMPORARY CRASH CUSHION
- FLASHING ARROW BOARD
- FLAGGER
- LAW ENFORCEMENT
- TRUCK MOUNTED ATTENUATOR (TMA)
- CHANGEABLE MESSAGE SIGN

TEMPORARY SIGNING

- PORTABLE SIGN
- STATIONARY SIGN
- STATIONARY OR PORTABLE SIGN

SIGNALS

EXISTING PROPOSED TEMPORARY (TEMP)

PAVEMENT MARKINGS

- EXISTING LINES
- TEMPORARY LINES

PAVEMENT MARKERS

- CRYSTAL/CRYSTAL
- CRYSTAL/RED
- YELLOW/YELLOW

PAVEMENT MARKING SYMBOLS

PAVEMENT MARKING SYMBOLS

Mattern & Craig
CONSULTING ENGINEERS - SURVEYORS
12 BROAD STREET
ASHEVILLE, NORTH CAROLINA 28801
(828) 254-2201 - FAX (828) 254-4562

APPROVED: _____ DATE: 5/12/14

NORTH CAROLINA PROFESSIONAL SEAL 022599 ENGINEER JAMES B. VOSO

DIVISION OF HIGHWAYS * STATE OF NORTH CAROLINA * DEPARTMENT OF TRANSPORTATION * WORK ZONE TRAFFIC CONTROL

ROADWAY STANDARD DRAWINGS & LEGEND

10:05:51 AM
R:\3280 NCDOT Div.13 Bridges\007\Traffic\TrafficControl\Roadway\1007_tc_tsh.dgn
bgross

PROJ. REFERENCE NO.	SHEET NO.
17BP.13.R.40	TMP-1B

GENERAL NOTES / LOCAL NOTES

GENERAL NOTES

CHANGES MAY BE REQUIRED WHEN PHYSICAL DIMENSIONS IN THE DETAIL DRAWINGS, STANDARD DETAILS, AND ROADWAY DETAILS ARE NOT ATTAINABLE TO MEET FIELD CONDITIONS OR RESULT IN DUPLICATE OR UNDESIRED OVERLAPPING OF DEVICES, MODIFICATION MAY INCLUDE: MOVING, SUPPLEMENTING, COVERING, OR REMOVAL OF DEVICES AS DIRECTED BY THE ENGINEER

THE FOLLOWING GENERAL NOTES APPLY AT ALL TIMES FOR THE DURATION OF THE CONSTRUCTION PROJECT, EXCEPT WHEN OTHERWISE NOTED IN THE PLAN, OR DIRECTED BY THE ENGINEER.

TRAFFIC PATTERN ALTERATIONS

A. NOTIFY THE ENGINEER TWENTY ONE (21) CALENDAR DAYS PRIOR TO ANY TRAFFIC PATTERN ALTERATION.

SIGNING

B. INSTALL ADVANCE WORK ZONE WARNING SIGNS WHEN WORK IS WITHIN 40 FT FROM THE EDGE OF TRAVEL LANE AND NO MORE THAN THREE (3) DAYS PRIOR TO THE BEGINNING OF CONSTRUCTION.

C. CONTRACTOR TO PROVIDE SIGNING AND DEVICES REQUIRED TO CLOSE THE ROAD ACCORDING TO THE ROADWAY STANDARD DRAWINGS AND TRAFFIC CONTROL PLANS.

CONTRACTOR TO PROVIDE SIGNING REQUIRED FOR THE OFF-SITE DETOUR ROUTE AS SHOWN IN THE TRAFFIC CONTROL PLANS.

D. CONTRACTOR TO COVER OR REMOVE ALL SIGNS AND DEVICES REQUIRED TO CLOSE THE ROAD WHEN ROAD CLOSURE IS NOT IN OPERATION.

CONTRACTOR TO COVER OR REMOVE ALL SIGNS AND DEVICES REQUIRED FOR THE OFF-SITE DETOUR WHEN THE DETOUR IS NOT IN OPERATION.

E. ENSURE ALL NECESSARY SIGNING IS IN PLACE PRIOR TO ALTERING ANY TRAFFIC PATTERN.

TRAFFIC CONTROL DEVICES

F. PLACE TYPE III BARRICADES, WITH "ROAD CLOSED" SIGN R11-2 ATTACHED, OF SUFFICIENT LENGTH TO CLOSE ENTIRE ROADWAY.

PAVEMENT MARKINGS AND MARKERS

G. TIE PROPOSED PAVEMENT MARKING LINES TO EXISTING PAVEMENT MARKING LINES

LOCAL NOTES

CONTRACTOR TO MAINTAIN DRIVEWAY ACCESS AT ALL TIMES.

Mattern & Craig
CONSULTING ENGINEERS - SURVEYORS
12 BROAD STREET
ASHEVILLE, NORTH CAROLINA 28801
(828) 254-2201 - FAX (828) 254-4562

APPROVED: [signature] DATE: 5/12/14

NORTH CAROLINA PROFESSIONAL SEAL 022599 ENGINEER JAMES B. VOSO

DIVISION OF HIGHWAYS STATE OF NORTH CAROLINA DEPARTMENT OF TRANSPORTATION WORK ZONE TRAFFIC CONTROL

TRANSPORTATION OPERATIONS PLAN

10:06:17 AM
R:\3280 NCDOT Div.13 Bridges\007\Traffic\TrafficControl\Roadway\11007_tc_tsh.dgn
bgross

PROJ. REFERENCE NO.	SHEET NO.
17BP.14.R.40	TMP-2

DETOUR ROUTE

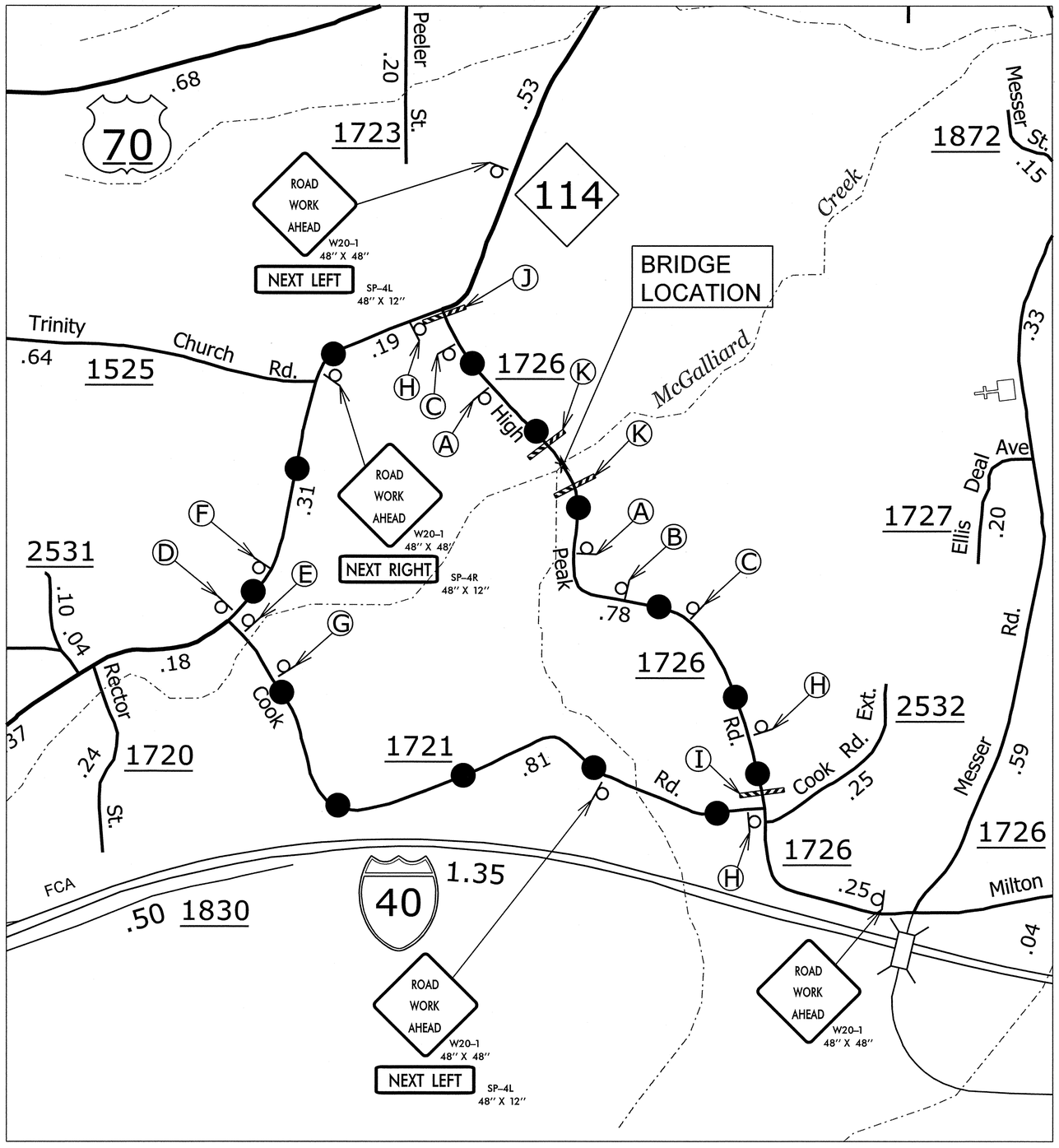

ASSEMBLY A

ROAD CLOSED 500 FT
W20-3
48" X 48"

ASSEMBLY B

ROAD CLOSED 1000 FT
W20-3
48" X 48"

ASSEMBLY C

ROAD CLOSED AHEAD
W20-3
48" X 48"

ASSEMBLY D

DETOUR M4-8 24" X 12"

M6-1 L 21" X 15"

ASSEMBLY E

DETOUR M4-8 24" X 12"

M6-1 21" X 15"

ASSEMBLY F

DETOUR M4-8 24" X 12"

M5-1 21" X 15"

ASSEMBLY G

DETOUR M4-8 24" X 12"

M5-1 R 21" X 15"

ASSEMBLY H

END DETOUR M4-8 A 24" X 18"

ASSEMBLY I

R11-4
60" x 30"

ROAD CLOSED TO THRU TRAFFIC
DETOUR
M4-10L
48" x 18"

TYPE III BARRICADE

ASSEMBLY J

R11-4
60" x 30"

ROAD CLOSED TO THRU TRAFFIC
DETOUR
M4-10R
48" x 18"

TYPE III BARRICADE

ASSEMBLY K

R11-2
48" x 30"

ROAD CLOSED

TYPE III BARRICADE(S)

REFER TO RSD 1101.03 FOR SIGN SPACING (SHEET 1 OF 9)

Mattern & Craig
CONSULTING ENGINEERS - SURVEYORS
12 BROAD STREET
ASHEVILLE, NORTH CAROLINA 28801
(828) 254-2201 - FAX (828) 254-4562

APPROVED: _____ DATE: 5/12/14

NORTH CAROLINA PROFESSIONAL SEAL 022599 ENGINEER JAMES B. VOSO

DIVISION OF HIGHWAYS · STATE OF NORTH CAROLINA · DEPARTMENT OF TRANSPORTATION · WORK ZONE TRAFFIC CONTROL

TEMPORARY DETOUR DETAIL

PROJ. REFERENCE NO.	SHEET NO.
17BP.13.R.40	PMP-1

NAD 83/
NSRS 2007

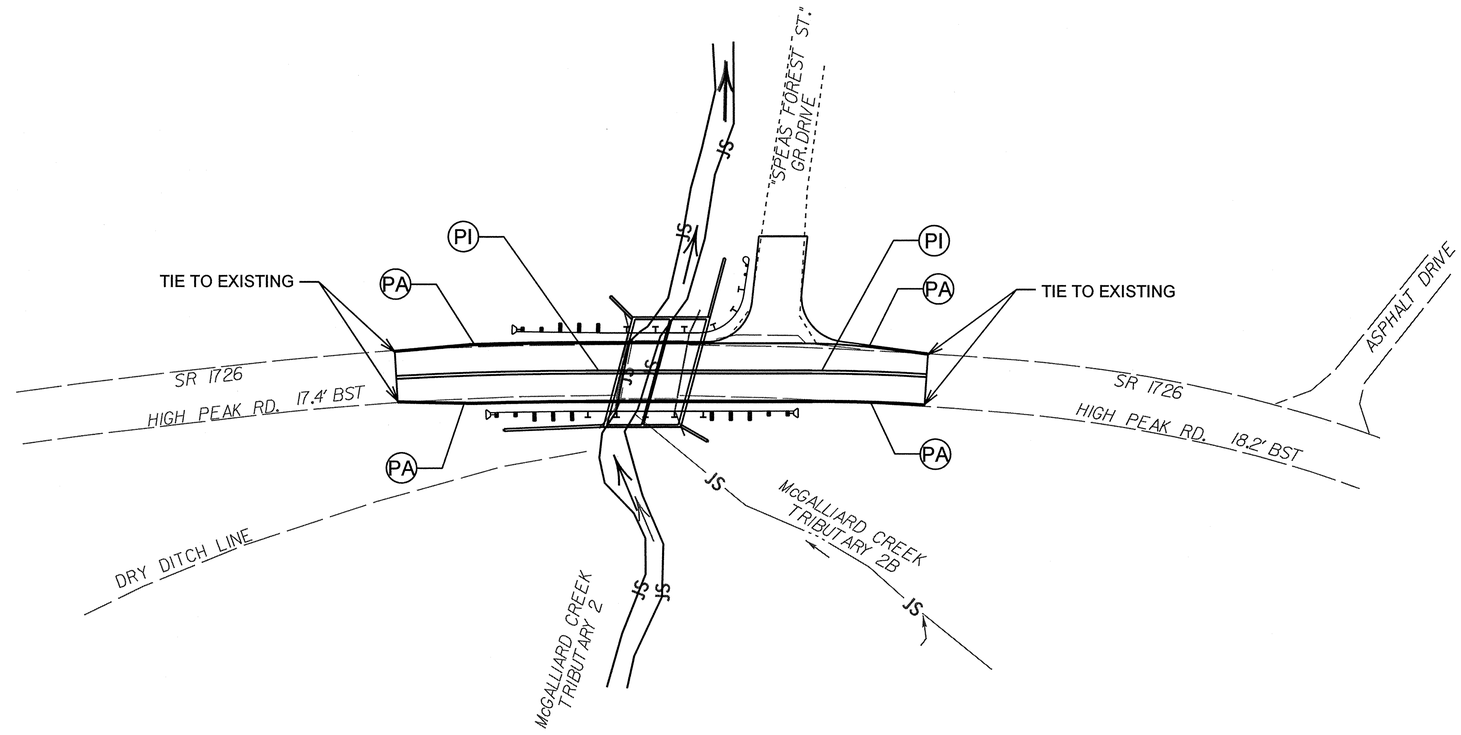

LEGEND

PA WHITE EDGELINE
PI YELLOW DOUBLE CENTER

PROJECT MARKING SCHEDULE
BRIDGE 007

SYMBOL	DESCRIPTION	PAY ITEM	PAY ITEM QUANTITY
PA	WHITE EDGELINE	PAINT (4") (DOUBLE COAT)	700 LF
PI	DOUBLE YELLOW CENTER	PAINT (4") (DOUBLE COAT)	350 LF

GRAPHIC SCALE
25' 0' 25' 50'
100'
PLANS

Mattern & Craig
SINCE 1978
CONSULTING ENGINEERS - SURVEYORS
12 BROAD STREET
ASHEVILLE, NORTH CAROLINA 28801
(828) 254-2201 - FAX (828) 254-4562

APPROVED: _____ DATE: 5/12/14

NORTH CAROLINA PROFESSIONAL SEAL 022599 ENGINEER JAMES B. VOSO

DIVISION OF HIGHWAYS * STATE OF NORTH CAROLINA * DEPARTMENT OF TRANSPORTATION * WORK ZONE TRAFFIC CONTROL

PAVEMENT MARKING PLAN

10:08:08 AM
R:\3280 NCDOT Div. 13 Bridges\007\Traffic\TrafficControl\Roadway\tl007_tc_pmp.dgn
bgross

PROJECT NO: 17BP.13.R.40

STATE	STATE PROJECT REFERENCE NO.	SHEET NO.	TOTAL SHEETS
N.C.	17BP.13.R.40	EC-1	

STATE PROJ. NO.	F. A. PROJ. NO.	DESCRIPTION

STATE OF NORTH CAROLINA
DIVISION OF HIGHWAYS

PLAN FOR PROPOSED
HIGHWAY EROSION CONTROL

BURKE COUNTY

LOCATION: BRIDGE NO. 007 OVER McGALLIARD CREEK, TRIB. 2 ON SR 1726 (HIGH PEAK RD.)

TYPE OF WORK: GRADING, DRAINAGE, PAVING, & STRUCTURE

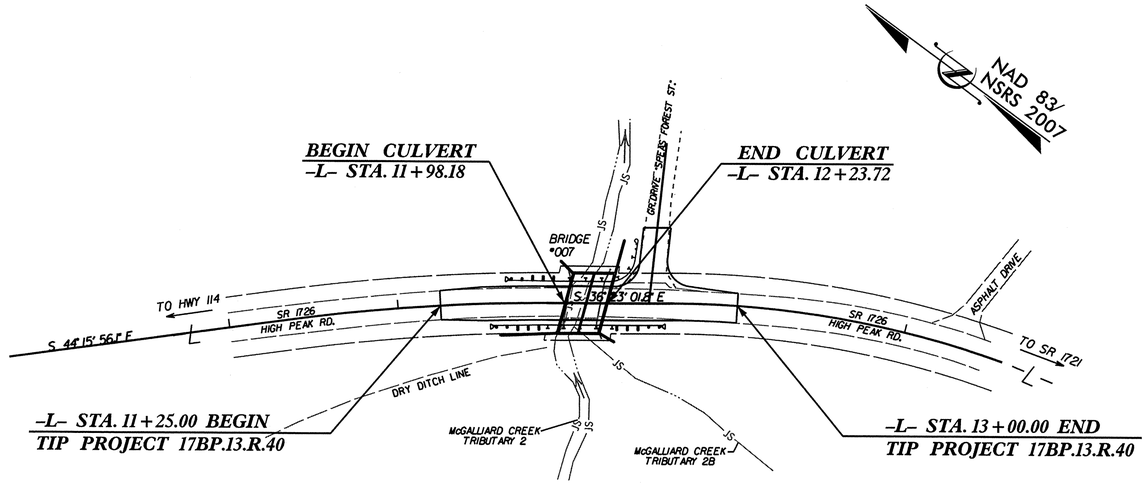

EROSION AND SEDIMENT CONTROL MEASURES

Std. #	Description	Symbol
1630.03	Temporary Silt Ditch	TSD
1630.05	Temporary Diversion	TD
1605.01	Temporary Silt Fence	
1606.01	Special Sediment Control Fence	
1622.01	Temporary Berms and Slope Drains	
1630.02	Silt Basin Type B	
1633.01	Temporary Rock Silt Check Type-A	
	Temporary Rock Silt Check Type-A with Matting and Polyacrylamide (PAM)	
1633.02	Temporary Rock Silt Check Type-B	
	Wattle / Coir Fiber Wattle	ST CFW
	Wattle / Coir Fiber Wattle with Polyacrylamide (PAM)	
1634.01	Temporary Rock Sediment Dam Type-A	
1634.02	Temporary Rock Sediment Dam Type-B	
1635.01	Rock Pipe Inlet Sediment Trap Type-A	
1635.02	Rock Pipe Inlet Sediment Trap Type-B	
1630.04	Stilling Basin	
1630.06	Special Stilling Basin	
	Rock Inlet Sediment Trap:	
1632.01	Type A	A
1632.02	Type B	B
1632.03	Type C	C
	Skimmer Basin	
	Tiered Skimmer Basin	
	Infiltration Basin	

THIS PROJECT CONTAINS EROSION CONTROL PLANS FOR CLEARING AND GRUBBING PHASE OF CONSTRUCTION.

THIS PROJECT HAS BEEN DESIGNED TO SENSITIVE WATERSHED STANDARDS.

ENVIRONMENTALLY SENSITIVE AREA(S) EXIST ON THIS PROJECT

Refer To E. C. Special Provisions for Special Considerations.

DANA BOLDEN
LEVEL IIIA NAME

3171
LEVEL IIIA CERTIFICATION NO.

CLEARING ON THIS PROJECT SHALL BE PERFORMED TO THE LIMITS ESTABLISHED BY METHOD II

GRAPHIC SCALE

15 0 30
PLANS

ROADSIDE ENVIRONMENTAL UNIT
DIVISION OF HIGHWAYS
STATE OF NORTH CAROLINA

THESE EROSION AND SEDIMENT CONTROL PLANS COMPLY WITH THE REGULATIONS SET FORTH BY THE NCG-010000 GENERAL CONSTRUCTION PERMIT EFFECTIVE AUGUST 3, 2011 ISSUED BY THE NORTH CAROLINA DEPARTMENT OF ENVIRONMENT AND NATURAL RESOURCES DIVISION OF WATER QUALITY.

Prepared In the Office of:

Mattern & Craig
CONSULTING ENGINEERS - SURVEYORS
12 BROAD STREET
ASHEVILLE, NORTH CAROLINA 28801
(828) 254-2201 - FAX (828) 254-4562

Reviewed In the Office of:

ROADSIDE ENVIRONMENTAL UNIT
1 South Wilmington St.
Raleigh, NC 27611

2012 STANDARD SPECIFICATIONS

Roadway Standard Drawings

The following roadway english standards as appear in "Roadway Standard Drawings"- Roadway Design Unit - N. C. Department of Transportation - Raleigh, N. C., dated January 2012 and the latest revison thereto are applicable to this project and by reference hereby are considered a part of these plans.

1604.01	Railroad Erosion Control Detail	1632.01	Rock Inlet Sediment Trap Type A
1605.01	Temporary Silt Fence	1632.02	Rock Inlet Sediment Trap Type B
1606.01	Special Sediment Control Fence	1632.03	Rock Inlet Sediment Trap Type C
1607.01	Gravel Construction Entrance	1633.01	Temporary Rock Silt Check Type A
1622.01	Temporary Berms and Slope Drains	1633.02	Temporary Rock Silt Check Type B
1630.01	Riser Basin	1634.01	Temporary Rock Sediment Dam Type A
1630.02	Silt Basin Type B	1634.02	Temporary Rock Sediment Dam Type B
1630.03	Temporary Silt Ditch	1635.01	Rock Pipe Inlet Sediment Trap Type A
1630.04	Stilling Basin	1635.02	Rock Pipe Inlet Sediment Trap Type B
1630.05	Temporary Diversion	1640.01	Coir Fiber Baffle
1630.06	Special Stilling Basin	1645.01	Temporary Stream Crossing
1631.01	Matting Installation		

10:13:42 AM
Div. 13 Bridges\007\Environmental\Design\11007_ec_tsh.dgn

PROJECT REFERENCE NO.	SHEET NO.
17BPJ3.R.40	EC-3

DIVISION OF HIGHWAYS
STATE OF NORTH CAROLINA

SOIL STABILIZATION TIMEFRAMES

SITE DESCRIPTION	STABILIZATION TIME	TIMEFRAME EXCEPTIONS
PERIMETER DIKES, SWALES, DITCHES AND SLOPES	7 DAYS	NONE
HIGH QUALITY WATER (HQW) ZONES	7 DAYS	NONE
SLOPES STEEPER THAN 3:1	7 DAYS	IF SLOPES ARE 10' OR LESS IN LENGTH AND ARE NOT STEEPER THAN 2:1, 14 DAYS ARE ALLOWED.
SLOPES 3:1 OR FLATTER	14 DAYS	7 DAYS FOR SLOPES GREATER THAN 50' IN LENGTH.
ALL OTHER AREAS WITH SLOPES FLATTER THAN 4:1	14 DAYS	NONE, EXCEPT FOR PERIMETERS AND HQW ZONES.

PROJECT REFERENCE NO.	SHEET NO.
17BPJ4.R.40	EC-3A

ROADWAY DESIGN ENGINEER

NORTH CAROLINA PROFESSIONAL SEAL 028599 ENGINEER JAMES B. VOSO

HYDRAULICS ENGINEER

NORTH CAROLINA PROFESSIONAL SEAL 028945 ENGINEER DINA J. BOLDEN

DIVISION OF HIGHWAYS
STATE OF NORTH CAROLINA

SOIL STABILIZATION SUMMARY SHEET

MATTING FOR EROSION CONTROL

CONST SHEET NO.	LINE	FROM STATION	TO STATION	SIDE	ESTIMATE (SY)
			SUBTOTAL		0
MISCELLANEOUS MATTING TO BE INSTALLED AS DIRECTED BY THE ENGINEER					600
				TOTAL	600
				SAY	600

PERMANENT SOIL REINFORCEMENT MAT

CONST SHEET NO.	LINE	FROM STATION	TO STATION	SIDE	ESTIMATE (SY)
			SUBTOTAL		0
		ADDITIONAL PSRM TO BE INSTALLED			0
				TOTAL	0
				SAY	0

PROJECT REFERENCE NO.	SHEET NO.
17BP.13.R.40	EC-4
R/W SHEET NO.	

ROADWAY DESIGN ENGINEER

NORTH CAROLINA PROFESSIONAL SEAL 022239 ENGINEER JAMES B. VOSO

HYDRAULICS ENGINEER

NORTH CAROLINA PROFESSIONAL SEAL 028045 ENGINEER DANA J. BOLDEN

NOTES: ANY DEVIATION FROM OPTIONS GIVEN WILL REQUIRE PRIOR APPROVAL BY ENGINEER.

ADDITIONAL EROSION CONTROL DEVICES MAY NEED TO BE INSTALLED AS DIRECTED BY THE ENGINEER.

IF ANY PUMPED DEWATERING IS REQUIRED, A SPECIAL STILLING BASIN SHALL BE PROVIDED AS NEEDED

NOTE: PLACE TEMPORARY ROCK SILT CHECKS TYPE – A AT DRAINAGE OUTLETS.

CLEARING AND GRUBBING EROSION CONTROL FOR CONSTRUCTION SHEET 4

30 15 0 30 60

SCALE

NAD 83/ NSRS 2007

1 CLAY & LILA C. HOLLIFIELD DB 451 PG 688

2 MICHAEL C. & DIANA B. QUEEN DB 669 PG 521

3 GEORGE W. & SHERLENE STAMEY DB 828 PG 1053

4 GEORGE W. & SHERLENE STAMEY DB 778 PG 1555

5 GEORGE W. & SHERLENE STAMEY DB 847 PG 1866

6 GEORGE W. & SHERLENE STAMEY DB 847 PG 1866

7 CLAY & LILA C. HOLLIFIELD DB 451 PG 124

SR 1726 HIGH PEAK RD. 17.4' BST

SR 1726 HIGH PEAK RD. 18.2' BST

SEAS FOREST ST. DR.

ASPHALT DRIVE

15" RCP

FIRE HYDRANT TOWN OF VALDESE

DRY DITCH LINE

McGALLIARD CREEK TRIBUTARY 2

McGALLIARD CREEK TRIBUTARY 2B

11+05 63.00

11+02 18.00

10+17.98 48.00

8+68.74 74.56'

12+70 65.00

12+84 77.00

12+71 78.00

12+82 64.00

13+14 64.00

13+18 18.00

13+57 18.00

14+48 18.00

BEGIN TIP PROJECT 17BP.13.R.40 -L- STA 11+25.00

CLASS II RIP RAP STRUCTURES PAY ITEM (TYP.)

BEGIN R.C.B.C. 17BP.13.R.40 -L- STA 11+98.18

EXCAVATE TO CREATE CONFLUENCE INTO MAIN BARREL

BM#1 LOCATED S 10°49'29" W 13.68' FROM BL-2 ELEV=1148.11'

END TIP PROJECT 17BP.13.R.40 -L- STA 13+00

END R.C.B.C. 17BP.13.R.40 -L- STA 12+23.72

ENVIRONMENTALLY SENSITIVE AREA SEE PROJECT SPECIAL PROVISIONS

PROJECT REFERENCE NO.	SHEET NO.
17BPJ3.R.40	EC-5
R/W SHEET NO.	

ROADWAY DESIGN ENGINEER

NORTH CAROLINA PROFESSIONAL SEAL 042939 ENGINEER JAMES B. VOSO

HYDRAULICS ENGINEER

NORTH CAROLINA PROFESSIONAL SEAL 028945 ENGINEER DIANA V. BOLDEN

NOTES: ANY DEVIATION FROM OPTIONS GIVEN WILL REQUIRE PRIOR APPROVAL BY ENGINEER.

ADDITIONAL EROSION CONTROL DEVICES MAY NEED TO BE INSTALLED AS DIRECTED BY THE ENGINEER.

IF ANY PUMPED DEWATERING IS REQUIRED, A SPECIAL STILLING BASIN SHALL BE PROVIDED AS NEEDED

NOTE: PLACE TEMPORARY ROCK SILT CHECKS TYPE – A AT DRAINAGE OUTLETS.

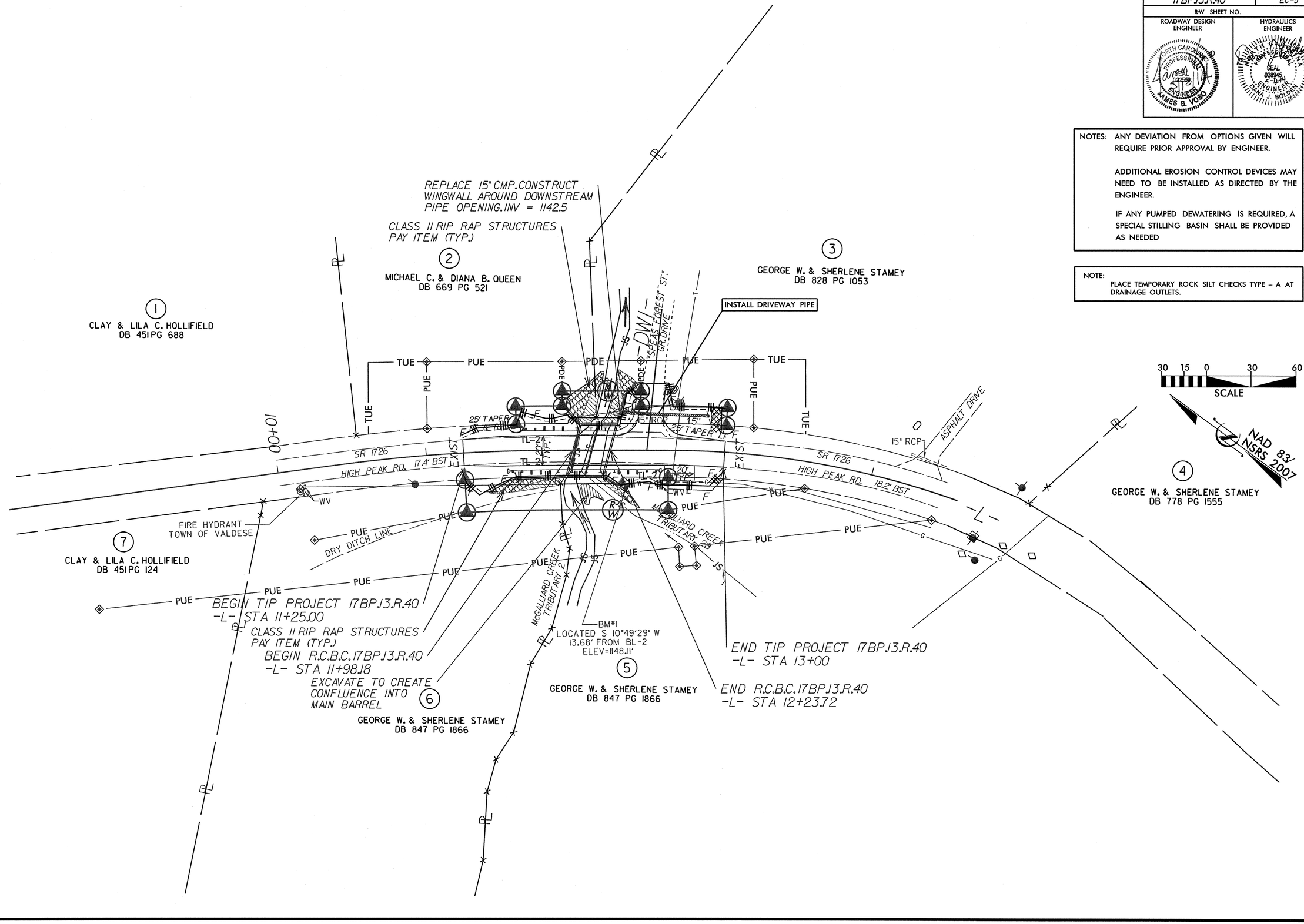

CULVERT CONSTRUCTION SEQUENCE STA. 12+10 -L-

PROJECT REFERENCE NO.	SHEET NO.
17BPJ3.R.40	EC-6
R/W SHEET NO.	

ROADWAY DESIGN ENGINEER

NORTH CAROLINA PROFESSIONAL SEAL 022588 ENGINEER JAMES B. VOSO

HYDRAULICS ENGINEER

SEAL 028945 5-17-12 ENGINEER DANA J. BOLDEN

1. SET UP BYPASS PUMP AND TEMPORARY PIPING ACCORDING TO THE NCDOT "BEST MANAGEMENT PRACTICES FOR CONSTRUCTION AND MAINTENANCE ACTIVITIES" MANUAL.
2. CONSTRUCT IMPERVIOUS DIKES.
3. UTILIZE SPECIAL STILL BASIN AS STILLING BASIN DURING PUMPING OPERATIONS.
4. CONSTRUCT PROPOSED CULVERT AND CHANNEL IMPROVEMENTS UP TO THE IMPERVIOUS DIKES.
5. UPON COMPLETION OF THE CONSTRUCTION, REMOVE IMPERVIOUS DIKES, BYPASS PUMP, AND TEMPORARY PIPE. COMPLETE ROADWAY AND REMAINING CHANNEL IMPROVEMENTS.

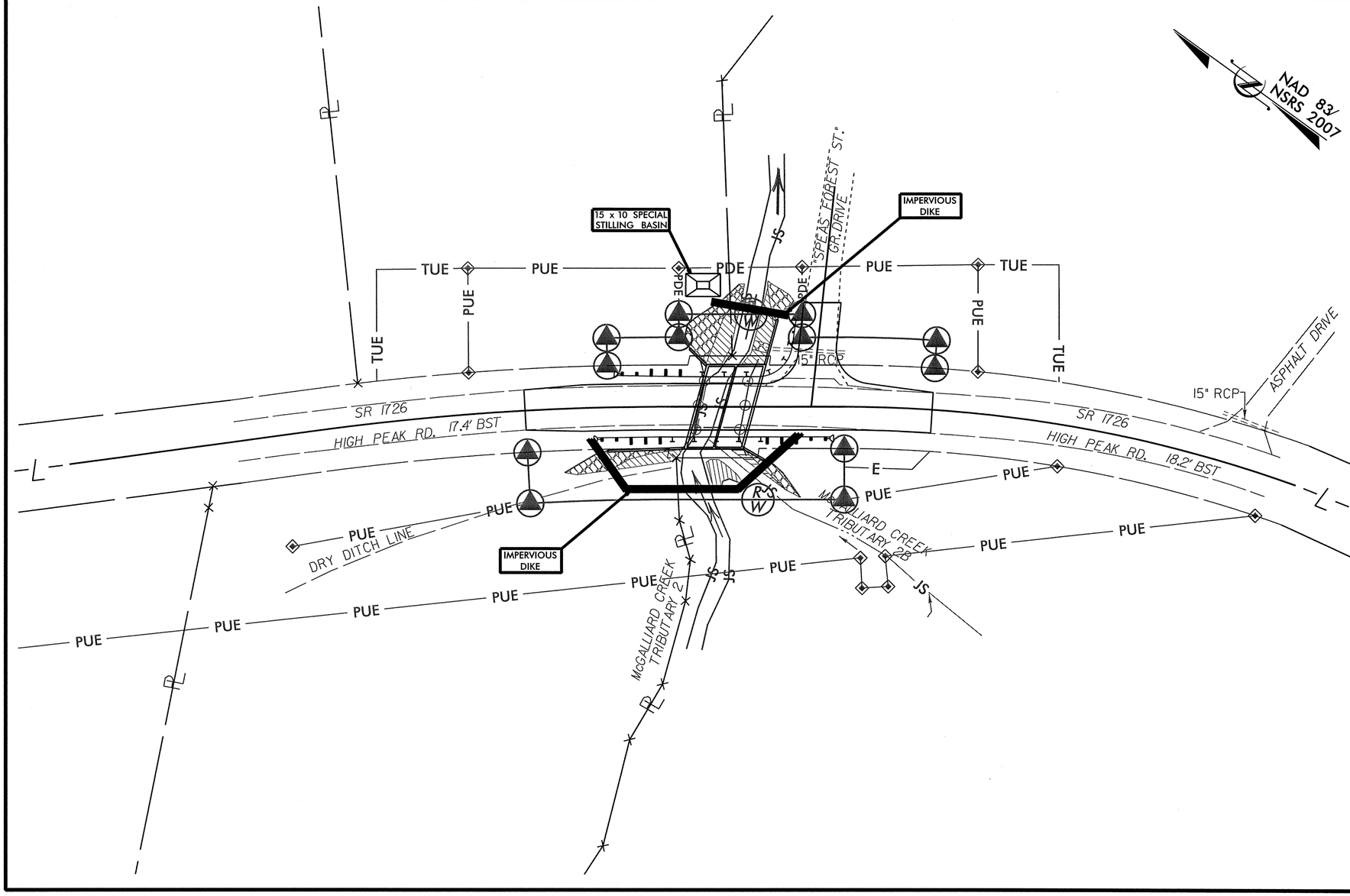

SPECIAL STILLING BASIN:

Description

This work consists of furnishing, placing, and removing special stilling basin(s) as directed. The special stilling basin shall be used to filter pumped water during construction of drilled piers, footing excavation, and/or culvert construction. The special stilling basin shall also be used for sediment storage at the outlet of temporary slope drain pipe(s).

Materials

Refer to Division 10

Item	Section
Filter Fabric for Drainage, Type 2	1056
Sediment Control Stone	1005

The filter fabric and sediment control stone shall be clean and shall not contain debris.

The special stilling basin shall be a water permeable fabric bag that traps sand, silt, and fines as sediment-laden water is pumped into it, or as runoff flows into it through the temporary slope drain pipe(s).

The special stilling basin shall be a bag constructed to a minimum size of 10' x 15' made from a nonwoven fabric. It shall have a sewn-in 8" (maximum) spout for receiving pump discharge. The bag seams shall be sewn with a double needle machine using a high strength thread. The seams shall have a minimum wide width strength as follows:

Test Method	Minimum Specifications
ASTM D-4884	60 lb/in

The fabric used to construct the bag shall be stabilized to provide resistance to ultra-violet degradation and meet the following specifications for flow rates, strength, and permeability:

Property	Test Method	Minimum Specifications
Weight	ASTM D-3776	8.0 oz/yd
Grab tensile	ASTM D-4632	200.0 lb
Puncture	ASTM D-4833	130.0 lb
Flow rate	ASTM D-4491	80.0 gal/min/sf
Permittivity	ASTM D-4491	1.2 1/sec
UV Resistance	ASTM D-4355	70.0%

Construction Methods

The Contractor shall install the special stilling basin(s), filter fabric, and stone in accordance with Standard Drawing No. 1630.06 and at locations on the plans and as directed.

The special stilling basin(s) shall be constructed such that it is portable and can be used adjacent to each drilled pier, footing, and/or culvert. Temporary slope drain pipe(s) shall be attached to the special stilling basin(s) so that the runoff in the slope drain pipe(s) flows directly into the special stilling basin(s). The special stilling basin(s) shall be placed so the incoming water flows into and through the bag without causing erosion. The neck or spout of the bag shall be tied off tightly to stop the water from flowing out of the bag without going through the walls. If applicable, the neck or spout of the silt bag shall be cut to allow for a slope drain pipe to be inserted into the special stilling basin, and tied off tightly to stop the water from flowing out of the bag.

The special stilling basin(s) shall be replaced and disposed of when it is * full of sediment or when it is impractical for the bag to filter the sediment out at a reasonable flow rate. Prior approval from the Engineer shall be received before removal and replacement.

The Contractor shall be responsible for providing a sufficient quantity of bags to contain silt from pumped effluent during construction of drilled piers, footing excavation, and/or culvert construction. A sufficient quantity of special stilling basins shall be provided to contain sediment from temporary slope drain runoff.

STATE	STATE PROJECT REFERENCE NO.	SHEET NO.	TOTAL SHEETS
N.C.	17BP.13.R.40	RF-1	
STATE PROJ. NO.	F. A. PROJ. NO.	DESCRIPTION	

PLANTING DETAILS

SEEDLING / LINER BAREROOT PLANTING DETAIL

HEALING IN

1. Locate a healing-in site in a shady, well protected area.
2. Excavate a flat bottom trench 12 inches deep and provide drainage.

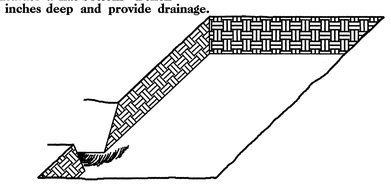

3. Backfill the trench with 2 inches well rotted sawdust. Place a 2 inch layer of well rotted sawdust at a sloping angle at one end of the trench.

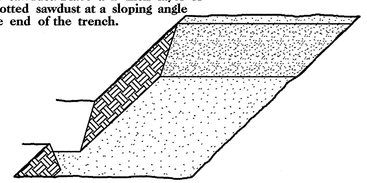

4. Place a single layer of plants against the sloping end so that the root collar is at ground level.

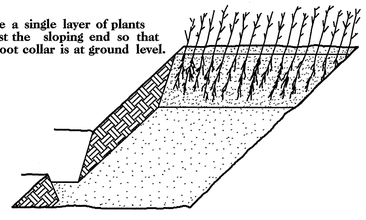

5. Place a 2 inch layer of well rotted sawdust over the roots maintaining a sloping angle.

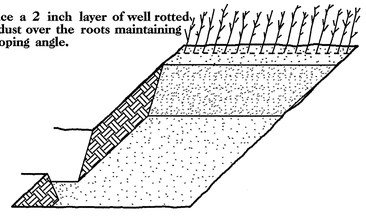

6. Repeat layers of plants and sawdust as necessary and water thoroughly.

DIBBLE PLANTING METHOD USING THE KBC PLANTING BAR

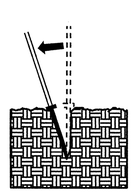

1. Insert planting bar as shown and pull handle toward planter.

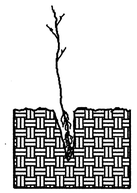

2. Remove planting bar and place seedling at correct depth.

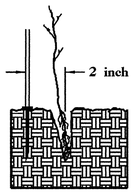

3. Insert planting bar 2 inches toward planter from seedling.

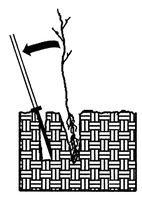

4. Pull handle of bar toward planter, firming soil at bottom.

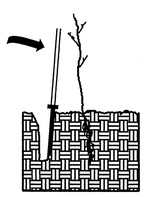

5. Push handle forward firming soil at top.

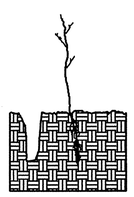

6. Leave compaction hole open. Water thoroughly.

PLANTING NOTES:

PLANTING BAG
During planting, seedlings shall be kept in a moist canvas bag or similar container to prevent the root systems from drying.



KBC PLANTING BAR
Planting bar shall have a blade with a triangular cross section, and shall be 12 inches long, 4 inches wide and 1 inch thick at center.



ROOT PRUNING
All seedlings shall be root pruned, if necessary, so that no roots extend more than 10 inches below the root collar.

REFORESTATION

☐ TREE REFORESTATION SHALL BE PLANTED 6 FT. TO 10 FT. ON CENTER, RANDOM SPACING, AVERAGING 8 FT. ON CENTER, APPROXIMATELY 680 PLANTS PER ACRE.

REFORESTATION

MIXTURE, TYPE, SIZE, AND FURNISH SHALL CONFORM TO THE FOLLOWING:

25%	LIRIODENDRON TULIPIFERA	TULIP POPLAR	12 in – 18 in BR
25%	PLATANUS OCCIDENTALIS	SYCAMORE	12 in – 18 in BR
25%	FRAXINUS PENNSYLVANICA	GREEN ASH	12 in – 18 in BR
25%	BETULA NIGRA	RIVER BIRCH	12 in – 18 in BR

REFORESTATION DETAIL SHEET

N.C.D.O.T. - ROADSIDE ENVIRONMENTAL UNIT

UTILITY CONSTUCTION PLANS

PROJECT REFERENCE NO.	SHEET NO.
17BPJ3.R.40	UC-1
R/W SHEET NO.	

ROADWAY DESIGN ENGINEER

NORTH CAROLINA PROFESSIONAL SEAL 022599 ENGINEER JAMES B. VOSO

UTILITY DESIGN ENGINEER

NORTH CAROLINA PROFESSIONAL SEAL 028945 ENGINEER DANA J. BOLDEN

30 15 0 30 60
SCALE

NAD 83/ NSRS 2007

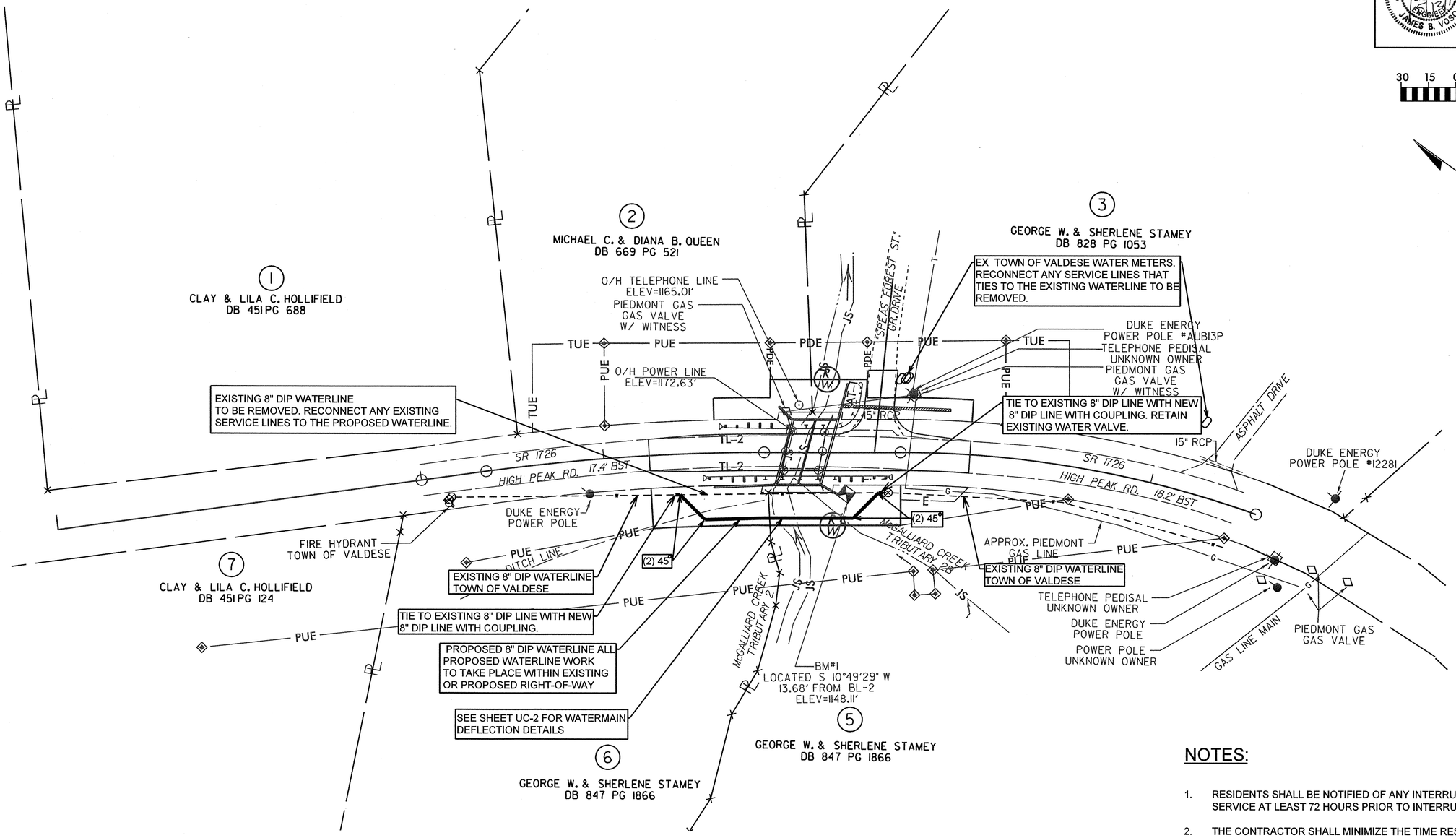

NOTES:

1. RESIDENTS SHALL BE NOTIFIED OF ANY INTERRUPTION IN WATER SERVICE AT LEAST 72 HOURS PRIOR TO INTERRUPTION.
2. THE CONTRACTOR SHALL MINIMIZE THE TIME RESIDENTS ARE WITHOUT WATER SERVICE AND SHALL NOT ALLOW WATER SERVICE TO BE INTERRUPTED FOR MORE THAN 8 CONSECUTIVE HOURS.
3. WATER LINE DEFLECTION DUE TO PIPE INSTALLATION SHALL BE INCIDENTAL TO CONTRACT ITEMS. CONTRACTOR TO LOCATE WATERLINE PRIOR TO PIPE INSTALLATION OR GRADING ACTIVITIES. CONTRACTOR TO NOTIFY THE ENGINEER IMEDIATELY IF DISCREPENCIES EXIST IN THE EXISTING WATERLINE AND/OR THE SURVEY.
4. WATER LINE TO HAVE MINIMUM 3' COVER AT ALL LOCATIONS. ADDITIONAL BENDS MAY BE UTILIZED/REQUIRED TO PROVIDE REQUIRED COVER UNDER STREAMBED.

PROJECT REFERENCE NO.	SHEET NO.
17BPJ3,R,40	UC-2
R/W SHEET NO.	
	UTILITY DESIGN ENGINEER

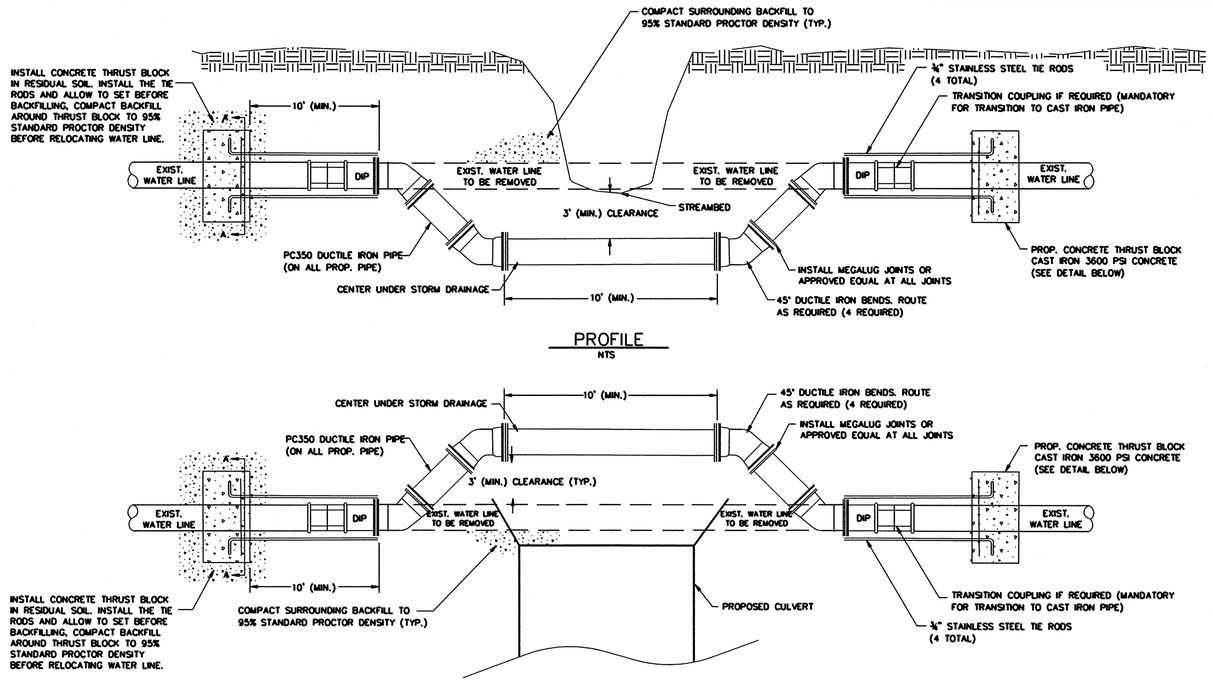

THRUST BLOCKING DIMENSIONS		
PIPE DIAMETER	"A" DIMENSIONS	"B" DIMENSIONS
6"	4'	1'-6"
8"	4'	1'-6"
12"	6'	2'

NOTES:

1. WATER SHALL BE MAINTAINED DURING THRUST BLOCK INSTALLATION.
2. ALL CONCRETE SHALL BE 3600 PSI COMPRESSIVE STRENGTH.
3. RESIDENTS SHALL BE NOTIFIED OF ANY INTERRUPTION IN WATER SERVICE AT LEAST 72 HOURS PRIOR TO INTERRUPTION.
4. THE CONTRACTOR SHALL MINIMIZE THE TIME RESIDENTS ARE WITHOUT WATER SERVICE AND SHALL NOT ALLOW WATER SERVICE TO BE INTERRUPTED FOR MORE THAN 8 HOURS.
5. FITTINGS SHALL BE RESTRAINED USING MEGALUGS. STAINLESS STEEL TIE RODS, OR RESTRAINED JOINT PIPE AS APPROVED BY ENGINEER.
6. IF THE EXISTING WATER MAIN IS CAST IRON OR PVC, USE TRANSITION COUPLING TO CONNECT TO DUCTILE IRON PIPE.
7. WATERLINE DEFLECTION DUE TO PIPE INSTALLATION SHALL BE INCIDENTAL TO CONTRACT ITEMS. CONTRACTOR TO LOCATE WATERLINE PRIOR TO PIPE INSTALLATION OR GRADING ACTIVITIES.

WATERMAIN DEFLECTION DETAIL

IC:26 CIAM
R:\3288 NCDOT Div.13 Bridges\007\Utilities\Rdy_Utl\Proj\Burke 7_UC-2.dgn
bgross

10/09/13

TIP PROJECT: 17BP.13.R.40

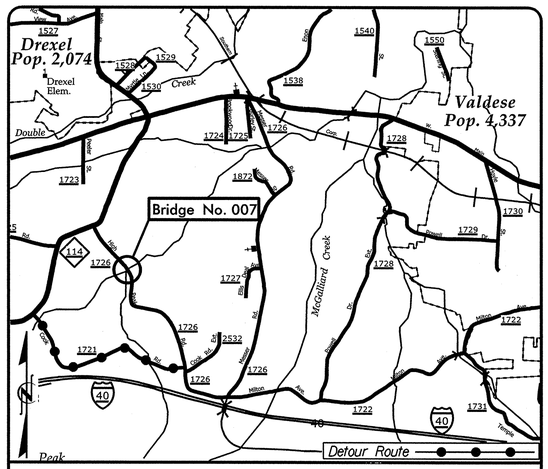

VICINITY MAP

STATE OF NORTH CAROLINA
DIVISION OF HIGHWAYS

UTILITIES BY OTHERS
BURKE COUNTY

T.I.P. NO.	SHEET NO.
17BP.13.R.40	UO–1

LOCATION: *BRIDGE NO. 007 OVER McGALLIARD CREEK, TRIBUTARY 2 ON SR 1726 (HIGH PEAK ROAD)*

TYPE OF WORK: *AERIAL POWER AND CABLE TV UNDERGROUND GAS*

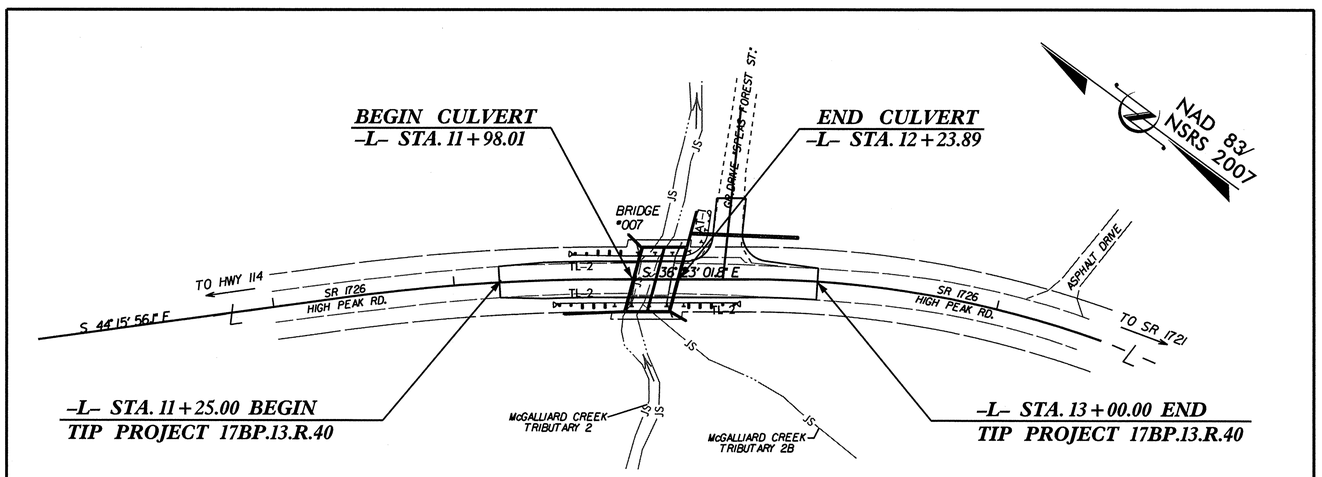

V&M
Vaughn & Melton
Consulting Engineers
Asheville, North Carolina 828-253-2796
Charlotte, North Carolina 704-357-0488
Tri-Cities, Tennessee 423-467-9409
Knoxville, Tennessee 865 546 5800
Middlesboro, Kentucky 606-248-6600
Spartanburg, South Carolina 864-574-4775
Copyright© 1994 Vaughn & Melton, Inc. All Rights Reserved

GRAPHIC SCALES

15 0 15 30
PLANS

INDEX OF SHEETS

SHEET NO.	*DESCRIPTION*
UO–1	*TITLE SHEET*
UO–2	*UTILITIES BY OTHERS PLAN SHEET*

UTILITY OWNERS ON PROJECT

(1) POWER – DUKE ENERGY
(2) CABLE TV – CHARTER COMMUNICATIONS
(3) GAS – PIEDMONT NATURAL GAS
(4) TELEPHONE – CENTURY LINK
(5) WATER – TOWN OF VALDESE

PLANS PREPARED BY:

V&M
Vaughn & Melton
Consulting Engineers
1318-F PATTON AVE.
Asheville, NC 28806
828-253-2796

PREPARED FOR THE OFFICE OF:
DIVISION OF HIGHWAYS
UTILITIES ENGINEERING SECTION
1591 MAIL SERVICES CENTER
RALEIGH NC 27699–1591
PHONE (919) 250–4128
FAX (919) 250–4119

Roger Worthington, P.E. — *UTILITIES SECTION ENGINEER*
Lynn Mann, P.G. — *UTILITIES SQUAD LEADER PROJECT ENGINEER*
UTILITIES PROJECT DESIGNER

V&M PROJECT #31234-02
TRANSPORTATION\31234-02\UTILITIES\UO-1.DGN

PROJECT REFERENCE NO.	SHEET NO.
17BP.13.R.40	U0-2

UTILITIES BY OTHERS

NOTE:
ALL PROPOSED UTILITY WORK SHOWN ON THIS SHEET WILL BE DONE BY OTHERS

V&M
Vaughn & Melton
Consulting Engineers
Asheville, North Carolina 828-253-2796
Charlotte, North Carolina 704-357-0488
Tri-Cities, Tennessee 423-467-8401
Knoxville, Tennessee 865-546-5800
Middlesboro, Kentucky 606-248-6600
Spartanburg, South Carolina 864-574-4775

Copyright © 2006 Vaughn & Melton, Inc. All Rights Reserved

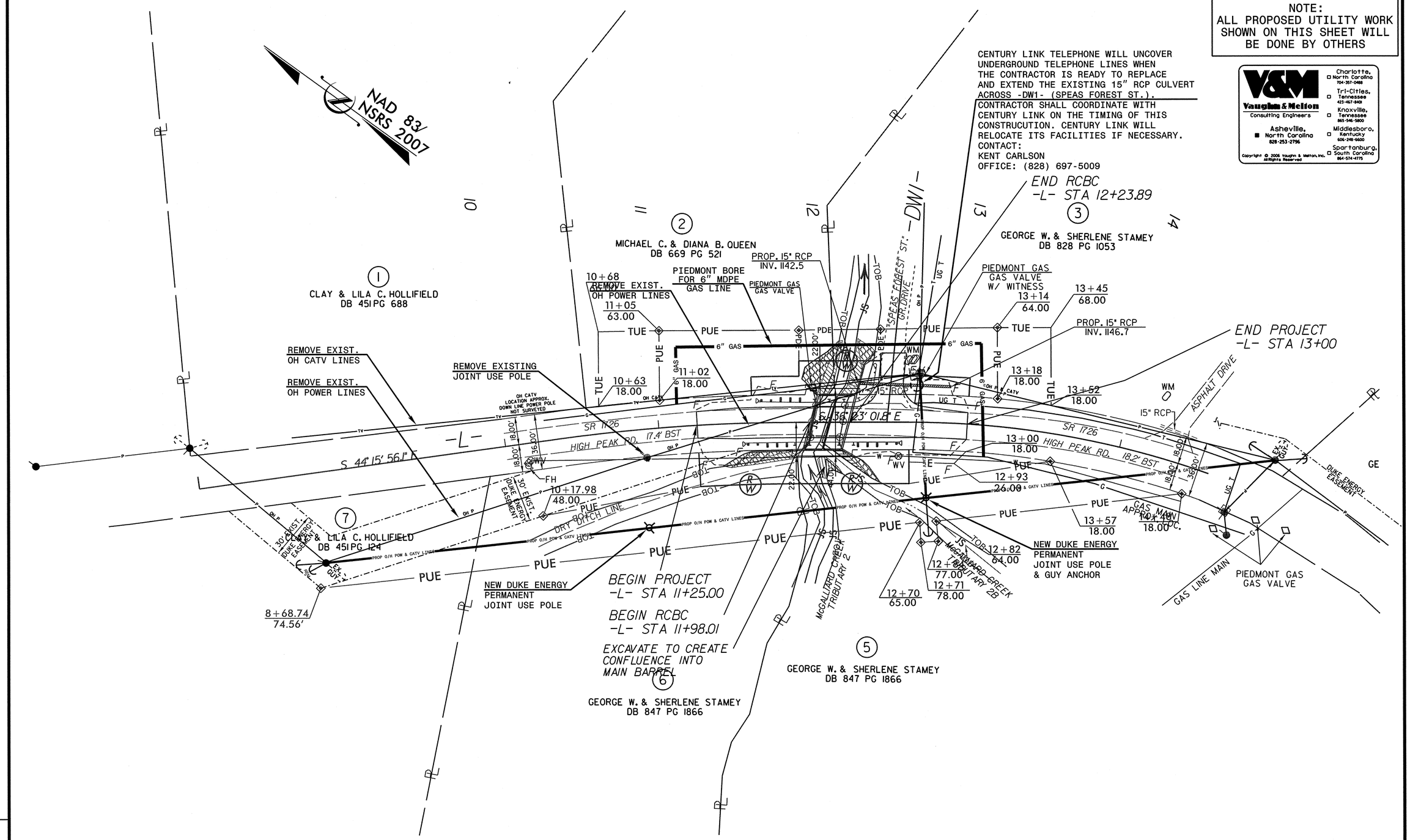

10/09/13

TIP PROJECT: 17BP.13.R.40

CONTRACT:

V&M PROJECT #31234-02
TRANSPORTATION\31234-02\UTILITIES\U0-2.DGN

REVISIONS

6/2/99

PROJECT REFERENCE NO.	SHEET NO.
17BPJ3.R.40	X-1A

STATE OF NORTH CAROLINA
DIVISION OF HIGHWAYS

CROSS SECTION SUMMARY

LOCATION	UNCLASSIFIED EXCAVATION	EMBT+%
-L- 11+25 TO 11+50	0	11
-L- 11+50 TO 11+75	0	21
-L- 11+75 TO 12+00	0	112
-L- 12+00 TO 12+25	0	121
-L- 12+25 TO 12+50	0	29
-L- 12+50 TO 12+75	0	25
-L- 12+75 TO 13+00	0	16
TOTALS	0	335

Note: Embankment column does not include fill for undercut.

Approximate quantities only. Unclassified excavation, borrow excavation, shoulder borrow, fine grading, clearing and grubbing, breaking of existing pavement and removal of existing pavement will be paid for at the lump sum price for "Grading".

9:42:51 AM
R:\3280 NCDOT Div.13 Bridges\007\Roadway\Proj\11007_rdy_typ.dgn
mross

8/23/99

0 2.5 5	PROJ. REFERENCE NO.	SHEET NO.
	17BP.13.R.40	X-1

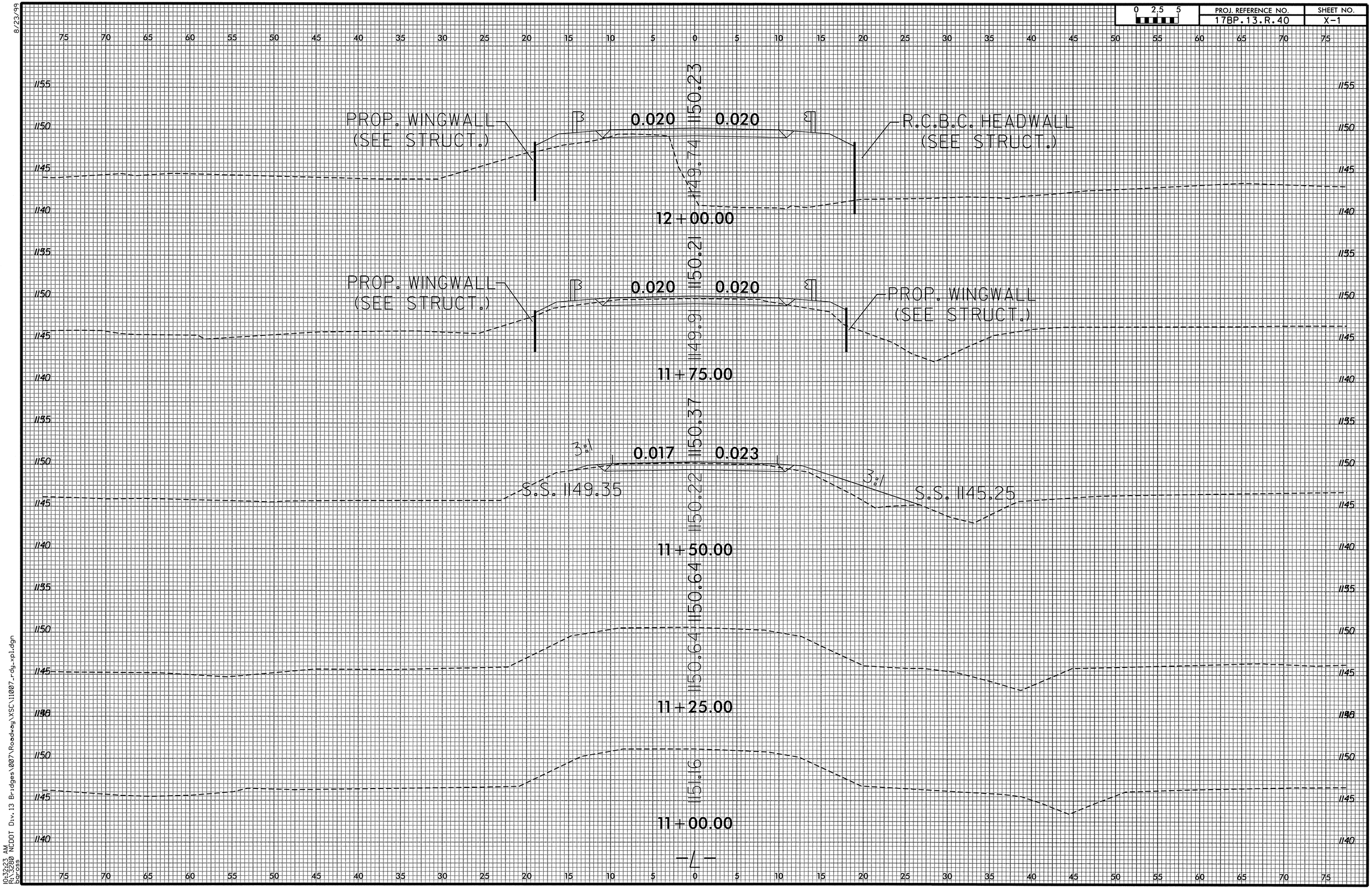

10:32:23 AM
R:\5280 NCDOT Div.13 Bridges\007\Roadway\XSC\11007_rdy_xpl.dgn
bgross

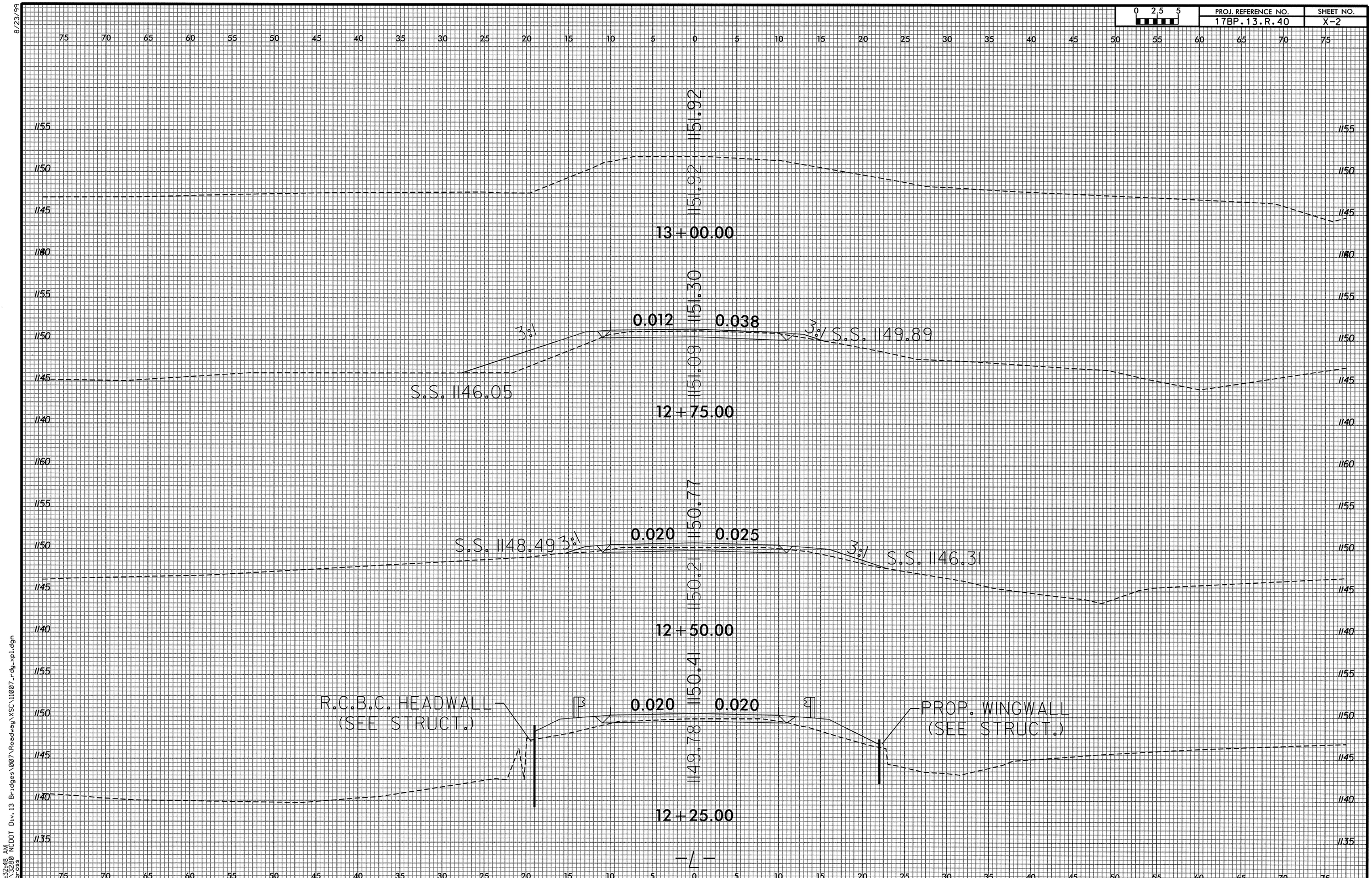

8/23/99

10:32:48 AM
R:\3280 NCDOT Div.13 Bridges\007\Roadway\XSC\11007_rdy_xpl.dgn
bgross

PROJECT: 17BP.13.R.40

CONTRACT:

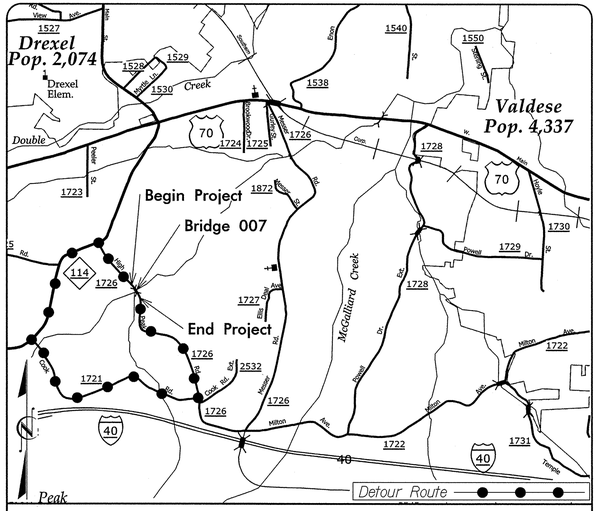

VICINITY MAP

STATE OF NORTH CAROLINA
DIVISION OF HIGHWAYS

BURKE COUNTY

STATE	STATE PROJECT REFERENCE NO.	SHEET NO.	TOTAL SHEETS
N.C.	17BP.13.R.40	1	

STATE PROJECT NO.	F.A. PROJ. NO.	DESCRIPTION
17BP.13.R.40		PE, R/W, UTIL
17BP.13.R.40		CONST.

LOCATION: BRIDGE NO. 007 OVER MCGALLIARD CREEK TRIB 2 ON SR 1726 (HIGH PEAK RD.)

TYPE OF WORK: GRADING, PAVING, DRAINAGE, AND CULVERT

CULVERT

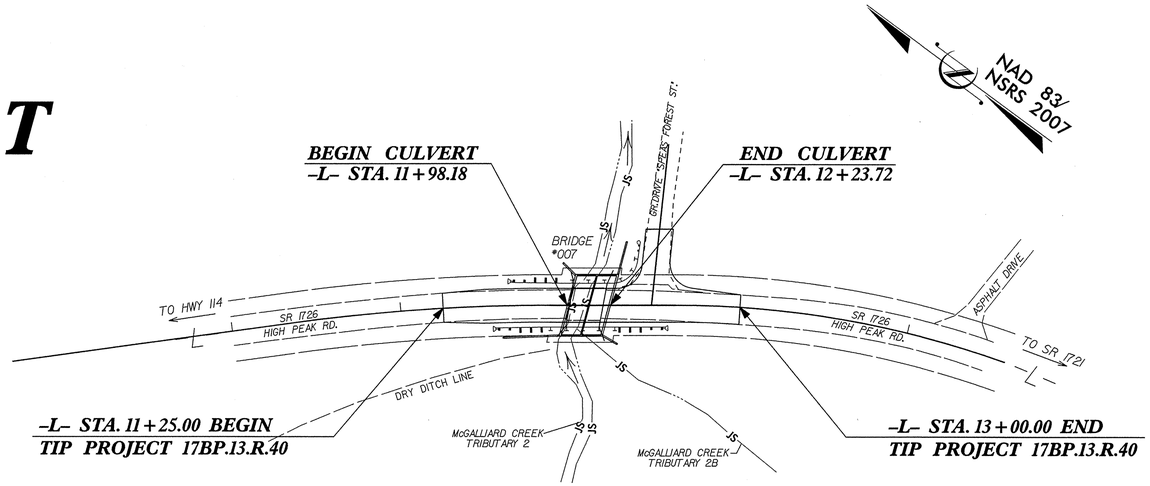

DESIGN DATA

ADT 2010 = 810

V = 40 MPH

FUNC CLASS = LOCAL

PROJECT LENGTH

LENGTH ROADWAY TIP PROJECT 17BP.13.R.40	=	0.028 MILES
LENGTH STRUCTURE TIP PROJECT 17BP.13.R.40	=	0.005 MILES
TOTAL LENGTH TIP PROJECT 17BP.13.R.40	=	0.033 MILES

Prepared In the Office of Mattern & Craig for

DIVISION 13

NORTH CAROLINA DEPARTMENT OF TRANSPORTATION

2012 STANDARD SPECIFICATIONS

LETTING DATE:

JAMES VOSO, PE
PROJECT ENGINEER

STEVEN A. CAMPBELL, PE
PROJECT DESIGN ENGINEER

NCDOT CONTACT: PAUL SPROUSE, PE
DIVISION 13 BRIDGE PROJECT MANAGER

BRIDGE ENGINEER

SIGNATURE: P.E.

PLANS PREPARED BY:

Mattern & Craig
CONSULTING ENGINEERS • SURVEYORS
12 BROAD STREET
ASHEVILLE, NORTH CAROLINA
(828) 254-2201
FAX (828) 254-4562

$$DATE$$
$$SYSTIME$$
$$DGN$$
$$USERNAME$$

$$$$$$$$TSTIME$$$$$$$$
$$$$$$$$$$$$$$$$$$$$$$$$DGN$$$$$$$$$$$$$$$$$$$$$$$$
$$$$USERNAME$$$$

B.M. #1: RAILROAD SPIKE IN 14" BLACK WALNUT -L- STA. 12+32.63 22.80' RT., EL. 1148.11' NAVD 88

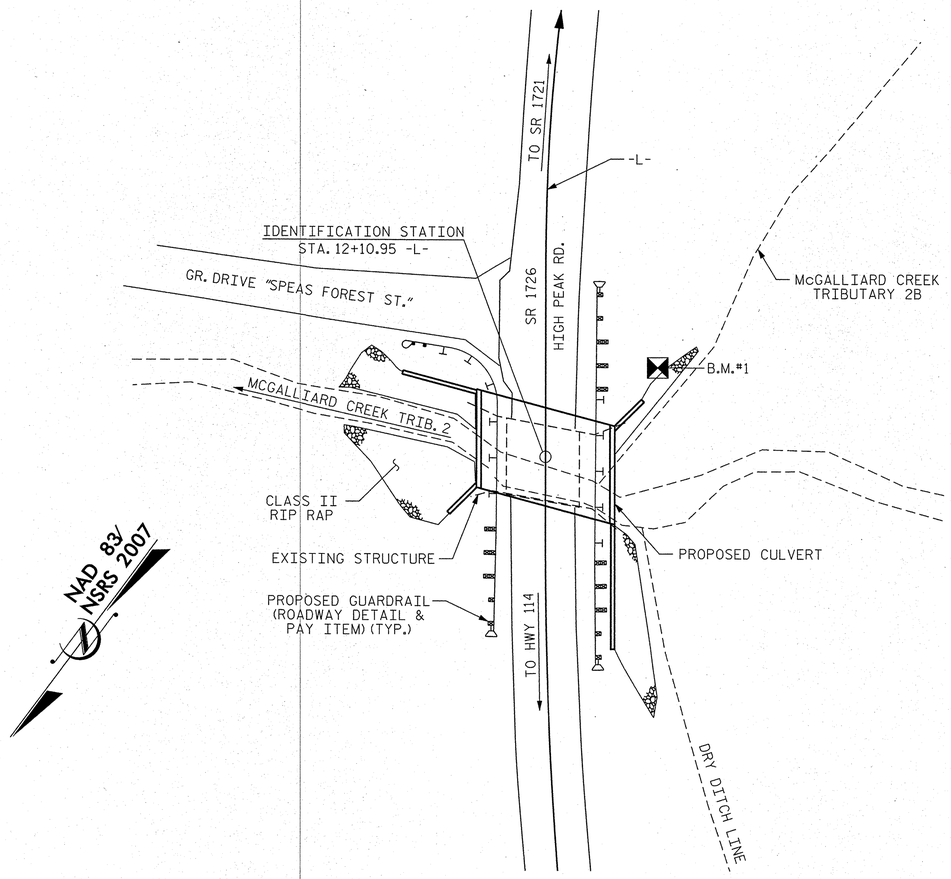

LOCATION SKETCH

NO KNOWN UTILITY CONFLICTS.

HYDRAULIC DATA

DESIGN DISCHARGE	650 CFS
FREQUENCY OF DESIGN FLOOD	25 YR.
DESIGN HIGH WATER ELEVATION	1146.50
DRAINAGE AREA	1.40 SQ. MI.
BASE DISCHARGE (Q 100)	950 CFS
BASE HIGH WATER ELEVATION	1147.72

OVERTOPPING DATA

OVERTOPPING DISCHARGE	1475 CFS
FREQUENCY OF OVERTOPPING FLOOD	500 YR.+
OVERTOPPING FLOOD ELEVATION	1150.00

HORIZONTAL CURVE DATA -L-

PI Sta 11+11.77 -L-	PI Sta 13+62.08 -L-
△ = 7° 52' 54.4" (RT)	△ = 19° 43' 07.6" (RT)
D = 5° 11' 06.5"	D = 9° 57' 52.1"
L = 152.01'	L = 197.89'
T = 76.12'	T = 99.93'
R = 1105.00'	R = 575.00'

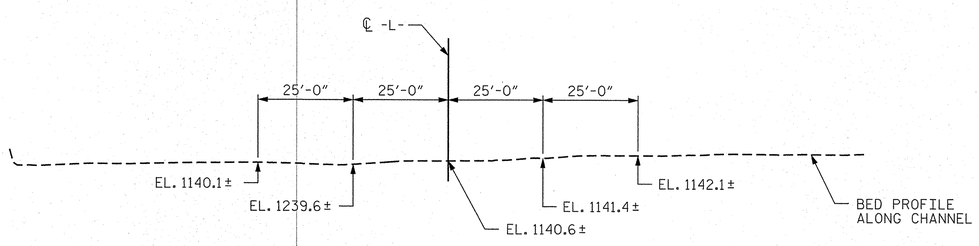

PROFILE ALONG ℄ CULVERT

TOTAL STRUCTURE QUANTITIES

CLASS A CONCRETE			
BARREL @	3.083 CY/FT	116.5	C.Y.
WING ETC.		44.8	C.Y.
TOTAL		161.3	C.Y.
REINFORCING STEEL			
BARREL		20970	LBS.
WINGS ETC.		3244	LBS.
TOTAL		24214	LBS.
FOUNDATION CONDITIONING MATERIAL:		TONS	99
CULVERT EXCAVATION:		LUMP	SUM

NOTES

ASSUMED LIVE LOAD ---------- HL-93 OR ALTERNATE LOADING.

DESIGN FILL---------- 1'-6"

FOR OTHER DESIGN DATA AND GENERAL NOTES SEE SHEET SN.

3" Ø WEEP HOLES INDICATED TO BE IN ACCORDANCE WITH THE SPECIFICATIONS.

CONCRETE IN CULVERTS TO BE POURED IN THE FOLLOWING ORDER:

1. WING FOOTINGS AND FLOOR SLAB INCLUDING 4" OF ALL VERTICAL WALLS.
2. THE REMAINING PORTIONS OF THE WALLS AND WINGS FULL HEIGHT FOLLOWED BY ROOF SLAB AND HEADWALLS.

THE RESIDENT ENGINEER SHALL CHECK THE LENGTH OF CULVERT BEFORE STAKING IT OUT TO MAKE CERTAIN THAT IT WILL PROPERLY TAKE CARE OF THE FILL.

DIMENSIONS FOR WING LAYOUT AS WELL AS ADDITIONAL REINFORCING STEEL EMBEDDED IN BARREL ARE SHOWN ON WING SHEET.

STEEL IN THE BOTTOM SLAB MAY BE SPLICED AT THE PERMITTED CONSTRUCTION JOINT AT THE CONTRACTOR'S OPTION. EXTRA WEIGHT OF STEEL DUE TO THE SPLICES SHALL BE PAID FOR BY THE CONTRACTOR.

AT THE CONTRACTOR'S OPTION, HE MAY SPLICE THE VERTICAL REINFORCING STEEL IN THE INTERIOR FACE OF EXTERIOR WALL AND BOTH FACES OF INTERIOR WALLS ABOVE LOWER WALL CONSTRUCTION JOINT. THE SPLICE LENGTH SHALL BE AS PROVIDED IN THE SPLICE LENGTH CHART SHOWN ON THE PLANS. EXTRA WEIGHT OF STEEL DUE TO THE SPLICES SHALL BE PAID FOR BY THE CONTRACTOR.

AT THE CONTRACTOR'S OPTION HE MAY SUBMIT, TO THE ENGINEER FOR APPROVAL, DESIGN AND DETAIL DRAWINGS FOR A PRECAST REINFORCED CONCRETE BOX CULVERT IN LIEU OF THE CAST-IN-PLACE CULVERT SHOWN ON THE PLANS. THE DESIGN SHALL PROVIDE THE SAME SIZE AND NUMBER OF BARRELS AS USED ON THE CAST-IN-PLACE DESIGN. FOR OPTIONAL PRECAST REINFORCED CONCRETE BOX CULVERT, SEE SPECIAL PROVISIONS.

THIS STRUCTURE HAS BEEN DESIGNED IN ACCORDANCE WITH THE AASHTO LRFD BRIDGE DESIGN SPECIFICATIONS.

THE EXISTING STRUCTURE CONSISTING OF 1 SPAN AT 20'-7", 19'-0" CLEAR ROADWAY WIDTH, TIMBER FLOOR ON I-BEAMS, ON TIMBER CAPS WITH TIMBER POSTS AND SILLS, AT EXISTING CROSSING FOR PROPOSED STRUCTURE, SHALL BE REMOVED. THE EXISTING BRIDGE IS CURRENTLY POSTED BELOW THE LEGAL LOAD LIMIT.

REMOVAL OF THE EXISTING BRIDGE SHALL BE PERFORMED AS NOT TO ALLOW DEBRIS TO FALL INTO THE WATER. THE CONTRACTOR SHALL REMOVE THE BRIDGE AND SUBMIT PLANS FOR DEMOLITION IN ACCORDANCE WITH ARTICLE 402-2 OF THE STANDARD SPECIFICATIONS.

THE SUBSTRUCTURE OF THE EXISTING BRIDGE INDICATED ON THE PLANS IS FROM THE BEST INFORMATION AVAILABLE. SINCE THIS INFORMATION IS SHOWN FOR THE CONVENIENCE OF THE CONTRACTOR, THE CONTRACTOR SHALL HAVE NO CLAIM WHATSOEVER AGAINST THE DEPARTMENT OF TRANSPORTATION FOR ANY DELAYS OR ADDITIONAL COSTS INCURRED BASED ON DIFFERENCES BETWEEN THE EXISTING BRIDGE SUBSTRUCTURE SHOWN ON THE PLANS AND THE ACTUAL CONDITIONS AT THE PROJECT SITE.

FOR SUBMITTAL OF WORKING DRAWINGS, SEE SPECIAL PROVISIONS.

FOR FALSEWORK AND FORMWORK, SEE SPECIAL PROVISIONS.

FOR CRANE SAFETY, SEE SPECIAL PROVISIONS.

FOR GROUT FOR STRUCTURES, SEE SPECIAL PROVISIONS.

EXCAVATE 1'-0" BELOW CULVERT AND FOOTINGS AND REPLACE WITH FOUNDATION CONDITIONING MATERIAL IN ACCORDANCE WITH ARTICLE 414 OF THE STANDARD SPECIFICATIONS.

INASMUCH AS THE PAINT SYSTEM ON THE EXISTING STRUCTURAL STEEL CONTAINS LEAD, THE CONTRACTOR'S ATTENTION IS DIRECTED TO ARTICLE 107-1 OF THE STANDARD SPECIFICATIONS. ANY COSTS RESULTING FROM COMPLIANCE WITH APPLICABLE STATE OR FEDERAL REGULATIONS PERTAINING TO HANDLING OF MATERIALS CONTAINING LEAD BASED PAINT SHALL BE INCLUDED IN THE BID PRICE FOR "REMOVAL OF EXISTING STRUCTURE AT STATION 12+10.95."

ADDED NOV. 1990

ASSEMBLED BY : PFC	DATE : 2/14	SPECIAL
CHECKED BY : CMT	DATE : 2/14	
DRAWN BY : R.W. WRIGHT	DATE : OCT. 1989	STANDARD
CHECKED BY : C.R.K.	DATE : OCT. 1989	

Prepared in the Office of:
Mattern & Craig
CONSULTING ENGINEERS - SURVEYORS
12 BROAD STREET
ASHEVILLE, NORTH CAROLINA 28801
(828) 254-2201 - FAX (828) 254-4562

NORTH CAROLINA PROFESSIONAL ENGINEER SEAL 14309 STEVEN A. CAMPBELL

PROJECT NO. 17BP.13.R.40

BURKE COUNTY

STATION: 12+10.95 -L-

SHEET 1 OF 7 REPLACES BRIDGE NO. 007

STATE OF NORTH CAROLINA
DEPARTMENT OF TRANSPORTATION
RALEIGH

BARREL STANDARD

DOUBLE 11 FT. X 8 FT. CONCRETE BOX CULVERT 105° SKEW

AUGUST 1989

REVISIONS						SHEET NO.
NO.	BY:	DATE:	NO.	BY:	DATE:	S-1
1			3			TOTAL SHEETS
2			4			7

STD. NO. CB222A

$$$$$$$$TSTIME$$$$$$
$$$$$$$$$$$$$$$$$$$$$$$$$$DGN$$$$$$$$$$$$$$$$$$$$$$$$
$$$$USERNAME$$$$

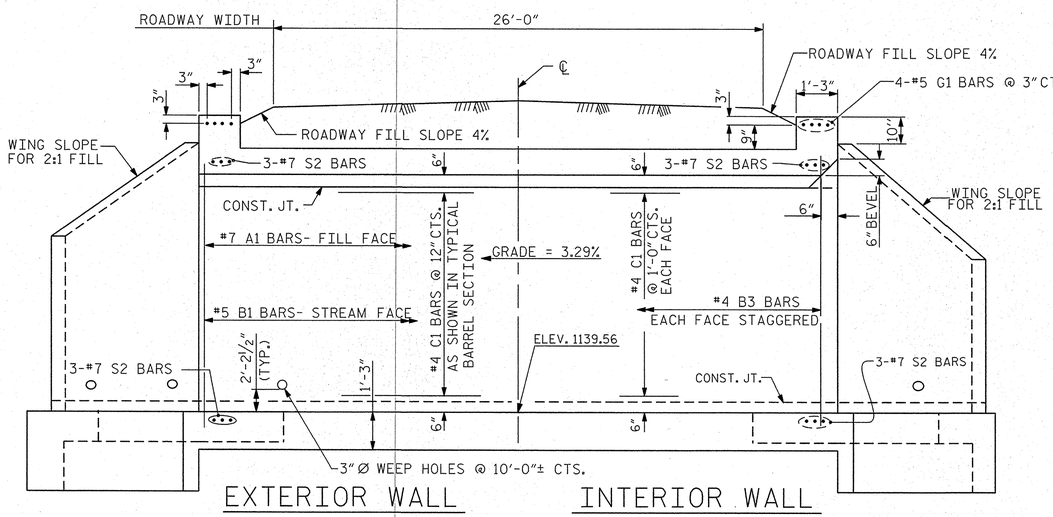

CULVERT SECTION NORMAL TO ROADWAY

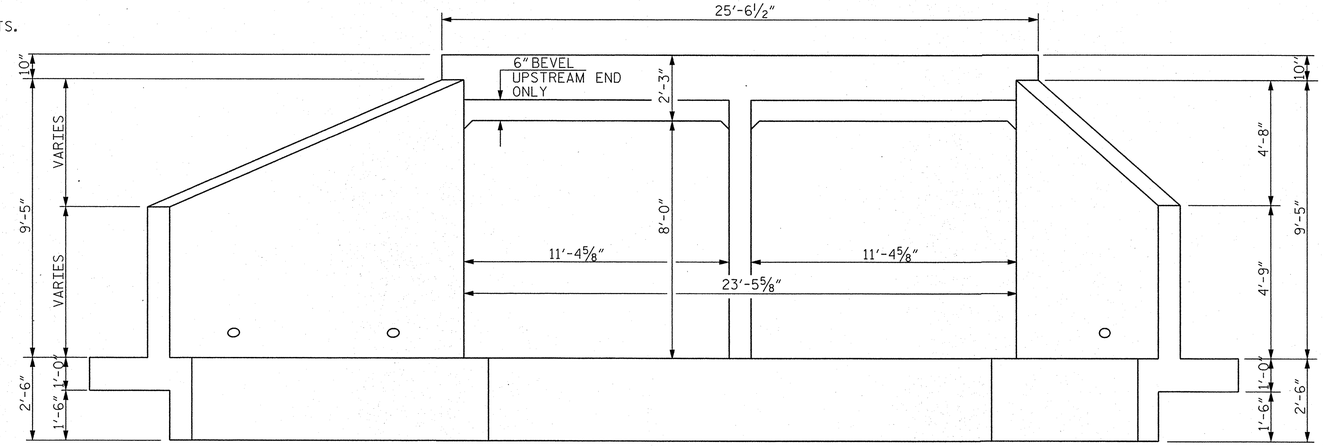

END ELEVATION NORMAL TO SKEW

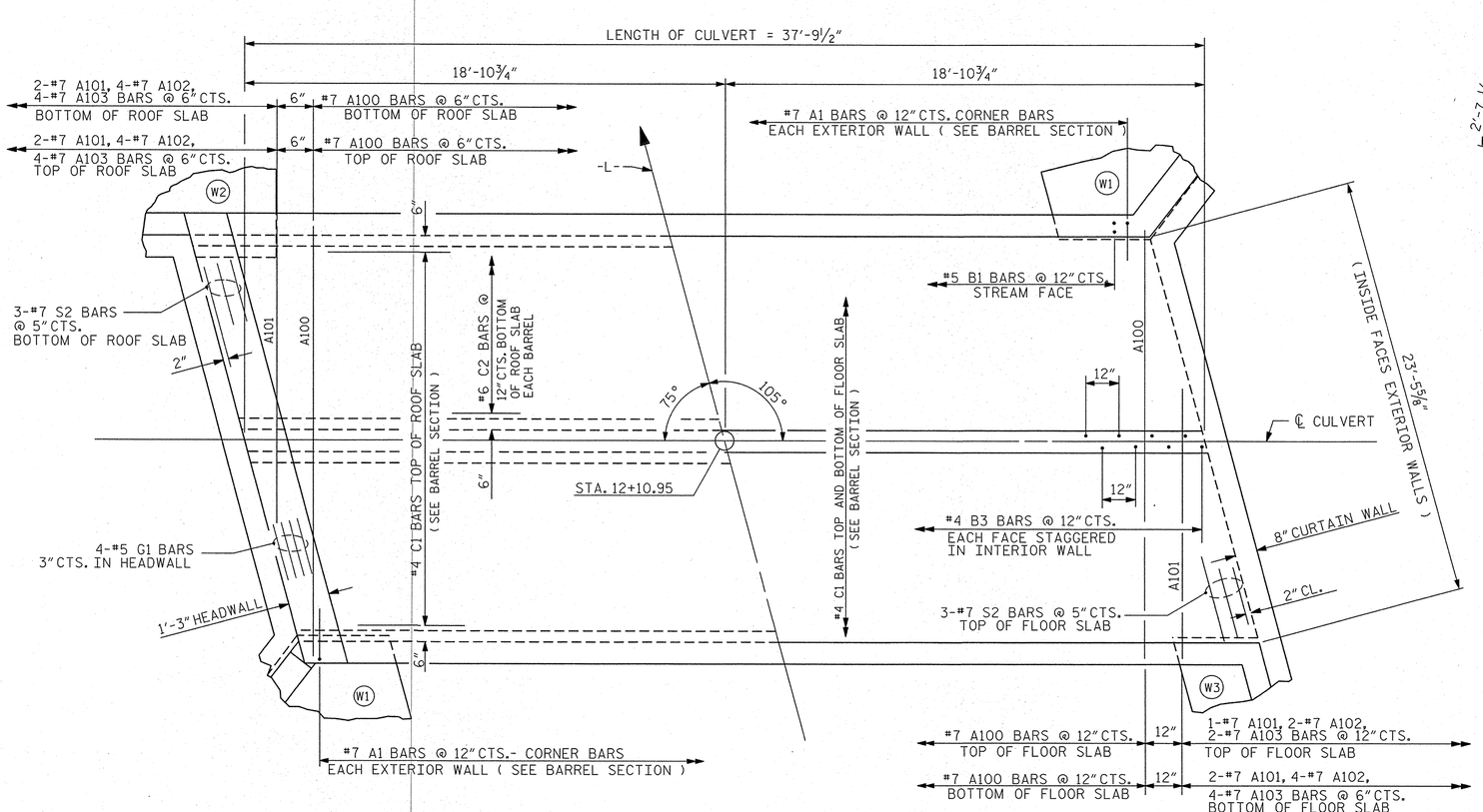

PART PLAN - ROOF SLAB

PART PLAN - FLOOR SLAB

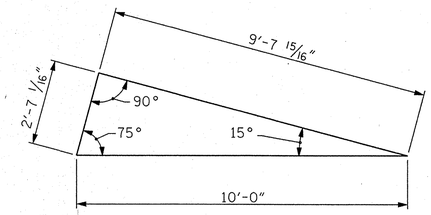

SKEW TRIANGLE

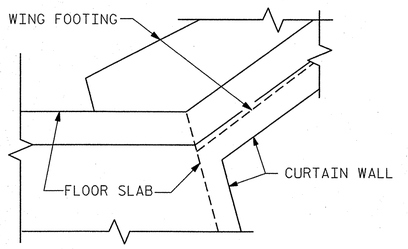

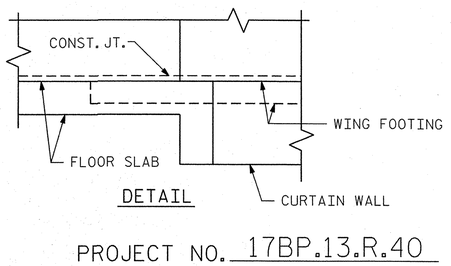

DETAIL

CONNECTION OF WING FOOTING AND FLOOR SLAB WHEN SLAB IS THICKER THAN FOOTING

PROJECT NO. 17BP.13.R.40

BURKE COUNTY

STATION: 12+10.95 -L-

SHEET 2 OF 7

REVISED 11-19-99 BY M.M. CHECKED BY R.W.W.
REVISED 8-28-92 BY E.L.R. CHECKED BY G.R.P.
REDRAWN 11-90 BY A.R.B. CHECKED BY C.R.R.

ASSEMBLED BY : PFC	DATE : 2/14	SPECIAL	
CHECKED BY : CMT	DATE : 2/14		
DRAWN BY : W. BRYAN STANLEY II	DATE : NOV.1971	STANDARD	
CHECKED BY : JOEL A. JOHNSON	DATE : DEC.1971		

Prepared in the Office of:
Mattern & Craig
CONSULTING ENGINEERS - SURVEYORS
12 BROAD STREET
ASHEVILLE, NORTH CAROLINA 28801
(828) 254-2201 - FAX (828) 254-4562

NORTH CAROLINA PROFESSIONAL SEAL 14309 ENGINEER STEVEN A. CAMPBELL

STATE OF NORTH CAROLINA
DEPARTMENT OF TRANSPORTATION
RALEIGH

BARREL STANDARD

DOUBLE 11 FT. X 8 FT. CONCRETE BOX CULVERT 105° SKEW

1971

REVISIONS						SHEET NO.
NO.	BY:	DATE:	NO.	BY:	DATE:	S-2
1			3			TOTAL SHEETS
2			4			7

STD. NO. CB222

$$$$$$$$STITLE$$$$$$$
$$$$$$$$$$$$$$$$$$$$$$$$DGN$$$$$$$$$$$$$$$$$$$$$$$$
$$$$USERNAME$$$$

BAR TYPES

ALL BAR DIMENSIONS ARE OUT TO OUT.

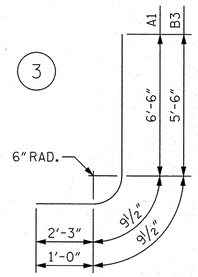

BILL OF MATERIAL

BAR	NO.	SIZE	TYPE	LENGTH	WEIGHT
A1	156	#7	3	9'-7"	3057
A100	190	#7	STR	24'-4"	9452
A101	12	#7	STR	20'-5"	501
A102	24	#7	STR	13'-0"	638
A103	24	#7	STR	5'-6"	270
B1	78	#5	STR	10'-0"	814
B3	156	#4	3	7'-4"	764
C1	126	#4	STR	37'-5"	3147
C2	26	#6	STR	36'-11"	1442
D1	12	#6	STR	1'-10"	33
D2	6	#6	STR	2'-10"	25
G1	8	#5	STR	25'-2"	210
S2	12	#7	STR	25'-2"	617

REINFORCING STEEL CULVERT 20970 LBS

CLASS A CONCRETE
CULVERT 116.5 CY
SILLS 3.3 CY
TOTAL 119.8 CY

SPLICE LENGTHS

BAR SIZE	UNCOATED
#4	1'-9"
#5	2'-2"
#6	2'-9"
#7	3'-9"

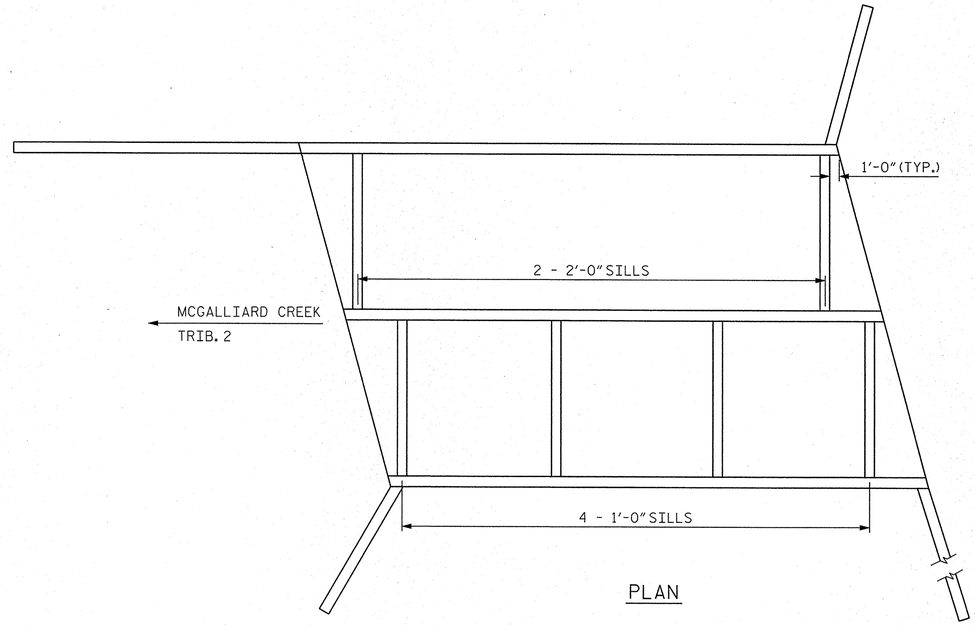

PLAN

NOTE:
PLACE SILLS ONE FOOT INSIDE OF INLET AND OUTLET OF BOTH BARRELS. PLACE TWO ADDITIONAL EVENLY SPACED SILLS IN LOW FLOW BARREL TO HELP RETAIN BED MATERIAL. FILL SILLS WITH NATIVE BED MATERIAL SIMILAR IN SIZE TO CLASS 'B' RIP RAP. SUBSTITUTE WITH CLASS 'B' RIP RAP IF NEEDED.

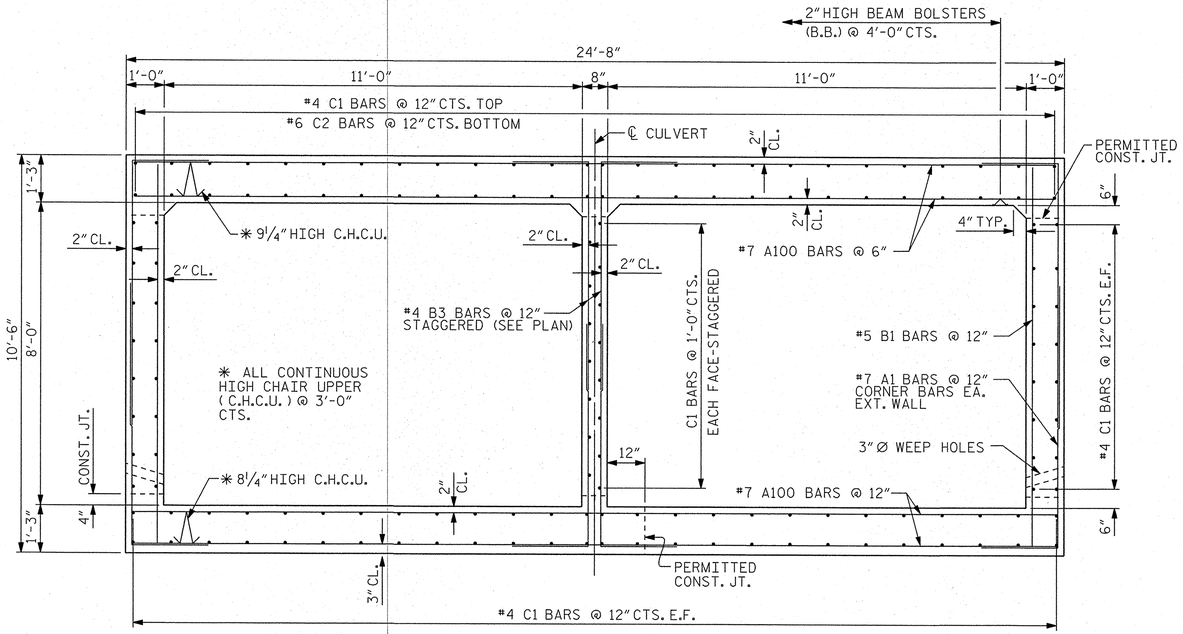

RIGHT ANGLE SECTION OF BARREL

(REINFORCING IS SYMMETRIC ABOUT ℄ CULVERT)

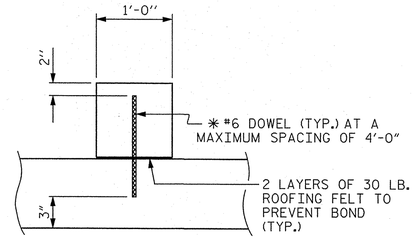

SECTION THROUGH SILL

* DOWELS MAY BE PUSHED INTO GREEN CONCRETE AFTER SLAB HAS BEEN FLOAT FINISHED.

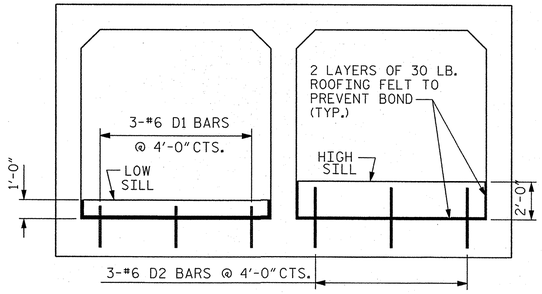

ELEVATION

(LOOKING DOWNSTREAM)

CULVERT SILL DETAILS

PROJECT NO. 17BP.13.R.40

BURKE COUNTY

STATION: 12+10.95 -L-

SHEET 3 OF 7

STATE OF NORTH CAROLINA
DEPARTMENT OF TRANSPORTATION
RALEIGH

BARREL STANDARD

DOUBLE 11 FT. X 8 FT.
CONCRETE BOX CULVERT
105° SKEW

AUGUST 1989

REVISIONS						SHEET NO.
NO.	BY:	DATE:	NO.	BY:	DATE:	S-3
1			3			TOTAL SHEETS
2			4			7

DRAWN BY : PFC DATE : 2/14
CHECKED BY : CMT DATE : 2/14

Prepared in the Office of:
Mattern & Craig
CONSULTING ENGINEERS - SURVEYORS
12 BROAD STREET
ASHEVILLE, NORTH CAROLINA 28801
(828) 254-2201 - FAX (828) 254-4562

NORTH CAROLINA PROFESSIONAL SEAL 14309 ENGINEER STEVEN A. CAMPBELL

$$$$$$$STYLE$$$$$$
$$$$$$$$$$$$$$$$$$$$DGN$$$$$$$$$$$$$$$$$$$$$$$$
$$$$USERNAME$$$$

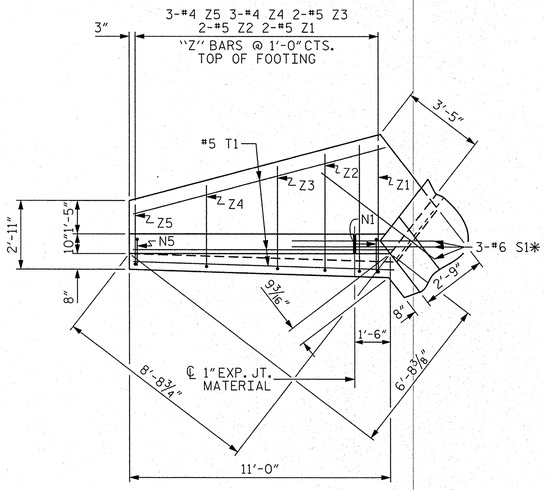

* S1 @ BOTTOM OF FLOOR SLAB & FOOTING

PLAN W1

BILL OF MATERIAL FOR WINGWALL W1

BAR	NO.	SIZE	TYPE	LENGTH	WEIGHT
H1	12	#4	STR	9'-1"	73
H2	4	#4	STR	8'-2"	22
H3	4	#4	STR	4'-5"	12
H4	24	#4	1	3'-3"	52
H5	4	#4	STR	9'-10"	26
N1	4	#5	3	10'-2"	42
N2	4	#5	3	9'-7"	40
N3	4	#5	3	8'-9"	37
N4	6	#4	3	7'-7"	30
N5	6	#4	3	6'-4"	25
S1	6	#6	STR	6'-0"	54
T1	6	#5	STR	11'-0"	69
V1	4	#4	STR	8'-2"	22
V2	4	#4	STR	7'-6"	20
V3	4	#4	STR	6'-9"	18
V4	6	#4	STR	5'-6"	22
V5	6	#4	STR	4'-4"	17
Z1	4	#5	4	6'-0"	25
Z2	4	#5	4	5'-7"	23
Z3	4	#5	4	5'-0"	21
Z4	6	#4	4	4'-0"	16
Z5	6	#4	4	3'-1"	12

REINFORCING STEEL FOR 2 W1 WINGS 678 LBS

CLASS A CONCRETE FOR 2 W1 WINGS 8.5 CY

BAR TYPES

ALL BAR DIMENSIONS ARE OUT TO OUT.

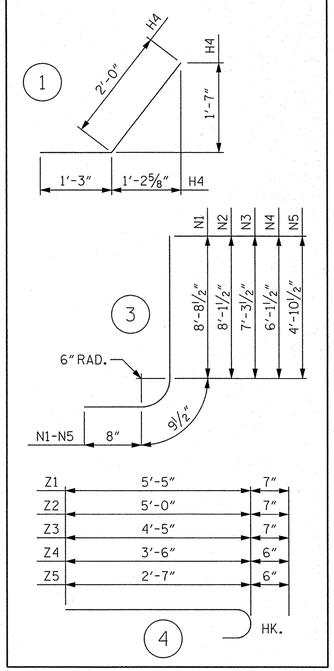

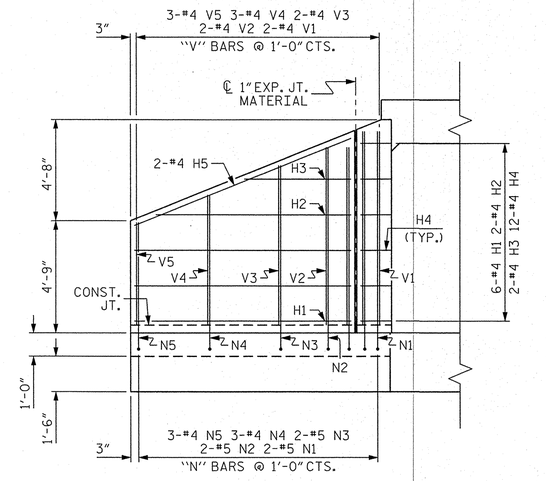

ELEVATION W1

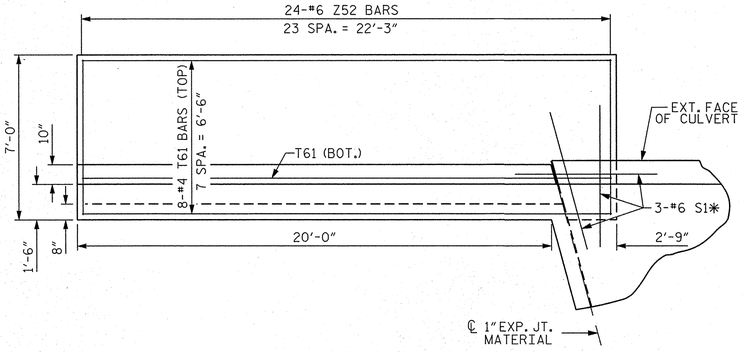

* S1 @ BOTTOM OF FLOOR SLAB & FOOTING

PLAN W2

BAR TYPES

ALL BAR DIMENSIONS ARE OUT TO OUT.

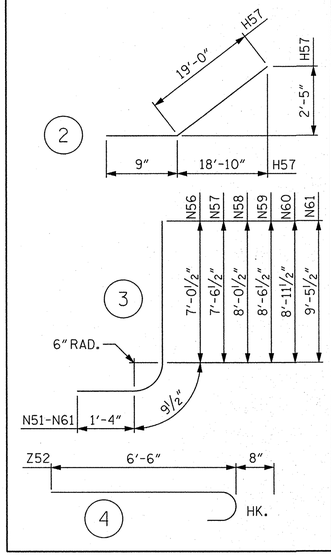

BILL OF MATERIAL FOR WINGWALL W2

BAR	NO.	SIZE	TYPE	LENGTH	WEIGHT
H55	10	#4	STR	19'-7"	131
H56	2	#4	STR	9'-8"	13
H57	2	#4	2	19'-9"	26
N56	4	#6	3	9'-2"	55
N57	4	#6	3	9'-8"	58
N58	4	#6	3	10'-2"	61
N59	4	#6	3	10'-8"	64
N60	4	#6	3	11'-1"	67
N61	2	#6	3	11'-7"	35
S1	3	#6	STR	6'-0"	27
T61	9	#4	STR	22'-4"	134
V56	4	#4	STR	6'-4"	17
V57	4	#4	STR	6'-10"	18
V58	4	#4	STR	7'-4"	20
V59	4	#4	STR	7'-10"	21
V60	4	#4	STR	8'-3"	22
V61	2	#4	STR	8'-9"	12
Z52	24	#6	4	7'-2"	259

REINFORCING STEEL FOR 1 W2 WING 1040 LBS

CLASS A CONCRETE FOR 1 W2 WING 11.7 CY

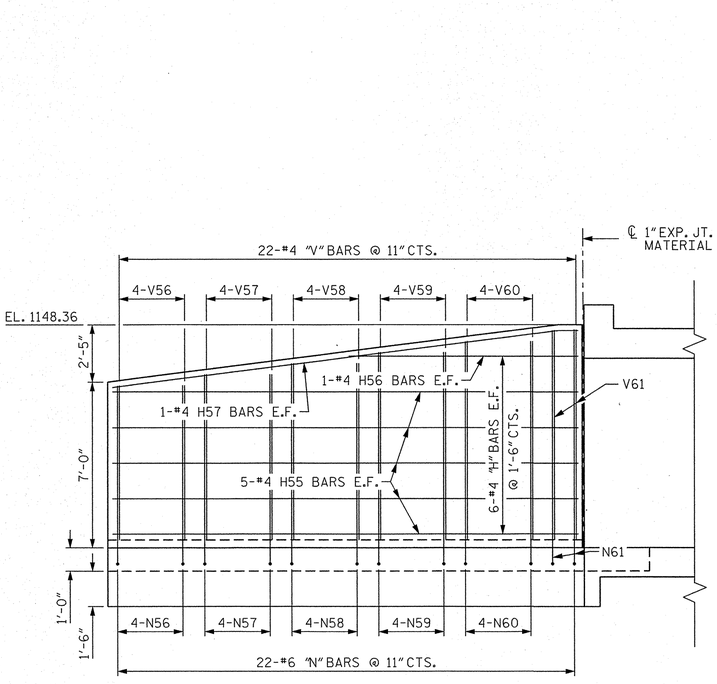

ELEVATION W2

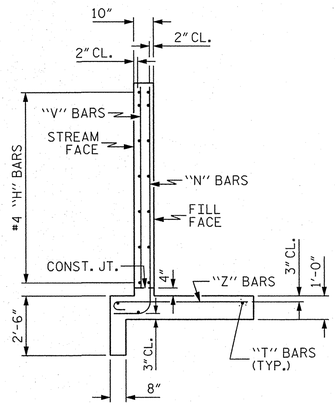

TYPICAL W1 AND W2 SECTION

PROJECT NO. 17BP.13.R.40

BURKE COUNTY

STATION: 12+10.95 -L-

SHEET 4 OF 7

STATE OF NORTH CAROLINA
DEPARTMENT OF TRANSPORTATION
RALEIGH

WINGS 1 AND 2
FOR
CONCRETE BOX CULVERT

H = 8'-0" SLOPE = 2:1
75° OR 105° SKEW

ASSEMBLED BY : PFC	DATE : 2/14
CHECKED BY : CMT	DATE : 2/14
DRAWN BY : CCJ 01/00	
CHECKED BY : RWW 03/00	

Prepared in the Office of:
Mattern & Craig
CONSULTING ENGINEERS - SURVEYORS
12 BROAD STREET
ASHEVILLE, NORTH CAROLINA 28801
(828) 254-2201 - FAX (828) 254-4562

NORTH CAROLINA PROFESSIONAL SEAL 14309 ENGINEER STEVEN T. CAMPBELL

REVISIONS						SHEET NO.
NO.	BY:	DATE:	NO.	BY:	DATE:	S-4
1			3			TOTAL SHEETS
2			4			7

STD. NO. CW7508

$$$$$$$STSTIME$$$$$$$
$$$$$$$$$$$$$$$$$$$$$$$$$DGN$$$$$$$$$$$$$$$$$$$$$$$$$
$$$$USERNAME$$$$

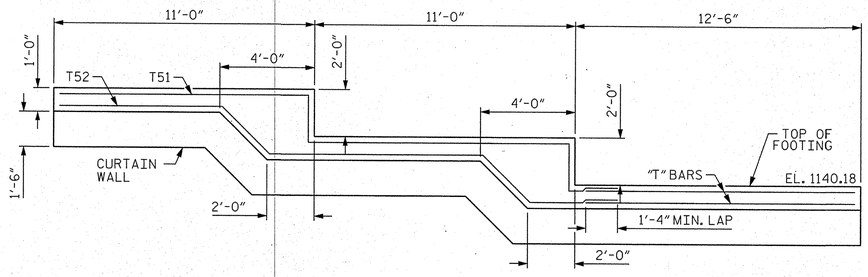

FOOTING ELEVATION W3

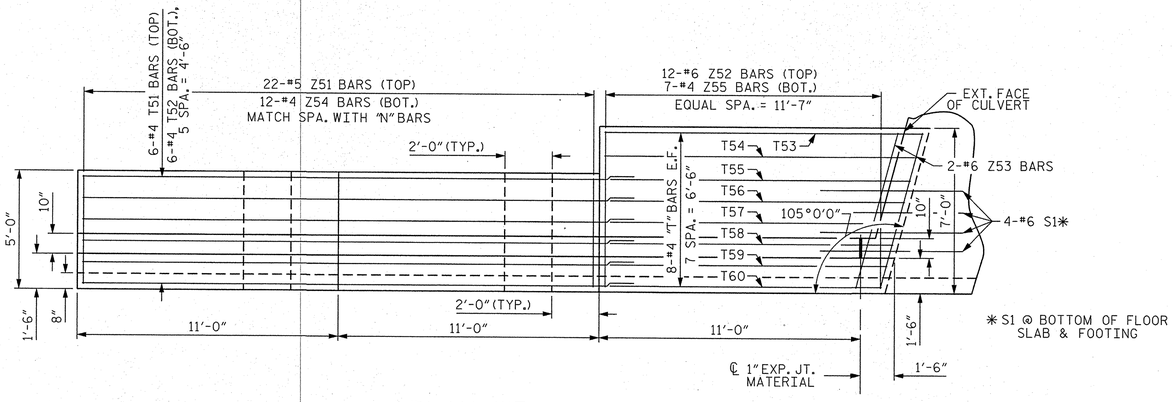

PLAN W3

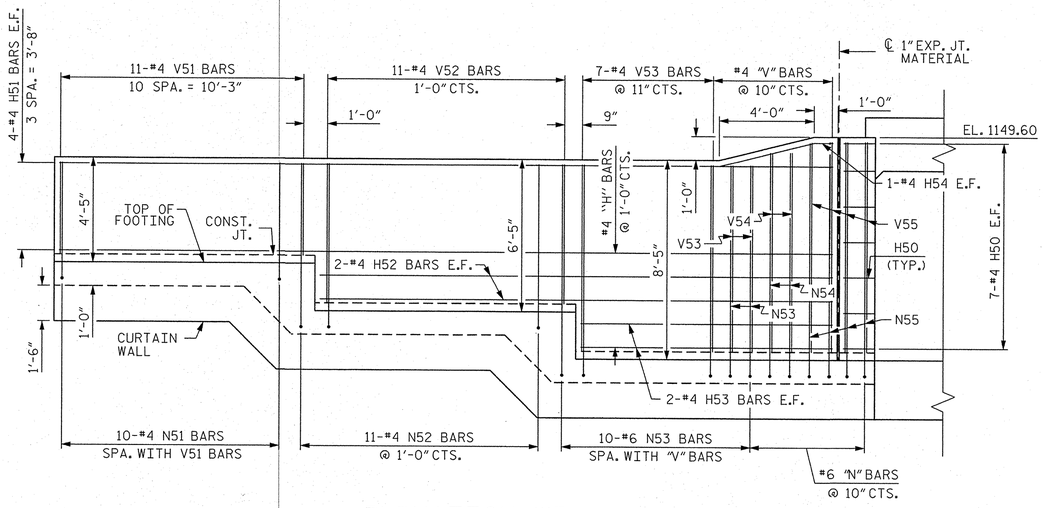

ELEVATION W3

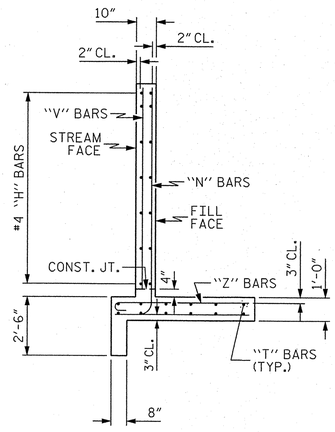

W3 SECTION

BAR TYPES

ALL BAR DIMENSIONS ARE OUT TO OUT.

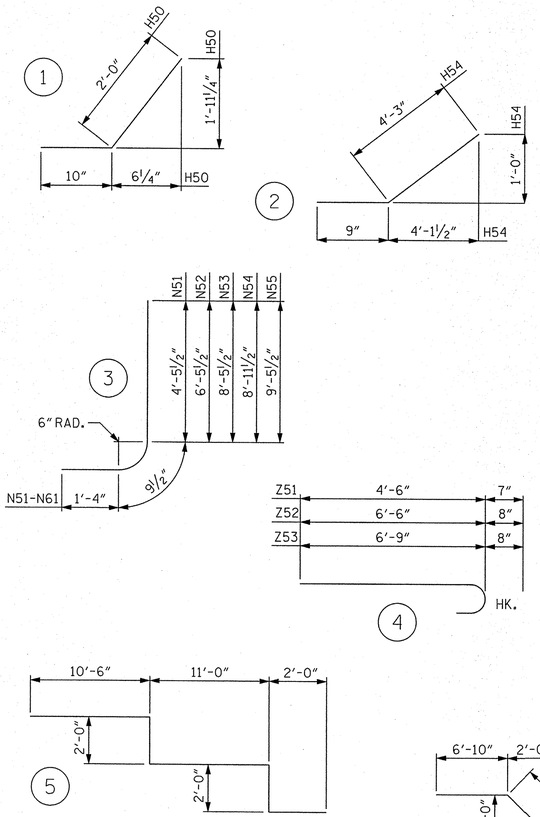

BILL OF MATERIAL FOR WINGWALL W3

BAR	NO.	SIZE	TYPE	LENGTH	WEIGHT
H50	14	#4	1	2'-10"	27
H51	8	#4	STR	32'-7"	174
H52	4	#4	STR	21'-7"	58
H53	4	#4	STR	10'-7"	28
H54	2	#4	2	5'-0"	7
N51	10	#4	3	6'-7"	44
N52	11	#4	3	8'-7"	63
N53	10	#6	3	10'-7"	159
N54	2	#6	3	11'-1"	33
N55	4	#6	3	11'-7"	70
S1	4	#6	STR	6'-0"	36
T51	6	#4	5	27'-6"	110
T52	6	#4	6	25'-1"	100
T53	2	#4	STR	13'-4"	18
T54	2	#4	STR	13'-0"	17
T55	2	#4	STR	12'-10"	17
T56	2	#4	STR	12'-7"	17
T57	2	#4	STR	12'-4"	16
T58	2	#4	STR	12'-1"	16
T59	2	#4	STR	11'-10"	16
T60	2	#4	STR	11'-7"	15
V51	11	#4	STR	3'-9"	28
V52	11	#4	STR	5'-9"	42
V53	9	#4	STR	7'-9"	47
V54	2	#4	STR	8'-3"	11
V55	4	#4	STR	8'-9"	23
Z51	22	#5	4	5'-1"	117
Z52	12	#6	4	7'-2"	129
Z53	2	#6	4	7'-5"	22
Z54	12	#4	STR	4'-6"	36
Z55	7	#4	STR	6'-6"	30

REINFORCING STEEL FOR 2 WINGS 1526 LBS

CLASS A CONCRETE

1 W3 WING	17.6 CY
2 HEADWALLS	2.4 CY
2 END CURTAIN WALLS	4.6 CY
TOTAL	24.6 CY

ASSEMBLED BY :	PFC
CHECKED BY :	CMT
DATE :	2/14
DATE :	2/14
DRAWN BY :	CCJ 01/00
CHECKED BY :	RWW 03/00

Prepared in the Office of:
Mattern & Craig
CONSULTING ENGINEERS - SURVEYORS
12 BROAD STREET
ASHEVILLE, NORTH CAROLINA 28801
(828) 254-2201 - FAX (828) 254-4562

NORTH CAROLINA PROFESSIONAL SEAL 14309 ENGINEER STEVEN A. CAMPBELL

PROJECT NO. 17BP.13.R.40
BURKE COUNTY
STATION: 12+10.95 -L-

SHEET 5 OF 7

STATE OF NORTH CAROLINA
DEPARTMENT OF TRANSPORTATION
RALEIGH

WING 3
FOR
CONCRETE BOX CULVERT

H = 8'-0" SLOPE = 2:1
75° OR 105° SKEW

REVISIONS						SHEET NO.
NO.	BY:	DATE:	NO.	BY:	DATE:	S-5
1			3			TOTAL SHEETS
2			4			7

STD. NO. CW7508

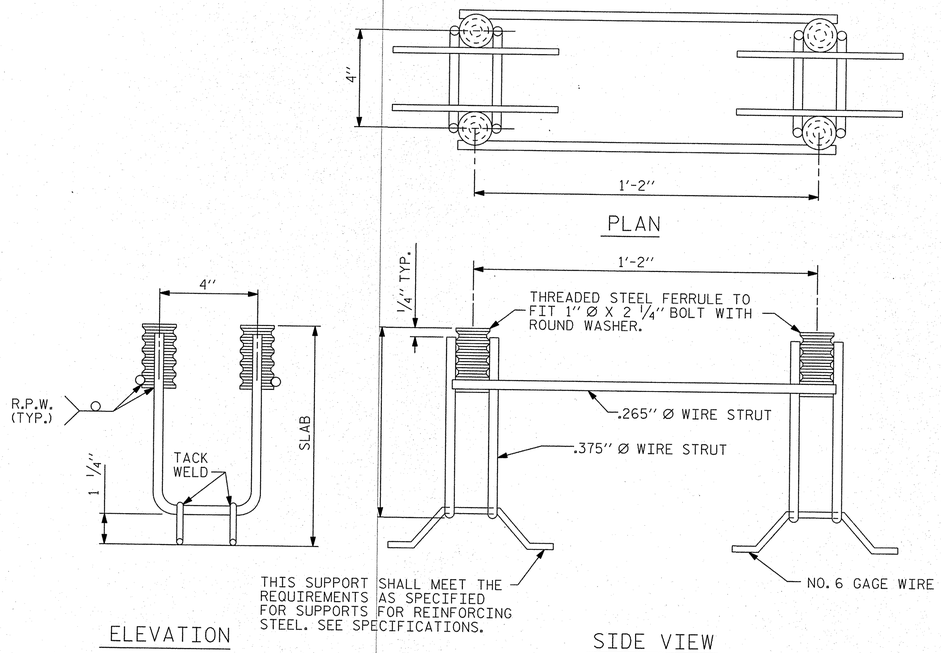

GUARDRAIL ANCHOR ASSEMBLY FOR CULVERTS

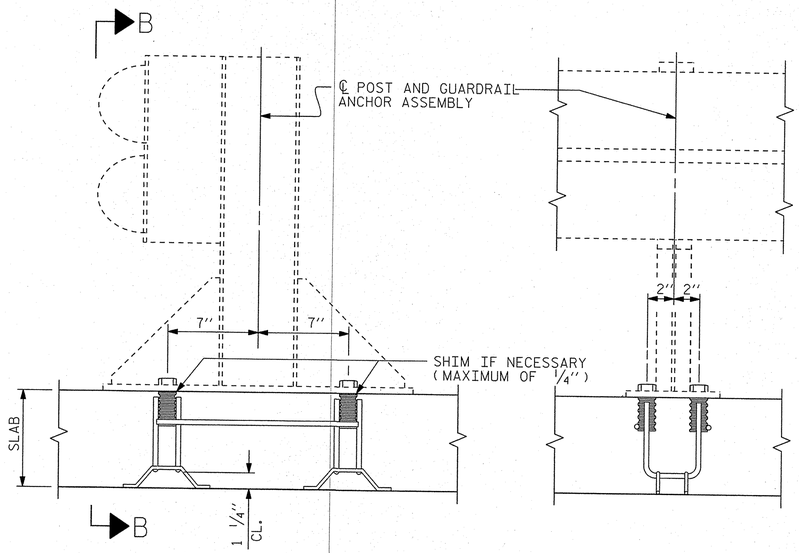

ASSEMBLED BY :	PFC		DATE :	2/14
CHECKED BY :	CMT		DATE :	2/14
DRAWN BY :	FCJ	6/88	REV. 7/10/01	LES/RDR
CHECKED BY :	ARB	6/88	REV. 5/7/03	RWW/JTE
			REV. 5/1/06R	KMM/GM

$$$$$$SYSTIME$$$$$
$$$$$$$$$$$$$$$$$$$$$$$$DGN$$$$$$$$$$$$$$$$$$$$$$$$
$$$$USERNAME$$$$

NOTES

THE GUARDRAIL ANCHOR ASSEMBLY FOR CULVERTS SHALL CONSIST OF THE FOLLOWING COMPONENTS :

A. FERRULES SHALL BE MADE FROM STEEL MEETING THE REQUIREMENTS OF AASHTO M169, GRADE 12L14 AND SHALL HAVE A MINIMUM LENGTH OF THREADS OF 2½".

B. 4 - 1'' Ø X 2 ¼'' BOLTS WITH WASHERS. BOLTS SHALL CONFORM TO THE REQUIREMENTS OF ASTM A307. BOLTS AND WASHERS SHALL BE GALVANIZED. (AT THE CONTRACTOR'S OPTION, STAINLESS STEEL BOLTS AND WASHERS MAY BE USED AS AN ALTERNATE FOR THE 1'' Ø X 2¼'' GALVANIZED BOLTS AND WASHERS. THEY SHALL CONFORM TO OR EXCEED THE MECHANICAL REQUIREMENTS OF ASTM A307. THE USE OF THIS ALTERNATE SHALL BE APPROVED BY THE ENGINEER.)

C. WIRE STRUTS SHOWN IN THE GUARDRAIL ANCHOR ASSEMBLY FOR CULVERTS DETAIL ARE MINIMUM ALLOWABLE SIZE AND SHALL HAVE A MINIMUM TENSILE STRENGTH OF 100,000 P.S.I. AS AN OPTION, A 7/16'' Ø WIRE STRUT WITH A MINIMUM TENSILE STRENGTH OF 90,000 PSI IS ACCEPTABLE.

GUARDRAIL ANCHOR ASSEMBLY WITH BOLTS SHALL BE ASSEMBLED IN THE SHOP. BOLT THREADS MAY BE RECUT AS NECESSARY TO INSURE FIT.

THE COST OF THE GUARDRAIL ANCHOR ASSEMBLY FOR CULVERTS COMPLETE IN PLACE, SHALL BE INCLUDED IN THE UNIT CONTRACT PRICE BID FOR CLASS "A" CONCRETE.

FERRULES TO BE PLUGGED DURING POURING OF SLAB AS RECOMMENDED BY THE MANUFACTURER.

AT THE CONTRACTOR'S OPTION, FERRULES WITH OPEN OR CLOSED ENDS MAY BE USED.

PAYMENT FOR GUARDRAIL, POSTS, AND POST BASE PLATES IS INCLUDED IN ROADWAY PAY ITEMS.

SLAB REINFORCING STEEL MAY BE SHIFTED AS NECESSARY TO CLEAR GUARDRAIL ANCHOR ASSEMBLY. CARE SHOULD BE TAKEN TO KEEP THE SHIFTING OF REINFORCING STEEL TO A MINIMUM.

THE CONTRACTOR MAY USE ADHESIVELY ANCHORED ANCHOR BOLTS IN PLACE OF GUARDRAIL ANCHOR ASSEMBLY. LEVEL TWO FIELD TESTING IS REQUIRED, AND THE YIELD LOAD OF THE 1"Ø BOLT IS 21.8 KIPS. FOR ADHESIVELY ANCHORED ANCHOR BOLTS OR DOWELS, SEE STANDARD SPECIFICATIONS.

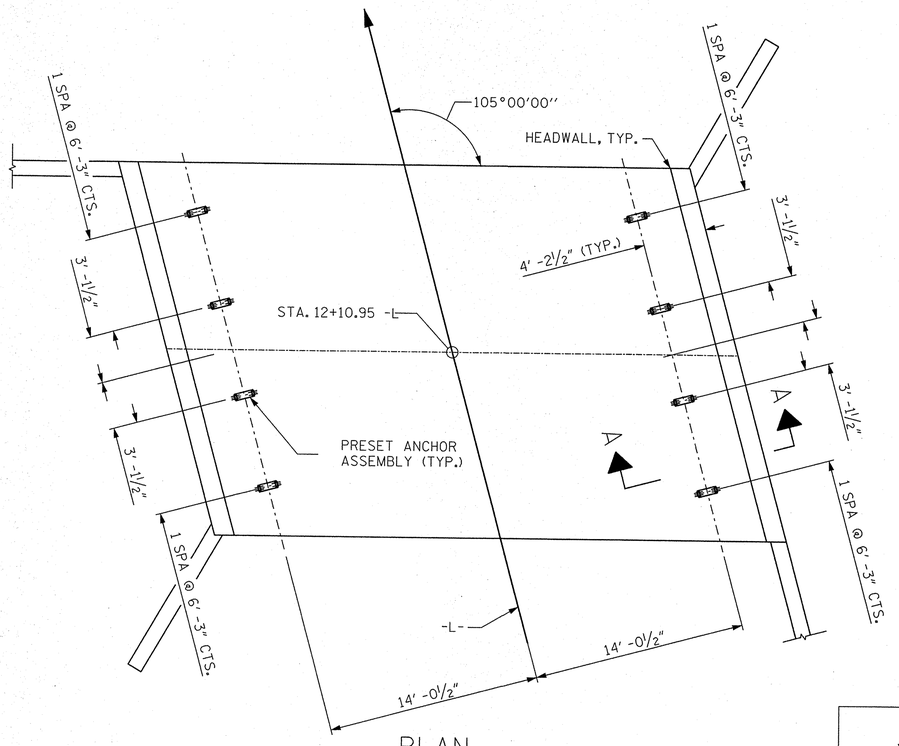

SHOWING : GUARDRAIL ANCHOR ASSEMBLY SPACING.

Prepared in the Office of:
Mattern & Craig
CONSULTING ENGINEERS - SURVEYORS
12 BROAD STREET
ASHEVILLE, NORTH CAROLINA 28801
(828) 254-2201 - FAX (828) 254-4562

NORTH CAROLINA PROFESSIONAL SEAL 14309 ENGINEER STEVEN A. CAMPBELL

PROJECT NO. 17BP.13.R.40
BURKE COUNTY
STATION: 12+10.95 -L-

SHEET 6 OF 7

STATE OF NORTH CAROLINA
DEPARTMENT OF TRANSPORTATION
RALEIGH

STANDARD

ANCHORAGE DETAILS FOR GUARDRAIL ANCHOR ASSEMBLY FOR CULVERTS

REVISIONS						SHEET NO.
NO.	BY:	DATE:	NO.	BY:	DATE:	S-6
1			3			TOTAL SHEETS
2			4			7

STD. NO. GRA1

LOAD AND RESISTANCE FACTOR RATING (LRFR)
SUMMARY FOR REINFORCED CONCRETE BOX CULVERTS

LEVEL		VEHICLE	WEIGHT (W) (TONS)	⟨#⟩ CONTROLLING LOAD RATING	MINIMUM RATING FACTORS (RF)	TONS = W × RF	STRENGTH I LIMIT STATE									COMMENT NUMBER
								MOMENT				SHEAR				
							LIVE-LOAD FACTORS (γ_{LL})	RATING FACTOR	BOX NO.	ELEMENT TYPE	DISTANCE FROM LEFT END OF ELEMENT (ft)	RATING FACTOR	BOX NO.	ELEMENT TYPE	DISTANCE FROM LEFT END OF ELEMENT (ft)	
DESIGN LOAD RATING		HL-93 (INVENTORY)	N/A	⟨1⟩	1.29	--	1.75	1.29	1	EXTERIOR WALL	0.33	2.30	1	TOP SLAB	9.72	
		HL-93 (OPERATING)	N/A		1.66	--	1.35	1.66	1	EXTERIOR WALL	0.33	2.98	1	TOP SLAB	9.72	
		HS-20 (INVENTORY)	36.000	⟨2⟩	1.43	51.5	1.75	1.43	1	EXTERIOR WALL	0.33	2.42	1	EXTERIOR WALL	1.06	
		HS-20 (OPERATING)	36.000		1.85	66.8	1.35	1.85	1	EXTERIOR WALL	0.33	3.13	1	EXTERIOR WALL	1.06	
LEGAL LOAD RATING	SINGLE VEHICLE (SV)	SNSH	13.500		2.18	29.5	1.40	2.18	1	EXTERIOR WALL	0.33	3.13	1	EXTERIOR WALL	1.06	
		SNGARBS2	20.000		2.05	40.9	1.40	2.05	1	EXTERIOR WALL	0.33	3.00	1	EXTERIOR WALL	1.06	
		SNAGRIS2	22.000		2.18	48.1	1.40	2.18	1	EXTERIOR WALL	0.33	3.13	1	EXTERIOR WALL	1.06	
		SNCOTTS3	27.250	⟨3⟩	1.35	36.8	1.40	1.35	1	EXTERIOR WALL	0.33	2.40	1	TOP SLAB	9.72	
		SNAGGRS4	34.925		1.72	60.2	1.40	1.72	1	BOTTOM SLAB	0.33	2.81	1	TOP SLAB	9.72	
		SNS5A	35.550		1.60	57.0	1.40	1.60	1	EXTERIOR WALL	0.33	2.66	1	TOP SLAB	9.72	
		SNS6A	39.950		1.60	64.1	1.40	1.60	1	EXTERIOR WALL	0.33	2.58	1	BOTTOM SLAB	9.70	
		SNS7B	42.000		1.60	67.3	1.40	1.60	1	EXTERIOR WALL	0.33	2.46	1	BOTTOM SLAB	9.70	
	TRUCK TRACTOR SEMI-TRAILER (TTST)	TNAGRIT3	33.000		2.20	72.5	1.40	2.20	1	EXTERIOR WALL	0.33	3.13	1	EXTERIOR WALL	1.06	
		TNT4A	33.075		1.61	53.2	1.40	1.61	1	EXTERIOR WALL	0.33	2.83	1	TOP SLAB	9.72	
		TNT6A	41.600		1.60	66.7	1.40	1.60	1	EXTERIOR WALL	0.33	2.64	1	TOP SLAB	9.72	
		TNT7A	42.000		1.61	67.5	1.40	1.61	1	EXTERIOR WALL	0.33	2.71	1	TOP SLAB	9.72	
		TNT7B	42.000		1.60	67.3	1.40	1.60	1	EXTERIOR WALL	0.33	2.70	1	TOP SLAB	9.72	
		TNAGRIT4	43.000		1.61	69.2	1.40	1.61	1	EXTERIOR WALL	0.33	2.80	1	TOP SLAB	9.72	
		TNAGRT5A	45.000		1.61	72.4	1.40	1.61	1	EXTERIOR WALL	0.33	2.78	1	TOP SLAB	9.72	
		TNAGRT5B	45.000		1.61	72.4	1.40	1.61	1	EXTERIOR WALL	0.33	2.54	1	BOTTOM SLAB	9.70	

LOAD FACTORS:

DESIGN LOAD RATING FACTORS

LOAD TYPE	MAX FACTOR	MIN FACTOR
DC	1.25	0.90
DW	1.50	0.65
EV	1.30	0.90
EH	1.35	0.90
ES	1.35	0.90
LS	1.75	--
WA	1.00	--

NOTE:

RATING FACTORS ARE BASED ON THE STRENGTH I LIMIT STATE.

⟨#⟩ CONTROLLING LOAD RATING

⟨1⟩ DESIGN LOAD RATING (HL-93)

⟨2⟩ DESIGN LOAD RATING (HS-20)

⟨3⟩ LEGAL LOAD RATING **

** SEE CHART FOR VEHICLE TYPE

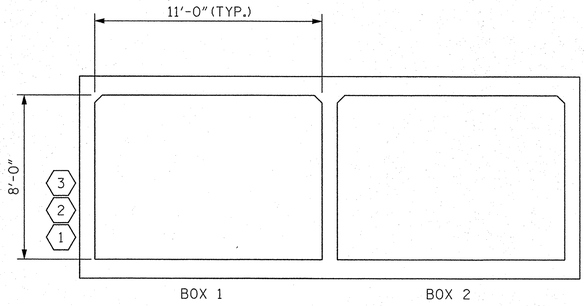

LRFR SUMMARY

(LOOKING DOWNSTREAM)

PROJECT NO. 17BP.13.R.40

BURKE COUNTY

STATION: 12+10.95 -L-

SHEET 7 OF 7

STATE OF NORTH CAROLINA
DEPARTMENT OF TRANSPORTATION
RALEIGH

STANDARD

LRFR SUMMARY FOR REINFORCED CONCRETE BOX CULVERTS

(NON-INTERSTATE TRAFFIC)

REVISIONS						SHEET NO.
NO.	BY:	DATE:	NO.	BY:	DATE:	S-7
1			3			TOTAL SHEETS
2			4			7

STD. NO. LRFR5

ASSEMBLED BY :	PFC	DATE :	2/14
CHECKED BY :	CMT	DATE :	2/14
DRAWN BY : WMC	7/11	REV. 10/1/11	MAA/GM
CHECKED BY : GM	7/11		

Prepared in the Office of:
Mattern & Craig
CONSULTING ENGINEERS - SURVEYORS
12 BROAD STREET
ASHEVILLE, NORTH CAROLINA 28801
(828) 254-2201 - FAX (828) 254-4562

NORTH CAROLINA PROFESSIONAL SEAL 14309 ENGINEER STEVEN A. CAMPBELL

$$$$$$$SYSTIME$$$$$
$$$$$$$$$$$$$$$$$$$$DGN$$$$$$$$$$$$$$$$$$$$$$$
$$$$$USERNAME$$$$$

STANDARD NOTES

DESIGN DATA:

SPECIFICATIONS	A.A.S.H.T.O. (CURRENT)
LIVE LOAD	SEE PLANS
IMPACT ALLOWANCE	SEE A.A.S.H.T.O.
STRESS IN EXTREME FIBER OF	
STRUCTURAL STEEL - AASHTO M270 GRADE 36	20,000 LBS. PER SQ. IN.
- AASHTO M270 GRADE 50W	27,000 LBS. PER SQ. IN.
- AASHTO M270 GRADE 50	27,000 LBS. PER SQ. IN.
REINFORCING STEEL IN TENSION	
GRADE 60	24,000 LBS. PER SQ. IN.
CONCRETE IN COMPRESSION	1,200 LBS. PER SQ. IN.
CONCRETE IN SHEAR	SEE A.A.S.H.T.O.
STRUCTURAL TIMBER - TREATED OR	
UNTREATED - EXTREME FIBER STRESS	1,800 LBS. PER SQ. IN.
COMPRESSION PERPENDICULAR TO GRAIN OF TIMBER	375 LBS. PER SQ. IN.
EQUIVALENT FLUID PRESSURE OF EARTH	30 LBS. PER CU. FT. (MINIMUM)

MATERIAL AND WORKMANSHIP:

EXCEPT AS MAY OTHERWISE BE SPECIFIED ON PLANS OR IN THE SPECIAL PROVISIONS, ALL MATERIAL AND WORKMANSHIP SHALL BE IN ACCORDANCE WITH THE 2012 "STANDARD SPECIFICATIONS FOR ROADS AND STRUCTURES" OF THE N. C. DEPARTMENT OF TRANSPORTATION.

STEEL SHEET PILING FOR PERMANENT OR TEMPORARY APPLICATIONS SHALL BE HOT ROLLED.

CONCRETE:

UNLESS OTHERWISE REQUIRED ON PLANS, CLASS A CONCRETE SHALL BE USED FOR ALL PORTIONS OF ALL STRUCTURES WITH THE EXCEPTION THAT: CLASS AA CONCRETE SHALL BE USED IN BRIDGE SUPERSTRUCTURES, ABUTMENT BACKWALLS, AND APPROACH SLABS; AND CLASS B CONCRETE SHALL BE USED FOR SLOPE PROTECTION AND RIP RAP.

CONCRETE CHAMFERS:

UNLESS OTHERWISE NOTED ON THE PLANS, ALL EXPOSED CORNERS ON STRUCTURES SHALL BE CHAMFERED 3/4" WITH THE FOLLOWING EXCEPTIONS: TOP CORNERS OF CURBS MAY BE ROUNDED TO 1-1/2" RADIUS WHICH IS BUILT INTO CURB FORMS; CORNERS OF TRANSVERSE FLOOR EXPANSION JOINTS SHALL BE ROUNDED WITH A 1/4" FINISHING TOOL UNLESS OTHERWISE REQUIRED ON PLANS; AND CORNERS OF EXPANSION JOINTS IN THE ROADWAY FACES AND TOPS OF CURBS AND SIDEWALKS SHALL BE ROUNDED TO A 1/4" RADIUS WITH A FINISHING STONE OR TOOL UNLESS OTHERWISE REQUIRED ON PLANS.

DOWELS:

DOWELS WHEN INDICATED ON PLANS AS FOR CULVERT EXTENSIONS, SHALL BE EMBEDDED AT LEAST 12" INTO THE OLD CONCRETE AND GROUTED INTO PLACE WITH 1:2 CEMENT MORTAR.

ALLOWANCE FOR DEAD LOAD DEFLECTION, SETTLEMENT, ETC. IN CASTING SUPERSTRUCTURES:

BRIDGES SHALL BE BUILT ON THE GRADE OR VERTICAL CURVE SHOWN ON PLANS. SLABS, CURBS AND PARAPETS SHALL CONFORM TO THE GRADE OR CURVE.

ALL DIMENSIONS WHICH ARE GIVEN IN SECTION AND ARE AFFECTED BY DEAD LOAD DEFLECTIONS ARE DIMENSIONS AT CENTER LINE OF BEARING UNLESS OTHERWISE NOTED ON PLANS. IN SETTING FORMS FOR STEEL BEAM BRIDGES AND PRESTRESSED CONCRETE GIRDER BRIDGES, ADJUSTMENTS SHALL BE MADE DUE TO THE DEAD LOAD DEFLECTIONS FOR THE ELEVATIONS SHOWN. WHERE BLOCKS ARE SHOWN OVER BEAMS FOR BUILDING UP TO THE SLAB, THE VERTICAL DIMENSIONS OF THE BLOCKS SHALL BE ADJUSTED BETWEEN BEARINGS TO COMPENSATE FOR DEAD LOAD DEFLECTIONS, VERTICAL CURVE ORDINATE, AND ACTUAL BEAM CAMBER. WHERE BOTTOM OF SLAB IS IN LINE WITH BOTTOM OF TOP FLANGES, DEPTH OF SLAB BETWEEN BEARINGS SHALL BE ADJUSTED TO COMPENSATE FOR DEAD LOAD DEFLECTION, VERTICAL CURVE ORDINATE, AND ACTUAL BEAM CAMBER.

IN SETTING FALSEWORK AND FORMS FOR REINFORCED CONCRETE SPANS, AN ALLOWANCE SHALL BE MADE FOR DEAD LOAD DEFLECTIONS, SETTLEMENT OF FALSEWORK, AND PERMANENT CAMBER WHICH SHALL BE PROVIDED FOR IN ADDITION TO THE ELEVATIONS SHOWN. AFTER REMOVAL OF THE FALSEWORK, THE FINISHED STRUCTURES SHALL CONFORM TO THE PROFILE AND ELEVATIONS SHOWN ON THE PLANS AND CONSTRUCTION ELEVATIONS FURNISHED BY THE ENGINEER.

DETAILED DRAWINGS FOR FALSEWORK OR FORMS FOR BRIDGE SUPERSTRUCTURE AND ANY STRUCTURE OR PARTS OF A STRUCTURE AS NOTED ON THE PLANS SHALL BE SUBMITTED TO THE ENGINEER FOR APPROVAL BEFORE CONSTRUCTION OF THE FALSEWORK OR FORMS IS STARTED.

REINFORCING STEEL:

ALL REINFORCING STEEL SHALL BE DEFORMED. DIMENSIONS RELATIVE TO PLACEMENT OF REINFORCING ARE TO CENTERS OF BARS UNLESS OTHERWISE INDICATED IN THE PLANS. DIMENSIONS ON BAR DETAILS ARE TO CENTERS OF BARS OR ARE OUT TO OUT AS INDICATED ON PLANS.

WIRE BAR SUPPORTS SHALL BE PROVIDED FOR REINFORCING STEEL WHERE INDICATED ON THE PLANS. WHEN BAR SUPPORT PIECES ARE PLACED IN CONTINUOUS LINES, THEY SHALL BE SO PLACED THAT THE ENDS OF THE SUPPORTING WIRES SHALL BE LAPPED TO LOCK LEGS ON ADJOINING PIECES.

STRUCTURAL STEEL:

AT THE CONTRACTOR'S OPTION, HE MAY SUBSTITUTE 7/8" Ø SHEAR STUDS FOR THE 3/4" Ø STUDS SPECIFIED ON THE PLANS. THIS SUBSTITUTION SHALL BE MADE AT THE RATE OF 3 - 7/8" Ø STUDS FOR 4 - 3/4" Ø STUDS, AND STUD SPACING CHANGES SHALL BE MADE AS NECESSARY TO PROVIDE THE SAME EQUIVALENT NUMBER OF 7/8" Ø STUDS ALONG THE BEAM AS SHOWN FOR 3/4" Ø STUDS BASED ON THE RATIO OF 3 - 7/8" Ø STUDS FOR 4 - 3/4" Ø STUDS. STUDS OF THE LENGTH SPECIFIED ON THE PLANS MUST BE PROVIDED. THE MAXIMUM SPACING SHALL BE 2'-0".

EXCEPT AT THE INTERIOR SUPPORTS OF CONTINUOUS BEAMS WHERE THE COVER PLATE IS IN CONTACT WITH BEARING PLATE, THE CONTRACTOR MAY, AT HIS OPTION, SUBSTITUTE FOR THE COVER PLATES DESIGNATED ON THE PLANS COVER PLATES OF THE EQUIVALENT AREA PROVIDED THESE PLATES ARE AT LEAST 5/16" IN THICKNESS AND DO NOT EXCEED A WIDTH EQUAL TO THE FLANGE WIDTH LESS 2" OR A THICKNESS EQUAL TO 2 TIMES THE FLANGE THICKNESS. THE SIZE OF FILLET WELDS SHALL CONFORM TO THE REQUIREMENTS OF THE CURRENT ANSI/AASHTO/AWS "BRIDGE WELDING CODE". ELECTROSLAG WELDING WILL NOT BE PERMITTED.

WITH THE SOLE EXCEPTION OF EDGES AT SURFACES WHICH BEAR ON OTHER SURFACES, ALL SHARP EDGES AND ENDS OF SHAPES AND PLATES SHALL BE SLIGHTLY ROUNDED BY SUITABLE MEANS TO A RADIUS OF APPROXIMATELY 1/16 INCH OR EQUIVALENT FLAT SURFACE AT A SUITABLE ANGLE PRIOR TO PAINTING, GALVANIZING, OR METALLIZING.

HANDRAILS AND POSTS:

METAL STANDARDS AND FACES OF THE CONCRETE END POSTS FOR THE METAL RAIL SHALL BE SET NORMAL TO THE GRADE OF THE CURB, UNLESS OTHERWISE SHOWN ON PLANS. THE METAL RAIL AND TOPS OF CONCRETE POSTS USED WITH THE ALUMINUM RAIL SHALL BE BUILT PARALLEL TO THE GRADE OF THE CURB.

METAL HANDRAILS SHALL BE IN ACCORDANCE WITH THE PLANS. RAILS SHALL BE AS MANUFACTURED FOR BRIDGE RAILING. CASTINGS SHALL BE OF A UNIFORM APPEARANCE. FINS AND OTHER DEFORMATIONS RESULTING FROM CASTING OR OTHERWISE SHALL BE REMOVED IN A MANNER SO THAT A UNIFORM COLORING OF THE COMPLETED CASTING SHALL BE OBTAINED. CASTINGS WITH DISCOLORATIONS OR OF NON-UNIFORM COLORING WILL NOT BE ACCEPTED. CERTIFIED MILL REPORTS ARE REQUIRED FOR METAL RAILS AND POSTS.

SPECIAL NOTES:

GENERALLY, IN CASE OF DISCREPANCY, THIS STANDARD SHEET OF NOTES SHALL GOVERN OVER THE SPECIFICATIONS, BUT THE REMAINDER OF THE PLANS SHALL GOVERN OVER NOTES HEREON, AND SPECIAL PROVISIONS SHALL GOVERN OVER ALL. SEE SPECIFICATIONS ARTICLE 105-4.

ENGLISH

JANUARY, 1990

STD. NO. SN

REV. 6-16-95 EEM (c) RGW REV. 5-7-03 RWW (c) JTE REV. 10-1-11 MAA (c) GM
REV. 8-16-99 RWW (c) LES REV. 5-1-06 TLA (c) GM

$$$$$$SYSTIME$$$$$
$$$$$$$$$$$$$$$$$$$$$$DGN$$$$$$$$$$$$$$$$$$$$$$$$
$$$$USERNAME$$$$

06/09/11

PROJECT: 17BP.13.R.42

CONTRACT:

$$$$SYSTIME$$$$ $$$$DGN$$$$ $$$$USERNAME$$$$

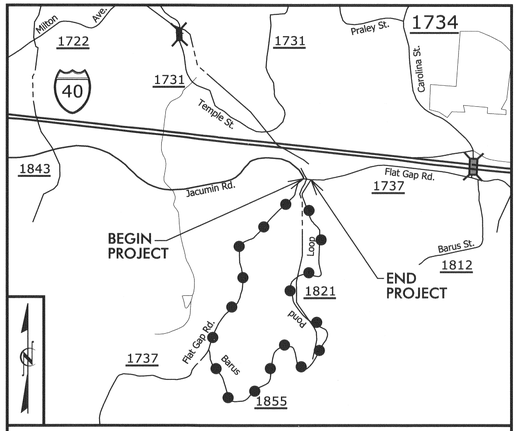

VICINITY MAP

DETOUR ROUTE

STATE OF NORTH CAROLINA
DIVISION OF HIGHWAYS

BURKE COUNTY

STATE	STATE PROJECT REFERENCE NO.	SHEET NO.	TOTAL SHEETS
N.C.	17BP.13.R.42	1	

STATE PROJ. NO.	F. A. PROJ. NO.	DESCRIPTION
17BP.13.R.42		PE
17BP.13.R.42		R/W
17BP.13.R.42		CONST.

LOCATION: BRIDGE NO. 218 OVER DOUBLE BRANCH ON SR 1737 (FLAT GAP ROAD)

TYPE OF WORK: GRADING, DRAINAGE, PAVING, AND STRUCTURE

MAP 2

4

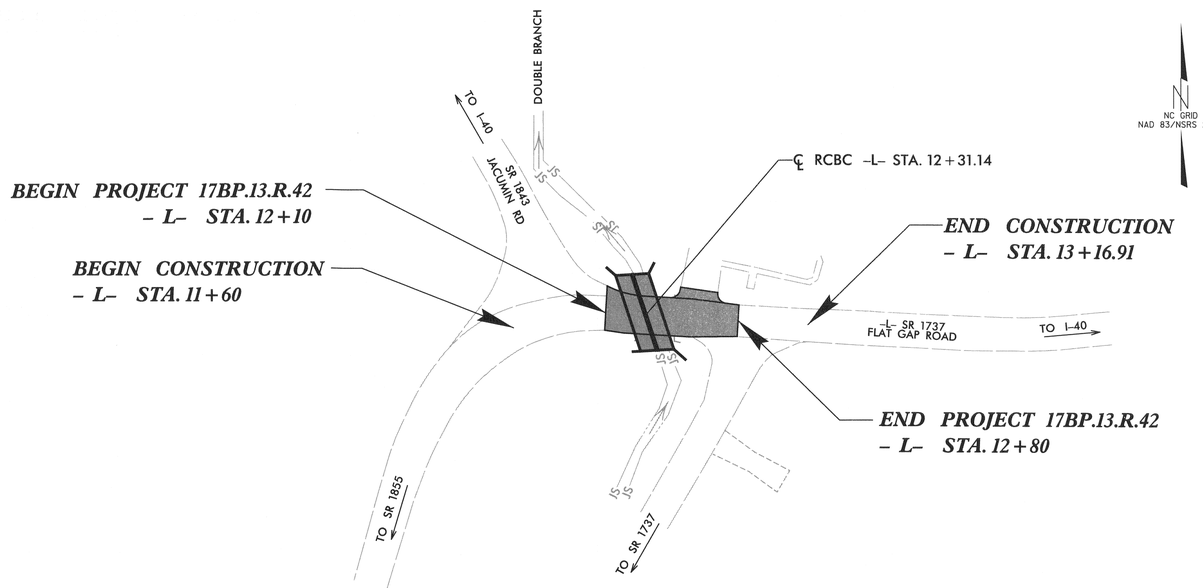

V&M Vaughn & Melton
Consulting Engineers
Asheville, North Carolina
828-253-2796
Tri-Cities, TN 423-467-8401
Knoxville, TN 865-546-5800
Spartanburg, SC 864-574-4715
Charleston, SC 843-974-5650
Middlesboro, KY 606-248-6600
Charlotte, NC 704-357-0488
Boone, NC 828-355-9933
Atlanta, GA 770-627-3509

Copyright © 2006 Vaughn & Melton, Inc. All Rights Reserved

GRAPHIC SCALES

30 15 0 30 60
PLANS

30 15 0 30 60
PROFILE (HORIZONTAL)

6 3 0 6 12
PROFILE (VERTICAL)

DESIGN DATA

ADT 2005 = 1700
ADT 2025 = 3400

T = 6 %
V = 40 MPH

FUNC CLASS = LOCAL

PROJECT LENGTH

LENGTH ROADWAY PROJECT 17BP.13.R.42 = 0.010 MI.

LENGTH STRUCTURE PROJECT 17BP.13.R.42 = 0.003 MI.

TOTAL LENGTH PROJECT 17BP.13.R.42 = 0.013 MI.

Prepared In the Office of:
VAUGHN & MELTON
1318-F PATTON AVE.
ASHEVILLE, NC 28806
FOR THE NORTH CAROLINA DIVISION OF HIGHWAYS

2012 STANDARD SPECIFICATIONS

RIGHT OF WAY DATE:
MAY 10, 2013

LETTING DATE:

AARON CARVER, PE
PROJECT ENGINEER

CHASE CARVER, EI
PROJECT DESIGN ENGINEER

NCDOT CONTACT:
PAUL SPROUSE, PE
DIVISION 13 BRIDGE PROJECT MANAGER

HYDRAULICS ENGINEER

NORTH CAROLINA PROFESSIONAL SEAL 033023 ENGINEER BRADLEY S. RIDNOUR

5/27/14
Bradley S Ridnour, PE
P.E.
SIGNATURE:

ROADWAY DESIGN ENGINEER

NORTH CAROLINA PROFESSIONAL SEAL 030453 ENGINEER AARON C. CARVER

5/27/14
P.E.
SIGNATURE:

DIVISION OF HIGHWAYS STATE OF NORTH CAROLINA

STATE OF NORTH CAROLINA DEPARTMENT OF TRANSPORTATION

PROJECT REFERENCE NO.	SHEET NO.
17BP.13.R.42	1-A

ROADWAY DESIGN ENGINEER

NORTH CAROLINA PROFESSIONAL SEAL 030453 ENGINEER AARON C. CARVER

5/27/14

INDEX OF SHEETS

SHEET NUMBER	SHEET
1	TITLE SHEET
1-A	INDEX OF SHEETS, GENERAL NOTES, AND LIST OF STANDARD DRAWINGS
1-B	CONVENTIONAL SYMBOLS
1-C	SURVEY CONTROL SHEET
2	PAVEMENT SCHEDULE, TYPICAL SECTIONS, AND WEDGING DETAILS
3A	SUMMARY OF DRAINAGE QUANTITIES, SUMMARY OF GUARDRAIL, AND ASPHALT PAVEMENT REMOVAL SUMMARY
3B	EARTHWORK SUMMARY
4	PLAN AND PROFILE SHEET
TMP-1 THRU TMP-2	TRAFFIC MANAGEMENT PLANS
SD-1	SPECIAL SIGN DESIGN
EC-1 THRU EC-4	EROSION CONTROL PLANS
UO-1 THRU UO-2	UTILITIES BY OTHERS
X-0	CROSS-SECTION SUMMARY
X-1 THRU X-2	CROSS-SECTIONS
S-1 THRU S-6	STRUCTURE PLANS

GENERAL NOTES:

2012 SPECIFICATIONS
EFFECTIVE: 01-17-12

GRADE LINE:
GRADING AND SURFACING OR RESURFACING AND WIDENING:

THE GRADE LINES SHOWN DENOTE THE FINISHED ELEVATION OF THE PROPOSED SURFACING AT GRADE POINTS SHOWN ON THE TYPICAL SECTIONS. WHERE NO GRADE LINES ARE SHOWN, THE PROFILES SHOWN DENOTE THE TOP ELEVATION OF THE EXISTING PAVEMENT ALONG THE CENTER LINE OF SURVEY ON WHICH THE PROPOSED RESURFACING WILL BE PLACED. GRADE LINES MAY BE ADJUSTED BY THE ENGINEER IN ORDER TO SECURE A PROPER TIE-IN.

CLEARING:

CLEARING ON THIS PROJECT SHALL BE PERFORMED TO THE LIMITS ESTABLISHED BY METHOD II.

SUPERELEVATION:

ALL CURVES ON THIS PROJECT SHALL BE SUPERELEVATED IN ACCORDANCE WITH STD. NO. 225.04 USING THE RATE OF SUPERELEVATION AND RUNOFF SHOWN ON THE PLANS. SUPERELEVATION IS TO BE REVOLVED ABOUT THE GRADE POINTS SHOWN ON THE TYPICAL SECTIONS.

SHOULDER CONSTRUCTION:

ASPHALT, EARTH, AND CONCRETE SHOULDER CONSTRUCTION ON THE HIGH SIDE OF SUPERELEVATED CURVES SHALL BE IN ACCORDANCE WITH STD. NO. 560.01.

SIDE ROADS:

THE CONTRACTOR WILL BE REQUIRED TO DO ALL NECESSARY WORK TO PROVIDE SUITABLE CONNECTIONS WITH ALL ROADS, STREETS, AND DRIVES ENTERING THIS PROJECT. THIS WORK WILL BE PAID FOR AT THE CONTRACT UNIT PRICE FOR THE PARTICULAR ITEMS INVOLVED.

GUARDRAIL:

THE GUARDRAIL LOCATIONS SHOWN ON THE PLANS MAY BE ADJUSTED DURING CONSTRUCTION AS DIRECTED BY THE ENGINEER. THE CONTRACTOR SHOULD CONSULT WITH THE ENGINEER PRIOR TO ORDERING GUARDRAIL MATERIAL.

TEMPORARY SHORING:

SHORING REQUIRED FOR THE MAINTENANCE OF TRAFFIC WILL BE PAID FOR AS "EXTRA WORK" IN ACCORDANCE WITH SECTION 104-7.

UTILITIES:

UTILITY OWNERS ON THIS PROJECT ARE: DUKE ENERGY, SPRINT NEXTEL, AND TOWN OF VALDESE TRIPLE COMMUNITY DISTRICT. ANY RELOCATION OF EXISTING UTILITIES WILL BE ACCOMPLISHED BY OTHERS.

RIGHT-OF-WAY MARKERS:

ALL RIGHT-OF-WAY MARKERS ON THIS PROJECT SHALL BE PLACED BY CONTRACT.

2012 ROADWAY ENGLISH STANDARD DRAWINGS

The following Roadway Standards as appear in "Roadway Standard Drawings" Highway Design Branch - N. C. Department of Transportation - Raleigh, N. C., Dated January 17, 2012 are applicable to this project and by reference hereby are considered a part of these plans:

STD.NO.	TITLE
DIVISION 2 - EARTHWORK	
200.02	Method of Clearing - Method II
225.02	Guide for Grading Subgrade - Secondary and Local
225.04	Method of Obtaining Superelevation - Two Lane Pavement
DIVISION 3 - PIPE CULVERTS	
300.01	METHOD OF PIPE INSTALLATION
DIVISION 5 - SUBGRADE, BASES AND SHOULDERS	
560.01	Method of Shoulder Construction - High Side of Superelevated Curve - Method I
DIVISION 8 - INCIDENTALS	
806.01	Concrete Right of Way Marker
815.03	Pipe Underdrain and Blind Drain
840.00	Concrete Base Pad for Drainage Stuctures
840.25	Anchorage for Frames - Brick, Concrete, or Precast
840.29	Frames and Narrow Slot Flat Grates
840.35	Traffic Bearing Grated Drop Inlet - for Cast Iron Double Frame and Grates
840.46	Traffic Bearing Precast Drainage Structure
840.72	Pipe Collar
862.01	Guardrail Placement
862.02	Guardrail Installation

$$$$ SYSTIME $$$$
$$$$ USERNAME $$$$

3/15/06

PROJECT REFERENCE NO.	SHEET NO.
17BP.13.R.42	1-B

Note: Not to Scale

S.U.E. = Subsurface Utility Engineering

STATE OF NORTH CAROLINA
DIVISION OF HIGHWAYS

CONVENTIONAL PLAN SHEET SYMBOLS

BOUNDARIES AND PROPERTY:

- State Line
- County Line
- Township Line
- City Line
- Reservation Line
- Property Line
- Existing Iron Pin — EIP
- Property Corner
- Property Monument — ECM
- Parcel/Sequence Number — 123
- Existing Fence Line
- Proposed Woven Wire Fence
- Proposed Chain Link Fence
- Proposed Barbed Wire Fence
- Existing Wetland Boundary — WLB
- Proposed Wetland Boundary — WLB
- Existing Endangered Animal Boundary — EAB
- Existing Endangered Plant Boundary — EPB

BUILDINGS AND OTHER CULTURE:

- Gas Pump Vent or U/G Tank Cap
- Sign — S
- Well — W
- Small Mine
- Foundation
- Area Outline
- Cemetery
- Building
- School
- Church
- Dam

HYDROLOGY:

- Stream or Body of Water
- Hydro, Pool or Reservoir
- Jurisdictional Stream — JS
- Buffer Zone 1 — BZ 1
- Buffer Zone 2 — BZ 2
- Flow Arrow
- Disappearing Stream
- Spring
- Swamp Marsh
- Proposed Lateral, Tail, Head Ditch — FLOW
- False Sump

RAILROADS:

- Standard Gauge — CSX TRANSPORTATION
- RR Signal Milepost — MILEPOST 35
- Switch — SWITCH
- RR Abandoned
- RR Dismantled

RIGHT OF WAY:

- Baseline Control Point
- Existing Right of Way Marker
- Existing Right of Way Line
- Proposed Right of Way Line — RW
- Proposed Right of Way Line with Iron Pin and Cap Marker — RW
- Proposed Right of Way Line with Concrete or Granite Marker — RW
- Existing Control of Access — CA
- Proposed Control of Access — CA
- Existing Easement Line — E
- Proposed Temporary Construction Easement — E
- Proposed Temporary Drainage Easement — TDE
- Proposed Permanent Drainage Easement — PDE
- Proposed Permanent Utility Easement — PUE

ROADS AND RELATED FEATURES:

- Existing Edge of Pavement
- Existing Curb
- Proposed Slope Stakes Cut — C
- Proposed Slope Stakes Fill — F
- Proposed Wheel Chair Ramp — WCR
- Proposed Wheel Chair Ramp Curb Cut — WCC
- Curb Cut for Future Wheel Chair Ramp — CCFR
- Existing Metal Guardrail
- Proposed Guardrail
- Existing Cable Guiderail
- Proposed Cable Guiderail
- Equality Symbol
- Pavement Removal

VEGETATION:

- Single Tree
- Single Shrub
- Hedge
- Woods Line
- Orchard
- Vineyard — Vineyard

EXISTING STRUCTURES:

MAJOR:

- Bridge, Tunnel or Box Culvert — CONC
- Bridge Wing Wall, Head Wall and End Wall — CONC WW

MINOR:

- Head and End Wall — CONC HW
- Pipe Culvert
- Footbridge
- Drainage Box: Catch Basin, DI or JB — CB
- Paved Ditch Gutter
- Storm Sewer Manhole — S
- Storm Sewer — S

UTILITIES:

POWER:

- Existing Power Pole
- Proposed Power Pole
- Existing Joint Use Pole
- Proposed Joint Use Pole
- Power Manhole — P
- Power Line Tower
- Power Transformer
- U/G Power Cable Hand Hole — HH
- H–Frame Pole
- Recorded U/G Power Line — P
- Designated U/G Power Line (S.U.E.*) — P

TELEPHONE:

- Existing Telephone Pole
- Proposed Telephone Pole
- Telephone Manhole — T
- Telephone Booth
- Telephone Pedestal — T
- Telephone Cell Tower
- U/G Telephone Cable Hand Hole — HH
- Recorded U/G Telephone Cable — T
- Designated U/G Telephone Cable (S.U.E.*) — T
- Recorded U/G Telephone Conduit — TC
- Designated U/G Telephone Conduit (S.U.E.*) — TC
- Recorded U/G Fiber Optics Cable — T FO
- Designated U/G Fiber Optics Cable (S.U.E.*) — T FO

WATER:

- Water Manhole — W
- Water Meter
- Water Valve
- Water Hydrant
- Recorded U/G Water Line — W
- Designated U/G Water Line (S.U.E.*) — W
- Above Ground Water Line — A/G Water

TV:

- TV Satellite Dish
- TV Pedestal — C
- TV Tower
- U/G TV Cable Hand Hole — HH
- Recorded U/G TV Cable — TV
- Designated U/G TV Cable (S.U.E.*) — TV
- Recorded U/G Fiber Optic Cable — TV FO
- Designated U/G Fiber Optic Cable (S.U.E.*) — TV FO

GAS:

- Gas Valve
- Gas Meter
- Recorded U/G Gas Line — G
- Designated U/G Gas Line (S.U.E.*) — G
- Above Ground Gas Line — A/G Gas

SANITARY SEWER:

- Sanitary Sewer Manhole
- Sanitary Sewer Cleanout
- U/G Sanitary Sewer Line — SS
- Above Ground Sanitary Sewer — A/G Sanitary Sewer
- Recorded SS Forced Main Line — FSS
- Designated SS Forced Main Line (S.U.E.*) — FSS

MISCELLANEOUS:

- Utility Pole
- Utility Pole with Base
- Utility Located Object
- Utility Traffic Signal Box — S
- Utility Unknown U/G Line — ?UTL
- U/G Tank; Water, Gas, Oil
- A/G Tank; Water, Gas, Oil
- U/G Test Hole (S.U.E.*)
- Abandoned According to Utility Records — AATUR
- End of Information — E.O.I.

PROJECT REFERENCE NO.	SHEET NO.
17BP.13.R.42	1 – C
Location and Surveys	

SURVEY CONTROL SHEET 17BP.13.R.42

BL

POINT	DESC.	NORTH	EAST	ELEVATION	L STATION	OFFSET
1	BL-1	729402.2480	1237568.0510	1191.65	11+53.41	300.81 LT
2	BL-2	729170.8420	1237788.2680	1199.40	12+18.15	14.86 LT
3	BL-3	729138.4332	1238073.5531	1208.18	OUTSIDE PROJECT LIMITS	

****
BM1 ELEVATION = 1198.74
N 729207 E 1237784
BL STATION 7+91.00 22 LEFT
RR SPIKE IN BASE OF 14" SWEETGUM
****

ROW MARKER CONCRETE OR GRANITE-E

ALIGN	STATION	OFFSET	NORTH	EAST
L	11+60.00	16.00	729134.4279	1237737.7775
L	11+88.56	-58.00	729214.3765	1237751.9215
L	12+34.69	55.00	729100.1494	1237800.8026
L	12+43.46	-16.00	729170.5346	1237813.6003
L	12+43.46	-30.00	729184.5119	1237814.3979

FINAL -L-

TYPE	STATION	NORTH	EAST
POT	10+00.00	729013.1462	1237655.0576
PC	10+64.95	729075.2795	1237673.9683
PCC	11+39.06	729136.9822	1237713.3420
PT	12+01.16	729156.9705	1237770.4576
PC	13+92.00	729146.0980	1237960.9854
PT	14+64.72	729147.4606	1238033.6301
POT	14+72.86	729148.2288	1238041.7338

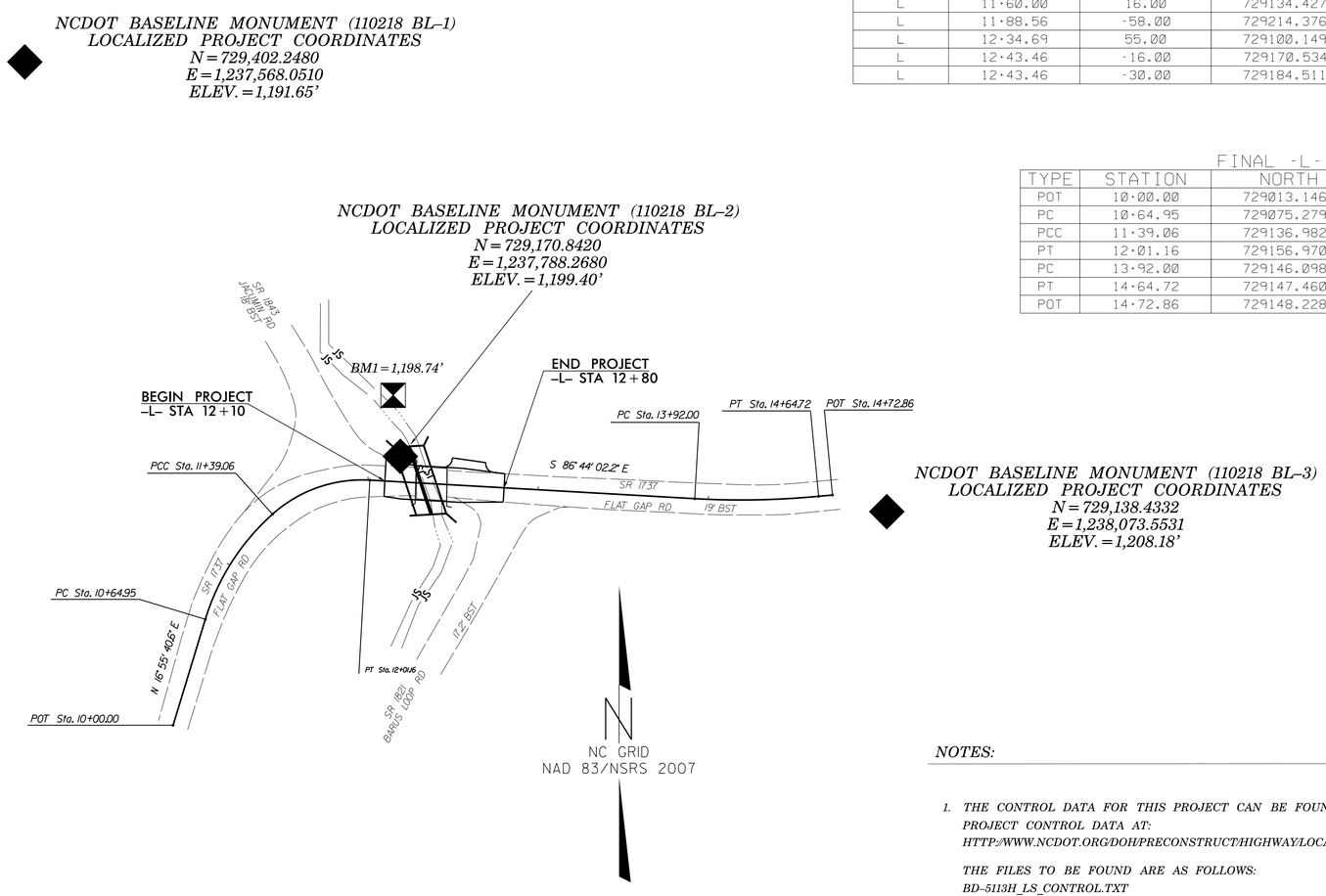

DATUM DESCRIPTION

THE LOCALIZED COORDINATE SYSTEM DEVELOPED FOR THIS PROJECT IS BASED ON THE STATE PLANE COORDINATES ESTABLISHED BY NCDOT FOR MONUMENT "110218 BL-2" WITH NAD 83/NSRS 2007 STATE PLANE GRID COORDINATES OF NORTHING: 729170.8420(ft) EASTING: 1237788.2680(ft) ELEVATION: 1199.40(ft)
THE AVERAGE COMBINED GRID FACTOR USED ON THIS PROJECT (GROUND TO GRID) IS: 0.99985461
THE N.C. LAMBERT GRID BEARING AND LOCALIZED HORIZONTAL GROUND DISTANCE FROM "110218 BL-2" TO -L- STATION 10+00.00 IS S 40°11'20" W 206.43'
ALL LINEAR DIMENSIONS ARE LOCALIZED HORIZONTAL DISTANCES
VERTICAL DATUM USED IS NAVD 88

NOTES:

1. *THE CONTROL DATA FOR THIS PROJECT CAN BE FOUND ELECTRONICALLY BY SELECTING PROJECT CONTROL DATA AT:*
   HTTP://WWW.NCDOT.ORG/DOH/PRECONSTRUCT/HIGHWAY/LOCATION/PROJECT/

   THE FILES TO BE FOUND ARE AS FOLLOWS:
   BD-5113H_LS_CONTROL.TXT

   SITE CALIBRATION INFORMATION HAS NOT BEEN PROVIDED FOR THIS PROJECT. IF FURTHER INFORMATION IS NEEDED, PLEASE CONTACT THE LOCATION AND SURVEYS UNIT.

◆ *INDICATES GEODETIC CONTROL MONUMENTS USED OR SET FOR HORIZONTAL PROJECT CONTROL BY THE NCDOT LOCATION AND SURVEYS UNIT.*
PROJECT CONTROL ESTABLISHED USING GLOBAL POSITIONING SYSTEM.

NOTE: DRAWING NOT TO SCALE

6/2/99

PROJECT REFERENCE NO.	SHEET NO.
17BPJ3.R.42	2

ROADWAY DESIGN ENGINEER

NORTH CAROLINA PROFESSIONAL SEAL 030453 ENGINEER AARON C. CARVER 5/27/14

PAVEMENT DESIGN ENGINEER

NORTH CAROLINA PROFESSIONAL SEAL 20134 ENGINEER ROBERT M. CRISP 5/27/14

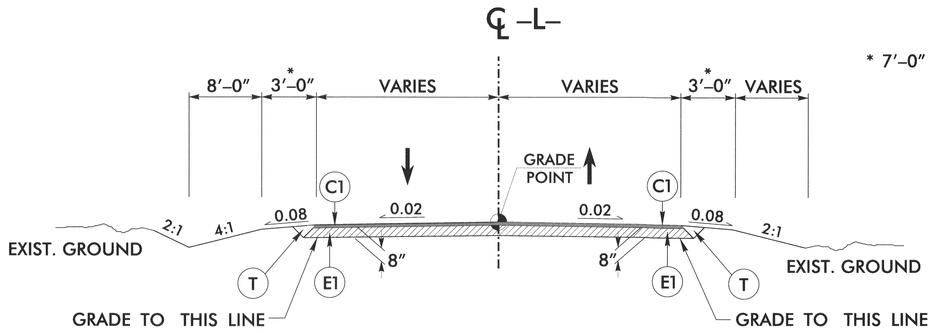

* 7′–0″ WITH GUARDRAIL

TYPICAL SECTION NO. 1

USE TYPICAL SECTION NO. 1

–L– STA. 12+10.00 (BEGIN PROJECT) TO –L– STA. 12+21.99 (BEGIN CULVERT)
–L– STA. 12+40.28 (END CULVERT) TO –L– STA. 12+55

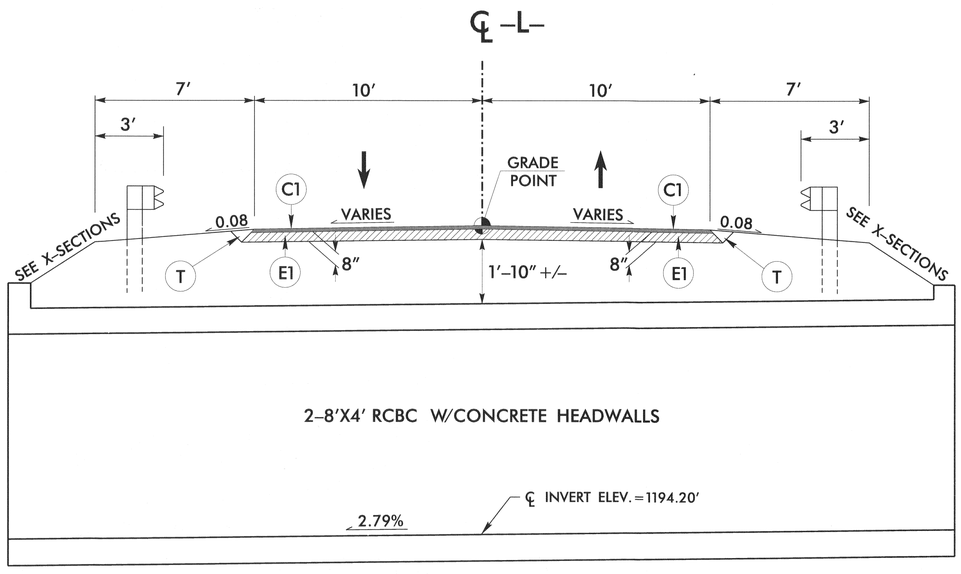

TYPICAL SECTION NO. 2

USE TYPICAL SECTION NO. 2

–L– STA. 12+21.99 (BEGIN CULVERT) TO –L– STA. 12+40.28 (END CULVERT)

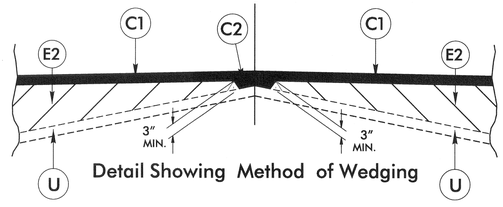

Detail Showing Method of Wedging

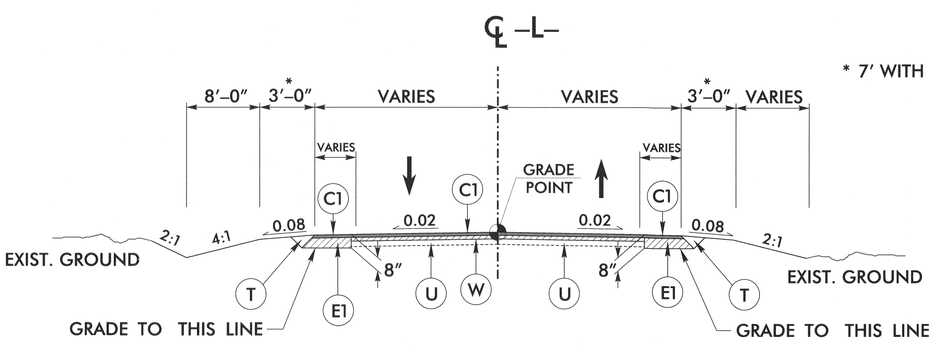

* 7′ WITH GUARDRAIL

TYPICAL SECTION NO. 3

USE TYPICAL SECTION NO. 3

–L– STA. 12+55 TO –L– STA. 12+80.00 (END PROJECT)

	PAVEMENT SCHEDULE
C1	PROP. APPROX. 3″ ASPHALT CONCRETE SURFACE COURSE, TYPE SF9.5A, AT AN AVERAGE RATE OF 165 LBS. PER SQ. YD. IN EACH OF TWO LAYERS.
C2	PROP. VAR. DEPTH ASPHALT CONCRETE SURFACE COURSE, TYPE SF9.5A, AT AN AVERAGE RATE OF 110 LBS. PER SQ.YD. PER 1″ DEPTH. TO BE PLACED IN LAYERS NOT TO EXCEED 2″ IN DEPTH.
E1	PROP. APPROX. 5″ ASPHALT CONCRETE BASE COURSE, TYPE B25.0B, AT AN AVERAGE RATE OF 570 LBS. PER SQ. YD.
E2	PROP. VAR. DEPTH ASPHALT CONCRETE BASE COURSE, TYPE B25.0B, AT AN AVERAGE RATE OF 114 LBS. PER SQ.YD. PER 1″ DEPTH. TO BE PLACED IN LAYERS NOT LESS THAN 3″ IN DEPTH OR GREATER THAN 5½″ IN DEPTH.
T	EARTH MATERIAL
U	EXISTING PAVEMENT
W	PROPOSED WEDGING (SEE APPROPRIATE DETAILS)

NOTE: ALL PAVEMENT EDGE SLOPES ARE 1:1 UNLESS SHOWN OTHERWISE.

6/2/99

$$$$$$$SYSTIME$$$$$$
$$$$$$$USERNAME$$$$$$
$$$$$$$DGN$$$$$$$$$$$$

6/21/00

COMPUTED BY: CBC DATE: 01-18-12
CHECKED BY: RMS DATE: 01-18-12

PROJECT REFERENCE NO.	SHEET NO.
17BP.13.R.42	3-A

STATE OF NORTH CAROLINA
DIVISION OF HIGHWAYS

PAVEMENT REMOVAL SUMMARY

IN SQUARE YARDS					
LINE	LOCATION	ASPHALT REMOVAL	ASPHALT BREAK-UP	CONCRETE REMOVAL	CONCRETE REMOVAL
-L-	12+10 TO 12+28	40			
-L-	12+46 TO 12+55	15			
	TOTAL	55			

Approximate quantities only. Unclassified excavation, borrow excavation, fine grading, clearing and grubbing, and removal of existing pavement will be paid for at the contract lump sum price for "grading".

NOTE: Invert Elevations are for Bid Purposes only and shall not be used for project construction stakeout. See "Standard Specifications For Roads and Structures, Section 300-5".

SUB-REGIONAL & REGIONAL
LIST OF PIPES, ENDWALLS, ETC. (FOR PIPES 48" & UNDER)

| STATION | LOCATION (LT,RT, OR CL) | STRUCTURE NO. FROM | STRUCTURE NO. TO | TOP ELEVATION | INVERT ELEVATION | INVERT ELEVATION | SLOPE CRITICAL | DRAINAGE PIPE (RCP, CSP, CAAP, HDPE, or PVC) SIZE 12" | 15" | 18" | 24" | 30" | 36" | 42" | 48" | DO NOT USE RCP | DO NOT USE CSP | DO NOT USE CAAP | DO NOT USE HDPE | C.S. PIPE SIZE 12" | 15" | 18" | 24" | 36" | 42" | 48" | R.C. PIPE (CLASS III) SIZE 12" | 15" | 18" | 24" | 30" | 36" | 42" | R.C. PIPE (CLASS IV) SIZE 12" | 15" | 18" | 24" | 30" | 36" | 42" | 48" | *** R. C. PIPE (CLASS V) | *** R. C. PIPE CULVERTS, CONTRACTOR DESIGN PIPE | *** R. C. PIPE CULVERTS, CONTRACTOR DESIGN PIPE | 15" SIDE DRAIN PIPE | 18" SIDE DRAIN PIPE | ENDWALLS STD. 838.01, STD. 838.11 OR STD. 838.80 (UNLESS NOTED OTHERWISE) CU. YDS. R.C.P. | C.S.P. | QUANTITIES FOR DRAINAGE STRUCTURES * TOTAL L.F. FOR PAY QUANTITY SHALL BE COL 'A' + (1.3 X COL.'B') LIN. FT. A | B | PER EACH (0' THRU 5.0') | 5.0' THRU 10.0' | 10.0' AND ABOVE | C.B. STD. 840.01 OR STD. 840.02 | FRAME, GRATES AND HOOD STANDARD 840.03 TYPE OF GRATE E | F | G | CONCRETE TRANSITIONAL SECTION CATCH BASIN | DROP INLET | T.B.D.I STD. 840.35 | T.B.D.I FRAME WITH TWO GRATES STD. 840.29 | CORR. STEEL ELBOWS NO. & SIZE | CONC. COLLARS CL. "B" C.Y. STD 840.72 | CONC. & BRICK PIPE PLUG, C.Y. STD. 840.71 | PIPE REMOVAL LIN.FT. | REMARKS |
|---|---|---|---|---|---

COMPUTED BY: ACC DATE: 10-13-11
CHECKED BY: ACC DATE: 10-13-11

PROJECT REFERENCE NO.	SHEET NO.
17BP.13.R.42	3-B

DIVISION OF HIGHWAYS
STATE OF NORTH CAROLINA

SUMMARY OF EARTHWORK

IN CUBIC YARDS

LOCATION	UNCLASSIFIED EXCAVATION	UNDERCUT	EMBT + %	BORROW	WASTE
SUMMARY NO.1					
–L– STA. 12 + 10 TO STA. 12 + 80	171		62		109
SUBTOTAL SUMMARY NO.1	171		62		109
PROJECT TOTAL	171		62		109
SAY	175				

CONTINGENCY ITEMS:

SELECT GRANULAR MATERIAL = 55 CY

GEOTEXTILE FOR SOIL STABILIZATION = 30 SY

Approximate quantities only. Borrow, excavation, fine grading, clearing and grubbing, and removal of existing pavement will be paid for at the contract lump sum price for "grading".

8/17/99

REVISIONS

PROJECT REFERENCE NO.	SHEET NO.
17BPJ3.R.42	4
R/W SHEET NO.	

ROADWAY DESIGN ENGINEER
NORTH CAROLINA PROFESSIONAL SEAL 030453 ENGINEER AARON C. CARVER
3/27/14

HYDRAULICS ENGINEER
NORTH CAROLINA PROFESSIONAL SEAL 033023 ENGINEER BRADLEY S. RIDNOUR
3/27/14
Bradley S. Ridnour, PE

SEE SHEETS S-1 THRU S-5 FOR STRUCTURE PLANS

Vaughn & Melton
Consulting Engineers
Asheville, North Carolina
828-253-2796

Tri-Cities, TN 423-467-8401
Knoxville, TN 865-546-5800
Spartanburg, SC 864-574-4775
Charleston, SC 843-974-5650
Middleburg, KY 606-248-6600
Charlotte, NC 704-357-0488
Boone, NC 828-355-9933
Atlanta, GA 770-627-3509

Copyright © 2006 Vaughn & Melton, Inc. All Rights Reserved

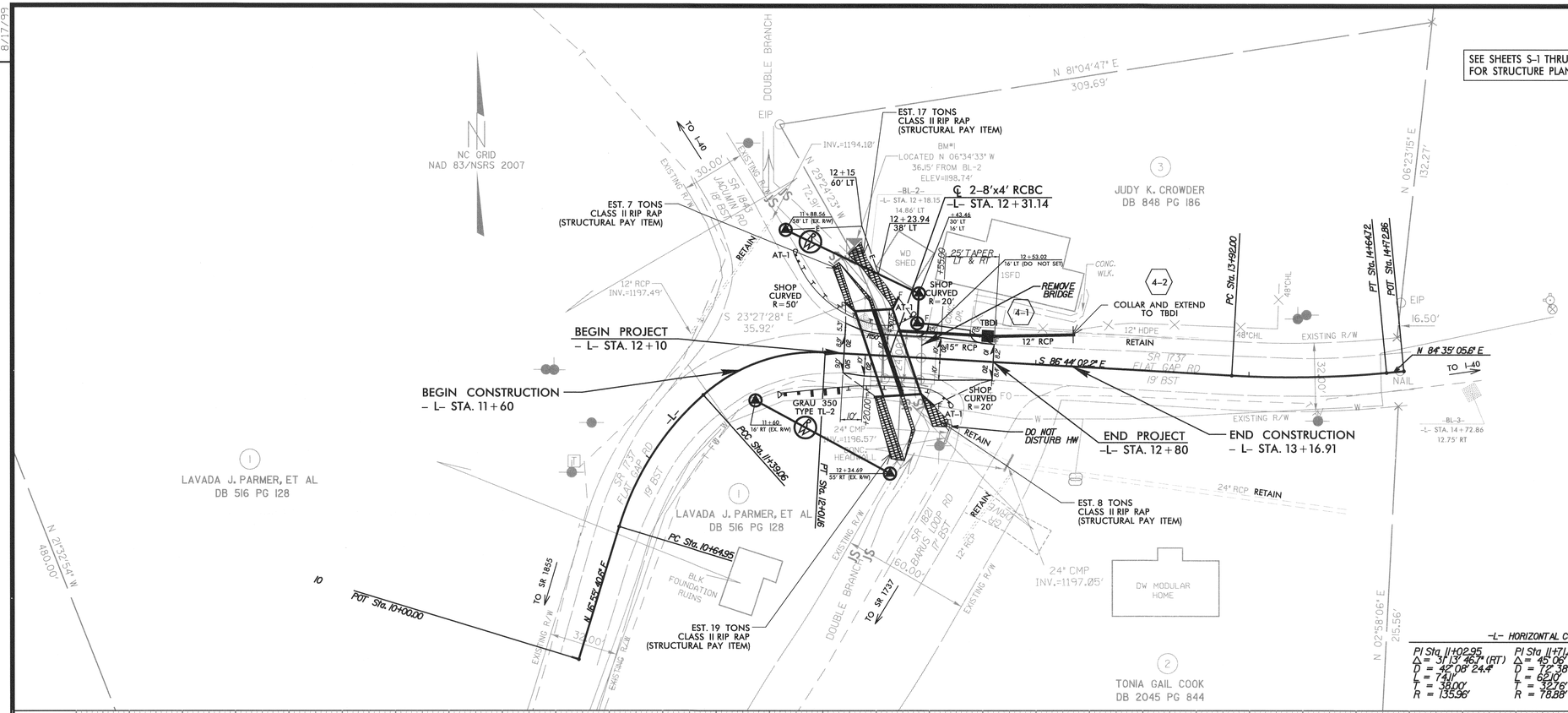

-L- HORIZONTAL CURVE DATA

PI Sta. 11+02.95	PI Sta. 11+71.82	PI Sta. 14+28.43
Δ = 31°13'46.7" (RT)	Δ = 45°06'30.5" (RT)	Δ = 8°40'52.1" (LT)
D = 42°08'24.4"	D = 72°38'02.9"	D = 11°56'11.8"
L = 74.11'	L = 62.10'	L = 72.73'
T = 38.00'	T = 32.76'	T = 36.43'
R = 135.96'	R = 78.88'	R = 480.00'

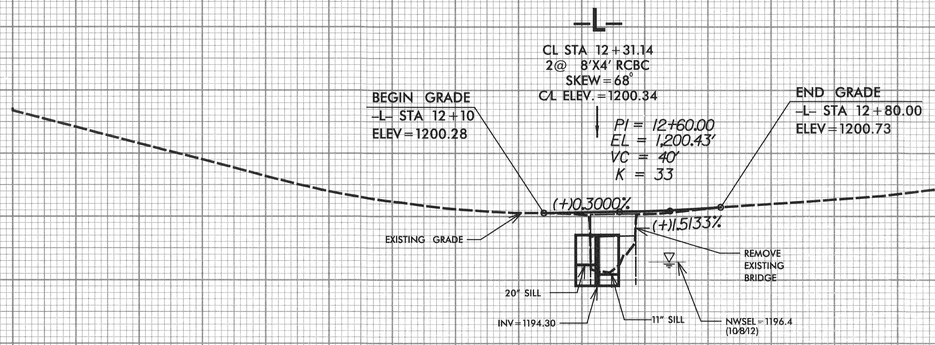

STRUCTURE HYDRAULIC DATA

DESIGN DISCHARGE	= 320 CFS
DESIGN FREQUENCY	= 25 YRS
DESIGN HW ELEVATION	= 1199.9 FT
BASE DISCHARGE	= 885 CFS
BASE FREQUENCY	= 100 YRS
BASE HW ELEVATION	= 1202.96 FT
OVERTOPPING DISCHARGE	= 350 CFS
OVERTOPPING FREQUENCY	= 25 YRS
OVERTOPPING ELEVATION	= 1200.3 FT
W.S. ELEVATION AT DATE OF SURVEY	= 1196.4 FT

BM #1
N 729206.7557 E 1237784.1280
ELEVATION = 1198.74
-EL- STATION 12+11.97

1,215 1,210 1,205 1,200 1,195 1,190 1,185 1,180

10+00 11+00 12+00 13+00 14+00 15+00

$$$$$$$$SYSTIME$$$$$$$$
$$$$$$$$FILENAME$$$$$$$$
$$$$$$$$DGN$$$$$$$$

STATE OF NORTH CAROLINA
DIVISION OF HIGHWAYS

TRANSPORTATION MANAGEMENT PLAN

BURKE COUNTY

DIVISION 13

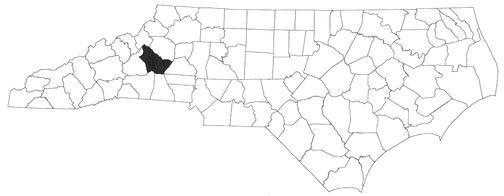

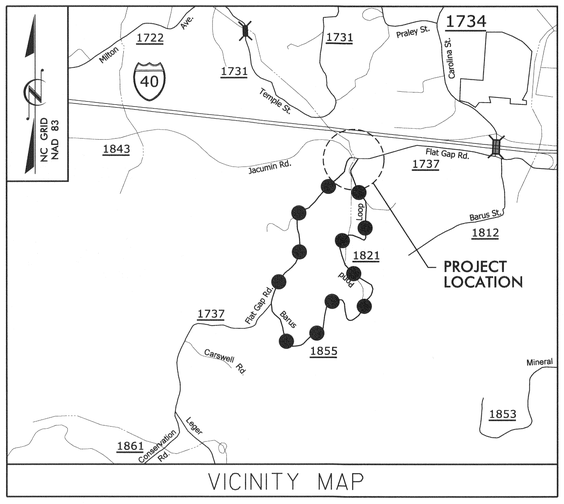

VICINITY MAP

DETOUR ROUTE

LOCATION: BRIDGE NO. 218 OVER DOUBLE BRANCH ON SR 1737 (FLAT GAP ROAD)

INDEX OF SHEETS

SHEET NO.	TITLE
TMP-1	TITLE SHEET, LEGEND, AND INDEX OF SHEETS
TMP-1A	LIST OF APPLICABLE ROADWAY STANDARD DRAWINGS, GENERAL NOTES, TRANSPORTATION OPERATIONS AND LOCAL NOTES.
TMP-2	TEMPORARY TRAFFIC CONTROL DETAIL, PHASING NOTES OFFSITE DETOUR SIGNING AND ROAD CLOSURE
SD-1	SPECIAL SIGN DESIGN

LEGEND

GENERAL

NORTH ARROW

TRAFFIC CONTROL DEVICES

BARRICADE (TYPE III)

TEMPORARY SIGNING

STATIONARY SIGN

SHEET NO.
TMP-1

TIP PROJECT: 17BP.13.R.42



WORK ZONE SAFETY & MOBILITY
"from the MOUNTAINS to the COAST"

N.C.D.O.T. WORK ZONE TRAFFIC CONTROL
1580 MAIL SERVICE CENTER (MSC) RALEIGH, NC 27699-1580
1020 BIRCH RIDGE DRIVE, RALEIGH, NC 27610 (DELIVERY)
PHONE: (919) 250-4094 FAX: (919) 250-4098

J. S. BOURNE, P.E. *STATE TRAFFIC MANAGEMENT ENGINEER*
LLOYD D. BROWN, P.E. *TRAFFIC CONTROL PROJECT ENGINEER*
AARON C. CARVER, P.E. *TRAFFIC CONTROL PROJECT DESIGN ENGINEER*
AARON C. CARVER, P.E. *TRAFFIC CONTROL DESIGN ENGINEER*

DIVISION OF HIGHWAYS · STATE OF NORTH CAROLINA · DEPARTMENT OF TRANSPORTATION · WORK ZONE TRAFFIC CONTROL

V&M Vaughn & Melton
Consulting Engineers
Asheville, North Carolina 828-253-2796
Charlotte, NC 704-357-0488 · Boone, NC 828-355-9933
Tri-Cities, TN 423-467-8401 · Knoxville, TN 865-546-5800 · Spartanburg, SC 864-574-4775 · Charleston, SC 843-974-5650 · Middlesboro, KY 606-248-6600 · Atlanta, GA 770-627-3509

Copyright © 2006 Vaughn & Melton, Inc. All Rights Reserved

APPROVED:
DATE: May 28, 2014

SEAL

NORTH CAROLINA PROFESSIONAL SEAL 20119 ENGINEER LLOYD D. BROWN

$$$$$$SYSTIME$$$$$$
$$$$$$USERNAME$$$$$$
$$$$$$FILEPATH$$$$$$

PROJ. REFERENCE NO.	SHEET NO.
17BP.13.R.42	TMP-1A

ROADWAY STANDARD DRAWINGS

THE FOLLOWING ROADWAY STANDARDS AS SHOWN IN "ROADWAY STANDARD DRAWINGS" - PROJECT SERVICES UNIT - N.C. DEPARTMENT OF TRANSPORTATION - RALEIGH, N.C., DATED JANUARY 2012 ARE APPLICABLE TO THIS PROJECT AND BY REFERENCE HEREBY ARE CONSIDERED A PART OF THESE PLANS:

STD. NO.	TITLE
1101.01	WORK ZONE ADVANCE WARNING SIGNS
1101.03	TEMPORARY ROAD CLOSURES
1101.05	WORK ZONE VEHICLE ACCESSES
1101.11	TRAFFIC CONTROL DESIGN TABLES
1110.01	STATIONARY WORK ZONE SIGNS
1145.01	BARRICADES

TRANSPORTATION OPERATIONS

CONSTRUCTION

REMOVE AND REPLACE EXISTING STRUCTURE AND APPROACHES ALONG THE EXISTING ROADWAY ALIGNMENT AS SHOWN IN THE CONSTRUCTION PLANS.

TMP DESIGN PARAMETERS

TRAFFIC WILL BE DETOURED OFF-SITE DURING THE CONSTRUCTION PERIOD.

THE OFF-SITE DETOUR WILL INCLUDE SR 1737, SR 1855, AND SR 1821(SEE SHEET TMP-2).

GENERAL NOTES

CHANGES MAY BE REQUIRED WHEN PHYSICAL DIMENSIONS IN THE DETAIL DRAWINGS, STANDARD DETAILS AND ROADWAY DETAILS ARE NOT ATTAINABLE TO MEET FIELD CONDITIONS, OR RESULT IN DUPLICATE, OR UNDESIRED OVERLAPPING OF DEVICES. MODIFICATION MAY INCLUDE: MOVING, SUPPLEMENTING, COVERING OR REMOVAL OF DEVICES, AS DIRECTED BY THE ENGINEER.

THE FOLLOWING GENERAL NOTES APPLY AT ALL TIMES FOR THE DURATION OF THE CONSTRUCTION PROJECT, EXCEPT WHEN OTHERWISE NOTED IN THE PLAN, OR DIRECTED BY THE ENGINEER.

TRAFFIC PATTERN ALTERATIONS

A) NOTIFY THE ENGINEER TWENTY ONE (21) CALENDAR DAYS PRIOR TO ANY TRAFFIC PATTERN ALTERATION.

SIGNING

B) PROVIDE PERMANENT SIGNING.

C) PROVIDE SIGNING AND DEVICES REQUIRED TO CLOSE THE ROAD ACCORDING TO THE ROADWAY STANDARD DRAWINGS AND TRAFFIC CONTROL PLANS.

PROVIDE SIGNING REQUIRED FOR THE OFF-SITE DETOUR ROUTE AS SHOWN IN THE TRAFFIC CONTROL PLANS.

D) COVER OR REMOVE ALL SIGNS AND DEVICES REQUIRED TO CLOSE THE ROAD WHEN ROAD CLOSURE IS NOT IN OPERATION.

COVER OR REMOVE ALL SIGNS REQUIRED FOR THE OFF-SITE DETOUR WHEN THE DETOUR IS NOT IN OPERATION.

E) ENSURE ALL NECESSARY SIGNING IS IN PLACE PRIOR TO ALTERING ANY TRAFFIC PATTERN.

TRAFFIC CONTROL DEVICES

F) PLACE TYPE III BARRICADES WITH "ROAD CLOSED" SIGN R11-2 ATTACHED OF SUFFICIENT LENGTH TO CLOSE ENTIRE ROADWAY.

PAVEMENT MARKINGS AND MARKERS

G) INSTALL PAVEMENT MARKINGS (PAINT) ON THE FINAL SURFACE OF THE ENTIRE PROJECT.

H) TIE PROPOSED PAVEMENT MARKING LINES TO EXISTING PAVEMENT MARKING LINES.

LOCAL NOTES

1. EMERGENCEY VEHICLE ACCESS MUST BE MAINTAINED AT ALL TIMES.
2. NOTIFY BURKE COUNTY EMERGENCY SERVICES AND PUBLIC SCHOOLS AT LEAST 30 DAYS PRIOR TO ROAD CLOSURE.

V&M
Vaughn & Melton
Consulting Engineers
Asheville, North Carolina
828-253-2796
Tri-Cities, TN 423-467-8401
Knoxville, TN 865-546-5800
Spartanburg, SC 864-574-4775
Charleston, SC 843-974-5650
Middlesboro, KY 606-248-6600
Atlanta, GA 770-627-3509
Charlotte, NC 704-357-0488
Boone, NC 828-355-9933

Copyright © 2006 Vaughn & Melton, Inc. All Rights Reserved

APPROVED: [signature] DATE: 5/28/2014

SEAL

NORTH CAROLINA PROFESSIONAL SEAL 20119 ENGINEER LLOYD D. BROWN

DIVISION OF HIGHWAYS · STATE OF NORTH CAROLINA · DEPARTMENT OF TRANSPORTATION · WORK ZONE TRAFFIC CONTROL

ROADWAY STANDARD DRAWINGS, GENERAL NOTES & TRANSPORTATION OPERATIONS

$$$$$SYSTIME$$$$ $$$$$DGN$$$$$ $$$$$USERNAME$$$$

PROJ. REFERENCE NO.	SHEET NO.
17BP.13.R.42	TMP-2

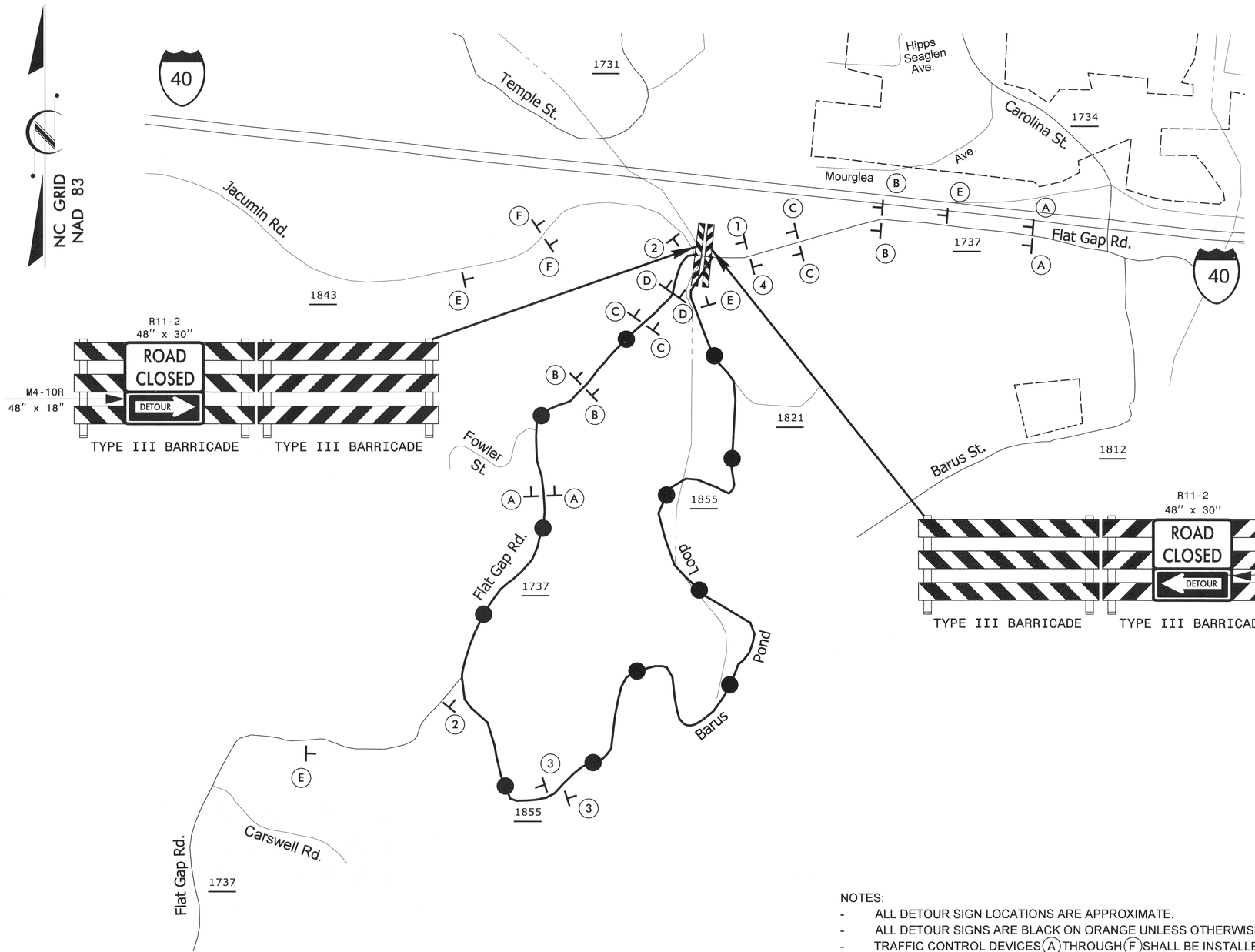

FLAT GAP ROAD 48" X 18"
DETOUR M4-8 24" X 12"
M6-1 L 21" X 15"
SIGN (1)

FLAT GAP ROAD 48" X 18"
DETOUR M4-8 24" X 12"
M6-1 21" X 15"
SIGN (2)

FLAT GAP ROAD 48" X 18"
DETOUR M4-8 24" X 12"
M6-3 21" X 15"
SIGN (3)

END DETOUR M4-8 A 24" X 18"
SIGN (4)

ROAD CLOSED AHEAD W20-3 48" X 48"
SIGN (A)

ROAD CLOSED 1000 FT W20-3 48" X 48"
SIGN (B)

ROAD CLOSED 500 FT W20-3 48" X 48"
SIGN (C)

ROAD CLOSED W20-3 48" X 48"
SIGN (D)

DETOUR AHEAD W20-2 48" X 48"
SIGN (E)

ROAD CLOSED AHEAD W20-3 48" X 48"
NEXT LEFT SP-4L 42" X 12"
SIGN (F)

PHASING

STEP 1: - INSTALL OFF-SITE DETOUR ROUTE SIGN ASSEMBLIES FOR THE CLOSING OF SR 1737 (FLAT GAP ROAD, -L-).

- USING ROADWAY STANDARD DRAWING NO. 1101.03, SHEETS 1 OF 9 AND 2 OF 9, CLOSE SR 1737 (FLAT GAP ROAD,-L-) TO THRU TRAFFIC.

STEP 2: - REMOVE THE EXISTING STRUCTURE AND CONSTRUCT THE PROPOSED STRUCTURE AND ROADWAY UP TO AND INCLUDING THE FINAL LAYER OF SURFACE COURSE AND PLACE FINAL PAVEMENT MARKINGS ON SR 1737 (FLAT GAP ROAD,-L-) FROM STATION 12+10+/- -L- TO STATION 12+80 +/- -L-. (SEE CONSTRUCTION PLANS).

STEP 3: - REMOVE ALL TRAFFIC CONTROL DEVICES, SIGNING AND DETOUR ROUTE SIGNING.

- OPEN TO FINAL TRAFFIC PATTERN.

NOTES:
- ALL DETOUR SIGN LOCATIONS ARE APPROXIMATE.
- ALL DETOUR SIGNS ARE BLACK ON ORANGE UNLESS OTHERWISE NOTED.
- TRAFFIC CONTROL DEVICES (A) THROUGH (F) SHALL BE INSTALLED ACCORDING TO ROADWAY STANDARD DRAWING 1101.03, SHEET 1 OF 9.
- TRAFFIC CONTROL DEVICES (1) THROUGH (4) SHALL BE INSTALLED AS PER ENGINEER'S INSTRUCTIONS, AND AS SHOWN HEREON.
- SEE ROADWAY STANDARD DRAWING NO. 1101.03, SHEET 1 OF 9 AND 2 OF 9, FOR ADDITIONAL WORK ZONE SIGNS.

V&M Vaughn & Melton
Consulting Engineers
Asheville, North Carolina
828-253-2796
Tri-Cities, TN 423-467-8401
Knoxville, TN 865-546-5800
Spartanburg, SC 864-574-4775
Charleston, SC 843-974-5650
Middlesboro, KY 606-248-6600
Charlotte, NC 704-357-0488
Boone, NC 828-355-9933
Atlanta, GA 770-627-3509

Copyright © 2006 Vaughn & Melton, Inc. All Rights Reserved

APPROVED: DATE: 5/28/2014

SEAL — NORTH CAROLINA PROFESSIONAL SEAL 20119 ENGINEER LLOYD D. BROWN

DIVISION OF HIGHWAYS · STATE OF NORTH CAROLINA · DEPARTMENT OF TRANSPORTATION · WORK ZONE TRAFFIC CONTROL

TEMPORARY TRAFFIC CONTROL DETAIL, PHASING NOTES, OFFSITE DETOUR SIGNING AND ROAD CLOSURE

$$$$$$SYSTIME$$$$$$
$$$$$$$$$$$$$$$$$$$$DGN$$$$$$$$$$$$$$$$$$$$
$$$$$$USERNAME$$$$$$

PROJ. REFERENCE NO.	SHEET NO.
17BP.13.R.42	SD-1

SIGN NUMR: FLAT GAP ROAD
TYPE: D Ground
QUANTITY: 1

BACKG. COLOR: Orange
COPY COLOR: RGB(0,0,0)

DESIGN BY: ACC
PROJECT ID: 17BP.13.R.42

CHK BY: LDB
DIV: 13

STD #: STD
DATE: June 17,2013

SIGN WIDTH: 4′-0″
HEIGHT: 1′-6″
TOTAL AREA: 6.0 Sq.Ft.

MAT′L: 0.063 in.(1.6 mm) ALUMINUM

BORDER TYPE: FLUSH
RECESS: 0.47″
WIDTH: 0.63″
RADII: 1.5″

NO. Z BARS:
LENGTH: in.

SYMBOL	X	Y	WID	HT

USE NOTES: 1,3,4,6

1. Legend and border shall be direct applied encapsulated lens reflective sheeting.
2. Legend and border shall be direct applied enclosed lens reflective sheeting.
3. Shields shall be encapsulated lens reflective sheeting on 0.8mm aluminum and demountable.
4. Background shall be encapsulated lens reflective sheeting.
5. Background shall be enclosed lens reflective sheeting.
6. Center arrows vertically on sign.

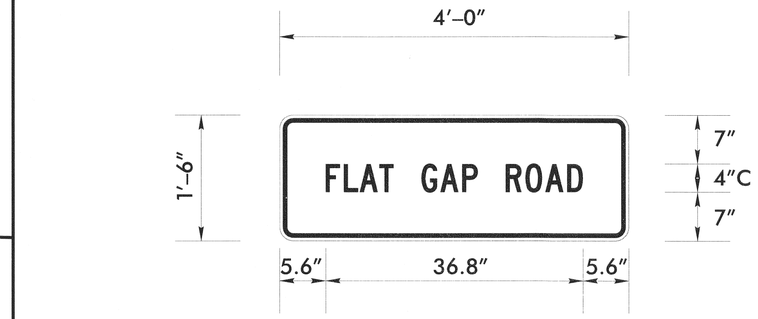

BORDER
R = 1.5″
TH = 0.63″
IN = 0.47″

Panel Style: construction_guide.ssi
M.U.T.C.D.: 2009 Edition

Letter spacings are to start of next letter

Series/Size
Text Length

		F	L	A	T		G	A	P		R	O	A	D													C 2000/4
5.6	2.6	2.3	2.8	2	4	2.7	3.1	2.2	4	2.8	2.8	3.1	2.2	5.6													36.8

Spacing Factor is 1 unless specified otherwise

FILENAME: GS4O_ENGL

Vaughn & Melton
Consulting Engineers
Asheville, North Carolina
828-253-2796
Charlotte, NC 704-357-0488
Boone, NC 828-355-9933
Tri-Cities, TN 423-467-8401
Knoxville, TN 865-546-5800
Spartanburg, SC 864-574-4775
Charleston, SC 843-974-5650
Middlesboro, KY 606-248-6600
Atlanta, GA 770-627-3509

Copyright © 2006 Vaughn & Melton, Inc. All Rights Reserved

APPROVED: DATE: 5/28/2014

SEAL

NORTH CAROLINA PROFESSIONAL SEAL 20119 ENGINEER LLOYD D. BROWN

DIVISION OF HIGHWAYS · STATE OF NORTH CAROLINA · DEPARTMENT OF TRANSPORTATION · WORK ZONE TRAFFIC CONTROL

SPECIAL SIGN DESIGN

$$$$SYSTIME$$$$
$$$$SFENGINE$$$$
$$$$SFGUCN$$$$

PROJECT REFERENCE NO.	SHEET NO.
17BP.13.R.42	EC-1/CONST 4

THESE EROSION AND SEDIMENT CONTROL PLANS COMPLY WITH THE REGULATIONS SET FORTH BY THE NCG-010000 GENERAL CONSTRUCTION PERMIT EFFECTIVE AUGUST 3, 2011 ISSUED BY THE NORTH CAROLINA DEPARTMENT OF ENVIRONMENT AND NATURAL RESOURCES DIVISION OF WATER QUALITY.

EROSION CONTROL PLAN

V&M Vaughn & Melton
Consulting Engineers
Asheville, North Carolina 828-253-2796
Charlotte, North Carolina 704-895-9051
Tri-Cities, Tennessee 423-467-8401
Knoxville, Tennessee 865-546-5800
Middlesboro, Kentucky 606-248-6600
Spartanburg, South Carolina 864-574-4775

Copyright 1994 Vaughn & Melton, Inc.

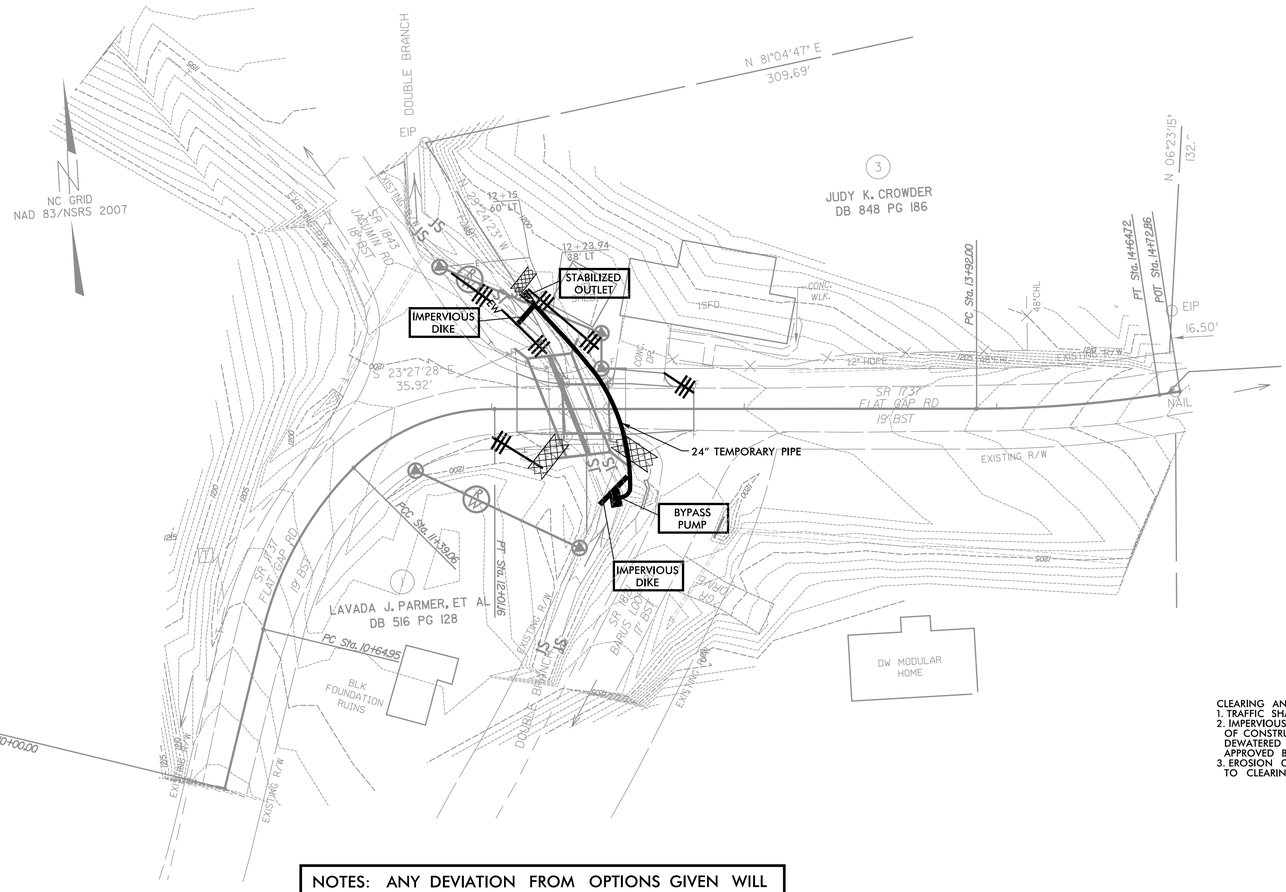

CLEARING AND GRUBBING PHASE:
1. TRAFFIC SHALL BE DIVERTED TO OFFSITE DETOUR.
2. IMPERVIOUS DIKE SHALL BE INSTALLED UPSTREAM AND DOWNSTREAM OF CONSTRUCTION TO CONTAIN THE WORK SITE AND SHALL BE DEWATERED WITH SPECIAL STILLING BASINS. PLACEMENT SHALL BE APPROVED BY THE ENGINEER.
3. EROSION CONTROL MEASURES SHALL BE INSTALLED PRIOR TO CLEARING AND GRUBBING.

NOTES: ANY DEVIATION FROM OPTIONS GIVEN WILL REQUIRE PRIOR APPROVAL BY ENGINEER.

ADDITIONAL EROSION CONTROL DEVICES MAY NEED TO BE INSTALLED AS DIRECTED BY THE ENGINEER.

Std. #	Description	Symbol
1605.01	Temporary Silt Fence	
1633.01	Temporary Rock Silt Check Type-A	
1633.01	Wattle / Coir Fiber Wattle	EW

ROADSIDE ENVIRONMENTAL UNIT
DEPARTMENT OF TRANSPORTATION
DIVISION OF HIGHWAYS
RALEIGH, N.C.

2012 STANDARD SPECIFICATIONS

CLEARING AND GRUBBING EROSION CONTROL FOR CONSTRUCTION SHEET 4

Level III-A: Designer of Erosion and Sediment Control Plans

Michael Clark
Date Issued: June 5, 2013
Date Expires: December 31, 2016
Certification Number: 3376

PROJECT NO. 17BP.13.R.42
COUNTY BURKE
STATION: 12+31.14 -L-
REPLACES BRIDGE NO. 218

STATE OF NORTH CAROLINA
DEPARTMENT OF TRANSPORTATION
RALEIGH

BRIDGE #218 ON SR 1737
OVER DOUBLE BRANCH

REVISIONS						SHEET NO.
NO.	BY	DATE	NO.	BY	DATE	EC-1
1			3			TOTAL SHEETS
2			4			5

$SYSTIME$$$$ $LOGIN$$$$ $$$$$

PROJECT REFERENCE NO.	SHEET NO.
17BP.13.R.42	EC-2/CONST 4

THESE EROSION AND SEDIMENT CONTROL PLANS COMPLY WITH THE REGULATIONS SET FORTH BY THE NCG-010000 GENERAL CONSTRUCTION PERMIT EFFECTIVE AUGUST 3, 2011 ISSUED BY THE NORTH CAROLINA DEPARTMENT OF ENVIRONMENT AND NATURAL RESOURCES DIVISION OF WATER QUALITY.

EROSION CONTROL PLAN

PHASE 2

Vaughn & Melton
Consulting Engineers
Asheville, North Carolina 828-253-2796
Charlotte, North Carolina 704-895-9051
Tri-Cities, Tennessee 423-467-8401
Knoxville, Tennessee 865-546-5800
Middlesboro, Kentucky 606-248-6600
Spartanburg, South Carolina 864-574-4775

Copyright 1994 Vaughn & Melton, Inc.

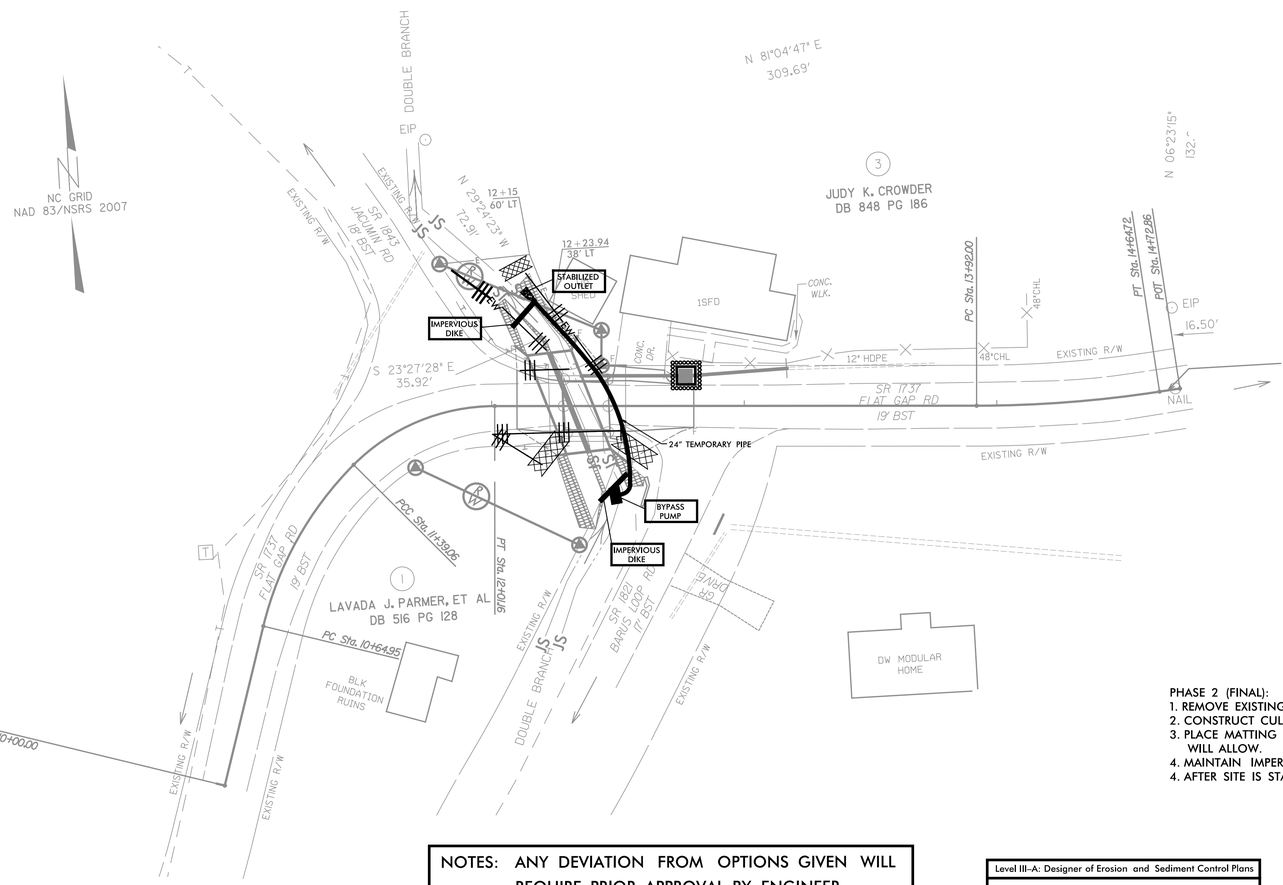

PHASE 2 (FINAL):
1. REMOVE EXISTING STRUCTURE
2. CONSTRUCT CULVERT AND HEADWALLS
3. PLACE MATTING ON DISTURBED AREAS WHERE CONSTRUCTION WILL ALLOW.
4. MAINTAIN IMPERVIOUS DIKE AND SPECIAL STILLING BASIN DURING CONSTRUCTION
4. AFTER SITE IS STABILIZED, REMOVE EROSION CONTROL MEASURES

Std. #	Description	Symbol
1605.01	Temporary Silt Fence	
1632.03	Rock Inlet Sediment Trap Type C	
1633.01	Temporary Rock Silt Check Type-A	
1633.01	Wattle / Coir Fiber Wattle	EW

NOTES: ANY DEVIATION FROM OPTIONS GIVEN WILL REQUIRE PRIOR APPROVAL BY ENGINEER.

ADDITIONAL EROSION CONTROL DEVICES MAY NEED TO BE INSTALLED AS DIRECTED BY THE ENGINEER.

ROADSIDE ENVIRONMENTAL UNIT
DEPARTMENT OF TRANSPORTATION
DIVISION OF HIGHWAYS
RALEIGH, N.C.

2012 STANDARD SPECIFICATIONS

Level III-A: Designer of Erosion and Sediment Control Plans

Michael Clark
Date Issued: June 5, 2013
Date Expires: December 31, 2016
Certification Number: 3376

PROJECT NO. 17BP.13.R.42
COUNTY BURKE
STATION: 12+31.14 -L-
REPLACES BRIDGE NO. 218

STATE OF NORTH CAROLINA
DEPARTMENT OF TRANSPORTATION
RALEIGH

BRIDGE #218 ON SR 1737
OVER DOUBLE BRANCH

REVISIONS						SHEET NO.
NO.	BY	DATE	NO.	BY	DATE	EC-2
1			3			TOTAL SHEETS
2			4			5

$$$$SYSTIME$$$$
$$$$USERNAME$$$$
$$$$DGN$$$$

PROJECT REFERENCE NO.	SHEET NO.
17BP.13.R.42	EC-3
R/W SHEET NO.	
ROADWAY DESIGN ENGINEER	HYDRAULICS ENGINEER

STATE OF NORTH CAROLINA
DIVISION OF HIGHWAYS

SOIL STABILIZATION TIMEFRAMES

SITE DESCRIPTION	STABILIZATION TIME	TIMEFRAME EXCEPTIONS
PERIMETER DIKES, SWALES, DITCHES, AND SLOPES	7 DAYS	NONE
HIGH QUALITY WATER (HQW) ZONES	7 DAYS	NONE
SLOPES STEEPER THAN 3:1	7 DAYS	IF SLOPES ARE 10' OR LESS IN LENGTH AND ARE NOT STEEPER THAN 2:1, 14 DAYS ARE ALLOWED.
SLOPES 3:1 OR FLATTER	14 DAYS	7 DAYS FOR SLOPES GREATER THAN 50' IN LENGTH.
ALL OTHER AREAS WITH SLOPES FLATTER THAN 4:1	14 DAYS	NONE, EXCEPT FOR PERIMETERS AND HQW ZONES.

PROJECT REFERENCE NO.	SHEET NO.
17BPJ3.R.42	EC-3A

DIVISION OF HIGHWAYS
STATE OF NORTH CAROLINA

SOIL STABILIZATION SUMMARY SHEET

MATTING FOR EROSION CONTROL

CONST SHEET NO.	LINE	FROM STATION	TO STATION	SIDE	ESTIMATE (SY)
			SUBTOTAL		
MISCELLANEOUS MATTING TO BE INSTALLED AS DIRECTED BY THE ENGINEER					**200
				TOTAL	200
				SAY	

PROJECT REFERENCE NO.	SHEET NO.
17BPJ3.R.42	EC-4
R/W SHEET NO.	
ROADWAY DESIGN ENGINEER	HYDRAULICS ENGINEER

SILT FENCE WATTLE BREAK DETAIL

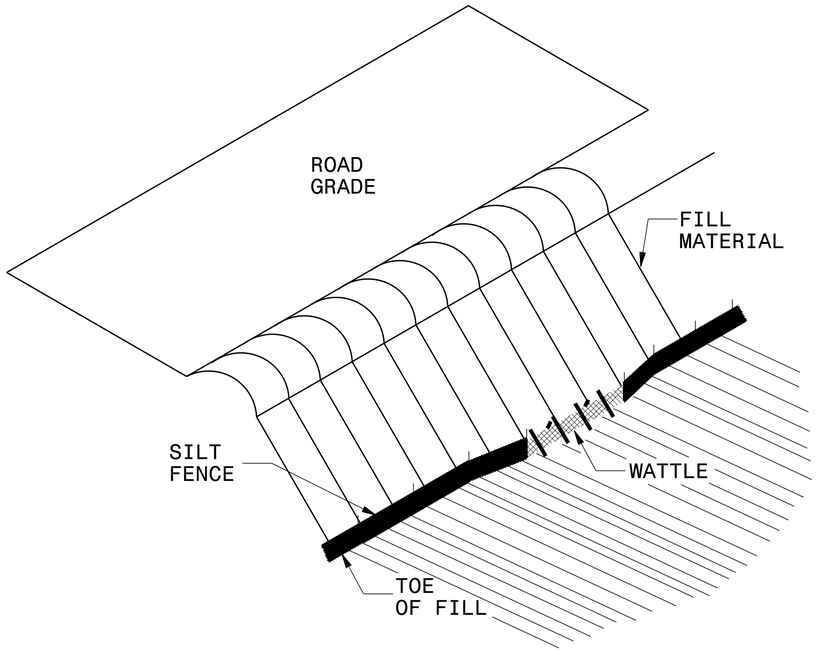

ISOMETRIC VIEW

NOTES:

USE MINIMUM 12 IN. DIAMETER EXCELSIOR WATTLE AND LENGTH OF 10 FT.

EXCAVATE A 1 TO 2 INCH TRENCH FOR WATTLE TO BE PLACED.

DO NOT PLACE WATTLE ON TOE OF SLOPE.

USE 2 FT. WOODEN STAKES WITH A 2 IN. BY 2 IN. NOMINAL CROSS SECTION.

INSTALL A MINIMUM OF 2 UPSLOPE STAKES AND 4 DOWNSLOPE STAKES AT AN ANGLE TO WEDGE WATTLE TO GROUND.

PROVIDE STAPLES MADE OF 0.125 IN. DIAMETER STEEL WIRE FORMED INTO A U SHAPE NOT LESS THAN 12″ IN LENGTH.

INSTALL STAPLES APPROXIMATELY EVERY 1 LINEAR FOOT ON BOTH SIDES OF WATTLE AND AT EACH END TO SECURE IT TO THE SOIL.

WATTLE INSTALLATION CAN BE ON OUTSIDE OF THE SILT FENCE AS DIRECTED.

INSTALL TEMPORARY SILT FENCE IN ACCORDANCE WITH SECTION 1605 OF THE STANDARD SPECIFICATIONS.

INSET A

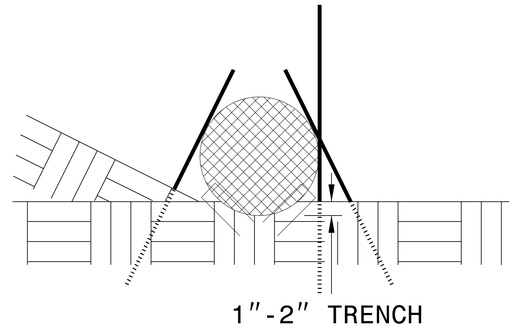

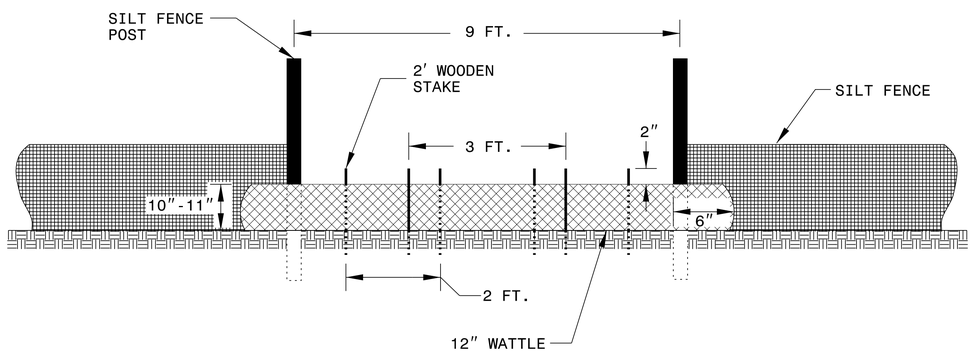

VIEW FROM SLOPE

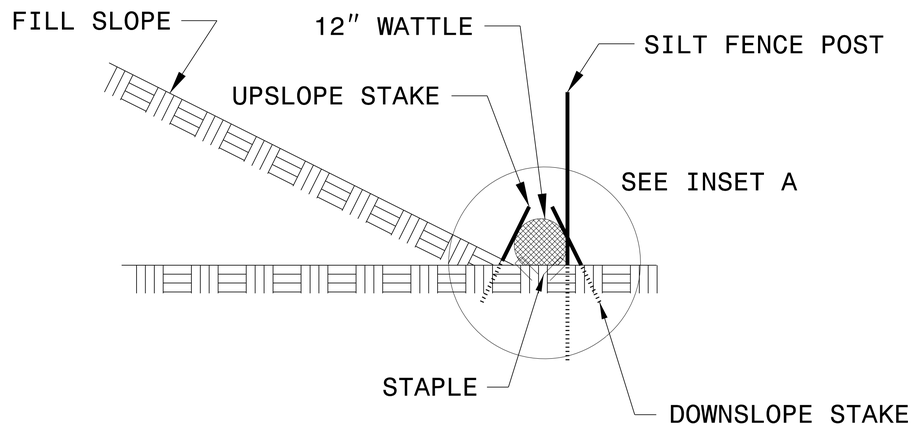

SIDE VIEW

06/11/13

CONTRACT: STRUCTURE: SF–110218

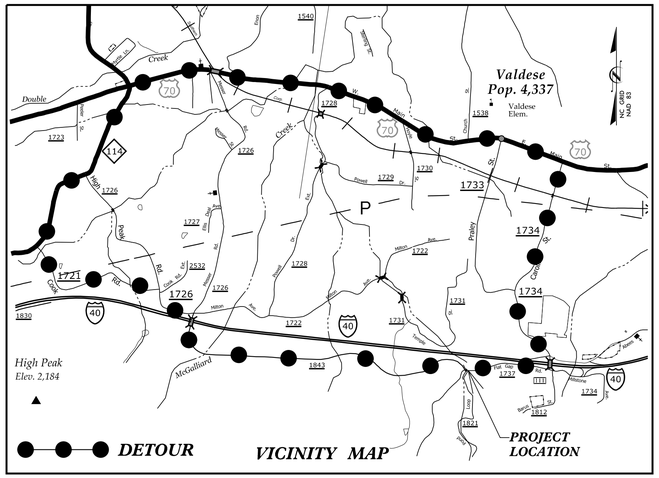
Valdese
Pop. 4,337
Valdese Elem.
NC GRID NAD 83
Double Branch Creek
Creek
Hoyle
Polly
McGalliard
Mill
Pinkney
Carroll
Patton
Mine
Rock Quarry
Rock Quarry Rd
Flat Gap Rd
Valdese Hwy
Valdese Loop
Valdese Loop Bus
Valdese Loop Bus Rd
Valdese Loop Rd
Valdese Loop Rd Bus
Valdese Loop Rd Bus Rd
Valdese Loop Rd Rd
Valdese Loop Rd Rd Bus
Valdese Loop Rd Rd Bus Rd
Valdese Loop Rd Rd Rd
Valdese Loop Rd Rd Rd Bus
Valdese Loop Rd Rd Rd Bus Rd
Valdese Loop Rd Rd Rd Rd
Valdese Loop Rd Rd Rd Rd Bus
Valdese Loop Rd Rd Rd Rd Bus Rd
Valdese Loop Rd Rd Rd Rd Rd
Valdese Loop Rd Rd Rd Rd Rd Bus
Valdese Loop Rd Rd Rd Rd Rd Bus Rd
Valdese Loop Rd Rd Rd Rd Rd Rd
Valdese Loop Rd Rd Rd Rd Rd Rd Bus
Valdese Loop Rd Rd Rd Rd Rd Rd Bus Rd
Valdese Loop Rd Rd Rd Rd Rd Rd Rd
Valdese Loop Rd Rd Rd Rd Rd Rd Rd Bus
Valdese Loop Rd Rd Rd Rd Rd Rd Rd Bus Rd
Valdese Loop Rd Rd Rd Rd Rd Rd Rd Rd
Valdese Loop Rd Rd Rd Rd Rd Rd Rd Rd Bus
Valdese Loop Rd Rd Rd Rd Rd Rd Rd Rd Bus Rd
Valdese Loop Rd Rd Rd Rd Rd Rd Rd Rd Rd
Valdese Loop Rd Rd Rd Rd Rd Rd Rd Rd Rd Bus
Valdese Loop Rd Rd Rd Rd Rd Rd Rd Rd Rd Bus Rd
Valdese Loop Rd Rd Rd Rd Rd Rd Rd Rd Rd Rd
Valdese Loop Rd Rd Rd Rd Rd Rd Rd Rd Rd Rd Bus
Valdese Loop Rd Rd Rd Rd Rd Rd Rd Rd Rd Rd Bus Rd
Valdese Loop Rd Rd Rd Rd Rd Rd Rd Rd Rd Rd Rd
Valdese Loop Rd Rd Rd Rd Rd Rd Rd Rd Rd Rd Rd Bus
Valdese Loop Rd Rd Rd Rd Rd Rd Rd Rd Rd Rd Rd Bus Rd
Valdese Loop Rd Rd Rd Rd Rd Rd Rd Rd Rd Rd Rd Rd
Valdese Loop Rd Rd Rd Rd Rd Rd Rd Rd Rd Rd Rd Rd Bus
Valdese Loop Rd Rd Rd Rd Rd Rd Rd Rd Rd Rd Rd Rd Bus Rd
Valdese Loop Rd Rd Rd Rd Rd Rd Rd Rd Rd Rd Rd Rd Rd
Valdese Loop Rd Rd Rd Rd Rd Rd Rd Rd Rd Rd Rd Rd Rd Bus
Valdese Loop Rd Rd Rd Rd Rd Rd Rd Rd Rd Rd Rd Rd Rd Bus Rd
Valdese Loop Rd Rd Rd Rd Rd Rd Rd Rd Rd Rd Rd Rd Rd Rd
Valdese Loop Rd Rd Rd Rd Rd Rd Rd Rd Rd Rd Rd Rd Rd Rd Bus
Valdese Loop Rd Rd Rd Rd Rd Rd Rd Rd Rd Rd Rd Rd Rd Rd Bus Rd
Valdese Loop Rd Rd Rd Rd Rd Rd Rd Rd Rd Rd Rd Rd Rd Rd Rd
Valdese Loop Rd Rd Rd Rd Rd Rd Rd Rd Rd Rd Rd Rd Rd Rd Rd Bus
Valdese Loop Rd Rd Rd Rd Rd Rd Rd Rd Rd Rd Rd Rd Rd Rd Rd Bus Rd
Valdese Loop Rd Rd Rd Rd Rd Rd Rd Rd Rd Rd Rd Rd Rd Rd Rd Rd
Valdese Loop Rd Rd Rd Rd Rd Rd Rd Rd Rd Rd Rd Rd Rd Rd Rd Rd Bus
Valdese Loop Rd Rd Rd Rd Rd Rd Rd Rd Rd Rd Rd Rd Rd Rd Rd Rd Bus Rd
Valdese Loop Rd Rd Rd Rd Rd Rd Rd Rd Rd Rd Rd Rd Rd Rd Rd Rd Rd
Valdese Loop Rd Rd Rd Rd Rd Rd Rd Rd Rd Rd Rd Rd Rd Rd Rd Rd Rd Bus
Valdese Loop Rd Rd Rd Rd Rd Rd Rd Rd Rd Rd Rd Rd Rd Rd Rd Rd Rd Bus Rd
Valdese Loop Rd Rd Rd Rd Rd Rd Rd Rd Rd Rd Rd Rd Rd Rd Rd Rd Rd Rd
Valdese Loop Rd Rd Rd Rd Rd Rd Rd Rd Rd Rd Rd Rd Rd Rd Rd Rd Rd Rd Bus
Valdese Loop Rd Rd Rd Rd Rd Rd Rd Rd Rd Rd Rd Rd Rd Rd Rd Rd Rd Rd Bus Rd
Valdese Loop Rd Rd Rd Rd Rd Rd Rd Rd Rd Rd Rd Rd Rd Rd Rd Rd Rd Rd Rd
Valdese Loop Rd Rd Rd Rd Rd Rd Rd Rd Rd Rd Rd Rd Rd Rd Rd Rd Rd Rd Rd Bus
Valdese Loop Rd Rd Rd Rd Rd Rd Rd Rd Rd Rd Rd Rd Rd Rd Rd Rd Rd Rd Rd Bus Rd
Valdese Loop Rd Rd Rd Rd Rd Rd Rd Rd Rd Rd Rd Rd Rd Rd Rd Rd Rd Rd Rd Rd
Valdese Loop Rd Rd Rd Rd Rd Rd Rd Rd Rd Rd Rd Rd Rd Rd Rd Rd Rd Rd Rd Rd Bus
Valdese Loop Rd Rd Rd Rd Rd Rd Rd Rd Rd Rd Rd Rd Rd Rd Rd Rd Rd Rd Rd Rd Bus Rd
Valdese Loop Rd Rd Rd Rd Rd Rd Rd Rd Rd Rd Rd Rd Rd Rd Rd Rd Rd Rd Rd Rd Rd
Valdese Loop Rd Rd Rd Rd Rd Rd Rd Rd Rd Rd Rd Rd Rd Rd Rd Rd Rd Rd Rd Rd Rd Bus
Valdese Loop Rd Rd Rd Rd Rd Rd Rd Rd Rd Rd Rd Rd Rd Rd Rd Rd Rd Rd Rd Rd Rd Bus Rd
Valdese Loop Rd Rd Rd Rd Rd Rd Rd Rd Rd Rd Rd Rd Rd Rd Rd Rd Rd Rd Rd Rd Rd Rd
Valdese Loop Rd Rd Rd Rd Rd Rd Rd Rd Rd Rd Rd Rd Rd Rd Rd Rd Rd Rd Rd Rd Rd Rd Bus
Valdese Loop Rd Rd Rd Rd Rd Rd Rd Rd Rd Rd Rd Rd Rd Rd Rd Rd Rd Rd Rd Rd Rd Rd Bus Rd
Valdese Loop Rd Rd Rd Rd Rd Rd Rd Rd Rd Rd Rd Rd Rd Rd Rd Rd Rd Rd Rd Rd Rd Rd Rd
Valdese Loop Rd Rd Rd Rd Rd Rd Rd Rd Rd Rd Rd Rd Rd Rd Rd Rd Rd Rd Rd Rd Rd Rd Rd Bus
Valdese Loop Rd Rd Rd Rd Rd Rd Rd Rd Rd Rd Rd Rd Rd Rd Rd Rd Rd Rd Rd Rd Rd Rd Rd Bus Rd
Valdese Loop Rd Rd Rd Rd Rd Rd Rd Rd Rd Rd Rd Rd Rd Rd Rd Rd Rd Rd Rd Rd Rd Rd Rd Rd
Valdese Loop Rd Rd Rd Rd Rd Rd Rd Rd Rd Rd Rd Rd Rd Rd Rd Rd Rd Rd Rd Rd Rd Rd Rd Rd Bus
Valdese Loop Rd Rd Rd Rd Rd Rd Rd Rd Rd Rd Rd Rd Rd Rd Rd Rd Rd Rd Rd Rd Rd Rd Rd Rd Bus Rd
Valdese Loop Rd Rd Rd Rd Rd Rd Rd Rd Rd Rd Rd Rd Rd Rd Rd Rd Rd Rd Rd Rd Rd Rd Rd Rd Rd
Valdese Loop Rd Rd Rd Rd Rd Rd Rd Rd Rd Rd Rd Rd Rd Rd Rd Rd Rd Rd Rd Rd Rd Rd Rd Rd Rd Bus
Valdese Loop Rd Rd Rd Rd Rd Rd Rd Rd Rd Rd Rd Rd Rd Rd Rd Rd Rd Rd Rd Rd Rd Rd Rd Rd Rd Bus Rd
Valdese Loop Rd Rd Rd Rd Rd Rd Rd Rd Rd Rd Rd Rd Rd Rd Rd Rd Rd Rd Rd Rd Rd Rd Rd Rd Rd Rd
Valdese Loop Rd Rd Rd Rd Rd Rd Rd Rd Rd Rd Rd Rd Rd Rd Rd Rd Rd Rd Rd Rd Rd Rd Rd Rd Rd Rd Bus
Valdese Loop Rd Rd Rd Rd Rd Rd Rd Rd Rd Rd Rd Rd Rd Rd Rd Rd Rd Rd Rd Rd Rd Rd Rd Rd Rd Rd Bus Rd
Valdese Loop Rd Rd Rd Rd Rd Rd Rd Rd Rd Rd Rd Rd Rd Rd Rd Rd Rd Rd Rd Rd Rd Rd Rd Rd Rd Rd Rd
Valdese Loop Rd Rd Rd Rd Rd Rd Rd Rd Rd Rd Rd Rd Rd Rd Rd Rd Rd Rd Rd Rd Rd Rd Rd Rd Rd Rd Rd Bus
Valdese Loop Rd Rd Rd Rd Rd Rd Rd Rd Rd Rd Rd Rd Rd Rd Rd Rd Rd Rd Rd Rd Rd Rd Rd Rd Rd Rd Rd Bus Rd
Valdese Loop Rd Rd Rd Rd Rd Rd Rd Rd Rd Rd Rd Rd Rd Rd Rd Rd Rd Rd Rd Rd Rd Rd Rd Rd Rd Rd Rd Rd
Valdese Loop Rd Rd Rd Rd Rd Rd Rd Rd Rd Rd Rd Rd Rd Rd Rd Rd Rd Rd Rd Rd Rd Rd Rd Rd Rd Rd Rd Rd Bus
Valdese Loop Rd Rd Rd Rd Rd Rd Rd Rd Rd Rd Rd Rd Rd Rd Rd Rd Rd Rd Rd Rd Rd Rd Rd Rd Rd Rd Rd Rd Bus Rd
Valdese Loop Rd Rd Rd Rd Rd Rd Rd Rd Rd Rd Rd Rd Rd Rd Rd Rd Rd Rd Rd Rd Rd Rd Rd Rd Rd Rd Rd Rd Rd
Valdese Loop Rd Rd Rd Rd Rd Rd Rd Rd Rd Rd Rd Rd Rd Rd Rd Rd Rd Rd Rd Rd Rd Rd Rd Rd Rd Rd Rd Rd Rd Bus
Valdese Loop Rd Rd Rd Rd Rd Rd Rd Rd Rd Rd Rd Rd Rd Rd Rd Rd Rd Rd Rd Rd Rd Rd Rd Rd Rd Rd Rd Rd Rd Bus Rd
Valdese Loop Rd Rd Rd Rd Rd Rd Rd Rd Rd Rd Rd Rd Rd Rd Rd Rd Rd Rd Rd Rd Rd Rd Rd Rd Rd Rd Rd Rd Rd Rd
Valdese Loop Rd Rd Rd Rd Rd Rd Rd Rd Rd Rd Rd Rd Rd Rd Rd Rd Rd Rd Rd Rd Rd Rd Rd Rd Rd Rd Rd Rd Rd Rd Bus
Valdese Loop Rd Rd Rd Rd Rd Rd Rd Rd Rd Rd Rd Rd Rd Rd Rd Rd Rd Rd Rd Rd Rd Rd Rd Rd Rd Rd Rd Rd Rd Rd Bus Rd
Valdese Loop Rd Rd Rd Rd Rd Rd Rd Rd Rd Rd Rd Rd Rd Rd Rd Rd Rd Rd Rd Rd Rd Rd Rd Rd Rd Rd Rd Rd Rd Rd Rd
Valdese Loop Rd Rd Rd Rd Rd Rd Rd Rd Rd Rd Rd Rd Rd Rd Rd Rd Rd Rd Rd Rd Rd Rd Rd Rd Rd Rd Rd Rd Rd Rd Rd Bus
Valdese Loop Rd Rd Rd Rd Rd Rd Rd Rd Rd Rd Rd Rd Rd Rd Rd Rd Rd Rd Rd Rd Rd Rd Rd Rd Rd Rd Rd Rd Rd Rd Rd Bus Rd
Valdese Loop Rd Rd Rd Rd Rd Rd Rd Rd Rd Rd Rd Rd Rd Rd Rd Rd Rd Rd Rd Rd Rd Rd Rd Rd Rd Rd Rd Rd Rd Rd Rd Rd
Valdese Loop Rd Rd Rd Rd Rd Rd Rd Rd Rd Rd Rd Rd Rd Rd Rd Rd Rd Rd Rd Rd Rd Rd Rd Rd Rd Rd Rd Rd Rd Rd Rd Rd Bus
Valdese Loop Rd Rd Rd Rd Rd Rd Rd Rd Rd Rd Rd Rd Rd Rd Rd Rd Rd Rd Rd Rd Rd Rd Rd Rd Rd Rd Rd Rd Rd Rd Rd Rd Bus Rd
Valdese Loop Rd Rd Rd Rd Rd Rd Rd Rd Rd Rd Rd Rd Rd Rd Rd Rd Rd Rd Rd Rd Rd Rd Rd Rd Rd Rd Rd Rd Rd Rd Rd Rd Rd
Valdese Loop Rd Rd Rd Rd Rd Rd Rd Rd Rd Rd Rd Rd Rd Rd Rd Rd Rd Rd Rd Rd Rd Rd Rd Rd Rd Rd Rd Rd Rd Rd Rd Rd Rd Bus
Valdese Loop Rd Rd Rd Rd Rd Rd Rd Rd Rd Rd Rd Rd Rd Rd Rd Rd Rd Rd Rd Rd Rd Rd Rd Rd Rd Rd Rd Rd Rd Rd Rd Rd Rd Bus Rd
Valdese Loop Rd Rd Rd Rd Rd Rd Rd Rd Rd Rd Rd Rd Rd Rd Rd Rd Rd Rd Rd Rd Rd Rd Rd Rd Rd Rd Rd Rd Rd Rd Rd Rd Rd Rd
Valdese Loop Rd Rd Rd Rd Rd Rd Rd Rd Rd Rd Rd Rd Rd Rd Rd Rd Rd Rd Rd Rd Rd Rd Rd Rd Rd Rd Rd Rd Rd Rd Rd Rd Rd Rd Bus
Valdese Loop Rd Rd Rd Rd Rd Rd Rd Rd Rd Rd Rd Rd Rd Rd Rd Rd Rd Rd Rd Rd Rd Rd Rd Rd Rd Rd Rd Rd Rd Rd Rd Rd Rd Rd Bus Rd
Valdese Loop Rd Rd Rd Rd Rd Rd Rd Rd Rd Rd Rd Rd Rd Rd Rd Rd Rd Rd Rd Rd Rd Rd Rd Rd Rd Rd Rd Rd Rd Rd Rd Rd Rd Rd Rd
Valdese Loop Rd Rd Rd Rd Rd Rd Rd Rd Rd Rd Rd Rd Rd Rd Rd Rd Rd Rd Rd Rd Rd Rd Rd Rd Rd Rd Rd Rd Rd Rd Rd Rd Rd Rd Rd Bus
Valdese Loop Rd Rd Rd Rd Rd Rd Rd Rd Rd Rd Rd Rd Rd Rd Rd Rd Rd Rd Rd Rd Rd Rd Rd Rd Rd Rd Rd Rd Rd Rd Rd Rd Rd Rd Rd Bus Rd
Valdese Loop Rd Rd Rd Rd Rd Rd Rd Rd Rd Rd Rd Rd Rd Rd Rd Rd Rd Rd Rd Rd Rd Rd Rd Rd Rd Rd Rd Rd Rd Rd Rd Rd Rd Rd Rd Rd
Valdese Loop Rd Rd Rd Rd Rd Rd Rd Rd Rd Rd Rd Rd Rd Rd Rd Rd Rd Rd Rd Rd Rd Rd Rd Rd Rd Rd Rd Rd Rd Rd Rd Rd Rd Rd Rd Rd Bus
Valdese Loop Rd Rd Rd Rd Rd Rd Rd Rd Rd Rd Rd Rd Rd Rd Rd Rd Rd Rd Rd Rd Rd Rd Rd Rd Rd Rd Rd Rd Rd Rd Rd Rd Rd Rd Rd Rd Bus Rd
Valdese Loop Rd Rd Rd Rd Rd Rd Rd Rd Rd Rd Rd Rd Rd Rd Rd Rd Rd Rd Rd Rd Rd Rd Rd Rd Rd Rd Rd Rd Rd Rd Rd Rd Rd Rd Rd Rd Rd
Valdese Loop Rd Rd Rd Rd Rd Rd Rd Rd Rd Rd Rd Rd Rd Rd Rd Rd Rd Rd Rd Rd Rd Rd Rd Rd Rd Rd Rd Rd Rd Rd Rd Rd Rd Rd Rd Rd Rd Bus
Valdese Loop Rd Rd Rd Rd Rd Rd Rd Rd Rd Rd Rd Rd Rd Rd Rd Rd Rd Rd Rd Rd Rd Rd Rd Rd Rd Rd Rd Rd Rd Rd Rd Rd Rd Rd Rd Rd Rd Bus Rd
Valdese Loop Rd Rd Rd Rd Rd Rd Rd Rd Rd Rd Rd Rd Rd Rd Rd Rd Rd Rd Rd Rd Rd Rd Rd Rd Rd Rd Rd Rd Rd Rd Rd Rd Rd Rd Rd Rd Rd Rd
Valdese Loop Rd Rd Rd Rd Rd Rd Rd Rd Rd Rd Rd Rd Rd Rd Rd Rd Rd Rd Rd Rd Rd Rd Rd Rd Rd Rd Rd Rd Rd Rd Rd Rd Rd Rd Rd Rd Rd Rd Bus
Valdese Loop Rd Rd Rd Rd Rd Rd Rd Rd Rd Rd Rd Rd Rd Rd Rd Rd Rd Rd Rd Rd Rd Rd Rd Rd Rd Rd Rd Rd Rd Rd Rd Rd Rd Rd Rd Rd Rd Rd Bus Rd
Valdese Loop Rd Rd Rd Rd Rd Rd Rd Rd Rd Rd Rd Rd Rd Rd Rd Rd Rd Rd Rd Rd Rd Rd Rd Rd Rd Rd Rd Rd Rd Rd Rd Rd Rd Rd Rd Rd Rd Rd Rd
Valdese Loop Rd Rd Rd Rd Rd Rd Rd Rd Rd Rd Rd Rd Rd Rd Rd Rd Rd Rd Rd Rd Rd Rd Rd Rd Rd Rd Rd Rd Rd Rd Rd Rd Rd Rd Rd Rd Rd Rd Rd Bus
Valdese Loop Rd Rd Rd Rd Rd Rd Rd Rd Rd Rd Rd Rd Rd Rd Rd Rd Rd Rd Rd Rd Rd Rd Rd Rd Rd Rd Rd Rd Rd Rd Rd Rd Rd Rd Rd Rd Rd Rd Rd Bus Rd
Valdese Loop Rd Rd Rd Rd Rd Rd Rd Rd Rd Rd Rd Rd Rd Rd Rd Rd Rd Rd Rd Rd Rd Rd Rd Rd Rd Rd Rd Rd Rd Rd Rd Rd Rd Rd Rd Rd Rd Rd Rd Rd
Valdese Loop Rd Rd Rd Rd Rd Rd Rd Rd Rd Rd Rd Rd Rd Rd Rd Rd Rd Rd Rd Rd Rd Rd Rd Rd Rd Rd Rd Rd Rd Rd Rd Rd Rd Rd Rd Rd Rd Rd Rd Rd Bus
Valdese Loop Rd Rd Rd Rd Rd Rd Rd Rd Rd Rd Rd Rd Rd Rd Rd Rd Rd Rd Rd Rd Rd Rd Rd Rd Rd Rd Rd Rd Rd Rd Rd Rd Rd Rd Rd Rd Rd Rd Rd Rd Bus Rd
Valdese Loop Rd Rd Rd Rd Rd Rd Rd Rd Rd Rd Rd Rd Rd Rd Rd Rd Rd Rd Rd Rd Rd Rd Rd Rd Rd Rd Rd Rd Rd Rd Rd Rd Rd Rd Rd Rd Rd Rd Rd Rd Rd
Valdese Loop Rd Rd Rd Rd Rd Rd Rd Rd Rd Rd Rd Rd Rd Rd Rd Rd Rd Rd Rd Rd Rd Rd Rd Rd Rd Rd Rd Rd Rd Rd Rd Rd Rd Rd Rd Rd Rd Rd Rd Rd Rd Bus
Valdese Loop Rd Rd Rd Rd Rd Rd Rd Rd Rd Rd Rd Rd Rd Rd Rd Rd Rd Rd Rd Rd Rd Rd Rd Rd Rd Rd Rd Rd Rd Rd Rd Rd Rd Rd Rd Rd Rd Rd Rd Rd Rd Bus Rd
Valdese Loop Rd Rd Rd Rd Rd Rd Rd Rd Rd Rd Rd Rd Rd Rd Rd Rd Rd Rd Rd Rd Rd Rd Rd Rd Rd Rd Rd Rd Rd Rd Rd Rd Rd Rd Rd Rd Rd Rd Rd Rd Rd Rd
Valdese Loop Rd Rd Rd Rd Rd Rd Rd Rd Rd Rd Rd Rd Rd Rd Rd Rd Rd Rd Rd Rd Rd Rd Rd Rd Rd Rd Rd Rd Rd Rd Rd Rd Rd Rd Rd Rd Rd Rd Rd Rd Rd Rd Bus
Valdese Loop Rd Rd Rd Rd Rd Rd Rd Rd Rd Rd Rd Rd Rd Rd Rd Rd Rd Rd Rd Rd Rd Rd Rd Rd Rd Rd Rd Rd Rd Rd Rd Rd Rd Rd Rd Rd Rd Rd Rd Rd Rd Rd Bus Rd
Valdese Loop Rd Rd Rd Rd Rd Rd Rd Rd Rd Rd Rd Rd Rd Rd Rd Rd Rd Rd Rd Rd Rd Rd Rd Rd Rd Rd Rd Rd Rd Rd Rd Rd Rd Rd Rd Rd Rd Rd Rd Rd Rd Rd Rd
Valdese Loop Rd Rd Rd Rd Rd Rd Rd Rd Rd Rd Rd Rd Rd Rd Rd Rd Rd Rd Rd Rd Rd Rd Rd Rd Rd Rd Rd Rd Rd Rd Rd Rd Rd Rd Rd Rd Rd Rd Rd Rd Rd Rd Rd Bus
Valdese Loop Rd Rd Rd Rd Rd Rd Rd Rd Rd Rd Rd Rd Rd Rd Rd Rd Rd Rd Rd Rd Rd Rd Rd Rd Rd Rd Rd Rd Rd Rd Rd Rd Rd Rd Rd Rd Rd Rd Rd Rd Rd Rd Rd Bus Rd
Valdese Loop Rd Rd Rd Rd Rd Rd Rd Rd Rd Rd Rd Rd Rd Rd Rd Rd Rd Rd Rd Rd Rd Rd Rd Rd Rd Rd Rd Rd Rd Rd Rd Rd Rd Rd Rd Rd Rd Rd Rd Rd Rd Rd Rd Rd
Valdese Loop Rd Rd Rd Rd Rd Rd Rd Rd Rd Rd Rd Rd Rd Rd Rd Rd Rd Rd Rd Rd Rd Rd Rd Rd Rd Rd Rd Rd Rd Rd Rd Rd Rd Rd Rd Rd Rd Rd Rd Rd Rd Rd Rd Rd Bus
Valdese Loop Rd Rd Rd Rd Rd Rd Rd Rd Rd Rd Rd Rd Rd Rd Rd Rd Rd Rd Rd Rd Rd Rd Rd Rd Rd Rd Rd Rd Rd Rd Rd Rd Rd Rd Rd Rd Rd Rd Rd Rd Rd Rd Rd Rd Bus Rd
Valdese Loop Rd Rd Rd Rd Rd Rd Rd Rd Rd Rd Rd Rd Rd Rd Rd Rd Rd Rd Rd Rd Rd Rd Rd Rd Rd Rd Rd Rd Rd Rd Rd Rd Rd Rd Rd Rd Rd Rd Rd Rd Rd Rd Rd Rd Rd
Valdese Loop Rd Rd Rd Rd Rd Rd Rd Rd Rd Rd Rd Rd Rd Rd Rd Rd Rd Rd Rd Rd Rd Rd Rd Rd Rd Rd Rd Rd Rd Rd Rd Rd Rd Rd Rd Rd Rd Rd Rd Rd Rd Rd Rd Rd Rd Bus
Valdese Loop Rd Rd Rd Rd Rd Rd Rd Rd Rd Rd Rd Rd Rd Rd Rd Rd Rd Rd Rd Rd Rd Rd Rd Rd Rd Rd Rd Rd Rd Rd Rd Rd Rd Rd Rd Rd Rd Rd Rd Rd Rd Rd Rd Rd Rd Bus Rd
Valdese Loop Rd Rd Rd Rd Rd Rd Rd Rd Rd Rd Rd Rd Rd Rd Rd Rd Rd Rd Rd Rd Rd Rd Rd Rd Rd Rd Rd Rd Rd Rd Rd Rd Rd Rd Rd Rd Rd Rd Rd Rd Rd Rd Rd Rd Rd Rd
Valdese Loop Rd Rd Rd Rd Rd Rd Rd Rd Rd Rd Rd Rd Rd Rd Rd Rd Rd Rd Rd Rd Rd Rd Rd Rd Rd Rd Rd Rd Rd Rd Rd Rd Rd Rd Rd Rd Rd Rd Rd Rd Rd Rd Rd Rd Rd Rd Bus
Valdese Loop Rd Rd Rd Rd Rd Rd Rd Rd Rd Rd Rd Rd Rd Rd Rd Rd Rd Rd Rd Rd Rd Rd Rd Rd Rd Rd Rd Rd Rd Rd Rd Rd Rd Rd Rd Rd Rd Rd Rd Rd Rd Rd Rd Rd Rd Rd Bus Rd
Valdese Loop Rd Rd Rd Rd Rd Rd Rd Rd Rd Rd Rd Rd Rd Rd Rd Rd Rd Rd Rd Rd Rd Rd Rd Rd Rd Rd Rd Rd Rd Rd Rd Rd Rd Rd Rd Rd Rd Rd Rd Rd Rd Rd Rd Rd Rd Rd Rd
Valdese Loop Rd Rd Rd Rd Rd Rd Rd Rd Rd Rd Rd Rd Rd Rd Rd Rd Rd Rd Rd Rd Rd Rd Rd Rd Rd Rd Rd Rd Rd Rd Rd Rd Rd Rd Rd Rd Rd Rd Rd Rd Rd Rd Rd Rd Rd Rd Rd Bus
Valdese Loop Rd Rd Rd Rd Rd Rd Rd Rd Rd Rd Rd Rd Rd Rd Rd Rd Rd Rd Rd Rd Rd Rd Rd Rd Rd Rd Rd Rd Rd Rd Rd Rd Rd Rd Rd Rd Rd Rd Rd Rd Rd Rd Rd Rd Rd Rd Rd Bus Rd
Valdese Loop Rd Rd Rd Rd Rd Rd Rd Rd Rd Rd Rd Rd Rd Rd Rd Rd Rd Rd Rd Rd Rd Rd Rd Rd Rd Rd Rd Rd Rd Rd Rd Rd Rd Rd Rd Rd Rd Rd Rd Rd Rd Rd Rd Rd Rd Rd Rd Rd
Valdese Loop Rd Rd Rd Rd Rd Rd Rd Rd Rd Rd Rd Rd Rd Rd Rd Rd Rd Rd Rd Rd Rd Rd Rd Rd Rd Rd Rd Rd Rd Rd Rd Rd Rd Rd Rd Rd Rd Rd Rd Rd Rd Rd Rd Rd Rd Rd Rd Rd Bus
Valdese Loop Rd Rd Rd Rd Rd Rd Rd Rd Rd Rd Rd Rd Rd Rd Rd Rd Rd Rd Rd Rd Rd Rd Rd Rd Rd Rd Rd Rd Rd Rd Rd Rd Rd Rd Rd Rd Rd Rd Rd Rd Rd Rd Rd Rd Rd Rd Rd Rd Bus Rd
Valdese Loop Rd Rd Rd Rd Rd Rd Rd Rd Rd Rd Rd Rd Rd Rd Rd Rd Rd Rd Rd Rd Rd Rd Rd Rd Rd Rd Rd Rd Rd Rd Rd Rd Rd Rd Rd Rd Rd Rd Rd Rd Rd Rd Rd Rd Rd Rd Rd Rd Rd
Valdese Loop Rd Rd Rd Rd Rd Rd Rd Rd Rd Rd Rd Rd Rd Rd Rd Rd Rd Rd Rd Rd Rd Rd Rd Rd Rd Rd Rd Rd Rd Rd Rd Rd Rd Rd Rd Rd Rd Rd Rd Rd Rd Rd Rd Rd Rd Rd Rd Rd Rd Bus
Valdese Loop Rd Rd Rd Rd Rd Rd Rd Rd Rd Rd Rd Rd Rd Rd Rd Rd Rd Rd Rd Rd Rd Rd Rd Rd Rd Rd Rd Rd Rd Rd Rd Rd Rd Rd Rd Rd Rd Rd Rd Rd Rd Rd Rd Rd Rd Rd Rd Rd Rd Bus Rd
Valdese Loop Rd Rd Rd Rd Rd Rd Rd Rd Rd Rd Rd Rd Rd Rd Rd Rd Rd Rd Rd Rd Rd Rd Rd Rd Rd Rd Rd Rd Rd Rd Rd Rd Rd Rd Rd Rd Rd Rd Rd Rd Rd Rd Rd Rd Rd Rd Rd Rd Rd Rd
Valdese Loop Rd Rd Rd Rd Rd Rd Rd Rd Rd Rd Rd Rd Rd Rd Rd Rd Rd Rd Rd Rd Rd Rd Rd Rd Rd Rd Rd Rd Rd Rd Rd Rd Rd Rd Rd Rd Rd Rd Rd Rd Rd Rd Rd Rd Rd Rd Rd Rd Rd Rd Bus
Valdese Loop Rd Rd Rd Rd Rd Rd Rd Rd Rd Rd Rd Rd Rd Rd Rd Rd Rd Rd Rd Rd Rd Rd Rd Rd Rd Rd Rd Rd Rd Rd Rd Rd Rd Rd Rd Rd Rd Rd Rd Rd Rd Rd Rd Rd Rd Rd Rd Rd Rd Rd Bus Rd
Valdese Loop Rd Rd Rd Rd Rd Rd Rd Rd Rd Rd Rd Rd Rd Rd Rd Rd Rd Rd Rd Rd Rd Rd Rd Rd Rd Rd Rd Rd Rd Rd Rd Rd Rd Rd Rd Rd Rd Rd Rd Rd Rd Rd Rd Rd Rd Rd Rd Rd Rd Rd Rd
Valdese Loop Rd Rd Rd Rd Rd Rd Rd Rd Rd Rd Rd Rd Rd Rd Rd Rd Rd Rd Rd Rd Rd Rd Rd Rd Rd Rd Rd Rd Rd Rd Rd Rd Rd Rd Rd Rd Rd Rd Rd Rd Rd Rd Rd Rd Rd Rd Rd Rd Rd Rd Rd Bus
Valdese Loop Rd Rd Rd Rd Rd Rd Rd Rd Rd Rd Rd Rd Rd Rd Rd Rd Rd Rd Rd Rd Rd Rd Rd Rd Rd Rd Rd Rd Rd Rd Rd Rd Rd Rd Rd Rd Rd Rd Rd Rd Rd Rd Rd Rd Rd Rd Rd Rd Rd Rd Rd Bus Rd
Valdese Loop Rd Rd Rd Rd Rd Rd Rd Rd Rd Rd Rd Rd Rd Rd Rd Rd Rd Rd Rd Rd Rd Rd Rd Rd Rd Rd Rd Rd Rd Rd Rd Rd Rd Rd Rd Rd Rd Rd Rd Rd Rd Rd Rd Rd Rd Rd Rd Rd Rd Rd Rd Rd
Valdese Loop Rd Rd Rd Rd Rd Rd Rd Rd Rd Rd Rd Rd Rd Rd Rd Rd Rd Rd Rd Rd Rd Rd Rd Rd Rd Rd Rd Rd Rd Rd Rd Rd Rd Rd Rd Rd Rd Rd Rd Rd Rd Rd Rd Rd Rd Rd Rd Rd Rd Rd Rd Rd Bus
Valdese Loop Rd Rd Rd Rd Rd Rd Rd Rd Rd Rd Rd Rd Rd Rd Rd Rd Rd Rd Rd Rd Rd Rd Rd Rd Rd Rd Rd Rd Rd Rd Rd Rd Rd Rd Rd Rd Rd Rd Rd Rd Rd Rd Rd Rd Rd Rd Rd Rd Rd Rd Rd Rd Bus Rd
Valdese Loop Rd Rd Rd Rd Rd Rd Rd Rd Rd Rd Rd Rd Rd Rd Rd Rd Rd Rd Rd Rd Rd Rd Rd Rd Rd Rd Rd Rd Rd Rd Rd Rd Rd Rd Rd Rd Rd Rd Rd Rd Rd Rd Rd Rd Rd Rd Rd Rd Rd Rd Rd Rd Rd Rd
Valdese Loop Rd Rd Rd Rd Rd Rd Rd Rd Rd Rd Rd Rd Rd Rd Rd Rd Rd Rd Rd Rd Rd Rd Rd Rd Rd Rd Rd Rd Rd Rd Rd Rd Rd Rd Rd Rd Rd Rd Rd Rd Rd Rd Rd Rd Rd Rd Rd Rd Rd Rd Rd Rd Rd Bus
Valdese Loop Rd Rd Rd Rd Rd Rd Rd Rd Rd Rd Rd Rd Rd Rd Rd Rd Rd Rd Rd Rd Rd Rd Rd Rd Rd Rd Rd Rd Rd Rd Rd Rd Rd Rd Rd Rd Rd Rd Rd Rd Rd Rd Rd Rd Rd Rd Rd Rd Rd Rd Rd Rd Rd Bus Rd
Valdese Loop Rd Rd Rd Rd Rd Rd Rd Rd Rd Rd Rd Rd Rd Rd Rd Rd Rd Rd Rd Rd Rd Rd Rd Rd Rd Rd Rd Rd Rd Rd Rd Rd Rd Rd Rd Rd Rd Rd Rd Rd Rd Rd Rd Rd Rd Rd Rd Rd Rd Rd Rd Rd Rd Rd Rd
Valdese Loop Rd Rd Rd Rd Rd Rd Rd Rd Rd Rd Rd Rd Rd Rd Rd Rd Rd Rd Rd Rd Rd Rd Rd Rd Rd Rd Rd Rd Rd Rd Rd Rd Rd Rd Rd Rd Rd Rd Rd Rd Rd Rd Rd Rd Rd Rd Rd Rd Rd Rd Rd Rd Rd Rd Rd Bus
Valdese Loop Rd Rd Rd Rd Rd Rd Rd Rd Rd Rd Rd Rd Rd Rd Rd Rd Rd Rd Rd Rd Rd Rd Rd Rd Rd Rd Rd Rd Rd Rd Rd Rd Rd Rd Rd Rd Rd Rd Rd Rd Rd Rd Rd Rd Rd Rd Rd Rd Rd Rd Rd Rd Rd Rd Rd Bus Rd
Valdese Loop Rd Rd Rd Rd Rd Rd Rd Rd Rd Rd Rd Rd Rd Rd Rd Rd Rd Rd Rd Rd Rd Rd Rd Rd Rd Rd Rd Rd Rd Rd Rd Rd Rd Rd Rd Rd Rd Rd Rd Rd Rd Rd Rd Rd Rd Rd Rd Rd Rd Rd Rd Rd Rd Rd Rd Rd
Valdese Loop Rd Rd Rd Rd Rd Rd Rd Rd Rd Rd Rd Rd Rd Rd Rd Rd Rd Rd Rd Rd Rd Rd Rd Rd Rd Rd Rd Rd Rd Rd Rd Rd Rd Rd Rd Rd Rd Rd Rd Rd Rd Rd Rd Rd Rd Rd Rd Rd Rd Rd Rd Rd Rd Rd Rd Rd Bus
Valdese Loop Rd Rd Rd Rd Rd Rd Rd Rd Rd Rd Rd Rd Rd Rd Rd Rd Rd Rd Rd Rd Rd Rd Rd Rd Rd Rd Rd Rd Rd Rd Rd Rd Rd Rd Rd Rd Rd Rd Rd Rd Rd Rd Rd Rd Rd Rd Rd Rd Rd Rd Rd Rd Rd Rd Rd Rd Bus Rd
Valdese Loop Rd Rd Rd Rd Rd Rd Rd Rd Rd Rd Rd Rd Rd Rd Rd Rd Rd Rd Rd Rd Rd Rd

PROJECT REFERENCE NO.	SHEET NO.
17BP.13.R.42	UO-2

UTILITIES BY OTHERS

NOTE:
ALL PROPOSED UTILITY WORK SHOWN ON THIS SHEET WILL BE DONE BY OTHERS

V&M
Vaughn & Melton
Consulting Engineers
Asheville, North Carolina
828-253-2796
Tri-Cities, TN 423-467-8401
Knoxville, TN 865-546-5800
Spartanburg, SC 864-574-4775
Charleston, SC 843-974-5650
Middlesboro, KY 606-248-6600
Charlotte, NC 704-357-0488
Boone, NC 828-355-9933
Atlanta, GA 770-627-3509

Copyright © 2006 Vaughn & Melton, Inc. All Rights Reserved

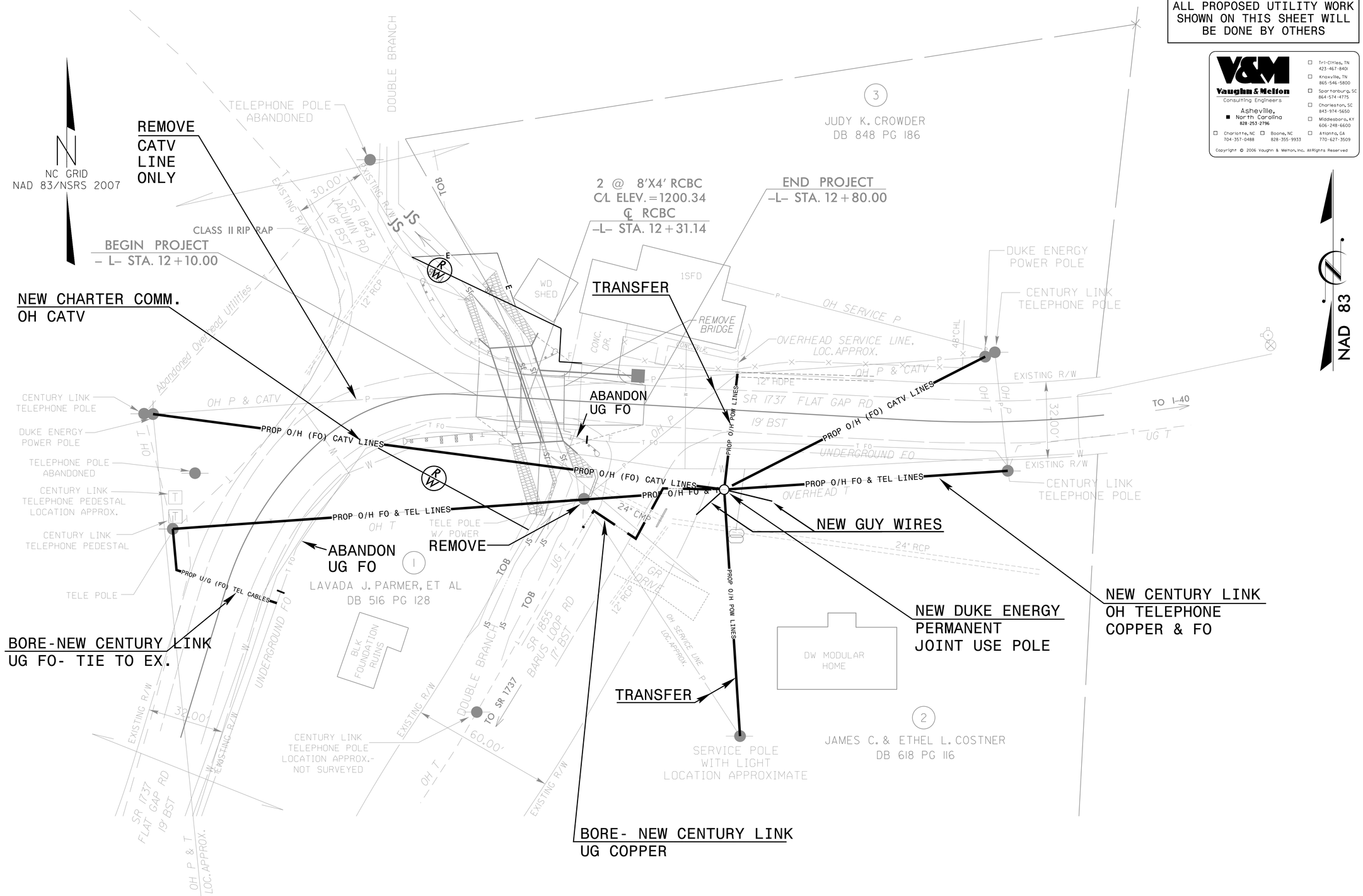

TIP PROJECT: 17BP.13.R.42

CONTRACT:

$$$$USERNAME$$$$

PROJECT REFERENCE NO.	SHEET NO.
17BP.13.R.42	WD-1

PROJECT: 17BP.13.R.42

CONTRACT:

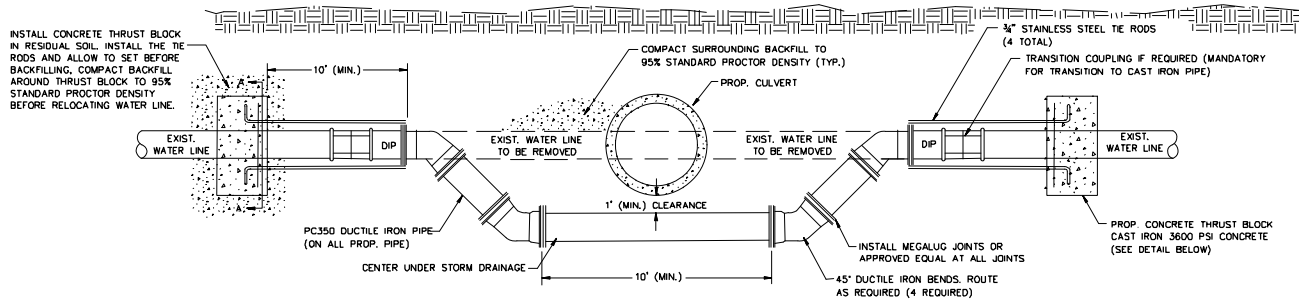

PROFILE
NTS

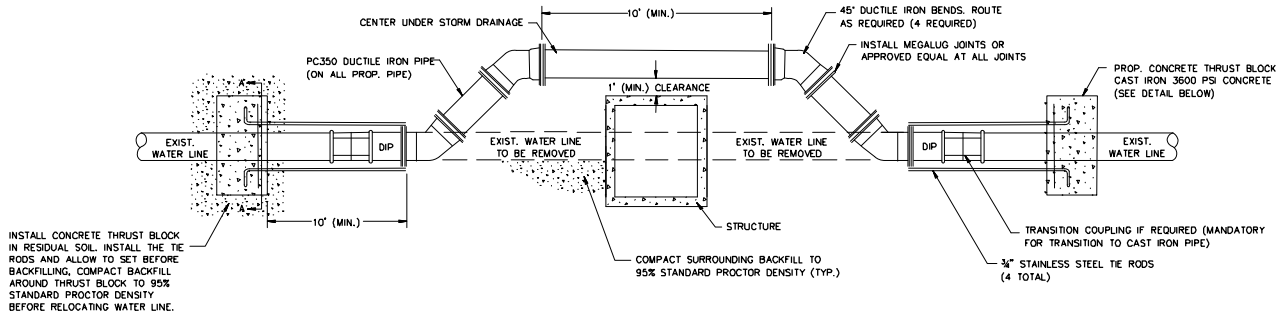

PLAN
NTS

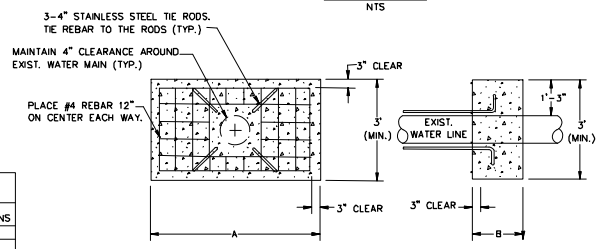

SECTION A-A
NTS

THRUST BLOCK ELEVATION
NTS

THRUST BLOCKING DIMENSIONS		
PIPE DIAMETER	"A" DIMENSIONS	"B" DIMENSIONS
6"	4'	1'-6"
8"	4'	1'-6"
12"	6'	2'

NOTES:

1. WATER SHALL BE MAINTAINED DURING THRUST BLOCK INSTALLATION.
2. ALL CONCRETE SHALL BE 3600 PSI COMPRESSIVE STRENTH.
3. TRIPLE COMMUNITY WATER SERVICE RESIDENTS SHALL BE NOTIFIED OF ANY INTERRUPTION IN WATERSERVICE AT LEAST 72 HOURS PRIOR TO INTERRUPTION.
4. THE CONTRACTOR SHALL MINIMIZE THE TIME RESIDENTS ARE WITHOUT WATER SERVICE AND SHALL NOT ALLOW WATER SERVICE TO BE INTERRUPTED FOR MORE THAN 8 HOURS.
5. FITTINGS SHALL BE RESTRAINED USING MEGALUGS. STAINLES STEEL TIE RODS, OR RESTRAINED JOINT PIPE AS APPROVED BY ENGINEER.
6. IF THE EXISTING WATER MAIN IS CAST IRON OR PVC, USE TRANSITION COUPLING TO CONNECT TO DUCTILE IRON PIPE.
7. CONTRACTOR TO LOCATE WATERLINE PRIOR TO PIPE INSTALLATION OR GRADING ACTIVITIES.

WATERMAIN DEFLECTION DETAIL

TRANSP\32224-01 BURKE 21B\UTILITIES\WATER DEFLECTION DETAIL.DGN

COMPUTED BY: CBC DATE: 01-20-12
CHECKED BY: RMS DATE: 01-20-12

PROJECT REFERENCE NO.	SHEET NO.
17BP.13.R.42	X-0

DIVISION OF HIGHWAYS
STATE OF NORTH CAROLINA

NORTH CAROLINA PROFESSIONAL SEAL 030453 ENGINEER AARON C. CARVER
5/27/14

CROSS SECTION SUMMARY

IN CUBIC YARDS

-L- LOCATION	UNCLASSIFIED EXCAVATION	EMBT
12+10	0	0
12+25	55	10
12+50	115	41
12+75	1	3
12+80	0	0

NOTE: EMBANKMENT COLUMN DOES NOT INCLUDE BACKFILL FOR UNDERCUT.

Approximate quantities only. Borrow, excavation, fine grading, clearing and grubbing, and removal of existing pavement will be paid for at the contract lump sum price for "grading".

8/23/99

0 2.5 5	PROJ. REFERENCE NO.	SHEET NO.
	17BP.13.R.42	X-1

END PROJECT 17BP.13.R.42
–L– STA. 12+80

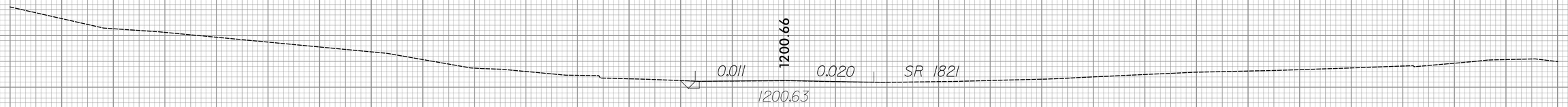

12+75

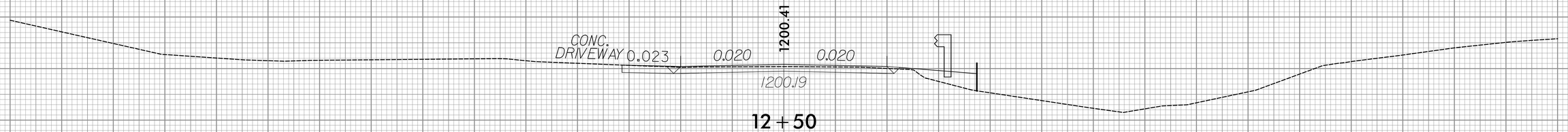

12+50

℄ RCBC
–L– STA. 12+31.14

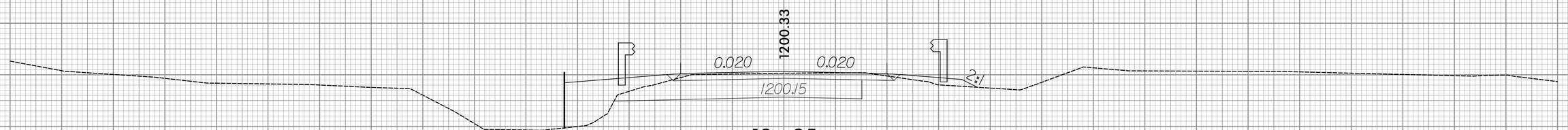

12+25

BEGIN PROJECT 17BP.13.R.42
–L– STA. 12+10



12+00

BEGIN CONSTRUCTION
–L– STA. 11+60
–℄–

$$$$SYSTIME$$$$
$$$$SYSNAME$$$$
$$$$DGN$$$$
$$$$USERNAME$$$$

8/23/99

0 2.5 5

PROJ. REFERENCE NO.	SHEET NO.
17BP.13.R.42	X-2

75 70 65 60 55 50 45 40 35 30 25 20 15 10 5 0 5 10 15 20 25 30 35 40 45 50 55 60 65 70 75

1215
1210
1205
1200
1195

END CONSTRUCTION
–L– STA. 13+16.91

1200.99

13+00
–L–

$$$$$SYSTIME$$$$$
$$$$$ENAME$$$$$
$$$$$

BM-1: R/R SPIKE IN BASE OF 14" SWEETGUM, STA. 12+11.97, 50.5' LEFT OF -L-
N 729206.7557 E 1237784.1280 ELEV. 1198.74'

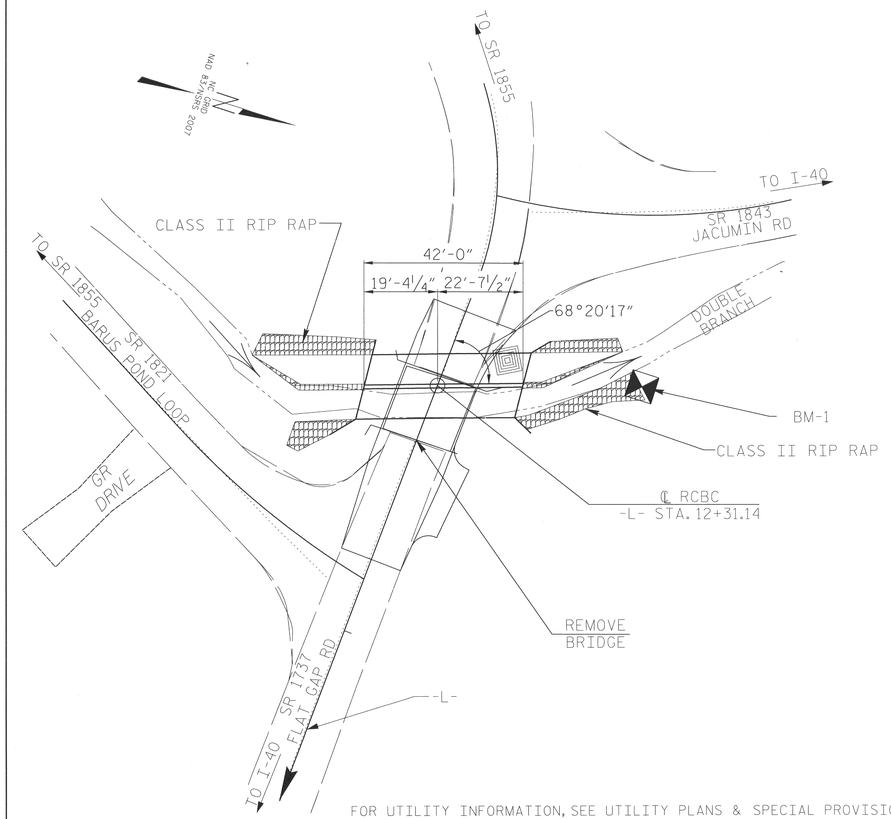

FOR UTILITY INFORMATION, SEE UTILITY PLANS & SPECIAL PROVISIONS

LOCATION SKETCH

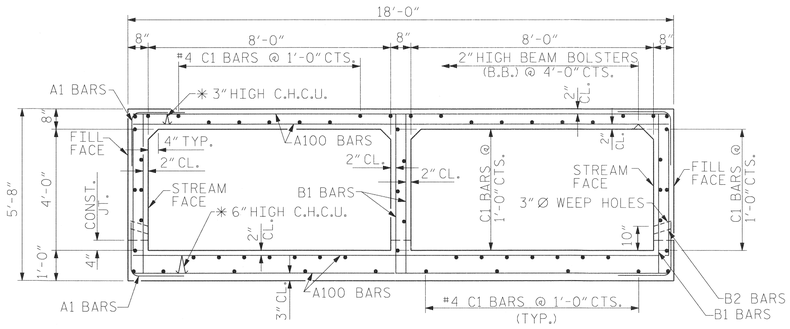

RIGHT ANGLE SECTION OF BARREL

THERE ARE 60 "C" BARS IN SECTION OF BARREL.

* ALL CONTINUOUS HIGH CHAIR UPPER (C.H.C.U.) @ 3'-0" CTS.

STRUCTURE HYDRAULIC DATA

DESIGN DISCHARGE	= 320 CFS
DESIGN FREQUENCY	= 25 YRS
DESIGN HW ELEVATION	= 1199.9 FT
BASE DISCHARGE	= 885 CFS
BASE FREQUENCY	= 100 YRS
BASE HW ELEVATION	= 1202.96 FT
OVERTOPPING DISCHARGE	= 350 CFS
OVERTOPPING FREQUENCY	= 25+ YRS
OVERTOPPING ELEVATION	= 1200.3 FT

NOTES

ASSUMED LIVE LOAD ---------- HL-93 OR ALT. LOADING.

DESIGN FILL: 2'-0"

FOR OTHER DESIGN DATA AND NOTES SEE STANDARD NOTE SHEET.

3" Ø WEEP HOLES INDICATED TO BE IN ACCORDANCE WITH THE SPECIFICATIONS.

CONCRETE IN CULVERTS TO BE POURED IN THE FOLLOWING ORDER:

1. WING FOOTINGS AND FLOOR SLAB INCLUDING 4" OF ALL VERTICAL WALLS.
2. THE REMAINING PORTIONS OF THE WALLS AND WINGS FULL HEIGHT FOLLOWED BY ROOF SLAB AND HEADWALLS.

THE RESIDENT ENGINEER SHALL CHECK THE LENGTH OF CULVERT BEFORE STAKING IT OUT TO MAKE CERTAIN THAT IT WILL PROPERLY TAKE CARE OF THE FILL.

DIMENSIONS FOR WING LAYOUT AS WELL AS ADDITIONAL REINFORCING STEEL EMBEDDED IN BARREL ARE SHOWN ON WING SHEET.

AT THE CONTRACTOR'S OPTION, HE MAY SPLICE THE VERTICAL REINFORCING STEEL IN THE INTERIOR FACE OF EXTERIOR WALL AND BOTH FACES OF INTERIOR WALLS ABOVE LOWER WALL CONSTRUCTION JOINT. THE SPLICE LENGTH SHALL BE AS PROVIDED IN THE SPLICE LENGTH CHART SHOWN ON THE PLANS. EXTRA WEIGHT OF STEEL DUE TO THE SPLICES SHALL BE PAID FOR BY THE CONTRACTOR.

FOR CULVERT DIVERSION DETAILS AND PAY ITEMS, SEE EROSION CONTROL PLANS.

A 3'-0" STRIP OF FILTER FABRIC SHALL BE ATTACHED TO THE FILL FACE OF THE WING COVERING THE ENTIRE LENGTH OF THE EXPANSION JOINT.

FOR SUBMITTAL OF WORKING DRAWINGS, SEE SPECIAL PROVISIONS.

FOR FALSEWORK AND FORMWORK, SEE SPECIAL PROVISIONS.

FOR CULVERT EXCAVATION, SEE SPECIAL PROVISIONS.

FOR GROUT FOR STRUCTURES, SEE SPECIAL PROVISIONS.

AFTER SERVING AS A TEMPORARY STRUCTURE, THE EXISTING STRUCTURE CONSISTING OF A SINGLE SPAN, 18'-6" LONG TIMBER FLOOR BRIDGE ON TIMBER JOISTS WITH TIMBER CAPS ON POSTS AND SILLS AND LOCATED AT THE SAME LOCATION SHALL BE REMOVED. THE EXISTING BRIDGE IS PRESENTLY POSTED BELOW THE LEGAL LOAD LIMIT. SHOULD THE STRUCTURAL INTEGRITY OF THE BRIDGE FURTHER DETERIORATE, THIS LOAD LIMITATION MAY BE REDUCED AS FOUND NECESSARY DURING THE LIFE OF THE PROJECT.

TOTAL STRUCTURE QUANTITIES

CLASS A CONCRETE		
BARRELS @ 1.42 CY/FT	59.7	C.Y.
SILLS	2.1	C.Y.
WINGS ETC.	12.9	C.Y.
TOTAL	74.7	C.Y.
REINFORCING STEEL		
BARRELS	9,008	LBS.
SILLS	49	LBS.
WINGS ETC.	694	LBS.
TOTAL	9,751	LBS.
FOUND. COND. MATL.	27.3	TONS
REMOVAL OF EXIST. STR.	1	L.S.
RIP RAP CLASS II	51	TONS

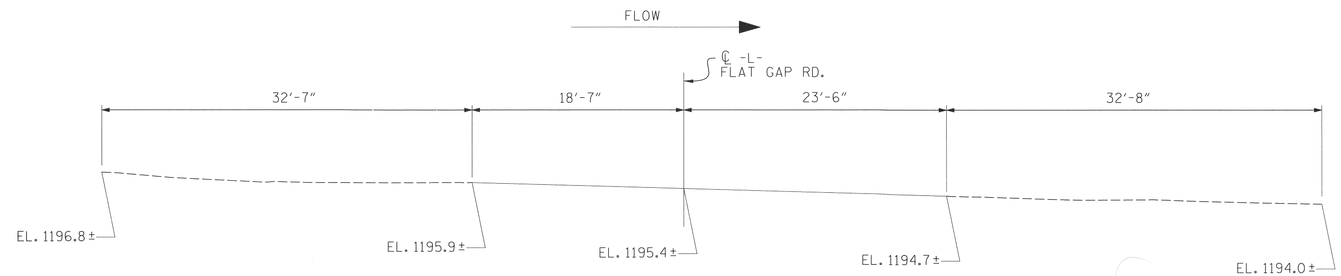

PROFILE ALONG ℄ STREAM

NORTH CAROLINA PROFESSIONAL SEAL 20977 ENGINEER HARDY L. WILLIS 5/27/14

PROJECT NO. 17BP.13.R.42
BURKE COUNTY
STATION: 12+31.14 -L-

SHEET 1 OF 6 REPLACES BRIDGE #218

STATE OF NORTH CAROLINA
DEPARTMENT OF TRANSPORTATION
RALEIGH

DOUBLE BARREL
8 FT. X 4 FT.
CONCRETE BOX CULVERT
68° SKEW

DECEMBER 2013

REVISIONS						SHEET NO.
NO.	BY:	DATE:	NO.	BY:	DATE:	S-1
1			3			TOTAL SHEETS
2			4			6

ASSEMBLED BY : MAF	DATE : 8/28/09	SPECIAL	
CHECKED BY : HLW	DATE : 8/28/09		
DRAWN BY : D.P.DONOVAN	DATE : DEC.1989	STANDARD	
CHECKED BY : M. A. JONES	DATE : NOV 90		

REDRAWN NOV.1990 BY D.P.D. CHECKED BY M.A.J.
ADDED 11-90

Vaughn & Melton
Consulting Engineers
Middlesboro, Kentucky 606-248-6600
Knoxville, Tennessee 865-546-5800
Asheville, North Carolina 828-253-2796

Copyright© 1994 Vaughn & Melton, Inc. All Rights Reserved

STD. NO. CB442A

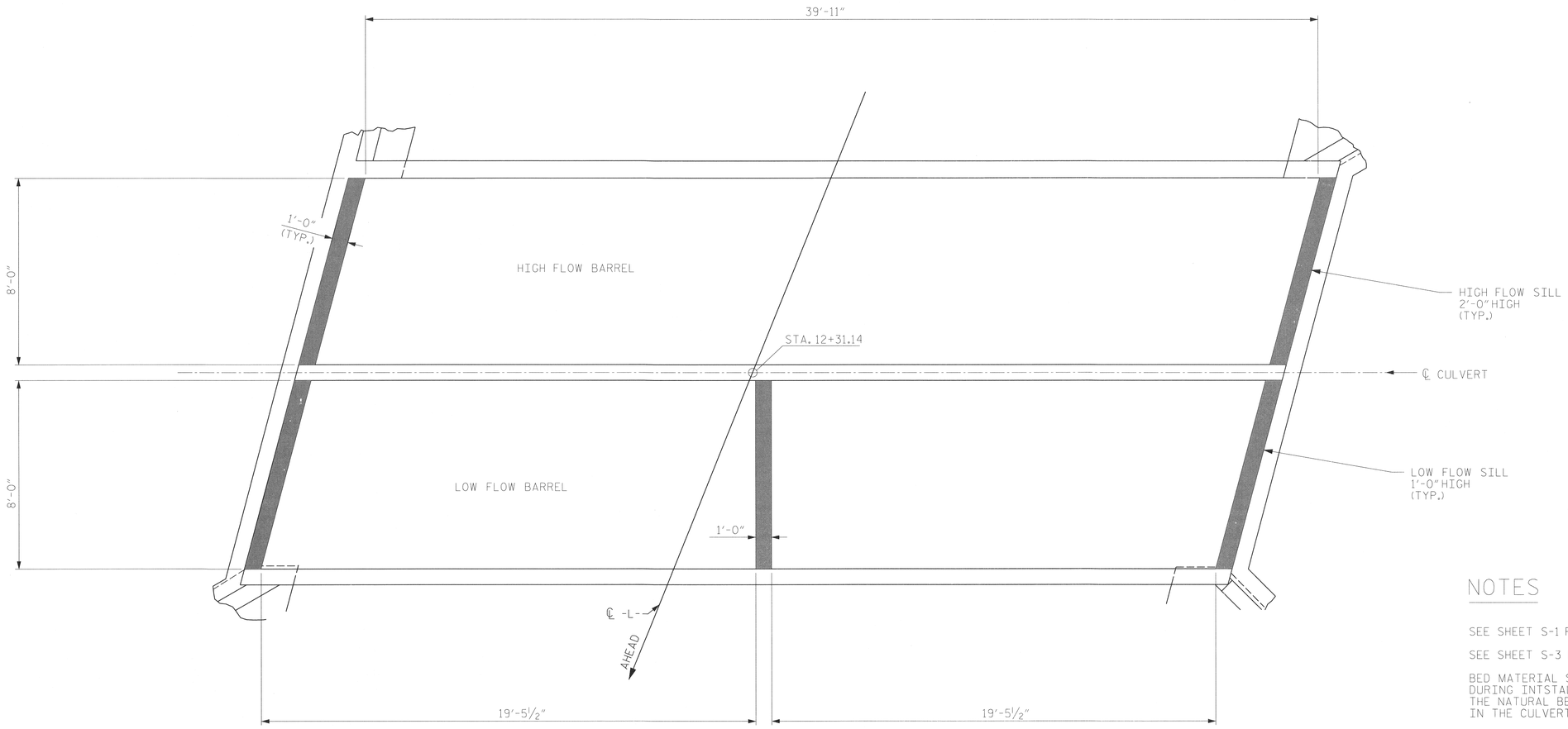

CULVERT SILL LAYOUT

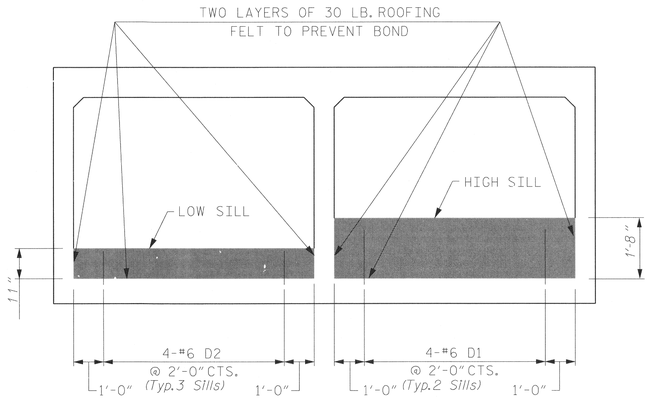

END ELEVATION

(LOOKING UPSTREAM)

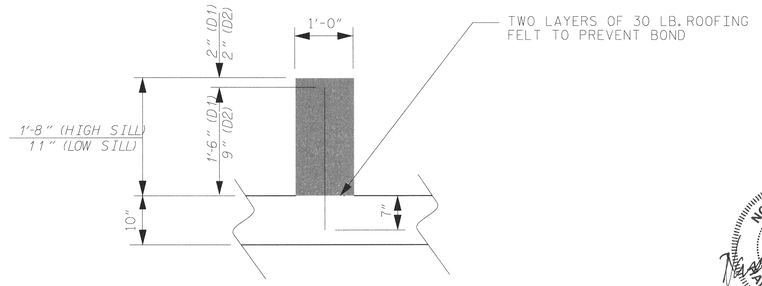

SECTION THRU SILL

* DOWELS MAY BE PUSHED INTO GREEN CONCRETE AFTER SLAB HAS BEEN FLOAT FINISHED *

NOTES

SEE SHEET S-1 FOR SILL CONCRETE QUANTITY

SEE SHEET S-3 BAR SCHEDULE FOR DOWELS

BED MATERIAL SHALL BE EXCAVATED AND STOCKPILED DURING INTSTALLATION OF THE CULVERT AND SILLS. THE NATURAL BED MATERIALS SHALL THEN BE PLACED IN THE CULVERT TO THE SPECIFIED ELEVATION.

CLASS I RIP-RAP MAY BE USED TO SUPPLEMENT BED MATERIAL.

TOP OF LOW FLOW SILL SHOULD MATCH THE STREAM ELEVATION IN THE LOW FLOW CHANNEL OF STREAM.

NORTH CAROLINA PROFESSIONAL SEAL 20977 ENGINEER HARDY L. WILLIS 5/27/14

V&M
Vaughn & Melton
Consulting Engineers
Middlesboro, Kentucky 606-248-6600
Knoxville, Tennessee 865-546-5800
Asheville, North Carolina 828-253-2796

Copyright© 1994 Vaughn & Melton, Inc.
All Rights Reserved

PROJECT NO. 17BP.13.R.42

BURKE COUNTY

STATION: 12+31.14 -L-

SHEET 2 OF 6

STATE OF NORTH CAROLINA
DEPARTMENT OF TRANSPORTATION
RALEIGH

DOUBLE BARREL 8 FT. X 4 FT. CONCRETE BOX CULVERT

DECEMBER 2013

REVISIONS						SHEET NO.
NO.	BY:	DATE:	NO.	BY:	DATE:	S-2
1			3			TOTAL SHEETS
2			4			6

STD. NO. CB442

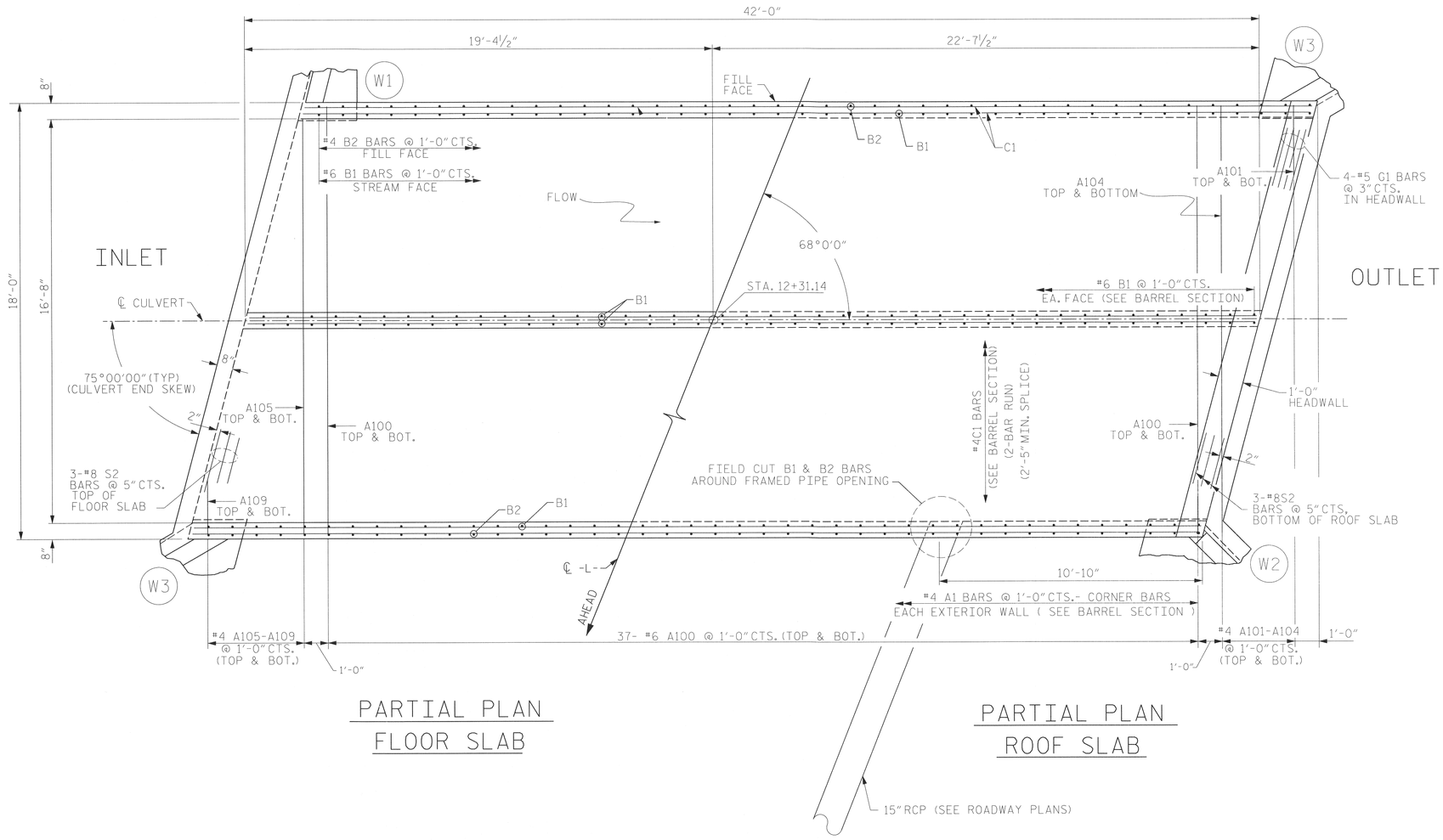

PARTIAL PLAN
FLOOR SLAB

PARTIAL PLAN
ROOF SLAB

BOX CULVERT REINFORCING STEEL BAR SCHEDULE

BAR	NO.	SIZE	TYPE	LENGTH	WEIGHT
A1	168	#4	(6)	4'-10"	542
A100	148	#6	STR.	17'-8"	3927
A101	4	#6	STR.	2'-11"	18
A102	4	#6	STR.	6'-8"	40
A103	4	#6	STR.	10'-5"	63
A104	4	#6	STR.	14'-2"	85
A105	4	#6	STR.	17'-2"	103
A106	4	#6	STR.	13'-5"	81
A107	4	#6	STR.	9'-9"	59
A108	4	#6	STR.	6'-0"	36
A109	4	#6	STR.	2'-3"	14
B1	168	#6	STR.	5'-3"	1325
B2	84	#4	STR.	3'-2"	178
C1	120	#4	STR.	22'-9"	1824
D1	8	#6	STR.	2'-1"	25
D2	12	#6	STR.	1'-4"	24
G1	8	#5	STR.	18'-3"	152
S2	12	#8	STR.	18'-3"	585

REINFORCING STEEL *9,057 LBS.*

BAR TYPES

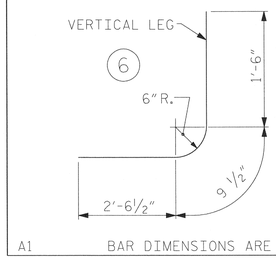

A1 BAR DIMENSIONS ARE OUT TO OUT

PROJECT NO. 17BP.13.R.42

BURKE COUNTY

STATION: 12+31.14 -L-

SHEET 3 OF 6

STATE OF NORTH CAROLINA
DEPARTMENT OF TRANSPORTATION
RALEIGH

DOUBLE BARREL 8 FT. X 4 FT. CONCRETE BOX CULVERT

DECEMBER 2013

REVISIONS						SHEET NO.
NO.	BY:	DATE:	NO.	BY:	DATE:	S-3
1			3			TOTAL SHEETS
2			4			6

STD. NO. CB442

NORTH CAROLINA PROFESSIONAL SEAL 29777 ENGINEER HARDY L. WILLIS 5/27/14

Vaughn & Melton Consulting Engineers
Middlesboro, Kentucky 606-248-6600
Knoxville, Tennessee 865-546-5800
Asheville, North Carolina 828-253-2796

Copyright© 1994 Vaughn & Melton, Inc. All Rights Reserved

ASSEMBLED BY : MAF	DATE : 8/28/09	SPECIAL
CHECKED BY : HLW	DATE : 8/28/09	
DRAWN BY : RALPH D. UNDERWOOD	DATE : APR. 1972	STANDARD
CHECKED BY : HASON A.JUDEH	DATE : MAY 1972	

REVISED 11-19-99 BY M.M. CHECKED BY R.W.W.
REDRAWN NOV.1990 BY D.P.D. CHECKED BY M.A.J.

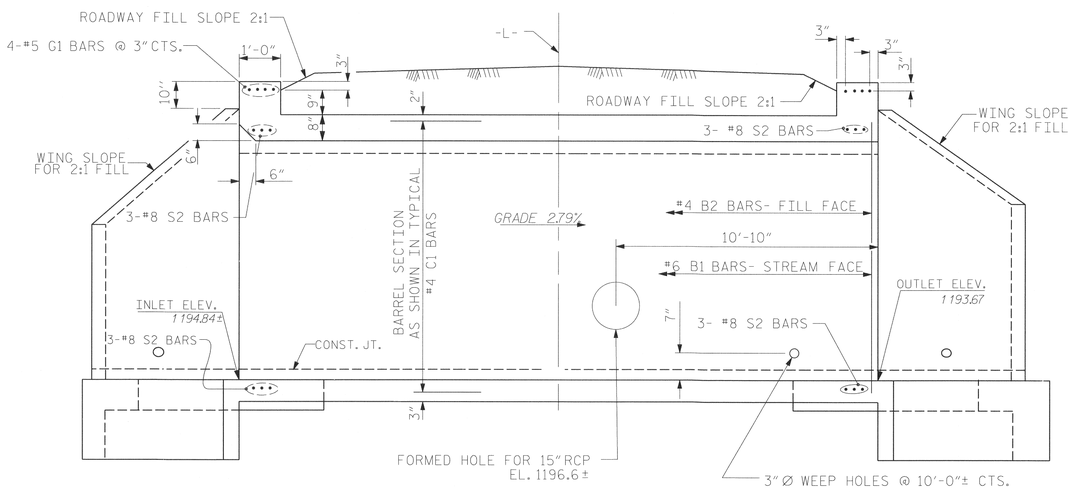

CULVERT SECTION NORMAL TO ROADWAY

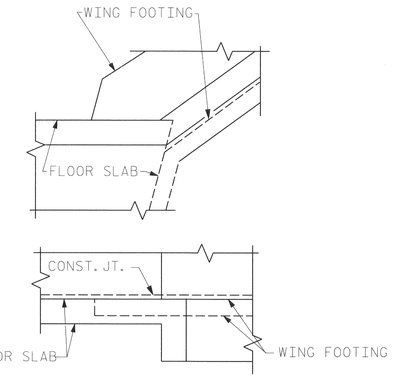

DETAIL

CONNECTION OF WING FOOTING AND FLOOR SLAB

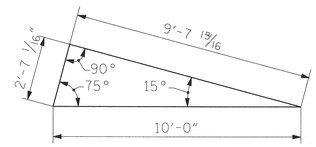

SKEW TRIANGLE

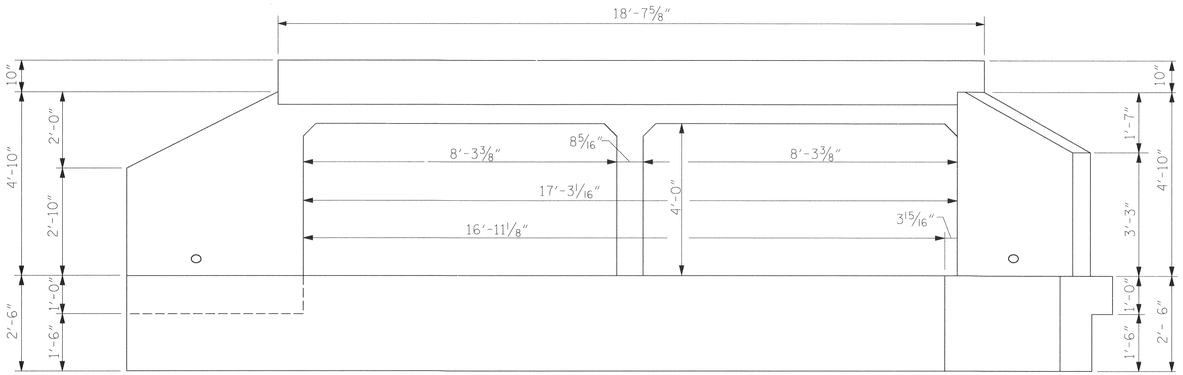

(W1) INLET END ELEVATION NORMAL TO SKEW (W3)

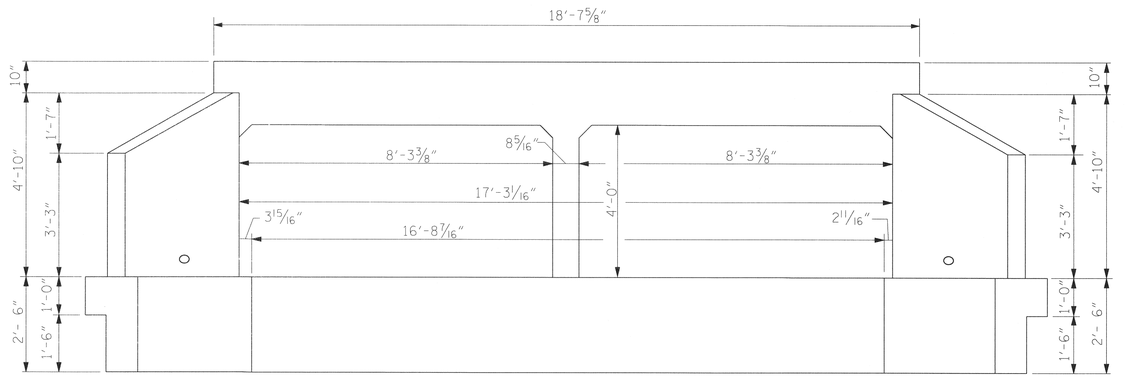

(W2) OUTLET END ELEVATION NORMAL TO SKEW (W3)

PROJECT NO. 17BP.13.R.42

BURKE COUNTY

STATION: 12+31.14 -L-

SHEET 4 OF 6

NORTH CAROLINA PROFESSIONAL SEAL 20777 ENGINEER RICHARDY L. WILLIS 5/27/14

V&M Vaughn & Melton Consulting Engineers
Middlesboro, Kentucky 606·248·6600
Knoxville, Tennessee 865·546·5800
Asheville, North Carolina 828·253·2796

Copyright © 1994 Vaughn & Melton, Inc. All Rights Reserved

STATE OF NORTH CAROLINA
DEPARTMENT OF TRANSPORTATION
RALEIGH

DOUBLE BARREL 8 FT. X 4 FT. CONCRETE BOX CULVERT 68° SKEW

DECEMBER 2013

REVISIONS						SHEET NO.
NO.	BY:	DATE:	NO.	BY:	DATE:	S-4
1			3			TOTAL SHEETS
2			4			6

ASSEMBLED BY : AW DATE : 12/2013 CHECKED BY : HLW DATE : 12/2013	SPECIAL
DRAWN BY : RALPH D. UNDERWOOD DATE : APR. 1972 CHECKED BY : HASON A.JUDEH DATE : MAY 1972	STANDARD

STD. NO. CB442

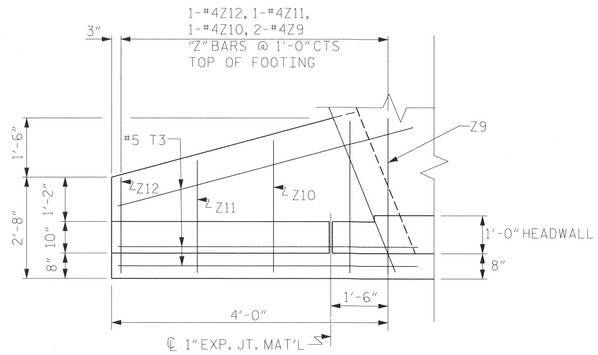

PLAN W1

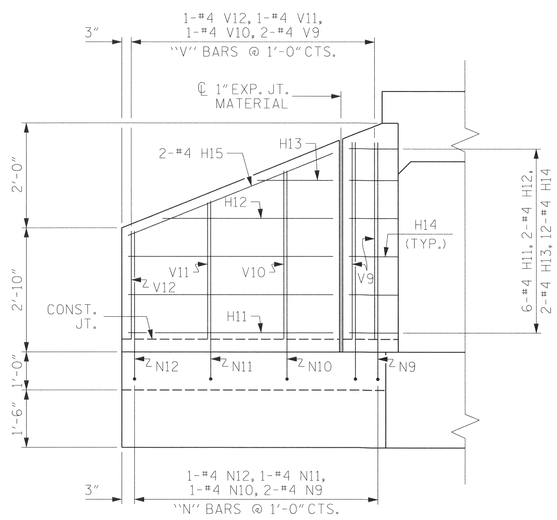

ELEVATION W1

(1 REQ'D)

NOTE:
SEE SHEET 6 OF 6 FOR OTHER WING DETAILS,
AND BILL OF MATERIAL FOR ALL WINGS

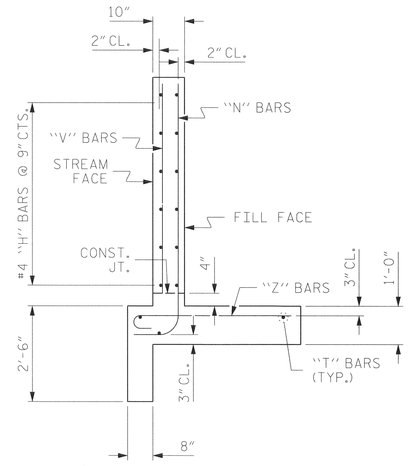

TYPICAL WING
SECTION

NORTH CAROLINA PROFESSIONAL SEAL 20777 ENGINEER HARDY L. WILLIS

1/27/14

PROJECT NO. 17BP.13.R.42

BURKE COUNTY

STATION: 12+31.14 -L-

SHEET 5 OF 6

V&M Vaughn & Melton Consulting Engineers

Asheville, North Carolina 828-253-2796

Charlotte, North Carolina 704-357-0488

Tri-Cities, Tennessee 423-467-8400

Knoxville, Tennessee 865-546-5800

Middlesboro, Kentucky 606-248-6400

Spartanburg, South Carolina 864-574-4775

Copyright © 2006 Vaughn & Melton, Inc. All Rights Reserved

STATE OF NORTH CAROLINA
DEPARTMENT OF TRANSPORTATION
RALEIGH

WING W1 DETAILS

DECEMBER 2013

DWN. BY: AW	DATE: 12/2013
CHKD. BY: HLW	DATE: 12/2013
DES. EGR. OF RECORD: CBC	DATE: 12/2013

REVISIONS						SHEET NO.
NO.	BY:	DATE:	NO.	BY:	DATE:	S-5
1			3			TOTAL SHEETS
2			4			6

STD. NO. CW7505

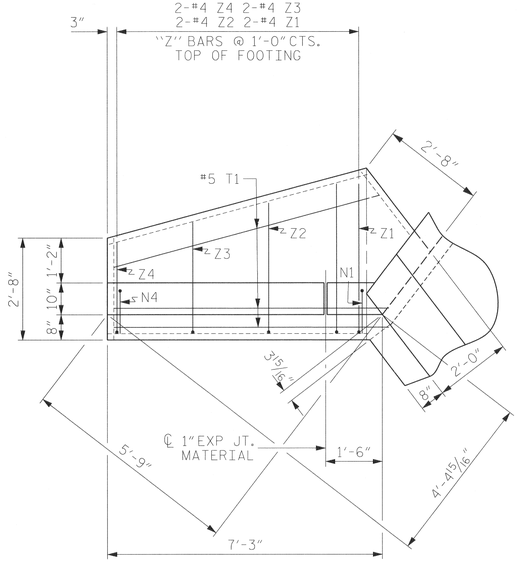

PLAN W2

(1 REQ'D)

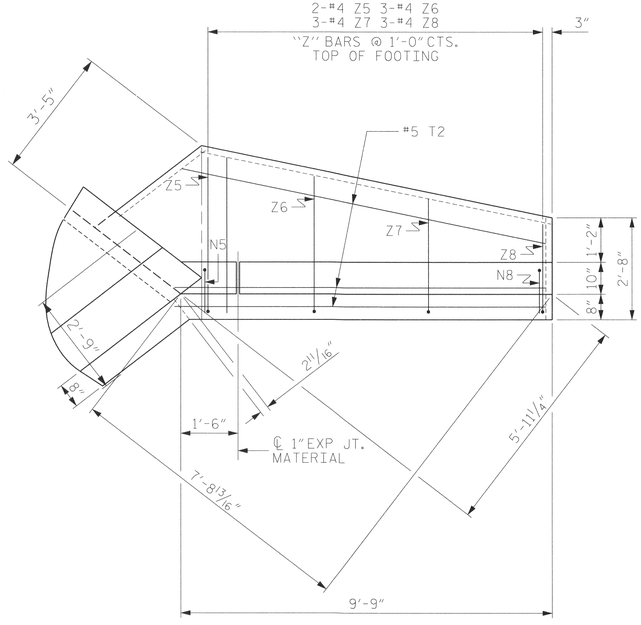

PLAN W3

(2 REQ'D)

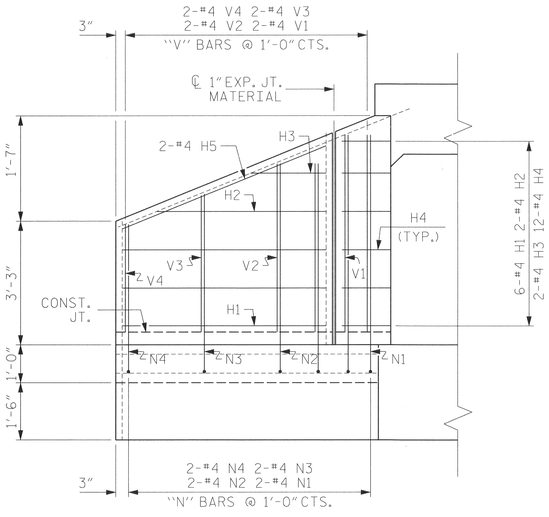

ELEVATION W2

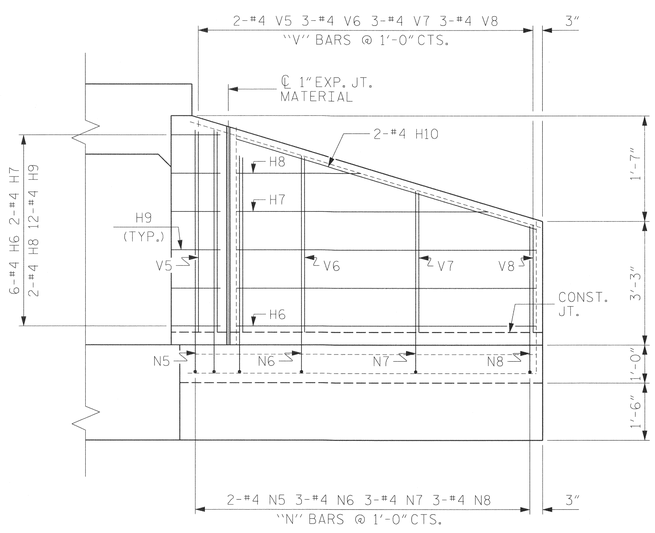

ELEVATION W3

BAR TYPES

ALL BAR DIMENSIONS ARE OUT TO OUT.

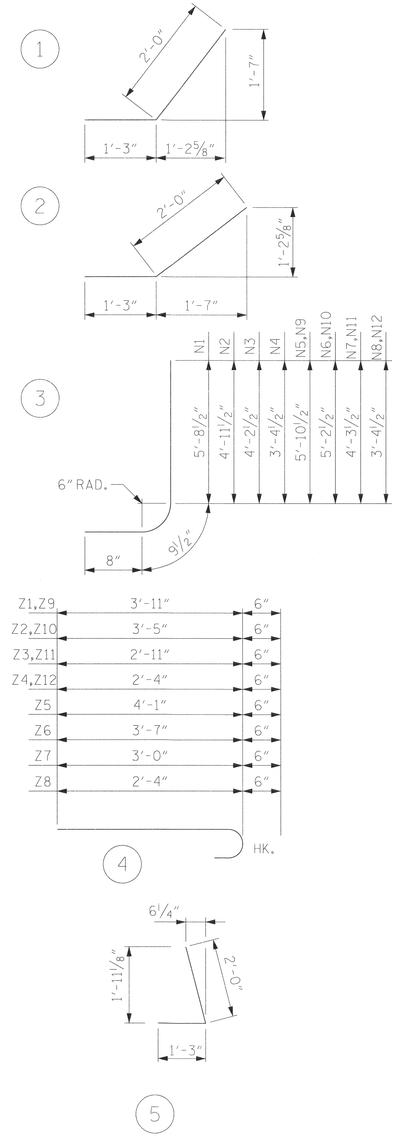

BILL OF MATERIAL

BAR	NO.	SIZE	TYPE	LENGTH	WEIGHT
H1	6	#4	STR	5'-4"	22
H2	2	#4	STR	4'-5"	6
H3	2	#4	STR	2'-0"	3
H4	12	#4	1	3'-3"	26
H5	2	#4	STR	5'-9"	8
H6	12	#4	STR	7'-10"	63
H7	4	#4	STR	6'-7"	18
H8	4	#4	STR	3'-3"	9
H9	24	#4	2	3'-3"	52
H10	4	#4	STR	8'-2"	22
H11	6	#4	STR	2'-1"	8
H12	2	#4	STR	1'-6"	2
H13	2	#4	STR	1'-0"	1
H14	12	#4	5	3'-3"	26
H15	2	#4	STR	2'-3"	3
N1	2	#4	3	7'-2"	10
N2	2	#4	3	6'-5"	9
N3	2	#4	3	5'-8"	8
N4	2	#4	3	4'-10"	7
N5	4	#4	3	7'-4"	20
N6	6	#4	3	6'-8"	27
N7	6	#4	3	5'-9"	23
N8	6	#4	3	4'-10"	19
N9	2	#4	3	7'-4"	10
N10	1	#4	3	6'-8"	4
N11	1	#4	3	5'-9"	4
N12	1	#4	3	4'-10"	3
T1	3	#5	STR	7'-3"	23
T2	6	#5	STR	9'-9"	61
T3	3	#5	STR	5'-6"	17
V1	2	#4	STR	5'-2"	7
V2	2	#4	STR	4'-5"	6
V3	2	#4	STR	3'-7"	5
V4	2	#4	STR	2'-10"	4
V5	4	#4	STR	5'-3"	14
V6	6	#4	STR	4'-7"	18
V7	6	#4	STR	3'-8"	15
V8	6	#4	STR	2'-10"	11
V9	2	#4	STR	5'-2"	7
V10	1	#4	STR	4'-3"	3
V11	1	#4	STR	3'-4"	2
V12	1	#4	STR	2'-5"	2

BAR	NO.	SIZE	TYPE	LENGTH	WEIGHT
Z1	2	#4	4	4'-5"	6
Z2	2	#4	4	3'-11"	5
Z3	2	#4	4	3'-5"	5
Z4	2	#4	4	2'-10"	4
Z5	4	#4	4	4'-7"	12
Z6	6	#4	4	4'-1"	16
Z7	6	#4	4	3'-6"	14
Z8	6	#4	4	2'-10"	11
Z9	2	#4	4	4'-5"	6
Z10	1	#4	4	3'-11"	3
Z11	1	#4	4	3'-5"	2
Z12	1	#4	4	2'-10"	2

REINFORCING STEEL 694 LBS
FOR 4 WINGS

CLASS A CONCRETE

4 WINGS	10.1	CY
2 HEADWALLS	1.4	CY
2 END CURTAIN WALLS	1.4	CY
TOTAL	12.9	CY

NOTE:
SEE SHEET 5 OF 6 FOR
TYPICAL WING SECTION.

NORTH CAROLINA PROFESSIONAL SEAL 20777 ENGINEER RICHARDY L. WILLIS 5/27/14

PROJECT NO. 17BP.13.R.42

BURKE COUNTY

STATION: 12+31.14 -L-

SHEET 6 OF 6

STATE OF NORTH CAROLINA
DEPARTMENT OF TRANSPORTATION
RALEIGH

STANDARD WINGS FOR CONCRETE BOX CULVERT

H = 5'-0" SLOPE = 2:1
75° OR 105° SKEW

REVISIONS						SHEET NO.
NO.	BY:	DATE:	NO.	BY:	DATE:	S-6
1			3			TOTAL SHEETS
2			4			6

STD. NO. CW7505

ASSEMBLED BY : AW	DATE : 12/2013	
CHECKED BY : HLW	DATE : 12/2013	
DRAWN BY : CCJ	12/99	
CHECKED BY : RWW	03/00	