09/08/99

TIP PROJECT: R-5875

CONTRACT: DM00247

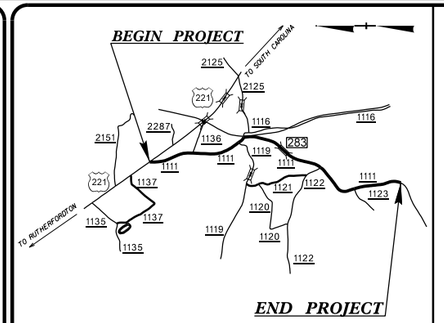

VICINITY MAP

STATE OF NORTH CAROLINA
DIVISION OF HIGHWAYS

RUTHERFORD COUNTY

STATE	STATE PROJECT REFERENCE NO.	SHEET NO.	TOTAL SHEETS
N.C.	R-5875	1	22

STATE PROJ. NO.	F. A. PROJ. NO.	DESCRIPTION
47918.1.1		P.E.
47918.3.1		CONST.

LOCATION: SR 1111 JACK McKINNEY RD APPROX. 0.12 MILES SOUTHWEST OF US-221 S TO APPROX. 0.55 MILES SOUTH OF SR 1123 JENKINS RD

TYPE OF WORK: WIDENING AND RESURFACING

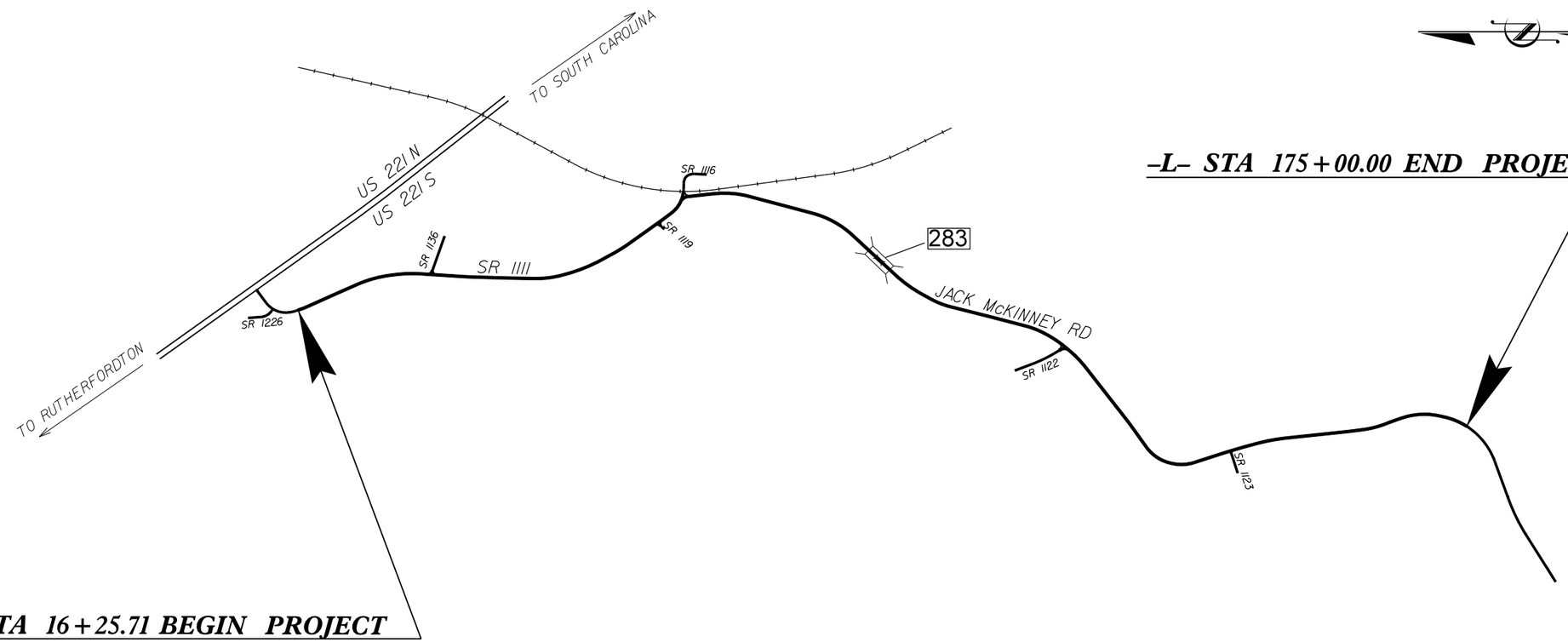

PROJECT LENGTH

LENGTH OF ROAD PROJECT = 3.01 MILES

24-SEP-2018 07:39

PROJECT REFERENCE NO.	SHEET NO.
R-5875	2

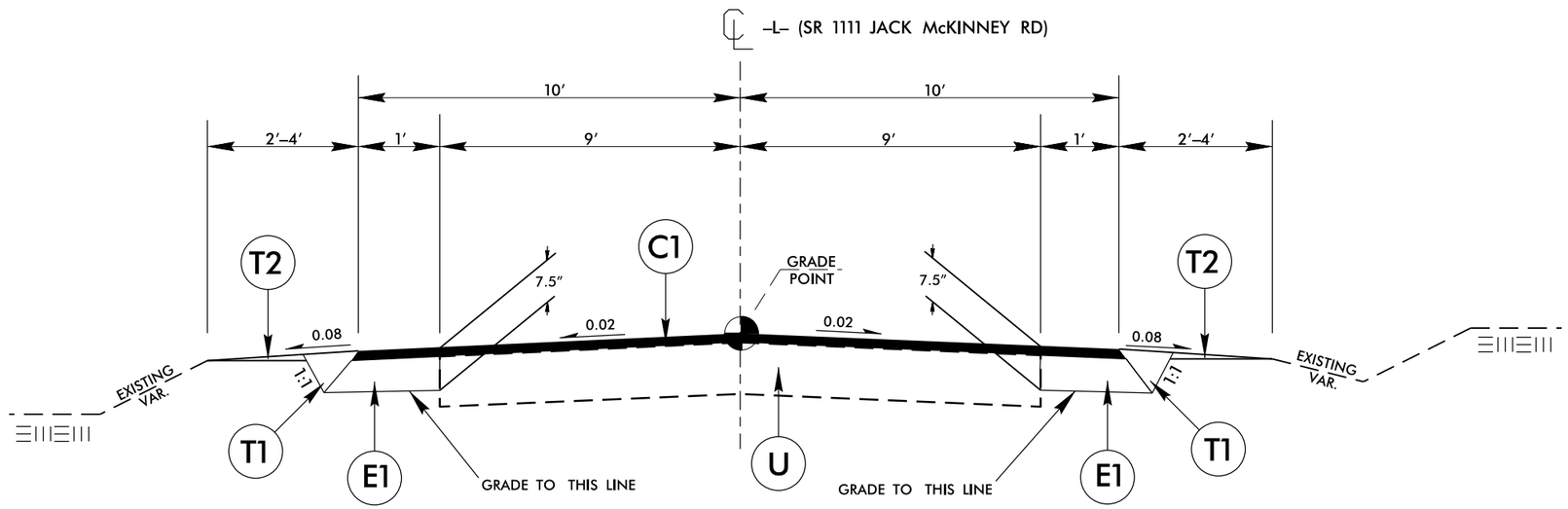

TYPICAL SECTION

PAVEMENT SCHEDULE	
C1	PROP. APPROX. 1 1/2" ASPHALT CONCRETE SURFACE COURSE, TYPE S9.5C AT AN AVERAGE RATE OF 168 LBS. PER SQ. YD.
E1	PROP. APPROX. 6" ASPHALT CONCRETE BASE COURSE, TYPE B25.0C AT AN AVERAGE RATE OF 342 LBS. PER SQ. YD. IN EACH OF TWO LAYERS.
T1	EARTH MATERIAL.
T2	SHOULDER RECONSTRUCTION.
U	EXISTING PAVEMENT.

6/2/99
17-SEP-2018 14:31
S:\Division 7 Engineer\Contract Working Files\DM\DM00247 Jack McKinney Road_R-5875_ARC Project_Rutherford_10-17-18\DM00247 DGN Files\DM00247_Rdy_typ.dgn
$$$$USERNAME$$$$

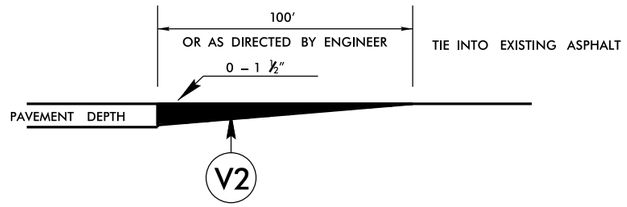

DETAIL TO TIE INTO EXIST PAVEMENT

THE CONTRACTOR'S ATTENTION IS DIRECTED TO THE FACT THAT HE WILL BE REQUIRED TO MILL THE EXISTING ASPHALT PAVEMENT TO ENSURE A PROPER TIE–IN WITH THE EXISTING SURFACE AT THE BEGINNING, END AND Y LINES OF EACH MAP TO BE RESURFACED WITH ASPHALT CONC SURFACE COURSE, TYPE S9.5C. THIS WILL BE PAID FOR AS INCIDENTAL MILLING.

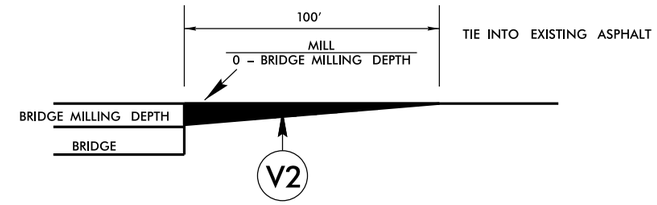

MILLING DETAIL AT BRIDGE APPROACHES

WHERE BRIDGES WILL BE MILLED THEN RESURFACED. THIS WILL BE PAID FOR AS INCIDENTAL MILLING. USE AT BRIDGE NUMBER 283.

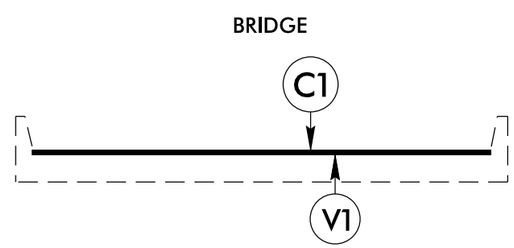

BRIDGE DETAIL

BRIDGE NUMBER 283.
MILL 1–1/2" OFF EXISTING PAVEMENT
SEE MAP FOR BRIDGE LOCATION.

PAVEMENT SCHEDULE	
C1	PROP. APPROX. 1 1/2" ASPHALT CONCRETE SURFACE COURSE TYPE S9.5C AT AN AVERAGE RATE OF 168 LBS. PER SQ. YD.
V1	MILLLNG ASPAHLT PAVEMENT 1 1/2"
V2	INCIDENTAL MILLING

7-SEP-2018 14:33
$$$$USERNAME$$$$ C:\Users\ce\Engineer\Contract Working Files\DM\DM00247 Jack McKinney Road_R-5875_ARC Project_Rutherford_10-17-18\DM00247 DGN Files\DM00247_Rdy_details.dgn
6/2/99

PROJECT REFERENCE NO.	SHEET NO.
R-5875	3A

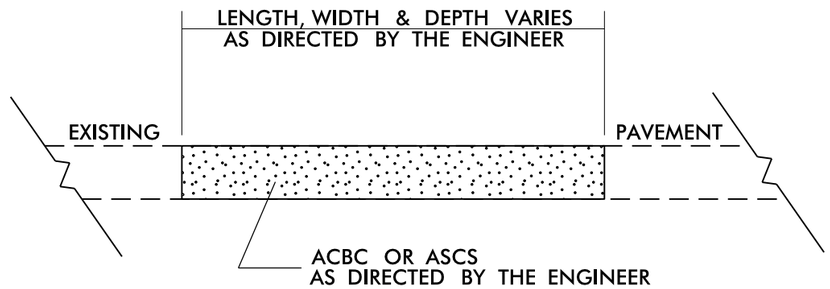

PATCHING EXISTING PAVEMENT

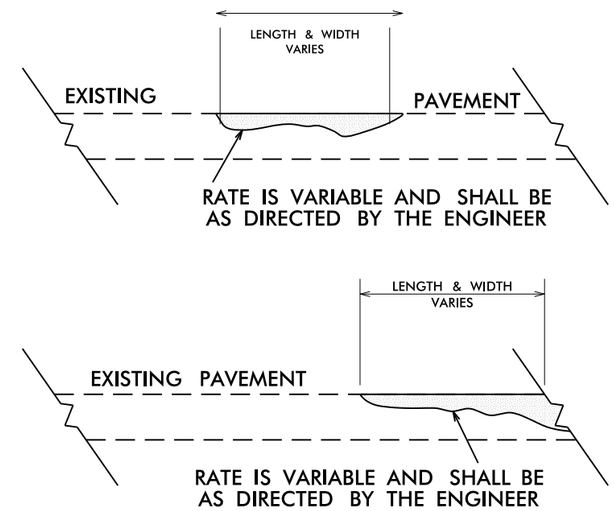

DETAIL SHOWING METHOD OF WEDGING

6/2/99
17-SEP-2018 14:34
S:\Design Engineer\Contract Working Files\DM\DM00247 Jack McKinney Road_R-5875_ARC Project_Rutherford_10-17-18\DM00247 DGN Files\DM00247_Rdy_details.dgn
$$$$USERNAME$$$$

PROJECT REFERENCE NO.	SHEET NO.
R-5875	3B

NOTES:
1) DETAIL DOES NOT APPLY TO OGAFC AND ULTRA-THIN BONDED WEARING COURSE.
2) BACKFILL SHOULDER WITH APPROVED MATERIAL.
3) THE SHOULDER WEDGE DEVICE MAY BE DISENGAGED AT PAVED DRIVEWAYS AND SIDE STREETS.

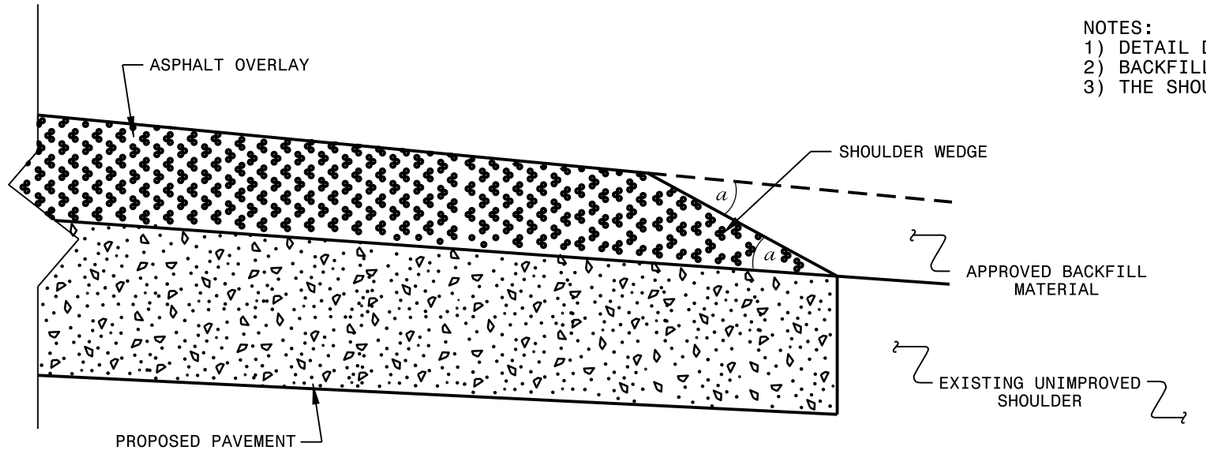

SHOULDER WEDGE DETAIL

(Resurfacing Projects w/ Widening or with Existing Paved Shoulder having no dropoffs)

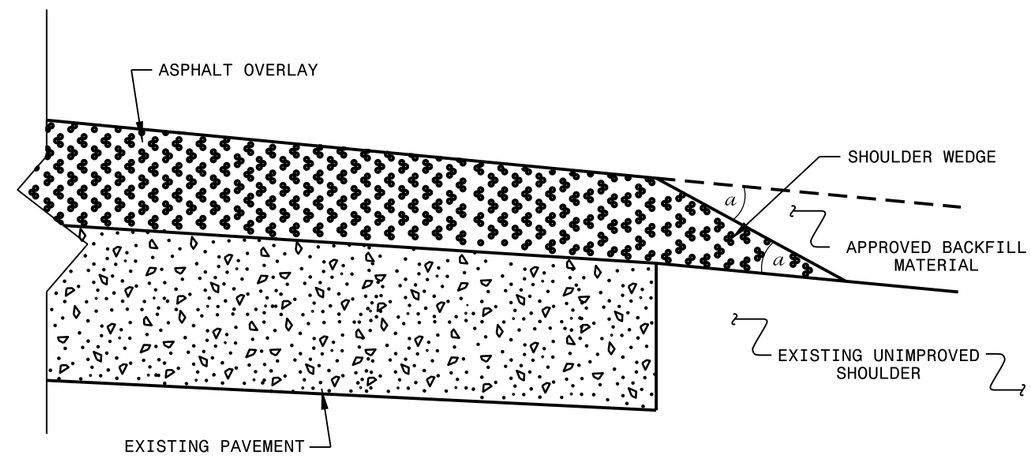

SHOULDER WEDGE DETAIL

(Resurfacing Projects w/ NO Widening)

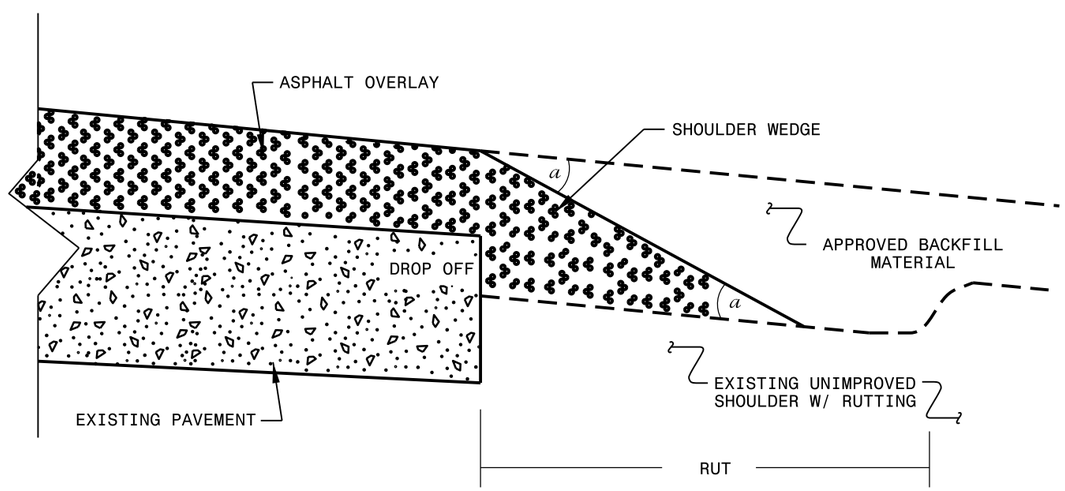

SHOULDER WEDGE DETAIL

(Resurfacing Adjacent to Rutted Shoulder)

- SHOULDER WEDGE ANGLE = 30°

CONTRACT STANDARDS AND DEVELOPMENT UNIT
Office 919-707-6950 FAX 919-250-4119

SHOULDER WEDGE DETAILS

ORIGINAL BY:	T.SPELL	DATE:	7-19-11
MODIFIED BY:		DATE:	10/16/12
CHECKED BY:		DATE:	
FILE SPEC.:	$:usr/details/stand/shoulderwedgedetail.dgn		

$$$$$$$$SYSTIME$$$$$$$$
$$$$$$$$$$$$$$$$$$$$$$$$$$$$$$$$
$$$$$$$$USERNAME$$$$$$$$

PROJECT REFERENCE NO.	SHEET NO.
R-5875	4

–L– STA 16+25.71 BEGIN PROJECT

REVISIONS

8/17/99

17-SEP-2018 15:45
S:\DIV\Staff Engineer\Contract Working Files\DM\DM00247 Jack McKinney Road_R-5875_ARC Project_Rutherford_10-17-18\DM00247_DGN Files\DM00247_-rdy-psh_04.dgn
$$$$USERNAME$$$$

PROJECT REFERENCE NO.	SHEET NO.
R-5875	5

REVISIONS

8/17/99

17-SEP-2018 15:45
S:\DIV\Staff Engineer\Contract Working Files\DM\DM00247 Jack McKinney Road_R-5875_ARC Project_Rutherford_10-17-18\DM00247 DGN Files\DM00247_-rdy_psh_05.dgn
$$$$USERNAME$$$$

PROJECT REFERENCE NO.	SHEET NO.
R-5875	6

REVISIONS

8/17/99

17-SEP-2018 14:43
S:\DIV\Staff Engineer\Contract Working Files\DM\DM00247 Jack McKinney Road_R-5875_ARC Project_Rutherford_10-17-18\DM00247 DGN Files\DM00247_-rdy_psh_06.dgn
$$$$USERNAME$$$$

PROJECT REFERENCE NO.	SHEET NO.
R-5875	7

REVISIONS

8/17/99

17-SEP-2018 15:45
S:\DIV\Staff Engineer\Contract Working Files\DM\DM00247 Jack McKinney Road R-5875 ARC Project Rutherford 10-17-18\DM00247 DGN Files\DM00247_rdy_psh_07.dgn
$$$$USERNAME$$$$

PROJECT REFERENCE NO.	SHEET NO.
R-5875	8

REVISIONS

8/17/99

17-SEP-2018 14:43
S:\DIV\Staff Engineer\Contract Working Files\DM\DM00247 Jack McKinney Road_R-5875_ARC Project_Rutherford_10-17-18\DM00247 DGN Files\DM00247_-rdy_psh_08.dgn
$$$$USERNAME$$$$

PROJECT REFERENCE NO.	SHEET NO.
R-5875	9

REVISIONS

8/17/99

17-SEP-2018 14:44
S:\DIV\Staff Engineer\Contract Working Files\DM\DM00247 Jack McKinney Road_R-5875_ARC Project_Rutherford_10-17-18\DM00247_DGN Files\DM00247_-rdy_psh_09.dgn
$$$$USERNAME$$$$

PROJECT REFERENCE NO.	SHEET NO.
R-5875	10

REVISIONS

8/17/99

17-SEP-2018 14:44
S:\DIV\Staff Engineer\Contract Working Files\DM\DM00247 Jack McKinney Road_R-5875_ARC Project_Rutherford_10-17-18\DM00247 DGN Files\DM00247_rdy_psh_10.dgn

PROJECT REFERENCE NO.	SHEET NO.
R-5875	11

REVISIONS

8/17/99

17-SEP-2018 14:44
S:\DIV\Staff Engineer\Contract Working Files\DM\DM00247 Jack McKinney Road_R-5875_ARC Project_Rutherford_10-17-18\DM00247 DGN Files\DM00247_-rdy_psh_11.dgn
$$$$USERNAME$$$$

PROJECT REFERENCE NO.	SHEET NO.
R-5875	12

REVISIONS

8/17/99

17-SEP-2018 14:44
S:\DIV\Staff Engineer\Contract Working Files\DM\DM00247 Jack McKinney Road_R-5875_ARC Project_Rutherford_10-17-18\DM00247 DGN Files\DM00247_-rdy_psh_12.dgn
$$$$CELLHAUS$$$$

PROJECT REFERENCE NO.	SHEET NO.
R-5875	13

REVISIONS

8/17/99

17-SEP-2018 14:44
S:\DIV\Staff Engineer\Contract Working Files\DM\DM00247 Jack McKinney Road_R-5875_ARC Project_Rutherford_10-17-18\DM00247 DGN Files\DM00247_-rdy-psh_13.dgn
$$$$USERNAME$$$$

PROJECT REFERENCE NO.	SHEET NO.
R-5875	14

REVISIONS

8/17/99

17-SEP-2018 14:45
S:\DIV\Staff Engineer\Contract Working Files\DM\DM00247 Jack McKinney Road_R-5875_ARC Project_Rutherford_10-17-18\DM00247 DGN Files\DM00247_-rdy_psh_14.dgn
$$$$USERNAME$$$$

PROJECT REFERENCE NO.	SHEET NO.
R-5875	15

–L– STA 175+00.00 END PROJECT

REVISIONS

8/17/99

17-SEP-2018 14:45
S:\DIV\Staff Engineer\Contract Working Files\DM\DM00247 Jack McKinney Road.R-5875_ARC Project.Rutherford.10-17-18\DM00247 DGN Files\DM00247_-rdy-psh_15.dgn
$$$$USERNAME$$$$

PROJ. REFERENCE NO.	SHEET NO.
R-5875	16

URBAN / SUBURBAN WORKZONES

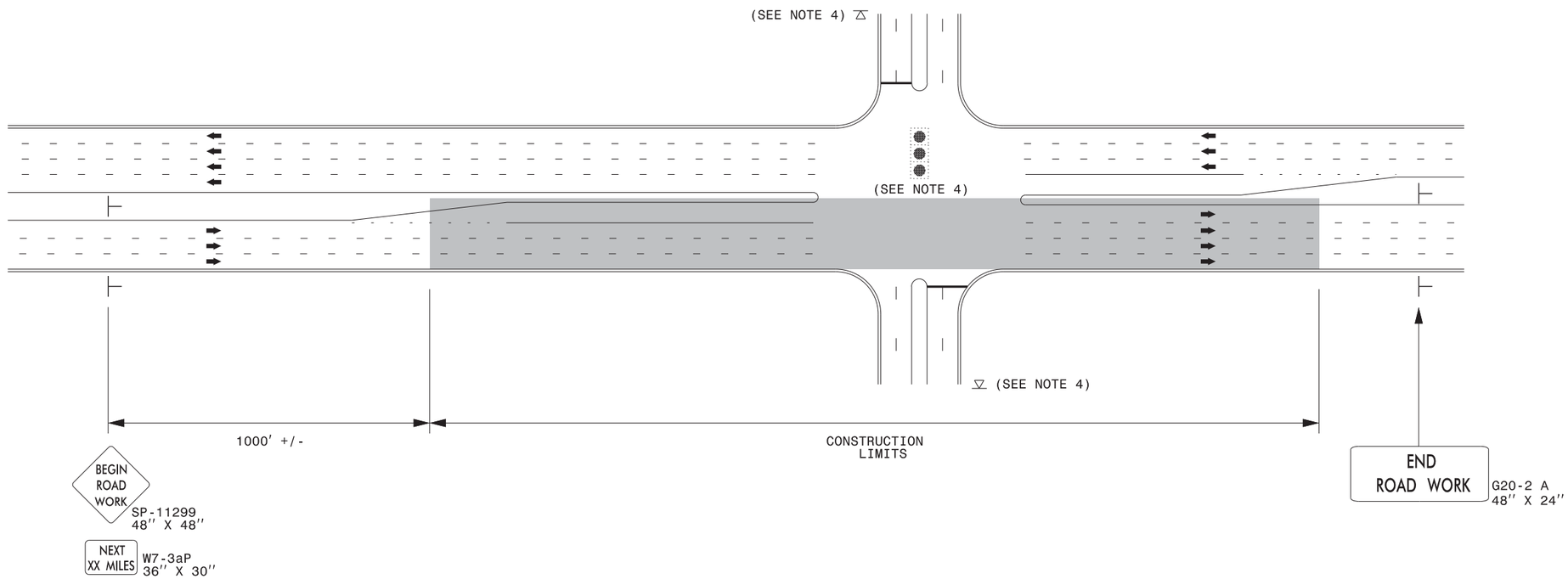

NOTES:

1) 48" x 48" SIZED SIGNS (SP- 11299) MAY BE REDUCED TO 36" X 36" ON ROADWAYS WITH SPEED LIMITS OF 40 MPH OR LESS.
2) MOUNT SIGNS THAT ARE LARGER THAN 10 SQUARE FEET IN AREA ON TWO OR MORE WOOD OR U-CHANNEL SUPPORTS. PERFORATED SQUARE TUBING SUPPORT SYSTEMS MAY SUPPORT LARGER AREAS ON A SINGLE SUPPORT. FOLLOW MANUFACTURER'S RECOMMENDATIONS. THESE SYSTEMS SHALL BE NCHRP 350 COMPLIANT AND NCDOT APPROVED.
3) ADVANCE WARNING SIGNS NOT REQUIRED ON NON-SIGNALIZED SIDE STREETS.
4) MAY USE LAW ENFORCEMENT TO CONTROL TRAFFIC AT SIGNALIZED INTERSECTIONS AS DIRECTED BY THE ENGINEER. PROVIDE PORTABLE "ROAD WORK AHEAD" (W20-1) SIGNS 500' IN ADVANCE ALONG BOTH APPROACHES FROM THE SIDE STREETS WHEN PAVING PROCEEDS THROUGH THE INTERSECTION.
5) LATERAL CLEARANCE AT ALL SIGN LOCATIONS SHALL BE 2' AS MEASURED FROM THE EDGE OF PAVEMENT OR THE FACE OF THE CURB. WHEN UNABLE TO OBTAIN THE LATERAL CLEARANCE WITHIN THE MEDIAN AREA USE SHOULDER MOUNTS ONLY.
6) SIGN MOUNT LOCATIONS SHALL NOT BLOCK SIDEWALKS OR DRIVEWAYS.
7) IF STATIONARY GENERAL WARNING SIGNS ARE USED, THEY WILL BE PAID FOR PER SECTION 104 OF THE NCDOT STANDARD SPECIFICATIONS AS EXTRA WORK.
8) IF MILLED AREAS ARE NOT PAVED BACK BY THE END OF THE WORK DAY, PORTABLE SIGNS SHALL BE USED TO WARN DRIVERS OF THE PRESENT CONDITIONS. THESE ARE TO INCLUDE, BUT NOT LIMITED TO "ROUGH ROAD" W8-8, "UNEVEN LANES" W8-11, "GROOVED PAVEMENT" W8-15 w/MOTORCYCLE PLAQUE MOUNTED BELOW. THESE ARE TO BE DOUBLE INDICATED ON MULTI-LANE ROADWAYS WITH SPEED LIMITS 45 MPH AND GREATER WHERE LATERAL CLEARANCE CAN BE OBTAINED WITHIN THE MEDIAN AREAS.THESE PORTABLE SIGNS ARE INCIDENTAL TO THE OTHER ITEMS OF WORK INCLUDED IN THE TEMPORARY TRAFFIC CONTROL (LUMP SUM) PAY ITEM.

LEGEND

- STATIONARY SIGN
- DIRECTION OF TRAFFIC FLOW

DIVISION OF HIGHWAYS · STATE OF NORTH CAROLINA · DEPARTMENT OF TRANSPORTATION · WORK ZONE TRAFFIC CONTROL

RESURFACING ADVANCE WARNING SIGNS FOR URBAN / SUBURBAN FACILITIES

4/8/2015
C:\Users\rmgarrett\Downloads\Resurfacing_AdvWarn_UrSu (2).dgn
User:rmgarrett

PROJ. REFERENCE NO.	SHEET NO.
R-5875	17

SIGNING FOR RESURFACING PROJECTS

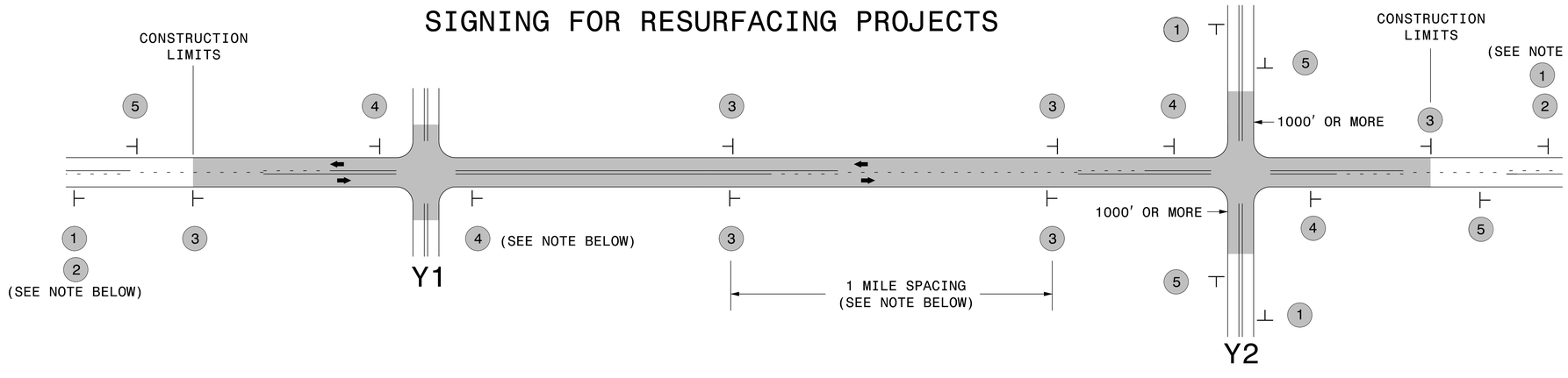

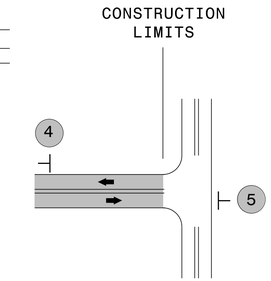

TEE INTERSECTION

LEGEND

⊢ STATIONARY SIGN

⬅ DIRECTION OF TRAFFIC FLOW

SIGNING NOTES AND PLACEMENT PER DIRECTION

MAINLINE (-L-) SIGNING

1	ROAD WORK AHEAD W20-1 48″ X 48″	PLACE 1000′ PRIOR TO BEGINNING OF CONSTRUCTION LIMITS. ONLY USED ON -Y- LINES IF RESURFACING LIMITS EXTEND 1000′ ALONG -Y- LINE.
2	NEXT XX MILES W7-3aP 24″ X 18″	#2 SIGN ONLY USED WHEN RESURFACING LIMITS ARE 2 OR MORE MILES IN LENGTH. ROUND UP TO NEXT WHOLE NUMBER.(NO FRACTIONAL OR DECIMAL NUMBERS)
3	LOW/SOFT SHOULDER SP 13107 48″ X 48″	- PLACE INITIALLY AT THE CONSTRUCTION LIMITS AND SPACE 1 MILE APART THEREAFTER. - AT TEE INTERSECTIONS INSTALL INITIALLY 0.5 MILE FROM INTERSECTION AND SPACE 1 MILE APART THEREAFTER.
4	ROAD UNDER CONST SP 13106 48″ X 48″	- THESE ARE FOR -Y- LINES THAT ARE "THROUGH" ROADWAYS. - DEAD END AND SUBDIVISION ROADS ARE NOT "THROUGH" ROADWAYS. - INSTALL 500′ +/- FROM EACH -Y- LINE APPROACH AS SHOWN ABOVE. - FOR MULTIPLE -Y- LINES THAT ARE SEPARATED BY 0.25 MILES OR LESS, TREAT AS A SINGLE UNIT AND INSTALL WITHIN 500′ OF EACH APPROACH. - A MAXIMUM OF 2 SIGN SETS PER MILE. DO NOT INSTALL WHEN -Y- LINES ARE WITHIN 0.5 MILES FROM "END ROAD WORK" SIGN. - FOR TEE INTERSECTIONS, INSTALL WITHIN 500′ +/- OF THE INTERSECTION ALONG -L- LINE.
5	END ROAD WORK G20-2 A 48″ X 24″	PLACE 500′ FOLLOWING THE END OF CONSTRUCTION LIMITS OR AS SHOWN WHEN WORK ENDS AT A 3-WAY TEE INTERSECTION.

-Y- LINE SIGNING

NO REQUIRED STATIONARY SIGNING FOR THE FOLLOWING -Y- LINE CONDITIONS:

1) LESS THAN 1000′ OF RESURFACING ALONG -Y- LINE
2) SUBDIVISION ROADS
3) DEAD END ROADS

WHEN PAVING/CONSTRUCTION ACTIVITIES PROCEED ACROSS AN UNSIGNED -Y- LINE, ADVANCE WARNING PORTABLE SIGNS SHALL BE USED ALONG THE -Y- LINE AS SHOWN BELOW. REMOVE UPON COMPLETION OF WORK.

PLACED 500′ IN ADVANCE OF FLAGGER.

PLACED 250′ IN ADVANCE OF FLAGGER.

DIVISION OF HIGHWAYS · STATE OF NORTH CAROLINA · DEPARTMENT OF TRANSPORTATION · WORK ZONE TRAFFIC CONTROL

RESURFACING
ADVANCE WARNING SIGNS
FOR
RURAL AND SUBURBAN
2 LANE ROADWAYS

4/20/2016
C:\Users\rmgarrett\Desktop\Resurfacing_AdvWarn_2Ln.dgn
User:rmgarrett

SIGN NUMBER: SP13106
TYPE: STATIONARY
QUANTITY: SEE PLANS

SIGN WIDTH: 4′-0″
HEIGHT: 4′-0″
TOTAL AREA: 16.00 Sq.Ft.

BORDER TYPE: INSET
RECESS: 0.75″
WIDTH: 1.25″
RADII: 3″

NO. Z BARS:
LENGTH:

BACKG COLOR: Fluorescent Orange
COPY COLOR: Black

SYMBOL	X	Y	WID	HT

MAT′L: 0.080″ (2.0 mm) ALUMINUM

DESIGN BY: B. RASHID
PROJECT ID:
CHECKED BY: AIA
DIV:
DATE: Apr 26, 2013

PROJECT REFERENCE NO.	SHEET NO.
R-5875	18

USE NOTES: 1,2

1. Legend and border shall be direct applied black non-reflective sheeting.
2. Background shall be NC GRADE B fluoresent orange retroreflective sheeting.

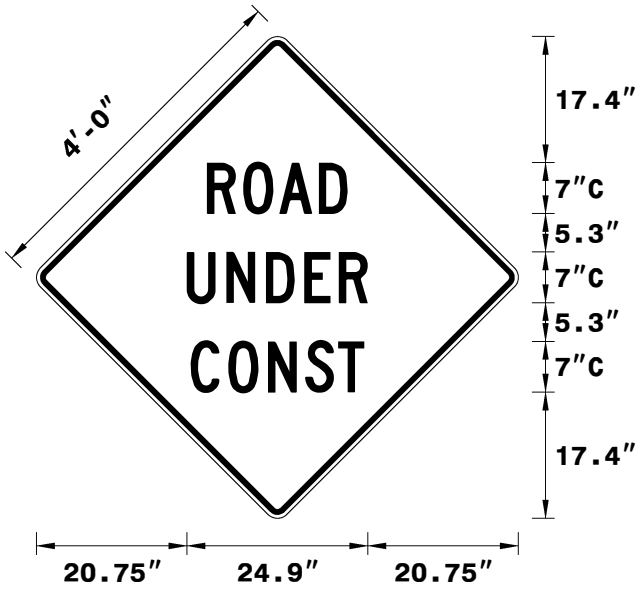

Spacing Factor is 1 unless specified otherwise

LETTER POSITIONS

Letter spacings are to start of next letter

																											Series/Size Text Length
		R	O	A	D																						C 2000
	23.5	5	5	5.5	3.9	23.5																					19.3
		U	N	D	E	R																					C 2000
	20.7	5.5	5.5	5.3	4.8	3.9	20.7																				24.9
		C	O	N	S	T																					C 2000
	21.2	5.2	5.5	5.1	4.6	3.6	21.2																				23.9

FILENAME: SP13OXX_Sgn_SGN_special

NORTH CAROLINA D.O.T. SIGN DETAIL

SIGN NUMBER: 11299
TYPE: B
QUANTITY: SEE PLANS

SIGN WIDTH: 5′-6″
HEIGHT: 5′-6″
TOTAL AREA: 30.5 Sq.Ft.

BORDER TYPE: INSET
RECESS: 0.59″
WIDTH: 0.75″
RADII: 1.38″

NO. Z BARS: N/A
LENGTH: N/A

BACKG COLOR: Fluorescent Orange
COPY COLOR: Black

SYMBOL	X	Y	WID	HT

MAT'L: 0.125″ (3.2 mm) ALUMINUM

USE NOTES: 1,2

1. Legend and border shall be direct applied black non-reflective sheeting.
2. Background shall be Type VII, VIII, or IX (prismatic) fluorescent orange retroreflective sheeting.

DESIGN BY: WJ
PROJECT ID: ALL
CHECKED BY:
DIV: ALL
DATE: Jun 22, 2011

PROJECT REFERENCE NO.	SHEET NO.
R-5875	19

SP 11299

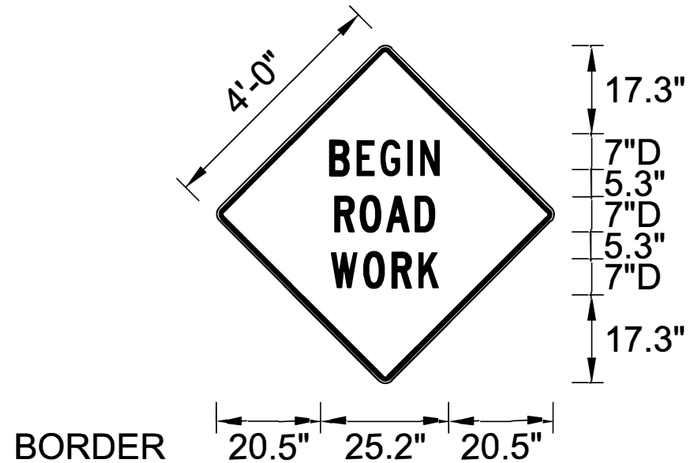

BORDER
R=1.38"
TH=0.75"
IN=0.59"

Spacing Factor is 1 unless specified otherwise

LETTER POSITIONS

Letter spacings are to start of next letter

																											Series/Size Text Length
		B	E	G	I	N																					D 2000
	20.5	6	5.4	6.3	2.8	4.8	20.5																				25.2
		R	O	A	D																						D 2000
	21.4	5.8	5.9	7	4.8	21.4																					23.5
		W	O	R	K																						D 2000
	20.9	7.1	6.5	5.9	4.9	20.9																					24.5

FILENAME: SP11299.PDF

NORTH CAROLINA D.O.T. SIGN DETAIL

SIGN NUMBER: SP13107
TYPE: STATIONARY
QUANTITY: SEE PLANS

SIGN WIDTH: 4′-0″
HEIGHT: 4′-0″
TOTAL AREA: 16.00 Sq.Ft.

BORDER TYPE: INSET
RECESS: 0.75″
WIDTH: 1.25″
RADII: 3″

NO. Z BARS:
LENGTH:

BACKG COLOR: Fluorescent Orange
COPY COLOR: Black

SYMBOL	X	Y	WID	HT

MAT′L: 0.080″ (2.0 mm) ALUMINUM

DESIGN BY: B. RASHID
PROJECT ID:

CHECKED BY: AIA
DIV:

DATE: Apr 26, 2013

PROJECT REFERENCE NO.	SHEET NO.
R-5875	20

USE NOTES: 1,2

1. Legend and border shall be direct applied black non-reflective sheeting.
2. Background shall be NC GRADE B fluoresent orange retroreflective sheeting.

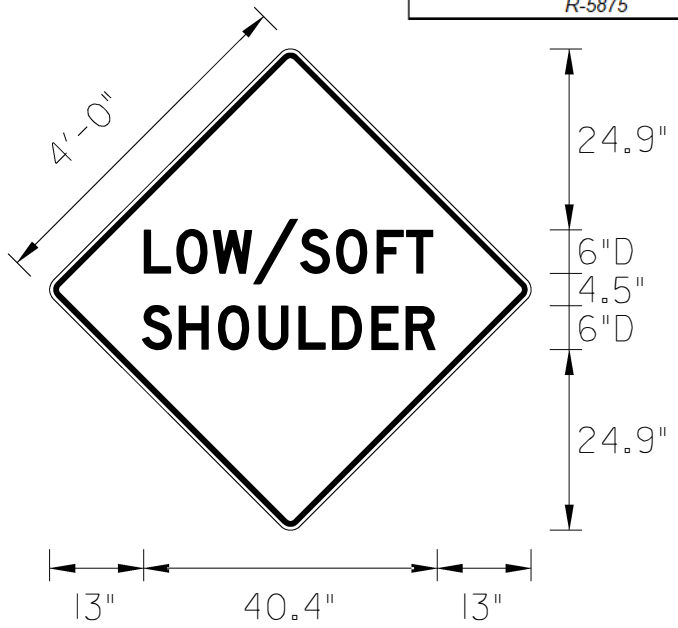

Spacing Factor is 1 unless specified otherwise

LETTER POSITIONS

Letter spacings are to start of next letter

																											Series/Size Text Length
		L	O	W	/	S	O	F	T																		D 2000
	13.2	4.5	5	5.5	6.5	5	5.6	4.1	3.7	13.2																	39.9
		S	H	O	U	L	D	E	R																		D 2000
	13	5.1	5.4	5.6	5.5	4.6	5.4	4.7	4.1	13																	40.4

FILENAME: SP13OXX_Sgn_SGN_special

NORTH CAROLINA D.O.T. SIGN DETAIL