09/08/99

CONTRACT: STATE PROJECT: 17BP.13.R.82

See Sheet 1-A For Index of Sheets
See Sheet 1-B for Conventional Symbols

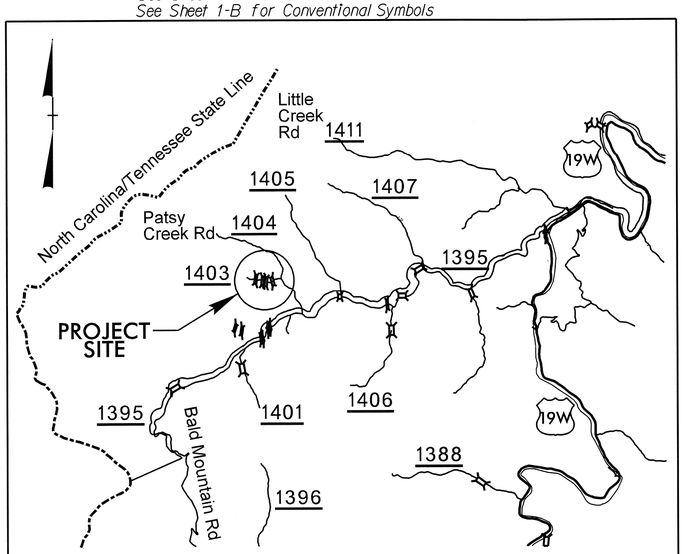

VICINITY MAP

STATE OF NORTH CAROLINA
DIVISION OF HIGHWAYS

YANCEY COUNTY

STATE	STATE PROJECT REFERENCE NO.	SHEET NO.	TOTAL SHEETS
N.C.	17BP.13.R.82	1	

STATE PROJ. NO.	F. A. PROJ. NO.	DESCRIPTION
17BP.13.R.82		PE
17BP.13.R.82		R/W & UTIL.
17BP.13.R.82		CONST.

LOCATION: BRIDGE NO. 150 OVER ROARING FORK CREEK ON SR 1403 (ROARING FORK RD)

TYPE OF WORK: GRADING, DRAINAGE, PAVING, AND STRUCTURE

4

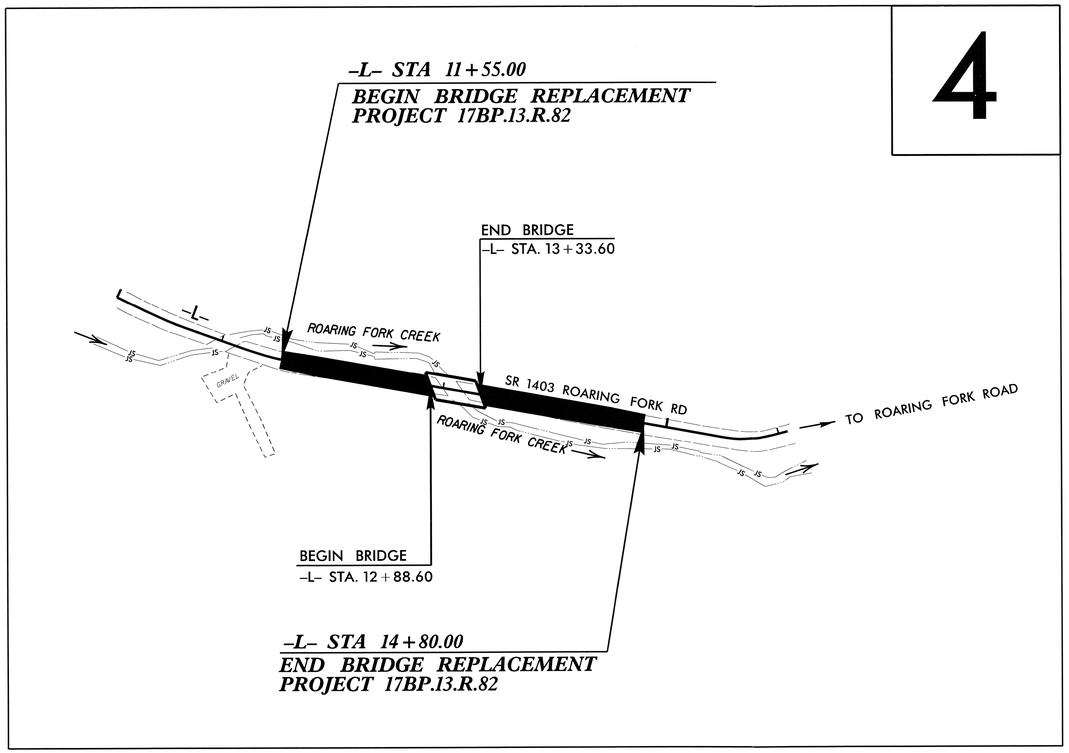

NAD 83/
NSRS 2007

moffatt & nichol
1616 EAST MILLBROOK ROAD, SUITE 160
RALEIGH, NORTH CAROLINA 27609
(919) 781-4626 VOICE (919) 781-4869 FAX

GRAPHIC SCALES

PLANS: 50 25 0 50 100

PROFILE (HORIZONTAL): 50 25 0 50 100

PROFILE (VERTICAL): 10 5 0 10 20

DESIGN DATA

ADT 2010 = 60
V = 35 MPH
FUNC. CLASS = RURAL LOCAL

Sub–Regional Tier & Very Low–Volume Local Roads Guidelines.

PROJECT LENGTH

LENGTH OF ROADWAY PROJECT 17BP.13.R.82 = 0.053 MILES

LENGTH OF STRUCTURE PROJECT 17BP.13.R.82 = 0.009 MILES

TOTAL LENGTH OF PROJECT 17BP.13.R.82 = 0.062 MILES

Prepared in the Office of:
KCI ASSOCIATES OF NC
4601 Six Forks Rd., Suite 220, Raleigh NC, 27609

2012 STANDARD SPECIFICATIONS

RIGHT OF WAY DATE: SEPTEMBER 12, 2013

LETTING DATE:

BARRY C. SMITH, PE
PROJECT ENGINEER

BRYAN E. HOUGH, PE
PROJECT DESIGN ENGINEER

NCDOT CONTACT: TROY S. WILSON, PLS

HYDRAULICS ENGINEER

NORTH CAROLINA PROFESSIONAL SEAL 033860 ENGINEER LEAH M. YOUNG

SIGNATURE: P.E. 11/3/14

ROADWAY DESIGN ENGINEER

NORTH CAROLINA PROFESSIONAL SEAL 034375 ENGINEER BARRY C. SMITH

SIGNATURE: P.E. 10-15-14

DIVISION OF HIGHWAYS STATE OF NORTH CAROLINA

STATE OF NORTH CAROLINA · DEPARTMENT OF TRANSPORTATION

P.E.
STATE HIGHWAY DESIGN ENGINEER

11:16:54 AM
150_rdy_tsh_sl.dgn
Division:

8/17/99

PROJECT REFERENCE NO.	SHEET NO.
17BPJ3R82	1-A

ROADWAY DESIGN ENGINEER



10-15-14

INDEX OF SHEETS

SHEET NUMBER	SHEET
1	TITLE SHEET
1-A	INDEX OF SHEETS, GENERAL NOTES, AND LIST OF STANDARD DRAWINGS
1-B	CONVENTIONAL SYMBOLS
2	TYPICAL SECTIONS, PAVEMENT SCHEDULE, WEDGING DETAIL, AND CURB AND GUTTER DETAIL
2-A	DETOUR PLAN SHEET
2-B	DETAIL OF MODIFIED CONCRETE FLUME
3-A	SUMMARY OF EARTHWORK, SUMMARY OF PAVEMENT REMOVAL, SUMMARY OF DRAINAGE QUANTITIES, SUMMARY OF RIP RAP, AND GUARDRAIL SUMMARY
4	PLAN SHEET
5	PROFILE SHEET
TMP-1 TO TMP-5	TRAFFIC MANAGEMENT PLANS
PMP-1 TO PMP-2	PAVEMENT MARKING PLANS
EC-1 TO EC-6	EROSION CONTROL PLANS
RF-1	REFORESTATION DETAIL SHEET
X-1A	CROSS SECTION SUMMARY SHEET
X-1 TO X-4	-L- CROSS-SECTIONS
X-5 TO X-8	-DET- CROSS SECTIONS
S-1 TO S-24	STRUCTURE PLANS

GENERAL NOTES:

2012 SPECIFICATIONS
EFFECTIVE: 01-17-2012
REVISED: 07-30-2012

GRADING AND SURFACING OR RESURFACING AND WIDENING:

THE GRADE LINES SHOWN DENOTE THE FINISHED ELEVATION OF THE PROPOSED SURFACING AT GRADE POINTS SHOWN ON THE TYPICAL SECTIONS. WHERE NO GRADE LINES ARE SHOWN, THE PROFILES SHOWN DENOTE THE TOP ELEVATION OF THE EXISTING PAVEMENT ALONG THE CENTER LINE OF SURVEY ON WHICH THE PROPOSED RESURFACING WILL BE PLACED. GRADE LINES MAY BE ADJUSTED BY THE ENGINEER IN ORDER TO SECURE A PROPER TIE-IN.

CLEARING:

CLEARING ON THIS PROJECT SHALL BE PERFORMED TO THE LIMITS ESTABLISHED BY METHOD II.

SUPERELEVATION:

ALL CURVES ON THIS PROJECT SHALL BE SUPERELEVATED IN ACCORDANCE WITH STD. NO. 225.04
SUPERELEVATION IS TO BE REVOLVED ABOUT THE GRADE POINTS SHOWN ON THE TYPICAL SECTIONS.

SHOULDER CONSTRUCTION:

ASPHALT, EARTH, AND CONCRETE SHOULDER CONSTRUCTION ON THE HIGH SIDE OF SUPERELEVATED CURVES SHALL BE IN ACCORDANCE WITH STD. NO. 560.01

GUARDRAIL:

THE GUARDRAIL LOCATIONS SHOWN ON THE PLANS MAY BE ADJUSTED DURING CONSTRUCTION AS DIRECTED BY THE ENGINEER. THE CONTRACTOR SHOULD CONSULT WITH THE ENGINEER PRIOR TO ORDERING GUARDRAIL MATERIAL.

TEMPORARY SHORING:

SHORING REQUIRED FOR THE MAINTENANCE OF TRAFFIC NOT SHOWN ON THE PLANS WILL BE PAID FOR AT THE CONTRACT PRICE FOR "TEMPORARY SHORING".

END BENTS:

THE ENGINEER SHALL CHECK THE STRUCTURE END BENT PLANS, DETAILS, AND CROSS-SECTION PRIOR TO SETTING OF THE SLOPE STAKES FOR THE EMBANKMENT OR EXCAVATION APPROACHING A BRIDGE.

UTILITIES:

UTILITY OWNERS ON THIS PROJECT ARE FRENCH BROAD ELECTRIC AND FRONTIER COMMUNICATIONS.

RIGHT-OF-WAY MARKERS:

ALL RIGHT-OF-WAY MARKERS ON THIS PROJECT SHALL BE PLACED BY CONTRACT.

EFF. 01-17-2012
REV. 10-30-2012

2012 ROADWAY ENGLISH STANDARD DRAWINGS

The following Roadway Standards as appear in "Roadway Standard Drawings" Highway Design Branch - N. C. Department of Transportation - Raleigh, N. C., Dated January, 2012 are applicable to this project and by reference hereby are considered a part of these plans:

STD.NO.	TITLE
DIVISION 2 - EARTHWORK	
200.02	Method of Clearing - Method II
225.02	Guide for Grading Subgrade - Secondary and Local
225.04	Method of Obtaining Superelevation - Two Lane Pavement
DIVISION 3 - PIPE CULVERTS	
300.01	Method of Pipe Installation
DIVISION 4 - MAJOR STRUCTURES	
422.11	Bridge Approach Fills - Sub Regional Tier
DIVISION 5 - SUBGRADE, BASES AND SHOULDERS	
560.01	Method of Shoulder Construction - High Side of Superelevated Curve - Method I
DIVISION 8 - INCIDENTALS	
806.01	Concrete Right-of-Way Marker
806.02	Granite Right-of-Way Marker
846.01	Concrete Curb, Gutter and Curb & Gutter
862.01	Guardrail Placement
862.02	Guardrail Installation
862.03	Structure Anchor Units (Details in Lieu of Standard Drawing as March 2013 Letting)
876.01	Rip Rap in Channels
876.04	Drainage Ditches with Class 'B' Rip Rap

1/6/15 AM
I:\projects\...\1A.dgn
Division

04/16/11

PROJECT REFERENCE NO.	SHEET NO.
17BPJ3.R.82	1-B

Note: Not to Scale

****S.U.E. = Subsurface Utility Engineering***

STATE OF NORTH CAROLINA
DIVISION OF HIGHWAYS

CONVENTIONAL PLAN SHEET SYMBOLS

BOUNDARIES AND PROPERTY:

- State Line
- County Line
- Township Line
- City Line
- Reservation Line
- Property Line
- Existing Iron Pin — EIP
- Property Corner
- Property Monument — ECM
- Parcel/Sequence Number — 123
- Existing Fence Line
- Proposed Woven Wire Fence
- Proposed Chain Link Fence
- Proposed Barbed Wire Fence
- Existing Wetland Boundary — WLB
- Proposed Wetland Boundary — WLB
- Existing Endangered Animal Boundary — EAB
- Existing Endangered Plant Boundary — EPB
- Known Soil Contamination: Area or Site
- Potential Soil Contamination: Area or Site

BUILDINGS AND OTHER CULTURE:

- Gas Pump Vent or U/G Tank Cap
- Sign — S
- Well — W
- Small Mine
- Foundation
- Area Outline
- Cemetery
- Building
- School
- Church
- Dam

HYDROLOGY:

- Stream or Body of Water
- Hydro, Pool or Reservoir
- Jurisdictional Stream — JS
- Buffer Zone 1 — BZ 1
- Buffer Zone 2 — BZ 2
- Flow Arrow
- Disappearing Stream
- Spring
- Wetland
- Proposed Lateral, Tail, Head Ditch — FLOW
- False Sump

RAILROADS:

- Standard Gauge — CSX TRANSPORTATION
- RR Signal Milepost — MILEPOST 35
- Switch — SWITCH
- RR Abandoned
- RR Dismantled

RIGHT OF WAY:

- Baseline Control Point
- Existing Right of Way Marker
- Existing Right of Way Line
- Proposed Right of Way Line — RW
- Proposed Right of Way Line with Iron Pin and Cap Marker — RW
- Proposed Right of Way Line with Concrete or Granite Marker — RW
- Existing Control of Access — CA
- Proposed Control of Access — CA
- Existing Easement Line — E
- Proposed Temporary Construction Easement — E
- Proposed Temporary Drainage Easement — TDE
- Proposed Permanent Drainage Easement — PDE
- Proposed Permanent Drainage / Utility Easement — DUE
- Proposed Permanent Utility Easement — PUE
- Proposed Temporary Utility Easement — TUE
- Proposed Aerial Utility Easement — AUE
- Proposed Permanent Easement with Iron Pin and Cap Marker

ROADS AND RELATED FEATURES:

- Existing Edge of Pavement
- Existing Curb
- Proposed Slope Stakes Cut — C
- Proposed Slope Stakes Fill — F
- Proposed Curb Ramp — CR
- Curb Cut Future Ramp — CCFR
- Existing Metal Guardrail
- Proposed Guardrail
- Existing Cable Guiderail
- Proposed Cable Guiderail
- Equality Symbol
- Pavement Removal

VEGETATION:

- Single Tree
- Single Shrub
- Hedge
- Woods Line
- Orchard
- Vineyard — Vineyard

EXISTING STRUCTURES:

MAJOR:

- Bridge, Tunnel or Box Culvert — CONC
- Bridge Wing Wall, Head Wall and End Wall — CONC WW

MINOR:

- Head and End Wall — CONC HW
- Pipe Culvert
- Footbridge
- Drainage Box: Catch Basin, DI or JB — CB
- Paved Ditch Gutter
- Storm Sewer Manhole — S
- Storm Sewer — S

UTILITIES:

POWER:

- Existing Power Pole
- Proposed Power Pole
- Existing Joint Use Pole
- Proposed Joint Use Pole
- Power Manhole — P
- Power Line Tower
- Power Transformer
- U/G Power Cable Hand Hole
- H-Frame Pole
- Recorded U/G Power Line — P
- Designated U/G Power Line (S.U.E.*) — P

TELEPHONE:

- Existing Telephone Pole
- Proposed Telephone Pole
- Telephone Manhole — T
- Telephone Booth
- Telephone Pedestal — T
- Telephone Cell Tower
- U/G Telephone Cable Hand Hole — HH
- Recorded U/G Telephone Cable — T
- Designated U/G Telephone Cable (S.U.E.*) — T
- Recorded U/G Telephone Conduit — TC
- Designated U/G Telephone Conduit (S.U.E.*) — TC
- Recorded U/G Fiber Optics Cable — T FO
- Designated U/G Fiber Optics Cable (S.U.E.*) — T FO

WATER:

- Water Manhole — W
- Water Meter
- Water Valve
- Water Hydrant
- Recorded U/G Water Line
- Designated U/G Water Line (S.U.E.*)
- Above Ground Water Line — A/G Water

TV:

- TV Satellite Dish
- TV Pedestal — C
- TV Tower
- U/G TV Cable Hand Hole — HH
- Recorded U/G TV Cable — TV
- Designated U/G TV Cable (S.U.E.*) — TV
- Recorded U/G Fiber Optic Cable — TV FO
- Designated U/G Fiber Optic Cable (S.U.E.*) — TV FO

GAS:

- Gas Valve
- Gas Meter
- Recorded U/G Gas Line — G
- Designated U/G Gas Line (S.U.E.*) — G
- Above Ground Gas Line — A/G Gas

SANITARY SEWER:

- Sanitary Sewer Manhole
- Sanitary Sewer Cleanout
- U/G Sanitary Sewer Line — SS
- Above Ground Sanitary Sewer — A/G Sanitary Sewer
- Recorded SS Forced Main Line — FSS
- Designated SS Forced Main Line (S.U.E.*) — FSS

MISCELLANEOUS:

- Utility Pole
- Utility Pole with Base
- Utility Located Object
- Utility Traffic Signal Box — S
- Utility Unknown U/G Line — ?UTL
- U/G Tank; Water, Gas, Oil
- Underground Storage Tank, Approx. Loc. — UST
- A/G Tank; Water, Gas, Oil
- Geoenvironmental Boring
- U/G Test Hole (S.U.E.*)
- Abandoned According to Utility Records — AATUR
- End of Information — E.O.I.

PROJECT REFERENCE NO.	SHEET NO.
17BP.13.R.82	2

ROADWAY DESIGN ENGINEER

NORTH CAROLINA PROFESSIONAL SEAL 034375 ENGINEER BARRY C. SMITH

10-15-14

KCI
Engineers • Planners • Scientists • Construction Managers
4601 Six Forks Road, Landmark Center II, Suite 220
Raleigh, NC 27609-5210
Phone (919) 783-9214 • Fax (919) 783-9266
http://www.kci.com

PAVEMENT SCHEDULE
FINAL DESIGN

C1	PROP. APPROX. 1½" ASPHALT CONCRETE SURFACE COURSE, TYPE SF9.5A, AT AN AVERAGE RATE OF 165 LBS. PER SQ. YD.
C2	PROP. APPROX. 3" ASPHALT CONCRETE SURFACE COURSE, TYPE SF9.5A, AT AN AVERAGE RATE OF 165 LBS. PER SQ. YD. IN EACH OF TWO LAYERS.
C3	PROP. VAR. DEPTH ASPHALT CONCRETE SURFACE COURSE, TYPE SF9.5A, AT AN AVERAGE RATE OF 110 LBS. PER SQ. YD. PER 1" DEPTH TO BE PLACED IN LAYERS NOT TO EXCEED 1.5" IN DEPTH.
E1	PROP. APPROX. 4" ASPHALT CONCRETE BASE COURSE, TYPE B25.0B, AT AN AVERAGE RATE OF 456 LBS. PER SQ. YD.
E2	PROP. VAR. DEPTH ASPHALT CONCRETE BASE COURSE, TYPE B25.0B, AT AN AVERAGE RATE OF 114 LBS. PER SQ. YD. PER 1" DEPTH. TO BE PLACED IN LAYERS NOT LESS THAN 4" IN DEPTH OR GREATER THAN 5½" IN DEPTH.
R1	2'-6" CONCRETE CURB AND GUTTER.
R2	2' TEMPORARY PORTABLE CONCRETE BARRIER.
T	EARTH MATERIAL.
U	EXISTING PAVEMENT.
W	VARIABLE DEPTH ASPHALT PAVEMENT (SEE STANDARD WEDGING DETAIL THIS SHEET).

ALL PAVEMENT EDGE SLOPES ARE 1:1

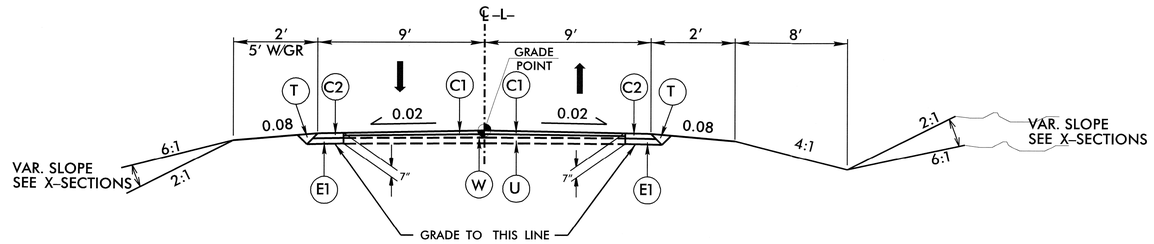

ROADWAY TYPICAL SECTION NO. 1

ROADWAY TYPICAL SECTION NO. 1
-L- STA. 11+55.00 TO STA. 12+38.00
-L- STA. 14+00.00 TO STA. 14+80.00

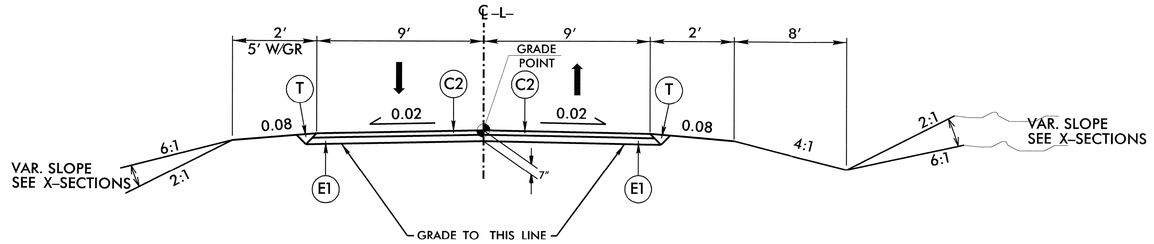

ROADWAY TYPICAL SECTION NO. 2

ROADWAY TYPICAL SECTION NO. 2
-L- STA. 12+38.00 TO STA. 12+88.60
-L- STA. 13+33.60 TO STA. 14+00.00

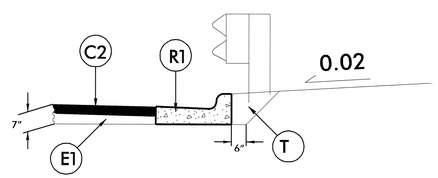

CURB AND GUTTER DETAIL

USE CURB AND GUTTER DETAIL
-L- STA. 13+27.25 TO -L- STA. 13+44.00 (LT.)
-L- STA. 13+39.95 TO -L- STA. 14+01.43 (RT.)

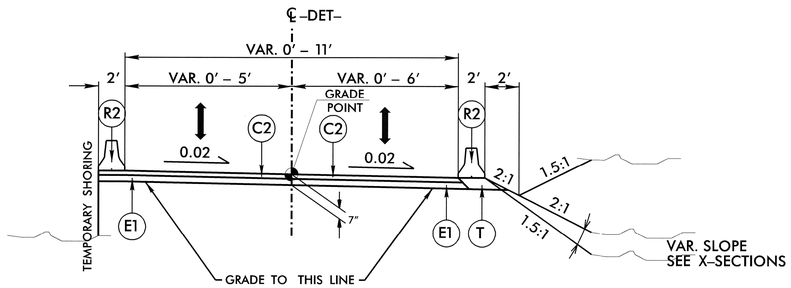

ROADWAY TYPICAL SECTION NO. 3

ROADWAY TYPICAL SECTION NO. 3
-DET- STA. 10+39.45 TO STA. 12+29.89

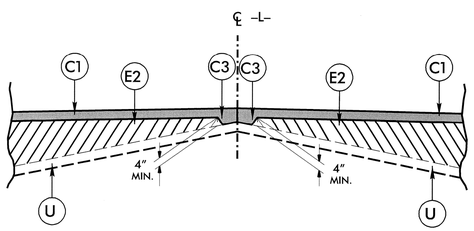

Detail Showing Method of Wedging

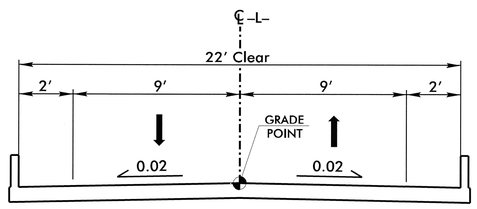

TYPICAL SECTION ON STRUCTURE

STRUCTURE TYPICAL SECTION
-L- STA. 12+88.60 TO STA. 13+33.60

6/2/99

11:16:57 AM
150_Rdy_typ.dgn
Division

PROJECT REFERENCE NO.	SHEET NO.
17BP.13.R.82	2-A
R/W SHEET NO.	

ROADWAY DESIGN ENGINEER

NORTH CAROLINA PROFESSIONAL SEAL 034375 ENGINEER BARRY C. SMITH

10-15-14

HYDRAULICS ENGINEER

NORTH CAROLINA PROFESSIONAL SEAL 033860 ENGINEER JEAN M. YOUNG

11/3/14

KCI http://www.kci.com
Engineers • Planners • Scientists • Construction Managers
4601 Six Forks Road, Landmark Center II, Suite 220
Raleigh, NC 27609-5210
Phone (919) 783-9214 • Fax (919) 783-9266

moffatt & nichol
1616 EAST MILLBROOK ROAD, SUITE 160
RALEIGH, NORTH CAROLINA 27609
(919) 781-4626 VOICE (919) 781-4869 FAX

FOR -DET- PROFILE, SEE SHEET 5

TEMPORARY DETOUR

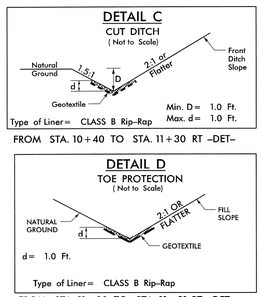

FROM STA. 10+40 TO STA. 11+30 RT -DET-

FROM STA. 11+30 TO STA. 11+81 RT -DET-
FROM STA. 11+00 TO STA. 11+25 LT -DET-
FROM STA. 11+60 TO STA. 11+80 LT -DET-

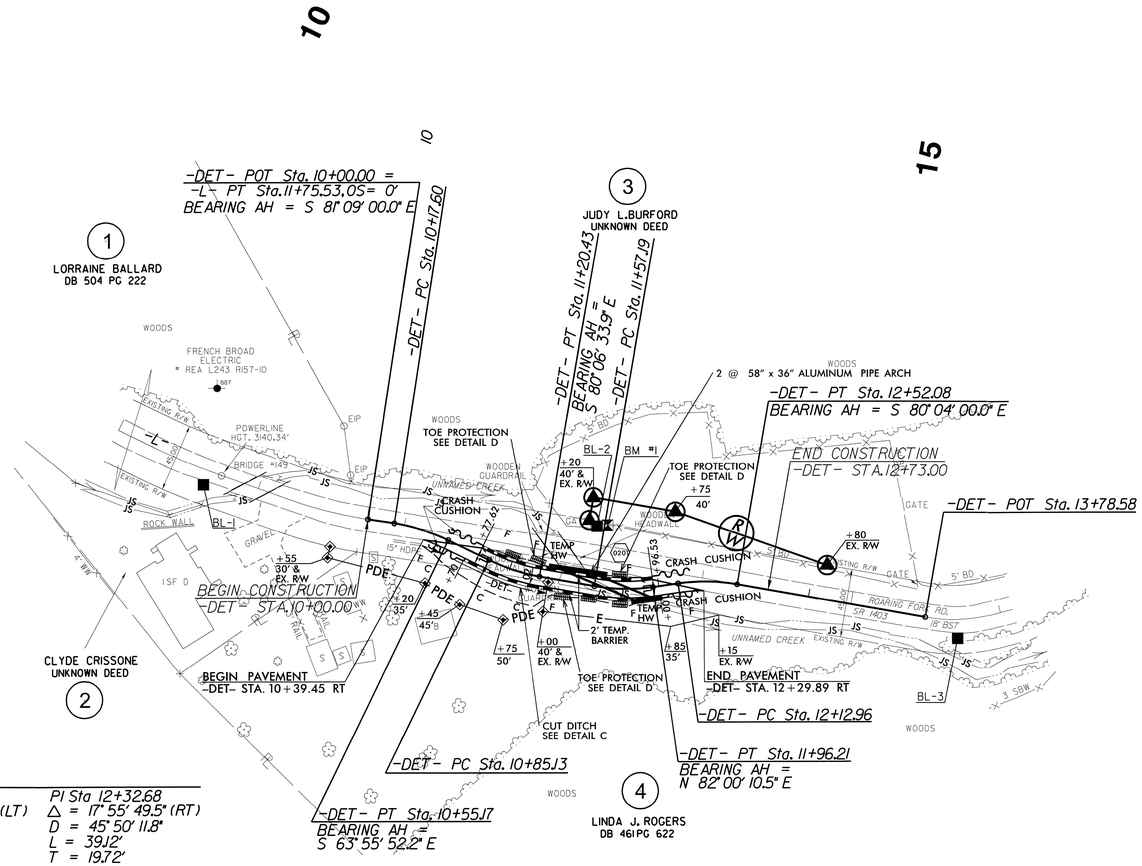

-DET-

PI Sta 10+79.46	PI Sta 11+02.90	PI Sta 11+76.86	PI Sta 12+32.68
Δ = 10° 39' 00.0" (LT)	Δ = 16° 10' 41.8" (LT)	Δ = 17° 53' 15.5" (LT)	Δ = 17° 55' 49.5" (RT)
D = 20° 00' 00.0"	D = 45° 50' 11.8"	D = 45° 50' 11.8"	D = 45° 50' 11.8"
L = 53.25'	L = 35.30'	L = 39.02'	L = 39.12'
T = 26.70'	T = 17.77'	T = 19.67'	T = 19.72'
R = 286.48'	R = 125.00'	R = 125.00'	R = 125.00'

5/14/99
13-OCT-2014 11:16
Bridge Group R/G - 990150\Roadway\Proj\150_Rdy_psh_s2a.dgn
$$$$USERNAME$$$$

PROJECT REFERENCE NO.	SHEET NO.
17BP.13.R.82	2-B

STATE OF
NORTH CAROLINA
DEPT. OF TRANSPORTATION
DIVISION OF HIGHWAYS
RALEIGH, N.C.

ENGLISH DETAIL DRAWING FOR

MODIFIED CONCRETE FLUME

WITH CONCRETE OR RIP-RAP DITCH

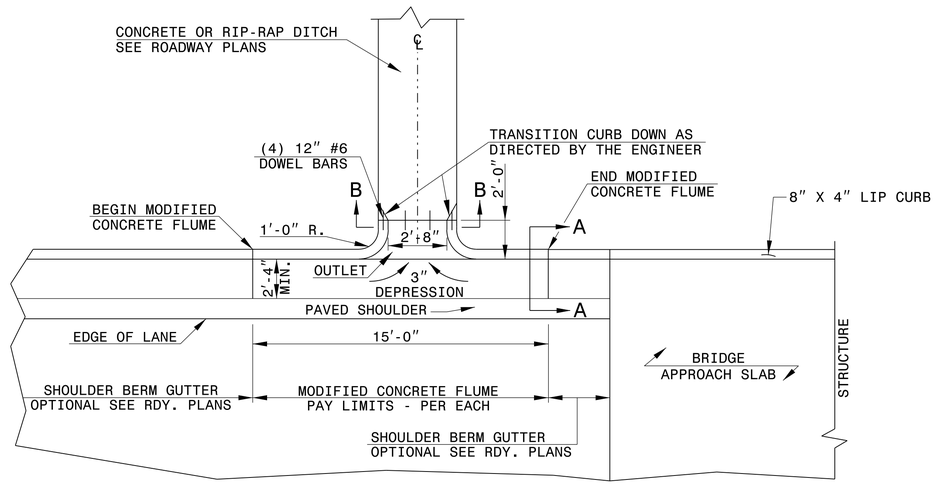

PLAN VIEW

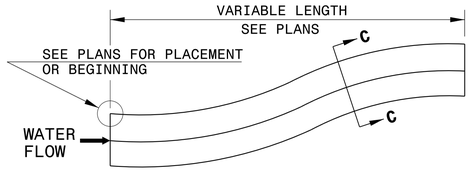

DOWNGRADE OR SAG

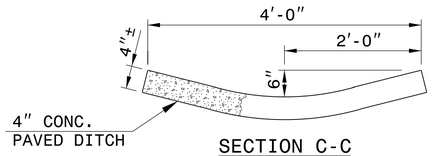

SECTION C-C

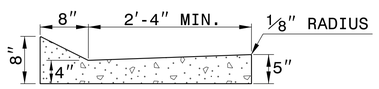

SECTION A-A

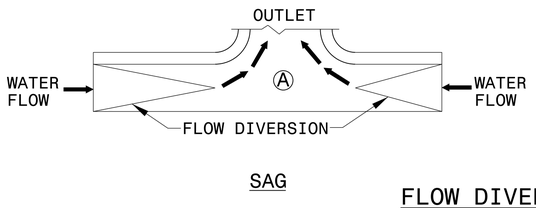

SAG

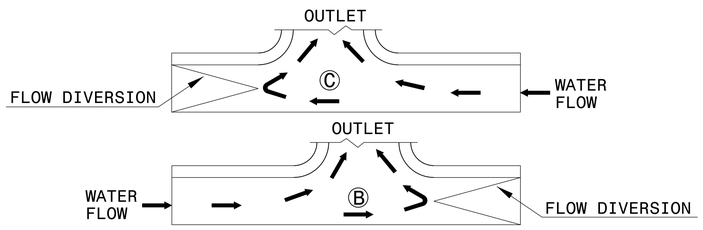

DOWN GRADE

FLOW DIVERSION EXAMPLES

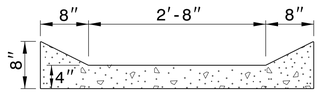

SECTION B-B

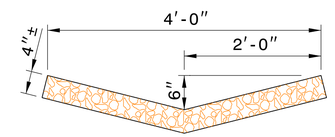

RIP-RAP LINED DITCH

NOTES:

- CONSTRUCT MODIFIED CONCRETE FLUME AND SHOULDER BERM GUTTER IN ACCORDANCE WITH THIS DETAIL.
- CONSTRUCT CONCRETE DITCH IN ACCORDANCE WITH STD. DWG. NO. 850.01.
- CONSTRUCT RIP RAP LINED DITCH IN ACCORDANCE WITH THIS DETAIL, IF CALLED FOR IN PLANS.
- CONCRETE OR RIP RAP LINED DITCH SHALL BE THE TYPE AND LENGTH SPECIFIED BY THE ROADWAY PLANS. THE DITCH SHALL TERMINATE AS SHOWN ON THE PLANS. IF NO TERMINATION IS INDICATED PLACE RIP-RAP AT THE END OF THE DITCH AS INDICATED BY STD. DWG. 876.02 FOR AN 18″ PIPE. TRANSITIONS FROM THE DITCH TO TERMINATION SHALL BE AS DIRECTED BY THE ENGINEER.
- MODIFICATIONS SHALL BE AS DICTATED BY SITE CONDITIONS AND DIRECTED BY THE ENGINEER.

SHEET 1 OF 1
MODFLMDTCH

STATE OF
NORTH CAROLINA
DEPT. OF TRANSPORTATION
DIVISION OF HIGHWAYS
RALEIGH, N.C.

ENGLISH DETAIL DRAWING FOR
MODIFIED CONCRETE FLUME
WITH CONCRETE OR RIP-RAP DITCH

SHEET 1 OF 1
MODFLMDTCH

CONTRACT STANDARDS
AND DEVELOPMENT UNIT
Office 919-707-6950 FAX 919-250-4119

SEE PLATE FOR TITLE

ORIGINAL BY: E.E. Ward DATE: Apr. 2002
MODIFIED BY: E.E. Ward DATE: July 2004
CHECKED BY: DATE:
FILE SPEC.: w:details\stand\modifiedflume.dgn

$$$$$$$SYTME$$$$$
$$$$$$$

4/04/06

COMPUTED BY: T.CAREY DATE: 09/21/12
CHECKED BY: B. SMITH DATE: 10/02/12

PROJECT REFERENCE NO.	SHEET NO.
17BP.13.R.82	3–A

DIVISION OF HIGHWAYS
STATE OF NORTH CAROLINA

SUMMARY OF EARTHWORK IN CUBIC YARDS

STATION	STATION	UNCL. EXCAV.	EMBANK. + %	BORROW	WASTE
–L– 11+55.00	12+88.60	176	98		78
–L– 13+33.60	14+80.00	35	122	87	
SUBTOTAL:		211	220	87	78
–DET– 10+39.45	12+29.89	114	98		16
SUBTOTAL:		114	98		16
TEMPORARY DETOUR REMOVAL					
–L– 13+00.00	13+75.00	93			93
SUBTOTAL:		93			93
PROJECT SUBTOTAL:		418	318	87	187
WASTE IN LIEU OF BORROW:				–87	–87
PROJECT TOTAL:		418	318		100
GRAND TOTAL:		418	318		100
SAY:		420			110

NOTE:
APPROXIMATE QUANTITIES ONLY. UNCLASSIFIED EXCAVATION, BORROW EXCAVATION, FINE GRADING, CLEARING AND GRUBBING, AND REMOVAL OF EXISTING PAVEMENT WILL BE PAID FOR AT THE LUMP SUM PRICE FOR "GRADING".

EXISTING PAVEMENT REMOVAL SUMMARY

SURVEY LINE	STATION	STATION	LOCATION LT/RT/CL	YD^2
–L–	12+38.00	12+96.60	CL	91
–L–	13+15.20	14+00.00	CL	150
–DET–	10+39.45	10+77.63	CL	26
–DET–	10+77.63	11+96.53	CL	161
–DET–	11+96.53	12+29.89	CL	23
			TOTAL:	451
			SAY:	455

SUMMARY OF RIP RAP

LINE	STATION	STATION	LOC	RIP RAP CLASS I	II	A	B	RR (TON)	FF (SY)	DDE (CY)	DETAIL	COMMENTS
–L–	11+60.00	12+97.10	RT	X				159	224	180	A	
–L–	13+30.00	14+70.00	LT	X				140	198		B	
–DET–	10+40.00	11+30.00	RT				X	18	40		C	
–DET–	11+00.00	11+25.00	LT				X	6	12		D	
–DET–	11+30.00	11+81.00	RT				X	11	25		D	
–DET–	11+60.00	11+80.00	LT				X	5	10		D	

	TOTAL (TON)	SAY
CLASS I	299	315
CLASS II		
CLASS A		
CLASS B	40	45
SHOT ROCK		
DDE	180	180
	TOTAL (SQ. YD)	SAY
FILTER FABRIC	509	515

2'– 6" CURB & GUTTER SUMMARY

SURVEY LINE	STATION	STATION	LENGTH
–L–	13+27.25	13+44.00	17
–L–	13+39.95	14+01.43	61
		TOTAL:	78
		SAY:	80

ABBREVIATIONS	
CY	CUBIC YARD
DDE	DRAINAGE DITCH EXCAVATION
FF	FILTER FABRIC
LOC	LOCATION
RR	RIP RAP
SY	SQUARE YARD

NOTE: Invert Elevations are for Bid Purposes only and shall not be used for project construction stakeout. See "Standard Specifications For Roads and Structures, Section 300–5".

SUB–REGIONAL & REGIONAL LIST OF PIPES, ENDWALLS, ETC. (FOR PIPES 48" & UNDER)

| STATION | LOCATION (LT,RT, OR CL) | STRUCTURE NO. FROM. | STRUCTURE NO. TO | TOP ELEVATION | INVERT ELEVATION | INVERT ELEVATION | SLOPE CRITICAL | DRAINAGE PIPE (RCP, CSP, CAAP, HDPE, or PVC) SIZE | 12" | 15" | 18" | 24" | 30" | 36" | 42" | 48" | DO NOT USE RCP | DO NOT USE CSP | DO NOT USE CAAP | DO NOT USE HDPE | C.S. PIPE THICKNESS OR GAUGE | 12" | 15" | 18" | 24" | 36" | 42" | 48" | R.C. PIPE (CLASS III) | 15" | 18" | 24" | 30" | 36" | 42" | 48" | R.C. PIPE (CLASS IV) | 12" | 15" | 18" | 24" | 30" | 36" | 42" | 48" | 58" x 36" CORR. ALUM. ALLOY PIPE ARCH, 135° THICK | ** R. C. PIPE CULVERTS, CONTRACTOR DESIGN | *** R. C. PIPE CULVERTS, CONTRACTOR DESIGN | 15" SIDE DRAIN PIPE | 18" SIDE DRAIN PIPE | ENDWALLS STD. 838.01, STD. 838.11 OR STD. 838.80 (UNLESS NOTED OTHERWISE) CU. YDS. R.C.P. | C.S.P. | QUANTITIES FOR DRAINAGE STRUCTURES * TOTAL L.F. FOR PAY QUANTITY SHALL BE COL. 'A' + (1.3 X COL. 'B') LIN. *FT. A | B | PER EACH (0' THRU 5.0') | 5.0' THRU 10.0' | 10.0' AND ABOVE | C.B. STD. 840.01 OR STD. 840.02 | FRAME, GRATES AND HOOD STANDARD 840.03 TYPE OF GRATE E | F | G | CONCRETE TRANSITIONAL SECTION CATCH BASIN | DROP INLET | G.D.I. FRAME WITH GRATE STD. 840.22 | G.D.I. FRAME WITH TWO GRATES STD. 840.22 | G.D.I. FRAME WITH GRATE STD. 840.24 | G.D.I. (N.S.) FRAME WITH TWO GRATES STD. 840.24 | G.D.I. (N.S.) FRAME WITH GRATES STD. 840.24 | J.B. STD. 840.31 OR 840.32 | CORR. STEEL ELBOWS NO. & SIZE | CONC. COLLARS CL. "B" C.Y. STD. 840.72 | MODIFIED CONCRETE FLUME (SEE SHEET 2–B) | PIPE REMOVAL LIN.FT. | REMARKS |
|---|---|---|---|---|---|---|---|---|---|---|---|---

PROJECT REFERENCE NO.	SHEET NO.
17BP.13.R.82	4
R/W SHEET NO.	

ROADWAY DESIGN ENGINEER

NORTH CAROLINA PROFESSIONAL SEAL 034375 ENGINEER JERRY C. SMITH

10-15-14

HYDRAULICS ENGINEER

NORTH CAROLINA PROFESSIONAL SEAL 033860 ENGINEER

11/3/14

KCI http://www.kci.com
Engineers • Planners • Scientists • Construction Managers
4601 Six Forks Road, Landmark Center II, Suite 220
Raleigh, NC 27609-5210
Phone (919) 783-9214 • Fax (919) 783-9266

moffatt & nichol
1616 EAST MILLBROOK ROAD, SUITE 160
RALEIGH, NORTH CAROLINA 27609
(919) 781-4626 VOICE (919) 781-4869 FAX

FOR -L- PROFILE, SEE SHEET 5

EXCAVATION (STR. PAY ITEM)

NAD 83/NSRS 2007

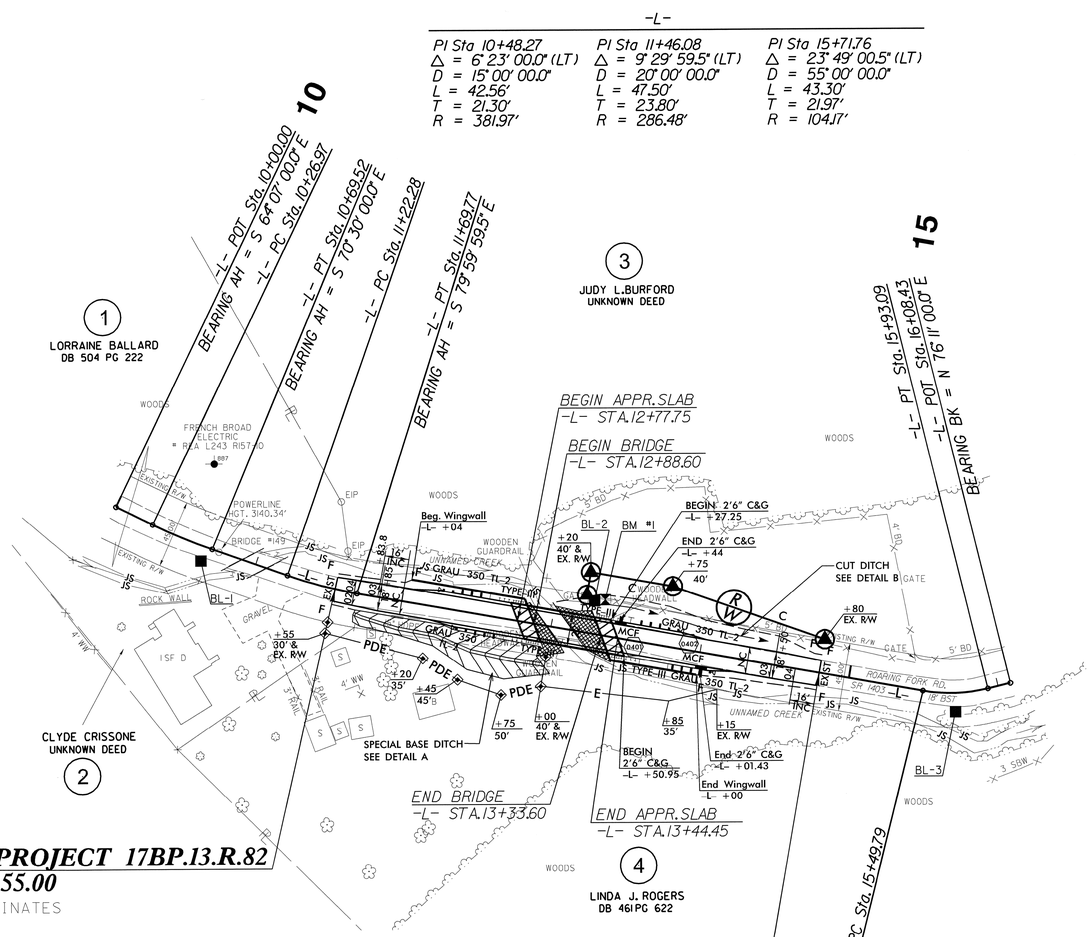

BEGIN BRIDGE REPLACEMENT PROJECT 17BP.13.R.82
-L- POC STA 11+55.00
LOCALIZED PROJECT COORDINATES
N = 830916.9415
E = 978633.7616

END BRIDGE REPLACEMENT PROJECT 17BP.13.R.82
-L- POT STA 14+80.00
LOCALIZED PROJECT COORDINATES
N = 830860.1311
E = 978953.7514

DETAIL A
SPECIAL CUT BASE DITCH
(Not to Scale)

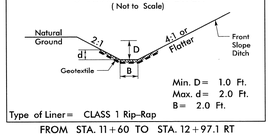

Min. D = 1.0 Ft.
Max. d = 2.0 Ft.
B = 2.0 Ft.
Type of Liner = CLASS 1 Rip-Rap
FROM STA. 11+60 TO STA. 12+97.1 RT

DETAIL B
CUT DITCH
(Not to Scale)

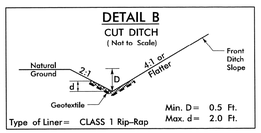

Min. D = 0.5 Ft.
Max. d = 2.0 Ft.
Type of Liner = CLASS 1 Rip-Rap
FROM STA. 13+30 TO STA. 14+70 LT

UTILITY OWNERS

FRENCH BROAD ELECTRIC
381 CRIMSON LAUREL WAY
PO BOX 43
BAKERSVILLE, NC 28705

FRONTIER COMMUNICATIONS
15 SOUTH MAIN STREET
WEAVERVILLE, NC 28787

BL POINT	DESC.	NORTH	EAST	ELEVATION	L STATION	OFFSET
1	BL-1	830935.9783	978545.8804	3125.62	10+65.09	9.82 RT
2	BL-2	830908.3900	978805.3930	3103.52	13+25.52	21.76 LT
3	BL-3	830834.1495	979043.8821	3083.04	15+70.93	12.33 RT

BM1 ELEVATION = 3103.64
N 830909 E 978813
L STATION 13+32.46 23.73 LEFT
*5 REBAR SET AT BASE OF FENCE POST

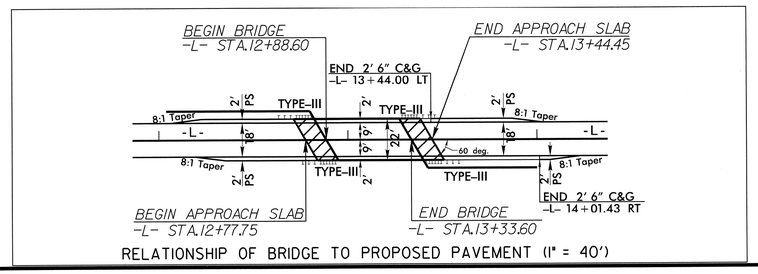

RELATIONSHIP OF BRIDGE TO PROPOSED PAVEMENT (1" = 40')

BRIDGE APPROACH SLABS

DATUM DESCRIPTION

THE LOCALIZED COORDINATE SYSTEM DEVELOPED FOR THIS PROJECT IS BASED ON THE STATE PLANE COORDINATES ESTABLISHED BY NCDOT FOR MONUMENT "990150 BL-2" WITH NAD 83/NSRS 2007 STATE PLANE GRID COORDINATES OF NORTHING: 830908.3900(ft) EASTING: 978805.3930(ft) ELEVATION: 3103.52(ft)
THE AVERAGE COMBINED GRID FACTOR USED ON THIS PROJECT (GROUND TO GRID) IS: 0.999809971
THE N.C. LAMBERT GRID BEARING AND LOCALIZED HORIZONTAL GROUND DISTANCE FROM "990150 BL-2" TO -L- STATION 11+55.00 IS N 87° 8' 51.4" W 171.84 ft
ALL LINEAR DIMENSIONS ARE LOCALIZED HORIZONTAL DISTANCES
VERTICAL DATUM USED IS NAVD 88

REVISIONS

8/17/99

13-OCT-2014 11:17
N:\Projects\17BP_13_R_82 Bridge Group RVG - 990150\Roadway\Proj\150_Rdy_psh_s4.dgn
$$$$USERNAME$$$$

PROJECT REFERENCE NO.	SHEET NO.
17BP.13.R.82	5

ROADWAY DESIGN ENGINEER

NORTH CAROLINA PROFESSIONAL SEAL 034375 ENGINEER BARRY C. SMITH

10-15-14

HYDRAULICS ENGINEER

NORTH CAROLINA PROFESSIONAL SEAL 033660 ENGINEER LEAH M. YOUNG

11/3/14

KCI
http://www.kci.com
Engineers • Planners • Scientists • Construction Managers
4601 Six Forks Road, Landmark Center II, Suite 220
Raleigh, NC 27609-5210
Phone (919) 783-9214 • Fax (919) 783-9266

moffatt & nichol
1616 EAST MILLBROOK ROAD, SUITE 160
RALEIGH, NORTH CAROLINA 27609
(919) 781-4626 VOICE (919) 781-4869 FAX

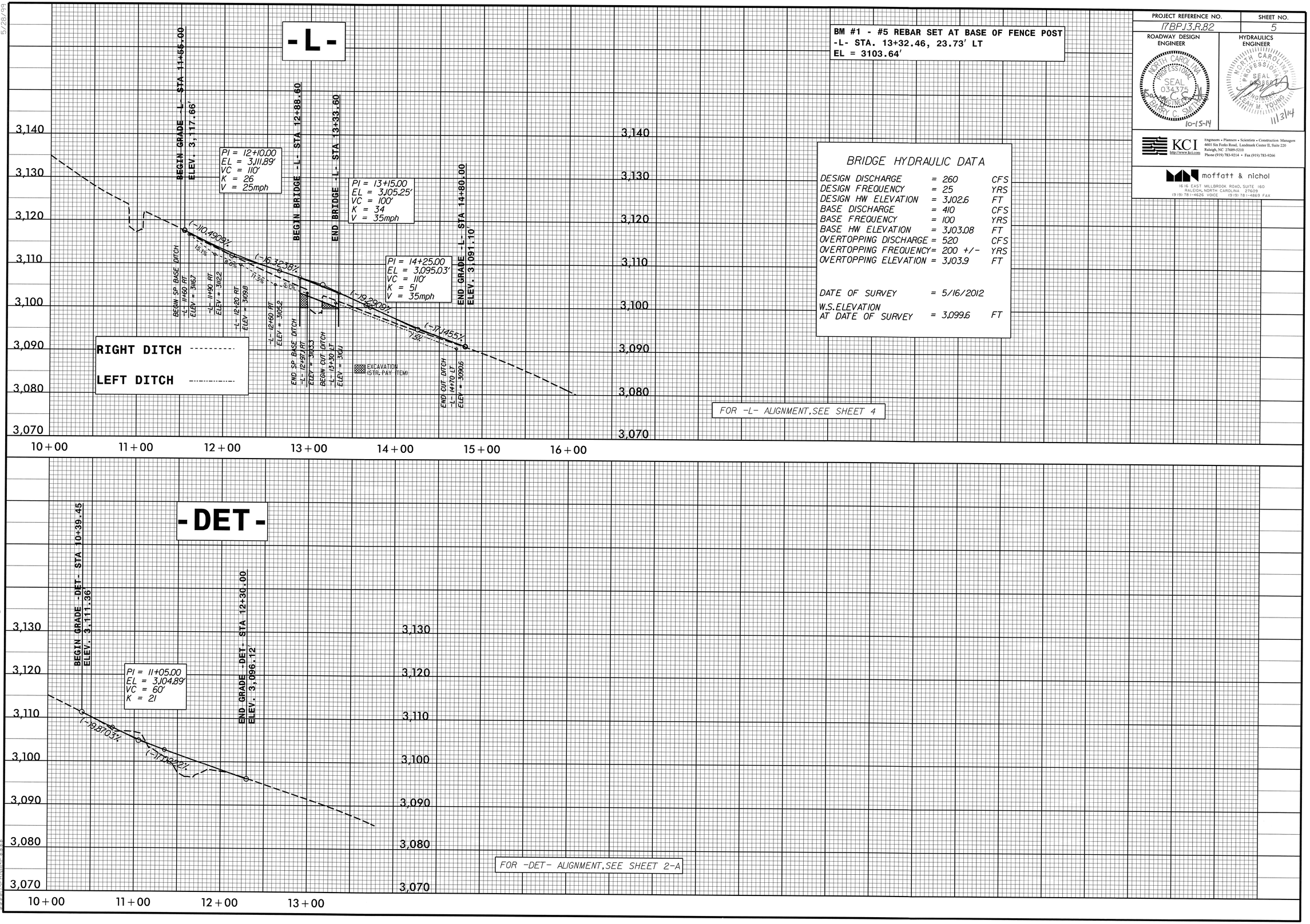

BRIDGE HYDRAULIC DATA

DESIGN DISCHARGE	= 260	CFS
DESIGN FREQUENCY	= 25	YRS
DESIGN HW ELEVATION	= 3,102.6	FT
BASE DISCHARGE	= 410	CFS
BASE FREQUENCY	= 100	YRS
BASE HW ELEVATION	= 3,103.08	FT
OVERTOPPING DISCHARGE	= 520	CFS
OVERTOPPING FREQUENCY	= 200 +/-	YRS
OVERTOPPING ELEVATION	= 3,103.9	FT
DATE OF SURVEY	= 5/16/2012	
W.S. ELEVATION AT DATE OF SURVEY	= 3,099.6	FT

5/28/99

13-OCT-2014 11:17
M:\2012\24121456 Bridge Group R\G - 990150\Roadway\Proj\150_Rdy_pfl_s5.dgn
$$$$USERNAME$$$$

STATE OF NORTH CAROLINA
DIVISION OF HIGHWAYS

TRANSPORTATION MANAGEMENT PLAN

YANCEY COUNTY



LOCATION: ***BRIDGE NO.150 OVER ROARING FORK CREEK ON SR 1403 (ROARING FORK RD)***

TYPE OF WORK: ***GRADING, DRAINAGE, PAVING, AND STRUCTURE***

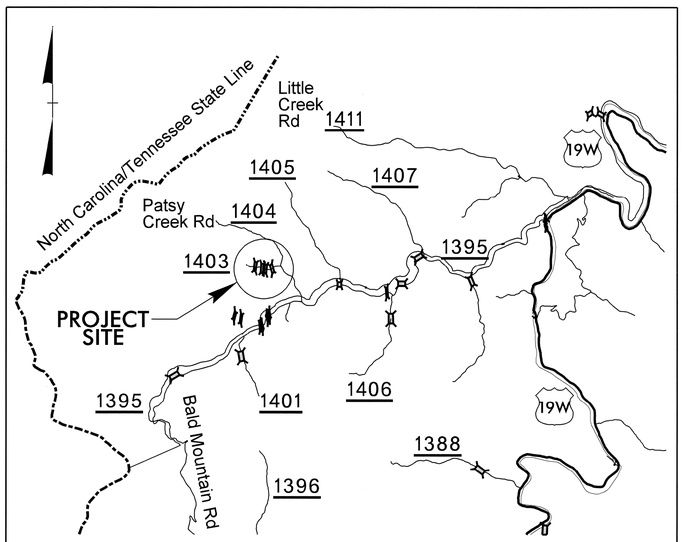

VICINITY MAP

INDEX OF SHEETS

SHEET NO.	TITLE
TMP-1	TITLE SHEET, AND INDEX OF SHEETS
TMP-1A	LIST OF APPLICABLE ROADWAY STANDARD DRAWINGS, LEGEND, AND TEMPORARY PAVEMENT MARKING
TMP-1B	TRANSPORTATION OPERATIONS PLAN: (MANAGEMENT STRATEGIES, GENERAL NOTES AND LOCAL NOTES)
TMP-2A	PORTABLE CONCRETE BARRIER AT TEMPORARY SHORING LOCATIONS
TMP-2B	"BEGIN ROAD WORK" SPECIAL SIGN DESIGN
TMP-2C	DETAIL DRAWING FOR ONE-LANE, TWO-WAY TRAFFIC TAPER WORK ZONE WARNING SIGNS WITH TEMPORARY TRAFFIC SIGNAL SOUTHBOUND DETOUR SHIFT.
TMP-2D	DETAIL DRAWING FOR ONE-LANE, TWO-WAY TRAFFIC TAPER WORK ZONE WARNING SIGNS WITH TEMPORARY TRAFFIC SIGNAL NORTHBOUND SHIFT.
TMP-3	TEMPORARY TRAFFIC CONTROL PHASE 1 DETAIL
TMP-4	TEMPORARY TRAFFIC CONTROL PHASE 2 DETAIL
TMP-5	TEMPORARY TRAFFIC CONTROL PHASE 3 DETAIL

SHEET NO.
TMP-1

STATE PROJECT: 17BP.13.R.82

KCI ASSOCIATES OF N.C.
CIVIL ENGINEERS
ENVIRONMENTAL - CEI
LAND SURVEYING
SUBSURFACE UTILITY ENGINEERING
SUITE 220, LANDMARK CENTER II,
4601 SIX FORKS ROAD
RALEIGH, NORTH CAROLINA 27609
(919) 783-9214
WWW.KCI.COM

APPROVED: Barry C. Smith
DATE: 10-15-14

SEAL

NORTH CAROLINA PROFESSIONAL SEAL 034375 ENGINEER BARRY C. SMITH

4:02:10 PM
150_TC_TCP_01.dgn
Division:

PROJ. REFERENCE NO.	SHEET NO.
17BP.13.R.82	TMP-1A

ROADWAY STANDARD DRAWINGS

THE FOLLOWING ROADWAY STANDARDS AS SHOWN IN "ROADWAY STANDARD DRAWINGS" - PROJECT SERVICES UNIT - N.C. DEPARTMENT OF TRANSPORTATION - RALEIGH, N.C., DATED JANAUARY 2012 ARE APPLICABLE TO THIS PROJECT AND BY REFERENCE HEREBY ARE CONSIDERED A PART OF THESE PLANS:

STD. NO.	TITLE
1101.01	WORK ZONE WARNING SIGNS
1101.02	TEMPORARY LANE CLOSURES
1101.03	TEMPORARY ROAD CLOSURES
1101.04	TEMPORARY SHOULDER CLOSURES
1101.05	WORK ZONE VEHICLE ACCESSES
1101.11	TRAFFIC CONTROL DESIGN TABLES
1110.01	STATIONARY WORK ZONE SIGNS
1110.02	PORTABLE WORK ZONE SIGNS
1115.01	FLASHING ARROW BOARDS
1130.01	DRUMS
1135.01	CONES
1145.01	BARRICADES
1150.01	FLAGGING DEVICES
1160.01	TEMPORARY CRASH CUSHION
1165.01	WORK VEHICLE LIGHTING SYSTEMS AND TMA DELINEATION
1170.01	PORTABLE CONCRETE BARRIER
1180.01	SKINNY - DRUM
1205.01	PAVEMENT MARKINGS - LINE TYPES AND OFFSETS
1205.02	PAVEMENT MARKINGS - TWO LANE AND MULTILANE ROADWAYS
1205.06	PAVEMENT MARKINGS - LANE DROPS
1205.08	PAVEMENT MARKINGS - SYMBOLS AND WORD MESSAGES
1205.12	PAVEMENT MARKINGS - BRIDGES
1250.01	RAISED PAVEMENT MARKERS - INSTALLATION SPACING
1251.01	RAISED PAVEMENT MARKERS - (PERMANENT AND TEMPORARY)
1261.01	GUARDRAIL AND BARRIER DELINEATORS - INSTALLATION SPACING
1261.02	GUARDRAIL AND BARRIER DELINEATORS - TYPES AND MOUNTING
1262.01	GUARDRAIL END DELINEATION
1264.01	OBJECT MARKERS - TYPES
1264.02	OBJECT MARKERS - INSTALLATION

LEGEND

GENERAL

- DIRECTION OF TRAFFIC FLOW
- DIRECTION OF PEDESTRIAN TRAFFIC FLOW
- EXIST. PVMT.
- NORTH ARROW
- PROPOSED PVMT.
- WORK AREA
- REMOVAL
- USER DEFINED (IF NEEDED)
- USER DEFINED (IF NEEDED)

TRAFFIC CONTROL DEVICES

- BARRICADE (TYPE III)
- CONE
- DRUM SKINNY DRUM TUBULAR MARKER
- TEMPORARY CRASH CUSHION
- FLASHING ARROW BOARD
- FLAGGER
- LAW ENFORCEMENT
- TRUCK MOUNTED ATTENUATOR (TMA)
- CHANGEABLE MESSAGE SIGN

TEMPORARY SIGNING

- PORTABLE SIGN
- STATIONARY SIGN
- STATIONARY OR PORTABLE SIGN

SIGNALS

EXISTING PROPOSED TEMPORARY (T E M P)

PAVEMENT MARKINGS

- EXISTING LINES
- TEMPORARY LINES

PAVEMENT MARKERS

- CRYSTAL/CRYSTAL
- CRYSTAL/RED
- YELLOW/YELLOW

PAVEMENT MARKING SYMBOLS

PAVEMENT MARKING SYMBOLS

TEMPORARY PAVEMENT MARKING

DESCRIPTION	PAY ITEM
WHITE EDGELINE 2X	PAINT (4")
YELLOW DOUBLE CENTER LINE 2X	PAINT (4")
WHITE STOP BAR 2X	PAINT (24")
YELLOW AND YELLOW	TEMPORARY RAISED MARKERS

KCI
http://www.kci.com
Engineers • Planners • Scientists • Construction Managers
4601 Six Forks Road, Landmark Center II, Suite 220
Raleigh, NC 27609-5210
Phone (919) 783-9214 • Fax (919) 783-9266

APPROVED: Barry C. Smith DATE: 10-15-14

SEAL

NORTH CAROLINA PROFESSIONAL SEAL 034[illegible] ENGINEER BARRY C. SMITH

DIVISION OF HIGHWAYS STATE OF NORTH CAROLINA DEPARTMENT OF TRANSPORTATION WORK ZONE TRAFFIC CONTROL SEAL

ROADWAY STANDARD DRAWINGS & LEGEND

4:02:2 PM
150::TC_TCP_01A.dgn
Divisions

PROJ. REFERENCE NO.	SHEET NO.
17BP.13.R.82	TMP-1B

MANAGEMENT STRATEGIES

-MAINTAIN LOCAL TRAFFIC USING ONSITE DETOUR ROAD AND TEMPORARY SIGNALS. UTILIZE SINGLE LANE WITH TWO-WAY TRAFFIC AND A MINIMUM WIDTH OF 10'.
-STAGE CONSTRUCT PROPOSED BRIDGE.
-OPEN TRAFFIC BACK TO TWO-WAY, TWO-LANE PATTERN ON TO SR1403
-REMOVE ONSITE DETOUR

LOCAL NOTES

1. NOTIFY YANCEY COUNTY EMERGENCY SERVICES AND PUBLIC SCHOOLS AT LEAST ONE MONTH PRIOR TO ROAD CONSTRUCTION.
2. ALL SIGN SPACING DIMENSIONS ARE APPROXIMATE, FIELD ADJUST AS NECESSARY OR AS DIRECTED BY THE ENGINEER
3. MAINTAIN ACCESS TO EXISTING DRIVEWAYS AT ALL TIMES.
4. INSTALLATION AND MAINTENANCE OF THE TEMPORARY TRAFFIC SIGNAL IS THE RESPONSIBILITY OF THE CONTRACTOR. SUBJECT TO APPROVAL OF THE DIVISION ENGINEER.

GENERAL NOTES

CHANGES MAY BE REQUIRED WHEN PHYSICAL DIMENSIONS IN THE DETAIL DRAWINGS, STANDARD DETAILS, AND ROADWAY DETAILS ARE NOT ATTAINABLE TO MEET FIELD CONDITIONS OR RESULT IN DUPLICATE OR UNDESIRED OVERLAPPING OF DEVICES. MODIFICATION MAY INCLUDE: MOVING, SUPPLEMENTING, COVERING, OR REMOVAL OF DEVICES AS DIRECTED BY THE ENGINEER.

THE FOLLOWING GENERAL NOTES APPLY AT ALL TIMES FOR THE DURATION OF THE CONSTRUCTION PROJECT EXCEPT WHEN OTHERWISE NOTED IN THE PLAN OR DIRECTED BY THE ENGINEER.

LANE AND SHOULDER CLOSURE REQUIREMENTS

A) REMOVE LANE CLOSURE DEVICES FROM THE LANE WHEN WORK IS NOT BEING PERFORMED BEHIND THE LANE CLOSURE OR WHEN A LANE CLOSURE IS NO LONGER NEEDED OR AS DIRECTED BY THE ENGINEER.

B) WHEN PERSONNEL AND/OR EQUIPMENT ARE WORKING WITHIN 15 FT OF AN OPEN TRAVEL LANE, CLOSE THE NEAREST OPEN SHOULDER USING ROADWAY STANDARD DRAWING NO. 1101.04 UNLESS THE WORK AREA IS PROTECTED BY BARRIER OR GUARDRAIL OR A LANE CLOSURE IS INSTALLED.

C) WHEN PERSONNEL AND/OR EQUIPMENT ARE WORKING ON THE SHOULDER ADJACENT TO AN UNDIVIDED FACILITY AND WITHIN 5 FT OF AN OPEN TRAVEL LANE, CLOSE THE NEAREST OPEN TRAVEL LANE USING ROADWAY STANDARD DRAWING NO. 1101.02 UNLESS THE WORK AREA IS PROTECTED BY BARRIER OR GUARDRAIL.

WHEN PERSONNEL AND/OR EQUIPMENT ARE WORKING ON THE SHOULDER ADJACENT TO A DIVIDED FACILITY AND WITHIN 10 FT OF AN OPEN TRAVEL LANE, CLOSE THE NEAREST OPEN TRAVEL LANE USING ROADWAY STANDARD DRAWING NO. 1101.02 UNLESS THE WORK AREA IS PROTECTED BY BARRIER OR GUARDRAIL.

D) WHEN PERSONNEL AND/OR EQUIPMENT ARE WORKING WITHIN A LANE OF TRAVEL OF AN UNDIVIDED OR DIVIDED FACILITY, CLOSE THE LANE ACCORDING TO THE TRAFFIC CONTROL PLANS, ROADWAY STANDARD DRAWINGS, OR AS DIRECTED BY THE ENGINEER. CONDUCT THE WORK SO THAT ALL PERSONNEL AND/OR EQUIPMENT REMAIN WITHIN THE CLOSED TRAVEL LANE.

E) DO NOT WORK SIMULTANEOUSLY WITHIN 15 FT ON BOTH SIDES OF AN OPEN TRAVELWAY, RAMP, OR LOOP WITHIN THE SAME LOCATION UNLESS PROTECTED WITH GUARDRAIL OR BARRIER.

F) PROVIDE TRAFFIC CONTROL FOR APPROPRIATE LANE CLOSURES FOR SURVEYING DONE BY THE DEPARTMENT.

PAVEMENT EDGE DROP OFF REQUIREMENTS

G) BACKFILL AT A 6:1 SLOPE UP TO THE EDGE AND ELEVATION OF EXISTING PAVEMENT IN AREAS ADJACENT TO AN OPENED TRAVEL LANE THAT HAS AN EDGE OF PAVEMENT DROP-OFF AS FOLLOWS:

BACKFILL DROP-OFFS THAT EXCEED 2 INCHES ON ROADWAYS WITH POSTED SPEED LIMITS OF 45 MPH OR GREATER.

BACKFILL DROP-OFFS THAT EXCEED 3 INCHES ON ROADWAYS WITH POSTED SPEED LIMITS LESS THAN 45 MPH.

BACKFILL WITH SUITABLE COMPACTED MATERIAL, AS APPROVED BY THE ENGINEER, AT NO EXPENSE TO THE DEPARTMENT.

H) DO NOT EXCEED A DIFFERENCE OF 2 INCHES IN ELEVATION BETWEEN OPEN LANES OF TRAFFIC FOR NOMINAL LIFTS OF 1.5 INCHES. INSTALL ADVANCE WARNING "UNEVEN LANES" SIGNS (W8-11) 100 ft IN ADVANCE AND A MINIMUM OF EVERY HALF MILE THROUGHOUT THE UNEVEN AREA.

TRAFFIC PATTERN ALTERATIONS

I) NOTIFY THE ENGINEER TWENTY ONE (21) CALENDAR DAYS PRIOR TO ANY TRAFFIC PATTERN ALTERATION.

SIGNING

J) INSTALL ADVANCE WORK ZONE WARNING SIGNS WHEN WORK IS WITHIN 40 FT FROM THE EDGE OF TRAVEL LANE AND NO MORE THAN THREE (3) DAYS PRIOR TO THE BEGINNING OF CONSTRUCTION.

K) ENSURE ALL NECESSARY SIGNING IS IN PLACE PRIOR TO ALTERING ANY TRAFFIC PATTERN.

L) INSTALL BLACK ON ORANGE "DIP" SIGNS (W8-2) AND/OR "BUMP" SIGNS (W8-1) 100 ft IN ADVANCE OF THE UNEVEN AREA, OR AS DIRECTED BY THE ENGINEER.

TRAFFIC BARRIER

M) INSTALL TEMPORARY BARRIER ACCORDING TO THE TRANSPORTATION MANAGEMENT PLANS A MAXIMUM OF TWO (2) WEEKS PRIOR TO BEGINNING WORK IN ANY LOCATION. ONCE TEMPORARY BARRIER IS INSTALLED AT ANY LOCATION PROCEED IN A CONTINUOUS MANNER TO COMPLETE THE PROPOSED WORK IN THAT LOCATION UNLESS OTHERWISE STATED IN THE TRANSPORTATION MANAGEMENT PLANS OR AS DIRECTED BY THE ENGINEER.

DO NOT PLACE BARRIER DIRECTLY ON ANY SURFACE OTHER THAN ASPHALT OR CONCRETE.

ONCE TEMPORARY BARRIER IS INSTALLED AT ANY LOCATION AND NO WORK IS PERFORMED BEHIND THE TEMPORARY BARRIER FOR A PERIOD LONGER THAN TWO (2) MONTHS, REMOVE / RESET TEMPORARY BARRIER AT NO COST TO THE DEPARTMENT UNLESS OTHERWISE STATED IN THE TRANSPORTATION MANAGEMENT PLANS, TEMPORARY BARRIER IS PROTECTING A HAZARD, OR AS DIRECTED BY THE ENGINEER.

INSTALL TEMPORARY BARRIER WITH THE TRAFFIC FLOW BEGINNING WITH THE UPSTREAM SIDE OF TRAFFIC. REMOVE TEMPORARY BARRIER AGAINST THE TRAFFIC FLOW BEGINNING WITH THE DOWNSTREAM SIDE OF TRAFFIC.

INSTALL AND SPACE DRUMS NO GREATER THAN TWICE THE POSTED SPEED LIMIT (25 MPH) TO CLOSE OR KEEP THE SECTION OF THE ROADWAY CLOSED UNTIL THE TEMPORARY BARRIER CAN BE PLACED OR AFTER THE TEMPORARY BARRIER IS REMOVED.

N) PROTECT THE APPROACH END OF MOVABLE/PORTABLE CONCRETE BARRIER AT ALL TIMES DURING THE INSTALLATION AND REMOVAL OF THE BARRIER BY EITHER A TRUCK MOUNTED ATTENUATOR (MAXIMUM 72 HOURS) OR A TEMPORARY CRASH CUSHION.

PROTECT THE APPROACH END OF MOVABLE/PORTABLE CONCRETE BARRIER FROM ONCOMING TRAFFIC AT ALL TIMES BY A TEMPORARY CRASH CUSHION UNLESS THE APPROACH END OF MOVABLE/PORTABLE CONCRETE BARRIER IS OFFSET FROM ONCOMING TRAFFIC AS FOLLOWS OR AS SHOWN IN THE PLANS: (SEE ALSO 1101.05)

POSTED SPEED LIMIT	MINIMUM OFFSET
40 OR LESS	15 FT
45 - 50	20 FT
55	25 FT
60 MPH or HIGHER	30 FT

TRAFFIC CONTROL DEVICES

O) WHEN LANE CLOSURES ARE NOT IN EFFECT SPACE CHANNELIZING DEVICES IN WORK AREAS NO GREATER IN FEET THAN TWICE THE POSTED SPEED LIMIT (25 MPH) EXCEPT, 10 FT ON-CENTER IN RADII, AND 3 FT OFF THE EDGE OF AN OPEN TRAVELWAY. REFER TO STANDARD SPECIFICATIONS FOR ROADS AND STRUCTURES SECTIONS 1130 (DRUMS), 1135 (CONES) AND 1180 (SKINNY DRUMS) FOR ADDITIONAL REQUIREMENTS.

P) PLACE TYPE III BARRICADES, WITH "ROAD CLOSED" SIGN R11-2 ATTACHED, OF SUFFICIENT LENGTH TO CLOSE ENTIRE ROADWAY.

Q) INSTALL TEMPORARY PAVEMENT MARKINGS AND TEMPORARY PAVEMENT MARKERS ON INTERIM LAYERS OF PAVEMENT AS FOLLOWS:

ROAD NAME	MARKING	MARKER
ROARING FORK ROAD (-DET-)	WHITE EDGELINES (4")	
ROARING FORK ROAD (-L-)	WHITE EDGELINES (4")	
ROARING FORK ROAD (-L-)	YELLOW DOUBLE CENTERLINE	YELLOW AND YELLOW TEMP. RAISED

R) PLACE TWO APPLICATIONS OF PAINT FOR TEMPORARY TRAFFIC PATTERNS. PLACE A SECOND APPLICATION OF PAINT SIX (6) MONTHS AFTER THE INITIAL APPLICATION AND EVERY SIX MONTHS AS DIRECTED BY THE ENGINEER.

S) TIE PROPOSED PAVEMENT MARKING LINES TO EXISTING PAVEMENT MARKING LINES.

T) REMOVE/REPLACE ANY CONFLICTING/DAMAGED PAVEMENT MARKINGS AND MARKERS BY THE END OF EACH DAY'S OPERATION.

MISCELLANEOUS

U) IN THE EVENT A TIE-IN CANNOT BE MADE IN ONE DAY'S TIME, BRING THE TIE-IN AREA TO AN APPROPRIATE ROADWAY ELEVATION AS DETERMINED BY THE ENGINEER. PLACE BLACK ON ORANGE "LOOSE GRAVEL" SIGNS (W8-7) AND BLACK ON ORANGE "PAVEMENT ENDS" SIGNS (W8-3) 100 ft AND 200 ft RESPECTIVELY IN ADVANCE OF THE UNEVEN AREAS. USE DRUMS TO DELINEATE THE EDGE OF ROADWAY ALONG UNPAVED AREAS.

V) FOR TEMPORARY SHORING DATA SEE SPECIAL PROVISIONS.

KCI
Engineers • Planners • Scientists • Construction Managers
4601 Six Forks Road, Landmark Center II, Suite 220
Raleigh, NC 27609-5210
http://www.kci.com
Phone (919) 783-9214 • Fax (919) 783-9266

APPROVED: Barry C Smith DATE: 10-15-14

SEAL

NORTH CAROLINA PROFESSIONAL SEAL 034375 ENGINEER BARRY C. SMITH

DIVISION OF HIGHWAYS STATE OF NORTH CAROLINA DEPARTMENT OF TRANSPORTATION WORK ZONE TRAFFIC CONTROL

TRANSPORTATION OPERATIONS PLAN

4:02:13 PM
I:\17BP_13_R_82_TCP_01B.dgn
10/15/2014
Division

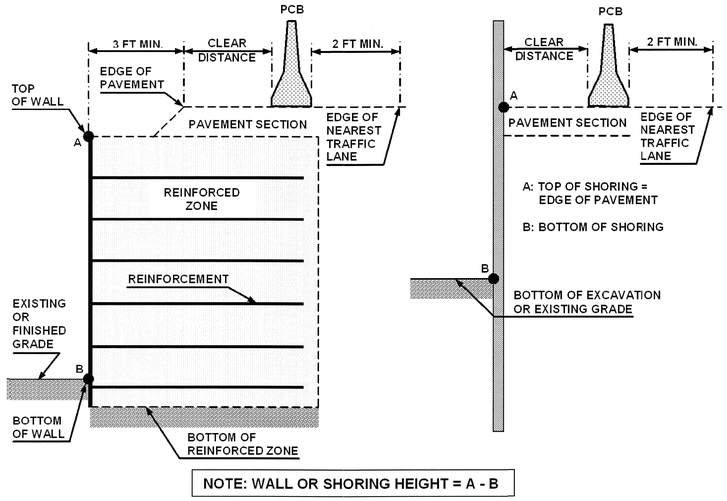

FIGURE A

NOTES

1- REFER TO THE TRAFFIC CONTROL PLANS FOR TEMPORARY SHORING LOCATIONS AND NOTES.

2- REFER TO THE "TEMPORARY SHORING" PROJECT SPECIAL PROVISION FOR INFORMATION ABOUT TEMPORARY SHORING AND PORTABLE CONCRETE BARRIER (PCB).

3- PCB IS REQUIRED IF TEMPORARY SHORING IS LOCATED WITHIN THE CLEAR ZONE IN ACCORDANCE WITH THE AASHTO ROADSIDE DESIGN GUIDE. DO NOT PLACE BARRIER DIRECTLY ON ANY SURFACE OTHER THAN ASPHALT OR CONCRETE. (CONTACT NCDOT PAVEMENT MANAGEMENT UNIT FOR APPLICABLE PAVEMENT DESIGN).

4- BASED ON THE CLEAR DISTANCE, OFFSET, DESIGN SPEED AND PAVEMENT TYPE, CHOOSE AN UNANCHORED OR ANCHORED PCB FROM THE TABLE SHOWN IN FIGURE B. CLEAR DISTANCE IS DEFINED AS SHOWN IN FIGURE A AND OFFSET IS DEFINED AS SHOWN IN FIGURE B.

5- AT THE CONTRACTOR'S OPTION OR IF THE MINIMUM REQUIRED CLEAR DISTANCE IS NOT AVAILABLE, SET PCB NEXT TO AND UP AGAINST THE TRAFFIC SIDE OF THE TEMPORARY SHORING EXCEPT FOR BARRIER ABOVE TEMPORARY WALLS. PCB WITH THE MINIMUM REQUIRED CLEAR DISTANCE IS REQUIRED ABOVE TEMPORARY WALLS.

6- USE NCDOT PORTABLE CONCRETE BARRIER (PCB) IN ACCORDANCE WITH ROADWAY STANDARD DRAWING NO. 1170.01 AND SECTION 1170 OF THE STANDARD SPECIFICATIONS.

7- PCB REQUIREMENTS FOR TEMPORARY WALLS APPLY TO TEMPORARY MECHANICALLY STABILIZED EARTH (MSE) WALLS AND TEMPORARY SOIL NAIL WALLS.

8- SET PCB WITH A MINIMUM HORIZONTAL DISTANCE OF 2 FT BETWEEN THE FRONT FACE OF THE BARRIER AND THE EDGE OF THE NEAREST TRAFFIC LANE AS SHOWN IN FIGURE A UNLESS OTHERWISE SHOWN IN THE PLANS AND OR AS APPROVED BY THE ENGINEER.

9- FOR PCB ABOVE AND BEHIND TEMPORARY WALLS, PROVIDE A MINIMUM DISTANCE OF 3 FT BETWEEN THE EDGE OF PAVEMENT AND THE WALL FACE AS SHOWN IN FIGURE A. IF THESE MINIMUM REQUIRED DISTANCES ARE NOT AVAILABLE, CONTACT THE ENGINEER.

10- TABLE SHOWN IN FIGURE B IS BASED ON NCDOT RESEARCH PROJECT NO. 2005-010 WITH VEHICLE TYPE USED FOR NCHRP 350 CRASH TESTS. BARRIER DEFLECTIONS AND RESULTING MINIMUM REQUIRED CLEAR DISTANCES MIGHT VARY SIGNIFICANTLY FOR LARGER HEAVIER VEHICLES, RUNS OF BARRIER LESS THAN 200 FT IN LENGTH AND WET OR DRY PAVEMENT.

17BP.13.R.82 TMP-2A

PROJ. REFERENCE NO.	SHEET NO.
17BP.13.R.82	TMP-2A

MINIMUM REQUIRED CLEAR DISTANCE, inches

Barrier Type	Pavement Type	Offset * ft	Design Speed, mph					
			<30	31-40	41-50	51-60	61-70	71-80
Unanchored PCB	Asphalt	<8	24	26	29	32	36	40
		8-14	26	28	31	35	38	42
		14-20	27	29	34	36	39	43
		20-26	28	31	35	38	40	44
		26-32	29	32	36	39	42	45
		32-38	30	34	38	41	43	46
		38-44	31	34	41	43	45	48
		44-50	31	35	41	43	46	49
		50-56	32	36	42	44	47	50
		>56	32	36	42	45	47	51
	Concrete	<8	17	18	21	22	25	26
		8-14	19	20	23	25	26	29
		14-20	22	22	24	26	28	31
		20-26	23	24	26	27	30	34
		26-32	24	25	27	28	32	35
		32-38	24	26	27	30	33	36
		38-44	25	26	28	30	34	37
		44-50	26	26	28	32	35	37
		50-56	26	26	28	32	35	38
		>56	26	27	29	32	36	38
Anchored PCB	Asphalt	All Offsets	24 for All Design Speeds					
Anchored PCB	Concrete (including bridge approach slabs)	All Offsets	12 for All Design Speeds					

* See Figure Below

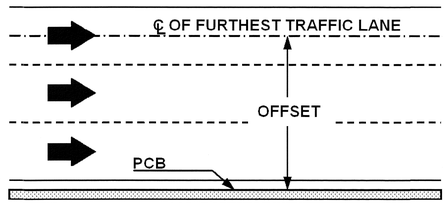

FIGURE B

APPROVED: Barry C. Smith DATE: 10-15-14

SEAL

NORTH CAROLINA PROFESSIONAL SEAL 034375 ENGINEER BARRY C. SMITH

DIVISION OF HIGHWAYS • STATE OF NORTH CAROLINA • DEPARTMENT OF TRANSPORTATION • WORK ZONE TRAFFIC CONTROL

PORTABLE CONCRETE BARRIER
AT
TEMPORARY SHORING LOCATIONS

PROJ. REFERENCE NO.	SHEET NO.
17BP.13.R.82	TMP-2B

SP 11299

SIGN NUMBER: 11299
TYPE: B
QUANTITY: SEE PLANS

SIGN WIDTH: 5′-6″
HEIGHT: 5′-6″
TOTAL AREA: 30.5 Sq.Ft.

BORDER TYPE: INSET
RECESS: 0.59″
WIDTH: 0.75″
RADII: 1.38″

NO. Z BARS: N/A
LENGTH: N/A

BACKG COLOR: Fluorescent Orange
COPY COLOR: Black

SYMBOL	X	Y	WID	HT

MAT'L: 0.125″ (3.2 mm) ALUMINUM

USE NOTES: 1,2

1. Legend and border shall be direct applied black non-reflective sheeting.
2. Background shall be Type VII, VIII, or IX (prismatic) fluorescent orange retroreflective sheeting.

DESIGN BY: WJ
PROJECT ID: ALL
CHECKED BY:
DIV: ALL
DATE: Jun 22, 2011

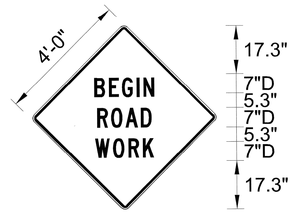

BORDER
R=1.38"
TH=0.75"
IN=0.59"

Spacing Factor is 1 unless specified otherwise

LETTER POSITIONS

Letter spacings are to start of next letter

								Series/Size Text Length
	B	E	G	I	N			D 2000
20.5	6	5.4	6.3	2.8	4.8	20.5		25.2
	R	O	A	D				D 2000
21.4	5.8	5.9	7	4.8	21.4			23.5
	W	O	R	K				D 2000
20.9	7.1	6.5	5.9	4.9	20.9			24.5

FILENAME: BEGIN ROAD WORK2

NORTH CAROLINA D.O.T. SIGN DETAIL

GENERAL NOTES FOR THE "BEGIN ROAD WORK" SIGN

-SIGN SP-11299 "BEGIN ROAD WORK" ONLY APPLIES TO FULL CONTROL AND PARTIAL CONTROL OF ACCESS ROADWAYS.

-WHEN USED, INSTALL SIGN SP-11299 "BEGIN ROAD WORK" ACCORDING TO DETAIL A ON ROADWAY STANDARD DRAWING 1101.01, SHEETS 1 & 2 OF 3.

APPROVED: Barry C Smith DATE: 10-15-14

SEAL

NORTH CAROLINA PROFESSIONAL SEAL 034375 ENGINEER BARRY C SMITH

DIVISION OF HIGHWAYS · STATE OF NORTH CAROLINA · DEPARTMENT OF TRANSPORTATION · WORK ZONE TRAFFIC CONTROL

BEGIN ROAD WORK
SIGN DESIGN

4:02:15 PM
150_TC_TCP_02B.dgn
Divisions

PROJ. REFERENCE NO.	SHEET NO.
17BP.13.R.82	TMP-2C

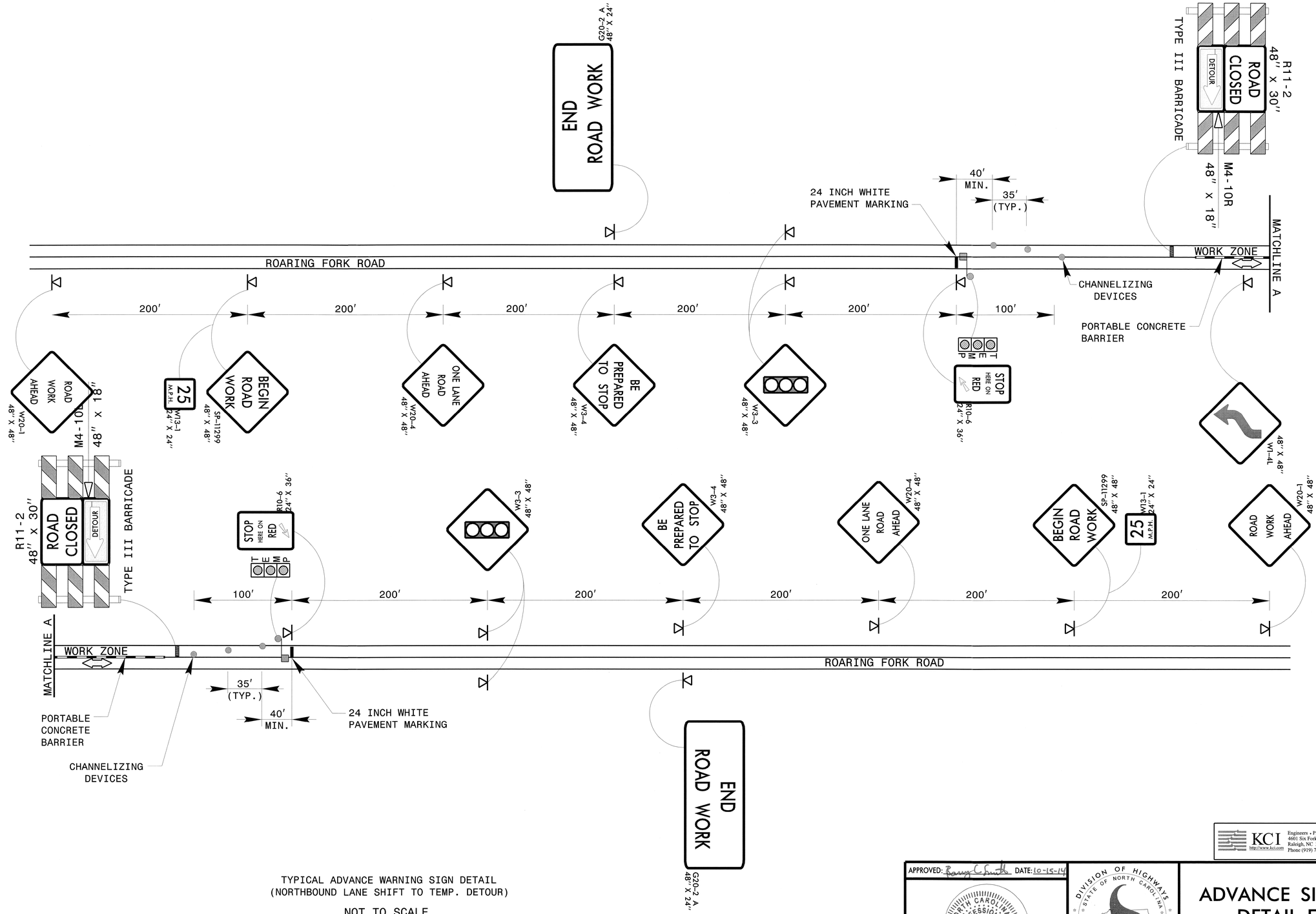

TYPICAL ADVANCE WARNING SIGN DETAIL
(NORTHBOUND LANE SHIFT TO TEMP. DETOUR)

NOT TO SCALE

KCI
Engineers • Planners • Scientists • Construction Managers
4601 Six Forks Road, Landmark Center II, Suite 220
Raleigh, NC 27609-5210
http://www.kci.com
Phone (919) 783-9214 • Fax (919) 783-9266

APPROVED: Barry C Smith DATE: 10-15-14

SEAL

NORTH CAROLINA PROFESSIONAL SEAL 034375 ENGINEER BARRY C. SMITH

DIVISION OF HIGHWAYS STATE OF NORTH CAROLINA DEPARTMENT OF TRANSPORTATION WORK ZONE TRAFFIC CONTROL

ADVANCE SIGNING DETAIL FOR TEMPORARY SIGNAL

4:02:15 PM
150_TC_TCP_2c.dgn
Division:

PROJ. REFERENCE NO.	SHEET NO.
17BP.13.R.82	TMP-2D

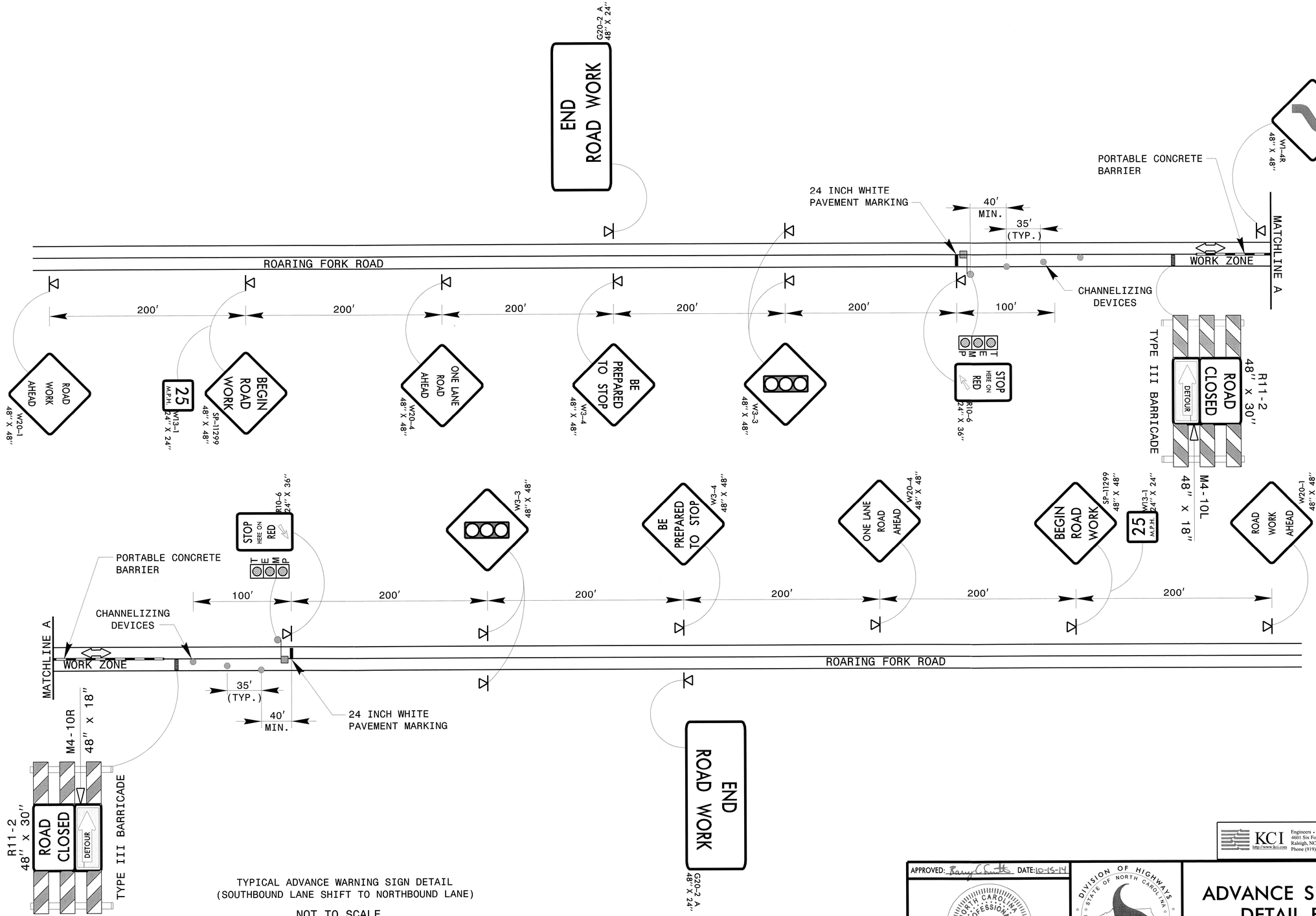

TYPICAL ADVANCE WARNING SIGN DETAIL
(SOUTHBOUND LANE SHIFT TO NORTHBOUND LANE)

NOT TO SCALE

KCI
http://www.kci.com
Engineers • Planners • Scientists • Construction Managers
4601 Six Forks Road, Landmark Center II, Suite 220
Raleigh, NC 27609-5210
Phone (919) 783-9214 • Fax (919) 783-9266

APPROVED: Barry C. Smith DATE: 10-15-14

SEAL

NORTH CAROLINA PROFESSIONAL SEAL 034375 ENGINEER BARRY C. SMITH

DIVISION OF HIGHWAYS
STATE OF NORTH CAROLINA
DEPARTMENT OF TRANSPORTATION
WORK ZONE TRAFFIC CONTROL

ADVANCE SIGNING DETAIL FOR TEMPORARY SIGNAL

4:02:16 PM
150_TC_TCP_2D.dgn
Division:

PROJ. REFERENCE NO.	SHEET NO.
17BP.13.R.82	TMP-3

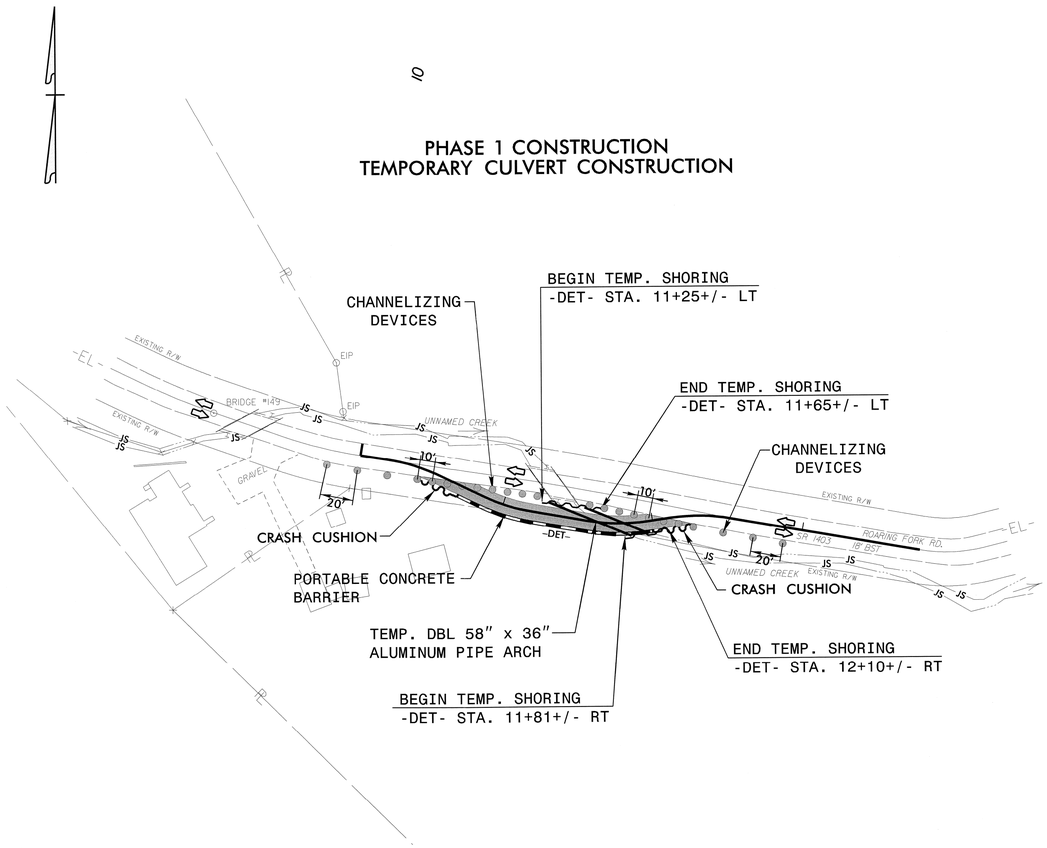

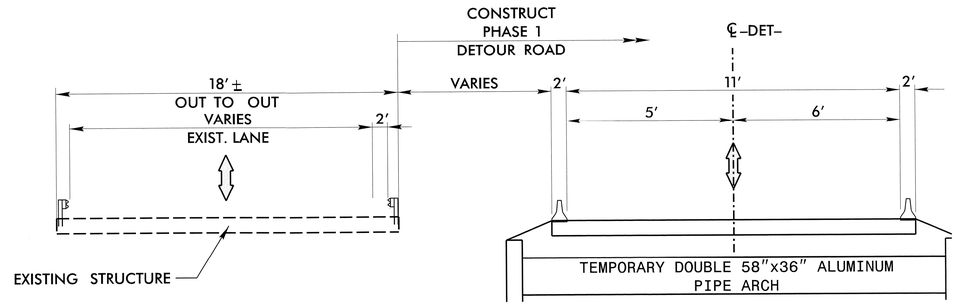

ROADWAY TYPICAL SECTION
PHASE 1

NOTES:
1. MAINTAIN ACCESS TO DRIVEWAYS AT ALL TIMES.
2. SEE SPECIAL PROVISIONS FOR SHORING INFORMATION.
3. REFER TO SHEET TMP-2C FOR ADVANCED SIGNING DETAILS.

PHASE 1

WORKING IN A CONTINUOUS MANNER COMPLETE THE FOLLOWING IN PHASE 1 STEPS 1 & 2:

STEP 1: USING ROADWAY STANDARD DRAWING NO. 1101.04 SHEET 1 OF 1 COMPLETE THE FOLLOWING:

INSTALL ADVANCE WARNING WORK ZONE SIGNS PER ROADWAY STANDARD DRAWING 1101.01, SHEET 3 OF 3 AND ADVANCED SIGNING DETAIL SHEET TMP-2C.

INSTALL CHANNELIZING DEVICES (DRUMS) TO CLOSE SHOULDER ALONG EXISTING -L- FROM -L- STA. 11+55+/- TO -L- STA. 14+60+/-.

STEP 2: BEHIND TEMPORARY SHOULDER CLOSURE COMPLETE THE FOLLOWING:

INSTALL TEMPORARY DOUBLE 58" X 36" ALUMINUM PIPE ARCHES.

INSTALL TEMPORARY SHORING ON LEFT SIDE OF DETOUR FROM -DET- STA. 11+25+/- TO -DET- STA. 11+65+/-, AND ON RIGHT SIDE OF DETOUR FROM -DET- STA. 11+81+/- TO -DET- STA. 12+10+/-.

CONSTRUCT TEMPORARY DETOUR ROAD RIGHT OF EXISTING PAVEMENT FROM -L- STA.12+14+/- TO -L- STA. 14+02+/- RT.

INSTALL TEMPORARY PORTABLE CONCRETE BARRIER ALONG THE RIGHT SIDE OF DETOUR ROAD FROM -DET- STA. 10+70+/- TO -DET- STA. 12+00+/- KEEPING ENDS PROTECTED BY TEMPORARY CRASH CUSHIONS.

KCI http://www.kci.com
Engineers • Planners • Scientists • Construction Managers
4601 Six Forks Road, Landmark Center II, Suite 220
Raleigh, NC 27609-5210
Phone (919) 783-9214 • Fax (919) 783-9266

APPROVED: Barry C. Smith DATE: 10-15-14

SEAL

NORTH CAROLINA PROFESSIONAL SEAL 034375 ENGINEER BARRY C. SMITH

DIVISION OF HIGHWAYS STATE OF NORTH CAROLINA DEPARTMENT OF TRANSPORTATION WORK ZONE TRAFFIC CONTROL

TEMPORARY TRAFFIC CONTROL PHASE 1 DETAIL

4:02:7 PM
150_TC_TCP_03.dgn
Division:

PROJ. REFERENCE NO.	SHEET NO.
17BP.13.R.82	TMP-4

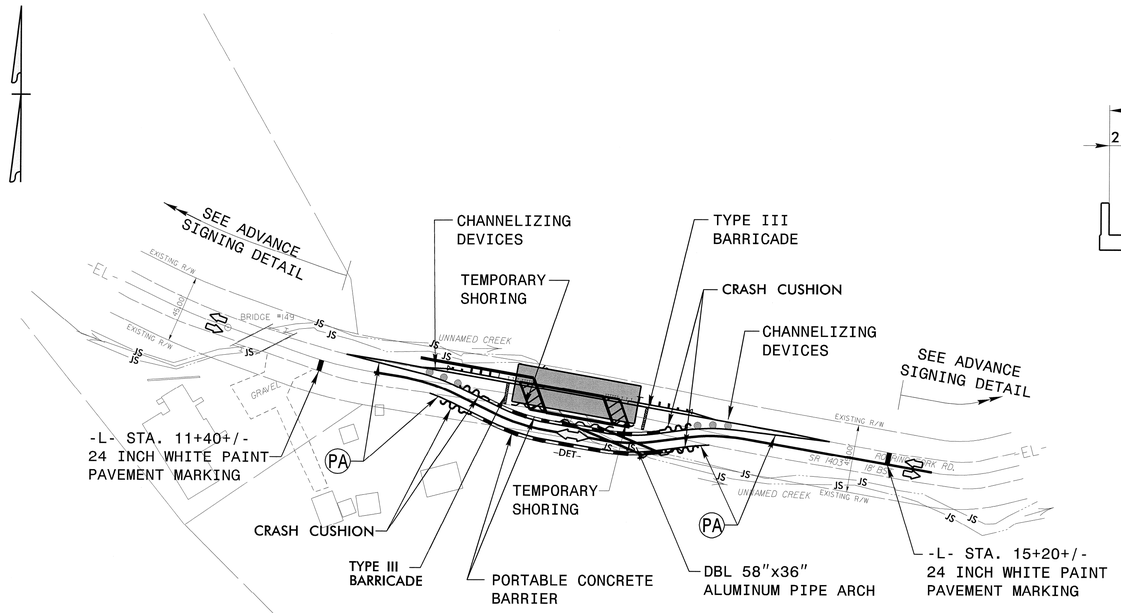

PHASE 2 CONSTRUCTION NORTHBOUND CONSTRUCTION

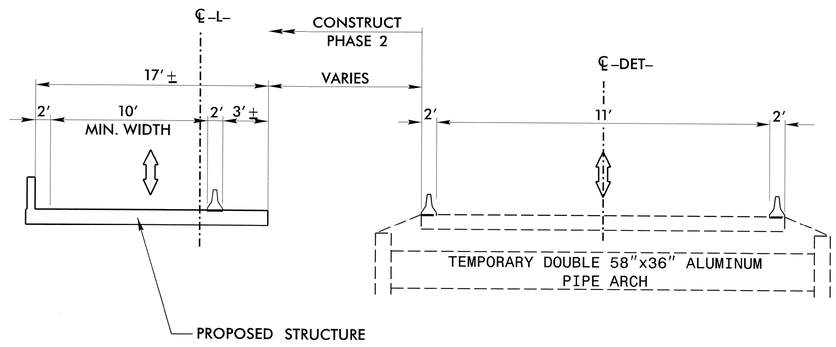

DETOUR ROAD TYPICAL SECTION PHASE 2

NOTES:

1. BLACKOUT EXISTING PAVEMENT MARKINGS AND RESTRIPE AS NECESSARY WITH TEMPORARY PAVEMENT MARKINGS.
2. REMOVE CONFLICTING SIGNS AND MARKINGS TO COMPLY WITH TRAFFIC PATTERNS SHOWN ON THIS DRAWING. REFER TO SHEET TMP-2C FOR ADVANCE WARNING SIGNS DETAILS.
3. SEE SPECIAL PROVISIONS FOR SHORING INFORMATION.
4. MAINTAIN ACCESS TO DRIVEWAYS AT ALL TIMES.

PHASE 2

WORKING IN A CONTINUOUS MANNER, COMPLETE THE FOLLOWING WORK IN PHASE 2 STEPS 1 TO 4.

STEP 1: USING ROADWAY STANDARD DRAWING NUMBER 1101.04, SHEET 1 OF 1 COMPLETE THE FOLLOWING:

INSTALL "ONE LANE ROAD AHEAD", "BE PREPARED TO STOP", "SIGNAL AHEAD", "STOP HERE ON RED", AND LANE SHIFT SIGNS PER DETAIL TMP-2C, KEEPING SIGNS COVERED.

STEP 2: USING ROADWAY STANDARD 1101.02, SHEET 1 OF 15 AND FLAGGERS COMPLETE THE FOLLOWING:

INSTALL TEMPORARY SIGNALS AND TEMPORARY 24" STOP BARS, KEEPING SIGNAL HEADS COVERED (SEE DETAIL TMP-2C).

REMOVE CHANNELIZING DEVICES ON RIGHT SIDE OF -L- IN PHASE 1 FROM -L- STA. 11+55+/- TO -L- STA. 14+60+/-.

PAVE/WEDGE AS NECESSARY TO SMOOTHLY TIE PROPOSED DETOUR ROAD WITH EXISTING ROARING FORK LOOP ROAD FROM -DET- STA.10+39+/- TO -DET- STA. 12+30+/-.

REMOVE EXISTING PAVEMENT MARKINGS AS NECESSARY AND PLACE TEMPORARY PAVEMENT MARKINGS (PAINT) FROM -L- STA. 11+55 TO -L- STA.14+80 TYING EXISTING MARKINGS WITH TEMPORARY DETOUR ROAD AND DESIGNATING ONE-LANE, TWO-WAY TRAFFIC PATTERN.

INSTALL TEMPORARY P.C.B. ON THE LEFT SIDE OF DETOUR ROAD FROM -DET- STA. 10+77+/- TO -DET- STA. 11+97+/-, KEEPING ENDS PROTECTED BY TEMPORARY CRASH CUSHIONS.

STEP 3: UNCOVER "ONE LANE ROAD AHEAD", "BE PREPARED TO STOP", "SIGNAL AHEAD", "STOP HERE ON RED", AND TRAFFIC SHIFT SIGNS. INSTALL TYPE III BARRICADES AND CHANNELIZING DEVICES PER DETAIL TMP-2C AND PHASE 2 DETAIL ABOVE. UNCOVER AND ACTIVATE TEMPORARY SIGNALS.

PLACE SR 1403 TRAFFIC IN A ONE-LANE, TWO-WAY PATTERN FROM -L- STA. 11+40 TO -L- STA.15+20 USING NEWLY CONSTRUCTED DETOUR ROAD.

STEP 4: BEHIND THE TEMPORARY BARRIER COMPLETE THE FOLLOWING:

REMOVE EXISTING BRIDGE 150 INCLUDING WING WALLS.

BEGIN CONSTRUCTION OF A PORTION OF THE PROPOSED STRUCTURE INCLUDING LEFT SIDE WING WALLS AND RETAINING WALL. (SEE STRUCTURE PLANS)

INSTALL TEMPORARY SHORING FROM -L- STA. 12+65+/- RT TO -L- STA. 12+91+/- RT AND FROM -L- STA. 13+36+/- RT TO -L- STA. 13+55+/- RT.

BEGIN CONSTRUCTION OF PROPOSED ROADWAY FROM -L- STA. 12+65+/- TO -L- STA. 13+55+/- UP TO BUT NOT INCLUDING THE FINAL LAYER OF SURFACE COURSE. CONSTRUCT LEFT SIDE SHOULDERS, CURB AND GUTTER, AND GUARDRAIL FROM -L- STA. 11+55+/- LT TO -L- STA. 14+80+/- LT.

KCI
http://www.kci.com
Engineers • Planners • Scientists • Construction Managers
4601 Six Forks Road, Landmark Center II, Suite 220
Raleigh, NC 27609-5210
Phone (919) 783-9214 • Fax (919) 783-9266

APPROVED: Barry C. Smith DATE: 10-15-14

SEAL

NORTH CAROLINA PROFESSIONAL SEAL 034375 ENGINEER BARRY C. SMITH

DIVISION OF HIGHWAYS STATE OF NORTH CAROLINA DEPARTMENT OF TRANSPORTATION WORK ZONE TRAFFIC CONTROL

TEMPORARY TRAFFIC CONTROL PHASE 2 DETAIL

4:02:18 PM
150_TC_TCP_04.dgn
Division:

PROJ. REFERENCE NO.	SHEET NO.
17BP.13.R.82	TMP-5

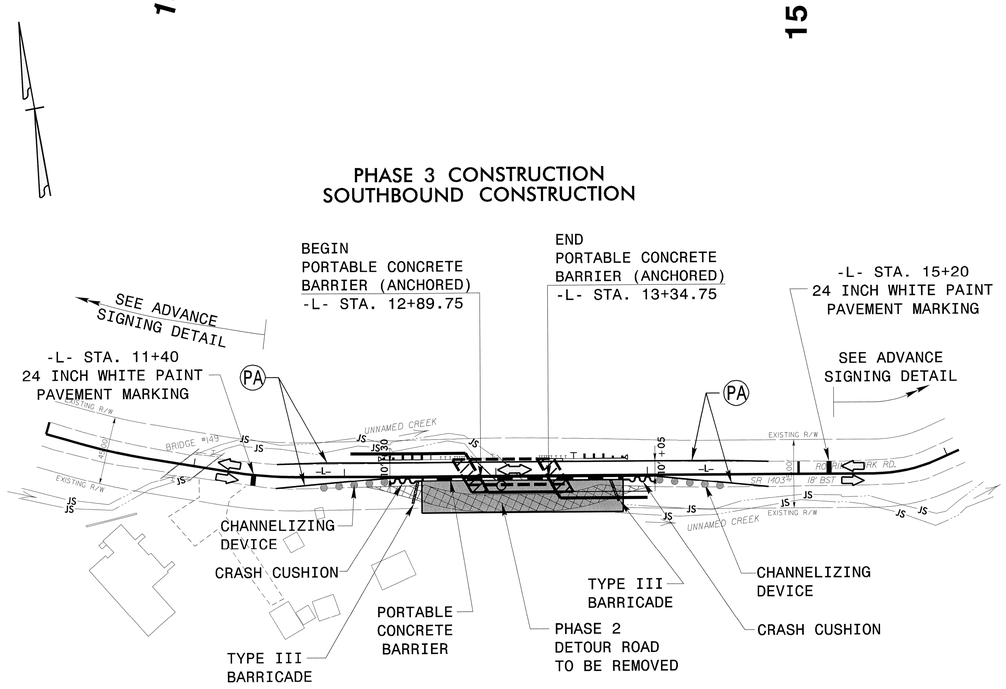

PHASE 3 CONSTRUCTION SOUTHBOUND CONSTRUCTION

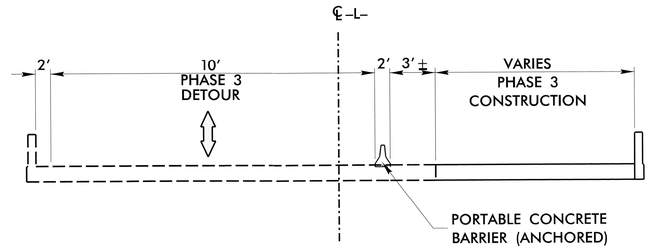

DETOUR ROAD TYPICAL SECTION PHASE 3

NOTES:
1. BLACKOUT EXISTING PAVEMENT MARKINGS AND RESTRIPE AS NECESSARY WITH TEMPORARY PAVEMENT MARKINGS.
2. REMOVE CONFLICTING SIGNS AND MARKINGS TO COMPLY WITH TRAFFIC PATTERNS SHOWN ON THIS DRAWING AND ON DETAIL SHEET TMP-2D.
3. MAINTAIN ACCESS TO DRIVEWAYS AT ALL TIMES.

PHASE 3

WORKING IN A CONTINUOUS MANNER, COMPLETE THE FOLLOWING WORK IN PHASE 3 STEP 1 IN ONE DAY OPERATION.

STEP 1: USING ROADWAY STANDARD DRAWING NUMBER 1101.02 SHEET 1 OF 15 AND FLAGGERS COMPLETE THE FOLLOWING:

REMOVE CONFLICTING TEMPORARY PORTABLE CONCRETE BARRIER ON LEFT SIDE OF DETOUR FROM -DET- STA. 10+77 TO STA. 11+84 AND FROM -DET- STA. 11+60 TO STA. 11+84 KEEPING ENDS PROTECTED BY TEMPORARY CRASH CUSHIONS.

PAVE/WEDGE AS NECESSARY TO SMOOTHLY TIE NEWLY CONSTRUCTED LEFT SIDE OF PROPOSED -L- FROM -L- STA. 11+55 TO STA. 12+65 AND FROM -L- STA. 13+55 TO STA. 14+80, UP TO BUT NOT INCLUDING THE FINAL LAYER OF SURFACE COURSE.

PLACE NEW TEMPORARY PAVEMENT MARKINGS (PAINT) TO DESIGNATE A ONE-LANE, TWO-WAY PATTERN USING NORTHBOUND LANE, AS SHOWN ABOVE ON PHASE 3 DETAIL.

RESET TEMPORARY PORTABLE CONCRETE BARRIER 10′ RIGHT OF LEFT E.O.T. FROM -L- STA. 12+51 TO -L- STA.13+84, KEEPING ENDS PROTECTED BY TEMPORARY CRASH CUSHIONS.

RESET TYPE III BARRICADES, CHANNELIZING DEVICES, AND LANE SHIFT SIGNS PER SHEET TMP-2D TO BLOCK TEMPORARY DETOUR ROAD AS SHOWN IN PHASE 3 DETAIL. PLACE SR 1403 (ROARING FORK ROAD) TRAFFIC IN NEW ONE-LANE (10′ MIN.), TWO-WAY TRAFFIC PATTERN.

WORKING IN A CONTINUOUS MANNER, COMPLETE THE FOLLOWING WORK IN PHASE 3 STEPS 2, 3 & 4 BEHIND TEMPORARY PORTABLE CONCRETE BARRIER AND CHANNELIZING DEVICES.

STEP 2: REMOVE TEMPORARY DETOUR ROAD, TEMPORARY SHORING, TEMPORARY ALUMINUM PIPE ARCH, AND TEMPORARY PORTABLE CONCRETE BARRIER CONSTRUCTED IN PHASE 1.

STEP 3: COMPLETE CONSTRUCTION OF PROPOSED RIGHT SIDE OF STRUCTURE FROM -L- STA.12+92+/- TO -L- STA.13+37+/- INCLUDING RIGHT SIDE WING WALLS AND RETAINING WALL (SEE STRUCTURE PLANS).

STEP 4: CONSTRUCT PROPOSED -L- FROM -L- STA. 12+35+/- TO -L- STA. 14+07+/- UP TO BUT NOT INCLUDING THE FINAL LAYER OF SURFACE COURSE, REMOVING TEMPORARY SHORING IN THE PROCESS. COMPLETE PROPOSED RIGHT SIDE CURB AND GUTTER AND SHOULDER GRADING FROM -L- STA. 11+55 TO -L- STA. 14+80.

WORKING IN A CONTINUOUS MANNER, COMPLETE THE FOLLOWING WORK IN PHASE 3 STEPS 5 & 6.

STEP 5: USING ROADWAY STANDARD DRAWING NUMBER 1101.02, SHEET 1 OF 15 AND FLAGGERS COMPLETE THE FOLLOWING:

REMOVE TEMPORARY PORTABLE CONCRETE BARRIER, CRASH CUSHIONS, AND CHANNELIZING DEVICES.

COVER OR REMOVE TEMPORARY SIGNALS, "SIGNAL AHEAD", "STOP HERE ON RED", AND LANE SHIFT SIGNS.

TIE RIGHT SIDE OF -L- TO LEFT SIDE OF -L- IN REMAINING AREAS UP TO BUT NOT INCLUDING THE FINAL LAYER OF SURFACE COURSE. FINISH PLACING RIGHT SIDE GUARDRAIL.

REMOVE ALL EXISTING AND TEMPORARY PAVEMENT MARKINGS (PAINT) FROM -L- STA.11+55 TO -L- STA. 14+80. PLACE PAVEMENT MARKINGS (PAINT) IN THE FINAL TWO-WAY, TWO-LANE PATTERN FROM -L- STA.11+55 TO -L- STA. 14+80.

PLACE THE FINAL LAYER OF SURFACE COURSE, FINAL PAVEMENT MARKINGS (PAINT) AND PAVEMENT MARKERS (PERMANENT RAISED) IN THE FINAL PATTERN.

OPEN SR 1403 (ROARING FORK ROAD) TO THE FINAL TWO-LANE, TWO-WAY PATTERN (SEE ROADWAY PLANS).

STEP 6: REMOVE ALL WORK ZONE TRAFFIC CONTROL DEVICES.

KCI http://www.kci.com
Engineers • Planners • Scientists • Construction Managers
4601 Six Forks Road. Landmark Center II, Suite 220
Raleigh, NC 27609-5210
Phone (919) 783-9214 • Fax (919) 783-9266

APPROVED: [signature] DATE: 10-15-14

SEAL

NORTH CAROLINA PROFESSIONAL SEAL 034375 ENGINEER BARRY C. SMITH

DIVISION OF HIGHWAYS STATE OF NORTH CAROLINA DEPARTMENT OF TRANSPORTATION WORK ZONE TRAFFIC CONTROL

TEMPORARY TRAFFIC CONTROL PHASE 3 DETAIL

10:57:13 AM
150_TTC_TCP_05.dgn
Divisions

TIP NO.	SHEET NO.
17BP.13.R.82	PMP-1

APPROVED: Barry C. Smith

DATE: 10-15-14

SEAL

NORTH CAROLINA PROFESSIONAL SEAL 034375 ENGINEER BARRY C. SMITH

KCI Engineers • Planners • Scientists • Construction Managers
4601 Six Forks Road, Landmark Center II, Suite 220
Raleigh, NC 27609-5210
http://www.kci.com
Phone (919) 783-9214 • Fax (919) 783-9266

STATE OF NORTH CAROLINA
DIVISION OF HIGHWAYS

PAVEMENT MARKING PLAN

YANCEY COUNTY

LOCATION: BRIDGE NO. 150 OVER ROARING FORK CREEK ON SR 1403 (ROARING FORK RD)

PAVEMENT MARKING SCHEDULE

SYMBOL	DESCRIPTION	FINAL PAVEMENT MARKINGS
PA	WHITE EDGELINE	PAINT (4")
PI	YELLOW DOUBLE CENTER	PAINT (4")

ROADWAY STANDARD DRAWING

THE FOLLOWING ROADWAY STANDARDS AS APPEAR IN "ROADWAY STANDARD DRAWINGS" – PROJECT SERVICES UNIT – N.C. DEPARTMENT OF TRANSPORTATION – RALEIGH, N.C., DATED JANUARY 2012 ARE APPLICABLE TO THIS PROJECT AND BY REFERENCE HEREBY ARE CONSIDERED A PART OF THESE PLANS:

STD. NO.	TITLE
1205.01	PAVEMENT MARKINGS – LINE TYPES AND OFFSETS
1205.02	PAVEMENT MARKINGS – TWO–LANE AND MULTILANE ROADWAYS
1205.12	PAVEMENT MARKINGS – BRIDGES
1261.01	GUARDRAIL AND BARRIER DELINEATORS – INSTALLATION SPACING
1261.02	GUARDRAIL AND BARRIER DELINEATORS – TYPES AND MOUNTING
1262.01	GUARDRAIL AND DELINEATION

GENERAL NOTES

THE FOLLOWING GENERAL NOTES APPLY AT ALL TIMES FOR THE DURATION OF THE CONSTRUCTION PROJECT, EXCEPT WHEN OTHERWISE NOTED IN THE PLAN, OR DIRECTED BY THE ENGINEER.

A) INSTALL PAVEMENT MARKINGS AND PAVEMENT MARKERS ON THE FINAL SURFACE AS FOLLOWS:

ROAD NAME	MARKING	MARKER
–L– SR 1403 (ROARING FORK RD)	PAINT	NONE

B) PLACE TWO APPLICATIONS OF PAINT PAVEMENT MARKINGS ON THE FINAL WEARING SURFACE. PLACE THE SECOND APPLICATION OF PAINT UPON SUFFICIENT DRYING TIME OF THE FIRST.

C) TIE PROPOSED PAVEMENT MARKING LINES TO EXISTING PAVEMENT MARKING LINES.

D) REMOVE/REPLACE ANY CONFLICTING/DAMAGED PAVEMENT MARKINGS AND MARKERS.

E) PASSING ZONES WILL BE DETERMINED IN THE FIELD AND MUST BE APPROVED BY THE ENGINEER.

F) REMOVE ALL RESIDUE AND SURFACE LAITANCE BY ACCEPTABLE METHODS ON THE BRIDGE DECK(s) PRIOR TO PLACING PAINT PAVEMENT MARKINGS.

INDEX

SHEET NO.	DESCRIPTION
PMP–1	PAVEMENT MARKING PLAN TITLE AND SCHEDULE SHEET
PMP–2	PAVEMENT MARKING DETAIL

4:02:27 PM
150_Sgn_BPMP_PMP-1.dgn
10/15/2014

TIP NO.	SHEET NO.
17BP.13.R.82	PMP-2

APPROVED: Barry C. Smith

DATE: 10-15-14

SEAL

NORTH CAROLINA PROFESSIONAL SEAL 034375 ENGINEER BARRY C. SMITH

KCI
http://www.kci.com
Engineers • Planners • Scientists • Construction Managers
4601 Six Forks Road, Landmark Center II, Suite 220
Raleigh, NC 27609-5210
Phone (919) 783-9214 • Fax (919) 783-9266

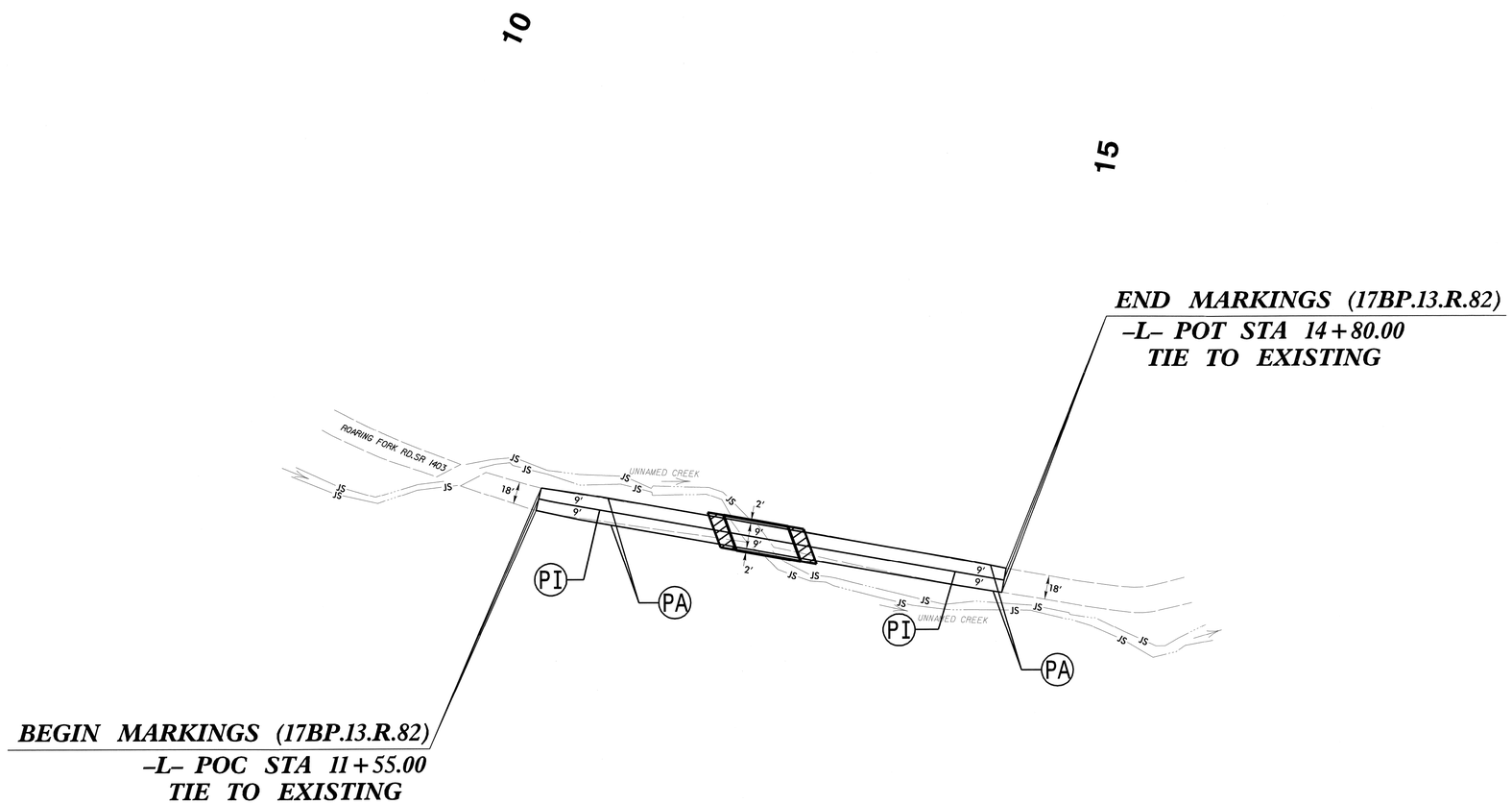

PAVEMENT MARKING LEGEND	
PA	WHITE EDGELINE (4")
PI	YELLOW DOUBLE CENTER (4")

PAVEMENT MARKING DETAIL

4:02:28 PM
150_Sgn_BPMP_PMP-2.dgn
Division:

TIP PROJECT: 17BP.13.R.82

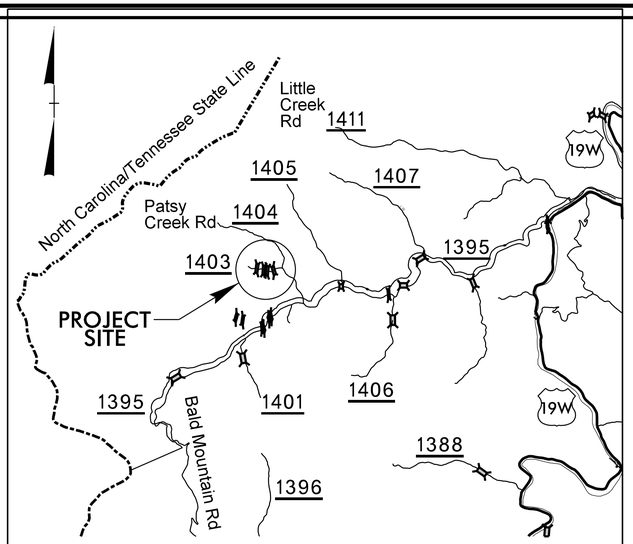

VICINITY MAP

STATE OF NORTH CAROLINA

DIVISION OF HIGHWAYS

BRIDGE 990150

STATE	STATE PROJECT REFERENCE NO.	SHEET NO.	TOTAL SHEETS
N.C.	17BP.13.R.82	EC-1	

STATE PROJ. NO.	F. A. PROJ. NO.	DESCRIPTION

PLAN FOR PROPOSED HIGHWAY EROSION CONTROL

YANCEY COUNTY

LOCATION: BRIDGE NO. 150 OVER ROARING FORK CREEK ON SR 1403 (ROARING FORK RD)

TYPE OF WORK: GRADING, DRAINAGE, PAVING, AND STRUCTURE

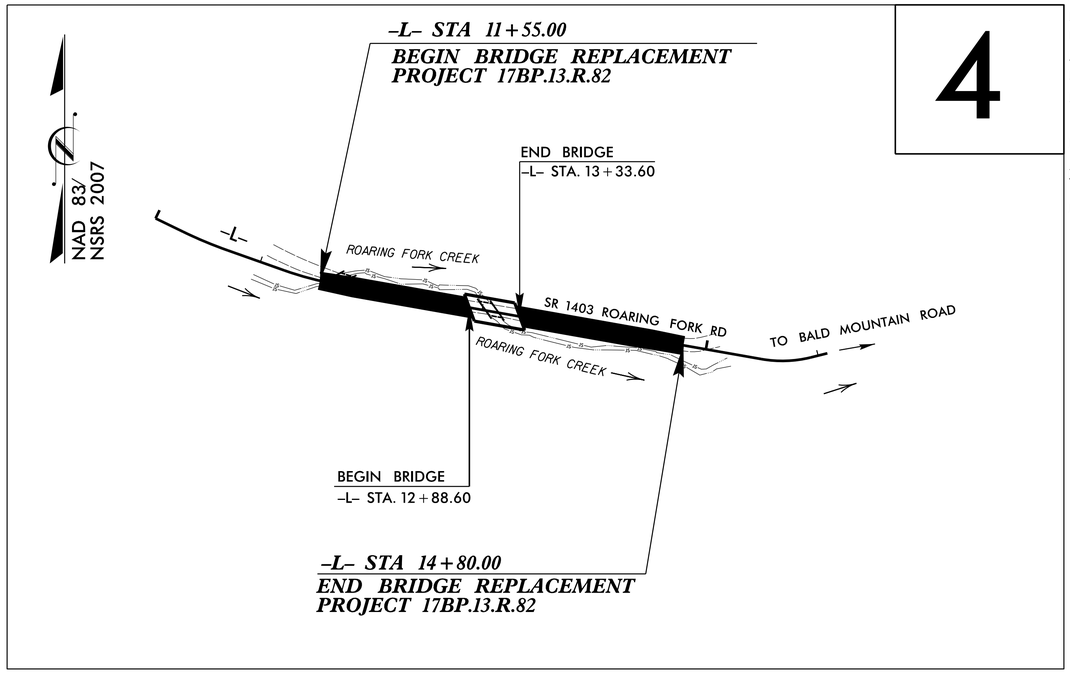

4

EROSION AND SEDIMENT CONTROL MEASURES

Std. #	Description	Symbol
1630.03	Temporary Silt Ditch	TSD
1630.05	Temporary Diversion	TD
1605.01	Temporary Silt Fence	
1606.01	Special Sediment Control Fence	
1622.01	Temporary Berms and Slope Drains	
1630.02	Silt Basin Type B	
1633.01	Temporary Rock Silt Check Type-A	
	Temporary Rock Silt Check Type-A with Matting and Polyacrylamide (PAM)	
1633.02	Temporary Rock Silt Check Type-B	
	Wattle / Coir Fiber Wattle	EW CFW
	Wattle / Coir Fiber Wattle with Polyacrylamide (PAM)	
1634.01	Temporary Rock Sediment Dam Type-A	
1634.02	Temporary Rock Sediment Dam Type-B	
1635.01	Rock Pipe Inlet Sediment Trap Type-A	
1635.02	Rock Pipe Inlet Sediment Trap Type-B	
1630.04	Stilling Basin	
1630.06	Special Stilling Basin	
	Rock Inlet Sediment Trap:	
1632.01	Type A	A
1632.02	Type B	B
1632.03	Type C	C
	Skimmer Basin	
	Tiered Skimmer Basin	
	Infiltration Basin	

THIS PROJECT CONTAINS EROSION CONTROL PLANS FOR CLEARING AND GRUBBING PHASE OF CONSTRUCTION.

THIS PROJECT HAS BEEN DESIGNED TO SENSITIVE WATERSHED STANDARDS.

ENVIRONMENTALLY SENSITIVE AREA(S) EXIST ON THIS PROJECT

Refer To E. C. Special Provisions for Special Considerations.

GRAPHIC SCALE

25 0 50
PLANS

25 0 50
PROFILE (HORIZONTAL)

5 0 10
PROFILE (VERTICAL)

ROADSIDE ENVIRONMENTAL UNIT
DIVISION OF HIGHWAYS
STATE OF NORTH CAROLINA

THESE EROSION AND SEDIMENT CONTROL PLANS COMPLY WITH THE REGULATIONS SET FORTH BY THE NCG–010000 GENERAL CONSTRUCTION PERMIT EFFECTIVE AUGUST 3, 2011 ISSUED BY THE NORTH CAROLINA DEPARTMENT OF ENVIRONMENT AND NATURAL RESOURCES DIVISION OF WATER QUALITY.

PREPARED BY: moffatt & nichol
1616 EAST MILLBROOK ROAD, SUITE 160
RALEIGH, NORTH CAROLINA 27609
(919) 781-4626 VOICE (919) 781-4869 FAX

DESIGN BY: *LEAH M. YOUNG, PE*
NCDOT LEVEL III: DESIGNER OF EROSION AND SEDIMENT CONTROL PLANS CERT #3157

REVIEWED BY: *JEFFREY L. RECK, PE*
NCDOT LEVEL III–A: DESIGNER OF EROSION AND SEDIMENT CONTROL PLANS CERT #132

Prepared In the Office of:

ROADSIDE ENVIRONMENTAL UNIT
1 South Wilmington St.
Raleigh, NC 27611

2012 STANDARD SPECIFICATIONS

Roadway Standard Drawings

The following roadway english standards as appear in "Roadway Standard Drawings"– Roadway Design Unit – N. C. Department of Transportation – Raleigh, N. C., dated January 2012 and the latest revison thereto are applicable to this project and by reference hereby are considered a part of these plans.

1604.01	Railroad Erosion Control Detail	1632.01	Rock Inlet Sediment Trap Type A
1605.01	Temporary Silt Fence	1632.02	Rock Inlet Sediment Trap Type B
1606.01	Special Sediment Control Fence	1632.03	Rock Inlet Sediment Trap Type C
1607.01	Gravel Construction Entrance	1633.01	Temporary Rock Silt Check Type A
1622.01	Temporary Berms and Slope Drains	1633.02	Temporary Rock Silt Check Type B
1630.01	Riser Basin	1634.01	Temporary Rock Sediment Dam Type A
1630.02	Silt Basin Type B	1634.02	Temporary Rock Sediment Dam Type B
1630.03	Temporary Silt Ditch	1635.01	Rock Pipe Inlet Sediment Trap Type A
1630.04	Stilling Basin	1635.02	Rock Pipe Inlet Sediment Trap Type B
1630.05	Temporary Diversion	1640.01	Coir Fiber Baffle
1630.06	Special Stilling Basin	1645.01	Temporary Stream Crossing
1631.01	Matting Installation		

10:28:16 AM
Division 10_reu_tsh_sl.dgn

BRIDGE 150

PROJECT REFERENCE NO.	SHEET NO.
17BP.13.R.81	EC-2

KCI
Engineers • Planners • Scientists • Construction Managers
4601 Six Forks Road, Landmark Center II, Suite 220
Raleigh, NC 27609-5210
http://www.kci.com
Phone (919) 783-9214 • Fax (919) 783-9266

moffatt & nichol
1616 EAST MILLBROOK ROAD, SUITE 160
RALEIGH, NORTH CAROLINA 27609
(919) 781-4626 VOICE (919) 781-4869 FAX

COIR FIBER WATTLE BARRIER DETAIL

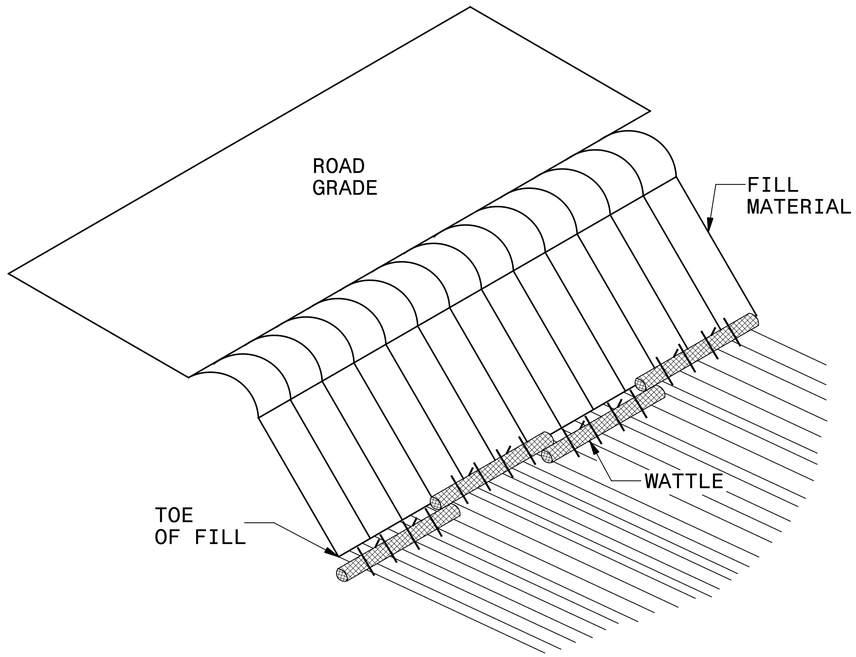

ISOMETRIC VIEW

NOTES:

USE MINIMUM 18 IN. DIAMETER COIR FIBER (COCONUT) WATTLE AND LENGTH OF 10 FT.

EXCAVATE A 1 TO 2 INCH TRENCH FOR WATTLE TO BE PLACED.

DO NOT PLACE WATTLES ON TOE OF SLOPE.

USE 2 FT. WOODEN STAKES WITH A 2 IN. BY 2 IN. NOMINAL CROSS SECTION.

INSTALL A MINIMUM OF 2 UPSLOPE STAKES AND 4 DOWNSLOPE STAKES AT AN ANGLE TO WEDGE WATTLE TO GROUND.

PROVIDE STAPLES MADE OF 0.125 IN. DIAMETER STEEL WIRE FORMED INTO A U SHAPE NOT LESS THAN 12″ IN LENGTH.

INSTALL STAPLES APPROXIMATELY EVERY 1 LINEAR FOOT ON BOTH SIDES OF WATTLE AND AT EACH END TO SECURE IT TO THE SOIL.

FOR BREAKS ALONG LARGE SLOPES, USE MAXIMUM SPACING OF 20 FT.

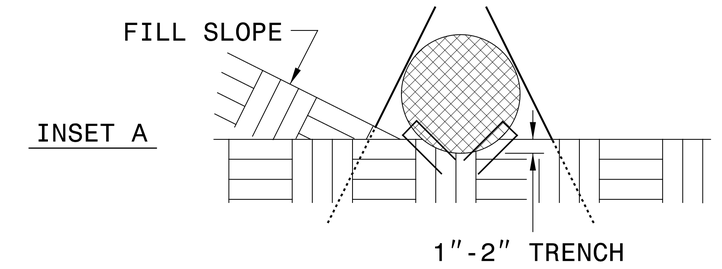

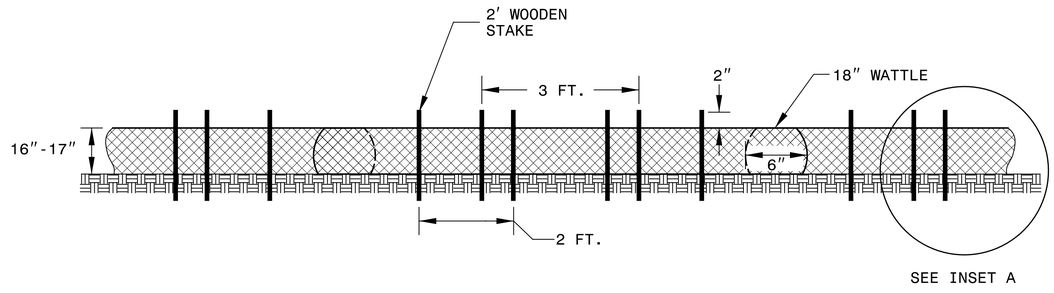

FRONT VIEW

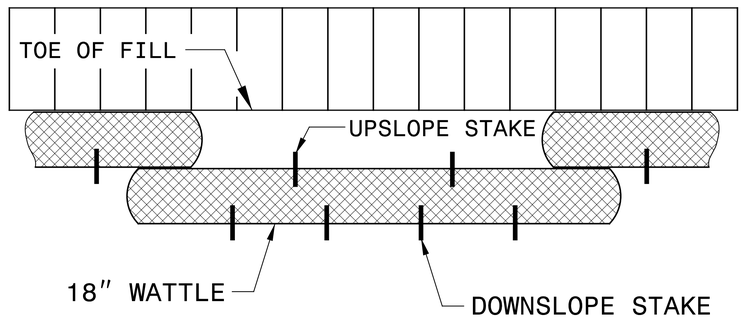

TOP VIEW

6/2/99

12/4/2013
R:\Roadside\189_reu_det_ec2B_wattle_barrier.dgn
Moffatt_Nichol

6/2/99

BRIDGE 990150

PROJECT REFERENCE NO.	SHEET NO.
17BP.13.R.82	EC-3

KCI
http://www.kci.com
Engineers • Planners • Scientists • Construction Managers
4601 Six Forks Road, Landmark Center II, Suite 220
Raleigh, NC 27609-5210
Phone (919) 783-9214 • Fax (919) 783-9266

moffatt & nichol
1616 EAST MILLBROOK ROAD, SUITE 160
RALEIGH, NORTH CAROLINA 27609
(919) 781-4626 VOICE (919) 781-4869 FAX

DIVISION OF HIGHWAYS
STATE OF NORTH CAROLINA

SOIL STABILIZATION TIMEFRAMES

SITE DESCRIPTION	*STABLIZATION TIME*	*TIMEFRAME EXCEPTIONS*
PERIMETER DIKES, SWALES, DITCHES AND SLOPES	7 DAYS	NONE
HIGH QUALITY WATER (HQW) ZONES	7 DAYS	NONE
SLOPES STEEPER THAN 3:1	7 DAYS	IF SLOPES ARE 10' OR LESS IN LENGTH AND ARE NOT STEEPER THAN 2:1, 14 DAYS ARE ALLOWED
SLOPES 3:1 OR FLATTER	14 DAYS	7 DAYS FOR SLOPES GREATER THAN 50' IN LENGTH
ALL OTHER AREAS W/ SLOPES FLATTER THAN 4:1	14 DAYS	NONE, EXCEPT FOR PERIMETERS AND HQW ZONES

10/1/2013
R:\Projects\Guide\150_reu_det_ec3_stabilization.dgn
Moffatt Nichol

8/17/99

REVISIONS

PROJECT REFERENCE NO.	SHEET NO.
17.BP.13.R.82	EC-4 CONST-4
R/W SHEET NO.	

KCI Engineers • Planners • Scientists • Construction Managers
http://www.kci.com
4601 Six Forks Road, Landmark Center II, Suite 220
Raleigh, NC 27609-5210
Phone (919) 783-9214 • Fax (919) 783-9266

moffatt & nichol
1616 EAST MILLBROOK ROAD, SUITE 160
RALEIGH, NORTH CAROLINA 27609
(919) 781-4626 VOICE (919) 781-4869 FAX

FOR -L- PROFILE, SEE SHEET 5

NAD 83/NSRS 2007

10

15

-L-

PI Sta 10+48.27	PI Sta 11+46.08	PI Sta 15+71.76
△ = 6° 23' 00.0" (LT)	△ = 9° 29' 59.5" (LT)	△ = 23° 49' 00.5" (LT)
D = 15° 00' 00.0"	D = 20° 00' 00.0"	D = 55° 00' 00.0"
L = 42.56'	L = 47.50'	L = 43.30'
T = 21.30'	T = 23.80'	T = 21.97'
R = 381.97'	R = 286.48'	R = 104.17'

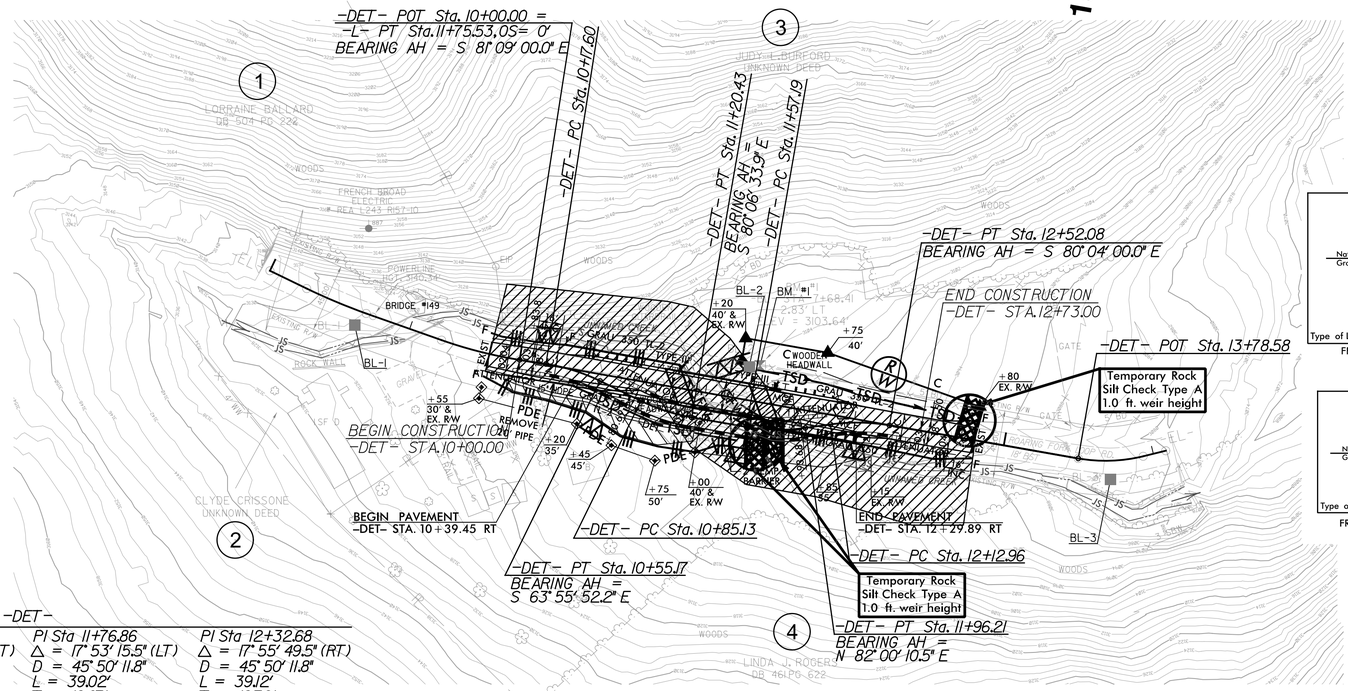

DETAIL A
SPECIAL CUT BASE DITCH
(Not to Scale)

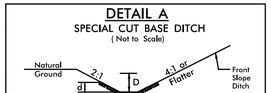

Min. D = 1.0 Ft.
Max. d = 2.0 Ft.
B = 2.0 Ft.

Type of Liner = CLASS 1 Rip-Rap

FROM STA. 11+60 TO STA. 12+97.1 RT

DETAIL B
CUT DITCH
(Not to Scale)

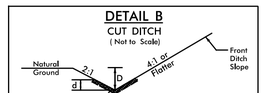

Min. D = 0.5 Ft.
Max. d = 2.0 Ft.

Type of Liner = CLASS 1 Rip-Rap

FROM STA. 13+30 TO STA. 14+70 LT

CLEARING AND GRUBBING EROSION CONTROL FOR CONSTRUCTION SHEET 4

NOTE:
PLACE TEMPORARY ROCK SEDIMENT DAMS TYPE – B AND TEMPORARY ROCK SILT CHECKS TYPE – A AT DRAINAGE OUTLETS.

NOTE:
PERIMETER EROSION CONTROL MEASURES SHALL BE INSTALLED DURING CLEARING AND GRUBBING PHASE.

TROUT STREAM BUFFER ZONE

UTILITY OWNERS

FRENCH BROAD ELECTRIC
381 CRIMSON LAUREL WAY
PO BOX 43
BAKERSVILLE, NC 28705

FRONTIER COMMUNICATIONS
15 SOUTH MAIN STREET
WEAVERVILLE, NC 28787

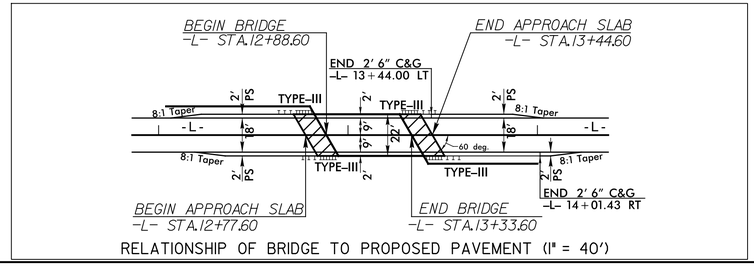

RELATIONSHIP OF BRIDGE TO PROPOSED PAVEMENT (1" = 40')

DATUM DESCRIPTION

THE LOCALIZED COORDINATE SYSTEM DEVELOPED FOR THIS PROJECT IS BASED ON THE STATE PLANE COORDINATES ESTABLISHED BY NCDOT FOR MONUMENT "990150 BL-2" WITH NAD 83/NSRS 2007 STATE PLANE GRID COORDINATES OF NORTHING: 830908.3900(ft) EASTING: 978805.3930(ft) ELEVATION: 3103.52(ft)
THE AVERAGE COMBINED GRID FACTOR USED ON THIS PROJECT (GROUND TO GRID) IS: 0.999809971
THE N.C. LAMBERT GRID BEARING AND LOCALIZED HORIZONTAL GROUND DISTANCE FROM "990150 BL-2" TO -L- STATION 11+55.00 IS N 87° 8' 51.4" W 171.84 ft
ALL LINEAR DIMENSIONS ARE LOCALIZED HORIZONTAL DISTANCES
VERTICAL DATUM USED IS NAVD 88

STRUCTURE: 990150
COUNTY: YANCEY

BRIDGE APPROACH SLABS

10/1/2013
R:\Roadside\150_reu_psh_s4.dgn
Moffatt Nichol

8/17/99

REVISIONS

PROJECT REFERENCE NO.	SHEET NO.
17.BP.13.R.82	EC-5\CONST-4
R/W SHEET NO.	

KCI Engineers • Planners • Scientists • Construction Managers
4601 Six Forks Road, Landmark Center II, Suite 220
Raleigh, NC 27609-5210
Phone (919) 783-9214 • Fax (919) 783-9266
http://www.kci.com

moffatt & nichol
1616 EAST MILLBROOK ROAD, SUITE 160
RALEIGH, NORTH CAROLINA 27609
(919) 781-4626 VOICE (919) 781-4869 FAX

NAD 83/NSRS 2007

FOR -L- PROFILE, SEE SHEET 5

DETAIL A
CUT DITCH
(Not to Scale)

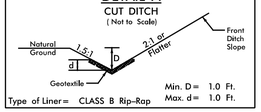

Min. D = 1.0 Ft.
Max. d = 1.0 Ft.
Type of Liner = CLASS B Rip-Rap

FROM STA. 10+40 TO STA. 11+30 RT -DET-

DETAIL B
TOE PROTECTION
(Not to Scale)

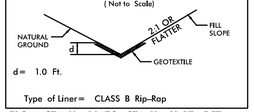

d = 1.0 Ft.
Type of Liner = CLASS B Rip-Rap

FROM STA. 11+30 TO STA. 11+81 RT -DET-
FROM STA. 11+00 TO STA. 11+25 LT -DET-
FROM STA. 11+60 TO STA. 11+80 LT -DET-

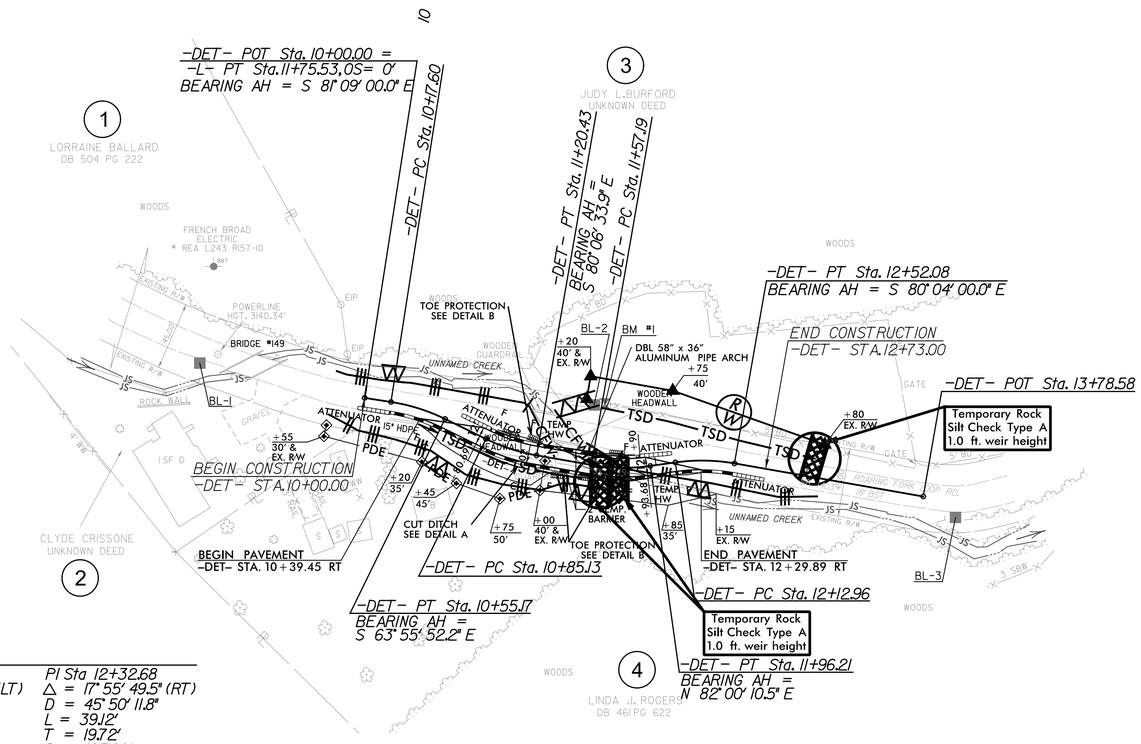

-DET-			
PI Sta 10+79.46	PI Sta 11+02.90	PI Sta 11+76.86	PI Sta 12+32.68
△ = 10° 39' 00.0" (LT)	△ = 16° 10' 41.8" (LT)	△ = 17° 53' 15.5" (LT)	△ = 17° 55' 49.5" (RT)
D = 20° 00' 00.0"	D = 45° 50' 11.8"	D = 45° 50' 11.8"	D = 45° 50' 11.8"
L = 53.25'	L = 35.30'	L = 39.02'	L = 39.12'
T = 26.70'	T = 17.77'	T = 19.67'	T = 19.72'
R = 286.48'	R = 125.00'	R = 125.00'	R = 125.00'

DETOUR

UTILITY OWNERS

FRENCH BROAD ELECTRIC
381 CRIMSON LAUREL WAY
PO BOX 43
BAKERSVILLE, NC 28705

FRONTIER COMMUNICATIONS
15 SOUTH MAIN STREET
WEAVERVILLE, NC 28787

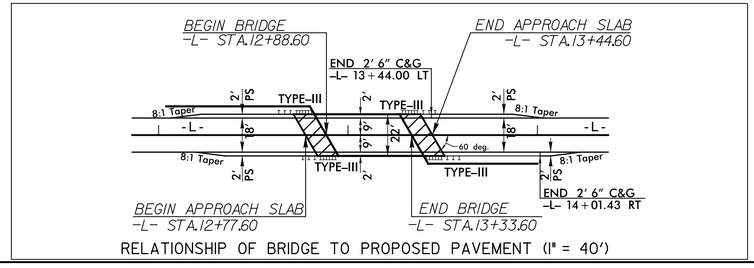

RELATIONSHIP OF BRIDGE TO PROPOSED PAVEMENT (1" = 40')

BRIDGE APPROACH SLABS

10/1/2013
R:\Roadside\150_reu_psh_s5.dgn
(Moffatt Nichol)

8/17/99

REVISIONS

PROJECT REFERENCE NO.	SHEET NO.
17BP.13.R.82	EC-6\CONST-4
R/W SHEET NO.	

KCI
Engineers • Planners • Scientists • Construction Managers
4601 Six Forks Road, Landmark Center II, Suite 220
Raleigh, NC 27609-5210
Phone (919) 783-9214 • Fax (919) 783-9266

moffatt & nichol
1616 EAST MILLBROOK ROAD, SUITE 160
RALEIGH, NORTH CAROLINA 27609
(919) 781-4626 VOICE (919) 781-4869 FAX

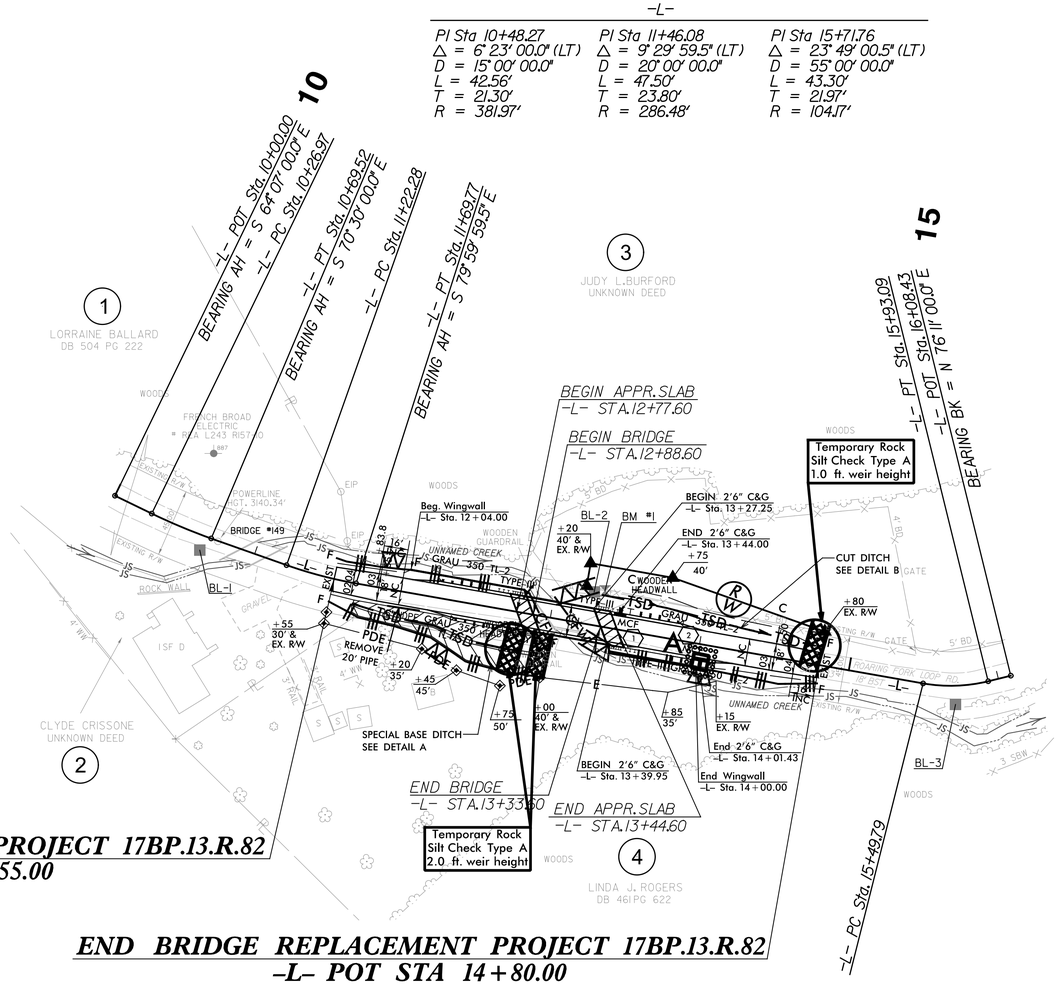

FOR -L- PROFILE, SEE SHEET 5

DETAIL A
SPECIAL CUT BASE DITCH
(Not to Scale)

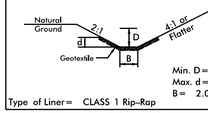

Min. D= 1.0 Ft.
Max. d= 2.0 Ft.
B= 2.0 Ft.
Type of Liner= CLASS 1 Rip-Rap
FROM STA. 11+60 TO STA. 12+97.1 RT

DETAIL B
CUT DITCH
(Not to Scale)

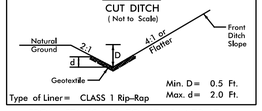

Min. D= 0.5 Ft.
Max. d= 2.0 Ft.
Type of Liner= CLASS 1 Rip-Rap
FROM STA. 13+30 TO STA. 14+70 LT

BEGIN BRIDGE REPLACEMENT PROJECT 17BP.13.R.82
-L- POC STA 11+55.00

END BRIDGE REPLACEMENT PROJECT 17BP.13.R.82
-L- POT STA 14+80.00

UTILITY OWNERS

FRENCH BROAD ELECTRIC
381 CRIMSON LAUREL WAY
PO BOX 45
BAKERSVILLE, NC 28705

FRONTIER COMMUNICATIONS
15 SOUTH MAIN STREET
WEAVERVILLE, NC 28787

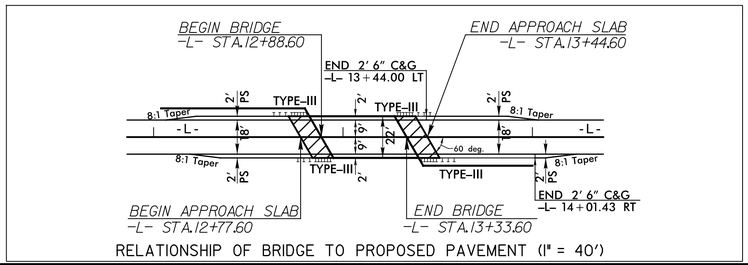

RELATIONSHIP OF BRIDGE TO PROPOSED PAVEMENT (1" = 40')

BRIDGE APPROACH SLABS

10/1/2013
R:\Projects\17bp13r82\roadway\sheets\17bp13r82_rev_psh_s6.dgn
Moffatt Nichol

6/2/99

BRIDGE 990150

PROJECT REFERENCE NO.	SHEET NO.
17BP.13.R.82	RF-1

KCI Engineers • Planners • Scientists • Construction Managers
4601 Six Forks Road, Landmark Center II, Suite 220
Raleigh, NC 27609-5210
http://www.kci.com
Phone (919) 783-9214 • Fax (919) 783-9266

moffatt & nichol
1616 EAST MILLBROOK ROAD, SUITE 160
RALEIGH, NORTH CAROLINA 27609
(919) 781-4626 VOICE (919) 781-4869 FAX

REFORESTATION DETAIL SHEET

N.C.D.O.T. - ROADSIDE ENVIRONMENTAL UNIT

PLANTING DETAILS

SEEDLING / LINER BAREROOT PLANTING DETAIL

HEALING IN

1. Locate a healing-in site in a shady, well protected area.
2. Excavate a flat bottom trench 12 inches deep and provide drainage.

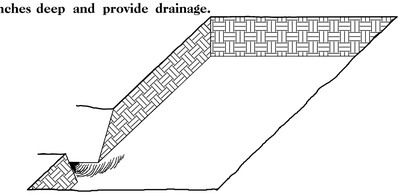

3. Backfill the trench with 2 inches well rotted sawdust. Place a 2 inch layer of well rotted sawdust at a sloping angle at one end of the trench.

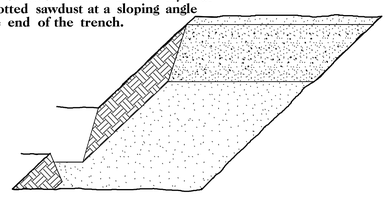

4. Place a single layer of plants against the sloping end so that the root collar is at ground level.

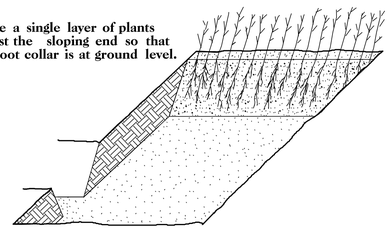

5. Place a 2 inch layer of well rotted sawdust over the roots maintaining a sloping angle.

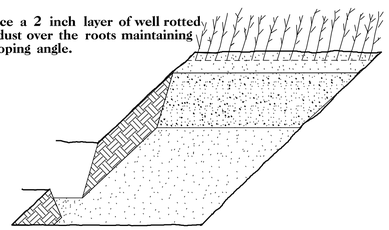

6. Repeat layers of plants and sawdust as necessary and water thoroughly.

DIBBLE PLANTING METHOD
USING THE KBC PLANTING BAR

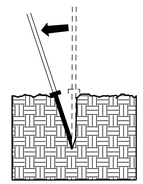

1. Insert planting bar as shown and pull handle toward planter.

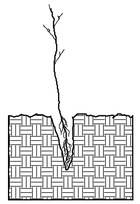

2. Remove planting bar and place seedling at correct depth.

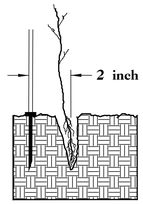

3. Insert planting bar 2 inches toward planter from seedling.

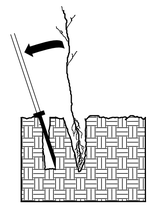

4. Pull handle of bar toward planter, firming soil at bottom.

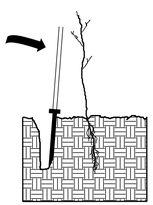

5. Push handle forward firming soil at top.

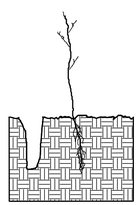

6. Leave compaction hole open. Water thoroughly.

PLANTING NOTES:

PLANTING BAG
During planting, seedlings shall be kept in a moist canvas bag or similar container to prevent the root systems from drying.



KBC PLANTING BAR
Planting bar shall have a blade with a triangular cross section, and shall be 12 inches long, 4 inches wide and 1 inch thick at center.



ROOT PRUNING
All seedlings shall be root pruned, if necessary, so that no roots extend more than 10 inches below the root collar.

REFORESTATION

☐ TREE REFORESTATION SHALL BE PLANTED 6 FT. TO 10 FT. ON CENTER, RANDOM SPACING, AVERAGING 8 FT. ON CENTER, APPROXIMATELY 680 PLANTS PER ACRE.

REFORESTATION

MIXTURE, TYPE, SIZE, AND FURNISH SHALL CONFORM TO THE FOLLOWING:

25% LIRIODENDRON TULIPIFERA	TULIP POPLAR	12 in – 18 in BR
25% PLATANUS OCCIDENTALIS	SYCAMORE	12 in – 18 in BR
25% FRAXINUS PENNSYLVANICA	GREEN ASH	12 in – 18 in BR
25% BETULA NIGRA	RIVER BIRCH	12 in – 18 in BR

10/1/2013
H:\Projects\Roadside\150_reu_det_rf1.dgn
Moffatt Nichol

STATE OF NORTH CAROLINA
DIVISION OF HIGHWAYS

CROSS-SECTION SUMMARY

PROJ. REFERENCE NO.	SHEET NO.
17BP.13.R.82	X-1A

Approximate quantities only. Unclassified excavation, borrow excavation, fine grading, clearing and grubbing, and removal of existing pavement will be paid for at the contract lump sum price for "Grading".

Station L	Uncl. Exc. (cu. yd.)	Embt (cu. yd.)
11+55.00	0	0
11+75.00	4	0
12+00.00	8	2
12+25.00	12	8
12+50.00	36	19
12+75.00	60	33
12+88.60	34	23
12+97.10	22	0

Station L	Uncl. Exc. (cu. yd.)	Embt (cu. yd.)
13+33.60	0	0
13+50.00	7	28
13+75.00	12	36
14+00.00	8	24
14+25.00	3	12
14+50.00	3	4
14+75.00	2	2
14+80.00	0	0

DETOUR REMOVAL

Station L	Uncl. Exc. (cu. yd.)	Embt (cu. yd.)
13+00.00	0	0
13+25.00	32	0
13+50.00	41	0
13+75.00	20	0

Station Det	Uncl. Exc. (cu. yd.)	Embt (cu. yd.)
10+39.45	0	0
10+50.00	1	0
10+60.00	2	0
10+70.00	6	0
10+80.00	12	0
10+90.00	18	0
11+00.00	23	0
11+10.00	25	1
11+20.00	18	1
11+30.00	6	3
11+40.00	0	8
11+50.00	0	13
11+60.00	0	15
11+70.00	0	15
11+80.00	0	13
11+90.00	0	10
12+00.00	0	5
12+10.00	1	1
12+20.00	1	0
12+29.89	1	0

PROJ. REFERENCE NO.	SHEET NO.
17BP.13.R.82	X-1

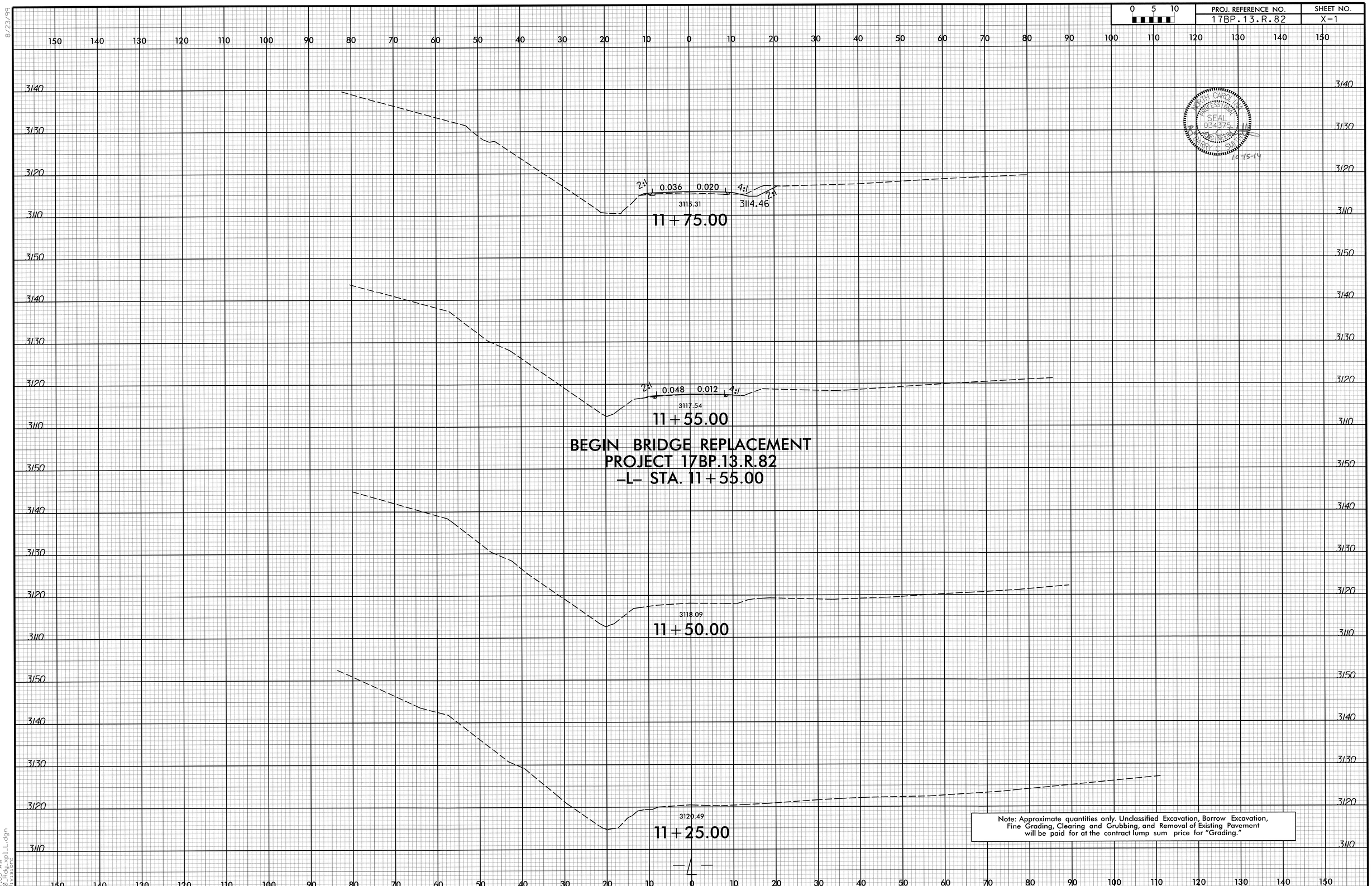

Note: Approximate quantities only. Unclassified Excavation, Borrow Excavation, Fine Grading, Clearing and Grubbing, and Removal of Existing Pavement will be paid for at the contract lump sum price for "Grading."

8/23/99

11:17:03 AM
150_Rdy_xpl_L.dgn
Division:

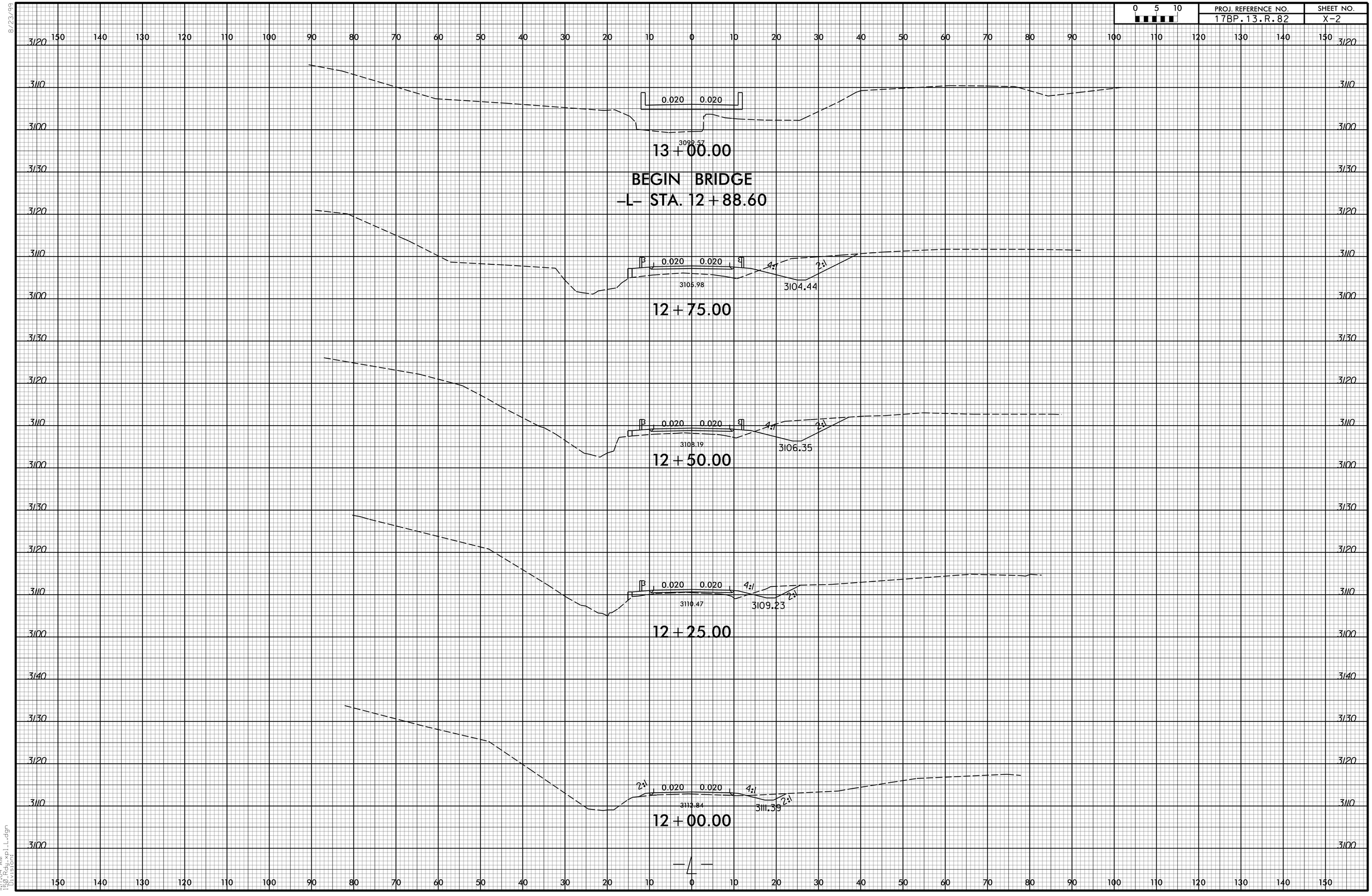

8/23/99

11:17:04 AM
150_Rdy_xpl_L.dgn
Division:

PROJ. REFERENCE NO.	SHEET NO.
17BP.13.R.82	X-3

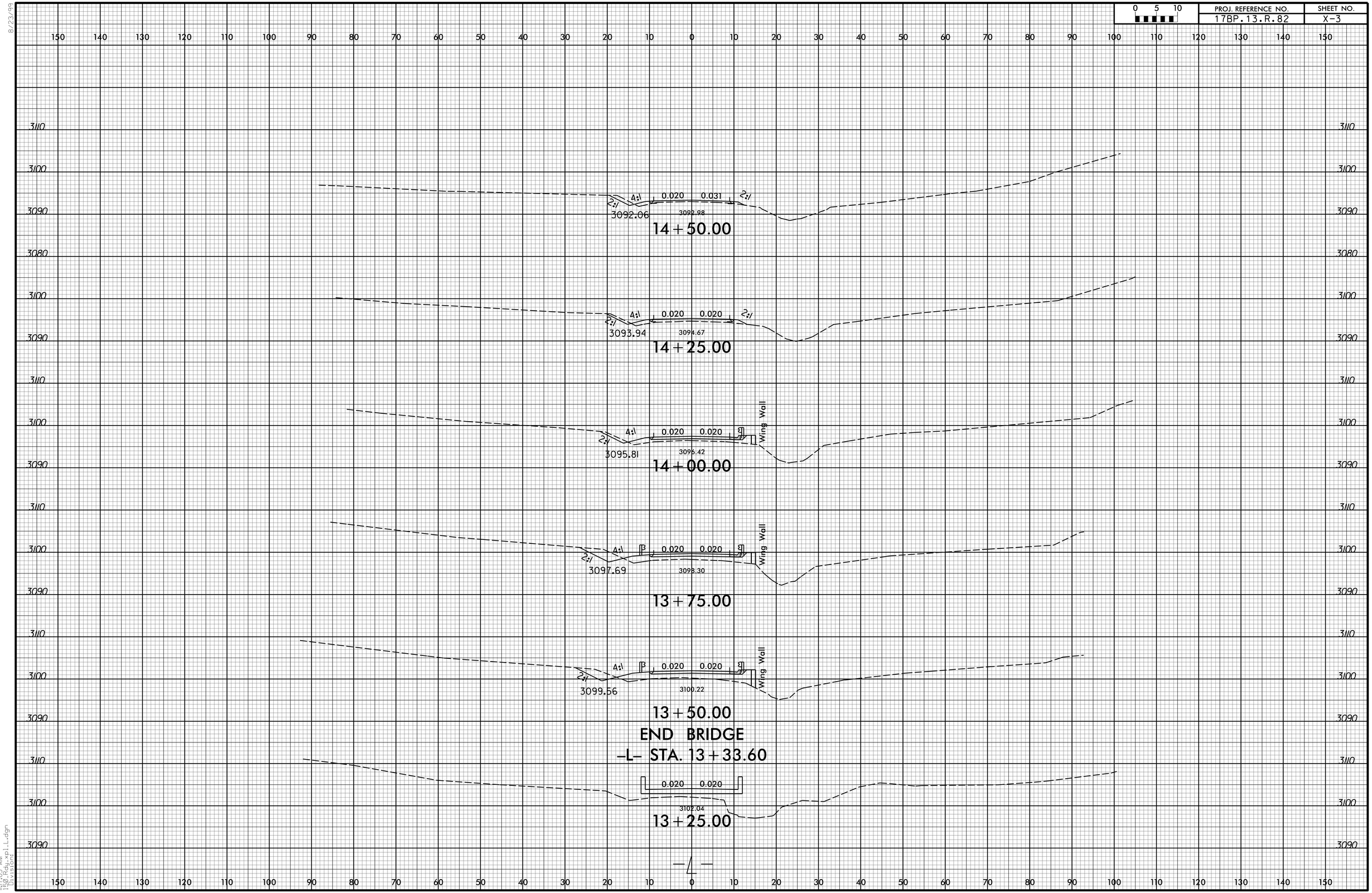

8/23/99

11:17:05 AM
150_Rdy_xpl_L.dgn
Division:

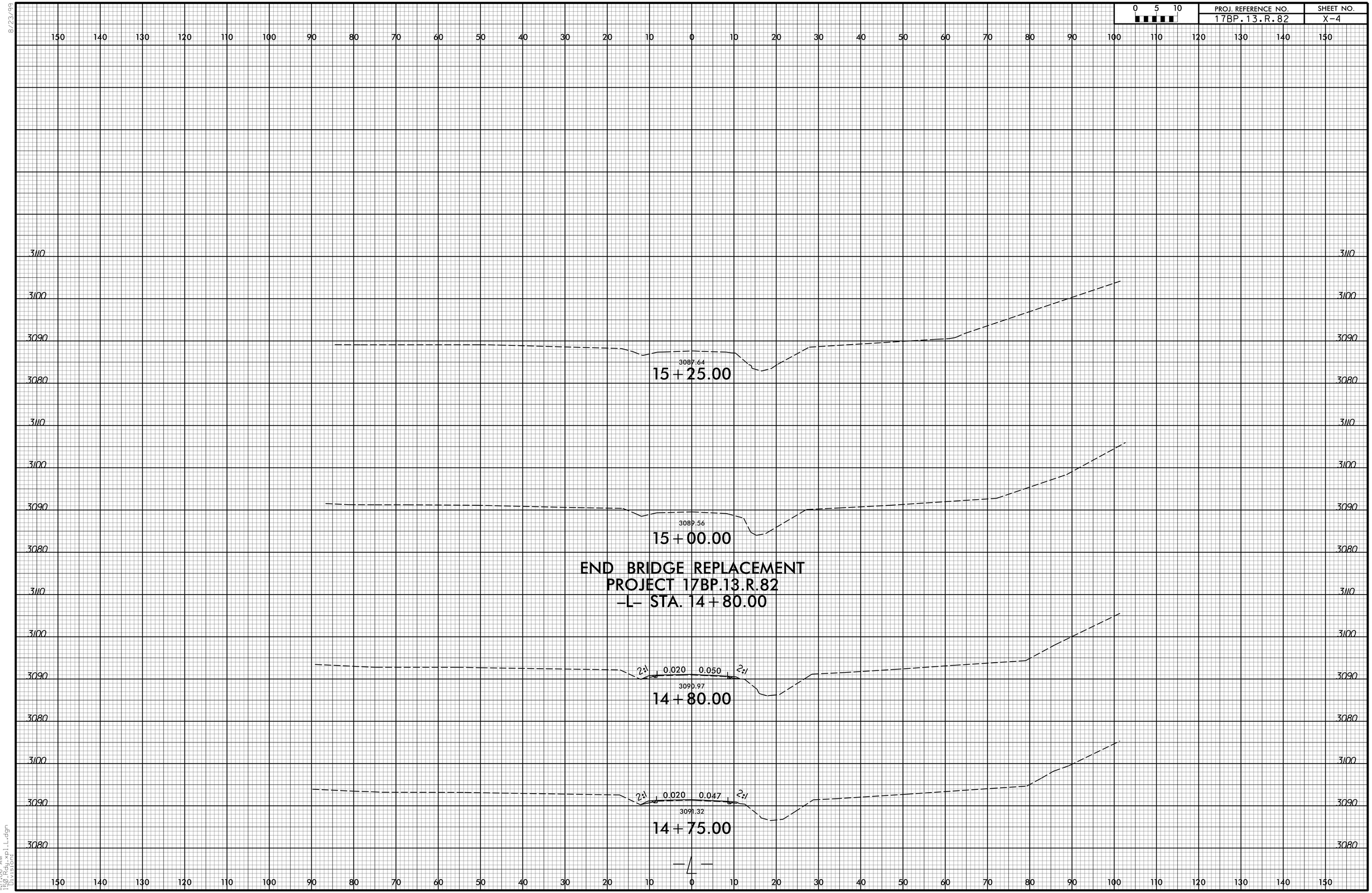

PROJ. REFERENCE NO.
17BP.13.R.82
SHEET NO.
X-4
0 5 10
3087.64
15+25.00
3089.56
15+00.00
END BRIDGE REPLACEMENT
PROJECT 17BP.13.R.82
-L- STA. 14+80.00
2:1
0.020
0.050
2:1
3090.97
14+80.00
2:1
0.020
0.047
2:1
3091.32
14+75.00
-L-

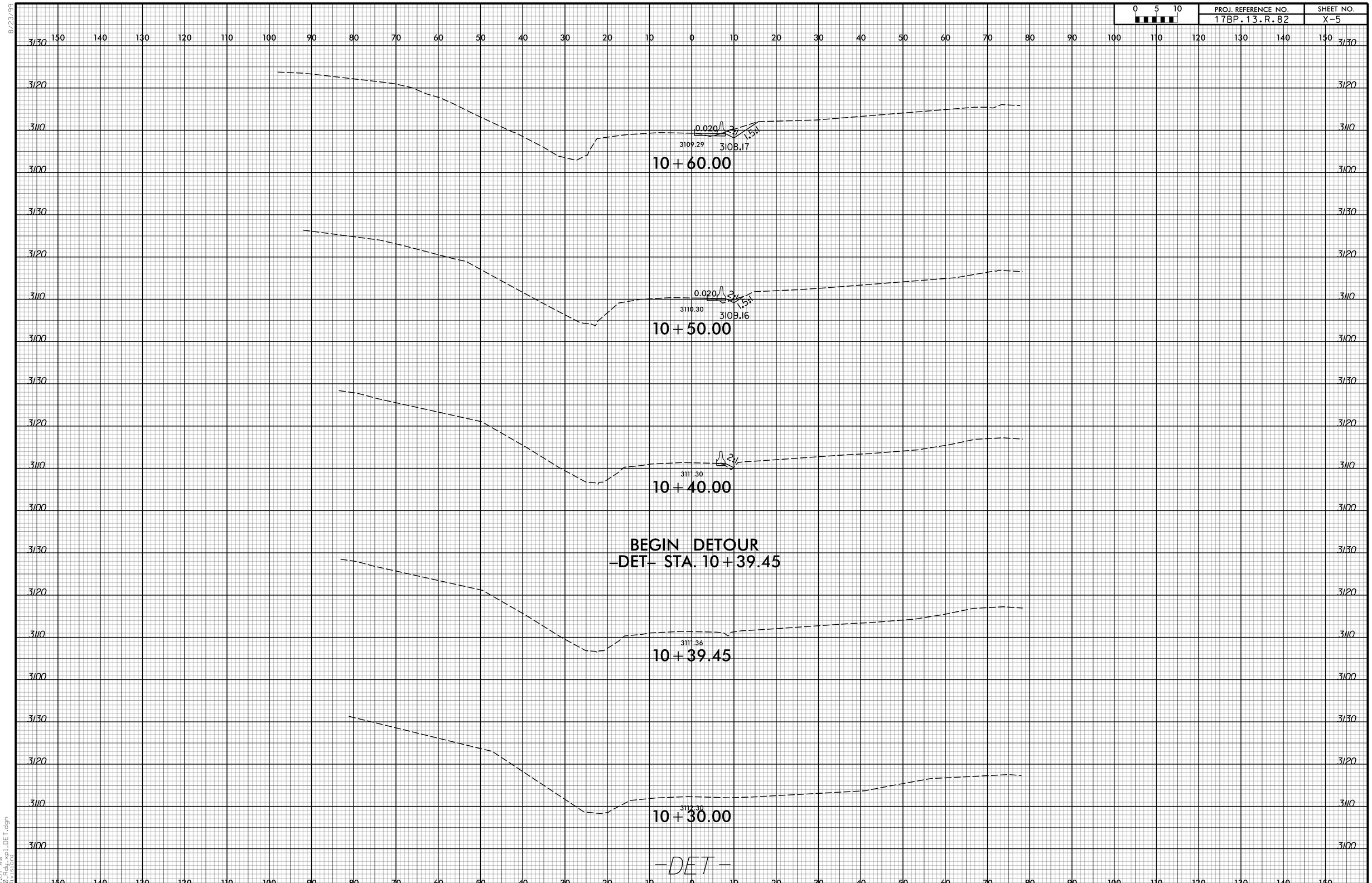

8/23/99

11:17:07 AM
150_Rdy_xpl_DET.dgn
Division:

PROJ. REFERENCE NO.	SHEET NO.
17BP.13.R.82	X-6

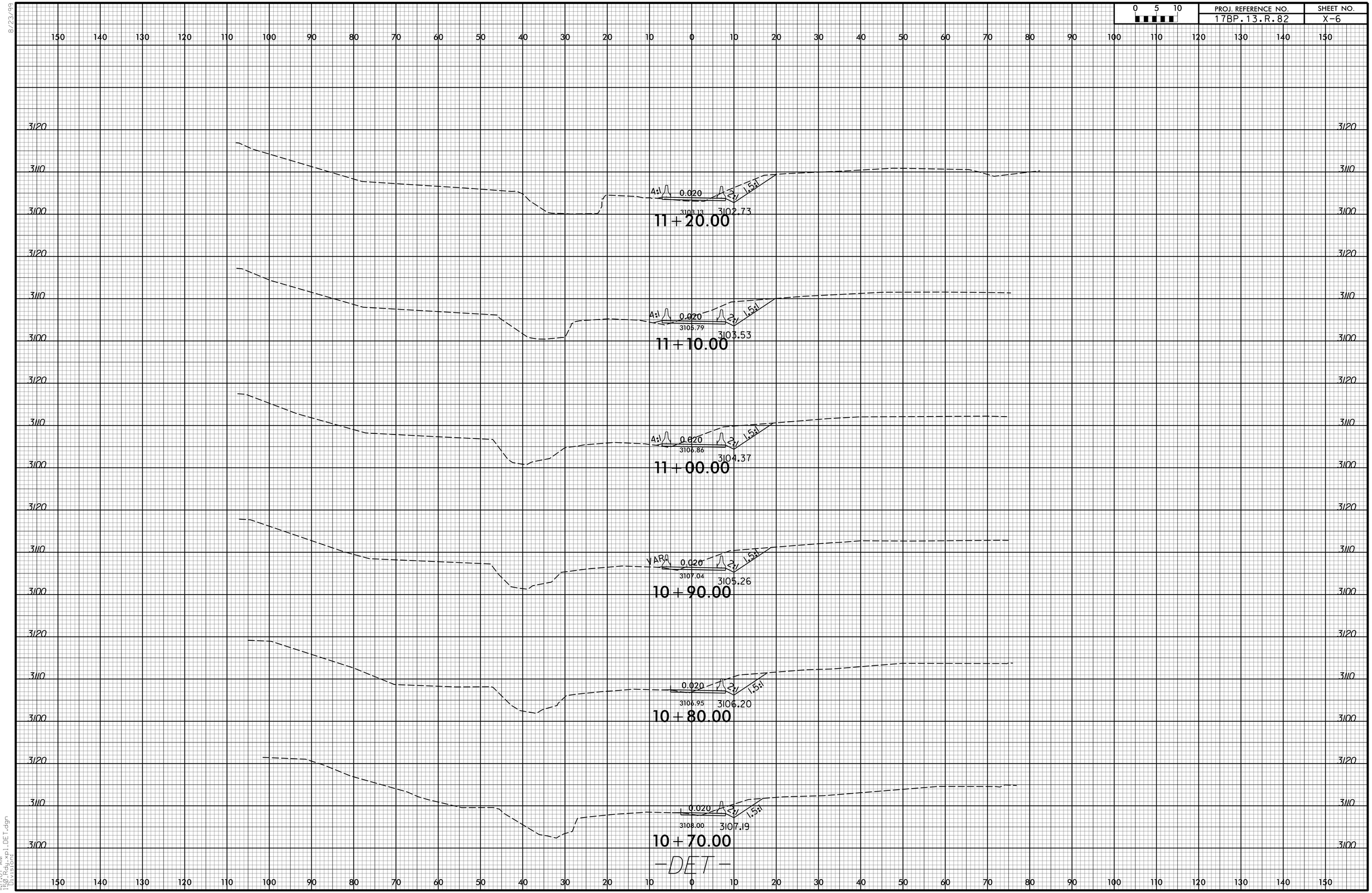

8/23/99

11:17:07 AM
150_Rdy_xpl_DET.dgn
Division:

PROJ. REFERENCE NO.	SHEET NO.
17BP.13.R.82	X-7

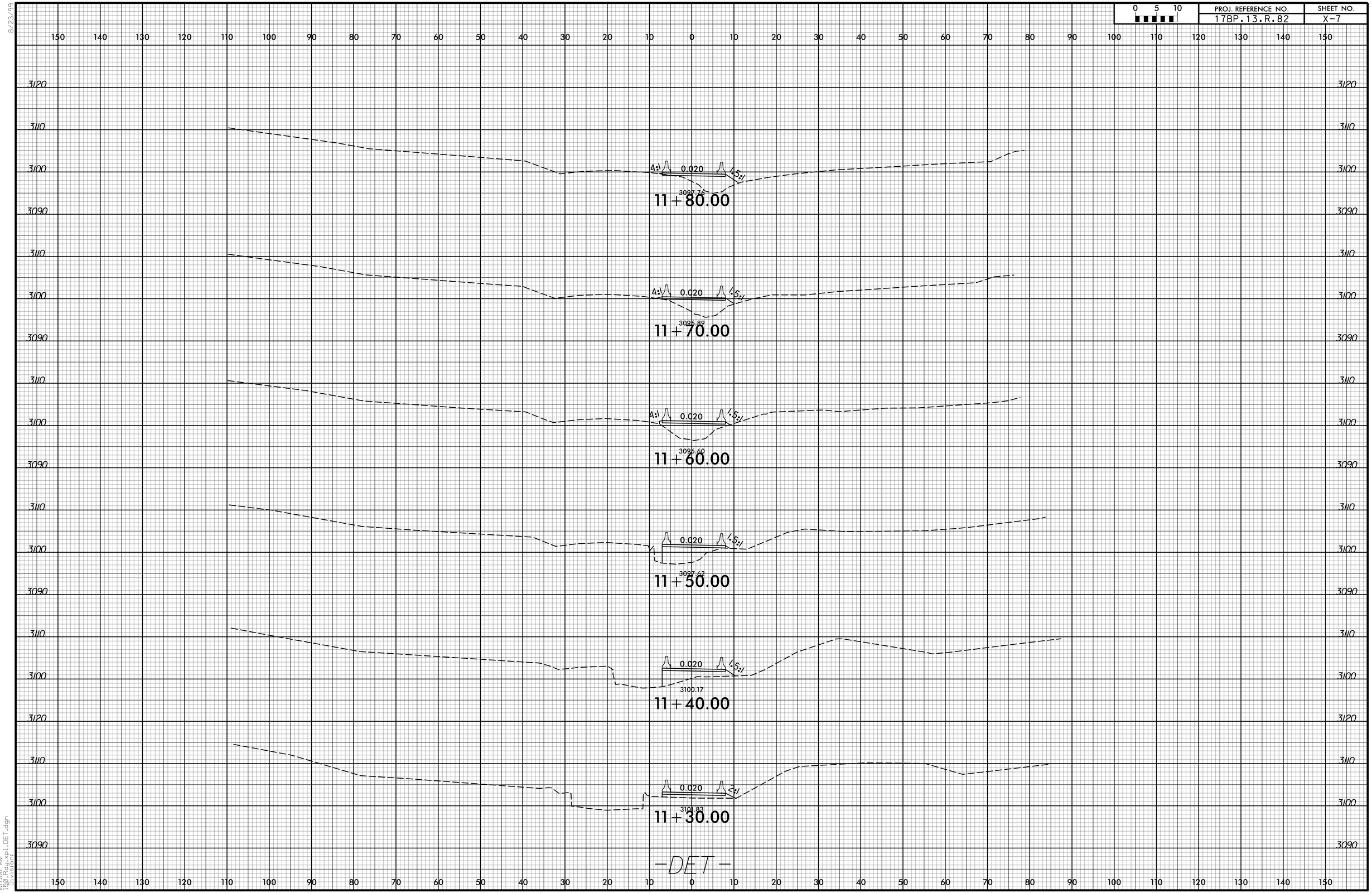

8/23/99

11:17:08 AM
150_Rdy_xpl_DET.dgn
Division:

PROJ. REFERENCE NO.	SHEET NO.
17BP.13.R.82	X-8

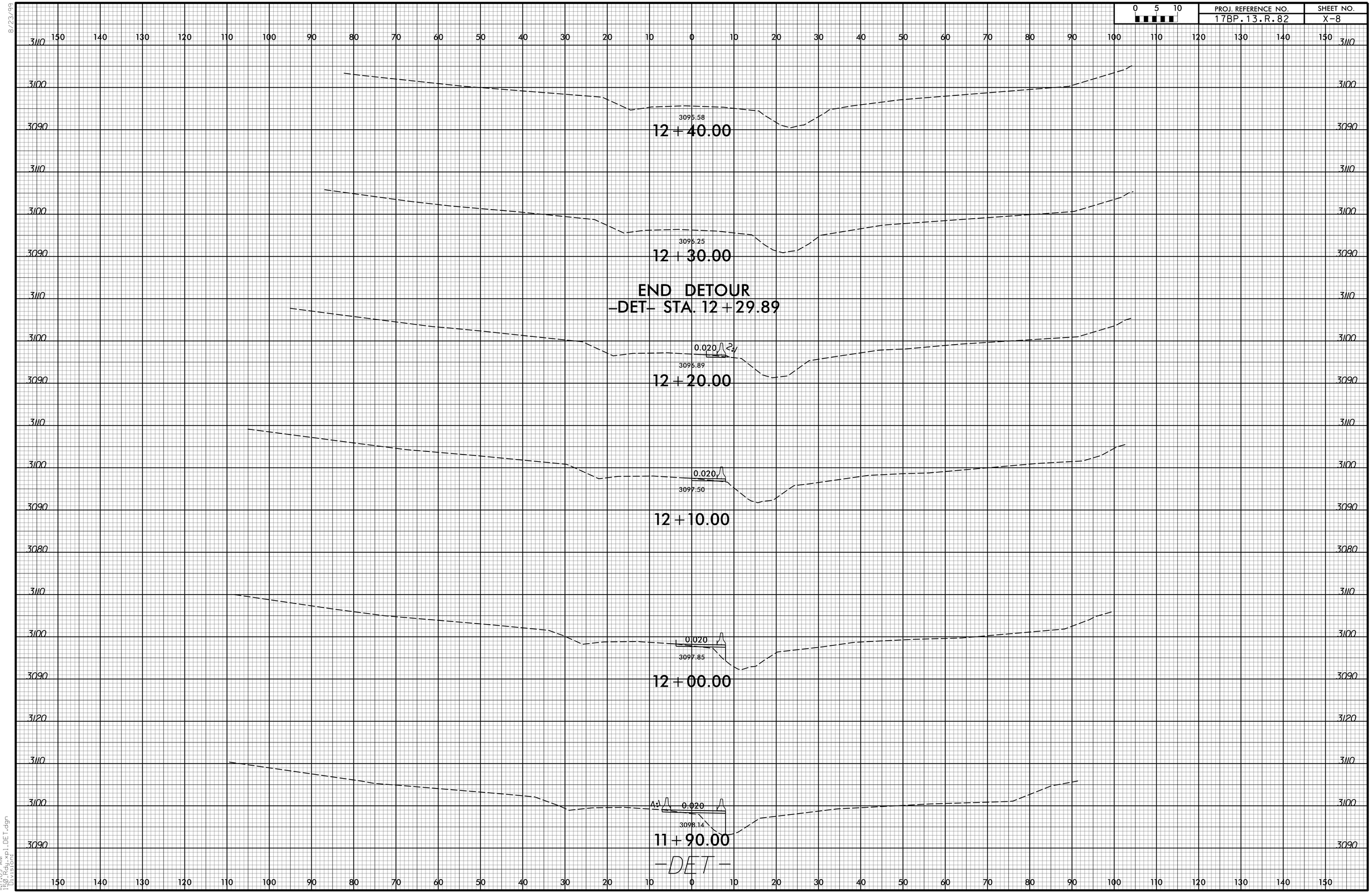

8/23/99

11:17:09 AM
150_Rdy_xpl_DET.dgn
Division:

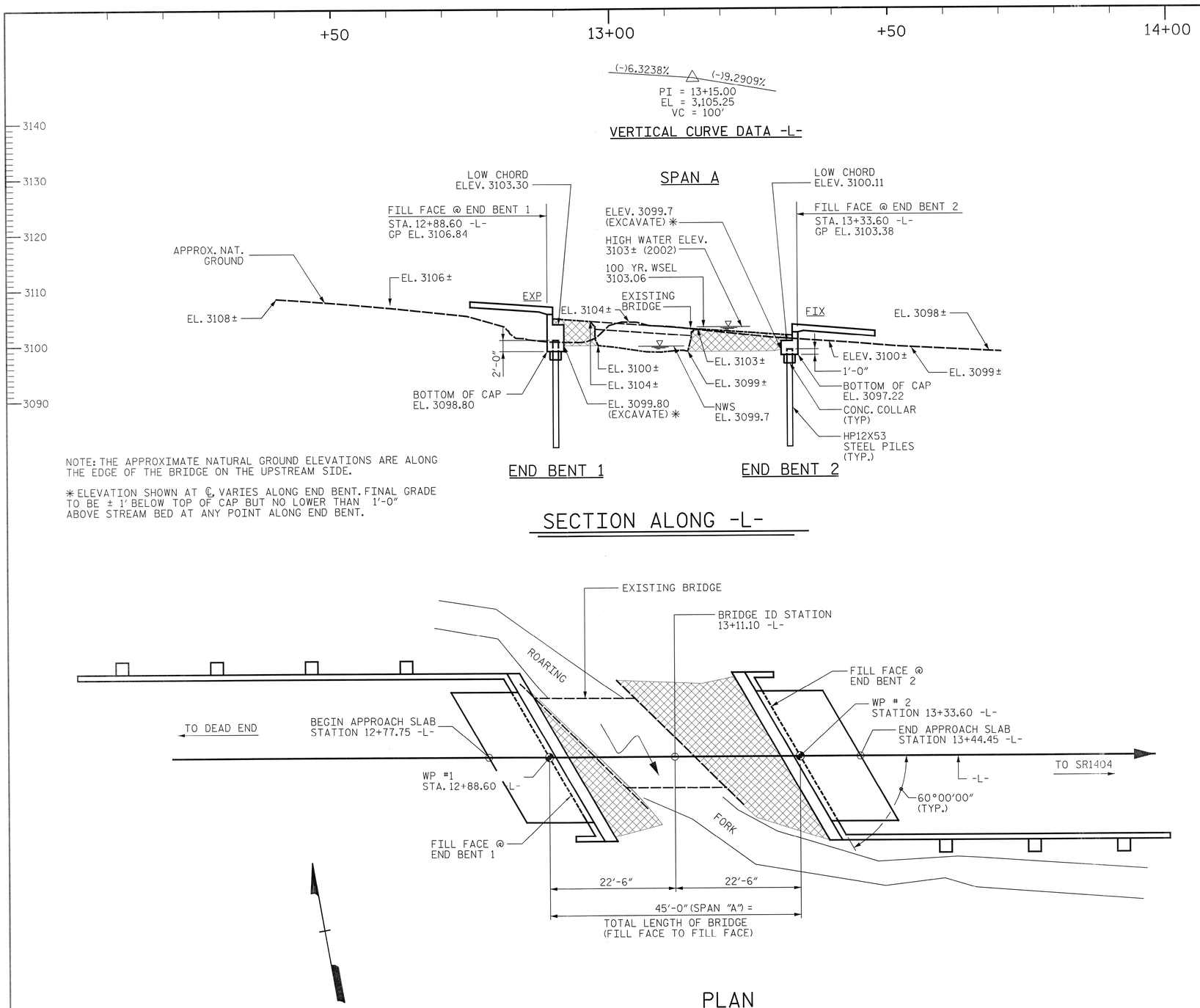

NOTE: THE APPROXIMATE NATURAL GROUND ELEVATIONS ARE ALONG THE EDGE OF THE BRIDGE ON THE UPSTREAM SIDE.

* ELEVATION SHOWN AT ℄, VARIES ALONG END BENT. FINAL GRADE TO BE ± 1' BELOW TOP OF CAP BUT NO LOWER THAN 1'-0" ABOVE STREAM BED AT ANY POINT ALONG END BENT.

SECTION ALONG -L-



UNCLASSIFIED STRUCTURE EXCAVATION (SEE NOTES)

BRIDGE HYDRAULIC DATA		
DESIGN DISCHARGE	= 260	CFS
DESIGN FREQUENCY	= 25	YRS
DESIGN HW ELEVATION	= 3102.6	FT
DRAINAGE AREA	= 0.94	SQ.MI.
BASE DISCHARGE	= 410	CFS
BASE FREQUENCY	= 100	YRS
BASE HW ELEVATION	= 3103.06	FT
OVERTOPPING DISCHARGE	= 520	CFS
OVERTOPPING FREQUENCY	= 200+/-	YRS
OVERTOPPING ELEVATION	= 3103.9	FT

PLAN

(PILES NOT SHOWN IN PLAN VIEW)

PROJECT NO. 17BP.13.R.82

YANCEY COUNTY

STATION: 13+11.10 -L-

SHEET 1 OF 4 REPLACES BRIDGE NO. 150

STATE OF NORTH CAROLINA
DEPARTMENT OF TRANSPORTATION
RALEIGH

GENERAL DRAWING FOR BRIDGE ON SR1403 OVER ROARING FORK BETWEEN DEAD END AND SR1404

NORTH CAROLINA PROFESSIONAL SEAL 14114 ENGINEER ROBERT C. LARSON

1/9/14

KCI Associates of North Carolina, P.A.
SUITE 220, LANDMARK CENTER II
4601 SIX FORKS RD.
RALEIGH, N.C. 27609-5210
(919) 783-7824
ENGINEERS & PLANNERS & ECOLOGISTS
LICENSE NUMBER C-0784

DWG. REF. NO. 1 OF 24

REVISIONS						SHEET NO.
NO.	BY:	DATE:	NO.	BY:	DATE:	
1			3			TOTAL SHEETS
2			4			

DESIGN ENGINEER OF RECORD: DATE: 1/9/14

DRAWN BY: R. C. LARSON DATE: 10/18/12

CHECKED BY: E. R. PHIPPS DATE: 10/24/12

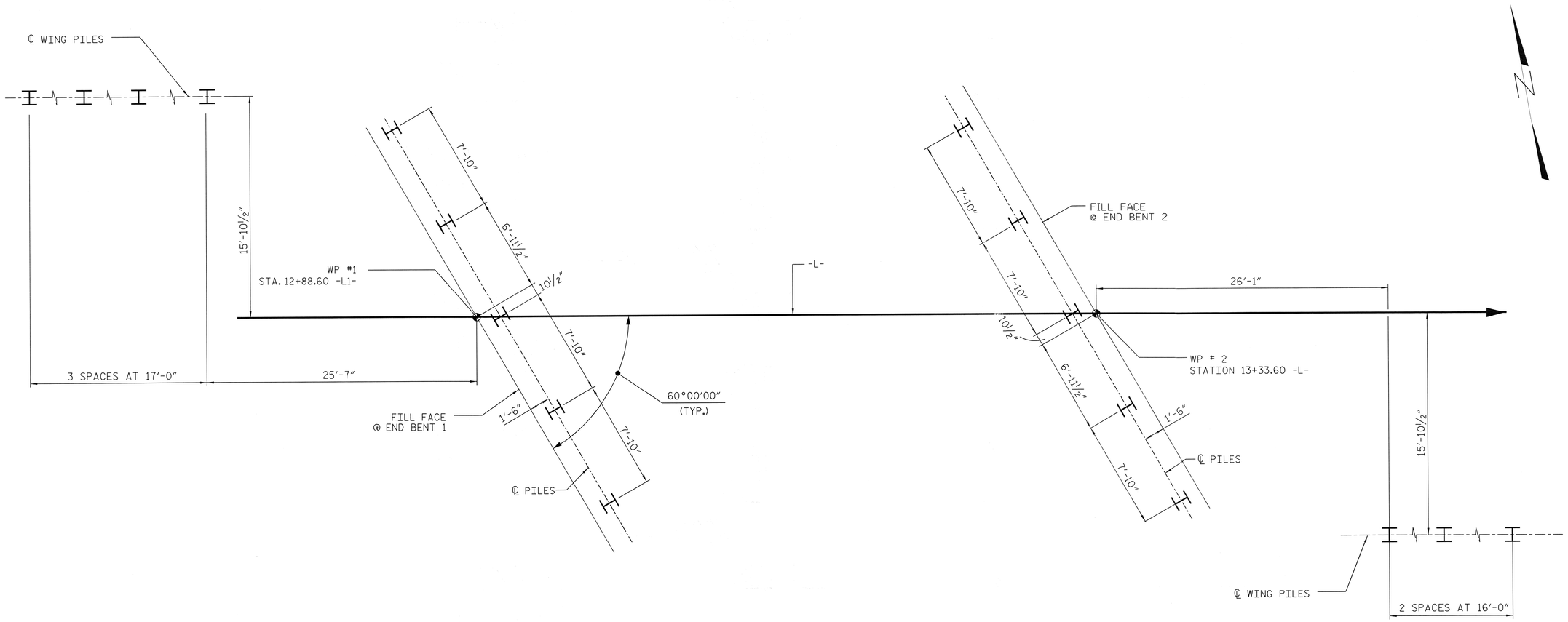

FOUNDATION LAYOUT PLAN

(ALL PILES ARE VERTICAL HP 12X53)

FOUNDATION NOTES

FOR PILES, SEE SECTION 450 OF THE STANDARD SPECIFICATIONS.

PILES AT END BENTS 1 AND 2 ARE DESIGNED FOR A FACTORED RESISTANCE OF 55 TONS PER PILE.

DRIVE PILES AT END BENTS 1 AND 2 TO A REQUIRED DRIVING RESISTANCE OF 95 TONS PER PILE.

STEEL H-PILE POINTS ARE REQUIRED FOR STEEL H-PILES AT END BENT 1 AND END BENT 2. FOR STEEL PILE POINTS, SEE SECTION 450 OF THE STANDARD SPECIFICATIONS.

TESTING THE FIRST PRODUCTION PILE WITH THE PDA DURING DRIVING, RESTRIKING OR REDRIVING MAY BE REQUIRED. THE ENGINEER WILL DETERMINE THE NEED FOR PDA TESTING. FOR PDA TESTING, SEE SECTION 450 OF THE STANDARD SPECIFICATIONS AND FOR PILE DRIVING CRITERIA, SEE PILE DRIVING CRITERIA PROVISION.

PILE EXCAVATOIN IS REQUIRED AT END BENT 2 DUE TO THE PRESENCE OF BOULDERS. AT END BENT 2 (LEFT), DRIVE PILES TO REFUSAL AFTER PILE EXCAVATION THROUGH THE BOULDER LAYER. AT END BENT 2 (RIGHT), BEDROCK WAS ENCOUNTERED BELOW THE BOULDER LAYER. PILE EXCAVATION THROUGH THE BOULDER LAYER AND INTO BEDROCK IS REQUIRED.

PILE EXCAVATION IS REQUIRED TO INSTALL PILES AT END BENT 2 (LEFT). EXCAVATE HOLES AT PILE LOCATIONS TO ELEVATION 3,092 FT. FOR PILE EXCAVATION, SEE SECTION 450 OF THE STANDARD SPECIFICATIONS.

PILE EXCAVATION IS REQUIRED TO INSTALL PILES AT END BENT 2 (RIGHT). EXCAVATE HOLES AT PILE LOCATIONS TO ELEVATION 3,087 FT. FOR PILE EXCAVATION, SEE SECTION 450 OF THE STANDARD SPECIFICATIONS.

CONCRETE IS REQUIRED TO FILL HOLES FOR PILE EXCAVATION AT END BENT 2.

PROJECT NO. 17BP.13.R.82
YANCEY COUNTY
STATION: 13+11.10 -L-

SHEET 2 OF 4

STATE OF NORTH CAROLINA
DEPARTMENT OF TRANSPORTATION
RALEIGH

GENERAL DRAWING FOR BRIDGE ON SR1403 OVER ROARING FORK BETWEEN DEAD END AND SR1404

NORTH CAROLINA PROFESSIONAL SEAL 14114 ENGINEER ROBERT C. LARSON
10/8/13

DESIGN ENGINEER OF RECORD:	DATE : 10/8/13
DRAWN BY : R.A. PRUETT	DATE : 10/18/12
CHECKED BY : R. C. LARSON	DATE : 3/27/13

KCI Associates of North Carolina, P.A.
SUITE 220, LANDMARK CENTER II
4601 ON FORKS RD.
RALEIGH, N.C. 27609-1200
(919) 783-9104
RALEIGH OFFICE
ENGINEERS • PLANNERS • ECOLOGISTS
LICENSE NUMBER C-0784

DWG. REF. NO. 2 OF 24

REVISIONS						SHEET NO.
NO.	BY:	DATE:	NO.	BY:	DATE:	
1			3			TOTAL SHEETS
2			4			

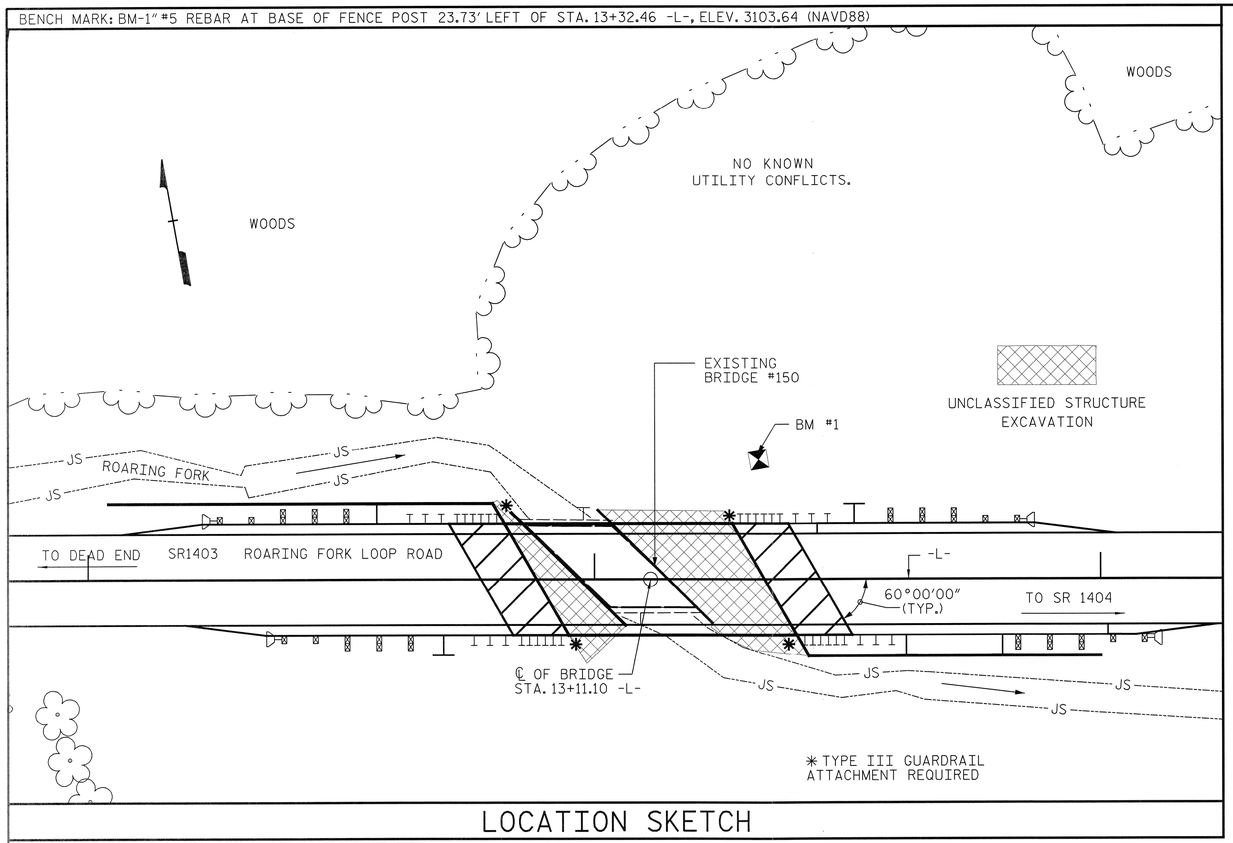

LOCATION SKETCH

NOTES:

ASSUMED LIVE LOAD = HL-93 OR ALTERNATE LOADING.

FOR OTHER DESIGN DATA AND GENERAL NOTES, SEE SHEET SN.

FOR EROSION CONTROL MEASURES SEE EROSION CONTROL PLANS.

THIS BRIDGE HAS BEEN DESIGNED IN ACCORDANCE WITH THE AASHTO LRFD BRIDGE DESIGN SPECIFICATIONS.

ALL STRUCTURAL STEEL SHALL BE AASHTO M270 GRADE 50 AND GALVANIZED IN ACCORDANCE WITH SECTION 1076 OF THE STANDARD SPECIFICATIONS UNLESS OTHERWISE NOTED ON THE PLANS. FOR GALVANIZING STRUCTURAL STEEL SEE SPECIAL PROVISIONS.

REMOVABLE FORMS MAY BE USED IN LIEU OF METAL STAY-IN-PLACE FORMS IN ACCORDANCE WITH ARTICLE 420-3 OF THE STANDARD SPECIFICATIONS.

THE EXISTING STRUCTURE CONSISTING OF 1 @ 18'-6" SPAN TIMBER FLOOR ON TIMBER JOISTS ON TIMBER ABUTMENTS, WITH 15.67' CLEAR ROADWAY WIDTH AND LOCATED AT THE PROPOSED STRUCTURE SHALL BE REMOVED. THE EXISTING BRIDGE IS PRESENTLY POSTED BELOW THE LEGAL LOAD LIMIT. SHOULD THE STRUCTURAL INTEGRITY OF THE BRIDGE FURTHER DETERIORATE, THIS LOAD LIMITATION MAY BE REDUCED AS FOUND NECESSARY DURING THE LIFE OF THE PROJECT.

REMOVAL OF THE EXISTING BRIDGE SHALL BE PERFORMED SO AS NOT TO ALLOW DEBRIS TO FALL INTO THE WATER. THE CONTRACTOR SHALL REMOVE THE BRIDGE AND SUBMIT PLANS FOR DEMOLITION IN ACCORDANCE WITH ARTICLE 402-2 OF THE STANDARD SPECIFICATIONS.

THE MATERIAL SHOWN IN THE CROSS-HATCHED AREA SHALL BE EXCAVATED FOR A DISTANCE OF 15 FT. EACH SIDE OF CENTERLINE ROADWAY AS DIRECTED BY THE ENGINEER. THIS WORK WILL BE PAID FOR AT THE CONTRACT LUMP SUM PRICE FOR UNCLASSIFIED STRUCTURE EXCAVATION. SEE SECTION 412 OF THE STANDARD SPECIFICATIONS.

FOR LIMITS OF TEMPORARY SHORING FOR MAINTENANCE OF TRAFFIC, SEE TRAFFIC CONTROL PLANS. FOR PAY ITEM FOR TEMPORARY SHORING FOR MAINTENANCE OF TRAFFIC, SEE ROADWAY PLANS.

THE SUBSTRUCTURE OF THE EXISTING BRIDGE INDICATED ON THE PLANS IS FROM THE BEST INFORMATION AVAILABLE. SINCE THIS INFORMATION IS SHOWN FOR THE CONVENIENCE OF THE CONTRACTOR, THE CONTRACTOR SHALL HAVE NO CLAIM WHATSOEVER AGAINST THE DEPARTMENT OF TRANSPORTATION FOR ANY DELAYS OR ADDITIONAL COST INCURRED BASED ON DIFFERENCES BETWEEN THE EXISTING BRIDGE SUBSTRUCTURE SHOWN ON THE PLANS AND THE ACTUAL CONDITIONS AT THE PROJECT SITE.

THE CLASS AA CONCRETE IN THE BRIDGE DECK SHALL CONTAIN FLY ASH OR GROUND GRANULATED BLAST FURNACE SLAG AT THE SUBSTITUTION RATE SPECIFIED IN ARTICLE 1024-1 AND IN ACCORDANCE WITH ARTICLES 1024-5 AND 1024-6 OF THE STANDARD SPECIFICATIONS. NO PAYMENT WILL BE MADE FOR THIS SUBSTITUTION AS IT IS CONSIDERED INCIDENTAL TO THE COST OF THE REINFORCED CONCRETE DECK SLAB.

THIS STRUCTURE HAS BEEN DESIGNED IN ACCORDANCE WITH "HEC 18 - EVALUATING SCOUR AT BRIDGES."

FOR SUBMITTAL OF WORKING DRAWINGS, SEE SPECIAL PROVISIONS.

FOR FALSEWORK AND FORMWORK, SEE SPECIAL PROVISIONS.

FOR CRANE SAFETY, SEE SPECIAL PROVISIONS.

FOR GROUT FOR STRUCTURES, SEE SPECIAL PROVISIONS.

THIS BRIDGE IS LOCATED IN SEISMIC ZONE 1.

FOR PLACING LOAD ON STRUCTURE MEMBERS, SEE SPECIAL PROVISIONS.

TOTAL BILL OF MATERIAL

	REMOVAL OF EXISTING STRUCTURE	PILE EXCAVATION IN SOIL	PILE EXCAVATION NOT IN SOIL	PDA TESTING	UNCLASSIFIED STRUCTURE EXCAVATION	REINFORCED CONCRETE DECK SLAB	GROOVING BRIDGE FLOORS	CLASS A CONCRETE	BRIDGE APPROACH SLABS	REIN-FORCING STEEL	APPROX. 20,600 LBS. STRUCTURAL STEEL	HP 12 X 53 STEEL PILES		STEEL PILE POINTS	VERTICAL CONCRETE BARRIER RAIL	ELASTOMERIC BEARINGS	FOAM JOINT SEALS
	LUMP SUM	LIN.FT.	LIN.FT.	EACH	LUMP SUM	SQ.FT.	SQ.FT.	CU.YDS.	LUMP SUM	LBS.	LUMP SUM	NO.	LIN.FT.	EACH	LIN.FT.	LUMP SUM	LUMP SUM
SUPERSTRUCTURE						1,033	1,179		LUMP SUM		LUMP SUM				85.20	LUMP SUM	LUMP SUM
END BENT 1								37.8		4,497		9	220	9			
END BENT 2		6	33					24.2		3,290		8	160	8			
TOTAL	LUMP SUM	6	33		LUMP SUM	1,033	1,179	62.0	LUMP SUM	7,787	LUMP SUM	17	380	17	85.20	LUMP SUM	LUMP SUM

PROJECT NO. 17BP.13.R.82

YANCEY COUNTY

STATION: 13+11.10 -L-

SHEET 3 OF 4

NORTH CAROLINA PROFESSIONAL SEAL 14114 ENGINEER ROBERT C. LARSON

1/9/14

STATE OF NORTH CAROLINA
DEPARTMENT OF TRANSPORTATION
RALEIGH

GENERAL DRAWING FOR BRIDGE ON SR1403 OVER ROARING FORK BETWEEN DEAD END AND SR1404

DESIGN ENGINEER OF RECORD: DATE : 1/9/14

DRAWN BY : R. C. LARSON DATE : 10/24/12

CHECKED BY : E. R. PHIPPS DATE : 10/25/12

KCI Associates of North Carolina, P.A.
SUITE 200, LAMBANE CENTER II
4601 DE FORES RD.
RALEIGH, N.C. 27609-5200
(919) 783-9214
ENGINEERS & PLANNERS & ECOLOGISTS
LICENSE NUMBER: C-0754

DWG. REF. NO. 3 OF 24

REVISIONS						SHEET NO.
NO.	BY:	DATE:	NO.	BY:	DATE:	
1			3			TOTAL SHEETS
2			4			

LOAD AND RESISTANCE FACTOR RATING (LRFR) SUMMARY FOR STEEL GIRDERS

LEVEL		VEHICLE	WEIGHT (W) (TONS)	CONTROLLING LOAD RATING (#)	MINIMUM RATING FACTORS (RF)	TONS = W x RF	STRENGTH I LIMIT STATE											SERVICE II LIMIT STATE							COMMENT NUMBER
							LIVE-LOAD FACTORS $\gamma_{(LL)}$	MOMENT					SHEAR					LIVE-LOAD FACTORS $\gamma_{(LL)}$	MOMENT						
								DISTRIBUTION FACTORS (DF)	RATING FACTOR	SPAN	GIRDER LOCATION	DISTANCE FROM LEFT END OF SPAN (ft)	DISTRIBUTION FACTORS (DF)	RATING FACTOR	SPAN	GIRDER LOCATION	DISTANCE FROM LEFT END OF SPAN (ft)		DISTRIBUTION FACTORS (DF)	RATING FACTOR	SPAN	GIRDER LOCATION	DISTANCE FROM LEFT END OF SPAN (ft)	
DESIGN LOAD RATING		HL-93 (INVENTORY)	N/A	1	1.323	N/A	1.75	0.5280	1.392	1	E	20.14	0.5963	1.703	1	I	0.00	1.30	0.5280	1.323	1	E	20.14	
		HL-93 (OPERATING)	N/A		1.719	N/A	1.35	0.5280	1.805	1	E	20.14	0.5963	2.208	1	I	0.00	1.00	0.5280	1.719	1	E	20.14	
		HS-20 (INVENTORY)	36.000	2	2.004	72.14	1.75	0.5280	2.109	1	E	20.14	0.5963	2.790	1	I	0.00	1.30	0.5280	2.004	1	E	20.14	
		HS-20 (OPERATING)	36.000		2.605	93.78	1.35	0.5280	2.734	1	E	20.14	0.5963	3.617	1	I	0.00	1.00	0.5280	2.605	1	E	20.14	
LEGAL LOAD RATING	SINGLE VEHICLE (SV)	SNSH	13.500		3.933	53.10	1.40	0.5280	5.175	1	E	20.14	0.5963	7.744	1	I	0.00	1.30	0.5280	3.933	1	E	20.14	
		SNGARBS2	20.000		3.128	62.56	1.40	0.5280	4.115	1	E	20.14	0.5963	5.685	1	I	0.00	1.30	0.5280	3.128	1	E	20.14	
		SNAGRIS2	22.000		3.041	66.90	1.40	0.5280	4.001	1	E	20.14	0.5963	5.345	1	I	0.00	1.30	0.5280	3.041	1	E	20.14	
		SNCOTTS3	27.250		1.971	53.72	1.40	0.5280	2.594	1	E	20.14	0.5963	3.887	1	I	0.00	1.30	0.5280	1.971	1	E	20.14	
		SNAGGRS4	34.925		1.740	60.78	1.40	0.5280	2.290	1	E	20.14	0.5963	3.345	1	I	0.00	1.30	0.5280	1.740	1	E	20.14	
		SNS5A	35.550		1.701	60.46	1.40	0.5280	2.237	1	E	20.14	0.5963	3.451	1	I	0.00	1.30	0.5280	1.701	1	E	20.14	
		SNS6A	39.950		1.600	63.94	1.40	0.5280	2.106	1	E	20.14	0.5963	3.203	1	I	0.00	1.30	0.5280	1.600	1	E	20.14	
		SNS7B	42.000		1.530	64.27	1.40	0.5280	2.013	1	E	20.14	0.5963	3.219	1	I	0.00	1.30	0.5280	1.530	1	E	20.14	
	TRUCK TRACTOR SEMI-TRAILER (TTST)	TNAGRIT3	33.000		1.971	65.04	1.40	0.5280	2.593	1	E	20.14	0.5963	3.768	1	I	0.00	1.30	0.5280	1.971	1	E	20.14	
		TNT4A	33.075		1.972	65.22	1.40	0.5280	2.595	1	E	20.14	0.5963	3.616	1	I	0.00	1.30	0.5280	1.972	1	E	20.14	
		TNT6A	41.600		1.672	69.56	1.40	0.5280	2.220	1	E	20.14	0.5963	3.512	1	I	0.00	1.30	0.5280	1.672	1	E	20.14	
		TNT7A	42.000		1.696	71.24	1.40	0.5280	2.232	1	E	20.14	0.5963	3.251	1	I	0.00	1.30	0.5280	1.696	1	E	20.14	
		TNT7B	42.000		1.763	74.03	1.40	0.5280	2.319	1	E	20.14	0.5963	3.093	1	I	0.00	1.30	0.5280	1.763	1	E	20.14	
		TNAGRIT4	43.000		1.682	72.34	1.40	0.5280	2.214	1	E	20.14	0.5963	2.976	1	I	0.00	1.30	0.5280	1.682	1	E	20.14	
		TNAGRIT5A	45.000		1.581	71.15	1.40	0.5280	2.080	1	E	20.14	0.5963	3.040	1	I	0.00	1.30	0.5280	1.581	1	E	20.14	
		TNAGRIT5B	45.000	3	1.524	68.60	1.40	0.5280	2.006	1	E	20.14	0.5963	2.818	1	I	0.00	1.30	0.5280	1.524	1	E	20.14	
FATIGUE		HL-93 (INVENTORY)	γ_{LL}=0.75		5.375																			

LOAD FACTORS:

DESIGN LOAD RATING FACTORS	LIMIT STATE	γ_{DC}	γ_{DW}
	STRENGTH I	1.25	1.50
	SERVICE II	1.00	1.00

NOTES:

MINIMUM RATING FACTORS ARE BASED ON THE STRENGTH I AND SERVICE II LIMIT STATES.

ALLOWABLE STRESS FOR SERVICE II LIMIT STATE ARE AS REQUIRED FOR DESIGN.

(#) CONTROLLING LOAD RATING

(1) DESIGN LOAD RATING (HL-93) **

(2) DESIGN LOAD RATING (HS-20) **

(3) LEGAL LOAD RATING **

** SEE CHART FOR VEHICLE TYPE

GIRDER LOCATION

I - INTERIOR GIRDER
E - EXTERIOR GIRDER

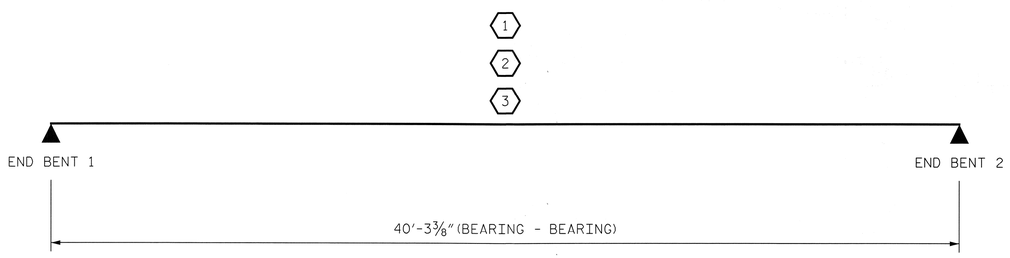

LRFR SUMMARY

PROJECT NO. 17BP.13.R.82

YANCEY COUNTY

STATION: 13+11.10 -L-

SHEET 4 OF 4

NORTH CAROLINA PROFESSIONAL SEAL 14114 ENGINEER ROBERT C. LARSON

10/8/13

STATE OF NORTH CAROLINA
DEPARTMENT OF TRANSPORTATION
RALEIGH

STANDARD
LRFR SUMMARY FOR SEEL GIRDERS
(NON-INTERSTATE TRAFFIC)
(STD. NO. LRFR3)

DESIGN ENGINEER OF RECORD: Mark O Jarvis DATE: 10/8/13

DRAWN BY: R. A. PRUETT DATE: 05/02/13

CHECKED BY: R. C. LARSON DATE: 05/13/13

KCI Associates of North Carolina, P.A. — SUITE 200, LANDMARK CENTER II, 4601 DE FORCE RD, RALEIGH, N.C. 27609-5200, (919) 783-9214 — RALEIGH OFFICE, ENGINEERS & PLANNERS & ECOLOGISTS, LICENSE NUMBER: C-0754

REVISIONS						SHEET NO.
NO.	BY:	DATE:	NO.	BY:	DATE:	
1			3			TOTAL SHEETS
2			4			

DWG. REF. NO. 4 OF 24

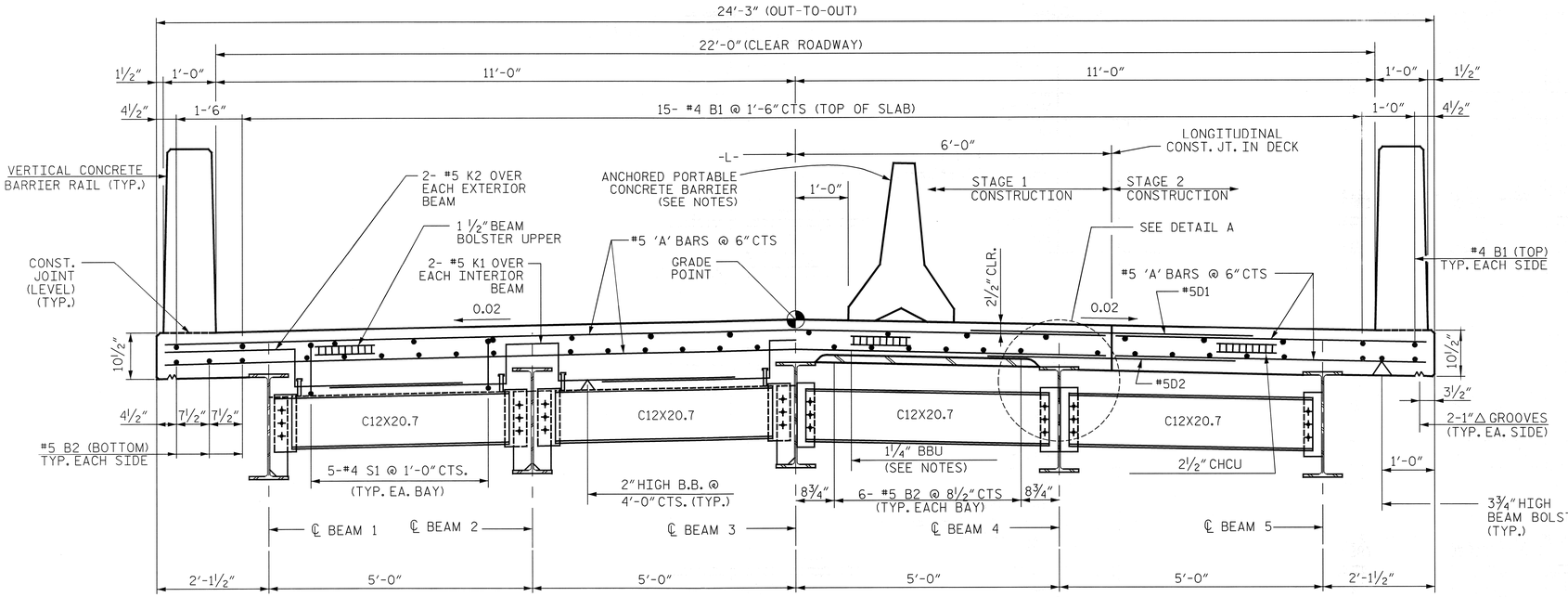

HALF SECTION AT END BENT

HALF SECTION AT INTERIOR DIAPHRAGM

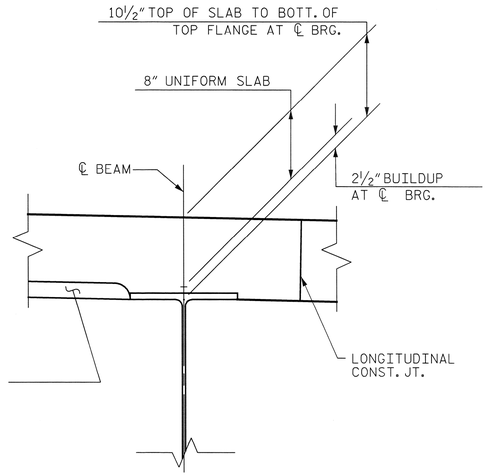

DETAIL A

TYPICAL SECTION

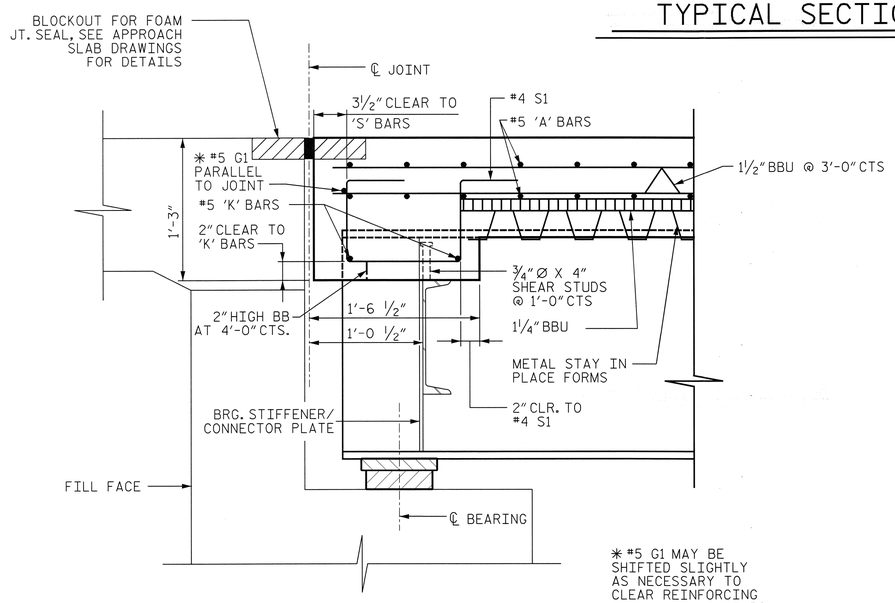

* #5 G1 MAY BE SHIFTED SLIGHTLY AS NECESSARY TO CLEAR REINFORCING STEEL AND STIRRUPS.

SECTION A-A

(SEE PLAN OF SPAN A FOR LOCATION OF SECTION A-A)

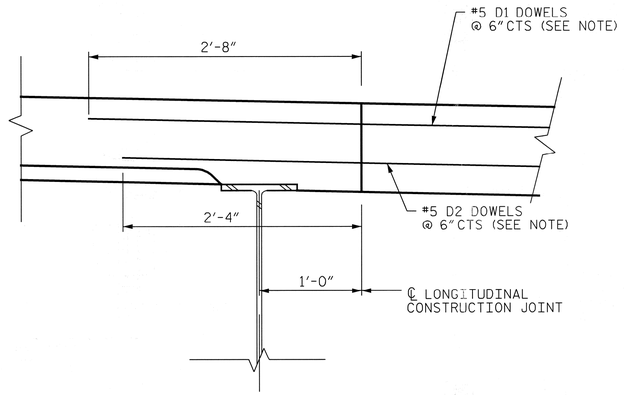

SECTION B-B

THRU LONGITUDINAL CONSTRUCTION JOINT IN SLAB
(OTHER REINFORCING NOT SHOWN FOR CLARITY)

NOTES

PROVIDE 1¼" HIGH BEAM BOLSTERS UPPER AT 4'-0" CTS. ATOP THE METAL STAY-IN-PLACE FORMS TO SUPPORT THE BOTTOM MAT OF 'A' BARS. WHEN USING REMOVABLE FORMS, PROVIDE CONTINUOUS HIGH CHAIRS FOR METAL DECK (C.H.C.M.) @ 4'-0" CTS. WITH A HEIGHT TO SUPPORT THE BOTTOM MAT OF 'A' BARS A CLEAR DISTANCE OF 2½" ABOVE THE TOP OF THE REMOVABLE FORM.

NEEDLE BEAM TYPE SUPPORTS MAY BE REQUIRED FOR THE OVERHANG FALSEWORK.

DOWELS SHALL BE PLACED IN THE SAME HORIZONTAL PLANE AS THE TOP AND BOTTOM SLAB REINFORCING STEEL.

REMOVABLE FORMS ARE REQUIRED FOR THE CONSTRUCTION OF STAGE 2 DECK.

SEE TRAFFIC CONTROL PLANS FOR LOCATION AND PAY LIMITS OF THE ANCHORED PORTABLE CONCRETE BARRIER.

PROJECT NO. 17BP.13.R.82

YANCEY COUNTY

STATION: 13+11.10 -L-

DESIGN ENGINEER OF RECORD: R. C. Larson DATE: 10/9/13

DRAWN BY: R. A. PRUETT DATE: 05/01/13

CHECKED BY: R. C. LARSON DATE: 05/05/13

NORTH CAROLINA PROFESSIONAL SEAL 14114 ENGINEER ROBERT C. LARSON

10/9/13

KCI Associates of North Carolina, P.A. SUITE 200, LANDMARK CENTER II 4601 DES MOINES RD. RALEIGH, N.C. 27609-5261 (919) 783-9104

RALEIGH OFFICE ENGINEERS ◎ PLANNERS ◎ ECOLOGISTS LICENSE NUMBER: C-0704

STATE OF NORTH CAROLINA
DEPARTMENT OF TRANSPORTATION
RALEIGH

SUPERSTRUCTURE TYPICAL SECTION

REVISIONS						SHEET NO.
NO.	BY:	DATE:	NO.	BY:	DATE:	
1			3			TOTAL SHEETS
2			4			

DWG. REF. NO. 5 OF 24

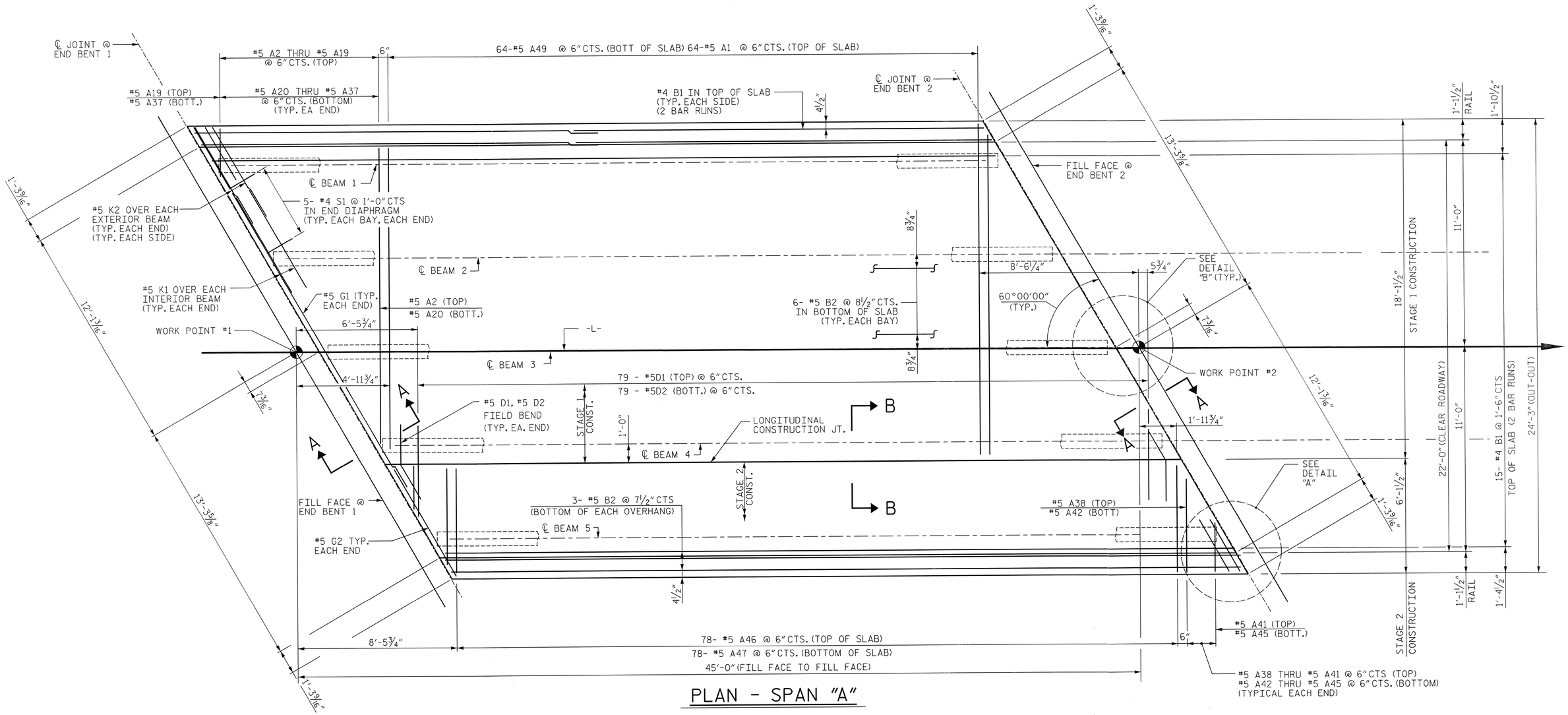

PLAN - SPAN "A"

SEE SUPERSTRUCTURE BILL OF MATERIAL FOR REINFORCING SPLICE LENGTHS.

REINFORCING EXTENDING INTO RAIL NOT SHOWN SEE "VERTICAL CONCRETE BARRIER RAIL" SHEET.

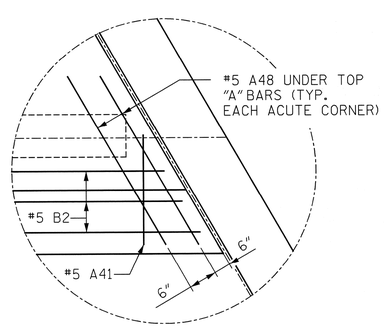

DETAIL "A"

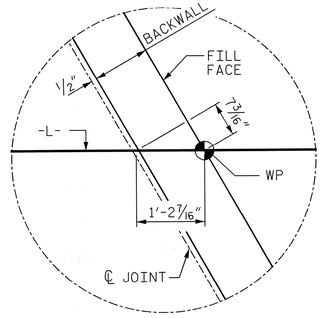

DETAIL "B"

PROJECT NO. 17BP.13.R.82

YANCEY COUNTY

STATION: 13+11.10 -L-

STATE OF NORTH CAROLINA
DEPARTMENT OF TRANSPORTATION
RALEIGH

SUPERSTRUCTURE PLAN OF SPAN "A"

NORTH CAROLINA PROFESSIONAL SEAL 14114 ENGINEER ROBERT C. LARSON
10/9/13

KCI Associates of North Carolina, P.A.

REVISIONS						SHEET NO.
NO.	BY:	DATE:	NO.	BY:	DATE:	
1			3			TOTAL SHEETS
2			4			

DWG. REF. NO. 6 OF 24

DESIGN ENGINEER OF RECORD:		DATE :	10/9/13
DRAWN BY :	R. A. PRUETT	DATE :	4/30/13
CHECKED BY :	R. C. LARSON	DATE :	5/05/13

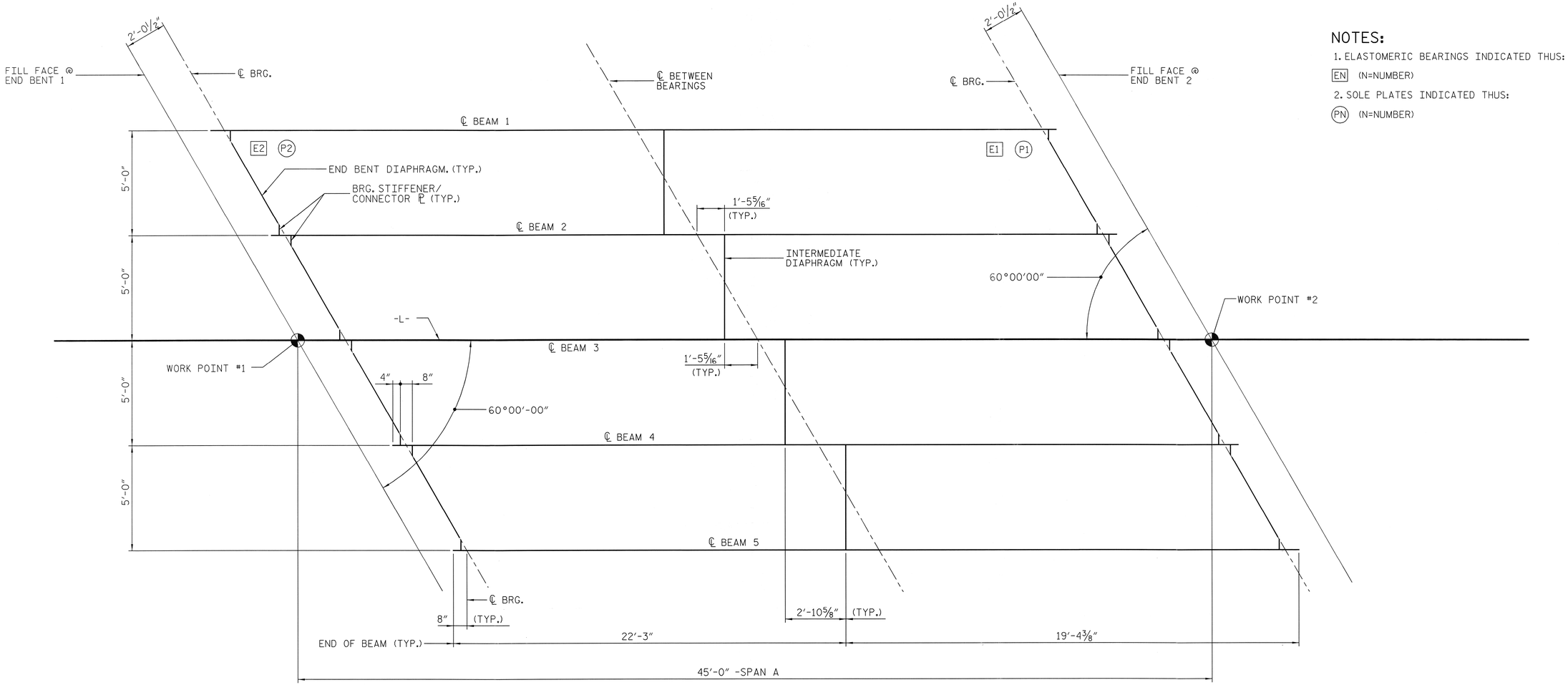

NOTES:

1. ELASTOMERIC BEARINGS INDICATED THUS:
   EN (N=NUMBER)
2. SOLE PLATES INDICATED THUS:
   PN (N=NUMBER)

FRAMING PLAN

PROJECT NO. 17BP.13.R.82
YANCEY COUNTY
STATION: 13+11.10 -L-

DEAD LOAD DEFLECTION TABLE FOR BEAMS											
TENTH POINTS	0	.1	.2	.3	.4	.5	.6	.7	.8	.9	0
DEFLECTION DUE TO WEIGHT OF BEAM	0	0.002	0.004	0.006	0.007	0.007	0.007	0.006	0.004	0.002	0
DEFLECTION DUE TO WEIGHT OF SLAB *	0	0.013	0.025	0.034	0.040	0.042	0.040	0.034	0.025	0.013	0
DEFLECTION DUE TO WEIGHT OF BARRIER RAIL	0	0.002	0.004	0.005	0.006	0.006	0.006	0.005	0.004	0.002	0
TOTAL DEAD LOAD DEFLECTION	0	0.017	0.033	0.045	0.053	0.055	0.053	0.045	0.033	0.017	0
VERTICAL CURVE ORDINATE	0	0.055	0.098	0.129	0.147	0.153	0.147	0.129	0.098	0.055	0
REQUIRED CAMBER	0	⅞	1 9/16	2 1/16	2⅜	2½	2⅜	2 1/16	1 9/16	⅞	0

* INCLUDES SLAB, BUILDUPS & STAY-IN-PLACE FORMS.
ALL VALUES ARE SHOWN IN FEET (DECIMAL FORM), EXCEPT "REQUIRED CAMBER", WHICH IS GIVEN IN INCHES (FRACTION FORM).

DESIGN ENGINEER OF RECORD: [signature] DATE: 10/8/13
DRAWN BY: R. A. PRUETT DATE: 5/01/13
CHECKED BY: R. C. LARSON DATE: 5/05/13

NORTH CAROLINA PROFESSIONAL SEAL 14114 ENGINEER ROBERT C. LARSON
10/8/13

STATE OF NORTH CAROLINA
DEPARTMENT OF TRANSPORTATION
RALEIGH

SUPERSTRUCTURE FRAMING PLAN

KCI Associates of North Carolina, P.A.
RALEIGH OFFICE
ENGINEERS & PLANNERS & ECOLOGISTS
LICENSE NUMBER: C-0764
SUITE 200, LANDMARK CENTER II
4601 SIX FORKS RD.
RALEIGH, N.C. 27609-5200
(919) 783-9024

REVISIONS						SHEET NO.
NO.	BY:	DATE:	NO.	BY:	DATE:	
1			3			TOTAL SHEETS
2			4			

DWG. REF. NO. 7 OF 24

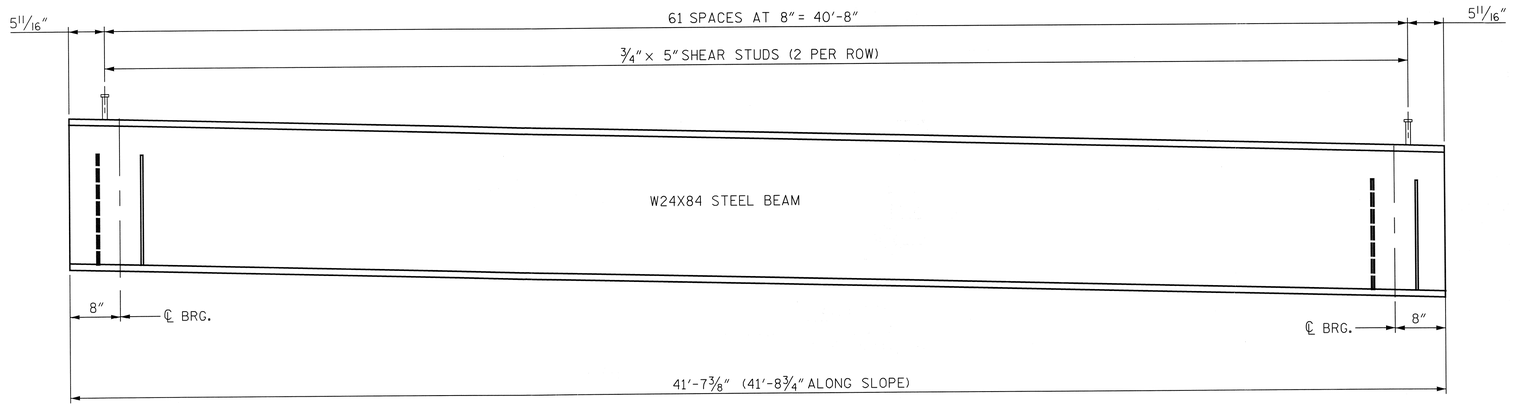

ELEVATION - BEAMS 1-5

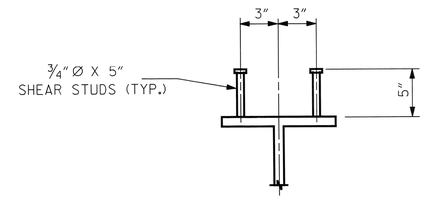

SHEAR STUD DETAIL

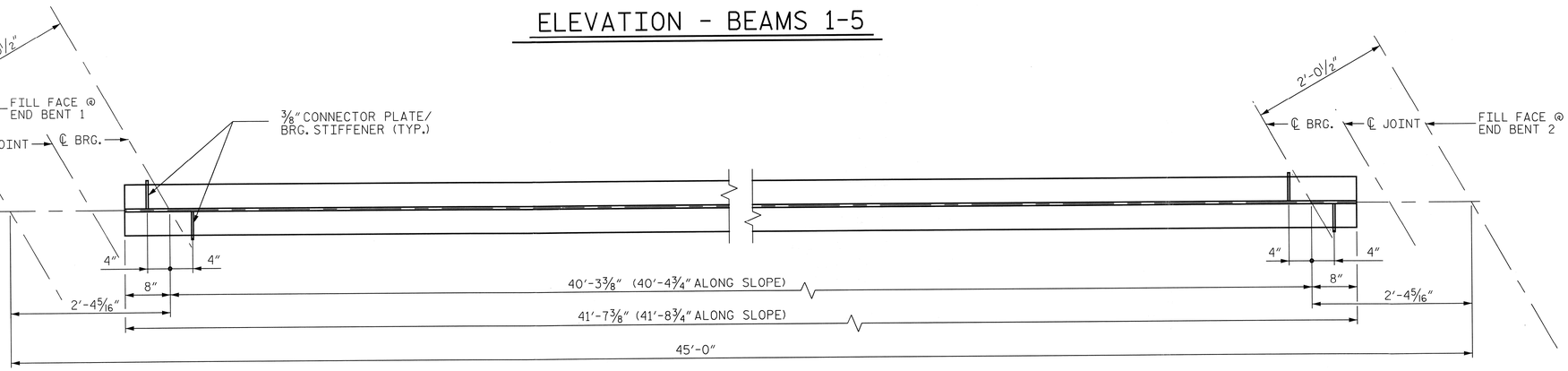

PLAN OF BOTTOM FLANGE

NOTES

ALL DIMENSIONS SHOWN ARE HORIZONTAL OR VERTICAL, UNLESS OTHERWISE NOTED.

ALL FIELD CONNECTIONS TO BE 7/8" DIA. HIGH STRENGTH BOLTS UNLESS OTHERWISE NOTED.

STIFFENERS ARE NOT REQUIRED ON THE OUTSIDE OF EXTERIOR BEAMS.

CONNECTOR PLATE/BEARING STIFFENERS ARE TO BE PLACED NORMAL TO THE WEB OF THE GIRDER AND SHALL BE PLUMB.

A CHARPY V-NOTCH TEST IS REQUIRED ON ALL BEAM SECTIONS IN ACCORDANCE WITH ARTICLE 1072-7 OF THE STANDARD SPECIFICATIONS.

TENSION ON THE AASHTO M164 BOLTS SHALL BE CALIBRATED USING DIRECT TENSION INDICATOR WASHERS IN ACCORDANCE WITH ARTICLE 440-8 OF THE STANDARD SPECIFICATIONS.

END OF BEAMS AND GIRDERS SHALL BE PLUMB.

FABRICATORS SHALL DETAIL DIAPHRAGM MEMBERS AND CONNECTIONS FOR FULL DEAD LOAD FIT UP. GIRDERS SHALL BE PLUMB AFTER THE FULL AMOUNT OF DEAD LOAD IS APPLIED.

THE CONTRACTOR MAY, WHEN NECESSARY, PROPOSE A SCHEME FOR AVOIDING INTERFERENCE BETWEEN METAL STAY-IN-PLACE FORM SUPPORTS OR FORMS AND BEAM/GIRDER STIFFENERS OR CONNECTOR PLATES. THE PROPOSAL SHALL BE INDICATED, AS APPROPRIATE, ON EITHER THE STEEL WORKING DRAWINGS OR THE METAL STAY-IN-PLACE FORM WORKING DRAWINGS.

PROJECT NO. 17BP.13.R.82
YANCEY COUNTY
STATION: 13+11.10 -L-

SHEET 1 OF 2

NORTH CAROLINA PROFESSIONAL SEAL 14114 ENGINEER ROBERT C. LARSON
10/8/13

STATE OF NORTH CAROLINA
DEPARTMENT OF TRANSPORTATION
RALEIGH

SUPERSTRUCTURE STRUCTURAL STEEL DETAILS

KCI Associates of North Carolina, P.A.
SUITE 220, LANDMARK CENTER II
4601 SIX FORKS RD.
RALEIGH, N.C. 27609-1200
(919) 783-9204
RALEIGH OFFICE
ENGINEERS • PLANNERS • ECOLOGISTS
LICENSE NUMBER C-0764

REVISIONS						SHEET NO.
NO.	BY:	DATE:	NO.	BY:	DATE:	
1			3			TOTAL SHEETS
2			4			

DWG. REF. NO. 8 OF 24

DESIGN ENGINEER OF RECORD: [signature] DATE: 10/8/13
DRAWN BY: R. A. PRUETT DATE: 5/01/13
CHECKED BY: R. C. LARSON DATE: 5/09/13

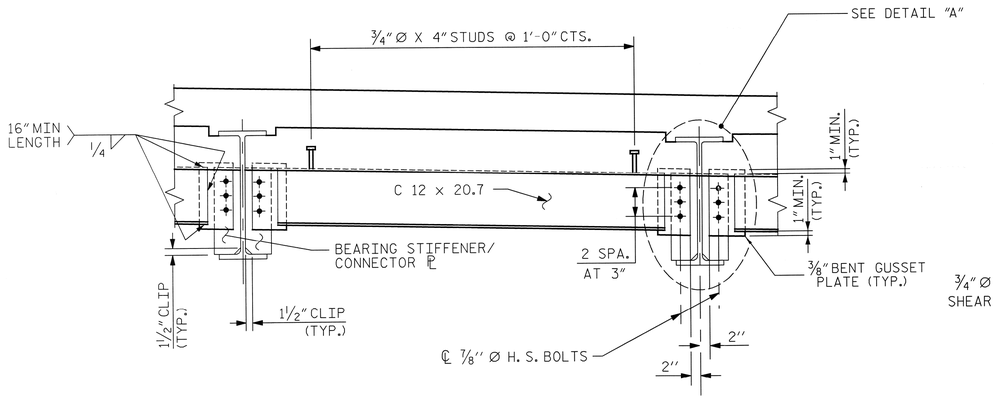

TYPICAL END BENT DIAPHRAGM

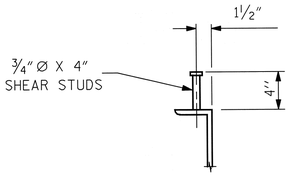

SHEAR STUD DETAILS

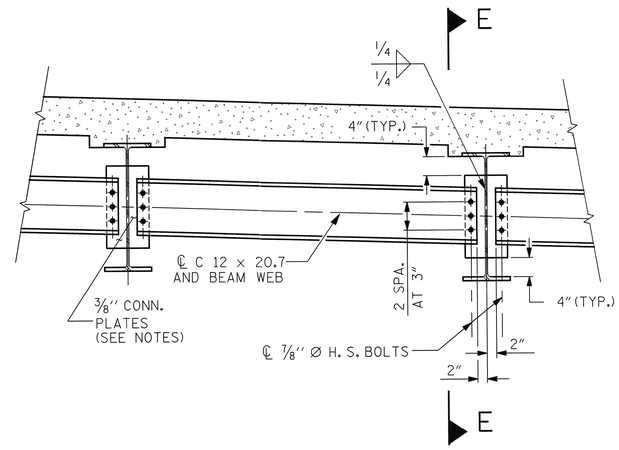

TYPICAL INTERMEDIATE DIAPHRAGM

NOTES

CONNECTOR PLATE AT BEAM 5 INTERMEDIATE DIAPHRAGM TO HAVE 15/16" X 1 1/2" VERTICAL SLOTS.

BEAM 5 CONNECTION BOLTS ARE TO BE LOCATED AT THE BOTTOM OF THE SLOTS AND TIGHTENED TO SNUG FIT PRIOR TO FULLY BOLTING OPPOSITE END (BEAM 4 END) OF DIAPHRAGM. AFTER BEAM 4 END IS BOLTED AND PRIOR TO POURING OF THE SLAB, BACK OFF BEAM 5 BOLTS 1/2 TURN TO ALLOW FOR VERTICAL DEFLECTION OF BEAM 5. AFTER DEFLECTIONS HAVE OCCURRED, TIGHTEN BOLTS AS REQUIRED BY THE STANDARD SPECIFICATIONS.

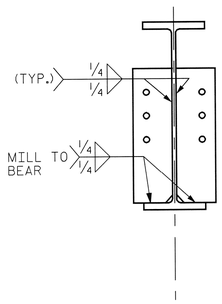

SECTION A-A

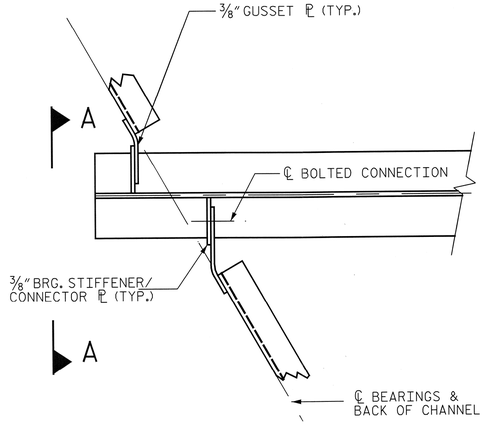

PLAN

DETAIL "A"

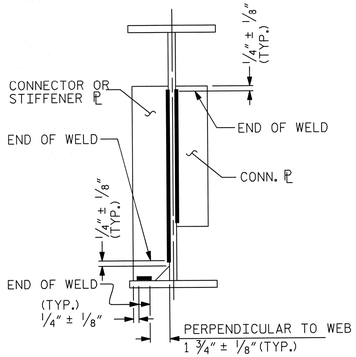

TYPICAL STIFFENER OR CONNECTOR PLATE CONNECTIONS

WELD TERMINATION DETAILS

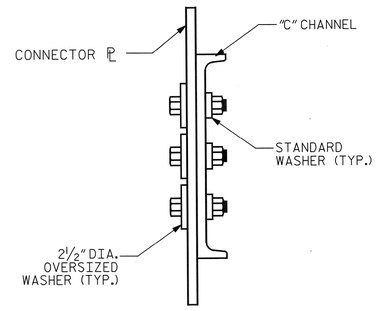

SECTION E-E

(BEAM 5 ONLY)

PROJECT NO. 17BP.13.R.82

YANCEY COUNTY

STATION: 13+11.10 -L-

SHEET 2 OF 2

STATE OF NORTH CAROLINA
DEPARTMENT OF TRANSPORTATION
RALEIGH

SUPERSTRUCTURE STRUCTURAL STEEL DETAILS

NORTH CAROLINA PROFESSIONAL SEAL 14114 ENGINEER ROBERT C. LARSON
10/8/13

KCI Associates of North Carolina, P.A.

REVISIONS						SHEET NO.
NO.	BY:	DATE:	NO.	BY:	DATE:	
1			3			TOTAL SHEETS
2			4			

DWG. REF. NO. 9 OF 24

DESIGN ENGINEER OF RECORD: DATE: 10/8/13

DRAWN BY: R. A. PRUETT DATE: 5/01/13

CHECKED BY: R. C. LARSON DATE: 5/01/13

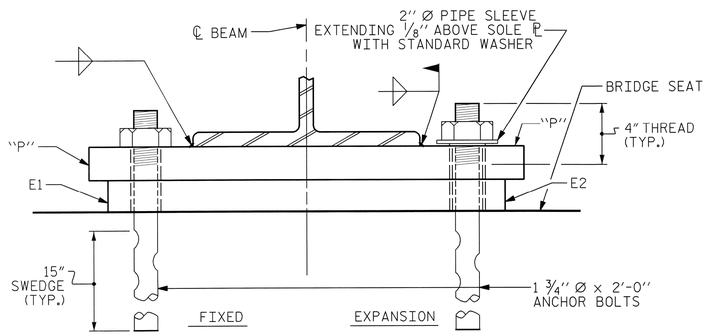

END VIEW

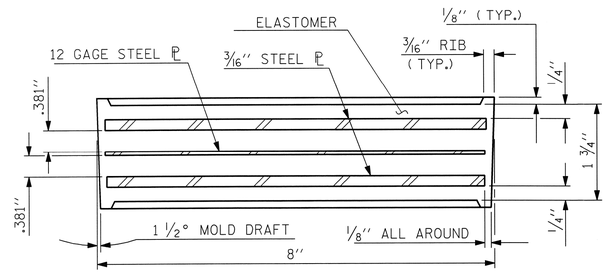

TYPICAL SECTION OF ELASTOMERIC BEARINGS

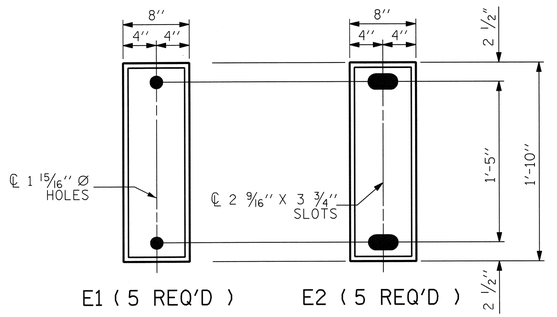

PLAN VIEW OF ELASTOMERIC BEARING

TYPE I

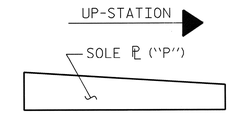

SOLE ℙ PLACEMENT DETAIL

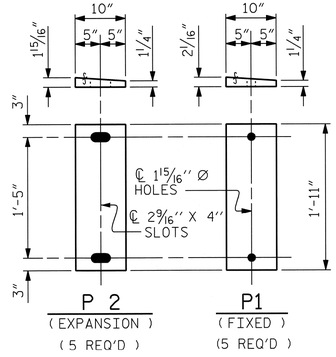

SOLE PLATE DETAILS (''P'')

NOTES

AT ALL FIXED POINTS OF SUPPORT, NUTS FOR ANCHOR BOLTS ARE TO BE TIGHTENED FINGER TIGHT AND THEN BACKED OFF 1/2 TURN. THE THREAD OF THE NUT AND BOLT SHALL THEN BE BURRED WITH A SHARP POINTED TOOL.

THE 2'' Ø PIPE SLEEVE SHALL BE CUT FROM SCHEDULE 40 PVC PLASTIC PIPE. THE PVC PLASTIC PIPE SHALL MEET THE REQUIREMENTS OF ASTM D1785.

THE PAYMENT FOR THE PIPE SLEEVES SHALL BE INCLUDED IN THE SEVERAL PAY ITEMS.

SOLE PLATES, ANCHOR BOLTS, NUTS AND WASHERS SHALL BE GALVANIZED IN ACCORDANCE WITH THE STANDARD SPECIFICATIONS.

ANCHOR BOLTS SHALL MEET THE REQUIREMENTS OF ASTM A449. NUTS SHALL MEET THE REQUIREMENTS OF AASHTO M291-DH OR AASHTO M292-2H. WASHERS SHALL MEET THE REQUIREMENTS OF AASHTO M293. SHOP DRAWINGS ARE NOT REQUIRED FOR ANCHOR BOLTS, NUTS AND WASHERS. SHOP INSPECTION IS REQUIRED.

WHEN FIELD WELDING THE SOLE PLATE TO THE GIRDER FLANGE, USE TEMPERATURE INDICATING WAX PENS, OR OTHER SUITABLE MEANS, TO ENSURE THAT THE TEMPERATURE OF THE SOLE PLATE DOES NOT EXCEED 300°F. TEMPERATURES ABOVE THIS MAY DAMAGE THE ELASTOMER.

ALL BEARING PLATES SHALL BE AASHTO M270 GRADE 50.

ALL SURFACES OF BEARING PLATES SHALL BE SMOOTH AND STRAIGHT.

THE ELASTOMER IN THE STEEL REINFORCED BEARINGS SHALL HAVE A SHEAR MODULUS OF 0.160 KSI, IN ACCORDANCE WITH AASHTO M251.

FOR STEEL REINFORCED ELASTOMERIC BEARINGS, SEE SPECIAL PROVISIONS.

THE CONTRACTOR'S ATTENTION IS CALLED TO THE FOLLOWING PROCEDURE, WHICH MAY BE REQUIRED BY THE ENGINEER, TO RESET ELASTOMERIC BEARINGS DUE TO GIRDER TRANSLATION AND END ROTATION:

1. ONCE THE DECK HAS CURED, THE GIRDERS SHALL BE JACKED AND THE ELASTOMERIC BEARING SLOTS CENTERED AS NEARLY AS PRACTICAL ABOUT THE BEARING STIFFENER. THIS OPERATION SHALL BE PERFORMED AT APPROXIMATELY 60° F.

THE CONTRACTOR MAY PROPOSE ALTERNATE METHODS, PROVIDED DETAILS ARE SUBMITTED TO THE ENGINEER FOR REVIEW AND APPROVAL.

MAXIMUM ALLOWABLE SERVICE LOADS	
D.L.+L.L. (NO IMPACT)	
TYPE I	140 k
~~TYPE II~~	~~180 k~~
~~TYPE III~~	~~255 k~~

PROJECT NO. 17BP.13.R.82

YANCEY COUNTY

STATION: 13+11.10 -L-

DESIGN ENGINEER OF RECORD:		DATE :	10/8/13
ASSEMBLED BY : R. A. PRUETT		DATE :	5/01/13
CHECKED BY : R. C. LARSON		DATE :	5/09/13
DRAWN BY : JMB 11/87	REV. 5/1/06		TLA/GM
CHECKED BY : ARB 11/87	REV. 10/1/11		MAA/GM
	REV. 10/24/12		AAC/MAA

NORTH CAROLINA PROFESSIONAL SEAL 14114 ENGINEER ROBERT C. LARSON
10/8/13

KCI Associates of North Carolina, P.A. SUITE 220, LANDMARK CENTER II 4601 CAMERON VALLEY PKWY. RALEIGH, N.C. 27407-7200 (919) 783-9214
RALEIGH OFFICE ENGINEERS@KCIANC.COM LICENSE NUMBER: C-1194

REVISIONS						SHEET NO.
NO.	BY:	DATE:	NO.	BY:	DATE:	
1			3			TOTAL SHEETS
2			4			

DWG. REF. NO. 10 OF 24

STATE OF NORTH CAROLINA
DEPARTMENT OF TRANSPORTATION
RALEIGH

STANDARD

ELASTOMERIC BEARING DETAILS

(STEEL SUPERSTRUCTURE)

STD. NO. EB1

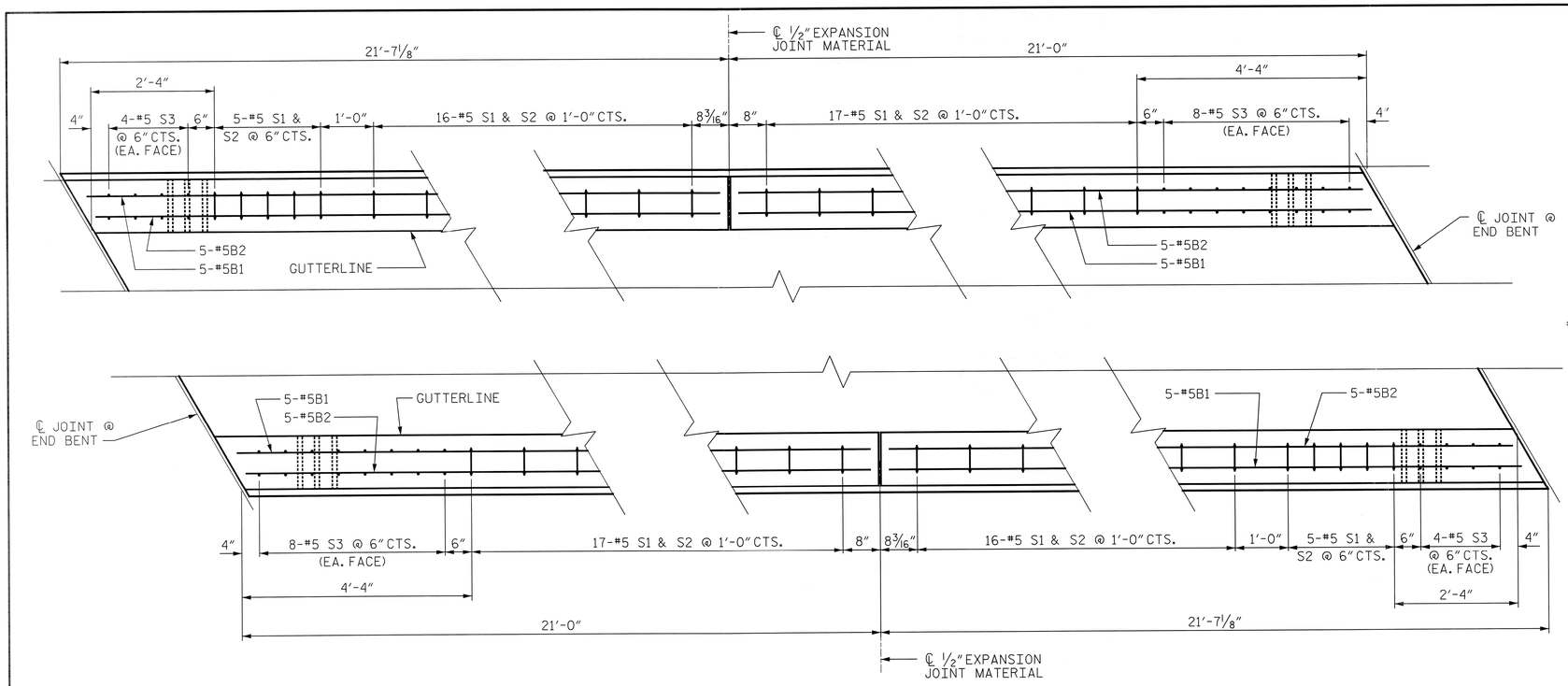

PLAN

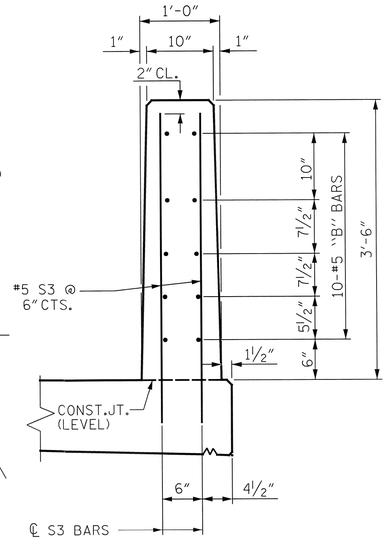

END VIEW

BAR TYPES

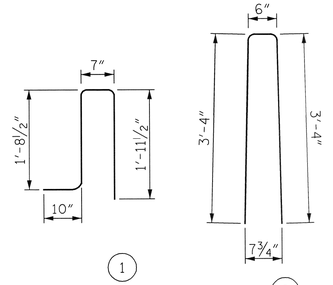

ALL BAR DIMENSIONS ARE OUT TO OUT

BILL OF MATERIAL

FOR VERTICAL CONCRETE BARRIER RAIL ONLY

BAR	NO.	SIZE	TYPE	LENGTH	WEIGHT
✳ B1	20	#5	STR	20'-11"	436
✳ B2	20	#5	STR	20'-9"	433
✳ S1	76	#5	1	5'-1"	403
✳ S2	76	#5	2	7'-2"	568
✳ S3	48	#5	STR	4'-0"	200

✳ EPOXY COATED REINFORCING STEEL	2040 LBS.
CLASS AA CONCRETE	10.1 CU. YDS.
VERTICAL CONCRETE BARRIER RAIL	85.20 LIN. FT.

NOTES

THE BARRIER RAIL IN EACH SPAN SHALL NOT BE CAST UNTIL ALL SLAB CONCRETE IN THAT SPAN HAS BEEN CAST AND HAS REACHED A MINIMUM COMPRESSIVE STRENGTH OF 3,000 PSI.

WHEN EVAZOTE JOINT SEAL IS REQUIRED, THE JOINT IN THE DECK SHALL BE SAWED PRIOR TO THE CASTING OF VERTICAL CONCRETE BARRIER RAIL.

ALL REINFORCING STEEL IN BARRIER RAILS SHALL BE EPOXY COATED.

THE #5 S3 BARS SHALL BE INSTALLED, USING AN ADHESIVE ANCHORING SYSTEM, AFTER SAWING THE JOINT. THE YIELD LOAD FOR THE #5 S3 BARS IS 18.6 KIPS. FIELD TESTING FOR THE ADHESIVE BONDING SYSTEM IS NOT REQUIRED.

GROOVED CONTRACTION JOINTS, ½" IN DEPTH, SHALL BE TOOLED IN ALL EXPOSED FACES OF THE BARRIER RAIL AND IN ACCORDANCE WITH ARTICLE 825-10(B) OF THE STANDARD SPECIFICATIONS. THE CONTRACTION JOINT SHALL BE LOCATED AT EACH THIRD POINT BETWEEN BARRIER RAIL EXPANSION JOINTS. ONLY ONE CONTRACTION JOINT IS REQUIRED AT MIDPOINT OF BARRIER RAIL SEGMENTS LESS THAN 20 FEET IN LENGTH AND NO CONTRACTION JOINTS ARE REQUIRED FOR THOSE SEGMENTS LESS THAN 10 FEET IN LENGTH.

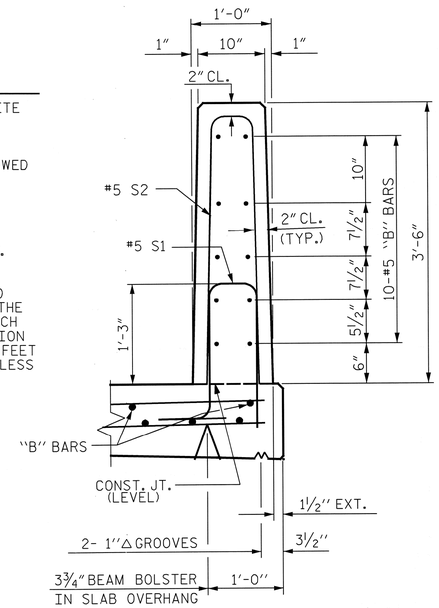

SECTION THRU RAIL

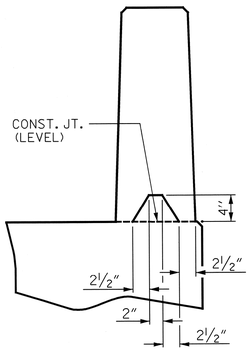

SECTION S-S

AT DAM IN OPEN JOINT
(THIS IS TO BE USED ONLY WHEN SLIP FORM IS USED)

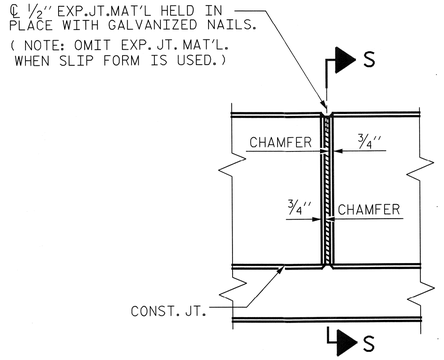

ELEVATION AT EXPANSION JOINTS

BARRIER RAIL DETAILS

PROJECT NO. 17BP.13.R.82

YANCEY COUNTY

STATION: 13+11.10 -L-

DESIGN ENGINEER OF RECORD: Robert C. Larson	DATE : 10/8/13	
ASSEMBLED BY : K. SU	DATE : 4/15/13	
CHECKED BY : R.C. LARSON	DATE : 04/16/13	
DRAWN BY : MAA 5/10	ADDED 5/6/10	
CHECKED BY : GM 5/10	REV. 10/1/11 MAA/GM	
	REV. 12/5/11 MAA/GM	

NORTH CAROLINA PROFESSIONAL SEAL 14114 ENGINEER ROBERT C. LARSON
10/8/13

KCI Associates of North Carolina, P.A. — SUITE 200, LANDMARK CENTER II, 4601 MT. HOPE DR., RALEIGH, N.C. 27609-7092, (919) 783-9214 — RALEIGH OFFICE, DRAWING@PLANNERS@KCI.COM/375, LICENSE NUMBER C-0754

DWG. REF. NO. 11 OF 24

STATE OF NORTH CAROLINA
DEPARTMENT OF TRANSPORTATION
RALEIGH

VERTICAL CONCRETE BARRIER RAIL

STD. NO. CBR2

REVISIONS						SHEET NO.
NO.	BY:	DATE:	NO.	BY:	DATE:	
1			3			TOTAL SHEETS
2			4			

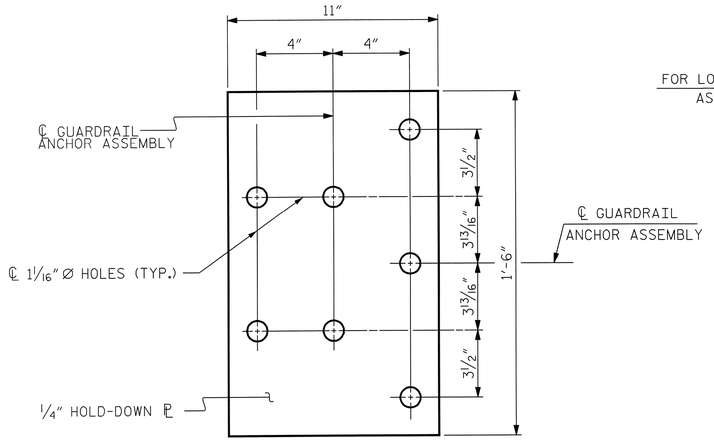

PLAN

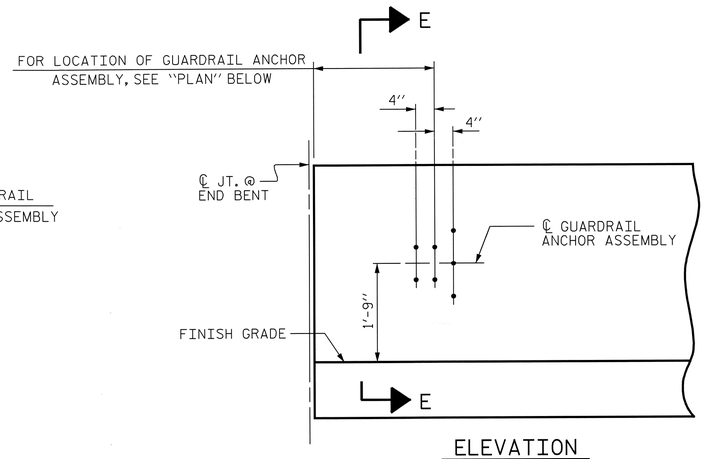

ELEVATION

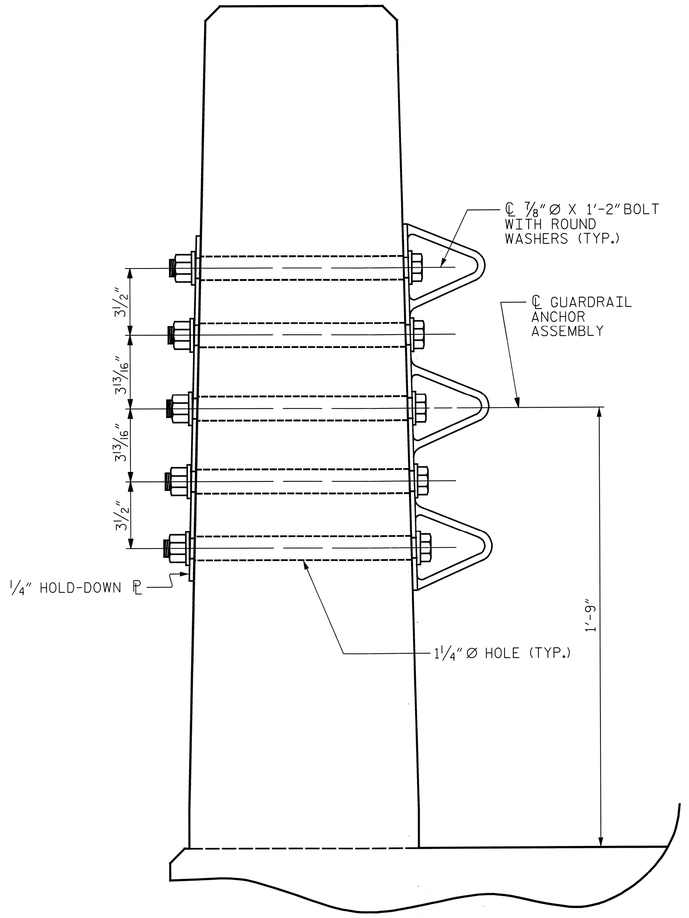

SECTION E-E

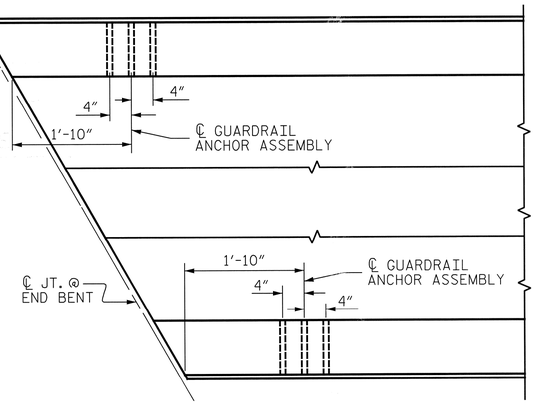

PLAN

GUARDRAIL ANCHOR ASSEMBLY DETAILS

NOTES

THE GUARDRAIL ANCHOR ASSEMBLY SHALL CONSIST OF A 1/4″ HOLD DOWN PLATE AND 7 - 7/8″ Ø BOLTS WITH NUTS AND WASHERS.

THE HOLD-DOWN PLATE SHALL CONFORM TO AASHTO M270 GRADE 36. AFTER FABRICATION, THE HOLD-DOWN PLATE SHALL BE HOT-DIP GALVANIZED IN ACCORDANCE WITH AASHTO M111.

BOLTS SHALL CONFORM TO THE REQUIREMENTS OF ASTM A307 AND NUTS SHALL CONFORM TO THE REQUIREMENTS OF AASHTO M291. BOLTS, NUTS AND WASHERS SHALL BE GALVANIZED. (AT THE CONTRACTOR'S OPTION, STAINLESS STEEL BOLTS, NUTS AND WASHERS MAY BE USED AS AN ALTERNATE FOR THE 7/8″ Ø GALVANIZED BOLTS, NUTS AND WASHERS. THEY SHALL CONFORM TO OR EXCEED THE MECHANICAL REQUIREMENTS OF ASTM A307. THE USE OF THIS ALTERNATE SHALL BE APPROVED BY THE ENGINEER.)

THE GUARDRAIL ANCHOR ASSEMBLY IS REQUIRED AT ALL POINTS WHERE APPROACH GUARDRAIL IS TO BE ATTACHED TO THE END OF BARRIER RAIL. FOR POINTS OF ATTACHMENT, SEE SKETCH.

AFTER INSTALLATION, THE EXPOSED THREAD OF THE BOLT SHALL BE BURRED WITH A SHARP POINTED TOOL.

THE COST OF THE GUARDRAIL ANCHOR ASSEMBLY SHALL BE INCLUDED IN THE UNIT CONTRACT PRICE BID FOR VERTICAL CONCRETE BARRIER RAIL.

THE VERTICAL REINFORCING BARS MAY BE SHIFTED SLIGHTLY IN THE VERTICAL CONCRETE BARRIER RAIL TO CLEAR ASSEMBLY BOLTS.

THE 1 1/4″ Ø HOLES SHALL BE FORMED OR DRILLED WITH A CORE BIT. IMPACT TOOLS WILL NOT BE PERMITTED. ANY CONCRETE DAMAGED BY THIS WORK SHALL BE REPAIRED TO THE SATISFACTION OF THE ENGINEER.

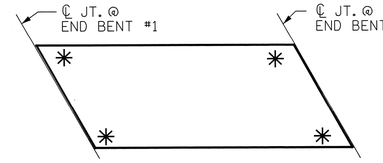

SKETCH SHOWING POINTS OF ATTACHMENT

✳ DENOTES GUARDRAIL ANCHOR ASSEMBLY

LOCATION OF ANCHORS FOR GUARDRAIL

END BENT #1 SHOWN, END BENT #2 SIMILAR.

PROJECT NO. 17BP.13.R.82

YANCEY COUNTY

STATION: 13+11.10 -L-

DESIGN ENGINEER OF RECORD:	DATE : 10/10/13
ASSEMBLED BY : R. C. LARSON	DATE : 4/22/13
CHECKED BY : R. A. PRUETT	DATE : 4/23/13
DRAWN BY : MAA 5/10	ADDED 5/6/10
CHECKED BY : GM 5/10	REV. 10/1/11 MAA/GM
	REV. 12/5/11 MAA/GM

NORTH CAROLINA PROFESSIONAL SEAL 14114 ENGINEER ROBERT C. LARSON

10/10/13

KCI Associates of North Carolina, P.A. — SUITE 225, LANDMARK CENTER II, 4601 SIX FORKS RD, RALEIGH, NORTH CAROLINA 27609-5200, (919) 783-9214 — ENGINEERS, PLANNERS & ECOLOGISTS, LICENSE NUMBER: C-0764

DWG. REF. NO. 12 OF 24

STATE OF NORTH CAROLINA
DEPARTMENT OF TRANSPORTATION
RALEIGH

STANDARD
GUARDRAIL ANCHORAGE FOR VERTICAL CONCRETE BARRIER RAIL
STD. NO. GRA3

REVISIONS						SHEET NO.
NO.	BY:	DATE:	NO.	BY:	DATE:	
1			3			TOTAL SHEETS
2			4			

SUPERSTRUCTURE REINFORCING STEEL LENGTHS ARE BASED ON THE FOLLOWING MINIMUM SPLICE LENGTHS

BAR SIZE	SUPERSTRUCTURE EXCEPT APPROACH SLABS, PARAPET, AND BARRIER RAIL		APPROACH SLABS		PARAPET AND BARRIER RAIL
	EPOXY COATED	UNCOATED	EPOXY COATED	UNCOATED	
#4	2′-0″	1′-9″	2′-0″	1′-9″	2′-9″
#5	2′-6″	2′-2″	2′-6″	2′-2″	3′-5″
#6	3′-0″	2′-7″	3′-10″	2′-7″	4′-4″
#7	5′-3″	3′-6″			
#8	6′-10″	4′-7″			

REINFORCING STEEL SCHEDULE

STAGE 1

BAR	NO.	SIZE	TYPE	LENGTH	WEIGHT
✳A1	64	5	STR.	17′-10″	1190
✳A2	2	5	STR.	17′-2″	36
✳A3	2	5	STR.	16′-4″	34
✳A4	2	5	STR.	15′-5″	32
✳A5	2	5	STR.	14′-7″	30
✳A6	2	5	STR.	13′-9″	29
✳A7	2	5	STR.	12′-10″	27
✳A8	2	5	STR.	12′-0″	25
✳A9	2	5	STR.	11′-1″	23
✳A10	2	5	STR.	10′-3″	21
✳A11	2	5	STR.	9′-5″	20
✳A12	2	5	STR.	8′-6″	18
✳A13	2	5	STR.	7′-8″	16
✳A14	2	5	STR.	6′-9″	14
✳A15	2	5	STR.	5′-11″	12
✳A16	2	5	STR.	5′-1″	11
✳A17	2	5	STR.	4′-2″	9
✳A18	2	5	STR.	3′-4″	7
✳A19	2	5	STR.	2′-5″	5
A20	2	5	STR.	17′-2″	36
A21	2	5	STR.	16′-4″	34
A22	2	5	STR.	15′-5″	32
A23	2	5	STR.	14′-7″	30
A24	2	5	STR.	13′-9″	29
A25	2	5	STR.	12′-10″	27
A26	2	5	STR.	12′-0″	25
A27	2	5	STR.	11′-1″	23
A28	2	5	STR.	10′-3″	21
A29	2	5	STR.	9′-5″	20
A30	2	5	STR.	8′-6″	18
A31	2	5	STR.	7′-8″	16
A32	2	5	STR.	6′-9″	14
A33	2	5	STR.	5′-11″	12
A34	2	5	STR.	5′-1″	11
A35	2	5	STR.	4′-2″	9
A36	2	5	STR.	3′-4″	7
A37	2	5	STR.	2′-5″	5
✳A48	2	5	STR.	3′-6″	7
A49	64	5	STR.	17′-10″	1190
✳B1	24	4	STR.	22′-1″	354
B2	22	5	STR.	42′-1″	966
✳D1	81	5	STR.	5′-4″	451
D2	81	5	STR.	4′-8″	394
✳G1	2	5	STR.	23′-3″	48
✳K1	12	5	2	9′-10″	123
✳K2	4	5	1	7′-1″	30
✳S1	32	4	3	3′-7″	77
REINFORCING STEEL, LB					2920
EPOXY COATED REINFORCING STEEL, LB					2649

STAGE 2

BAR	NO.	SIZE	TYPE	LENGTH	WEIGHT
✳A38	2	5	STR.	5′-1″	11
✳A39	2	5	STR.	4′-3″	9
✳A40	2	5	STR.	3′-5″	7
✳A41	2	5	STR.	2′-6″	5
A42	2	5	STR.	5′-1″	11
A43	2	5	STR.	4′-3″	9
A44	2	5	STR.	3′-5″	7
A45	2	5	STR.	2′-6″	5
✳A46	78	5	STR.	5′-10″	475
A47	78	5	STR.	5′-10″	475
✳A48	2	5	STR.	3′-6″	7
✳B1	10	4	STR.	22′-1″	148
B2	8	5	STR.	42′-1″	351
✳G2	2	5	STR.	6′-10″	14
✳K2	4	5	1	7′-1″	30
✳S1	8	4	3	3′-7″	19
				1583	
REINFORCING STEEL, LB					858
EPOXY COATED REINFORCING STEEL, LB					725

✳ EPOXY COATED REINFORCING STEEL

BAR TYPES

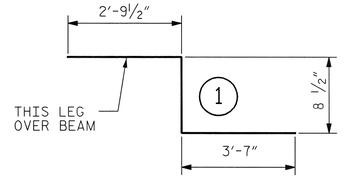

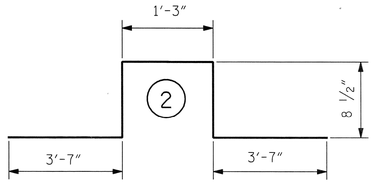

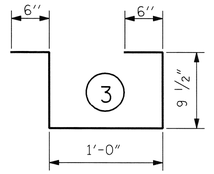

ALL BAR DIMENSIONS ARE OUT TO OUT

SUPERSTRUCTURE BILL OF MATERIAL

	CLASS AA CONCRETE	REINFORCING STEEL	EPOXY COATED REINFORCING STEEL
	(CU. YDS.)	(LBS.)	(LBS.)
STAGE 1	23.3	2920	2649
STAGE 2	8.6	858	725
TOTALS	31.9	3778	3374

GROOVING BRIDGE FLOORS

APPROACH SLABS	399	SQ.FT.
BRIDGE DECK	780	SQ.FT.
TOTAL	1179	SQ.FT.

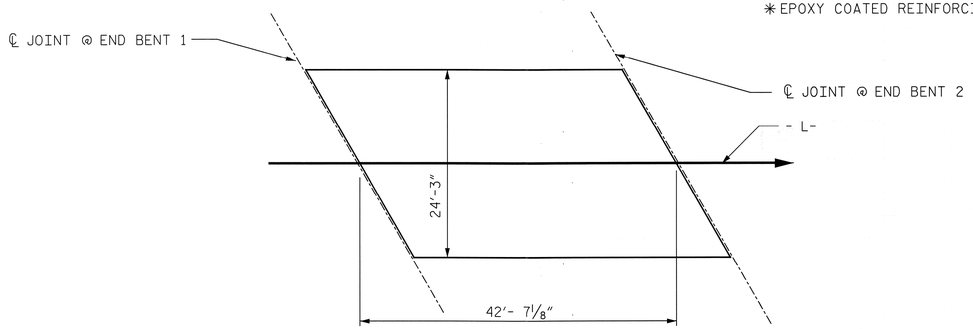

LAYOUT FOR COMPUTING AREA REINFORCED CONCRETE DECK SLAB (SQ. FT. =1,033)

PROJECT NO. 17BP.13.R.82

YANCEY COUNTY

STATION: 13+11.10 -L-

STATE OF NORTH CAROLINA
DEPARTMENT OF TRANSPORTATION
RALEIGH

STANDARD

SUPERSTRUCTURE BILL OF MATERIAL

STD. NO. BOM 1

NORTH CAROLINA PROFESSIONAL SEAL 14114 ENGINEER ROBERT C. LARSON
10/9/13

DESIGN ENGINEER OF RECORD:	DATE : 10/9/13		
ASSEMBLED BY : R. A. PRUETT	DATE : 5/01/13		
CHECKED BY : R. C. LARSON	DATE : 5/10/13		
DRAWN BY : JMB 5/87	REV. 8/16/99	RWW/LES	
CHECKED BY : SJD 9/87	REV. 5/1/06	TLA/GM	
	REV. 10/1/11	MAA/GM	

KCI Associates of North Carolina, P.A. — SUITE 230, LANDMARK CENTER II, 4601 DUKE STORES RD., RALEIGH, N.C. 27609-5210, (919) 783-1604
RALEIGH OFFICE
CHARLOTTE ● FLAMMER ● COLOGNE
LEDDGE MAIDEN © 0784

REVISIONS						SHEET NO.
NO.	BY:	DATE:	NO.	BY:	DATE:	
1			3			TOTAL SHEETS
2			4			

DWG. REF. NO. 13 OF 24

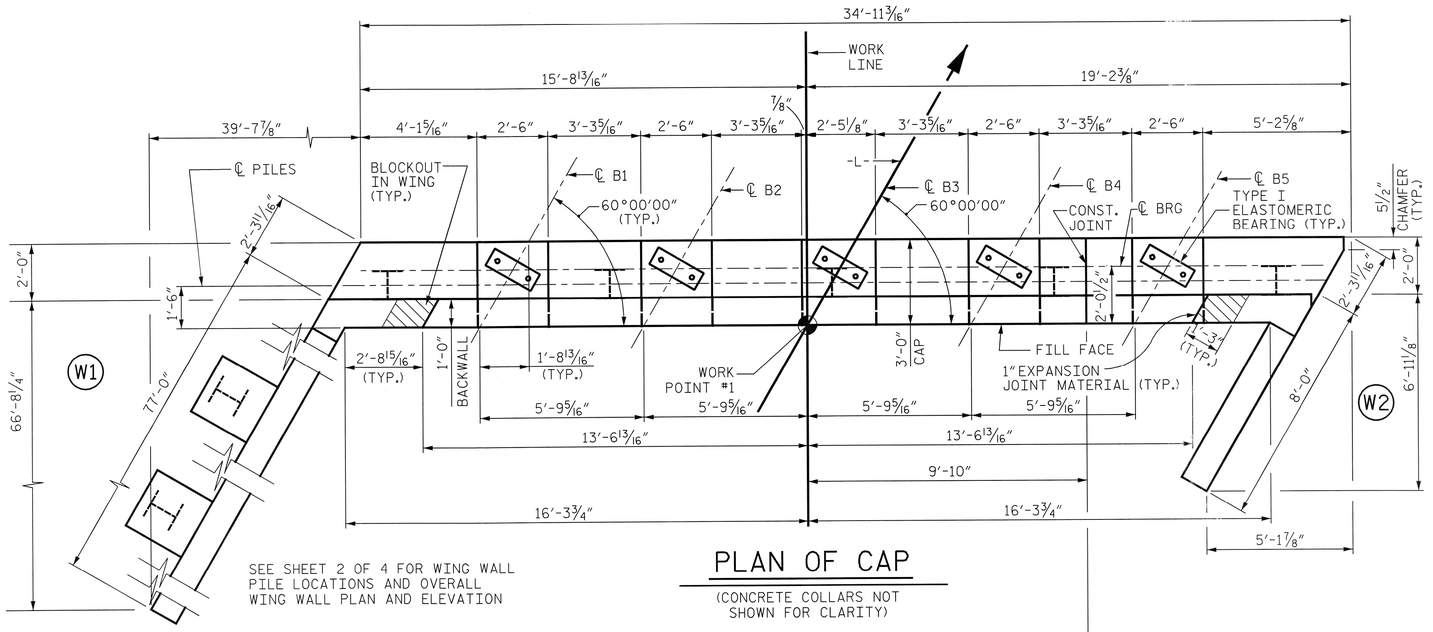

SEE SHEET 2 OF 4 FOR WING WALL PILE LOCATIONS AND OVERALL WING WALL PLAN AND ELEVATION

PLAN OF CAP

(CONCRETE COLLARS NOT SHOWN FOR CLARITY)

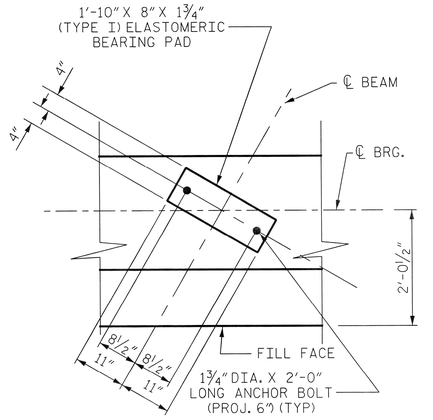

TYPICAL ANCHOR BOLT DETAIL

(TYP. EA. BEAM)

NOTES

STIRRUPS IN CAP MAY BE SHIFTED AS NECESSARY TO CLEAR ANCHOR BOLTS.

THE TOP SURFACE AREAS OF THE END BENT CAP SHALL BE CURED IN ACCORDANCE WITH THE STANDARD SPECIFICATIONS EXCEPT THE MEMBRANE CURING COMPOUND METHOD SHALL NOT BE USED.

BACKWALL SHALL BE PLACED BEFORE APPLYING THE EPOXY PROTECTIVE COATING.

EPOXY COAT THE END BENT CAP AFTER ADJUSTMENTS ARE MADE TO THE BEARING.

THE TOP SURFACE OF THE CAP EXCEPT THE BRIDGE SEAT BUILDUPS SHALL BE SLOPED TRANSVERSELY FROM FILL FACE TO FRONT FACE AT THE RATE OF 2%.

FOR BLOCKOUT IN WINGWALLS, SEE END BENT 2.

NO SEPARATE PAYMENT WILL BE MADE FOR MECHANICAL BUTT SPLICES. THIS WORK IS CONSIDERED INCIDENTAL TO REINFORCING STEEL.

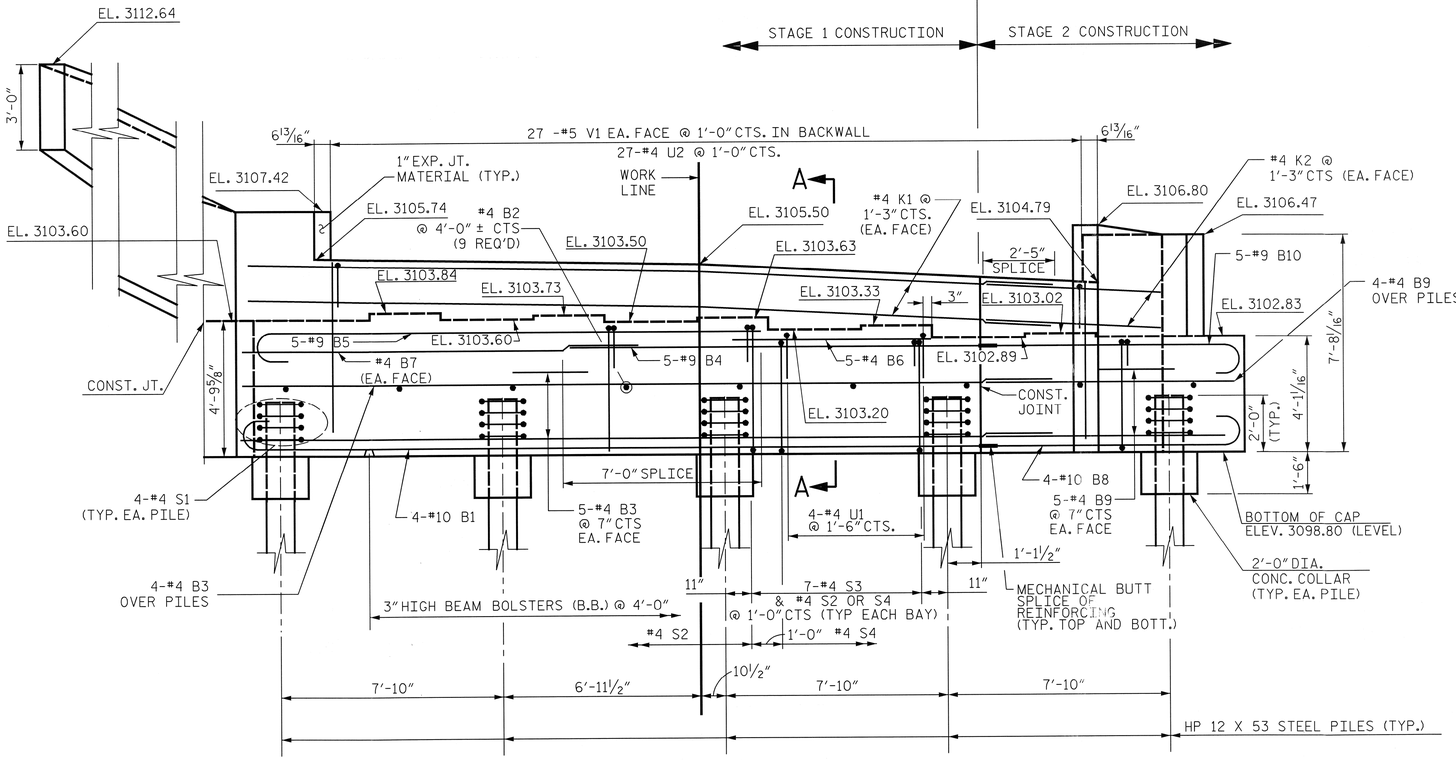

ELEVATION

PROJECT NO. 17BP.13.R.82

YANCEY COUNTY

STATION: 13+11.10 -L-

SHEET 1 OF 4

STATE OF NORTH CAROLINA
DEPARTMENT OF TRANSPORTATION
RALEIGH

SUBSTRUCTURE END BENT 1

NORTH CAROLINA PROFESSIONAL SEAL 14114 ENGINEER ROBERT C. LARSON
10/10/13

DESIGN ENGINEER OF RECORD:	DATE: 10/10/13
DRAWN BY: R. J. FLORY	DATE: 3/28/13
CHECKED BY: R. C. LARSON	DATE: 3/28/13

KCI Associates of North Carolina, P.A. — SUITE 220, LANDMARK CENTER II, 4601 DTC PKWY, BLVD., RALEIGH, N.C. 27609-5200, (919) 783-9104 — RALEIGH OFFICE, DRAWINGS@KCI.COM, LICENSE NUMBER: C-0194

DWG. REF. NO. 14 OF 24

REVISIONS						SHEET NO.
NO.	BY:	DATE:	NO.	BY:	DATE:	
1			3			TOTAL SHEETS
2			4			

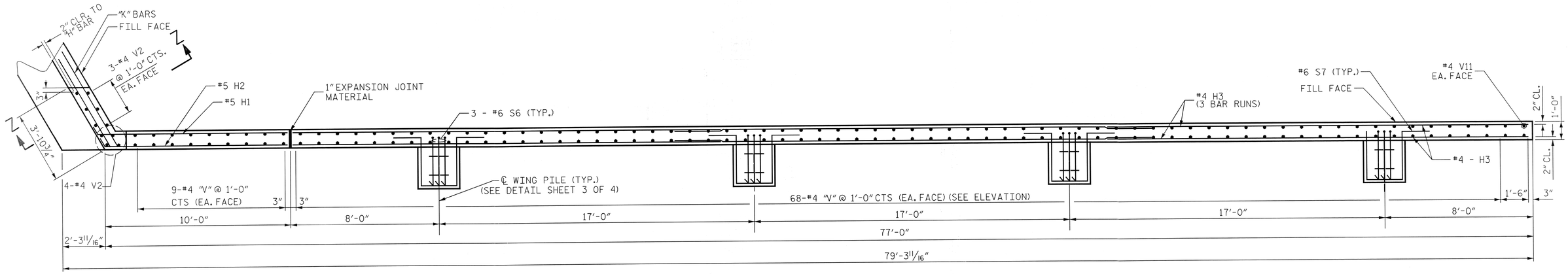

PLAN W1

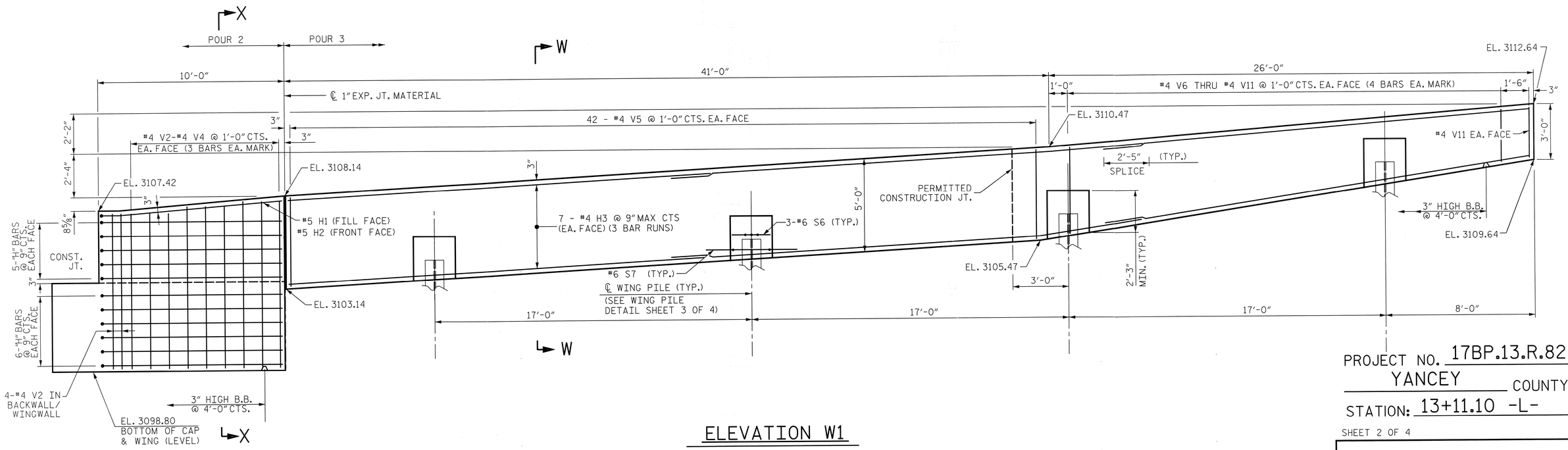

ELEVATION W1

PROJECT NO. 17BP.13.R.82

YANCEY COUNTY

STATION: 13+11.10 -L-

SHEET 2 OF 4

STATE OF NORTH CAROLINA
DEPARTMENT OF TRANSPORTATION
RALEIGH

SUBSTRUCTURE
END BENT 1

NORTH CAROLINA PROFESSIONAL SEAL 14114 ENGINEER ROBERT C. LARSON
10/8/13

KCI Associates of North Carolina, P.A.

REVISIONS						SHEET NO.
NO.	BY:	DATE:	NO.	BY:	DATE:	
1			3			TOTAL SHEETS
2			4			

DWG. REF. NO. 15 OF 24

DESIGN ENGINEER OF RECORD: DATE: 10/8/13

DRAWN BY: R. J. FLORY DATE: 3/28/13

CHECKED BY: R. C. LARSON DATE: 3/28/13

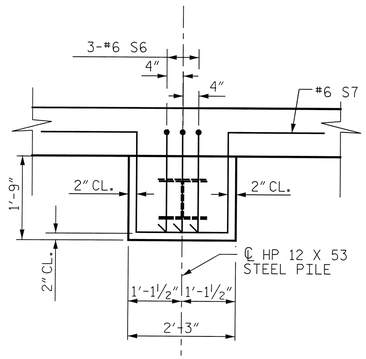

TYPICAL WING PILE DETAIL

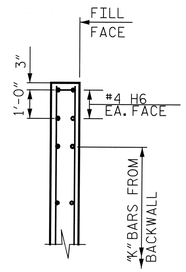

SECTION Z-Z

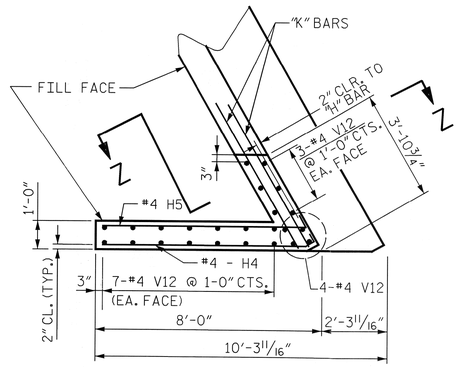

PLAN W2

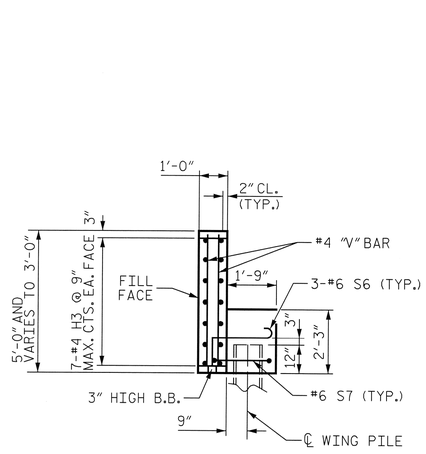

SECTION W-W

(SEE SHEET 2 OF 4 FOR LOCATION OF SECTION)

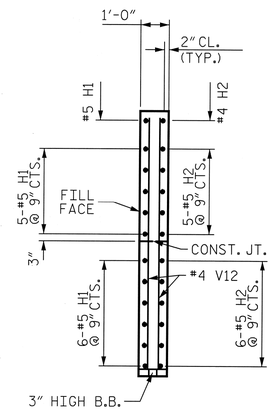

SECTION X-X

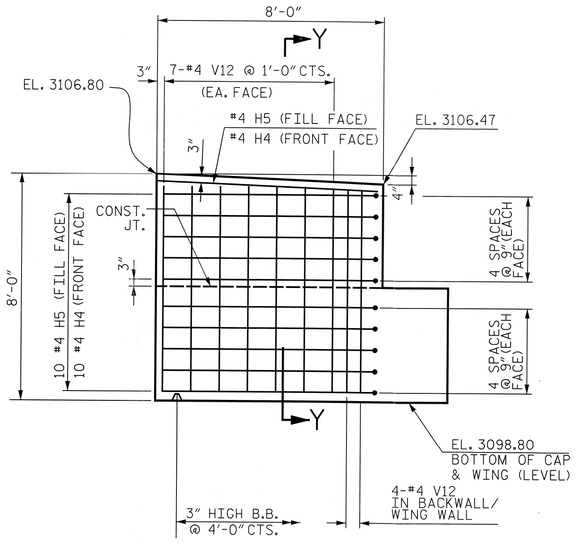

ELEVATION W2

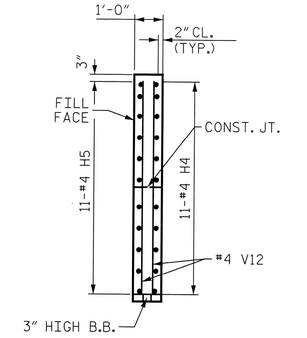

SECTION Y-Y

PROJECT NO. 17BP.13.R.82

YANCEY COUNTY

STATION: 13+11.10 -L-

SHEET 3 OF 4

STATE OF NORTH CAROLINA
DEPARTMENT OF TRANSPORTATION
RALEIGH

SUBSTRUCTURE END BENT 1

NORTH CAROLINA PROFESSIONAL SEAL 14114 ENGINEER ROBERT C. LARSON
10/8/13

DESIGN ENGINEER OF RECORD:	DATE: 10/8/13
DRAWN BY: R. J. FLORY	DATE: 3/28/13
CHECKED BY: R. C. LARSON	DATE: 3/28/13

KCI Associates of North Carolina, P.A.
RALEIGH OFFICE
ENGINEERS & PLANNERS & ECOLOGISTS
LICENSE NUMBER: C-0194
SUITE 120, LOCKWOOD CENTER II
2801 SW. FORK RD.
RALEIGH, N.C. 27609-7260
(919) 783-9214

REVISIONS						SHEET NO.
NO.	BY:	DATE:	NO.	BY:	DATE:	
1			3			TOTAL SHEETS
2			4			

DWG. REF. NO. 16 OF 24

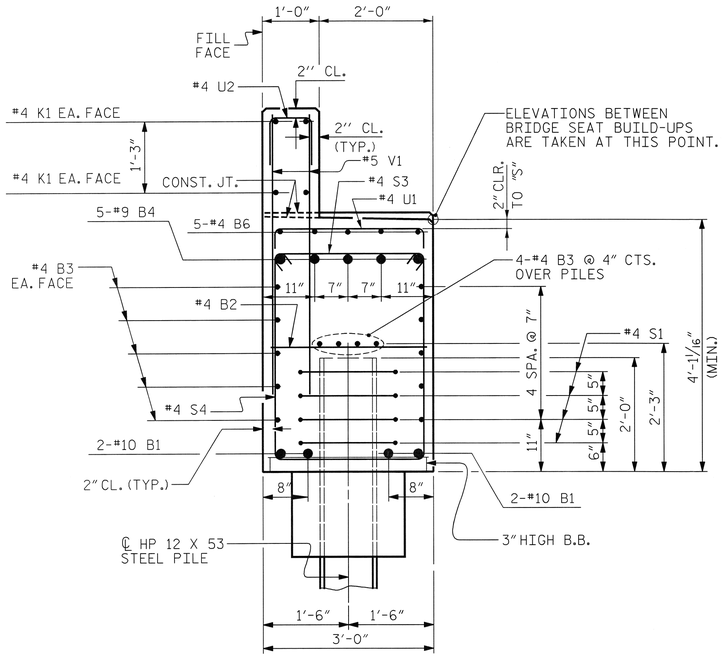

SECTION A-A

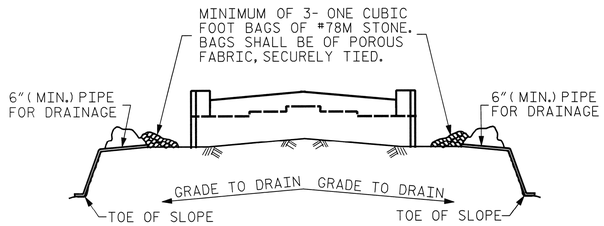

BAGGED STONE AND PIPE SHALL BE PLACED IMMEDIATELY AFTER COMPLETION OF END BENT EXCAVATION. PIPE MAY BE EITHER CONCRETE, CORRUGATED STEEL, CORRUGATED ALUMINUM ALLOY, OR CORRUGATED PLASTIC. PERFORATED PIPE WILL NOT BE ALLOWED.

BAGGED STONE SHALL REMAIN IN PLACE UNTIL THE ENGINEER DIRECTS THAT IT BE REMOVED. THE CONTRACTOR SHALL REMOVE AND DISPOSE OF SILT ACCUMULATIONS AT BAGGED STONE WHEN SO DIRECTED BY THE ENGINEER. BAGS SHALL BE REMOVED AND REPLACED WHENEVER THE ENGINEER DETERMINES THAT THEY HAVE DETERIORATED AND LOST THEIR EFFECTIVENESS.

NO SEPARATE PAYMENT WILL BE MADE FOR THIS WORK AND THE ENTIRE COST OF THIS WORK SHALL BE INCLUDED IN THE UNIT CONTRACT PRICE BID FOR THE SEVERAL PAY ITEMS.

TEMPORARY DRAINAGE AT END BENT

BAR TYPES

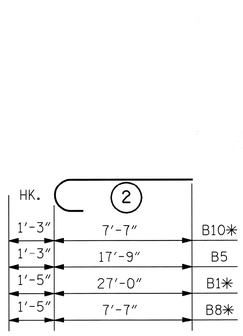

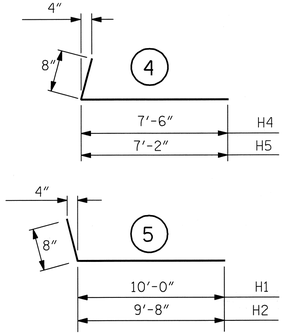

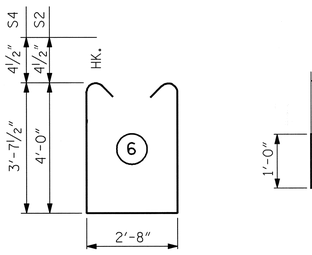

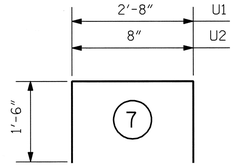

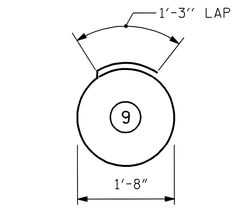

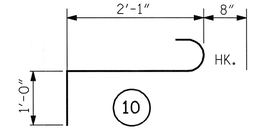

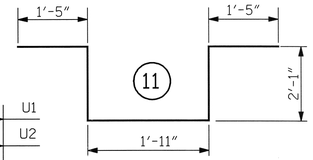

ALL BAR DIMENSIONS ARE OUT TO OUT.

* BAR LENGTHS DO NOT INCLUDE ANY ALLOWANCE FOR MECHANICAL SPLICES. FABRICATOR TO ADJUST LENGTHS AS NECESSARY. NO ADDITIONAL PAYMENT WILL BE MADE FOR THIS ADJUSTMENT.

BILL OF MATERIAL
END BENT 1

STAGE 1

BAR	NO.	SIZE	TYPE	LENGTH	WEIGHT
B1*	4	10	2	28'-5"	489
B2	7	4	STR.	2'-8"	12
B3	14	4	STR.	29'-8"	277
B4*	5	9	STR.	16'-3"	276
B5	5	9	2	19'-0"	323
B6	5	4	STR.	7'-0"	23
B7	2	4	STR.	13'-2"	18
H1	12	5	5	10'-8"	134
H2	12	5	5	10'-4"	129
H3	42	4	STR.	23'-10"	669
H6	4	4	STR.	3'-6"	9
K1	4	4	STR.	29'-8"	79
S1	16	4	9	6'-6"	69
S2	15	4	6	11'-5"	114
S3	22	4	3	3'-5"	50
S4	7	4	6	10'-8"	50
S6	12	6	10	3'-9"	68
S7	4	6	11	8'-11"	54
U1	4	4	7	5'-8"	15
U2	23	4	7	3'-8"	56
V1	46	5	STR.	5'-8"	272
V2	16	4	STR.	8'-3"	88
V3	6	4	STR.	8'-7"	34
V4	6	4	STR.	8'-10"	35
V5	84	4	STR.	4'-8"	262
V6	8	4	STR.	4'-4"	23
V7	8	4	STR.	4'-0"	21
V8	8	4	STR.	3'-9"	20
V9	8	4	STR.	3'-5"	18
V10	8	4	STR.	3'-1"	16
V11	10	4	STR.	2'-9"	18

REINFORCING STEEL, LBS		3721
CLASS A CONCRETE	POUR 1	16.1 CY
(STAGE 1)	POUR 2	3.6 CY
	POUR 3	11.4 CY
	TOTAL	31.1 CY
HP 12X53 STEEL PILES, NO		8
LIN FT		200
STEEL PILE POINTS, EA		8

STAGE 2

BAR	NO.	SIZE	TYPE	LENGTH	WEIGHT
B2	2	4	STR.	2'-8"	4
B8*	4	10	2	9'-0"	155
B9	14	4	STR.	7'-7"	71
B10*	5	9	2	8'-10"	150
H4	11	4	4	8'-2"	60
H5	11	4	4	7'-10"	58
H6	4	4	STR.	3'-6"	9
K2	4	4	STR.	7'-7"	20
S1	4	4	9	6'-6"	17
S3	6	4	3	3'-5"	14
S4	6	4	6	10'-8"	43
U2	4	4	7	3'-8"	10
V1	8	5	STR.	5'-8"	47
V12	24	4	STR.	7'-4"	118

REINFORCING STEEL, LB		776
CLASS A CONCRETE	POUR 1	5.0 CY
(STAGE 2)	POUR 2	1.7 CY
	TOTAL	6.7 CY
HP 12X53 STEEL PILES, NO		1
LIN FT		20
STEEL PILE POINTS, EA		1

PROJECT NO. 17BP.13.R.82
YANCEY COUNTY
STATION: 13+11.10 -L-

SHEET 4 OF 4

STATE OF NORTH CAROLINA
DEPARTMENT OF TRANSPORTATION
RALEIGH

SUBSTRUCTURE END BENT 1

NORTH CAROLINA PROFESSIONAL SEAL 14114 ENGINEER ROBERT C LARSON
10/10/13

DESIGN ENGINEER OF RECORD: DATE: 10/10/13
DRAWN BY: R. J. FLORY DATE: 3/29/13
CHECKED BY: R.C. LARSON DATE: 4/12/13

KCI Associates of North Carolina, P.A.
SUITE 220, LANDMARK CENTER II
4601 DUKE POINT RD.
RALEIGH, N.C. 27609-5610
(919) 783-9214
RALEIGH OFFICE
ENGINEERS • SURVEYORS • ECOLOGISTS
LICENSE NUMBERS C-0754

REVISIONS						SHEET NO.
NO.	BY:	DATE:	NO.	BY:	DATE:	
1			3			TOTAL SHEETS
2			4			

DWG. REF. NO. 17 OF 24

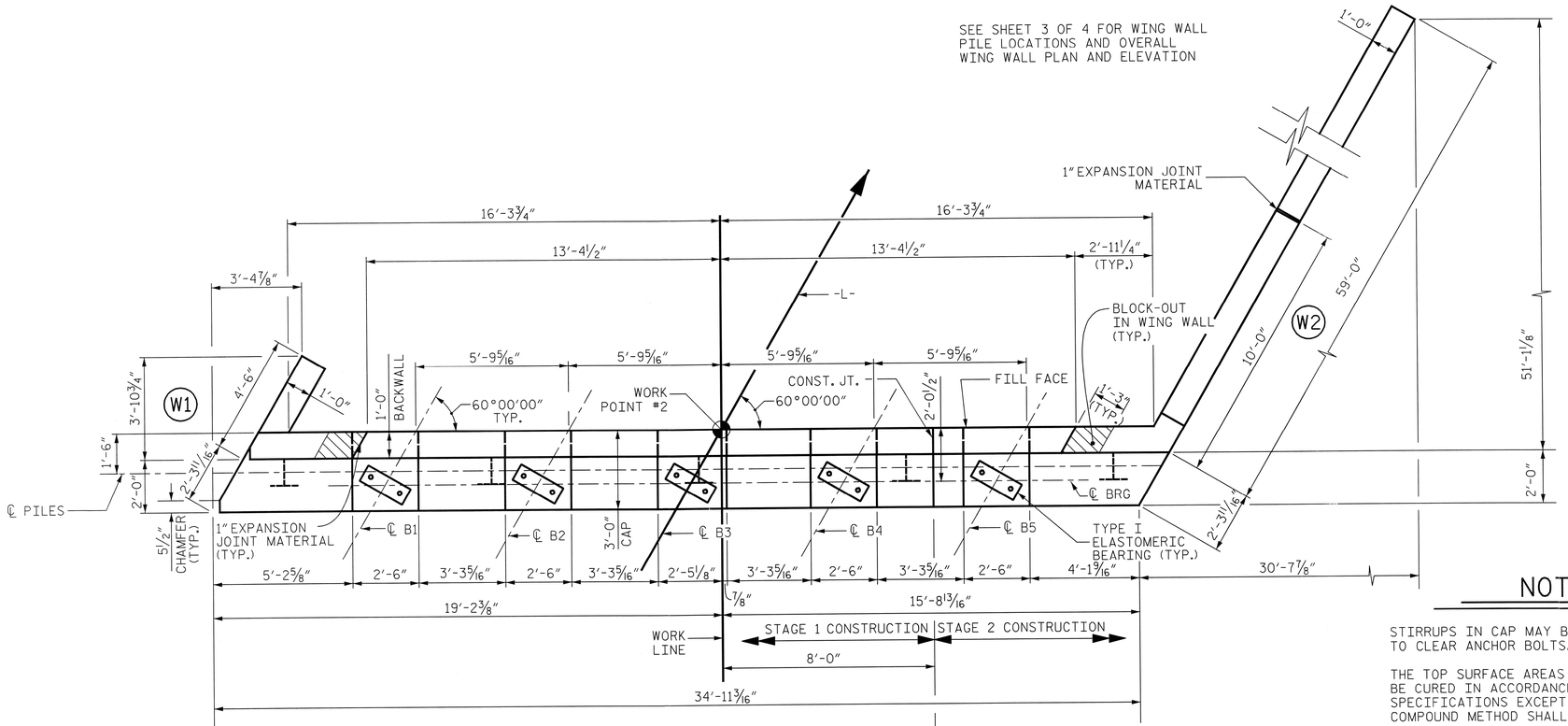

PLAN OF CAP

CONCRETE COLLARS NOT SHOWN FOR CLARITY

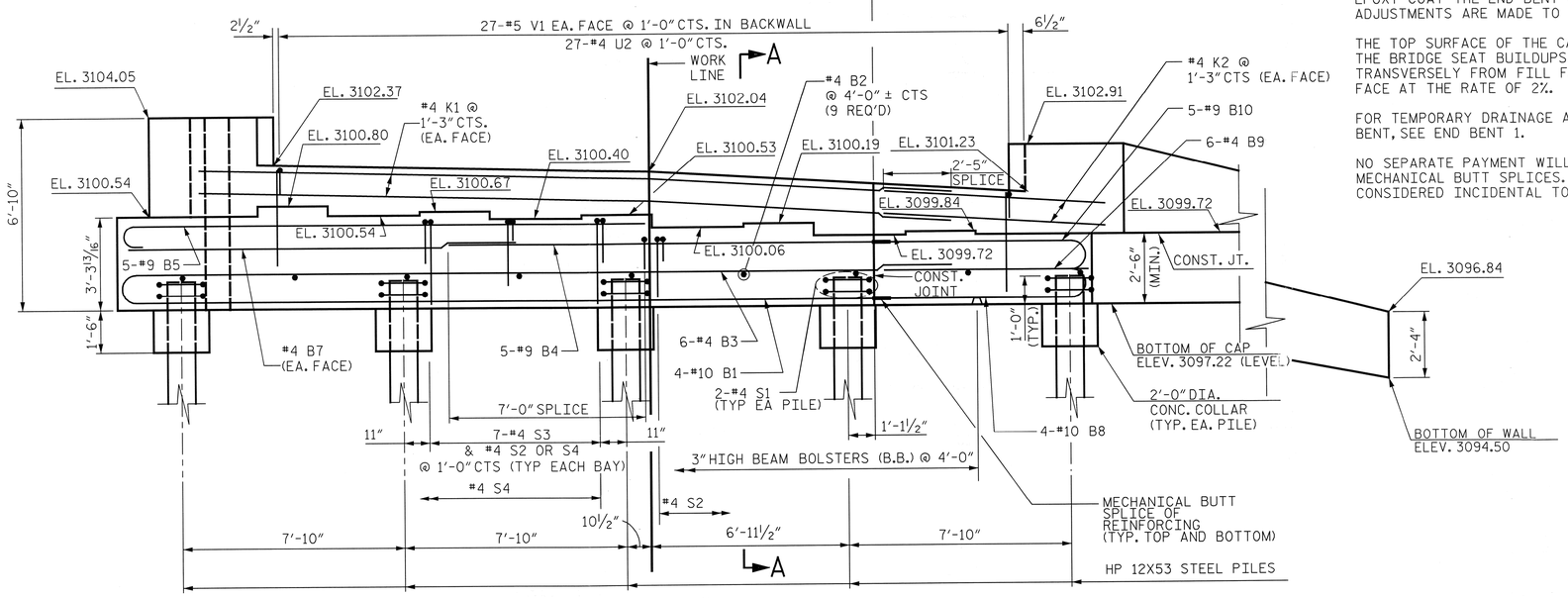

ELEVATION

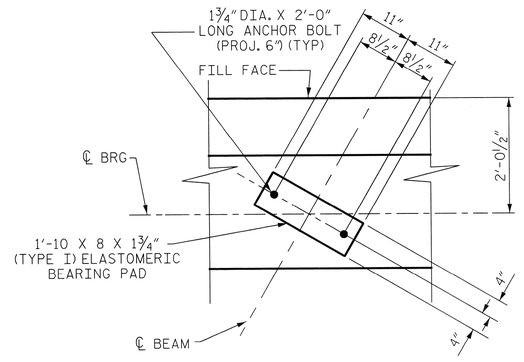

TYPICAL ANCHOR BOLT DETAIL

(TYP. EA. BEAM)

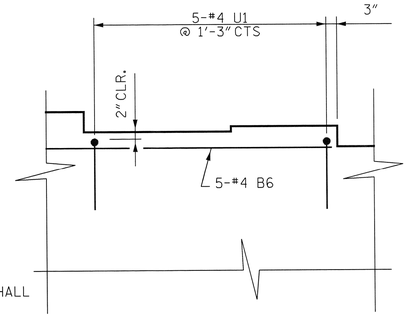

ADDITIONAL BRIDGE SEAT REINFORCING DETAIL @ BEAM 4

NOTES

STIRRUPS IN CAP MAY BE SHIFTED AS NECESSARY TO CLEAR ANCHOR BOLTS.

THE TOP SURFACE AREAS OF THE END BENT CAP SHALL BE CURED IN ACCORDANCE WITH THE STANDARD SPECIFICATIONS EXCEPT THE MEMBRANE CURING COMPOUND METHOD SHALL NOT BE USED.

BACKWALL SHALL BE PLACED BEFORE APPLYING THE EPOXY PROTECTIVE COATING.

EPOXY COAT THE END BENT CAP AFTER ADJUSTMENTS ARE MADE TO THE BEARING.

THE TOP SURFACE OF THE CAP EXCEPT THE BRIDGE SEAT BUILDUPS SHALL BE SLOPED TRANSVERSELY FROM FILL FACE TO FRONT FACE AT THE RATE OF 2%.

FOR TEMPORARY DRAINAGE AT END BENT, SEE END BENT 1.

NO SEPARATE PAYMENT WILL BE MADE FOR MECHANICAL BUTT SPLICES. THIS WORK IS CONSIDERED INCIDENTAL TO REINFORCING STEEL.

PROJECT NO. 17BP.13.R.82

YANCEY COUNTY

STATION: 13+11.10 -L-

SHEET 1 OF 4

STATE OF NORTH CAROLINA
DEPARTMENT OF TRANSPORTATION
RALEIGH

SUBSTRUCTURE END BENT 2

NORTH CAROLINA PROFESSIONAL SEAL 14414 ENGINEER ROBERT C. LARSON

10/15/13

DESIGN ENGINEER OF RECORD: DATE : 10/15/13

DRAWN BY : R. J. FLORY DATE : 5/7/13

CHECKED BY : R. C. LARSON DATE : 5/8/13

KCI Associates of North Carolina, P.A. — SUITE 2201, LANDMARK CENTER II, 4601 DOUGLAS DRIVE, RALEIGH, N.C. 27606-5200 (919) 783-7654
RALEIGH OFFICE
LICENSED ENGINEERS & ECOLOGISTS
LICENSE NUMBER: C-0754

REVISIONS						SHEET NO.
NO.	BY:	DATE:	NO.	BY:	DATE:	
1			3			TOTAL SHEETS
2			4			

DWG. REF. NO. 18 OF 24

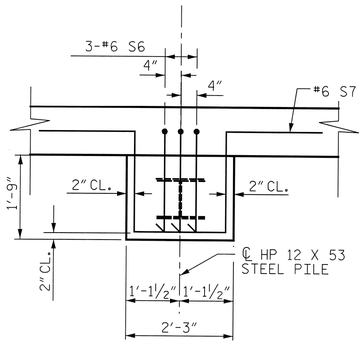

TYPICAL WING PILE DETAIL

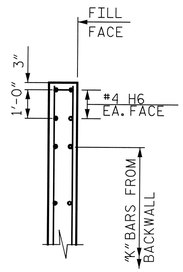

SECTION Z-Z

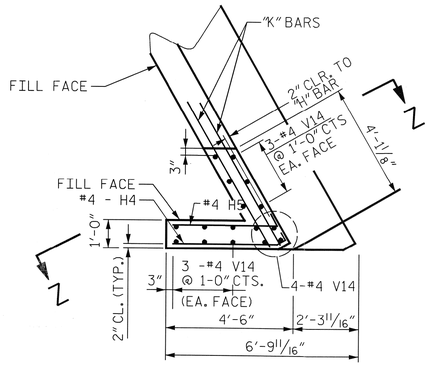

PLAN W1

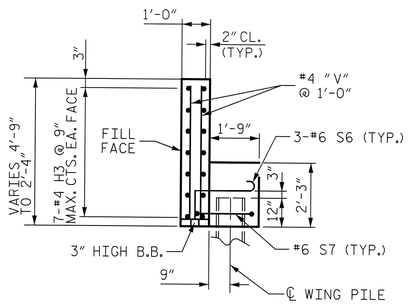

SECTION W-W

(SEE SHEET 3 OF 4
FOR LOCATION OF SECTION)

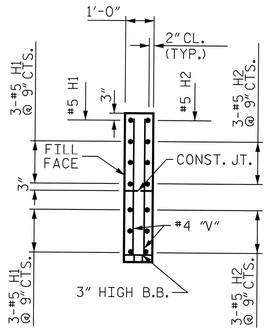

SECTION X-X

(SEE SHEET 3 OF 4
FOR LOCATION OF SECTION)

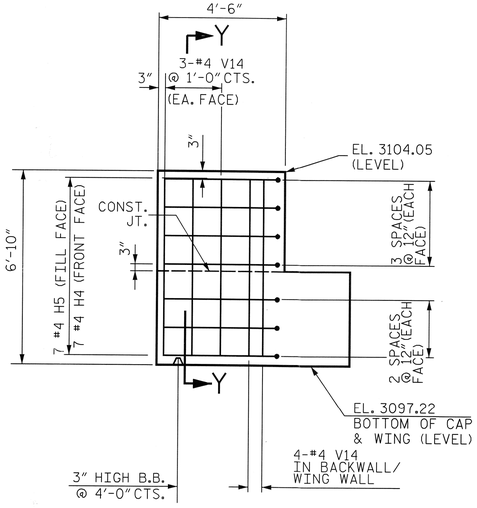

ELEVATION W1

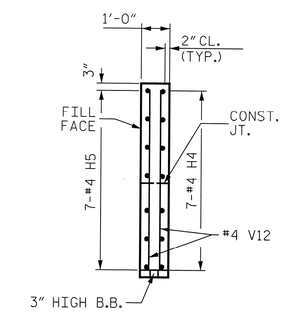

SECTION Y-Y

PROJECT NO. 17BP.13.R.82
YANCEY COUNTY
STATION: 13+11.10 -L-

SHEET 2 OF 4

STATE OF NORTH CAROLINA
DEPARTMENT OF TRANSPORTATION
RALEIGH

SUBSTRUCTURE
END BENT 2

NORTH CAROLINA PROFESSIONAL SEAL 14114 ENGINEER ROBERT C. LARSON
10/15/13

KCI Associates of North Carolina, P.A.
SUITE 220, LANDMARK CENTER II
4601 SIX FORKS RD.
RALEIGH, N.C. 27609-5200
(919) 783-9024
RALEIGH OFFICE
ENGINEERS • PLANNERS • ECOLOGISTS
LICENSE NUMBER: C-0164

REVISIONS						SHEET NO.
NO.	BY:	DATE:	NO.	BY:	DATE:	
1			3			TOTAL SHEETS
2			4			

DWG. REF. NO. 19 OF 24

DESIGN ENGINEER OF RECORD: DATE : 10/15/13
DRAWN BY : R. J. FLORY DATE : 5/8/13
CHECKED BY : R. C. LARSON DATE : 5/9/13

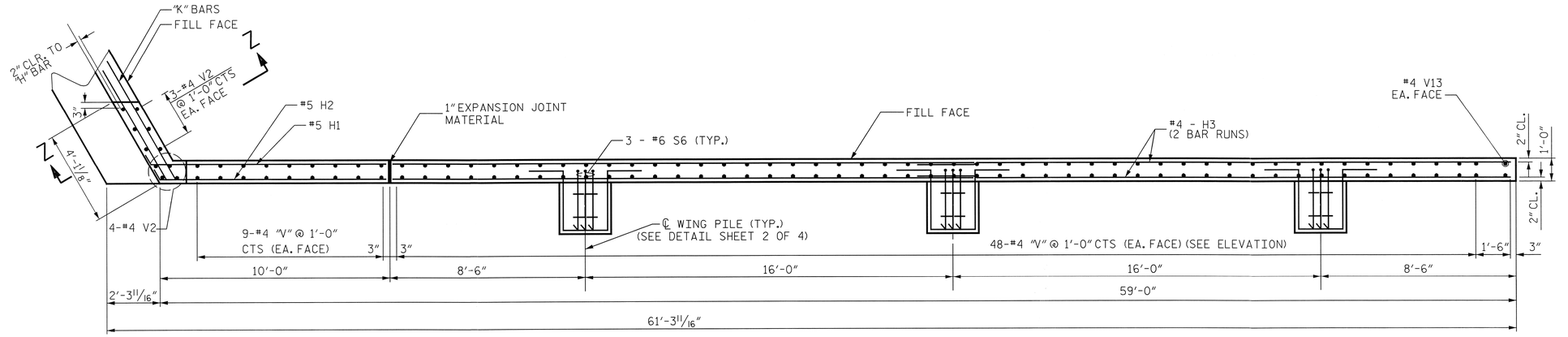

PLAN W2

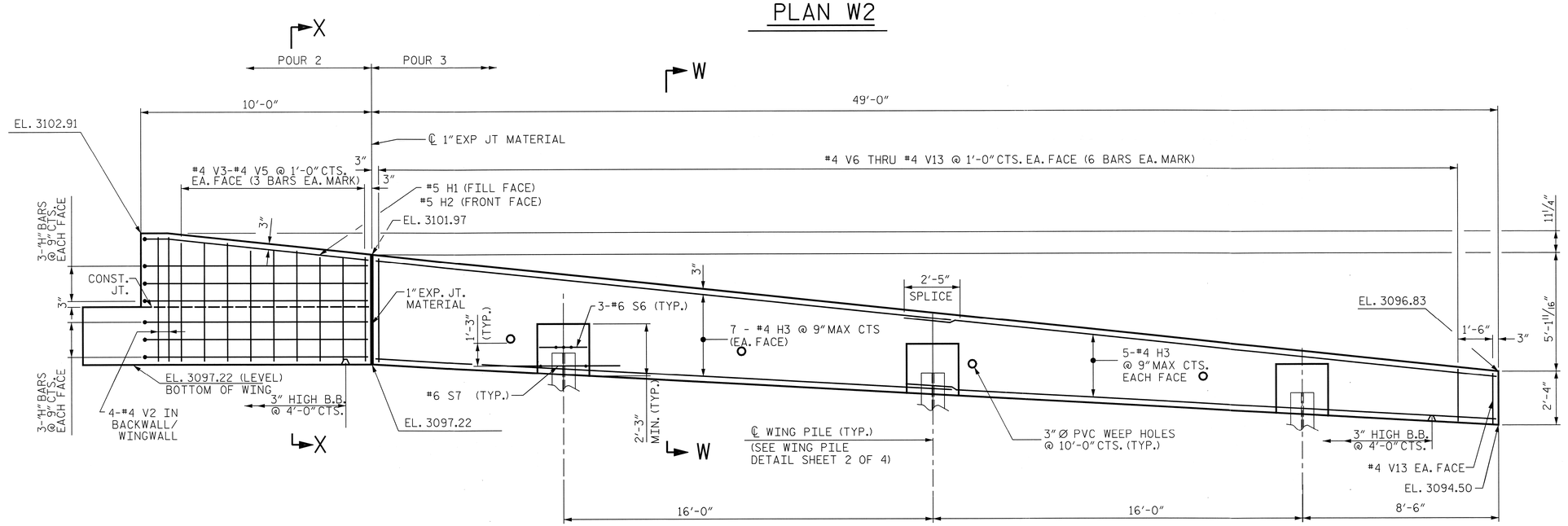

ELEVATION W2

PROJECT NO. 17BP.13.R.82

YANCEY COUNTY

STATION: 13+11.10 -L-

SHEET 3 OF 4

STATE OF NORTH CAROLINA
DEPARTMENT OF TRANSPORTATION
RALEIGH

SUBSTRUCTURE END BENT 2

NORTH CAROLINA PROFESSIONAL SEAL 14114 ENGINEER ROBERT C. LARSON
10/15/13

DESIGN ENGINEER OF RECORD:		DATE :	10/15/13
DRAWN BY :	R. J. FLORY	DATE :	5/7/13
CHECKED BY :	R. C. LARSON	DATE :	5/8/13

KCI Associates of North Carolina, P.A.
RALEIGH OFFICE
CHARLOTTE BY PLANNERS & ECOLOGISTS
LICENSE NUMBER C-0784
SUITE 200, LANDMARK CENTER II
4601 SIX FORKS RD.
RALEIGH, N.C. 27609-5200
(919) 783-9204

DWG. REF. NO. 20 OF 24

REVISIONS						SHEET NO.
NO.	BY:	DATE:	NO.	BY:	DATE:	
1			3			TOTAL SHEETS
2			4			

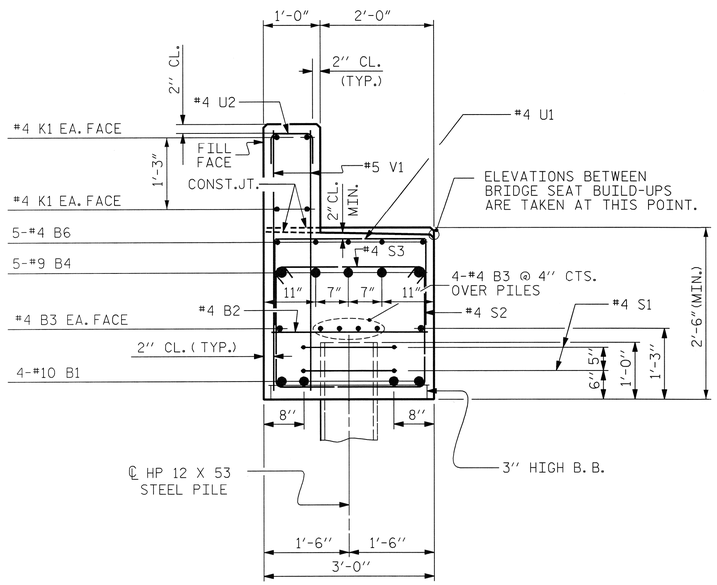

SECTION A-A

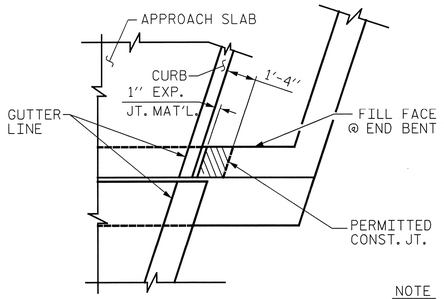

PLAN

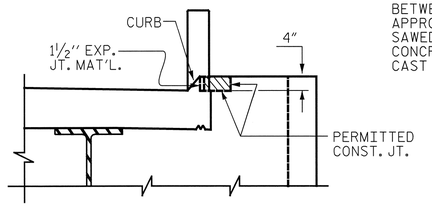

ELEVATION

BLOCKOUT IN WING WALL

NOTE

THE CONCRETE IN THE SHADED AREA OF THE WING SHALL BE POURED AFTER THE JOINT BETWEEN THE DECK AND APPROACH SLAB HAS BEEN SAWED AND THE VERTICAL CONCRETE BARRIER RAIL IS CAST IF SLIP FORMING IS USED.

BAR TYPES

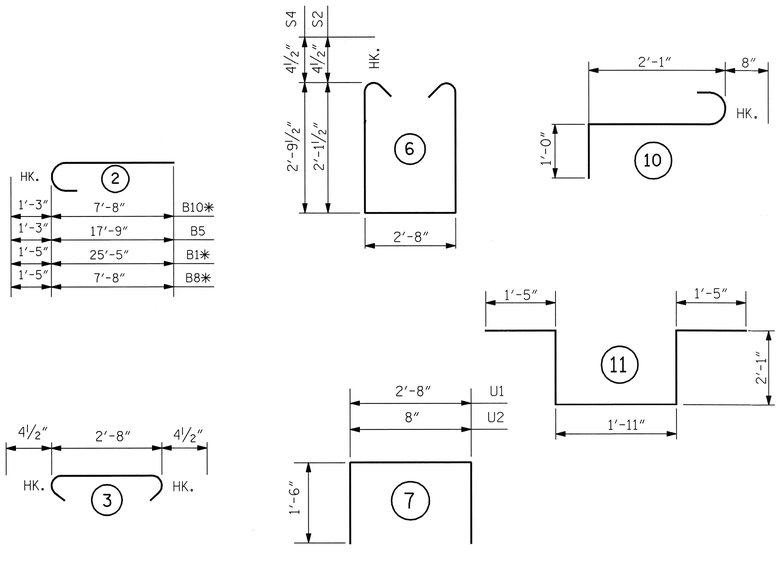

ALL BAR DIMENSIONS ARE OUT TO OUT.

*BAR LENGTHS DO NOT INCLUDE ANY ALLOWANCE FOR MECHANICAL SPLICES. FABRICATOR TO ADJUST LENGTHS AS NECESSARY. NO ADDITIONAL PAYMENT WILL BE MADE FOR THIS ADJUSTMENT.

BILL OF MATERIAL
END BENT 1

STAGE 1

BAR	NO.	SIZE	TYPE	LENGTH	WEIGHT
B1*	4	10	2	26'-10"	462
B2	7	4	STR.	2'-8"	12
B3	6	4	STR.	29'-4"	118
B4*	5	9	STR.	15'-0"	255
B5	5	9	2	19'-0"	323
B6	5	4	STR.	7'-0"	23
B7	2	4	STR.	14'-8"	20
H4	7	4	4	4'-8"	22
H5	7	4	4	4'-4"	20
H6	4	4	STR.	3'-8"	10
K1	4	4	STR.	29'-5"	79
S1	8	4	9	6'-6"	35
S2	8	4	6	7'-8"	41
S3	22	4	3	3'-5"	50
S4	14	4	6	9'-0"	84
U1	5	4	7	5'-8"	19
U2	21	4	7	3'-8"	51
V1	42	5	STR.	3'-8"	161
V16	16	4	STR.	6'-6"	69

REINFORCING STEEL, LB 1854

CLASS A CONCRETE (STAGE 1) POUR 1 10.4 CY; POUR 2 2.2 CY; TOTAL 12.6 CY

HP 12X53 STEEL PILES, NO 4; LIN FT 100

STEEL PILE POINTS, EA 4

PILE EXCAVATION NOT IN SOIL, LIN FT 13

STAGE 2

BAR	NO.	SIZE	TYPE	LENGTH	WEIGHT
B2	2	4	STR.	2'-8"	4
B8*	4	10	STR.	9'-1"	156
B9	6	4	2	7'-8"	31
B10*	5	9	2	8'-11"	152
H1	7	5	5	10'-8"	78
H2	7	5	5	10'-4"	75
H3	24	4	STR.	25'-7"	410
H6	4	4	STR.	3'-8"	10
K2	4	4	STR.	7'-8"	20
S1	2	4	9	6'-6"	9
S2	6	4	6	7'-8"	31
S3	6	4	3	3'-5"	14
S6	9	6	10	3'-9"	51
S7	3	6	11	8'-11"	40
U2	6	4	7	3'-8"	15
V1	12	5	STR.	3'-8"	46
V2	10	4	STR.	5'-4"	36
V3	6	4	STR.	5'-1"	20
V4	6	4	STR.	4'-9"	19
V5	6	4	STR.	4'-4"	17
V6	12	4	STR.	4'-2"	33
V7	12	4	STR.	3'-10"	31
V8	12	4	STR.	3'-7"	29
V9	12	4	STR.	3'-3"	26
V10	12	4	STR.	3'-0"	24
V11	12	4	STR.	2'-8"	21
V12	12	4	STR.	2'-4"	19
V13	14	4	STR.	2'-1"	19

REINFORCING STEEL, LB 1436

CLASS A CONCRETE (STAGE 2) POUR 1 3.5 CY; POUR 2 1.7 CY; POUR 3 6.4 CY; TOTAL 11.6 CY

HP 12X53 STEEL PILES, NO 4; LIN FT 60

STEEL PILE POINTS, EA 4

PILE EXCAVATION NOT IN SOIL, LIN FT 20

PILE EXCAVATION IN SOIL, LIN FT 6

DESIGN ENGINEER OF RECORD: DATE : 10|15|13

DRAWN BY : R. J. FLORY DATE : 3/29/13

CHECKED BY : R.C. LARSON DATE : 4/12/13

PROJECT NO. 17BP.13.R.82

YANCEY COUNTY

STATION: 13+11.10 -L-

SHEET 4 OF 4

NORTH CAROLINA PROFESSIONAL SEAL 14114 ENGINEER ROBERT C. LARSON

10/15/13

STATE OF NORTH CAROLINA
DEPARTMENT OF TRANSPORTATION
RALEIGH

SUBSTRUCTURE END BENT 2

KCI Associates of North Carolina, P.A. — SUITE 200, LANDMARK CENTER II, 4601 DE BARRY RD., RALEIGH, N.C. 27616-7600, (919) 783-9214 — RALEIGH OFFICE, ENGINEERS & PLANNERS & ECOLOGISTS, LICENSE NUMBER C-0764

DWG. REF. NO. 21 OF 24

REVISIONS						SHEET NO.
NO.	BY:	DATE:	NO.	BY:	DATE:	
1			3			TOTAL SHEETS
2			4			

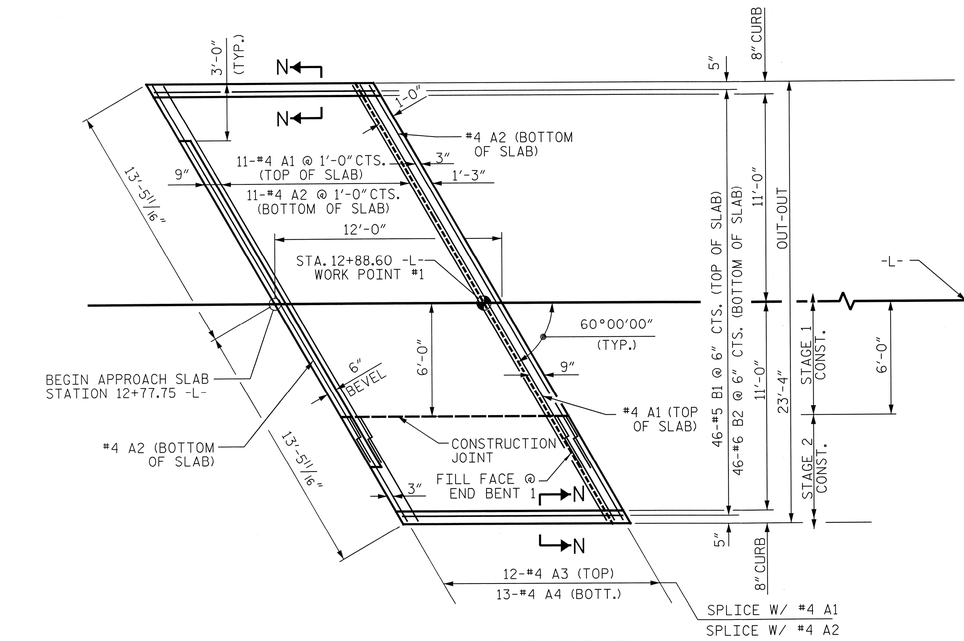

PLAN @ END BENT 1

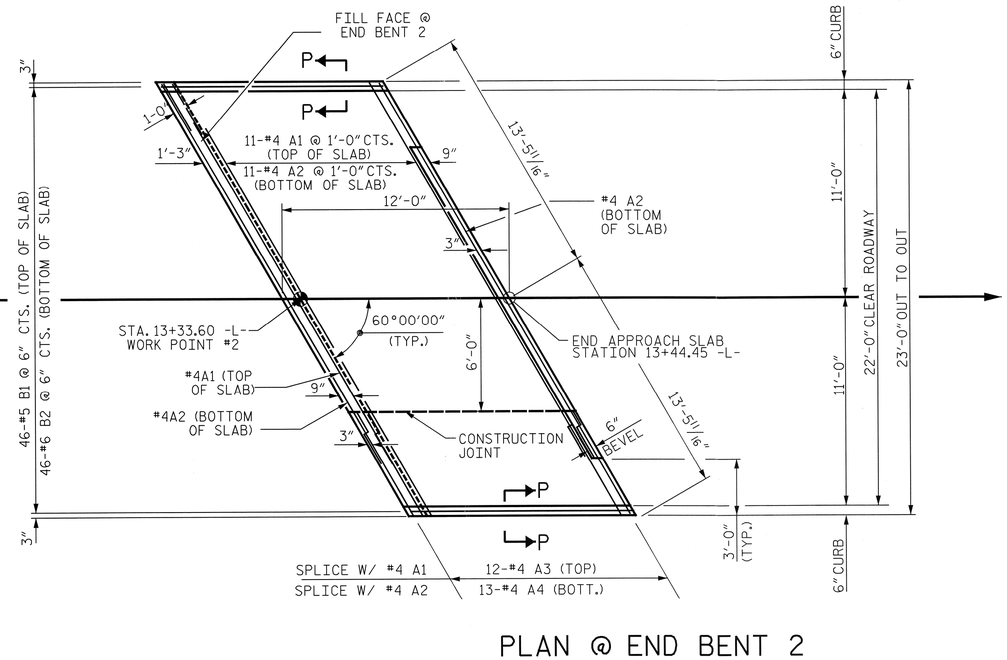

PLAN @ END BENT 2

BILL OF MATERIAL FOR ONE APPROACH SLAB (2 REQ'D)					
STAGE 1					
BAR	NO.	SIZE	TYPE	LENGTH	WEIGHT
✳A1	12	#4	STR.	22'-5"	178
A2	13	#4	STR.	22'-2"	191
✳B1	35	#5	STR.	10'-8"	389
B2	35	#6	STR.	11'-7"	609
REINFORCING STEEL					800 LBS
✳EPOXY COATED REINFORCING STEEL					567 LBS
CLASS AA CONCRETE					9.3 CU YD
STAGE 2					
BAR	NO.	SIZE	TYPE	LENGTH	WEIGHT
✳A3	12	#4	STR.	6'-1"	50
A4	13	#4	STR.	6'-1"	54
✳B1	11	#5	STR.	10'-8"	122
B2	11	#6	STR.	11'-7"	191
REINFORCING STEEL					245 LBS
✳EPOXY COATED REINFORCING STEEL					172 LBS
CLASS AA CONCRETE					3.0 CU YD

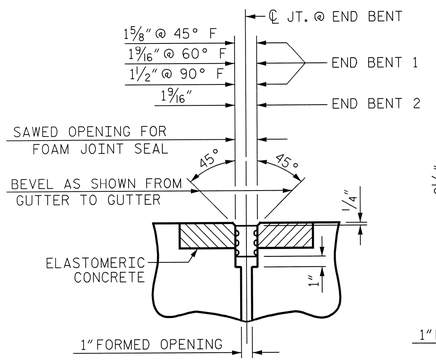

SECTION C-C
FOAM JOINT SEAL

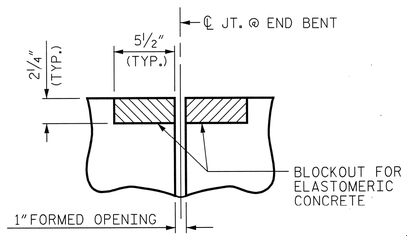

SECTION C-C
FOAM JOINT SEAL
(PRE-SAWED ELASTOMERIC CONCRETE DIMENSIONS)

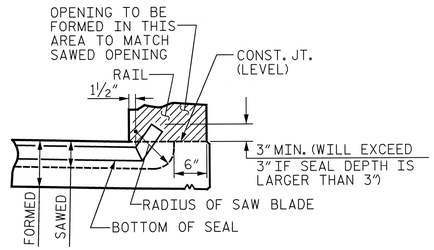

SECTION A-A

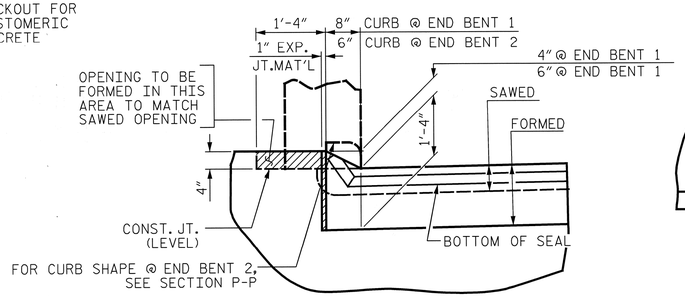

SECTION B-B

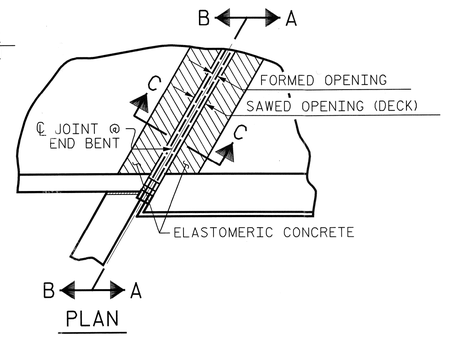

PLAN

JOINT SEAL DETAILS @ END BENT

FOAM JOINT SEAL TO BE CUT, HEAT WELDED AND TURNED UP AT A 45° ANGLE FROM HORIZONTAL.

THE JOINT SHALL BE SAWED PRIOR TO THE CASTING OF THE BARRIER RAIL.

SPLICE LENGTHS		
BAR SIZE	EPOXY COATED	UNCOATED
#4	2'-0"	1'-9"
#5	2'-6"	2'-2"
#6	3'-10"	2'-7"

ELASTOMERIC CONCRETE	
END BENT NO.	ELASTOMERIC CONCRETE ✳ (CU. FT.)
1	4.4
2	4.4
TOTAL	8.8

✳ BASED ON THE MINIMUM BLOCKOUT SHOWN.

PROJECT NO. 17BP.13.R.82

YANCEY COUNTY

STATION: 13+11.10 -L-

SHEET 1 OF 2

STATE OF NORTH CAROLINA
DEPARTMENT OF TRANSPORTATION
RALEIGH

BRIDGE APPROACH SLAB

NORTH CAROLINA PROFESSIONAL SEAL 14114 ENGINEER ROBERT C. LARSON
10/15/13

DESIGN ENGINEER OF RECORD: DATE: 10/15/13
DRAWN BY: R. A. PRUETT DATE: 4/26/13
CHECKED BY: R. C. LARSON DATE: 5/08/13

KCI Associates of North Carolina, P.A.
SUITE 200, LANDMARK CENTER II
4601 DUR. FORKS RD.
RALEIGH, N.C. 27609-5310
(919) 783-9214
RALEIGH OFFICE
LICENSURE NUMBERS @ ECOL.OGISTS
LICENSE NUMBER: C-0754

REVISIONS						SHEET NO.
NO.	BY:	DATE:	NO.	BY:	DATE:	
1			3			TOTAL SHEETS
2			4			

DWG. REF. NO. 22 OF 24

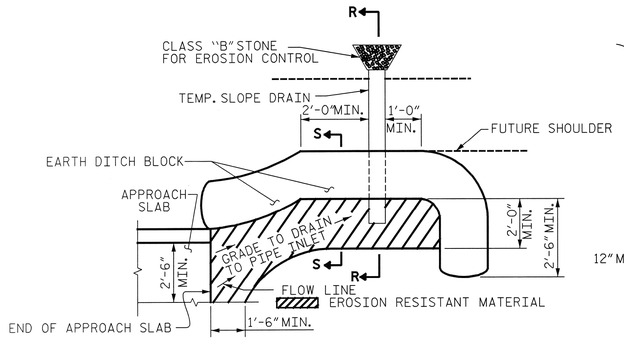

NOTE: IMMEDIATELY AFTER THE CONSTRUCTION OF THE APPROACH SLAB, THE CONTRACTOR SHALL PROVIDE TEMPORARY BERM AND SLOPE DRAIN. CONTRACTOR SHALL GRADE TO PIPE INLET AND PROVIDE EROSION RESISTANT MATERIAL AS SHOWN. THE EROSION RESISTANT MATERIAL SHALL BE EITHER 1) ASPHALT PLANT MIX, TYPE 1 OR TYPE 2, MIN. 2" DEPTH, 2) EROSION CONTROL MAT, OR 3) CONCRETE, AS DIRECTED BY THE ENGINEER. THE SLOPE DRAIN SHALL CONSIST OF A NON-PERFORATED TEMPORARY DRAINAGE PIPE, 12 INCHES IN DIAMETER.

PLAN VIEW

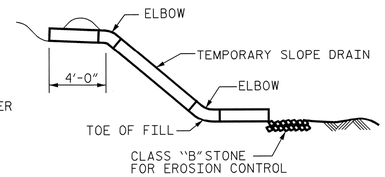

SECTION R-R

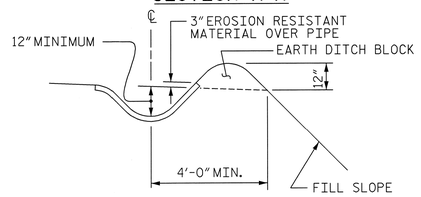

SECTION S-S

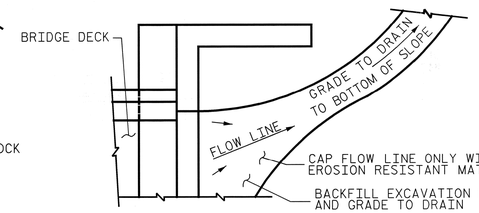

NOTE: IF THE APPROACH SLAB IS NOT CONSTRUCTED IMMEDIATELY AFTER THE BACKFILLING OF THE END BENT EXCAVATION, GRADE TO DRAIN TO THE BOTTOM OF THE SLOPE AND PROVIDE EROSION RESISTANT MATERIAL, SUCH AS FIBERGLASS ROVING OR AS DIRECTED BY THE ENGINEER TO PREVENT SOIL EROSION AND TO PROTECT THE AREA ADJACENT TO THE STRUCTURE. THE CONTRACTOR WILL BE REQUIRED TO REMOVE THESE MATERIALS PRIOR TO CONSTRUCTION OF THE APPROACH SLAB.

TEMPORARY DRAINAGE DETAIL

TEMPORARY BERM AND SLOPE DRAIN DETAILS

(TO BE USED WHEN CURB AND GUTTER IS REQUIRED)

NOTES

APPROACH SLAB SHALL NOT BE CONSTRUCTED PRIOR TO COMPLETION OF THE BRIDGE DECK.

FOR BRIDGE APPROACH FILL INCLUDING GEOTEXTILE, IMPERMEABLE GEOMEMBRANE, 4" Ø DRAINAGE PIPE, AND #78M STONE, SEE ROADWAY PLANS.

AREA BETWEEN THE WINGWALL AND APPROACH SLAB SHALL BE GRADED TO DRAIN THE WATER AWAY FROM THE FILL FACE OF THE BRIDGE AND SHALL BE PAVED. SEE ROADWAY PLANS.

THE JOINT SHALL BE SAWED PRIOR TO THE CASTING OF THE BARRIER RAIL.

SUBDRAIN FINE AGGREGATE IS TO BE CONTINUOUS ALONG FILL FACE OF BACKWALL AND END BENT FROM OUTSIDE EDGE TO OUTSIDE EDGE OF APPROACH SLAB.

FOR FOAM JOINT SEALS, SEE SPECIAL PROVISIONS.

THE NOMINAL UNCOMPRESSED SEAL WIDTH OF THE FOAM JOINT SEAL SHALL BE 2".

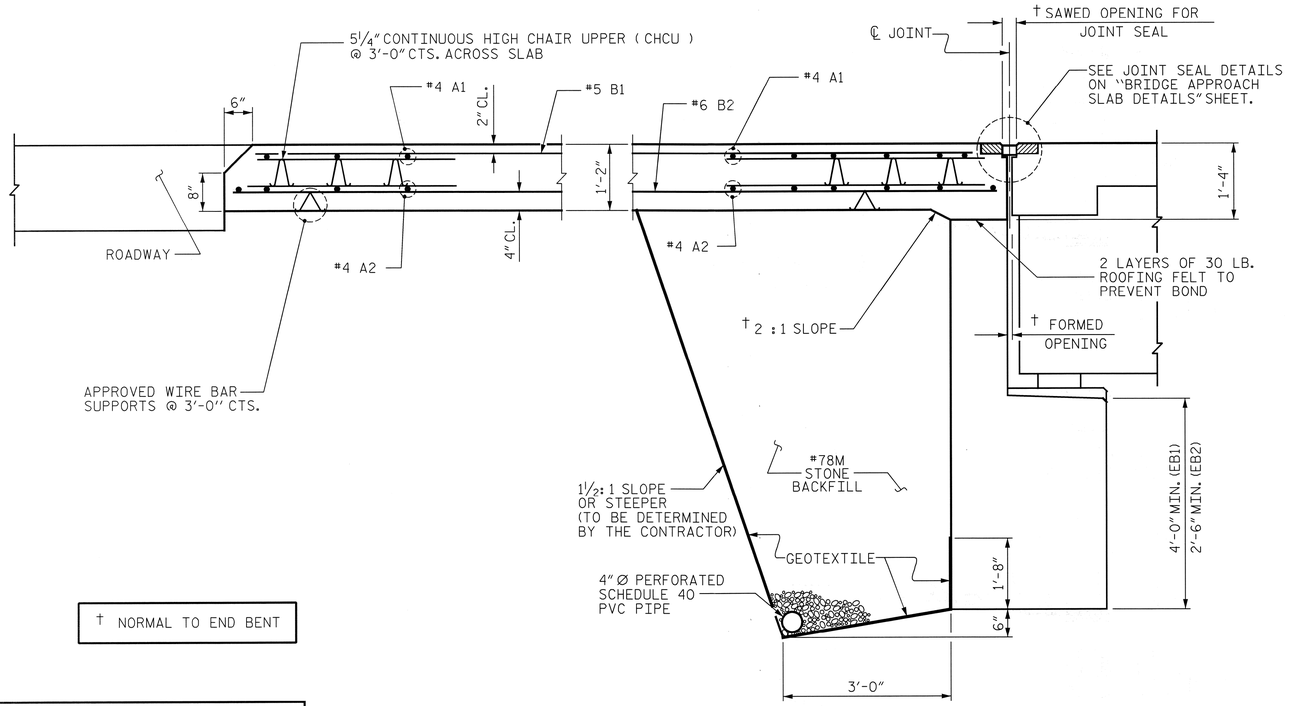

† NORMAL TO END BENT

SECTION THRU SLAB

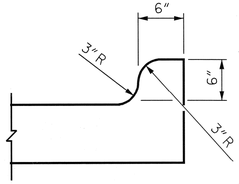

SECTION P-P

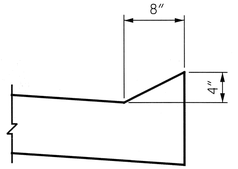

SECTION N-N

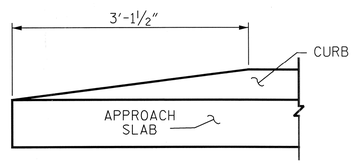

END OF CURB WITHOUT CURB AND GUTTER

CURB DETAILS

DESIGN ENGINEER OF RECORD:	DATE: 10/15/13
ASSEMBLED BY: R. A. PRUETT	DATE: 5/01/13
CHECKED BY: R. C. LARSON	DATE: 5/08/13
DRAWN BY: EEM 3/95	REV. 5/1/06RR KMM/GM
CHECKED BY: VAP 3/95	REV. 10/1/11 MAA/GM
	REV. 12/21/11 MAA/GM

PROJECT NO. 17BP.13.R.82

YANCEY COUNTY

STATION: 13+11.10 -L-

SHEET 2 OF 2

NORTH CAROLINA PROFESSIONAL SEAL 14114 ENGINEER ROBERT C. LARSON 10/15/13

STATE OF NORTH CAROLINA
DEPARTMENT OF TRANSPORTATION
RALEIGH

BRIDGE APPROACH SLAB DETAILS

KCI Associates of North Carolina, P.A.
SUITE 220, LANDMARK CENTER II
4601 SIX FORKS RD.
RALEIGH, N.C. 27609-5210
(919) 783-9214
RALEIGH OFFICE
ENGINEERS ◉ ECOLOGISTS
LICENSE NUMBER: C-0754

REVISIONS						SHEET NO.
NO.	BY:	DATE:	NO.	BY:	DATE:	
1			3			TOTAL SHEETS
2			4			

DWG. REF. NO. 23 OF 24

STANDARD NOTES

DESIGN DATA:

SPECIFICATIONS	A.A.S.H.T.O. (CURRENT)
LIVE LOAD	SEE PLANS
IMPACT ALLOWANCE	SEE A.A.S.H.T.O.
STRESS IN EXTREME FIBER OF	
STRUCTURAL STEEL - AASHTO M270 GRADE 36	20,000 LBS. PER SQ. IN.
- AASHTO M270 GRADE 50W	27,000 LBS. PER SQ. IN.
- AASHTO M270 GRADE 50	27,000 LBS. PER SQ. IN.
REINFORCING STEEL IN TENSION	
GRADE 60	24,000 LBS. PER SQ. IN.
CONCRETE IN COMPRESSION	1,200 LBS. PER SQ. IN.
CONCRETE IN SHEAR	SEE A.A.S.H.T.O.
STRUCTURAL TIMBER - TREATED OR	
UNTREATED - EXTREME FIBER STRESS	1,800 LBS. PER SQ. IN.
COMPRESSION PERPENDICULAR TO GRAIN OF TIMBER	375 LBS. PER SQ. IN.
EQUIVALENT FLUID PRESSURE OF EARTH	30 LBS. PER CU. FT. (MINIMUM)

MATERIAL AND WORKMANSHIP:

EXCEPT AS MAY OTHERWISE BE SPECIFIED ON PLANS OR IN THE SPECIAL PROVISIONS, ALL MATERIAL AND WORKMANSHIP SHALL BE IN ACCORDANCE WITH THE 2006 "STANDARD SPECIFICATIONS FOR ROADS AND STRUCTURES" OF THE N. C. DEPARTMENT OF TRANSPORTATION.

STEEL SHEET PILING FOR PERMANENT OR TEMPORARY APPLICATIONS SHALL BE HOT ROLLED.

CONCRETE:

UNLESS OTHERWISE REQUIRED ON PLANS, CLASS A CONCRETE SHALL BE USED FOR ALL PORTIONS OF ALL STRUCTURES WITH THE EXCEPTION THAT: CLASS AA CONCRETE SHALL BE USED IN BRIDGE SUPERSTRUCTURES, ABUTMENT BACKWALLS, AND APPROACH SLABS; AND CLASS B CONCRETE SHALL BE USED FOR SLOPE PROTECTION AND RIP RAP.

CONCRETE CHAMFERS:

UNLESS OTHERWISE NOTED ON THE PLANS, ALL EXPOSED CORNERS ON STRUCTURES SHALL BE CHAMFERED 3/4" WITH THE FOLLOWING EXCEPTIONS: TOP CORNERS OF CURBS MAY BE ROUNDED TO 1-1/2" RADIUS WHICH IS BUILT INTO CURB FORMS; CORNERS OF TRANSVERSE FLOOR EXPANSION JOINTS SHALL BE ROUNDED WITH A 1/4" FINISHING TOOL UNLESS OTHERWISE REQUIRED ON PLANS; AND CORNERS OF EXPANSION JOINTS IN THE ROADWAY FACES AND TOPS OF CURBS AND SIDEWALKS SHALL BE ROUNDED TO A 1/4" RADIUS WITH A FINISHING STONE OR TOOL UNLESS OTHERWISE REQUIRED ON PLANS.

DOWELS:

DOWELS WHEN INDICATED ON PLANS AS FOR CULVERT EXTENSIONS, SHALL BE EMBEDDED AT LEAST 12" INTO THE OLD CONCRETE AND GROUTED INTO PLACE WITH 1:2 CEMENT MORTAR.

ALLOWANCE FOR DEAD LOAD DEFLECTION, SETTLEMENT, ETC. IN CASTING SUPERSTRUCTURES:

BRIDGES SHALL BE BUILT ON THE GRADE OR VERTICAL CURVE SHOWN ON PLANS. SLABS, CURBS AND PARAPETS SHALL CONFORM TO THE GRADE OR CURVE.

ALL DIMENSIONS WHICH ARE GIVEN IN SECTION AND ARE AFFECTED BY DEAD LOAD DEFLECTIONS ARE DIMENSIONS AT CENTER LINE OF BEARING UNLESS OTHERWISE NOTED ON PLANS. IN SETTING FORMS FOR STEEL BEAM BRIDGES AND PRESTRESSED CONCRETE GIRDER BRIDGES, ADJUSTMENTS SHALL BE MADE DUE TO THE DEAD LOAD DEFLECTIONS FOR THE ELEVATIONS SHOWN. WHERE BLOCKS ARE SHOWN OVER BEAMS FOR BUILDING UP TO THE SLAB, THE VERTICAL DIMENSIONS OF THE BLOCKS SHALL BE ADJUSTED BETWEEN BEARINGS TO COMPENSATE FOR DEAD LOAD DEFLECTIONS, VERTICAL CURVE ORDINATE, AND ACTUAL BEAM CAMBER. WHERE BOTTOM OF SLAB IS IN LINE WITH BOTTOM OF TOP FLANGES, DEPTH OF SLAB BETWEEN BEARINGS SHALL BE ADJUSTED TO COMPENSATE FOR DEAD LOAD DEFLECTION, VERTICAL CURVE ORDINATE, AND ACTUAL BEAM CAMBER.

IN SETTING FALSEWORK AND FORMS FOR REINFORCED CONCRETE SPANS, AN ALLOWANCE SHALL BE MADE FOR DEAD LOAD DEFLECTIONS, SETTLEMENT OF FALSEWORK, AND PERMANENT CAMBER WHICH SHALL BE PROVIDED FOR IN ADDITION TO THE ELEVATIONS SHOWN. AFTER REMOVAL OF THE FALSEWORK, THE FINISHED STRUCTURES SHALL CONFORM TO THE PROFILE AND ELEVATIONS SHOWN ON THE PLANS AND CONSTRUCTION ELEVATIONS FURNISHED BY THE ENGINEER.

DETAILED DRAWINGS FOR FALSEWORK OR FORMS FOR BRIDGE SUPERSTRUCTURE AND ANY STRUCTURE OR PARTS OF A STRUCTURE AS NOTED ON THE PLANS SHALL BE SUBMITTED TO THE ENGINEER FOR APPROVAL BEFORE CONSTRUCTION OF THE FALSEWORK OR FORMS IS STARTED.

REINFORCING STEEL:

ALL REINFORCING STEEL SHALL BE DEFORMED. DIMENSIONS RELATIVE TO PLACEMENT OF REINFORCING ARE TO CENTERS OF BARS UNLESS OTHERWISE INDICATED IN THE PLANS. DIMENSIONS ON BAR DETAILS ARE TO CENTERS OF BARS OR ARE OUT TO OUT AS INDICATED ON PLANS.

WIRE BAR SUPPORTS SHALL BE PROVIDED FOR REINFORCING STEEL WHERE INDICATED ON THE PLANS. WHEN BAR SUPPORT PIECES ARE PLACED IN CONTINUOUS LINES, THEY SHALL BE SO PLACED THAT THE ENDS OF THE SUPPORTING WIRES SHALL BE LAPPED TO LOCK LEGS ON ADJOINING PIECES.

STRUCTURAL STEEL:

AT THE CONTRACTOR'S OPTION, HE MAY SUBSTITUTE 7/8" Ø SHEAR STUDS FOR THE 3/4" Ø STUDS SPECIFIED ON THE PLANS. THIS SUBSTITUTION SHALL BE MADE AT THE RATE OF 3 - 7/8" Ø STUDS FOR 4 - 3/4" Ø STUDS, AND STUD SPACING CHANGES SHALL BE MADE AS NECESSARY TO PROVIDE THE SAME EQUIVALENT NUMBER OF 7/8" Ø STUDS ALONG THE BEAM AS SHOWN FOR 3/4" Ø STUDS BASED ON THE RATIO OF 3 - 7/8" Ø STUDS FOR 4 - 3/4" Ø STUDS. STUDS OF THE LENGTH SPECIFIED ON THE PLANS MUST BE PROVIDED. THE MAXIMUM SPACING SHALL BE 2'-0".

EXCEPT AT THE INTERIOR SUPPORTS OF CONTINUOUS BEAMS WHERE THE COVER PLATE IS IN CONTACT WITH BEARING PLATE, THE CONTRACTOR MAY, AT HIS OPTION, SUBSTITUTE FOR THE COVER PLATES DESIGNATED ON THE PLANS COVER PLATES OF THE EQUIVALENT AREA PROVIDED THESE PLATES ARE AT LEAST 5/16" IN THICKNESS AND DO NOT EXCEED A WIDTH EQUAL TO THE FLANGE WIDTH LESS 2" OR A THICKNESS EQUAL TO 2 TIMES THE FLANGE THICKNESS. THE SIZE OF FILLET WELDS SHALL CONFORM TO THE REQUIREMENTS OF THE CURRENT ANSI/AASHTO/AWS "BRIDGE WELDING CODE". ELECTROSLAG WELDING WILL NOT BE PERMITTED.

WITH THE SOLE EXCEPTION OF EDGES AT SURFACES WHICH BEAR ON OTHER SURFACES, ALL SHARP EDGES AND ENDS OF SHAPES AND PLATES SHALL BE SLIGHTLY ROUNDED BY SUITABLE MEANS TO A RADIUS OF APPROXIMATELY 1/16 INCH OR EQUIVALENT FLAT SURFACE AT A SUITABLE ANGLE PRIOR TO PAINTING, GALVANIZING, OR METALLIZING.

HANDRAILS AND POSTS:

METAL STANDARDS AND FACES OF THE CONCRETE END POSTS FOR THE METAL RAIL SHALL BE SET NORMAL TO THE GRADE OF THE CURB, UNLESS OTHERWISE SHOWN ON PLANS. THE METAL RAIL AND TOPS OF CONCRETE POSTS USED WITH THE ALUMINUM RAIL SHALL BE BUILT PARALLEL TO THE GRADE OF THE CURB.

METAL HANDRAILS SHALL BE IN ACCORDANCE WITH THE PLANS. RAILS SHALL BE AS MANUFACTURED FOR BRIDGE RAILING. CASTINGS SHALL BE OF A UNIFORM APPEARANCE. FINS AND OTHER DEFORMATIONS RESULTING FROM CASTING OR OTHERWISE SHALL BE REMOVED IN A MANNER SO THAT A UNIFORM COLORING OF THE COMPLETED CASTING SHALL BE OBTAINED. CASTINGS WITH DISCOLORATIONS OR OF NON-UNIFORM COLORING WILL NOT BE ACCEPTED. CERTIFIED MILL REPORTS ARE REQUIRED FOR METAL RAILS AND POSTS.

SPECIAL NOTES:

GENERALLY, IN CASE OF DISCREPANCY, THIS STANDARD SHEET OF NOTES SHALL GOVERN OVER THE SPECIFICATIONS, BUT THE REMAINDER OF THE PLANS SHALL GOVERN OVER NOTES HEREON, AND SPECIAL PROVISIONS SHALL GOVERN OVER ALL. SEE SPECIFICATIONS ARTICLE 105-4.

REV. 6-16-95 EEM (/) RGW REV. 5-7-03 RWW (/) JTE
REV. 8-16-99 RWW (/) LES REV. 5-1-06 TLA (/) GM

ENGLISH

JANUARY, 1990

STD. NO. SN