DocuSign Envelope ID: C859E6FC-1301-4F3E-895B-6C10029A58A9

PROJECT: 17BP.13.R.167

CONTRACT: DM00333

See Sheet 1-A For Index of Sheets
See Sheet 1-B For Conventional Symbols

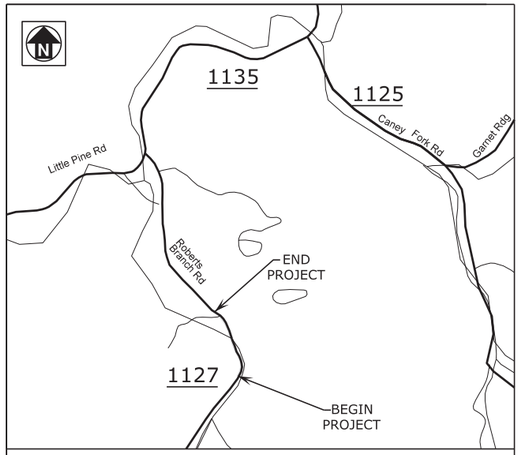

VICINITY MAP
(NOT TO SCALE)

STATE OF NORTH CAROLINA
DIVISION OF HIGHWAYS

MADISON COUNTY

STATE	STATE PROJECT REFERENCE NO.	SHEET NO.	TOTAL SHEETS
N.C.	17BP.13.R.167	1	

STATE PROJECT NO.	F.A. PROJ. NO.	DESCRIPTION
17BP.13.PE.167	N/A	P.E.
17BP.13.ROW.167	N/A	R/W & UTIL
17BP.13.R.167	N/A	CONST

LOCATION: BRIDGE NO. 310 ON SR 1127 (ROBERTS BRANCH ROAD) OVER ROBERTS BRANCH

TYPE OF WORK: GRADING, PAVING, DRAINAGE, AND STRUCTURE

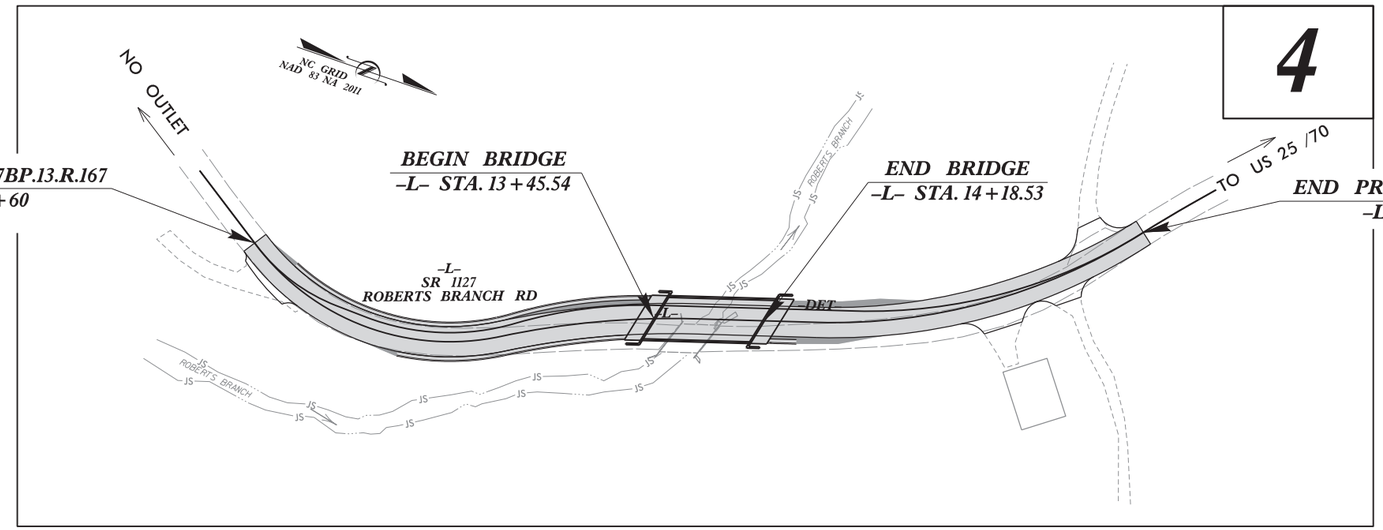

PLANS PREPARED BY:

Mattern & Craig
ENGINEERS • SURVEYORS
12 BROAD STREET
ASHEVILLE, NORTH CAROLINA 28801
(828) 254-2201
FAX (828) 254-4562
NC LIC. NO. C-1154

DOCUMENT NOT CONSIDERED FINAL UNLESS ALL SIGNATURES COMPLETED

GRAPHIC SCALES

30 15 0 30 60
PLANS

30 15 0 30 60
PROFILE (HORIZONTAL)

10 5 0 10 20
PROFILE (VERTICAL)

DESIGN DATA

ADT (2000) = 130

V = 30 MPH

FUNC CLASS =
RURAL LOCAL
SUBREGIONAL TIER

PROJECT LENGTH

LENGTH ROADWAY PROJECT 17BP.13.R.167 = 0.103 MILES

LENGTH STRUCTURE PROJECT 17BP.13.R.167 = 0.014 MILES

TOTAL LENGTH PROJECT 17BP.13.R.167 = 0.117 MILES

Prepared In the Office of:
MATTERN & CRAIG
12 BROAD ST.
ASHEVILLE, NC 28801
FOR NCDOT DIVISION OF HIGHWAYS

2018 STANDARD SPECIFICATIONS

RIGHT OF WAY DATE:
JULY 2, 2021

LETTING DATE:
DECEMBER 21, 2022

AARON CARVER, PE
PROJECT ENGINEER

MENG YANG, PE
PROJECT DESIGN ENGINEER

NCDOT CONTACT:
MICHAEL CALLOWAY
DIVISION 13 BRIDGE PROGRAM MANAGER

ROADWAY DESIGN ENGINEER

NORTH CAROLINA PROFESSIONAL SEAL 030453 ENGINEER AARON C. CARVER

DocuSigned by: Aaron Carver
8250B42A220F49C...

11/29/2022
P.E.
SIGNATURE:

HYDRAULICS ENGINEER

NORTH CAROLINA PROFESSIONAL SEAL 030453 ENGINEER AARON C. CARVER

DocuSigned by: Aaron Carver
8250B42A220F49C...

11/29/2022
P.E.
SIGNATURE:

STATE OF NORTH CAROLINA • DEPARTMENT OF TRANSPORTATION

DocuSign Envelope ID: F2604789-03FA-4783-8338-F1C75C3DADE8

PROJECT REFERENCE NO.	SHEET NO.
17BPJ3.R.J67	1A

ROADWAY DESIGN ENGINEER

NORTH CAROLINA PROFESSIONAL SEAL 039683 ENGINEER
DocuSigned by: Aaron Carver
8250B4D42D20F49C...
6/27/2022

INDEX OF SHEETS

SHEET NUMBER	SHEET
1	TITLE SHEET
1A	INDEX OF SHEETS, GENERAL NOTES, AND LIST OF STANDARD DRAWINGS
1B	CONVENTIONAL PLAN SHEET SYMBOLS
2A-1	PAVEMENT SCHEDULE & TYPICAL SECTIONS
2B-1	ON-SITE DETOUR SHEET
2C-1	GUARDRAIL INSTALLATION IN LIEU OF STD 862.02 SHEET 6 OF 8
2C-2	GUARDRAIL INSTALLATION: TYPE III ANCHOR UNITS
3B-1	SUMMARY OF DRAINAGE QUANTITIES, SUMMARY OF GUARDRAIL, SUMMARY OF PAVEMENT REMOVAL, AND SUMMARY OF EARTHWORK
3G-1	GEOTECHNICAL SUMMARY SHEET
4	PLAN & PROFILE SHEET
RW01 thru RW04	RIGHT OF WAY SHEETS
TMP-1 thru TMP-6	TRAFFIC MANAGEMENT PLANS
PM-1	PAVEMENT MARKING PLAN
EC-1 thru EC-6	EROSION CONTROL PLANS
X-1A	CROSS-SECTION SUMMARY SHEET
X-1 thru X-5	CROSS SECTION SHEETS
S-1 thru S-16	STRUCTURE PLANS

GENERAL NOTES

GENERAL NOTES: 2018 SPECIFICATIONS
EFFECTIVE: 01-16-2018
REVISED:

GRADING AND SURFACING OR RESURFACING AND WIDENING:

THE GRADE LINES SHOWN DENOTE THE FINISHED ELEVATION OF THE PROPOSED SURFACING AT GRADE POINTS SHOWN ON THE TYPICAL SECTIONS. WHERE NO GRADE LINES ARE SHOWN, THE PROFILES SHOWN DENOTE THE TOP ELEVATION OF THE EXISTING PAVEMENT ALONG THE CENTER LINE OF SURVEY ON WHICH THE PROPOSED RESURFACING WILL BE PLACED. GRADE LINES MAY BE ADJUSTED BY THE ENGINEER IN ORDER TO SECURE A PROPER TIE-IN.

CLEARING:

CLEARING ON THIS PROJECT SHALL BE PERFORMED TO THE LIMITS ESTABLISHED BY METHOD II.

SUPERELEVATION:

ALL CURVES ON THIS PROJECT SHALL BE SUPERELEVATED IN ACCORDANCE WITH STD. NO. 225.04 USING THE RATE OF SUPERELEVATION AND RUNOFF SHOWN ON THE PLANS. SUPERELEVATION IS TO BE REVOLVED ABOUT THE GRADE POINTS SHOWN ON THE TYPICAL SECTIONS.

SHOULDER CONSTRUCTION:

ASPHALT, EARTH, AND CONCRETE SHOULDER CONSTRUCTION ON THE HIGH SIDE OF SUPERELEVATED CURVES SHALL BE IN ACCORDANCE WITH STD. NO. 560.01

SIDE ROADS:

THE CONTRACTOR WILL BE REQUIRED TO DO ALL NECESSARY WORK TO PROVIDE SUITABLE CONNECTIONS WITH ALL ROADS, STREETS, AND DRIVES ENTERING THIS PROJECT. THIS WORK WILL BE PAID FOR AT THE CONTRACT UNIT PRICE FOR THE PARTICULAR ITEMS INVOLVED.

SUBSURFACE DRAINS:

SUBSURFACE DRAINS SHALL BE CONSTRUCTED IN ACCORDANCE WITH STD. NO. 815.02 AT LOCATIONS DIRECTED BY THE ENGINEER.

GUARDRAIL:

THE GUARDRAIL LOCATIONS SHOWN ON THE PLANS MAY BE ADJUSTED DURING CONSTRUCTION AS DIRECTED BY THE ENGINEER. THE CONTRACTOR SHOULD CONSULT WITH THE ENGINEER PRIOR TO ORDERING GUARDRAIL MATERIAL.

TEMPORARY SHORING:

SHORING REQUIRED FOR THE MAINTENANCE OF TRAFFIC NOT SHOWN ON THE PLANS WILL BE PAID FOR AT THE CONTRACT PRICE FOR "TEMPORARY SHORING".

UTILITIES:

UTILITY OWNERS ON THIS PROJECT ARE:
POWER - FRENCH BROAD ELECTRIC MEMBERSHIP CORP.
PHONE - FRONTIER COMMUNICATIONS

ANY RELOCATION OF EXISTING UTILITIES WILL BE ACCOMPLISHED BY OTHERS, EXCEPT AS SHOWN ON THE PLANS.

RIGHT-OF-WAY MARKERS:

ALL RIGHT-OF-WAY MARKERS ON THIS PROJECT SHALL BE PLACED BY OTHERS.

STANDARD DRAWINGS

EFF. 01-16-2018
REV.

2018 ROADWAY ENGLISH STANDARD DRAWINGS

The following Roadway Standards as appear in "Roadway Standard Drawings" Highway Design Branch - N. C. Department of Transportation - Raleigh, N. C., Dated January, 2018 are applicable to this project and by reference hereby are considered a part of these plans:

STD.NO.	TITLE
DIVISION 2 - EARTHWORK	
200.02	Method of Clearing - Method II
225.02	Guide for Grading Subgrade - Secondary and Local
225.04	Method of Obtaining Superelevation - Two Lane Pavement
DIVISION 3 - PIPE CULVERTS	
300.01	Method of Pipe Installation
310.03	Cross Pipe End Section - Precast Concrete Section for 18" to 30" Pipe
DIVISION 4 - MAJOR STRUCTURES	
422.02	Bridge Approach Fills - Type II Modified Approach Fill
DIVISION 5 - SUBGRADE, BASES AND SHOULDERS	
560.01	Method of Shoulder Construction - High Side of Superelevated Curve - Method I
DIVISION 6 - ASPHALT BASES AND PAVEMENTS	
654.01	Pavement Repairs
DIVISION 8 - INCIDENTALS	
815.02	Subsurface Drain
840.25	Anchorage for Frames
840.29	Frames and Narrow Slot Flat Grates
840.35	Traffic Bearing Grated Drop Inlet - for Cast Iron Double Frame and Grates
840.46	Traffic Bearing Precast Drainage Structure
846.01	Concrete Curb, Gutter and Curb & Gutter
846.04	Drop Inlet Installation in Shoulder Berm Gutter
862.01	Guardrail Placement
862.02	Guardrail Installation
862.03	Structure Anchor Unit
876.02	Guide for Rip Rap at Pipe Outlets
876.04	Drainage Ditches with Class 'B' Rip Rap

Mattern & Craig
ENGINEERS•SURVEYORS
12 BROAD STREET
ASHEVILLE, NORTH CAROLINA 28801
(828) 254-2201
FAX (828) 254-4562
NC LIC. NO. C-1154

12/2/2016

PROJECT REFERENCE NO.	SHEET NO.
17BPJ.3.RJ67	1-B

STATE OF NORTH CAROLINA, DIVISION OF HIGHWAYS

CONVENTIONAL PLAN SHEET SYMBOLS

Note: Not to Scale

**S.U.E. = Subsurface Utility Engineering*

BOUNDARIES AND PROPERTY:

- State Line
- County Line
- Township Line
- City Line
- Reservation Line
- Property Line
- Existing Iron Pin — EIP
- Computed Property Corner
- Property Monument — ECM
- Parcel/Sequence Number — 123
- Existing Fence Line
- Proposed Woven Wire Fence
- Proposed Chain Link Fence
- Proposed Barbed Wire Fence
- Existing Wetland Boundary — WLB
- Proposed Wetland Boundary — WLB
- Existing Endangered Animal Boundary — EAB
- Existing Endangered Plant Boundary — EPB
- Existing Historic Property Boundary — HPB
- Known Contamination Area: Soil — S
- Potential Contamination Area: Soil — S
- Known Contamination Area: Water — W
- Potential Contamination Area: Water — W
- Contaminated Site: Known or Potential

BUILDINGS AND OTHER CULTURE:

- Gas Pump Vent or U/G Tank Cap
- Sign — S
- Well — W
- Small Mine
- Foundation
- Area Outline
- Cemetery
- Building
- School
- Church
- Dam

HYDROLOGY:

- Stream or Body of Water
- Hydro, Pool or Reservoir
- Jurisdictional Stream — JS
- Buffer Zone 1 — BZ 1
- Buffer Zone 2 — BZ 2
- Flow Arrow
- Disappearing Stream
- Spring
- Wetland
- Proposed Lateral, Tail, Head Ditch — FLOW
- False Sump

RAILROADS:

- Standard Gauge — CSX TRANSPORTATION
- RR Signal Milepost — MILEPOST 35
- Switch — SWITCH
- RR Abandoned
- RR Dismantled

RIGHT OF WAY & PROJECT CONTROL:

- Secondary Horiz and Vert Control Point
- Primary Horiz Control Point
- Primary Horiz and Vert Control Point
- Exist Permanent Easment Pin and Cap
- New Permanent Easement Pin and Cap
- Vertical Benchmark
- Existing Right of Way Marker
- Existing Right of Way Line
- New Right of Way Line — RW
- New Right of Way Line with Pin and Cap — RW
- New Right of Way Line with Concrete or Granite R/W Marker — RW
- New Control of Access Line with Concrete C/A Marker — CA
- Existing Control of Access — CA
- New Control of Access — CA
- Existing Easement Line — E
- New Temporary Construction Easement — E
- New Temporary Drainage Easement — TDE
- New Permanent Drainage Easement — PDE
- New Permanent Drainage / Utility Easement — DUE
- New Permanent Utility Easement — PUE
- New Temporary Utility Easement — TUE
- New Aerial Utility Easement — AUE

ROADS AND RELATED FEATURES:

- Existing Edge of Pavement
- Existing Curb
- Proposed Slope Stakes Cut — C
- Proposed Slope Stakes Fill — F
- Proposed Curb Ramp — CR
- Existing Metal Guardrail
- Proposed Guardrail
- Existing Cable Guiderail
- Proposed Cable Guiderail
- Equality Symbol
- Pavement Removal

VEGETATION:

- Single Tree
- Single Shrub
- Hedge
- Woods Line
- Orchard
- Vineyard — Vineyard

EXISTING STRUCTURES:

MAJOR:

- Bridge, Tunnel or Box Culvert — CONC
- Bridge Wing Wall, Head Wall and End Wall — CONC WW

MINOR:

- Head and End Wall — CONC HW
- Pipe Culvert
- Footbridge
- Drainage Box: Catch Basin, DI or JB — CB
- Paved Ditch Gutter
- Storm Sewer Manhole — S
- Storm Sewer — S

UTILITIES:

POWER:

- Existing Power Pole
- Proposed Power Pole
- Existing Joint Use Pole
- Proposed Joint Use Pole
- Power Manhole — P
- Power Line Tower
- Power Transformer
- U/G Power Cable Hand Hole
- H-Frame Pole
- U/G Power Line LOS B (S.U.E.*) — P
- U/G Power Line LOS C (S.U.E.*) — P
- U/G Power Line LOS D (S.U.E.*) — P

TELEPHONE:

- Existing Telephone Pole
- Proposed Telephone Pole
- Telephone Manhole — T
- Telephone Pedestal — T
- Telephone Cell Tower
- U/G Telephone Cable Hand Hole
- U/G Telephone Cable LOS B (S.U.E.*) — T
- U/G Telephone Cable LOS C (S.U.E.*) — T
- U/G Telephone Cable LOS D (S.U.E.*) — T
- U/G Telephone Conduit LOS B (S.U.E.*) — TC
- U/G Telephone Conduit LOS C (S.U.E.*) — TC
- U/G Telephone Conduit LOS D (S.U.E.*) — TC
- U/G Fiber Optics Cable LOS B (S.U.E.*) — T FO
- U/G Fiber Optics Cable LOS C (S.U.E.*) — T FO
- U/G Fiber Optics Cable LOS D (S.U.E.*) — T FO

WATER:

- Water Manhole — W
- Water Meter
- Water Valve
- Water Hydrant
- U/G Water Line LOS B (S.U.E*)
- U/G Water Line LOS C (S.U.E*)
- U/G Water Line LOS D (S.U.E*)
- Above Ground Water Line — A/G Water

TV:

- TV Pedestal — C
- TV Tower
- U/G TV Cable Hand Hole — HH
- U/G TV Cable LOS B (S.U.E.*) — TV
- U/G TV Cable LOS C (S.U.E.*) — TV
- U/G TV Cable LOS D (S.U.E.*) — TV
- U/G Fiber Optic Cable LOS B (S.U.E.*) — TV FO
- U/G Fiber Optic Cable LOS C (S.U.E.*) — TV FO
- U/G Fiber Optic Cable LOS D (S.U.E.*) — TV FO

GAS:

- Gas Valve
- Gas Meter
- U/G Gas Line LOS B (S.U.E.*) — G
- U/G Gas Line LOS C (S.U.E.*) — G
- U/G Gas Line LOS D (S.U.E.*) — G
- Above Ground Gas Line — A/G Gas

SANITARY SEWER:

- Sanitary Sewer Manhole
- Sanitary Sewer Cleanout
- U/G Sanitary Sewer Line — SS
- Above Ground Sanitary Sewer — A/G Sanitary Sewer
- SS Forced Main Line LOS B (S.U.E.*) — FSS
- SS Forced Main Line LOS C (S.U.E.*) — FSS
- SS Forced Main Line LOS D (S.U.E.*) — FSS

MISCELLANEOUS:

- Utility Pole
- Utility Pole with Base
- Utility Located Object
- Utility Traffic Signal Box — S
- Utility Unknown U/G Line LOS B (S.U.E.*) — ?UTL
- U/G Tank; Water, Gas, Oil
- Underground Storage Tank, Approx. Loc. — UST
- A/G Tank; Water, Gas, Oil
- Geoenvironmental Boring
- U/G Test Hole LOS A (S.U.E.*)
- Abandoned According to Utility Records — AATUR
- End of Information — E.O.I.

DocuSign Envelope ID: D8D3F375-7C02-47A9-9D1E-031804E6AF3C

PROJECT REFERENCE NO.	SHEET NO.
17BP.13.R.167	2A-1
ROADWAY DESIGN ENGINEER	PAVEMENT DESIGN ENGINEER
NORTH CAROLINA PROFESSIONAL SEAL 030453 — DocuSigned by: Aaron Carver 8/27/2022	NORTH CAROLINA PROFESSIONAL SEAL 022896 — DocuSigned by: Clark S. Morrison 6/27/2022

DOCUMENT NOT CONSIDERED FINAL UNLESS ALL SIGNATURES COMPLETED

Mattern & Craig
ENGINEERS•SURVEYORS
12 BROAD STREET
ASHEVILLE, NORTH CAROLINA 28801
(828) 254-2201
FAX (828) 254-4562
NC LIC. NO. C-1154

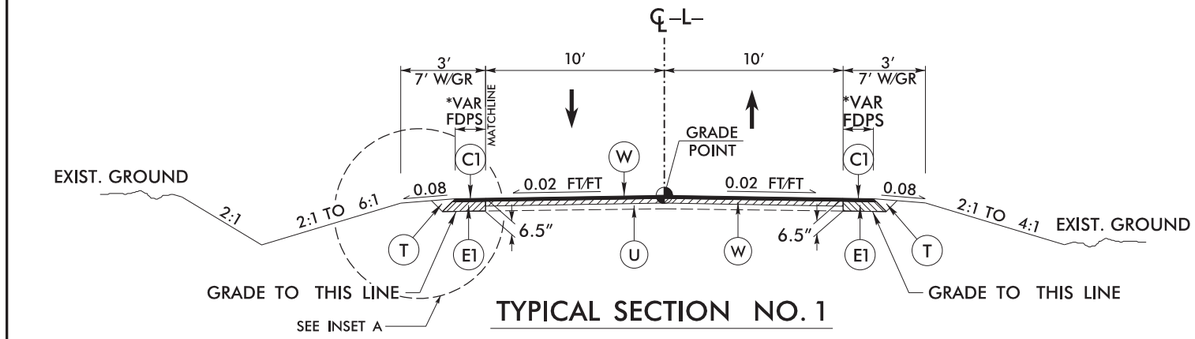

TYPICAL SECTION NO. 1

USE TYPICAL SECTION NO. 1

-L- STA. 10+60 TO -L- STA. 11+50
-L- STA. 15+50 TO -L- STA. 16+80

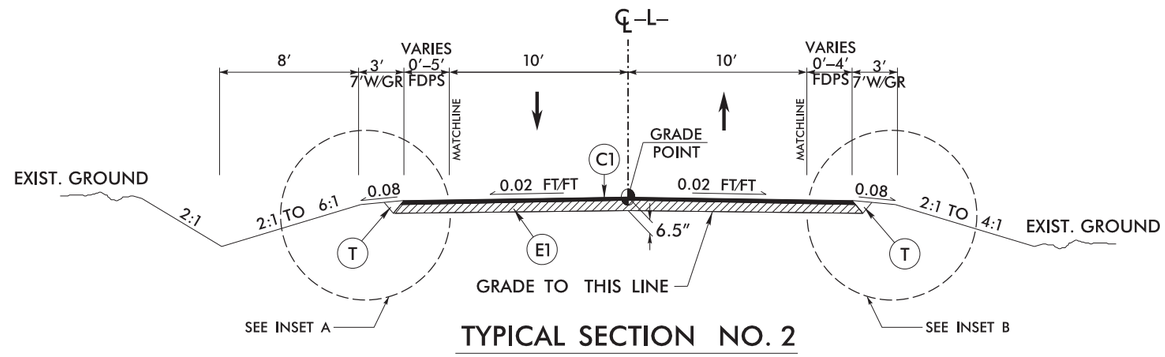

TYPICAL SECTION NO. 2

USE TYPICAL SECTION NO. 2

-L- STA. 11+50 TO -L- STA. 13+45.54
-L- STA. 14+18.53 TO -L- STA. 15+50

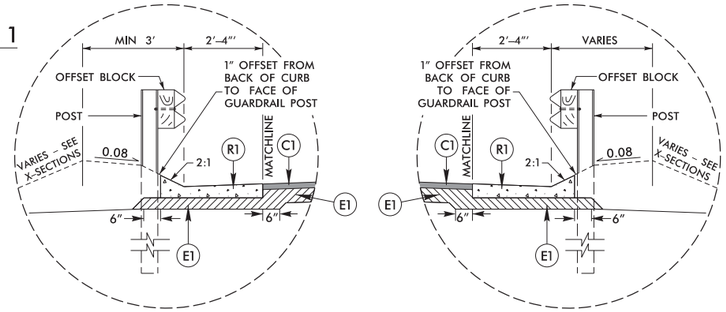

INSET A

SBG -L- STA. 10+90 LT TO BEGIN APPROACH SLAB LT

INSET B

SBG -L- STA. 11+77 RT TO BEGIN APPROACH SLAB RT
SBG END APPROACH SLAB RT TO -L- STA 14+40 RT

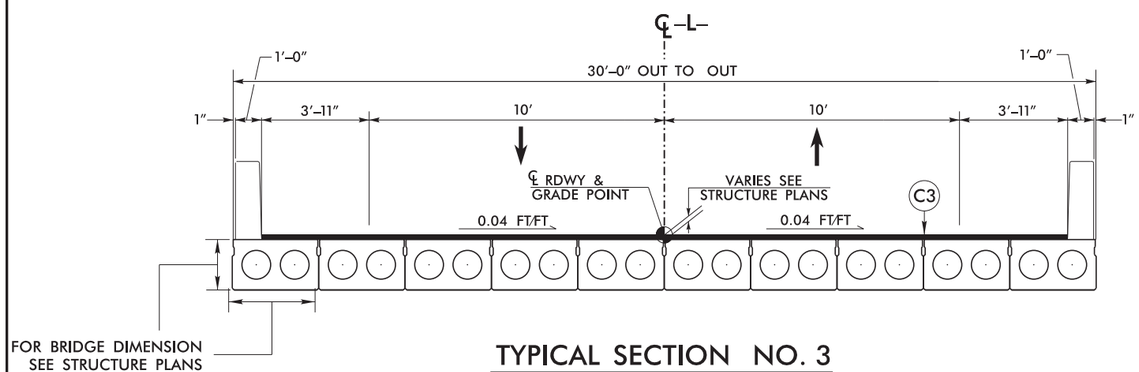

TYPICAL SECTION NO. 3

USE TYPICAL SECTION NO. 3

-L- STA. 13+45.54 (BEGIN BRIDGE) TO
-L- STA. 14+18.53 (END BRIDGE)

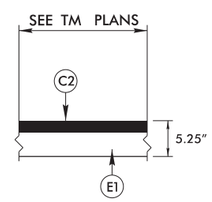

TEMPORARY PAVEMENT DETAIL NO. 1

-L- UP TO 3 MONTHS

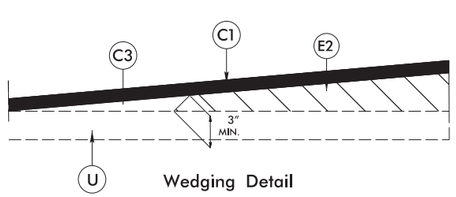

Wedging Detail

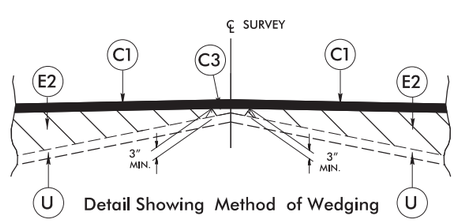

Detail Showing Method of Wedging

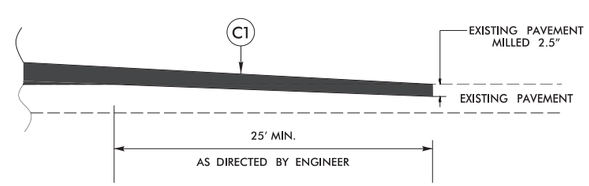

INCIDENTAL MILLING EXISTING PAVEMENT

PAVEMENT SCHEDULE	
C1	PROP. APPROX. 2.5″ ASPHALT CONCRETE SURFACE COURSE, TYPE S9.5B, AT AN AVERAGE RATE OF 137.5 LBS. PER SQ. YD. IN EACH OF TWO LAYERS.
C2	PROP. APPROX. 1.25″ ASPHALT CONCRETE SURFACE COURSE, TYPE S9.5B, AT AN AVERAGE RATE OF 137.5 LBS. PER SQ. YD.
C3	PROP. VAR. DEPTH ASPHALT CONCRETE SURFACE COURSE, TYPE S9.5B AT AN AVERAGE RATE OF 110 LBS. PER SQ. YD. PER 1″ DEPTH. TO BE PLACED IN LAYERS NOT TO EXCEED 1.5″ IN DEPTH.
E1	PROP. APPROX. 4″ ASPHALT CONCRETE BASE COURSE, TYPE B25.0C, AT AN AVERAGE RATE OF 456 LBS. PER SQ. YD.
E2	PROP. VAR. DEPTH ASPHALT CONCRETE BASE COURSE, TYPE B25.0C, AT AN AVERAGE RATE OF 114 LBS. PER SQ. YD. PER 1″ DEPTH. TO BE PLACED IN LAYERS NOT LESS THAN 3″ IN DEPTH OR GREATER THAN 5.5″ IN DEPTH.
R1	SHOULDER BERM GUTTER (NCDOT STANDARD DRAWING NO. 846.01)
T	EARTH MATERIAL
U	EXISTING PAVEMENT
W	PROPOSED WEDGING (SEE APPROPRIATE DETAILS)

NOTE: PAVEMENT EDGE SLOPES ARE 1:1 UNLESS SHOWN OTHERWISE

DocuSign Envelope ID: F2604789-03FA-4783-8338-F1C75C3DADE8

PROJECT REFERENCE NO.	SHEET NO.
17BP.13.R.167	2B-1
R/W SHEET NO.	
ROADWAY DESIGN ENGINEER	HYDRAULICS ENGINEER

NORTH CAROLINA PROFESSIONAL SEAL 030463 ENGINEER — DocuSigned by: Karen Garner — 6/27/2022

NORTH CAROLINA PROFESSIONAL SEAL 030463 ENGINEER — DocuSigned by: Karen Garner — 6/27/2022

DOCUMENT NOT CONSIDERED FINAL UNLESS ALL SIGNATURES COMPLETED

ON-SITE DETOUR

Mattern & Craig
ENGINEERS • SURVEYORS
12 BROAD STREET
ASHEVILLE, NORTH CAROLINA 28801
(828) 254-2201
FAX (828) 254-4562
NC LIC. NO. C-1154

REVISIONS

-DET- CURVE DATA

PI Sta 20+96.56 Δ = 31° 47' 18.0" (LT) D = 47° 44' 47.3" L = 66.58' T = 34.17' R = 120.00'	PI Sta 22+02.02 Δ = 37° 18' 05.0" (LT) D = 37° 12' 18.2" L = 100.26' T = 51.98' R = 154.00'	PI Sta 22+97.61 Δ = 17° 55' 24.9" (RT) D = 19° 05' 54.9" L = 93.85' T = 47.31' R = 300.00'
PI Sta 25+78.45 Δ = 33° 40' 32.9" (LT) D = 16° 51' 06.1" L = 199.84' T = 102.90' R = 340.00'	PI Sta 26+94.01 Δ = 2° 27' 07.2" (RT) D = 6° 35' 08.6" L = 37.23' T = 18.62' R = 870.00'	

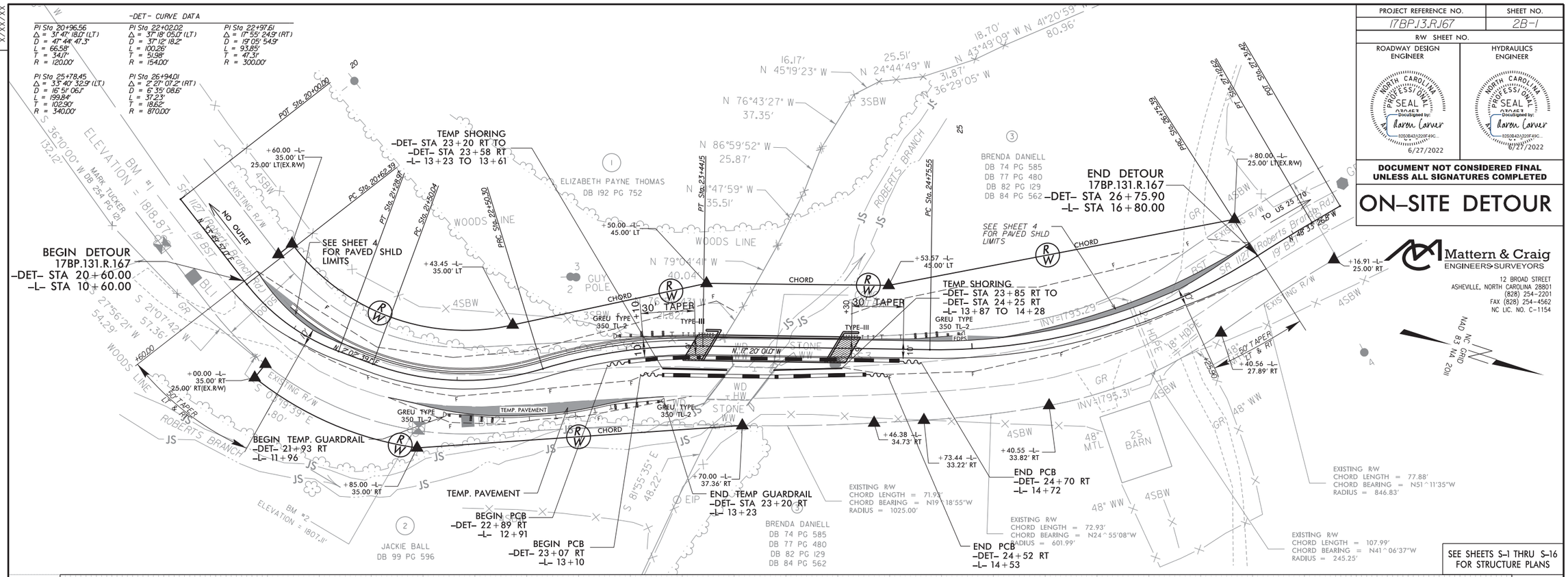

SEE SHEETS S-1 THRU S-16 FOR STRUCTURE PLANS

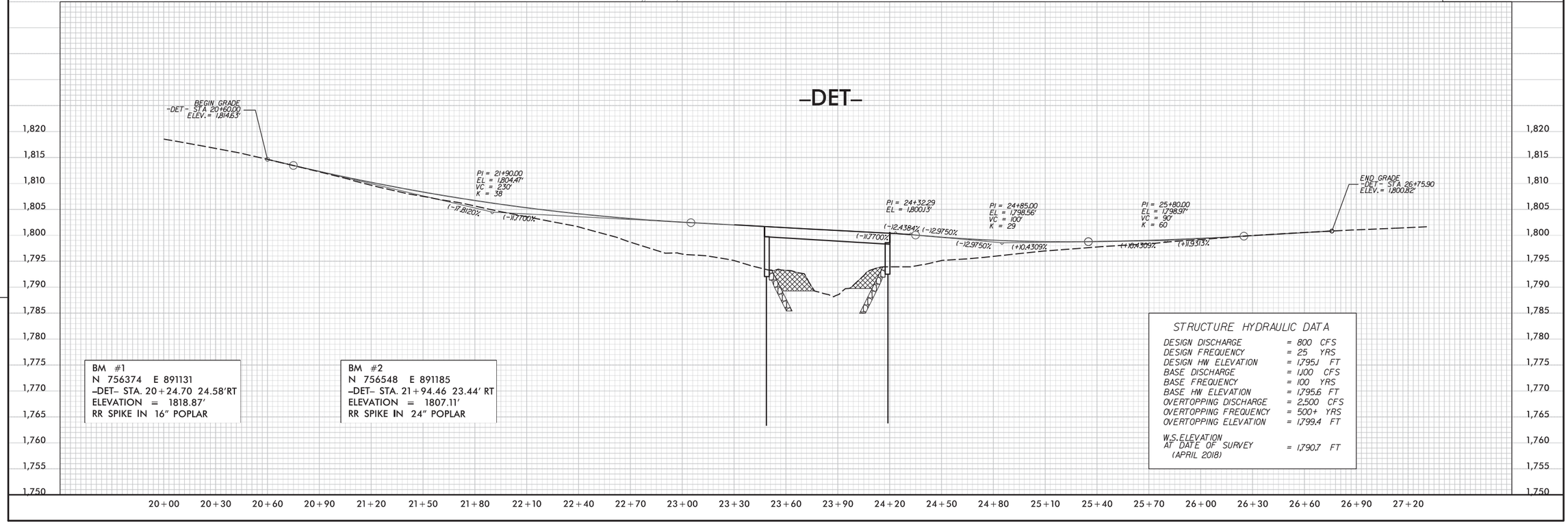

BM #1
N 756374 E 891131
-DET- STA. 20+24.70 24.58'RT
ELEVATION = 1818.87'
RR SPIKE IN 16" POPLAR

BM #2
N 756548 E 891185
-DET- STA. 21+94.46 23.44' RT
ELEVATION = 1807.11'
RR SPIKE IN 24" POPLAR

STRUCTURE HYDRAULIC DATA

DESIGN DISCHARGE	= 800 CFS
DESIGN FREQUENCY	= 25 YRS
DESIGN HW ELEVATION	= 1,795.1 FT
BASE DISCHARGE	= 1,100 CFS
BASE FREQUENCY	= 100 YRS
BASE HW ELEVATION	= 1,795.6 FT
OVERTOPPING DISCHARGE	= 2,500 CFS
OVERTOPPING FREQUENCY	= 500+ YRS
OVERTOPPING ELEVATION	= 1,799.4 FT
W.S. ELEVATION AT DATE OF SURVEY (APRIL 2018)	= 1,790.7 FT

DocuSign Envelope ID: 46F441F2-B2FD-462E-BFCA-25CD6D5C31DA

PROJECT REFERENCE NO.	SHEET NO.
17BP.13.R.167	2C-1

DOCUMENT NOT CONSIDERED FINAL UNLESS ALL SIGNATURES COMPLETED

STATE OF NORTH CAROLINA
DEPT. OF TRANSPORTATION
DIVISION OF HIGHWAYS
RALEIGH, N.C.

ROADWAY DETAIL DRAWING FOR
GUARDRAIL INSTALLATION

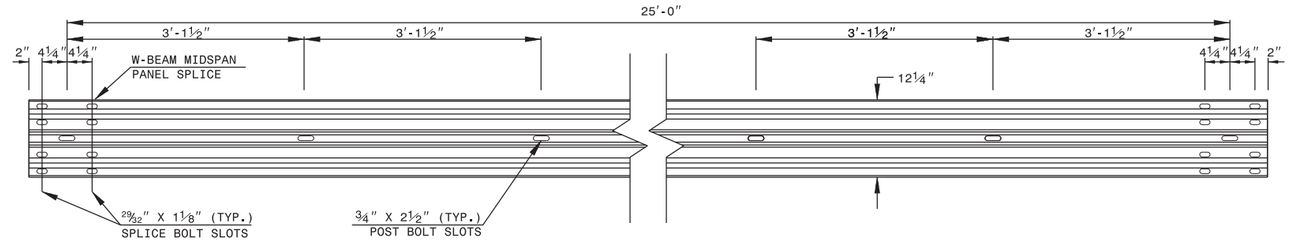

STANDARD W-BEAM GUARDRAIL

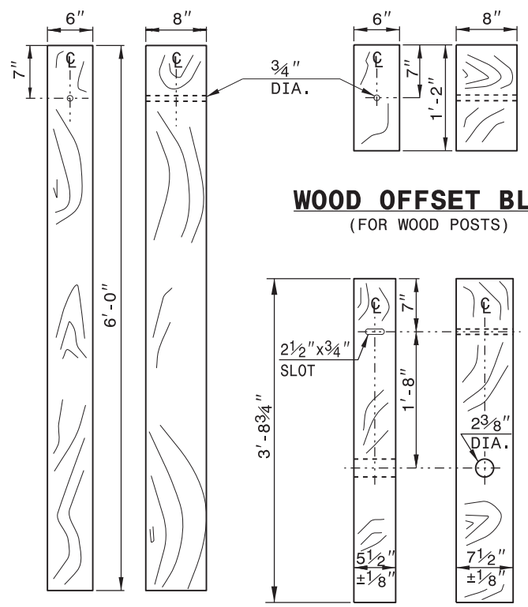

STANDARD LINE POST

WOOD OFFSET BLOCK
(FOR WOOD POSTS)

SHORT WOOD BREAKAWAY POST

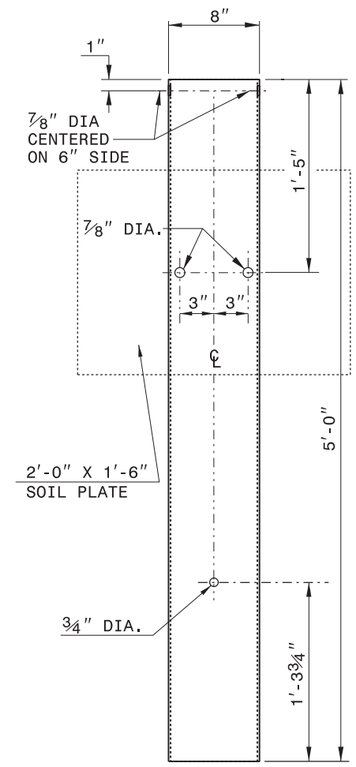

STEEL TUBE
TS 6"x8"x0.1875"

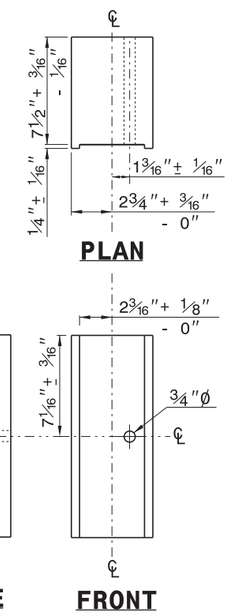

ROUTED OFFSET BLOCK

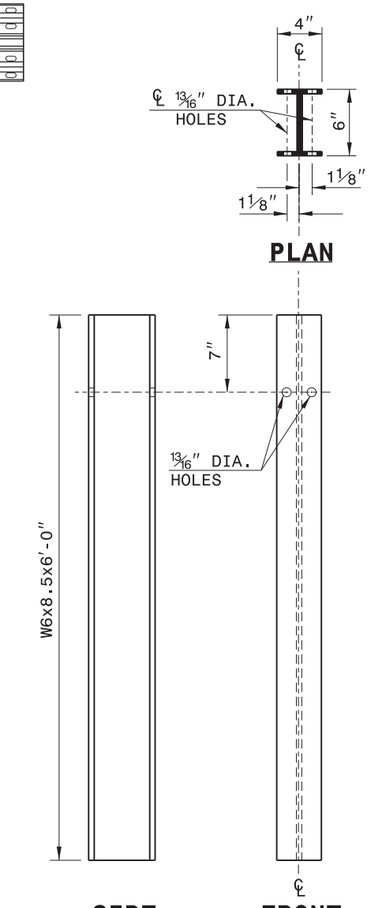

"W6" STEEL POST

SYSTEM PARTS

SHEET 6 OF 8
862D02

STATE OF NORTH CAROLINA
DEPT. OF TRANSPORTATION
DIVISION OF HIGHWAYS
RALEIGH, N.C.

ROADWAY DETAIL DRAWING FOR
GUARDRAIL INSTALLATION

SHEET 6 OF 8
862D02

NORTH CAROLINA PROFESSIONAL SEAL 022071 ENGINEER ROBERTON DAVENPORT
6/16/2022
DocuSigned by: Ron Davenport F81B8036A47A442...

CONTRACTS STANDARDS AND DEVELOPMENT UNIT
Office 919-707-6950 FAX 919-250-4119

SEE TITLE BLOCK

ORIGINAL BY: J.HOWERTON DATE: 3-7-2018
MODIFIED BY: DATE:
CHECKED BY: DATE:
FILE SPEC.:

DocuSign Envelope ID: 46F44172-B2FD-462E-BFCA-23CD6B5C31DA

STATE OF NORTH CAROLINA
DEPT. OF TRANSPORTATION
DIVISION OF HIGHWAYS
RALEIGH, N.C.

ROADWAY DETAIL DRAWING FOR
STRUCTURE ANCHOR UNITS
GUARDRAIL ANCHOR UNIT, TYPE III
FOR ATTACHMENT TO RAIL ON BRIDGE

SHEET 1 OF 7
862D03

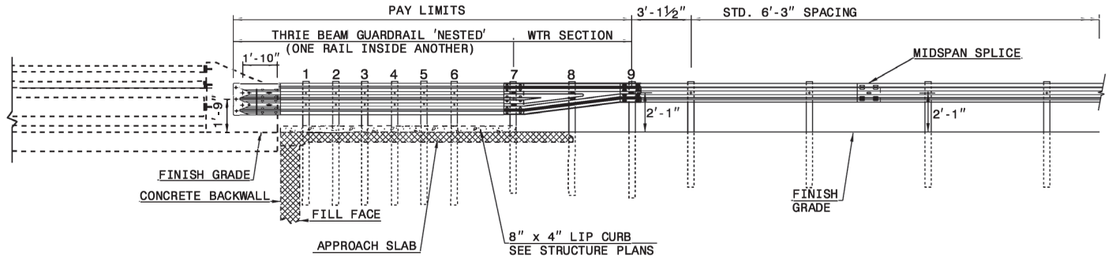

ELEVATION

NOTE:
**POST NOT REQUIRED FOR SKEW ANGLES GREATER THAN 150° OR LESS THAN 30° UNLESS OTHERWISE DIRECTED BY THE ENGINEER.
*THE DISTANCE FROM END OF BRIDGE RAIL TO CENTER LINE OF THE FIRST POST SHOULD BE 11½" IF CONCRETE BACKWALL IS NOT PRESENT.
-SHOULDER BERM GUTTER MUST BE INSTALLED TO THE LIMITS 8" x 4" LIP CURB IS SHOWN IF ANCHOR UNIT IS NOT ADJACENT TO AN APPROACH SLAB.
-MEASURE GUARDRAIL HEIGHT FROM THE TOP OF ADJACENT SURFACE (SHOULDER, BERM, OR GUTTER).
-LAP JOINTS IN THE DIRECTION OF TRAFFIC FLOW.
-SEE SHEET 3 FOR POST SECTIONS 1 THRU 9.

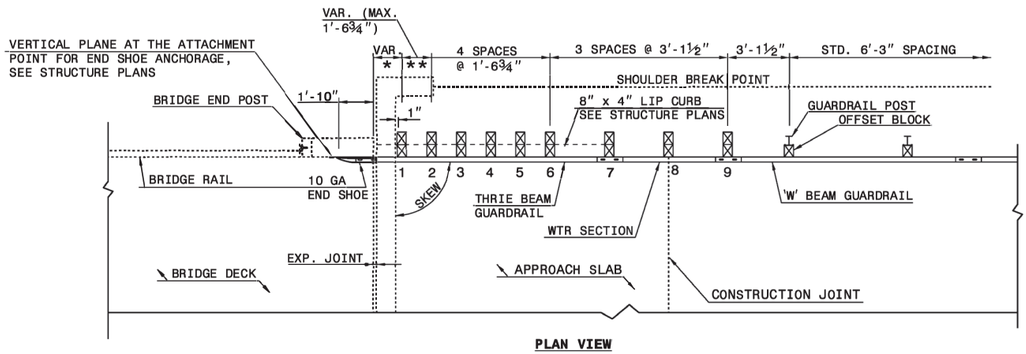

PLAN VIEW

GUARDRAIL ANCHOR UNIT, TYPE III FOR ATTACHMENT TO RAIL ON BRIDGE

STATE OF NORTH CAROLINA
DEPT. OF TRANSPORTATION
DIVISION OF HIGHWAYS
RALEIGH, N.C.

ROADWAY DETAIL DRAWING FOR
STRUCTURE ANCHOR UNITS
GUARDRAIL ANCHOR UNIT, TYPE III
FOR ATTACHMENT TO RAIL ON BRIDGE

SHEET 1 OF 7
862D03

STATE OF NORTH CAROLINA
DEPT. OF TRANSPORTATION
DIVISION OF HIGHWAYS
RALEIGH, N.C.

ROADWAY DETAIL DRAWING FOR
STRUCTURE ANCHOR UNITS
GUARDRAIL ANCHOR UNIT, TYPE III FOR ATTACHMENT TO
RAIL ON BRIDGE - SUB REGIONAL TIER

SHEET 2 OF 7
862D03

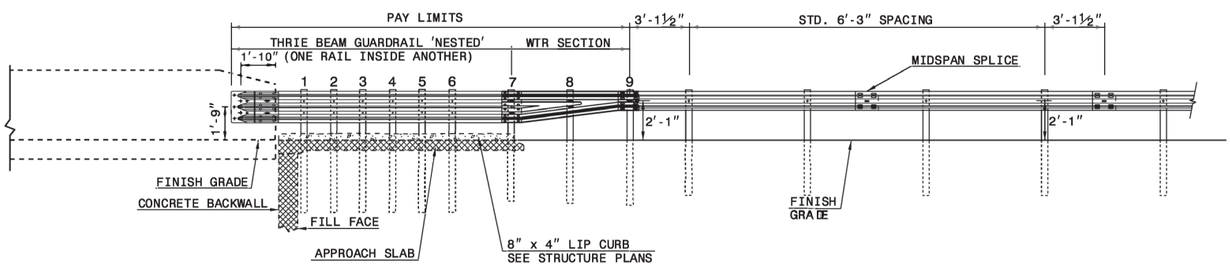

ELEVATION

NOTE:
**POST NOT REQUIRED FOR SKEW ANGLES GREATER THAN 150° OR LESS THAN 30° UNLESS OTHERWISE DIRECTED BY THE ENGINEER.
*THE DISTANCE FROM END OF BRIDGE RAIL TO CENTER LINE OF THE FIRST POST SHOULD BE 11½" IF CONCRETE BACKWALL IS NOT PRESENT.
-SHOULDER BERM GUTTER MUST BE INSTALLED TO THE LIMITS 8" x 4" LIP CURB IS SHOWN IF ANCHOR UNIT IS NOT ADJACENT TO AN APPROACH SLAB.
-MEASURE GUARDRAIL HEIGHT FROM THE TOP OF ADJACENT SURFACE (SHOULDER, BERM, OR GUTTER).
-LAP JOINTS IN THE DIRECTION OF TRAFFIC FLOW.
-SEE SHEET 3 FOR POST SECTIONS 1 THRU 9.

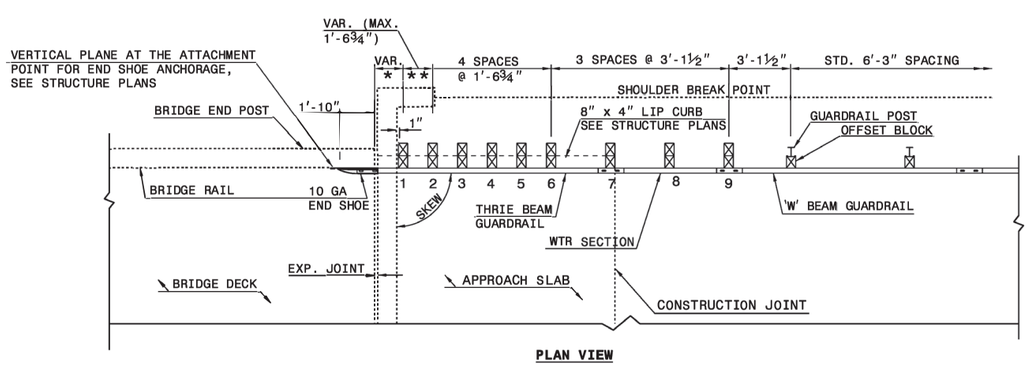

PLAN VIEW

GUARDRAIL ANCHOR UNIT, TYPE III FOR ATTACHMENT TO RAIL ON BRIDGE - SUB REGIONAL TIER

STATE OF NORTH CAROLINA
DEPT. OF TRANSPORTATION
DIVISION OF HIGHWAYS
RALEIGH, N.C.

ROADWAY DETAIL DRAWING FOR
STRUCTURE ANCHOR UNITS
GUARDRAIL ANCHOR UNIT, TYPE III FOR ATTACHMENT TO
RAIL ON BRIDGE - SUB REGIONAL TIER

SHEET 2 OF 7
862D03

ORIGINAL BY: J. HOWERTON DATE: 06-22-12
MODIFIED BY: DATE:
CHECKED BY: DATE:
FILE SPEC.:

SEE TITLE BLOCK

CONTRACT STANDARDS AND DEVELOPMENT UNIT
Office 919-707-6950 FAX 919-250-4119

DOCUMENT NOT CONSIDERED FINAL UNLESS ALL SIGNATURES COMPLETED

NORTH CAROLINA PROFESSIONAL SEAL 022071 ENGINEER KENNETH S. SNAVELY, JR.
DocuSigned by: Ken Snavely
6/16/2022

PROJECT REFERENCE NO. 17BP.13.R.167
SHEET NO. 2C-2

6/21/00

COMPUTED BY: MY DATE: 1-4-18
CHECKED BY: ACC DATE: 1-4-18

STATE OF NORTH CAROLINA
DIVISION OF HIGHWAYS

PAVEMENT REMOVAL SUMMARY

IN SQUARE YARDS

LINE	LOCATION	ASPHALT REMOVAL	ASPHALT BREAK-UP	2.5"ASPHALT MILLING	
-L-	10+60 TO 10+85			50	
-L-	11+50 TO 12+00	100			
-L-	12+00 TO 13+62		325		
-L-	13+76 TO 15+00		250		
-L-	15+00 TO 15+50	100			
-L-	16+55 TO 16+80			50	
-L-	11+65 TO 13+23 (TEMPORARY PAVEMENT)	60			
	TOTAL	260	575	100	
	SAY	260	575	100	

SUMMARY OF EARTHWORK

IN CUBIC YARDS

LOCATION	UNCLASSIFIED EXCAVATION	UNDERCUT	EMBT+%	BORROW	WASTE
SUMMARY NO.1					
-L- STA. 10+60.00 TO -L- STA. 13+45.54 (BEGIN BRIDGE)	16		925	909	
SUBTOTAL SUMMARY NO.1	16		925	909	
SUMMARY NO.2					
-L- STA. 14+18.53 (END BRIDGE) TO -L- STA. 16+80.00	60		1005	945	
SUBTOTAL SUMMARY NO.2	60		1005	945	
PROJECT SUBTOTAL	76		1930	1854	
EST. 5% TO REPLACE TOP SOIL ON BORROW PIT				93	
GRAND TOTAL	76			1947	
SAY	80			1980	

CONTINGENCY ITEMS:
INCIDENTAL STONE = 50 TONS
UNDERCUT EXCAVATION = 450 CY
SELECT GRANULAR MATERIAL = 400 CY
GEOTEXTILE FOR SOIL STABILIZATION = 200 SY

Note: Earthwork quantities are calculated by the roadway designer. These earthwork quantities are based in part on subsurface data provided by the Geotechnical Unit.

Note: Approximate quantities only. Unclassified excavation, fine grading, clearing and grubbing, breaking of existing asphalt, and removalof existing pavement will be paid for at the contract lump sum price for "grading".

NOTE: Invert Elevations are for Bid Purposes only and shall not be used for project construction stakeout.
See "Standard Specifications For Roads and Structures, Section 300-5".

SUB-REGIONAL & REGIONAL LIST OF PIPES, ENDWALLS, ETC. (FOR PIPES 48" & UNDER)

STATION	LOCATION (LT,RT, OR CL)	STRUCTURE NO. FROM	STRUCTURE NO. TO	TOP ELEVATION	INVERT ELEVATION	INVERT ELEVATION	SLOPE CRITICAL	DRAINAGE PIPE (RCP, CSP, CAAP, HDPE, or PVC) 12"	15"	18"	24"	30"	36"	42"	48"	DO NOT USE RCP	DO NOT USE CSP	DO NOT USE CAAP	DO NOT USE HDPE
-L- 10+87	LT	400		1810.48	1810.02														
	LT	400	401		1810.02	1806.76			32										
-L- 11+23	LT	401		1809.93	1806.76														
	LT	401	402		1806.76	1802.36			44										
-L- 11+72	LT	402		1805.53	1802.36														
	LT	402	403		1802.36	1801.92			44										
-L- 12+22	LT	403		1805.09	1801.67														
	LT	403	404		1801.67	1801.50													
-L- 13+17	RT	405		1801.63	1796.63														
		405	406		1796.63	1796.43			12										
-L- 14+37	RT	407		1799.51	1795.51														
		407	408		1795.51	1795.37			12										
-L- 16+00	RT	409	410		1795.31	1791.02													
TOTAL									144										

STATION	C.S. PIPE 12" (.064)	15" (.064)	18" (.064)	24" (.064)	36" (.079)	42" (.109)	48" (.109)	R.C. PIPE (CLASS III) 15"	18"	24"	30"	36"	42"	48"	R.C. PIPE (CLASS IV) 12"	15"	18"	24"	30"	36"	42"	48"
-L- 10+87																						
-L- 11+23																						
-L- 11+72																						
-L- 12+22																						
																	32					
-L- 13+17																						
-L- 14+37																						
-L- 16+00																				64			
TOTAL																	32		64			

STATION	**" R. C. PIPE (CLASS V)	**" R. C. PIPE CULVERTS, CONTRACTOR DESIGN PIPE	**" R. C. PIPE CULVERTS, CONTRACTOR DESIGN PIPE	15" SIDE DRAIN PIPE	18" SIDE DRAIN PIPE	ENDWALLS STD. 838.01, STD. 838.11 OR STD. 838.80 (UNLESS NOTED OTHERWISE) CU. YDS. R.C.P.	C.S.P.	QUANTITIES FOR DRAINAGE STRUCTURES PER EACH (0' THRU 5.0')	* TOTAL L.F. FOR PAY QUANTITY SHALL BE COL. 'A' + (1.3 X COL.'B') LIN. *FT. A 5.0' THRU 10.0'	B 10.0' AND ABOVE	C.B. STD. 840.01 OR STD. 840.02	FRAME, GRATES AND HOOD STANDARD 840.03 TYPE OF GRATE E	F	G		CONCRETE TRANSITIONAL SECTION CATCH BASIN	DROP INLET	TBDI STD 840.35	TBDI FRAME WITH TWO GRATES 840.29	J.B. STD. 840.31 OR 840.32	M.H. FRAME & COVER STD. 840.54	MODIFIED CONCRETE FLUME		CORR. STEEL ELBOWS NO. & SIZE	CONC. COLLARS CL. "B" C.Y. STD 840.72	CONC. & BRICK PIPE PLUG, C.Y. STD. 840.71	PIPE REMOVAL LIN.FT.	REMARKS
-L- 10+87																												
-L- 11+23								1										1	1									
-L- 11+72								1										1	1									
-L- 12+22								1										1	1									
-L- 13+17								1										1	1									
-L- 14+37								1										1	1									
-L- 16+00																											44	REMOVE 24" HDPE
TOTAL								5										5	5								44	

ABBREVIATIONS

C.B.	CATCH BASIN
N.D.I.	NARROW DROP INLET
D.I.	DROP INLET
G.D.I.	GRATED DROP INLET
G.D.I. (N.S.)	GRATED DROP INLET (NARROW SLOT)
J.B.	JUNCTION BOX
M.H.	MANHOLE
T.B.D.I.	TRAFFIC BEARING DROP INLET
T.B.G.I.	TRAFFIC BEARING GRATE INLET
T.B.J.B.	TRAFFIC BEARING JUNCTION BOX

"N" = DISTANCE FROM EDGE OF LANE TO FACE OF GUARDRAIL.
TOTAL SHOULDER WIDTH = DISTANCE FROM EDGE OF TRAVEL LANE TO SHOULDER BREAK POINT.
FLARE LENGTH = DISTANCE FROM LAST SECTION OF PARALLEL GUARDRAIL TO END OF GUARDRAIL.
W = TOTAL WIDTH OF FLARE FROM BEGINNING OF TAPER TO END OF GUARDRAIL.
G = GATING IMPACT ATTENUATOR TYPE 350
NG = NON-GATING IMPACT ATTENUATOR TYPE 350

GUARDRAIL SUMMARY

SURVEY LINE	BEG. STA.	END STA.	LOCATION	LENGTH STRAIGHT	LENGTH SHOP CURVED	LENGTH DOUBLE FACED	WARRANT POINT APPROACH END	WARRANT POINT TRAILING END	"N" DIST. FROM E.O.L.	TOTAL SHOUL. WIDTH	FLARE LENGTH APPROACH END	FLARE LENGTH TRAILING END	W APPROACH END	W TRAILING END	ANCHORS XI MOD	XI	GREU 350 TL-2	GREU 350 TL-3	IA-350 TL-2	TYPE III	TYPE III SHOP CURVED	B-77	AT-1	IMPACT ATTENUATOR TYPE 350 EA	G	NG	SINGLE FACED GUARDRAIL	REMOVE EXISTING GUARDRAIL	REMOVE AND STOCKPILE EXISTING GUARDRAIL	REMARKS
-L-	11+77	13+37	RT	156.25			12+27		4	7	25		0.5				1			1										
-L-	14+10	14+71	RT	56.25				14+10	4	7		25		0.5			1			1										
-L-	12+97	13+54	LT	56.25				13+54	4	7		25		0.5			1			1										
-L-	14+26	15+00	LT	68.75			14+26		4	7	25		0.5				1			1										
			SUBTOTAL	337.5																										
		LESS DEDUCTIONS FOR ANCHORS																												
		GREU 350 TL-2 4 @ 25'=		-100																										
		TL-III 4 @ 18.75=		-75																										
		PROJECT TOTALS:		162.5													4			4										
		ADDITIONAL GUARDRAIL POSTS=5 EA.																												
	TEMPORARY GUARDRAIL																													
-DET-	21+93	23+20	RT	125			22+18	22+94	1	4	25	25	0.5	0.5			2													
		LESS DEDUCTIONS FOR ANCHORS																												
		GREU 350 TL-2 2 @ 25'=		-50																										
		PROJECT TOTALS:		75													2													

COMPUTED BY: DMM	DATE: 11/15/2019
CHECKED BY: JCK	DATE: 11/15/2019

(5-15-18)

PROJECT NO.	SHEET NO.
17BP.13.R.167	3G-1

STATE OF NORTH CAROLINA
DIVISION OF HIGHWAYS

SUMMARY OF SUBSURFACE DRAINAGE

LINE	Station	Station	Location LT/RT/CL	Drain Type* UD/BD/SD	LF
CONTINGENCY				SD	200
				TOTAL LF:	200

*UD = Underdrain
*BD = Blind Drain
*SD = Subsurface Drain

SUMMARY OF GEOTEXTILE FOR PAVEMENT STABILIZATION

LINE	Station	Station	Geotextile for Pavement Stabilization SY	Class IV Subgrade Stabilization TONS
CONTINGENCY				
		TOTAL SY/TONS:	0	0*

*Total tons of "Class IV Subgrade Stabilization" is only the estimated quantity for pavement stabilization and may only represent a portion of the subgrade stabilization quantity shown in the Item Sheets of the Proposal.

SUMMARY OF AGGREGATE SUBGRADE/STABILIZATION

LINE	Station	Station	Aggregate Type* ASU(1/2)/ AST	Aggregate Thickness INCHES [8" for ASU(2)]	Shallow Undercut CY	Class IV Subgrade Stabilization TONS	Geotextile for Soil Stabilization SY	Stabilizer Aggregate TONS	Class IV Aggregate Stabilization TONS
CONTINGENCY					100	200	500		
			TOTAL CY/TONS/SY:		100	200**	500**	0	0

*ASU(1/2) = Aggregate Subgrade (Type 1 or 2)
*AST = Aggregate Stabilization
**Total tons of "Class IV Subgrade Stabilization" and total square yards of "Geotextile for Soil Stabilization" are only the estimated quantities for ASU(1/2)/AST and may only represent a portion of the subgrade stabilization and geotextile quantities shown in the Item Sheets of the Proposal.

SUMMARY OF ROCK PLATING

LINE	Beginning Slope (H:V)	Approx. Station	Ending Slope (H:V)	Approx. Station	Location LT/RT	Rock Plating Detail No. 1/2/3/4	Riprap Class* 1/2/B	Rock Plating SY
							TOTAL SY:	0

*Use Class 1, 2 or B riprap if riprap class is not shown for rock plating location.

SUMMARY OF REINFORCED SOIL SLOPES AND SLOPE EROSION CONTROL

LINE	Beginning Slope/ RSS (H:V)	Approx. Station	Ending Slope/ RSS (H:V)	Approx. Station	Location LT/RT	Reinforced Soil Slope (RSS) SY	Geocells SY	Coir Fiber Mat SY	Matting for Erosion Control SY
					TOTAL SY:	0	0	0*	0**

*Total square yards of "Coir Fiber Mat" is only the estimated quantity for slopes steeper than 2:1 (H:V) and may only represent a portion of the coir fiber mat quantity shown in the Item Sheets of the Proposal.
**Total square yards of "Matting for Erosion Control" is only the estimated quantity for RSS and may only represent a portion of the matting quantity shown in the Item Sheets of the Proposal.

SUMMARY OF PRE-SPLITTING OF ROCK

LINE	Beginning Rock Cut Slope (H:V)	Approx. Station	Ending Rock Cut Slope (H:V)	Approx. Station	Location LT/RT	Pre-splitting of Rock SY
					TOTAL SY:	0

SUMMARY OF SURCHARGES AND SURCHARGE WAITING PERIODS

LINE	Station	Station	Surcharge Height FT	MONTHS

SUMMARY OF SETTLEMENT GAUGES

Gauge No.	LINE and Station	Offset	
		Distance FT	Direction LT/RT
	TOTAL GAUGES (EACH):		

SUMMARY OF EMBANKMENT WAITING PERIODS

LINE	Station	Station	MONTHS

SUMMARY OF BRIDGE WAITING PERIODS

Bridge Description	End Bent/ Bent No.	MONTHS

DocuSign Envelope ID: F2604789-03FA-4783-8338-F1C75C3DADE8

PROJECT REFERENCE NO.	SHEET NO.
17BP.13.R.167	4
R/W SHEET NO.	
ROADWAY DESIGN ENGINEER	HYDRAULICS ENGINEER
NORTH CAROLINA PROFESSIONAL SEAL 030453 — Docusigned by: Karen Carver 8250B42A220F49C... 6/27/2022	NORTH CAROLINA PROFESSIONAL SEAL 030453 — Docusigned by: Karen Carver 8250B42A220F49C... 6/27/2022

DOCUMENT NOT CONSIDERED FINAL UNLESS ALL SIGNATURES COMPLETED

Mattern & Craig
ENGINEERS • SURVEYORS
12 BROAD STREET
ASHEVILLE, NORTH CAROLINA 28801
(828) 254-2201
FAX (828) 254-4562
NC LIC. NO. C-1154

-L- CURVE DATA

PI Sta 11+64.01	PI Sta 13+08.19	PI Sta 15+69.02	PI Sta 16+97.29
Δ = 64° 50' 14.2" (LT)	Δ = 13° 40' 16.2" (RT)	Δ = 33° 47' 55.3" (LT)	Δ = 2° 34' 29.6" (RT)
D = 35° 48' 35.5"	D = 10° 36' 37.2"	D = 15° 04' 40.2"	D = 6° 35' 08.6"
L = 181.06'	L = 128.85'	L = 224.16'	L = 39.10'
T = 101.61'	T = 64.73'	T = 115.45'	T = 19.55'
R = 160.00'	R = 540.00'	R = 380.00'	R = 870.00'
SE = 04	SE = 04	SE = 04	SE = 04
R0 = 77'	R0 = 77'	R0 = 60'	R0 = 60'

SHOULDER BERM GUTTER
-L- STA 10+90 LT
TO BEGIN APPROACH SLAB LT
-L- STA 11+77 RT TO
BEGIN APPROACH SLAB RT
END APPROACH SLAB RT TO
-L- STA 14+40 RT

DETAIL 1
TOE PROTECTION
(Not to Scale)

d = 1 Ft.

Type of Liner = 160 SY PSRM

FROM -L- STA. 12+00 TO STA 13+62 LT
FROM -L- STA. 13+81 TO STA. 14+39 RT

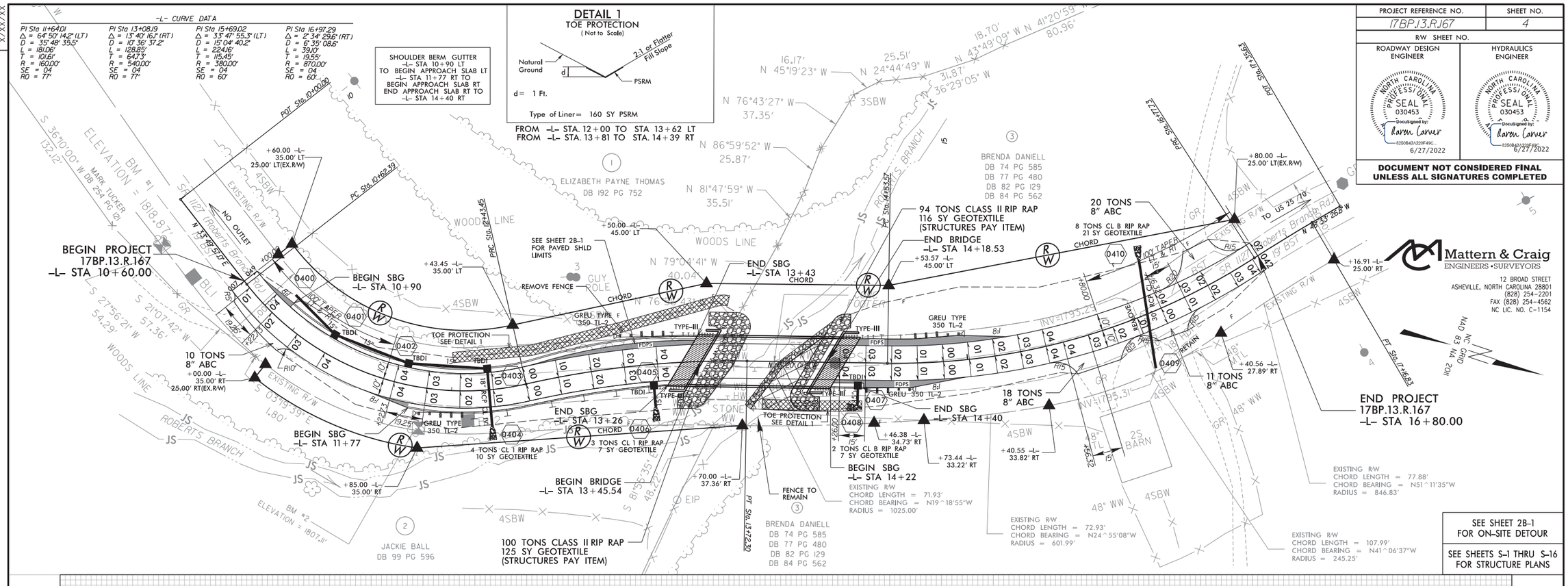

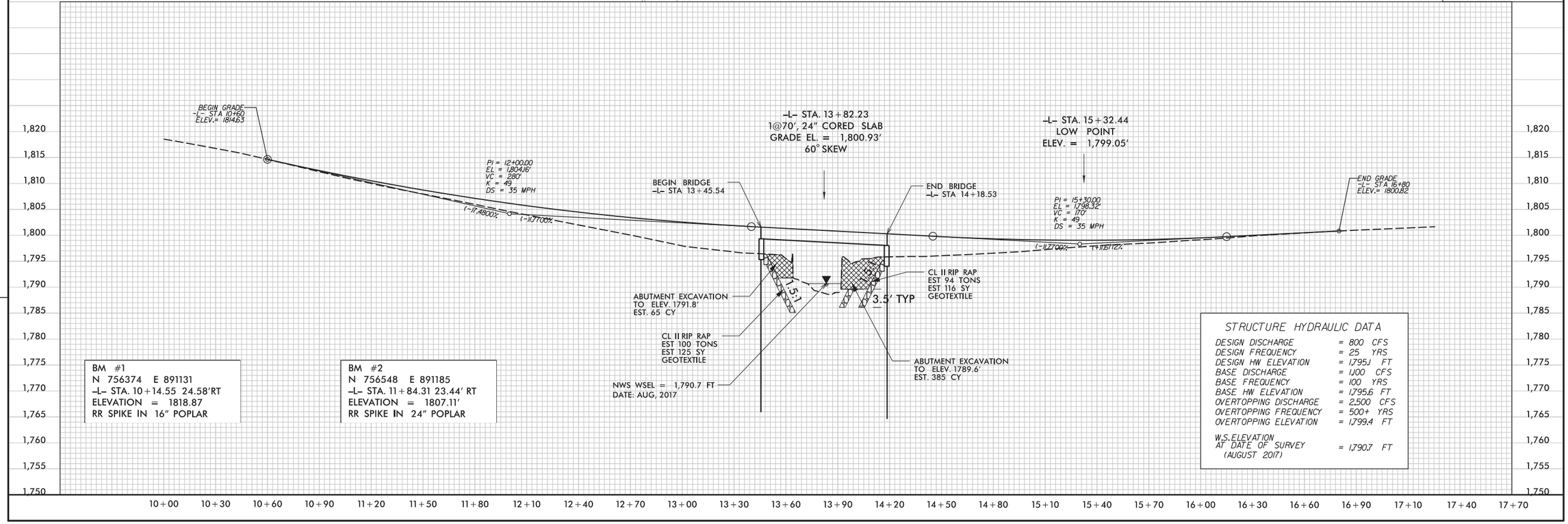

BM #1
N 756374 E 891131
-L- STA. 10+14.55 24.58'RT
ELEVATION = 1818.87
RR SPIKE IN 16" POPLAR

BM #2
N 756548 E 891185
-L- STA. 11+84.31 23.44' RT
ELEVATION = 1807.11'
RR SPIKE IN 24" POPLAR

STRUCTURE HYDRAULIC DATA

DESIGN DISCHARGE	= 800 CFS
DESIGN FREQUENCY	= 25 YRS
DESIGN HW ELEVATION	= 1,795.1 FT
BASE DISCHARGE	= 1,100 CFS
BASE FREQUENCY	= 100 YRS
BASE HW ELEVATION	= 1,795.6 FT
OVERTOPPING DISCHARGE	= 2,500 CFS
OVERTOPPING FREQUENCY	= 500+ YRS
OVERTOPPING ELEVATION	= 1,799.4 FT
W.S. ELEVATION AT DATE OF SURVEY (AUGUST 2017)	= 1,790.7 FT

STATE	STATE PROJECT REFERENCE NO.	SHEET NO.	TOTAL SHEETS
N.C.	17BP.13.R.167	RW01	

TIP PROJECT: 17BP.13.R.167

STATE OF NORTH CAROLINA
DIVISION OF HIGHWAYS

SURVEY CONTROL, EXISTING CENTERLINES, RIGHT OF WAY, EASEMENTS AND PROPERTY TIES

MADISON COUNTY

LOCATION: BRIDGE NO. 310 ON SR 1127 (ROBERTS BRANCH ROAD) OVER ROBERTS BRANCH

NAD 83 NC GRID MA 2011

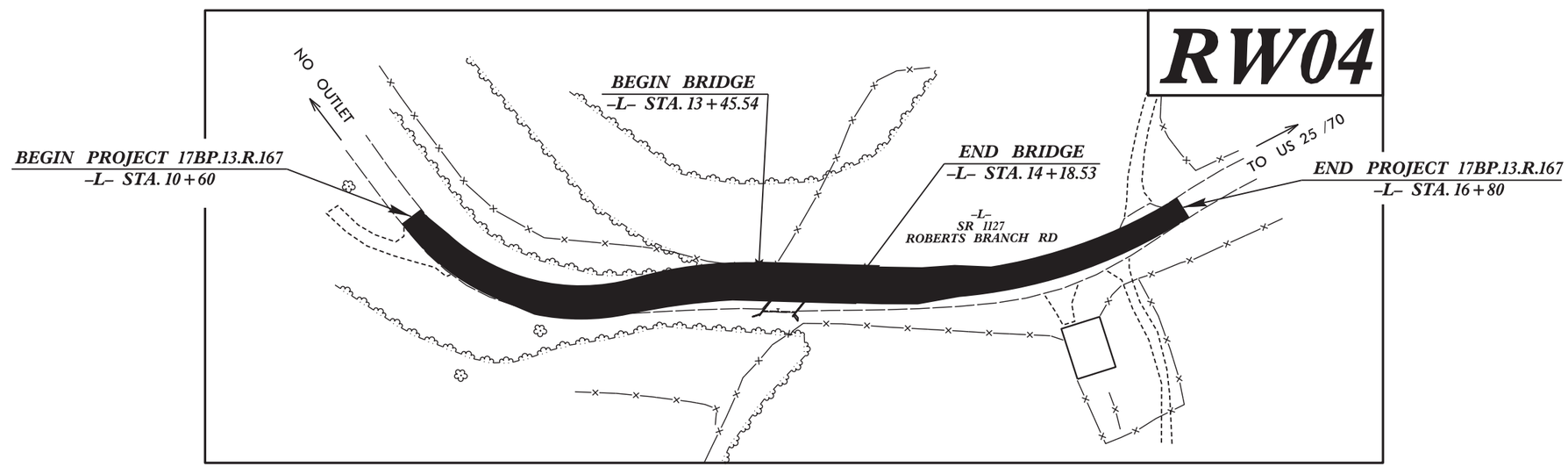

GRAPHIC SCALE

30 15 0 30 60

PLANS

DATUM DESCRIPTION

THE LOCALIZED COORDINATE SYSTEM DEVELOPED FOR THIS PROJECT
IS BASED ON THE STATE PLANE COORDINATES ESTABLISHED BY
NCDOT FOR MONUMENT "GPS-3"
WITH NAD 83/NA 2011 STATE PLANE GRID COORDINATES OF
NORTHING: 756765.4350 (ft) EASTING: 891073.8873 (ft)
ELEVATION: 1795.62 (ft)
THE AVERAGE COMBINED GRID FACTOR USED ON THIS PROJECT
(GROUND TO GRID) IS: 0.999820779
THE N.C. LAMBERT GRID BEARING AND
LOCALIZED HORIZONTAL GROUND DISTANCE FROM
"GPS-3" TO -L- STATION 10+00 IS
S 4°11'2.7" E 390.48 (ft)
ALL LINEAR DIMENSIONS ARE LOCALIZED HORIZONTAL DISTANCES
VERTICAL DATUM USED IS NAVD 88

Prepared In the Office of:

Mattern & Craig
ENGINEERS·SURVEYORS
12 BROAD STREET
ASHEVILLE, NORTH CAROLINA 28801
(828) 254-2201
FAX (828) 254-4562
NC LIC. NO. C-1154

2018 STANDARD SPECIFICATIONS

RIGHT OF WAY DATE:	*LETTING DATE:*
MARCH 17, 2019	MARCH 18, 2020

PROFESSIONAL LAND SURVEYOR

NORTH CAROLINA PROFESSIONAL SEAL L-4473 LAND SURVEYOR JEFF B. HOPPES

DocuSigned by:
Jeff Hoppes
2C3FB0F0CD6D472...

SIGNATURE: *Date:*

STATE OF NORTH CAROLINA DEPARTMENT OF TRANSPORTATION

09/08/99

$$$$SYSTIME$$$$DGN$$$$USERNAME$$$$

PROJECT REFERENCE NO.	SHEET NO.
17BP13R167	1C-1
Location and Surveys	

SURVEY CONTROL SHEET

W/ EXISTING CENTERLINE ALIGNMENTS PRIOR TO CONSTRUCTION

SEE SHEET 1C-2 FOR FURTHER ALIGNMENT DETAILS

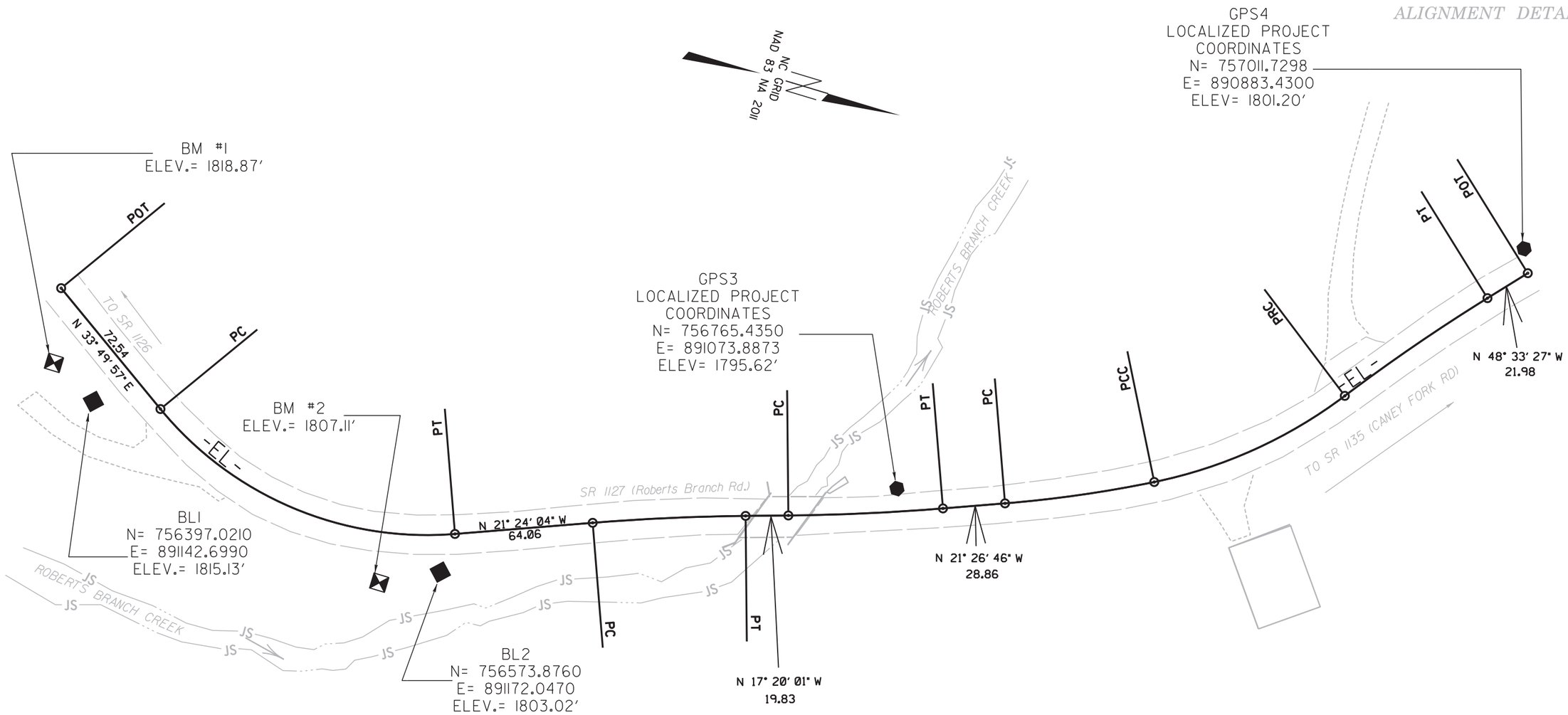

DATUM DESCRIPTION

THE LOCALIZED COORDINATE SYSTEM DEVELOPED FOR THIS PROJECT IS BASED ON THE STATE PLANE COORDINATES ESTABLISHED BY MATTERN AND CRAIG FOR MONUMENT "GPS3" WITH NAD 83/NSRS 2007 STATE PLANE GRID COORDINATES OF NORTHING: 756765.4350(ft) EASTING: 891073.8873(ft) ELEVATION: 1795.62(ft)

THE AVERAGE COMBINED GRID FACTOR USED ON THIS PROJECT (GROUND TO GRID) IS: .999820779

THE N.C. LAMBERT GRID BEARING AND LOCALIZED HORIZONTAL GROUND DISTANCE FROM "GPS3" TO -L- STATION IS

ALL LINEAR DIMENSIONS ARE LOCALIZED HORIZONTAL DISTANCES
VERTICAL DATUM USED IS NAVD 88

NOTES:

1. PROJECT CONTROL WAS ESTABLISHED USING GNSS, THE GLOBAL NAVIGATION SATELLITE SYSTEM.
2. THE SURVEY CONTROL DATA FOR THIS PROJECT HAS BEEN COMPILED FROM VARIOUS SOURCES. IF FURTHER INFORMATION REGARDING PROJECT CONTROL IS NEEDED, PLEASE CONTACT THE LOCATION AND SURVEYS UNIT.

NOTE: DRAWING NOT TO SCALE

6/2/99

REVISIONS

13-JUN-2018 14:08
I:\3590\35980M Madison Bridges\560310\Final Deliverables\560310_ls_1C-1.dgn
Location: 01 MicroStation

SURVEY CONTROL SHEET

W/ EXISTING CENTERLINE ALIGNMENTS PRIOR TO CONSTRUCTION

BASELINE

BL

POINT	DESC.	NORTH	EAST	ELEVATION
1	BL1	756397.0210	891142.6990	1815.13
2	BL2	756573.8760	891172.0470	1803.02
3	GPS3	756765.4350	891073.8873	1795.62
4	GPS4	757011.7298	890883.4300	1801.20

****
BM1 ELEVATION = 1818.87'
N 756374 E 891131
BM1 IS RR SPIKE SET IN BASE OF 16" POPLAR
****
****
BM2 ELEVATION = 1807.11'
N 756548 E 891185
BM2 IS RR SPIKE SET IN 24" POPLAR
****

EXISTING ALIGNMENT

EL

POINT	N	E	BEARING	DIST	DELTA	D	L	T	R
POT	756367.564	891096.726							
LINE			N 33°49'57" E	72.54					
PC	756427.825	891137.117							
CURVE			N 06°12'57" E	148.34	55°14'01"(LT)	35°48'36"	154.24	83.71	160.00
PT	756575.291	891153.177							
LINE			N 21°24'04" W	64.06					
PC	756634.938	891129.801							
CURVE			N 19°22'02" W	70.98	04°04'03"(RT)	05°43'47"	70.99	35.51	1000.00
PT	756701.896	891106.264							
LINE			N 17°20'01" W	19.83					
PC	756720.828	891100.355							
CURVE			N 19°23'23" W	71.76	04°06'45"(LT)	05°43'47"	71.78	35.90	1000.00
PT	756788.518	891076.531							
LINE			N 21°26'46" W	28.86					
PC	756815.384	891065.978							
CURVE			N 24°55'08" W	69.90	06°56'45"(LT)	09°55'49"	69.95	35.02	576.99
PCC	756878.780	891036.525							
CURVE			N 41°06'37" W	96.98	25°26'12"(LT)	26°00'53"	97.78	49.71	220.25
PT	756951.848	890972.761							
LINE			N 53°49'43" W	0.00					
PC	756951.849	890972.760							
CURVE			N 51°11'35" W	80.18	05°16'16"(RT)	06°34'19"	80.21	40.13	871.83
PT	757002.096	890910.280							
LINE			N 48°33'27" W	21.98					
POT	757016.645	890893.802							

NOTES:

1. PROJECT CONTROL WAS ESTABLISHED USING GNSS, THE GLOBAL NAVIGATION SATELLITE SYSTEM.
2. THE SURVEY CONTROL DATA FOR THIS PROJECT HAS BEEN COMPILED FROM VARIOUS SOURCES. IF FURTHER INFORMATION REGARDING PROJECT CONTROL IS NEEDED, PLEASE CONTACT THE LOCATION AND SURVEYS UNIT.

6/2/99
REVISIONS
13-JUN-2019 14:15
11:35:40\35:40M Madison Bridges\560310\Final Deliverables\560310_ls_1C-2.dgn
Direction of MicroStation

PROPOSED ALIGNMENT CONTROL SHEET

PROJECT REFERENCE NO.	SHEET NO.
17BP13R167	RW02D-1

Location and Surveys

MATTERN AND CRAIG
ENGINEERS & SURVEYORS
12 BROAD STREET
ASHEVILLE NORTH CAROLINA 28801
(828) 254-2201
FAX (828) 254-4562
NC LIC. NO. C-1154

L

TYPE	STATION	NORTH	EAST
POT	10+00.00	756375.9960	891102.3772
PC	10+62.39	756427.8253	891137.1166
PRC	12+43.45	756599.3256	891141.3495
PT	13+72.30	756716.5997	891088.7202
PC	14+53.57	756794.1781	891064.5073
PRC	16+77.73	756976.8298	890940.2236
PT	17+16.83	757002.0403	890910.3436
POT	17+35.63	757014.4810	890896.2534

NOTES:

1. IF FURTHER INFORMATION REGARDING PROJECT CONTROL IS NEEDED, PLEASE CONTACT THE LOCATION AND SURVEYS UNIT.

2. PROJECT CONTROL WAS ESTABLISHED USING GNSS, THE GLOBAL NAVIGATION SATELLITE SYSTEM.

REVISIONS

6/2/99

23-MAY-2010 13:28
F:\3921 NCDOT Survey\3921J Div.13 R_W Stake\06 Working Folders\Survey\Dwgs\560310\17BP13R167_ls_rw02d-1.dgn
Plotted at SURV ASH (1:1)

RIGHT OF WAY CONTROL SHEET

PROJECT REFERENCE NO.	SHEET NO.
17BP13R167	RW03E-1

Location and Surveys

MATTERN AND CRAIG
ENGINEERS & SURVEYORS
12 BROAD STREET
ASHEVILLE NORTH CAROLINA 28801
(828) 254-2201
FAX (828) 254-4562
NC LIC. NO. C-1154

PROJECT SURVEYOR

NORTH CAROLINA PROFESSIONAL SEAL L-4473 LAND SURVEYOR JEFF B. HOPPES

DOCUMENT NOT CONSIDERED FINAL UNLESS ALL SIGNATURES COMPLETED

I, JEFF B. HOPPES, a Professional Land Surveyor in the state of North Carolina hereby certify to the best of my knowledge and belief that the following work item(s) (Base map Compilation, R/W Staking) performed under my responsible charge meet NCDOT Survey Standards as directed in the NCDOT Location & Surveys guidelines and procedures.

I further certify that the data compiled came from available surveys/mapping performed by others and provided to me by NCDOT and do not certify to the accuracy or quality of the individual data sources.

I further certify that the right of way and permanent easement points shown herein and outlined in the tables shown hereon (localized coordinates, station/offset) have been checked and are accurate representations of the right of way and permanent easement points depicted on the corresponding highway plans. I also certify that the right of way and permanent easement points shown herein have been field monumented under my supervision from existing survey control provided by others; that the depicted property data shown herein were surveyed by others; and these monuments denote the right of way and easement boundaries at the time of staking which may be subject to change due to right of way revisions (See deeds for final determination).

Witness my original signature, registration number and seal this 5th day of June, 2019.

DocuSigned by:
Jeff Hoppes
2C3FB0F0CD6D472...

---------- L-4473
Professional Land Surveyor PLS # Seal

ROW MARKER IRON PIN AND CAP-E

ALIGN	STATION	OFFSET	NORTH	EAST	
L	10+60.00	-35.00	756445.3229	891106.7098	PK NAIL SET IN ROCK
L	10+60.00	-25.00	756439.7553	891115.0165	DRILL HOLE IN ROCK
L	11+00.00	35.00	756449.0446	891187.0197	
L	11+00.00	25.00	756452.5247	891177.6448	PK NAIL SET IN ROCK
L	11+85.00	35.00	756551.0116	891196.2042	PK NAIL SET IN ROCK
L	12+43.45	-35.00	756581.2967	891111.3501	
L	13+50.00	-45.00	756680.2844	891053.4362	
L	13+70.00	37.36	756725.6869	891125.0281	
L	14+46.38	34.73	756797.6588	891099.8003	
L	14+53.57	-45.00	756780.7711	891021.5509	
L	14+73.44	33.22	756824.5250	891089.2466	
L	15+40.55	33.82	756890.6677	891058.5176	
L	16+40.56	27.89	756972.0302	890987.5147	
L	16+80.00	-25.00	756958.8323	890922.7227	
L	17+16.91	25.00	757020.8366	890926.8271	

NOTES:

1. IF FURTHER INFORMATION REGARDING PROJECT CONTROL IS NEEDED, PLEASE CONTACT THE LOCATION AND SURVEYS UNIT.

2. PROJECT CONTROL WAS ESTABLISHED USING GNSS, THE GLOBAL NAVIGATION SATELLITE SYSTEM.

REVISIONS

6/2/99

05-JUN-2019 07:54
R:\392\ NCDOT Survey\2921 Div.13 R_W Stake\06 Working Folders\Survey\Dwgs\560310\17BP13R167_ls_rw3e.dgn
jjrosier@ ar_WK_ks1555

PROJECT REFERENCE NO.	SHEET NO.
17BP.13.R.167	RW04

Location and Surveys

MATTERN AND CRAIG
ENGINEERS & SURVEYORS
12 BROAD STREET
ASHEVILLE NORTH CAROLINA 28801
(828) 254-2201
FAX (828) 254-4562
NC LIC. NO. C-1154

PROJECT SURVEYOR

NORTH CAROLINA PROFESSIONAL SEAL L-4473 LAND SURVEYOR JEFF B. HOPPES

DOCUMENT NOT CONSIDERED FINAL UNLESS ALL SIGNATURES COMPLETED

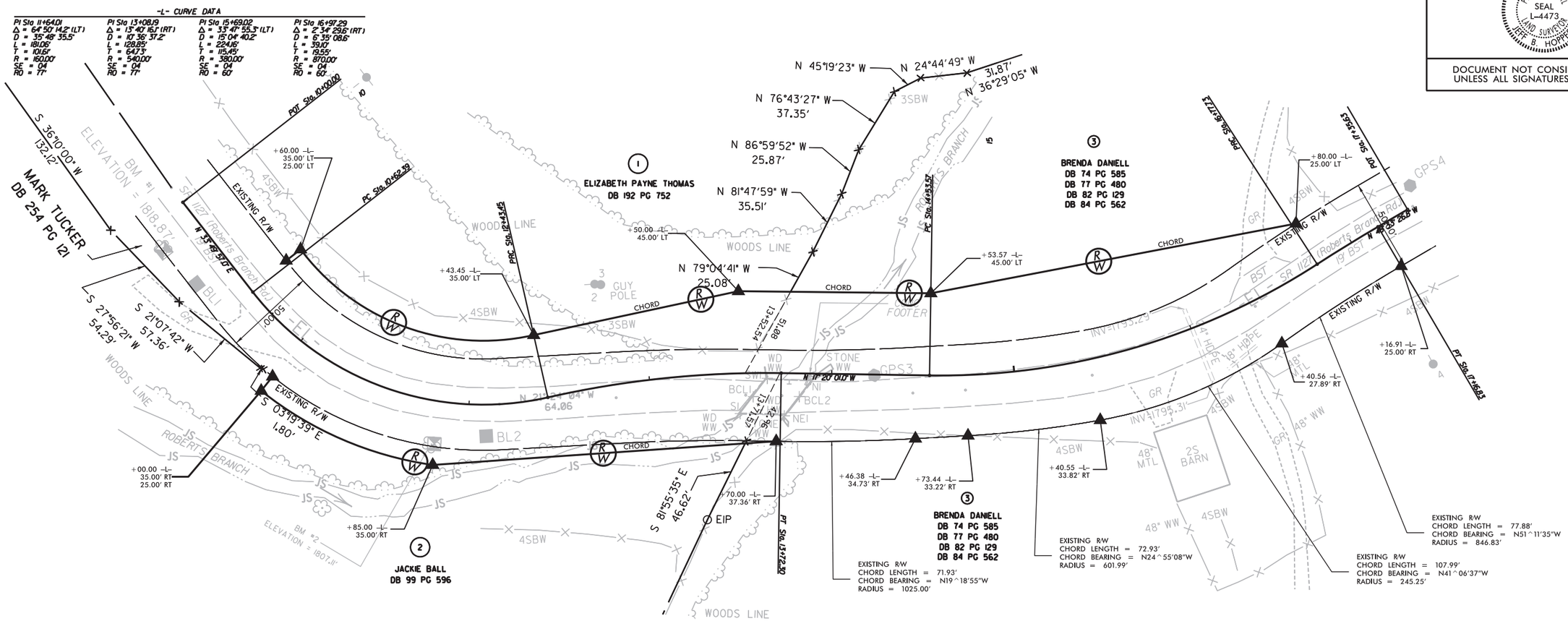

I, JEFF B. HOPPES, a Professional Land Surveyor in the state of North Carolina hereby certify to the best of my knowledge and belief that the following work item(s) (R/W Staking) performed under my responsible charge meet NCDOT Survey Standards as directed in the NCDOT Location & Surveys guidelines and procedures.

I further certify that the right of way and permanent easement points shown herein and outlined in the tables shown hereon (localized coordinates, station/offset) have been checked and are accurate representations of the right of way and permanent easement points depicted on the corresponding highway plans. I also certify that the right of way and permanent easement points shown herein have been field monumented under my supervision from existing survey control provided by others; that the depicted property data shown herein were surveyed by others; and these monuments denote the right of way and easement boundaries at the time of staking which may be subject to change due to right of way revisions (See deeds for final determination).

Witness my original signature, registration number and seal this 5th day of June, 2019.

DocuSigned by:
Jeff Hoppes
2C3FB0F0CD6D472...

Professional Land Surveyor — PLS # L-4473 — Seal

NOTES:

1. IF FURTHER INFORMATION REGARDING PROJECT CONTROL IS NEEDED, PLEASE CONTACT THE LOCATION AND SURVEYS UNIT.

2. PROJECT CONTROL WAS ESTABLISHED USING GNSS, THE GLOBAL NAVIGATION SATELLITE SYSTEM.

6/2/99
REVISIONS
04-JUN-2019 10:09
(1:392) NCDOT Survey\392LL Div.13 R_W Stake\06 Working Folders\Survey\Dwgs\56030\17BP13R167_rdy_ROW revised.dgn
Creation: gl_WorkSpace

STATE OF NORTH CAROLINA
DIVISION OF HIGHWAYS

TRANSPORTATION MANAGEMENT PLAN

MADISON COUNTY

LOCATION: BRIDGE NO. 310 OVER ROBERTS BRANCH ON SR 1127 (ROBERTS BRANCH ROAD)

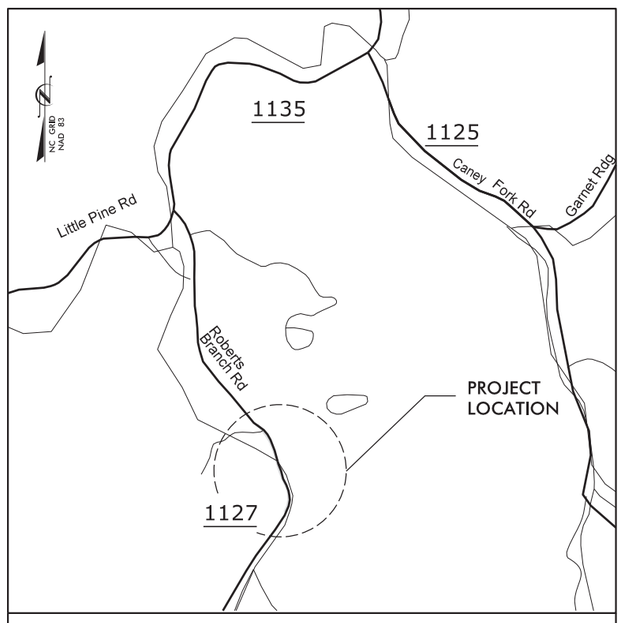

VICINITY MAP

INDEX OF SHEETS

SHEET NO.	TITLE
TMP-1	TITLE SHEET, VINCINITY MAP, AND INDEX OF SHEETS
TMP-1A	LIST OF APPLICABLE ROADWAY STANDARD DRAWINGS, AND LEGEND
TMP-1B	DETAIL 1205.12: PAVEMENT MARKINGS - BRIDGES, SHEET 1 OF 1
TMP-1C	TRANSPORTATION OPERATIONS PLAN: (MANAGEMENT STRATEGIES, GENERAL NOTES, AND LOCAL NOTES)
TMP-2	PORTABLE CONCRETE BARRIER AT TEMPORARY SHORING LOCATIONS - STANDARD DETAIL
TMP-3	PROJECT PHASING NOTES
TMP-4	TEMPORARY TRAFFIC CONTROL, PHASE I DETAILS
TMP-5	TEMPORARY TRAFFIC CONTROL, PHASE II DETAILS
TMP-6	TEMPORARY TRAFFIC CONTROL, PHASE III DETAILS
PM-1	PERMANENT PAVEMENT MARKING PLAN

SHEET NO.
TMP-1

17BP.13.R.167

TIP PROJECT:

DOCUMENT NOT CONSIDERED FINAL UNLESS ALL SIGNATURES COMPLETED

WORK ZONE SAFETY & MOBILITY
"from the MOUNTAINS to the COAST"

PLANS PREPARED BY:

JAMES B. VOSO, PE

MENG YANG, EI

NCDOT CONTACTS:

MIKE K. CALLOWAY
PROJECT ENGINEER

PROJECT DESIGN ENGINEER

PLANS PREPARED BY:

Mattern & Craig
ENGINEERS • SURVEYORS
12 BROAD STREET
ASHEVILLE, NORTH CAROLINA 28801
(828) 254-2201
FAX (828) 254-4562
NC LIC. NO. C-1154

APPROVED: DocuSigned by: James Voso 142F1B93F9B241F...

DATE: 6/13/2022

SEAL

NORTH CAROLINA PROFESSIONAL SEAL 022599 ENGINEER JAMES B. VOSO

PROJ. REFERENCE NO.	SHEET NO.
17BP.13.R.167	TMP-1A

ROADWAY STANDARD DRAWINGS

THE FOLLOWING ROADWAY STANDARDS AS SHOWN IN "ROADWAY STANDARD DRAWINGS" - PROJECT SERVICES UNIT - N.C. DEPARTMENT OF TRANSPORTATION - RALEIGH, N.C., DATED JANUARY 2018 ARE APPLICABLE TO THIS PROJECT AND BY REFERENCE HEREBY ARE CONSIDERED A PART OF THESE PLANS:

STD. NO.	TITLE
1101.01	WORK ZONE ADVANCE WARNING SIGNS
1101.02	TEMPORARY LANE CLOSURES
1101.04	TEMPORARY SHOULDER CLOSURES
1101.05	WORK ZONE VEHICLE ACCESSES
1101.11	TRAFFIC CONTROL DESIGN TABLES
1110.01	STATIONARY WORK ZONE SIGNS
1110.02	PORTABLE WORK ZONE SIGNS
1130.01	DRUMS
1135.01	CONES
1145.01	BARRICADES
1150.01	FLAGGING DEVICES
1170.01	PORTABLE CONCRETE BARRIER
1180.01	SKINNY-DRUM
1205.01	PAVEMENT MARKINGS - LINE TYPES & OFFSETS
1205.02	PAVEMENT MARKINGS - TWO LANE AND MULTI-LANE ROADWAYS
1250.01	RAISED PAVEMENT MARKERS - INSTALLATION SPACING
1251.01	RAISED PAVEMENT MARKERS - PERMANENT AND TEMPORARY
1253.01	RAISED PAVEMENT MARKERS - SNOWPLOWABLE
1261.01	GUARDRAIL & BARRIER DELINEATOR SPACING
1261.02	GUARDRAIL & BARRIER DELINEATOR TYPES
1262.01	GUARDRAIL END DELINEATION

LEGEND

GENERAL

- DIRECTION OF TRAFFIC FLOW
- DIRECTION OF PEDESTRIAN TRAFFIC FLOW
- EXIST. PVMT.
- NORTH ARROW
- PROPOSED PVMT.
- WORK AREA
- TEMPORARY PAVEMENT
- PAVEMENT REMOVAL

TRAFFIC CONTROL DEVICES

- BARRICADE (TYPE III)
- CONE
- DRUM SKINNY DRUM TUBULAR MARKER
- TEMPORARY CRASH CUSHION
- FLASHING ARROW PANEL (TYPE C)
- FLAGGER
- LAW ENFORCEMENT
- TRUCK MOUNTED IMPACT ATTENUATOR (TMIA)
- CHANGEABLE MESSAGE SIGN

TEMPORARY SIGNING

- PORTABLE SIGN
- STATIONARY SIGN
- STATIONARY OR PORTABLE SIGN

SIGNALS

EXISTING PROPOSED TEMPORARY

PAVEMENT MARKINGS

- EXISTING LINES
- TEMPORARY LINES
- WHITE SOLID EDGE LINE
- YELLOW DOUBLE CENTER LINE

PAVEMENT MARKERS

- YELLOW/YELLOW

PAVEMENT MARKING SYMBOLS

- PAVEMENT MARKING SYMBOLS

TEMPORARY PAVEMENT MARKING

SYMBOL	DESCRIPTION	TOTAL QUANTITY
	PAINT	
P2	STOP BAR (24"WHITE)	64 FT
PA	WHITE EDGE LINE (4")	3,040 FT

TEMPORARY RAISED MARKERS

SYMBOL	DESCRIPTION	TOTAL QUANTITY
MF	CRYSTAL & CRYSTAL	64 EA

APPROVED: DocuSigned by: James Voso 143H-U803/98:341F... DATE: 6/13/2022

SEAL

NORTH CAROLINA PROFESSIONAL SEAL 022599 ENGINEER JAMES B. VOSO

DIVISION OF HIGHWAYS STATE OF NORTH CAROLINA DEPARTMENT OF TRANSPORTATION WORK ZONE TRAFFIC CONTROL

ROADWAY STANDARD DRAWINGS & LEGEND

TIP NO.	SHEET NO.
17BP.13.R.167	7-1B

APPROVED: Matthew V. Springer
DATE: 8/30/2019

SEAL
NORTH CAROLINA PROFESSIONAL SEAL 042546 ENGINEER MATTHEW V. SPRINGER

STATE OF NORTH CAROLINA
DEPT. OF TRANSPORTATION
DIVISION OF HIGHWAYS
RALEIGH, N.C.

8-19

ENGLISH DETAIL DRAWING FOR
PAVEMENT MARKINGS
BRIDGES

STANDARD BRIDGE

CLEAR ROADWAY WIDTH > 25 FT.

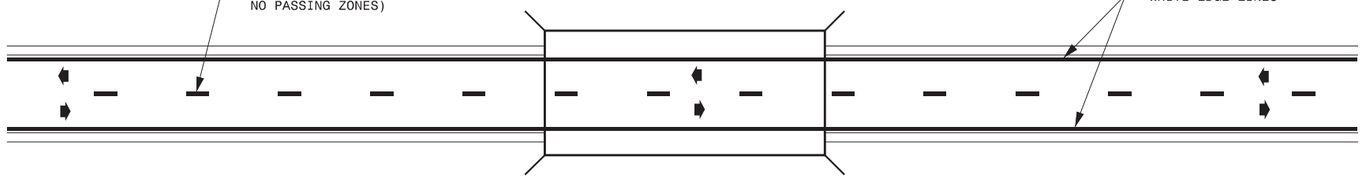

NARROW BRIDGE

18 FT. ≥ CLEAR ROADWAY WIDTH ≤ 25 FT.

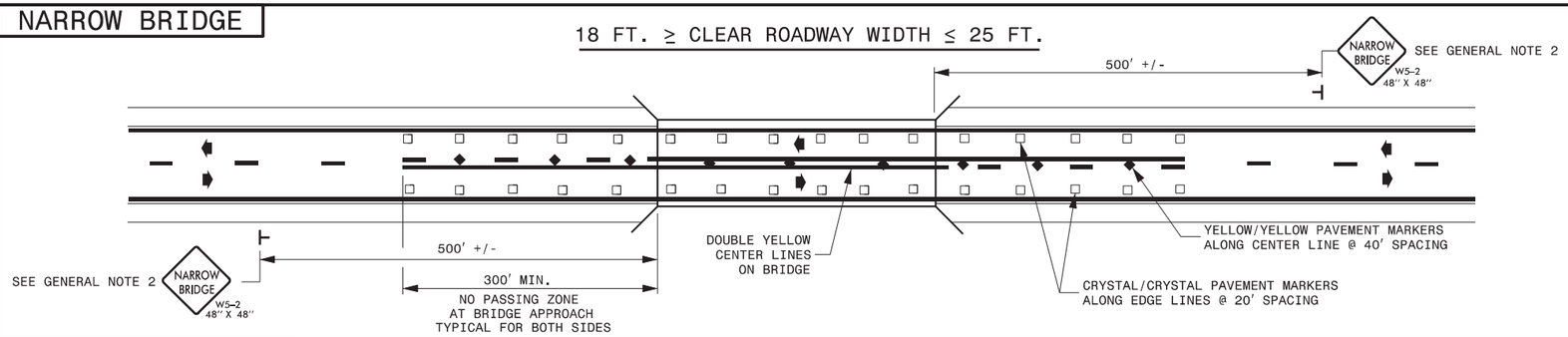

ONE-LANE BRIDGE

CLEAR ROADWAY WIDTH < 18 FT.

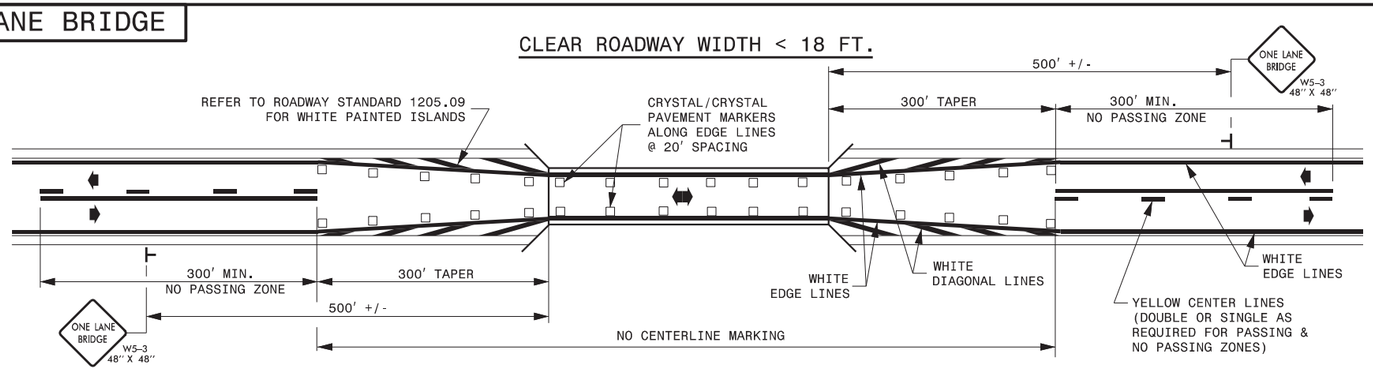

GENERAL NOTES:

1- NO PASSING ZONES SHOWN ARE MINIMUMS. APPLY MINIMUM PASSING AND STOPPING SIGHT DISTANCES AS DETERMINED BY THE ENGINEER.

2- FOR BRIDGES WITH 18 TO 25 FEET CLEAR ROADWAY WIDTH, SIGNS MUST BE USED WHEN THE APPROACH PAVEMENT WIDTH IS 2 FOOT OR GREATER THAN THE CLEAR ROADWAY WIDTH.

LEGEND

- DIRECTION OF TRAFFIC FLOW
- STATIONARY SIGN
- YELLOW/YELLOW PAVEMENT MARKER
- CRYSTAL/CRYSTAL PAVEMENT MARKER

SHEET 1 OF 1
1205D12

STATE OF NORTH CAROLINA
DEPT. OF TRANSPORTATION
DIVISION OF HIGHWAYS
RALEIGH, N.C.

8-19

ENGLISH DETAIL DRAWING FOR
PAVEMENT MARKINGS
BRIDGES

SHEET 1 OF 1
1205D12

REVISED PAVEMENT MARKING ROADWAY STANDARD DRAWING

08/30/19
S:\S&DU\Standards Group\Standards and Drawings\Drawings\2018 Standard Dwgs\Division 12 Final\1205I20L_08-29-19.dgn
User:rdstokes

PROJ. REFERENCE NO.	SHEET NO.
17BP.13.R.167	TMP-1C

GENERAL NOTES / LOCAL NOTES

CHANGES MAY BE REQUIRED WHEN PHYSICAL DIMENSIONS IN THE DETAIL DRAWINGS, STANDARD DETAILS, AND ROADWAY DETAILS ARE NOT ATTAINABLE TO MEET FIELD CONDITIONS OR RESULT IN DUPLICATE OR UNDESIRED OVERLAPPING OF DEVICES. MODIFICATION MAY INCLUDE: MOVING, SUPPLEMENTING, COVERING, OR REMOVAL OF DEVICES AS DIRECTED BY THE ENGINEER.

THE FOLLOWING GENERAL NOTES APPLY AT ALL TIMES FOR THE DURATION OF THE CONSTRUCTION PROJECT EXCEPT WHEN OTHERWISE NOTED IN THE PLAN OR DIRECTED BY THE ENGINEER.

TIME RESTRICTIONS

A) DO NOT CLOSE ROADS AS FOLLOWS:

ROAD NAME	DAY AND TIME RESTRICTIONS
ROBERTS BRANCH ROAD (SR 1127)	JUNE 15TH - AUGUST 14TH 6:00 AM TO 9:00 AM AND 4:00 PM TO 6:00 PM
ROBERTS BRANCH ROAD (SR 1127)	AUGUST 15TH - JUNE 14TH 6:00 AM TO 9:00 AM AND 2:00 PM TO 6:00 PM

LANE AND SHOULDER CLOSURE REQUIREMENTS

B) REMOVE LANE CLOSURE DEVICES FROM THE LANE WHEN WORK IS NOT BEING PERFORMED BEHIND THE LANE CLOSURE OR WHEN A LANE CLOSURE IS NO LONGER NEEDED OR AS DIRECTED BY THE ENGINEER.

C) WHEN PERSONNEL AND/OR EQUIPMENT ARE WORKING WITHIN 15 FT OF AN OPEN TRAVEL LANE, CLOSE THE NEAREST OPEN SHOULDER USING ROADWAY STANDARD DRAWING NO. 1101.04 UNLESS THE WORK AREA IS PROTECTED BY BARRIER OR GUARDRAIL OR A LANE CLOSURE IS INSTALLED.

D) WHEN PERSONNEL AND/OR EQUIPMENT ARE WORKING ON THE SHOULDER ADJACENT TO AN UNDIVIDED FACILITY AND WITHIN 5 FT OF AN OPEN TRAVEL LANE, CLOSE THE NEAREST OPEN TRAVEL LANE USING ROADWAY STANDARD DRAWING NO. 1101.02 UNLESS THE WORK AREA IS PROTECTED BY BARRIER OR GUARDRAIL.

E) WHEN PERSONNEL AND/OR EQUIPMENT ARE WORKING WITHIN A LANE OF TRAVEL OF AN UNDIVIDED OR DIVIDED FACILITY, CLOSE THE LANE ACCORDING TO THE TRAFFIC CONTROL PLANS, ROADWAY STANDARD DRAWINGS, OR AS DIRECTED BY THE ENGINEER. CONDUCT THE WORK SO THAT ALL PERSONNEL AND/OR EQUIPMENT REMAIN WITHIN THE CLOSED TRAVEL LANE.

F) DO NOT WORK SIMULTANEOUSLY WITHIN 15 FT ON BOTH SIDES OF AN OPEN TRAVELWAY, RAMP, OR LOOP WITHIN THE SAME LOCATION UNLESS PROTECTED WITH GUARDRAIL OR BARRIER.

PAVEMENT EDGE DROP OFF REQUIREMENTS

G) BACKFILL AT A 6:1 SLOPE UP TO THE EDGE AND ELEVATION OF EXISTING PAVEMENT IN AREAS ADJACENT TO AN OPENED TRAVEL LANE THAT HAS AN EDGE OF PAVEMENT DROP-OFF AS FOLLOWS:

BACKFILL DROP-OFFS THAT EXCEED 2 INCHES ON ROADWAYS WITH POSTED SPEED LIMITS OF 45 MPH OR GREATER.

BACKFILL DROP-OFFS THAT EXCEED 3 INCHES ON ROADWAYS WITH POSTED SPEED LIMITS LESS THAN 45 MPH.

BACKFILL WITH SUITABLE COMPACTED MATERIAL, AS APPROVED BY THE ENGINEER, AT NO EXPENSE TO THE DEPARTMENT.

H) DO NOT EXCEED A DIFFERENCE OF 2 INCHES IN ELEVATION BETWEEN OPEN LANES OF TRAFFIC FOR NOMINAL LIFTS OF 1.5 INCHES. INSTALL ADVANCE WARNING "UNEVEN LANES" SIGNS (W8-11) IN ADVANCE AND A MINIMUM OF EVERY HALF MILE THROUGHOUT THE UNEVEN AREA.

TRAFFIC PATTERN ALTERATIONS

I) NOTIFY THE ENGINEER TWENTY ONE (21) CALENDAR DAYS PRIOR TO ANY TRAFFIC PATTERN ALTERATION.

SIGNING

J) INSTALL ADVANCE WORK ZONE WARNING SIGNS WHEN WORK IS WITHIN 40 FT FROM THE EDGE OF TRAVEL LANE AND NO MORE THAN THREE (3) DAYS PRIOR TO THE BEGINNING OF CONSTRUCTION.

K) ENSURE ALL NECESSARY SIGNING IS IN PLACE PRIOR TO ALTERING ANY TRAFFIC PATTERN.

L) INSTALL BLACK ON ORANGE "DIP" SIGNS (W8-2) AND/OR "BUMP" SIGNS (W8-1) 100 ft IN ADVANCE OF THE UNEVEN AREA, OR AS DIRECTED BY THE ENGINEER.

TRAFFIC BARRIER

M) INSTALL TEMPORARY BARRIER ACCORDING TO THE TRANSPORTATION MANAGEMENT PLANS A MAXIMUM OF TWO (2) WEEKS PRIOR TO BEGINNING WORK IN ANY LOCATION. ONCE TEMPORARY BARRIER IS INSTALLED AT ANY LOCATION PROCEED IN A CONTINUOUS MANNER TO COMPLETE THE PROPOSED WORK IN THAT LOCATION UNLESS OTHERWISE STATED IN THE TRANSPORTATION MANAGEMENT PLANS OR AS DIRECTED BY THE ENGINEER.

DO NOT PLACE BARRIER DIRECTLY ON ANY SURFACE OTHER THAN ASPHALT OR CONCRETE.

ONCE TEMPORARY BARRIER IS INSTALLED AT ANY LOCATION AND NO WORK IS PERFORMED BEHIND THE TEMPORARY BARRIER FOR A PERIOD LONGER THAN TWO (2) MONTHS, REMOVE / RESET TEMPORARY BARRIER AT NO COST TO THE DEPARTMENT UNLESS OTHERWISE STATED IN THE TRANSPORTATION MANAGEMENT PLANS, TEMPORARY BARRIER IS PROTECTING A HAZARD, OR AS DIRECTED BY THE ENGINEER.

INSTALL TEMPORARY BARRIER WITH THE TRAFFIC FLOW BEGINNING WITH THE UPSTREAM SIDE OF TRAFFIC. REMOVE TEMPORARY BARRIER AGAINST THE TRAFFIC FLOW BEGINNING WITH THE DOWNSTREAM SIDE OF TRAFFIC.

INSTALL AND SPACE DRUMS NO GREATER THAN TWICE THE POSTED SPEED LIMIT (MPH) TO CLOSE OR KEEP THE SECTION OF THE ROADWAY CLOSED UNTIL THE TEMPORARY BARRIER CAN BE PLACED OR AFTER THE TEMPORARY BARRIER IS REMOVED.

N) PROTECT THE APPROACH END OF MOVABLE/PORTABLE CONCRETE BARRIER AT ALL TIMES DURING THE INSTALLATION AND REMOVAL OF THE BARRIER BY EITHER A TRUCK MOUNTED ATTENUATOR (MAXIMUM 72 HOURS) OR A TEMPORARY CRASH CUSHION.

PROTECT THE APPROACH END OF MOVABLE/PORTABLE CONCRETE BARRIER FROM ONCOMING TRAFFIC AT ALL TIMES BY A TEMPORARY CRASH CUSHION UNLESS THE APPROACH END OF MOVABLE/PORTABLE CONCRETE BARRIER IS OFFSET FROM ONCOMING TRAFFIC AS FOLLOWS OR AS SHOWN IN THE PLANS: (SEE ALSO 1101.05)

POSTED SPEED LIMIT	MINIMUM OFFSET
40 OR LESS	15 FT
45 - 50	20 FT
55	25 FT
60 MPH or HIGHER	30 FT

LOCAL NOTES:

1) EMERGENCY VEHICLE ACCESS MUST BE MAINTAINED AT ALL TIMES.

2) NOTIFY THE MADISON COUNTY SCHOOL BOARD 30 DAYS PRIOR TO ANY LANE CLOSURES.

3) MAINTAIN ACCESS TO DRIVEWAYS DURING CONSTRUCTION

TRAFFIC CONTROL DEVICES

O) WHEN LANE CLOSURES ARE NOT IN EFFECT SPACE CHANNELIZING DEVICES IN WORK AREAS NO GREATER IN FEET THAN TWICE THE POSTED SPEED LIMIT (MPH) EXCEPT, 10 FT ON-CENTER IN RADII, AND 3 FT OFF THE EDGE OF AN OPEN TRAVELWAY. REFER TO STANDARD SPECIFICATIONS FOR ROADS AND STRUCTURES SECTIONS 1130 (DRUMS), 1135 (CONES) AND 1180 (SKINNY DRUMS) FOR ADDITIONAL REQUIREMENTS.

P) PLACE TYPE III BARRICADES, WITH "ROAD CLOSED" SIGN R11-2 ATTACHED, OF SUFFICIENT LENGTH TO CLOSE ENTIRE ROADWAY.

PAVEMENT MARKING AND MARKERS

Q) INSTALL TEMPORARY PAVEMENT MARKINGS ON INTERIM LAYERS OF PAVEMENT AS FOLLOWS:

ROAD NAME	MARKING	MARKER
SR 1127 (ROBERTS BRANCH ROAD)	PAINT	RAISED

R) PLACE ONE APPLICATION OF PAINT FOR TEMPORARY TRAFFIC PATTERNS. PLACE A SECOND APPLICATION OF PAINT SIX (6) MONTHS AFTER THE INITIAL APPLICATION AND EVERY SIX MONTHS AS DIRECTED BY THE ENGINEER.

S) TIE PROPOSED PAVEMENT MARKING LINES TO EXISTING PAVEMENT MARKING LINES.

T) REMOVE/REPLACE ANY CONFLICTING/DAMAGED PAVEMENT MARKINGS BY THE END OF EACH DAY'S OPERATION.

MISCELLANEOUS

U) IN THE EVENT A TIE-IN CANNOT BE MADE IN ONE DAY'S TIME, BRING THE TIE-IN AREA TO AN APPROPRIATE ROADWAY ELEVATION AS DETERMINED BY THE ENGINEER. PLACE BLACK ON ORANGE "LOOSE GRAVEL" SIGNS (W8-7) AND BLACK ON ORANGE "PAVEMENT ENDS" SIGNS (W8-3) 100 ft AND 200 ft RESPECTIVELY IN ADVANCE OF THE UNEVEN AREAS. USE DRUMS TO DELINEATE THE EDGE OF ROADWAY ALONG UNPAVED AREAS.

Mattern & Craig
ENGINEERS • SURVEYORS
12 BROAD STREET
ASHEVILLE, NORTH CAROLINA 28801
(828) 254-2201
FAX (828) 254-4562
NC LIC. NO. C-1154

MANAGEMENT STRATEGIES

PHASE I SHOWS TRAFFIC TO BE MAINTAINED ON THE EXISTING SOUTHBOUND LANE, BUT REDUCED TO ONE LANE USING FLAGGERS WHILE TEMPORARY PAVEMENT IS BEING CONSTRUCTED.

PHASE II SHOWS TRAFFIC TO BE MAINTAINED ON THE EXISTING NORTHBOUND LANE AND ON TEMPORARY PAVEMENT (FROM PHASE I), BUT REDUCED TO ONE LANE USING TEMPORARY SIGNALS AND PAVEMENT MARKINGS AS SOUTHBOUND SR 1127 IS BEING CONSTRUCTED.

PHASE III SHOWS TRAFFIC TO BE DIRECTED ON TO SOUTHBOUND SR 1127, BUT REDUCED TO ONE LANE USING TEMPORARY SIGNALS AND PAVEMENT MARKINGS AS NORTHBOUND SR 1127 IS BEING CONSTRUCTED.

APPROVED: DocuSigned by: James Vosa 1A2HLB023/9SL2A1F DATE 6/13/2022

SEAL

NORTH CAROLINA PROFESSIONAL SEAL 022599 ENGINEER JAMES B. VOSS

DIVISION OF HIGHWAYS STATE OF NORTH CAROLINA DEPARTMENT OF TRANSPORTATION WORK ZONE TRAFFIC CONTROL

TRANSPORTATION OPERATIONS PLAN
(MANAGEMENT STRATEGIES & GENERAL NOTES)

PROJ. REFERENCE NO.	SHEET NO.
17BP.13.R.167	TMP-2

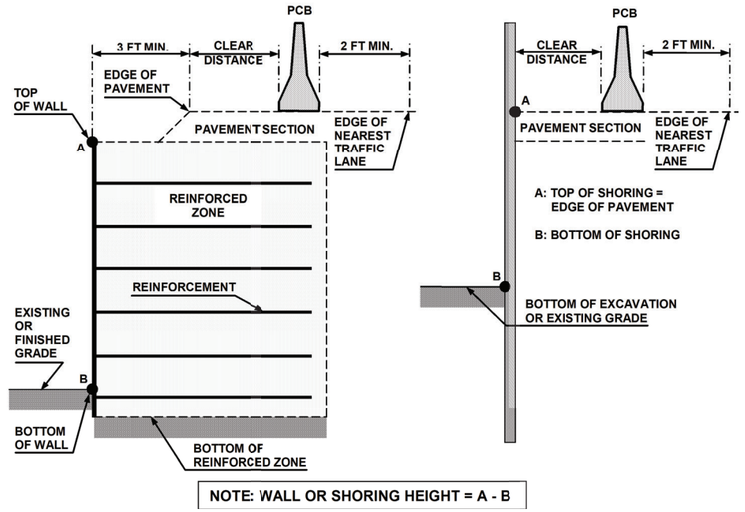

FIGURE A

NOTES

1- REFER TO THE TRAFFIC CONTROL PLANS FOR TEMPORARY SHORING LOCATIONS AND NOTES.

2- REFER TO THE "TEMPORARY SHORING" PROJECT SPECIAL PROVISION FOR INFORMATION ABOUT TEMPORARY SHORING AND PORTABLE CONCRETE BARRIER (PCB).

3- PCB IS REQUIRED IF TEMPORARY SHORING IS LOCATED WITHIN THE CLEAR ZONE IN ACCORDANCE WITH THE AASHTO ROADSIDE DESIGN GUIDE. DO NOT PLACE BARRIER DIRECTLY ON ANY SURFACE OTHER THAN ASPHALT OR CONCRETE. (CONTACT NCDOT PAVEMENT MANAGEMENT UNIT FOR APPLICABLE PAVEMENT DESIGN).

4- BASED ON THE CLEAR DISTANCE, OFFSET, DESIGN SPEED AND PAVEMENT TYPE, CHOOSE AN UNANCHORED OR ANCHORED PCB FROM THE TABLE SHOWN IN FIGURE B. CLEAR DISTANCE IS DEFINED AS SHOWN IN FIGURE A AND OFFSET IS DEFINED AS SHOWN IN FIGURE B.

5- AT THE CONTRACTOR'S OPTION OR IF THE MINIMUM REQUIRED CLEAR DISTANCE IS NOT AVAILABLE, SET PCB NEXT TO AND UP AGAINST THE TRAFFIC SIDE OF THE TEMPORARY SHORING EXCEPT FOR BARRIER ABOVE TEMPORARY WALLS. PCB WITH THE MINIMUM REQUIRED CLEAR DISTANCE IS REQUIRED ABOVE TEMPORARY WALLS.

6- USE NCDOT PORTABLE CONCRETE BARRIER (PCB) IN ACCORDANCE WITH ROADWAY STANDARD DRAWING NO. 1170.01 AND SECTION 1170 OF THE STANDARD SPECIFICATIONS.

7- PCB REQUIREMENTS FOR TEMPORARY WALLS APPLY TO TEMPORARY MECHANICALLY STABILIZED EARTH (MSE) WALLS AND TEMPORARY SOIL NAIL WALLS.

8- SET PCB WITH A MINIMUM HORIZONTAL DISTANCE OF 2 FT BETWEEN THE FRONT FACE OF THE BARRIER AND THE EDGE OF THE NEAREST TRAFFIC LANE AS SHOWN IN FIGURE A UNLESS OTHERWISE SHOWN IN THE PLANS AND OR AS APPROVED BY THE ENGINEER.

9- FOR PCB ABOVE AND BEHIND TEMPORARY WALLS, PROVIDE A MINIMUM DISTANCE OF 3 FT BETWEEN THE EDGE OF PAVEMENT AND THE WALL FACE AS SHOWN IN FIGURE A. IF THESE MINIMUM REQUIRED DISTANCES ARE NOT AVAILABLE, CONTACT THE ENGINEER.

10- TABLE SHOWN IN FIGURE B IS BASED ON NCDOT RESEARCH PROJECT NO. 2005-010 WITH VEHICLE TYPE USED FOR NCHRP 350 CRASH TESTS. BARRIER DEFLECTIONS AND RESULTING MINIMUM REQUIRED CLEAR DISTANCES MIGHT VARY SIGNIFICANTLY FOR LARGER HEAVIER VEHICLES, RUNS OF BARRIER LESS THAN 200 FT IN LENGTH AND WET OR DRY PAVEMENT.

MINIMUM REQUIRED CLEAR DISTANCE, inches

Barrier Type	Pavement Type	Offset * ft	Design Speed, mph <30	31-40	41-50	51-60	61-70	71-80
Unanchored PCB	Asphalt	<8	24	26	29	32	36	40
		8-14	26	28	31	35	38	42
		14-20	27	29	34	36	39	43
		20-26	28	31	35	38	40	44
		26-32	29	32	36	39	42	45
		32-38	30	34	38	41	43	46
		38-44	31	34	41	43	45	48
		44-50	31	35	41	43	46	49
		50-56	32	36	42	44	47	50
		>56	32	36	42	45	47	51
	Concrete	<8	17	18	21	22	25	26
		8-14	19	20	23	25	26	29
		14-20	22	22	24	26	28	31
		20-26	23	24	26	27	30	34
		26-32	24	25	27	28	32	35
		32-38	24	26	27	30	33	36
		38-44	25	26	28	30	34	37
		44-50	26	26	28	32	35	37
		50-56	26	26	28	32	35	38
		>56	26	27	29	32	36	38
Anchored PCB	Asphalt	All Offsets	24 for All Design Speeds					
Anchored PCB	Concrete (including bridge approach slabs)	All Offsets	12 for All Design Speeds					

* See Figure Below

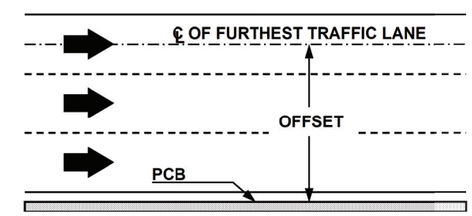

FIGURE B

Mattern & Craig
ENGINEERS•SURVEYORS
12 BROAD STREET
ASHEVILLE, NORTH CAROLINA 28801
(828) 254-2201
FAX (828) 254-4562
NC LIC. NO. C-1154

DIVISION OF HIGHWAYS • STATE OF NORTH CAROLINA • DEPARTMENT OF TRANSPORTATION • WORK ZONE TRAFFIC CONTROL

PORTABLE CONCRETE BARRIER AT TEMPORARY SHORING LOCATIONS

DocuSign Envelope ID: ABD5E7C1-7E7A-4D91-BDC9-1ECC098B30B8

PROJ. REFERENCE NO.	SHEET NO.
17BP.13.R.167	TMP-3

PROJECT PHASING

PHASE I

STEP 1: - INSTALL ADVANCED WARNING SIGNS USING DETAIL DRAWINGS FOR WORK ZONE SIGNS. (SEE RDWY STD. 1101.01)

NOTE: STEP 2 SHALL BE COMPLETED IN CONTINUOUS OPERATION.

STEP 2: - USING DETAIL DRAWINGS 1101.02 SHEET 1 OF 14 AND FLAGGERS PERFORM THE FOLLOWING WORK:

- DIRECT TRAFFIC ONTO A ONE LANE, TWO WAY PATTERN IN THE EXISTING SOUTHBOUND LANE OF SR 1127 (ROBERTS BRANCH ROAD). (SEE TMP-4)
- CONSTRUCT TEMPORARY PAVEMENT FROM -L- STA. 11+65 +/- TO -L- STA. 13+23 +/-. (SEE TMP-4)
- INSTALL TEMPORARY GUARDRAIL FROM -L- STA. 11+96 RT +/- TO 13+23 RT +/-. (SEE TMP-4)

PHASE II

STEP 1: INSTALL PORTABLE TRAFFIC SIGNALS.

NOTE: STEP 2 SHALL BE COMPLETED IN A CONTINUOUS OPERATION.

STEP 2: USING RDWY STD 1101.02 SHEET 1 OF 14 AND FLAGGERS, PERFORM THE FOLLOWING ON SR 1127:

- REMOVE ADVANCE WARNING SIGNS FROM PHASE 1 AND INSTALL ADVANCE WARNING SIGNS USING DETAIL DRAWINGS FOR WORK ZONE SIGNS FOR PHASE II WORK. (SEE RDW STD. 1101.01)
- REMOVE AS NECESSARY EXISTING PAVEMENT MARKINGS, AND PLACE TEMPORARY PAVEMENT MARKINGS (PAINT), AND MARKERS FROM -L- STA. 10+60 +/- TO -L- STA. 16+80 +/-. (SEE TMP-5)
- INSTALL TEMPORARY CONCRETE BARRIER FROM -L- STA. 13+10 +/- TO -L- STA. 14+53 +/-. (SEE TMP-4)
- ACTIVATE PORTABLE TRAFFIC SIGNALS AND DIRECT SR 1127 (ROBERTS BRANCH ROAD) TRAFFIC ONTO A ONE LANE, TWO WAY PATTERN IN THE EXISTING NORTHBOUND LANE OF SR 1127 (ROBERTS BRANCH ROAD). SEE (TMP-5)

STEP 3: - INSTALL TEMPORARY SHORING BEHIND TEMPORARY CONCRETE BARRIER FROM -L- STA. 13+23 +/- TO -L- STA. 13+61 +/- AND FROM -L- STA. 13+87 +/- TO -L- STA. 14+28 +/-. (SEE TMP-5)

- REMOVE EXISTING BRIDGE RAIL (LEFT SIDE) AND PORTION OF EXISTING BRIDGE 310 PER STRUCTURE PLANS.

STEP 4: - CONSTRUCT STRUCTURE PER THE STRUCTURE PLANS STAGE 1.

- CONSTRUCT -L- (SR 1127 ROBERTS BRANCH RD) FROM -L- STA 10+60 TO -L- STA 16+80 SOUTHBOUND LANE (LEFT SIDE) EXCLUDING FINAL PAVEMENT LAYER.
- INSTALL GUARDRAIL FROM -L- STA. 12+97 +/- LT TO BEGIN BRIDGE AND END BRIDGE TO -L- STA 15+00 +/- LT (SEE RDY PLANS 2B-1 AND TMP-5)

PHASE III

NOTE: STEP 1 SHALL BE COMPLETED IN A CONTINUOUS OPERATION.

STEP 1: USING RDWY STD 1101.02 SHEET 1 OF 14 AND FLAGGERS, PERFORM THE FOLLOWING ON SR 1127:

- RETAIN TEMPORARY SHORING CONSTRUCTED IN PHASE II.
- INSTALL TEMPORARY CONCRETE BARRIER FROM -L- STA. 12+91 +/- TO -L- STA. 14+72 +/- (SEE TMP-6 AND RDY PLANS 2B-1 & 4)
- REMOVE AS NECESSARY, PAVEMENT MARKINGS AND MARKERS PLACED IN PHASE II, STEP 2. PLACE TEMPORARY PAVEMENT MARKINGS (PAINT) AND MARKERS FROM -L- STA. 10+60 +/- TO -L- STA. 16+80 +/-. (SEE TMP-6)
- ACTIVATE PORTABLE TRAFFIC SIGNALS AND DIRECT SR 1127 (ROBERTS BRANCH ROAD) TRAFFIC INTO A ONE LANE, TWO-WAY PATTERN IN THE SOUTHBOUND LANE OF SR 1127 (ROBERTS BRANCH ROAD). (SEE TMP-6)

STEP 2: - REMOVE TEMPORARY GUARDRAIL INSTALLED IN PHASE I, STEP 2.

- REMOVE TEMPORARY CONCRETE BARRIER INSTALLED IN PHASE II, STEP 2.
- REMOVE EXISTING AND TEMPORARY PAVEMENT FROM -L- STA 12+26 +/- TO -L- STA 13+53 +/- AND -L- STA 13+76 +/- TO -L- STA 16+66 +/-. (SEE TMP-6)
- REMOVE NORTHBOUND SIDE (RIGHT SIDE) OF EXISTING STRUCTURE (SEE STRUCTURE PLANS).

STEP 3: - CONSTRUCT STRUCTURE PER THE STRUCTURE PLANS STAGE 2.

- CONSTRUCT -L- SR 1127 (ROBERTS BRANCH ROAD) FROM STA 10+60 TO STA 16+80 NORTHBOUND LANE (RIGHT SIDE) EXCLUDING FINAL PAVEMENT LAYER. REMOVE TEMPORARY SHORING AS NECESSARY.
- USING RDWY STD 1101.02 SHEET 1 OF 14 AND FLAGGERS, CONSTRUCT GUARDRAIL AND REMOVE TEMPORARY BARRIER PLACED IN PHASE II-STEP 3.

STEP 4: - USING RDWY STD 1101.02 SHEET 1 OF 14 AND FLAGGERS, PLACE THE FINAL LAYER OF SURFACE COURSE, FINAL PAVEMENT MARKINGS (PAINT), AND PAVEMENT MARKERS ON THE ENTIRE PROJECT. (SEE PM-1)

STEP 5: - REMOVE ALL TEMPORARY TRAFFIC CONTROL DEVICES AND SIGNALS.

- OPEN SR 1127 (ROBERTS BRANCH ROAD) TO 2-LANE, 2-WAY TRAFFIC.

Mattern & Craig
ENGINEERS•SURVEYORS
12 BROAD STREET
ASHEVILLE, NORTH CAROLINA 28801
(828) 254-2201
FAX (828) 254-4562
NC LIC. NO. C-1154

APPROVED: DocuSigned by: James B. Vose, PE 140FD6037 9E041F...

DATE: 6/20/2022

SEAL

NORTH CAROLINA PROFESSIONAL SEAL 022599 ENGINEER JAMES B. VOSE

DOCUMENT NOT CONSIDERED FINAL UNLESS ALL SIGNATURES COMPLETED

DIVISION OF HIGHWAYS STATE OF NORTH CAROLINA DEPARTMENT OF TRANSPORTATION WORK ZONE TRAFFIC CONTROL

PHASING

DocuSign Envelope ID: ABD5E7C1-7E7A-4D91-BDC9-1ECC098B30B8

PROJ. REFERENCE NO.	SHEET NO.
17BP.13.R.167	TMP-4

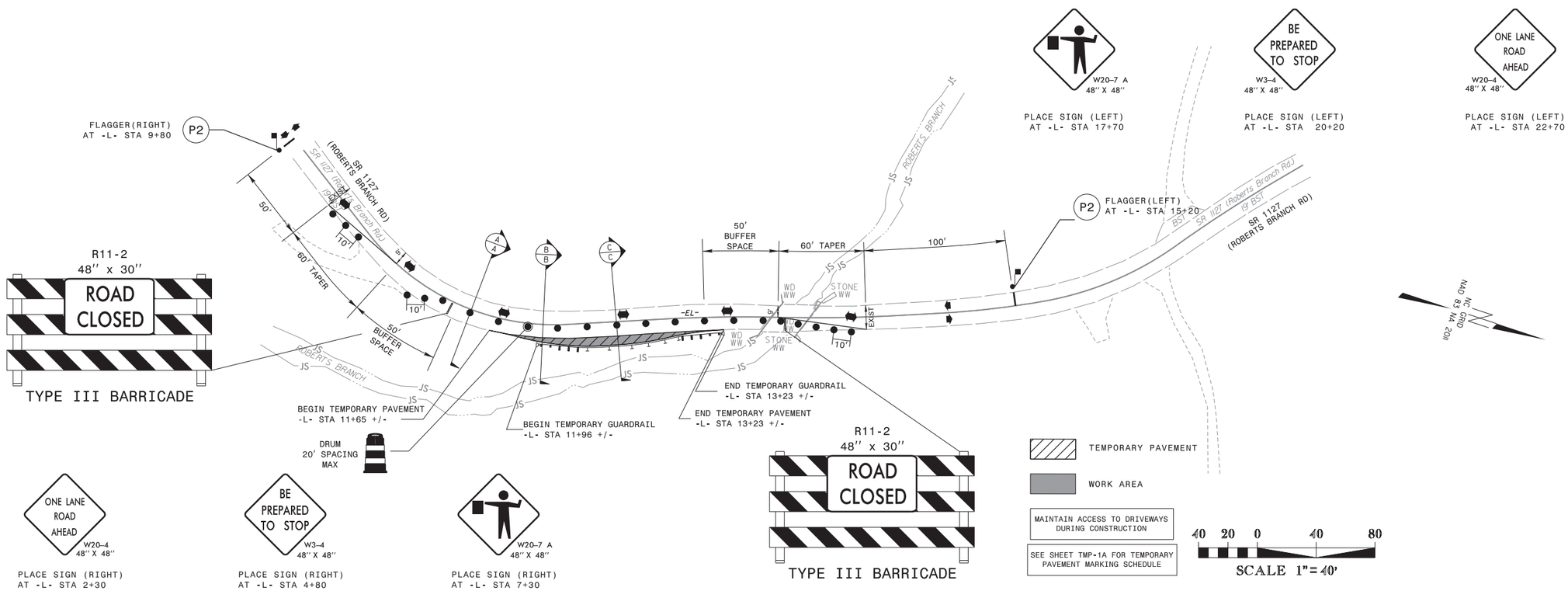

SECTION A-A

-L- STA 11+50

NOT TO SCALE

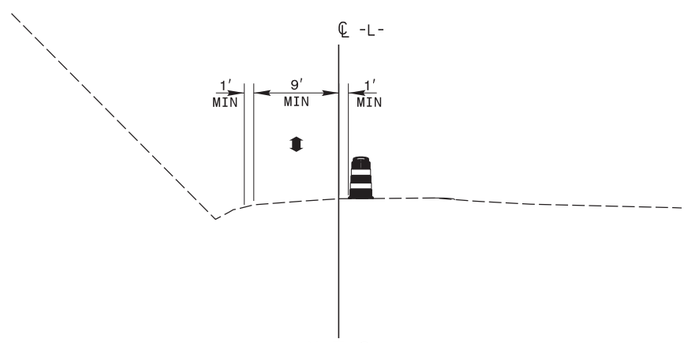

N.T.S.

SECTION B-B

-L- STA 12+00

NOT TO SCALE

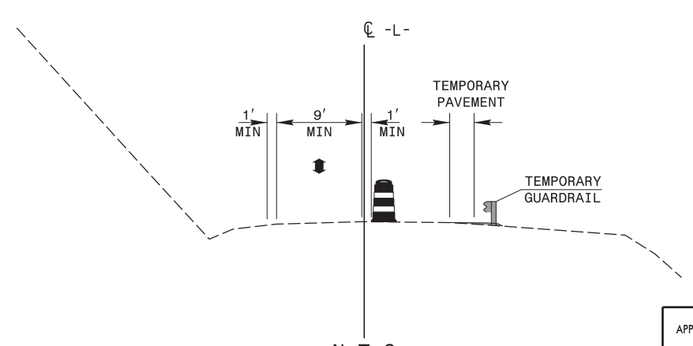

N.T.S.

SECTION C-C

-L- STA 12+50

NOT TO SCALE

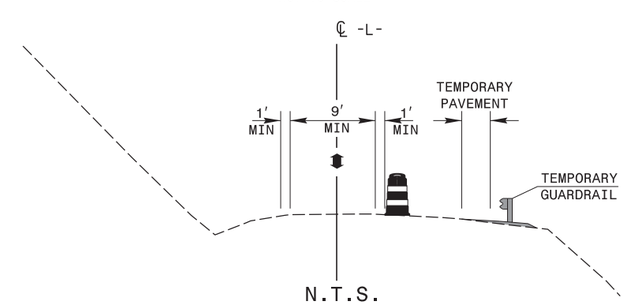

N.T.S.

Mattern & Craig
ENGINEERS • SURVEYORS
12 BROAD STREET
ASHEVILLE, NORTH CAROLINA 28801
(828) 254-2201
FAX (828) 254-4562
NC LIC. NO. C-1154

APPROVED: DocuSigned by: James B. Vose, PE 145FD6037BE041F...

DATE: 6/20/2022

SEAL

NORTH CAROLINA PROFESSIONAL SEAL 022599 ENGINEER JAMES B. VOSE

DOCUMENT NOT CONSIDERED FINAL
UNLESS ALL SIGNATURES COMPLETED

DIVISION OF HIGHWAYS • STATE OF NORTH CAROLINA • DEPARTMENT OF TRANSPORTATION • WORK ZONE TRAFFIC CONTROL

PHASE I DETAILS

PROJ. REFERENCE NO.	SHEET NO.
17BP.13.R.167	TMP-5

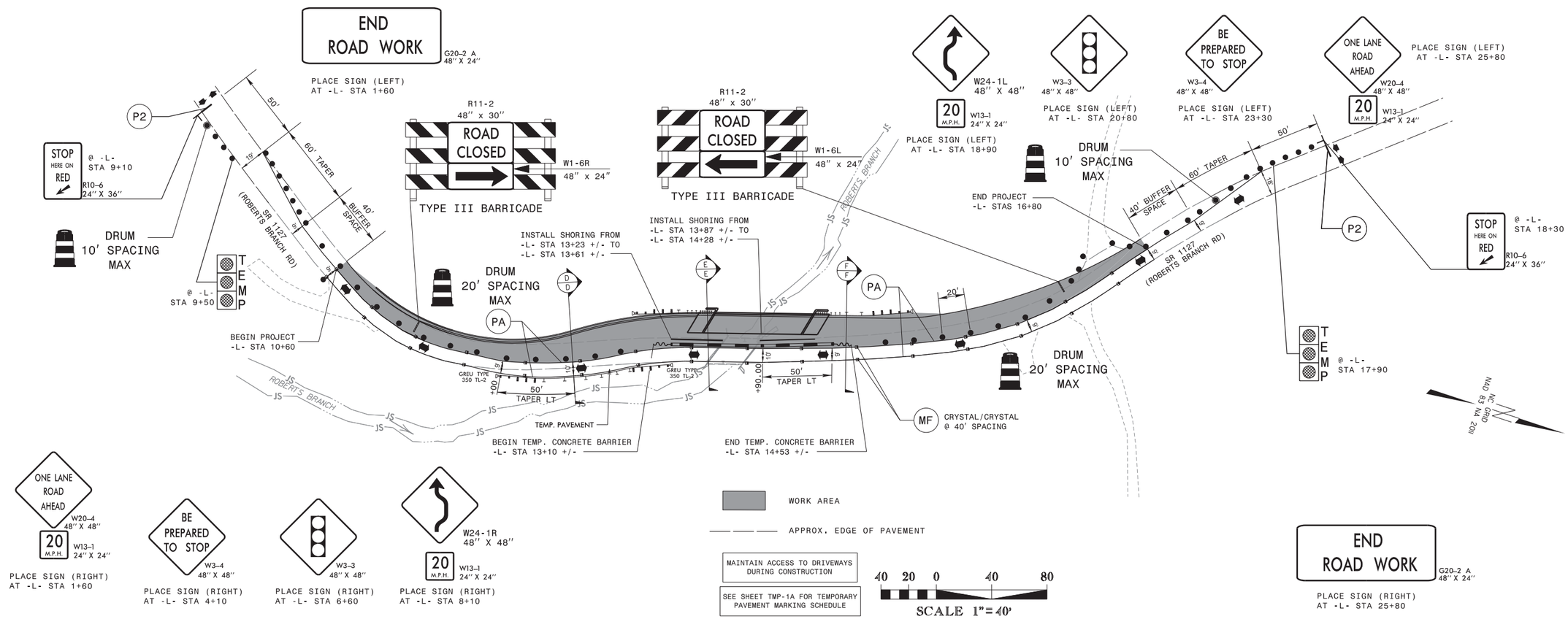

SECTION D-D

-L- STA 12+50

NOT TO SCALE

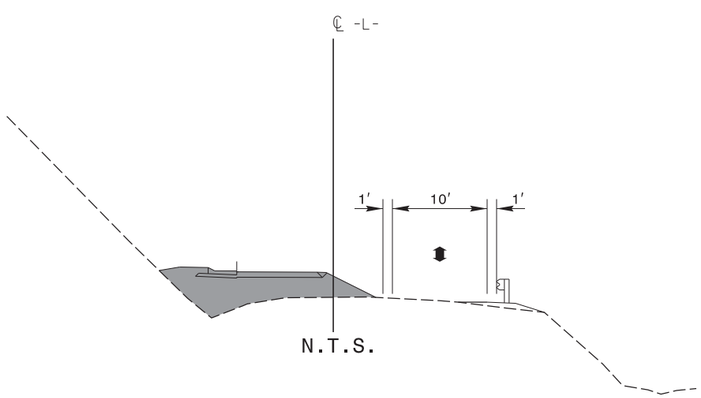

SECTION E-E

-L- STA 13+50

NOT TO SCALE

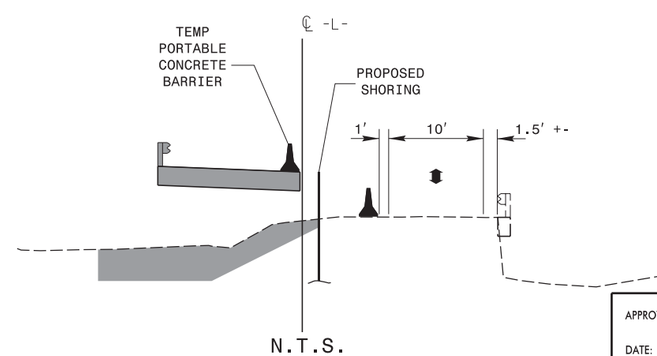

SECTION F-F

-L- STA 14+50

NOT TO SCALE

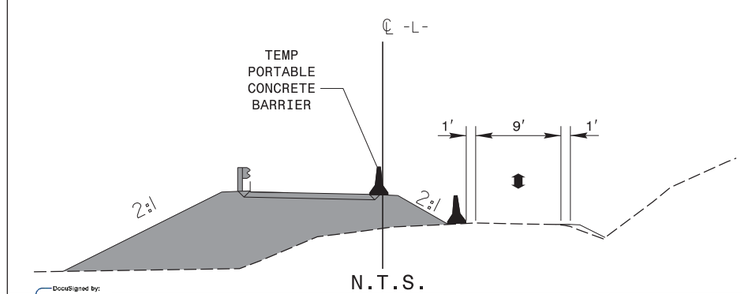

Mattern & Craig
ENGINEERS • SURVEYORS
12 BROAD STREET
ASHEVILLE, NORTH CAROLINA 28801
(828) 254-2201
FAX (828) 254-4562
NC LIC. NO. C-1154

APPROVED: DocuSigned by: James Vosso 142FLB923/98L341F

DATE: 6/13/2022

SEAL

NORTH CAROLINA PROFESSIONAL SEAL 022599 ENGINEER JAMES B. VOSO

DIVISION OF HIGHWAYS STATE OF NORTH CAROLINA DEPARTMENT OF TRANSPORTATION WORK ZONE TRAFFIC CONTROL

DOCUMENT NOT CONSIDERED FINAL UNLESS ALL SIGNATURES COMPLETED

PHASE II DETAILS

DocuSign Envelope ID: 21C4112E-2D04-4FE4-AFD9-3A40BE6312EB

PROJ. REFERENCE NO.	SHEET NO.
17BP.13.R.167	TMP-6

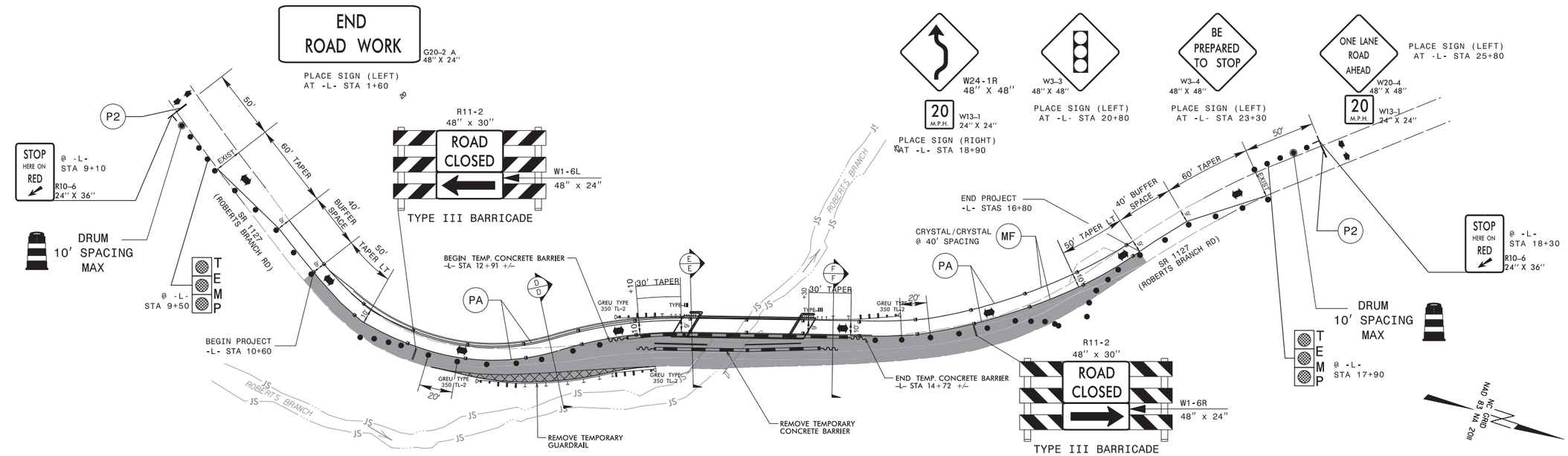

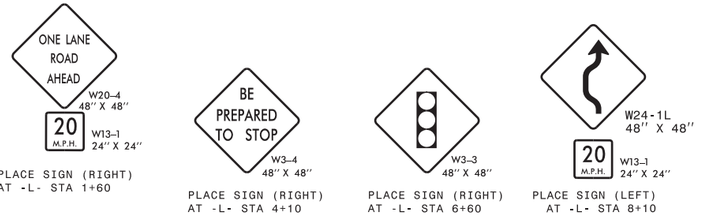

APPROX. EDGE OF PAVEMENT

WORK AREA

TEMPORARY PAVEMENT REMOVAL

MAINTAIN ACCESS TO DRIVEWAYS DURING CONSTRUCTION

SEE SHEET TMP-1A FOR TEMPORARY PAVEMENT MARKING SCHEDULE

40 20 0 40 80

SCALE 1"=40'

END ROAD WORK G20-2 A 48" X 24"

PLACE SIGN (RIGHT) AT -L- STA 25+80

SECTION D-D

-L- STA 12+50

NOT TO SCALE

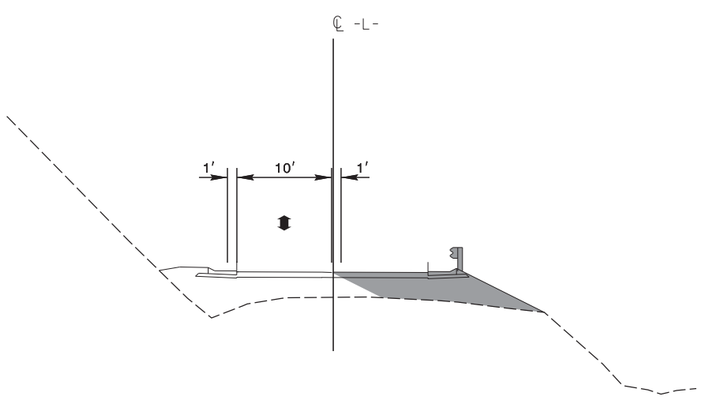

SECTION E-E

-L- STA 13+50

NOT TO SCALE

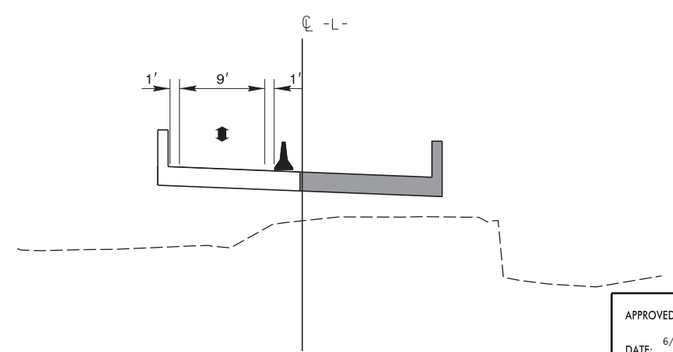

SECTION F-F

-L- STA 14+50

NOT TO SCALE

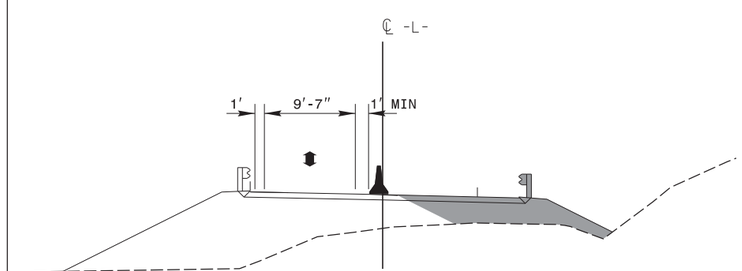

Mattern & Craig
ENGINEERS SURVEYORS
12 BROAD STREET
ASHEVILLE, NORTH CAROLINA 28801
(828) 254-2201
FAX (828) 254-4562
NC LIC. NO. C-1154

APPROVED: DocuSigned by: James B. Vose, PE 140FD6037BE041F...

DATE: 6/20/2022

SEAL

NORTH CAROLINA PROFESSIONAL SEAL 022599 ENGINEER JAMES B. VOSO

DIVISION OF HIGHWAYS STATE OF NORTH CAROLINA DEPARTMENT OF TRANSPORTATION WORK ZONE TRAFFIC CONTROL

DOCUMENT NOT CONSIDERED FINAL UNLESS ALL SIGNATURES COMPLETED

PHASE III DETAILS

PROJ. REFERENCE NO.	SHEET NO.
17BP.13.R.167	PM-1

FINAL PAVEMENT MARKING SCHEDULE

SYMBOL	DESCRIPTION	QUANTITY BREAKDOWN	PAY ITEM	TOTAL QUANTITY
		PAVEMENT MARKING LINES		
PA	WHITE SOLID EDGE LINE	1,380 FT	PAINT (4")	2,760 FT
PI	YELLOW DOUBLE CENTER LINE	820 FT	PAINT (4")	3,280 FT

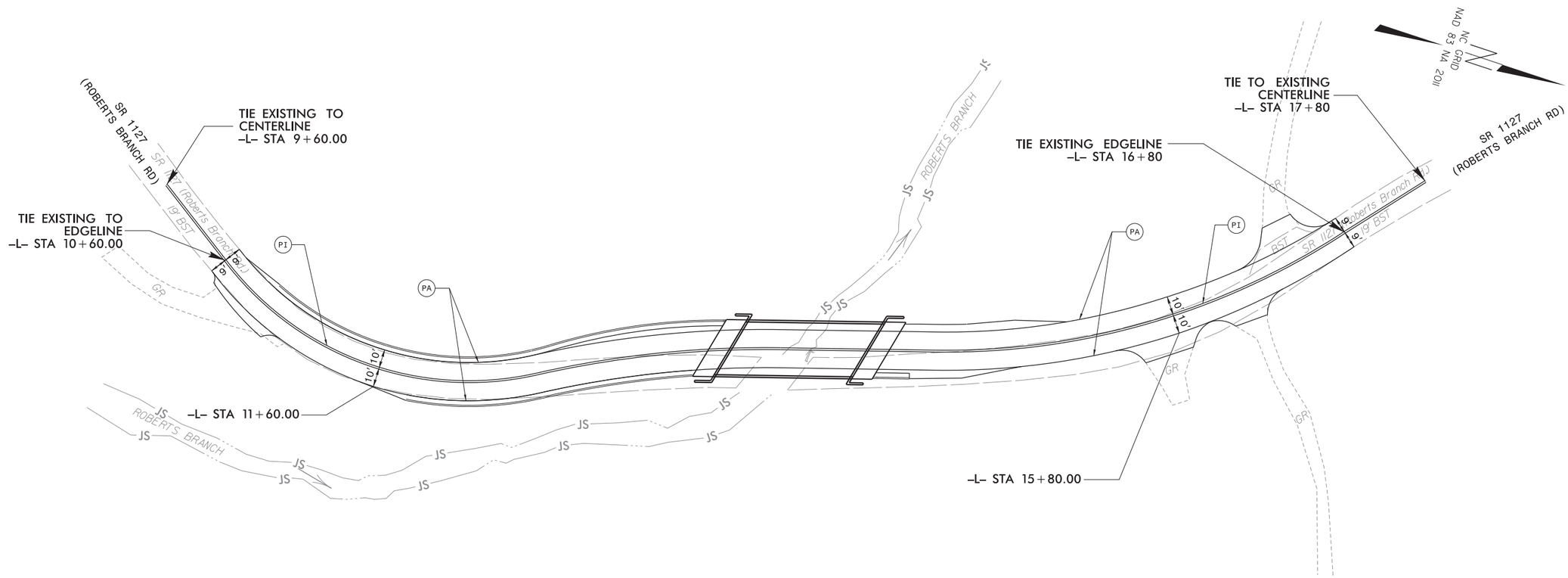

30 15 0 30 60

SCALE 1"=30'

NOTE: FINAL PAVEMENT MARKINGS = 2 COATS OF PAINT

Mattern & Craig
ENGINEERS • SURVEYORS
12 BROAD STREET
ASHEVILLE, NORTH CAROLINA 28801
(828) 254-2201
FAX (828) 254-4562
NC LIC. NO. C-1154

APPROVED: DocuSigned by: James Voso 14:2H:U0923/98:J419:...

DATE: 6/13/2022

SEAL

NORTH CAROLINA PROFESSIONAL SEAL 022599 ENGINEER JAMES B. VOSO

DIVISION OF HIGHWAYS STATE OF NORTH CAROLINA DEPARTMENT OF TRANSPORTATION WORK ZONE TRAFFIC CONTROL

DOCUMENT NOT CONSIDERED FINAL UNLESS ALL SIGNATURES COMPLETED

PERMANENT PAVEMENT MARKING PLAN

TIP PROJECT: 17BP.13.R.167

STATE	STATE PROJECT REFERENCE NO.	SHEET NO.	TOTAL SHEETS
N.C.	17BP.13.R.167	EC-1	

STATE PROJ. NO.	F.A. PROJ. NO.	DESCRIPTION
17BP.13.R.167	N/A	P.E.
17BP.13.R.167	N/A	R/W & UTIL
17BP.13.R.167	N/A	CONST

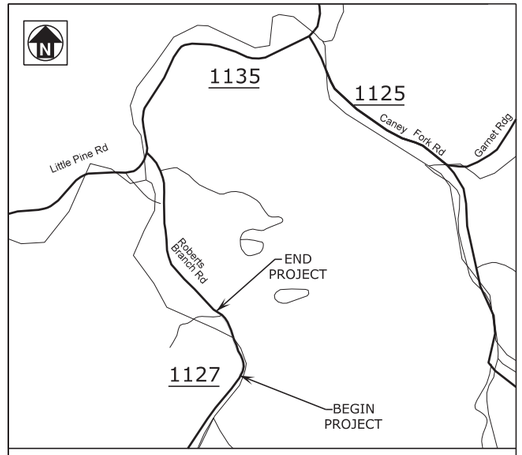

VICINITY MAP
(NOT TO SCALE)

STATE OF NORTH CAROLINA
DIVISION OF HIGHWAYS

PLAN FOR PROPOSED
HIGHWAY EROSION CONTROL

MADISON COUNTY

LOCATION: BRIDGE NO. 310 ON SR 1127 (ROBERTS BRANCH ROAD) OVER ROBERTS BRANCH

TYPE OF WORK: GRADING, PAVING, DRAINAGE, AND CULVERT

EC–4
EC–5

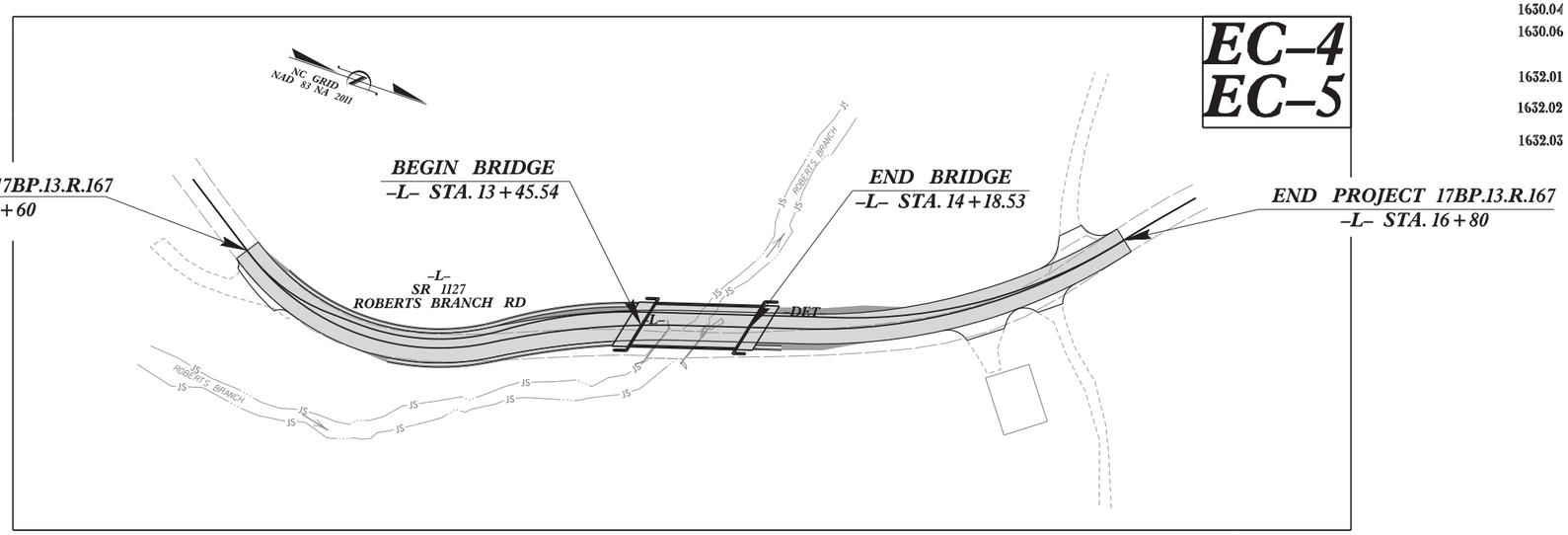

EROSION AND SEDIMENT CONTROL MEASURES

Std. #	Description	Symbol
1630.03	Temporary Silt Ditch	TSD
1630.05	Temporary Diversion	TD
1605.01	Temporary Silt Fence	
1606.01	Special Sediment Control Fence	
1622.01	Temporary Berms and Slope Drains	
1630.02	Silt Basin Type B	
1633.01	Temporary Rock Silt Check Type-A	
	Temporary Rock Silt Check Type-A with Matting and Polyacrylamide (PAM)	
1633.02	Temporary Rock Silt Check Type-B	
	Wattle/ Coir Fiber Wattle	EW CFW
	Wattle/ Coir Fiber Wattle with Polyacrylamide (PAM)	
1634.01	Temporary Rock Sediment Dam Type-A	
1634.02	Temporary Rock Sediment Dam Type-B	
1635.01	Rock Pipe Inlet Sediment Trap Type-A	
1635.02	Rock Pipe Inlet Sediment Trap Type-B	
1630.04	Stilling Basin	
1630.06	Special Stilling Basin	
	Rock Inlet Sediment Trap:	
1632.01	Type A	A
1632.02	Type B	B
1632.03	Type C	C
	Skimmer Basin	
	Tiered Skimmer Basin	
	Infiltration Basin	

THIS PROJECT CONTAINS EROSION CONTROL PLANS FOR CLEARING AND GRUBBING PHASE OF CONSTRUCTION.

GRAPHIC SCALE

30 15 0 30 60
PLANS

THESE EROSION AND SEDIMENT CONTROL PLANS COMPLY WITH THE APPLICABLE REGULATIONS SET FORTH BY THE NCG–010000 GENERAL CONSTRUCTION PERMIT EFFECTIVE APRIL 1, 2019 AND ISSUED BY THE NORTH CAROLINA DEPARTMENT OF ENVIRONMENTAL QUALITY DIVISION OF WATER RESOURCES.

Mattern & Craig
CONSULTING ENGINEERS • SURVEYORS
FIRM LICENSE No. C-1154
12 BROAD STREET
ASHEVILLE, NORTH CAROLINA 28801
(828) 254-2201
FAX (828) 254-4562

Prepared in the Office of:

MATTERN & CRAIG
12 BROAD ST.
ASHEVILLE, NC 28801
FOR NCDOT DIVISION OF HIGHWAYS

Designed by:

MENG YANG, PE ***4149***
NAME *LEVEL III CERTIFICATION NO.*

Roadway Standard Drawings

The following roadway english standards as appear in "Roadway Standard Drawings"– Roadway Design Unit – N. C. Department of Transportation – Raleigh, N. C., dated January 2018 and the latest revison thereto are applicable to this project and by reference hereby are considered a part of these plans.

1604.01	Railroad Erosion Control Detail	1632.01	Rock Inlet Sediment Trap Type A
1605.01	Temporary Silt Fence	1632.02	Rock Inlet Sediment Trap Type B
1606.01	Special Sediment Control Fence	1632.03	Rock Inlet Sediment Trap Type C
1607.01	Gravel Construction Entrance	1633.01	Temporary Rock Silt Check Type A
1622.01	Temporary Berms and Slope Drains	1633.02	Temporary Rock Silt Check Type B
1630.01	Riser Basin	1634.01	Temporary Rock Sediment Dam Type A
1630.02	Silt Basin Type B	1634.02	Temporary Rock Sediment Dam Type B
1630.03	Temporary Silt Ditch	1635.01	Rock Pipe Inlet Sediment Trap Type A
1630.04	Stilling Basin	1635.02	Rock Pipe Inlet Sediment Trap Type B
1630.05	Temporary Diversion	1640.01	Coir Fiber Baffle
1630.06	Special Stilling Basin	1645.01	Temporary Stream Crossing
1631.01	Matting Installation		

PROJECT REFERENCE NO.	SHEET NO.
17BP.13.R.167	EC-2

COIR FIBER WATTLE WITH POLYACRYLAMIDE (PAM) DETAIL

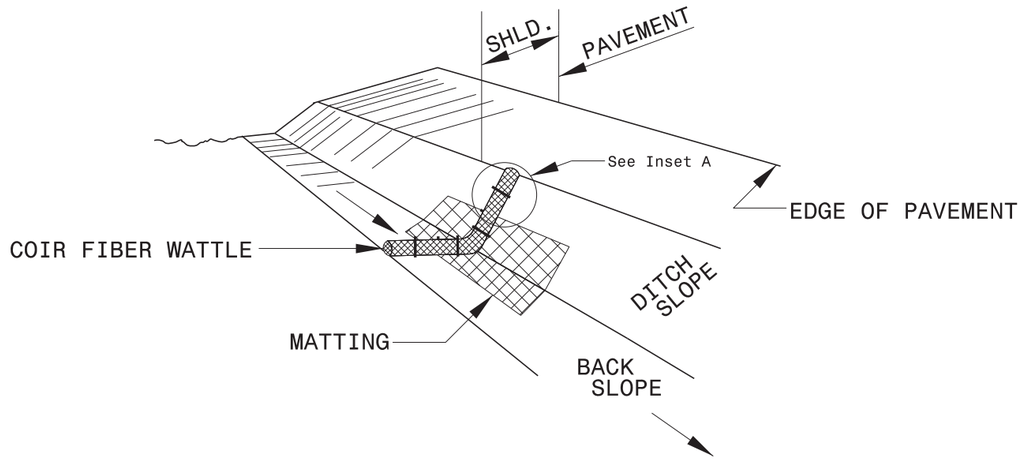

ISOMETRIC VIEW

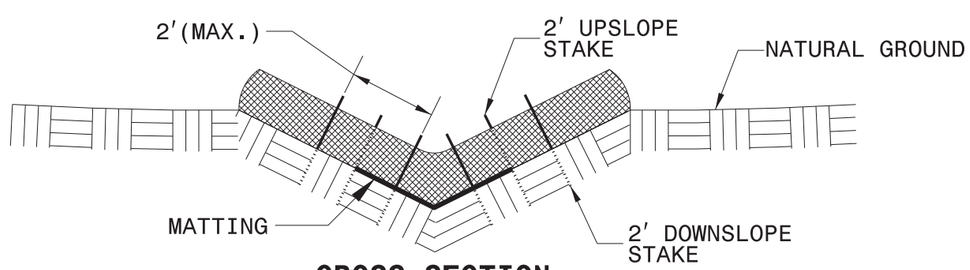

CROSS SECTION VEE DITCH

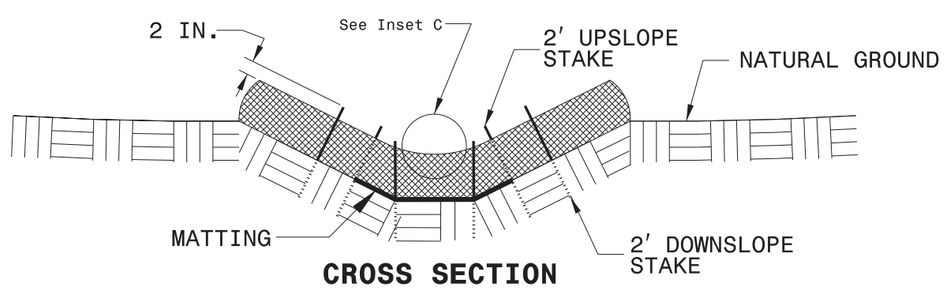

CROSS SECTION TRAPEZOIDAL DITCH

NOTES:

USE MINIMUM 12 IN. DIAMETER COIR FIBER (COCONUT FIBER) WATTLE.

USE 2 FT. WOODEN STAKES WITH A 2 IN. BY 2 IN. NOMINAL CROSS SECTION.

ONLY INSTALL WATTLE(S) TO A HEIGHT IN DITCH SO FLOW WILL NOT WASH AROUND WATTLE AND SCOUR DITCH SLOPES AND AS DIRECTED.

INSTALL A MINIMUM OF 2 UPSLOPE STAKES AND 4 DOWNSLOPE STAKES AT AN ANGLE TO WEDGE WATTLE TO BOTTOM OF DITCH.

PROVIDE STAPLES MADE OF 0.125 IN. DIAMETER STEEL WIRE FORMED INTO A U SHAPE NOT LESS THAN 12″ IN LENGTH.

INSTALL STAPLES APPROXIMATELY EVERY 1 LINEAR FOOT ON BOTH SIDES OF WATTLE AND AT EACH END TO SECURE IT TO THE SOIL.

INSTALL MATTING IN ACCORDANCE WITH SECTION 1631 OF THE STANDARD SPECIFICATIONS.

PRIOR TO POLYACRYLAMIDE (PAM) APPLICATION, OBTAIN A SOIL SAMPLE FROM PROJECT LOCATION, AND FROM OFFSITE MATERIAL, AND ANALYZE FOR APPROPRIATE PAM FLOCCULANT TO BE APPLIED TO EACH WATTLE.

INITIALLY APPLY 2 OUNCES OF ANIONIC OR NEUTRALLY CHARGED PAM OVER WATTLE WHERE WATER WILL FLOW AND 1 OUNCE OF PAM ON MATTING ON EACH SIDE OF WATTLE. REAPPLY PAM AFTER EVERY RAINFALL EVENT THAT IS EQUAL TO OR EXCEEDS 0.50 IN.

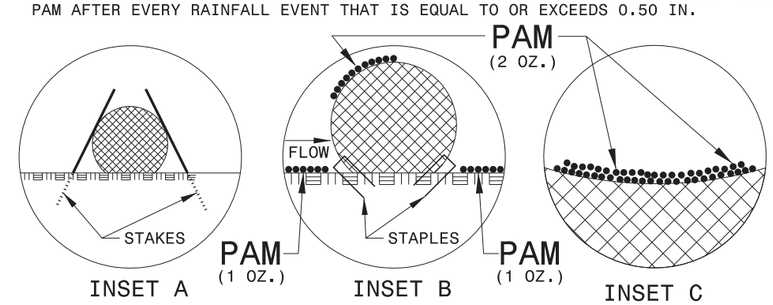

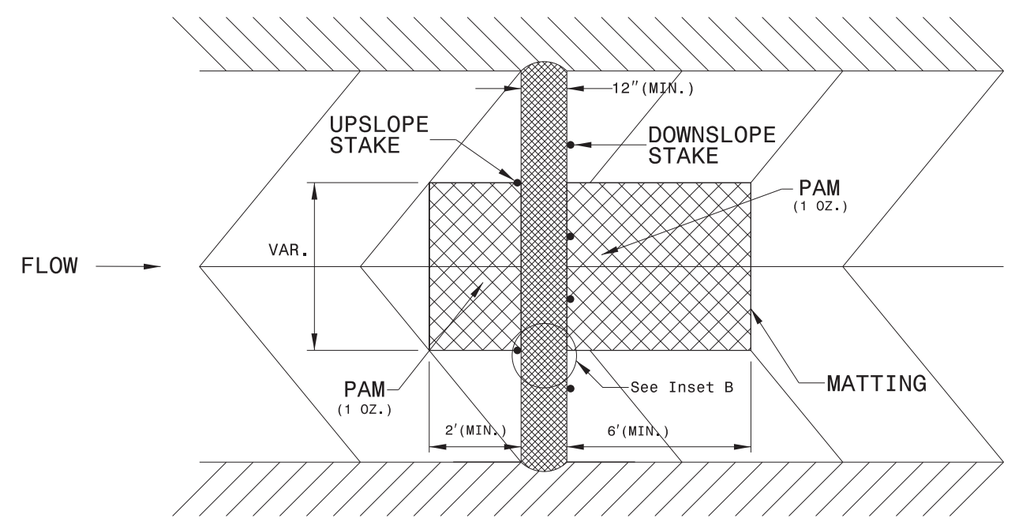

TOP VIEW

PROJECT REFERENCE NO.	SHEET NO.
17BP.13.R.167	EC-3

REVISIONS

SOIL STABILIZATION TIMEFRAMES

SITE DESCRIPTION	STABILIZATION TIME	TIMEFRAME EXCEPTIONS
PERIMETER DIKES, SWALES, DITCHES AND SLOPES	7 DAYS	NONE
HIGH QUALITY WATER (HQW) ZONES	7 DAYS	NONE
SLOPES STEEPER THAN 3:1	7 DAYS	IF SLOPES ARE 10' OR LESS IN LENGTH AND ARE NOT STEEPER THAN 2:1, 14 DAYS ARE ALLOWED.
SLOPES 3:1 OR FLATTER	14 DAYS	7 DAYS FOR SLOPES GREATER THAN 50' IN LENGTH.
ALL OTHER AREAS WITH SLOPES FLATTER THAN 4:1	14 DAYS	NONE, EXCEPT FOR PERIMETERS AND HQW ZONES.

DIVISION OF HIGHWAYS
STATE OF NORTH CAROLINA

SOIL STABILIZATION SUMMARY SHEET

MATTING FOR EROSION CONTROL

CONST SHEET NO.	LINE	FROM STATION	TO STATION	SIDE	ESTIMATE (SY)
			SUBTOTAL		
MISCELLANEOUS MATTING TO BE INSTALLED AS DIRECTED BY THE ENGINEER					1,200
				TOTAL	1,200
				SAY	1,200

PERMANENT SOIL REINFORCEMENT MAT

CONST SHEET NO.	LINE	FROM STATION	TO STATION	SIDE	ESTIMATE (SY)
4	-L-	12+00	13+62	LT	115
4	-L-	13+81	14+39	RT	45
			SUBTOTAL		160
		ADDITIONAL PSRM TO BE INSTALLED			
				TOTAL	160
				SAY	160

PROJECT REFERENCE NO.	SHEET NO.
17.BP.13.R.167	EC-4/CONST.4

NOTE:
PERIMETER EROSION CONTROL MEASURES SHALL BE INSTALLED DURING CLEARING AND GRUBBING PHASE.

CLEARING AND GRUBBING
EROSION CONTROL FOR
CONSTRUCTION SHEET 4

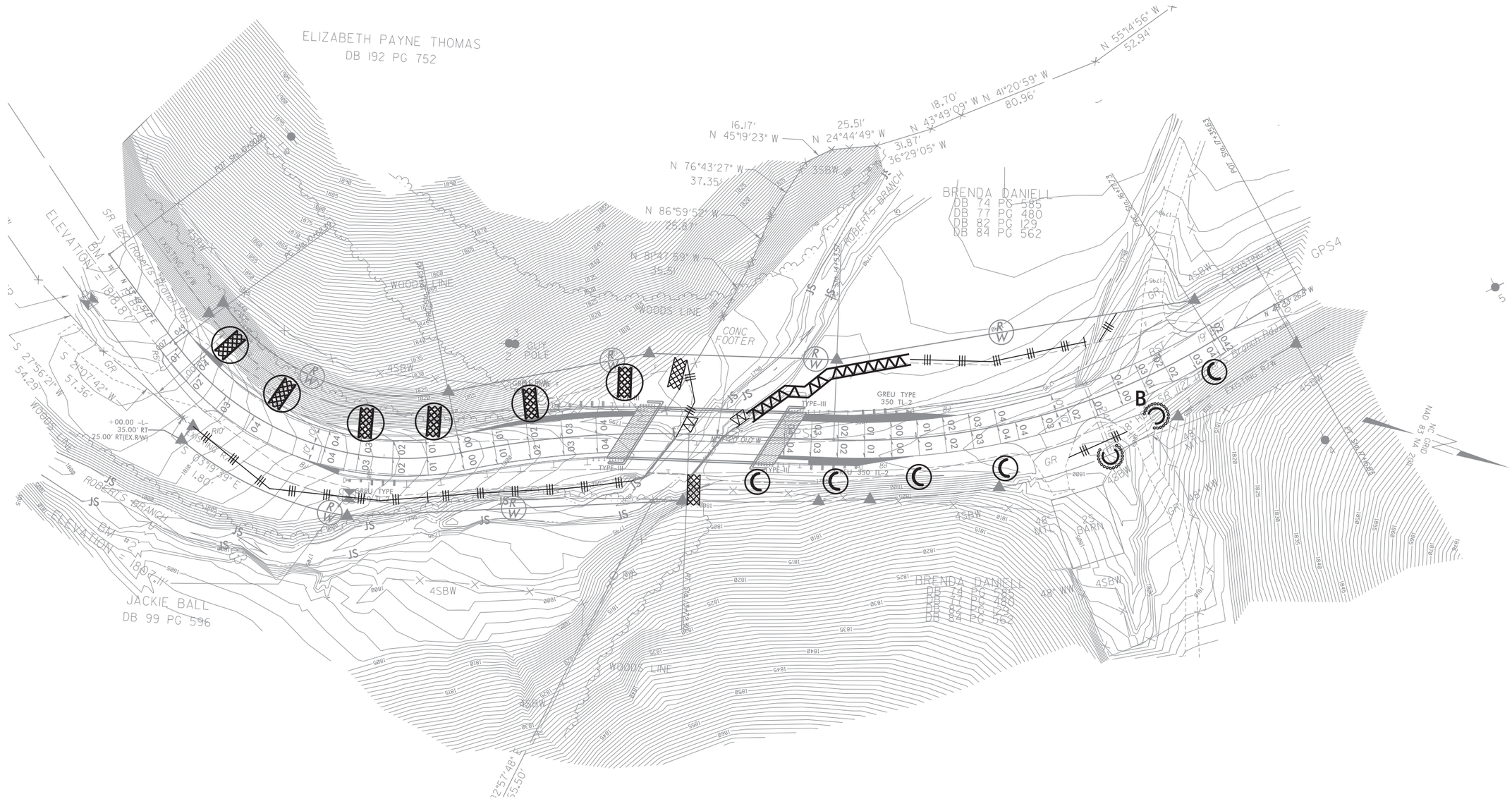

PROJECT REFERENCE NO.	SHEET NO.
17BP.13.R.167	EC-5/CONST.4
R/W SHEET NO.	
ROADWAY DESIGN ENGINEER	HYDRAULICS ENGINEER

Mattern & Craig
ENGINEERS • SURVEYORS

CULVERT CONSTRUCTION SEQUENCE STA. 13 + 82.23 –L–

PHASE I

1. INSTALL PERIMETER EROSION CONTROL DEVICES PRIOR TO CONSTRUCTION AS SHOWN IN THE CLEAR AND GRUBBING PHASE
2. INSTALL IMPERVIOUS DIKES AND TEMPORARY 36" PIPE. TOP OF DIKE SHOULD BE 1' ABOVE SOFFITT.
3. INSTALL DEWATERING PUMP AND SILT BAG AS DIRECTED BY THE ENGINEER.
4. CONSTRUCT DOWNSTREAM SECTION OF CORED SLAB BRIDGE FOR STAGING DETOUR.
5. CONSTRUCT A PORTION OF THE PROPOSED ROADWAY SUFFIECIENT TO ALLOW TRAFFIC THROUGH THE SITE AS DESCRIBED IN TRAFFIC MANAGEMENT PLANS.

PHASE II

1. INSTALL FINAL GRADE EROSION CONTROL DEVICES AS REMOVAL OF THE EXISTING ROADWAY AND BRIDGE MAKE THEM NECESSARY.
2. SHIFT TRAFFIC AS DESCRIBED IN THE TRAFFIC MANAGEMENT PLANS TO ONE LANE, TWO WAY PATTERN ON THE DOWNSTREAM SIDE OF THE STAGED CORED SLAB BRIDGE.
3. REMOVE EMBANKMENT AND ROADWAY BEHIND THE WINGWALLS OF THE EXISTING BRIDGE PRIOR TO REMVOAL OF THE BRIDGE ITSELF. THIS WILL PREVENT SEDIMENT FROM BEING DEPOSITED IN THE STREAM BED.
4. CONSTRUCT THE REMAINDER OF THE PROPOSED ROADWAY.
5. ENSURE DISTURBED LAND IS STABILIZED.
6. REMOVE TEMPORARY EROSION CONTROL DEVICES

NOTES:
1. CULVERT CONSTRUCTION SHALL BE PERFORMED IN ONLY DRY OR ISOLATED SECTIONS OF CHANNEL.
2. IMPERVIOUS DIKES ARE TO BE USED TO ISOLATE WORK FROM STREAM FLOW AS NECESSARY.
3. ALL GRADED AREAS SHALL BE STABILIZED WITHIN 24 HOURS.
4. MAINTENANCE OF STREAM FLOW OPERATIONS SHALL BE INCIDENTAL TO THE WORK. THIS INCLUDES POLETHYLENE SHEETING, DIVERSION PIPES, PUMPS AND HOSES.
5. PUMPS AND HOSES SHALL BE SUFFICIENT SIZE TO DEWATER THE WORK AREA.
6. THE CONTRACTOR SHALL NOT PUMP SEDIMENT–LADEN WATER DIRECTLY INTO STREAM. FOR DEWATERING OF CULVERT SITES, THE CONTRACTOR SHALL FILTER SEDIMENT–LADEN WATER THROUGH SPECIAL STILLING BASIN.

NOTE:
INSTALL TEMPORARY SLOPE DRAINS TO CONVEY RUNOFF FROM ROAD GRADE INTO PROPOSED DITCHES WITH A SPACING OF 1000 FT. OR AS DIRECTED.

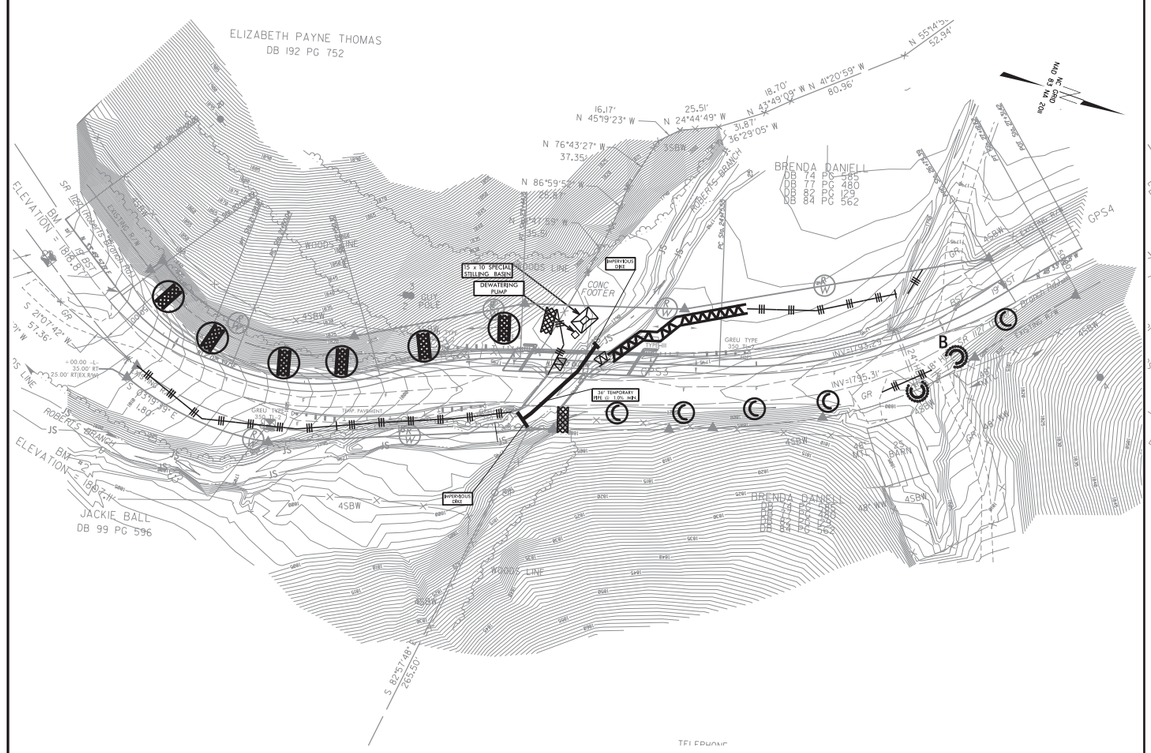

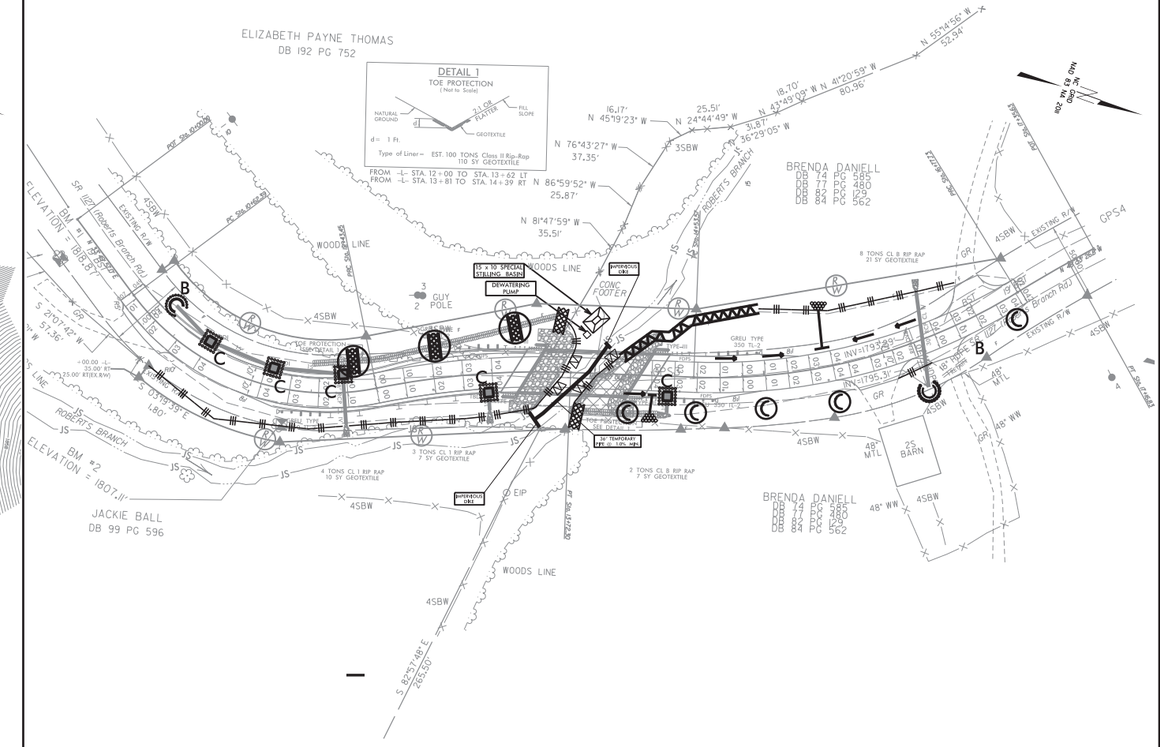

PROJECT REFERENCE NO.	SHEET NO.
17.BP.13.R167	EC-6/CONST.4

NOTE:
INSTALL TEMPORARY SLOPE DRAINS TO CONVEY RUNOFF FROM ROAD GRADE INTO PROPOSED DITCHES WITH A SPACING OF 1000 FT. OR AS DIRECTED.

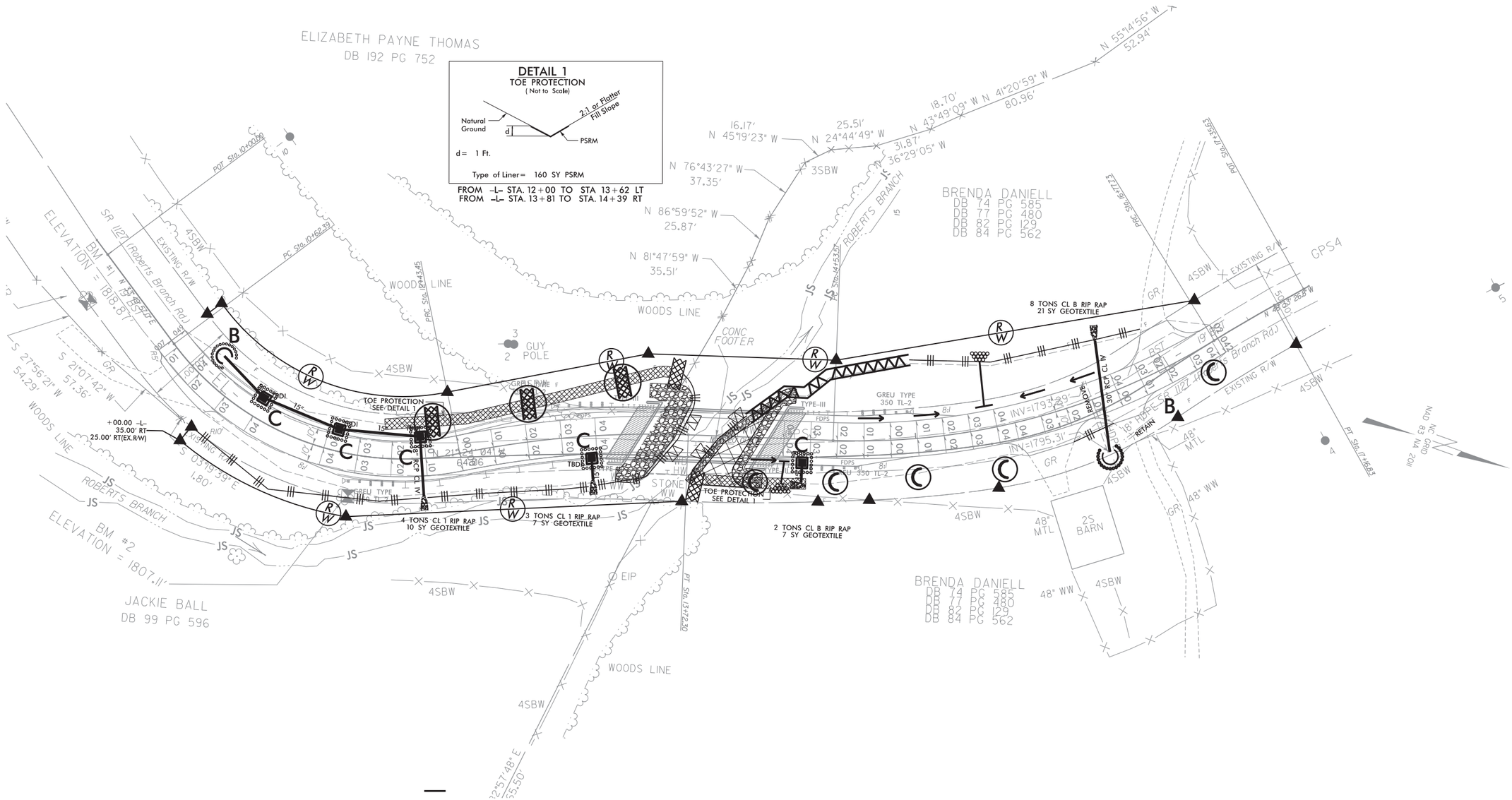

COMPUTED BY: MY	DATE: 1/3/2018
CHECKED BY: ACC	DATE: 1/3/2018

PROJECT REFERENCE NO.	SHEET NO.
17BP.13.R.167	X-1A

DIVISION OF HIGHWAYS
STATE OF NORTH CAROLINA

CROSS SECTION SUMMARY

IN CUBIC YARDS

-L- LOCATION	UNCLASSIFIED EXCAVATION	EMBT
10+60	0	0
11+00	10	12
11+50	6	25
12+00	0	75
12+50	0	148
13+00	0	251
13+45.54 (BEGIN BRIDGE)	0	293
14+18.53 (END BRIDGE)	0	0
14+50	0	243
15+00	0	300
15+50	0	167
16+00	5	112
16+50	28	52
16+80	27	0

NOTE: EMBANKMENT COLUMN DOES NOT INCLUDE BACKFILL FOR UNDERCUT.

Approximate quantities only. Unclassified excavation, fine grading, clearing and grubbing, breaking of existing asphalt, and removal of existing pavement will be paid for at the contract lump sum price for "grading".

6/23/16

0 2.5 5	PROJ. REFERENCE NO.	SHEET NO.
	17BP.13.R.167	X-1

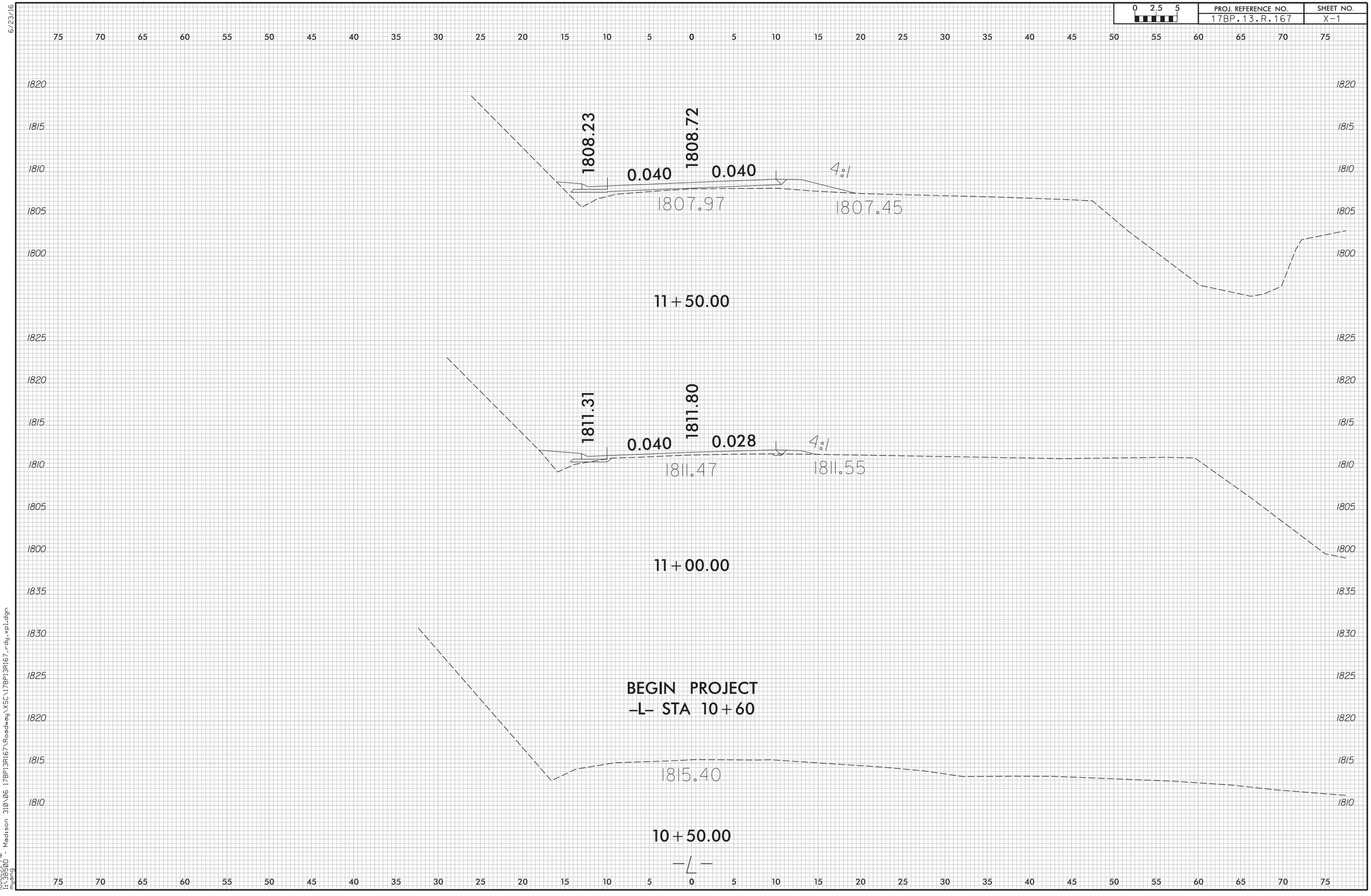

10:10:59 PM
1:1.3550D - Madison 310\06 17BP13R167\Roadway\XSC\17BP13R167_rdy_xp1.dgn
mjang

0 2.5 5	PROJ. REFERENCE NO.	SHEET NO.
	17BP.13.R.167	X-2

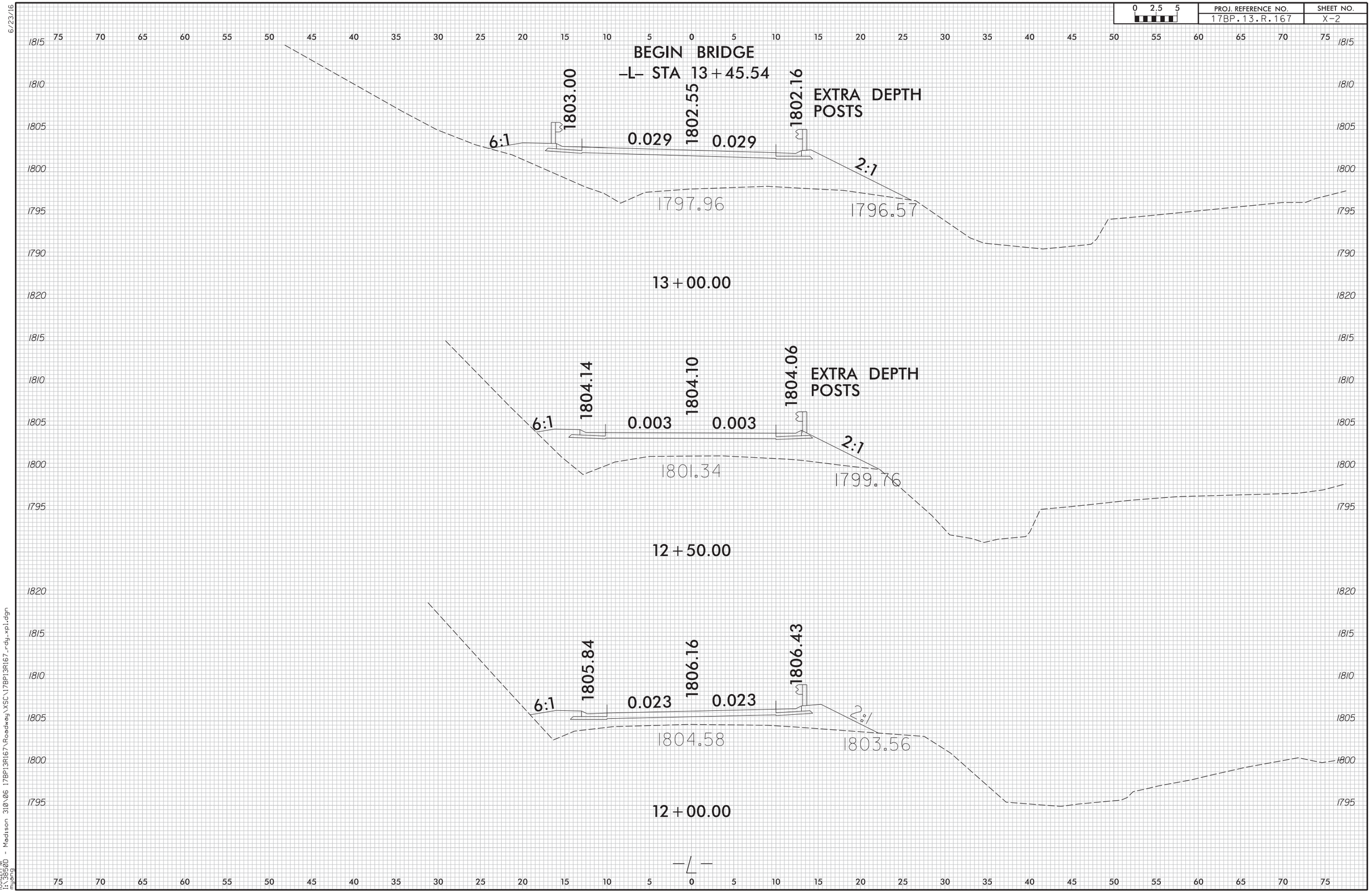

6/23/16

10:42 PM
USER
muang

Madison 310\06 17BP13R167\Roadway\XSC\17BP13R167_rdy_xpl.dgn

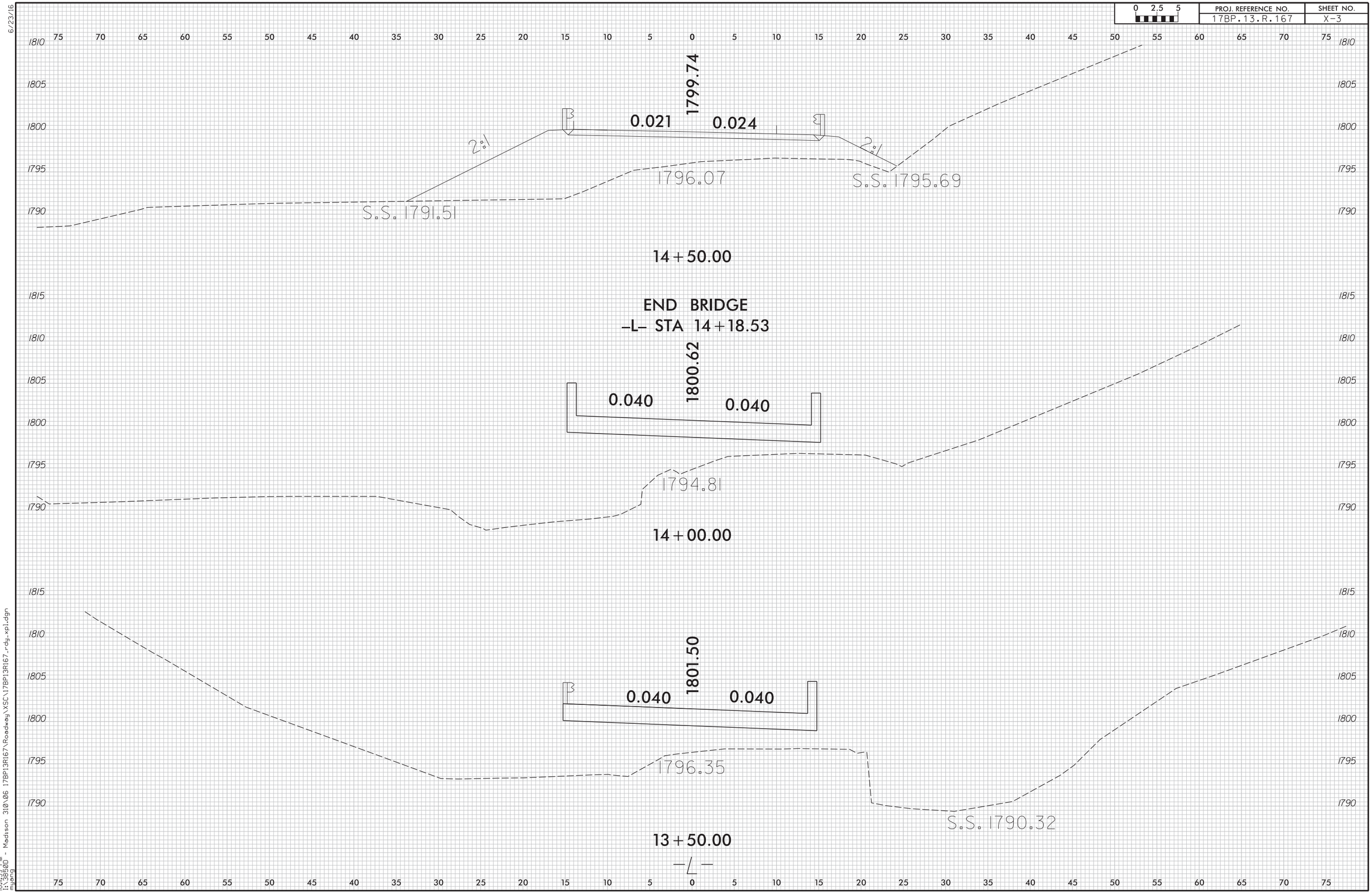

6/23/16
10:41:39 PM
13:35:00
myang
- Madison 310\06 17BP13R167\Roadway\XSC\17BP13R167_rdy_xp1.dgn

6/23/16

0 2.5 5	PROJ. REFERENCE NO.	SHEET NO.
	17BP.13.R.167	X-4

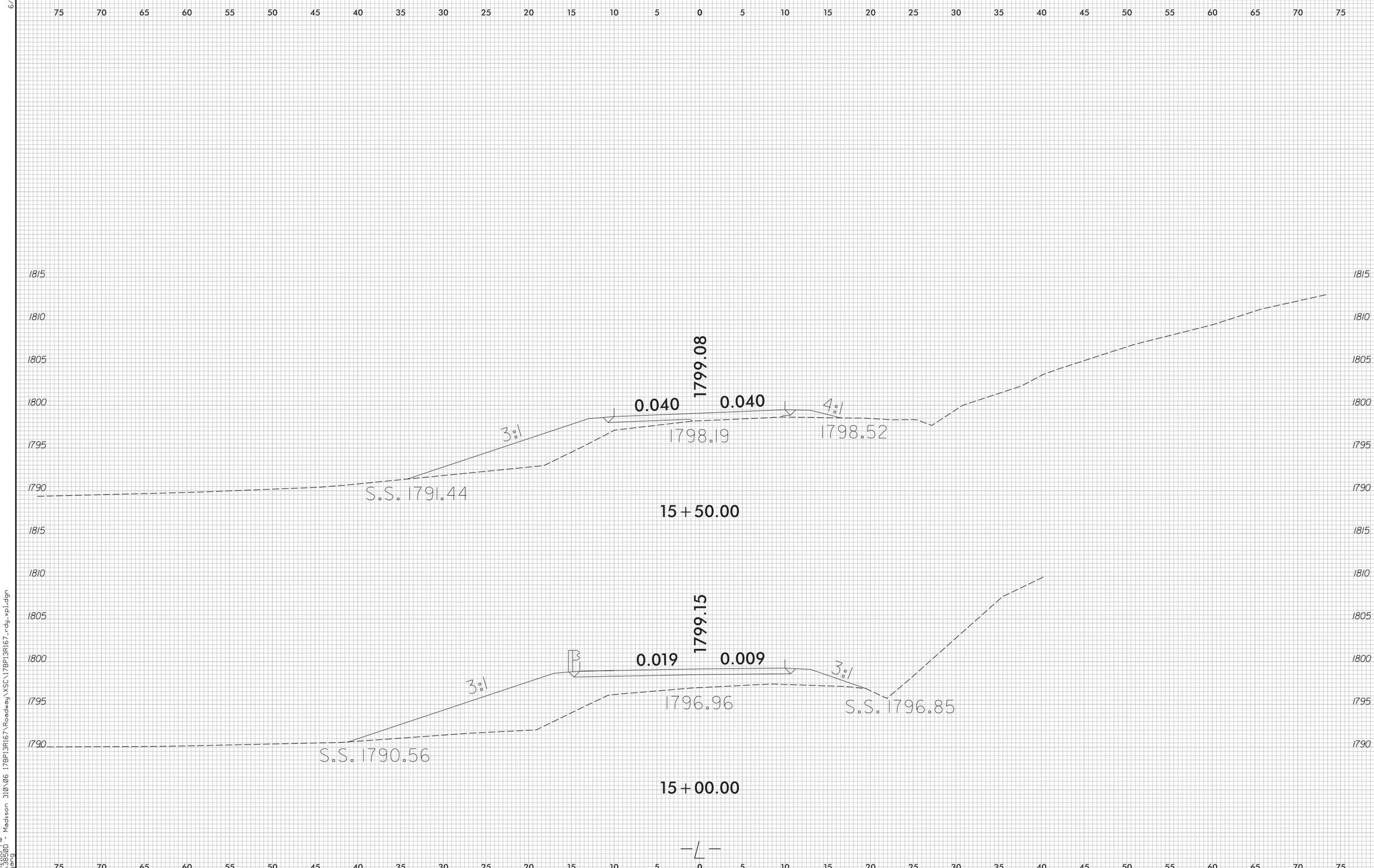

10:20:00 PM
1:1.3890D
mgarg

Madison 310\06 17BP13R167\Roadway\XSC\17BP13R167_rdy_xpl.dgn

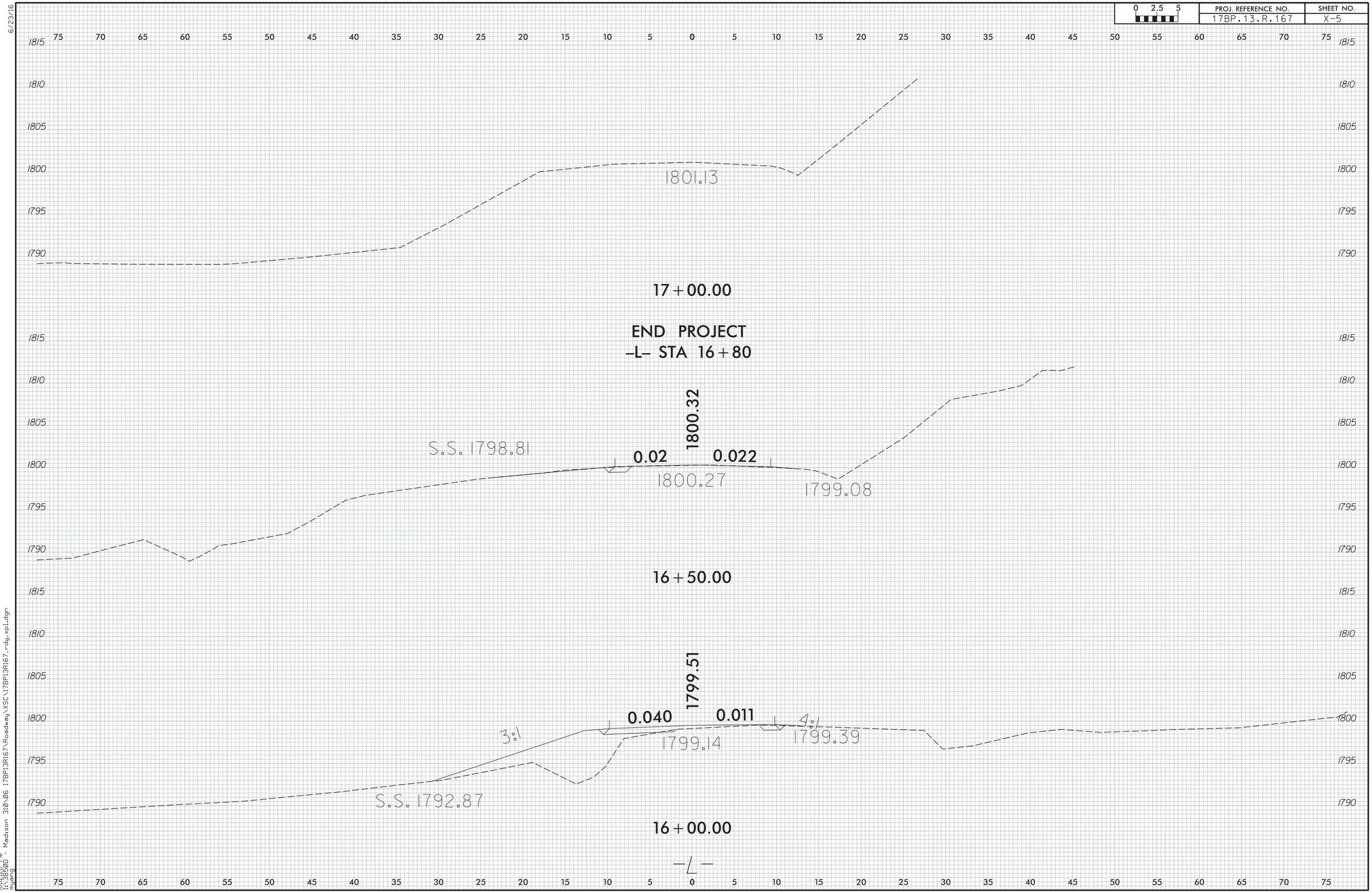

6/23/16
10:42:20 PM
Madison 310\06 17BP13R167\Roadway\XSC\17BP13R167_rdy_xpl.dgn
mjang

DocuSign Envelope ID: 6316DB79-6B4F-4168-AEF2-17E825AD0720

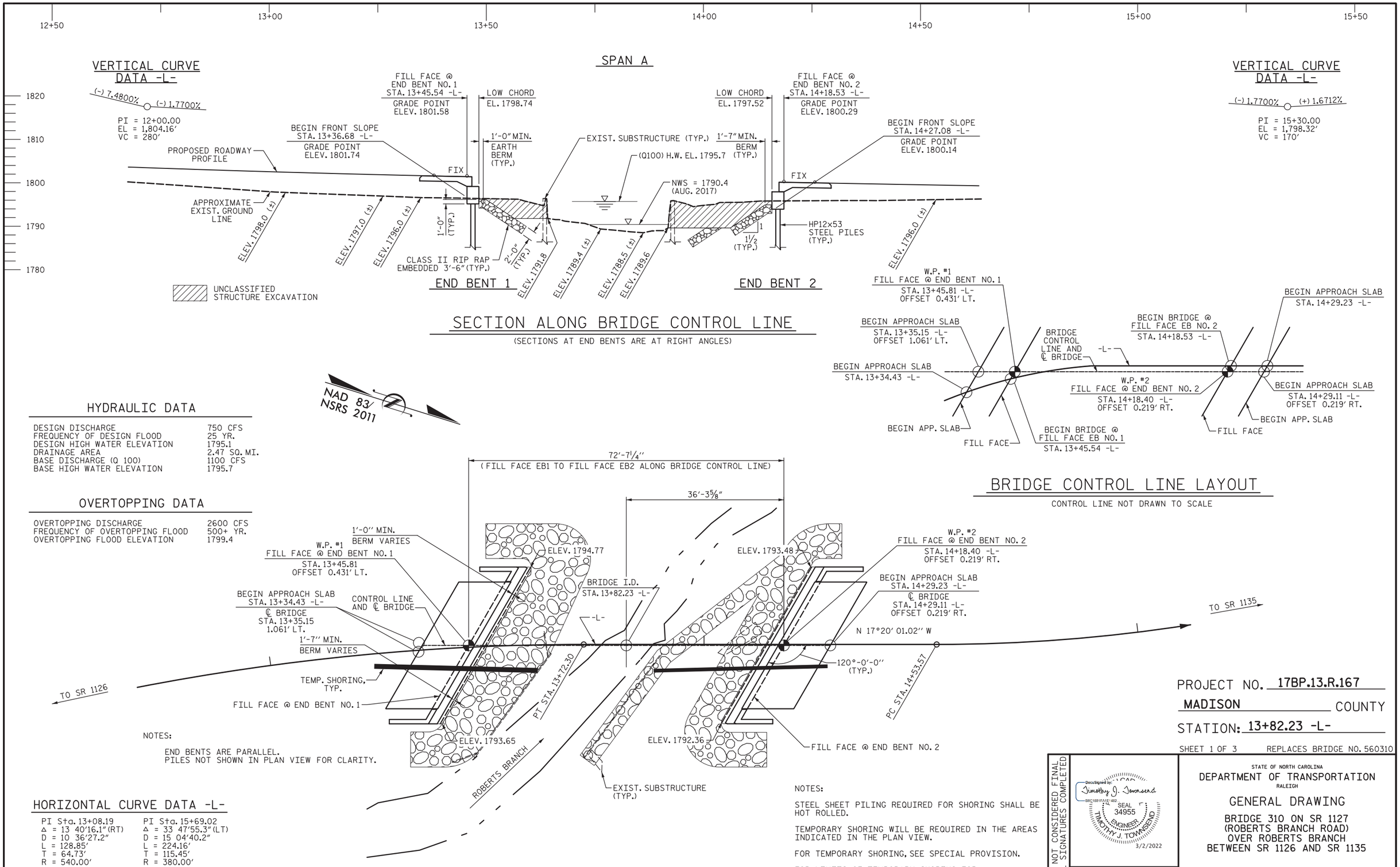

HYDRAULIC DATA

DESIGN DISCHARGE	750 CFS
FREQUENCY OF DESIGN FLOOD	25 YR.
DESIGN HIGH WATER ELEVATION	1795.1
DRAINAGE AREA	2.47 SQ. MI.
BASE DISCHARGE (Q 100)	1100 CFS
BASE HIGH WATER ELEVATION	1795.7

OVERTOPPING DATA

OVERTOPPING DISCHARGE	2600 CFS
FREQUENCY OF OVERTOPPING FLOOD	500+ YR.
OVERTOPPING FLOOD ELEVATION	1799.4

HORIZONTAL CURVE DATA -L-

PI Sta. 13+08.19	PI Sta. 15+69.02
Δ = 13 40'16.1" (RT)	Δ = 33 47'55.3" (LT)
D = 10 36'27.2"	D = 15 04'40.2"
L = 128.85'	L = 224.16'
T = 64.73'	T = 115.45'
R = 540.00'	R = 380.00'

NOTES:

END BENTS ARE PARALLEL.
PILES NOT SHOWN IN PLAN VIEW FOR CLARITY.

NOTES:

STEEL SHEET PILING REQUIRED FOR SHORING SHALL BE HOT ROLLED.

TEMPORARY SHORING WILL BE REQUIRED IN THE AREAS INDICATED IN THE PLAN VIEW.

FOR TEMPORARY SHORING, SEE SPECIAL PROVISION.

FOR LIMITS OF TEMPORARY SHORING FOR MAINTENANCE OF TRAFFIC, SEE TRAFFIC CONTROL PLANS. FOR PAY ITEM FOR TEMPORARY SHORING, FOR MAINTENANCE OF TRAFFIC, SEE ROADWAY PLANS.

PROJECT NO. 17BP.13.R.167
MADISON COUNTY
STATION: 13+82.23 -L-

SHEET 1 OF 3 REPLACES BRIDGE NO. 560310

DOCUMENT NOT CONSIDERED FINAL UNLESS ALL SIGNATURES COMPLETED

DocuSigned by: Timothy J. Townsend
BRC1881FA1E1482...
SEAL 34955 ENGINEER TIMOTHY J. TOWNSEND
3/2/2022

Mattern & Craig
ENGINEERS•SURVEYORS
12 BROAD STREET
ASHEVILLE, NORTH CAROLINA 28801
(828) 254-2201
FAX (828) 254-4562
NC LIC. NO. C-1154

STATE OF NORTH CAROLINA
DEPARTMENT OF TRANSPORTATION
RALEIGH

GENERAL DRAWING
BRIDGE 310 ON SR 1127
(ROBERTS BRANCH ROAD)
OVER ROBERTS BRANCH
BETWEEN SR 1126 AND SR 1135

REVISIONS								SHEET NO.
NO.	BY:	DATE:	NO.	BY:	DATE:			S-1
1			3					TOTAL SHEETS
2			4					16

DRAWN BY : KES	DATE : 02-22	DESIGN ENGINEER OF RECORD: T. TOWNSEND	DATE : 02-22
CHECKED BY : TJT	DATE : 02-22		

DATE: 2/25/2022 12:32:27 PM TIME: 12:32:27 PM
FILE: I:\3850D - Div 13 Bridge 310 (Madison Co)\Dwg\Sheets\401_001_17BP.13.R.167_SMU_G01_001_560310.dgn

DocuSign Envelope ID: 6316DB79-6B4F-4168-AEF2-17E825AD0720

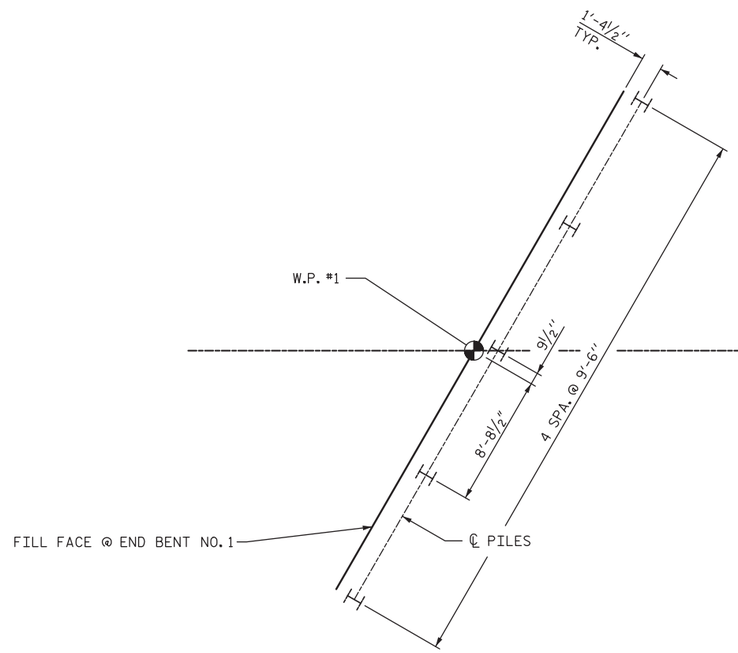

END BENT 1

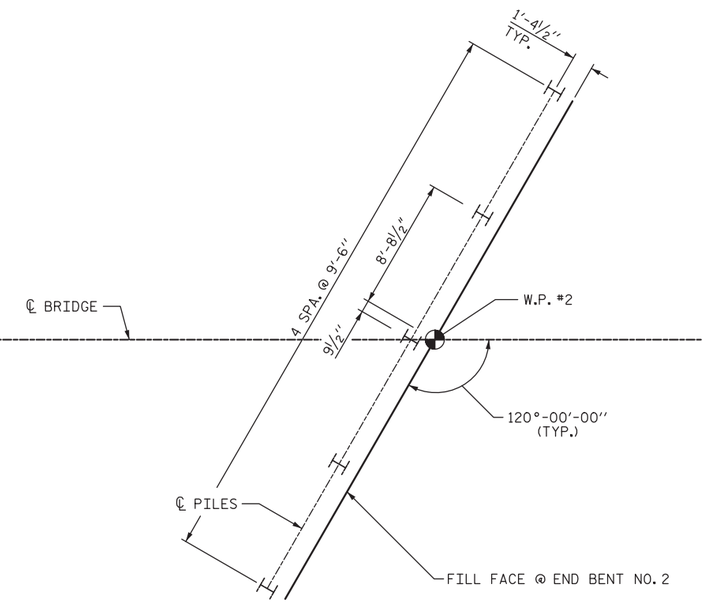

END BENT 2

FOUNDATION LAYOUT PLAN

ALL PILES ARE HP 12 X 53 STEEL PILES

FOUNDATION NOTES:

1) FOR PILES, SEE SECTION 450 OF THE STANDARD SPECIFICATIONS.

2) PILES AT END BENT NO. 1 ARE DESIGNED FOR A FACTORED RESISTANCE OF 99 TONS PER PILE.

3) DRIVE PILES AT END BENT NO. 1 TO A REQUIRED DRIVING RESISTANCE OF 165 TONS PER PILE.

4) DRILLED-IN PILES ARE REQUIRED FOR END BENT NO. 1. EXCAVATE HOLES TO A TIP ELEVATION NO HIGHER THAN 1785 FT FOR PILE EXCAVATION, SEE SECTION 450 OF THE STANDARD SPECIFICATIONS.

5) PILES AT END BENT NO. 2 ARE DESIGNED FOR A FACTORED RESISTANCE OF 99 TONS PER PILE.

6) DRIVE PILES AT END BENT NO. 2 TO A REQUIRED DRIVING RESISTANCE OF 165 TONS PER PILE.

7) DRILLED-IN PILES ARE REQUIRED FOR END BENT NO. 2. EXCAVATE HOLES TO A TIP ELEVATION NO HIGHER THAN 1784 FT FOR PILE EXCAVATION, SEE SECTION 450 OF THE STANDARD SPECIFICATIONS.

8) CONCRETE IS REQUIRED TO FILL HOLES FOR PILE EXCAVATION AT END BENTS NO. 1 AND 2.

PROJECT NO. 17BP.13.R.167

MADISON COUNTY

STATION: 13+82.23 -L-

SHEET 2 OF 3

DRAWN BY : KES	DATE : 02-22
CHECKED BY : TJT	DATE : 02-22
DESIGN ENGINEER OF RECORD: T. TOWNSEND	DATE : 02-22

DOCUMENT NOT CONSIDERED FINAL UNLESS ALL SIGNATURES COMPLETED

DocuSigned by: Timothy J. Townsend
B8C1881FA1E1482...
SEAL 34955 ENGINEER TIMOTHY J. TOWNSEND
3/2/2022

Mattern & Craig
ENGINEERS·SURVEYORS
12 BROAD STREET
ASHEVILLE, NORTH CAROLINA 28801
(828) 254-2201
FAX (828) 254-4562
NC LIC. NO. C-1154

STATE OF NORTH CAROLINA
DEPARTMENT OF TRANSPORTATION
RALEIGH

GENERAL DRAWING

BRIDGE 310 ON SR 1127
(ROBERTS BRANCH ROAD)
OVER ROBERTS BRANCH
BETWEEN SR 1126 AND SR 1135

REVISIONS						
NO.	BY:	DATE:	NO.	BY:	DATE:	
1			3			
2			4			

SHEET NO. S-2

TOTAL SHEETS 16

DATE: 2/25/2022 12:32:28 PM TIME: 12:32:28 PM
FILE: I:\38500 - Div 13 Bridge 310 (Madison Co)\Dwg\Sheets\401.003_17BP.13.R.167_SMU.FL.002.560310.dgn

DocuSign Envelope ID: 6316DB79-6B4F-4168-AEF2-17E825AD0720

B.M. #2: RR SPIKE SET IN 24" POPLAR -L- STA. 11+84.3 23.4' RT ELEV. 1807.11'

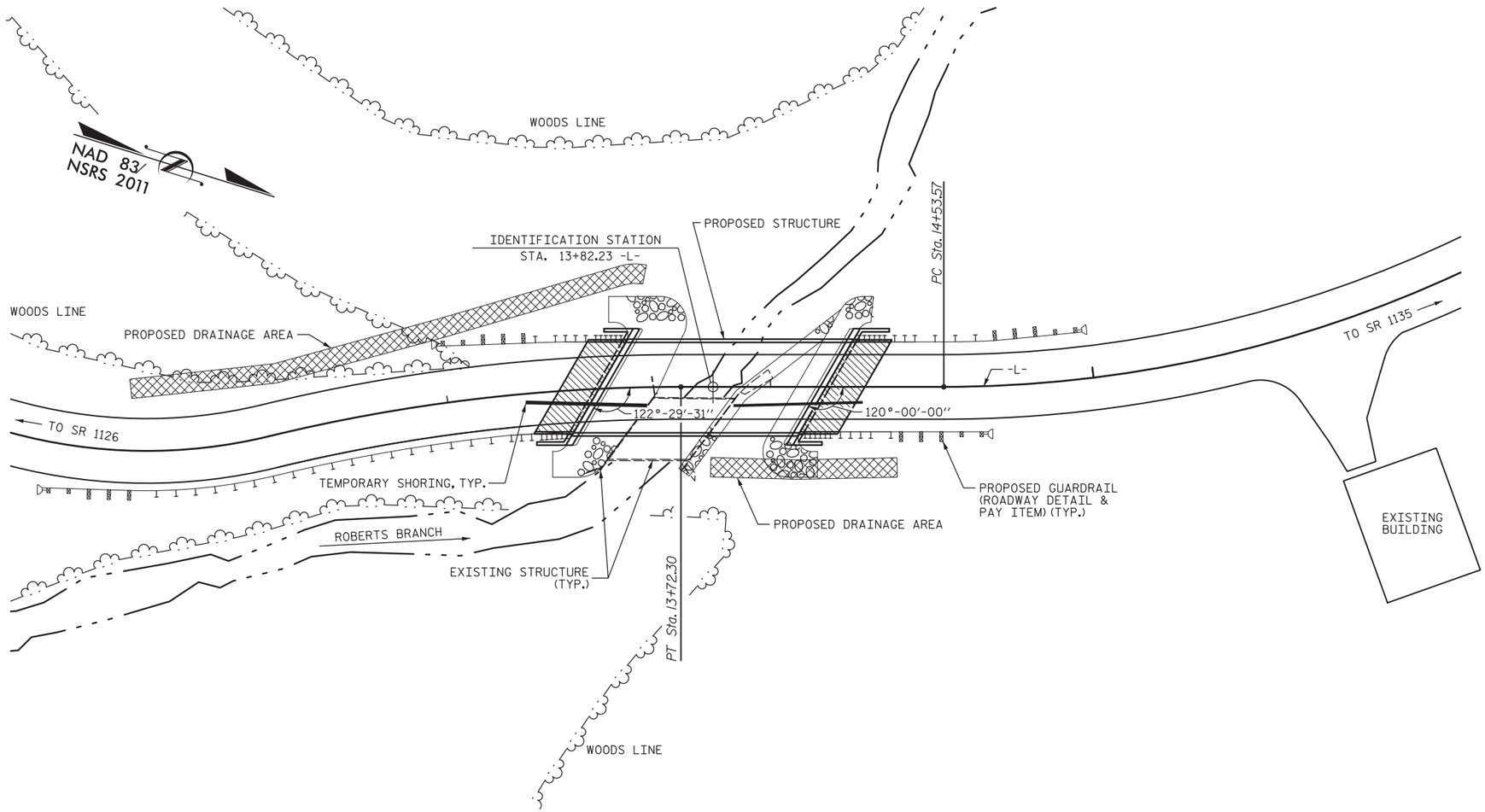

LOCATION SKETCH

NOTE: NO KNOWN UTILITY CONFLICTS

NOTES:

ASSUMED LIVE LOAD = HL-93 OR ALTERNATE LOADING.

FOR EROSION CONTROL MEASURES, SEE EROSION CONTROL PLANS.

THIS STRUCTURE HAS BEEN DESIGNED IN ACCORDANCE WITH THE AASHTO LRFD BRIDGE DESIGN SPECIFICATIONS.

THE EXISTING STRUCTURE CONSISTING OF 1 SPAN AT 25'-7", 18'-4" CLEAR ROADWAY WIDTH, TIMBER DECK ON STEEL BEAMS, ON TIMBER CAPS, SHALL BE REMOVED AFTER SERVING AS A TEMPORARY STRUCTURE. THE EXISTING BRIDGE IS CURRENTLY POSTED BELOW THE LEGAL LOAD LIMIT. SHOULD THE STRUCTURAL INTEGRITY OF THE BRIDGE FURTHER DETERIORATE, THE LOAD LIMITATION MAY BE REDUCED AS FOUND NECESSARY DURING THE LIFE OF THE PROJECT.

REMOVAL OF THE EXISTING BRIDGE SHALL BE PERFORMED AS NOT TO ALLOW DEBRIS TO FALL INTO THE WATER. THE CONTRACTOR SHALL REMOVE THE BRIDGE AND SUBMIT PLANS FOR DEMOLITION IN ACCORDANCE WITH ARTICLE 402-2 OF THE STANDARD SPECIFICATIONS.

FOR ASBESTOS ASSESSMENT FOR BRIDGE DEMOLITION AND RENOVATION ACTIVITIES, SEE SPECIAL PROVISIONS

THE SUBSTRUCTURE OF THE EXISTING BRIDGE INDICATED ON THE PLANS IS FROM THE BEST INFORMATION AVAILABLE. SINCE THIS INFORMATION IS SHOWN FOR THE CONVENIENCE OF THE CONTRACTOR, THE CONTRACTOR SHALL HAVE NO CLAIM WHATSOEVER AGAINST THE DEPARTMENT OF TRANSPORTATION FOR ANY DELAYS OR ADDITIONAL COSTS INCURRED BASED ON DIFFERENCES BETWEEN THE EXISTING BRIDGE SUBSTRUCTURE SHOWN ON THE PLANS AND THE ACTUAL CONDITIONS AT THE PROJECT SITE.

FOR SUBMITTAL OF WORKING DRAWINGS, SEE SPECIAL PROVISIONS.

FOR FALSEWORK AND FORMWORK, SEE SPECIAL PROVISIONS.

FOR CRANE SAFETY, SEE SPECIAL PROVISIONS.

FOR OTHER DESIGN DATA AND GENERAL NOTES, SEE SHEET SN.

THIS STRUCTURE HAS BEEN DESIGNED IN ACCORDANCE WITH "HEC 18-EVALUATING SCOUR AT BRIDGES."

FOR GROUT FOR STRUCTURES, SEE SPECIAL PROVISIONS.

INASMUCH AS THE PAINT SYSTEM ON THE EXISTING STRUCTURAL STEEL CONTAINS LEAD, THE CONTRACTOR'S ATTENTION IS DIRECTED TO ARTICLE 107-1 OF THE STANDARD SPECIFICATIONS. ANY COSTS RESULTING FROM COMPLIANCE WITH APPLICABLE STATE OR FEDERAL REGULATIONS PERTAINING TO HANDLING OF MATERIALS CONTAINING LEAD BASED PAINT SHALL BE INCLUDED IN THE BID PRICE FOR "REMOVAL OF EXISTING STRUCTURE AT STATION 13+75.64 -L-."

THIS BRIDGE IS LOCATED IN SEISMIC ZONE 1.

ASPHALT WEARING SURFACE IS INCLUDED IN THE ROADWAY QUANTITY ON ROADWAY PLANS.

THE MATERIAL SHOWN IN THE CROSS-HATCHED AREA SHALL BE EXCAVATED FOR A DISTANCE OF 15 FT EACH SIDE OF CENTERLINE ROADWAY AS DIRECTED BY THE ENGINEER. THIS WORK WILL BE PAID FOR AT THE CONTRACT LUMP SUM PRICE FOR UNCLASSIFIED STRUCTURE EXCAVATION. SEE SECTION 412 OF THE STANDARD SPECIFICATIONS.

TOTAL BILL OF MATERIAL

	REMOVAL OF EXISTING STRUCTURE	ASBESTOS ASSESSMENT	PILE EXCAVATION		UNCLASSIFIED STRUCTURE EXCAVATION	CLASS A CONCRETE	BRIDGE APPROACH SLABS	REINFORCING STEEL	PILE SETUP	HP 12X53 STEEL PILES		VERTICAL CONCRETE BARRIER RAIL	PLAIN RIP RAP CLASS II (2'-0" THICK)	GEOTEXTILE FOR DRAINAGE	ELASTOMERIC BEARINGS	3'-0" X 2'-0" PRESTRESSED CONCRETE CORED SLAB UNITS	
			IN SOIL	NOT IN SOIL													
	LUMP SUM	LUMP SUM	LIN. FT.	LIN. FT.	LUMP SUM	CU. YDS.	LUMP SUM	LBS.	EACH	NO.	LIN. FT.	LIN. FT.	TONS	SQ. YD.	LUMP SUM	NO.	LIN. FT.
SUPERSTRUCTURE							LUMP SUM					140				10	700
END BENT NO. 1			33	17	LUMP SUM	22.6		2898	5	5	75		100	125	LUMP SUM		
END BENT NO. 2			34	16	LUMP SUM	22.6		2898	5	5	75		94	116	LUMP SUM		
TOTAL	LUMP SUM	LUMP SUM	67	33	LUMP SUM	45.2	LUMP SUM	5796	10	10	150	140	194	241	LUMP SUM	10	700

PROJECT NO. 17BP.13.R.167

MADISON COUNTY

STATION: 13+82.23 -L-

SHEET 3 OF 3

DOCUMENT NOT CONSIDERED FINAL UNLESS ALL SIGNATURES COMPLETED

DocuSigned by: Timothy J. Townsend
BBC1681FA1E1482...
SEAL 34955 ENGINEER TIMOTHY J. TOWNSEND
3/2/2022

STATE OF NORTH CAROLINA
DEPARTMENT OF TRANSPORTATION
RALEIGH

GENERAL NOTES, LOCATION SKETCH, AND TOTAL BILL OF MATERIAL

Mattern & Craig
ENGINEERS·SURVEYORS
12 BROAD STREET
ASHEVILLE, NORTH CAROLINA 28801
(828) 254-2201
FAX (828) 254-4562
NC LIC. NO. C-1154

REVISIONS						SHEET NO.
NO.	BY:	DATE:	NO.	BY:	DATE:	S-3
1			3			TOTAL SHEETS
2			4			16

DRAWN BY : KES DATE : 02-22
CHECKED BY : TJT DATE : 02-22
DESIGN ENGINEER OF RECORD: T. TOWNSEND DATE : 02-22

DATE: 2/25/2022 12:32:29 PM TIME: 12:32:29 PM
FILE: I:\3850D - Div 13 Bridge 310 (Madison Co)\Dwg\Sheets\401_005_17BP.13.R.167_SMU_GD2_003_560310.dgn

DocuSign Envelope ID: 6316DB79-6B4F-4168-AEF2-17E825AD0720

LOAD AND RESISTANCE FACTOR RATING (LRFD) SUMMARY FOR PRESTRESSED CONCRETE GIRDERS

LEVEL		VEHICLE	WEIGHT (W) (TONS)	CONTROLLING LOAD RATING	MINIMUM RATING FACTORS (RF)	TONS = W X RF	STRENGTH I LIMIT STATE											SERVICE III LIMIT STATE						COMMENT NUMBER
							LIVELOAD FACTORS	MOMENT					SHEAR					LIVELOAD FACTORS	MOMENT					
								DISTRIBUTION FACTORS (DF)	RATING FACTOR	SPAN	GIRDER LOCATION	DISTANCE FROM LEFT END OF SPAN (ft)	DISTRIBUTION FACTORS (DF)	RATING FACTOR	SPAN	GIRDER LOCATION	DISTANCE FROM LEFT END OF SPAN (ft)		DISTRIBUTION FACTORS (DF)	RATING FACTOR	SPAN	GIRDER LOCATION	DISTANCE FROM LEFT END OF SPAN (ft)	
DESIGN LOAD RATING		HL-93(Inv)	N/A	1	1.06	--	1.75	0.248	1.14	A	EL	34.423	0.655	**1.06**	A	EL	**6.885**	0.80	0.248	1.11	A	EL	34.423	
		HL-93(Opr)	N/A		1.374	--	1.35	0.248	1.48	A	EL	34.423	0.655	1.37	A	EL	6.885	N/A	--	--	--	--	--	
		HS-20(Inv)	36.000	2	1.32	47.508	1.75	0.248	1.48	A	EL	34.423	0.655	**1.32**	A	EL	**6.885**	0.80	0.248	1.44	A	EL	34.423	
		HS-20(Opr)	36.000		1.711	61.585	1.35	0.248	1.91	A	EL	34.423	0.655	1.71	A	EL	6.885	N/A	--	--	--	--	--	
LEGAL LOAD RATING	SV	SNSH	13.500		3.204	43.258	1.4	0.248	4.12	A	EL	34.423	0.655	3.9	A	EL	6.885	0.80	0.248	3.20	A	EL	34.423	
		SNGARBS2	20.000		2.403	48.063	1.4	0.248	3.09	A	EL	34.423	0.655	2.78	A	EL	6.885	0.80	0.248	2.40	A	EL	34.423	
		SNAGRIS2	22.000		2.282	50.21	1.4	0.248	2.94	A	EL	34.423	0.655	2.58	A	EL	6.885	0.80	0.248	2.28	A	EL	34.423	
		SNCOTTS3	27.250		1.595	43.463	1.4	0.248	2.05	A	EL	34.423	0.655	1.95		EL	6.885	0.80	0.248	1.59	A	EL	34.423	
		SNAGGRS4	34.925		1.339	46.755	1.4	0.248	1.72	A	EL	34.423	0.655	1.62	A	EL	6.885	0.80	0.248	1.34	A	EL	34.423	
		SNS5A	35.550		1.309	46.526	1.4	0.248	1.68	A	EL	34.423	0.655	1.65	A	EL	6.885	0.80	0.248	1.31	A	EL	34.423	
		SNS6A	39.950		1.203	48.069	1.4	0.248	1.55	A	EL	34.423	0.655	1.5	A	EL	6.885	0.80	0.248	1.20	A	EL	34.423	
		SNS7B	42.000		1.146	48.129	1.4	0.248	1.47	A	EL	34.423	0.655	1.48	A	EL	6.885	0.80	0.248	1.15	A	EL	34.423	
	TTST	TNAGRIT3	33.000		1.468	48.444	1.4	0.248	1.89	A	EL	34.423	0.655	1.79	A	EL	6.885	0.80	0.248	1.47	A	EL	34.423	
		TNT4A	33.075		1.475	48.79	1.4	0.248	1.9	A	EL	34.423	0.655	1.74	A	EL	6.885	0.80	0.248	1.48	A	EL	34.423	
		TNT6A	41.600		1.208	50.272	1.4	0.248	1.55	A	EL	34.423	0.655	1.58	A	EL	6.885	0.80	0.248	1.21	A	EL	34.423	
		TNT7A	42.000		1.216	51.061	1.4	0.248	1.56	A	EL	34.423	0.655	1.55	A	EL	6.885	0.80	0.248	1.22	A	EL	34.423	
		TNT7B	42.000		1.261	52.955	1.4	0.248	1.62	A	EL	34.423	0.655	1.44	A	EL	6.885	0.80	0.248	1.26	A	EL	34.423	
		TNAGRIT4	43.000		1.197	51.476	1.4	0.248	1.54	A	EL	34.423	0.655	1.4	A	EL	6.885	0.80	0.248	1.20	A	EL	34.423	
		TNAGT5A	45.000		1.128	50.745	1.4	0.248	1.45	A	EL	34.423	0.655	1.39	A	EL	6.885	0.80	0.248	1.13	A	EL	34.423	
		TNAGT5B	45.000	3	1.113	50.088	1.4	0.248	1.43	A	EL	34.423	0.655	1.33	A	EL	6.885	0.80	0.248	**1.11**	A	EL	**34.423**	

LOAD FACTORS:

DESIGN LOAD RATING FACTORS	LIMIT STATE	γ_{DC}	γ_{DW}
	STRENGTH I	1.25	1.50
	SERVICE III	1.00	1.00

NOTES:

MINIMUM RATING FACTORS ARE BASED ON THE STRENGTH I AND SERVICE III LIMIT STATES.

ALLOWABLE STRESSES FOR SERVICE III LIMIT STATE ARE AS REQUIRED FOR DESIGN.

COMMENTS:

1. DUE TO THE PHASED CONSTRUCTION OF THIS BRIDGE, A MODIFIED C.S.U. WAS USED IN GIRDER POSITION 5. DIMENSIONS AND SECTION PROPERTIES ARE PROVIDED IN THE "TYPE 2 INTERIOR SLAB SECTION" BELOW. THIS UNIT DID NOT CONTROL THE BRIDGE RATING.

(#) CONTROLLING LOAD RATING

(1) DESIGN LOAD RATING (HL-93)

(2) DESIGN LOAD RATING (HS-20)

(3) LEGAL LOAD RATING **

** SEE CHART FOR VEHICLE TYPE

GIRDER LOCATION

I - INTERIOR GIRDER
EL - EXTERIOR LEFT GIRDER
ER - EXTERIOR RIGHT GIRDER

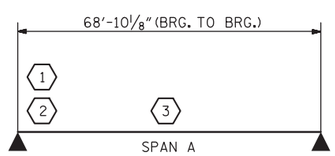

LRFR SUMMARY

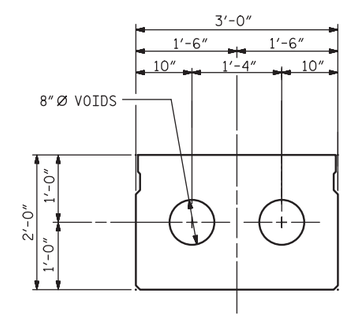

TYPE 2 INTERIOR SLAB SECTION

A = 755.3 in²
Wt. = 787 plf
I_{xx} = 40,462 in⁴
C_T = 12.08 in.
C_B = 11.92 in.
S_T = 3,350 in³
S_B = 3,394 in³

PROJECT NO. 17BP.13.R.167
MADISON COUNTY
STATION: 13+82.23 -L-

DOCUMENT NOT CONSIDERED FINAL UNLESS ALL SIGNATURES COMPLETED

DocuSigned by: Timothy J. Townsend
BRC1881FA1E482...
SEAL 34955 ENGINEER TIMOTHY J. TOWNSEND
3/2/2022

Mattern & Craig
ENGINEERS•SURVEYORS
12 BROAD STREET
ASHEVILLE, NORTH CAROLINA 28801
(828) 254-2201
FAX (828) 254-4562
NC LIC. NO. C-1154

STATE OF NORTH CAROLINA
DEPARTMENT OF TRANSPORTATION
RALEIGH

STANDARD
LRFR SUMMARY FOR
70' CORED SLAB UNIT
60° SKEW & 120° SKEW
(NON-INTERSTATE TRAFFIC)

REVISIONS						SHEET NO.
NO.	BY:	DATE:	NO.	BY:	DATE:	S-4
1			3			TOTAL SHEETS
2			4			16

DRAWN BY : KES	DATE : 02-22	DESIGN ENGINEER OF RECORD: T. TOWNSEND	DATE : 02-22
CHECKED BY : TJT	DATE : 02-22		

DATE: 2/25/2022 12:32:30 PM TIME: 12:32:30 PM
FILE: I:\3850D - Div 13 Bridge 310 (Madison Co)\Dwg\Sheets\401_007_17BP.13.R.167_SMU_LRFR_004_560310.dgn

DocuSign Envelope ID: 6316DB79-6B4F-4168-AEF2-17E825AD0720

STAGED CONSTRUCTION NOTES

EXISTING BRIDGE INFORMATION BASED ON BEST INFORMATION AVAILABLE.

FOR PORTABLE CONCRETE BARRIER, SEE ROADWAY STANDARD DRAWING 1170.01.

SEE ROADWAY PAY ITEMS FOR THE COST OF THE PORTABLE CONCRETE BARRIER.

FOR TRAFFIC STAGING, SEE TRAFFIC CONTROL PLANS.

AFTER THE REMOVAL OF THE PORTABLE CONCRETE BARRIER, THE HOLES LEFT IN THE PRESTRESSED CONCRETE CORED SLAB SHALL BE FILLED WITH AN EPOXY BASED GROUT.

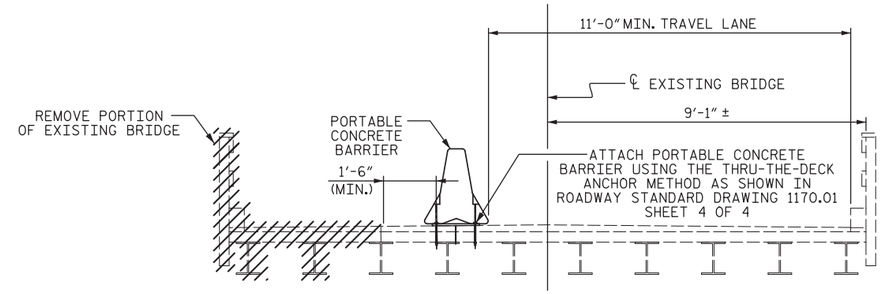

STAGE 1 CONSTRUCTION

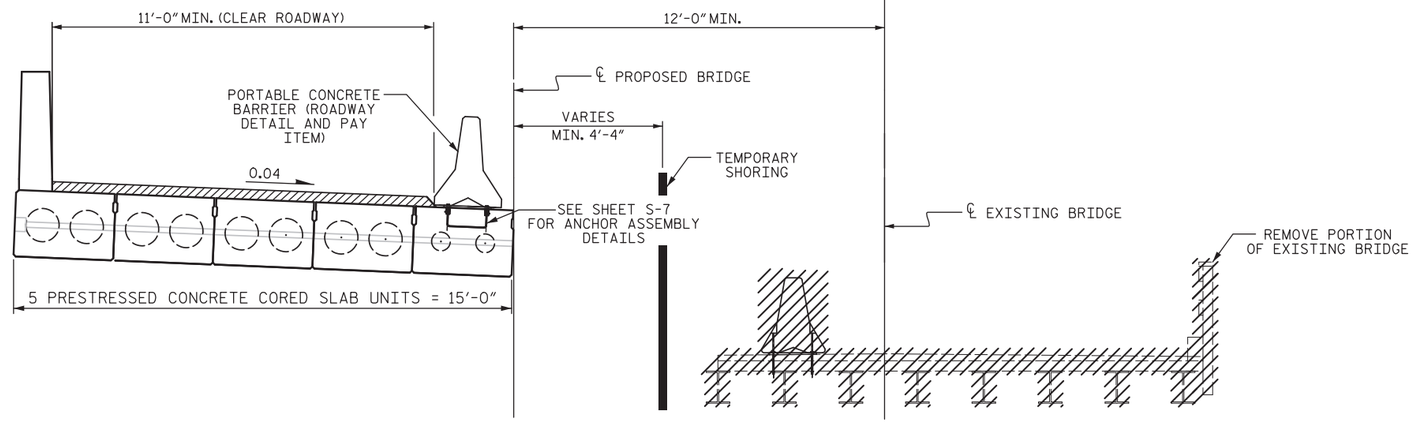

STAGE 2 CONSTRUCTION

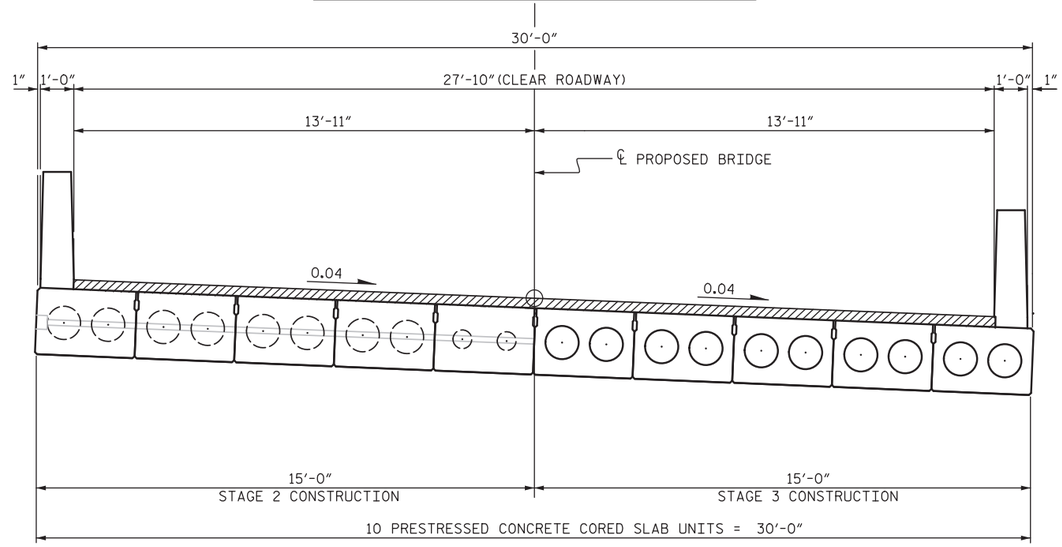

HALF SECTION
AT INTERMEDIATE DIAPHRAGMS

HALF SECTION
THROUGH VOIDS

STAGE 3 CONSTRUCTION

PROJECT NO. 17BP.13.R.167
MADISON COUNTY
STATION: 13+82.23 -L-

DOCUMENT NOT CONSIDERED FINAL UNLESS ALL SIGNATURES COMPLETED

DocuSigned by: Timothy J. Townsend
BBC1881FA1E482
SEAL 34955 ENGINEER TIMOTHY J. TOWNSEND
3/2/2022

Mattern & Craig
ENGINEERS•SURVEYORS
12 BROAD STREET
ASHEVILLE, NORTH CAROLINA 28801
(828) 254-2201
FAX (828) 254-4562
NC LIC. NO. C-1154

STATE OF NORTH CAROLINA
DEPARTMENT OF TRANSPORTATION
RALEIGH

BRIDGE CONSTRUCTION STAGING FOR MAINTENACE OF TRAFFIC

REVISIONS								
NO.	BY:	DATE:	NO.	BY:	DATE:		SHEET NO.	
1			3				S-5	
2			4				TOTAL SHEETS	
							16	

DRAWN BY : KES	DATE : 02-22	DESIGN ENGINEER OF RECORD: T. TOWNSEND	DATE : 02-22
CHECKED BY : TJT	DATE : 02-22		

DATE: 2/25/2022 12:32:31 PM TIME: 12:32:31 PM
FILE: I:\3850D - Div 13 Bridge 310 (Madison Co)\Dwg\Sheets\401_009_17BP.13.R.167_SMU_PC_005_560310.dgn

DocuSign Envelope ID: 6316DB79-6B4F-4168-AEF2-17E825AD0720

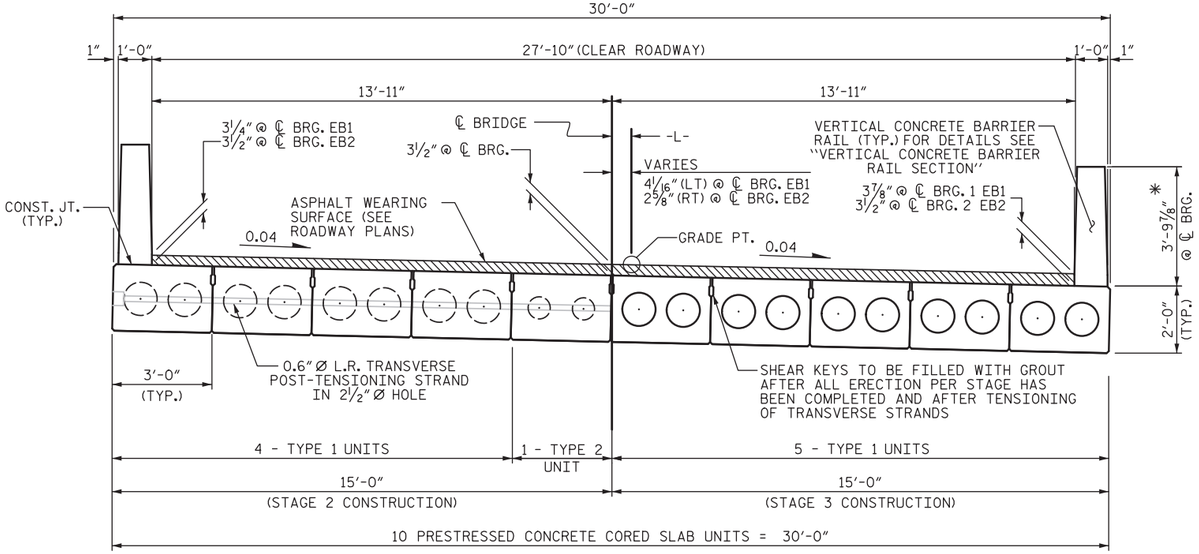

HALF SECTION
AT INTERMEDIATE DIAPHRAGMS

TYPICAL SECTION

HALF SECTION
THROUGH VOIDS

* - THE MAXIMUM BARRIER RAIL HEIGHT AND ASPHALT THICKNESS IS SHOWN. THE HEIGHT OF THE BARRIER RAIL AND ASPHALT THICKNESS VARIES WHILE THE TOP OF THE BARRIER RAIL FOLLOWS THE PROFILE OF THE GUTTERLINE. FOR RAIL HEIGHT DETAILS AND ASPHALT THICKNESS, SEE THE "VERTICAL CONCRETE BARRIER RAIL SECTION" DETAIL.

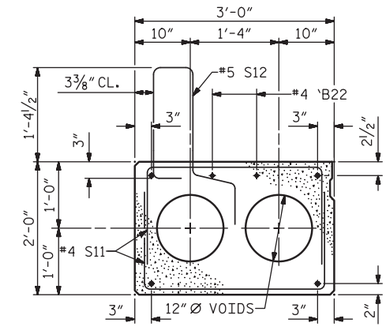

EXTERIOR SLAB SECTION

(FOR PRESTRESSED STRAND LAYOUT, SEE INTERIOR SLAB SECTION.)

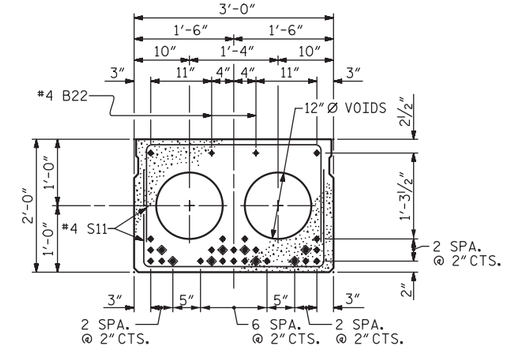

INTERIOR SLAB SECTION (TYPE 1)

(28 STRANDS REQUIRED)

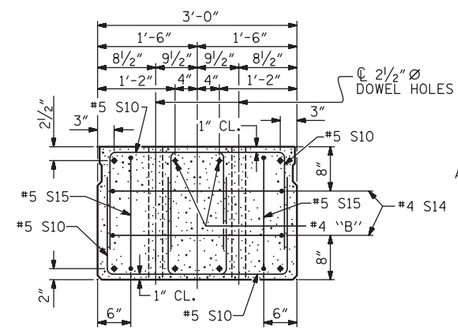

END ELEVATION

SHOWING PLACEMENT OF DOUBLE STIRRUPS AND LOCATION OF DOWEL HOLES. (STRAND LAYOUT NOT SHOWN.) INTERIOR SLAB UNIT SHOWN-EXTERIOR SLAB UNIT SIMILAR EXCEPT SHEAR KEY LOCATION.

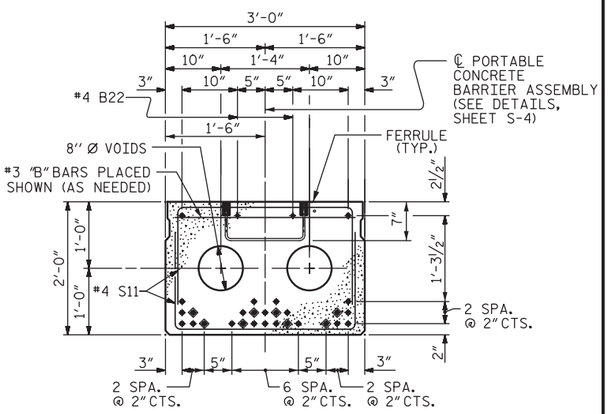

INTERIOR SLAB SECTION (TYPE 2)

(28 STRANDS REQUIRED)

0.6" Ø LOW RELAXATION STRAND LAYOUT

◆ BOND SHALL BE BROKEN ON THESE STRANDS FOR A DISTANCE OF 12'-0" FROM END OF CORED SLAB UNIT. SEE STANDARD SPECIFICATIONS, ARTICLE 1078-7.

DEBONDING LEGEND

FIXED END

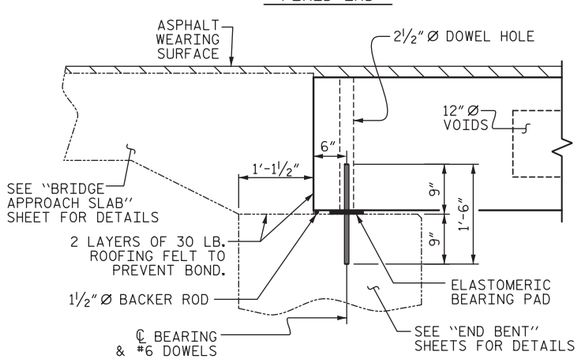

SECTION AT END BENT

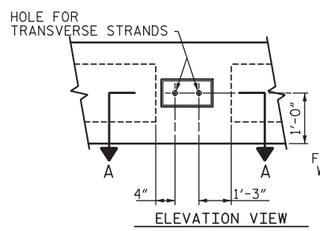

ELEVATION VIEW

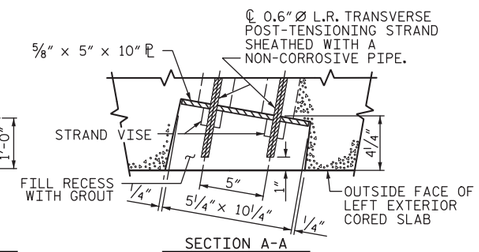

SECTION A-A

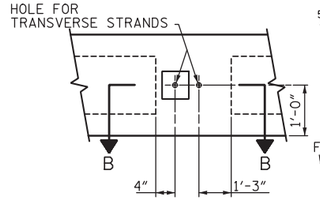

ELEVATION VIEW

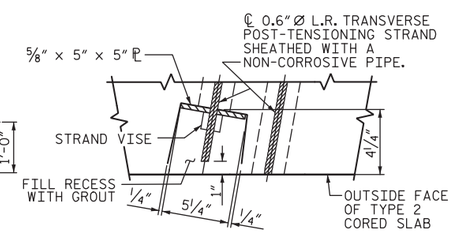

SECTION B-B

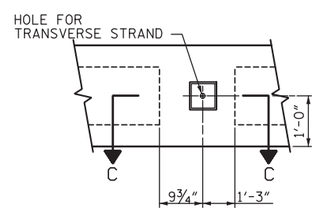

ELEVATION VIEW

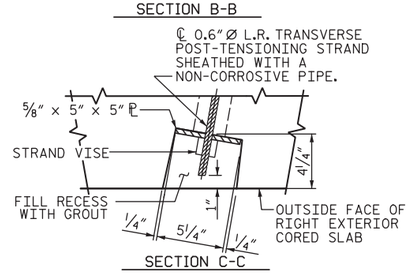

SECTION C-C

GROUTED RECESS AT END OF POST-TENSIONED STRAND-CORED SLABS

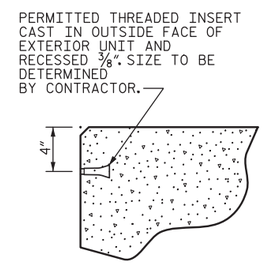

THREADED INSERT DETAIL

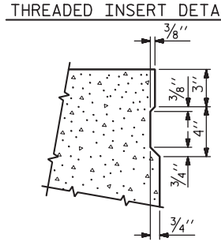

SHEAR KEY DETAIL

NOTE: OMIT SHEAR KEY ON OUTSIDE FACE OF EXTERIOR CORED SLABS.

PROJECT NO. 17BP.13.R.167

MADISON COUNTY

STATION: 13+82.23 -L-

SHEET 1 OF 3

DOCUMENT NOT CONSIDERED FINAL UNLESS ALL SIGNATURES COMPLETED

DocuSigned by: Timothy J. Townsend
BRC1881FA1E482...
SEAL 34955 ENGINEER TIMOTHY J. TOWNSEND
3/2/2022

Mattern & Craig
ENGINEERS·SURVEYORS
12 BROAD STREET
ASHEVILLE, NORTH CAROLINA 28801
(828) 254-2201
FAX (828) 254-4562
NC LIC. NO. C-1154

STATE OF NORTH CAROLINA
DEPARTMENT OF TRANSPORTATION
RALEIGH

3'-0" X 2'-0" PRESTRESSED CONCRETE CORED SLAB UNIT

REVISIONS								SHEET NO.
NO.	BY:	DATE:	NO.	BY:	DATE:			S-6
1			3					TOTAL SHEETS
2			4					16

DRAWN BY : KES	DATE : 02-22	DESIGN ENGINEER OF RECORD: T. TOWNSEND	DATE : 02-22
CHECKED BY : TJT	DATE : 02-22		

DATE: 2/25/2022 12:32:32 PM TIME: 12:32:32 PM
FILE: I:\3850D - Div 13 Bridge 310 (Madison Co)\Dwg\Sheets\401_011_17BP.13.R.167_SMU_CS_006_560310.dgn

DocuSign Envelope ID: 6316DB79-6B4F-4168-AEF2-17E825AD0720

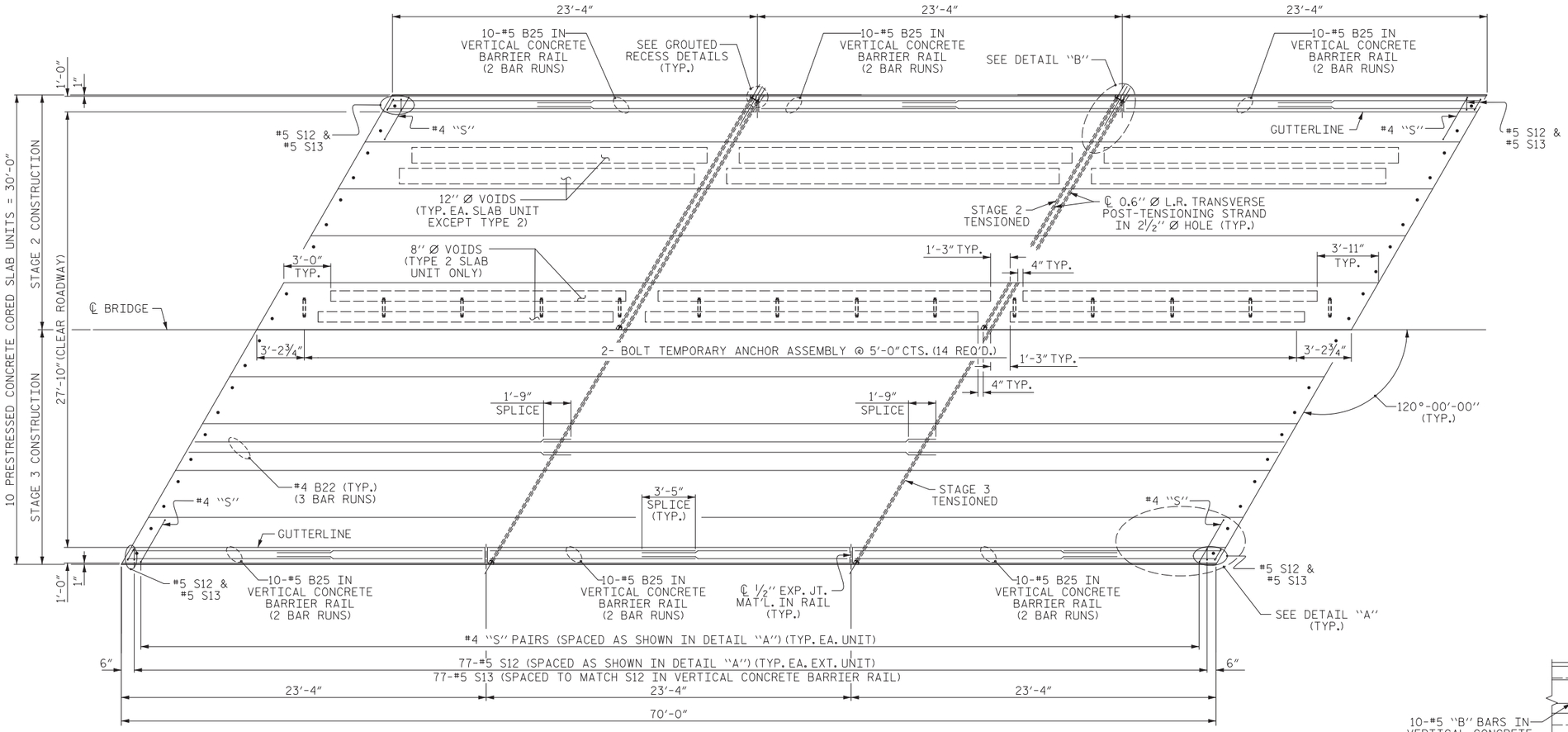

PLAN OF UNIT

ANCHOR ASSEMBLY NOTES

THE STRUCTURAL PORTABLE CONCRETE BARREIR ASSEMBLY SHALL CONSIST OF THE FOLLOWING COMPONENTS:

A. FERRULES SHALL BE MADE FROM STEEL MEETING THE REQUIREMENTS OF AASHTO M169, GRADE 12L14 AND SHALL HAVE A MINIMUM LENGTH OF THREADS OF 2½".

B. 4 - 1" Ø BOLTS WITH WASHERS. BOLTS SHALL CONFORM TO THE REQUIREMENTS OF ASTM A325. BOLTS AND WASHERS SHALL BE GALVANIZED. AT THE CONTRACTOR'S OPTION, STAINLESS STEEL BOLTS AND WASHERS MAY BE USED AS AN ALTERNATE FOR THE 1" Ø GALVANIZED BOLTS AND WASHERS. THEY SHALL CONFORM TO OR EXCEED THE MECHANICAL REQUIREMENTS OF ASTM A325. THE USE OF THIS ALTERNATE SHALL BE APPROVED BY THE ENGINEER.

C. WIRE STRUT SHOWN IN THE CONCRETE ANCHOR ASSEMBLY DETAIL IS THE MINIMUM ALLOWABLE SIZE AND SHALL HAVE A MINIMUM TENSILE STRENGTH OF 100,000 PSI. AS AN OPTION, A 7/16" Ø WIRE STRUT WITH A MINIMUM TENSILE STRENGTH OF 90,000 PSI IS ACCEPTABLE.

THE COST OF THE PORTABLE CONCRETE BARRIER ASSEMBLY COMPLETE IN PLACE SHALL BE INCLUDED IN THE UNIT CONTRACT BID FOR 3'-0" X 2'-0" TYPE 2 PRESTRESSED CONCRETE CORED SLABS.

FERRULES TO BE PLUGGED DURING CASTING OF THE CORED SLAB UNITS AS RECOMMENDED BY THE MANUFACTURER.

AT THE CONTRACTOR'S OPTION, FERRULES WITH OPEN OR CLOSED ENDS MAYBE USED.

FOR ADDITIONAL INFORMATION CONCERNING THE PORTABLE CONCRETE BARRIER, SEE THE CONSTRUCTION STAGING SHEET AND ROADWAY STANDARD DRAWING 1170.01, SHEET 7 OF 7.

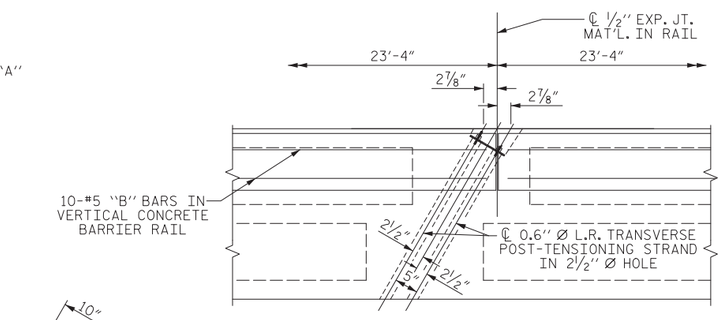

DETAIL "B"

#4 S11 BARS MAY BE SHIFTED AS NECESSARY TO MAINTAIN 1" CLEAR TO GROUTED RECESS AND 2½" Ø TRANSVERSE POST-TENSIONING STRAND HOLES

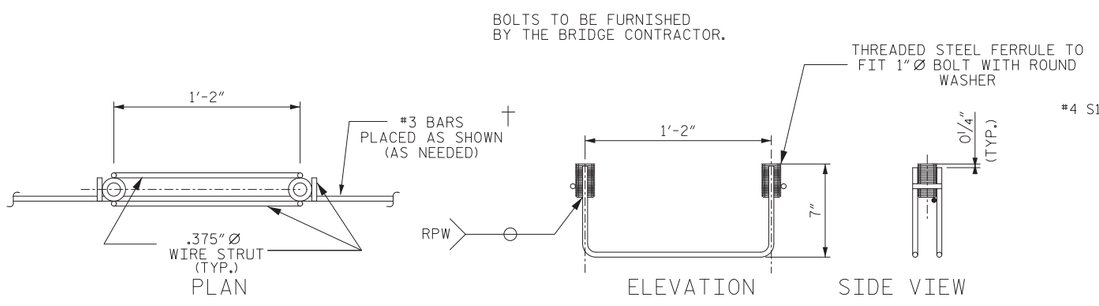

TEMPORARY GUARDRAIL ANCHOR ASSEMBLY

** ASSEMBLIES REQUIRED IN THE TYPE 2 CORED SLAB

† THE #3 BARS ARE INCIDENTAL AND THEIR COST SHALL BE INCLUDED IN THE PRICE BID FOR THE PRESTRESSED CONCRETE CORED SLABS

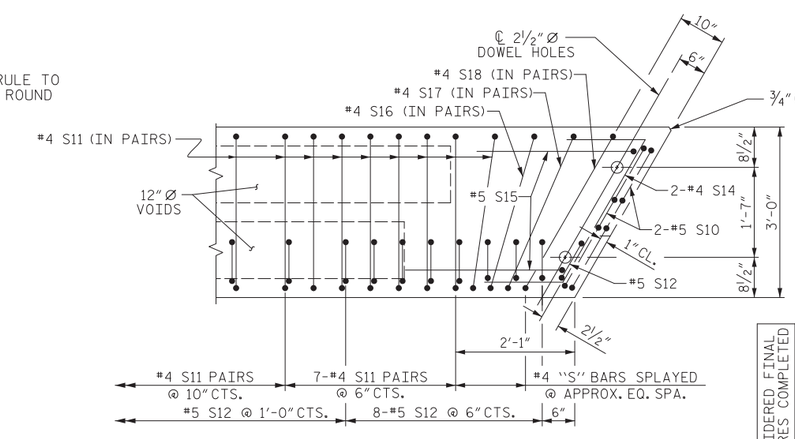

DETAIL "A"

(SIMILAR EACH END OF UNIT)
NOTE: EXTERIOR UNIT SHOWN - INTERIOR UNIT SIMILAR EXCEPT OMIT #5 S12 BARS.

PROJECT NO. 17BP.13.R.167

MADISON COUNTY

STATION: 13+82.23 -L-

SHEET 2 OF 3

DOCUMENT NOT CONSIDERED FINAL UNLESS ALL SIGNATURES COMPLETED

DocuSigned by: Timothy J. Townsend
B8C1881FA1E1482...
SEAL 34955 ENGINEER TIMOTHY J. TOWNSEND
3/2/2022

Mattern & Craig
ENGINEERS·SURVEYORS
12 BROAD STREET
ASHEVILLE, NORTH CAROLINA 28801
(828) 254-2201
FAX (828) 254-4562
NC LIC. NO. C-1154

STATE OF NORTH CAROLINA
DEPARTMENT OF TRANSPORTATION
RALEIGH

PLAN OF 70' UNIT
27'-10" CLEAR ROADWAY
120° SKEW

REVISIONS								SHEET NO.
NO.	BY:	DATE:	NO.	BY:	DATE:			S-7
1			3					TOTAL SHEETS
2			4					16

DRAWN BY : KES	DATE : 02-22	DESIGN ENGINEER OF RECORD: T. TOWNSEND	DATE : 02-22
CHECKED BY : TJT	DATE : 02-22		

DATE: 2/25/2022 12:32:32 PM TIME: 12:32:32 PM
FILE: I:\38500 - Div 13 Bridge 310 (Madison Co)\Dwg\Sheets\401.013.17BP.13.R.167_SMU_CS_007.560310.dgn

DocuSign Envelope ID: 6316DB79-6B4F-4168-AEF2-17E825AD0720

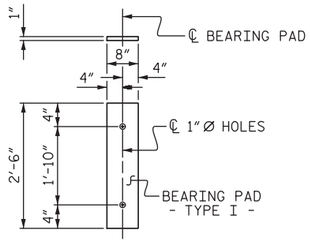

FIXED END
(TYPE I - 20 REQ'D)

BILL OF MATERIAL FOR ONE 70' CORED SLAB UNIT

				EXTERIOR UNIT		INTERIOR UNIT TYPE 1		INTERIOR UNIT TYPE 2	
BAR	NUMBER	SIZE	TYPE	LENGTH	WEIGHT	LENGTH	WEIGHT	LENGTH	WEIGHT
B22	6	#4	STR	24'-6"	98	24'-6"	98	24'-6"	98
S10	8	#5	3	5'-0"	42	5'-0"	42	5'-0"	42
S11	170	#4	3	5'-10"	662	5'-10"	662	5'-10"	662
✱S12	79	#5	1	5'-7"	460				
S14	4	#4	4	5'-11"	16	5'-11"	16	5'-11"	16
S15	4	#5	3	7'-1"	30	7'-1"	30	7'-1"	30
S16	4	#4	3	5'-11"	16	5'-11"	16	5'-11"	16
S17	4	#4	3	6'-1"	16	6'-1"	16	6'-1"	16
S18	4	#4	3	6'-3"	17	6'-3"	17	6'-3"	17
REINFORCING STEEL			LBS.		897		897		897
✱EPOXY COATED REINFORCING STEEL			LBS.		460				
7000 P.S.I. CONCRETE			CU. YDS.		12.0		12.0		13.9
0.6"Ø L.R. STRANDS			No.		28		28		28

BAR TYPES

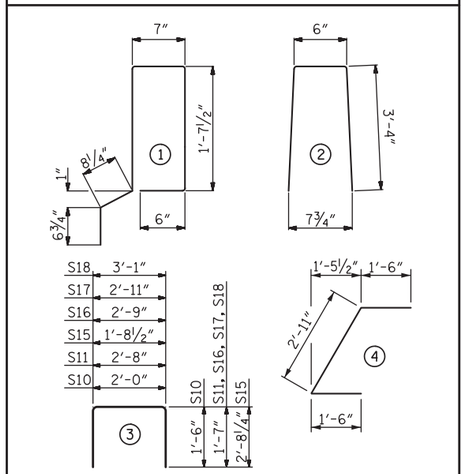

ALL BAR DIMENSIONS ARE OUT TO OUT

NOTES

ALL PRESTRESSING STRANDS SHALL BE 7-WIRE LOW RELAXATION GRADE 270 STRANDS AND SHALL CONFORM TO AASHTO M203 EXCEPT FOR SAMPLING REQUIREMENTS WHICH SHALL BE IN ACCORDANCE WITH THE STANDARD SPECIFICATIONS.

ALL REINFORCING STEEL CAST WITH THE CORED SLAB SECTIONS SHALL BE GRADE 60 AND SHALL BE INCLUDED IN THE UNIT PRICE BID FOR PRESTRESSED CONCRETE CORED SLABS.

RECESSES FOR TRANSVERSE STRANDS SHALL BE GROUTED AFTER THE TENSIONING OF THE STRANDS.

THE 2½"Ø DOWEL HOLES AT FIXED ENDS OF SLAB SECTIONS SHALL BE FILLED WITH NON-SHRINK GROUT.

THE BACKER RODS SHALL CONFORM TO THE REQUIREMENTS OF TYPE M BOND BREAKER. SEE SECTION 1028 OF THE STANDARD SPECIFICATIONS.

WHEN CORED SLABS ARE CAST, AN INTERNAL HOLD-DOWN SYSTEM SHALL BE EMPLOYED TO PREVENT VOIDS FROM RISING OR MOVING SIDEWAYS. AT LEAST SIX WEEKS PRIOR TO CASTING CORED SLABS, THE CONTRACTOR SHALL SUBMIT TO THE ENGINEER FOR REVIEW AND COMMENT, DETAILED DRAWINGS OF THE PROPOSED HOLD-DOWN SYSTEM. IN ADDITION TO STRUCTURAL DETAILS, LOCATION AND SPACING OF THE HOLD-DOWNS SHALL BE INDICATED.

THE TRANSFER OF LOAD FROM THE ANCHORAGES TO THE CORED SLAB UNIT SHALL BE DONE WHEN THE CONCRETE HAS REACHED A COMPRESSIVE STRENGTH OF NOT LESS THAN THE REQUIRED STRENGTH SHOWN IN THE "CONCRETE RELEASE STRENGTH" TABLE.

ALL REINFORCING STEEL IN VERTICAL CONCRETE BARRIER RAILS SHALL BE EPOXY COATED.

PRESTRESSING STRANDS SHALL BE CUT FLUSH WITH THE CORED SLAB UNIT ENDS.

APPLY EPOXY PROTECTIVE COATING TO CORED SLAB UNIT ENDS.

GROOVED CONTRACTION JOINTS, ½" IN DEPTH, SHALL BE TOOLED IN ALL EXPOSED FACES OF THE BARRIER RAIL AND IN ACCORDANCE WITH ARTICLE 825-10(B) OF THE STANDARD SPECIFICATIONS. A CONTRACTION JOINT SHALL BE LOCATED AT EACH THIRD POINT BETWEEN BARRIER RAIL EXPANSION JOINTS. ONLY ONE CONTRACTION JOINT IS REQUIRED AT MIDPOINT OF BARRIER RAIL SEGMENTS LESS THAN 20 FEET IN LENGTH AND NO CONTRACTION JOINTS ARE REQUIRED FOR THOSE SEGMENTS LESS THAN 10 FEET IN LENGTH.

FLAME CUTTING OF THE TRANSVERSE POST-TENSIONING STRAND IS NOT ALLOWED.

MAINTAIN A SYMMETRIC TENSION FORCE BETWEEN EACH PAIR OF TRANSVERSE POST TENSIONING STRANDS IN THE DIAPHRAGM.

THE #4 S11 STIRRUPS MAY BE SHIFTED AS NECESSARY TO MAINTAIN 1" CLEAR TO THE GROUTED RECESS.

FOR GROUT FOR STRUCTURES, SEE SPECIAL PROVISIONS.

THE PERMITTED THREADED INSERTS ARE DETAILED AS AN OPTION FOR THE CONTRACTOR TO ATTACH FALSEWORK AND FORMWORK DURING CONSTRUCTION.

THE PERMITTED THREADED INSERTS IN THE EXTERIOR UNITS SHALL BE SIZED BY THE CONTRACTOR, SPACED AT 4'-0" CENTERS AND GALVANIZED IN ACCORDANCE WITH SECTION 1076 OF THE STANDARD SPECIFICATIONS. STAINLESS STEEL THREADED INSERTS MAY BE USED AS AN ALTERNATE.

THE PERMITTED THREADED INSERTS SHALL BE GROUTED BY THE CONTRACTOR IMMEDIATELY FOLLOWING REMOVAL OF THE FALSEWORK.

THE COST OF THE PERMITTED THREADED INSERTS SHALL BE INCLUDED IN THE PRICE BID FOR THE PRECAST UNITS.

ELASTOMERIC BEARING DETAILS

ELASTOMER IN ALL BEARINGS SHALL BE 60 DUROMETER HARDNESS.

GUTTERLINE ASPHALT THICKNESS & RAIL HEIGHT

LOCATION	ASPHALT OVERLAY THICKNESS	RAIL HEIGHT
℄ BRG. EB1 (LEFT)	3¼"	3'-9¼"
MIDSPAN (LEFT)	1⅞"	3'-7⅞"
℄ BRG. EB2 (LEFT)	3½"	3'-9½"
℄ BRG. EB1 (RIGHT)	3⅞"	3'-9⅞"
MIDSPAN (RIGHT)	2"	3'-8"
℄ BRG EB2 (RIGHT)	3½"	3'-9½"

CORED SLABS REQUIRED

	NUMBER	LENGTH	TOTAL LENGTH
EXTERIOR C.S. TYPE 1	2	70'-0"	140'-0"
INTERIOR C.S. TYPE 1	7	70'-0"	490'-0"
INTERIOR C.S. TYPE 2	1	70'-0"	70'-0"
TOTAL	10		700'-0"

BILL OF MATERIAL FOR VERTICAL CONCRETE BARRIER RAIL

BAR	BARS PER PAIR OF EXTERIOR UNITS	TOTAL NO.	SIZE	TYPE	LENGTH	WEIGHT
	70' UNIT					
✱B25	120	120	#5	STR	13'-8"	1711
✱S13	158	158	#5	2	7'-2"	1181
✱EPOXY COATED REINFORCING STEEL				LBS.		2892
CLASS AA CONCRETE				CU.YDS.		18.1
TOTAL VERTICAL CONCRETE BARRIER RAIL				LN. FT.		140.29

GRADE 270 STRANDS

	0.6"Ø L.R.
AREA (SQUARE INCHES)	0.217
ULTIMATE STRENGTH (LBS. PER STRAND)	58,600
APPLIED PRESTRESS (LBS. PER STRAND)	43,950

DEAD LOAD DEFLECTION AND CAMBER

	3'-0" x 2'-0"
70' CORED SLAB UNIT	0.6"Ø L.R. STRAND
CAMBER (SLAB ALONE IN PLACE)	2¼" ↑
DEFLECTION DUE TO SUPERIMPOSED DEAD LOAD✱✱	¾" ↓
FINAL CAMBER	1½" ↑

✱✱ INCLUDES FUTURE WEARING SURFACE

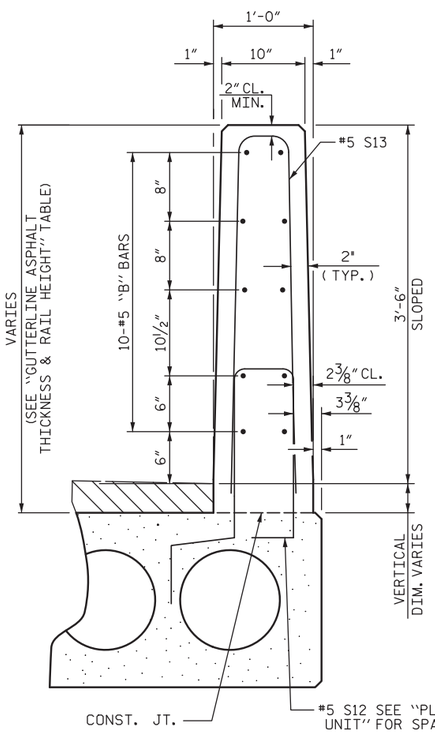

SECTION THRU RAIL

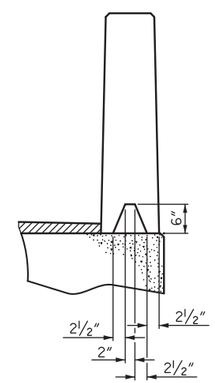

SECTION S-S
AT DAM IN OPEN JOINT
(THIS IS TO BE USED ONLY WHEN SLIP FORM IS USED)

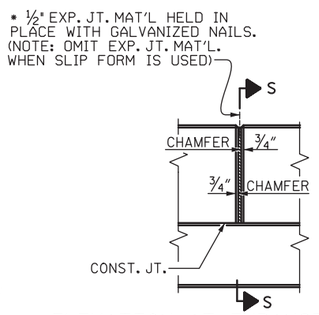

ELEVATION AT EXPANSION JOINTS

VERTICAL CONCRETE BARRIER RAIL DETAILS

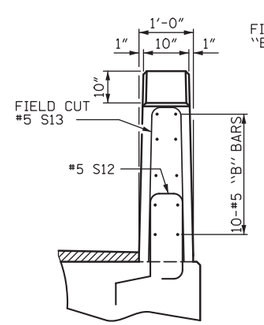

END VIEW

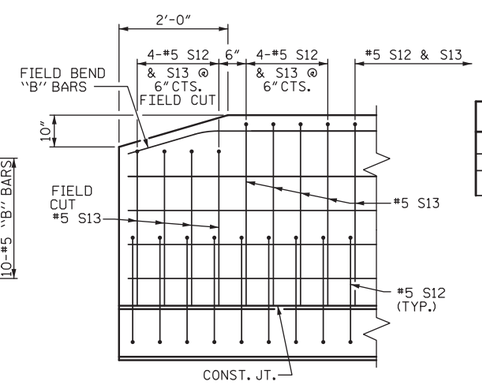

SIDE VIEW

END OF RAIL DETAILS

CONCRETE RELEASE STRENGTH

UNIT	PSI
70' UNITS	5500

PROJECT NO. 17BP.13.R.167
MADISON COUNTY
STATION: 13+82.23 -L-

SHEET 3 OF 3

DOCUMENT NOT CONSIDERED FINAL UNLESS ALL SIGNATURES COMPLETED

DocuSigned by: Timothy J. Townsend
BSC15815F1E482...
SEAL 34955 ENGINEER TIMOTHY J. TOWNSEND
3/2/2022

STATE OF NORTH CAROLINA
DEPARTMENT OF TRANSPORTATION
RALEIGH

3'-0" X 2'-0"
PRESTRESSED CONCRETE
CORED SLAB UNIT

Mattern & Craig
ENGINEERS·SURVEYORS
12 BROAD STREET
ASHEVILLE, NORTH CAROLINA 28801
(828) 254-2201
FAX (828) 254-4562
NC LIC. NO. C-1154

REVISIONS						SHEET NO.
NO.	BY:	DATE:	NO.	BY:	DATE:	S-8
1			3			TOTAL SHEETS
2			4			16

DRAWN BY : KES	DATE : 02-22	DESIGN ENGINEER OF RECORD: T. TOWNSEND	DATE : 02-22
CHECKED BY : TJT	DATE : 02-22		

DATE: 2/25/2022 12:32:33 PM TIME: 12:32:33 PM
FILE: I:\3850D - Div 13 Bridge 310 (Madison Co)\Dwg\Sheets\401_015_17BP.13.R.167_SMU_CS_008_560310.dgn

DocuSign Envelope ID: 6316DB79-6B4F-4168-AEF2-17E825AD0720

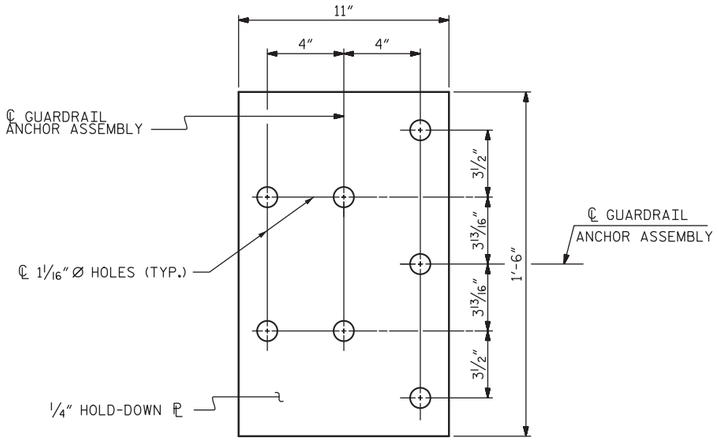

PLAN

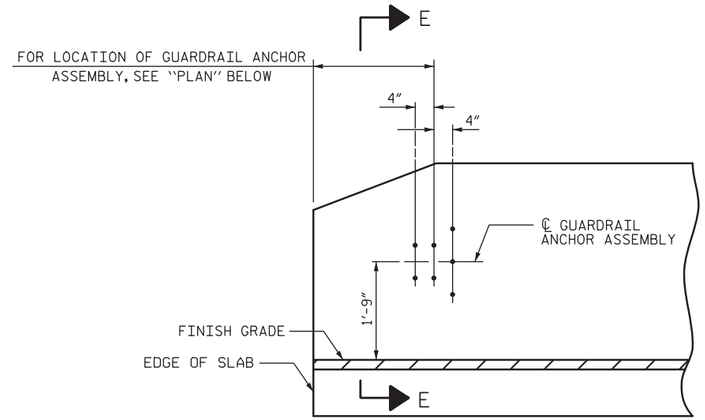

ELEVATION

NOTES

THE GUARDRAIL ANCHOR ASSEMBLY SHALL CONSIST OF A 1/4" HOLD DOWN PLATE AND 7 - 7/8" Ø BOLTS WITH NUTS AND WASHERS.

THE HOLD-DOWN PLATE SHALL CONFORM TO AASHTO M270 GRADE 36. AFTER FABRICATION, THE HOLD-DOWN PLATE SHALL BE HOT-DIP GALVANIZED IN ACCORDANCE WITH AASHTO M111.

BOLTS SHALL CONFORM TO THE REQUIREMENTS OF ASTM A307 AND NUTS SHALL CONFORM TO THE REQUIREMENTS OF AASHTO M291. BOLTS, NUTS AND WASHERS SHALL BE GALVANIZED. (AT THE CONTRACTOR'S OPTION, STAINLESS STEEL BOLTS, NUTS AND WASHERS MAY BE USED AS AN ALTERNATE FOR THE 7/8" Ø GALVANIZED BOLTS, NUTS AND WASHERS. THEY SHALL CONFORM TO OR EXCEED THE MECHANICAL REQUIREMENTS OF ASTM A307. THE USE OF THIS ALTERNATE SHALL BE APPROVED BY THE ENGINEER.)

THE GUARDRAIL ANCHOR ASSEMBLY IS REQUIRED AT ALL POINTS WHERE APPROACH GUARDRAIL IS TO BE ATTACHED TO THE END OF BARRIER RAIL. FOR POINTS OF ATTACHMENT, SEE SKETCH.

AFTER INSTALLATION, THE EXPOSED THREAD OF THE BOLT SHALL BE BURRED WITH A SHARP POINTED TOOL.

THE COST OF THE GUARDRAIL ANCHOR ASSEMBLY SHALL BE INCLUDED IN THE UNIT CONTRACT PRICE BID FOR VERTICAL CONCRETE BARRIER RAIL.

THE VERTICAL REINFORCING BARS MAY BE SHIFTED SLIGHTLY IN THE VERTICAL CONCRETE BARRIER RAIL TO CLEAR ASSEMBLY BOLTS.

THE 1 1/4" Ø HOLES SHALL BE FORMED OR DRILLED WITH A CORE BIT. IMPACT TOOLS WILL NOT BE PERMITTED. ANY CONCRETE DAMAGED BY THIS WORK SHALL BE REPAIRED TO THE SATISFACTION OF THE ENGINEER.

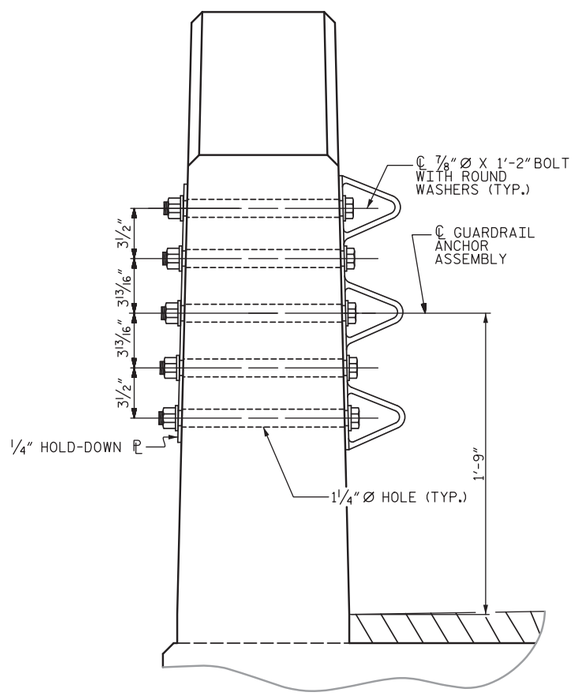

SECTION E-E

GUARDRAIL ANCHOR ASSEMBLY DETAILS

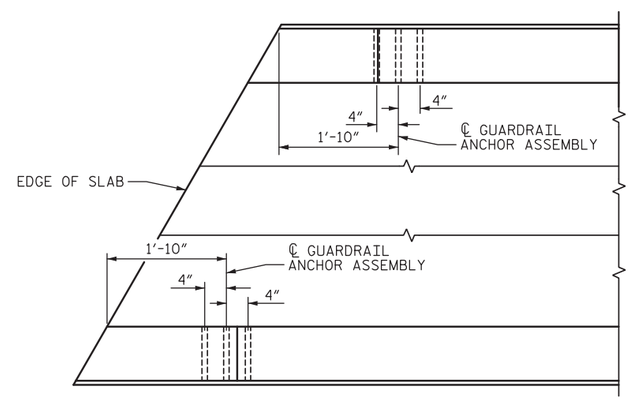

PLAN

LOCATION OF ANCHORS FOR GUARDRAIL

END BENT #1 SHOWN, END BENT #2 SIMILAR.

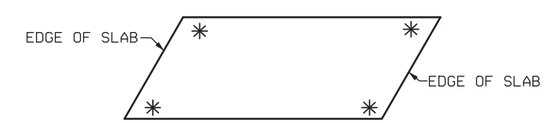

SKETCH SHOWING POINTS OF ATTACHMENT

✳ DENOTES GUARDRAIL ANCHOR ASSEMBLY

PROJECT NO. 17BP.13.R.167

MADISON COUNTY

STATION: 13+82.23 -L-

DOCUMENT NOT CONSIDERED FINAL UNLESS ALL SIGNATURES COMPLETED

DocuSigned by: Timothy J. Townsend
B8C1881FA1E1402...
SEAL 34955 ENGINEER TIMOTHY J. TOWNSEND
3/2/2022

Mattern & Craig
ENGINEERS•SURVEYORS
12 BROAD STREET
ASHEVILLE, NORTH CAROLINA 28801
(828) 254-2201
FAX (828) 254-4562
NC LIC. NO. C-1154

STATE OF NORTH CAROLINA
DEPARTMENT OF TRANSPORTATION
RALEIGH

REVISIONS						
NO.	BY:	DATE:	NO.	BY:	DATE:	
1			3			
2			4			

SHEET NO. S-9

TOTAL SHEETS 16

DRAWN BY : KES	DATE : 02-22	DESIGN ENGINEER OF RECORD: T. TOWNSEND	DATE : 02-22
CHECKED BY : TJT	DATE : 02-22		

DATE: 2/25/2022 12:32:33 PM TIME: 12:32:33 PM
FILE: I:\3850D - Div 13 Bridge 310 (Madison Co)\Dwg\Sheets\401_01I_17BP.13.R.167_SMU_GR_009_560310.dgn

DocuSign Envelope ID: 6316DB79-6B4F-4168-AEF2-17E825AD0720

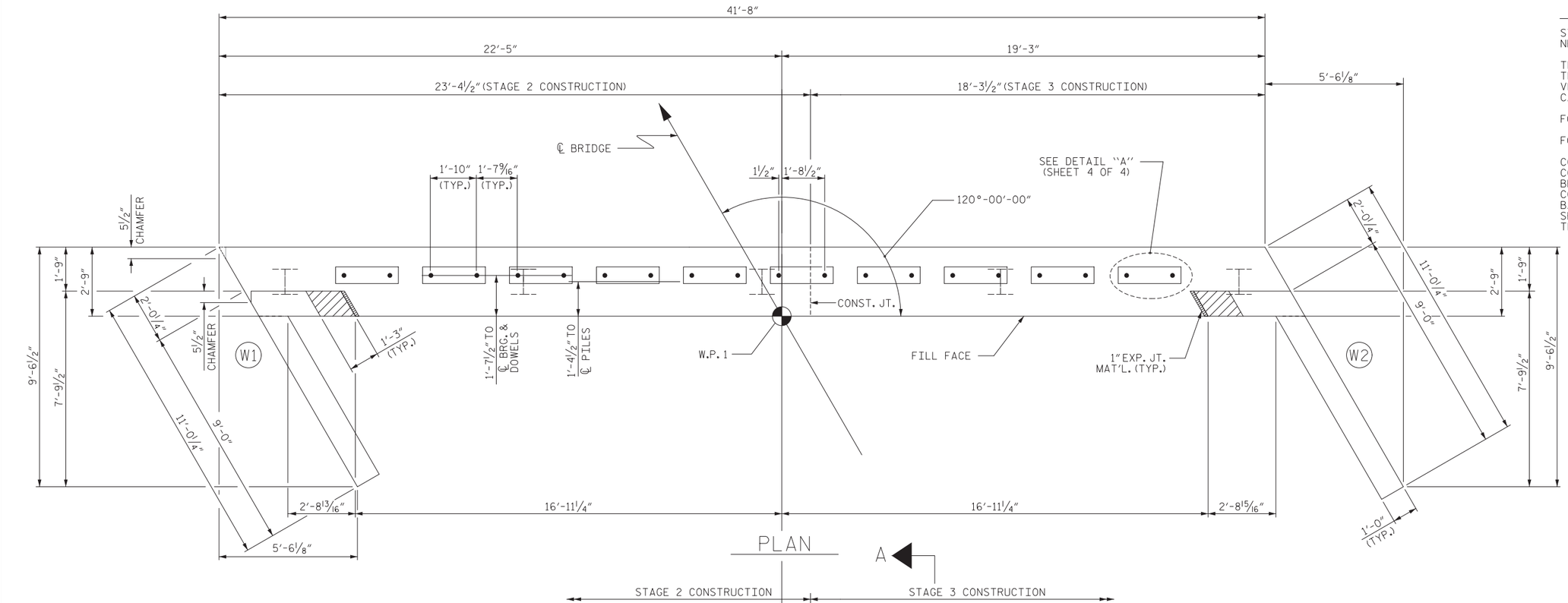

PLAN

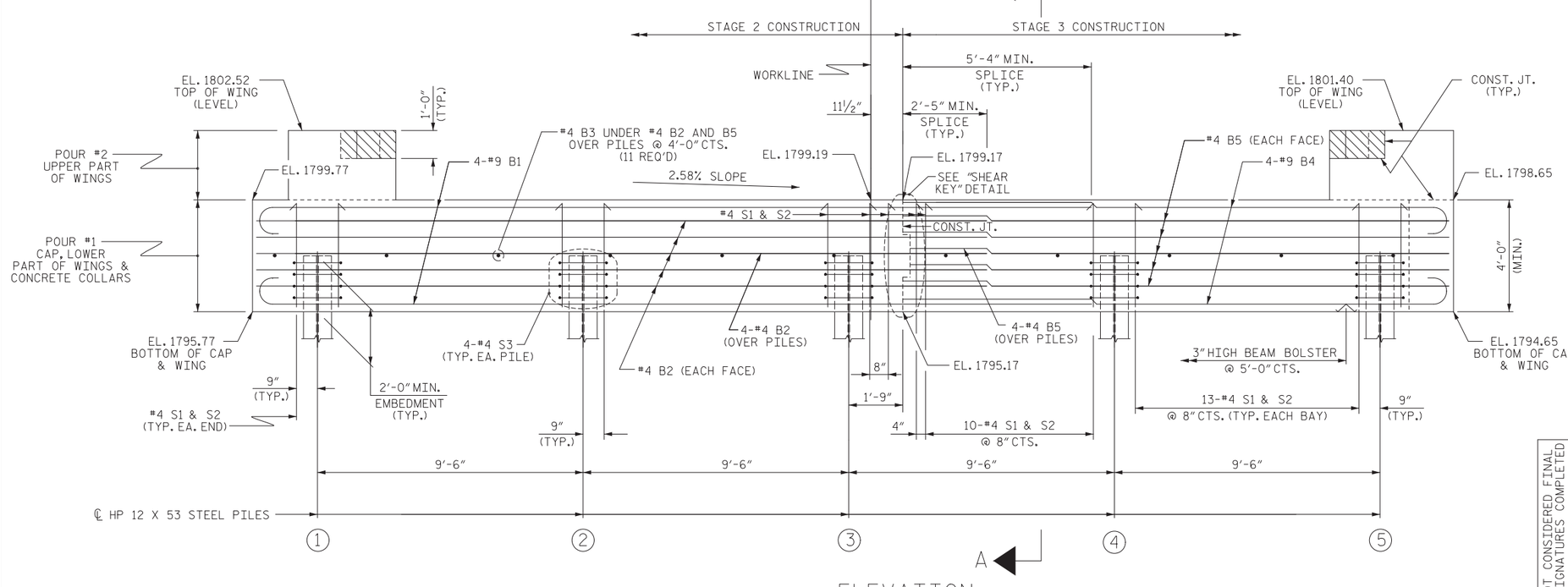

ELEVATION

WINGS NOT SHOWN FOR CLARITY.
FOR SECTION A-A, SEE SHEET 4 OF 4.
CONCRETE COLLARS FOR STEEL PILES NOT SHOWN IN PLAN AND ELEVATION VIEWS FOR CLARITY.
SEE "CORROSION PROTECTION FOR STEEL PILES DETAIL", SHEET 4 OF 4.

NOTES

STIRRUPS IN CAP MAY BE SHIFTED AS NECESSARY TO CLEAR DOWELS.

THE CONCRETE IN THE SHADED AREA OF THE WING SHALL BE POURED AFTER THE VERTICAL CONCRETE BARRIER RAIL IS CAST IF SLIP FORMING IS USED.

FOR PILE SPLICE DETAILS, SEE SHEET 4 OF 4.

FOR WING DETAILS, SEE SHEET 3 OF 4.

CONTRACTOR MAY ELECT TO USE MECHANICAL COUPLERS AT THE CONSTRUCTION JOINT BETWEEN STAGES 2 & 3 AT NO ADDITIONAL COST. THE CONTRACTOR SHALL ADJUST "B" BAR LENGTHS ACCORDINGLY. FOR MECHANICAL SPLICES SEE SECTION 425-5(B) OF THE STANDARD SPECIFICATIONS.

TOP OF PILE ELEVATIONS	
1	1797.70
2	1797.46
3	1797.21
4	1796.97
5	1796.72

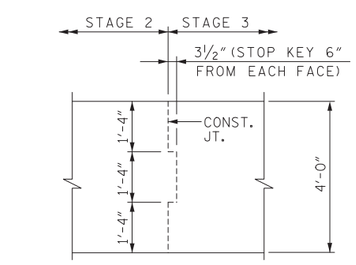

SHEAR KEY DETAIL

PROJECT NO. 17BP.13.R.167
MADISON COUNTY
STATION: 13+82.23 -L-

SHEET 1 OF 4

DOCUMENT NOT CONSIDERED FINAL UNLESS ALL SIGNATURES COMPLETED

DocuSigned by: Timothy J. Townsend
SEAL 34955 ENGINEER TIMOTHY J. TOWNSEND
3/2/2022

Mattern & Craig
ENGINEERS·SURVEYORS
12 BROAD STREET
ASHEVILLE, NORTH CAROLINA 28801
(828) 254-2201
FAX (828) 254-4562
NC LIC. NO. C-1154

STATE OF NORTH CAROLINA
DEPARTMENT OF TRANSPORTATION
RALEIGH

SUBSTRUCTURE
END BENT No. 1

REVISIONS								SHEET NO.
NO.	BY:	DATE:	NO.	BY:	DATE:			S-10
1			3					TOTAL SHEETS
2			4					16

DRAWN BY : KES	DATE : 02-22	DESIGN ENGINEER OF RECORD: T. TOWNSEND	DATE : 02-22
CHECKED BY : TJT	DATE : 02-22		

DATE: 2/25/2022 12:32:34 PM TIME: 12:32:34 PM
FILE: I:\3850D - Div 13 Bridge 310 (Madison Co)\Dwg\Sheets\401_019_17BP.13.R.167_SMU_E1_010_560310.dgn

DocuSign Envelope ID: 6316DB79-6B4F-4168-AEF2-17E825AD0720

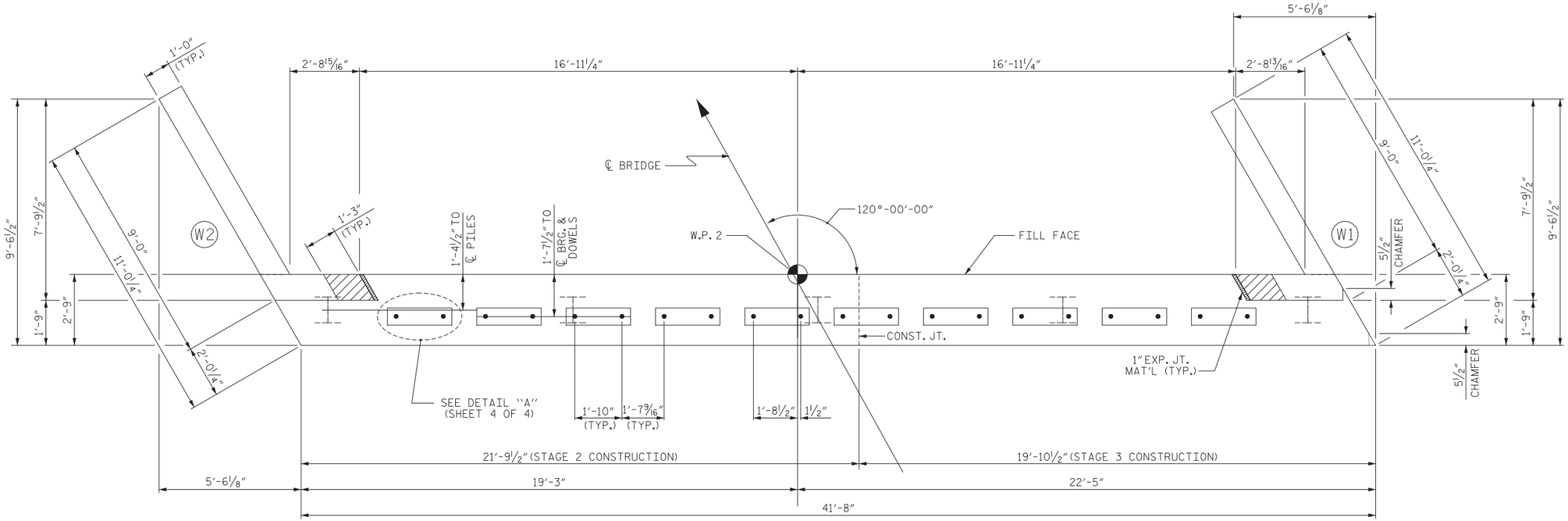

PLAN

NOTES

STIRRUPS IN CAP MAY BE SHIFTED AS NECESSARY TO CLEAR DOWELS.

THE CONCRETE IN THE SHADED AREA OF THE WING SHALL BE POURED AFTER THE VERTICAL CONCRETE BARRIER RAIL IS CAST IF SLIP FORMING IS USED.

FOR PILE SPLICE DETAILS, SEE SHEET 4 OF 4.

FOR WING DETAILS, SEE SHEET 3 OF 4.

CONTRACTOR MAY ELECT TO USE MECHANICAL COUPLERS AT THE CONSTRUCTION JOINT BETWEEN STAGES 2 & 3 AT NO ADDITIONAL COST. THE CONTRACTOR SHALL ADJUST "B" BAR LENGTHS ACCORDINGLY. FOR MECHANICAL SPLICES SEE SECTION 425-5(B) OF THE STANDARD SPECIFICATIONS.

TOP OF PILE ELEVATIONS	
1	1796.44
2	1796.19
3	1795.95
4	1795.70
5	1795.46

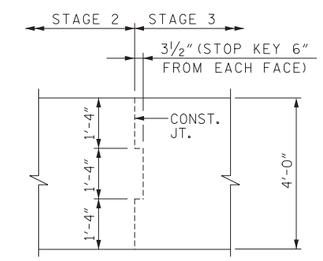

SHEAR KEY DETAIL

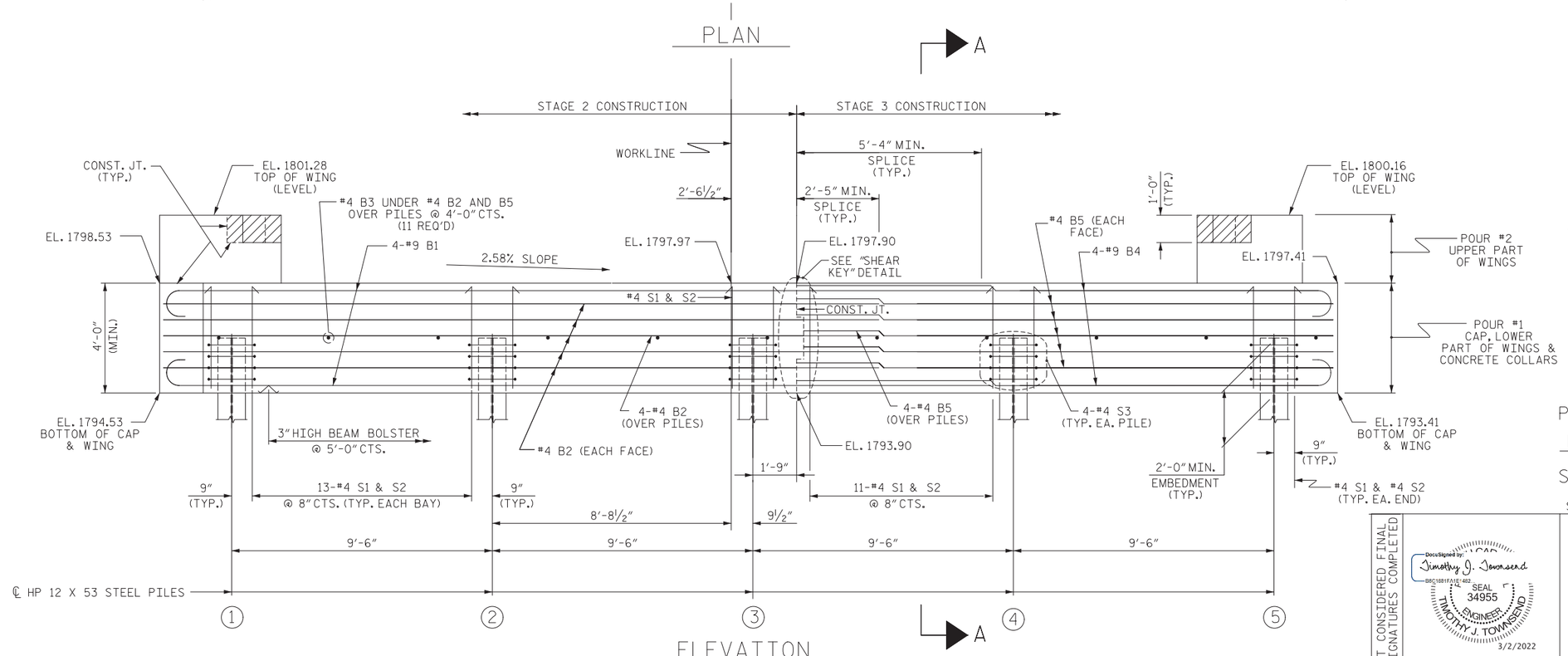

ELEVATION

WINGS NOT SHOWN FOR CLARITY.
FOR SECTION A-A, SEE SHEET 4 OF 4.
CONCRETE COLLARS FOR STEEL PILES NOT SHOWN IN PLAN AND ELEVATION VIEWS FOR CLARITY.
SEE "CORROSION PROTECTION FOR STEEL PILES DETAIL", SHEET 4 OF 4.

PROJECT NO. 17BP.13.R.167
MADISON COUNTY
STATION: 13+82.23 -L-

SHEET 2 OF 4

DOCUMENT NOT CONSIDERED FINAL UNLESS ALL SIGNATURES COMPLETED

DocuSigned by: Timothy J. Townsend
B8C1881FA1E1482...
SEAL 34955 ENGINEER TIMOTHY J. TOWNSEND
3/2/2022

Mattern & Craig
ENGINEERS•SURVEYORS
12 BROAD STREET
ASHEVILLE, NORTH CAROLINA 28801
(828) 254-2201
FAX (828) 254-4562
NC LIC. NO. C-1154

STATE OF NORTH CAROLINA
DEPARTMENT OF TRANSPORTATION
RALEIGH

SUBSTRUCTURE
END BENT No. 2

REVISIONS							
NO.	BY:	DATE:	NO.	BY:	DATE:	SHEET NO.	
1			3			S-11	
2			4			TOTAL SHEETS	
						16	

DRAWN BY : KES	DATE : 02-22	DESIGN ENGINEER OF RECORD: T. TOWNSEND	DATE : 02-22
CHECKED BY : TJT	DATE : 02-22		

DATE: 2/25/2022 12:32:34 PM TIME: 12:32:34 PM
FILE: I:\3850D - Div 13 Bridge 310 (Madison Co)\Dwg\Sheets\401.021.17BP.13.R.167_SMU.E2.011.560310.dgn

DocuSign Envelope ID: 6316DB79-6B4F-4168-AEF2-17E825AD0720

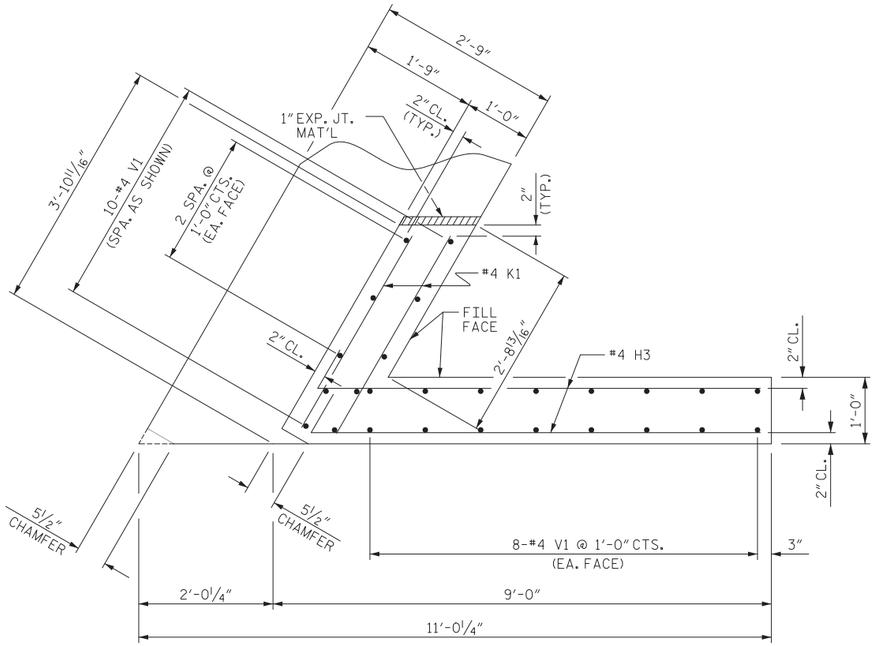

PLAN OF WING (W1)

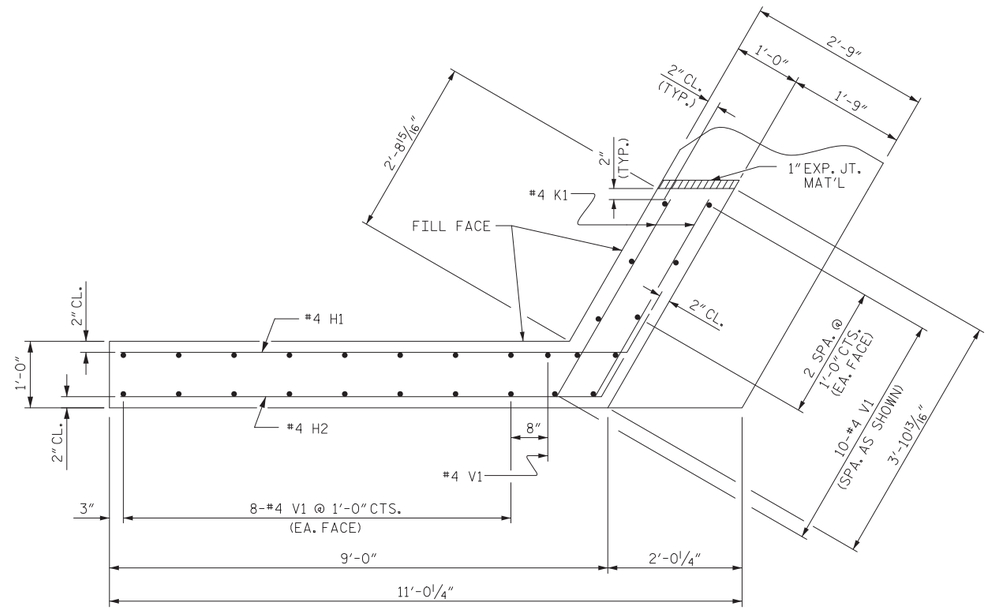

PLAN OF WING (W2)

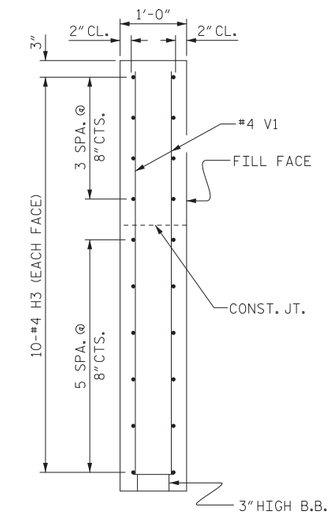

SECTION X-X

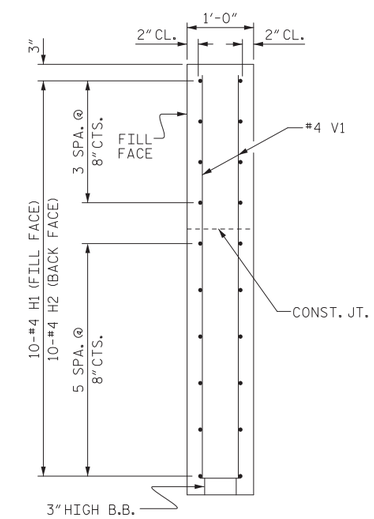

SECTION Y-Y

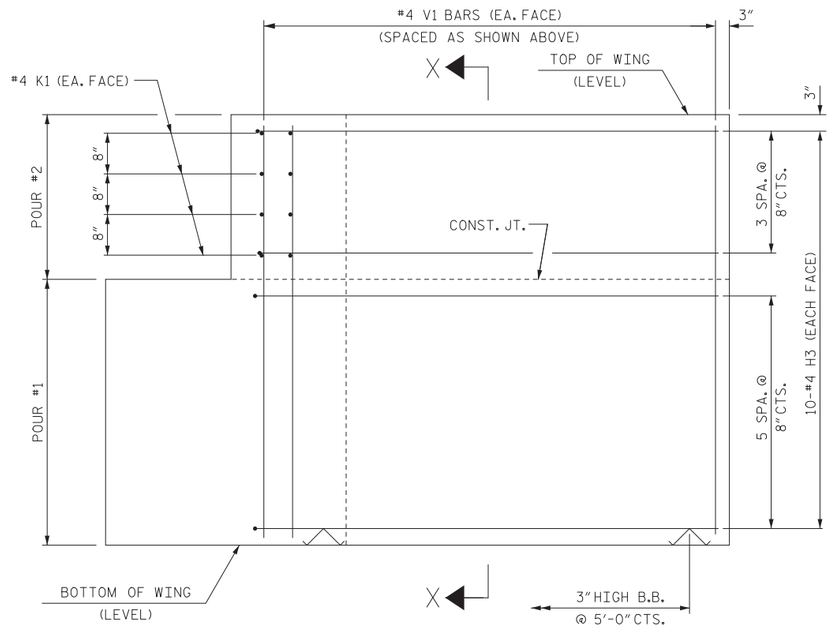

ELEVATION OF WING (W1)

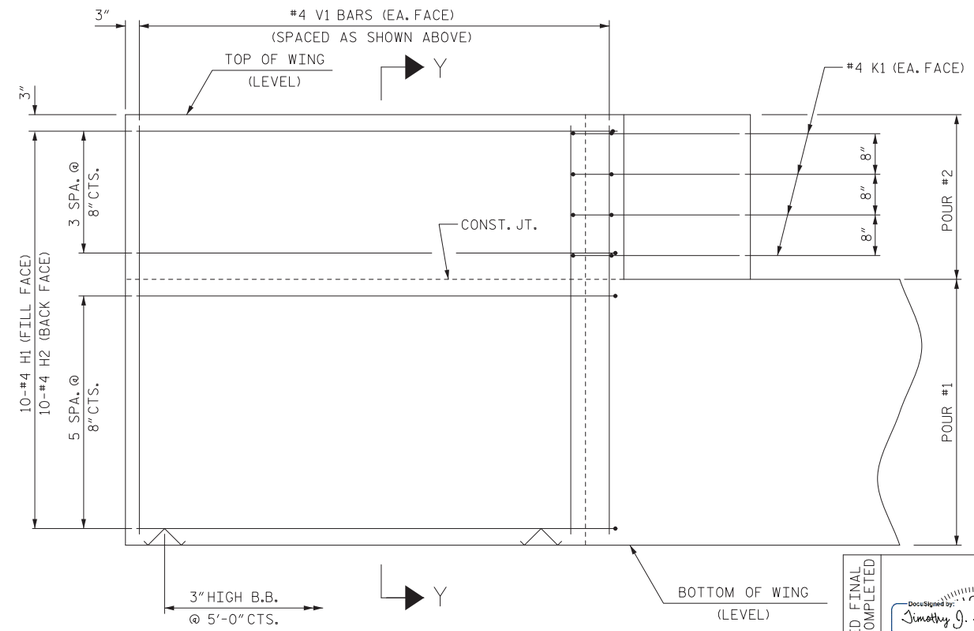

ELEVATION OF WING (W2)

WING DETAILS

PROJECT NO. 17BP.13.R.167

MADISON COUNTY

STATION: 13+82.23 -L-

SHEET 3 OF 4

DOCUMENT NOT CONSIDERED FINAL UNLESS ALL SIGNATURES COMPLETED

DocuSigned by: Timothy J. Townsend
B8C1881FA1E1482...
SEAL 34955 ENGINEER TIMOTHY J. TOWNSEND
3/2/2022

Mattern & Craig
ENGINEERS·SURVEYORS
12 BROAD STREET
ASHEVILLE, NORTH CAROLINA 28801
(828) 254-2201
FAX (828) 254-4562
NC LIC. NO. C-1154

STATE OF NORTH CAROLINA
DEPARTMENT OF TRANSPORTATION
RALEIGH

SUBSTRUCTURE
END BENT
WING DETAILS

REVISIONS								SHEET NO.
NO.	BY:	DATE:	NO.	BY:	DATE:			S-12
1			3					TOTAL SHEETS
2			4					16

DRAWN BY : KES	DATE : 02-22	DESIGN ENGINEER OF RECORD: T. TOWNSEND	DATE : 02-22
CHECKED BY : TJT	DATE : 02-22		

DATE: 2/25/2022 12:32:35 PM TIME: 12:32:35 PM
FILE: I:\3850D - Div 13 Bridge 310 (Madison Co)\Dwg\Sheets\401_023_17BP.13.R.167_SMU_E_012_560310.dgn

STD. NO. EB_30_120S4

DocuSign Envelope ID: 6316DB79-6B4F-4168-AEF2-17E825AD0720

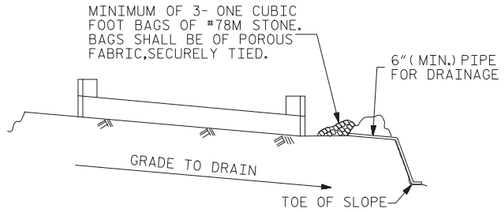

BAGGED STONE AND PIPE SHALL BE PLACED IMMEDIATELY AFTER COMPLETION OF END BENT EXCAVATION. PIPE MAY BE EITHER CONCRETE, CORRUGATED STEEL, CORRUGATED ALUMINUM ALLOY, OR CORRUGATED PLASTIC. PERFORATED PIPE WILL NOT BE ALLOWED.

BAGGED STONE SHALL REMAIN IN PLACE UNTIL THE ENGINEER DIRECTS THAT IT BE REMOVED. THE CONTRACTOR SHALL REMOVE AND DISPOSE OF SILT ACCUMULATIONS AT BAGGED STONE WHEN SO DIRECTED BY THE ENGINEER. BAGS SHALL BE REMOVED AND REPLACED WHENEVER THE ENGINEER DETERMINES THAT THEY HAVE DETERIORATED AND LOST THEIR EFFECTIVENESS.

NO SEPARATE PAYMENT WILL BE MADE FOR THIS WORK AND THE ENTIRE COST OF THIS WORK SHALL BE INCLUDED IN THE UNIT CONTRACT PRICE BID FOR THE SEVERAL PAY ITEMS.

TEMPORARY DRAINAGE AT END BENT

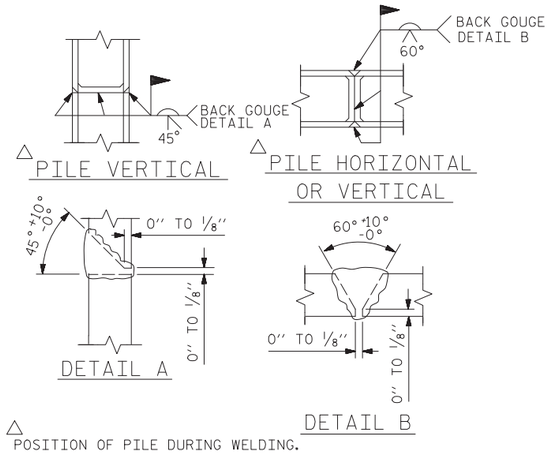

△ POSITION OF PILE DURING WELDING.

PILE SPLICE DETAILS

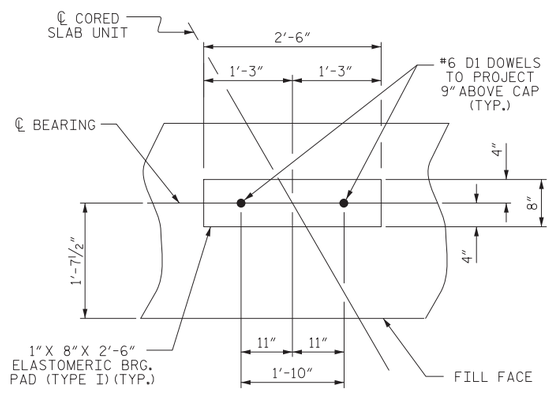

DETAIL "A"

(END BENT No. 1 SHOWN, END BENT No. 2 SIMILAR BY ROTATION)

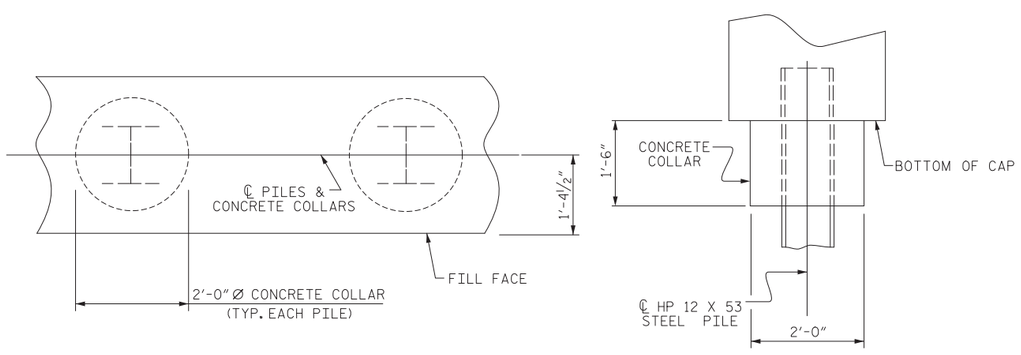

PLAN

ELEVATION

CORROSION PROTECTION FOR STEEL PILES DETAIL

(END BENT No. 1 SHOWN, END BENT No. 2 SIMILAR BY ROTATION)

BAR TYPES

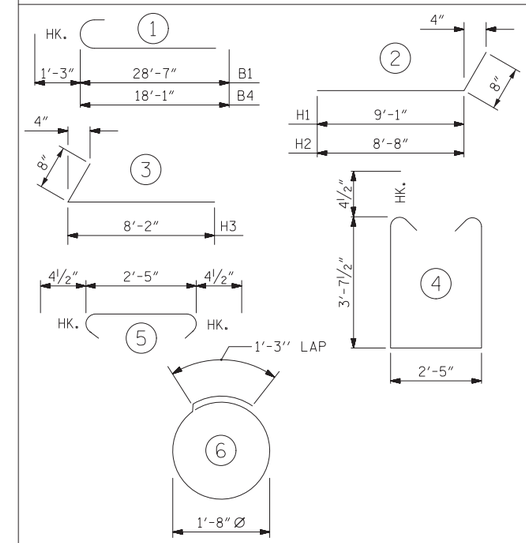

ALL BAR DIMENSIONS ARE OUT TO OUT.

END BENT No. 1	END BENT No. 2
HP 12 X 53 STEEL PILES NO: 5 LIN. FT.= 75	HP 12 X 53 STEEL PILES NO: 5 LIN. FT.= 75
PILE EXCAVATION IN SOIL 33 LIN. FT.	PILE EXCAVATION IN SOIL 34 LIN. FT.
PILE EXCAVATION NOT IN SOIL 17 LIN. FT.	PILE EXCAVATION NOT IN SOIL 16 LIN. FT.
PILE DRIVING EQUIPMENT SETUP FOR HP 12 X 53 STEEL PILES NO: 5	PILE DRIVING EQUIPMENT SETUP FOR HP 12 X 53 STEEL PILES NO: 5

BILL OF MATERIAL FOR ONE END BENT

STAGE 2 CONSTRUCTION

BAR	NO.	SIZE	TYPE	LENGTH	WEIGHT
B1	8	#9	1	29'-10"	811
B2	14	#4	STR	25'-10"	242
B3	6	#4	STR	2'-5"	10
D1	11	#6	STR	1'-6"	25
H1	5	#4	2	9'-9"	33
H2	5	#4	2	9'-4"	31
H3	10	#4	3	8'-10"	59
K1	8	#4	STR	3'-3"	18
S1	29	#4	4	10'-5"	202
S2	29	#4	5	3'-2"	62
S3	12	#4	6	6'-6"	52
V1	27	#4	STR	6'-5"	116

STAGE 2 REINFORCING STEEL (FOR ONE END BENT) 1661 LBS.

STAGE 3 CONSTRUCTION

BAR	NO.	SIZE	TYPE	LENGTH	WEIGHT
B3	5	#4	STR	2'-5"	8
B4	8	#9	1	19'-4"	526
B5	14	#4	STR	18'-1"	169
D1	9	#6	STR	1'-6"	21
H1	5	#4	2	9'-9"	33
H2	5	#4	2	9'-4"	31
H3	10	#4	3	8'-10"	59
K1	8	#4	STR	3'-3"	18
S1	25	#4	4	10'-5"	174
S2	25	#4	5	3'-2"	52
S3	8	#4	6	6'-6"	35
V1	27	#4	STR	6'-5"	116

STAGE 3 REINFORCING STEEL (FOR ONE END BENT) 1242 LBS.

CLASS A CONCRETE BREAKDOWN (FOR ONE END BENT)

POUR #1	CAP, LOWER PART OF WINGS & COLLARS	20.2 C.Y.
POUR #2	UPPER PART OF WINGS	2.4 C.Y.
	TOTAL CLASS A CONCRETE	22.6 C.Y.

CONTRACTOR PERMITTED TO USE MECHANICAL COUPLERS AS NECESSARY. IF MECHANICAL COUPLERS ARE USED, CONTRACTOR SHALL ADJUST BAR LENGTHS AS REQUIRED.

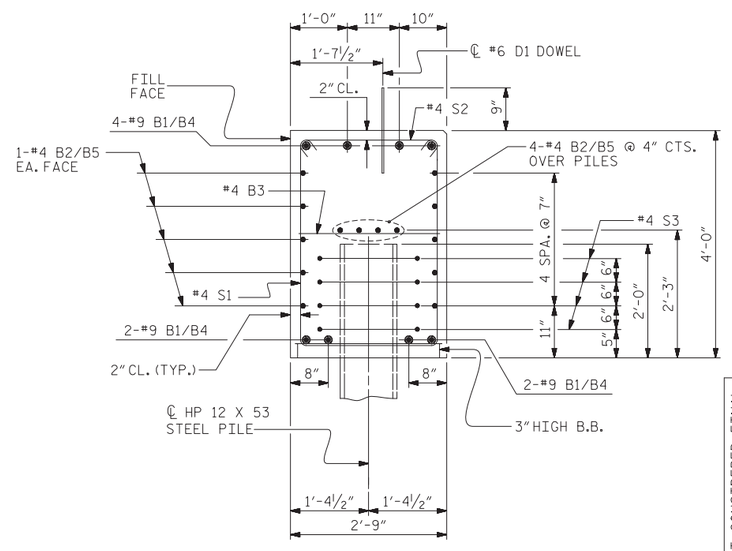

SECTION A-A

(CONCRETE COLLAR NOT SHOWN FOR CLARITY. SEE "CORROSION PROTECTION FOR STEEL PILES DETAIL.")

PROJECT NO. 17BP.13.R.167

MADISON COUNTY

STATION: 13+82.23 -L-

SHEET 4 OF 4

DOCUMENT NOT CONSIDERED FINAL UNLESS ALL SIGNATURES COMPLETED

DocuSigned by: Timothy J. Townsend
B8C1881FA1E1482...
SEAL 34955 ENGINEER TIMOTHY J. TOWNSEND
3/2/2022

Mattern & Craig
ENGINEERS·SURVEYORS
12 BROAD STREET
ASHEVILLE, NORTH CAROLINA 28801
(828) 254-2201
FAX (828) 254-4562
NC LIC. NO. C-1154

STATE OF NORTH CAROLINA
DEPARTMENT OF TRANSPORTATION
RALEIGH

SUBSTRUCTURE

END BENT No. 1 & 2 DETAILS

REVISIONS							SHEET NO.
NO.	BY:	DATE:	NO.	BY:	DATE:		S-13
1			3				TOTAL SHEETS
2			4				16

DRAWN BY : KES	DATE : 02-22	DESIGN ENGINEER OF RECORD: T. TOWNSEND	DATE : 02-22
CHECKED BY : TJT	DATE : 02-22		

DATE: 2/25/2022 12:32:35 PM TIME: 12:32:35 PM
FILE: I:\3850D - Div 13 Bridge 310 (Madison Co)\Dwg\Sheets\401_025_17BP.13.R.167_SMU_E_013_560310.dgn

DocuSign Envelope ID: 6316DB79-6B4F-4168-AEF2-17E825AD0720

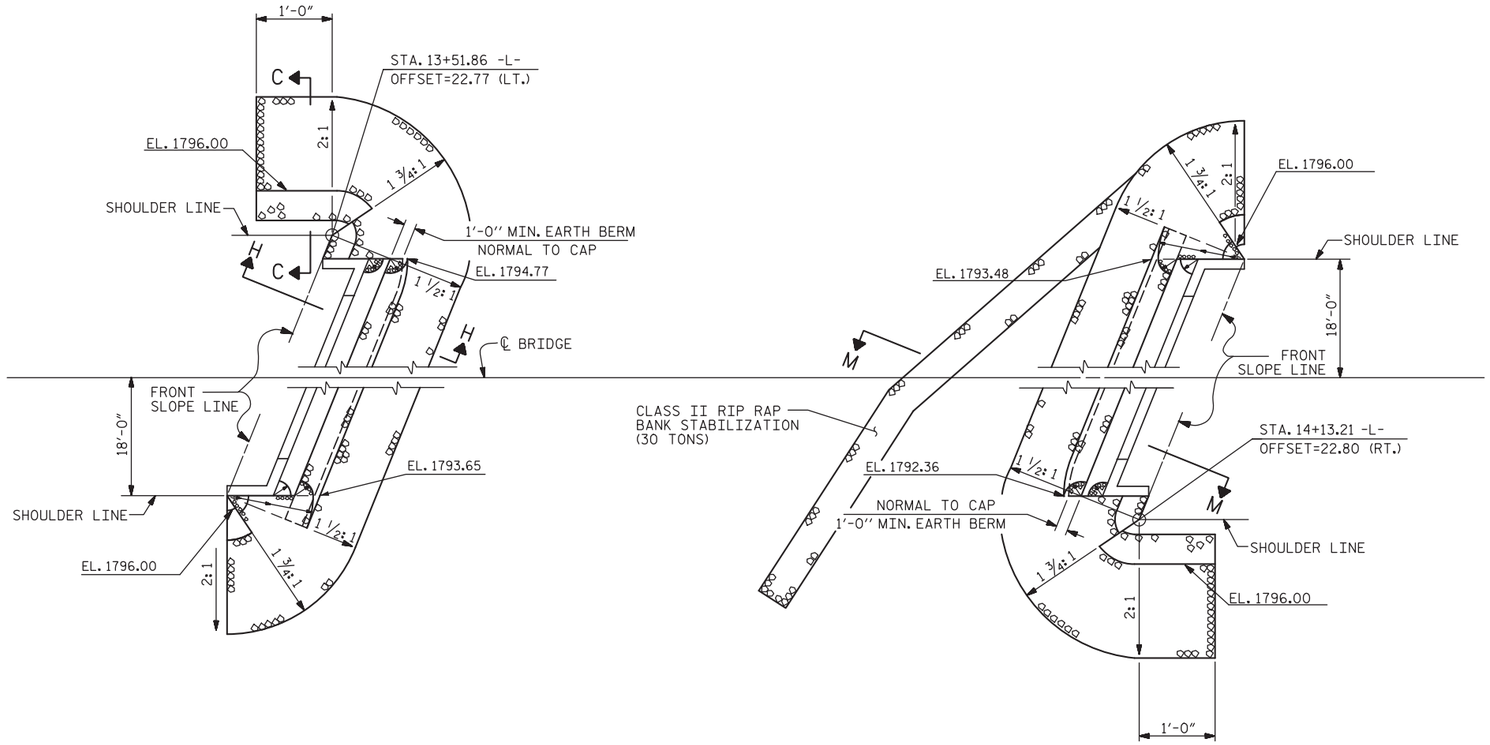

SHOULDER RIP RAP IS HIGHER THAN BERM RIP RAP

ESTIMATED QUANTITIES		
BRIDGE @ STA. 13+82.23 -L-	RIP RAP CLASS II (2'-0" THICK)	GEOTEXTILE FOR DRAINAGE
	TONS	SQUARE YARDS
END BENT 1	100	125
END BENT 2	94	116

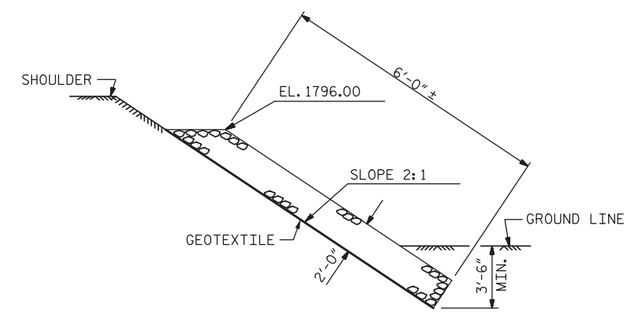

SECTION C-C

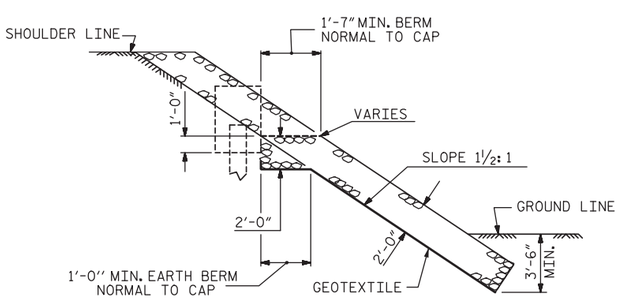

SECTION H-H

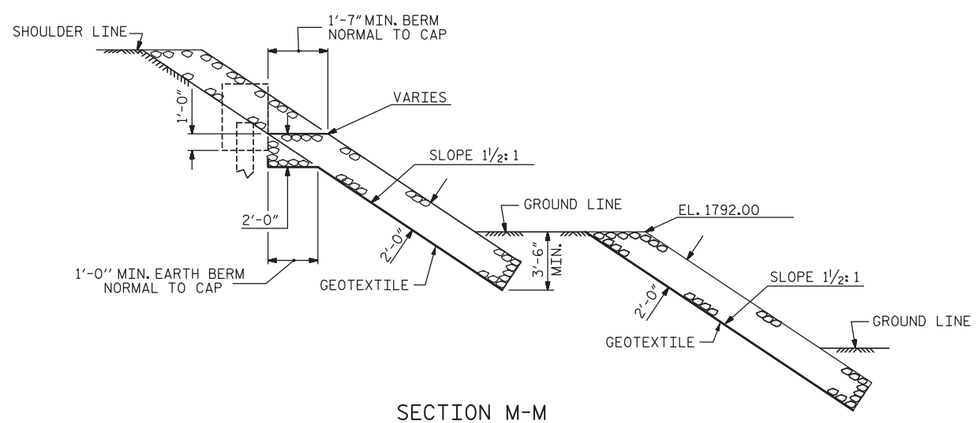

SECTION M-M

PROJECT NO. 17BP.13.R.167

MADISON COUNTY

STATION: 13+82.23 -L-

DOCUMENT NOT CONSIDERED FINAL UNLESS ALL SIGNATURES COMPLETED

DocuSigned by: Timothy J. Townsend
BBC1881FA1E482...
SEAL 34955 ENGINEER TIMOTHY J. TOWNSEND
3/2/2022

Mattern & Craig
ENGINEERS·SURVEYORS
12 BROAD STREET
ASHEVILLE, NORTH CAROLINA 28801
(828) 254-2201
FAX (828) 254-4562
NC LIC. NO. C-1154

STATE OF NORTH CAROLINA
DEPARTMENT OF TRANSPORTATION
RALEIGH

STANDARD

RIP RAP DETAILS

REVISIONS						
NO.	BY:	DATE:	NO.	BY:	DATE:	
1			3			
2			4			

SHEET NO. S-14

TOTAL SHEETS 16

DRAWN BY : KES	DATE : 02-22	DESIGN ENGINEER OF RECORD: T. TOWNSEND	DATE : 02-22
CHECKED BY : TJT	DATE : 02-22		

DATE: 2/25/2022 12:32:36 PM TIME: 12:32:36 PM
FILE: I:\3850D - Div 13 Bridge 310 (Madison Co)\Dwg\Sheets\401_027_17BP.13.R.167_SMU_RR_014_560310.dgn

DocuSign Envelope ID: 6316DB79-6B4F-4168-AEF2-17E825AD0720

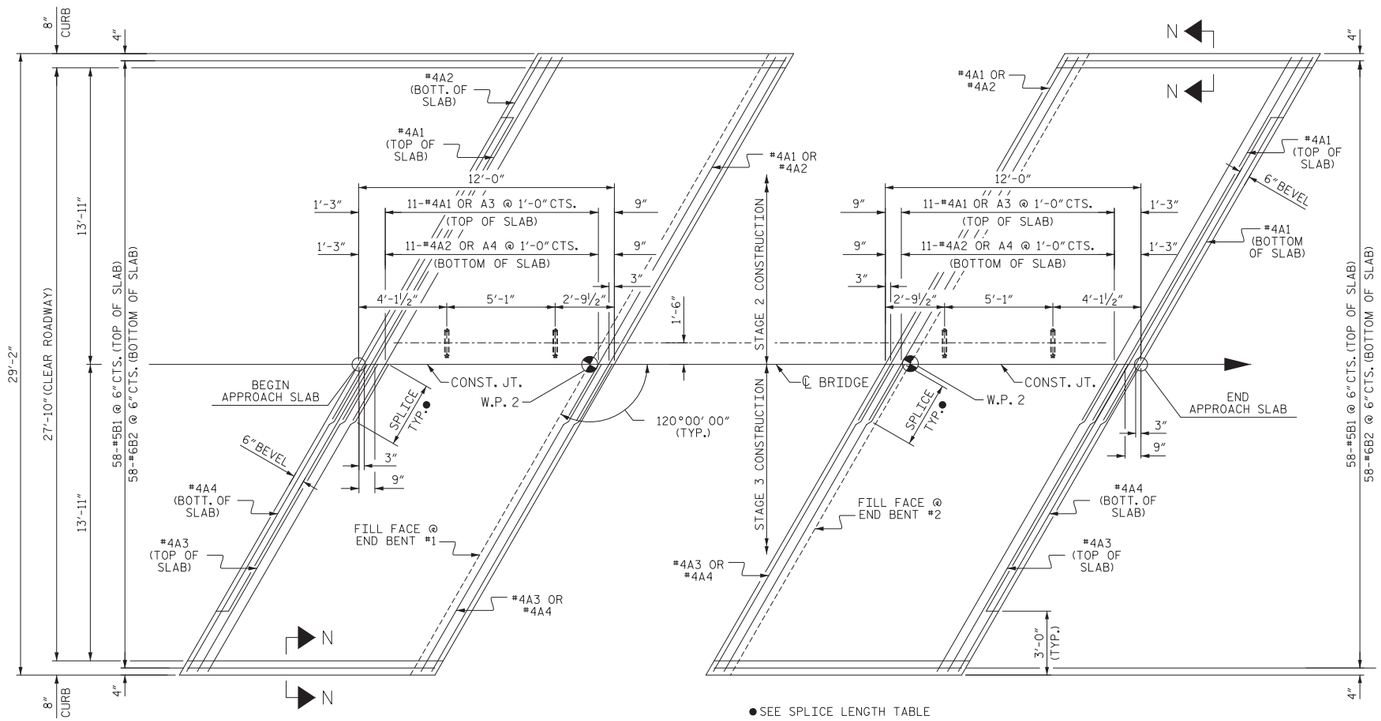

PLAN @ END BENT #1

PLAN @ END BENT #2

DIMENSIONS SHOWN ARE TYPICAL FOR BOTH APPROACH SLABS

NOTE: FOR PORTABLE CONCRETE BARRIER ASSEMBLY DETAILS, SEE SHEET S-5 AND S-7.

NOTES

FOR BRIDGE APPROACH FILL INCLUDING GEOTEXTILE, 4" Ø DRAINAGE PIPE, AND SELECT MATERIAL BACKFILL, SEE ROADWAY PLANS.

GEOTEXTILE SHALL BE TYPE 1 IN ACCORDANCE WITH THE STANDARD SPECIFICATIONS SECTION 1056.

SELECT MATERIAL BACKFILL (CLASS V OR CLASS VI) SHALL BE IN ACCORDANCE WITH STANDARD SPECIFICATIONS SECTION 1016.

SELECT MATERIAL BACKFILL IS TO BE CONTINUOUS ALONG FILL FACE OF BACKWALL FROM OUTSIDE EDGE TO OUTSIDE EDGE OF APPROACH SLAB.

FOR THE 4" Ø DRAINAGE PIPE OUTLET(S), SEE ROADWAY STANDARD DRAWINGS.

AREA BETWEEN THE WINGWALL AND APPROACH SLAB SHALL BE GRADED TO DRAIN THE WATER AWAY FROM THE FILL FACE OF THE BRIDGE AND SHALL BE PAVED. SEE ROADWAY PLANS.

APPROACH SLAB GROOVING IS NOT REQUIRED.

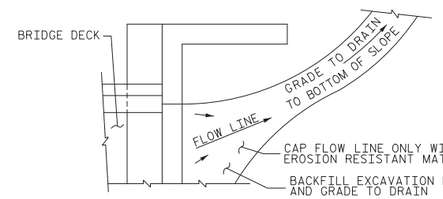

NOTE: IF THE APPROACH SLAB IS NOT CONSTRUCTED IMMEDIATELY AFTER THE BACKFILLING OF THE END BENT EXCAVATION, GRADE TO DRAIN TO THE BOTTOM OF THE SLOPE AND PROVIDE EROSION RESISTANT MATERIAL, SUCH AS FIBERGLASS ROVING OR AS DIRECTED BY THE ENGINEER TO PREVENT SOIL EROSION AND TO PROTECT THE AREA ADJACENT TO THE STRUCTURE. THE CONTRACTOR WILL BE REQUIRED TO REMOVE THESE MATERIALS PRIOR TO CONSTRUCTION OF THE APPROACH SLAB.

TEMPORARY DRAINAGE DETAIL

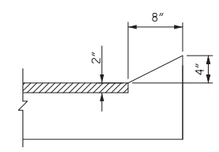

SECTION N-N

CURB DETAILS

BILL OF MATERIAL

APPROACH SLAB AT EB #1

STAGE 2 CONSTRUCTION

BAR	NO.	SIZE	TYPE	LENGTH	WEIGHT
✱ A1	13	#4	STR	18'-10"	164
A2	13	#4	STR	18'-7"	162
✱ B1	29	#5	STR	11'-1"	335
B2	29	#6	STR	11'-7"	504
REINFORCING STEEL				LBS.	666
✱ EPOXY COATED REINFORCING STEEL				LBS.	499
CLASS AA CONCRETE				C.Y.	10.0

APPROACH SLAB AT EB #2

STAGE 2 CONSTRUCTION

BAR	NO.	SIZE	TYPE	LENGTH	WEIGHT
✱ A1	13	#4	STR	18'-10"	164
A2	13	#4	STR	18'-7"	162
✱ B1	29	#5	STR	11'-1"	445
B2	29	#6	STR	11'-7"	504
REINFORCING STEEL				LBS.	666
✱ EPOXY COATED REINFORCING STEEL				LBS.	499
CLASS AA CONCRETE				C.Y.	10.0

APPROACH SLAB AT EB #1

STAGE 3 CONSTRUCTION

BAR	NO.	SIZE	TYPE	LENGTH	WEIGHT
✱ A3	13	#4	STR	16'-6"	143
A4	13	#4	STR	16'-6"	143
✱ B1	29	#5	STR	11'-1"	335
B2	29	#6	STR	11'-7"	504
REINFORCING STEEL				LBS.	647
✱ EPOXY COATED REINFORCING STEEL				LBS.	478
CLASS AA CONCRETE				C.Y.	8.0

APPROACH SLAB AT EB #2

STAGE 3 CONSTRUCTION

BAR	NO.	SIZE	TYPE	LENGTH	WEIGHT
✱ A3	13	#4	STR	16'-6"	143
A4	13	#4	STR	16'-6"	143
✱ B1	29	#5	STR	11'-1"	335
B2	29	#6	STR	11'-7"	504
REINFORCING STEEL				LBS.	647
✱ EPOXY COATED REINFORCING STEEL				LBS.	478
CLASS AA CONCRETE				C.Y.	8.0

SPLICE LENGTHS

BAR SIZE	EPOXY COATED	UNCOATED
#4	2'-0"	1'-9"
#5	2'-6"	2'-2"
#6	3'-10"	2'-7"

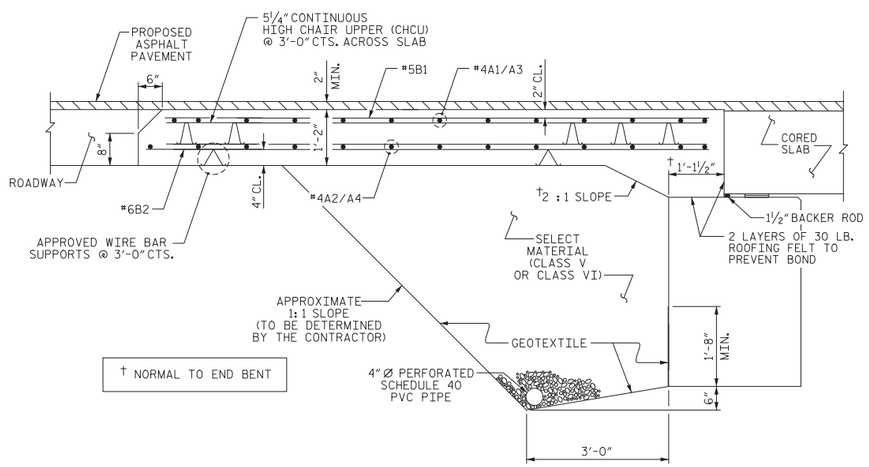

† NORMAL TO END BENT

SECTION THRU SLAB

(TYPE II - MODIFIED APPROACH FILL)

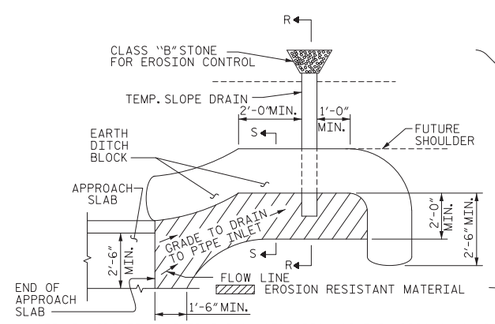

NOTE: IMMEDIATELY AFTER THE CONSTRUCTION OF THE APPROACH SLAB, THE CONTRACTOR SHALL PROVIDE TEMPORARY BERM AND SLOPE DRAIN. CONTRACTOR SHALL GRADE TO PIPE INLET AND PROVIDE EROSION RESISTANT MATERIAL AS SHOWN. THE EROSION RESISTANT MATERIAL SHALL BE EITHER 1) ASPHALT PLANT MIX, TYPE 1 OR TYPE 2, MIN. 2" DEPTH, 2) EROSION CONTROL MAT, OR 3) CONCRETE, AS DIRECTED BY THE ENGINEER. THE SLOPE DRAIN SHALL CONSIST OF A NON-PERFORATED TEMPORARY DRAINAGE PIPE, 12 INCHES IN DIAMETER.

PLAN VIEW

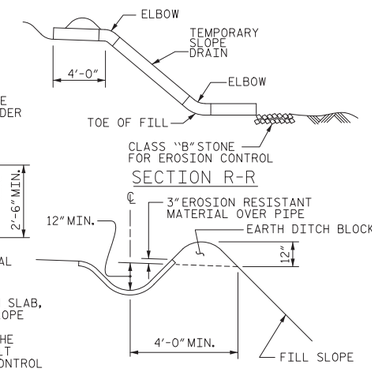

SECTION S-S

TEMPORARY BERM AND SLOPE DRAIN DETAILS

(TO BE USED WHEN SHOULDER BERM GUTTER IS REQUIRED)

PROJECT NO. 17BP.13.R.167

MADISON COUNTY

STATION: 13+82.23 -L-

DOCUMENT NOT CONSIDERED FINAL UNLESS ALL SIGNATURES COMPLETED

DocuSigned by: Timothy J. Townsend
BBC1881FA1E1402...
SEAL 34955 ENGINEER TIMOTHY J. TOWNSEND
3/2/2022

Mattern & Craig
ENGINEERS•SURVEYORS
12 BROAD STREET
ASHEVILLE, NORTH CAROLINA 28801
(828) 254-2201
FAX (828) 254-4562
NC LIC. NO. C-1154

STATE OF NORTH CAROLINA
DEPARTMENT OF TRANSPORTATION
RALEIGH

BRIDGE APPROACH SLAB FOR PRESTRESSED CONCRETE CORED SLAB UNIT (SUB-REGIONAL TIER) 120° SKEW

REVISIONS							
NO.	BY:	DATE:	NO.	BY:	DATE:	SHEET NO.	S-15
1			3			TOTAL SHEETS	16
2			4				

DRAWN BY : KES	DATE : 02-22	DESIGN ENGINEER OF RECORD: T. TOWNSEND	DATE : 02-22
CHECKED BY : TJT	DATE : 02-22		

DATE: 2/25/2022 12:32:36 PM TIME: 12:32:36 PM
FILE: I:\3850D - Div 13 Bridge 310 (Madison Co)\Dwg\Sheets\401_029_17BP.13.R.167_SMU_AS_015.560310.dgn

DocuSign Envelope ID: 6316DB79-6B4F-4168-AEF2-17E825AD0720

STANDARD NOTES

DESIGN DATA:

SPECIFICATIONS	A.A.S.H.T.O. (CURRENT)
LIVE LOAD	SEE PLANS
IMPACT ALLOWANCE	SEE A.A.S.H.T.O.
STRESS IN EXTREME FIBER OF STRUCTURAL STEEL - AASHTO M270 GRADE 36	20,000 LBS. PER SQ. IN.
- AASHTO M270 GRADE 50W	27,000 LBS. PER SQ. IN.
- AASHTO M270 GRADE 50	27,000 LBS. PER SQ. IN.
REINFORCING STEEL IN TENSION - GRADE 60	24,000 LBS. PER SQ. IN.
CONCRETE IN COMPRESSION	1,200 LBS. PER SQ. IN.
CONCRETE IN SHEAR	SEE A.A.S.H.T.O.
STRUCTURAL TIMBER - TREATED OR UNTREATED EXTREME FIBER STRESS	1,800 LBS. PER SQ. IN.
COMPRESSION PERPENDICULAR TO GRAIN OF TIMBER	375 LBS. PER SQ. IN.
EQUIVALENT FLUID PRESSURE OF EARTH	30 LBS. PER CU. FT. (MINIMUM)

MATERIAL AND WORKMANSHIP:

EXCEPT AS MAY OTHERWISE BE SPECIFIED ON PLANS OR IN THE SPECIAL PROVISIONS, ALL MATERIAL AND WORKMANSHIP SHALL BE IN ACCORDANCE WITH THE 2018 "STANDARD SPECIFICATIONS FOR ROADS AND STRUCTURES" OF THE N. C. DEPARTMENT OF TRANSPORTATION.

STEEL SHEET PILING FOR PERMANENT OR TEMPORARY APPLICATIONS SHALL BE HOT ROLLED.

CONCRETE:

UNLESS OTHERWISE REQUIRED ON PLANS, CLASS A CONCRETE SHALL BE USED FOR ALL PORTIONS OF ALL STRUCTURES WITH THE EXCEPTION THAT: CLASS AA CONCRETE SHALL BE USED IN BRIDGE SUPERSTRUCTURES, ABUTMENT BACKWALLS, AND APPROACH SLABS; AND CLASS B CONCRETE SHALL BE USED FOR SLOPE PROTECTION AND RIP RAP.

CONCRETE CHAMFERS:

UNLESS OTHERWISE NOTED ON THE PLANS, ALL EXPOSED CORNERS ON STRUCTURES SHALL BE CHAMFERED ¾" WITH THE FOLLOWING EXCEPTIONS: TOP CORNERS OF CURBS MAY BE ROUNDED TO 1½" RADIUS WHICH IS BUILT INTO CURB FORMS; CORNERS OF TRANSVERSE FLOOR EXPANSION JOINTS SHALL BE ROUNDED WITH A ¼" FINISHING TOOL UNLESS OTHERWISE REQUIRED ON PLANS; AND CORNERS OF EXPANSION JOINTS IN THE ROADWAY FACES AND TOPS OF CURBS AND SIDEWALKS SHALL BE ROUNDED TO A ¼" RADIUS WITH A FINISHING STONE OR TOOL UNLESS OTHERWISE REQUIRED ON PLANS.

DOWELS:

DOWELS WHEN INDICATED ON PLANS AS FOR CULVERT EXTENSIONS, SHALL BE EMBEDDED AT LEAST 12" INTO THE OLD CONCRETE AND GROUTED INTO PLACE WITH 1:2 CEMENT MORTAR.

ALLOWANCE FOR DEAD LOAD DEFLECTION, SETTLEMENT, ETC. IN CASTING SUPERSTRUCTURES:

BRIDGES SHALL BE BUILT ON THE GRADE OR VERTICAL CURVE SHOWN ON PLANS. SLABS, CURBS AND PARAPETS SHALL CONFORM TO THE GRADE OR CURVE.

ALL DIMENSIONS WHICH ARE GIVEN IN SECTION AND ARE AFFECTED BY DEAD LOAD DEFLECTIONS ARE DIMENSIONS AT CENTER LINE OF BEARING UNLESS OTHERWISE NOTED ON PLANS. IN SETTING FORMS FOR STEEL BEAM BRIDGES AND PRESTRESSED CONCRETE GIRDER BRIDGES, ADJUSTMENTS SHALL BE MADE DUE TO THE DEAD LOAD DEFLECTIONS FOR THE ELEVATIONS SHOWN. WHERE BLOCKS ARE SHOWN OVER BEAMS FOR BUILDING UP TO THE SLAB, THE VERTICAL DIMENSIONS OF THE BLOCKS SHALL BE ADJUSTED BETWEEN BEARINGS TO COMPENSATE FOR DEAD LOAD DEFLECTIONS, VERTICAL CURVE ORDINATE, AND ACTUAL BEAM CAMBER. WHERE BOTTOM OF SLAB IS IN LINE WITH BOTTOM OF TOP FLANGES, DEPTH OF SLAB BETWEEN BEARINGS SHALL BE ADJUSTED TO COMPENSATE FOR DEAD LOAD DEFLECTION, VERTICAL CURVE ORDINATE, AND ACTUAL BEAM CAMBER.

IN SETTING FALSEWORK AND FORMS FOR REINFORCED CONCRETE SPANS, AN ALLOWANCE SHALL BE MADE FOR DEAD LOAD DEFLECTIONS, SETTLEMENT OF FALSEWORK, AND PERMANENT CAMBER WHICH SHALL BE PROVIDED FOR IN ADDITION TO THE ELEVATIONS SHOWN. AFTER REMOVAL OF THE FALSEWORK, THE FINISHED STRUCTURES SHALL CONFORM TO THE PROFILE AND ELEVATIONS SHOWN ON THE PLANS AND CONSTRUCTION ELEVATIONS FURNISHED BY THE ENGINEER.

DETAILED DRAWINGS FOR FALSEWORK OR FORMS FOR BRIDGE SUPERSTRUCTURE AND ANY STRUCTURE OR PARTS OF A STRUCTURE AS NOTED ON THE PLANS SHALL BE SUBMITTED TO THE ENGINEER FOR APPROVAL BEFORE CONSTRUCTION OF THE FALSEWORK OR FORMS IS STARTED.

REINFORCING STEEL:

ALL REINFORCING STEEL SHALL BE DEFORMED. DIMENSIONS RELATIVE TO PLACEMENT OF REINFORCING ARE TO CENTERS OF BARS UNLESS OTHERWISE INDICATED IN THE PLANS. DIMENSIONS ON BAR DETAILS ARE TO CENTERS OF BARS OR ARE OUT TO OUT AS INDICATED ON PLANS.

WIRE BAR SUPPORTS SHALL BE PROVIDED FOR REINFORCING STEEL WHERE INDICATED ON THE PLANS. WHEN BAR SUPPORT PIECES ARE PLACED IN CONTINUOUS LINES, THEY SHALL BE SO PLACED THAT THE ENDS OF THE SUPPORTING WIRES SHALL BE LAPPED TO LOCK LEGS ON ADJOINING PIECES.

STRUCTURAL STEEL:

AT THE CONTRACTOR'S OPTION, HE MAY SUBSTITUTE ⅞" Ø SHEAR STUDS FOR THE ¾" Ø STUDS SPECIFIED ON THE PLANS. THIS SUBSTITUTION SHALL BE MADE AT THE RATE OF 3 - ⅞" Ø STUDS FOR 4 - ¾" Ø STUDS, AND STUD SPACING CHANGES SHALL BE MADE AS NECESSARY TO PROVIDE THE SAME EQUIVALENT NUMBER OF ⅞" Ø STUDS ALONG THE BEAM AS SHOWN FOR ¾" Ø STUDS BASED ON THE RATIO OF 3 - ⅞" Ø STUDS FOR 4 - ¾" Ø STUDS. STUDS OF THE LENGTH SPECIFIED ON THE PLANS MUST BE PROVIDED. THE MAXIMUM SPACING SHALL BE 2'-0".

EXCEPT AT THE INTERIOR SUPPORTS OF CONTINUOUS BEAMS WHERE THE COVER PLATE IS IN CONTACT WITH BEARING PLATE, THE CONTRACTOR MAY, AT HIS OPTION, SUBSTITUTE FOR THE COVER PLATES DESIGNATED ON THE PLANS COVER PLATES OF THE EQUIVALENT AREA PROVIDED THESE PLATES ARE AT LEAST 5/16" IN THICKNESS AND DO NOT EXCEED A WIDTH EQUAL TO THE FLANGE WIDTH LESS 2" OR A THICKNESS EQUAL TO 2 TIMES THE FLANGE THICKNESS. THE SIZE OF FILLET WELDS SHALL CONFORM TO THE REQUIREMENTS OF THE CURRENT ANSI/AASHTO/AWS "BRIDGE WELDING CODE". ELECTROSLAG WELDING WILL NOT BE PERMITTED.

WITH THE SOLE EXCEPTION OF EDGES AT SURFACES WHICH BEAR ON OTHER SURFACES, ALL SHARP EDGES AND ENDS OF SHAPES AND PLATES SHALL BE SLIGHTLY ROUNDED BY SUITABLE MEANS TO A RADIUS OF APPROXIMATELY 1/16 INCH OR EQUIVALENT FLAT SURFACE AT A SUITABLE ANGLE PRIOR TO PAINTING, GALVANIZING, OR METALLIZING.

HANDRAILS AND POSTS:

METAL STANDARDS AND FACES OF THE CONCRETE END POSTS FOR THE METAL RAIL SHALL BE SET NORMAL TO THE GRADE OF THE CURB, UNLESS OTHERWISE SHOWN ON PLANS. THE METAL RAIL AND TOPS OF CONCRETE POSTS USED WITH THE ALUMINUM RAIL SHALL BE BUILT PARALLEL TO THE GRADE OF THE CURB.

METAL HANDRAILS SHALL BE IN ACCORDANCE WITH THE PLANS. RAILS SHALL BE AS MANUFACTURED FOR BRIDGE RAILING. CASTINGS SHALL BE OF A UNIFORM APPEARANCE. FINS AND OTHER DEFORMATIONS RESULTING FROM CASTING OR OTHERWISE SHALL BE REMOVED IN A MANNER SO THAT A UNIFORM COLORING OF THE COMPLETED CASTING SHALL BE OBTAINED. CASTINGS WITH DISCOLORATIONS OR OF NON-UNIFORM COLORING WILL NOT BE ACCEPTED. CERTIFIED MILL REPORTS ARE REQUIRED FOR METAL RAILS AND POSTS.

SPECIAL NOTES:

GENERALLY, IN CASE OF DISCREPANCY, THIS STANDARD SHEET OF NOTES SHALL GOVERN OVER THE SPECIFICATIONS, BUT THE REMAINDER OF THE PLANS SHALL GOVERN OVER NOTES HEREON, AND SPECIAL PROVISIONS SHALL GOVERN OVER ALL. SEE SPECIFICATIONS ARTICLE 105-4.

PROJECT NO. 17BP.13.R.167

MADISON COUNTY

STATION: 13+82.23 -L-

STATE OF NORTH CAROLINA
DEPARTMENT OF TRANSPORTATION
RALEIGH

STANDARD NOTES

REVISIONS						SHEET NO.
NO.	BY:	DATE:	NO.	BY:	DATE:	S-16
1			3			TOTAL SHEETS
2			4			16

DRAWN BY : KES DATE : 9-19	DESIGN ENGINEER OF RECORD: T. TOWNSEND	DATE : 8-19
CHECKED BY : TJT DATE : 9-19		

DATE: 2/25/2022 12:32:37 PM TIME: 12:32:37 PM
FILE: I:\3850D - Div 13 Bridge 310 (Madison Co)\Dwg\Sheets\401_031_17BP.13.R.167_SMU_SN_016_560310.dgn

DocuSign Envelope ID: C859E6FC-1301-4F3E-895B-6C10029A58A9

PROJECT: 17BP.13.R.170

CONTRACT: DM00333

See Sheet 1-A For Index of Sheets
See Sheet 1-B for Conventional Symbols

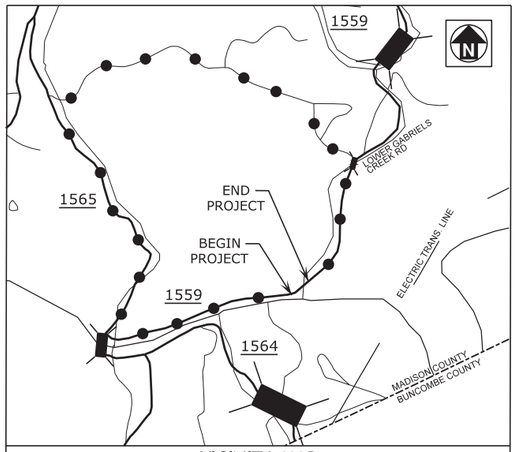

VICINITY MAP
(NOT TO SCALE)
OFF-SITE DETOUR

STATE OF NORTH CAROLINA

DIVISION OF HIGHWAYS

MADISON COUNTY

STATE	STATE PROJECT REFERENCE NO.	SHEET NO.	TOTAL SHEETS
N.C.	17BP.13.R.170	1	

STATE PROJECT NO.	F.A. PROJ. NO.	DESCRIPTION
17BP.13.PE.170	N/A	P.E.
17BP.13.ROW.170	N/A	R/W & UTIL
17BP.13.R.170	N/A	CONST

LOCATION: BRIDGE NO. 300 ON SR 1559 (LOWER GABRIELS CREEK RD) OVER GABRIEL CREEK

TYPE OF WORK: GRADING, PAVING, DRAINAGE, AND STRUCTURE

4

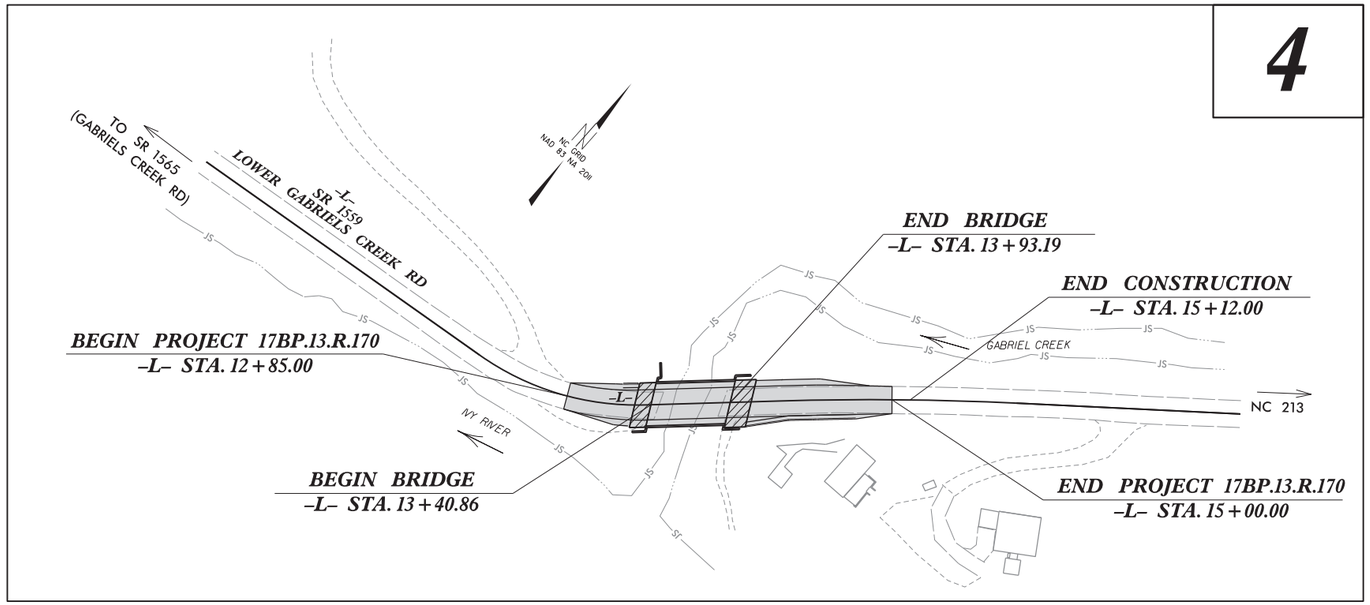

PLANS PREPARED BY:

Mattern & Craig
ENGINEERS •SURVEYORS
12 BROAD STREET
ASHEVILLE, NORTH CAROLINA 28801
(828) 254-2201
FAX (828) 254-4562
NC LIC. NO. C-1154

DOCUMENT NOT CONSIDERED FINAL UNLESS ALL SIGNATURES COMPLETED

GRAPHIC SCALES

30 15 0 30 60
PLANS

30 15 0 30 60
PROFILE (HORIZONTAL)

10 5 0 10 20
PROFILE (VERTICAL)

DESIGN DATA

ADT (2017) = 250

V = 30 MPH

FUNC CLASS =
RURAL LOCAL
SUBREGIONAL TIER

PROJECT LENGTH

LENGTH ROADWAY PROJECT 17BP.13.R.170 = 0.031 MILES

LENGTH STRUCTURE PROJECT 17BP.13.R.170 = 0.010 MILES

TOTAL LENGTH PROJECT 17BP.13.R.170 = 0.041 MILES

Prepared In the Office of:
MATTERN & CRAIG
12 BROAD ST.
ASHEVILLE, NC 28801
FOR NCDOT DIVISION OF HIGHWAYS

2018 STANDARD SPECIFICATIONS

RIGHT OF WAY DATE:
JULY 2, 2021

LETTING DATE:
DECEMBER 21, 2022

AARON CARVER, PE
PROJECT ENGINEER

MENG YANG, PE
PROJECT DESIGN ENGINEER

NCDOT CONTACT:
MIKE CALLOWAY
DIVISION 13 BRIDGE PROGRAM MANAGER

ROADWAY DESIGN ENGINEER

DocuSigned by: Aaron Carver 8250B42A220F49C...
NORTH CAROLINA PROFESSIONAL SEAL 030453 ENGINEER AARON C. CARVER
11/29/2022
SIGNATURE: *P.E.*

HYDRAULICS ENGINEER

DocuSigned by: Aaron Carver 8250B42A220F49C...
NORTH CAROLINA PROFESSIONAL SEAL 030453 ENGINEER AARON C. CARVER
11/29/2022
SIGNATURE: *P.E.*

STATE OF NORTH CAROLINA • DEPARTMENT OF TRANSPORTATION •

DocuSign Envelope ID: 077A085F-B0AB-4B0A-9C2A-1DF07548A0A3

PROJECT REFERENCE NO.	SHEET NO.
17BPJ3.R170	1A

ROADWAY DESIGN ENGINEER

NORTH CAROLINA PROFESSIONAL SEAL
DocuSigned by: Aaron Carver
8250B42A220F49C...
NORTH CAROLINA
10/13/2022

INDEX OF SHEETS

SHEET NUMBER	SHEET
1	TITLE SHEET
1A	INDEX OF SHEETS, GENERAL NOTES, AND LIST OF STANDARD DRAWINGS
1B	CONVENTIONAL PLAN SHEET SYMBOLS
2A-1	PAVEMENT SCHEDULE & TYPICAL SECTIONS
2C-1	GUARDRAIL INSTALLATION IN LIEU OF STD 862.02 SHEET 6 OF 8
2C-2	GUARDRAIL INSTALLATION IN LIEU OF STD 862.03 SHEET 1 OF 7 AND SHEET 2 OF 7
2C-3	MODIFIED CONCRETE FLUME
3B-1	SUMMARY OF DRAINAGE QUANTITIES, SUMMARY OF GUARDRAIL, SUMMARY OF PAVEMENT REMOVAL, AND SUMMARY OF EARTHWORK
3G-1	GEOTECHNICAL SUMMARY SHEET
4	PLAN SHEET & PROFILE SHEET
RW01 thru RW04	RIGHT OF WAY SHEETS
TMP-1 thru TMP-2	TRAFFIC MANAGEMENT PLANS
PM-1	PAVEMENT MARKING PLAN
EC-1 thru EC-5	EROSION CONTROL PLANS
X-0	CROSS-SECTION SUMMARY SHEET
X-1 thru X-3	CROSS SECTION SHEETS
S-1 thru S-20	STRUCTURE PLANS

GENERAL NOTES

GENERAL NOTES: 2018 SPECIFICATIONS
EFFECTIVE: 01-16-2018
REVISED:

GRADING AND SURFACING OR RESURFACING AND WIDENING:

THE GRADE LINES SHOWN DENOTE THE FINISHED ELEVATION OF THE PROPOSED SURFACING AT GRADE POINTS SHOWN ON THE TYPICAL SECTIONS. WHERE NO GRADE LINES ARE SHOWN, THE PROFILES SHOWN DENOTE THE TOP ELEVATION OF THE EXISTING PAVEMENT ALONG THE CENTER LINE OF SURVEY ON WHICH THE PROPOSED RESURFACING WILL BE PLACED. GRADE LINES MAY BE ADJUSTED BY THE ENGINEER IN ORDER TO SECURE A PROPER TIE-IN.

CLEARING:

CLEARING ON THIS PROJECT SHALL BE PERFORMED TO THE LIMITS ESTABLISHED BY METHOD II.

SUPER ELEVATION:

ALL CURVES ON THIS PROJECT SHALL BE SUPERELEVATED IN ACCORDANCE WITH STD. NO. 225.04 USING THE RATE OF SUPERELEVATION AND RUNOFF SHOWN ON THE PLANS. SUPERELEVATION IS TO BE REVOLVED ABOUT THE GRADE POINTS SHOWN ON THE TYPICAL SECTIONS.

SUBSURFACE DRAINS:

SUBSURFACE DRAINS SHALL BE CONSTRUCTED IN ACCORDANCE WITH STD. NO. 815.02 AT LOCATIONS DIRECTED BY THE ENGINEER.

SHOULDER CONSTRUCTION:

ASPHALT, EARTH, AND CONCRETE SHOULDER CONSTRUCTION ON THE HIGH SIDE OF SUPERELEVATED CURVES SHALL BE IN ACCORDANCE WITH STD. NO. 560.01

GUARDRAIL:

THE GUARDRAIL LOCATIONS SHOWN ON THE PLANS MAY BE ADJUSTED DURING CONSTRUCTION AS DIRECTED BY THE ENGINEER. THE CONTRACTOR SHOULD CONSULT WITH THE ENGINEER PRIOR TO ORDERING GUARDRAIL MATERIAL.

TEMPORARY SHORING:

SHORING REQUIRED FOR THE MAINTENANCE OF TRAFFIC WILL BE PAID FOR AS "EXTRA WORK" IN ACCORDANCE WITH SECTION 104-7

END BENTS:

THE ENGINEER SHALL CHECK THE STRUCTURE END BENT PLANS, DETAILS, AND CROSS-SECTION PRIOR TO SETTING OF THE SLOPE STAKES FOR THE EMBANKMENT OR EXCAVATION APPROACHING A BRIDGE.

UTILITIES:

UTILITY OWNERS ON THIS PROJECT ARE:
POWER - FRENCH BROAD ELECTRIC MEMBERSHIP CORP.

ANY RELOCATION OF EXISTING UTILITIES WILL BE ACCOMPLISHED BY OTHERS, EXCEPT AS SHOWN ON THE PLANS.

RIGHT-OF-WAY MARKERS:

ALL RIGHT-OF-WAY MARKERS ON THIS PROJECT SHALL BE PLACED BY OTHERS.

STANDARD DRAWINGS

EFF. 01-16-2018
REV.

2018 ROADWAY ENGLISH STANDARD DRAWINGS

The following Roadway Standards as appear in "Roadway Standard Drawings" Highway Design Branch - N. C. Department of Transportation - Raleigh, N. C., Dated January, 2018 are applicable to this project and by reference hereby are considered a part of these plans:

STD.NO.	TITLE
DIVISION 2 - EARTHWORK	
200.02	Method of Clearing - Method II
225.02	Guide for Grading Subgrade - Secondary and Local
225.04	Method of Obtaining Superelevation - Two Lane Pavement
DIVISION 3 - PIPE CULVERTS	
300.01	Method of Pipe Installation
DIVISION 4 - MAJOR STRUCTURES	
422.02	Bridge Approach Fills - Type II Modified Approach Fill
DIVISION 5 - SUBGRADE, BASES AND SHOULDERS	
560.01	Method of Shoulder Construction - High Side of Superelevated Curve - Method I
DIVISION 8 - INCIDENTALS	
815.02	Subsurface Drain
840.00	Concrete Base Pad for Drainage Structures
840.25	Anchorage for Frames - Brick or Concrete or Precast
840.29	Frames and Narrow Slot Flat Grates
840.35	Traffic Bearing Grated Drop Inlet - for Cast Iron Double Frame and Grates
840.46	Traffic Bearing Precast Drainage Structure
846.01	Concrete Curb, Gutter and Curb & Gutter
862.01	Guardrail Placement
862.02	Guardrail Installation
862.03	Structure Anchor Unit
876.02	Guide for Rip Rap at Pipe Outlets

Mattern & Craig
ENGINEERS•SURVEYORS
12 BROAD STREET
ASHEVILLE, NORTH CAROLINA 28801
(828) 254-2201
FAX (828) 254-4562
NC LIC. NO. C-1154

10/13/2022 1:35:01 PM
Madison 300\06 17BP13R170\Roadway\Proj\17BP13R170_rdy_sum_1A.dgn

DocuSign Envelope ID: 077A085F-B0AB-4B0A-9C2A-1DF07548A0A3

12/2/2016

PROJECT REFERENCE NO.	SHEET NO.
17BPJ3,RJ70	1-B

STATE OF NORTH CAROLINA, DIVISION OF HIGHWAYS

CONVENTIONAL PLAN SHEET SYMBOLS

Note: Not to Scale **S.U.E. = Subsurface Utility Engineering*

BOUNDARIES AND PROPERTY:

- State Line
- County Line
- Township Line
- City Line
- Reservation Line
- Property Line
- Existing Iron Pin — EIP
- Computed Property Corner
- Property Monument — ECM
- Parcel/Sequence Number — 123
- Existing Fence Line
- Proposed Woven Wire Fence
- Proposed Chain Link Fence
- Proposed Barbed Wire Fence
- Existing Wetland Boundary — WLB
- Proposed Wetland Boundary — WLB
- Existing Endangered Animal Boundary — EAB
- Existing Endangered Plant Boundary — EPB
- Existing Historic Property Boundary — HPB
- Known Contamination Area: Soil — S
- Potential Contamination Area: Soil — S
- Known Contamination Area: Water — W
- Potential Contamination Area: Water — W
- Contaminated Site: Known or Potential

BUILDINGS AND OTHER CULTURE:

- Gas Pump Vent or U/G Tank Cap
- Sign — S
- Well — W
- Small Mine
- Foundation
- Area Outline
- Cemetery
- Building
- School
- Church
- Dam

HYDROLOGY:

- Stream or Body of Water
- Hydro, Pool or Reservoir
- Jurisdictional Stream — JS
- Buffer Zone 1 — BZ 1
- Buffer Zone 2 — BZ 2
- Flow Arrow
- Disappearing Stream
- Spring
- Wetland
- Proposed Lateral, Tail, Head Ditch — FLOW
- False Sump

RAILROADS:

- Standard Gauge — CSX TRANSPORTATION
- RR Signal Milepost — MILEPOST 35
- Switch — SWITCH
- RR Abandoned
- RR Dismantled

RIGHT OF WAY & PROJECT CONTROL:

- Secondary Horiz and Vert Control Point
- Primary Horiz Control Point
- Primary Horiz and Vert Control Point
- Exist Permanent Easment Pin and Cap
- New Permanent Easement Pin and Cap
- Vertical Benchmark
- Existing Right of Way Marker
- Existing Right of Way Line
- New Right of Way Line — RW
- New Right of Way Line with Pin and Cap — RW
- New Right of Way Line with Concrete or Granite R/W Marker — RW
- New Control of Access Line with Concrete C/A Marker — CA
- Existing Control of Access — CA
- New Control of Access — CA
- Existing Easement Line — E
- New Temporary Construction Easement — E
- New Temporary Drainage Easement — TDE
- New Permanent Drainage Easement — PDE
- New Permanent Drainage / Utility Easement — DUE
- New Permanent Utility Easement — PUE
- New Temporary Utility Easement — TUE
- New Aerial Utility Easement — AUE

ROADS AND RELATED FEATURES:

- Existing Edge of Pavement
- Existing Curb
- Proposed Slope Stakes Cut — C
- Proposed Slope Stakes Fill — F
- Proposed Curb Ramp — CR
- Existing Metal Guardrail
- Proposed Guardrail
- Existing Cable Guiderail
- Proposed Cable Guiderail
- Equality Symbol
- Pavement Removal

VEGETATION:

- Single Tree
- Single Shrub
- Hedge
- Woods Line
- Orchard
- Vineyard — Vineyard

EXISTING STRUCTURES:

MAJOR:

- Bridge, Tunnel or Box Culvert — CONC
- Bridge Wing Wall, Head Wall and End Wall — CONC WW

MINOR:

- Head and End Wall — CONC HW
- Pipe Culvert
- Footbridge
- Drainage Box: Catch Basin, DI or JB — CB
- Paved Ditch Gutter
- Storm Sewer Manhole — S
- Storm Sewer — S

UTILITIES:

POWER:

- Existing Power Pole
- Proposed Power Pole
- Existing Joint Use Pole
- Proposed Joint Use Pole
- Power Manhole — P
- Power Line Tower
- Power Transformer
- U/G Power Cable Hand Hole
- H-Frame Pole
- U/G Power Line LOS B (S.U.E.*) — P
- U/G Power Line LOS C (S.U.E.*) — P
- U/G Power Line LOS D (S.U.E.*) — P

TELEPHONE:

- Existing Telephone Pole
- Proposed Telephone Pole
- Telephone Manhole — T
- Telephone Pedestal — T
- Telephone Cell Tower
- U/G Telephone Cable Hand Hole
- U/G Telephone Cable LOS B (S.U.E.*) — T
- U/G Telephone Cable LOS C (S.U.E.*) — T
- U/G Telephone Cable LOS D (S.U.E.*) — T
- U/G Telephone Conduit LOS B (S.U.E.*) — TC
- U/G Telephone Conduit LOS C (S.U.E.*) — TC
- U/G Telephone Conduit LOS D (S.U.E.*) — TC
- U/G Fiber Optics Cable LOS B (S.U.E.*) — T FO
- U/G Fiber Optics Cable LOS C (S.U.E.*) — T FO
- U/G Fiber Optics Cable LOS D (S.U.E.*) — T FO

WATER:

- Water Manhole — W
- Water Meter
- Water Valve
- Water Hydrant
- U/G Water Line LOS B (S.U.E*)
- U/G Water Line LOS C (S.U.E*)
- U/G Water Line LOS D (S.U.E*)
- Above Ground Water Line — A/G Water

TV:

- TV Pedestal — C
- TV Tower
- U/G TV Cable Hand Hole — HH
- U/G TV Cable LOS B (S.U.E.*) — TV
- U/G TV Cable LOS C (S.U.E.*) — TV
- U/G TV Cable LOS D (S.U.E.*) — TV
- U/G Fiber Optic Cable LOS B (S.U.E.*) — TV FO
- U/G Fiber Optic Cable LOS C (S.U.E.*) — TV FO
- U/G Fiber Optic Cable LOS D (S.U.E.*) — TV FO

GAS:

- Gas Valve
- Gas Meter
- U/G Gas Line LOS B (S.U.E.*) — G
- U/G Gas Line LOS C (S.U.E.*) — G
- U/G Gas Line LOS D (S.U.E.*) — G
- Above Ground Gas Line — A/G Gas

SANITARY SEWER:

- Sanitary Sewer Manhole
- Sanitary Sewer Cleanout
- U/G Sanitary Sewer Line — SS
- Above Ground Sanitary Sewer — A/G Sanitary Sewer
- SS Forced Main Line LOS B (S.U.E.*) — FSS
- SS Forced Main Line LOS C (S.U.E.*) — FSS
- SS Forced Main Line LOS D (S.U.E.*) — FSS

MISCELLANEOUS:

- Utility Pole
- Utility Pole with Base
- Utility Located Object
- Utility Traffic Signal Box — S
- Utility Unknown U/G Line LOS B (S.U.E.*) — ?UTL
- U/G Tank; Water, Gas, Oil
- Underground Storage Tank, Approx. Loc. — UST
- A/G Tank; Water, Gas, Oil
- Geoenvironmental Boring
- U/G Test Hole LOS A (S.U.E.*)
- Abandoned According to Utility Records — AATUR
- End of Information — E.O.I.

DocuSign Envelope ID: A332BEF4-DF26-451B-A837-BD9E62A6C521

PROJECT REFERENCE NO.	SHEET NO.
17BP.13.R.170	2A-1
ROADWAY DESIGN ENGINEER	PAVEMENT DESIGN ENGINEER
9/30/2022	9/30/2022

DOCUMENT NOT CONSIDERED FINAL UNLESS ALL SIGNATURES COMPLETED

Mattern & Craig
ENGINEERS • SURVEYORS
12 BROAD STREET
ASHEVILLE, NORTH CAROLINA 28801
(828) 254-2201
FAX (828) 254-4562
NC LIC. NO. C-1154

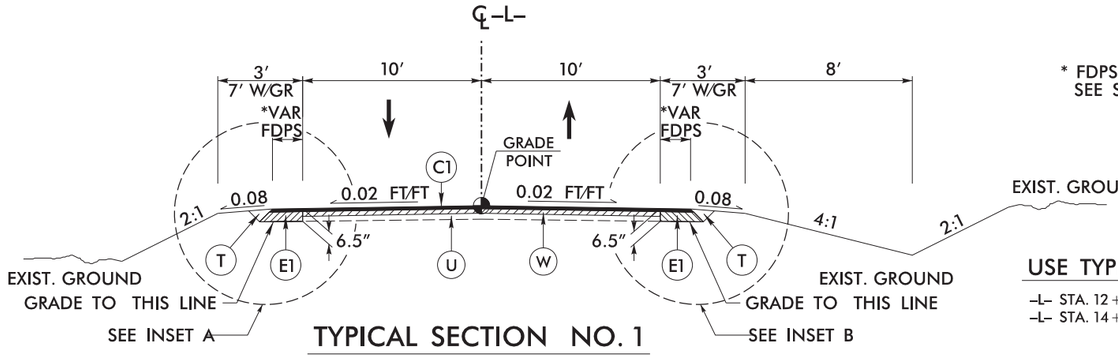

TYPICAL SECTION NO. 1

* FDPS WIDTH VARIES
SEE SHEET 4

USE TYPICAL SECTION NO. 1

-L- STA. 12+85 TO -L- STA. 13+30
-L- STA. 14+08 TO -L- STA. 15+00

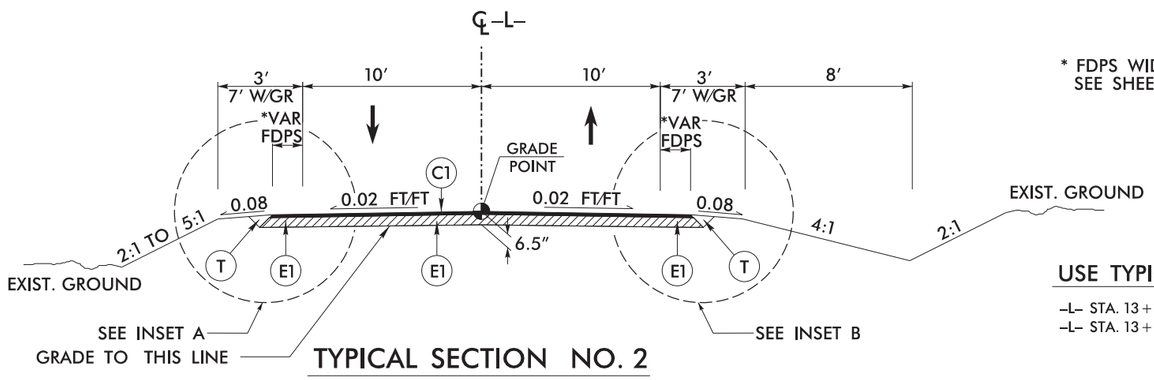

TYPICAL SECTION NO. 2

* FDPS WIDTH VARIES
SEE SHEET 4

USE TYPICAL SECTION NO. 2

-L- STA. 13+30 TO -L- STA. 13+40.86 (BEGIN BRIDGE)
-L- STA. 13+93.19 (END BRIDGE) TO -L- STA. 14+08

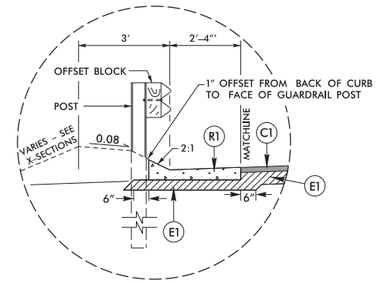

INSET A

-L- STA. 13+21 LT TO BEGIN APPROACH SLAB

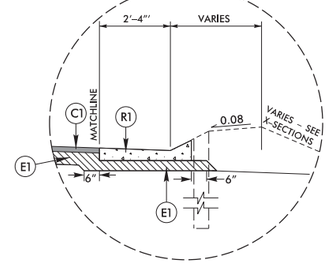

INSET B

END APPROACH SLAB RT TO -L- STA 14+76 RT

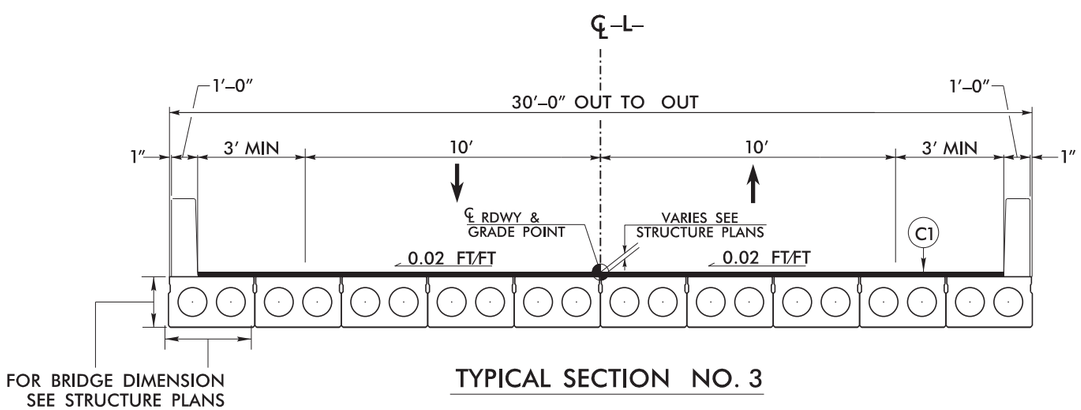

TYPICAL SECTION NO. 3

USE TYPICAL SECTION NO. 3

-L- STA. 13+40.86 (BEGIN BRIDGE) TO
-L- STA. 13+93.19 (END BRIDGE)

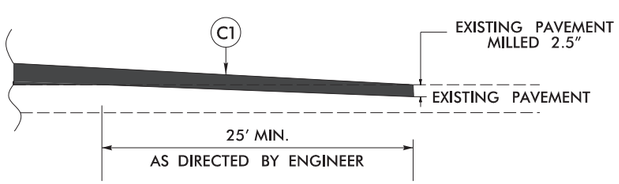

MILLING EXISTING PAVEMENT

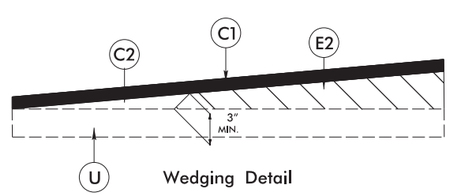

Wedging Detail

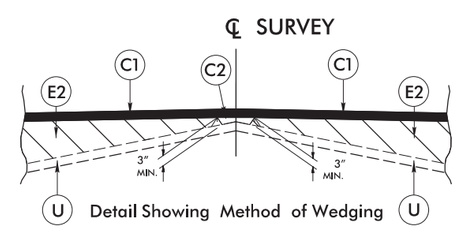

Detail Showing Method of Wedging

PAVEMENT SCHEDULE	
C1	PROP. APPROX. 2.5″ ASPHALT CONCRETE SURFACE COURSE, TYPE S9.5B, AT AN AVERAGE RATE OF 137.5 LBS. PER SQ. YD. IN EACH OF TWO LAYERS.
C2	PROP. VAR. DEPTH ASPHALT CONCRETE SURFACE COURSE, TYPE S9.5B AT AN AVERAGE RATE OF 110 LBS. PER SQ. YD. PER 1″ DEPTH. TO BE PLACED IN LAYERS NOT TO EXCEED 1½″ IN DEPTH.
E1	PROP. APPROX. 4″ ASPHALT CONCRETE BASE COURSE, TYPE B25.0C, AT AN AVERAGE RATE OF 456 LBS. PER SQ. YD.
E2	PROP. VAR. DEPTH ASPHALT CONCRETE BASE COURSE, TYPE B25.0C, AT AN AVERAGE RATE OF 114 LBS. PER SQ. YD. PER 1″ DEPTH. TO BE PLACED IN LAYERS NOT LESS THAN 3″ IN DEPTH OR GREATER THAN 5.5″ IN DEPTH.
R1	SHOULDER BERM GUTTER (NCDOT STANDARD DRAWING NO. 846.01)
T	EARTH MATERIAL
U	EXISTING PAVEMENT
W	PROPOSED WEDGING (SEE APPROPRIATE DETAILS)

NOTE: PAVEMENT EDGE SLOPES ARE 1:1 UNLESS SHOWN OTHERWISE

DocuSign Envelope ID: 2B61914C-4D92-49CF-9EBC-6C0EA0787B4C

PROJECT REFERENCE NO.	SHEET NO.
17BP.13.R.170	2C-1

DOCUMENT NOT CONSIDERED FINAL UNLESS ALL SIGNATURES COMPLETED

STATE OF NORTH CAROLINA
DEPT. OF TRANSPORTATION
DIVISION OF HIGHWAYS
RALEIGH, N.C.

ROADWAY DETAIL DRAWING FOR
GUARDRAIL INSTALLATION

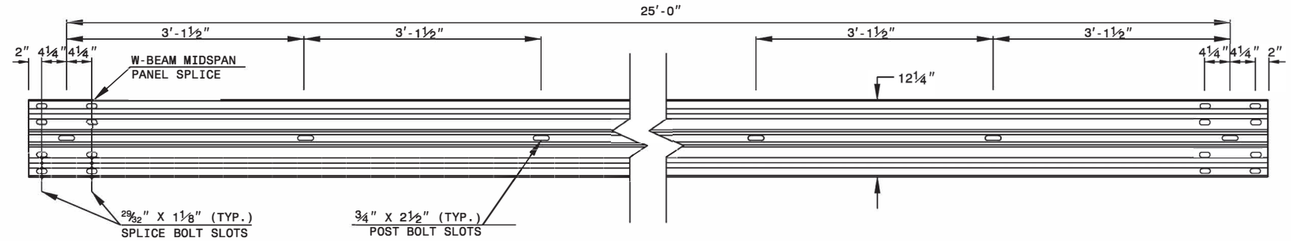

STANDARD W-BEAM GUARDRAIL

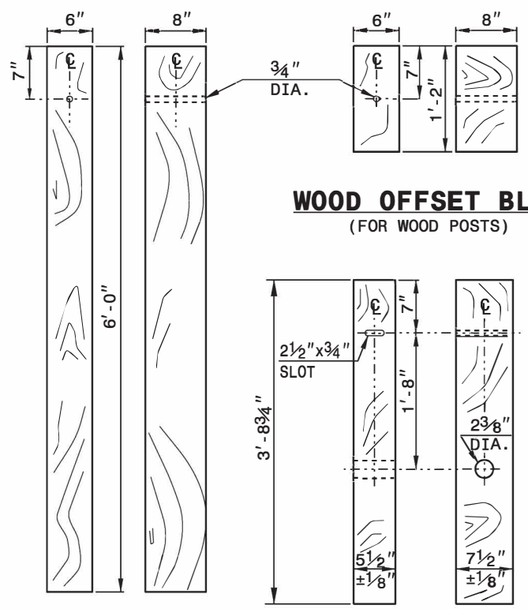

STANDARD LINE POST

WOOD OFFSET BLOCK
(FOR WOOD POSTS)

SHORT WOOD BREAKAWAY POST

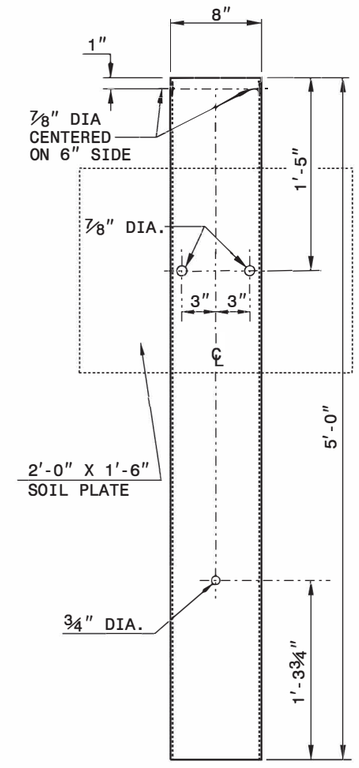

STEEL TUBE
TS 6"x8"x0.1875"

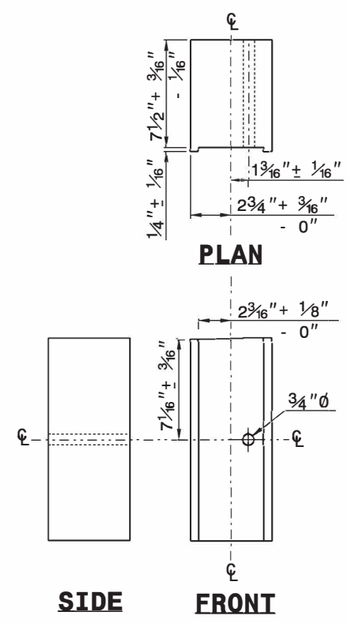

ROUTED OFFSET BLOCK

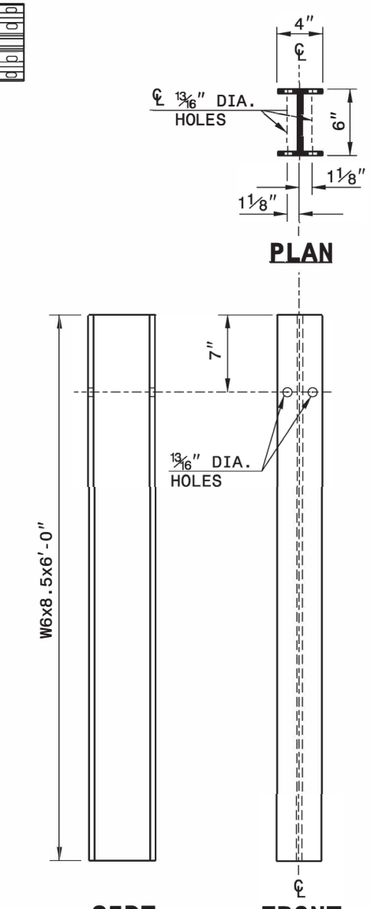

"W6" STEEL POST

SYSTEM PARTS

STATE OF NORTH CAROLINA
DEPT. OF TRANSPORTATION
DIVISION OF HIGHWAYS
RALEIGH, N.C.

ROADWAY DETAIL DRAWING FOR
GUARDRAIL INSTALLATION

SHEET 6 OF 8
862D02

SHEET 6 OF 8
862D02

NORTH CAROLINA PROFESSIONAL SEAL
DocuSigned by: Nicole M. Hackler
5B8423D3D4184C5...
10/3/2022

CONTRACTS STANDARDS AND DEVELOPMENT UNIT
Office 919-707-6950 FAX 919-250-4119

SEE TITLE BLOCK

ORIGINAL BY: J.HOWERTON DATE: 3-7-2018
MODIFIED BY: DATE:
CHECKED BY: DATE:
FILE SPEC.:

DocuSign Envelope ID: 28619194C-4D92-490F-9EBC-6C0EA07579A4C

STATE OF NORTH CAROLINA
DEPT. OF TRANSPORTATION
DIVISION OF HIGHWAYS
RALEIGH, N.C.

ROADWAY DETAIL DRAWING FOR
STRUCTURE ANCHOR UNITS
GUARDRAIL ANCHOR UNIT, TYPE III
FOR ATTACHMENT TO RAIL ON BRIDGE

SHEET 1 OF 7
862D03

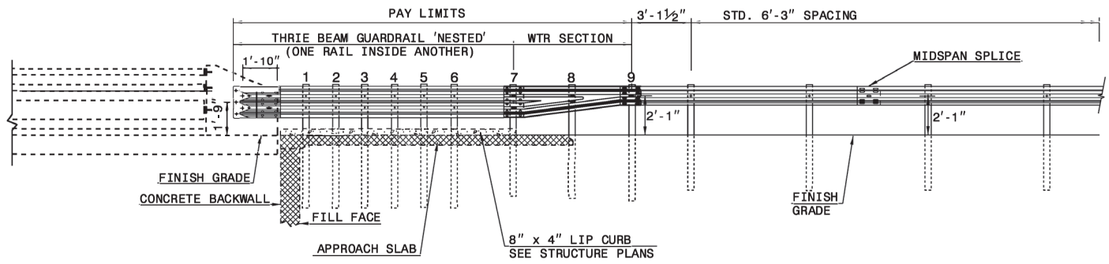

ELEVATION

NOTE:
**POST NOT REQUIRED FOR SKEW ANGLES GREATER THAN 150° OR LESS THAN 30° UNLESS OTHERWISE DIRECTED BY THE ENGINEER.
*THE DISTANCE FROM END OF BRIDGE RAIL TO CENTER LINE OF THE FIRST POST SHOULD BE 11½" IF CONCRETE BACKWALL IS NOT PRESENT.
-SHOULDER BERM GUTTER MUST BE INSTALLED TO THE LIMITS 8" x 4" LIP CURB IS SHOWN IF ANCHOR UNIT IS NOT ADJACENT TO AN APPROACH SLAB.
-MEASURE GUARDRAIL HEIGHT FROM THE TOP OF ADJACENT SURFACE (SHOULDER, BERM, OR GUTTER).
-LAP JOINTS IN THE DIRECTION OF TRAFFIC FLOW.
-SEE SHEET 3 FOR POST SECTIONS 1 THRU 9.

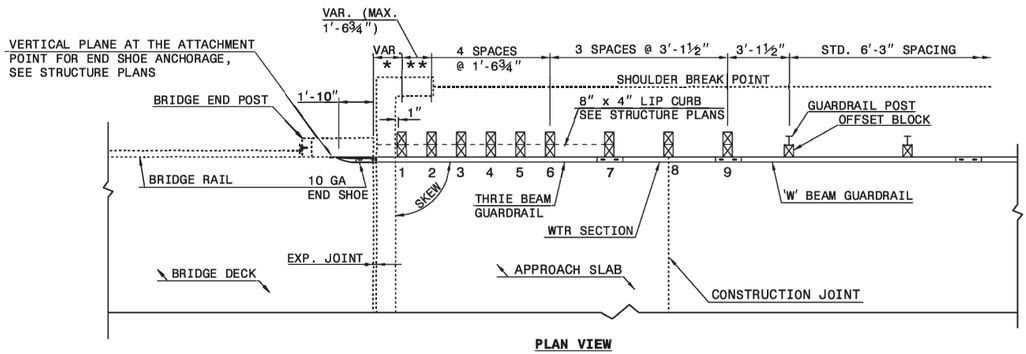

PLAN VIEW

GUARDRAIL ANCHOR UNIT, TYPE III FOR ATTACHMENT TO RAIL ON BRIDGE

STATE OF NORTH CAROLINA
DEPT. OF TRANSPORTATION
DIVISION OF HIGHWAYS
RALEIGH, N.C.

ROADWAY DETAIL DRAWING FOR
STRUCTURE ANCHOR UNITS
GUARDRAIL ANCHOR UNIT, TYPE III
FOR ATTACHMENT TO RAIL ON BRIDGE

SHEET 1 OF 7
862D03

STATE OF NORTH CAROLINA
DEPT. OF TRANSPORTATION
DIVISION OF HIGHWAYS
RALEIGH, N.C.

ROADWAY DETAIL DRAWING FOR
STRUCTURE ANCHOR UNITS
GUARDRAIL ANCHOR UNIT, TYPE III FOR ATTACHMENT TO RAIL ON BRIDGE - SUB REGIONAL TIER

SHEET 2 OF 7
862D03

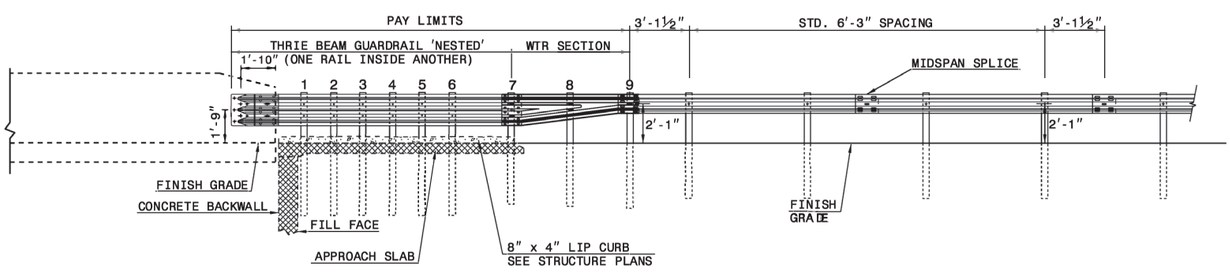

ELEVATION

NOTE:
**POST NOT REQUIRED FOR SKEW ANGLES GREATER THAN 150° OR LESS THAN 30° UNLESS OTHERWISE DIRECTED BY THE ENGINEER.
*THE DISTANCE FROM END OF BRIDGE RAIL TO CENTER LINE OF THE FIRST POST SHOULD BE 11½" IF CONCRETE BACKWALL IS NOT PRESENT.
-SHOULDER BERM GUTTER MUST BE INSTALLED TO THE LIMITS 8" x 4" LIP CURB IS SHOWN IF ANCHOR UNIT IS NOT ADJACENT TO AN APPROACH SLAB.
-MEASURE GUARDRAIL HEIGHT FROM THE TOP OF ADJACENT SURFACE (SHOULDER, BERM, OR GUTTER).
-LAP JOINTS IN THE DIRECTION OF TRAFFIC FLOW.
-SEE SHEET 3 FOR POST SECTIONS 1 THRU 9.

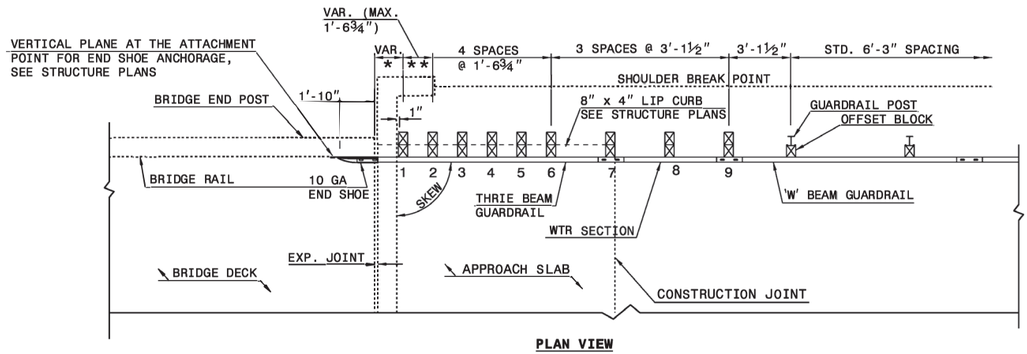

PLAN VIEW

GUARDRAIL ANCHOR UNIT, TYPE III FOR ATTACHMENT TO RAIL ON BRIDGE - SUB REGIONAL TIER

STATE OF NORTH CAROLINA
DEPT. OF TRANSPORTATION
DIVISION OF HIGHWAYS
RALEIGH, N.C.

ROADWAY DETAIL DRAWING FOR
STRUCTURE ANCHOR UNITS
GUARDRAIL ANCHOR UNIT, TYPE III FOR ATTACHMENT TO RAIL ON BRIDGE - SUB REGIONAL TIER

SHEET 2 OF 7
862D03

SEE TITLE BLOCK

ORIGINAL BY: J. HOWERTON DATE: 06-22-12
MODIFIED BY: DATE:
CHECKED BY: DATE:
FILE SPEC.:

CONTRACT STANDARDS AND DEVELOPMENT UNIT
Office 919-707-6950 FAX 919-250-4119

DOCUMENT NOT CONSIDERED FINAL UNLESS ALL SIGNATURES COMPLETED

NORTH CAROLINA PROFESSIONAL ENGINEER SEAL 036161 Nicole M. Hudson
Digitally signed by Nicole M. Hudson
10/3/2022

PROJECT REFERENCE NO. 17BP.13.R.170
SHEET NO. 2C-2

DocuSign Envelope ID: 2B61914C-4D92-49CF-9EBC-6C0EA0787B4C

PROJECT REFERENCE NO.	SHEET NO.
17BP.13.R.170	2C-3

STATE OF
NORTH CAROLINA
DEPT. OF TRANSPORTATION
DIVISION OF HIGHWAYS
RALEIGH, N.C.

ENGLISH DETAIL DRAWING FOR
MODIFIED CONCRETE FLUME
WITH CONCRETE OR RIP- RAP DITCH

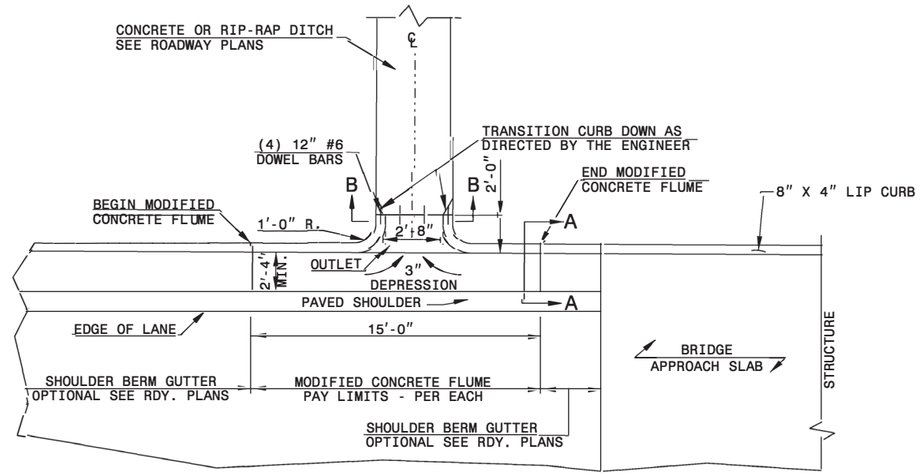

PLAN VIEW

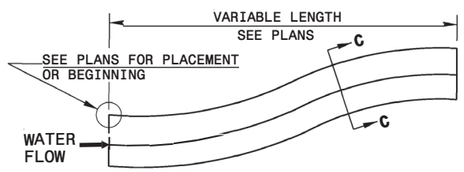

DOWNGRADE OR SAG

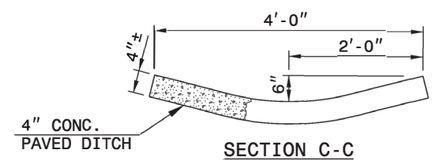

SECTION C-C

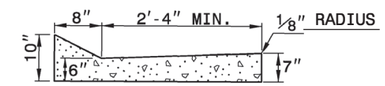

SECTION A-A

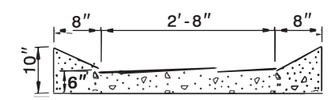

SECTION B-B

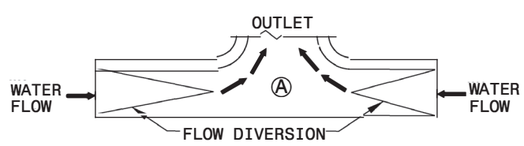

SAG

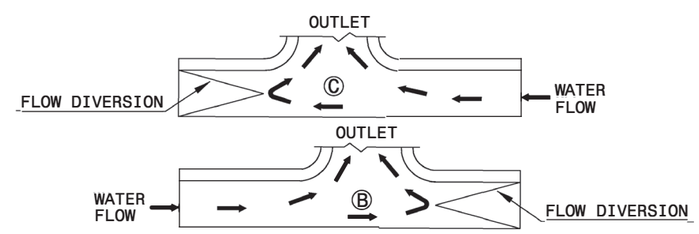

DOWN GRADE

FLOW DIVERSION EXAMPLES

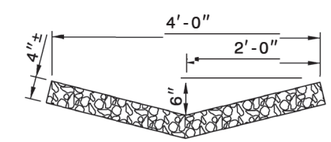

RIP-RAP LINED DITCH

NOTES:

- CONSTRUCT MODIFIED CONCRETE FLUME AND SHOULDER BERM GUTTER IN ACCORDANCE WITH THIS DETAIL.
- CONSTRUCT CONCRETE DITCH IN ACCORDANCE WITH STD. DWG. NO. 850.01.
- CONSTRUCT RIP RAP LINED DITCH IN ACCORDANCE WITH THIS DETAIL, IF CALLED FOR IN PLANS.
- CONCRETE OR RIP RAP LINED DITCH SHALL BE THE TYPE AND LENGTH SPECIFIED BY THE ROADWAY PLANS. THE DITCH SHALL TERMINATE AS SHOWN ON THE PLANS. IF NO TERMINATION IS INDICATED PLACE RIP-RAP AT THE END OF THE DITCH AS INDICATED BY STD. DWG. 876.02 FOR AN 18" PIPE. TRANSITIONS FROM THE DITCH TO TERMINATION SHALL BE AS DIRECTED BY THE ENGINEER.
- MODIFICATIONS SHALL BE AS DICTATED BY SITE CONDITIONS AND DIRECTED BY THE ENGINEER.

SHEET 1 OF 1
MODFLMDTCH

STATE OF
NORTH CAROLINA
DEPT. OF TRANSPORTATION
DIVISION OF HIGHWAYS
RALEIGH, N.C.

ENGLISH DETAIL DRAWING FOR
MODIFIED CONCRETE FLUME
WITH CONCRETE OR RIP- RAP DITCH

SHEET 1 OF 1
MODFLMDTCH

DOCUMENT NOT CONSIDERED FINAL
UNLESS ALL SIGNATURES COMPLETED

CONTRACT STANDARDS
AND DEVELOPMENT UNIT
Office 919-707-6950 FAX 919-250-4119

SEE PLATE FOR TITLE

ORIGINAL BY: E.E. Ward DATE: Apr. 2002
MODIFIED BY: J.S. Howerton DATE: October 2017
CHECKED BY: DATE:
FILE SPEC.: w:details\stand\modifiedflume.dgn

18-OCT-2017 14:17
S:\Contracts\Contracts\Special Details\ericward\usr\details\stand\modifiedflume.dgn
jhowerton AT CSD-292595

DocuSign Envelope ID: 077A085F-B0AB-4B0A-9C2A-1DF07548A0A3

6/21/00

COMPUTED BY: MY	DATE: 1-4-19		
CHECKED BY: ACC	DATE: 1-4-19		

STATE OF NORTH CAROLINA
DIVISION OF HIGHWAYS

PROJECT REFERENCE NO.	SHEET NO.
17BP.13.R.170	3B-1

PAVEMENT REMOVAL SUMMARY

IN SQUARE YARDS

LINE	LOCATION	ASPHALT REMOVAL	ASPHALT BREAK-UP		
-L-	12+85 TO 13+00				
-L-	13+30 TO 13+47	33			
-L-	13+88 TO 14+08	39			
-L-	14+75 TO 15+00				
	TOTAL	72			
	SAY	80			

SUMMARY OF EARTHWORK

IN CUBIC YARDS

LOCATION	UNCLASSIFIED EXCAVATION	UNDERCUT	EMBT+%	BORROW	WASTE
SUMMARY NO.1					
-L- STA. 12+85.00 TO 13+40.86 (BEGIN BRIDGE)	7		9	2	
SUBTOTAL SUMMARY NO.1	7		9	2	
SUBTOTAL SUMMARY NO.2					
-L- STA. 13+93.19 (END BRIDGE) TO 15+00.00	11		55	44	
SUBTOTAL SUMMARY NO.2	11		55	44	
PROJECT SUBTOTAL	18		64	46	
GRAND TOTAL	20			46	
SAY	20			50	

CONTINGENCY ITEMS:
INCIDENTAL STONE = 50 TONS
UNDERCUT EXCAVATION = 450 CY
SELECT GRANULAR MATERIAL = 400 CY
GEOTEXTILE FOR SOIL STABILIZATION = 200 SY

Note: Earthwork quantities are calculated by the roadway designer. These earthwork quantities are based in part on subsurface data provided by the Geotechnical Unit.

Note: Approximate quantities only. Unclassified excavation, borrow excavation, fine grading, clearing and grubbing, and removal of existing pavement will be paid for at the contract lump sum price for "grading".

NOTE: Invert Elevations are for Bid Purposes only and shall not be used for project construction stakeout.
See "Standard Specifications For Roads and Structures, Section 300-5".

SUB-REGIONAL & REGIONAL LIST OF PIPES, ENDWALLS, ETC. (FOR PIPES 48" & UNDER)

STATION	LOCATION (LT,RT, OR CL)	STRUCTURE NO. FROM	STRUCTURE NO. TO	TOP ELEVATION	INVERT ELEVATION	INVERT ELEVATION	SLOPE CRITICAL	DRAINAGE PIPE (RCP, CSP, CAAP, HDPE, or PVC) 12"	15"	18"	24"	30"	36"	42"	48"	DO NOT USE RCP	DO NOT USE CSP	DO NOT USE CAAP	DO NOT USE HDPE
-L- 13+28	LT	401																	
-L- 14+95	RT	402		1897.30	1893.88														
		402	403		1893.88	1893.43													
TOTAL																			

STATION	C.S. PIPE 12" (.064)	15" (.064)	18" (.064)	24" (.064)	36" (.079)	42" (.109)	48" (.109)	R.C. PIPE (CLASS III) 15"	18"	24"	30"	36"	42"	48"
-L- 13+28														
-L- 14+95														
TOTAL														

STATION	R.C. PIPE (CLASS IV) 12"	15"	18"	24"	30"	36"	42"	48"	**" R. C. PIPE (CLASS V)	**" R. C. PIPE CULVERTS, CONTRACTOR DESIGN PIPE	**" R. C. PIPE CULVERTS, CONTRACTOR DESIGN PIPE	15" SIDE DRAIN PIPE	18" SIDE DRAIN PIPE
-L- 13+28													
-L- 14+95													
			48										
TOTAL			48										

STATION	ENDWALLS STD. 838.01, STD. 838.11 OR STD. 838.80 (UNLESS NOTED OTHERWISE) CU. YDS. R.C.P.	C.S.P.	QUANTITIES FOR DRAINAGE STRUCTURES PER EACH (0' THRU 5.0')	* TOTAL L.F. FOR PAY QUANTITY SHALL BE COL. 'A' + (1.3 X COL.'B') LIN. *FT. A 5.0' THRU 10.0'	B 10.0' AND ABOVE	C.B. STD. 840.01 OR STD. 840.02	FRAME, GRATES AND HOOD STANDARD 840.03 TYPE OF GRATE E	F	G	
-L- 13+28										
-L- 14+95										
			1							
TOTAL			1							

STATION	CONCRETE TRANSITIONAL SECTION CATCH BASIN	DROP INLET	TBDI STD 840.35	TBDI FRAME WITH GRATE 840.29	J.B. STD. 840.31 OR 840.32	M.H. FRAME & COVER STD. 840.54	MODIFIED CONCRETE FLUME		CORR. STEEL ELBOWS NO. & SIZE	CONC. COLLARS CL. "B" C.Y. STD 840.72	CONC. & BRICK PIPE PLUG, C.Y. STD. 840.71	PIPE REMOVAL LIN.FT.	REMARKS
-L- 13+28							1						
-L- 14+95												20	-L- STA 13+81 LT REMOVAL OF EXISTING 15" CMP
			1	1									
TOTAL			1	1			1					20	

ABBREVIATIONS

- C.B. CATCH BASIN
- N.D.I. NARROW DROP INLET
- D.I. DROP INLET
- G.D.I. GRATED DROP INLET
- G.D.I. (N.S.) GRATED DROP INLET (NARROW SLOT)
- J.B. JUNCTION BOX
- M.H. MANHOLE
- T.B.D.I. TRAFFIC BEARING DROP INLET
- T.B.G.I. TRAFFIC BEARING GRATE INLET
- T.B.J.B. TRAFFIC BEARING JUNCTION BOX

"N" = DISTANCE FROM EDGE OF LANE TO FACE OF GUARDRAIL.
TOTAL SHOULDER WIDTH = DISTANCE FROM EDGE OF TRAVEL LANE TO SHOULDER BREAK POINT.
FLARE LENGTH = DISTANCE FROM LAST SECTION OF PARALLEL GUARDRAIL TO END OF GUARDRAIL.
W = TOTAL WIDTH OF FLARE FROM BEGINNING OF TAPER TO END OF GUARDRAIL.
G = GATING IMPACT ATTENUATOR TYPE 350
NG = NON-GATING IMPACT ATTENUATOR TYPE 350

GUARDRAIL SUMMARY

SURVEY LINE	BEG. STA.	END STA.	LOCATION	LENGTH STRAIGHT	LENGTH SHOP CURVED	LENGTH DOUBLE FACED	WARRANT POINT APPROACH END	WARRANT POINT TRAILING END	"N" DIST. FROM E.O.L.	TOTAL SHOUL. WIDTH	FLARE LENGTH APPROACH END	FLARE LENGTH TRAILING END	W APPROACH END	W TRAILING END
-L-	12+85	13+37	RT	56.25			13+36		4	7	25		0.5	
-L-	13+88	14+00	RT	13				13+88	4	7				
-L-	12+85	13+46	LT	56.25				13+46	4	7		25		0.5
-L-	13+98	14+58	LT	56.25			13+98		4	7	25		0.5	
			SUBTOTAL	181.75										
			LESS DEDUCTIONS FOR ANCHORS											
			GREU TL-2 3 @ 25'=	-75										
			IA TL 2 @ 13' =	-13										
			TYPE-III 3 @ 18.75=	-56.25										
			PROJECT TOTALS:	37.5										
			ADDITIONAL GUARDRAIL POSTS=5 EA.											

SURVEY LINE	BEG. STA.	ANCHORS XI MOD	XI	GREU TL-2	GREU TL-3	IA-TL-2	TYPE III	TYPE III SHOP CURVED	B-77	AT-1	IMPACT ATTENUATOR TYPE 350 EA	G	NG	SINGLE FACED GUARDRAIL	REMOVE EXISTING GUARDRAIL	REMOVE AND STOCKPILE EXISTING GUARDRAIL	REMARKS
-L-	12+85			1			1										
-L-	13+88					1											
-L-	12+85			1			1										
-L-	13+98			1			1										
PROJECT TOTALS:				3		1	3										

COMPUTED BY: DMM	DATE: 11/15/2019
CHECKED BY: JCK	DATE: 11/15/2019

(5-15-18)

PROJECT NO.	SHEET NO.
17BP.13.R.170	3G-1

STATE OF NORTH CAROLINA
DIVISION OF HIGHWAYS

SUMMARY OF SUBSURFACE DRAINAGE

LINE	Station	Station	Location LT/RT/CL	Drain Type* UD/BD/SD	LF
CONTINGENCY				SD	200
				TOTAL LF:	200

*UD = Underdrain
*BD = Blind Drain
*SD = Subsurface Drain

SUMMARY OF GEOTEXTILE FOR PAVEMENT STABILIZATION

LINE	Station	Station	Geotextile for Pavement Stabilization SY	Class IV Subgrade Stabilization TONS
CONTINGENCY				
		TOTAL SY/TONS:	0	0*

*Total tons of "Class IV Subgrade Stabilization" is only the estimated quantity for pavement stabilization and may only represent a portion of the subgrade stabilization quantity shown in the Item Sheets of the Proposal.

SUMMARY OF AGGREGATE SUBGRADE/STABILIZATION

LINE	Station	Station	Aggregate Type* ASU(1/2)/ AST	Aggregate Thickness INCHES [8" for ASU(2)]	Shallow Undercut CY	Class IV Subgrade Stabilization TONS	Geotextile for Soil Stabilization SY	Stabilizer Aggregate TONS	Class IV Aggregate Stabilization TONS
CONTINGENCY					100	200	500		
			TOTAL CY/TONS/SY:		100	200**	500**	0	0

*ASU(1/2) = Aggregate Subgrade (Type 1 or 2)
*AST = Aggregate Stabilization
**Total tons of "Class IV Subgrade Stabilization" and total square yards of "Geotextile for Soil Stabilization" are only the estimated quantities for ASU(1/2)/AST and may only represent a portion of the subgrade stabilization and geotextile quantities shown in the Item Sheets of the Proposal.

SUMMARY OF ROCK PLATING

LINE	Beginning Slope (H:V)	Approx. Station	Ending Slope (H:V)	Approx. Station	Location LT/RT	Rock Plating Detail No. 1/2/3/4	Riprap Class* 1/2/B	Rock Plating SY
							TOTAL SY:	0

*Use Class 1, 2 or B riprap if riprap class is not shown for rock plating location.

SUMMARY OF REINFORCED SOIL SLOPES AND SLOPE EROSION CONTROL

LINE	Beginning Slope/ RSS (H:V)	Approx. Station	Ending Slope/ RSS (H:V)	Approx. Station	Location LT/RT	Reinforced Soil Slope (RSS) SY	Geocells SY	Coir Fiber Mat SY	Matting for Erosion Control SY
					TOTAL SY:	0	0	0*	0**

*Total square yards of "Coir Fiber Mat" is only the estimated quantity for slopes steeper than 2:1 (H:V) and may only represent a portion of the coir fiber mat quantity shown in the Item Sheets of the Proposal.
**Total square yards of "Matting for Erosion Control" is only the estimated quantity for RSS and may only represent a portion of the matting quantity shown in the Item Sheets of the Proposal.

SUMMARY OF PRE-SPLITTING OF ROCK

LINE	Beginning Rock Cut Slope (H:V)	Approx. Station	Ending Rock Cut Slope (H:V)	Approx. Station	Location LT/RT	Pre-splitting of Rock SY
					TOTAL SY:	0

SUMMARY OF SURCHARGES AND SURCHARGE WAITING PERIODS

LINE	Station	Station	Surcharge Height FT	MONTHS

SUMMARY OF SETTLEMENT GAUGES

Gauge No.	LINE and Station	Offset	
		Distance FT	Direction LT/RT
	TOTAL GAUGES (EACH):		

SUMMARY OF EMBANKMENT WAITING PERIODS

LINE	Station	Station	MONTHS

SUMMARY OF BRIDGE WAITING PERIODS

Bridge Description	End Bent/ Bent No.	MONTHS

DocuSign Envelope ID: 077A085F-B0AB-4B0A-9C2A-1DF07548A0A3

PROJECT REFERENCE NO.	SHEET NO.
17BP.13.R.170	4
R/W SHEET NO.	
ROADWAY DESIGN ENGINEER	HYDRAULICS ENGINEER
NORTH CAROLINA PROFESSIONAL SEAL ENGINEER AARON C. CARVER 047041 — DocuSigned by: Aaron Carver — 10/21/2022	NORTH CAROLINA PROFESSIONAL SEAL ENGINEER AARON C. CARVER 047041 — DocuSigned by: Aaron Carver — 10/21/2022

DOCUMENT NOT CONSIDERED FINAL UNLESS ALL SIGNATURES COMPLETED

Mattern & Craig
ENGINEERS•SURVEYORS
12 BROAD STREET
ASHEVILLE, NORTH CAROLINA 28801
(828) 254-2201
FAX (828) 254-4562
NC LIC. NO. C-1154

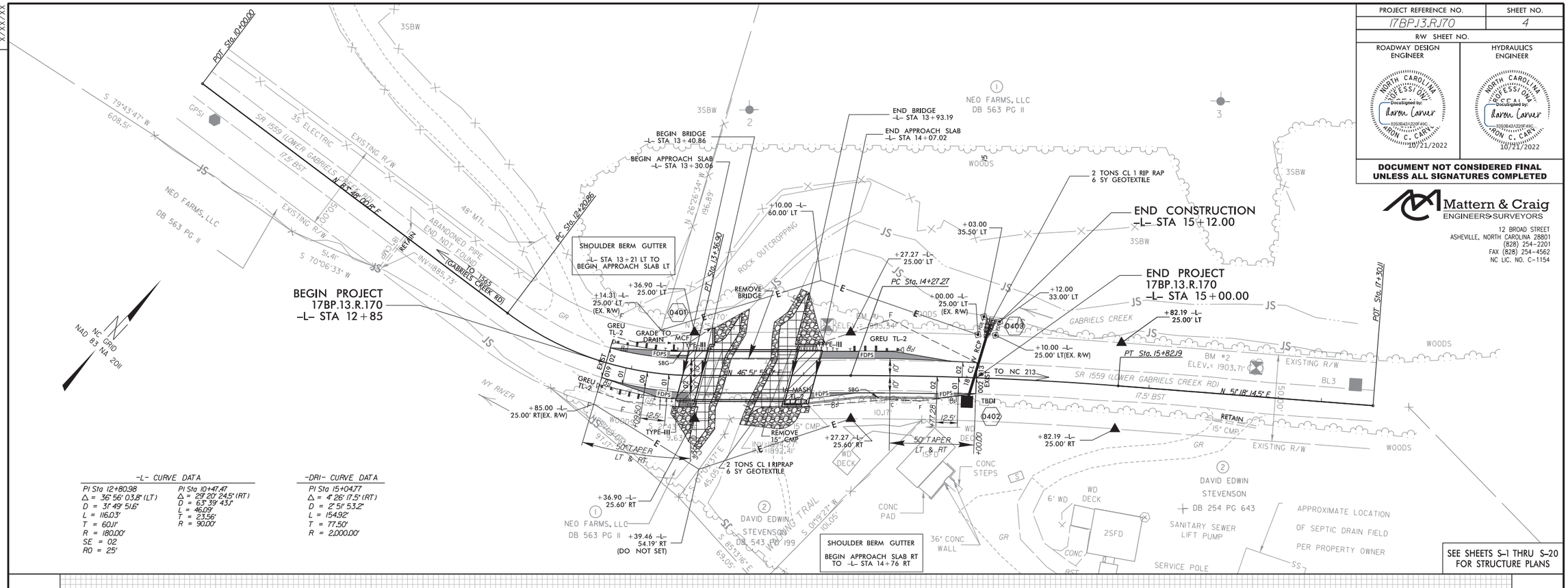

-L- CURVE DATA

PI Sta 12+80.98
Δ = 36°56' 03.8" (LT)
D = 3°49' 51.6"
L = 116.03'
T = 60.11'
R = 180.00'
SE = 02
RO = 25'

PI Sta 10+47.47
Δ = 29°20' 24.5" (RT)
D = 6°39' 43.1"
L = 46.09'
T = 23.56'
R = 90.00'

-DRI- CURVE DATA

PI Sta 15+04.77
Δ = 4°26' 17.5" (RT)
D = 2°51' 53.2"
L = 154.92'
T = 77.50'
R = 2,000.00'

* MEETS SUBREGIONAL TIER GUIDELINES

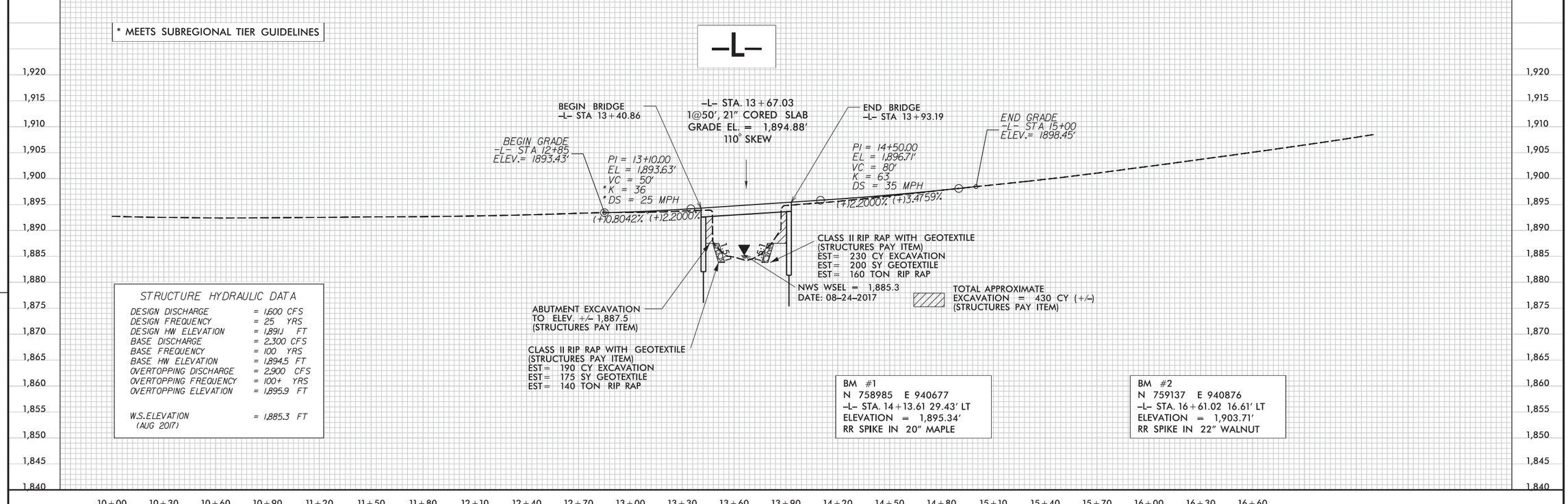

STRUCTURE HYDRAULIC DATA

DESIGN DISCHARGE	= 1,600 CFS
DESIGN FREQUENCY	= 25 YRS
DESIGN HW ELEVATION	= 1,891.1 FT
BASE DISCHARGE	= 2,300 CFS
BASE FREQUENCY	= 100 YRS
BASE HW ELEVATION	= 1,894.5 FT
OVERTOPPING DISCHARGE	= 2,900 CFS
OVERTOPPING FREQUENCY	= 100+ YRS
OVERTOPPING ELEVATION	= 1,895.9 FT
W.S.ELEVATION (AUG 2017)	= 1,885.3 FT

BM #1
N 758985 E 940677
-L- STA. 14+13.61 29.43' LT
ELEVATION = 1,895.34'
RR SPIKE IN 20" MAPLE

BM #2
N 759137 E 940876
-L- STA. 16+61.02 16.61' LT
ELEVATION = 1,903.71'
RR SPIKE IN 22" WALNUT

REVISIONS

DocuSign Envelope ID: 60C85A6D-27E3-4474-89A8-39A7DE5C9590

09/08/99

TIP PROJECT: 17BP.13.R.170

STATE	STATE PROJECT REFERENCE NO.	SHEET NO.	TOTAL SHEETS
N.C.	17BP.13.R.170	RW01	4

STATE OF NORTH CAROLINA
DIVISION OF HIGHWAYS

SURVEY CONTROL, EXISTING CENTERLINES, RIGHT OF WAY, EASEMENTS AND PROPERTY TIES

MADISON COUNTY

RW04

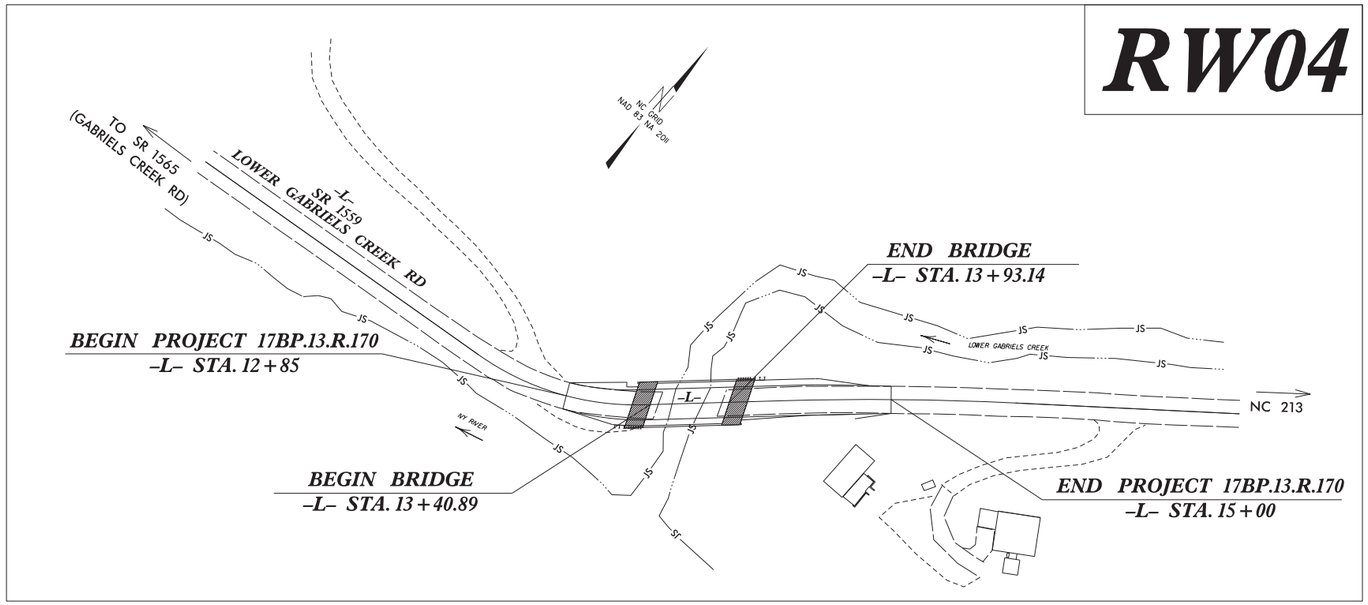

GRAPHIC SCALE

50 25 0 50 100

PLANS

DATUM DESCRIPTION

THE LOCALIZED COORDINATE SYSTEM DEVELOPED FOR THIS PROJECT
IS BASED ON THE STATE PLANE COORDINATES ESTABLISHED BY
MATTERN AND CRAIG FOR MONUMENT "GPS2"
WITH NAD 83/NA 2011 STATE PLANE GRID COORDINATES OF
NORTHING: 758897.667 (ft) EASTING: 940645.406 (ft)
ELEVATION: 1892.89 (ft)
THE AVERAGE COMBINED GRID FACTOR USED ON THIS PROJECT
(GROUND TO GRID) IS: 0.999817604
THE N.C. LAMBERT GRID BEARING AND
LOCALIZED HORIZONTAL GROUND DISTANCE FROM
"GPS2" TO -L- STATION 10+00 IS
S 79°58'27.2" W 332.23 (ft)
ALL LINEAR DIMENSIONS ARE LOCALIZED HORIZONTAL DISTANCES
VERTICAL DATUM USED IS NAVD 88

Prepared in the Office of:

Mattern & Craig
ENGINEERS SURVEYORS
12 BROAD STREET
ASHEVILLE, NORTH CAROLINA 28801
(828) 254-2201
FAX (828) 254-4562
NC LIC. NO. C-1154

2018 STANDARD SPECIFICATIONS

RIGHT OF WAY DATE:	*LETTING DATE:*
JULY 2, 2021	DECEMBER 7, 2022

PROFESSIONAL LAND SURVEYOR

NORTH CAROLINA PROFESSIONAL SEAL L-5235 LAND SURVEYOR RON L. ZIETLOW

DocuSigned by:
Ron Zietlow
84E55C984005472
SIGNATURE:

10/3/2022
Date:

STATE OF NORTH CAROLINA DEPARTMENT OF TRANSPORTATION

03-OCT-2022 07:43
C:\RLZ Laptop\392\YX17BP13R170_ls_rw01.dgn
rlzietlow AT MC-NBK-L5ST

DocuSign Envelope ID: 002B1156-647A-4170-BBA7-01430138C637

SURVEY CONTROL SHEET

W/ EXISTING CENTERLINE ALIGNMENTS PRIOR TO CONSTRUCTION

PROJECT REFERENCE NO.	SHEET NO.
17BP13R170	RW02C–1

Location and Surveys

MATTERN & CRAIG
ENGINEERS & SURVEYORS
12 BROAD STREET
ASHEVILLE, NORTH CAROLINA 28801
(828) 254-2201
FAX (828) 254-4562
NC LIC. NO. C-1154

PROJECT SURVEYOR

NORTH CAROLINA PROFESSIONAL SEAL L-5235 LAND SURVEYOR R.L. ZIETLOW

DOCUMENT NOT CONSIDERED FINAL UNLESS ALL SIGNATURES COMPLETED

SEE SHEET RW02C–2 FOR FURTHER ALIGNMENT DETAILS

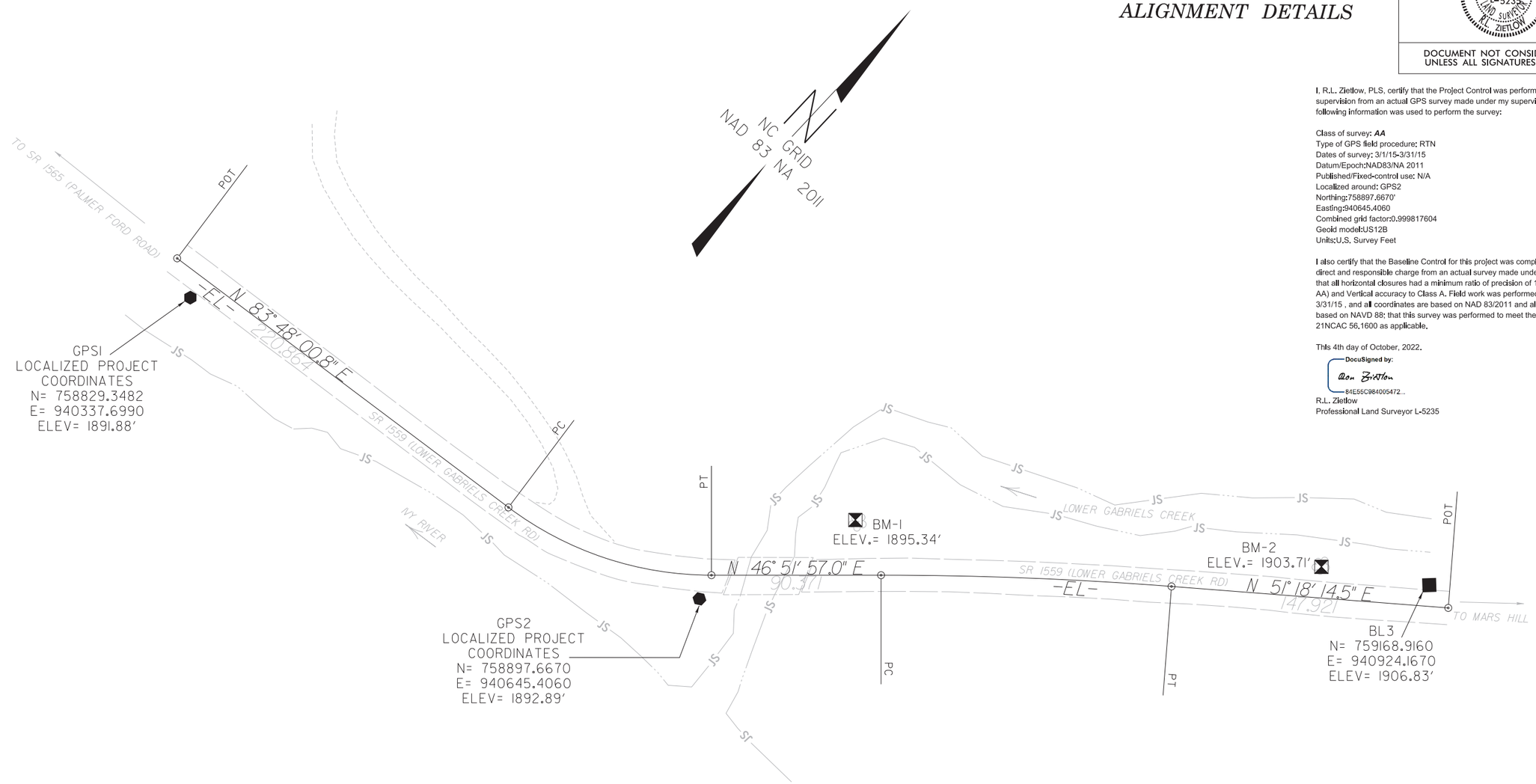

I, R.L. Zietlow, PLS, certify that the Project Control was performed under my supervision from an actual GPS survey made under my supervision and the following information was used to perform the survey:

Class of survey: ***AA***
Type of GPS field procedure: RTN
Dates of survey: 3/1/15-3/31/15
Datum/Epoch:NAD83/NA 2011
Published/Fixed-control use: N/A
Localized around: GPS2
Northing:758897.6670'
Easting:940645.4060
Combined grid factor:0.999817604
Geoid model:US12B
Units:U.S. Survey Feet

I also certify that the Baseline Control for this project was completed under my direct and responsible charge from an actual survey made under my supervision; that all horizontal closures had a minimum ratio of precision of 1:20,000 (Class AA) and Vertical accuracy to Class A. Field work was performed from 3/1/15 to 3/31/15 , and all coordinates are based on NAD 83/2011 and all elevations are based on NAVD 88; that this survey was performed to meet the requirements of 21NCAC 56.1600 as applicable.

This 4th day of October, 2022.

DocuSigned by:
Ron Zietlow
84E55C984005472...

R.L. Zietlow
Professional Land Surveyor L-5235

NOTES:

1. PROJECT CONTROL WAS ESTABLISHED USING GNSS, THE GLOBAL NAVIGATION SATELLITE SYSTEM.

2. THE SURVEY CONTROL DATA FOR THIS PROJECT HAS BEEN COMPILED FROM VARIOUS SOURCES. IF FURTHER INFORMATION REGARDING PROJECT CONTROL IS NEEDED, PLEASE CONTACT THE LOCATION AND SURVEYS UNIT.

6/2/99
REVISIONS
04-OCT 2022 11:59
r1zietlow
13-921 NCDOT Survey\3921I Div.13 R.W Stake\06 Working Folders\Survey\Dwgs\560300\17BP13R170_1s.rw02c-1a.dgn
AT MC-NBK-L5ST

DocuSign Envelope ID: 002B1156-647A-4170-BBA7-01430138C637

6/2/99

REVISIONS

SURVEY CONTROL SHEET

W/ EXISTING CENTERLINE ALIGNMENTS PRIOR TO CONSTRUCTION

PROJECT REFERENCE NO.	SHEET NO.
17BP13R170	RW02C-2

Location and Surveys

MATTERN & CRAIG
ENGINEERS & SURVEYORS
12 BROAD STREET
ASHEVILLE, NORTH CAROLINA 28801
(828) 254-2201
FAX (828) 254-4562
NC LIC. NO. C-1154

PROJECT SURVEYOR

NORTH CAROLINA PROFESSIONAL SEAL L-5235 LAND SURVEYOR R.L. ZIETLOW

DOCUMENT NOT CONSIDERED FINAL UNLESS ALL SIGNATURES COMPLETED

BASELINE

BL

POINT	DESC.	NORTH	EAST	ELEVATION
1	GPS1	758829.3482	940337.6990	1891.88
2	GPS2	758897.6670	940645.4060	1892.89
3	BL3	759168.9160	940924.1670	1906.83

BM2 ELEVATION = 1903.71
N 759137 E 940876
BM2 IS RR SPIKE SET IN BASE OF 22" WALNUT

BM1 ELEVATION = 1895.34
N 758985 E 940677
BM1 IS RR SPIKE SET IN BASE OF 20" MAPLE

I, R.L. Zietlow, PLS, certify that the Project Control was performed under my supervision from an actual GPS survey made under my supervision and the following information was used to perform the survey:

Class of survey: ***AA***
Type of GPS field procedure: RTN
Dates of survey: 3/1/15-3/31/15
Datum/Epoch:NAD83/NA 2011
Published/Fixed-control use: N/A
Localized around: GPS2
Northing:758897.6670'
Easting:940645.4060
Combined grid factor:0.999817604
Geoid model:US12B
Units:U.S. Survey Feet

I also certify that the Baseline Control for this project was completed under my direct and responsible charge from an actual survey made under my supervision; that all horizontal closures had a minimum ratio of precision of 1:20,000 (Class AA) and Vertical accuracy to Class A. Field work was performed from 3/1/15 to 3/31/15 , and all coordinates are based on NAD 83/2011 and all elevations are based on NAVD 88; that this survey was performed to meet the requirements of 21NCAC 56.1600 as applicable.

This 4th day of October, 2022.

DocuSigned by:
Ron Zietlow
84E55C984005472...

R.L. Zietlow
Professional Land Surveyor L-5235

EXISTING ALIGNMENT

EL

POINT	N	E	BEARING	DIST	DELTA	D	L	T	R
POT	758839.831	940318.252							
LINE			N 83°48'00.8" E	220.86					
PC	758863.684	940537.824							
CURVE			N 65°19'58.9" E	114.03	36°56'03.8"(LT)	31°49'51.6"	116.03	60.11	180.00
PT	758911.275	940641.453							
LINE			N 46°51'57.0" E	90.37					
PC	758973.063	940707.402							
CURVE			N 49°05'05.8" E	154.88	04°26'17.5"(RT)	02°51'53.2"	154.92	77.50	2000.00
PT	759074.502	940824.444							
LINE			N 51°18'14.5" E	147.92					
POT	759166.980	940939.892							

NOTES:

1. PROJECT CONTROL WAS ESTABLISHED USING GNSS, THE GLOBAL NAVIGATION SATELLITE SYSTEM.

2. THE SURVEY CONTROL DATA FOR THIS PROJECT HAS BEEN COMPILED FROM VARIOUS SOURCES. IF FURTHER INFORMATION REGARDING PROJECT CONTROL IS NEEDED, PLEASE CONTACT THE LOCATION AND SURVEYS UNIT.

04-OCT-2022 11:52
I:\3850F - Madison 300\06 17BP13R170\FinalSurvey\560300_ls_1C-2.dgn
rlzietlow AT MC-NBK-L5ST

DocuSign Envelope ID: E706BB5C-3DD7-412D-B00A-E18EC608E958

6/2/99

REVISIONS

PROPOSED ALIGNMENT CONTROL SHEET

PROJECT REFERENCE NO.	SHEET NO.
17BP13R170	RW02D-1

Location and Surveys

MATTERN AND CRAIG
ENGINEERS & SURVEYORS
12 BROAD STREET
ASHEVILLE NORTH CAROLINA 28801
(828) 254-2201
FAX (828) 254-4562
NC LIC. NO. C-1154

PROJECT SURVEYOR

NORTH CAROLINA PROFESSIONAL SEAL L-5235 LAND SURVEYOR R.L. ZIETLOW

DOCUMENT NOT CONSIDERED FINAL UNLESS ALL SIGNATURES COMPLETED

I, R. L. Zietlow, PLS, certify that the data compiled came from available surveys/mapping performed by others and provided to me by NCDOT and do not certify to the accuracy or quality of the individual data sources.

This 3rd day of October, 2022.

DocuSigned by:
Ron Zietlow
84E55C984005472...

Professional Land Surveyor L-5235

-L- SR 1559 (LOWER GABRIELS CREEK RD.)

TYPE	STATION	NORTH	EAST
POT	10+00.00	758839.8315	940318.2525
PC	12+20.86	758863.6837	940537.8244
PT	13+36.90	758911.2751	940641.4528
PC	14+27.27	758973.0627	940707.4017
PT	15+82.19	759074.5017	940824.4439
POT	17+30.11	759166.9802	940939.8925

NOTES:

1. PROJECT CONTROL WAS ESTABLISHED USING GNSS, THE GLOBAL NAVIGATION SATELLITE SYSTEM.

2. THE PROPOSED ALIGNMENT CONTROL DATA FOR THIS PROJECT HAS BEEN COMPILED FROM VARIOUS SOURCES. IF FURTHER INFORMATION REGARDING PROJECT CONTROL IS NEEDED, PLEASE CONTACT THE LOCATION AND SURVEYS UNIT.

04-OCT-2022 10:35
C:\PCC\Projects\21\17BP13R170.ls_rw02d-1.dgn
rlzietlow AT MC-NBK-LS3

DocuSign Envelope ID: 60C85A6D-27E3-4474-89A8-39A7DE5C9590

6/2/99

REVISIONS

RIGHT OF WAY CONTROL SHEET

PROJECT REFERENCE NO.	SHEET NO.
17BP13R170	RW03E-1

Location and Surveys

MATTERN AND CRAIG
ENGINEERS & SURVEYORS
12 BROAD STREET
ASHEVILLE NORTH CAROLINA 28801
(828) 254-2201
FAX (828) 254-4562
NC LIC. NO. C-1154

PROJECT SURVEYOR

NORTH CAROLINA PROFESSIONAL SEAL L-5235 LAND SURVEYOR R.L. ZIETLOW

DOCUMENT NOT CONSIDERED FINAL UNLESS ALL SIGNATURES COMPLETED

I, R. L. Zietlow, certify that the right of way and permanent easement monumentation for this project shown herein was completed under my direct and responsible charge from an actual survey made under my supervision; that all horizontal closures had a minimum ratio of precision of 1:10,000 (Class A). Field work was performed from 5/15/19 to 10/3/22, and all coordinates are based on NAD83/2011; That this survey was performed to meet the requirements of 21NCAC 56.1600 as applicable.

This 3rd day of October, 2022.

DocuSigned by:
Ron Zietlow
84E55C984005472...

Professional Land Surveyor L-5235

ROW MARKER IRON PIN AND CAP-E

ALIGN	STATION	OFFSET	NORTH	EAST
L	13+36.90	25.00	758893.0312	940658.5456
L	14+27.29	25.00	758954.8326	940724.5090
L	15+82.19	25.00	759054.9899	940840.0736
L	13+36.90	-25.00	758929.5190	940624.3601
L	14+27.27	-25.00	758991.3066	940690.3089
L	15+82.19	-25.00	759094.0136	940808.8142

ROW MARKER PERMANENT EASEMENT-E

ALIGN	STATION	OFFSET	NORTH	EAST
L	15+00.00	-25.00	759040.6678	940744.9528
L	15+03.00	-35.50	759050.5896	940740.3612
L	15+10.00	-25.00	759047.2980	940752.6049
L	15+12.00	-33.00	759054.6839	940748.9218

NOTES:

1. IF FURTHER INFORMATION REGARDING PROJECT CONTROL IS NEEDED PLEASE CONTACT THE LOCATION AND SURVEYS UNIT.
2. PROJECT CONTROL WAS ESTABLISHED USING GNSS, THE GLOBAL NAVIGATION SATELLITE SYSTEM.
3. RIGHT OF WAY MONUMENTATION ESTABLISHED 5/15/19 TO 10/3/22 .

03-OCT-2022 07:53
C:\APT\cpsg\321\X\17BP13R170.ls.rw03e-1.dgn
rlzietlow AT MC-NBK-L5ST

DocuSign Envelope ID: 6634AB1D-DAD3-4A9E-934F-53AFB5659FF0

6/2/99

REVISIONS

PROJECT REFERENCE NO.	SHEET NO.
17BP.13.R.170	RW04

Location and Surveys

MATTERN AND CRAIG
ENGINEERS & SURVEYORS
12 BROAD STREET
ASHEVILLE NORTH CAROLINA 28801
(828) 254-2201
FAX (828) 254-4562
NC LIC. NO. C-1154

PROJECT SURVEYOR

NORTH CAROLINA PROFESSIONAL SEAL L-5235 LAND SURVEYOR R.L. ZIETLOW

DOCUMENT NOT CONSIDERED FINAL UNLESS ALL SIGNATURES COMPLETED

I, R.L. Zietlow, certify that the right of way and permanent easement monumentation for this project shown herein was completed under my direct and responsible charge from an actual survey made under my supervision; that all horizontal closures had a minimum ratio of precision of 1:10,000 (Class A). Field work was performed from 5/15/19 to 10/3/22, and all coordinates are based on NAD83/2011; That this survey was performed to meet the requirements of 21NCAC 56.1600 as applicable.

This 3rd day of October, 2022.

DocuSigned by:
Rex Zietlow
5AE130C9B4D04F2...

Professional Land Surveyor L-5235

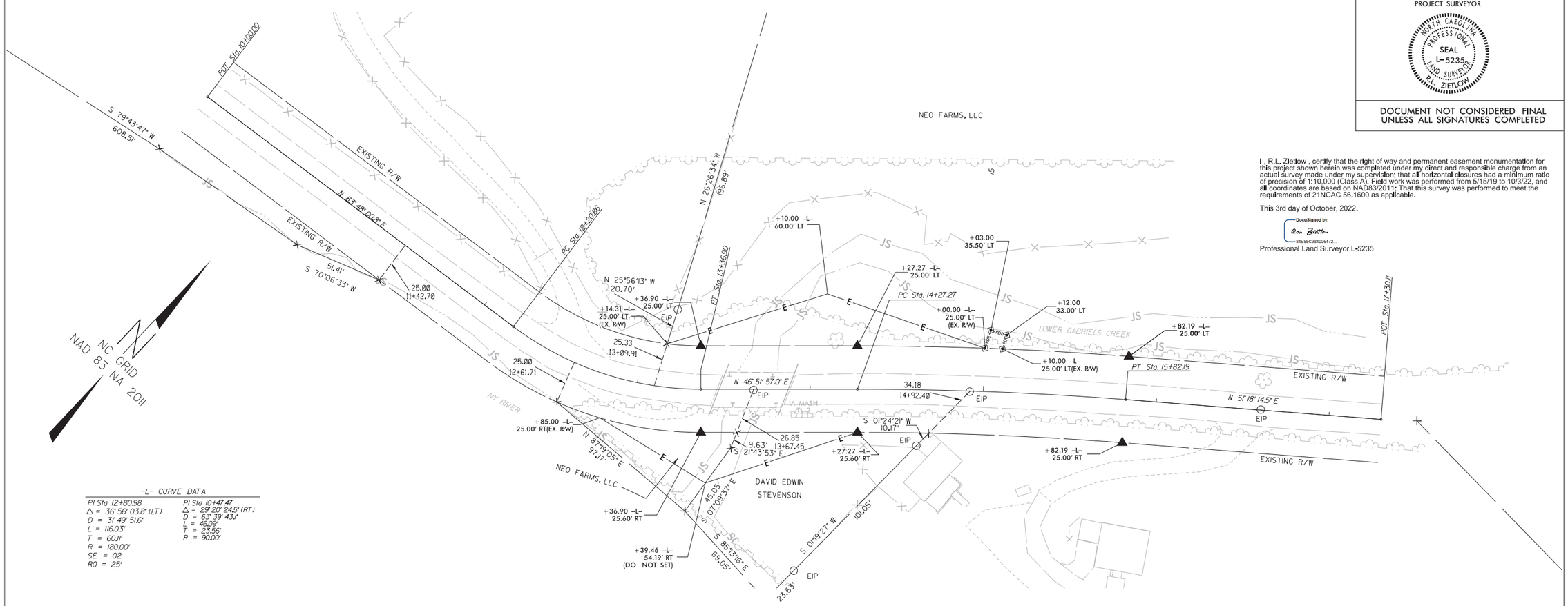

-L- CURVE DATA

PI Sta 12+80.98	PI Sta 10+47.47
Δ = 36° 56' 03.8" (LT)	Δ = 29° 20' 24.5" (RT)
D = 31° 49' 51.6"	D = 63° 39' 43.1"
L = 116.03'	L = 46.09'
T = 60.11'	T = 23.56'
R = 180.00'	R = 90.00'
SE = 02	
RO = 25'	

NOTES:

1. IF FURTHER INFORMATION REGARDING PROJECT CONTROL IS NEEDED PLEASE CONTACT THE LOCATION AND SURVEYS UNIT.
2. PROJECT CONTROL WAS ESTABLISHED USING GNSS, THE GLOBAL NAVIGATION SATELLITE SYSTEM.
3. RIGHT OF WAY MONUMENTATION ESTABLISHED 5/15/19 TO 10/3/22 .

04-OCT-2022 12:11
C:\RLZ_Local\3921\17BP13R170.1s_rw04.dgn
rlzietlow AT MC-NBK-L5ST

DocuSign Envelope ID: DD10A279-ECAB-4154-B937-2D821A0610C2

STATE OF NORTH CAROLINA
DIVISION OF HIGHWAYS

TRANSPORTATION MANAGEMENT PLAN

MADISON COUNTY

LOCATION: BRIDGE NO. 300 ON SR 1559 (LOWER GABRIELS CREEK RD) OVER GABRIELS CREEK

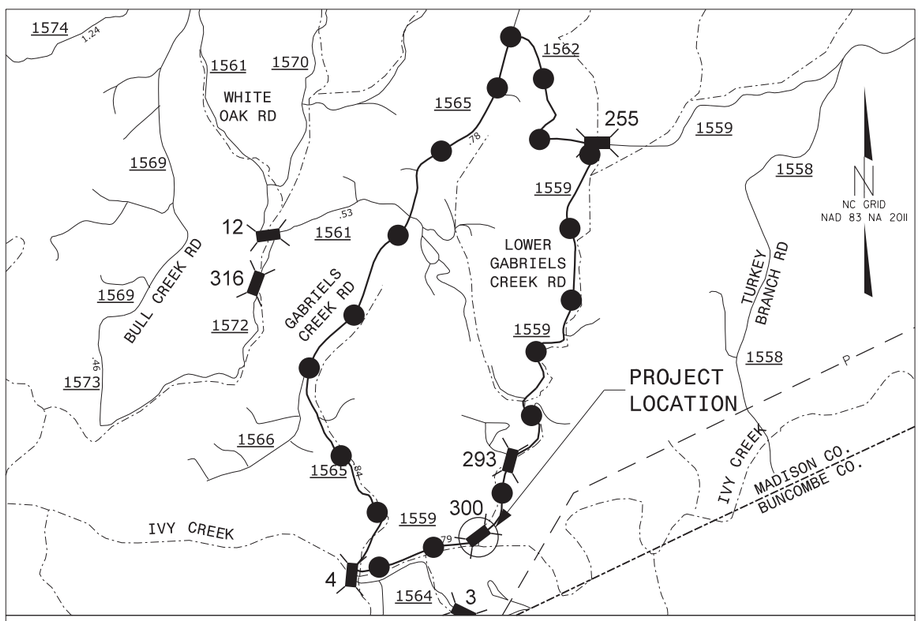

VICINITY MAP

OFF-SITE DETOUR ROUTE

INDEX OF SHEETS

SHEET NO.	TITLE
TMP-1	TITLE SHEET, VICINITY MAP, AND INDEX OF SHEETS
TMP-1A	LIST OF APPLICABLE ROADWAY STANDARD DRAWINGS, GENERAL NOTES, AND LEGEND
TMP-1B	DETAIL 1205D12: PAVEMENT MARKING - BRIDGES SHEET 1 OF 1
TMP-2	OFFSITE DETOUR SIGNING AND ROAD CLOSURE
TMP-2A	SPECIAL SIGN DESIGN
PM-1	PAVEMENT MARKING PLAN

SHEET NO.
TMP-1

TIP PROJECT: 17BP.13.R.170

WORK ZONE SAFETY & MOBILITY
"from the MOUNTAINS to the COAST"

PLANS PREPARED BY:

JAMES VOSO, PE
TRAFFIC CONTROL PROJECT DESIGN ENGINEER

BRITTON ORR, PE
TRAFFIC CONTROL DESIGNER ENGINEER

NCDOT CONTACTS:

MIKE CALLOWAY
PROJECT ENGINEER

PROJECT DESIGN ENGINEER

DIVISION OF HIGHWAYS · STATE OF NORTH CAROLINA · DEPARTMENT OF TRANSPORTATION · WORK ZONE TRAFFIC CONTROL

DOCUMENT NOT CONSIDERED FINAL UNLESS ALL SIGNATURES COMPLETED

Mattern & Craig
ENGINEERS • SURVEYORS
12 BROAD STREET
ASHEVILLE, NORTH CAROLINA 28801
(828) 254-2201
FAX (828) 254-4562
NC LIC. NO. C-1154

APPROVED: DocuSigned by: James B. Voso, PE 140FD6037BE041F...

DATE: 10/13/2022

SEAL

NORTH CAROLINA PROFESSIONAL SEAL 022599 ENGINEER JAMES B. VOSO

DocuSign Envelope ID: DD10A279-ECAB-4154-B937-2D821A0610C2

PROJ. REFERENCE NO.	SHEET NO.
17BP.13.R.170	TMP-1A

ROADWAY STANDARD DRAWINGS

THE FOLLOWING ROADWAY STANDARDS AS SHOWN IN "ROADWAY STANDARD DRAWINGS" - N.C. DEPARTMENT OF TRANSPORTATION - RALEIGH, N.C., DATED JANUARY 2018 ARE APPLICABLE TO THIS PROJECT AND BY REFERENCE HEREBY ARE CONSIDERED A PART OF THESE PLANS:

STD. NO.	TITLE
1101.01	WORK ZONE WARNING SIGNS
1101.03	TEMPORARY ROAD CLOSURES
1101.11	TRAFFIC CONTROL DESIGN TABLES
1110.01	STATIONARY WORK ZONE SIGNS
1130.01	DRUMS
1135.01	CONES
1145.01	BARRICADES
1205.01	PAVEMENT MARKINGS - LINE TYPES AND OFFSETS
1205.02	PAVEMENT MARKINGS - TWO LANE AND MULTILANE ROADWAYS
1205D12	PAVEMENT MARKINGS - BRIDGES
1250.01	RAISED PAVEMENT MARKERS - INSTALLATION SPACING
1251.01	RAISED PAVEMENT MARKERS - (PERMANENT AND TEMPORARY)
1261.01	GUARDRAIL AND BARRIER DELINEATORS - INSTALLATION SPACING
1261.02	GUARDRAIL AND BARRIER DELINEATORS - TYPES AND MOUNTING
1262.01	GUARDRAIL END DELINEATION

LEGEND

GENERAL

NORTH ARROW

TRAFFIC CONTROL DEVICES

BARRICADE (TYPE III)

TEMPORARY SIGNING

STATIONARY SIGN

MANAGEMENT STRATEGIES

THE FOLLOWING LISTED WORK ZONE STRATEGIES ARE RECOMMENDED FOR INCLUSION WITHIN THIS TRANSPORTATION MANAGEMENT PLAN (TMP).

RECOMMENDED STRATEGIES

FULL ROADWAY CLOSURES
OFF-SITE DETOURS / USE OF ALTERNATIVE ROUTES
LOCAL DETOUR ROUTES

GENERAL NOTES

CHANGES MAY BE REQUIRED WHEN PHYSICAL DIMENSIONS IN THE DETAIL DRAWINGS, STANDARD DETAILS, AND ROADWAY DETAILS ARE NOT ATTAINABLE TO MEET FIELD CONDITIONS OR RESULT IN DUPLICATE OR UNDESIRED OVERLAPPING OF DEVICES. MODIFICATION MAY INCLUDE: MOVING, SUPPLEMENTING, COVERING, OR REMOVAL OF DEVICES AS DIRECTED BY THE ENGINEER.

THE FOLLOWING GENERAL NOTES APPLY AT ALL TIMES FOR THE DURATION OF THE CONSTRUCTION PROJECT EXCEPT WHEN OTHERWISE NOTED IN THE PLAN OR DIRECTED BY THE ENGINEER.

TRAFFIC PATTERN ALTERATIONS

A) NOTIFY THE ENGINEER THIRTY (30) CALENDAR DAYS PRIOR TO ANY TRAFFIC PATTERN ALTERATION.

SIGNING

B) INSTALL ADVANCE WORK ZONE WARNING SIGNS WHEN WORK IS WITHIN 40 FT FROM THE EDGE OF TRAVEL LANE AND NO MORE THAN THREE (3) DAYS PRIOR TO THE BEGINNING OF CONSTRUCTION.

C) PROVIDE SIGNING AND DEVICES REQUIRED TO CLOSE THE ROAD ACCORDING TO THE ROADWAY STANDARD DRAWINGS AND TRAFFIC CONTROL PLANS.

PROVIDE SIGNING REQUIRED FOR THE OFF-SITE DETOUR ROUTE AS SHOWN IN THE TRAFFIC CONTROL PLANS.

D) STATE FORCES WILL COVER OR REMOVE ALL SIGNS AND DEVICES REQUIRED TO CLOSE THE ROAD WHEN ROAD CLOSURE IS NOT IN OPERATION.

STATE FORCES WILL COVER OR REMOVE ALL SIGNS REQUIRED FOR THE OFF-SITE DETOUR WHEN THE DETOUR IS NOT IN OPERATION.

E) ENSURE ALL NECESSARY SIGNING IS IN PLACE PRIOR TO ALTERING ANY TRAFFIC PATTERN.

TRAFFIC CONTROL DEVICES

F) PLACE TYPE III BARRICADES, WITH "ROAD CLOSED" SIGN R11-2 ATTACHED, OF SUFFICIENT LENGTH TO CLOSE ENTIRE ROADWAY.

PAVEMENT MARKINGS AND MARKERS

G) STATE FORCES WILL INSTALL PAVEMENT MARKINGS AND PAVEMENT MARKERS ON THE FINAL SURFACE.

H) TIE PROPOSED PAVEMENT MARKING LINES TO EXISTING PAVEMENT MARKING LINES.

LOCAL NOTES

1) EMERGENCY VEHICLE ACCESS MUST BE MAINTAINED AT ALL TIMES.

2) NOTIFY MADISON COUNTY EMERGENCY SERVICES AND MADISON COUNTY SCHOOL BOARD 30 DAYS PRIOR TO ANY LANE AND/OR ROAD CLOSURES.

PHASING NOTES

PHASE I

STEP 1) PRIOR TO ANY CONSTRUCTION OPERATIONS, INSTALL AND COVER OFF-SITE DETOUR SIGNING (SEE SHEET TMP-2) IN ACCORDANCE WITH RSD 1101.03 SHEET 1 OF 9.

STEP 2) UNCOVER OFF-SITE DETOUR SIGNING AND CLOSE SR 1559 (LOWER GABRIELS CREEK ROAD).

PHASE II

STEP 1) REMOVE EXISTING BRIDGE NO. 300 OVER GABRIELS CREEK)

STEP 2) CONSTRUCT PROPOSED STRUCTURE, APPROACH SLABS, AND ROADWAY (SEE ROADWAY PLAN AND STRUCTURE PLAN).

STEP 3) PLACE THE FINAL PAVEMENT MARKING (SEE SHEET TMP-2), REMOVE TRAFFIC CONTROL DEVICES AND DETOUR SIGNS, AND OPEN SR 1559 (LOWER GABRIELS CREEK RD) TO TRAFFIC.

Mattern & Craig
ENGINEERS • SURVEYORS
12 BROAD STREET
ASHEVILLE, NORTH CAROLINA 28801
(828) 254-2201
FAX (828) 254-4562
NC LIC. NO. C-1154

APPROVED: DocuSigned by: James B. Vosa, PE 16CFD6D37BD241F...

DATE: 10/13/2022

SEAL

NORTH CAROLINA PROFESSIONAL SEAL 022599 ENGINEER JAMES B. VOSO

DOCUMENT NOT CONSIDERED FINAL UNLESS ALL SIGNATURES COMPLETED

DIVISION OF HIGHWAYS • STATE OF NORTH CAROLINA • DEPARTMENT OF TRANSPORTATION • WORK ZONE TRAFFIC CONTROL

ROADWAY STANDARD DRAWINGS, GENERAL NOTES, & TRANSPORTATION OPERATIONS

DocuSign Envelope ID: DD10A279-ECAB-4154-B937-2D821A0610C2

TIP NO.	SHEET NO.
17BP.13.R.170	TMP-1B

APPROVED: DocuSigned by: Matthew V. Springer
DATE: 8/30/2019 BC00F0E8B584403...

SEAL
NORTH CAROLINA PROFESSIONAL SEAL 042546 ENGINEER MATTHEW V. SPRINGER

STATE OF NORTH CAROLINA
DEPT. OF TRANSPORTATION
DIVISION OF HIGHWAYS
RALEIGH, N.C.

8-19

ENGLISH DETAIL DRAWING FOR
PAVEMENT MARKINGS
BRIDGES

STANDARD BRIDGE

CLEAR ROADWAY WIDTH > 25 FT.

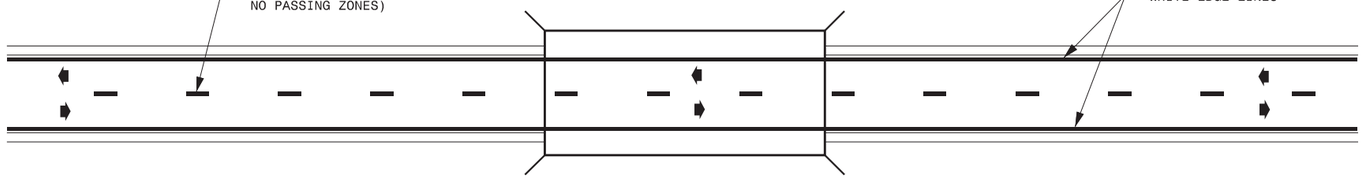

NARROW BRIDGE

18 FT. ≥ CLEAR ROADWAY WIDTH ≤ 25 FT.

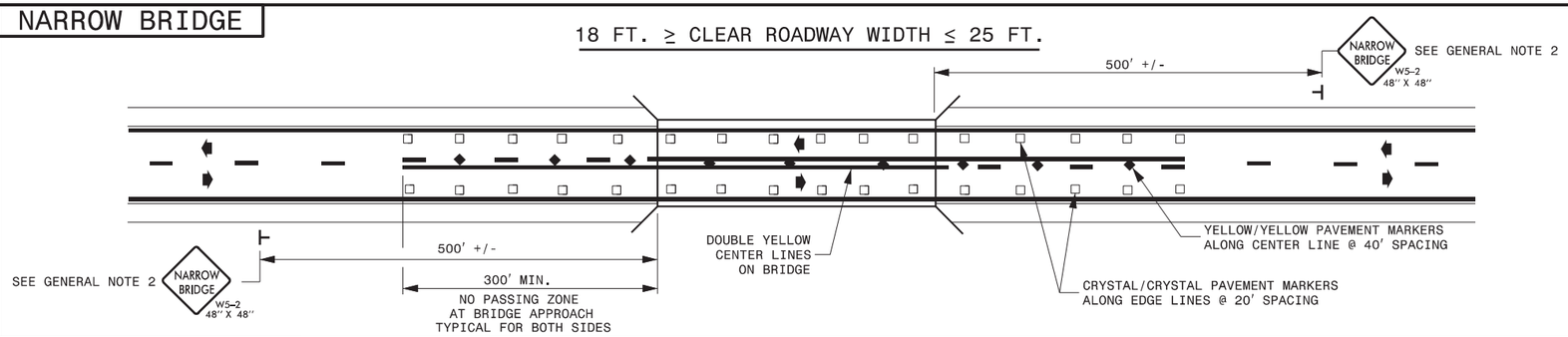

ONE-LANE BRIDGE

CLEAR ROADWAY WIDTH < 18 FT.

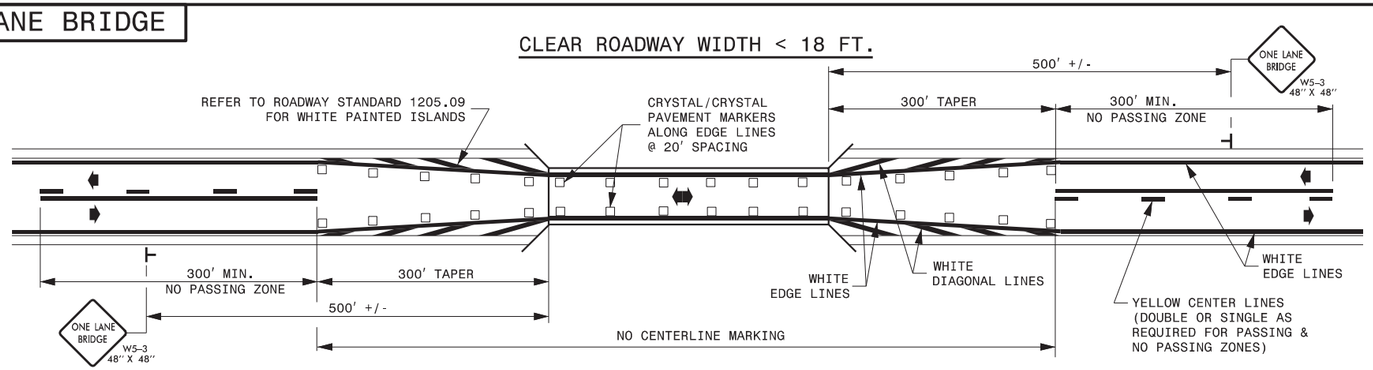

GENERAL NOTES:

1- NO PASSING ZONES SHOWN ARE MINIMUMS. APPLY MINIMUM PASSING AND STOPPING SIGHT DISTANCES AS DETERMINED BY THE ENGINEER.

2- FOR BRIDGES WITH 18 TO 25 FEET CLEAR ROADWAY WIDTH, SIGNS MUST BE USED WHEN THE APPROACH PAVEMENT WIDTH IS 2 FOOT OR GREATER THAN THE CLEAR ROADWAY WIDTH.

LEGEND

- DIRECTION OF TRAFFIC FLOW
- STATIONARY SIGN
- YELLOW/YELLOW PAVEMENT MARKER
- CRYSTAL/CRYSTAL PAVEMENT MARKER

SHEET 1 OF 1
1205D12

STATE OF NORTH CAROLINA
DEPT. OF TRANSPORTATION
DIVISION OF HIGHWAYS
RALEIGH, N.C.

8-19

ENGLISH DETAIL DRAWING FOR
PAVEMENT MARKINGS
BRIDGES

SHEET 1 OF 1
1205D12

REVISED PAVEMENT MARKING ROADWAY STANDARD DRAWING

08/30/19
S:\S&DU\Standards Group\Standards and Drawings\Drawings\2018 Standard Dwgs\Division 12 Final\1205120L_08-29-19.dgn
User:rdstokes

DocuSign Envelope ID: DD10A279-ECAB-4154-B937-2D821A0610C2

PROJ. REFERENCE NO.	SHEET NO.
17BP.13.R.170	TMP-2

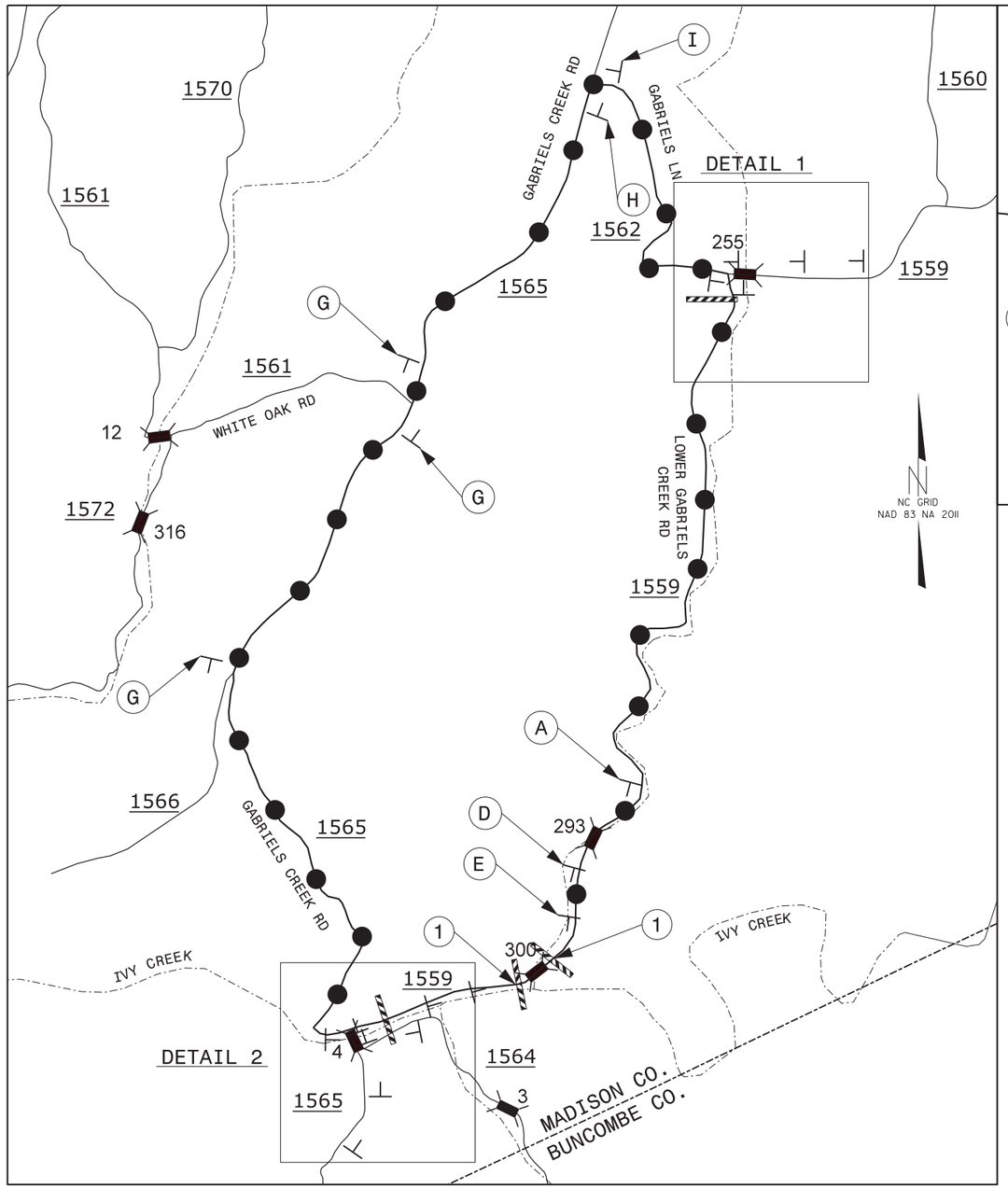

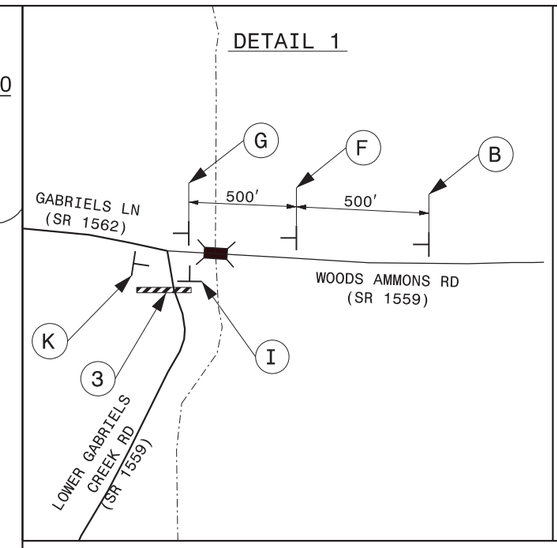

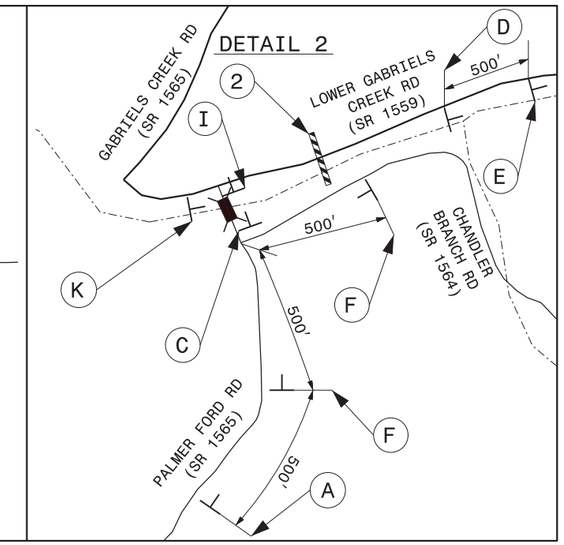

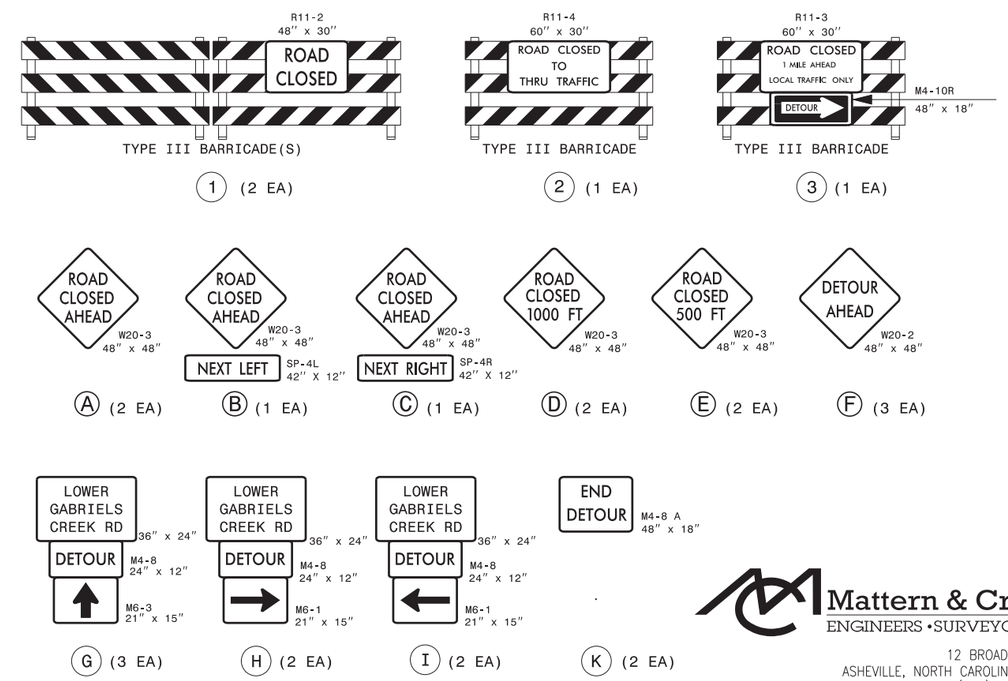

Mattern & Craig
ENGINEERS • SURVEYORS
12 BROAD STREET
ASHEVILLE, NORTH CAROLINA 28801
(828) 254-2201
FAX (828) 254-4562
NC LIC. NO. C-1154

NOTES:
- ALL DETOUR SIGN LOCATIONS ARE APPROXIMATE.
- ALL DETOUR SIGNS ARE BLACK ON ORANGE UNLESS OTHERWISE NOTED.
- TRAFFIC CONTROL DEVICES A THROUGH F SHALL BE INSTALLED ACCORDING TO ROADWAY STANDARD DRAWING 1101.03, SHEET 1 OF 9.
- TRAFFIC CONTROL DEVICES 1 THROUGH 3 SHALL BE INSTALLED AS PER ENGINEER'S INSTRUCTIONS, AND AS SHOWN HEREON.

* SEE ROADWAY STANDARD DRAWING NO. 1101.03, SHEET 1 OF 9 AND 2 OF 9, FOR ADDITIONAL WORK ZONE SIGNS.

APPROVED: DocuSigned by: James B. Vosi, PE
140FD603716D41F...
DATE: 10/13/2022
SEAL
NORTH CAROLINA PROFESSIONAL SEAL 022599 ENGINEER JAMES B. VOSI
DOCUMENT NOT CONSIDERED FINAL UNLESS ALL SIGNATURES COMPLETED

DIVISION OF HIGHWAYS STATE OF NORTH CAROLINA DEPARTMENT OF TRANSPORTATION WORK ZONE TRAFFIC CONTROL

OFF-SITE DETOUR ROUTE AND ROAD CLOSURE

DocuSign Envelope ID: DD10A279-ECAB-4154-B937-2D821A0610C2

PROJ. REFERENCE NO.	SHEET NO.
17BP.13.R.170	TMP-2A

SIGN NUMBER: SP-1
TYPE: D
QUANTITY: SEE PLANS

SIGN WIDTH: 3′-0″
HEIGHT: 2′-0″
TOTAL AREA: 6.0 Sq.Ft.

BORDER TYPE: FLUSH
RECESS: 0.47″
WIDTH: 0.63″
RADII: 1.5″

NO. Z BARS:
LENGTH:

BACKG COLOR: Fluorescent Orange
COPY COLOR: Black

SYMBOL	X	Y	WID	HT

MAT′L: 0.125″ (2.0 mm) ALUMINUM

DESIGN BY: BJO
PROJECT ID: 17BP.13.R.170
CHECKED BY:
DIV: 13
DATE: Aug 28, 2019

USE NOTES: 1,3,4,6

1. Legend and border shall be direct applied encapsulated lens reflective sheeting.
2. Legend and border shall be direct applied enclosed lens reflective sheeting.
3. Shields shall be encapsulated lens reflective sheeting on 0.8mm aluminum and demountable.
4. Background shall be encapsulated lens reflective sheeting.
5. Background shall be enclosed lens reflective sheeting.
6. Center arrows vertically on sign.

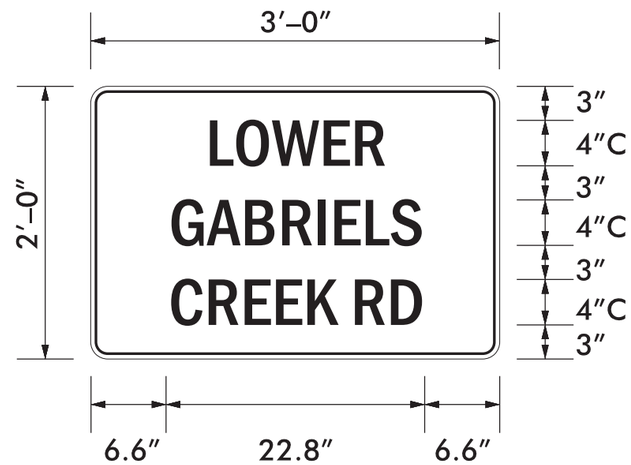

BORDER
R=1.5″
TH=0.63″
IN=0.47″

Spacing Factor is 1 unless specified otherwise

LETTER POSITIONS

Letter spacings are to start of next letter

																											Series/Size Text Length
		L	O	W	E	R																					C 2000/4
	11	2.5	2.9	3.6	2.7	2.2	11																				13.9
		G	A	B	R	I	E	L	S																		C 2000/4
	7.7	2.7	3.1	2.9	2.9	1.5	2.7	2.4	2.3	7.7																	20.5
		C	R	E	E	K		R	D																		C 2000/4
	6.6	3	2.9	2.7	2.7	2.3	4	2.9	2.3	6.6																	22.8

NORTH CAROLINA D.O.T. SIGN DETAIL

Mattern & Craig
ENGINEERS • SURVEYORS
12 BROAD STREET
ASHEVILLE, NORTH CAROLINA 28801
(828) 254-2201
FAX (828) 254-4562
NC LIC. NO. C-1154

APPROVED: DocuSigned by: James B. Vosi, PE 140FD602376E041F...
DATE: 10/13/2022
SEAL

NORTH CAROLINA PROFESSIONAL SEAL 022599 ENGINEER JAMES B. VOSSI

DIVISION OF HIGHWAYS · STATE OF NORTH CAROLINA · DEPARTMENT OF TRANSPORTATION · WORK ZONE TRAFFIC CONTROL

SPECIAL
SIGN DESIGN

DocuSign Envelope ID: DD10A279-ECAB-4154-B937-2D821A0610C2

PROJ. REFERENCE NO.	SHEET NO.
17BP.13.R.170	PM-1

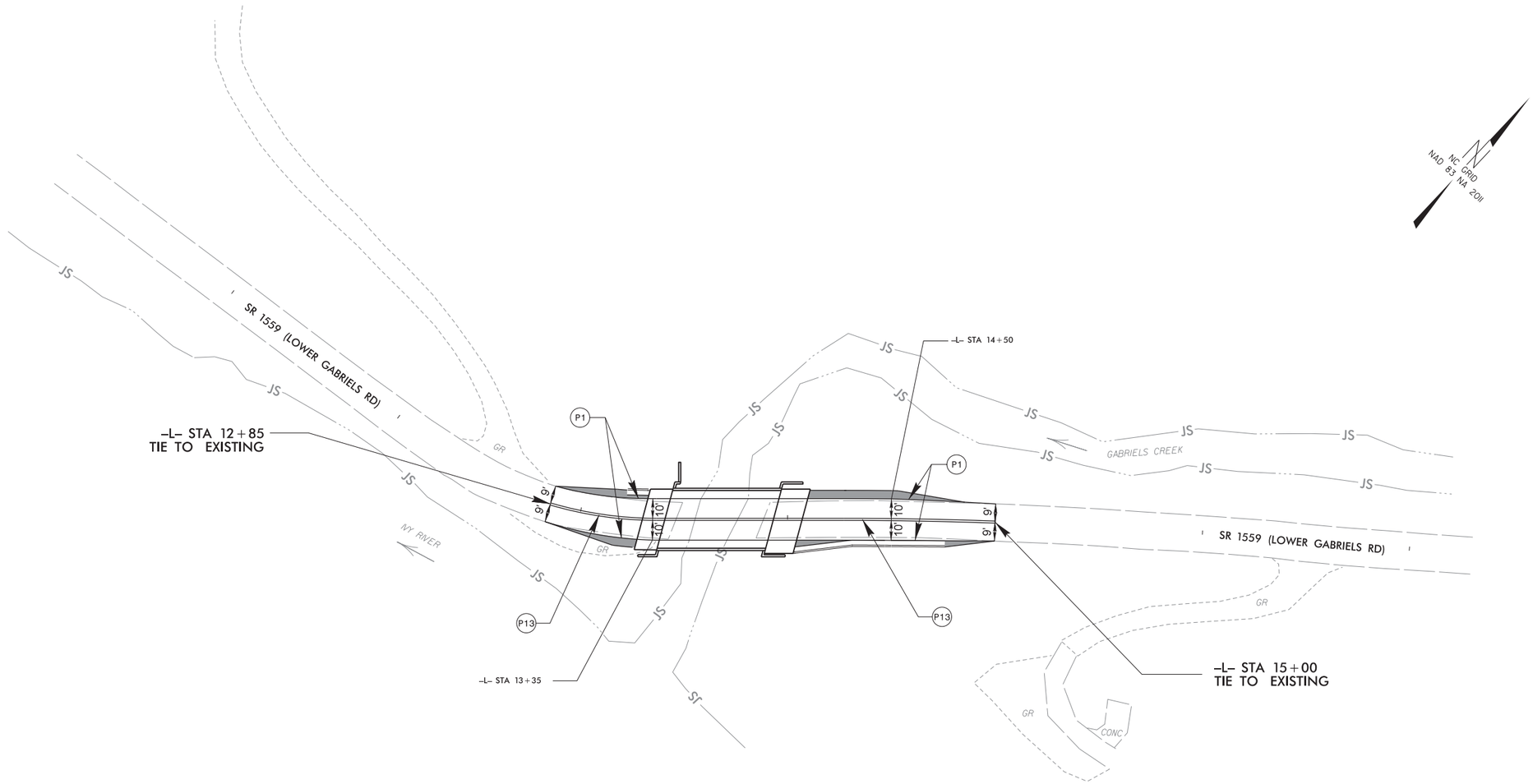

FINAL PAVEMENT MARKING SCHEDULE

SYMBOL	DESCRIPTION	QUANTITY BREAKDOWN	PAY ITEM	TOTAL QUANTITY
		PAVEMENT MARKING LINES		
P1	WHITE SOLID EDGE LINE	430 FT	PAINT (4")	860 FT
P13	YELLOW DOUBLE CENTER LINE	430 FT	PAINT (4")	860 FT

NOTE: FINAL PAVEMENT MARKINGS = 2 COATS OF PAINT

30 15 0 30 60

SCALE 1"=30'

Mattern & Craig
ENGINEERS • SURVEYORS
12 BROAD STREET
ASHEVILLE, NORTH CAROLINA 28801
(828) 254-2201
FAX (828) 254-4562
NC LIC. NO. C-1154

APPROVED: DocuSigned by: James B. Voso, PE 1A2FD6037GE041F...

DATE: 10/13/2022

SEAL

NORTH CAROLINA PROFESSIONAL SEAL 022599 ENGINEER JAMES B. VOSO

DOCUMENT NOT CONSIDERED FINAL UNLESS ALL SIGNATURES COMPLETED

DIVISION OF HIGHWAYS • STATE OF NORTH CAROLINA • DEPARTMENT OF TRANSPORTATION • WORK ZONE TRAFFIC CONTROL

PAVEMENT MARKING PLAN

DocuSign Envelope ID: 077A085F-B0AB-4B0A-9C2A-1DF07548A0A3

TIP PROJECT: 17BP.13.R.170

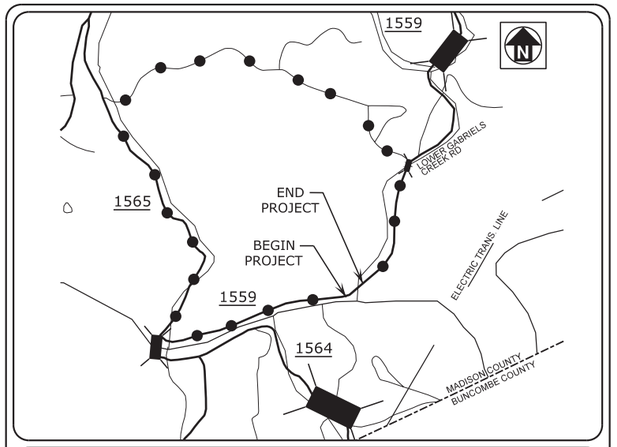

VICINITY MAP
NOT TO SCALE

STATE OF NORTH CAROLINA
DIVISION OF HIGHWAYS

PLAN FOR PROPOSED
HIGHWAY EROSION CONTROL

MADISON COUNTY

LOCATION: BRIDGE NO. 300 ON SR 1559 (LOWER GABRIELS CREEK RD) OVER GABRIEL CREEK

TYPE OF WORK: GRADING, PAVING, DRAINAGE, AND STRUCTURE

STATE	STATE PROJECT REFERENCE NO.	SHEET NO.	TOTAL SHEETS
N.C.	17BP.13.R.170	EC-1	

STATE PROJ. NO.	F. A. PROJ. NO.	DESCRIPTION
17BP.13.R.170	N/A	P.E.
17BP.13.R.170	N/A	R/W & UTIL
17BP.13.R.170	N/A	CONST

EC–4
EC–5

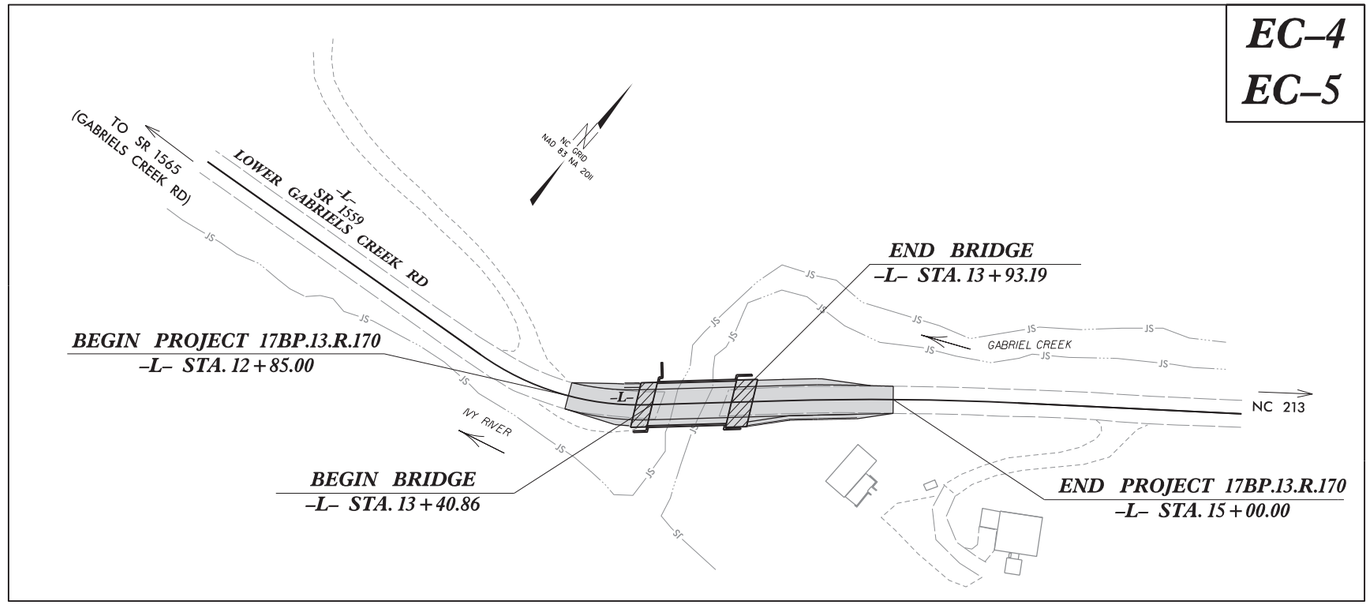

EROSION AND SEDIMENT CONTROL MEASURES

Std. #	Description	Symbol
1630.03	Temporary Silt Ditch	TSD
1630.05	Temporary Diversion	TD
1605.01	Temporary Silt Fence	
1606.01	Special Sediment Control Fence	
1622.01	Temporary Berms and Slope Drains	
1630.02	Silt Basin Type B	
1633.01	Temporary Rock Silt Check Type-A	
	Temporary Rock Silt Check Type-A with Matting and Polyacrylamide (PAM)	
1633.02	Temporary Rock Silt Check Type-B	
	Wattle/Coir Fiber Wattle	EW CFW
	Wattle/Coir Fiber Wattle with Polyacrylamide (PAM)	
1634.01	Temporary Rock Sediment Dam Type-A	
1634.02	Temporary Rock Sediment Dam Type-B	
1635.01	Rock Pipe Inlet Sediment Trap Type-A	
1635.02	Rock Pipe Inlet Sediment Trap Type-B	
1630.04	Stilling Basin	
1630.06	Special Stilling Basin	
	Rock Inlet Sediment Trap:	
1632.01	Type A	A
1632.02	Type B	B
1632.03	Type C	C
	Skimmer Basin	
	Tiered Skimmer Basin	
	Infiltration Basin	

THIS PROJECT CONTAINS EROSION CONTROL PLANS FOR CLEARING AND GRUBBING PHASE OF CONSTRUCTION.

GRAPHIC SCALE

30 15 0 30 60
PLANS

THESE EROSION AND SEDIMENT CONTROL PLANS COMPLY WITH THE APPLICABLE REGULATIONS SET FORTH BY THE NCG–010000 GENERAL CONSTRUCTION PERMIT EFFECTIVE APRIL 1, 2019 AND ISSUED BY THE NORTH CAROLINA DEPARTMENT OF ENVIRONMENTAL QUALITY DIVISION OF WATER RESOURCES.

Mattern & Craig
CONSULTING ENGINEERS • SURVEYORS
FIRM LICENSE No. C-1154
12 BROAD STREET
ASHEVILLE, NORTH CAROLINA 28801
(828) 254-2201
FAX (828) 254-4562

Prepared in the Office of:

MATTERN & CRAIG
12 BROAD ST.
ASHEVILLE, NC 28801
FOR NCDOT DIVISION OF HIGHWAYS

Designed by:

MENG YANG — NAME
4149 — LEVEL III CERTIFICATION NO.

Roadway Standard Drawings

The following roadway english standards as appear in "Roadway Standard Drawings"– Roadway Design Unit – N. C. Department of Transportation – Raleigh, N. C., dated January 2018 and the latest revison thereto are applicable to this project and by reference hereby are considered a part of these plans.

1604.01	Railroad Erosion Control Detail	1632.01	Rock Inlet Sediment Trap Type A
1605.01	Temporary Silt Fence	1632.02	Rock Inlet Sediment Trap Type B
1606.01	Special Sediment Control Fence	1632.03	Rock Inlet Sediment Trap Type C
1607.01	Gravel Construction Entrance	1633.01	Temporary Rock Silt Check Type A
1622.01	Temporary Berms and Slope Drains	1633.02	Temporary Rock Silt Check Type B
1630.01	Riser Basin	1634.01	Temporary Rock Sediment Dam Type A
1630.02	Silt Basin Type B	1634.02	Temporary Rock Sediment Dam Type B
1630.03	Temporary Silt Ditch	1635.01	Rock Pipe Inlet Sediment Trap Type A
1630.04	Stilling Basin	1635.02	Rock Pipe Inlet Sediment Trap Type B
1630.05	Temporary Diversion	1640.01	Coir Fiber Baffle
1630.06	Special Stilling Basin	1645.01	Temporary Stream Crossing
1631.01	Matting Installation		

DocuSign Envelope ID: 077A085F-B0AB-4B0A-9C2A-1DF07548A0A3

PROJECT REFERENCE NO.	SHEET NO.
17BP.13.R.170	EC-2
R/W SHEET NO.	
ROADWAY DESIGN ENGINEER	HYDRAULICS ENGINEER

COIR FIBER WATTLE WITH POLYACRYLAMIDE (PAM) DETAIL

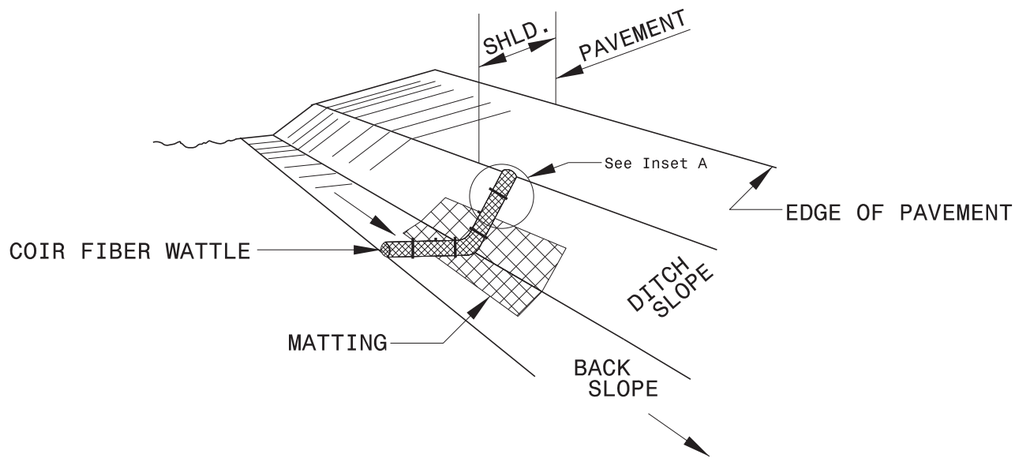

ISOMETRIC VIEW

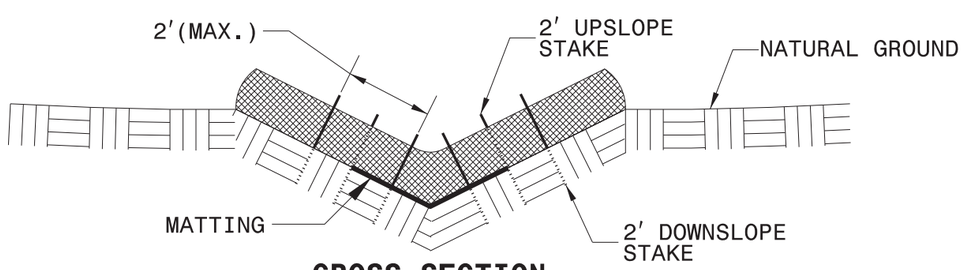

CROSS SECTION VEE DITCH

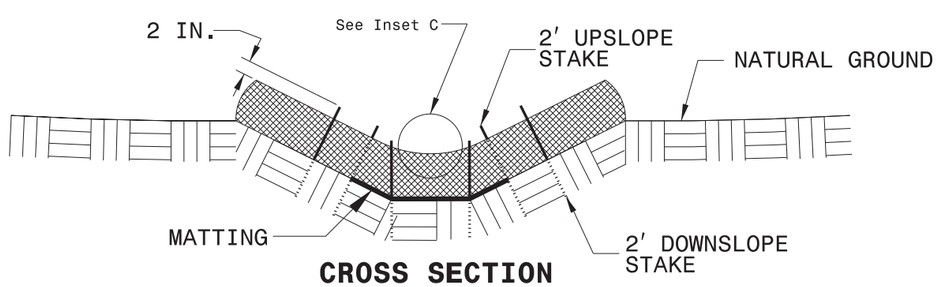

CROSS SECTION TRAPEZOIDAL DITCH

NOTES:

USE MINIMUM 12 IN. DIAMETER COIR FIBER (COCONUT FIBER) WATTLE.

USE 2 FT. WOODEN STAKES WITH A 2 IN. BY 2 IN. NOMINAL CROSS SECTION.

ONLY INSTALL WATTLE(S) TO A HEIGHT IN DITCH SO FLOW WILL NOT WASH AROUND WATTLE AND SCOUR DITCH SLOPES AND AS DIRECTED.

INSTALL A MINIMUM OF 2 UPSLOPE STAKES AND 4 DOWNSLOPE STAKES AT AN ANGLE TO WEDGE WATTLE TO BOTTOM OF DITCH.

PROVIDE STAPLES MADE OF 0.125 IN. DIAMETER STEEL WIRE FORMED INTO A U SHAPE NOT LESS THAN 12" IN LENGTH.

INSTALL STAPLES APPROXIMATELY EVERY 1 LINEAR FOOT ON BOTH SIDES OF WATTLE AND AT EACH END TO SECURE IT TO THE SOIL.

INSTALL MATTING IN ACCORDANCE WITH SECTION 1631 OF THE STANDARD SPECIFICATIONS.

PRIOR TO POLYACRYLAMIDE (PAM) APPLICATION, OBTAIN A SOIL SAMPLE FROM PROJECT LOCATION, AND FROM OFFSITE MATERIAL, AND ANALYZE FOR APPROPRIATE PAM FLOCCULANT TO BE APPLIED TO EACH WATTLE.

INITIALLY APPLY 2 OUNCES OF ANIONIC OR NEUTRALLY CHARGED PAM OVER WATTLE WHERE WATER WILL FLOW AND 1 OUNCE OF PAM ON MATTING ON EACH SIDE OF WATTLE. REAPPLY PAM AFTER EVERY RAINFALL EVENT THAT IS EQUAL TO OR EXCEEDS 0.50 IN.

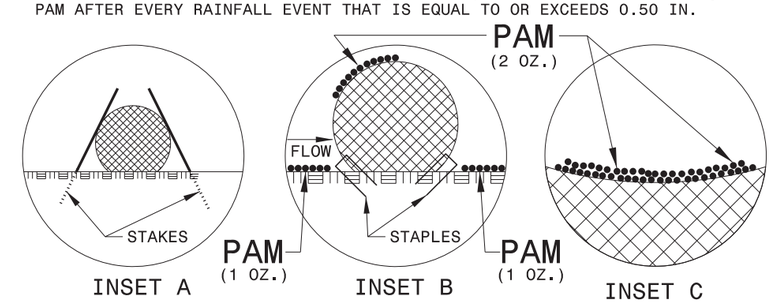

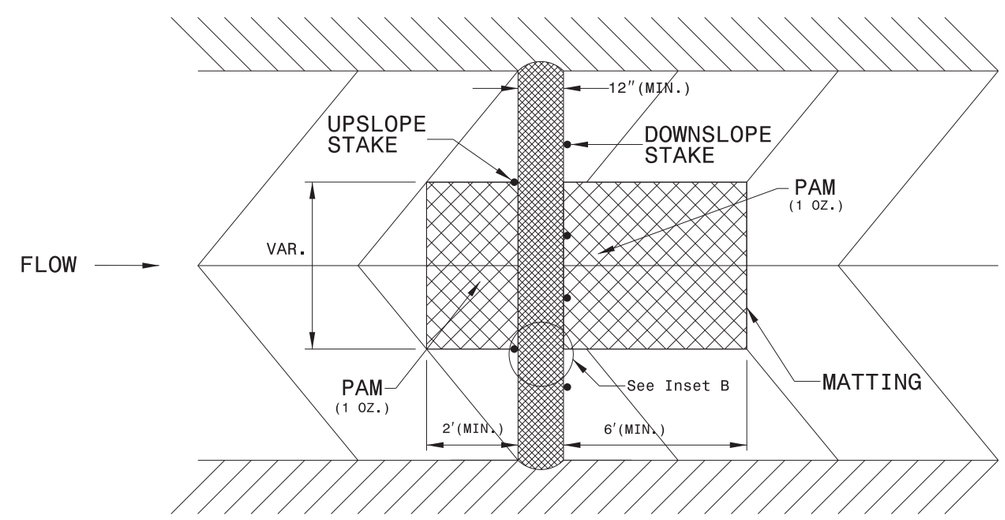

TOP VIEW

NOT TO SCALE

DocuSign Envelope ID: 077A085F-B0AB-4B0A-9C2A-1DF07548A0A3

PROJECT REFERENCE NO.	SHEET NO.
17BP.13.R.170	EC-3
R/W SHEET NO.	
ROADWAY DESIGN ENGINEER	HYDRAULICS ENGINEER

SOIL STABILIZATION TIMEFRAMES

SITE DESCRIPTION	STABILIZATION TIME	TIMEFRAME EXCEPTIONS
PERIMETER DIKES, SWALES, DITCHES AND SLOPES	7 DAYS	NONE
HIGH QUALITY WATER (HQW) ZONES	7 DAYS	NONE
SLOPES STEEPER THAN 3:1	7 DAYS	IF SLOPES ARE 10' OR LESS IN LENGTH AND ARE NOT STEEPER THAN 2:1, 14 DAYS ARE ALLOWED.
SLOPES 3:1 OR FLATTER	14 DAYS	7 DAYS FOR SLOPES GREATER THAN 50' IN LENGTH.
ALL OTHER AREAS WITH SLOPES FLATTER THAN 4:1	14 DAYS	NONE, EXCEPT FOR PERIMETERS AND HQW ZONES.

DIVISION OF HIGHWAYS
STATE OF NORTH CAROLINA

SOIL STABILIZATION SUMMARY SHEET

MATTING FOR EROSION CONTROL

CONST SHEET NO.	LINE	FROM STATION	TO STATION	SIDE	ESTIMATE (SY)
			SUBTOTAL		
MISCELLANEOUS MATTING TO BE INSTALLED AS DIRECTED BY THE ENGINEER					600
				TOTAL	600
				SAY	600

PERMANENT SOIL REINFORCEMENT MAT

CONST SHEET NO.	LINE	FROM STATION	TO STATION	SIDE	ESTIMATE (SY)
			SUBTOTAL		
		ADDITIONAL PSRM TO BE INSTALLED			
				TOTAL	
				SAY	

REVISIONS

8/17/99

2:40:32 PM
R:\3850F - Madison 300\06 17BP13R170\Environmental\EC3.dgn
mpro

DocuSign Envelope ID: 077A085F-B0AB-4B0A-9C2A-1DF07548A0A3

PROJECT REFERENCE NO.	SHEET NO.
17BP.13.R.170	EC-4/CONS.4
R/W SHEET NO.	
ROADWAY DESIGN ENGINEER	HYDRAULICS ENGINEER

DOCUMENT NOT CONSIDERED FINAL UNLESS ALL SIGNATURES COMPLETED

Mattern & Craig
ENGINEERS • SURVEYORS

CLEARING AND GRUBBING EROSION CONTROL FOR CONSTRUCTION SHEET 4

NOTE:
PERIMETER EROSION CONTROL MEASURES SHALL BE INSTALLED DURING CLEARING AND GRUBBING PHASE.

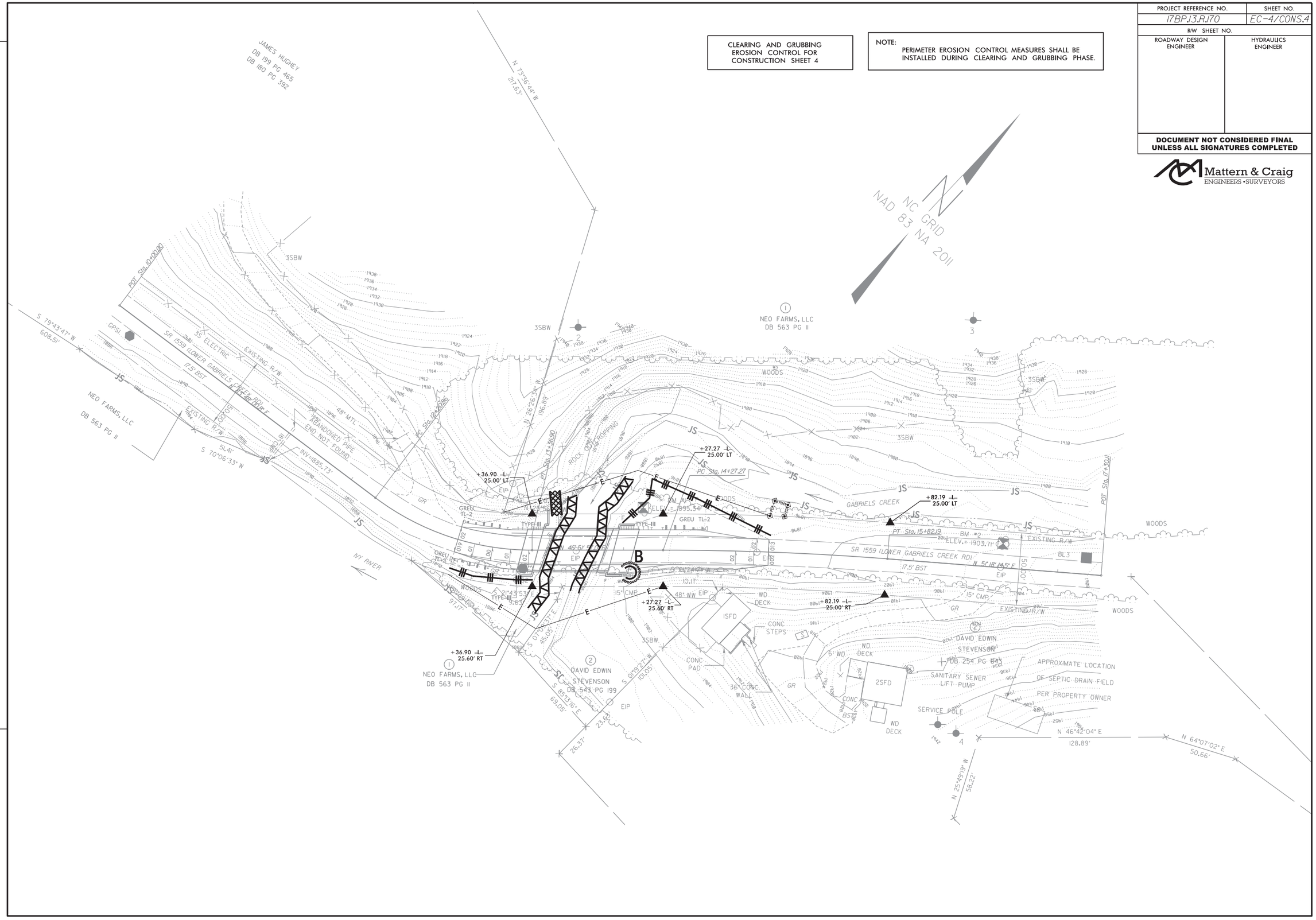

REVISIONS

DocuSign Envelope ID: 077A085F-B0AB-4B0A-9C2A-1DF07548A0A3

PROJECT REFERENCE NO.	SHEET NO.
17BP.13.R.170	EC-5/CONS.4
R/W SHEET NO.	
ROADWAY DESIGN ENGINEER	HYDRAULICS ENGINEER

DOCUMENT NOT CONSIDERED FINAL UNLESS ALL SIGNATURES COMPLETED

Mattern & Craig
ENGINEERS • SURVEYORS

REVISIONS

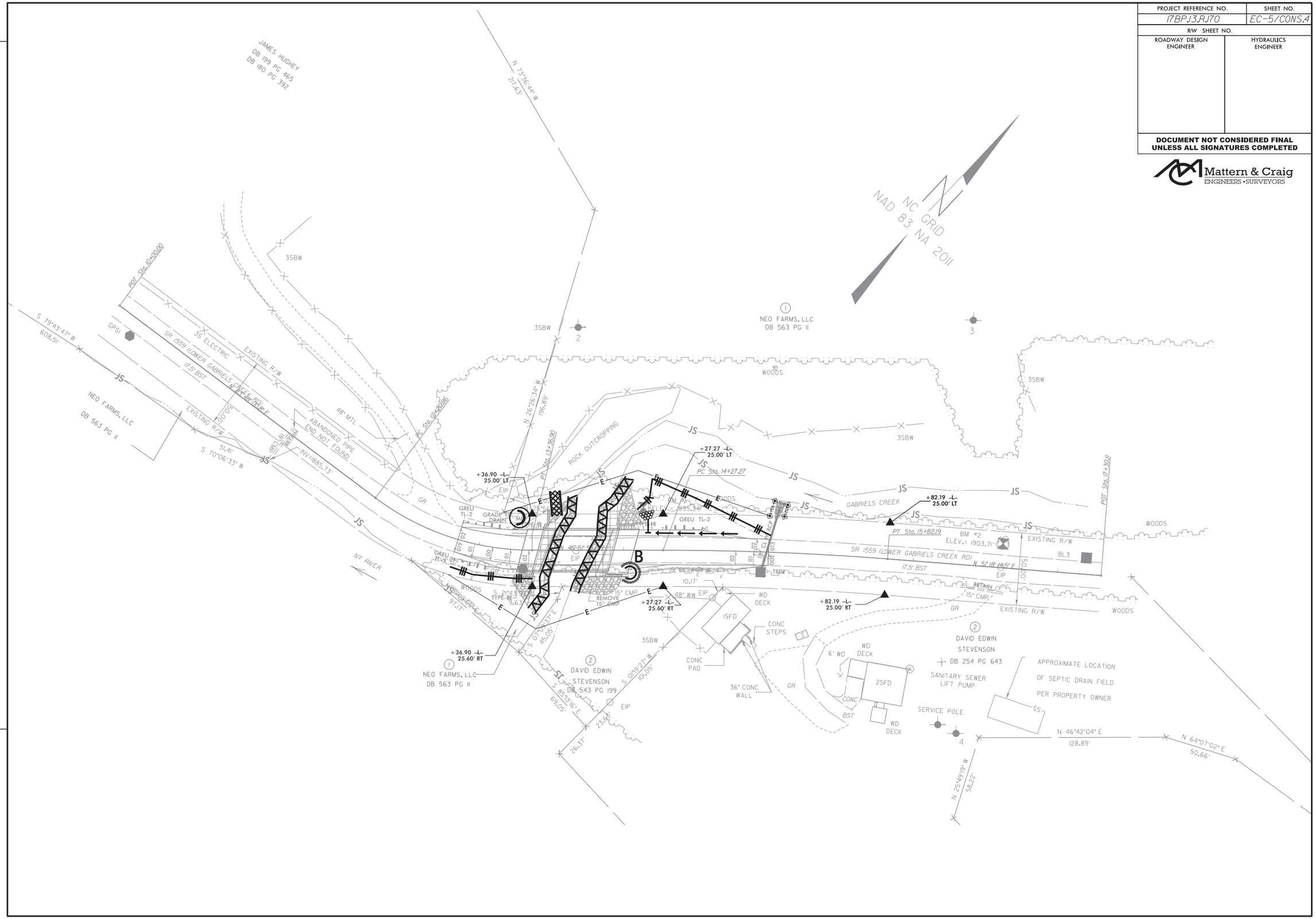

DocuSign Envelope ID: 077A085F-B0AB-4B0A-9C2A-1DF07548A0A3

COMPUTED BY: MY	DATE: 2/25/2019
CHECKED BY: ACC	DATE: 2/25/2019

PROJECT REFERENCE NO.	SHEET NO.
17BP.13.R.170	X-0

DIVISION OF HIGHWAYS
STATE OF NORTH CAROLINA

CROSS SECTION SUMMARY

IN CUBIC YARDS

-L- LOCATION	UNCLASSIFIED EXCAVATION	EMBT
12+85	0	0
13+00	2	2
13+40.86 (BEGIN BRIDGE)	5	6
13+93.19 (END BRIDGE)	0	0
14+00	1	2
14+50	5	19
15+00	5	27

NOTE: EMBANKMENT COLUMN DOES NOT INCLUDE BACKFILL FOR UNDERCUT.

Approximate quantities only. Unclassified excavation, borrow excavation, fine grading, clearing and grubbing, and removal of existing pavement will be paid for at the contract lump sum price for "grading".

6/23/16

0 2.5 5	PROJ. REFERENCE NO.	SHEET NO.
	17BP.13.R.170	X-1

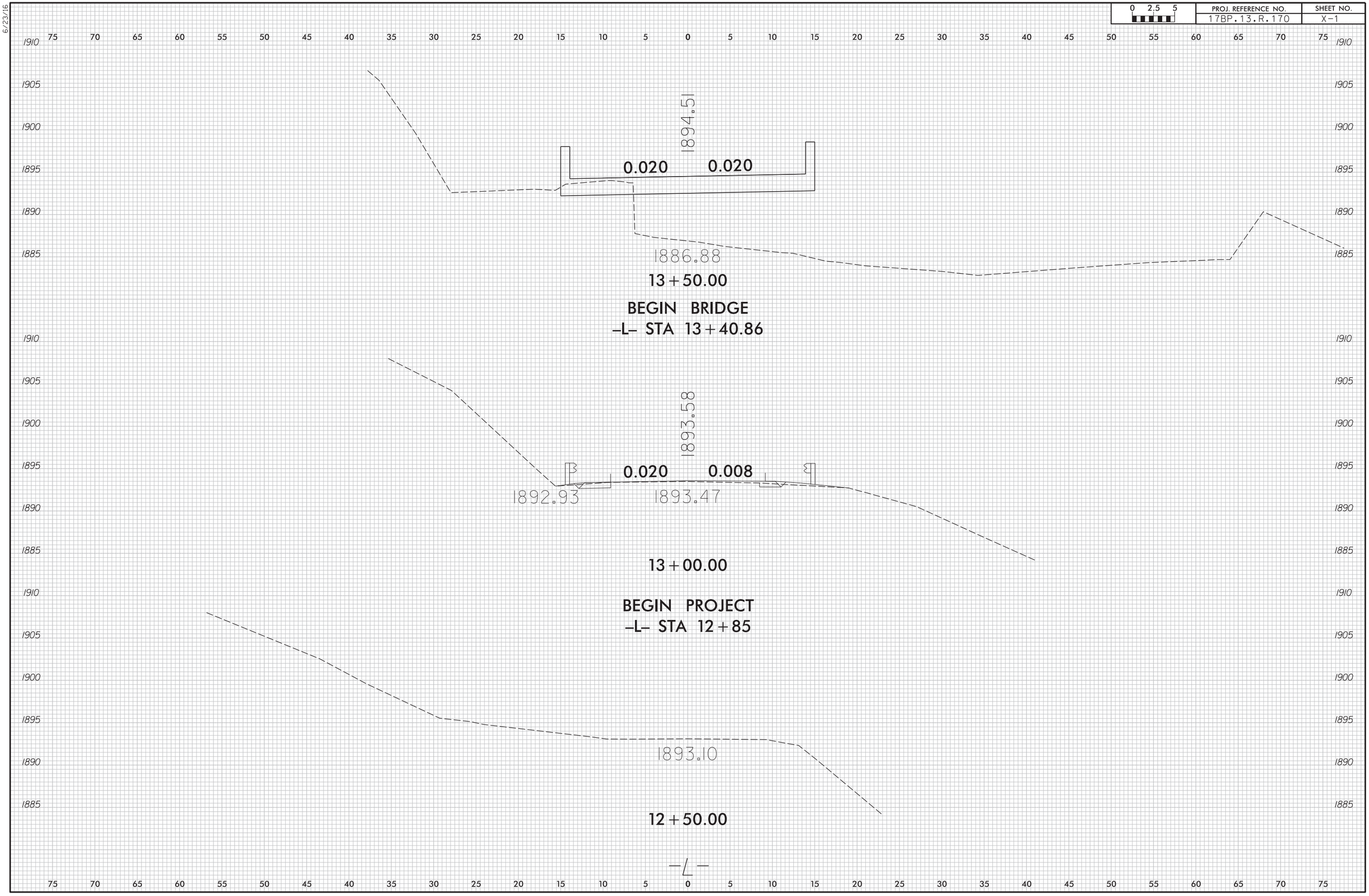

DocuSign Envelope ID: 077A085F-B0AB-4B0A-9C2A-1DF07548A0A3

6/23/16

0 2.5 5	PROJ. REFERENCE NO.	SHEET NO.
	17BP.13.R.170	X-2

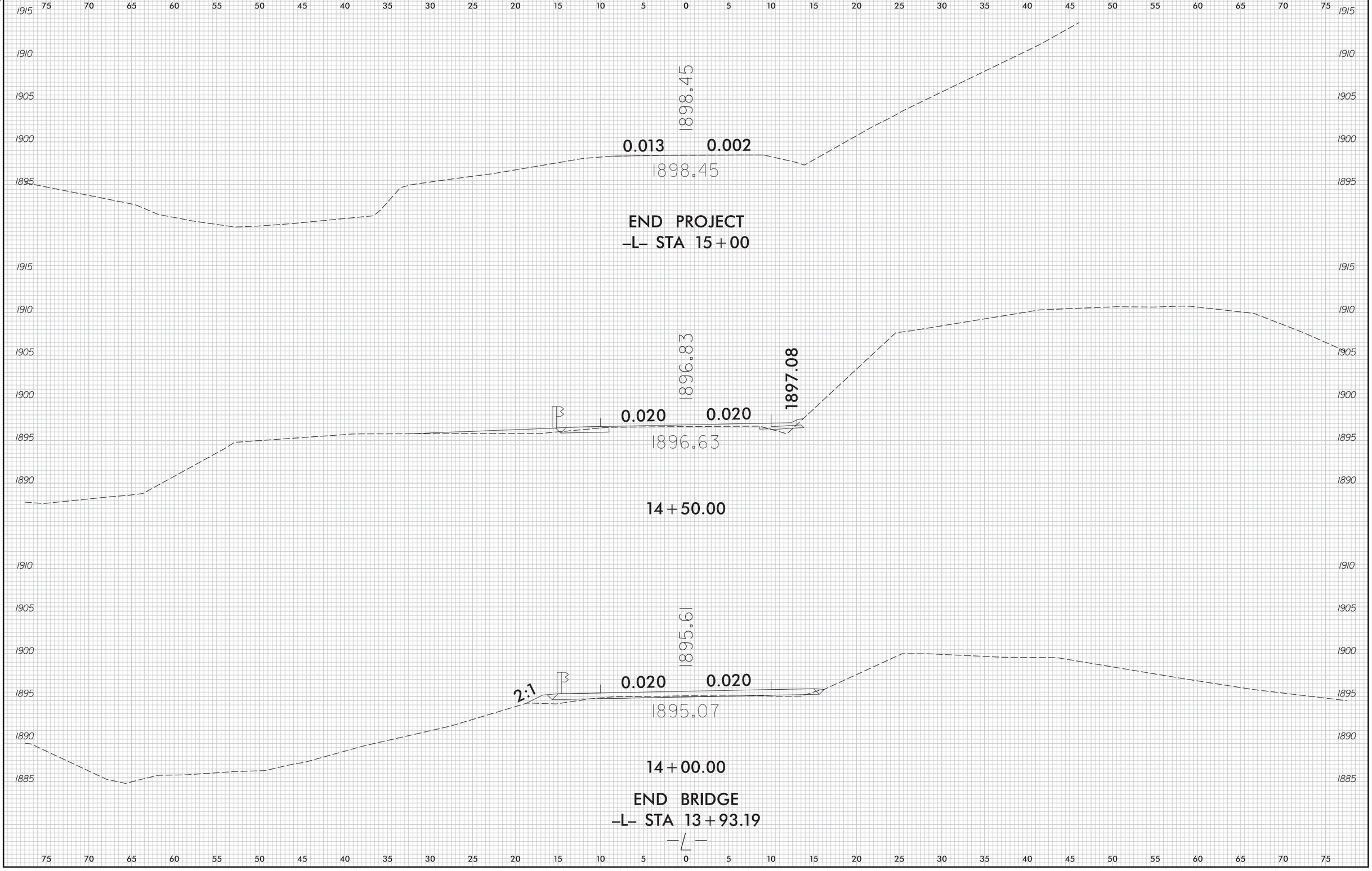

DocuSign Envelope ID: 077A085F-B0AB-4B0A-9C2A-1DF07548A0A3

6/23/16

0 2.5 5	PROJ. REFERENCE NO.	SHEET NO.
	17BP.13.R.170	X-3

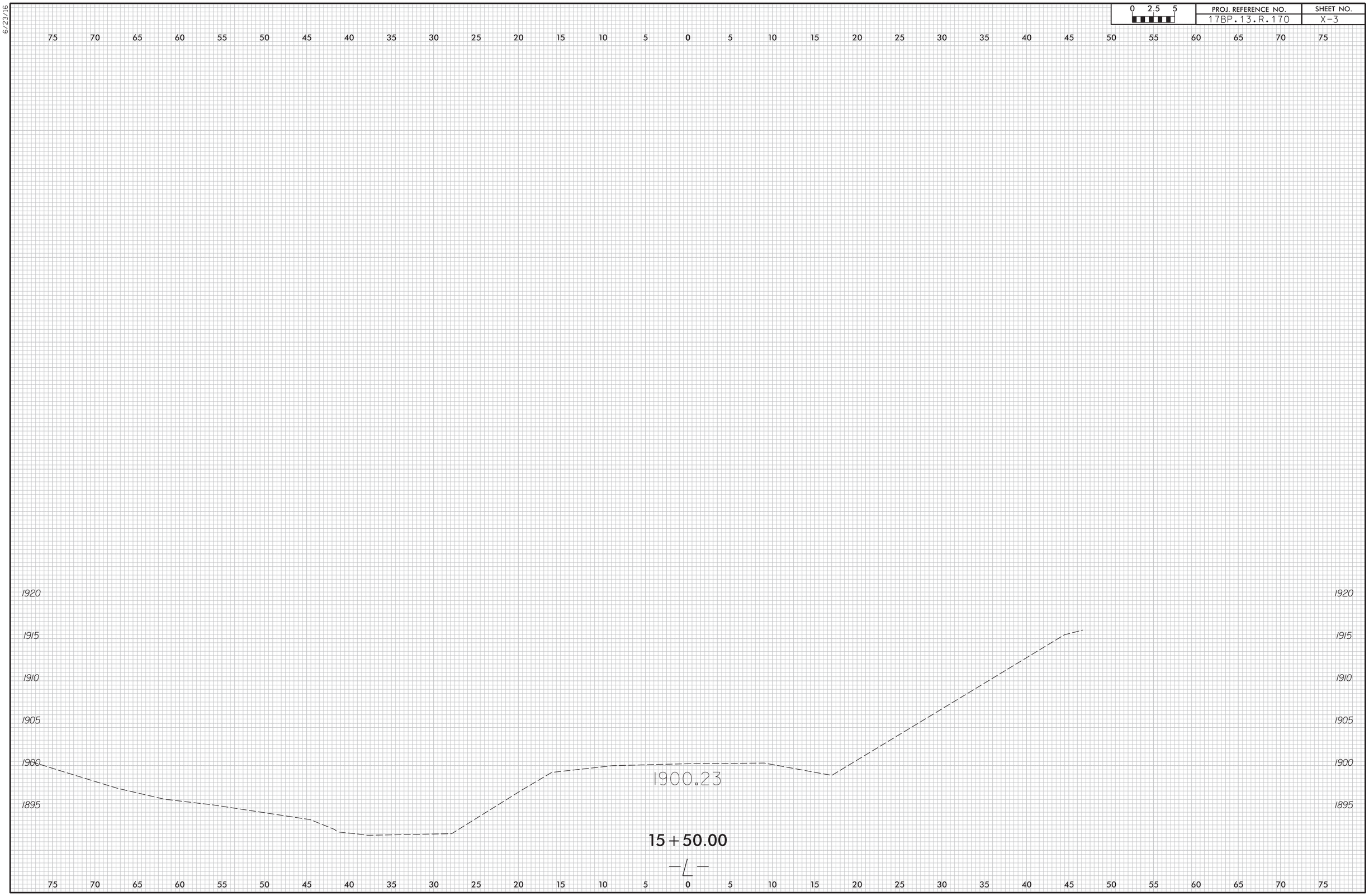

DocuSign Envelope ID: DC00C7E6-7A6F-40FA-BB09-FD6ECCC65ED6

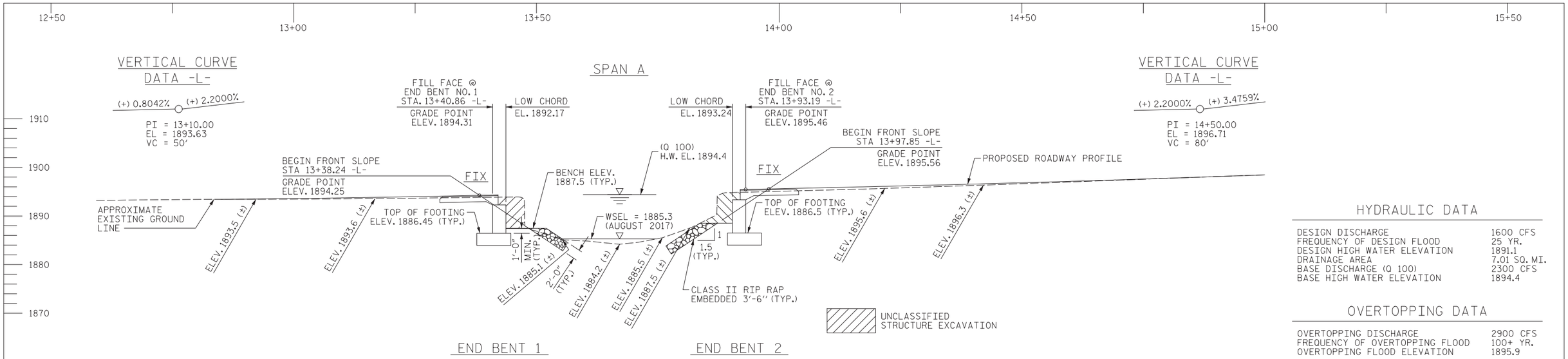

SECTION ALONG -L-

(SECTIONS AT END BENTS ARE AT RIGHT ANGLES)

HYDRAULIC DATA

DESIGN DISCHARGE	1600 CFS
FREQUENCY OF DESIGN FLOOD	25 YR.
DESIGN HIGH WATER ELEVATION	1891.1
DRAINAGE AREA	7.01 SQ. MI.
BASE DISCHARGE (Q 100)	2300 CFS
BASE HIGH WATER ELEVATION	1894.4

OVERTOPPING DATA

OVERTOPPING DISCHARGE	2900 CFS
FREQUENCY OF OVERTOPPING FLOOD	100+ YR.
OVERTOPPING FLOOD ELEVATION	1895.9

HORIZONTAL CURVE DATA -L-

PI STA. 12+80.98
△ = 36°-56'-03.8"(LT)
D = 31°-49'-51.6"
L = 116.03'
T = 60.11'
R = 180.00'

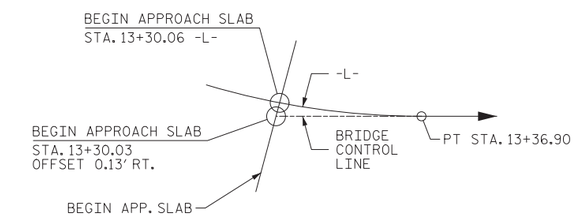

BRIDGE CONTROL LINE LAYOUT

(AT END BENT 1 ONLY - NOT DRAWN TO SCALE)

I HEREBY CERTIFY THESE PLANS ARE THE AS-BUILT PLANS

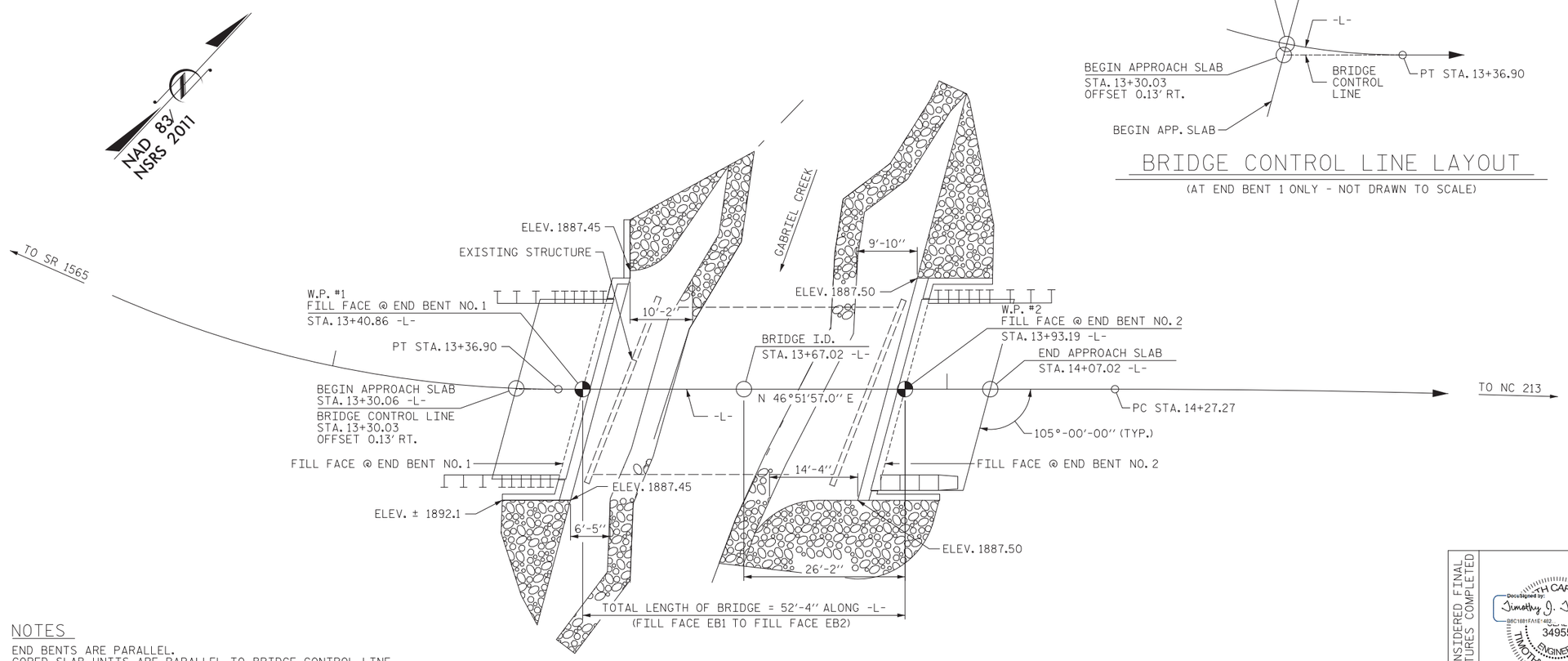

PLAN

NOTES

END BENTS ARE PARALLEL.
CORED SLAB UNITS ARE PARALLEL TO BRIDGE CONTROL LINE.

PROJECT NO. 17BP.13.R.170
MADISON COUNTY
STATION: 13+67.02 -L-

SHEET 1 OF 3 REPLACES BRIDGE NO. 300

DOCUMENT NOT CONSIDERED FINAL UNLESS ALL SIGNATURES COMPLETED

DocuSigned by: Timothy J. Townsend
34955 ENGINEER TIMOTHY J. TOWNSEND
3/29/2022

Mattern & Craig
ENGINEERS•SURVEYORS
12 BROAD STREET
ASHEVILLE, NORTH CAROLINA 28801
(828) 254-2201
FAX (828) 254-4562
NC LIC. NO. C-1154

STATE OF NORTH CAROLINA
DEPARTMENT OF TRANSPORTATION
RALEIGH

GENERAL DRAWING

BRIDGE 300 ON SR 1559
(LOWER GABRIELS CREEK ROAD)
OVER GABRIEL CREEK
BETWEEN SR 1565 AND SR 1563

REVISIONS							SHEET NO.
NO.	BY:	DATE:	NO.	BY:	DATE:		S-1
1			3				TOTAL SHEETS
2			4				20

DRAWN BY : CTB	DATE : 03-22	DESIGN ENGINEER OF RECORD: T. TOWNSEND	DATE : 03-22
CHECKED BY : TJT	DATE : 03-22		

DATE: 3/17/2022 TIME: 3:54:00 PM
FILE: \\192.168.14.61\project\3850F - Div 13 Bridge 300 (Madison Co)\Dwg\Sheets\401_001_17BP.13.R.170_SMU_GD1_001_560300.dgn

DocuSign Envelope ID: DC00C7E6-7A6F-40FA-BB09-FD6ECCC65ED6

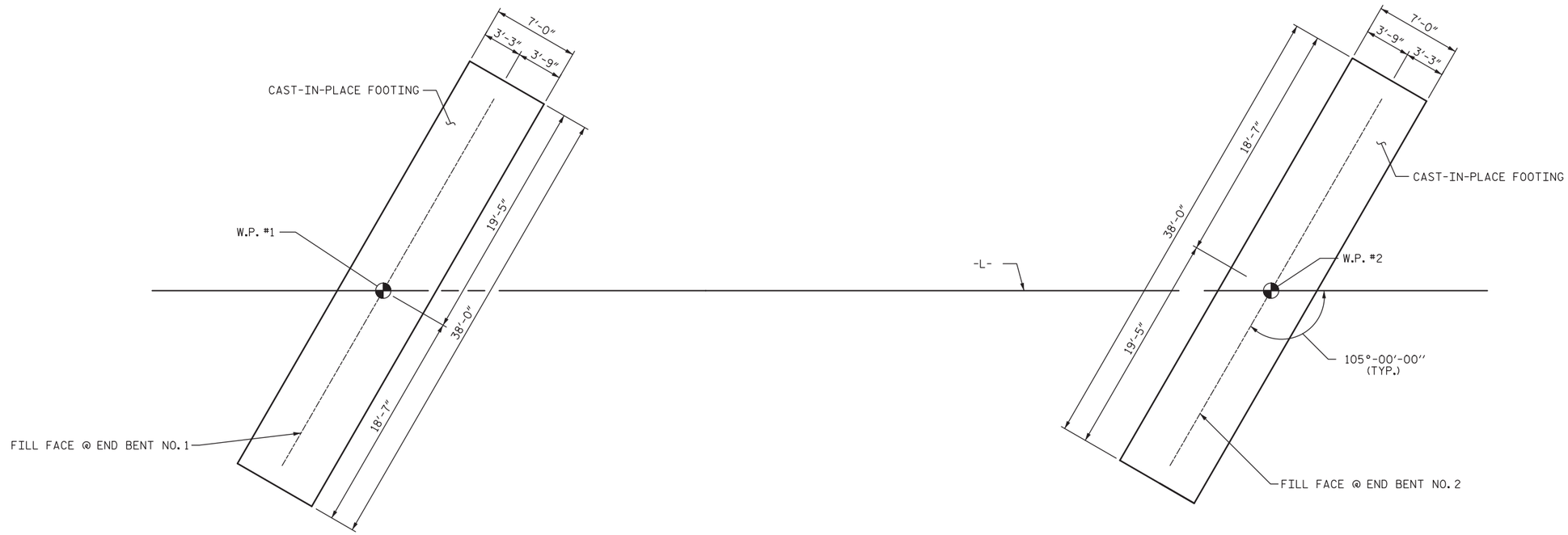

FOUNDATION LAYOUT PLAN

FOUNDATION NOTES:

1) THE SPREAD FOOTINGS AT END BENT NOs. 1 AND 2 ARE DESIGNED FOR A FACTORED RESISTANCE OF 5 T.S.F. CHECK FIELD CONDITIONS FOR THE REQUIRED RESISTANCE OF 15 T.S.F. JUST BEFORE PLACING CONCRETE.

2) KEY IN FOOTING AT END BENT NOs. 1 AND 2 AND AT LEAST 12" INTO WEATHERED ROCK / ROCK WITH MINIMUM THICKNESS AS SHOWN ON THE PLANS.

3) FOR BLASTING ADJACENT TO HIGHWAY STRUCTURES, SEE ARTICLE 410-9 OF THE STANDARD SPECIFICATIONS.

PROJECT NO. 17BP.13.R.170

MADISON COUNTY

STATION: 13+67.02 -L-

SHEET 2 OF 3

DOCUMENT NOT CONSIDERED FINAL UNLESS ALL SIGNATURES COMPLETED

NORTH CAROLINA
DocuSigned by:
Timothy J. Townsend
B8C1681FA1E1402...
34955
ENGINEER
TIMOTHY J. TOWNSEND
3/29/2022

Mattern & Craig
ENGINEERS•SURVEYORS
12 BROAD STREET
ASHEVILLE, NORTH CAROLINA 28801
(828) 254-2201
FAX (828) 254-4562
NC LIC. NO. C-1154

STATE OF NORTH CAROLINA
DEPARTMENT OF TRANSPORTATION
RALEIGH

FOUNDATION LAYOUT

REVISIONS						
NO.	BY:	DATE:	NO.	BY:	DATE:	
1			3			
2			4			

SHEET NO. S-2

TOTAL SHEETS 20

DRAWN BY : CTB	DATE : 03-22	DESIGN ENGINEER OF RECORD: T. TOWNSEND	DATE : 03-22
CHECKED BY : TJT	DATE : 03-22		

DATE: 3/17/2022 TIME: 3:54:31 PM
FILE: \\192.168.14.61\project\3850F - Div 13 Bridge 300 (Madison Co)\Dwg\Sheets\401_003_17BP.13.R.170_SMU_FL_002_560300.dgn

DocuSign Envelope ID: DC00C7E6-7A6F-40FA-BB09-FD6ECCC85ED6

B.M. #1: RR SPIKE SET IN 20'' MAPLE -L- STA. 14+13.6 29.4' LT ELEV. 1895.34'

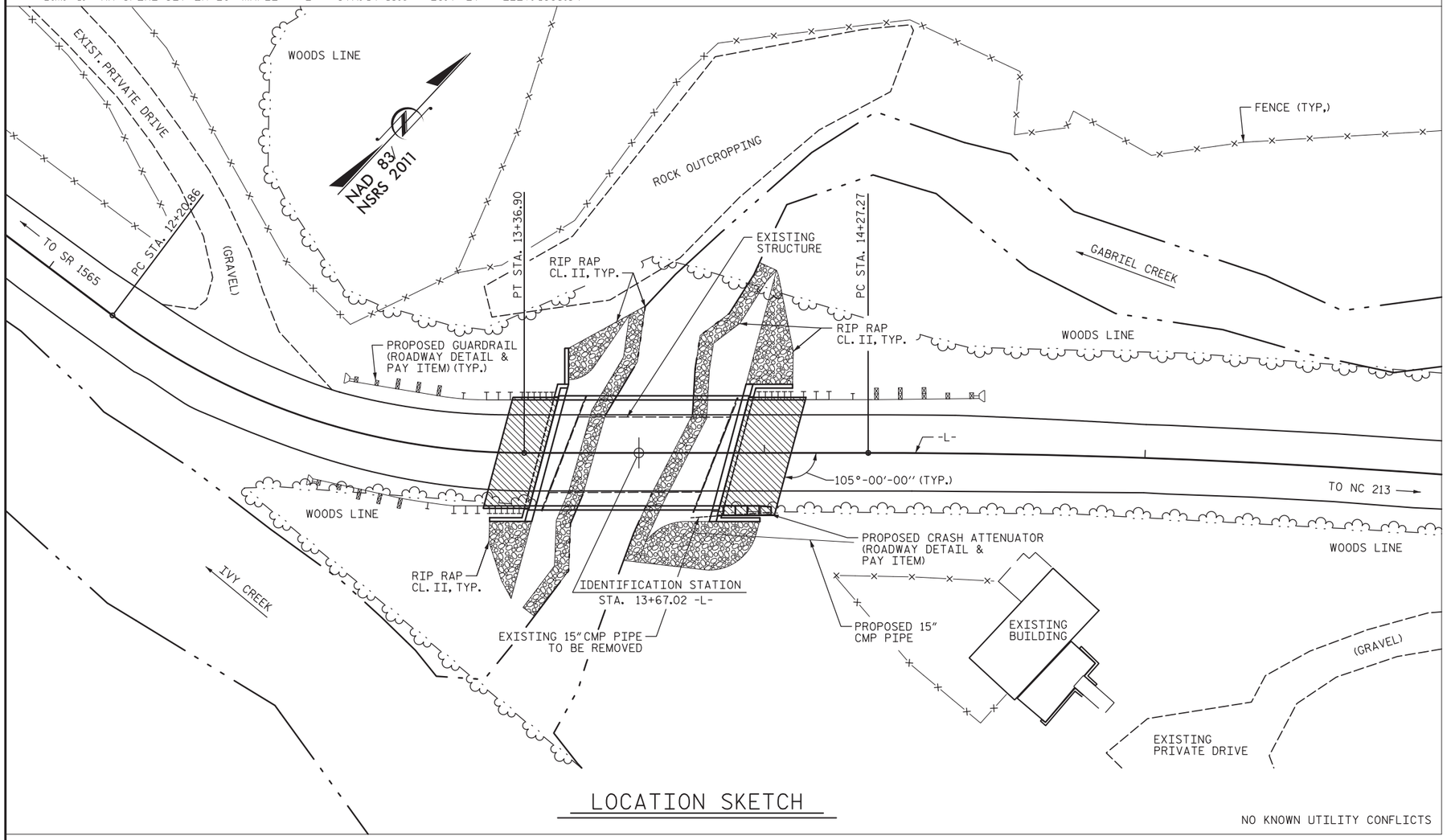

LOCATION SKETCH

NO KNOWN UTILITY CONFLICTS

NOTES:

ASSUMED LIVE LOAD = HL-93 OR ALTERNATE LOADING.

THIS STRUCTURE HAS BEEN DESIGNED IN ACCORDANCE WITH THE AASHTO LRFD BRIDGE DESIGN SPECIFICATIONS.

THIS BRIDGE IS LOCATED IN SEISMIC ZONE 1.

FOR OTHER DESIGN DATA AND GENERAL NOTES, SEE SHEET SN.

FOR SUBMITTAL OF WORKING DRAWINGS, SEE SPECIAL PROVISIONS.

FOR FALSEWORK AND FORMWORK, SEE SPECIAL PROVISIONS.

FOR CRANE SAFETY, SEE SPECIAL PROVISIONS.

FOR GROUT FOR STRUCTURES, SEE SPECIAL PROVISIONS.

THIS STRUCTURE HAS BEEN DESIGNED IN ACCORDANCE WITH ''HEC 18-EVALUATING SCOUR AT BRIDGES.''

ASPHALT WEARING SURFACE IS INCLUDED IN THE ROADWAY QUANTITY ON ROADWAY PLANS.

FOR EROSION CONTROL MEASURES, SEE EROSION CONTROL PLANS.

FOR ASBESTOS ASSESSMENT FOR BRIDGE DEMOLITION AND RENOVATION ACTIVITIES, SEE SPECIAL PROVISIONS.

REMOVAL OF THE EXISTING BRIDGE SHALL BE PERFORMED AS NOT TO ALLOW DEBRIS TO FALL INTO THE WATER. THE CONTRACTOR SHALL REMOVE THE BRIDGE AND SUBMIT PLANS FOR DEMOLITION IN ACCORDANCE WITH ARTICLE 402-2 OF THE STANDARD SPECIFICATIONS.

INASMUCH AS THE PAINT SYSTEM ON THE EXISTING STRUCTURAL STEEL CONTAINS LEAD, THE CONTRACTOR'S ATTENTION IS DIRECTED TO ARTICLE 107-1 OF THE STANDARD SPECIFICATIONS. ANY COSTS RESULTING FROM COMPLIANCE WITH APPLICABLE STATE OR FEDERAL REGULATIONS PERTAINING TO HANDLING OF MATERIALS CONTAINING LEAD BASED PAINT SHALL BE INCLUDED IN THE BID PRICE FOR ''REMOVAL OF EXISTING STRUCTURE AT STATION 13+67.02 -L-.''

THE EXISTING STRUCTURE CONSISTING OF 1 SPAN AT 40'-9'', 19'-2'' CLEAR ROADWAY WIDTH, TIMBER DECK ON STEEL BEAMS, ON TIMBER CAPS, SHALL BE REMOVED. THE EXISTING BRIDGE IS CURRENTLY POSTED BELOW THE LEGAL LOAD LIMIT. SHOULD THE STRUCTURAL INTEGRITY OF THE BRIDGE FURTHER DETERIORATE, THE LOAD LIMITATION MAY BE REDUCED AS FOUND NECESSARY DURING THE LIFE OF THE PROJECT.

THE SUBSTRUCTURE OF THE EXISTING BRIDGE INDICATED ON THE PLANS IS FROM THE BEST INFORMATION AVAILABLE. SINCE THIS INFORMATION IS SHOWN FOR THE CONVENIENCE OF THE CONTRACTOR, THE CONTRACTOR SHALL HAVE NO CLAIM WHATSOEVER AGAINST THE DEPARTMENT OF TRANSPORTATION FOR ANY DELAYS OR ADDITIONAL COSTS INCURRED BASED ON DIFFERENCES BETWEEN THE EXISTING BRIDGE SUBSTRUCTURE SHOWN ON THE PLANS AND THE ACTUAL CONDITIONS AT THE PROJECT SITE.

THE MATERIAL SHOWN IN THE CROSS-HATCHED AREA (ON SHEET 1 OF 3) SHALL BE EXCAVATED FOR A DISTANCE FROM THE CENTERLINE OF ROADWAY TO 36.3' +/- (LEFT) AND 40.5' +/- (RIGHT) AT END BENT 1, 48.5' +/-(LEFT) AND 31.1' +/- (RIGHT) AT END BENT 2, AND TO AN ELEVATION OF 1887.5 +/- AT BOTH END BENTS AS DIRECTED BY THE ENGINEER. THIS WORK WILL BE PAID FOR AT THE CONTRACT SUM PRICE FOR UNCLASSIFIED STRUCTURE EXCAVATION. SEE SECTION 412 OF THE STANDARD SPECIFICATIONS.

TOTAL BILL OF MATERIAL

	REMOVAL OF EXISTING STRUCTURE AT STA 13+67.02 -L-	ASBESTOS ASSESSMENT	UNCLASSIFIED STRUCTURE EXCAVATION	FOUNDATION EXCAVATION FOR END BENT NO. 1 AT STA 13+67.02 -L-	FOUNDATION EXCAVATION FOR END BENT NO. 2 AT STA 13+67.02 -L-	CLASS A CONCRETE	BRIDGE APPROACH SLABS	REINFORCING STEEL	VERTICAL CONCRETE BARRIER RAIL
	LUMP SUM	LUMP SUM	LUMP SUM	LUMP SUM	LUMP SUM	CU. YDS.	LUMP SUM	LBS.	LIN. FT.
SUPERSTRUCTURE	LUMP SUM						LUMP SUM		100
END BENT NO. 1			LUMP SUM	LUMP SUM		51.8		4064	
END BENT NO. 2			LUMP SUM		LUMP SUM	58.2		4857	
TOTAL	LUMP SUM	LUMP SUM	LUMP SUM	LUMP SUM	LUMP SUM	110.0	LUMP SUM	8921	100

TOTAL BILL OF MATERIAL CONT'D

PLAIN RIP RAP CLASS II (2'-0" THICK)	GEOTEXTILE FOR DRAINAGE	ELASTOMERIC BEARINGS	3'-0" X 1'-9" PRESTRESSED CONCRETE CORED SLAB UNITS		SOIL NAIL RETAINING WALLS	SOIL NAIL VERIFICATION TESTS	SOIL NAIL PROOF TESTS
TONS	SQ. YD.	LUMP SUM	NO.	LIN. FT.	SQ. FT.	EACH	EACH
			10	500			
140	175	LUMP SUM			85	2	3
160	200	LUMP SUM					
300	375	LUMP SUM	10	500	85	2	3

DRAWN BY : CTB DATE : 03-22
CHECKED BY : TJT DATE : 03-22
DESIGN ENGINEER OF RECORD: T. TOWNSEND DATE : 03-22

PROJECT NO. 17BP.13.R.170
MADISON COUNTY
STATION: 13+67.02 -L-

SHEET 3 OF 3

DOCUMENT NOT CONSIDERED FINAL UNLESS ALL SIGNATURES COMPLETED

NORTH CAROLINA
Docusigned by: Timothy J. Townsend
B8C1881FA1E1462...
34955
ENGINEER
TIMOTHY J. TOWNSEND
10-05-2022

Mattern & Craig
ENGINEERS•SURVEYORS
12 BROAD STREET
ASHEVILLE, NORTH CAROLINA 28801
(828) 254-2201
FAX (828) 254-4562
NC LIC. NO. C-1154

STATE OF NORTH CAROLINA
DEPARTMENT OF TRANSPORTATION
RALEIGH

GENERAL DRAWING

BRIDGE 300 ON SR 1559
(LOWER GABRIELS CREEK ROAD)
OVER GABRIEL CREEK
BETWEEN SR 1565 AND SR 1563

REVISIONS						SHEET NO.
NO.	BY:	DATE:	NO.	BY:	DATE:	S-3
1			3			TOTAL SHEETS
2			4			20

DATE: 10/5/2022 TIME: 12:14:56 PM
FILE: M:\3850F - Div 13 Bridge 300 (Madison Co)\Dwg\Sheets\401_005_17BP.13.R.170_SMU_GD2_003_560300 .dgn

DocuSign Envelope ID: DC00C7E6-7A6F-40FA-BB09-FD6ECCC65ED6

LOAD AND RESISTANCE FACTOR RATING (LRFD) SUMMARY FOR PRESTRESSED CONCRETE GIRDERS

LEVEL		VEHICLE	WEIGHT (W) (TONS)	CONTROLLING LOAD RATING	MINIMUM RATING FACTORS (RF)	TONS = W X RF	STRENGTH I LIMIT STATE											SERVICE III LIMIT STATE						COMMENT NUMBER
								MOMENT					SHEAR						MOMENT					
							LIVELOAD FACTORS	DISTRIBUTION FACTORS (DF)	RATING FACTOR	SPAN	GIRDER LOCATION	DISTANCE FROM LEFT END OF SPAN (ft)	DISTRIBUTION FACTORS (DF)	RATING FACTOR	SPAN	GIRDER LOCATION	DISTANCE FROM LEFT END OF SPAN (ft)	LIVELOAD FACTORS	DISTRIBUTION FACTORS (DF)	RATING FACTOR	SPAN	GIRDER LOCATION	DISTANCE FROM LEFT END OF SPAN (ft)	
DESIGN LOAD RATING		HL-93(Inv)	N/A	1	1.205	--	1.75	0.271	1.59	50'	EL	24.482	0.616	**1.2**	50'	EL	**4.896**	0.80	0.271	1.46	50'	EL	24.482	
		HL-93(Opr)	N/A	--	1.562	--	1.35	0.271	2.06	50'	EL	24.482	0.616	1.56	50'	EL	4.896	N/A	--	--	--	--	--	
		HS-20(Inv)	36.000	2	1.434	51.614	1.75	0.271	1.97	50'	EL	24.482	0.616	**1.43**	50'	EL	**4.896**	0.80	0.271	1.81	50'	EL	24.482	
		HS-20(Opr)	36.000	--	1.859	66.906	1.35	0.271	2.56	50'	EL	24.482	0.616	1.86	50'	EL	4.896	N/A	--	--	--	--	--	
LEGAL LOAD RATING	SV	SNSH	13.500	--	3.678	49.655	1.4	0.271	5.02	50'	EL	24.482	0.616	4	50'	EL	4.896	0.80	0.271	3.68	50'	EL	24.482	
		SNGARBS2	20.000	--	2.905	58.101	1.4	0.271	3.97	50'	EL	24.482	0.616	2.93	50'	EL	4.896	0.80	0.271	2.91	50'	EL	24.482	
		SNAGRIS2	22.000	--	2.748	60.456	1.4	0.271	3.83	50'	EL	19.586	0.616	2.75	50'	EL	4.896	0.80	0.271	2.81	50'	EL	24.482	
		SNCOTTS3	27.250	--	1.835	49.998	1.4	0.271	2.5	50'	EL	24.482	0.616	2.01	50'	EL	4.896	0.80	0.271	1.83	50'	EL	24.482	
		SNAGGRS4	34.925	--	1.595	55.714	1.4	0.271	2.18	50'	EL	24.482	0.616	1.72	50'	EL	4.896	0.80	0.271	1.60	50'	EL	24.482	
		SNS5A	35.550	--	1.556	55.303	1.4	0.271	2.12	50'	EL	24.482	0.616	1.77	50'	EL	4.896	0.80	0.271	1.56	50'	EL	24.482	
		SNS6A	39.950	--	1.455	58.112	1.4	0.271	1.99	50'	EL	24.482	0.616	1.64	50'	EL	4.896	0.80	0.271	1.45	50'	EL	24.482	
		SNS7B	42.000	--	1.386	58.224	1.4	0.271	1.89	50'	EL	24.482	0.616	1.65	50'	EL	4.896	0.80	0.271	1.39	50'	EL	24.482	
	TTST	TNAGRIT3	33.000	--	1.782	58.809	1.4	0.271	2.43	50'	EL	24.482	0.616	1.94	50'	EL	4.896	0.80	0.271	1.78	50'	EL	24.482	
		TNT4A	33.075	--	1.798	59.458	1.4	0.271	2.45	50'	EL	24.482	0.616	1.86	50'	EL	4.896	0.80	0.271	1.80	50'	EL	24.482	
		TNT6A	41.600	--	1.497	62.293	1.4	0.271	2.04	50'	EL	24.482	0.616	1.8	50'	EL	4.896	0.80	0.271	1.50	50'	EL	24.482	
		TNT7A	42.000	--	1.52	63.842	1.4	0.271	2.08	50'	EL	24.482	0.616	1.67	50'	EL	4.896	0.80	0.271	1.52	50'	EL	24.482	
		TNT7B	42.000	--	1.585	66.559	1.4	0.271	2.16	50'	EL	24.482	0.616	1.59	50'	EL	4.896	0.80	0.271	1.58	50'	EL	24.482	
		TNAGRIT4	43.000	--	1.504	64.667	1.4	0.271	2.05	50'	EL	24.482	0.616	1.53	50'	EL	4.896	0.80	0.271	1.50	50'	EL	24.482	
		TNAGT5A	45.000	--	1.405	63.217	1.4	0.271	1.92	50'	EL	24.482	0.616	1.56	50'	EL	4.896	0.80	0.271	1.40	50'	EL	24.482	
		TNAGT5B	45.000	3	1.376	61.936	1.4	0.271	1.88	50'	EL	24.482	0.616	1.45	50'	EL	4.896	0.80	0.271	**1.38**	50'	EL	**24.482**	

LOAD FACTORS:

DESIGN LOAD RATING FACTORS	LIMIT STATE	γ_{DC}	γ_{DW}
	STRENGTH I	1.25	1.50
	SERVICE III	1.00	1.00

NOTES:

MINIMUM RATING FACTORS ARE BASED ON THE STRENGTH I AND SERVICE III LIMIT STATES.

ALLOWABLE STRESSES FOR SERVICE III LIMIT STATE ARE AS REQUIRED FOR DESIGN.

COMMENTS:

1.
2.
3.
4.

(#) CONTROLLING LOAD RATING

(1) DESIGN LOAD RATING (HL-93)

(2) DESIGN LOAD RATING (HS-20)

(3) LEGAL LOAD RATING **

** SEE CHART FOR VEHICLE TYPE

GIRDER LOCATION

I - INTERIOR GIRDER
EL - EXTERIOR LEFT GIRDER
ER - EXTERIOR RIGHT GIRDER

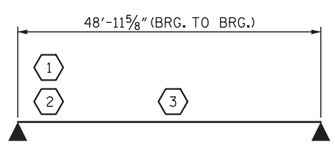

LRFR SUMMARY

PROJECT NO. 17BP.13.R.170

MADISON COUNTY

STATION: 13+67.02 -L-

DOCUMENT NOT CONSIDERED FINAL UNLESS ALL SIGNATURES COMPLETED

NORTH CAROLINA
Docusigned by: Timothy J. Townsend
34955
ENGINEER
TIMOTHY J. TOWNSEND
3/29/2022

Mattern & Craig
ENGINEERS·SURVEYORS
12 BROAD STREET
ASHEVILLE, NORTH CAROLINA 28801
(828) 254-2201
FAX (828) 254-4562
NC LIC. NO. C-1154

STATE OF NORTH CAROLINA
DEPARTMENT OF TRANSPORTATION
RALEIGH

STANDARD

LRFR SUMMARY FOR 50' CORED SLAB UNIT 75° SKEW & 105° SKEW (NON-INTERSTATE TRAFFIC)

REVISIONS						SHEET NO.
NO.	BY:	DATE:	NO.	BY:	DATE:	S-4
1			3			TOTAL SHEETS
2			4			20

DRAWN BY : CTB	DATE : 03-22	DESIGN ENGINEER OF RECORD: T. TOWNSEND	DATE : 03-22
CHECKED BY : TJT	DATE : 03-22		

STD. NO. 21LRFR1_75&105S_50L

DocuSign Envelope ID: DC00C7E6-7A6F-40FA-BB09-FD6ECCC65ED6

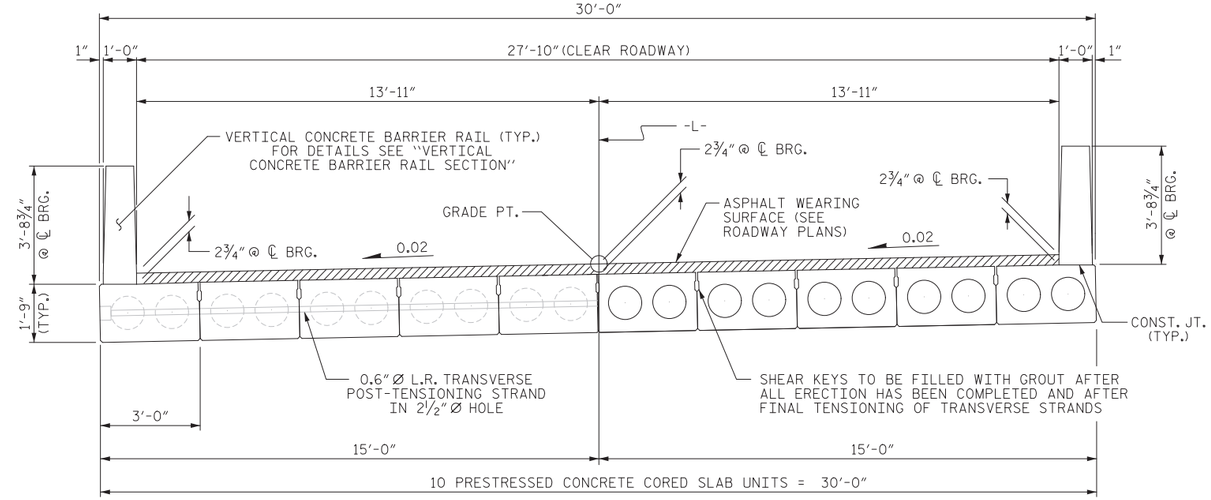

HALF SECTION
AT INTERMEDIATE DIAPHRAGMS

HALF SECTION
THROUGH VOIDS

TYPICAL SECTION

THE MAXIMUM BARRIER RAIL HEIGHT AND ASPHALT THICKNESS IS SHOWN. THE HEIGHT OF THE BARRIER RAIL AND ASPHALT THICKNESS VARIES WHILE THE TOP OF THE BARRIER RAIL FOLLOWS THE PROFILE OF THE GUTTERLINE. FOR RAIL HEIGHT DETAILS AND ASPHALT THICKNESS SEE THE "VERTICAL CONCRETE BARRIER RAIL SECTION" DETAIL

FIXED END

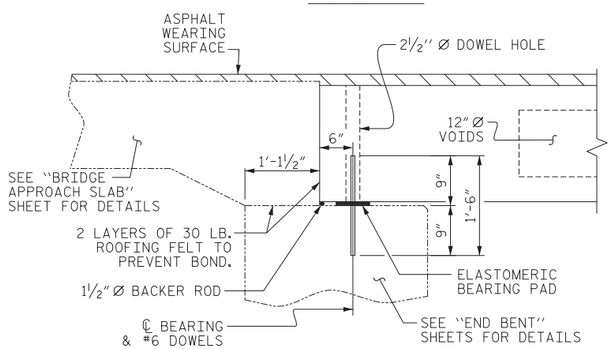

SECTION AT END BENT

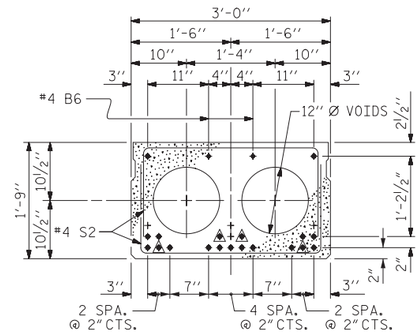

INTERIOR SLAB SECTION
(50' UNIT)
(19 STRANDS REQUIRED)

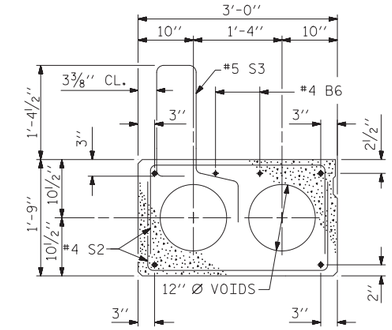

EXT. SLAB SECTION
(FOR PRESTRESSED STRAND LAYOUT, SEE INTERIOR SLAB SECTION.)

0.6" Ø LOW RELAXATION STRAND LAYOUT

BOND SHALL BE BROKEN ON THESE STRANDS FOR A DISTANCE OF 6'-0" FROM END OF CORED SLAB UNIT. SEE STANDARD SPECIFICATIONS, ARTICLE 1078-7.

DEBONDING LEGEND

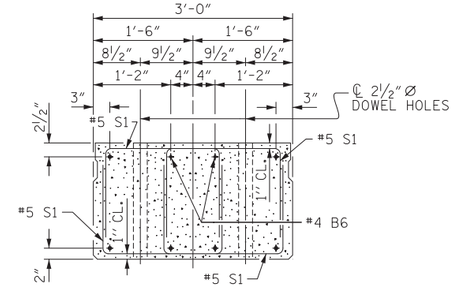

END ELEVATION

SHOWING PLACEMENT OF DOUBLE STIRRUPS AND LOCATION OF DOWEL HOLES. (STRAND LAYOUT NOT SHOWN.) INTERIOR SLAB UNIT SHOWN-EXTERIOR SLAB UNIT SIMILAR EXCEPT SHEAR KEY LOCATION.

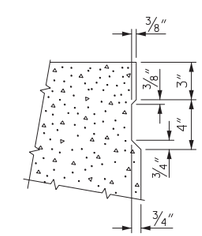

SHEAR KEY DETAIL

NOTE: OMIT SHEAR KEY ON OUTSIDE FACE OF EXTERIOR CORED SLABS.

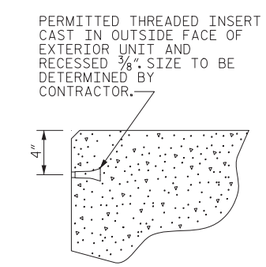

THREADED INSERT DETAIL

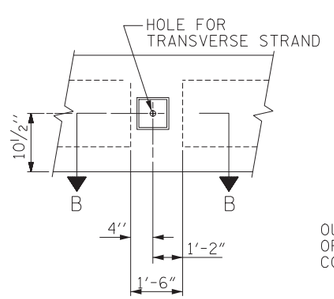

ELEVATION VIEW

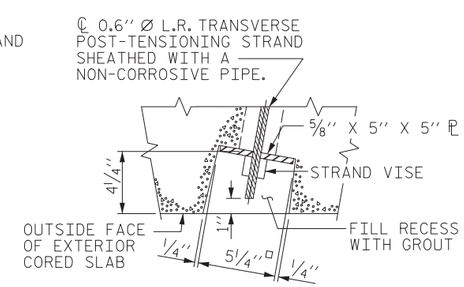

SECTION B-B

GROUTED RECESS AT END OF POST-TENSIONED STRAND OF CORED SLABS

PROJECT NO. 17BP.13.R.170
MADISON COUNTY
STATION: 13+67.02 -L-

SHEET 1 OF 3

DOCUMENT NOT CONSIDERED FINAL UNLESS ALL SIGNATURES COMPLETED

NORTH CAROLINA
DocuSigned by: Timothy J. Townsend
B8C1681FA1E1402...
34955
ENGINEER
TIMOTHY J. TOWNSEND
3/29/2022

Mattern & Craig
ENGINEERS·SURVEYORS
12 BROAD STREET
ASHEVILLE, NORTH CAROLINA 28801
(828) 254-2201
FAX (828) 254-4562
NC LIC. NO. C-1154

STATE OF NORTH CAROLINA
DEPARTMENT OF TRANSPORTATION
RALEIGH

STANDARD
3'-0" X 1'-9"
PRESTRESSED CONCRETE CORED SLAB UNIT
105° SKEW

REVISIONS							SHEET NO.
NO.	BY:	DATE:	NO.	BY:	DATE:		S-5
1			3				TOTAL SHEETS
2			4				20

DRAWN BY : CTB	DATE : 03-22	DESIGN ENGINEER OF RECORD: T. TOWNSEND	DATE : 03-22
CHECKED BY : TJT	DATE : 03-22		

STD. NO. 21" PCS2_30_105S

DocuSign Envelope ID: DC00C7E6-7A6F-40FA-BB09-FD6ECCC65ED6

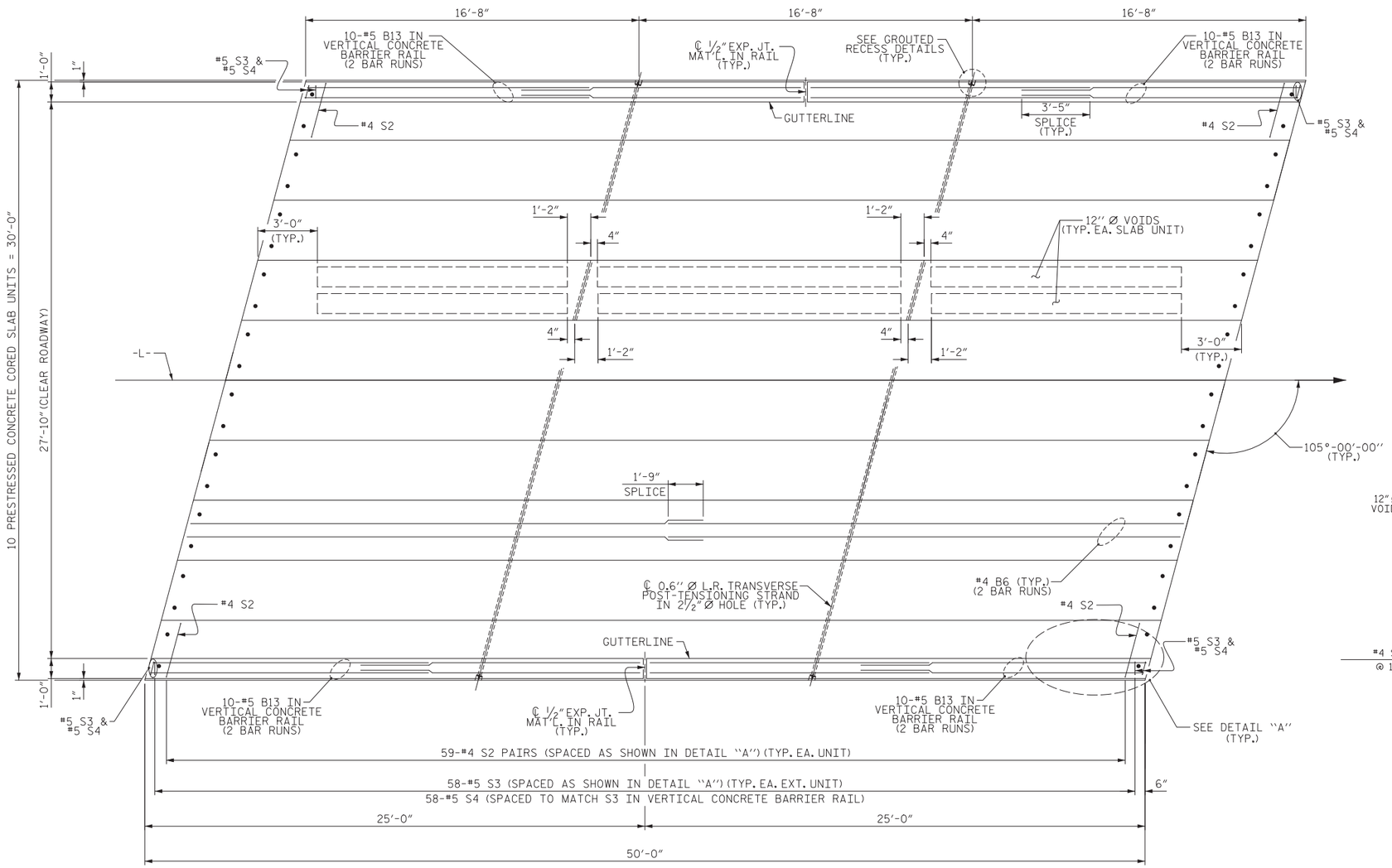

PLAN OF UNIT

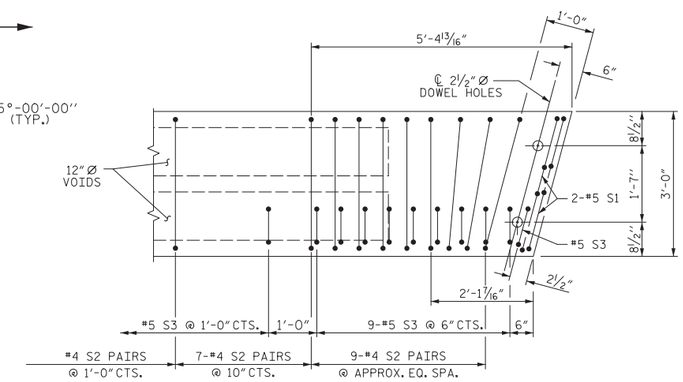

DETAIL "A"

(SIMILAR EACH END OF UNIT)
NOTE: EXTERIOR UNIT SHOWN - INTERIOR UNIT SIMILAR EXCEPT OMIT #5 S3 BARS.

PROJECT NO. 17BP.13.R.170

MADISON COUNTY

STATION: 13+67.02 -L-

SHEET 2 OF 3

DOCUMENT NOT CONSIDERED FINAL UNLESS ALL SIGNATURES COMPLETED

NORTH CAROLINA
Docusigned by: Timothy J. Townsend
DBC1881A1E4E2...
34955
ENGINEER
TIMOTHY J. TOWNSEND
3/29/2022

Mattern & Craig
ENGINEERS·SURVEYORS
12 BROAD STREET
ASHEVILLE, NORTH CAROLINA 28801
(828) 254-2201
FAX (828) 254-4562
NC LIC. NO. C-1154

STATE OF NORTH CAROLINA
DEPARTMENT OF TRANSPORTATION
RALEIGH

PLAN OF 50' UNIT
27'-10" CLEAR ROADWAY
105° SKEW

REVISIONS						
NO.	BY:	DATE:	NO.	BY:	DATE:	
1			3			
2			4			

SHEET NO. S-6
TOTAL SHEETS 20

DRAWN BY : CTB	DATE : 03-22	DESIGN ENGINEER OF RECORD: T. TOWNSEND	DATE : 03-22
CHECKED BY : TJT	DATE : 03-22		

DATE: 3/17/2022 TIME: 3:54:53 PM
FILE: \\192.168.14.61\project\3850F - Div 13 Bridge 300 (Madison Co)\Dwg\Sheets\401_011_17BP.13.R.170_SMU_CS_006_560300.dgn

3/17/2022
\\192.168.14.61\project\3850F - Div 13 Bridge 300 (Madison Co)\Dwg\Sheets\401_011_17BP.13.R.170_SMU_CS_006_560300.dgn
ctb

STD. NO. 21"PCS_30_105S_50L

DocuSign Envelope ID: DC00C7E6-7A6F-40FA-BB09-FD6ECCC65ED6

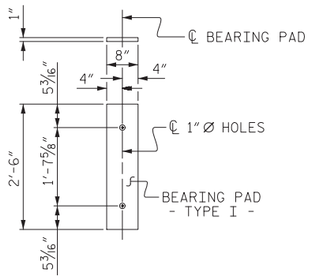

FIXED END
(TYPE I - 20 REQ'D)

ELASTOMERIC BEARING DETAILS

ELASTOMER IN ALL BEARINGS SHALL BE 50 DUROMETER HARDNESS.

BILL OF MATERIAL FOR VERTICAL CONCRETE BARRIER RAIL

BAR	BARS PER PAIR OF EXTERIOR UNITS	TOTAL NO.	SIZE	TYPE	LENGTH	WEIGHT
	50' UNIT					
✳B13	80	80	#5	STR	14'-2"	1182
✳ S4	120	120	#5	2	7'-2"	897
✳EPOXY COATED REINFORCING STEEL				LBS.		2079
CLASS AA CONCRETE				CU.YDS.		12.8
TOTAL VERTICAL CONCRETE BARRIER RAIL				LN. FT.		100.25

GUTTERLINE ASPHALT THICKNESS & RAIL HEIGHT

	ASPHALT OVERLAY THICKNESS	RAIL HEIGHT
	@ MID-SPAN	@ MID-SPAN
50' UNITS	1 5/8"	3'-7 5/8"

BILL OF MATERIAL FOR ONE 50' CORED SLAB UNIT

				EXTERIOR UNIT		INTERIOR UNIT	
BAR	NUMBER	SIZE	TYPE	LENGTH	WEIGHT	LENGTH	WEIGHT
B6	4	#4	STR	25'-9"	69	25'-9"	69
S1	8	#5	3	4'-3"	35	4'-3"	35
S2	118	#4	3	5'-4"	420	5'-4"	420
✳ S3	60	#5	1	5'-7"	349		
REINFORCING STEEL			LBS.		524		524
✳ EPOXY COATED REINFORCING STEEL			LBS.		349		
6500 P.S.I. CONCRETE			CU. YDS.		7.3		7.3
0.6" Ø L.R. STRANDS			No.		19		19

BAR TYPES

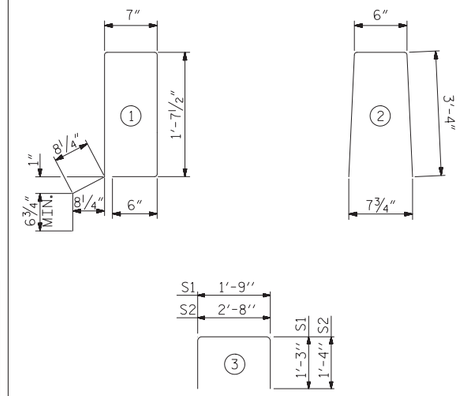

ALL BAR DIMENSIONS ARE OUT TO OUT

DEAD LOAD DEFLECTION AND CAMBER

	3'-0" x 1'-9"
50' CORED SLAB UNIT	0.6" Ø L.R. STRAND
CAMBER (SLAB ALONE IN PLACE)	1 1/2" ↑
DEFLECTION DUE TO SUPERIMPOSED DEAD LOAD✳✳	3/8" ↓
FINAL CAMBER	1 1/8" ↑

✳✳ INCLUDES FUTURE WEARING SURFACE

GRADE 270 STRANDS

	0.6" Ø L.R.
AREA (SQUARE INCHES)	0.217
ULTIMATE STRENGTH (LBS. PER STRAND)	58,600
APPLIED PRESTRESS (LBS. PER STRAND)	43,950

CORED SLABS REQUIRED

	NUMBER	LENGTH	TOTAL LENGTH
50' UNIT			
EXTERIOR C.S.	2	50'-0"	100'-0"
INTERIOR C.S.	8	50'-0"	400'-0"
TOTAL	10		500'-0"

CONCRETE RELEASE STRENGTH

UNIT	PSI
50' UNITS	4900

NOTES

ALL PRESTRESSING STRANDS SHALL BE 7-WIRE LOW RELAXATION GRADE 270 STRANDS AND SHALL CONFORM TO AASHTO M203 EXCEPT FOR SAMPLING REQUIREMENTS WHICH SHALL BE IN ACCORDANCE WITH THE STANDARD SPECIFICATIONS.

ALL REINFORCING STEEL CAST WITH THE CORED SLAB SECTIONS SHALL BE GRADE 60 AND SHALL BE INCLUDED IN THE UNIT PRICE BID FOR PRESTRESSED CONCRETE CORED SLABS.

RECESSES FOR TRANSVERSE STRANDS SHALL BE GROUTED AFTER THE TENSIONING OF THE STRANDS.

THE 2 1/2" Ø DOWEL HOLES AT FIXED ENDS OF SLAB SECTIONS SHALL BE FILLED WITH NON-SHRINK GROUT.

THE BACKER RODS SHALL CONFORM TO THE REQUIREMENTS OF TYPE M BOND BREAKER. SEE SECTION 1028 OF THE STANDARD SPECIFICATIONS.

WHEN CORED SLABS ARE CAST, AN INTERNAL HOLD-DOWN SYSTEM SHALL BE EMPLOYED TO PREVENT VOIDS FROM RISING OR MOVING SIDEWAYS. AT LEAST SIX WEEKS PRIOR TO CASTING CORED SLABS, THE CONTRACTOR SHALL SUBMIT TO THE ENGINEER FOR REVIEW AND COMMENT, DETAILED DRAWINGS OF THE PROPOSED HOLD-DOWN SYSTEM. IN ADDITION TO STRUCTURAL DETAILS, LOCATION AND SPACING OF THE HOLD-DOWNS SHALL BE INDICATED.

ALL REINFORCING STEEL IN THE VERTICAL CONCRETE BARRIER RAIL SHALL BE EPOXY COATED.

PRESTRESSING STRANDS SHALL BE CUT FLUSH WITH THE CORED SLAB UNIT ENDS.

APPLY EPOXY PROTECTIVE COATING TO CORED SLAB UNIT ENDS.

GROOVED CONTRACTION JOINTS, 1/2" IN DEPTH, SHALL BE TOOLED IN ALL EXPOSED FACES OF THE BARRIER RAIL AND IN ACCORDANCE WITH ARTICLE 825-10(B) OF THE STANDARD SPECIFICATIONS. A CONTRACTION JOINT SHALL BE LOCATED AT EACH THIRD POINT BETWEEN BARRIER RAIL EXPANSION JOINTS. ONLY ONE CONTRACTION JOINT IS REQUIRED AT MIDPOINT OF BARRIER RAIL SEGMENTS LESS THAN 20 FEET IN LENGTH AND NO CONTRACTION JOINTS ARE REQUIRED FOR THOSE SEGMENTS LESS THAN 10 FEET IN LENGTH.

FLAME CUTTING OF THE TRANSVERSE POST-TENSIONING STRAND IS NOT ALLOWED.

THE TRANSFER OF LOAD FROM THE ANCHORAGES TO THE CORED SLAB UNIT SHALL BE DONE WHEN THE CONCRETE HAS REACHED A COMPRESSIVE STRENGTH OF NOT LESS THAN THE REQUIRED STRENGTH SHOWN IN THE "CONCRETE RELEASE STRENGTH" TABLE.

FOR GROUT FOR STRUCTURES, SEE SPECIAL PROVISIONS.

THE PERMITTED THREADED INSERTS ARE DETAILED AS AN OPTION FOR THE CONTRACTOR TO ATTACH FALSEWORK AND FORMWORK DURING CONSTRUCTION.

THE PERMITTED THREADED INSERTS IN THE EXTERIOR UNITS SHALL BE SIZED BY THE CONTRACTOR, SPACED AT 4'-0" CENTERS AND GALVANIZED IN ACCORDANCE WITH SECTION 1076 OF THE STANDARD SPECIFICATIONS. STAINLESS STEEL THREADED INSERTS MAY BE USED AS AN ALTERNATE.

THE PERMITTED THREADED INSERTS SHALL BE GROUTED BY THE CONTRACTOR IMMEDIATELY FOLLOWING REMOVAL OF THE FALSEWORK.

THE COST OF THE PERMITTED THREADED INSERTS SHALL BE INCLUDED IN THE PRICE BID FOR THE PRECAST UNITS.

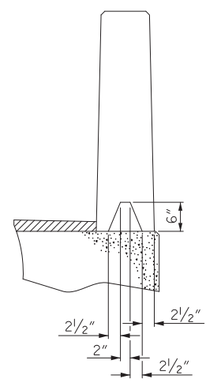

SECTION S-S
AT DAM IN OPEN JOINT
(THIS IS TO BE USED ONLY WHEN SLIP FORM IS USED)

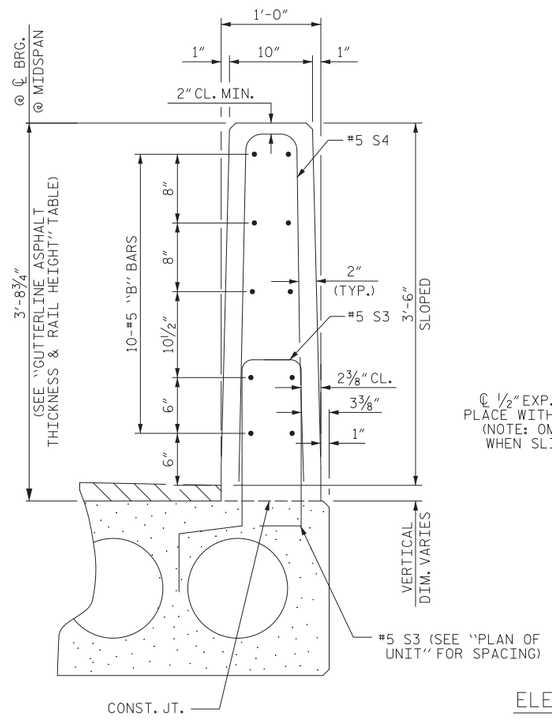

VERTICAL CONCRETE BARRIER RAIL SECTION

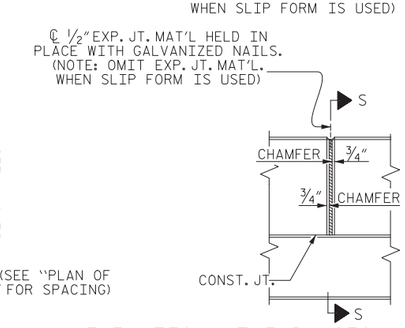

ELEVATION AT EXPANSION JOINTS

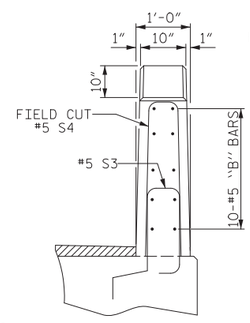

END VIEW

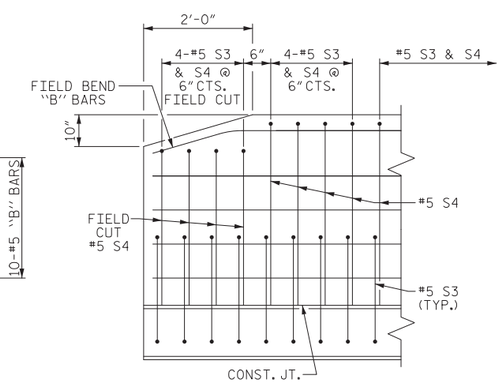

SIDE VIEW

END OF RAIL DETAILS

PROJECT NO. 17BP.13.R.170
MADISON COUNTY
STATION: 13+67.02 -L-

SHEET 3 OF 3

DOCUMENT NOT CONSIDERED FINAL UNLESS ALL SIGNATURES COMPLETED

NORTH CAROLINA
Docusigned by: Timothy J. Townsend
DocuSign Envelope ID: 1B8C1681-FA1E-1402-A7AC-F4C
34955
ENGINEER
TIMOTHY J. TOWNSEND
3/29/2022

Mattern & Craig
ENGINEERS·SURVEYORS
12 BROAD STREET
ASHEVILLE, NORTH CAROLINA 28801
(828) 254-2201
FAX (828) 254-4562
NC LIC. NO. C-1154

STATE OF NORTH CAROLINA
DEPARTMENT OF TRANSPORTATION
RALEIGH

STANDARD
3'-0" X 1'-9"
PRESTRESSED CONCRETE
CORED SLAB UNIT
105° SKEW

REVISIONS						SHEET NO.
NO.	BY:	DATE:	NO.	BY:	DATE:	S-7
1			3			TOTAL SHEETS
2			4			20

STD. NO. 21" PCS3_30_105S

DRAWN BY : CTB	DATE : 03-22	DESIGN ENGINEER OF RECORD: T. TOWNSEND	DATE : 03-22
CHECKED BY : TJT	DATE : 03-22		

DATE: 3/17/2022 TIME: 3:54:57 PM
FILE: \\192.168.14.61\project\3850F - Div 13 Bridge 300 (Madison Co)\Dwg\Sheets\401_013_17BP.13.R.170_SMU_CS_007_560300.dgn

3/17/2022
\\192.168.14.61\project\3850F - Div 13 Bridge 300 (Madison Co)\Dwg\Sheets\401_013_17BP.13.R.170_SMU_CS_007_560300.dgn
ctb

DocuSign Envelope ID: DC00C7E6-7A6F-40FA-BB09-FD6ECCC65ED6

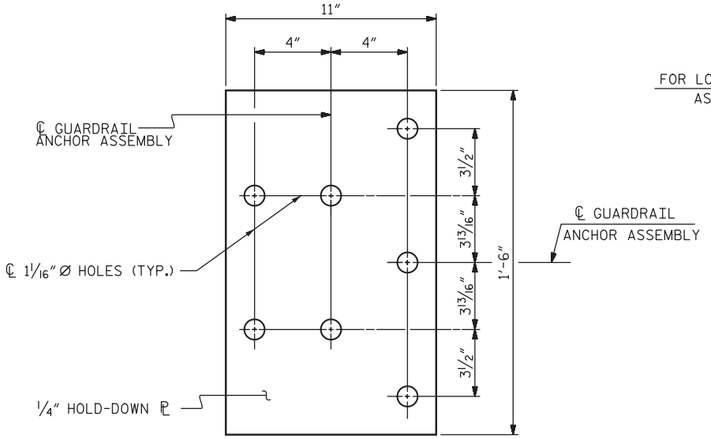

PLAN

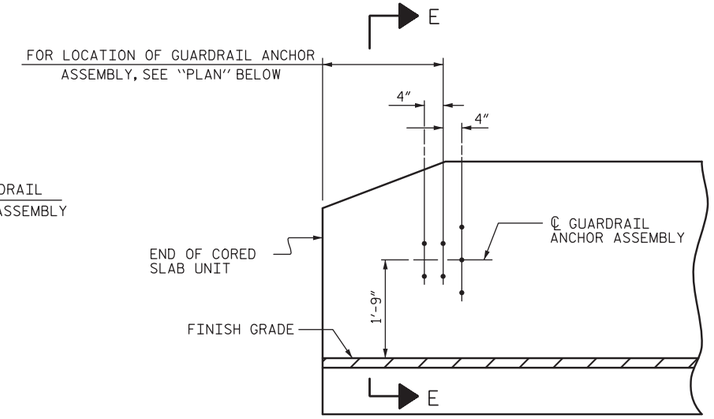

ELEVATION

NOTES

THE GUARDRAIL ANCHOR ASSEMBLY SHALL CONSIST OF A 1/4" HOLD DOWN PLATE AND 7 - 7/8" Ø BOLTS WITH NUTS AND WASHERS.

THE HOLD-DOWN PLATE SHALL CONFORM TO AASHTO M270 GRADE 36. AFTER FABRICATION, THE HOLD-DOWN PLATE SHALL BE HOT-DIP GALVANIZED IN ACCORDANCE WITH AASHTO M111.

BOLTS SHALL CONFORM TO THE REQUIREMENTS OF ASTM A307 AND NUTS SHALL CONFORM TO THE REQUIREMENTS OF AASHTO M291. BOLTS, NUTS AND WASHERS SHALL BE GALVANIZED. (AT THE CONTRACTOR'S OPTION, STAINLESS STEEL BOLTS, NUTS AND WASHERS MAY BE USED AS AN ALTERNATE FOR THE 7/8" Ø GALVANIZED BOLTS, NUTS AND WASHERS. THEY SHALL CONFORM TO OR EXCEED THE MECHANICAL REQUIREMENTS OF ASTM A307. THE USE OF THIS ALTERNATE SHALL BE APPROVED BY THE ENGINEER.)

THE GUARDRAIL ANCHOR ASSEMBLY IS REQUIRED AT ALL POINTS WHERE APPROACH GUARDRAIL IS TO BE ATTACHED TO THE END OF BARRIER RAIL. FOR POINTS OF ATTACHMENT, SEE SKETCH.

AFTER INSTALLATION, THE EXPOSED THREAD OF THE BOLT SHALL BE BURRED WITH A SHARP POINTED TOOL.

THE COST OF THE GUARDRAIL ANCHOR ASSEMBLY SHALL BE INCLUDED IN THE UNIT CONTRACT PRICE BID FOR VERTICAL CONCRETE BARRIER RAIL.

THE VERTICAL REINFORCING BARS MAY BE SHIFTED SLIGHTLY IN THE VERTICAL CONCRETE BARRIER RAIL TO CLEAR ASSEMBLY BOLTS.

THE 1 1/4" Ø HOLES SHALL BE FORMED OR DRILLED WITH A CORE BIT. IMPACT TOOLS WILL NOT BE PERMITTED. ANY CONCRETE DAMAGED BY THIS WORK SHALL BE REPAIRED TO THE SATISFACTION OF THE ENGINEER.

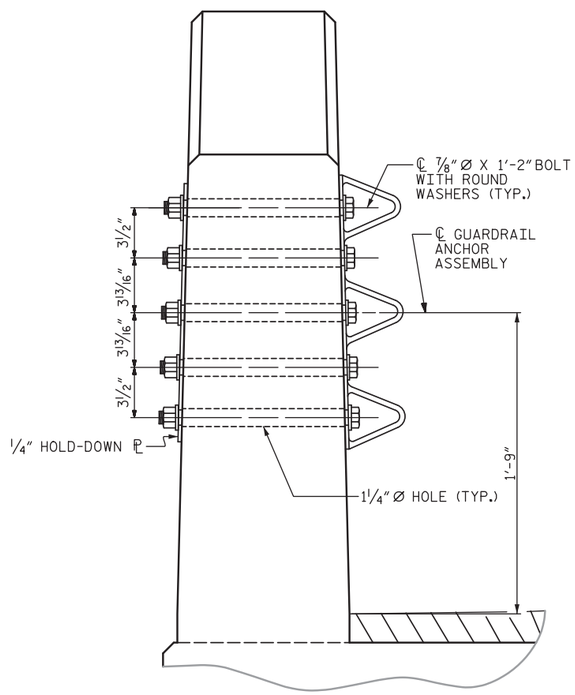

SECTION E-E

GUARDRAIL ANCHOR ASSEMBLY DETAILS

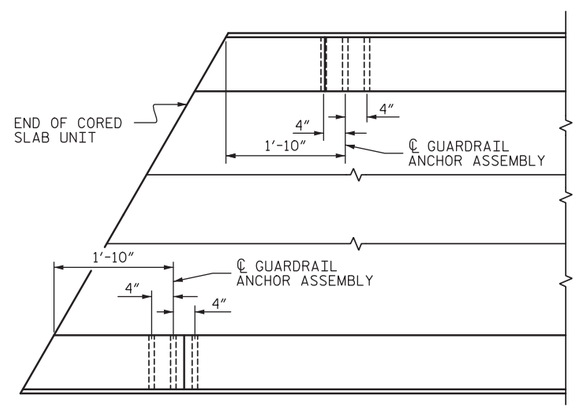

PLAN

LOCATION OF ANCHORS FOR GUARDRAIL

END BENT #1 SHOWN, END BENT #2 SIMILAR.

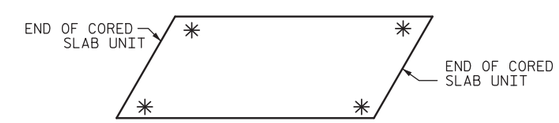

SKETCH SHOWING POINTS OF ATTACHMENT

✳ DENOTES GUARDRAIL ANCHOR ASSEMBLY

PROJECT NO. 17BP.13.R.170

MADISON COUNTY

STATION: 13+67.02 -L-

DOCUMENT NOT CONSIDERED FINAL UNLESS ALL SIGNATURES COMPLETED

NORTH CAROLINA
DocuSigned by: Timothy J. Townsend
B8C1881FA1E14E2...
34955
ENGINEER
TIMOTHY J. TOWNSEND
3/29/2022

Mattern & Craig
ENGINEERS•SURVEYORS
12 BROAD STREET
ASHEVILLE, NORTH CAROLINA 28801
(828) 254-2201
FAX (828) 254-4562
NC LIC. NO. C-1154

STATE OF NORTH CAROLINA
DEPARTMENT OF TRANSPORTATION
RALEIGH

STANDARD
GUARDRAIL ANCHORAGE DETAILS
FOR VERTICAL CONCRETE BARRIER RAIL

REVISIONS						SHEET NO.
NO.	BY:	DATE:	NO.	BY:	DATE:	S-8
1			3			TOTAL SHEETS
2			4			20

STD. NO. GRA3

DRAWN BY : CTB	DATE : 03-22	DESIGN ENGINEER OF RECORD: T. TOWNSEND	DATE : 03-22
CHECKED BY : TJT	DATE : 03-22		

DATE: 3/17/2022 TIME: 3:55:01 PM
FILE: \\192.168.14.61\project\3850F - Div 13 Bridge 300 (Madison Co)\Dwg\Sheets\401_015_17BP.13.R.170_SMU_GR_008_560300.dgn

DocuSign Envelope ID: DC00C7E6-7A6F-40FA-BB09-FD6ECCC65ED6

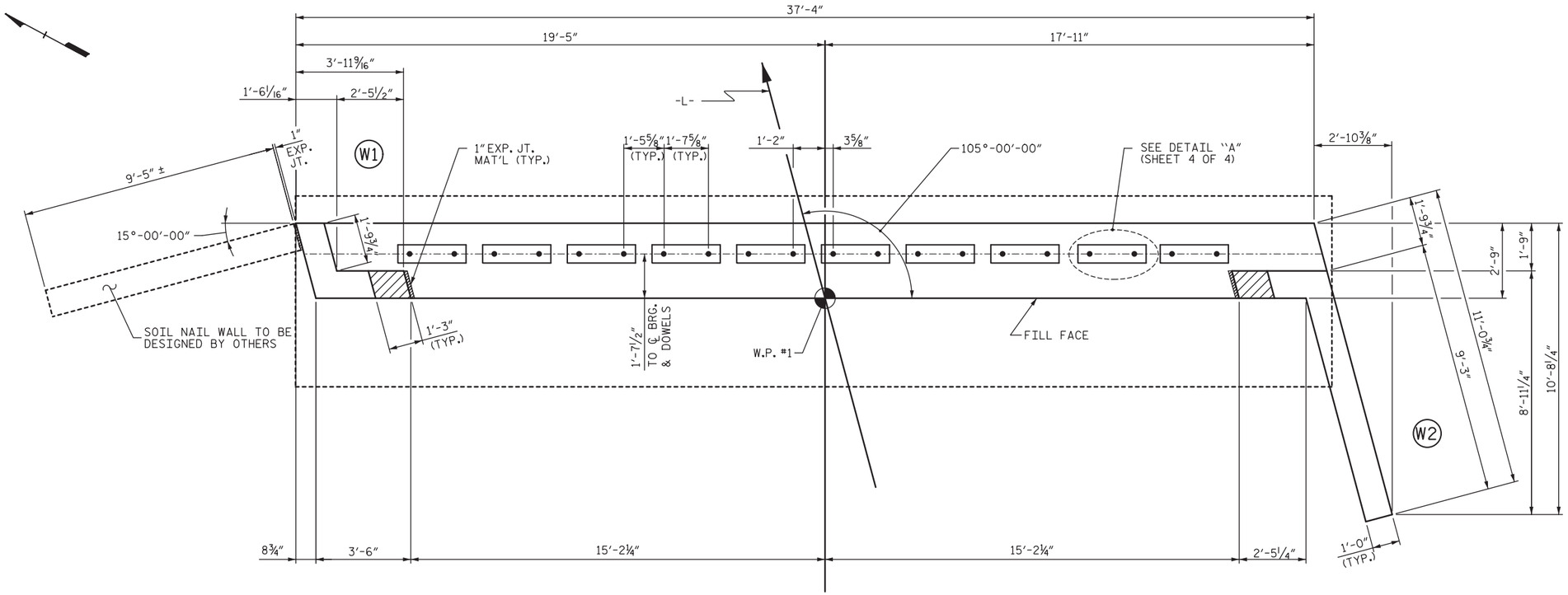

PLAN

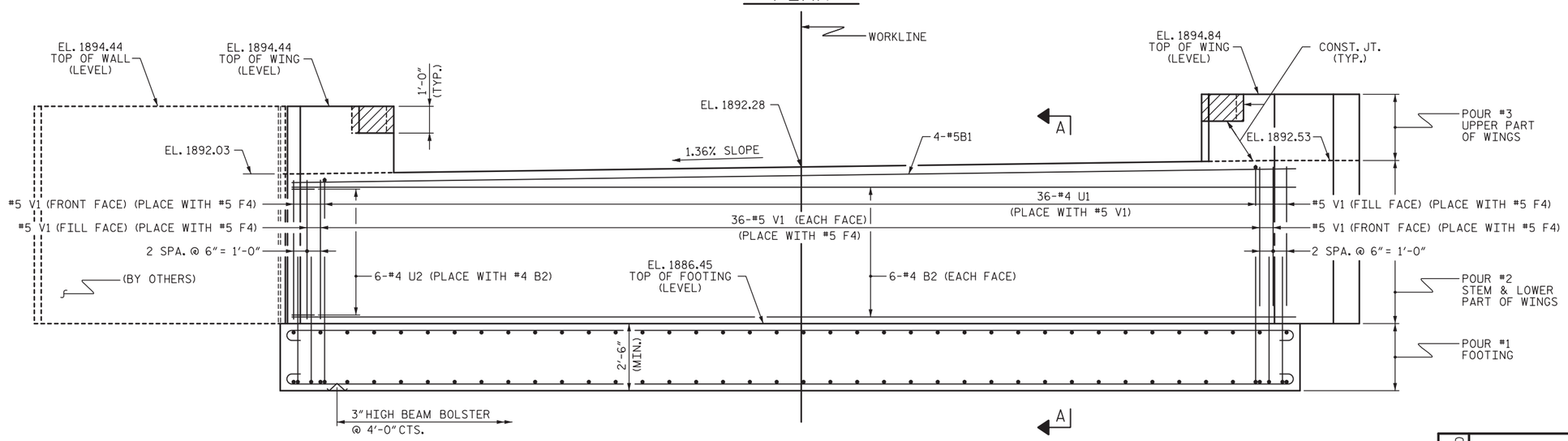

ELEVATION

WINGWALL REINFORCING NOT SHOWN FOR CLARITY.
FOR SECTION A-A, SEE SHEET 4 OF 4.
FOR WINGWALL REINFORCMENT DETAILS, SEE SHEET 2 OF 4.
FOR FOOTING REINFORCEMENT DETAILS, SEE 'FOOTING LAYOUT' ON SHEET 3 OF 4.

NOTES

"U" BARS IN CAP MAY BE SHIFTED AS NECESSARY TO CLEAR DOWELS.

THE CONCRETE IN THE SHADED AREA OF THE WING SHALL BE POURED AFTER THE VERTICAL CONCRETE BARRIER RAIL IS CAST IF SLIP FORMING IS USED.

FOR WINGWALL DETAILS, SEE SHEET 2 OF 4.

FOR FOOTING DETAILS, SEE SHEET 3 OF 4

PROJECT NO. 17BP.13.R.170
MADISON COUNTY
STATION: 13+67.02 -L-

SHEET 1 OF 4

DOCUMENT NOT CONSIDERED FINAL UNLESS ALL SIGNATURES COMPLETED

Docusigned by: Timothy J. Townsend
NORTH CAROLINA ENGINEER 34955 TIMOTHY J. TOWNSEND
3/29/2022

Mattern & Craig
ENGINEERS•SURVEYORS
12 BROAD STREET
ASHEVILLE, NORTH CAROLINA 28801
(828) 254-2201
FAX (828) 254-4562
NC LIC. NO. C-1154

STATE OF NORTH CAROLINA
DEPARTMENT OF TRANSPORTATION
RALEIGH

SUBSTRUCTURE
END BENT No. 1

REVISIONS								
NO.	BY:	DATE:	NO.	BY:	DATE:		SHEET NO.	
1			3				S-9	
2			4				TOTAL SHEETS	
							20	

DRAWN BY : CTB	DATE : 03-22	DESIGN ENGINEER OF RECORD: T. TOWNSEND	DATE : 03-22
CHECKED BY : TJT	DATE : 03-22		

DATE: 3/17/2022 TIME: 3:55:04 PM
FILE: \\192.168.14.61\project\3850F - Div 13 Bridge 300 (Madison Co)\Dwg\Sheets\401_017_17BP.13.R.170_SMU_E_009_560300.dgn

DocuSign Envelope ID: DC00C7E6-7A6F-40FA-BB09-FD6ECCC65ED6

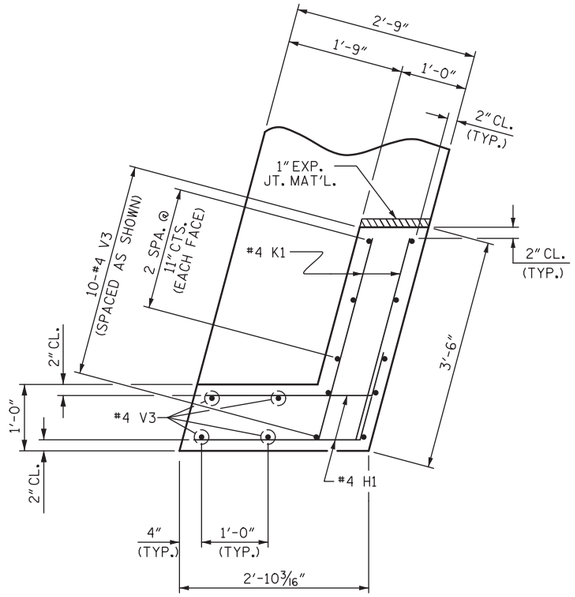

PLAN OF WING (W1)

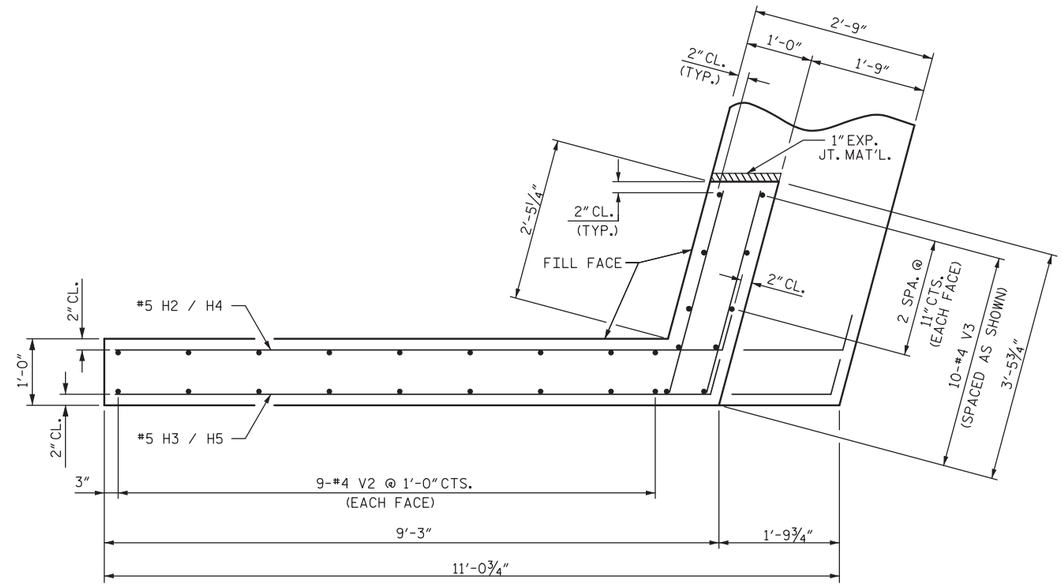

PLAN OF WING (W2)

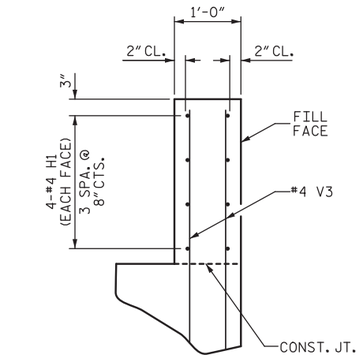

SECTION X-X

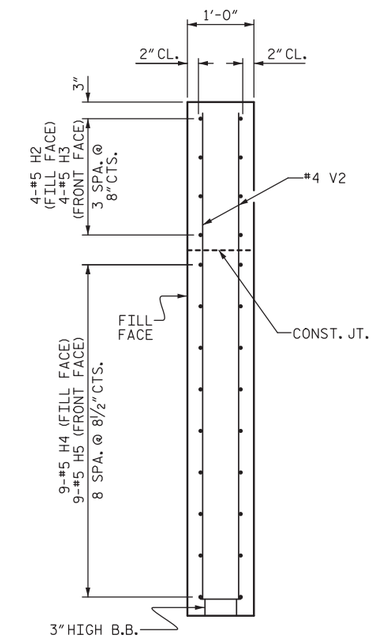

SECTION Y-Y

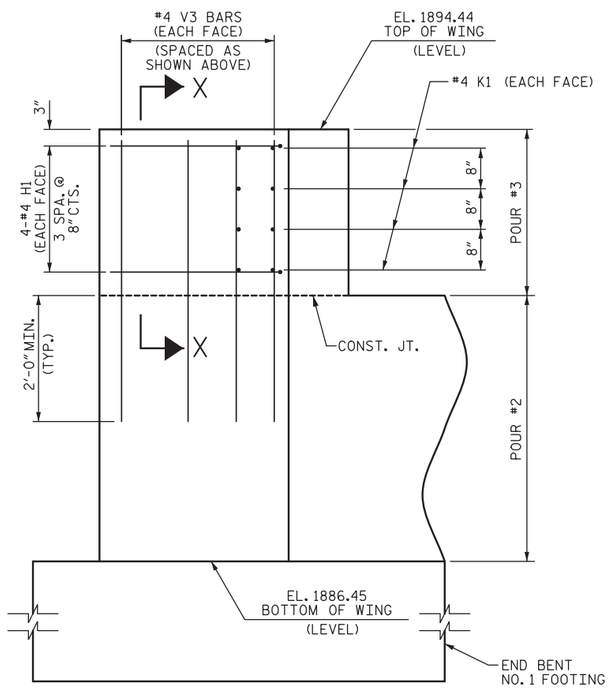

ELEVATION OF WING (W1)

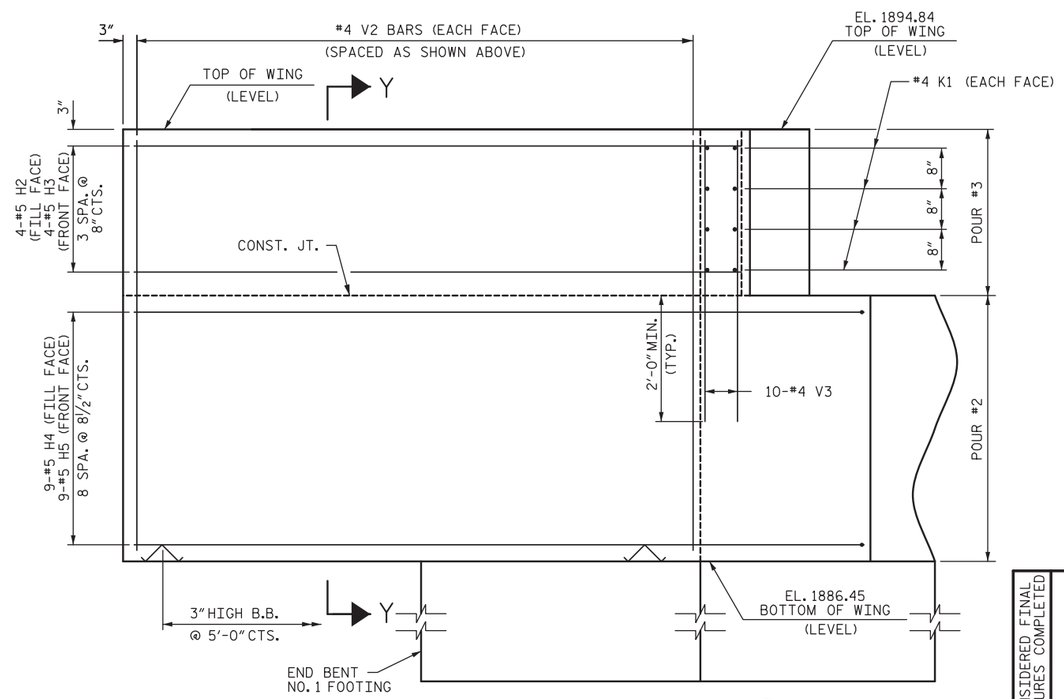

ELEVATION OF WING (W2)

WING DETAILS

PROJECT NO. 17BP.13.R.170

MADISON COUNTY

STATION: 13+67.02 -L-

SHEET 2 OF 4

DOCUMENT NOT CONSIDERED FINAL UNLESS ALL SIGNATURES COMPLETED

DocuSigned by: Timothy J. Townsend
B8C1681FA1E1482...
3/29/2022

STATE OF NORTH CAROLINA
DEPARTMENT OF TRANSPORTATION
RALEIGH

SUBSTRUCTURE
END BENT No. 1
WING DETAILS

Mattern & Craig
ENGINEERS•SURVEYORS
12 BROAD STREET
ASHEVILLE, NORTH CAROLINA 28801
(828) 254-2201
FAX (828) 254-4562
NC LIC. NO. C-1154

REVISIONS							
NO.	BY:	DATE:	NO.	BY:	DATE:		
1			3				
2			4				

SHEET NO. S-10

TOTAL SHEETS 20

DRAWN BY : CTB	DATE : 03-22	DESIGN ENGINEER OF RECORD: T. TOWNSEND	DATE : 03-22
CHECKED BY : TJT	DATE : 03-22		

DATE: 3/17/2022 TIME: 3:55:08 PM
FILE: \\192.168.14.61\project\3850F - Div 13 Bridge 300 (Madison Co)\Dwg\Sheets\401_019_17BP.13.R.170_SMU_E_010_560300.dgn

DocuSign Envelope ID: DC00C7E6-7A6F-40FA-BB09-FD6ECCC65ED6

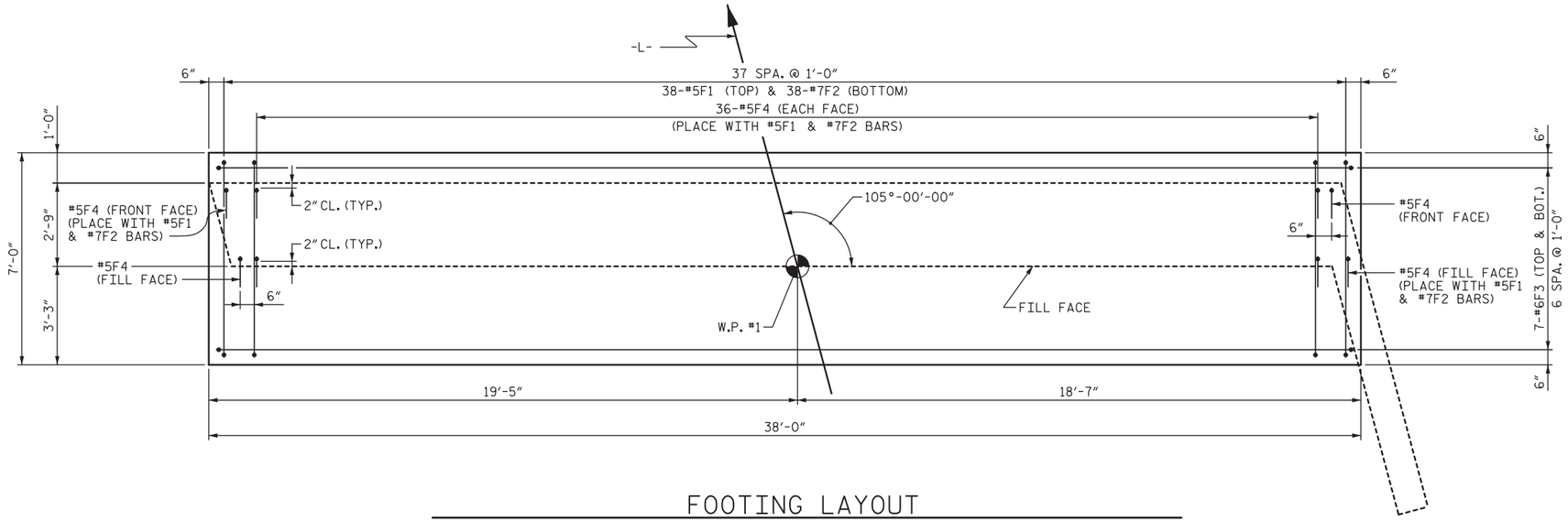

FOOTING LAYOUT

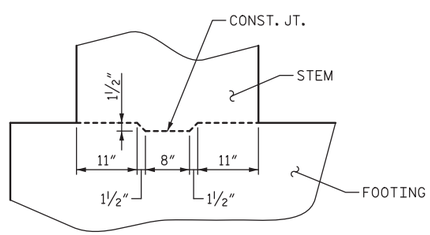

SHEAR KEY DETAIL

PROJECT NO. 17BP.13.R.170

MADISON COUNTY

STATION: 13+67.02 -L-

SHEET 3 OF 4

DOCUMENT NOT CONSIDERED FINAL UNLESS ALL SIGNATURES COMPLETED

DocuSigned by: Timothy J. Townsend
BBC1881FA1E14E2...
3/29/2022

34955 ENGINEER TIMOTHY J. TOWNSEND

Mattern & Craig
ENGINEERS·SURVEYORS
12 BROAD STREET
ASHEVILLE, NORTH CAROLINA 28801
(828) 254-2201
FAX (828) 254-4562
NC LIC. NO. C-1154

STATE OF NORTH CAROLINA
DEPARTMENT OF TRANSPORTATION
RALEIGH

SUBSTRUCTURE
END BENT No. 1
FOOTING LAYOUT

REVISIONS						
NO.	BY:	DATE:	NO.	BY:	DATE:	
1			3			
2			4			

SHEET NO. S-11

TOTAL SHEETS 20

DRAWN BY : CTB	DATE : 03-22	DESIGN ENGINEER OF RECORD: T. TOWNSEND	DATE : 03-22
CHECKED BY : TJT	DATE : 03-22		

DATE: 3/17/2022 TIME: 3:55:16 PM
FILE: \\192.168.14.61\project\3850F - Div 13 Bridge 300 (Madison Co)\Dwg\Sheets\401_021_17BP.13.R.170_SMU_E_011_560300.dgn

DocuSign Envelope ID: DC00C7E6-7A6F-40FA-BB09-FD6ECCC65ED6

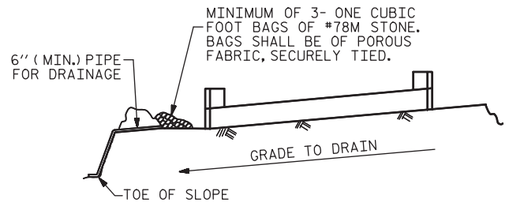

BAGGED STONE AND PIPE SHALL BE PLACED IMMEDIATELY AFTER COMPLETION OF END BENT EXCAVATION. PIPE MAY BE EITHER CONCRETE, CORRUGATED STEEL, CORRUGATED ALUMINUM ALLOY, OR CORRUGATED PLASTIC. PERFORATED PIPE WILL NOT BE ALLOWED.

BAGGED STONE SHALL REMAIN IN PLACE UNTIL THE ENGINEER DIRECTS THAT IT BE REMOVED. THE CONTRACTOR SHALL REMOVE AND DISPOSE OF SILT ACCUMULATIONS AT BAGGED STONE WHEN SO DIRECTED BY THE ENGINEER. BAGS SHALL BE REMOVED AND REPLACED WHENEVER THE ENGINEER DETERMINES THAT THEY HAVE DETERIORATED AND LOST THEIR EFFECTIVENESS.

NO SEPARATE PAYMENT WILL BE MADE FOR THIS WORK AND THE ENTIRE COST OF THIS WORK SHALL BE INCLUDED IN THE UNIT CONTRACT PRICE BID FOR THE SEVERAL PAY ITEMS.

TEMPORARY DRAINAGE AT END BENT

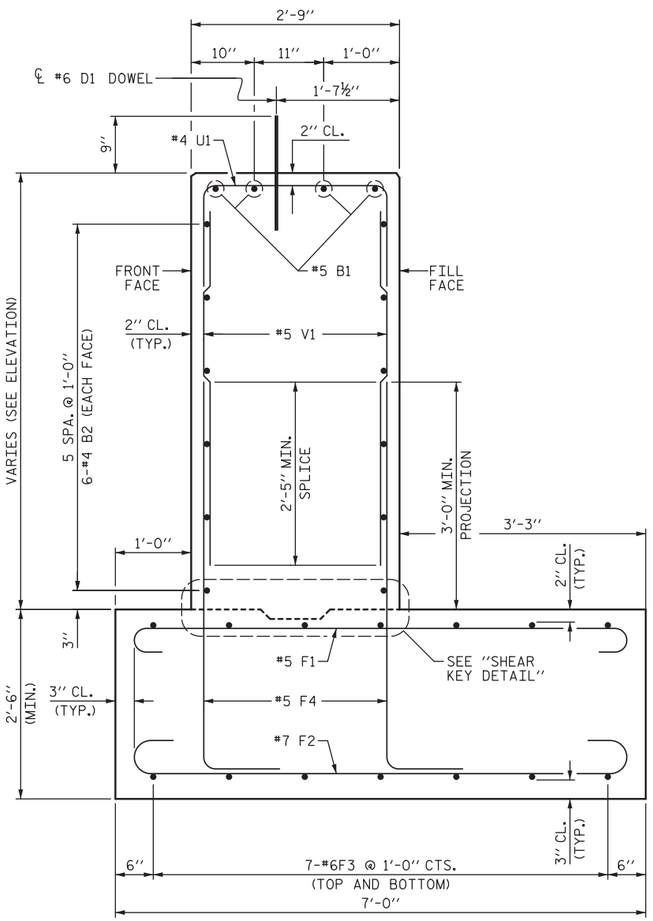

SECTION A-A

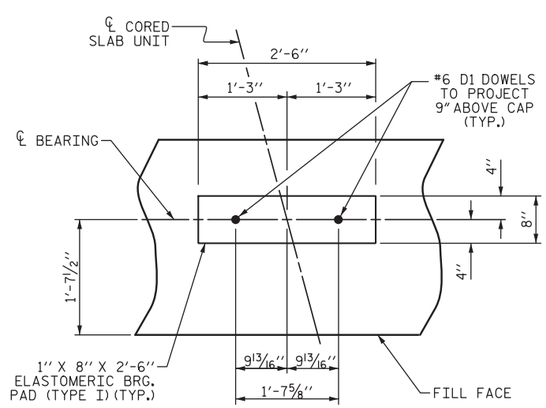

DETAIL "A"

BAR TYPES

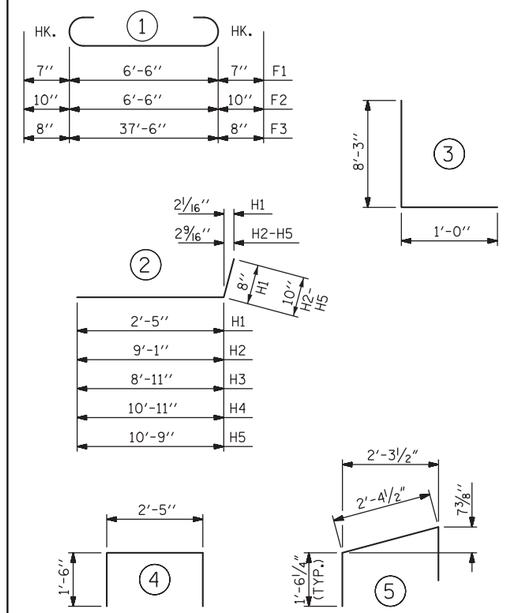

ALL BAR DIMENSIONS ARE OUT TO OUT.

BILL OF MATERIAL

BAR	NO.	SIZE	TYPE	LENGTH	WEIGHT
B1	4	#5	STR	37'-0''	154
B2	12	#4	STR	37'-0''	297
D1	20	#6	STR	1'-6''	45
F1	38	#5	1	7'-8''	304
F2	38	#7	1	8'-2''	634
F3	14	#6	1	38'-10''	817
F4	76	#5	3	9'-3''	733
H1	8	#4	2	3'-1''	16
H2	4	#5	2	9'-11''	41
H3	4	#5	2	9'-9''	41
H4	9	#5	2	11'-9''	110
H5	9	#5	2	11'-7''	109
K1	16	#4	STR	3'-1''	33
U1	36	#4	4	5'-5''	130
U2	6	#4	5	5'-5''	22
V1	76	#5	STR	5'-2''	410
V2	18	#4	STR	8'-0''	96
V3	24	#4	STR	4'-6''	72

REINFORCING STEEL 4064 LBS.

CLASS A CONCRETE BREAKDOWN

POUR #1	FOOTING	24.7 C.Y.
POUR #2	STEM & LOWER PART OF WINGS	25.6 C.Y.
POUR #3	UPPER PART OF WINGS	1.5 C.Y.
TOTAL CLASS A CONCRETE		51.8 C.Y.

NOTES

THE CONTRACTOR'S ATTENTION IS CALLED TO THE FACT THAT THE F4 BARS ARE DETAILED FOR 3 FEET OF EXTRA LENGTH

PROJECT NO. 17BP.13.R.170

MADISON COUNTY

STATION: 13+67.02 -L-

SHEET 4 OF 4

DOCUMENT NOT CONSIDERED FINAL UNLESS ALL SIGNATURES COMPLETED

NORTH CAROLINA
DocuSigned by: Timothy J. Townsend
DBC1881FA1E14E3...
34955
ENGINEER
TIMOTHY J. TOWNSEND
3/29/2022

Mattern & Craig
ENGINEERS•SURVEYORS
12 BROAD STREET
ASHEVILLE, NORTH CAROLINA 28801
(828) 254-2201
FAX (828) 254-4562
NC LIC. NO. C-1154

STATE OF NORTH CAROLINA
DEPARTMENT OF TRANSPORTATION
RALEIGH

SUBSTRUCTURE
END BENT No. 1
SECTIONS AND
REINFORCING
STEEL TABLE

REVISIONS							SHEET NO.
NO.	BY:	DATE:	NO.	BY:	DATE:		S-12
1			3				TOTAL SHEETS
2			4				20

DRAWN BY : CTB	DATE : 03-22	DESIGN ENGINEER OF RECORD: T. TOWNSEND	DATE : 03-22
CHECKED BY : TJT	DATE : 03-22		

DATE: 3/17/2022 TIME: 3:55:20 PM
FILE: \\192.168.14.61\project\3850F - Div 13 Bridge 300 (Madison Co)\Dwg\Sheets\401_023_17BP.13.R.170_SMU_E_012_560300.dgn

DocuSign Envelope ID: DC00C7E6-7A6F-40FA-BB09-FD6ECCC65ED6

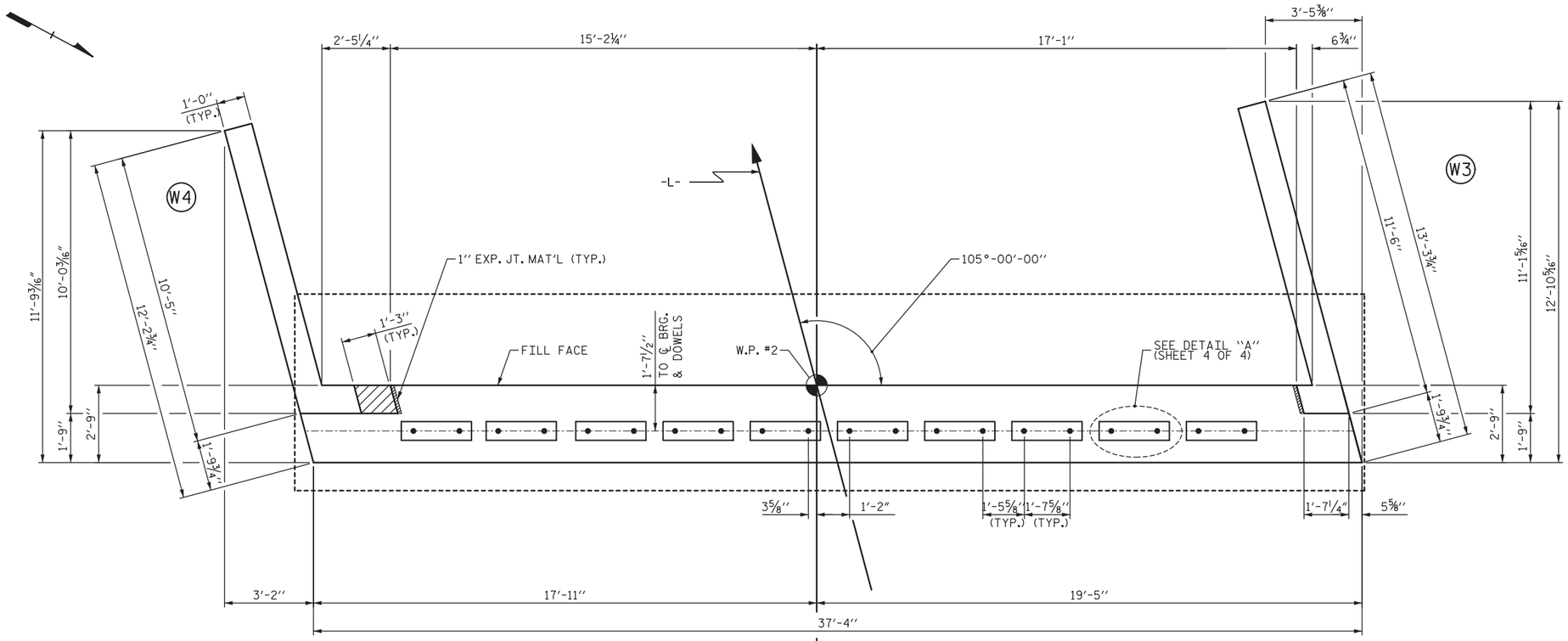

PLAN

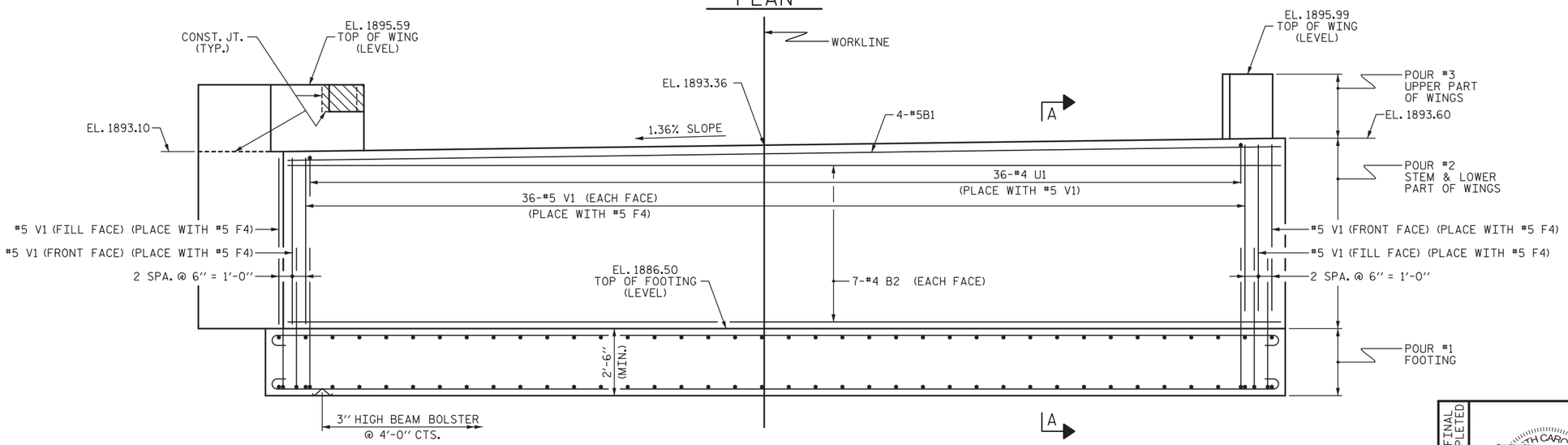

ELEVATION

WINGWALL REINFORCING NOT SHOWN FOR CLARITY.
FOR SECTION A-A, SEE SHEET 4 OF 4.
FOR WINGWALL REINFORCMENT DETAILS, SEE SHEET 2 OF 4.
FOR FOOTING REINFORCEMENT DETAILS, SEE 'FOOTING LAYOUT' ON SHEET 3 OF 4.

NOTES

"U" BARS IN CAP MAY BE SHIFTED AS NECESSARY TO CLEAR DOWELS.

THE CONCRETE IN THE SHADED AREA OF THE WING SHALL BE POURED AFTER THE VERTICAL CONCRETE BARRIER RAIL IS CAST IF SLIP FORMING IS USED.

FOR WINGWALL DETAILS, SEE SHEET 2 OF 4.

FOR FOOTING DETAILS, SEE SHEET 3 OF 4.

PROJECT NO. 17BP.13.R.170
MADISON COUNTY
STATION: 13+67.02 -L-

SHEET 1 OF 4

DOCUMENT NOT CONSIDERED FINAL UNLESS ALL SIGNATURES COMPLETED

DocuSigned by: Timothy J. Townsend
3/29/2022

STATE OF NORTH CAROLINA
DEPARTMENT OF TRANSPORTATION
RALEIGH

SUBSTRUCTURE

END BENT No. 2

Mattern & Craig
ENGINEERS•SURVEYORS
12 BROAD STREET
ASHEVILLE, NORTH CAROLINA 28801
(828) 254-2201
FAX (828) 254-4562
NC LIC. NO. C-1154

REVISIONS						
NO.	BY:	DATE:	NO.	BY:	DATE:	
1			3			
2			4			

SHEET NO. S-13
TOTAL SHEETS 20

DRAWN BY : CTB	DATE : 03-22	DESIGN ENGINEER OF RECORD: T. TOWNSEND	DATE : 03-22
CHECKED BY : TJT	DATE : 03-22		

DATE: 3/17/2022 TIME: 3:55:23 PM
FILE: \\192.168.14.61\project\3850F - Div 13 Bridge 300 (Madison Co)\Dwg\Sheets\401_025_17BP.13.R.170_SMU_E_013_560300.dgn

DocuSign Envelope ID: DC00C7E6-7A6F-40FA-BB09-FD6ECCC65ED6

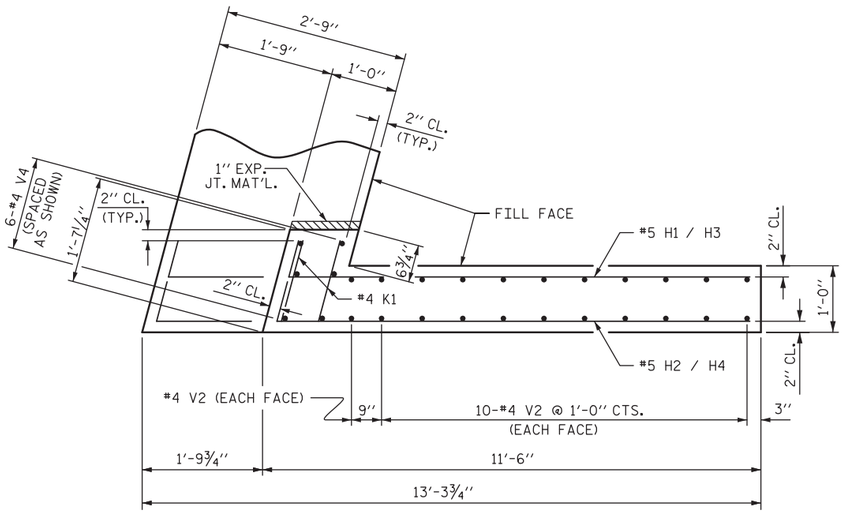

PLAN OF WING (W3)

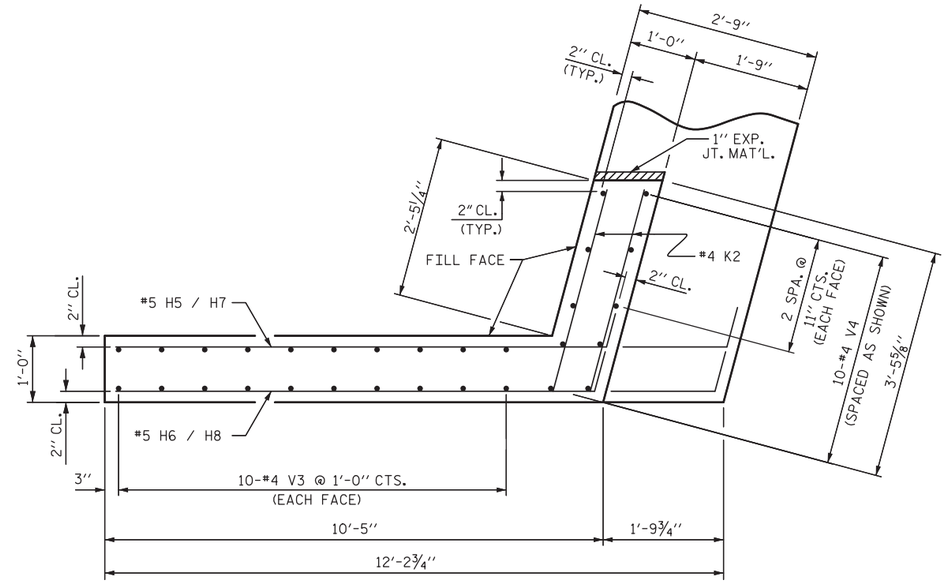

PLAN OF WING (W4)

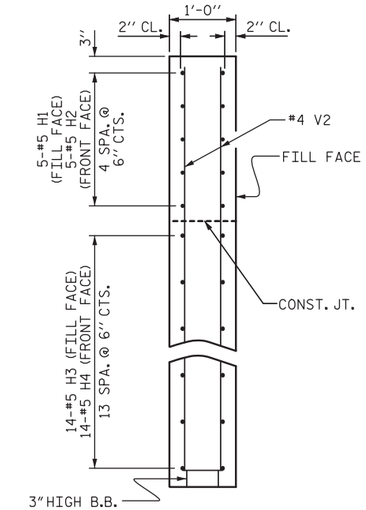

SECTION X-X

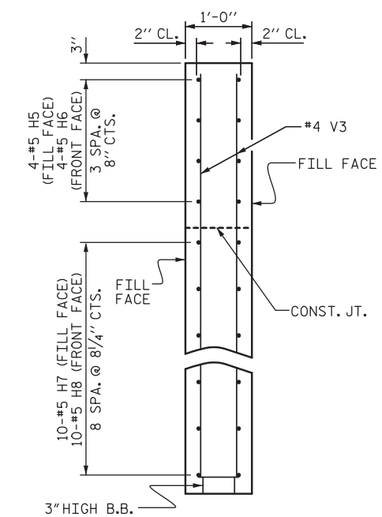

SECTION Y-Y

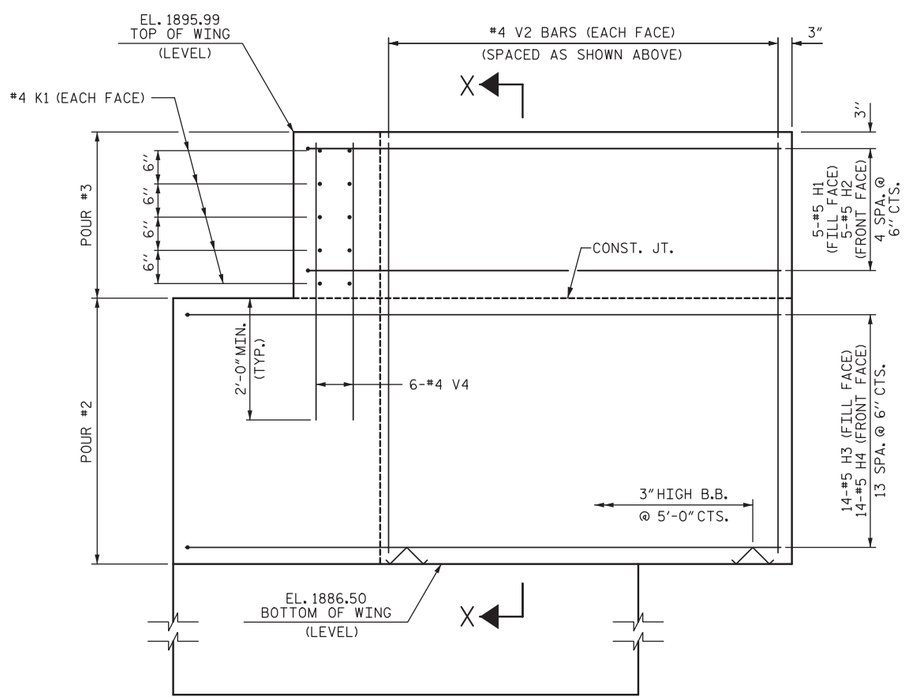

ELEVATION OF WING (W3)

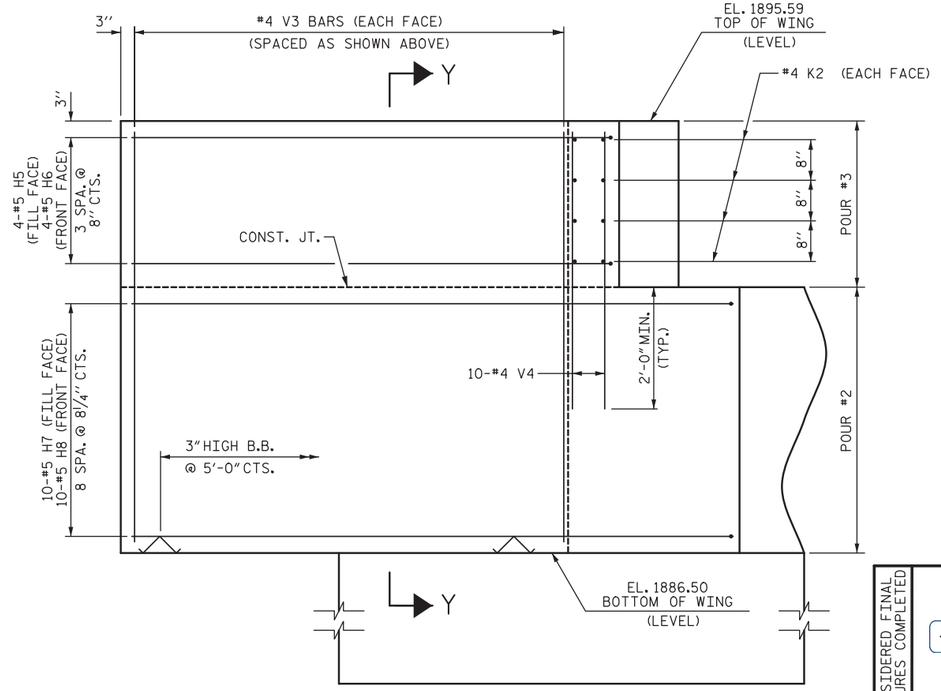

ELEVATION OF WING (W4)

WING DETAILS

PROJECT NO. 17BP.13.R.170

MADISON COUNTY

STATION: 13+67.02 -L-

SHEET 2 OF 4

DOCUMENT NOT CONSIDERED FINAL UNLESS ALL SIGNATURES COMPLETED

DocuSigned by: Timothy J. Townsend
B8C1881FA9E483...
3/29/2022

NORTH CAROLINA ENGINEER 34955 TIMOTHY J. TOWNSEND

Mattern & Craig
ENGINEERS·SURVEYORS
12 BROAD STREET
ASHEVILLE, NORTH CAROLINA 28801
(828) 254-2201
FAX (828) 254-4562
NC LIC. NO. C-1154

STATE OF NORTH CAROLINA
DEPARTMENT OF TRANSPORTATION
RALEIGH

SUBSTRUCTURE
END BENT No. 2
WING DETAILS

REVISIONS							SHEET NO.
NO.	BY:	DATE:	NO.	BY:	DATE:		S-14
1			3				TOTAL SHEETS
2			4				20

DRAWN BY : CTB	DATE : 03-22	DESIGN ENGINEER OF RECORD: T. TOWNSEND	DATE : 03-22
CHECKED BY : TJT	DATE : 03-22		

DATE: 3/17/2022 TIME: 3:55:27 PM
FILE: \\192.168.14.61\project\3850F - Div 13 Bridge 300 (Madison Co)\Dwg\Sheets\401_027_17BP.13.R.170_SMU_E_014_560300.dgn

DocuSign Envelope ID: DC00C7E6-7A6F-40FA-BB09-FD6ECCC65ED6

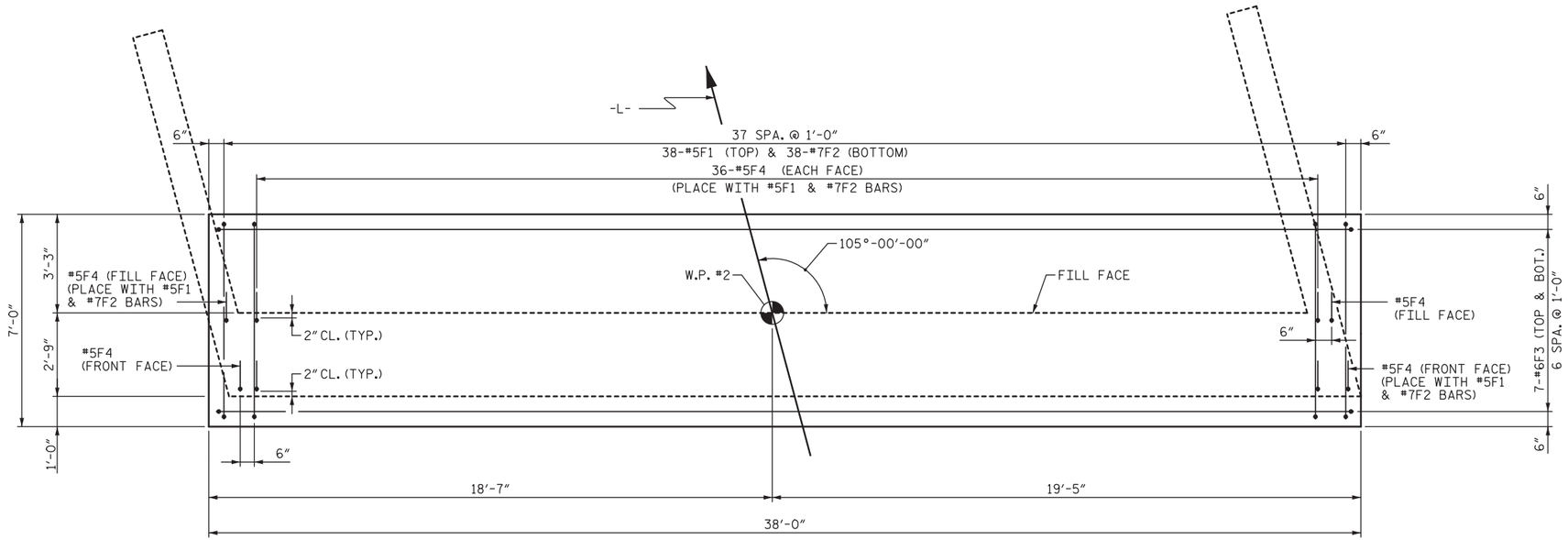

FOOTING LAYOUT

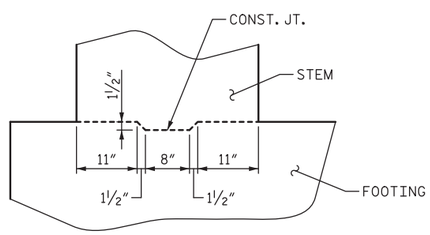

SHEAR KEY DETAIL

PROJECT NO. 17BP.13.R.170

MADISON COUNTY

STATION: 13+67.02 -L-

SHEET 3 OF 4

DOCUMENT NOT CONSIDERED FINAL UNLESS ALL SIGNATURES COMPLETED

Docu Signed by: Timothy J. Townsend
B8C1681FA1E1482...
3/29/2022

NORTH CAROLINA 34955 ENGINEER TIMOTHY J. TOWNSEND

Mattern & Craig
ENGINEERS•SURVEYORS
12 BROAD STREET
ASHEVILLE, NORTH CAROLINA 28801
(828) 254-2201
FAX (828) 254-4562
NC LIC. NO. C-1154

STATE OF NORTH CAROLINA
DEPARTMENT OF TRANSPORTATION
RALEIGH

SUBSTRUCTURE
END BENT No. 2
FOOTING LAYOUT

REVISIONS						
NO.	BY:	DATE:	NO.	BY:	DATE:	
1			3			
2			4			

SHEET NO. S-15

TOTAL SHEETS 20

DRAWN BY : CTB	DATE : 03-22	DESIGN ENGINEER OF RECORD: T. TOWNSEND	DATE : 03-22
CHECKED BY : TJT	DATE : 03-22		

DATE: 3/17/2022 TIME: 3:55:31 PM
FILE: \\192.168.14.61\project\3850F - Div 13 Bridge 300 (Madison Co)\Dwg\Sheets\401_029_17BP.13.R.170_SMU_E_015_560300.dgn

DocuSign Envelope ID: DC00C7E6-7A6F-40FA-BB09-FD6ECCC85ED6

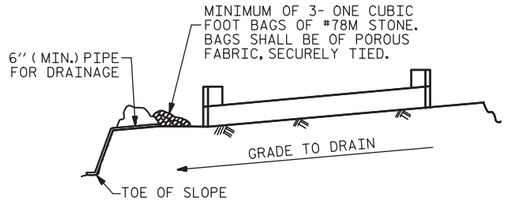

BAGGED STONE AND PIPE SHALL BE PLACED IMMEDIATELY AFTER COMPLETION OF END BENT EXCAVATION. PIPE MAY BE EITHER CONCRETE, CORRUGATED STEEL, CORRUGATED ALUMINUM ALLOY, OR CORRUGATED PLASTIC. PERFORATED PIPE WILL NOT BE ALLOWED.

BAGGED STONE SHALL REMAIN IN PLACE UNTIL THE ENGINEER DIRECTS THAT IT BE REMOVED. THE CONTRACTOR SHALL REMOVE AND DISPOSE OF SILT ACCUMULATIONS AT BAGGED STONE WHEN SO DIRECTED BY THE ENGINEER. BAGS SHALL BE REMOVED AND REPLACED WHENEVER THE ENGINEER DETERMINES THAT THEY HAVE DETERIORATED AND LOST THEIR EFFECTIVENESS.

NO SEPARATE PAYMENT WILL BE MADE FOR THIS WORK AND THE ENTIRE COST OF THIS WORK SHALL BE INCLUDED IN THE UNIT CONTRACT PRICE BID FOR THE SEVERAL PAY ITEMS.

TEMPORARY DRAINAGE AT END BENT

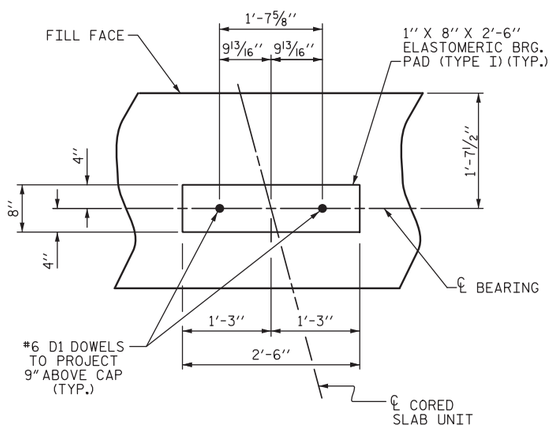

DETAIL "A"

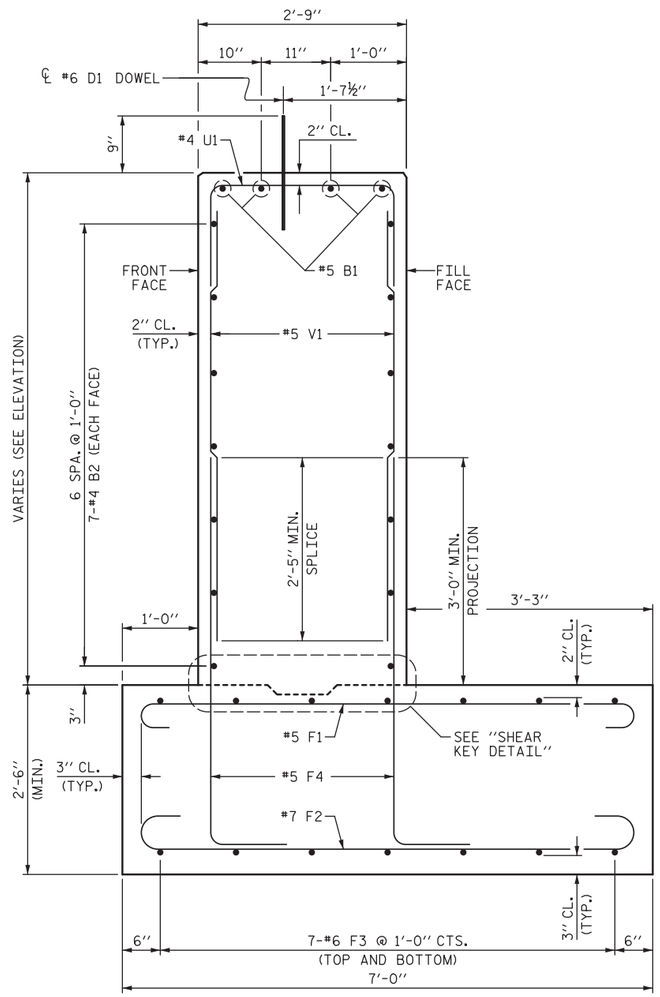

SECTION A-A

BAR TYPES

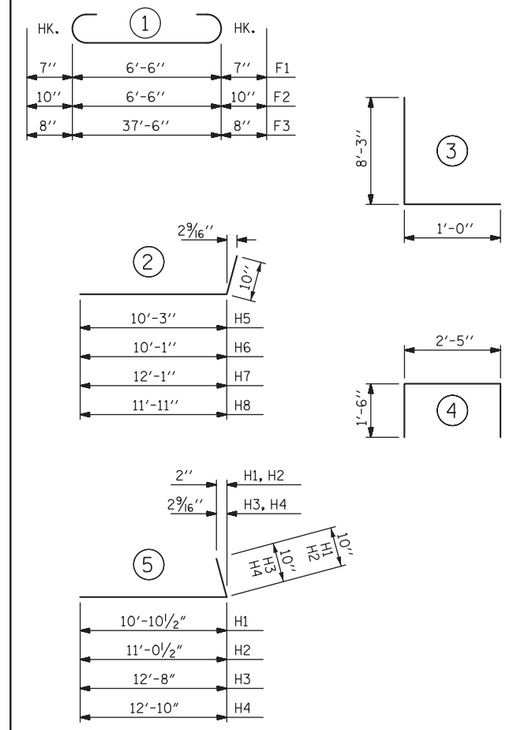

ALL BAR DIMENSIONS ARE OUT TO OUT.

BILL OF MATERIAL

BAR	NO.	SIZE	TYPE	LENGTH	WEIGHT
B1	4	#5	STR	37'-0''	154
B2	14	#4	STR	37'-0''	346
D1	20	#6	STR	1'-6''	45
F1	38	#5	1	7'-2''	304
F2	38	#7	1	8'-2''	634
F3	14	#6	1	38'-10''	817
F4	76	#5	3	9'-3''	733
H1	5	#5	5	11'-9''	62
H2	5	#5	5	11'-8''	62
H3	14	#5	5	13'-6''	197
H4	14	#5	5	13'-8''	200
H5	4	#5	2	11'-1''	46
H6	4	#5	2	10'-11''	46
H7	10	#5	2	12'-11''	135
H8	10	#5	2	12'-9''	133
K1	10	#4	STR	1'-3''	8
K2	8	#4	STR	3'-1''	16
U1	36	#4	4	5'-5''	130
V1	76	#5	STR	6'-2''	489
V2	22	#4	STR	9'-1''	133
V3	20	#4	STR	8'-8''	116
V4	16	#4	STR	4'-6''	51

REINFORCING STEEL 4857 LBS.

CLASS A CONCRETE BREAKDOWN

POUR #1	FOOTING	24.7 C.Y.
POUR #2	STEM & LOWER PART OF WINGS	31.2 C.Y.
POUR #3	UPPER PART OF WINGS	2.3 C.Y.
TOTAL CLASS A CONCRETE		58.2 C.Y.

NOTES

THE CONTRACTOR'S ATTENTION IS CALLED TO THE FACT THAT THE F4 BARS ARE DETAILED FOR 3 FEET OF EXTRA LENGTH.

PROJECT NO. 17BP.13.R.170

MADISON COUNTY

STATION: 13+67.02 -L-

SHEET 4 OF 4

DOCUMENT NOT CONSIDERED FINAL UNLESS ALL SIGNATURES COMPLETED

NORTH CAROLINA
Docusigned by: Timothy J. Townsend
DBC1881FA1E1402...
34955
ENGINEER
TIMOTHY J. TOWNSEND
3/29/2022

Mattern & Craig
ENGINEERS·SURVEYORS
12 BROAD STREET
ASHEVILLE, NORTH CAROLINA 28801
(828) 254-2201
FAX (828) 254-4562
NC LIC. NO. C-1154

STATE OF NORTH CAROLINA
DEPARTMENT OF TRANSPORTATION
RALEIGH

SUBSTRUCTURE
END BENT No. 2
SECTIONS AND
REINFORCING
STEEL TABLE

REVISIONS								
NO.	BY:	DATE:	NO.	BY:	DATE:			
1			3					
2			4					

SHEET NO. S-16
TOTAL SHEETS 20

DRAWN BY : CTB	DATE : 03-22	DESIGN ENGINEER OF RECORD: T. TOWNSEND	DATE : 03-22
CHECKED BY : TJT	DATE : 03-22		

DATE: 3/17/2022 TIME: 4:31:48 PM
FILE: \\192.168.14.61\project\3850F - Div 13 Bridge 300 (Madison Co)\Dwg\Sheets\401_031_17BP.13.R.170_SMU_E_016_560300.dgn

DocuSign Envelope ID: DC00C7E6-7A6F-40FA-BB09-FD6ECCC65ED6

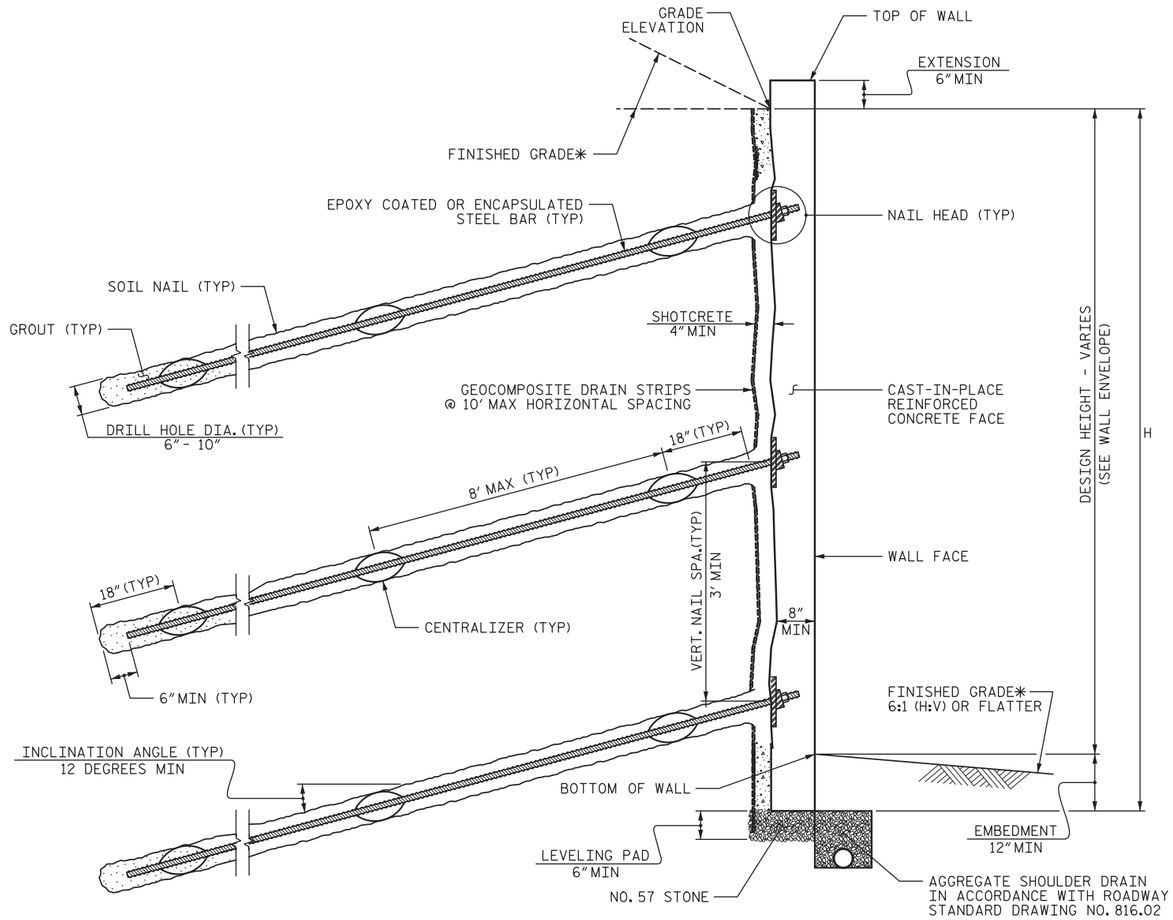

SOIL NAIL WALL - TYPICAL SECTION

* SEE ROADWAY PLANS FOR FINISHED GRADE AND DITCH DETAILS

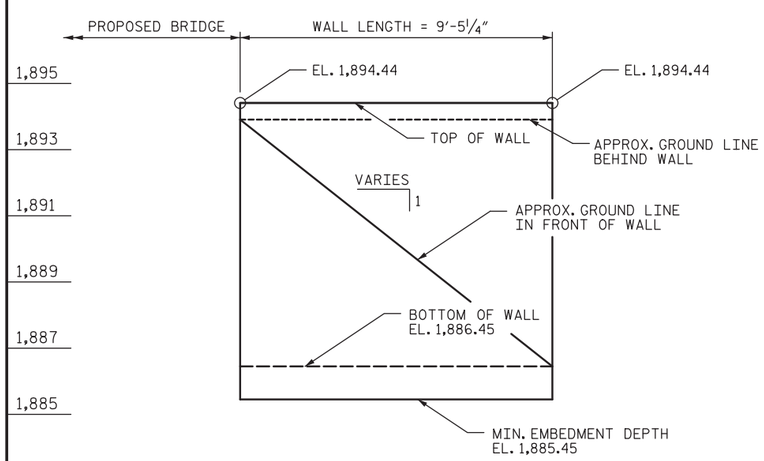

WALL PROFILE

NOTES:

FOR SOIL NAIL RETAINING WALLS, SEE SOIL NAIL RETAINING WALLS PROVISION.

BEFORE BEGINNING SOIL NAIL WALL DESIGN FOR RETAINING WALL, SURVEY WALL LOCATION AND SUBMIT A REVISED WALL PROFILE VIEW (WALL ENVELOPE) FOR REVIEW. DO NOT START WALL DESIGN OR CONSTRUCTION UNTIL THE REVISED WALL ENVELOPE IS ACCEPTED.

DESIGN RETAINING WALL FOR THE FOLLOWING:
1) H = DESIGN HEIGHT + EMBEDMENT
2) DESIGN LIFE = 75 YEARS
3) MINIMUM EMBEDMENT ELEVATION = 1885.45 FT
4) IN-SITU ASSUMED MATERIAL PARAMETERS ABOVE ELEVATION 1886.45 FT:
UNIT WEIGHT, γ = 120 LB/CF
FRICTION ANGLE, ϕ = 30 DEGREES
COHESION, c = 0 LB/SF

THE MINIMUM EMBEDMENT ELEVATION FOR RETAINING WALL INCLUDES EMBEDMENT FOR SCOUR.

DESIGN RETAINING WALL FOR A LIVE LOAD (TRAFFIC) SURCHARGE.

EXISTING OR FUTURE OBSTRUCTIONS SUCH AS FOUNDATIONS, GUARDRAIL, FENCE OR HANDRAIL POSTS, PAVEMENTS, PIPES, INLETS OR UTILITIES MAY INTERFERE WITH SOIL NAILS FOR RETAINING WALL.

"TEMPORARY SHORING" MAY BE REQUIRED FOR RETAINING WALL IN ACCORDANCE WITH THE TEMPORARY SHORING PROVISION. SEE ROADWAY PLANS.

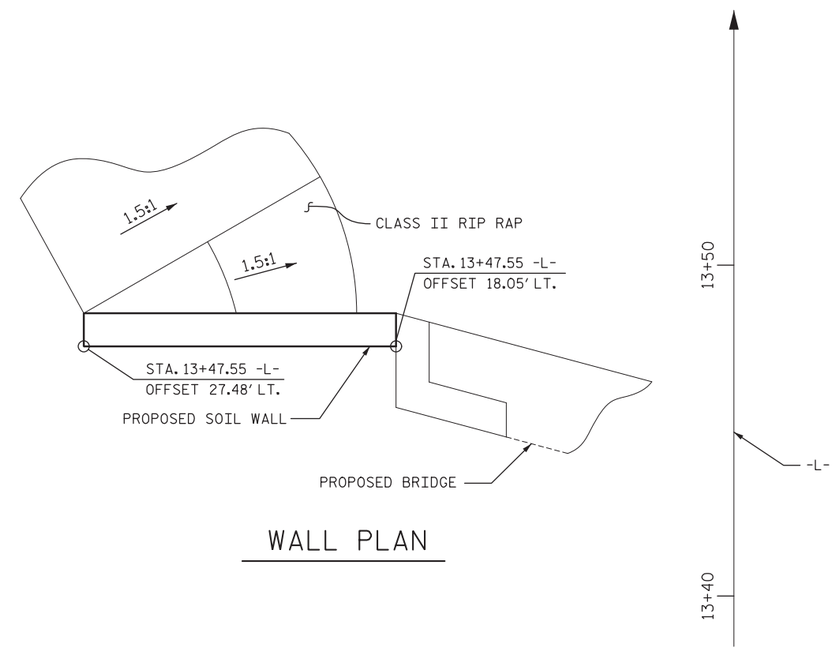

WALL PLAN

PROJECT NO. 17BP.13.R.170
MADISON COUNTY
STATION: 13+67.02 -L-

DOCUMENT NOT CONSIDERED FINAL UNLESS ALL SIGNATURES COMPLETED

DocuSigned by: PE CARO. Timothy J. Townsend B8C1681FA1E1482... 34955 ENGINEER TIMOTHY J. TOWNSEND
3/29/2022

Mattern & Craig
ENGINEERS·SURVEYORS
12 BROAD STREET
ASHEVILLE, NORTH CAROLINA 28801
(828) 254-2201
FAX (828) 254-4562
NC LIC. NO. C-1154

STATE OF NORTH CAROLINA
DEPARTMENT OF TRANSPORTATION
RALEIGH

SOIL NAIL WALL FOR BRIDGE 300

REVISIONS							
NO.	BY:	DATE:	NO.	BY:	DATE:		
1			3				
2			4				

SHEET NO. S-17
TOTAL SHEETS 20

DRAWN BY : CTB	DATE : 03-22	DESIGN ENGINEER OF RECORD: T. TOWNSEND	DATE : 03-22
CHECKED BY : TJT	DATE : 03-22		

DATE: 3/17/2022 TIME: 3:55:37 PM
FILE: \\192.168.14.61\project\3850F - Div 13 Bridge 300 (Madison Co)\Dwg\Sheets\401_033_17BP.13.R.170_SMU_E_017_560300.dgn

DocuSign Envelope ID: DC00C7E6-7A6F-40FA-BB09-FD6ECCC65ED6

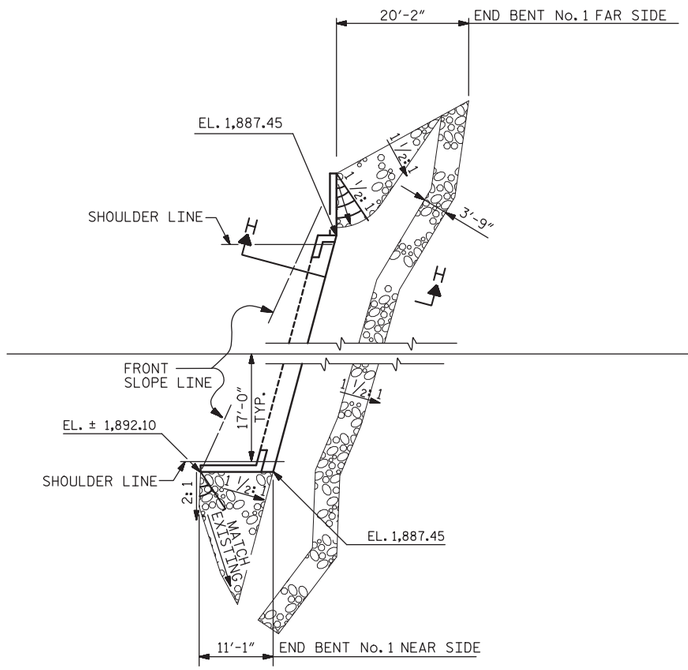

END BENT NO. 1

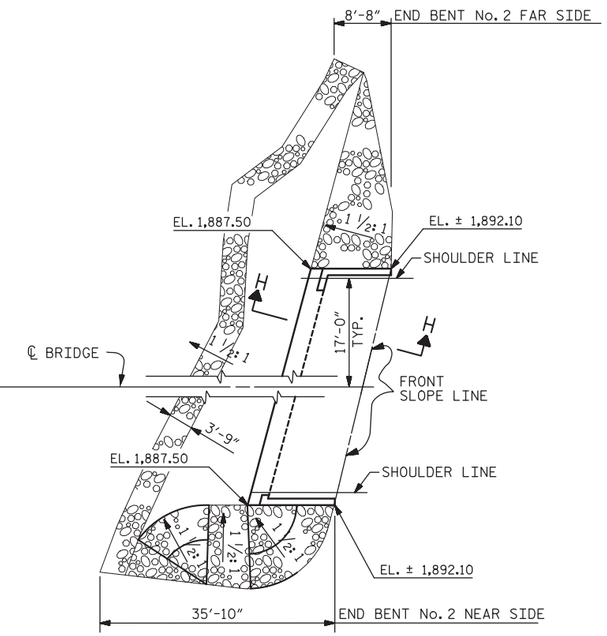

END BENT NO. 2

NOTES :

FOR BERM WIDTH DIMENSIONS, SEE GENERAL DRAWING.

ESTIMATED QUANTITIES		
BRIDGE @ STA. 13+67.02	RIP RAP CLASS II (2'-0" THICK)	GEOTEXTILE FOR DRAINAGE
	TONS	SQUARE YARDS
END BENT 1	140	175
END BENT 2	160	200

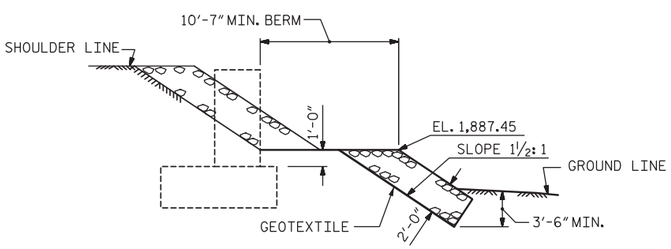

SECTION H-H

END BENT NO. 1

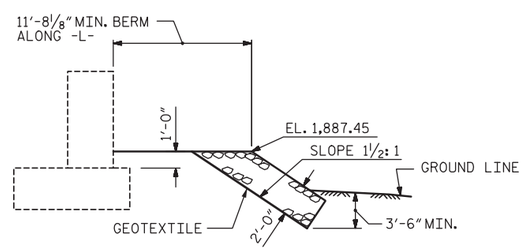

℄ SECTION

BERM RIP RAPPED

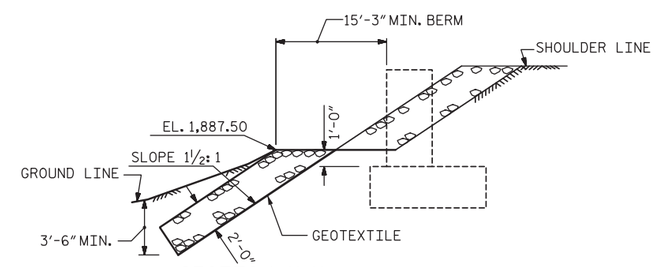

SECTION H-H

END BENT NO. 2

PROJECT NO. 17BP.13.R.170

MADISON COUNTY

STATION: 13+67.02 -L-

DOCUMENT NOT CONSIDERED FINAL UNLESS ALL SIGNATURES COMPLETED

NORTH CAROLINA
DocuSigned by: Timothy J. Townsend
34955
ENGINEER
TIMOTHY J. TOWNSEND
3/29/2022

Mattern & Craig
ENGINEERS•SURVEYORS
12 BROAD STREET
ASHEVILLE, NORTH CAROLINA 28801
(828) 254-2201
FAX (828) 254-4562
NC LIC. NO. C-1154

STATE OF NORTH CAROLINA
DEPARTMENT OF TRANSPORTATION
RALEIGH

STANDARD

RIP RAP DETAILS

REVISIONS							
NO.	BY:	DATE:	NO.	BY:	DATE:		
1			3				
2			4				

SHEET NO. S-18

TOTAL SHEETS 20

DRAWN BY : CTB	DATE : 03-22	DESIGN ENGINEER OF RECORD: T. TOWNSEND	DATE : 03-22
CHECKED BY : TJT	DATE : 03-22		

DATE: 3/17/2022 TIME: 3:55:41 PM
FILE: \\192.168.14.61\project\3850F - Div 13 Bridge 300 (Madison Co)\Dwg\Sheets\401_035_17BP.13.R.170_SMU_RR_018_560300.dgn

DocuSign Envelope ID: DC00C7E6-7A6F-40FA-BB09-FD6ECCC65ED6

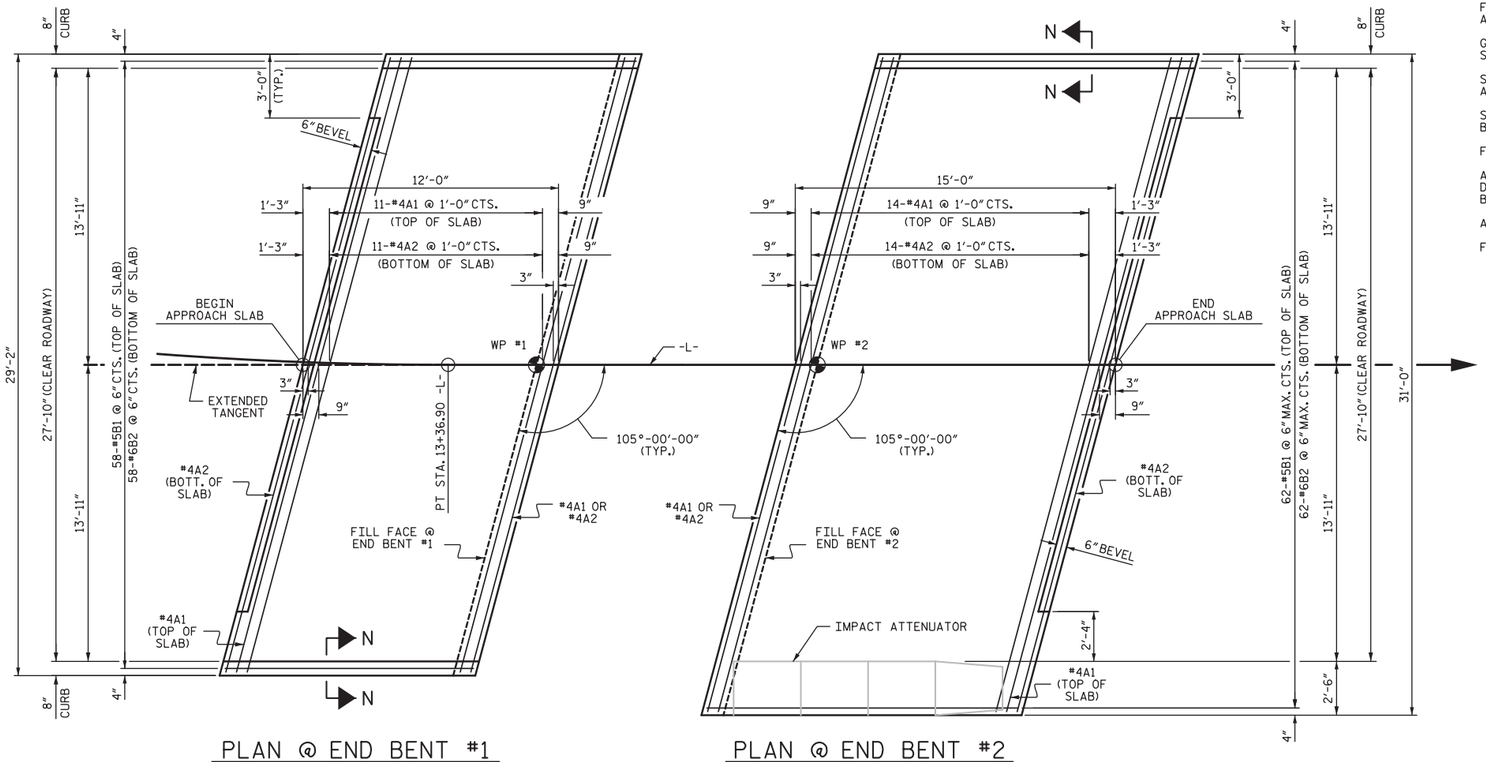

PLAN @ END BENT #1

PLAN @ END BENT #2

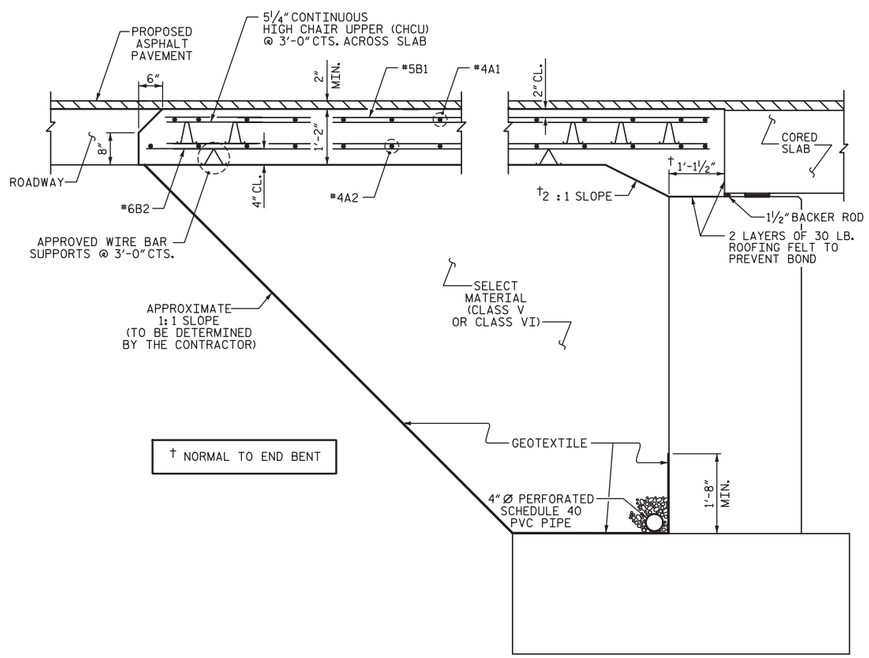

† NORMAL TO END BENT

SECTION THRU SLAB

(TYPE II - MODIFIED APPROACH FILL)

NOTES

FOR BRIDGE APPROACH FILL INCLUDING GEOTEXTILE, 4" Ø DRAINAGE PIPE, AND SELECT MATERIAL BACKFILL, SEE ROADWAY PLANS.

GEOTEXTILE SHALL BE TYPE 1 IN ACCORDANCE WITH THE STANDARD SPECIFICATIONS SECTION 1056.

SELECT MATERIAL BACKFILL (CLASS V OR CLASS VI) SHALL BE IN ACCORDANCE WITH STANDARD SPECIFICATIONS SECTION 1016.

SELECT MATERIAL BACKFILL IS TO BE CONTINUOUS ALONG FILL FACE OF BACKWALL FROM OUTSIDE EDGE TO OUTSIDE EDGE OF APPROACH SLAB.

FOR THE 4" Ø DRAINAGE PIPE OUTLET(S), SEE ROADWAY STANDARD DRAWINGS.

AREA BETWEEN THE WINGWALL AND APPROACH SLAB SHALL BE GRADED TO DRAIN THE WATER AWAY FROM THE FILL FACE OF THE BRIDGE AND SHALL BE PAVED. SEE ROADWAY PLANS.

APPROACH SLAB GROOVING IS NOT REQUIRED.

FOR IMPACT ATTENUATOR, SEE ROADWAY PLANS.

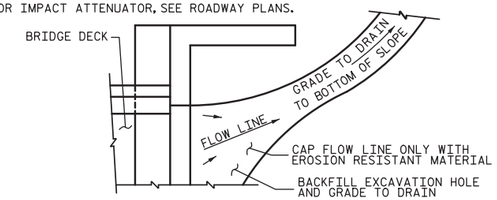

NOTE: IF THE APPROACH SLAB IS NOT CONSTRUCTED IMMEDIATELY AFTER THE BACKFILLING OF THE END BENT EXCAVATION, GRADE TO DRAIN TO THE BOTTOM OF THE SLOPE AND PROVIDE EROSION RESISTANT MATERIAL, SUCH AS FIBERGLASS ROVING OR AS DIRECTED BY THE ENGINEER TO PREVENT SOIL EROSION AND TO PROTECT THE AREA ADJACENT TO THE STRUCTURE. THE CONTRACTOR WILL BE REQUIRED TO REMOVE THESE MATERIALS PRIOR TO CONSTRUCTION OF THE APPROACH SLAB.

TEMPORARY DRAINAGE DETAIL

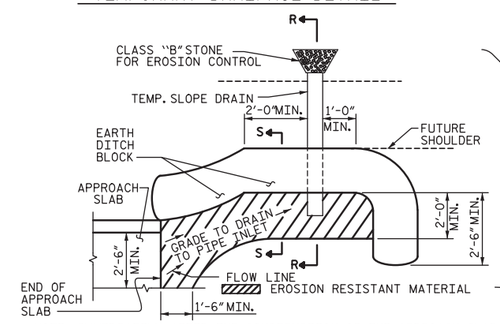

NOTE: IMMEDIATELY AFTER THE CONSTRUCTION OF THE APPROACH SLAB, THE CONTRACTOR SHALL PROVIDE TEMPORARY BERM AND SLOPE DRAIN. CONTRACTOR SHALL GRADE TO PIPE INLET AND PROVIDE EROSION RESISTANT MATERIAL AS SHOWN. THE EROSION RESISTANT MATERIAL SHALL BE EITHER 1) ASPHALT PLANT MIX, TYPE 1 OR TYPE 2, MIN. 2" DEPTH, 2) EROSION CONTROL MAT, OR 3) CONCRETE, AS DIRECTED BY THE ENGINEER. THE SLOPE DRAIN SHALL CONSIST OF A NON-PERFORATED TEMPORARY DRAINAGE PIPE, 12 INCHES IN DIAMETER.

PLAN VIEW

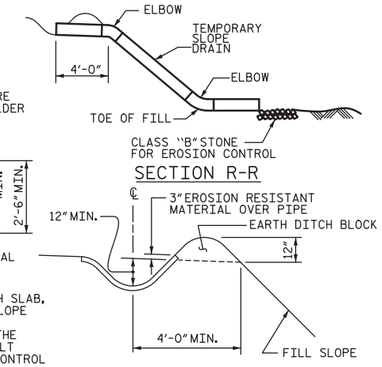

SECTION S-S

TEMPORARY BERM AND SLOPE DRAIN DETAILS

(TO BE USED WHEN SHOULDER BERM GUTTER IS REQUIRED)

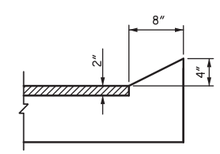

SECTION N-N

CURB DETAILS

SPLICE LENGTHS		
BAR SIZE	EPOXY COATED	UNCOATED
#4	1'-11"	1'-7"
#5	2'-5"	2'-0"
#6	3'-7"	2'-5"

BILL OF MATERIAL

APPROACH SLAB AT EB #1

BAR	NO.	SIZE	TYPE	LENGTH	WEIGHT
✳ A1	13	#4	STR	29'-10"	259
A2	13	#4	STR	29'-10"	259
✳ B1	58	#5	STR	11'-1"	670
B2	58	#6	STR	11'-7"	1009
REINFORCING STEEL				LBS.	1268
✳ EPOXY COATED REINFORCING STEEL				LBS.	929
CLASS AA CONCRETE				C. Y.	16.7

APPROACH SLAB AT EB #2

BAR	NO.	SIZE	TYPE	LENGTH	WEIGHT
✳ A1	16	#4	STR	31'-9"	339
A2	16	#4	STR	31'-9"	339
✳ B1	62	#5	STR	14'-1"	911
B2	62	#6	STR	14'-7"	1358
REINFORCING STEEL				LBS.	1697
✳ EPOXY COATED REINFORCING STEEL				LBS.	1250
CLASS AA CONCRETE				C. Y.	21.4

PROJECT NO. 17BP.13.R.170

MADISON COUNTY

STATION: 13+67.02 -L-

DOCUMENT NOT CONSIDERED FINAL UNLESS ALL SIGNATURES COMPLETED

NORTH CAROLINA
DocuSigned by: Timothy J. Townsend
B8C1681FA1E1462...
34955
ENGINEER
TIMOTHY J. TOWNSEND
3/29/2022

Mattern & Craig
ENGINEERS·SURVEYORS
12 BROAD STREET
ASHEVILLE, NORTH CAROLINA 28801
(828) 254-2201
FAX (828) 254-4562
NC LIC. NO. C-1154

STATE OF NORTH CAROLINA
DEPARTMENT OF TRANSPORTATION
RALEIGH

BRIDGE APPROACH SLAB
FOR PRESTRESSED CONCRETE
CORED SLAB UNIT
(SUB-REGIONAL TIER)
105° SKEW

REVISIONS							SHEET NO.
NO.	BY:	DATE:	NO.	BY:	DATE:		S-19
1			3				TOTAL SHEETS
2			4				20

DRAWN BY : CTB	DATE : 03-22	DESIGN ENGINEER OF RECORD: T. TOWNSEND	DATE : 03-22
CHECKED BY : TJT	DATE : 03-22		

DATE: 3/17/2022 TIME: 3:55:45 PM
FILE: \\192.168.14.61\project\3850F - Div 13 Bridge 300 (Madison Co)\Dwg\Sheets\401_037_17BP.13.R.170_SMU_AS_019_560300.dgn

3/17/2022
\\192.168.14.61\project\3850F - Div 13 Bridge 300 (Madison Co)\Dwg\Sheets\401_037_17BP.13.R.170_SMU_AS_019_560300.dgn
ctb

DocuSign Envelope ID: DC00C7E6-7A6F-40FA-BB09-FD6ECCC65ED6

STANDARD NOTES

DESIGN DATA:

SPECIFICATIONS	A.A.S.H.T.O. (CURRENT)
LIVE LOAD	SEE PLANS
IMPACT ALLOWANCE	SEE A.A.S.H.T.O.
STRESS IN EXTREME FIBER OF STRUCTURAL STEEL - AASHTO M270 GRADE 36	20,000 LBS. PER SQ. IN.
- AASHTO M270 GRADE 50W	27,000 LBS. PER SQ. IN.
- AASHTO M270 GRADE 50	27,000 LBS. PER SQ. IN.
REINFORCING STEEL IN TENSION - GRADE 60	24,000 LBS. PER SQ. IN.
CONCRETE IN COMPRESSION	1,200 LBS. PER SQ. IN.
CONCRETE IN SHEAR	SEE A.A.S.H.T.O.
STRUCTURAL TIMBER - TREATED OR UNTREATED EXTREME FIBER STRESS	1,800 LBS. PER SQ. IN.
COMPRESSION PERPENDICULAR TO GRAIN OF TIMBER	375 LBS. PER SQ. IN.
EQUIVALENT FLUID PRESSURE OF EARTH	30 LBS. PER CU. FT. (MINIMUM)

MATERIAL AND WORKMANSHIP:

EXCEPT AS MAY OTHERWISE BE SPECIFIED ON PLANS OR IN THE SPECIAL PROVISIONS, ALL MATERIAL AND WORKMANSHIP SHALL BE IN ACCORDANCE WITH THE 2018 "STANDARD SPECIFICATIONS FOR ROADS AND STRUCTURES" OF THE N. C. DEPARTMENT OF TRANSPORTATION.

STEEL SHEET PILING FOR PERMANENT OR TEMPORARY APPLICATIONS SHALL BE HOT ROLLED.

CONCRETE:

UNLESS OTHERWISE REQUIRED ON PLANS, CLASS A CONCRETE SHALL BE USED FOR ALL PORTIONS OF ALL STRUCTURES WITH THE EXCEPTION THAT: CLASS AA CONCRETE SHALL BE USED IN BRIDGE SUPERSTRUCTURES, ABUTMENT BACKWALLS, AND APPROACH SLABS; AND CLASS B CONCRETE SHALL BE USED FOR SLOPE PROTECTION AND RIP RAP.

CONCRETE CHAMFERS:

UNLESS OTHERWISE NOTED ON THE PLANS, ALL EXPOSED CORNERS ON STRUCTURES SHALL BE CHAMFERED ¾" WITH THE FOLLOWING EXCEPTIONS: TOP CORNERS OF CURBS MAY BE ROUNDED TO 1½" RADIUS WHICH IS BUILT INTO CURB FORMS; CORNERS OF TRANSVERSE FLOOR EXPANSION JOINTS SHALL BE ROUNDED WITH A ¼" FINISHING TOOL UNLESS OTHERWISE REQUIRED ON PLANS; AND CORNERS OF EXPANSION JOINTS IN THE ROADWAY FACES AND TOPS OF CURBS AND SIDEWALKS SHALL BE ROUNDED TO A ¼" RADIUS WITH A FINISHING STONE OR TOOL UNLESS OTHERWISE REQUIRED ON PLANS.

DOWELS:

DOWELS WHEN INDICATED ON PLANS AS FOR CULVERT EXTENSIONS, SHALL BE EMBEDDED AT LEAST 12" INTO THE OLD CONCRETE AND GROUTED INTO PLACE WITH 1:2 CEMENT MORTAR.

ALLOWANCE FOR DEAD LOAD DEFLECTION, SETTLEMENT, ETC. IN CASTING SUPERSTRUCTURES:

BRIDGES SHALL BE BUILT ON THE GRADE OR VERTICAL CURVE SHOWN ON PLANS. SLABS, CURBS AND PARAPETS SHALL CONFORM TO THE GRADE OR CURVE.

ALL DIMENSIONS WHICH ARE GIVEN IN SECTION AND ARE AFFECTED BY DEAD LOAD DEFLECTIONS ARE DIMENSIONS AT CENTER LINE OF BEARING UNLESS OTHERWISE NOTED ON PLANS. IN SETTING FORMS FOR STEEL BEAM BRIDGES AND PRESTRESSED CONCRETE GIRDER BRIDGES, ADJUSTMENTS SHALL BE MADE DUE TO THE DEAD LOAD DEFLECTIONS FOR THE ELEVATIONS SHOWN. WHERE BLOCKS ARE SHOWN OVER BEAMS FOR BUILDING UP TO THE SLAB, THE VERTICAL DIMENSIONS OF THE BLOCKS SHALL BE ADJUSTED BETWEEN BEARINGS TO COMPENSATE FOR DEAD LOAD DEFLECTIONS, VERTICAL CURVE ORDINATE, AND ACTUAL BEAM CAMBER. WHERE BOTTOM OF SLAB IS IN LINE WITH BOTTOM OF TOP FLANGES, DEPTH OF SLAB BETWEEN BEARINGS SHALL BE ADJUSTED TO COMPENSATE FOR DEAD LOAD DEFLECTION, VERTICAL CURVE ORDINATE, AND ACTUAL BEAM CAMBER.

IN SETTING FALSEWORK AND FORMS FOR REINFORCED CONCRETE SPANS, AN ALLOWANCE SHALL BE MADE FOR DEAD LOAD DEFLECTIONS, SETTLEMENT OF FALSEWORK, AND PERMANENT CAMBER WHICH SHALL BE PROVIDED FOR IN ADDITION TO THE ELEVATIONS SHOWN. AFTER REMOVAL OF THE FALSEWORK, THE FINISHED STRUCTURES SHALL CONFORM TO THE PROFILE AND ELEVATIONS SHOWN ON THE PLANS AND CONSTRUCTION ELEVATIONS FURNISHED BY THE ENGINEER.

DETAILED DRAWINGS FOR FALSEWORK OR FORMS FOR BRIDGE SUPERSTRUCTURE AND ANY STRUCTURE OR PARTS OF A STRUCTURE AS NOTED ON THE PLANS SHALL BE SUBMITTED TO THE ENGINEER FOR APPROVAL BEFORE CONSTRUCTION OF THE FALSEWORK OR FORMS IS STARTED.

REINFORCING STEEL:

ALL REINFORCING STEEL SHALL BE DEFORMED. DIMENSIONS RELATIVE TO PLACEMENT OF REINFORCING ARE TO CENTERS OF BARS UNLESS OTHERWISE INDICATED IN THE PLANS. DIMENSIONS ON BAR DETAILS ARE TO CENTERS OF BARS OR ARE OUT TO OUT AS INDICATED ON PLANS.

WIRE BAR SUPPORTS SHALL BE PROVIDED FOR REINFORCING STEEL WHERE INDICATED ON THE PLANS. WHEN BAR SUPPORT PIECES ARE PLACED IN CONTINUOUS LINES, THEY SHALL BE SO PLACED THAT THE ENDS OF THE SUPPORTING WIRES SHALL BE LAPPED TO LOCK LEGS ON ADJOINING PIECES.

STRUCTURAL STEEL:

AT THE CONTRACTOR'S OPTION, HE MAY SUBSTITUTE ⅞" Ø SHEAR STUDS FOR THE ¾" Ø STUDS SPECIFIED ON THE PLANS. THIS SUBSTITUTION SHALL BE MADE AT THE RATE OF 3 - ⅞" Ø STUDS FOR 4 - ¾" Ø STUDS, AND STUD SPACING CHANGES SHALL BE MADE AS NECESSARY TO PROVIDE THE SAME EQUIVALENT NUMBER OF ⅞" Ø STUDS ALONG THE BEAM AS SHOWN FOR ¾" Ø STUDS BASED ON THE RATIO OF 3 - ⅞" Ø STUDS FOR 4 - ¾" Ø STUDS. STUDS OF THE LENGTH SPECIFIED ON THE PLANS MUST BE PROVIDED. THE MAXIMUM SPACING SHALL BE 2'-0".

EXCEPT AT THE INTERIOR SUPPORTS OF CONTINUOUS BEAMS WHERE THE COVER PLATE IS IN CONTACT WITH BEARING PLATE, THE CONTRACTOR MAY, AT HIS OPTION, SUBSTITUTE FOR THE COVER PLATES DESIGNATED ON THE PLANS COVER PLATES OF THE EQUIVALENT AREA PROVIDED THESE PLATES ARE AT LEAST 5/16" IN THICKNESS AND DO NOT EXCEED A WIDTH EQUAL TO THE FLANGE WIDTH LESS 2" OR A THICKNESS EQUAL TO 2 TIMES THE FLANGE THICKNESS. THE SIZE OF FILLET WELDS SHALL CONFORM TO THE REQUIREMENTS OF THE CURRENT ANSI/AASHTO/AWS "BRIDGE WELDING CODE". ELECTROSLAG WELDING WILL NOT BE PERMITTED.

WITH THE SOLE EXCEPTION OF EDGES AT SURFACES WHICH BEAR ON OTHER SURFACES, ALL SHARP EDGES AND ENDS OF SHAPES AND PLATES SHALL BE SLIGHTLY ROUNDED BY SUITABLE MEANS TO A RADIUS OF APPROXIMATELY 1/16 INCH OR EQUIVALENT FLAT SURFACE AT A SUITABLE ANGLE PRIOR TO PAINTING, GALVANIZING, OR METALLIZING.

HANDRAILS AND POSTS:

METAL STANDARDS AND FACES OF THE CONCRETE END POSTS FOR THE METAL RAIL SHALL BE SET NORMAL TO THE GRADE OF THE CURB, UNLESS OTHERWISE SHOWN ON PLANS. THE METAL RAIL AND TOPS OF CONCRETE POSTS USED WITH THE ALUMINUM RAIL SHALL BE BUILT PARALLEL TO THE GRADE OF THE CURB.

METAL HANDRAILS SHALL BE IN ACCORDANCE WITH THE PLANS. RAILS SHALL BE AS MANUFACTURED FOR BRIDGE RAILING. CASTINGS SHALL BE OF A UNIFORM APPEARANCE. FINS AND OTHER DEFORMATIONS RESULTING FROM CASTING OR OTHERWISE SHALL BE REMOVED IN A MANNER SO THAT A UNIFORM COLORING OF THE COMPLETED CASTING SHALL BE OBTAINED. CASTINGS WITH DISCOLORATIONS OR OF NON-UNIFORM COLORING WILL NOT BE ACCEPTED. CERTIFIED MILL REPORTS ARE REQUIRED FOR METAL RAILS AND POSTS.

SPECIAL NOTES:

GENERALLY, IN CASE OF DISCREPANCY, THIS STANDARD SHEET OF NOTES SHALL GOVERN OVER THE SPECIFICATIONS, BUT THE REMAINDER OF THE PLANS SHALL GOVERN OVER NOTES HEREON, AND SPECIAL PROVISIONS SHALL GOVERN OVER ALL. SEE SPECIFICATIONS ARTICLE 105-4.

PROJECT NO. 17BP.13.R.170

MADISON COUNTY

STATION: 13+67.02 -L-

STATE OF NORTH CAROLINA
DEPARTMENT OF TRANSPORTATION
RALEIGH

STANDARD NOTES

REVISIONS						SHEET NO.
NO.	BY:	DATE:	NO.	BY:	DATE:	S-20
1			3			TOTAL SHEETS
2			4			20

DRAWN BY : CTB	DATE : 03-22	DESIGN ENGINEER OF RECORD: T. TOWNSEND	DATE : 03-22
CHECKED BY : TJT	DATE : 03-22		

DATE: 3/17/2022 TIME: 3:55:48 PM
FILE: \\192.168.14.61\project\3850F - Div 13 Bridge 300 (Madison Co)\Dwg\Sheets\401_039_17BP.13.R.170_SMU_SN_020_560300.dgn