TIP PROJECT: BD-5113B

CONTRACT:

09/08/99

See Sheet 1-A For Index of Sheets

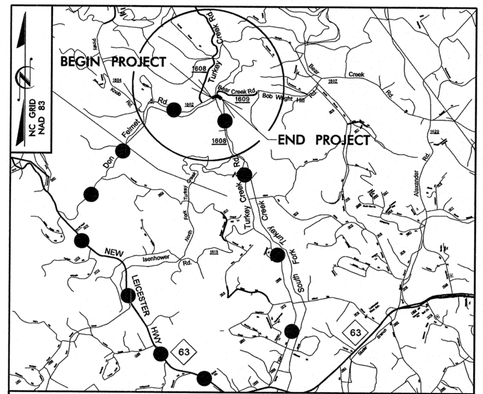

VICINITY MAP

DETOUR ROUTE

STATE OF NORTH CAROLINA
DIVISION OF HIGHWAYS

BUNCOMBE COUNTY

LOCATION: BRIDGE NO. 15 OVER SOUTH FORK TURKEY CREEK ON SR 1608 (TURKEY CREEK ROAD)

TYPE OF WORK: GRADING, DRAINAGE, PAVING AND STRUCTURE

STATE	STATE PROJECT REFERENCE NO.	SHEET NO.	TOTAL SHEETS
N.C.	BD-5113B	1	

STATE PROJ. NO.	F.A. PROJ. NO.	DESCRIPTION
45359.1.2		PE
45359.2.2		ROW
45359.3.2		CONST.

4

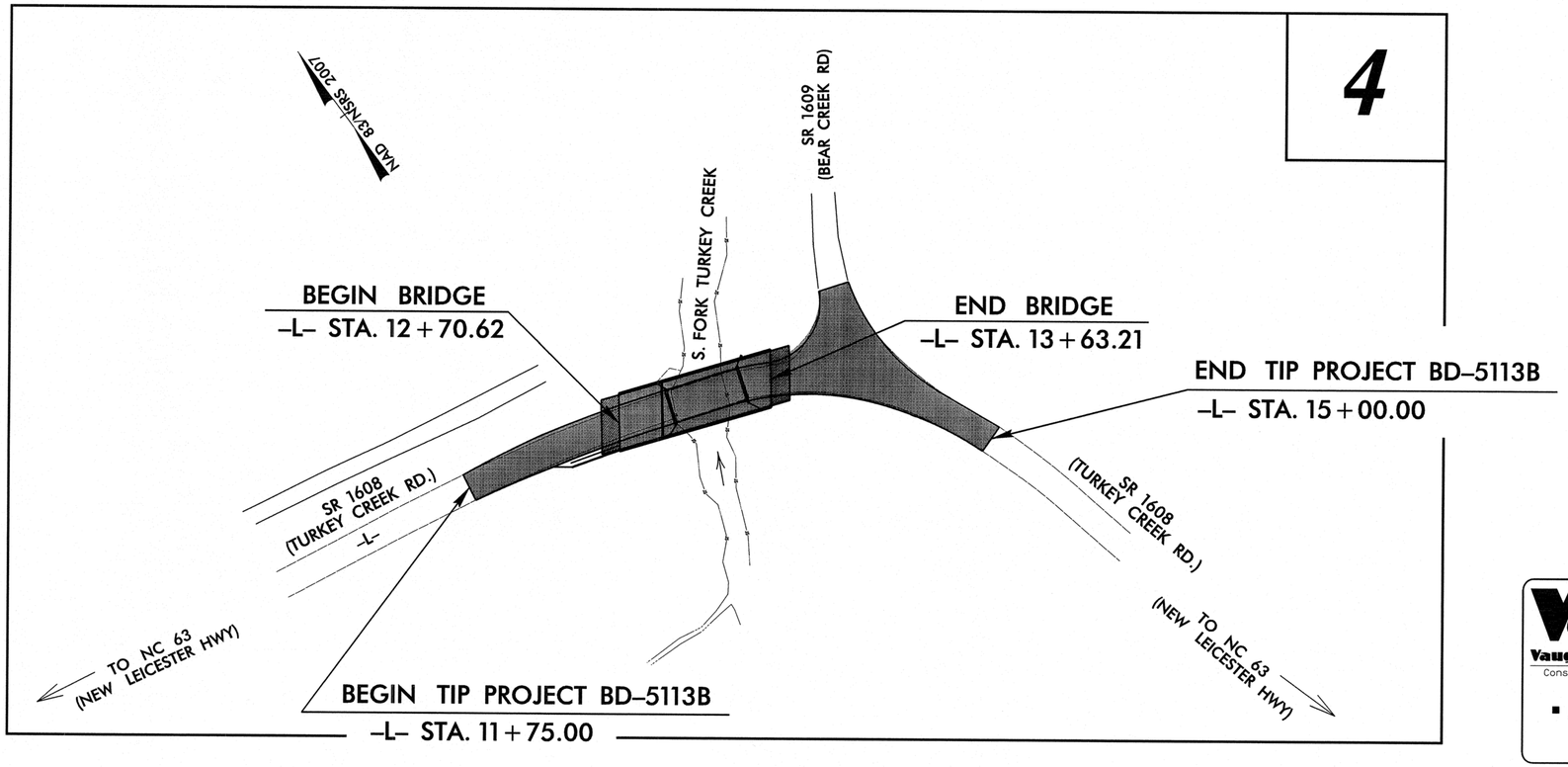

V&M
Vaughn & Melton
Consulting Engineers
Asheville, North Carolina 828-253-2796
Charlotte, North Carolina 704-895-9051
Tri-Cities, Tennessee 423-467-8401
Knoxville, Tennessee 865-546-5800
Middlesboro, Kentucky 606-248-6600
Spartanburg, South Carolina 864-574-4775

Copyright © 1994 Vaughn & Melton, Inc. All Rights Reserved

GRAPHIC SCALES

20 10 0 20 40 PLANS

20 10 0 20 40 PROFILE (HORIZONTAL)

4 2 0 4 8 PROFILE (VERTICAL)

DESIGN DATA

ADT 2006 = 930
ADT 2025 = 1860
T = 6%
V = 40 MPH

FUNCT. CLASS = RURAL COLLECTOR
SUB-REGIONAL TIER

PROJECT LENGTH

LENGTH ROADWAY TIP PROJECT BD-5113B = 0.044 MI
LENGTH STRUCTURE TIP PROJECT BD-5113B = 0.018 MI
TOTAL LENGTH OF TIP PROJECT BD-5113B = 0.062 MI

Prepared In the Office of:
VAUGHN & MELTON
1318-F PATTON AVE.
ASHEVILLE NC, 28806
FOR THE NORTH CAROLINA DIVISION OF HIGHWAYS

2012 STANDARD SPECIFICATIONS

RIGHT OF WAY DATE: NOVEMBER 30, 2011

LETTING DATE: JUNE 20, 2012

HARDY WILLIS, PE
PROJECT ENGINEER

REECE SCHULER, PE
PROJECT DESIGN ENGINEER

NCDOT CONTACT:
GARRY MOORE
PROJECT ENGINEER - ROADWAY DESIGN

HYDRAULICS ENGINEER

NORTH CAROLINA PROFESSIONAL SEAL 18462 ENGINEER JAMES C. DAVIS

SIGNATURE: James C. Davis P.E. 4/10/12

ROADWAY DESIGN ENGINEER

NORTH CAROLINA PROFESSIONAL SEAL 28960 ENGINEER REECE M. SCHULER

SIGNATURE: P.E. 4/3/12

DIVISION OF HIGHWAYS
STATE OF NORTH CAROLINA

STATE OF NORTH CAROLINA DEPARTMENT OF TRANSPORTATION

P.E.
STATE HIGHWAY DESIGN ENGINEER

$$$$$SYSTIME$$$$$
$$$$$$$$$$$$$$$$DGN$$$$$$$$$$$$$$$$
$$$$USERNAME$$$$

PROJECT REFERENCE NO.	SHEET NO.
BD-5113B	1-A

ROADWAY DESIGN ENGINEER

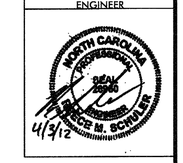

INDEX OF SHEETS

SHEET NUMBER	SHEET
1	TITLE SHEET
1-A	INDEX OF SHEETS, GENERAL NOTES, AND LIST OF STANDARD DRAWINGS
1-B	CONVENTIONAL SYMBOLS
2	PAVEMENT SCHEDULE, TYPICAL SECTIONS, AND WEDGING DETAILS
3	SUMMARY OF QUANTITIES
3A	SUMMARY OF DRAINAGE QUANTITIES, SUMMARY OF GUARDRAIL, AND ASPHALT PAVEMENT REMOVAL SUMMARY
3B	EARTHWORK SUMMARY
4	PLAN AND PROFILE SHEET
TMP-1 THRU TMP-2	TRAFFIC MANAGEMENT PLANS
EC-1 THRU EC-3A	EROSION CONTROL PLANS
UO-1 THRU UO-2	UTILITIES BY OTHERS PLANS
X-0	CROSS-SECTION SUMMARY
X-1 THRU X-8	CROSS-SECTIONS
S-1 THRU S-21	STRUCTURE PLANS

GENERAL NOTES:

2012 SPECIFICATIONS
EFFECTIVE: 01-17-12

GRADE LINE:
GRADING AND SURFACING OR RESURFACING AND WIDENING:

THE GRADE LINES SHOWN DENOTE THE FINISHED ELEVATION OF THE PROPOSED SURFACING AT GRADE POINTS SHOWN ON THE TYPICAL SECTIONS. WHERE NO GRADE LINES ARE SHOWN, THE PROFILES SHOWN DENOTE THE TOP ELEVATION OF THE EXISTING PAVEMENT ALONG THE CENTER LINE OF SURVEY ON WHICH THE PROPOSED RESURFACING WILL BE PLACED. GRADE LINES MAY BE ADJUSTED BY THE ENGINEER IN ORDER TO SECURE A PROPER TIE-IN.

CLEARING:

CLEARING ON THIS PROJECT SHALL BE PERFORMED TO THE LIMITS ESTABLISHED BY METHOD II.

SUPERELEVATION:

ALL CURVES ON THIS PROJECT SHALL BE SUPERELEVATED IN ACCORDANCE WITH STD. NO. 225.04 USING THE RATE OF SUPERELEVATION AND RUNOFF SHOWN ON THE PLANS. SUPERELEVATION IS TO BE REVOLVED ABOUT THE GRADE POINTS SHOWN ON THE TYPICAL SECTIONS.

SHOULDER CONSTRUCTION:

ASPHALT, EARTH, AND CONCRETE SHOULDER CONSTRUCTION ON THE HIGH SIDE OF SUPERELEVATED CURVES SHALL BE IN ACCORDANCE WITH STD. NO. 560.01.

UNDERDRAINS:

UNDERDRAINS SHALL BE CONSTRUCTED IN ACCORDANCE WITH STD. NO. 815.03 AT LOCATIONS DIRECTED BY THE ENGINEER.

GUARDRAIL:

THE GUARDRAIL LOCATIONS SHOWN ON THE PLANS MAY BE ADJUSTED DURING CONSTRUCTION AS DIRECTED BY THE ENGINEER. THE CONTRACTOR SHOULD CONSULT WITH THE ENGINEER PRIOR TO ORDERING GUARDRAIL MATERIAL.

TEMPORARY SHORING:

SHORING REQUIRED FOR THE MAINTENANCE OF TRAFFIC WILL BE PAID FOR AS "EXTRA WORK" IN ACCORDANCE WITH SECTION 104-7.

SUBSURFACE PLANS:

NO SUBSURFACE PLANS ARE AVAILABLE ON THIS PROJECT. THE CONTRACTOR SHOULD MAKE HIS OWN INVESTIGATION AS TO THE SUBSURFACE CONDITIONS.

END BENTS:

THE ENGINEER SHALL CHECK THE STRUCTURE END BENT PLANS, DETAILS, AND CROSS-SECTION PRIOR TO SETTING OF THE SLOPE STAKES FOR THE EMBANKMENT OR EXCAVATION APPROACHING A BRIDGE.

UTILITIES:

UTILITY OWNER ON THIS PROJECT IS AT&T.

RIGHT-OF-WAY MARKERS:

ALL RIGHT-OF-WAY MARKERS ON THIS PROJECT SHALL BE PLACED BY CONTRACT.

2012 ROADWAY ENGLISH STANDARD DRAWINGS

The following Roadway Standards as appear in "Roadway Standard Drawings" Highway Design Branch - N. C. Department of Transportation - Raleigh, N. C., Dated January 17, 2012 are applicable to this project and by reference hereby are considered a part of these plans:

STD.NO.	TITLE
DIVISION 2 - EARTHWORK	
200.02	Method of Clearing - Method II
225.02	Guide for Grading Subgrade - Secondary and Local
225.04	Method of Obtaining Superelevation - Two Lane Pavement
DIVISION 3 - PIPE CULVERTS	
300.01	Method of Pipe Installation - Method 'A'
DIVISION 4 - MAJOR STRUCTURES	
422.11	Bridge Approach Fills
DIVISION 5 - SUBGRADE, BASES AND SHOULDERS	
560.01	Method of Shoulder Construction - High Side of Superelevated Curve - Method I
DIVISION 8 - INCIDENTALS	
815.03	Pipe Underdrain and Blind Drain
840.25	Anchorage for Frames
840.29	Frames and Narrow Slot Flat Grates
840.35	Traffic Bearing Grated Drop Inlet - for Cast Iron Double Frame and Grates
840.46	Traffic Bearing Precast Drainage Structure
840.66	Drainage Structure Steps
846.01	Concrete Curb, Gutter and Curb & Gutter
846.04	Drop Inlet Installation in Shoulder Berm Gutter
862.01	Guardrail Placement
862.02	Guardrail Installation
862.03	Structure Anchor Units
876.02	Guide for Rip Rap at Pipe Outlets

$$$$SYSTIME$$$$
$$$$DGN$$$$
$$$$LIFENAME$$$$

PROJECT REFERENCE NO.	SHEET NO.
BD-5113B	2
ROADWAY DESIGN ENGINEER	PAVEMENT DESIGN ENGINEER

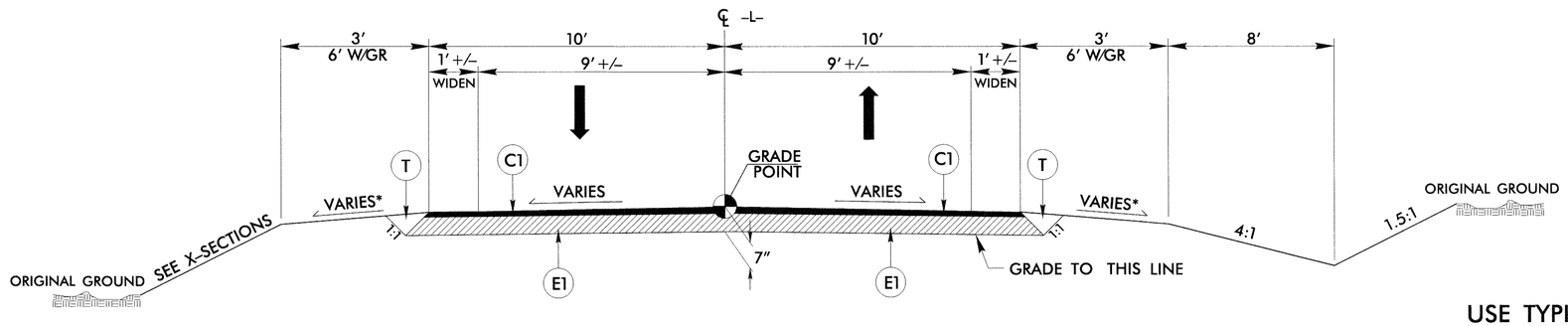

TYPICAL SECTION NO. 1

* SEE NCDOT STD. DWG. # 560.01

USE TYPICAL SECTION NO. 1

-L- STA. 11+75 TO -L- STA. 12+70.62 (BEG. BRIDGE)
-L- STA. 13+63.21 (END BRIDGE) TO STA. 15+00

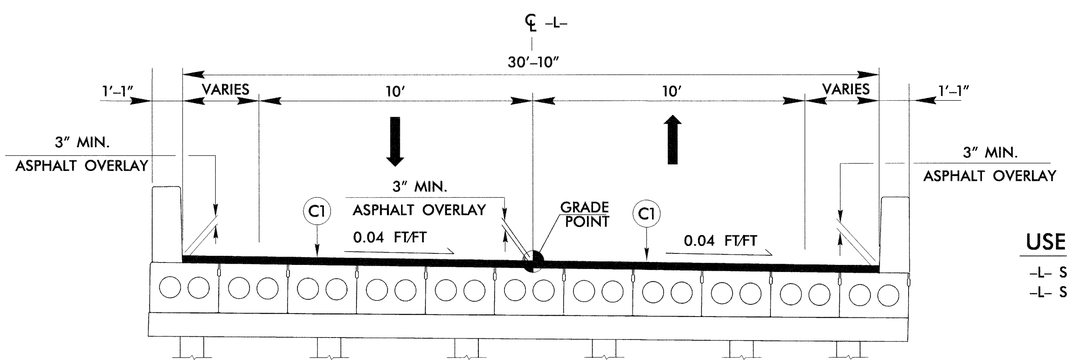

TYPICAL SECTION NO. 2

USE TYPICAL SECTION NO. 2

-L- STA. 12+70.62 (BEGIN BRIDGE) TO
-L- STA. 13+63.21 (END BRIDGE)

C1	PROP. APPROX. 3" ASPHALT CONCRETE SURFACE COURSE, TYPE S9.5B, AT AN AVERAGE RATE OF 165 LBS. PER SQ. YD. IN EACH OF TWO LAYERS.
E1	PROP. APPROX. 4" ASPHALT CONCRETE BASE COURSE, TYPE B25.0B, AT AN AVERAGE RATE OF 456 LBS. PER SQ. YD.
T	EARTH MATERIAL.

NOTE: PAVEMENT EDGE SLOPES ARE 1:1 UNLESS SHOWN OTHERWISE

PROJECT REFERENCE NO.	SHEET NO.
BD-5113B	2
ROADWAY DESIGN ENGINEER	PAVEMENT DESIGN ENGINEER

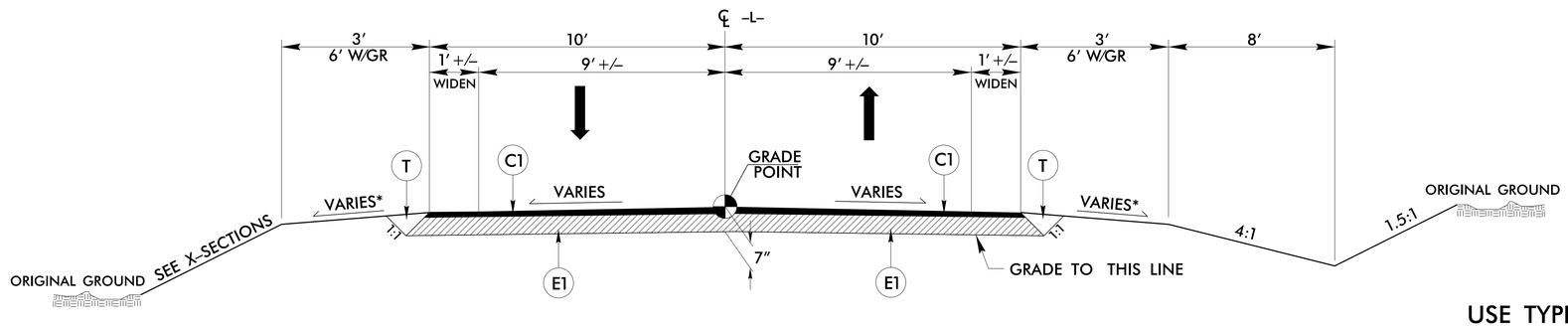

TYPICAL SECTION NO. 1

* SEE NCDOT STD. DWG. # 560.01

USE TYPICAL SECTION NO. 1

-L- STA. 11+75 TO -L- STA. 12+70.62 (BEG. BRIDGE)
-L- STA. 13+63.21 (END BRIDGE) TO STA. 15+00

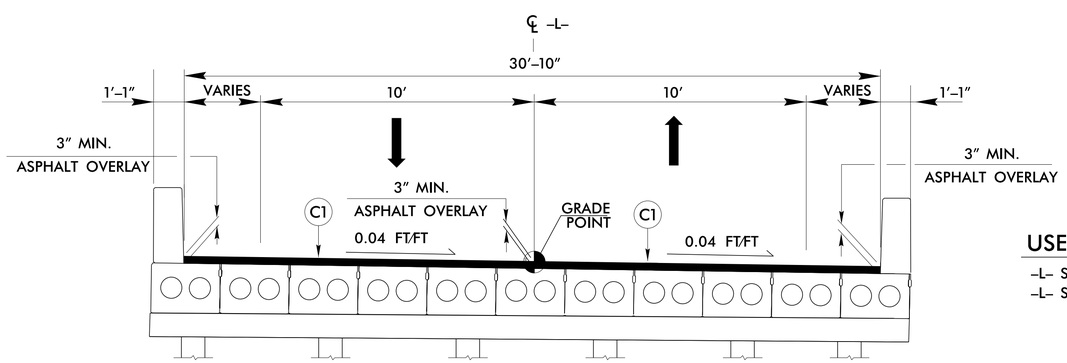

TYPICAL SECTION NO. 2

USE TYPICAL SECTION NO. 2

-L- STA. 12+70.62 (BEGIN BRIDGE) TO
-L- STA. 13+63.21 (END BRIDGE)

C1	PROP. APPROX. 3″ ASPHALT CONCRETE SURFACE COURSE, TYPE SF9.5A, AT AN AVERAGE RATE OF 165 LBS. PER SQ. YD. IN EACH OF TWO LAYERS.
E1	PROP. APPROX. 4″ ASPHALT CONCRETE BASE COURSE, TYPE B25.0B, AT AN AVERAGE RATE OF 456 LBS. PER SQ. YD.
T	EARTH MATERIAL.

NOTE: PAVEMENT EDGE SLOPES ARE 1:1 UNLESS SHOWN OTHERWISE

PROJECT REFERENCE NO.	SHEET NO.
BD-5113B	3

STATE OF NORTH CAROLINA
DIVISION OF HIGHWAYS

SUMMARY OF QUANTITIES

5/28/99
$$$

6/21/00

COMPUTED BY: ACC/MAF	DATE: 10-17-11
CHECKED BY: ACC	DATE: 10-17-11

PROJECT REFERENCE NO.	SHEET NO.
BD-5113B	3-A

STATE OF NORTH CAROLINA
DIVISION OF HIGHWAYS

RIGHT OF WAY AREA DATA

PARCEL NO.	PROPERTY OWNERS NAMES	TOTAL ACREAGE	AREA TAKEN (sf)	AREA REMAINING RT. (Acre)	AREA REMAINING LT. (Acre)	CONST. EASE. (sf)	PERM. UTILITY EASE. (sf)	PERM. DRAINAGE EASE. (sf)
1	BRIAN PATRICK & SEAN CULLEN	167.520	7292	118.797	48.556	2044	1764	119
2	DANNY LEE & DARRELL RAY ROBINSON	72.400	1004	–	72.377	859	–	–

PAVEMENT REMOVAL SUMMARY

IN SQUARE YARDS					
LINE	LOCATION	ASPHALT REMOVAL	ASPHALT BREAK-UP	CONCRETE REMOVAL	CONCRETE REMOVAL
–L–	11+75 TO 13+01	230			
–L–	13+48 TO 15+00	500			
	TOTAL	730			

Approximate quantities only. Unclassified excavation, borrow excavation, fine grading, clearing and grubbing, and removal of existing pavement will be paid for at the contract lump sum price for "grading".

NOTE: Invert Elevations are for Bid Purposes only and shall not be used for project construction stakeout. See "Standard Specifications For Roads and Structures, Section 300-5".

SUB-REGIONAL & REGIONAL
LIST OF PIPES, ENDWALLS, ETC. (FOR PIPES 48" & UNDER)

STATION	LOCATION (LT,RT, OR CL)	STRUCTURE NO. FROM	STRUCTURE NO. TO	TOP ELEVATION	INVERT ELEVATION	INVERT ELEVATION	SLOPE CRITICAL	DRAINAGE PIPE (RCP, CSP, CAAP, HDPE, or PVC) SIZE 12"	15"	18"	24"	30"	36"	42"	48"	DO NOT USE RCP	DO NOT USE CSP	DO NOT USE CAAP	DO NOT USE HDPE	C.S. PIPE SIZE 12"	15"	18"	24"	36"	42"	48"
THICKNESS OR GAUGE																				.064	.064	.064	.064	.079	.109	.109
–L– 12+41.54	RT	1						16																		
TOTAL								16																		

STATION	R.C. PIPE (CLASS III) 15"	18"	24"	30"	36"	42"	48"	R.C. PIPE (CLASS IV) 12"	15"	18"	24"	30"	36"	42"	48"	*** R.C. PIPE (CLASS V)	*** R.C. PIPE CULVERTS, CONTRACTOR DESIGN PIPE	*** R.C. PIPE CULVERTS, CONTRACTOR DESIGN PIPE	15" SIDE DRAIN PIPE	18" SIDE DRAIN PIPE	ENDWALLS STD. 838.01, STD. 838.11 OR STD. 838.80 (UNLESS NOTED OTHERWISE) CU. YDS. R.C.P.	C.S.P.	QUANTITIES FOR DRAINAGE STRUCTURES PER EACH (0' THRU 5.0')	* TOTAL L.F. FOR PAY QUANTITY SHALL BE COL. 'A' + (1.3 X COL.'B') LIN. FT. A: 5.0' THRU 10.0'	B: 10.0' AND ABOVE	C.B. STD. 840.01 OR STD. 840.02	FRAME, GRATES AND HOOD STANDARD 840.03 TYPE OF GRATE E	F	G	CONCRETE TRANSITIONAL SECTION CATCH BASIN	DROP INLET	T.B.D.I. STD. 840.36	T.B.D.I. FRAME WITH TWO GRATES STD. 840.37	D.I. TYPE 'D' WITH TWO GRATES STD. 840.19 OR 840.28			CORR. STEEL ELBOWS NO. & SIZE	CONC. COLLARS CL. "B" C.Y. STD 840.72	CONC. & BRICK PIPE PLUG, C.Y. STD. 840.71	PIPE REMOVAL LIN.FT.	REMARKS
–L– 12+41.54																													1								1		1	1								
TOTAL																													1								1		1	1								

ABBREVIATIONS

C.B.	CATCH BASIN
N.D.I.	NARROW DROP INLET
D.I.	DROP INLET
G.D.I.	GRATED DROP INLET
G.D.I. (N.S.)	GRATED DROP INLET (NARROW SLOT)
J.B.	JUNCTION BOX
M.H.	MANHOLE
T.B.D.I.	TRAFFIC BEARING DROP INLET
T.B.J.B.	TRAFFIC BEARING JUNCTION BOX

"N" = DISTANCE FROM EDGE OF LANE TO FACE OF GUARDRAIL.
TOTAL SHOULDER WIDTH = DISTANCE FROM EDGE OF TRAVEL LANE TO SHOULDER BREAK POINT.
FLARE LENGTH = DISTANCE FROM LAST SECTION OF PARALLEL GUARDRAIL TO END OF GUARDRAIL.
W = TOTAL WIDTH OF FLARE FROM BEGINNING OF TAPER TO END OF GUARDRAIL.
G = GATING IMPACT ATTENUATOR TYPE 350
NG = NON-GATING IMPACT ATTENUATOR TYPE 350

GUARDRAIL SUMMARY

SURVEY LINE	BEG. STA.	END STA.	LOCATION	LENGTH STRAIGHT	LENGTH SHOP CURVED	LENGTH DOUBLE FACED	WARRANT POINT APPROACH END	WARRANT POINT TRAILING END	"N" DIST. FROM E.O.L.	TOTAL SHOUL. WIDTH	FLARE LENGTH APPROACH END	FLARE LENGTH TRAILING END	W APPROACH END	W TRAILING END	ANCHORS XI MOD	XI	GRAU 350	M-350	TYPE III	CAT-1	B-77	BIC	AT-1	IMPACT ATTENUATOR TYPE 350 EA	G	NG	SINGLE FACED GUARDRAIL	REMOVE EXISTING GUARDRAIL	REMOVE AND STOCKPILE EXISTING GUARDRAIL	REMARKS
–L–	12+08.66	12+75.68	LT	68.75				12+70.62	6.8	9.8		50		1.0			1		1											
–L–	11+95.51	12+65.74	RT	68.75			12+70.62		4.4	7.4	50		1.0				1		1											
–L–	13+64.83	13+81.28	LT	6.25	31.25		13+63.21		6.6	9.6	–		0.5						1				1							
–L–	13+61.40	14+15.18	RT	6.25	43.75			13+63.21	3.8	6.8		–		0.5					1				1							
		SUBTOTAL		150	75												2		4				2							
		LESS DEDUCTIONS FOR ANCHORS																												
		GRAU-350 2 @ 50'=		–100																										
		TYPE III 4 @ 18.75'=		–37.5	–37.5																									
		AT-1 2 @ 6.25		–12.5																										
		PROJECT TOTALS:		0	37.5																									
		SAY:		0	50																									
		ADDITIONAL GUARDRAIL POSTS=5 EA.																												

DOCUMENT NOT FOR CONSTRUCTION

COMPUTED BY: ACC DATE: 10/17/11
CHECKED BY: ACC DATE: 10/17/11

PROJECT REFERENCE NO.	SHEET NO.
BD-5113B	3-B

DIVISION OF HIGHWAYS
STATE OF NORTH CAROLINA

SUMMARY OF EARTHWORK

IN CUBIC YARDS

LOCATION	UNCLASSIFIED EXCAVATION	UNDERCUT	EMBT + %	BORROW	WASTE
SUMMARY NO.1					
–L– STA. 11 + 75 TO STA. 12 + 70.62 (BEG. BRIDGE)	0		129	129	
SUBTOTAL SUMMARY NO.1	0		129	129	
SUMMARY NO.2					
–L– STA. 13 + 63.21 (END BRIDGE) TO STA. 15 + 00	6		93	87	
SUBTOTAL SUMMARY NO.2	6		93	87	
PROJECT TOTAL	6		222	216	
EST. 5% FOR REPLACING TOP SOIL ON BORROW PITS				11	
GRAND TOTAL	6			227	
SAY	10			235	
CONTINGENCY ITEMS:					

INCIDENTAL STONE = 50 TONS

UNDERCUT EXCAVATION = 50 CY

SELECT GRANULAR MATERIAL = 50 CY

CLASS IV SUBGRADE STABILIZATION = 50 TONS

Approximate quantities only. Unclassified excavation, borrow excavation, fine grading, clearing and grubbing, and removal of existing pavement will be paid for at the contract lump sum price for "grading".

PROJECT REFERENCE NO.	SHEET NO.
BD-5113B	4
R/W SHEET NO.	
ROADWAY DESIGN ENGINEER	HYDRAULICS ENGINEER

NORTH CAROLINA PROFESSIONAL SEAL 26960 ENGINEER — 4/3/12

NORTH CAROLINA PROFESSIONAL SEAL 18462 ENGINEER JAMES C. DAVIS

NAD 83/NSRS 2007

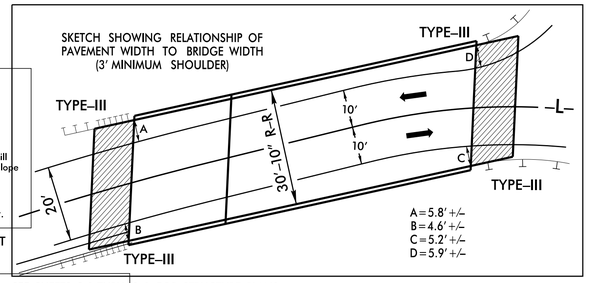

SEE SHEETS S-1 THRU S-3 FOR STRUCTURE PLANS.

-L- CURVE DATA

PI Sta 10+84.46
Δ = 1° 18' 27.4" (RT)
D = 6° 00' 00.0"
L = 217.79'
T = 109.10'
R = 954.93'

PI Sta 12+32.93
Δ = 9° 26' 41.3" (RT)
D = 8° 00' 00.0"
L = 118.06'
T = 59.16'
R = 716.20'
SE = 0.04
R0 = 72'

PI Sta 13+79.56
Δ = 31° 08' 45.4" (RT)
D = 34° 30' 00.0"
L = 90.28'
T = 46.28'
•• R = 166.07'
SE = 0.04
R0 = 72'

PI Sta 14+61.26
Δ = 21° 29' 09.2" (RT)
D = 28° 50' 00.0"
L = 74.52'
T = 37.70'
•• R = 198.71'
SE = 0.04
R0 = 72'

PI Sta 15+41.69
Δ = 7° 15' 33.5" (RT)
D = 8° 20' 00.0"
L = 87.31'
T = 43.61'
R = 687.55'

•• MEETS R-R-R DESIGN CRITERIA

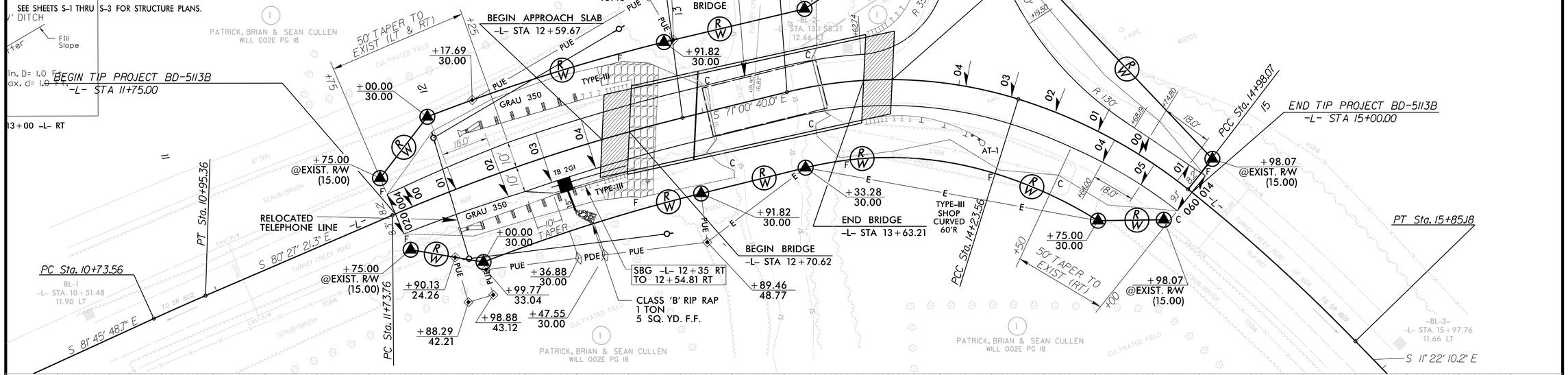

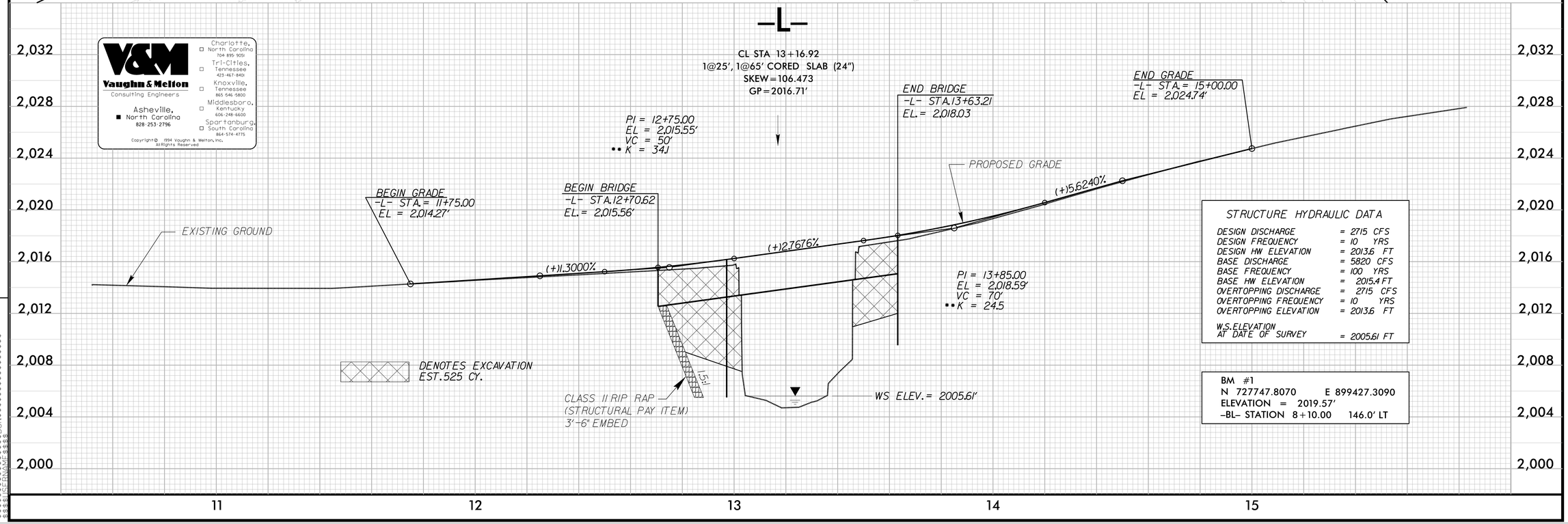

Vaughn & Melton
Consulting Engineers
Asheville, North Carolina 828-253-2796
Charlotte, North Carolina 704-895-9051
Tri-Cities, Tennessee 423-467-8400
Knoxville, Tennessee 865-546-5800
Middlesboro, Kentucky 606-248-6600
Spartanburg, South Carolina 864-574-4775
Copyright © 1994 Vaughn & Melton, Inc. All Rights Reserved

STRUCTURE HYDRAULIC DATA

DESIGN DISCHARGE	= 2715 CFS
DESIGN FREQUENCY	= 10 YRS
DESIGN HW ELEVATION	= 2013.6 FT
BASE DISCHARGE	= 5820 CFS
BASE FREQUENCY	= 100 YRS
BASE HW ELEVATION	= 2015.4 FT
OVERTOPPING DISCHARGE	= 2715 CFS
OVERTOPPING FREQUENCY	= 10 YRS
OVERTOPPING ELEVATION	= 2013.6 FT
W.S. ELEVATION AT DATE OF SURVEY	= 2005.61 FT

BM #1
N 727747.8070 E 899427.3090
ELEVATION = 2019.57'
-BL- STATION 8+10.00 146.0' LT

REVISIONS

8/17/99

SYSTIME$$$$
SYSDATE$$$$
SYSFRAME$$$$

STATE OF NORTH CAROLINA
DIVISION OF HIGHWAYS

TRANSPORTATION MANAGEMENT PLAN

BUNCOMBE COUNTY

DIVISION 13

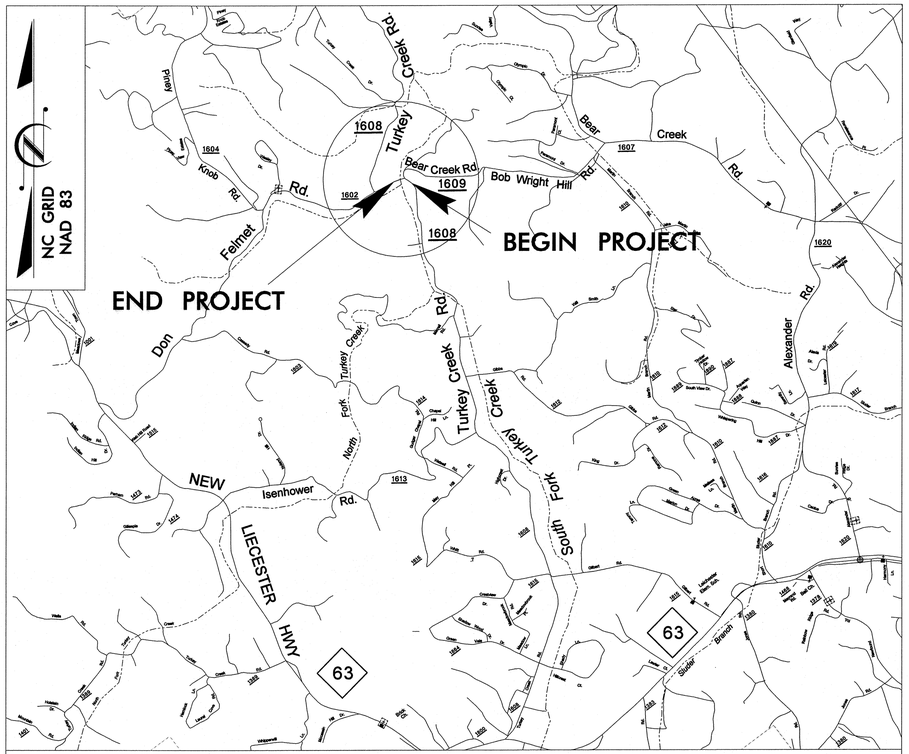

VICINITY MAP

INDEX OF SHEETS

SHEET NO.	TITLE
TMP-1	TITLE SHEET AND INDEX OF SHEETS
TMP-1A	ROADWAY STANDARD DRAWINGS AND LEGEND
TMP-1B	GENERAL NOTES AND PHASING NOTES
TMP-2	OFFSITE DETOUR SIGNING AND ROAD CLOSURE
SD-1	SPECIAL SIGN DESIGN

SHEET NO.
TMP-1

TIP PROJECT: BD-5113B

V&M
Vaughn & Melton
Consulting Engineers
Asheville, North Carolina 828-253-2796
Charlotte, North Carolina 704-895-9051
Tri-Cities, Tennessee 423-467-8401
Knoxville, Tennessee 865-546-5800
Middlesboro, Kentucky 606-248-6600
Spartanburg, South Carolina 864-574-4775

Copyright© 1994 Vaughn & Melton, Inc.
All Rights Reserved

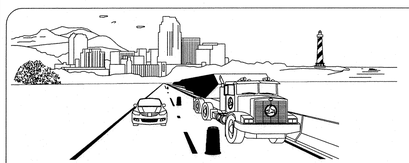

WORK ZONE SAFETY & MOBILITY
"from the MOUNTAINS to the COAST"

N.C.D.O.T. WORK ZONE TRAFFIC CONTROL
1561 MAIL SERVICE CENTER (MSC) RALEIGH, NC 27699-1561
750 N. GREENFIELD PARKWAY, GARNER, NC 27529 (DELIVERY)
PHONE: (919) 773-2800 FAX: (919) 771-2745

J. S. BOURNE, P.E. STATE TRAFFIC MANAGEMENT ENGINEER

_____ TRAFFIC CONTROL PROJECT ENGINEER

_____ TRAFFIC CONTROL PROJECT DESIGN ENGINEER

_____ TRAFFIC CONTROL DESIGN ENGINEER

DIVISION OF HIGHWAYS
STATE OF NORTH CAROLINA
DEPARTMENT OF TRANSPORTATION
WORK ZONE TRAFFIC CONTROL

STV / Ralph Whitehead Associates, Inc.
1000 West Morehead St., Ste. 200
Charlotte, NC 28208
NC License Number F-0991

PROJECT ENGINEER JOHN JOHNSON, PE

DESIGN ENGINEER RICHARD ODYNSKI, PE

APPROVED: _____

DATE: _____

NORTH CAROLINA PROFESSIONAL SEAL 026467 ENGINEER RICHARD A. ODYNSKI

4-3-12

4/3/2012
R:\Traffic\TrafficControl\TCP\BD5113B_TCP_TSH.dgn
parkercs

PROJ. REFERENCE NO.	SHEET NO.
BD-5113B	TMP-1A

STV/Ralph Whitehead Associates, Inc.
1000 West Morehead St., Ste. 200
Charlotte, NC 28208
NC License Number F-0991

Vaughn & Melton
Consulting Engineers
Asheville, North Carolina 828-253-2796
Charlotte, North Carolina 704-895-9051
Tri-Cities, Tennessee 423-467-8401
Knoxville, Tennessee 865-546-6600
Middlesboro, Kentucky 606-248-6600
Spartanburg, South Carolina 864-574-4775
Copyright© 1994 Vaughn & Melton, Inc.
All Rights Reserved

ROADWAY STANDARD DRAWINGS

REV. JUNE 2009

ROADWAY STANDARD DRAWINGS

THE FOLLOWING ROADWAY STANDARDS AS APPEAR IN "ROADWAY STANDARD DRAWINGS" - PROJECT SERVICES UNIT - N.C. DEPARTMENT OF TRANSPORTATION - RALEIGH, N.C., DATED JULY 2006 ARE APPLICABLE TO THIS PROJECT AND BY REFERENCE HEREBY ARE CONSIDERED A PART OF THESE PLANS:

STD.NO.	TITLE
1101.03	TEMPORARY ROAD CLOSURES
1101.05	WORK ZONE VEHICLE ACCESSES
1101.11	TRAFFIC CONTROL DESIGN TABLES
1110.01	STATIONARY WORK ZONE SIGNS
1110.02	PORTABLE WORK ZONE SIGNS
1145.01	BARRICADES

LEGEND

GENERAL

- DIRECTION OF TRAFFIC FLOW
- DIRECTION OF PEDESTRIAN TRAFFIC FLOW
- EXIST. PVMT.
- NORTH ARROW
- PROPOSED PVMT.
- WORK AREA
- REMOVAL

TRAFFIC CONTROL DEVICES

- BARRICADE (TYPE III)
- CONE
- DRUM — SKINNY DRUM — TUBULAR MARKER
- TEMPORARY CRASH CUSHION
- FLASHING ARROW PANEL (TYPE C)
- FLAGGER
- LAW ENFORCEMENT
- TRUCK MOUNTED IMPACT ATTENUATOR (TMIA)
- CHANGEABLE MESSAGE SIGN

TEMPORARY SIGNING

- PORTABLE SIGN
- STATIONARY SIGN
- STATIONARY OR PORTABLE SIGN

SIGNALS

- EXISTING
- PROPOSED
- TEMPORARY

PAVEMENT MARKINGS

- EXISTING LINES
- TEMPORARY LINES

PAVEMENT MARKERS

- CRYSTAL/CRYSTAL
- CRYSTAL/RED
- YELLOW/YELLOW

PAVEMENT MARKING SYMBOLS

- PAVEMENT MARKING SYMBOLS

APPROVED: _____ DATE: _____

NORTH CAROLINA PROFESSIONAL SEAL 019746 ENGINEER JOHN A. DRAYTON

4-3-12

DIVISION OF HIGHWAYS · STATE OF NORTH CAROLINA · DEPARTMENT OF TRANSPORTATION · WORK ZONE TRAFFIC CONTROL

ROADWAY STANDARD DRAWINGS & LEGEND

4/3/2012
R:\Traffic\TrafficControl\TCP\BD5113B_TCP_1A.dgn
parkercs

PROJ. REFERENCE NO.	SHEET NO.
BD-5113B	TMP-1B

STV/Ralph Whitehead Associates, Inc.
1000 West Morehead St., Ste. 200
Charlotte, NC 28208
NC License Number F-0991

V&M
Vaughn & Melton
Consulting Engineers
Asheville, North Carolina 828-253-2796
Charlotte, North Carolina 704-895-9051
Tri-Cities, Tennessee 423-467-8401
Knoxville, Tennessee 865-546-5800
Middlesboro, Kentucky 606-248-5600
Spartanburg, South Carolina 864-574-4775
Copyright © 1994 Vaughn & Melton, Inc.
All Rights Reserved

GENERAL NOTES

CHANGES MAY BE REQUIRED WHEN PHYSICAL DIMENSIONS IN THE DETAIL DRAWINGS, STANDARD DETAILS AND ROADWAY DETAILS ARE NOT ATTAINABLE TO MEET FIELD CONDITIONS, OR RESULT IN DUPLICATE, OR UNDESIRED OVERLAPPING OF DEVICES. MODIFICATION MAY INCLUDE: MOVING, SUPPLEMENTING, COVERING OR REMOVAL OF DEVICES, AS DIRECTED BY THE ENGINEER.

THE FOLLOWING GENERAL NOTES APPLY AT ALL TIMES FOR THE DURATION OF THE CONSTRUCTION PROJECT, EXCEPT WHEN OTHERWISE NOTED IN THE PLAN, OR DIRECTED BY THE ENGINEER.

TIME RESTRICTIONS

A) DO NOT CLOSE OR NARROW TRAVEL LANES ON SR 1608 DURING HOLIDAYS AND SPECIAL EVENTS AS FOLLOWS:

1. FOR ANY UNEXPECTED OCCURRENCE THAT CREATES UNUSUALLY HIGH TRAFFIC VOLUMES, AS DIRECTED BY THE ENGINEER.

2. FOR NEW YEAR'S, BETWEEN THE HOURS OF 6:00 A.M. DECEMBER 31st TO 9:00 P.M. JANUARY 2ND. IF NEW YEAR'S DAY IS ON A FRIDAY, SATURDAY, SUNDAY, OR MONDAY THEN UNTIL 9:00 P.M. THE FOLLOWING TUESDAY.

3. FOR EASTER, BETWEEN THE HOURS OF 6:00 A.M. THURSDAY AND 9:00 P.M. MONDAY.

4. FOR MEMORIAL DAY, BETWEEN THE HOURS OF 6:00 A.M. FRIDAY TO 9:00 P.M. TUESDAY.

5. FOR INDEPENDENCE DAY, BETWEEN THE HOURS OF 6:00 A.M. THE DAY BEFORE INDEPENDENCE DAY AND 9:00 P.M. THE DAY AFTER INDEPENDENCE DAY.

   IF INDEPENDENCE DAY IS ON A FRIDAY, SATURDAY, SUNDAY OR MONDAY THEN BETWEEN THE HOURS OF 6:00 A.M. THE THURSDAY BEFORE INDEPENDENCE DAY AND 9:00 P.M. THE TUESDAY AFTER INDEPENDENCE DAY.

6. FOR LABOR DAY, BETWEEN THE HOURS OF 6:00 A.M. FRIDAY AND 9:00 P.M. TUESDAY.

7. FOR THANKSGIVING DAY, BETWEEN THE HOURS OF 6:00 A.M. TUESDAY TO 9:00 P.M. MONDAY.

8. FOR CHRISTMAS, BETWEEN THE HOURS OF 6:00 A.M. THE FRIDAY BEFORE THE WEEK OF CHRISTMAS DAY AND 9:00 P.M. THE FOLLOWING MONDAY AFTER THE WEEK OF CHRISTMAS.

PAVEMENT EDGE DROP OFF REQUIREMENTS

B) BACKFILL AT 6:1 SLOPE UP TO THE EDGE AND ELEVATION OF EXISTING PAVEMENT IN AREAS ADJACENT TO AN OPENED TRAVEL LANE THAT HAS AN EDGE OF PAVEMENT DROP-OFF AS FOLLOWS:

   BACKFILL DROP-OFFS THAT EXCEED 2 INCHES ON ROADWAYS WITH POSTED SPEED LIMITS OF 45 MPH OR GREATER.

   BACKFILL DROP-OFFS THAT EXCEED 3 INCHES ON ROADWAYS WITH POSTED SPEED LIMITS LESS THAN 45 MPH.

   BACKFILL WITH SUITABLE COMPACTED MATERIAL, AS APPROVED BY THE ENGINEER, AT NO EXPENSE TO THE DEPARTMENT.

TRAFFIC PATTERN ALTERATIONS

C) NOTIFY THE ENGINEER TWENTY ONE (21) CALENDAR DAYS PRIOR TO ANY TRAFFIC PATTERN ALTERATION.

SIGNING

D) PROVIDE SIGNING AND DEVICES REQUIRED TO CLOSE THE ROAD ACCORDING TO THE ROADWAY STANDARD DRAWINGS AND TRAFFIC CONTROL PLANS.

E) PROVIDE SIGNING REQUIRED FOR THE OFF-SITE DETOUR ROUTE AS SHOWN IN THE TRAFFIC CONTROL PLANS.

F) COVER OR REMOVE ALL SIGNS AND DEVICES REQUIRED TO CLOSE THE ROAD WHEN ROAD CLOSURE IS NOT IN OPERATION.

G) COVER OR REMOVE ALL SIGNS REQUIRED FOR THE OFF-SITE DETOUR WHEN THE DETOUR IS NOT IN OPERATION.

H) ENSURE ALL NECESSARY SIGNING IS IN PLACE PRIOR TO ALTERING ANY TRAFFIC PATTERN.

PHASING NOTES

STEP 1: USING RSD 1101.03 SHEET 1 OF 9, AND TMP-2, INSTALL DETOUR SIGNS AND PLACE TYPE III BARRICADES TO CLOSE SR 1608 (TURKEY CREEK RD.) TO THRU TRAFFIC AND DETOUR ONTO PROPOSED DETOUR.

STEP 2: AWAY FROM TRAFFIC, PERFORM THE FOLLOWING:

REMOVE EXISTING STRUCTURE AND CONSTRUCT PROPOSED STRUCTURE. SEE ROADWAY AND STRUCTURE PLANS.

CONSTRUCT PROPOSED -L- UP TO BUT NOT INCLUDING FINAL LAYER OF SURFACE COURSE.

STEP 3: PLACE FINAL PAVEMENT MARKINGS AND FINAL LAYER OF SURFACE COURSE AND TIE TO EXISTING MARKINGS (SEE PAVEMENT MARKING PLAN).

STEP 4: REMOVE ALL TRAFFIC CONTROL DEVICES, SIGNING AND DETOUR ROUTE SIGNING.

OPEN SR 1608 TO FINAL TRAFFIC PATTERN.

LOCAL NOTES

1. NOTIFY BUNCOMBE COUNTY EMERGENCY SERVICES AND PUBLIC SCHOOLS AT LEAST ONE MONTH PRIOR TO ROAD CLOSURE.

APPROVED: _____ DATE: _____

NORTH CAROLINA PROFESSIONAL SEAL 019862 ENGINEER RICHARD ROTHSCHILD
4-3-12

DIVISION OF HIGHWAYS
STATE OF NORTH CAROLINA
DEPARTMENT OF TRANSPORTATION
WORK ZONE TRAFFIC CONTROL

GENERAL NOTES AND PHASING NOTES

4/3/2012
R:\Traffic\TrafficControl\TCP\BD5113B_TCP_1B.dgn
parkercs

PROJ. REFERENCE NO.	SHEET NO.
BD-5113B	TMP-2

STV/Ralph Whitehead Associates, Inc.
1000 West Morehead St., Ste. 200
Charlotte, NC 28208
NC License Number F-0991

Vaughn & Melton
Consulting Engineers
Asheville, North Carolina 828-253-2796
Charlotte, North Carolina 704-895-9051
Tri-Cities, Tennessee 423-467-8401
Knoxville, Tennessee 865-546-5800
Middlesboro, Kentucky 606-248-6600
Spartanburg, South Carolina 864-574-4775

Copyright © 1994 Vaughn & Melton, Inc.
All Rights Reserved

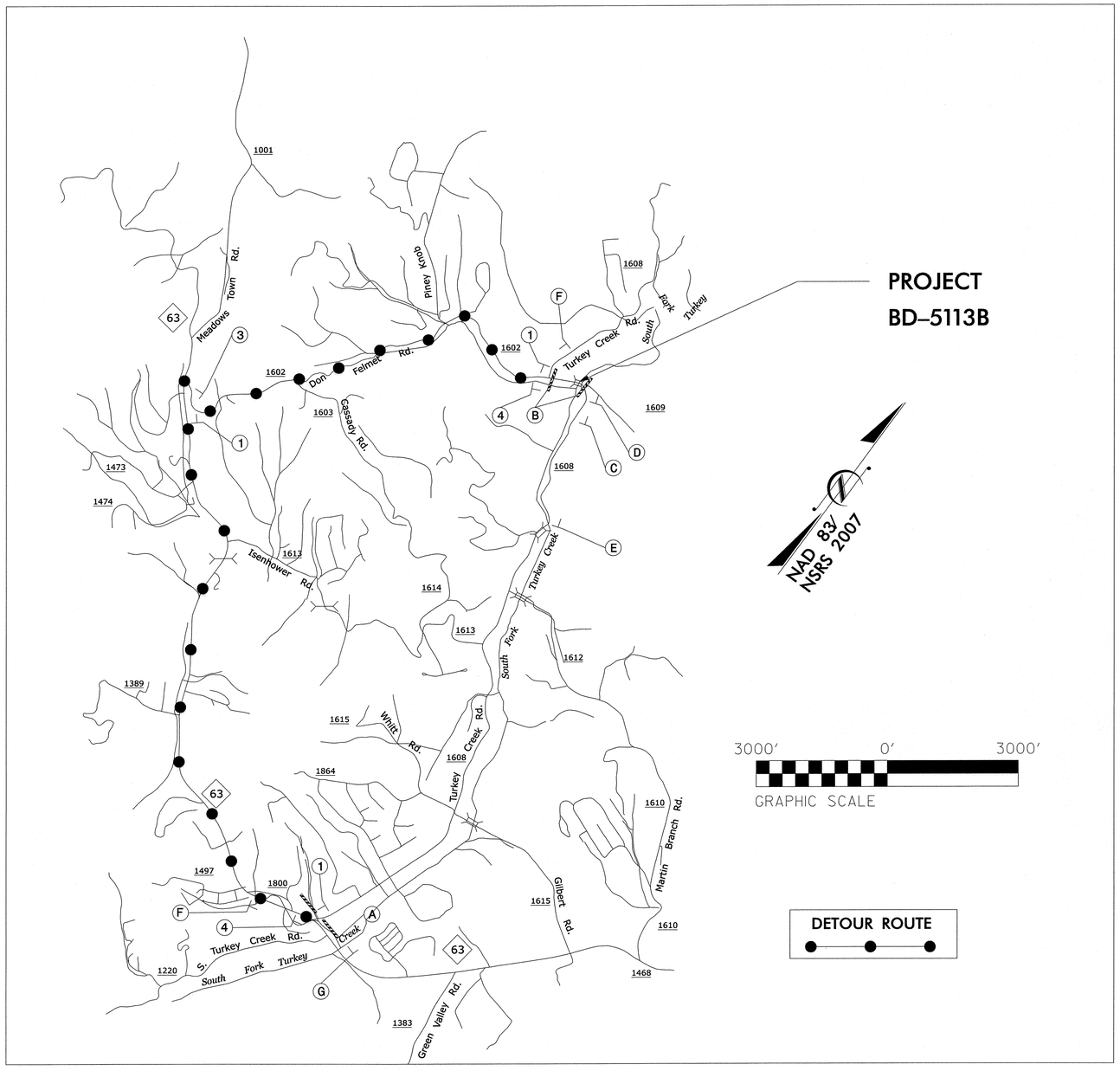

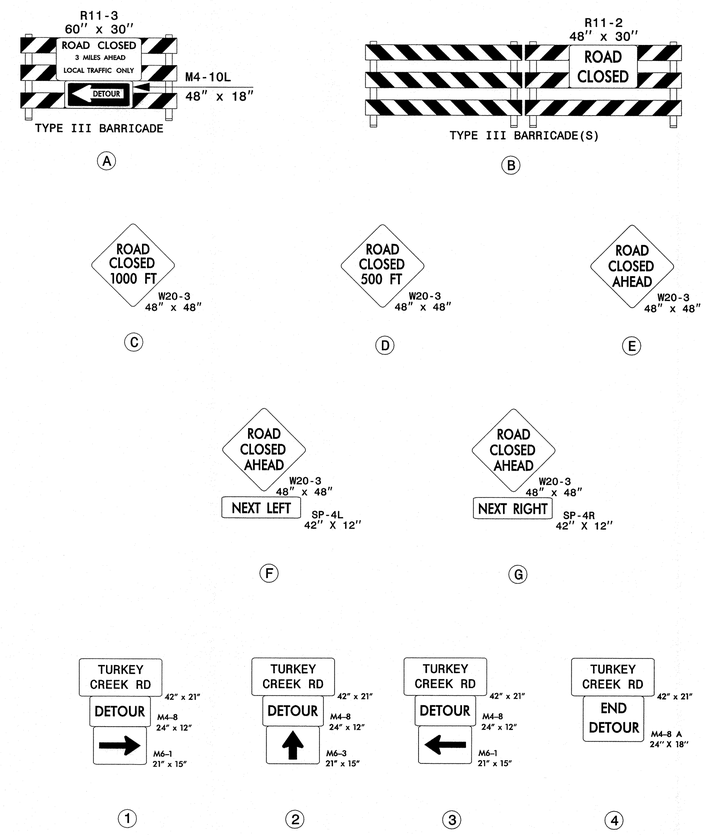

NOTES:

TRAFFIC CONTROL DEVICES Ⓐ THRU Ⓗ SHALL BE INSTALLED ACCORDING TO ROADWAY STANDARD DRAWING 1101.03, SHEET 1 OF 9.

TRAFFIC CONTROL DEVICES ① THRU ④ SHALL BE INSTALLED AS PER ENGINEER'S INSTRUCTION.

APPROVED:_____ DATE:_____

NORTH CAROLINA PROFESSIONAL SEAL 037467 ENGINEER RICHARD A. ODINEK

4-3-12

DIVISION OF HIGHWAYS
STATE OF NORTH CAROLINA
DEPARTMENT OF TRANSPORTATION
WORK ZONE TRAFFIC CONTROL

OFFSITE DETOUR SIGNING AND ROAD CLOSURE

4/3/2012
R:\Traffic\TrafficControl\TCP\BD5113B_TCP_2.dgn
odynskra

PROJ. REFERENCE NO.	SHEET NO.
BD-5113B	SD-1

STV / Ralph Whitehead Associates, Inc.
1000 West Morehead St., Ste. 200
Charlotte, NC 28208
NC License Number F-0991

Vaughn & Melton
Consulting Engineers
Asheville, North Carolina 828-253-2796
Charlotte, North Carolina 704-895-9051
Tri-Cities, Tennessee 423-467-8401
Knoxville, Tennessee 865-546-5800
Middlesboro, Kentucky 606-248-6600
Spartanburg, South Carolina 864-574-4775

Copyright © 1994 Vaughn & Melton, Inc. All Rights Reserved

SIGN NUMBER:
TYPE: STATIONARY BACKG COLOR: FLUORESCENT ORANGE
QUANTITY: SEE PLANS COPY COLOR: BLACK

SIGN WIDTH: 3'-6" MAJ. COPY SERIES: GROUND
HEIGHT: 1'-9"
TOTAL AREA: 6.0 Sq.Ft. ROUTE MARKERS:

BORDER TYPE: INSET
RECESS: 0.5"
WIDTH: 0.5" ARROW TYPES:
RADII: 3"

NO. Z BARS:
LENGTH: MAT'L: 0.080" (2.0 mm) Aluminum
0.079" (2.0 mm) Composite

LETTER POSITIONS

	T	u	r	k	e	y				
12.1	3.1	3.5	2.2	3.1	2.8	3.2	12.2			17.8
	C	r	e	e	k		R	d		
8.2	3.7	2	3.1	3.2	2.7	5	3.4	2.6	8.2	25.7

Letter positions are to the lower left corners

USE NOTES: 1,2

1. Legend and border shall be direct applied non-reflective sheeting.
2. Background shall be Type VII, VIII, or IX (prismatic) fluorescent orange retroreflective sheeting.

DESIGN BY: RAO CHECKED BY: KAP
PROJECT ID: BD-5113B DIV: 13 DATE: Nov 11, 2011

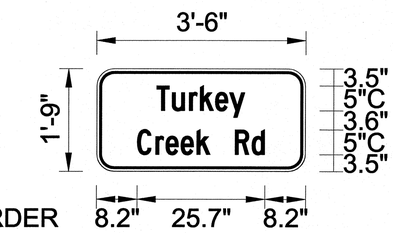

BORDER
R=3"
TH=0.5"
IN=0.5"

Panel Style: WORK ZONE STREET NAME.ssi
M.U.T.C.D.: 2003 Edition

NORTH CAROLINA D.O.T. SIGN DETAIL

APPROVED: DATE:

NORTH CAROLINA PROFESSIONAL SEAL 03467 ENGINEER RICHARD A. CONNER
4-3-12

DIVISION OF HIGHWAYS STATE OF NORTH CAROLINA DEPARTMENT OF TRANSPORTATION WORK ZONE TRAFFIC CONTROL

SPECIAL SIGN DESIGN

4/3/2012
R:\Traffic\TrafficControl\TCP\BD5113B_TCP_PSH_SD1.dgn
parkercs

PROJECT REFERENCE NO.	SHEET NO.
BD-5113B	1-A

ROADWAY DESIGN ENGINEER

INDEX OF SHEETS

SHEET NUMBER	SHEET
1	TITLE SHEET
1-A	INDEX OF SHEETS, GENERAL NOTES, AND LIST OF STANDARD DRAWINGS
1-B	CONVENTIONAL SYMBOLS
2	PAVEMENT SCHEDULE, TYPICAL SECTIONS, AND WEDGING DETAILS
3	SUMMARY OF QUANTITIES
3A	SUMMARY OF DRAINAGE QUANTITIES, SUMMARY OF GUARDRAIL, AND ASPHALT PAVEMENT REMOVAL SUMMARY
3B	EARTHWORK SUMMARY
4	PLAN AND PROFILE SHEET
TMP-1 THRU TMP-2	TRAFFIC MANAGEMENT PLANS
SD-1	SPECIAL SIGN DESIGN
EC-1 THRU EC-3A	EROSION CONTROL PLANS
UO-1 THRU UO-2	UTILITIES BY OTHERS PLANS
X-0	CROSS-SECTION SUMMARY
X-1 THRU X-8	CROSS-SECTIONS
S-1 THRU S-21	STRUCTURE PLANS

GENERAL NOTES:

2012 SPECIFICATIONS
EFFECTIVE: 01-17-12

GRADE LINE:
GRADING AND SURFACING OR RESURFACING AND WIDENING:

THE GRADE LINES SHOWN DENOTE THE FINISHED ELEVATION OF THE PROPOSED SURFACING AT GRADE POINTS SHOWN ON THE TYPICAL SECTIONS. WHERE NO GRADE LINES ARE SHOWN, THE PROFILES SHOWN DENOTE THE TOP ELEVATION OF THE EXISTING PAVEMENT ALONG THE CENTER LINE OF SURVEY ON WHICH THE PROPOSED RESURFACING WILL BE PLACED. GRADE LINES MAY BE ADJUSTED BY THE ENGINEER IN ORDER TO SECURE A PROPER TIE-IN.

CLEARING:

CLEARING ON THIS PROJECT SHALL BE PERFORMED TO THE LIMITS ESTABLISHED BY METHOD II.

SUPERELEVATION:

ALL CURVES ON THIS PROJECT SHALL BE SUPERELEVATED IN ACCORDANCE WITH STD. NO. 225.04 USING THE RATE OF SUPERELEVATION AND RUNOFF SHOWN ON THE PLANS. SUPERELEVATION IS TO BE REVOLVED ABOUT THE GRADE POINTS SHOWN ON THE TYPICAL SECTIONS.

SHOULDER CONSTRUCTION:

ASPHALT, EARTH, AND CONCRETE SHOULDER CONSTRUCTION ON THE HIGH SIDE OF SUPERELEVATED CURVES SHALL BE IN ACCORDANCE WITH STD. NO. 560.01.

UNDERDRAINS:

UNDERDRAINS SHALL BE CONSTRUCTED IN ACCORDANCE WITH STD. NO. 815.03 AT LOCATIONS DIRECTED BY THE ENGINEER.

GUARDRAIL:

THE GUARDRAIL LOCATIONS SHOWN ON THE PLANS MAY BE ADJUSTED DURING CONSTRUCTION AS DIRECTED BY THE ENGINEER. THE CONTRACTOR SHOULD CONSULT WITH THE ENGINEER PRIOR TO ORDERING GUARDRAIL MATERIAL.

TEMPORARY SHORING:

SHORING REQUIRED FOR THE MAINTENANCE OF TRAFFIC WILL BE PAID FOR AS "EXTRA WORK" IN ACCORDANCE WITH SECTION 104-7.

SUBSURFACE PLANS:

NO SUBSURFACE PLANS ARE AVAILABLE ON THIS PROJECT. THE CONTRACTOR SHOULD MAKE HIS OWN INVESTIGATION AS TO THE SUBSURFACE CONDITIONS.

END BENTS:

THE ENGINEER SHALL CHECK THE STRUCTURE END BENT PLANS, DETAILS, AND CROSS-SECTION PRIOR TO SETTING OF THE SLOPE STAKES FOR THE EMBANKMENT OR EXCAVATION APPROACHING A BRIDGE.

UTILITIES:

UTILITY OWNER ON THIS PROJECT IS AT&T.

RIGHT-OF-WAY MARKERS:

ALL RIGHT-OF-WAY MARKERS ON THIS PROJECT SHALL BE PLACED BY CONTRACT.

2012 ROADWAY ENGLISH STANDARD DRAWINGS

The following Roadway Standards as appear in "Roadway Standard Drawings" Highway Design Branch - N. C. Department of Transportation - Raleigh, N. C., Dated January 17, 2012 are applicable to this project and by reference hereby are considered a part of these plans:

STD.NO.	TITLE
DIVISION 2 - EARTHWORK	
200.02	Method of Clearing - Method II
225.02	Guide for Grading Subgrade - Secondary and Local
225.04	Method of Obtaining Superelevation - Two Lane Pavement
DIVISION 3 - PIPE CULVERTS	
300.01	Method of Pipe Installation - Method 'A'
DIVISION 4 - MAJOR STRUCTURES	
422.11	Bridge Approach Fills
DIVISION 5 - SUBGRADE, BASES AND SHOULDERS	
560.01	Method of Shoulder Construction - High Side of Superelevated Curve - Method I
DIVISION 8 - INCIDENTALS	
815.03	Pipe Underdrain and Blind Drain
840.25	Anchorage for Frames
840.29	Frames and Narrow Slot Flat Grates
840.35	Traffic Bearing Grated Drop Inlet - for Cast Iron Double Frame and Grates
840.46	Traffic Bearing Precast Drainage Structure
840.66	Drainage Structure Steps
846.01	Concrete Curb, Gutter and Curb & Gutter
846.04	Drop Inlet Installation in Shoulder Berm Gutter
862.01	Guardrail Placement
862.02	Guardrail Installation
862.03	Structure Anchor Units
876.02	Guide for Rip Rap at Pipe Outlets

$$$

ROADSIDE ENVIRONMENTAL UNIT
DEPARTMENT OF TRANSPORTATION
DIVISION OF HIGHWAYS
RALEIGH, N.C.

2012 STANDARD SPECIFICATIONS

EROSION CONTROL PLAN

30' 0' 30' 60' 90'
GRAPHIC SCALE

PROJECT REFERENCE NO.	SHEET NO.
BD-5113B	EC-1
R/W SHEET NO.	
ROADWAY DESIGN ENGINEER	HYDRAULICS ENGINEER

NORTH CAROLINA PROFESSIONAL SEAL 18862 ENGINEER JAMES C. DAVIS
4/18/12

WETHERILL ENGINEERING
509 Jones Franklin Rd. Suite 144
Raleigh, N.C. 27606
License No. F-0377
Voice 919 851 8077
Fax 919 851 8207

TRANSPORTATION PLANNING/DESIGN - BRIDGE/STRUCTURE DESIGN
CIVIL/SITE DESIGN - GIS/GPS - CONSTRUCTION OBSERVATION

THESE EROSION AND SEDIMENT CONTROL PLANS COMPLY WITH THE REGULATIONS SET FORTH BY THE NCG-010000 GENERAL CONSTRUCTION PERMIT EFFECTIVE AUGUST 3, 2011 ISSUED BY THE NORTH CAROLINA DEPARTMENT OF ENVIRONMENT AND NATURAL RESOURCES DIVISION OF WATER QUALITY.

NOTES: ANY DEVIATION FROM OPTIONS GIVEN WILL REQUIRE PRIOR APPROVAL BY ENGINEER.

ADDITIONAL EROSION CONTROL DEVICES MAY NEED TO BE INSTALLED AS DIRECTED BY THE ENGINEER.

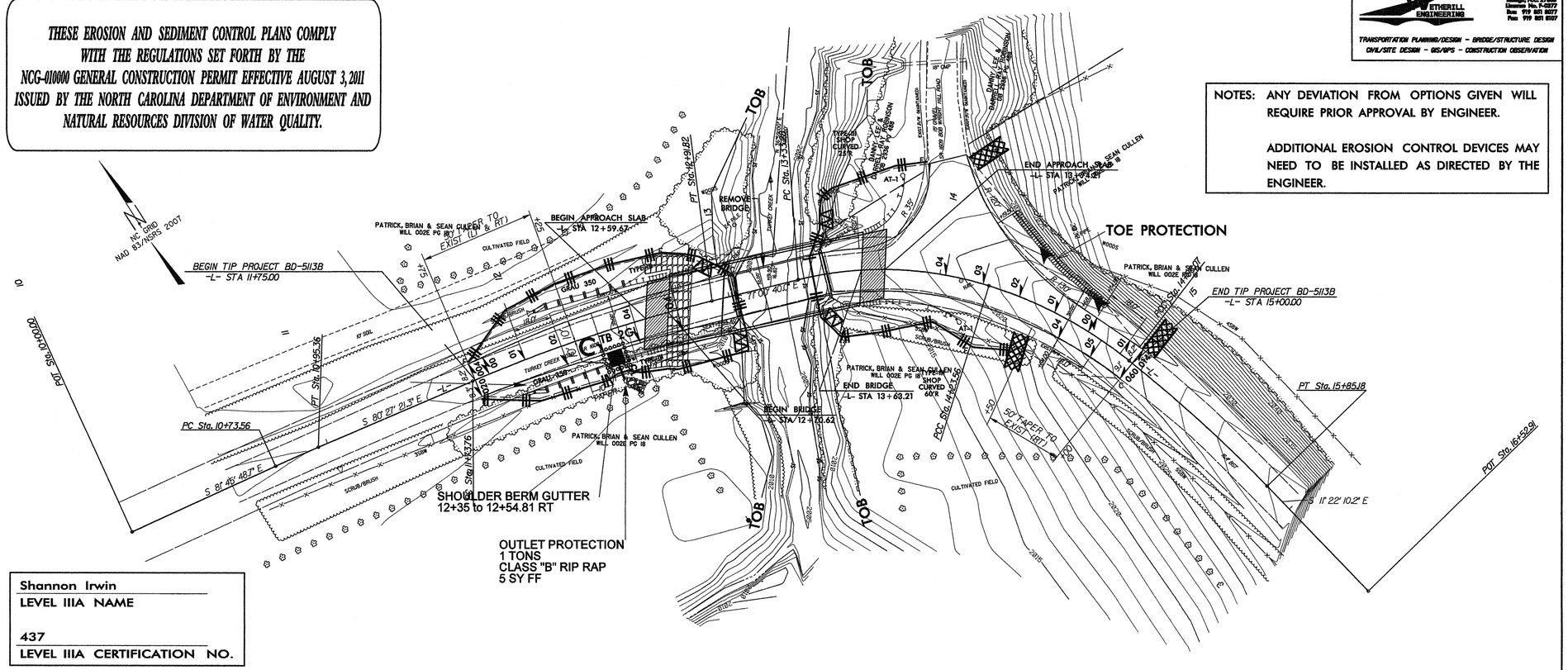

Shannon Irwin
LEVEL IIIA NAME

437
LEVEL IIIA CERTIFICATION NO.

Std. #	Description	Symbol
1605.01	Temporary Silt Fence	
1606.01	Special Sediment Control Fence	
1632.03	Rock Inlet Sediment Trap Type C	
1633.01	Temporary Rock Silt Check Type-A	
1633.01	Temporary Rock Silt Check Type-B	

2012 STANDARD DRAWINGS

1604.01	Railroad Erosion Control Detail	1632.01	Rock Inlet Sediment Trap Type A
1605.01	Temporary Silt Fence	1632.02	Rock Inlet Sediment Trap Type B
1606.01	Special Sediment Control Fence	1632.03	Rock Inlet Sediment Trap Type C
1607.01	Gravel Construction Entrance	1633.01	Temporary Rock Silt Check Type A
1622.01	Temporary Berms and Slope Drains	1633.02	Temporary Rock Silt Check Type B
1630.01	Riser Basin	1634.01	Temporary Rock Sediment Dam Type A
1630.02	Silt Basin Type B	1634.02	Temporary Rock Sediment Dam Type B
1630.03	Temporary Silt Ditch	1635.01	Rock Pipe Inlet Sediment Trap Type A
1630.04	Stilling Basin	1635.02	Rock Pipe Inlet Sediment Trap Type B
1630.05	Temporary Diversion	1640.01	Coir Fiber Baffle
1630.06	Special Stilling Basin	1645.01	Temporary Stream Crossing
1631.01	Matting Installation		

PROJECT NO. BD-5113B
COUNTY BUNCOMBE
STATION: 13+17
REPLACES BRIDGE NO. 15

STATE OF NORTH CAROLINA
DEPARTMENT OF TRANSPORTATION
RALEIGH

BRIDGE #15 ON SR 1608
OVER TURKEY CREEK

REVISIONS						SHEET NO.
NO.	BY	DATE	NO.	BY	DATE	EC-1
1			3			TOTAL SHEETS
2			4			1

PROJECT REFERENCE NO.	SHEET NO.
BD-5113B	EC-2
ROADWAY DESIGN ENGINEER	HYDRAULICS ENGINEER

DIVISION OF HIGHWAYS
STATE OF NORTH CAROLINA

SOIL STABILIZATION TIMEFRAMES

SITE DESCRIPTION	STABILIZATION TIME	TIMEFRAME EXCEPTIONS
PERIMETER DIKES, SWALES, DITCHES AND SLOPES	7 DAYS	NONE
HIGH QUALITY WATER (HQW) ZONES	7 DAYS	NONE
SLOPES STEEPER THAN 3:1	7 DAYS	IF SLOPES ARE 10' OR LESS IN LENGTH AND ARE NOT STEEPER THAN 2:1, 14 DAYS ARE ALLOWED.
SLOPES 3:1 OR FLATTER	14 DAYS	7 DAYS FOR SLOPES GREATER THAN 50' IN LENGTH.
ALL OTHER AREAS WITH SLOPES FLATTER THAN 4:1	14 DAYS	NONE, EXCEPT FOR PERIMETERS AND HQW ZONES.

PROJECT REFERENCE NO.	SHEET NO.
BD-5113B	EC-3
ROADWAY DESIGN ENGINEER	HYDRAULICS ENGINEER

NORTH CAROLINA PROFESSIONAL SEAL 18462 ENGINEER JAMES C. DAVIS
4/10/12

DIVISION OF HIGHWAYS
STATE OF NORTH CAROLINA

SOIL STABILIZATION SUMMARY SHEET

MATTING FOR EROSION CONTROL (SLOPES)

CONST SHEET NO.	LINE	FROM STATION	TO STATION	SIDE	ESTIMATE (SY)
4	-L-	12+00	12+76	LT.	74
4	-L-	12+00	12+55	RT.	23
4	-L-	13+50	14+25	RT.	55
			SUBTOTAL		152
MISCELLANEOUS MATTING TO BE INSTALLED AS DIRECTED BY THE ENGINEER					
			TOTAL		
			SAY		

MATTING FOR EROSION CONTROL (DITCHES)

CONST SHEET NO.	LINE	FROM STATION	TO STATION	SIDE	ESTIMATE (SY)

PROJECT REFERENCE NO.	SHEET NO.
BD-5113B	EC-3A
ROADWAY DESIGN ENGINEER	HYDRAULICS ENGINEER

NORTH CAROLINA PROFESSIONAL SEAL 18461 ENGINEER JAMES C. DAVIS
4/10/12

DIVISION OF HIGHWAYS
STATE OF NORTH CAROLINA

SOIL STABILIZATION SUMMARY SHEET

PERMANENT SOIL REINFORCEMNT MAT

CONST SHEET NO.	LINE	FROM STATION	TO STATION	SIDE	ESTIMATE (SY)
4	-L-	14+75	15+00	LT.	15
				SUBTOTAL	15
	ADDITIONAL	PSRM TO	BE INSTALLED		
				TOTAL	
				SAY	

PERMANENT SOIL REINFORCEMENT MAT

CONST SHEET NO.	LINE	FROM STATION	TO STATION	SIDE	ESTIMATE (SY)

T.I.P. NO.	SHEET NO.
BD–5113B	UO–1

TIP PROJECT: BD–5113B

See Sheet 1A For Index of Sheets
See Sheet 1B For Standard Symbology Sheet

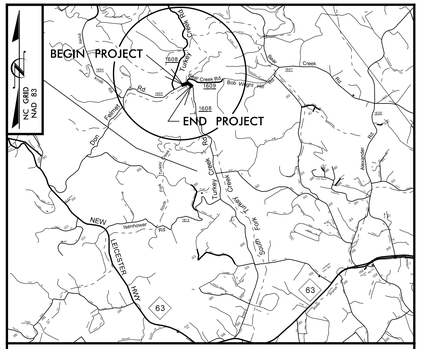

VICINITY MAP N.T.S.

STATE OF NORTH CAROLINA
DIVISION OF HIGHWAYS

UTILITIES BY OTHERS PLANS
BUNCOMBE COUNTY

LOCATION: BRIDGE NO. 15 OVER SOUTH FORK TURKEY CREEK ON SR 1608 (TURKEY CREEK ROAD)

TYPE OF WORK: AERIAL TELEPHONE

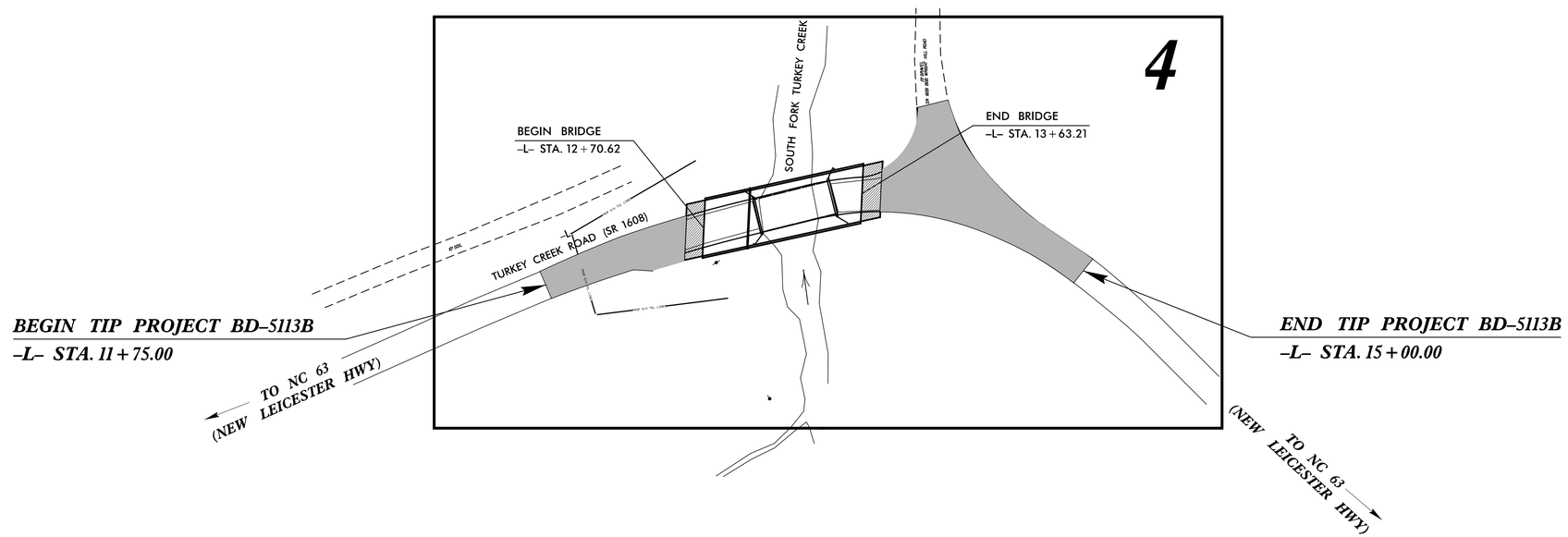

GRAPHIC SCALES

20 10 0 20 40
PLANS

20 10 0 20 40
PROFILE (HORIZONTAL)

4 2 0 4 8
PROFILE (VERTICAL)

INDEX OF SHEETS

SHEET NO.	DESCRIPTION
UO–1	TITLE SHEET
UO–2	UTILITY BY OTHERS PLAN SHEETS

UTILITY OWNERS ON PROJECT

(1) TELEPHONE – AT&T

SEAL
NORTH CAROLINA PROFESSIONAL SEAL 26960 ENGINEER REECE M. SCHULER

V&M
Vaughn & Melton
Consulting Engineers
3089-L Beam Road
Charlotte, NC 28217
704-837-7815

PREPARED IN THE OFFICE OF:
DIVISION OF HIGHWAYS
UTILITIES ENGINEERING SECTION
1591 MAIL SERVICES CENTER
RALEIGH NC 27699-1591
PHONE (919) 250-4128
FAX (919) 250-4119

Roger Worthington, P.E. — UTILITIES SECTION ENGINEER
UTILITIES SQUAD LEADER PROJECT ENGINEER
Reece Schuler, PE — UTILITIES PROJECT DESIGNER

$$$$$USERNAME$$$$ $$$$$SYSTIME$$$$ $$$$$DGN$$$$$

PROJECT REFERENCE NO.	SHEET NO.
BD-5113B	U0-2

UTILITIES BY OTHERS

NOTE:
ALL PROPOSED UTILITY WORK SHOWN ON THIS SHEET WILL BE DONE BY OTHERS

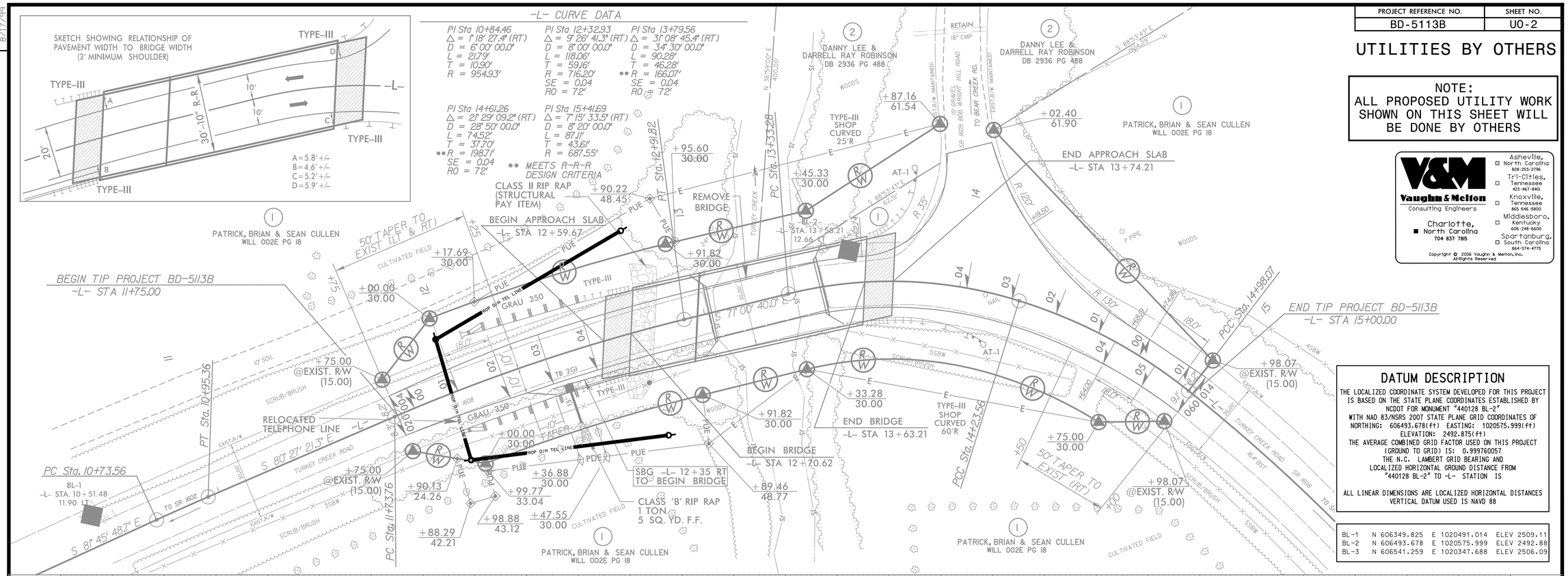

DATUM DESCRIPTION

THE LOCALIZED COORDINATE SYSTEM DEVELOPED FOR THIS PROJECT IS BASED ON THE STATE PLANE COORDINATES ESTABLISHED BY NCDOT FOR MONUMENT "440128 BL-2"
WITH NAD 83/NSRS 2007 STATE PLANE GRID COORDINATES OF
NORTHING: 606493.678(ft) EASTING: 1020575.999(ft)
ELEVATION: 2492.875(ft)
THE AVERAGE COMBINED GRID FACTOR USED ON THIS PROJECT (GROUND TO GRID) IS: 0.999760057
THE N.C. LAMBERT GRID BEARING AND LOCALIZED HORIZONTAL GROUND DISTANCE FROM "440128 BL-2" TO -L- STATION IS

ALL LINEAR DIMENSIONS ARE LOCALIZED HORIZONTAL DISTANCES
VERTICAL DATUM USED IS NAVD 88

BL-1	N 606349.825	E 1020491.014	ELEV 2509.11
BL-2	N 606493.678	E 1020575.999	ELEV 2492.88
BL-3	N 606541.259	E 1020347.688	ELEV 2506.09

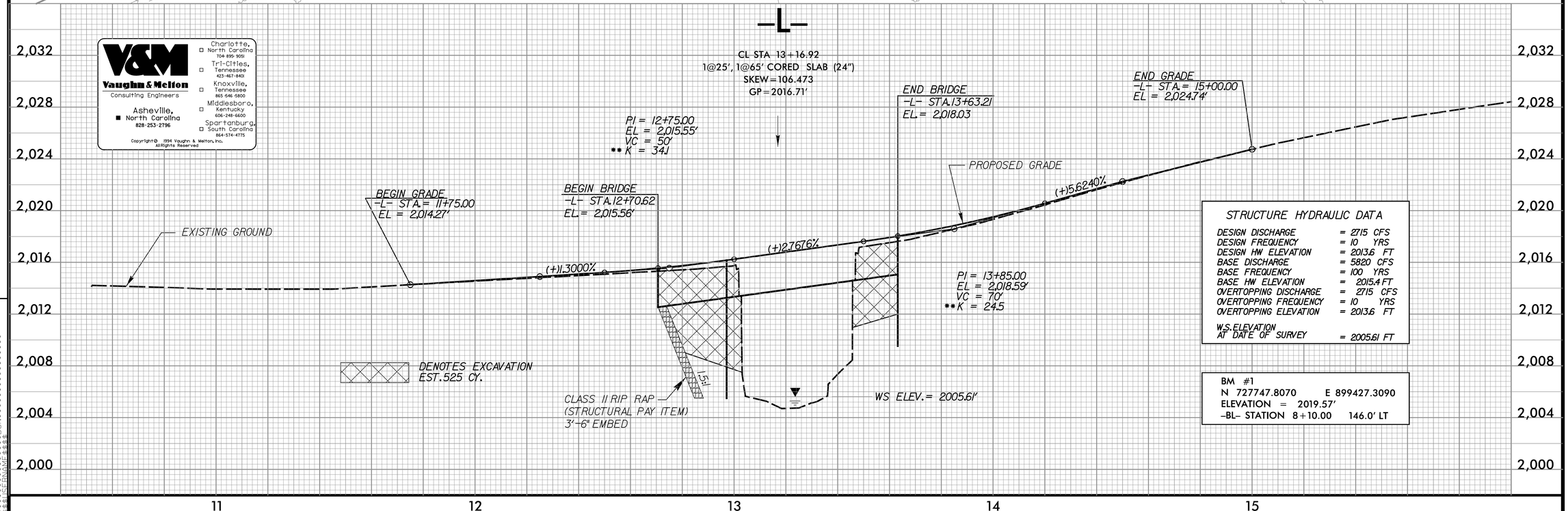

STRUCTURE HYDRAULIC DATA

DESIGN DISCHARGE	= 2715 CFS
DESIGN FREQUENCY	= 10 YRS
DESIGN HW ELEVATION	= 2013.6 FT
BASE DISCHARGE	= 5820 CFS
BASE FREQUENCY	= 100 YRS
BASE HW ELEVATION	= 2015.4 FT
OVERTOPPING DISCHARGE	= 2715 CFS
OVERTOPPING FREQUENCY	= 10 YRS
OVERTOPPING ELEVATION	= 2013.6 FT
W.S. ELEVATION AT DATE OF SURVEY	= 2005.61 FT

BM #1
N 727747.8070 E 899427.3090
ELEVATION = 2019.57'
-BL- STATION 8+10.00 146.0' LT

V&M Vaughn & Melton Consulting Engineers
Asheville, North Carolina 828-253-2796
Tri-Cities, Tennessee 423-467-8401
Knoxville, Tennessee 865-546-5800
Middlesboro, Kentucky 606-248-6600
Spartanburg, South Carolina 864-574-4775
Charlotte, North Carolina 704-837-7815
Copyright © 2006 Vaughn & Melton, Inc. All Rights Reserved

V&M Vaughn & Melton Consulting Engineers
Asheville, North Carolina 828-253-2796
Tri-Cities, Tennessee 423-467-8401
Knoxville, Tennessee 865-546-5800
Middlesboro, Kentucky 606-248-6600
Spartanburg, South Carolina 864-574-4775
Charlotte, North Carolina 704-895-9051
Copyright © 1994 Vaughn & Melton, Inc. All Rights Reserved

8/17/99
REVISIONS
SYSTIME
ENGINEER
SPNAME
VERSION

COMPUTED BY: ACC	DATE: 10/17/11
CHECKED BY: ACC	DATE: 10/17/11

PROJECT REFERENCE NO.	SHEET NO.
BD-5113B	X-0

DIVISION OF HIGHWAYS
STATE OF NORTH CAROLINA

CROSS SECTION SUMMARY

IN CUBIC YARDS

-L- LOCATION	UNCLASSIFIED EXCAVATION	EMBT
11+75	0	0
12+00	0	10
12+50	0	65
12+70.62 BEGIN BRIDGE	0	37
13+63.21 END BRIDGE	0	0
14+00	0	48
14+50	3	22
15+00	3	11

NOTE: EMBANKMENT COLUMN DOES NOT INCLUDE BACKFILL FOR UNDERCUT.

NORTH CAROLINA PROFESSIONAL SEAL 26960 ENGINEER PRICE M. SCHULER
4/3/12

Approximate quantities only. Unclassified excavation, borrow excavation, fine grading, clearing and grubbing, and removal of existing pavement will be paid for at the contract lump sum price for "grading".

0 2.5 5	PROJ. REFERENCE NO.	SHEET NO.
	BD-5113B	X-1

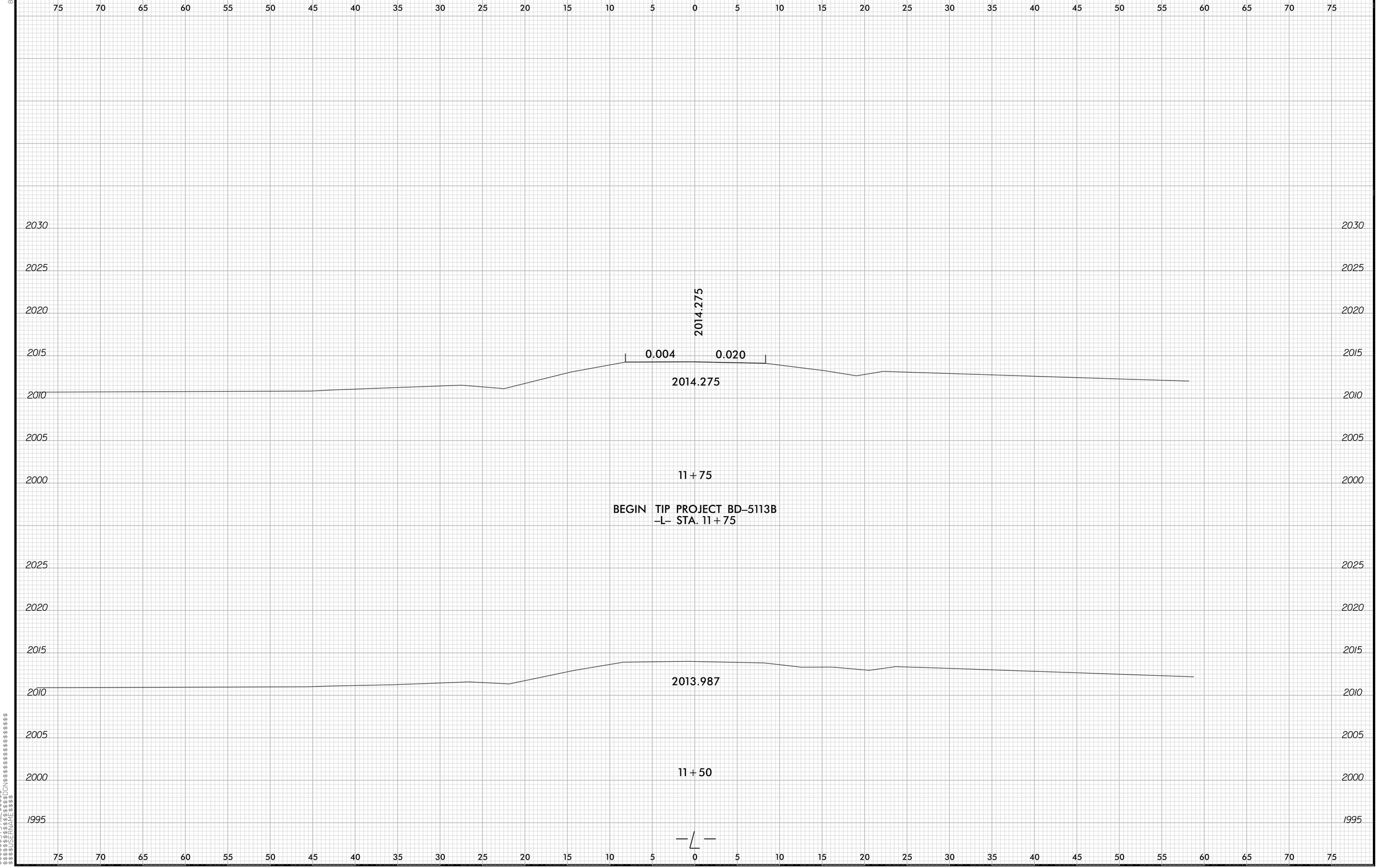

8/23/99

$$$

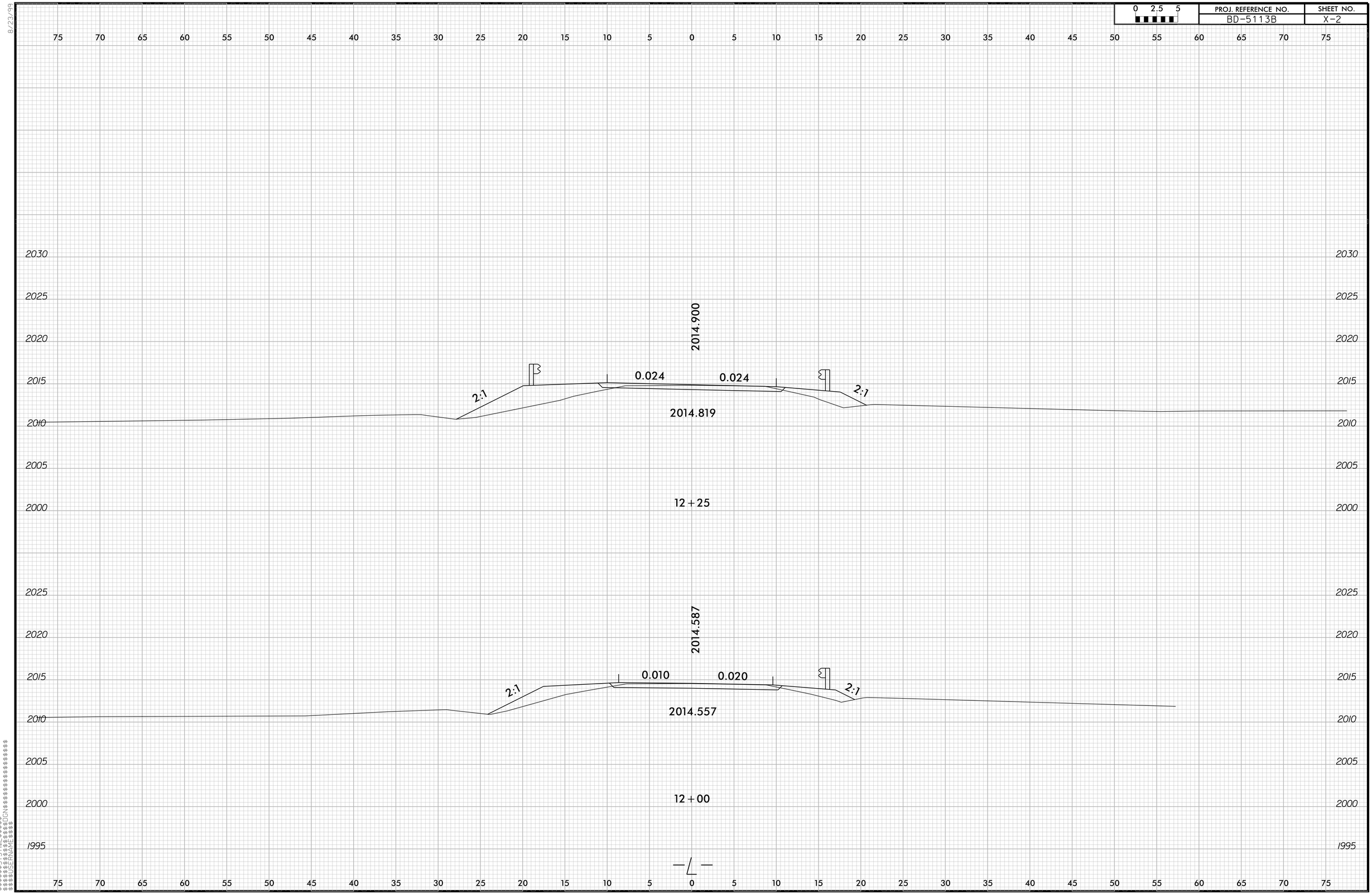

0 2.5 5
PROJ. REFERENCE NO.
BD-5113B
SHEET NO.
X-2
2014.900
0.024
0.024
2:1
2:1
2014.819
12+25
2014.587
0.010
0.020
2:1
2:1
2014.557
12+00

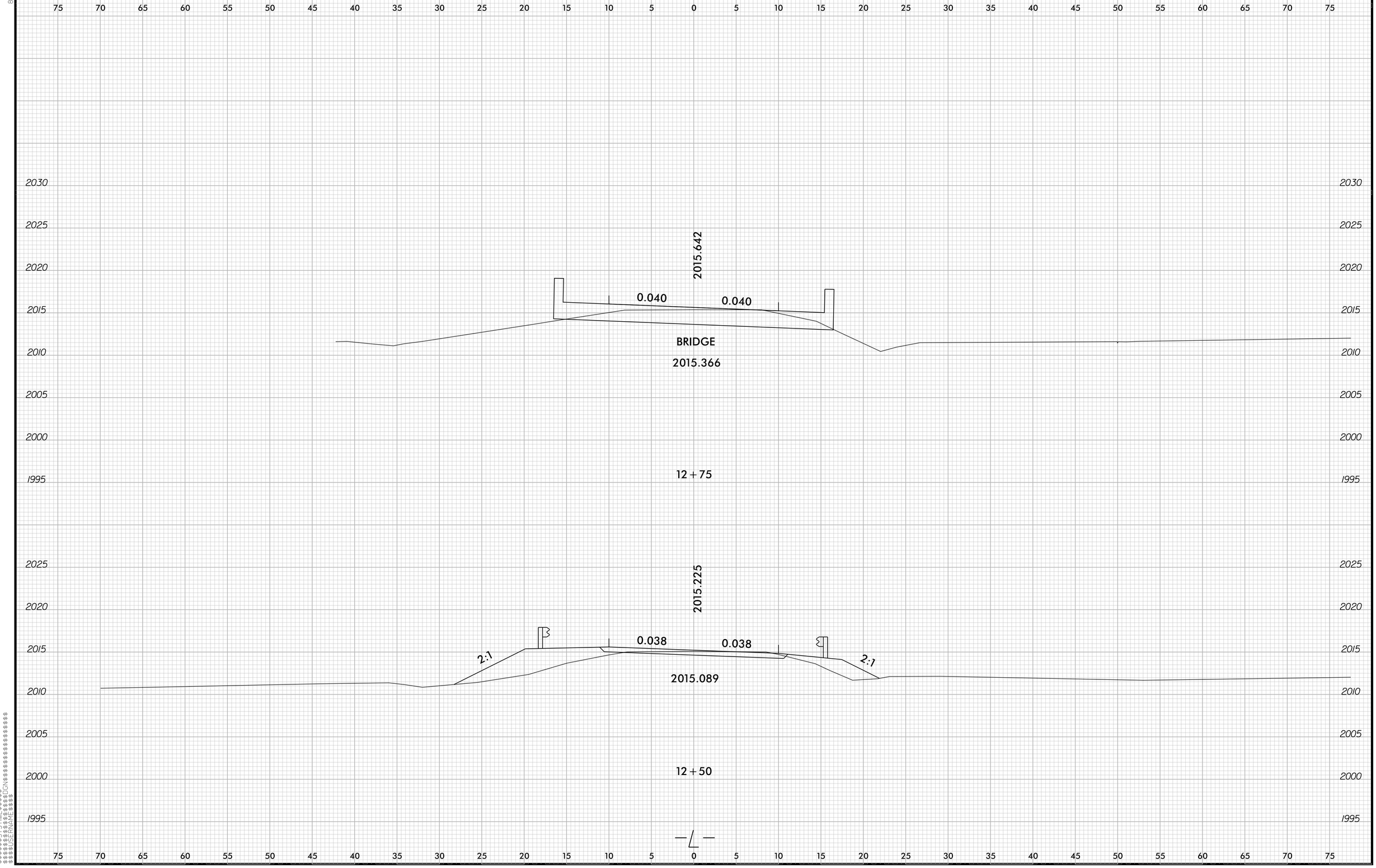

0 2.5 5
PROJ. REFERENCE NO.
BD-5113B
SHEET NO.
X-3
2015.642
0.040
0.040
BRIDGE
2015.366
12+75
2015.225
0.038
0.038
2:1
2:1
2015.089
12+50

0 2.5 5	PROJ. REFERENCE NO.	SHEET NO.
	BD-5113B	X-4

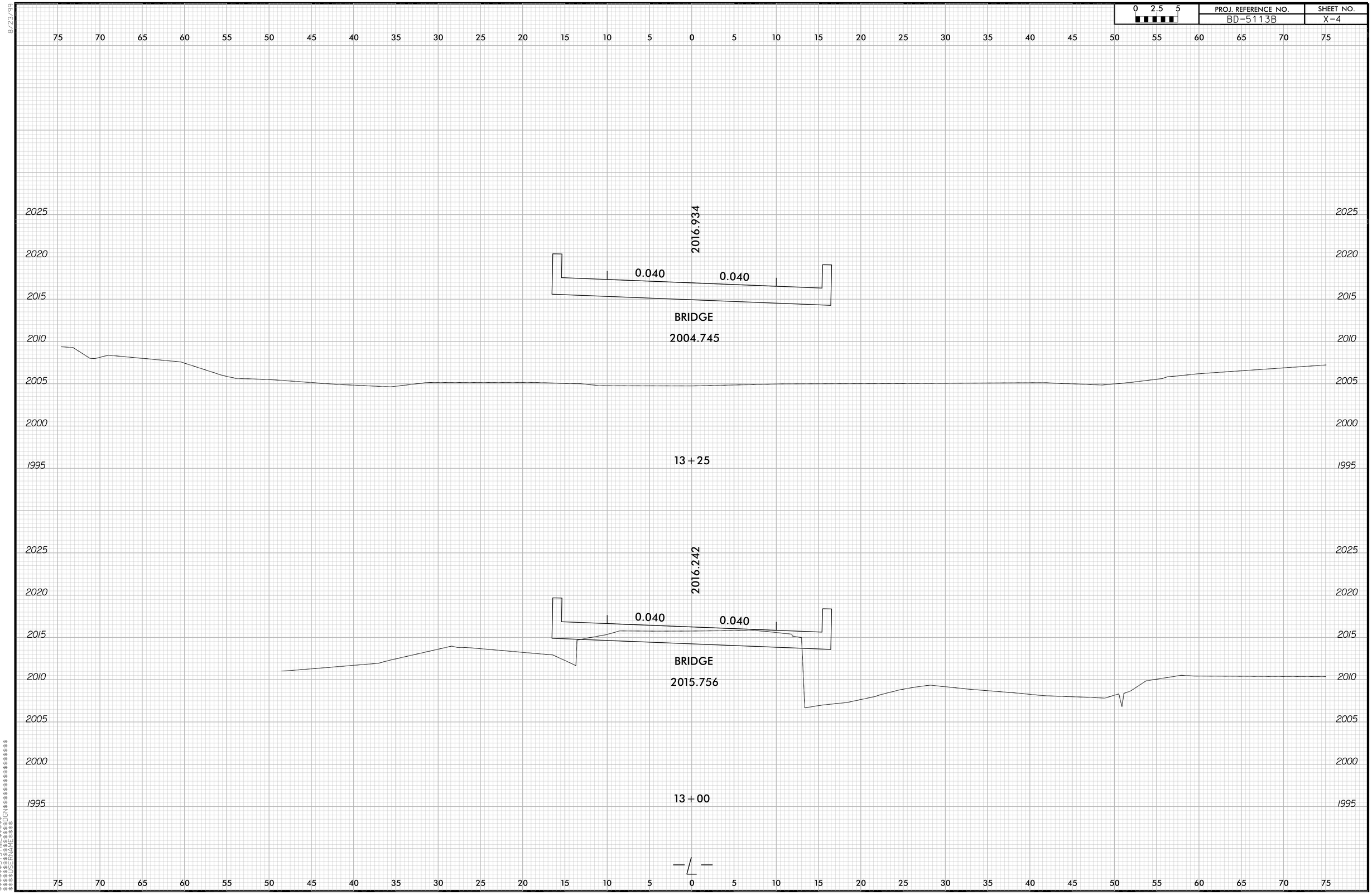

8/23/99

$$$

0 2.5 5	PROJ. REFERENCE NO.	SHEET NO.
	BD-5113B	X-5

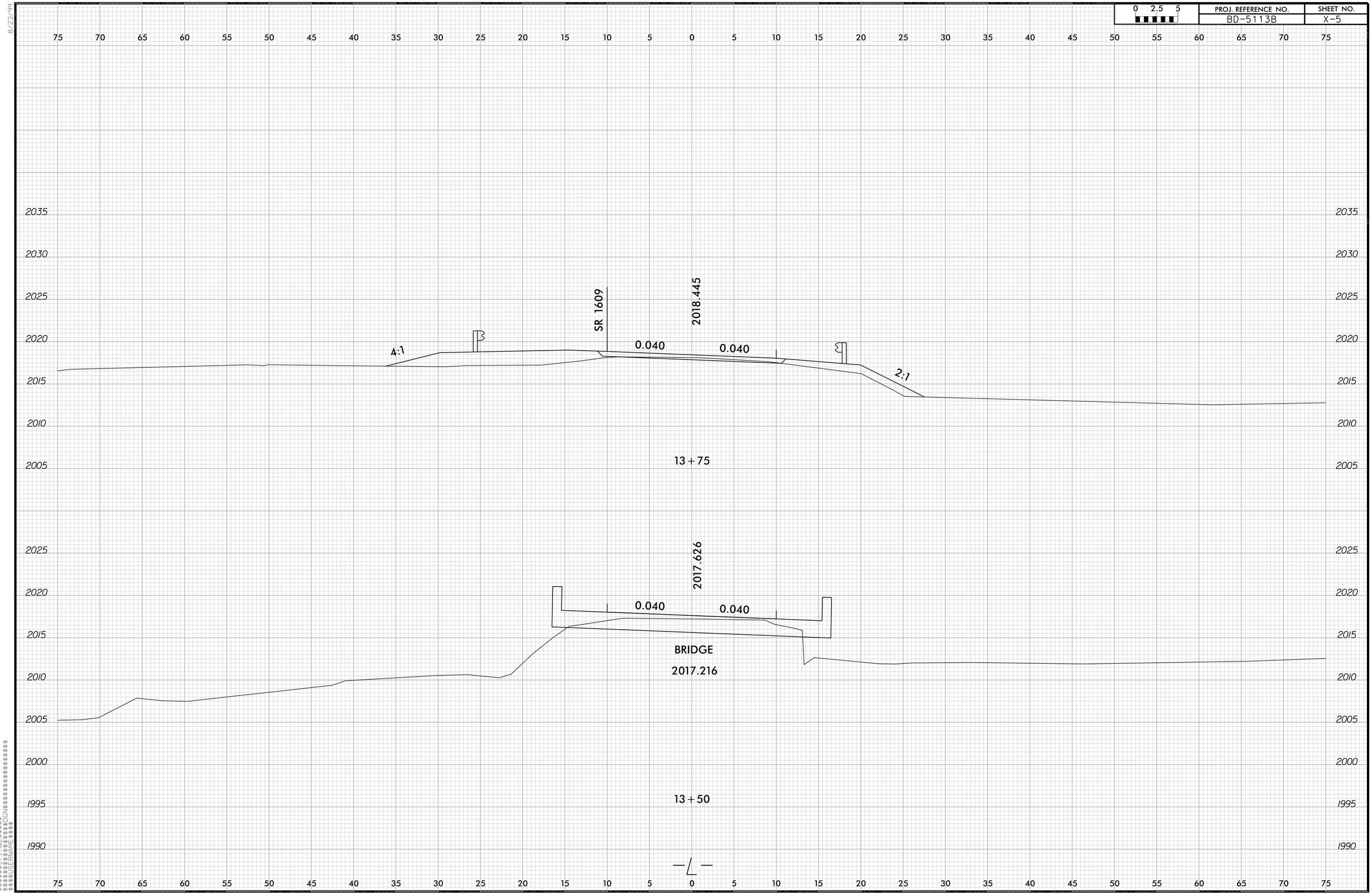

8/23/99

$$$

0 2.5 5	PROJ. REFERENCE NO.	SHEET NO.
	BD-5113B	X-6

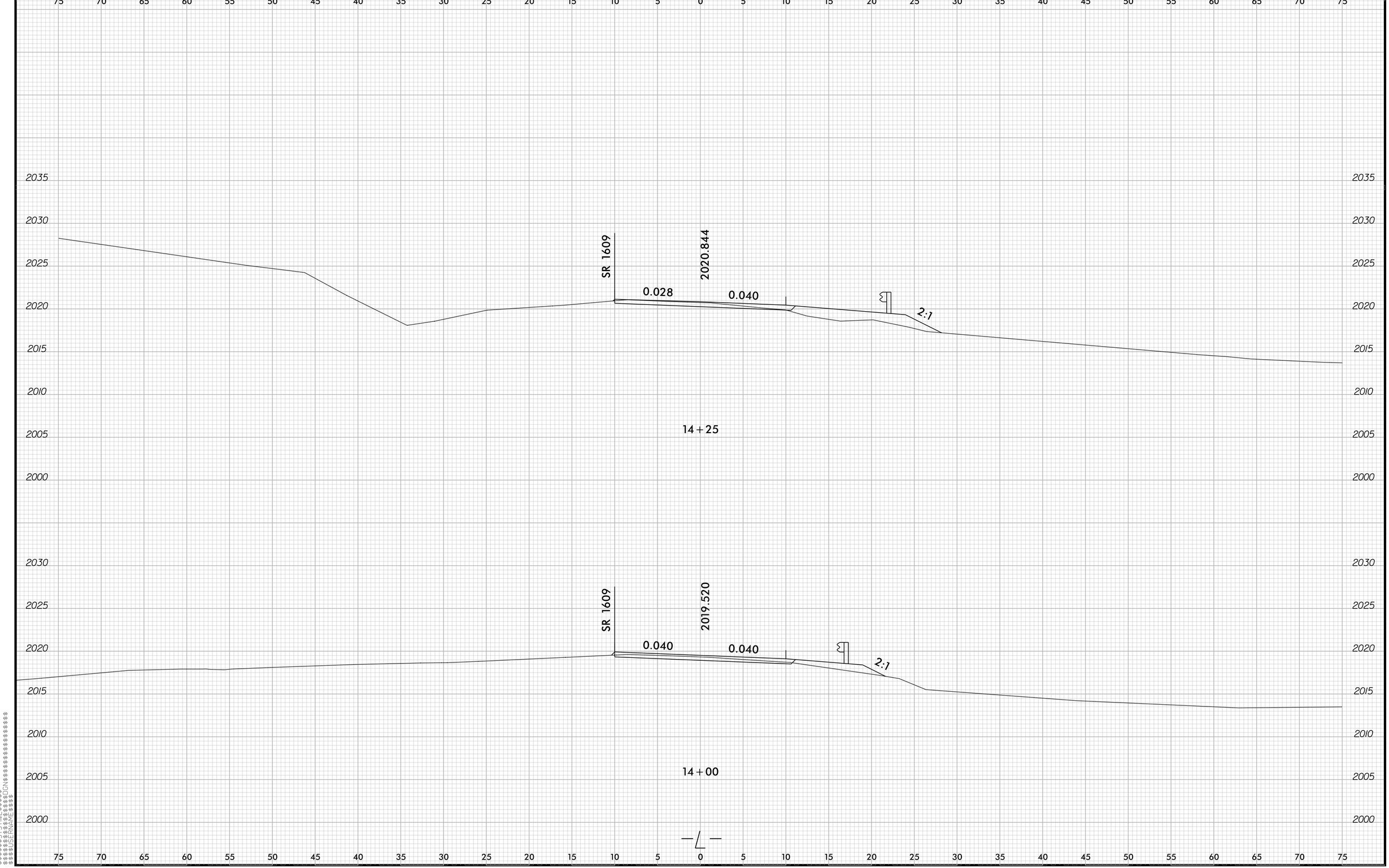

8/23/99

$$$

0 2.5 5	PROJ. REFERENCE NO.	SHEET NO.
	BD-5113B	X-7

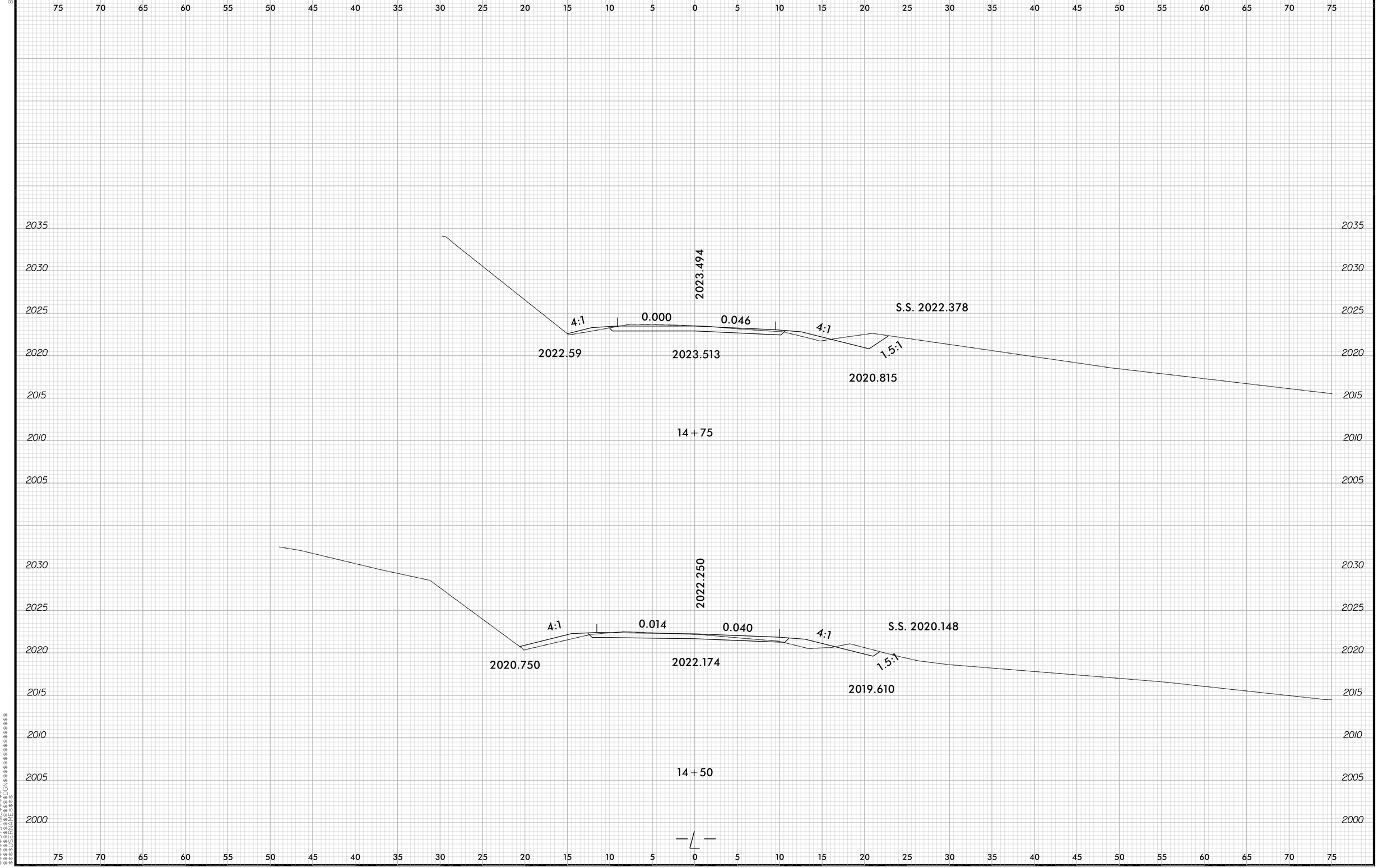

8/23/99

0 2.5 5	PROJ. REFERENCE NO.	SHEET NO.
	BD-5113B	X-8

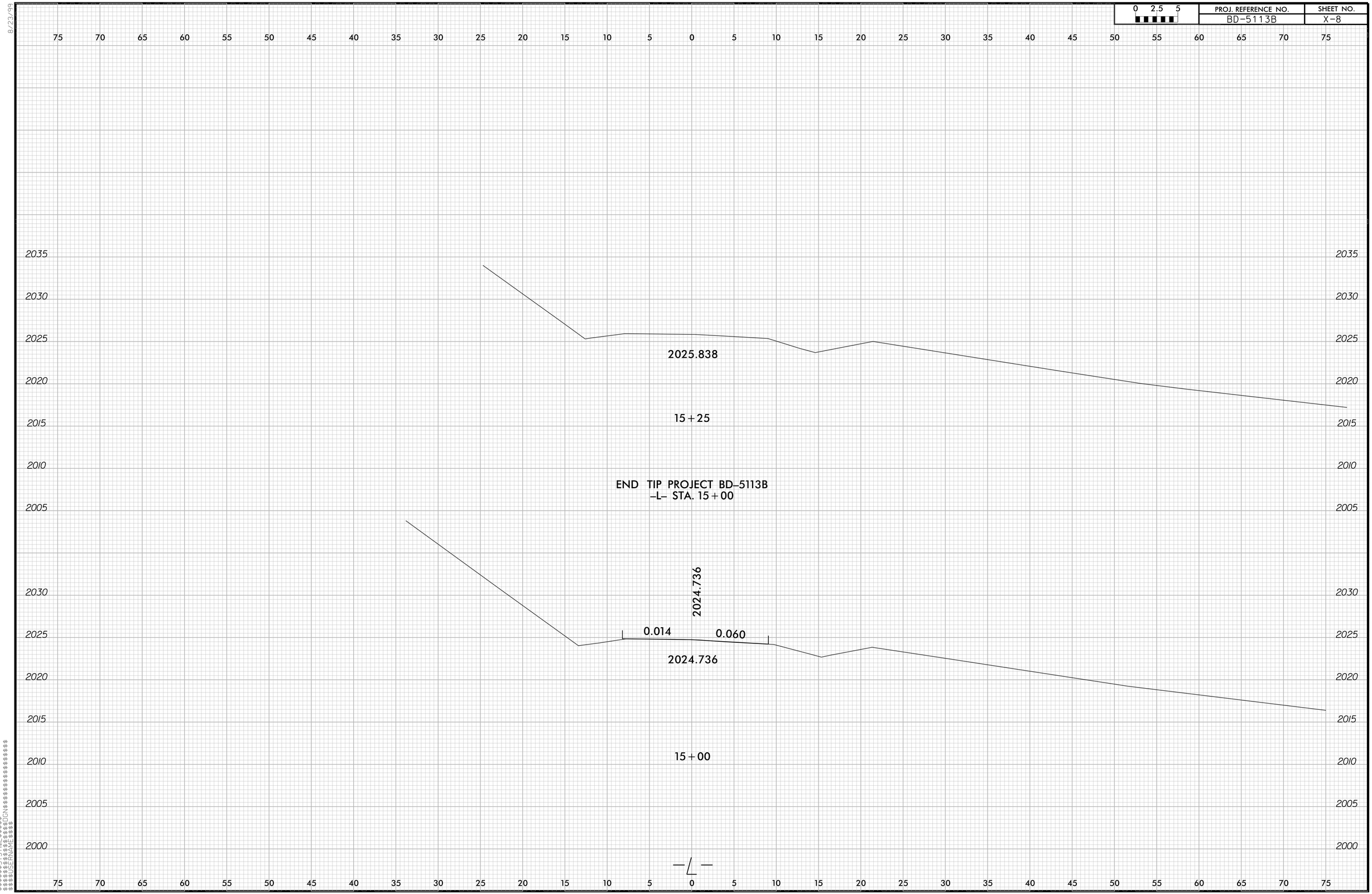

8/23/99

$$$

CONTRACT TIP NO: BD-5113B

STATE	STATE PROJECT REFERENCE NO.	SHEET NO.	TOTAL SHEETS
N.C.	BD-5113B	S-0	

STATE PROJ. NO.	F. A. PROJ. NO.	DESCRIPTION
		CONST.

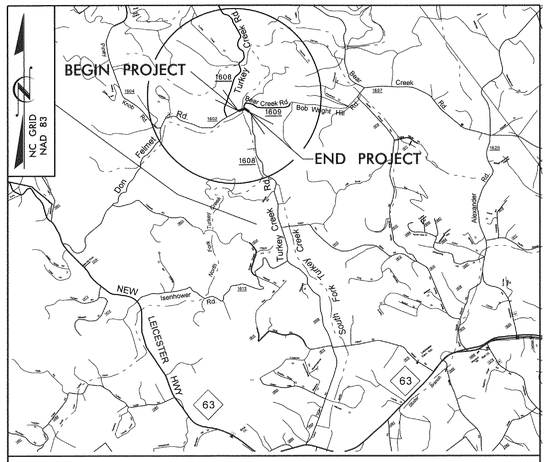

VICINITY MAP NTS.

STATE OF NORTH CAROLINA

DIVISION OF HIGHWAYS

BUNCOMBE COUNTY

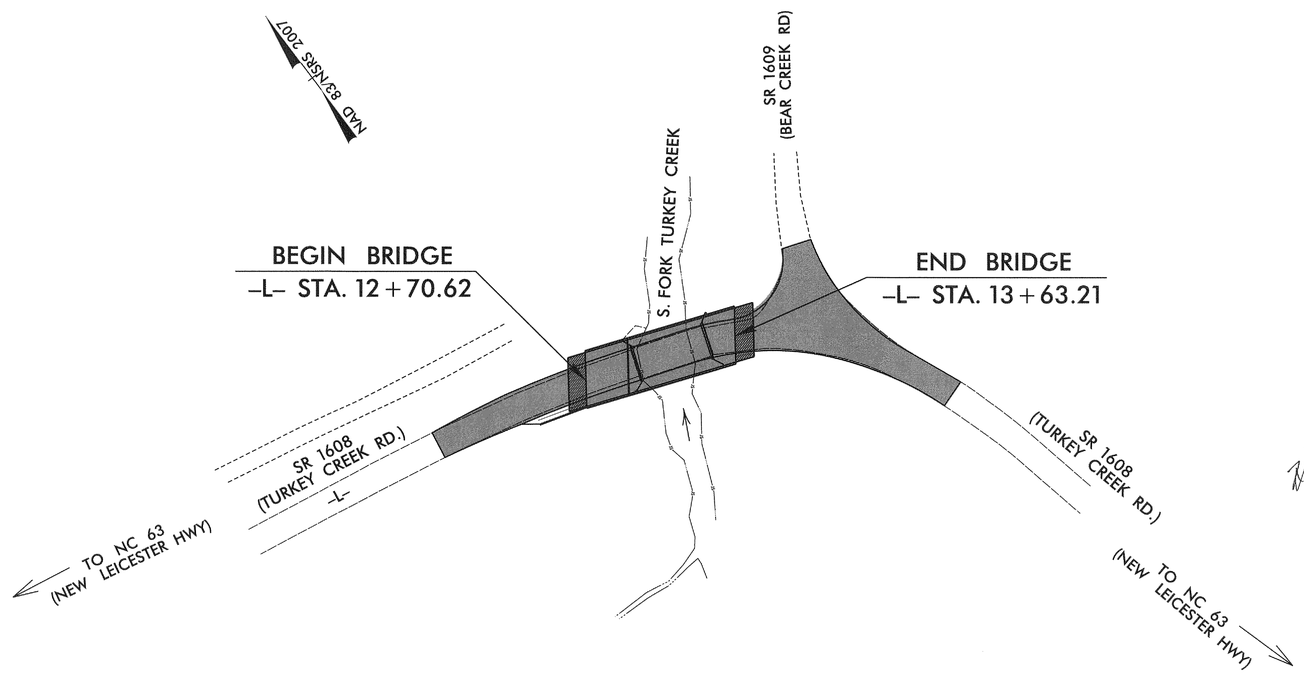

NORTH CAROLINA PROFESSIONAL SEAL 20777 ENGINEER HARDY L. WILLIS 5/18/12

V&M Vaughn & Melton Consulting Engineers

Asheville, North Carolina 828-253-2796

Charlotte, North Carolina 704-357-0488

Tri-Cities, Tennessee 423-467-8401

Knoxville, Tennessee 865-546-5800

Middlesboro, Kentucky 606-248-6600

Spartanburg, South Carolina 864-574-4775

Copyright © 2006 Vaughn & Melton, Inc. All Rights Reserved

STRUCTURES

STATE OF NORTH CAROLINA DEPARTMENT OF TRANSPORTATION

DESIGN DATA

ADT 2006 = 930
ADT 2025 = 1860
T = 6%
V = 40 MPH

FUNCT. CLASS = RURAL COLLECTOR
SUB-REGIONAL TIER

PROJECT LENGTH

LENGTH ROADWAY TIP PROJECT BD-5113B = 0.044 MI
LENGTH STRUCTURE TIP PROJECT BD-5113B = 0.018 MI
TOTAL LENGTH OF TIP PROJECT BD-5113B = 0.062 MI

Prepared In the Office of:
VAUGHN & MELTON
1318-F PATTON AVE.
ASHEVILLE NC. 28806
FOR THE NORTH CAROLINA DIVISION OF HIGHWAYS

2012 STANDARD SPECIFICATIONS

LETTING DATE :
APRIL 18, 2012

HARDY WILLIS, PE
PROJECT ENGINEER

REECE SCHULER, PE
PROJECT DESIGN ENGINEER

STRUCTURES MANAGEMENT UNIT
1000 BIRCH RIDGE DR.
RALEIGH, N.C. 27610

DIVISION OF HIGHWAYS
STATE OF NORTH CAROLINA

GARRY MOORE P.E.
STATE DESIGN ENGINEER

DEPARTMENT OF TRANSPORTATION
FEDERAL HIGHWAY ADMINISTRATION

APPROVED
DIVISION ADMINISTRATOR DATE

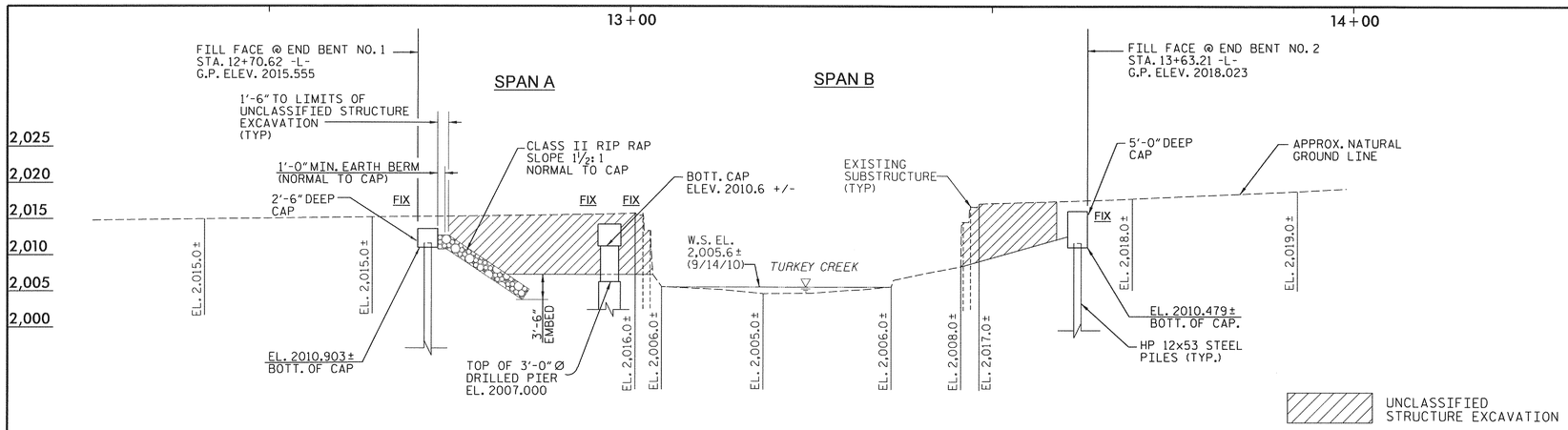

SECTION ALONG ℄ SURVEY -L-

NOTE: SECTIONS AT BENT AND END BENTS ARE AT RIGHT ANGLES.

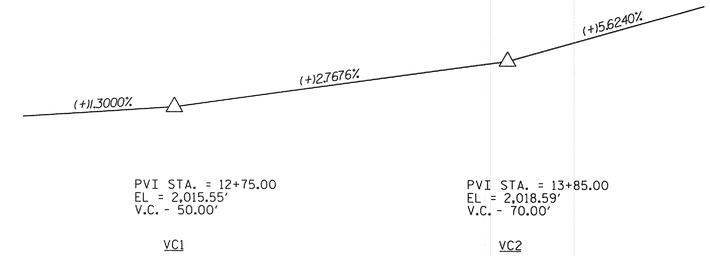

GRADE DATA -L-

PI Sta 12+32.93	PI Sta 13+79.56
Δ = 9° 26' 41.3" (RT)	Δ = 31° 08' 45.4" (RT)
D = 8° 00' 00.0"	D = 34° 30' 00.0"
L = 118.06'	L = 90.28'
T = 59.16'	T = 46.28'
R = 716.20'	R = 166.07'

HORIZONTAL CURVE DATA -L-

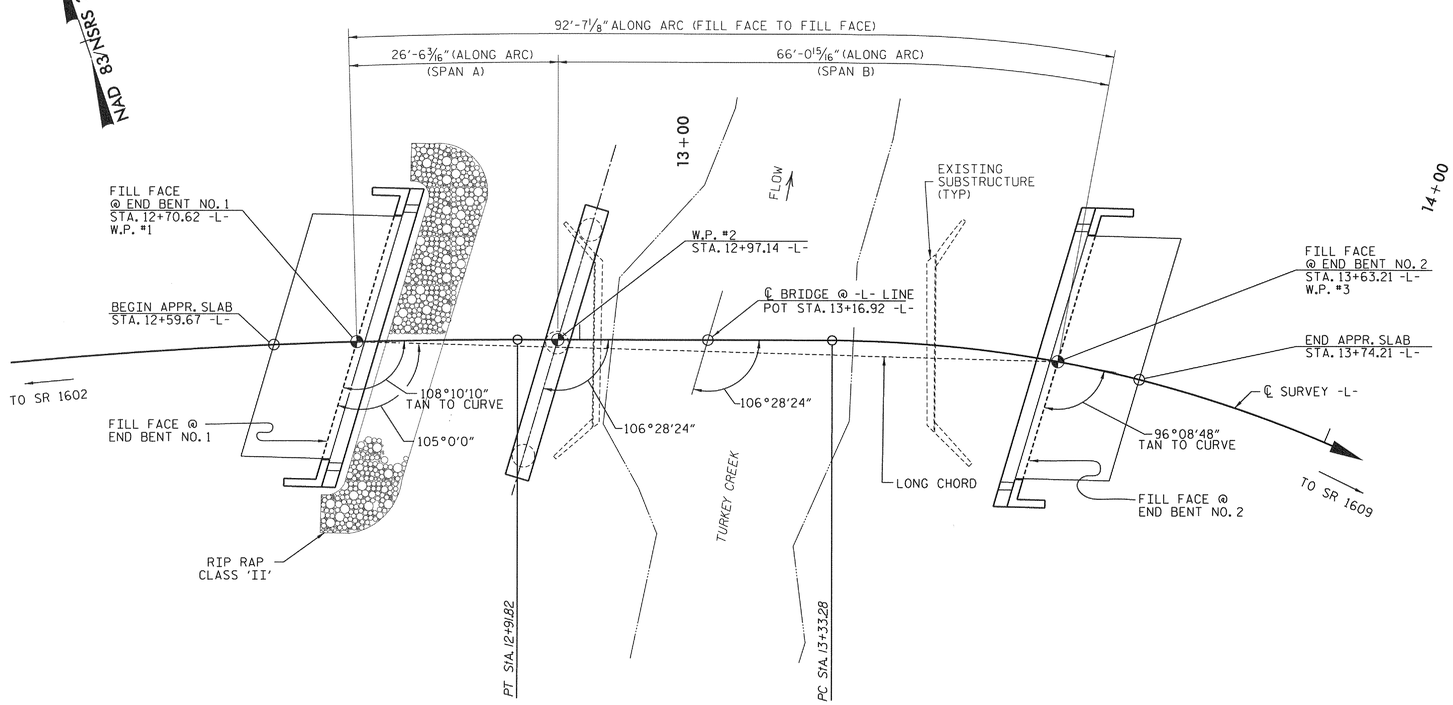

PLAN ALONG ℄ SURVEY -L-

NOTES: END BENTS AND BENT ARE PARALLEL.
CORED SLABS ARE PARALLEL TO LONG CHORD.
PILES ARE NOT SHOWN IN PLAN VIEW.

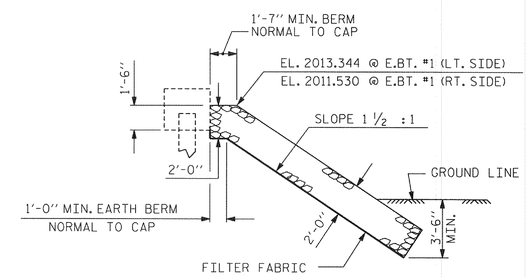

RIP RAP DETAIL

SECTION ALONG ℄ -L-

NORTH CAROLINA PROFESSIONAL SEAL 20777 ENGINEER HARDY L. WILLIS 5/18/12

PROJECT NO. BD-5113B
BUNCOMBE COUNTY
STATION: 13+16.92 -L-
SHEET 1 OF 3 REPLACES BRIDGE NO. 15

STATE OF NORTH CAROLINA
DEPARTMENT OF TRANSPORTATION
RALEIGH

GENERAL DRAWING
FOR BRIDGE on SR 1608
over TURKEY CK.
Between SR 1602 and SR 1609

JAN. 2012

V&M Vaughn & Melton Consulting Engineers
Middlesboro, Kentucky 606-248-5800
Knoxville, Tennessee 865-546-5800
Asheville, North Carolina 828-253-2796
Copyright © 2006 Vaughn & Melton, Inc. All Rights Reserved

DRAWN BY: MAF DATE: JAN. 2012
CHECKED BY: HLW DATE: JAN. 2012

REVISIONS						SHEET NO.
NO.	BY:	DATE:	NO.	BY:	DATE:	S-1
1			3			TOTAL SHEETS
2			4			21

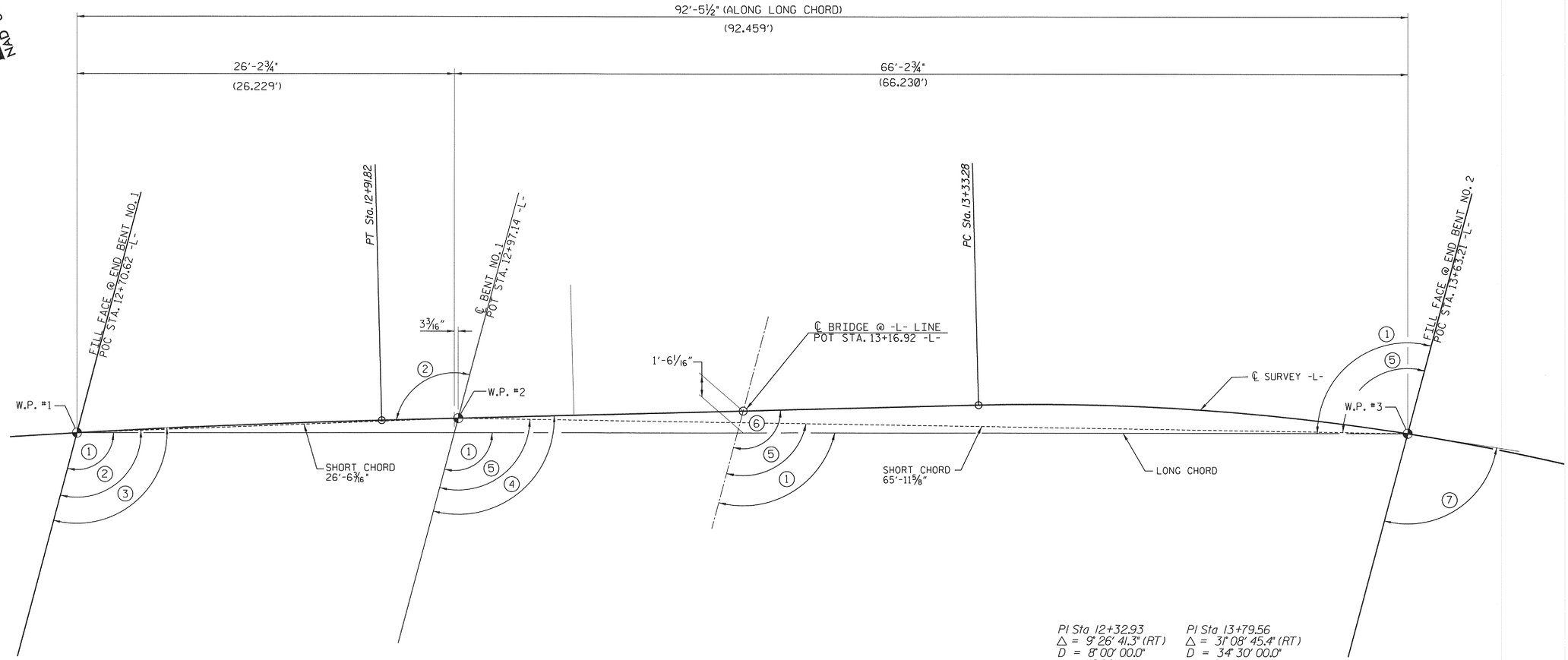

PI Sta 12+32.93	PI Sta 13+79.56
Δ = 9° 26' 41.3" (RT)	Δ = 31° 08' 45.4" (RT)
D = 8° 00' 00.0"	D = 34° 30' 00.0"
L = 118.06'	L = 90.28'
T = 59.16'	T = 46.28'
R = 716.20'	R = 166.07'

HORIZONTAL CURVE DATA -L-

LONG CHORD LAYOUT

1. 105°0'0" TO LONG CHORD
2. 107°09'05" TO SHORT CHORD
3. 108°10'10" TAN TO CURVE, ℄ SURVEY -L-
4. 106°28'24" TO ℄ SURVEY -L-
5. 104°08'11" TO SHORT CHORD
6. 106°28'24" TO ℄ SURVEY -L-
7. 96°08'48" TAN TO CURVE, ℄ SURVEY -L-

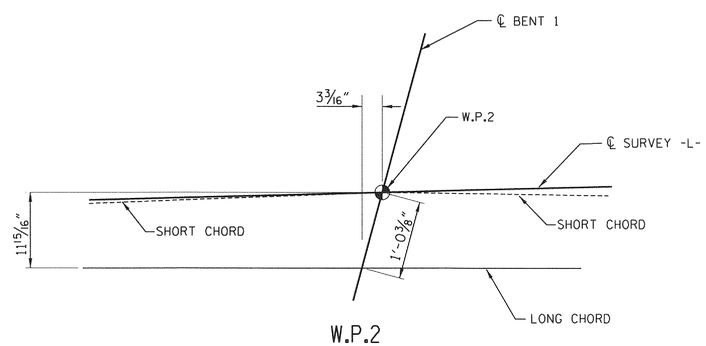

W.P.2

NORTH CAROLINA PROFESSIONAL SEAL 20777 ENGINEER HARDY L. WILLIS
5/18/12

PROJECT NO. BD-5113B
BUNCOMBE COUNTY
STATION: 13+16.92 -L-
SHEET 2 OF 3

STATE OF NORTH CAROLINA
DEPARTMENT OF TRANSPORTATION
RALEIGH

GENERAL DRAWING
FOR BRIDGE on SR 1608
over TURKEY CK.
Between SR 1602 and SR 1609

JAN. 2012

V&M Vaughn & Melton Consulting Engineers
Middlesboro, Kentucky 606-248-5600
Knoxville, Tennessee 865-546-5600
Asheville, North Carolina 828-253-2796
Copyright © 2006 Vaughn & Melton, Inc. All Rights Reserved

DRAWN BY: MAF DATE: JAN. 2012
CHECKED BY: HLW DATE: JAN. 2012

REVISIONS							
NO.	BY:	DATE:	NO.	BY:	DATE:		
1			3				
2			4				

SHEET NO. S-2
TOTAL SHEETS 21

BM #1 - RR SPIKE IN 14"BLACK WALNUT - N 727748 E 899427 ELEV. = 2019.57' -BL- STATION 8+10.00 146' LT

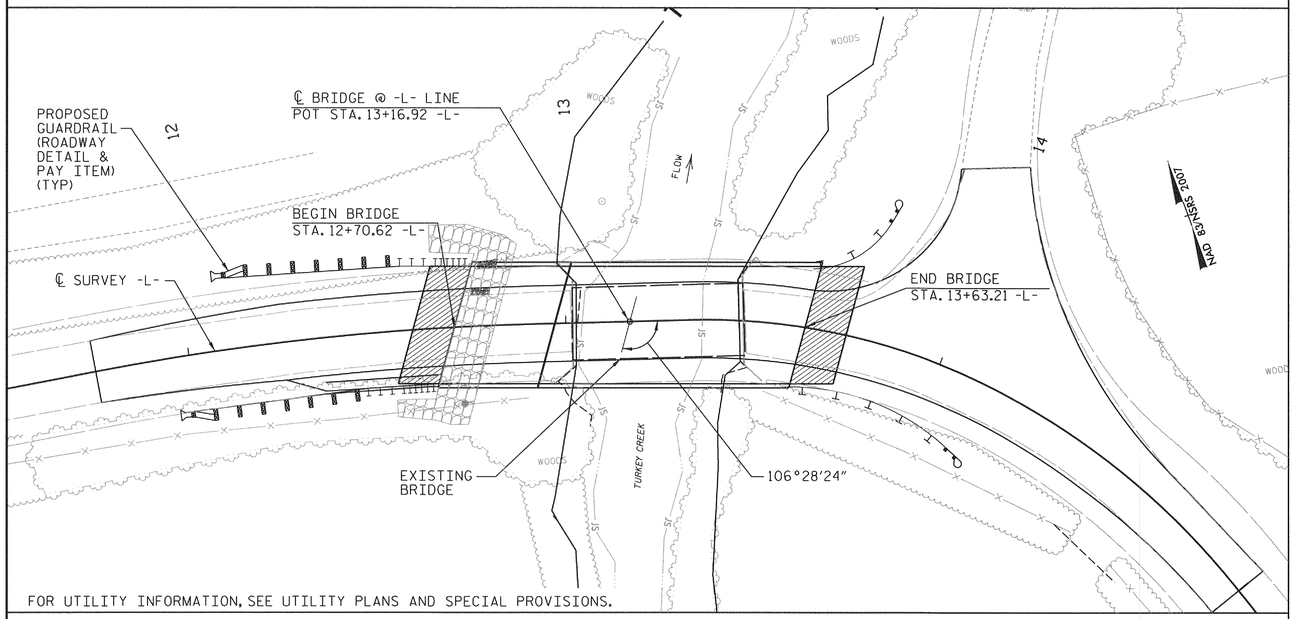

FOR UTILITY INFORMATION, SEE UTILITY PLANS AND SPECIAL PROVISIONS.

LOCATION SKETCH

GENERAL NOTES:

ASSUMED LIVE LOAD = HL 93 OR ALTERNATE LOADING.

THIS BRIDGE HAS BEEN DESIGNED IN ACCORDANCE WITH THE REQUIREMENTS OF THE AASHTO LRFD BRIDGE DESIGN SPECIFICATIONS. THIS BRIDGE IS LOCATED IN SEISMIC PERFORMANCE ZONE 1. NO DETAILED SEISMIC DESIGN IS REQUIRED.

FOR OTHER DESIGN DATA AND GENERAL NOTES, SEE "STANDARD NOTES" SHEET.

FOR EROSION CONTROL MEASURES, SEE EROSION CONTROL PLANS.

THE EXISTING STRUCTURE, CONSISTING OF A ONE SPAN, 45-FOOT LONG TIMBER DECK ON STEEL STRINGERS, 20-FEET WIDE, ON VERTICAL END BENTS, AND LOCATED AT THE PROPOSED STRUCTURE, SHALL BE REMOVED. THE EXISTING BRIDGE IS PRESENTLY POSTED BELOW THE LEGAL LOAD LIMIT. SHOULD THE STRUCTURAL INTEGRITY OF THE BRIDGE FURTHER DETERIORATE, THIS LOAD LIMITATION MAY BE REDUCED AS FOUND NECESSARY DURING THE LIFE OF THE PROJECT.

REMOVAL OF THE EXISTING BRIDGE SHALL BE PERFORMED SO AS NOT TO ALLOW DEBRIS TO FALL INTO THE WATER. THE CONTRACTOR SHALL REMOVE THE BRIDGE AND SUBMIT PLANS FOR DEMOLITION IN ACCORDANCE WITH ARTICLE 402-2 OF THE STANDARD SPECIFICATIONS.

THE SUBSTRUCTURE OF THE EXISTING BRIDGE INDICATED ON THE PLANS IS FROM THE BEST INFORMATION AVAILABLE. SINCE THIS INFORMATION IS SHOWN FOR THE CONVENIENCE OF THE CONTRACTOR, THE CONTRACTOR SHALL HAVE NO CLAIM WHATSOEVER AGAINST THE DEPARTMENT OF TRANSPORTATION FOR ANY DELAYS OR ADDITIONAL COST INCURRED BASED ON DIFFERENCES BETWEEN THE EXISTING BRIDGE SUBSTRUCTURE SHOWN ON THE PLANS AND THE ACTUAL CONDITIONS AT THE PROJECT SITE.

THIS STRUCTURE HAS BEEN DESIGNED IN ACCORDANCE WITH HEC 18, "EVALUATING SCOUR AT BRIDGES", MAY 2001.

FOR SUBMITTAL OF WORKING DRAWINGS, SEE SPECIAL PROVISIONS.

FOR FALSEWORK AND FORMWORK, SEE SPECIAL PROVISIONS.

FOR CRANE SAFETY, SEE SPECIAL PROVISIONS.

FOR PRESTRESSED CONCRETE MEMBERS, SEE SPECIAL PROVISIONS.

FOR GROUT FOR STRUCTURES, SEE SPECIAL PROVISIONS.

FOR VERTICAL CONCRETE BARRIER RAIL, SEE SPECIAL PROVISIONS.

FOR CURING CONCRETE, SEE SPECIAL PROVISIONS.

THE MATERIAL SHOWN IN THE CROSS-HATCHED AREA SHALL BE EXCAVATED FOR A DISTANCE OF 25 FT. EACH SIDE OF CENTERLINE ROADWAY AS DIRECTED BY THE ENGINEER. THIS WORK WILL BE PAID FOR AT THE CONTRACT LUMP SUM PRICE FOR UNCLASSIFIED STRUCTURE EXCAVATION. SEE SECTION 412 OF THE STANDARD SPECIFICATIONS.

ASPHALT WEARING SURFACE IS INCLUDED IN ROADWAY QUANTITY ON ROADWAY PLANS.

FOR PILES, SEE SPECIAL PROVISIONS.

PILES AT END BENT NO. 1 ARE DESIGNED FOR A FACTORED RESISTANCE OF 50 TONS PER PILE.

DRIVE PILES AT END BENT NO. 1 TO A REQUIRED DRIVING RESISTANCE OF 83 TONS PER PILE.

FOR DRILLED PIERS, SEE SPECIAL PROVISIONS.

DRILLED PIERS AT BENT NO. 1 ARE DESIGNED FOR A FACTORED RESISTANCE OF 365.0 TONS PER PIER. CHECK FIELD CONDITIONS FOR THE REQUIRED TIP RESISTANCE OF 30.0 TSF.

PERMANENT STEEL CASINGS MAY BE REQUIRED FOR DRILLED PIERS AT BENT NO. 1. IF REQUIRED, DO NOT EXTEND PERMANENT CASINGS BELOW ELEVATION 2000.0 FT. WITHOUT PRIOR APPROVAL FROM THE ENGINEER. THE ENGINEER WILL DETERMINE THE NEED FOR PERMANENT STEEL CASINGS.

INSTALL DRILLED PIERS AT BENT NO. 1 THAT EXTEND TO AN ELEVATION NO HIGHER THAN 1990.0 FT; SATISFY THE REQUIRED END BEARING CAPACITY AND HAVE A MINIMUM PENETRATION OF 6 FT. INTO ROCK AS DEFINED BY THE DRILL PIERS PROVISION.

THE SCOUR CRITICAL ELEVATION FOR BENT NO. 1 IS ELEVATION 1999.0 FT. THE SCOUR CRITICAL ELEVATIONS ARE USED TO MONITOR POSSIBLE SCOUR PROBLEMS DURING THE LIFE OF THE STRUCTURE.

SID INSPECTIONS MAY BE REQUIRED FOR THE DRILLED PIERS. THE ENGINEER WILL DETERMINE THE NEED FOR SID INSPECTIONS.

CSL TUBES ARE REQUIRED AND CSL TESTING MAY BE REQUIRED FOR THE DRILLED PIERS. THE ENGINEER WILL DETERMINE THE NEED FOR CSL TESTING. FOR CROSSHOLE SONIC LOGGING, SEE SPECIAL PROVISIONS.

SPT MAY BE REQUIRED FOR DRILLED PIERS. THE ENGINEER WILL DETERMINE THE NEED FOR SPT TESTING. FOR SPT TESTING, SEE SPECIAL PROVISIONS.

PILES AT END BENT NO. 2 ARE DESIGNED FOR A FACTORED RESISTANCE OF 80 TONS PER PILE.

DRIVE PILES AT END BENT NO. 2 TO A REQUIRED DRIVING RESISTANCE OF 133 TONS PER PILE.

TOTAL BILL OF MATERIAL

	REMOVAL OF EXISTING STRUCTURE	3'-0" Ø DRILLED PIERS IN SOIL	3'-0" Ø DRILLED PIERS NOT IN SOIL	PERMANENT STEEL CASINGS FOR 3'-0" DIA. DRILLED PIER	SID INSPECTIONS	SPT TESTING	CROSSHOLE SONIC LOGGING	UNCLASSIFIED STRUCTURE EXCAVATION	CLASS A CONCRETE	BRIDGE APPROACH SLABS	REINFORCING STEEL	SPIRAL COLUMN REINFORCING STEEL	HP 12 X 53 STEEL PILES		VERTICAL CONCRETE BARRIER RAIL	RIP RAP CLASS II (2'-0" THICK)	FILTER FABRIC FOR DRAINAGE	ELASTOMERIC BEARINGS	3'-0" x 1'-9" PRESTRESSED CONCRETE CORED SLAB UNIT		3'-0" x 2'-0" PRESTRESSED CONCRETE CORED SLAB UNIT	
	LUMP SUM	LIN. FT.	LIN. FT.	LIN. FT.	EACH	EACH	EACH	LUMP SUM	CU. YARDS	LUMP SUM	LBS.	LBS.	NO.	LIN. FT.	LIN. FT.	TONS	SQ. YARDS	LUMP SUM	NO.	LIN. FT.	NO.	LIN. FT.
SUPERSTRUCTURE										LUMP SUM					180.51			LUMP SUM	11	275.00	11	715.00
END BENT 1								LUMP SUM	14.6		2,193		7	70		107	118					
BENT 1		22.0	29.0	21.0					16.0		7,673	1,076										
END BENT 2								LUMP SUM	26.1		2,801		7	105								
TOTAL	LUMP SUM	22.0	29.0	21.0	1	1	1	LUMP SUM	56.7	LUMP SUM	12,667	1,076	14	175	180.51	107	118	LUMP SUM	11	275.00	11	715.00

HYDROGRAPHIC DATA

DESIGN DISCHARGE	= 2788	CFS
DESIGN FREQUENCY	= 10	YRS
DESIGN HW ELEVATION	= 2013.6	FT
BASE DISCHARGE	= 5820	CFS
BASE FREQUENCY	= 100	YRS
BASE HW ELEVATION	= 2015.3	FT

OVERTOPPING FLOOD DATA

OVERTOPPING DISCHARGE	= 2788	CFS
OVERTOPPING FREQUENCY	= 10	YRS
OVERTOPPING ELEVATION	= 2013.6	FT

PROJECT NO. BD-5113B

BUNCOMBE COUNTY

STATION: 13+16.92 -L-

SHEET 3 OF 3

NORTH CAROLINA PROFESSIONAL SEAL 20777 ENGINEER HARDY L. WILLIS 5/18/12

Vaughn & Melton Consulting Engineers
Middlesboro, Kentucky 606-248-5600
Knoxville, Tennessee 865-546-5800
Asheville, North Carolina 828-253-2796
Copyright © 2006 Vaughn & Melton, Inc. All Rights Reserved

DRAWN BY: MAF DATE: JAN. 2012
CHECKED BY: HLW DATE: JAN. 2012

STATE OF NORTH CAROLINA
DEPARTMENT OF TRANSPORTATION
RALEIGH

GENERAL DRAWING
FOR BRIDGE on SR 1608
over TURKEY CK.
Between SR 1602 and SR 1609

JAN. 2012

REVISIONS						SHEET NO.
NO.	BY:	DATE:	NO.	BY:	DATE:	S-3
1			3			TOTAL SHEETS
2			4			21

LOAD AND RESISTANCE FACTOR RATING (LRFD) SUMMARY FOR PRESTRESSED CONCRETE GIRDERS

LEVEL		VEHICLE	WEIGHT (W) (TONS)	CONTROLLING LOAD RATING	MINIMUM RATING FACTORS (RF)	TONS = W X RF	STRENGTH I LIMIT STATE											SERVICE III LIMIT STATE						COMMENT NUMBER
							LIVELOAD FACTORS	MOMENT					SHEAR					LIVELOAD FACTORS	MOMENT					
								DISTRIBUTION FACTORS (DF)	RATING FACTOR	SPAN	GIRDER LOCATION	DISTANCE FROM LEFT END OF SPAN (ft)	DISTRIBUTION FACTORS (DF)	RATING FACTOR	SPAN	GIRDER LOCATION	DISTANCE FROM LEFT END OF SPAN (ft)		DISTRIBUTION FACTORS (DF)	RATING FACTOR	SPAN	GIRDER LOCATION	DISTANCE FROM LEFT END OF SPAN (ft)	
DESIGN LOAD RATING		HL-93(Inv)	N/A	1	1.233	--	1.75	0.279	2.57	25'	EL	11.982	0.637	**1.23**	25'	EL	**1.198**	0.80	0.279	2.37	25'	EL	11.982	
		HL-93(Opr)	N/A	--	1.598	--	1.35	0.279	3.34	25'	EL	11.982	0.637	1.6	25'	EL	1.198	N/A	--	--	--	--	--	
		HS-20(Inv)	36.000	2	1.428	51.406	1.75	0.279	3.82	25'	EL	11.982	0.637	**1.43**	25'	EL	**1.198**	0.80	0.279	3.52	25'	EL	11.982	
		HS-20(Opr)	36.000	--	1.851	66.637	1.35	0.279	4.95	25'	EL	11.982	0.637	1.85	25'	EL	1.198	N/A	--	--	--	--	--	
LEGAL LOAD RATING	SV	SNSH	13.500	--	3.307	44.639	1.4	0.279	6.95	25'	EL	11.982	0.637	3.31	25'	EL	1.198	0.80	0.279	5.11	25'	EL	11.982	
		SNGARBS2	20.000	--	2.65	53	1.4	0.279	6.5	25'	EL	11.982	0.637	2.65	25'	EL	1.198	0.80	0.279	4.79	25'	EL	11.982	
		SNAGRIS2	22.000	--	2.596	57.117	1.4	0.279	6.95	25'	EL	11.982	0.637	2.6	25'	EL	1.198	0.80	0.279	5.11	25'	EL	11.982	
		SNCOTTS3	27.250	--	1.678	45.729	1.4	0.279	3.64	25'	EL	11.982	0.637	1.68	25'	EL	1.198	0.80	0.279	2.68	25'	EL	11.982	
		SNAGGRS4	34.925	--	1.615	56.393	1.4	0.279	3.62	25'	EL	11.982	0.637	1.61	25'	EL	1.198	0.80	0.279	2.66	25'	EL	11.982	
		SNS5A	35.550	--	1.687	59.981	1.4	0.279	3.51	25'	EL	11.982	0.637	1.69	25'	EL	1.198	0.80	0.279	2.58	25'	EL	11.982	
		SNS6A	39.950	--	1.618	64.639	1.4	0.279	3.29	25'	EL	11.982	0.637	1.62	25'	EL	1.198	0.80	0.279	2.42	25'	EL	11.982	
		SNS7B	42.000	--	1.63	68.445	1.4	0.279	3.29	25'	EL	11.982	0.637	1.63	25'	EL	1.198	0.80	0.279	2.41	25'	EL	11.982	
	TTST	TNAGRIT3	33.000	--	1.982	65.415	1.4	0.279	4.64	25'	EL	11.982	0.637	1.98	25'	EL	1.198	0.80	0.279	3.41	25'	EL	11.982	
		TNT4A	33.075	--	1.798	59.466	1.4	0.279	4.02	25'	EL	11.982	0.637	1.8	25'	EL	1.198	0.80	0.279	2.96	25'	EL	11.982	
		TNT6A	41.600	--	1.694	70.481	1.4	0.279	3.78	25'	EL	11.982	0.637	1.69	25'	EL	1.198	0.80	0.279	2.78	25'	EL	11.982	
		TNT7A	42.000	--	1.687	70.851	1.4	0.279	3.9	25'	EL	11.982	0.637	1.69	25'	EL	1.198	0.80	0.279	2.87	25'	EL	11.982	
		TNT7B	42.000	--	1.628	68.365	1.4	0.279	3.52	25'	EL	11.982	0.637	1.63	25'	EL	1.198	0.80	0.279	2.59	25'	EL	11.982	
		TNAGRIT4	43.000	--	1.625	69.855	1.4	0.279	3.78	25'	EL	11.982	0.637	1.62	25'	EL	1.198	0.80	0.279	2.77	25'	EL	11.982	
		TNAGT5A	45.000	--	1.657	74.558	1.4	0.279	3.78	25'	EL	11.982	0.637	1.66	25'	EL	1.198	0.80	0.279	2.77	25'	EL	11.982	
		TNAGT5B	45.000	3	1.503	67.632	1.4	0.279	3.72	25'	EL	9.586	0.637	**1.5**	25'	EL	**1.198**	0.80	0.279	2.75	25'	EL	9.586	

LOAD FACTORS:

DESIGN LOAD RATING FACTORS	LIMIT STATE	γ_{DC}	γ_{DW}
	STRENGTH I	1.25	1.50
	SERVICE III	1.00	1.00

NOTES:

MINIMUM RATING FACTORS ARE BASED ON THE STRENGTH I AND SERVICE III LIMIT STATES.

ALLOWABLE STRESSES FOR SERVICE III LIMIT STATE ARE AS REQUIRED FOR DESIGN.

COMMENTS:

1.
2.
3.
4.

CONTROLLING LOAD RATING
1 DESIGN LOAD RATING (HL-93)
2 DESIGN LOAD RATING (HS-20)
3 LEGAL LOAD RATING **
** SEE CHART FOR VEHICLE TYPE

GIRDER LOCATION
I - INTERIOR GIRDER
EL - EXTERIOR LEFT GIRDER
ER - EXTERIOR RIGHT GIRDER

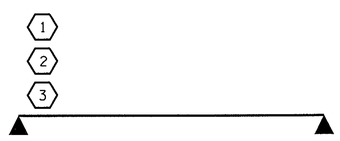

LRFR SUMMARY

FOR SPAN A

PROJECT NO. BD-5113B

BUNCOMBE COUNTY

STATION: 13+16.92 -L-

STATE OF NORTH CAROLINA
DEPARTMENT OF TRANSPORTATION
RALEIGH

STANDARD

LRFR SUMMARY FOR 25' CORED SLAB UNIT 105° SKEW

(NON-INTERSTATE TRAFFIC)

NORTH CAROLINA PROFESSIONAL SEAL 20125 ENGINEER MARSHALL L. CHEEK, JR.

1-12-12

REVISIONS						SHEET NO.
NO.	BY:	DATE:	NO.	BY:	DATE:	S-4
1			3			TOTAL SHEETS
2			4			21

ASSEMBLED BY :	B.MATHEW	DATE :	9/2011
CHECKED BY :	M.G. CHEEK	DATE :	12-11
DRAWN BY : CVC	6/10		
CHECKED BY : DNS	6/10		

12-JAN-2012 09:32
S:\DPG4\Marc\Low_Impact_Bridges\BD-5113B\BD-5113B_SD_LRFR.dgn
mpoole

LOAD AND RESISTANCE FACTOR RATING (LRFD) SUMMARY FOR PRESTRESSED CONCRETE GIRDERS

LEVEL		VEHICLE	WEIGHT (W) (TONS)	CONTROLLING LOAD RATING	MINIMUM RATING FACTORS (RF)	TONS = W X RF	STRENGTH I LIMIT STATE											SERVICE III LIMIT STATE						COMMENT NUMBER
							LIVELOAD FACTORS	MOMENT					SHEAR					LIVELOAD FACTORS	MOMENT					
								DISTRIBUTION FACTORS (DF)	RATING FACTOR	SPAN	GIRDER LOCATION	DISTANCE FROM LEFT END OF SPAN (ft)	DISTRIBUTION FACTORS (DF)	RATING FACTOR	SPAN	GIRDER LOCATION	DISTANCE FROM LEFT END OF SPAN (ft)		DISTRIBUTION FACTORS (DF)	RATING FACTOR	SPAN	GIRDER LOCATION	DISTANCE FROM LEFT END OF SPAN (ft)	
DESIGN LOAD RATING		HL-93(Inv)	N/A	(1)	1.03	--	1.75	0.269	1.06	65'	EL	31.982	0.608	1.05	65'	EL	3.198	0.80	0.269	**1.03**	65'	EL	**31.982**	
		HL-93(Opr)	N/A	--	1.362	--	1.35	0.269	1.38	65'	EL	31.982	0.608	1.36	65'	EL	3.198	N/A	--	--	--	--	--	
		HS-20(Inv)	36.000	(2)	1.296	46.666	1.75	0.269	1.36	65'	EL	31.982	0.608	**1.3**	65'	EL	**3.198**	0.80	0.269	1.32	65'	EL	31.982	
		HS-20(Opr)	36.000	--	1.68	60.493	1.35	0.269	1.76	65'	EL	31.982	0.608	1.68	65'	EL	3.198	N/A	--	--	--	--	--	
LEGAL LOAD RATING	SV	SNSH	13.500	--	2.898	39.127	1.4	0.269	3.74	65'	EL	31.982	0.608	3.82	65'	EL	3.198	0.80	0.269	2.90	65'	EL	31.982	
		SNGARBS2	20.000	--	2.194	43.878	1.4	0.269	2.83	65'	EL	31.982	0.608	2.73	65'	EL	3.198	0.80	0.269	2.19	65'	EL	31.982	
		SNAGRIS2	22.000	--	2.092	46.029	1.4	0.269	2.7	65'	EL	31.982	0.608	2.54	65'	EL	3.198	0.80	0.269	2.09	65'	EL	31.982	
		SNCOTTS3	27.250	--	1.443	39.328	1.4	0.269	1.86	65'	EL	31.982	0.608	1.91	65'	EL	3.198	0.80	0.269	1.44	65'	EL	31.982	
		SNAGGRS4	34.925	--	1.219	42.576	1.4	0.269	1.57	65'	EL	31.982	0.608	1.59	65'	EL	3.198	0.80	0.269	1.22	65'	EL	31.982	
		SNS5A	35.550	--	1.191	42.349	1.4	0.269	1.54	65'	EL	31.982	0.608	1.62	65'	EL	3.198	0.80	0.269	1.19	65'	EL	31.982	
		SNS6A	39.950	--	1.098	43.884	1.4	0.269	1.42	65'	EL	31.982	0.608	1.48	65'	EL	3.198	0.80	0.269	1.10	65'	EL	31.982	
		SNS7B	42.000	--	1.046	43.944	1.4	0.269	1.35	65'	EL	31.982	0.608	1.46	65'	EL	3.198	0.80	0.269	1.05	65'	EL	31.982	
	TTST	TNAGRIT3	33.000	--	1.341	44.258	1.4	0.269	1.73	65'	EL	31.982	0.608	1.76	65'	EL	3.198	0.80	0.269	1.34	65'	EL	31.982	
		TNT4A	33.075	--	1.349	44.604	1.4	0.269	1.74	65'	EL	31.982	0.608	1.71	65'	EL	3.198	0.80	0.269	1.35	65'	EL	31.982	
		TNT6A	41.600	--	1.108	46.092	1.4	0.269	1.43	65'	EL	31.982	0.608	1.56	65'	EL	3.198	0.80	0.269	1.11	65'	EL	31.982	
		TNT7A	42.000	--	1.116	46.888	1.4	0.269	1.44	65'	EL	31.982	0.608	1.52	65'	EL	3.198	0.80	0.269	1.12	65'	EL	31.982	
		TNT7B	42.000	--	1.162	48.806	1.4	0.269	1.5	65'	EL	31.982	0.608	1.42	65'	EL	3.198	0.80	0.269	1.16	65'	EL	31.982	
		TNAGRIT4	43.000	--	1.1	47.307	1.4	0.269	1.42	65'	EL	31.982	0.608	1.37	65'	EL	3.198	0.80	0.269	1.10	65'	EL	31.982	
		TNAGT5A	45.000	--	1.035	46.568	1.4	0.269	1.33	65'	EL	31.982	0.608	1.37	65'	EL	3.198	0.80	0.269	1.03	65'	EL	31.982	
		TNAGT5B	45.000	(3)	1.02	45.907	1.4	0.269	1.32	65'	EL	31.982	0.608	1.3	65'	EL	3.198	0.80	0.269	**1.02**	65'	EL	**31.982**	

LOAD FACTORS:

DESIGN LOAD RATING FACTORS	LIMIT STATE	γ_{DC}	γ_{DW}
	STRENGTH I	1.25	1.50
	SERVICE III	1.00	1.00

NOTES:

MINIMUM RATING FACTORS ARE BASED ON THE STRENGTH I AND SERVICE III LIMIT STATES.

ALLOWABLE STRESSES FOR SERVICE III LIMIT STATE ARE AS REQUIRED FOR DESIGN.

COMMENTS:

1.
2.
3.
4.

(#) CONTROLLING LOAD RATING

(1) DESIGN LOAD RATING (HL-93)

(2) DESIGN LOAD RATING (HS-20)

(3) LEGAL LOAD RATING **

** SEE CHART FOR VEHICLE TYPE

GIRDER LOCATION

I - INTERIOR GIRDER
EL - EXTERIOR LEFT GIRDER
ER - EXTERIOR RIGHT GIRDER

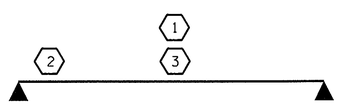

LRFR SUMMARY

FOR SPAN B

PROJECT NO. BD-5113B
BUNCOMBE COUNTY
STATION: 13+16.92 -L-

STATE OF NORTH CAROLINA
DEPARTMENT OF TRANSPORTATION
RALEIGH

STANDARD
LRFR SUMMARY FOR
65' CORED SLAB UNIT
105° SKEW
(NON-INTERSTATE TRAFFIC)

NORTH CAROLINA PROFESSIONAL SEAL 20125 ENGINEER MARSHALL C. CHEEK, JR.
1-12-12

REVISIONS						SHEET NO.
NO.	BY:	DATE:	NO.	BY:	DATE:	S-5
1			3			TOTAL SHEETS
2			4			21

ASSEMBLED BY :	B.MATHEW	DATE :	09/2011
CHECKED BY :	M.G. CHEEK	DATE :	12-11
DRAWN BY : CVC	6/10		
CHECKED BY : DNS	6/10		

12-JAN-2012 09:32
S:\DPG4\Marc\Low_Impact_Bridges\BD-5113B\BD-5113B_SD_LRFR.dgn
mpoole

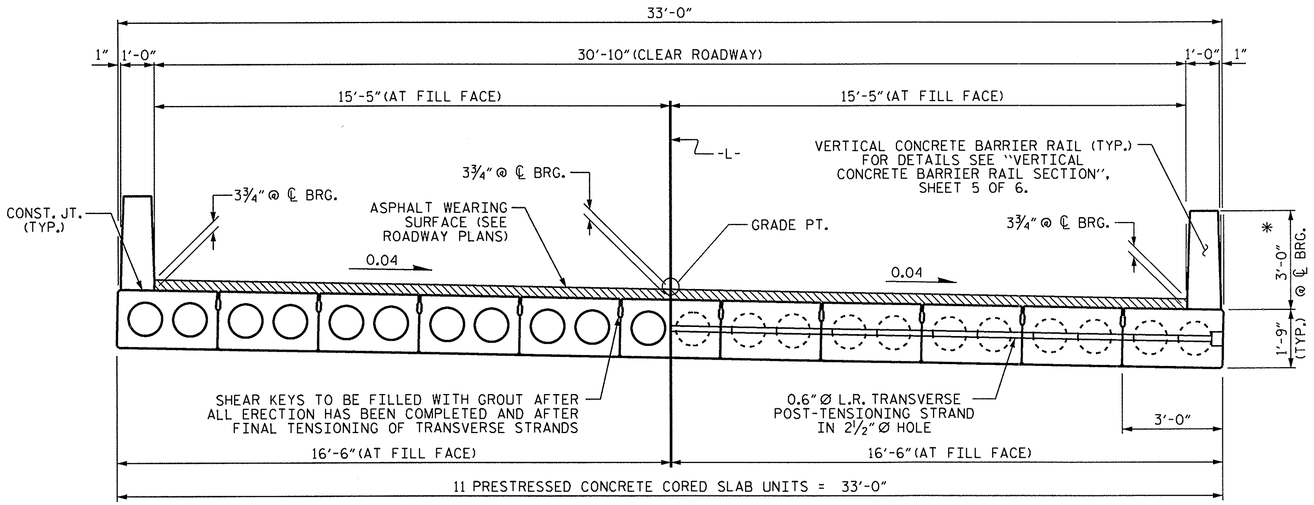

HALF SECTION
AT INTERMEDIATE DIAPHRAGMS

HALF SECTION
THROUGH VOIDS

TYPICAL SECTION

* - THE MAXIMUM BARRIER RAIL HEIGHT AND ASPHALT THICKNESS IS SHOWN. THE HEIGHT OF THE BARRIER RAIL AND ASPHALT THICKNESS VARIES WHILE THE TOP OF THE BARRIER RAIL FOLLOWS THE PROFILE OF THE GUTTERLINE. FOR RAIL HEIGHT DETAILS AND ASPHALT THICKNESS SEE THE "VERTICAL CONCRETE BARRIER RAIL SECTION" DETAIL, SHEET 5 OF 6.

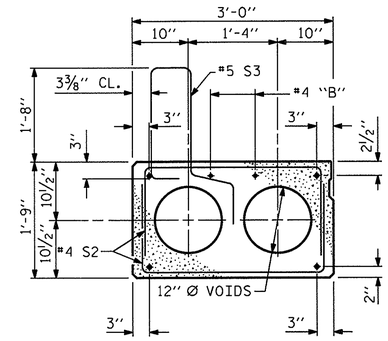

EXTERIOR SLAB SECTION
(FOR PRESTRESSED STRAND LAYOUT, SEE INTERIOR SLAB SECTION.)

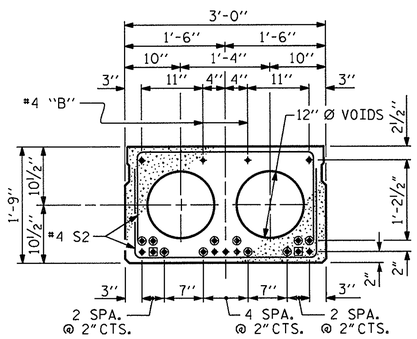

STRAND LAYOUT FOR 25' UNIT
(9 STRANDS REQUIRED)

▲ BOND SHALL BE BROKEN ON THESE STRANDS FOR A DISTANCE OF 6'-0" FROM END OF CORED SLAB UNIT. SEE STANDARD SPECIFICATIONS, ARTICLE 1078-7.

◉ BOND SHALL BE BROKEN ON THESE STRANDS FOR A DISTANCE OF 2'-0" FROM END OF CORED SLAB UNIT. SEE STANDARD SPECIFICATIONS, ARTICLE 1078-7.

◉ OPTIONAL FULL LENGTH DEBONDED STRANDS. THESE STRANDS ARE NOT REQUIRED. IF THE FABRICATOR CHOOSES TO INCLUDE THESE STRANDS IN THE CORED SLAB UNIT, THE STRANDS SHALL BE DEBONDED FOR THE FULL LENGTH OF THE UNIT AT NO ADDITIONAL COST. SEE STANDARD SPECIFICATIONS, ARTICLE 1078-7.

DEBONDING LEGEND

FIXED END

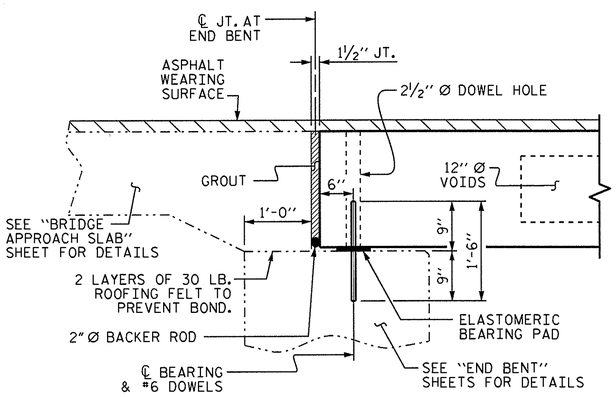

SECTION AT END BENT

FIXED END FIXED END

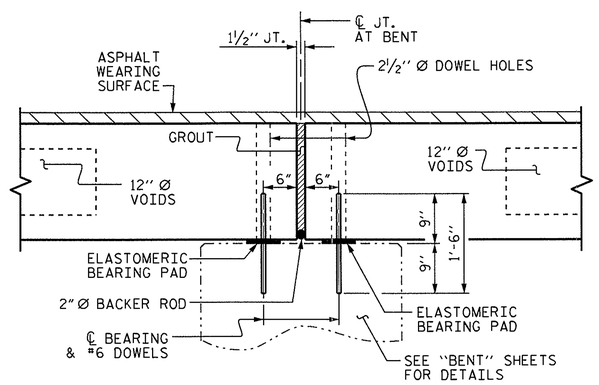

SECTION AT BENT

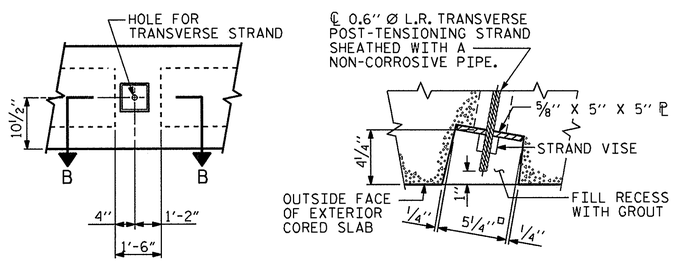

ELEVATION VIEW

SECTION B-B

GROUTED RECESS AT END OF POST-TENSIONED STRAND OF CORED SLABS

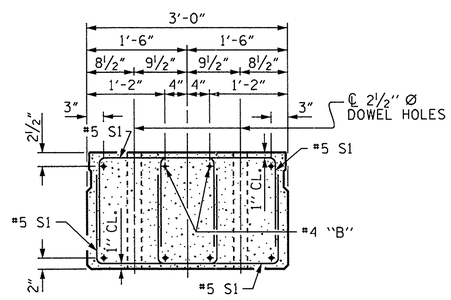

END ELEVATION

SHOWING PLACEMENT OF DOUBLE STIRRUPS AND LOCATION OF DOWEL HOLES. (STRAND LAYOUT NOT SHOWN.) INTERIOR SLAB UNIT SHOWN-EXTERIOR SLAB UNIT SIMILAR EXCEPT SHEAR KEY LOCATION.

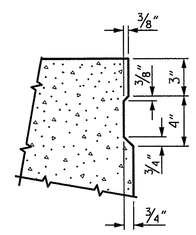

SHEAR KEY DETAIL

NOTE: OMIT SHEAR KEY ON OUTSIDE FACE OF EXTERIOR CORED SLABS.

PROJECT NO. BD-5113B
BUNCOMBE COUNTY
STATION: 13+16.92 -L-

SHEET 1 OF 6

STATE OF NORTH CAROLINA
DEPARTMENT OF TRANSPORTATION
RALEIGH

STANDARD
3'-0" X 1'-9"
PRESTRESSED CONCRETE
CORED SLAB UNIT
105° SKEW

NORTH CAROLINA PROFESSIONAL SEAL 20125 ENGINEER MARSHALL G. CHEEK, JR.
1-12-12

REVISIONS						SHEET NO.
NO.	BY:	DATE:	NO.	BY:	DATE:	S-6
1			3			TOTAL SHEETS
2			4			21

ASSEMBLED BY :	B.MATHEW	DATE :	9/2011
CHECKED BY :	M.G. CHEEK	DATE :	12/2011
DRAWN BY :	DGE	3/09	
CHECKED BY :	BCH	3/09	

12-JAN-2012 09:31
S:\DPG4\Marc\Low_Impact_Bridges\BD-5113B\BD-5113B_SD_S*.dgn
mpoole

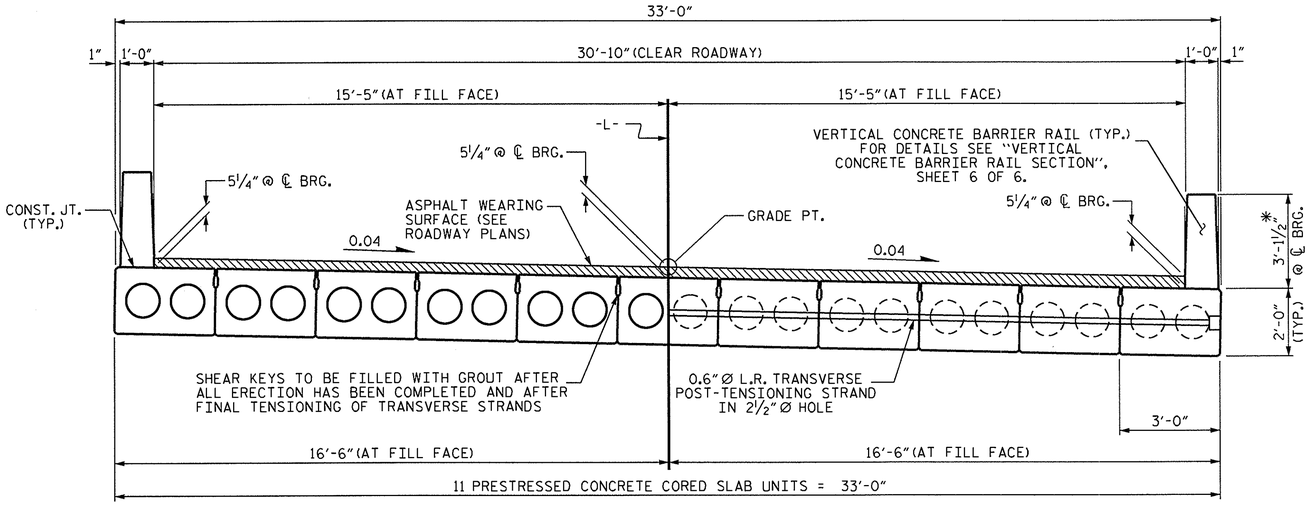

HALF SECTION
AT INTERMEDIATE DIAPHRAGMS

TYPICAL SECTION

HALF SECTION
THROUGH VOIDS

* - THE MAXIMUM BARRIER RAIL HEIGHT AND ASPHALT THICKNESS IS SHOWN. THE HEIGHT OF THE BARRIER RAIL AND ASPHALT THICKNESS VARIES WHILE THE TOP OF THE BARRIER RAIL FOLLOWS THE PROFILE OF THE GUTTERLINE. FOR RAIL HEIGHT DETAILS AND ASPHALT THICKNESS, SEE THE "VERTICAL CONCRETE BARRIER RAIL SECTION" DETAIL, SHEET 6 OF 6.

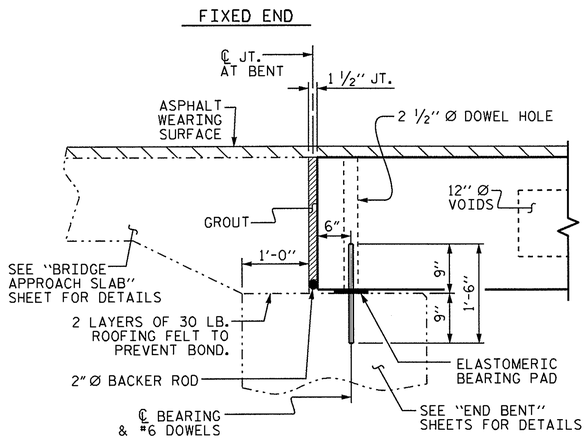

SECTION AT END BENT

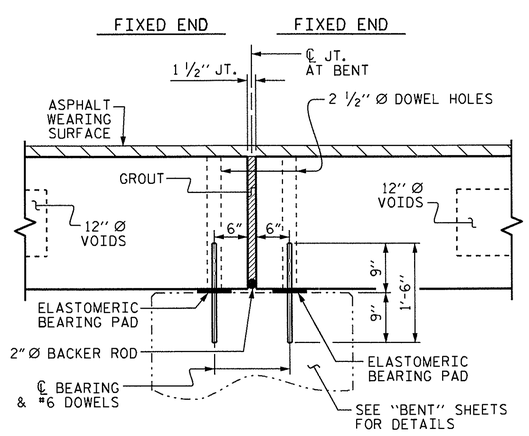

SECTION AT BENT

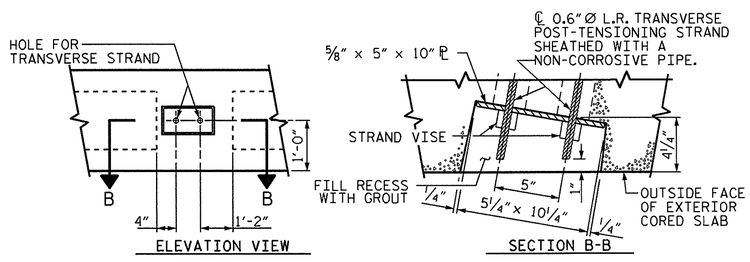

GROUTED RECESS AT END OF POST-TENSIONED STRAND OF CORED SLABS

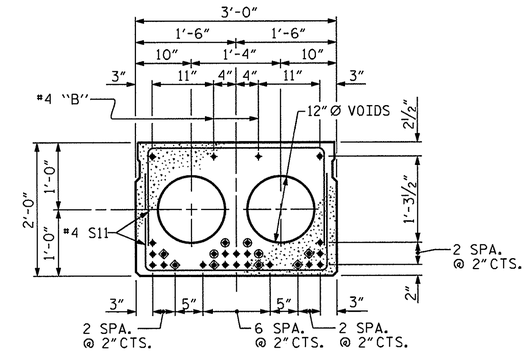

STRAND LAYOUT FOR 65' UNIT

(24 STRANDS REQUIRED)

◈ BOND SHALL BE BROKEN ON THESE STRANDS FOR A DISTANCE OF 12'-0" FROM END OF CORED SLAB UNIT. SEE STANDARD SPECIFICATIONS, ARTICLE 1078-7.

◉ OPTIONAL FULL LENGTH DEBONDED STRANDS. THESE STRANDS ARE NOT REQUIRED. IF THE FABRICATOR CHOOSES TO INCLUDE THESE STRANDS IN THE CORED SLAB UNIT, THE STRANDS SHALL BE DEBONDED FOR THE FULL LENGTH OF THE UNIT AT NO ADDITIONAL COST. SEE STANDARD SPECIFICATIONS, ARTICLE 1078-7.

DEBONDING LEGEND

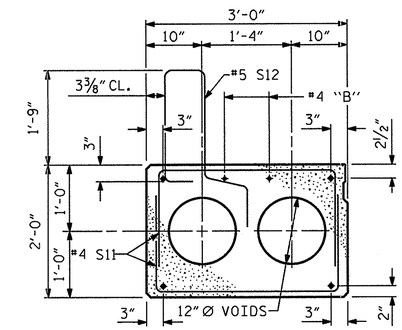

EXTERIOR SLAB SECTION

(FOR PRESTRESSED STRAND LAYOUT, SEE "INTERIOR SLAB SECTION".)

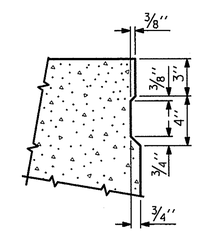

SHEAR KEY DETAIL

NOTE: OMIT SHEAR KEY ON OUTSIDE FACE OF EXTERIOR CORED SLABS.

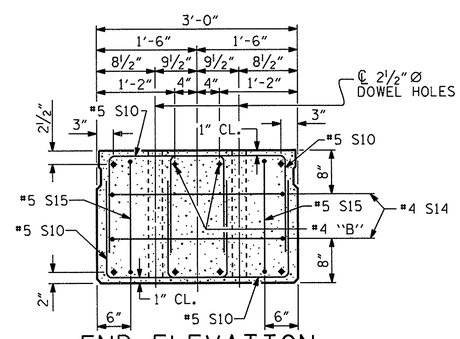

END ELEVATION

SHOWING PLACEMENT OF DOUBLE STIRRUPS AND LOCATION OF DOWEL HOLES. (STRAND LAYOUT NOT SHOWN.) INTERIOR SLAB UNIT SHOWN-EXTERIOR SLAB UNIT SIMILAR EXCEPT SHEAR KEY LOCATION.

PROJECT NO. BD-5113B
BUNCOMBE COUNTY
STATION: 13+16.92 -L-

SHEET 2 OF 6

STATE OF NORTH CAROLINA
DEPARTMENT OF TRANSPORTATION
RALEIGH

STANDARD

3'-0" X 2'-0"
PRESTRESSED CONCRETE
CORED SLAB UNIT
105° SKEW

NORTH CAROLINA PROFESSIONAL SEAL 20125 ENGINEER
1-12-12

REVISIONS						SHEET NO.
NO.	BY:	DATE:	NO.	BY:	DATE:	S-7
1			3			TOTAL SHEETS
2			4			21

ASSEMBLED BY :	B.MATHEW	DATE :	9/2011
CHECKED BY :	M.G. CHEEK	DATE :	12/2011
DRAWN BY : MAA	6/10		
CHECKED BY : MKT	7/10		

12-JAN-2012 11:52
S:\DPG4\Marc\Low_Impact_Bridges\BD-5113B\BD-5113B_SD_S*.dgn
mpoole

STD. NO. 24PCS4_33_105S

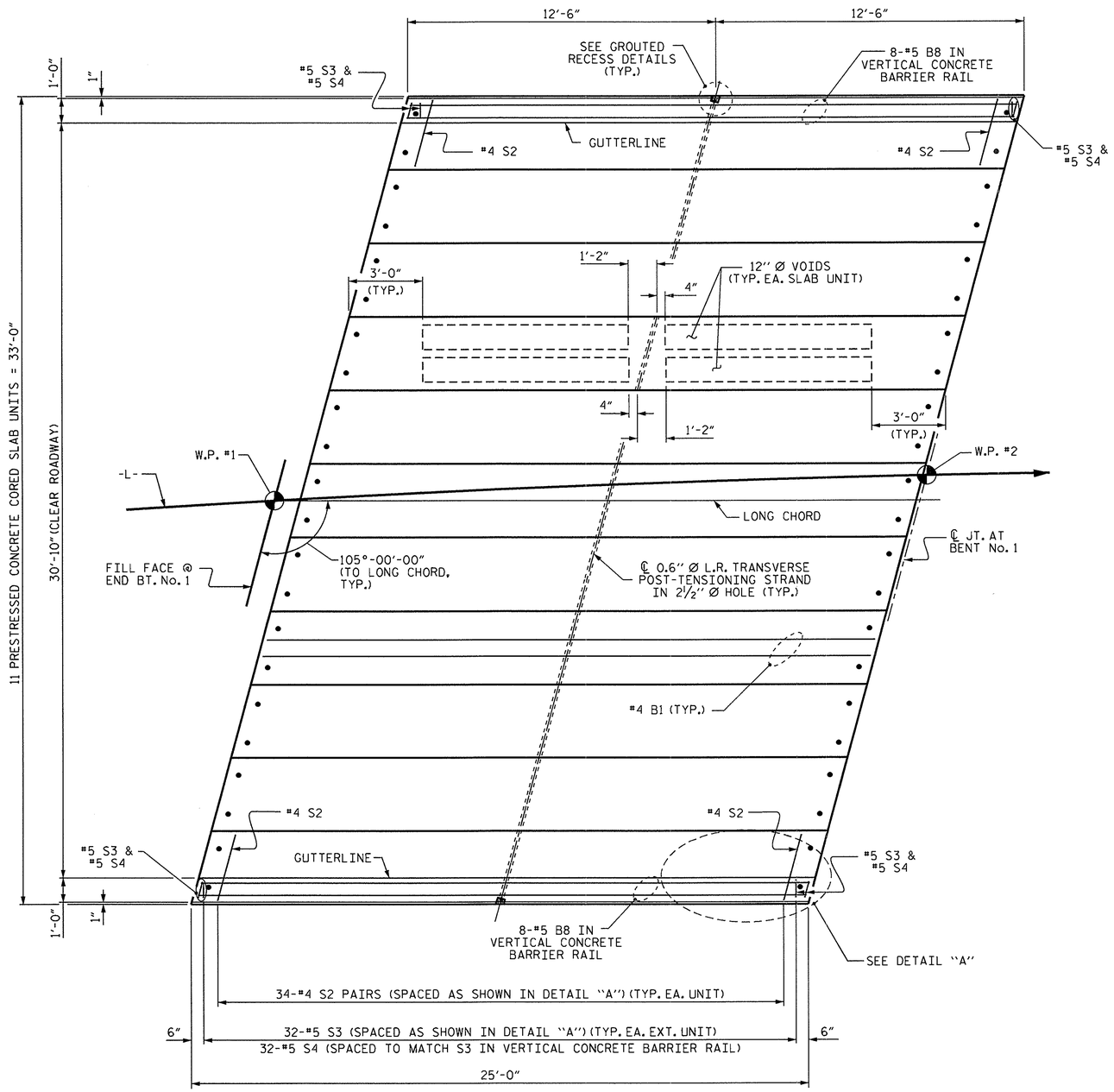

PLAN OF UNIT

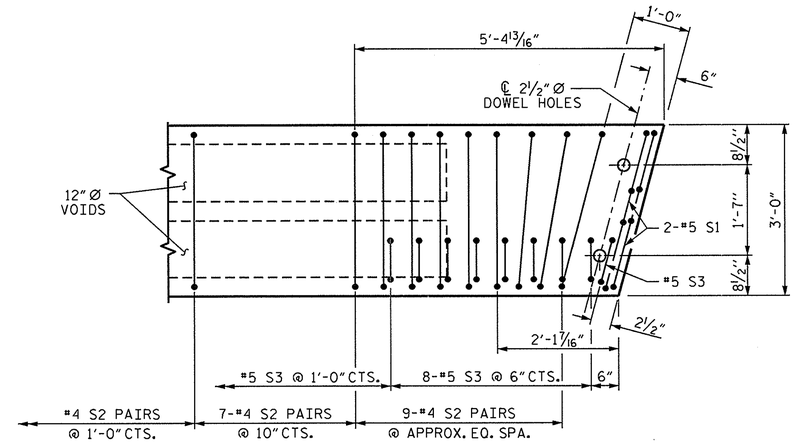

DETAIL "A"

NOTE: EXTERIOR UNIT SHOWN - INTERIOR UNIT SIMILAR EXCEPT OMIT #5 S3 BARS.

PROJECT NO. BD-5113B
BUNCOMBE COUNTY
STATION: 13+16.92 -L-

SHEET 3 OF 6

STATE OF NORTH CAROLINA
DEPARTMENT OF TRANSPORTATION
RALEIGH

PLAN OF 25' UNIT
30'-10" CLEAR ROADWAY
105° SKEW

NORTH CAROLINA PROFESSIONAL SEAL 20125 ENGINEER MARSHALL G. CHEEK, JR.

REVISIONS						SHEET NO.
NO.	BY:	DATE:	NO.	BY:	DATE:	S-8
1			3			TOTAL SHEETS
2			4			21

ASSEMBLED BY :	B.MATHEW	DATE :	9/2011
CHECKED BY :	M.G. CHEEK	DATE :	12/2011
DRAWN BY : DGE	3/09		
CHECKED BY : BCH	3/09		

12-JAN-2012 09:31
S:\OPC4\Marc\Low_Impact_Bridges\BD-5113B\BD-5113B_SD_S*.dgn
mpoole

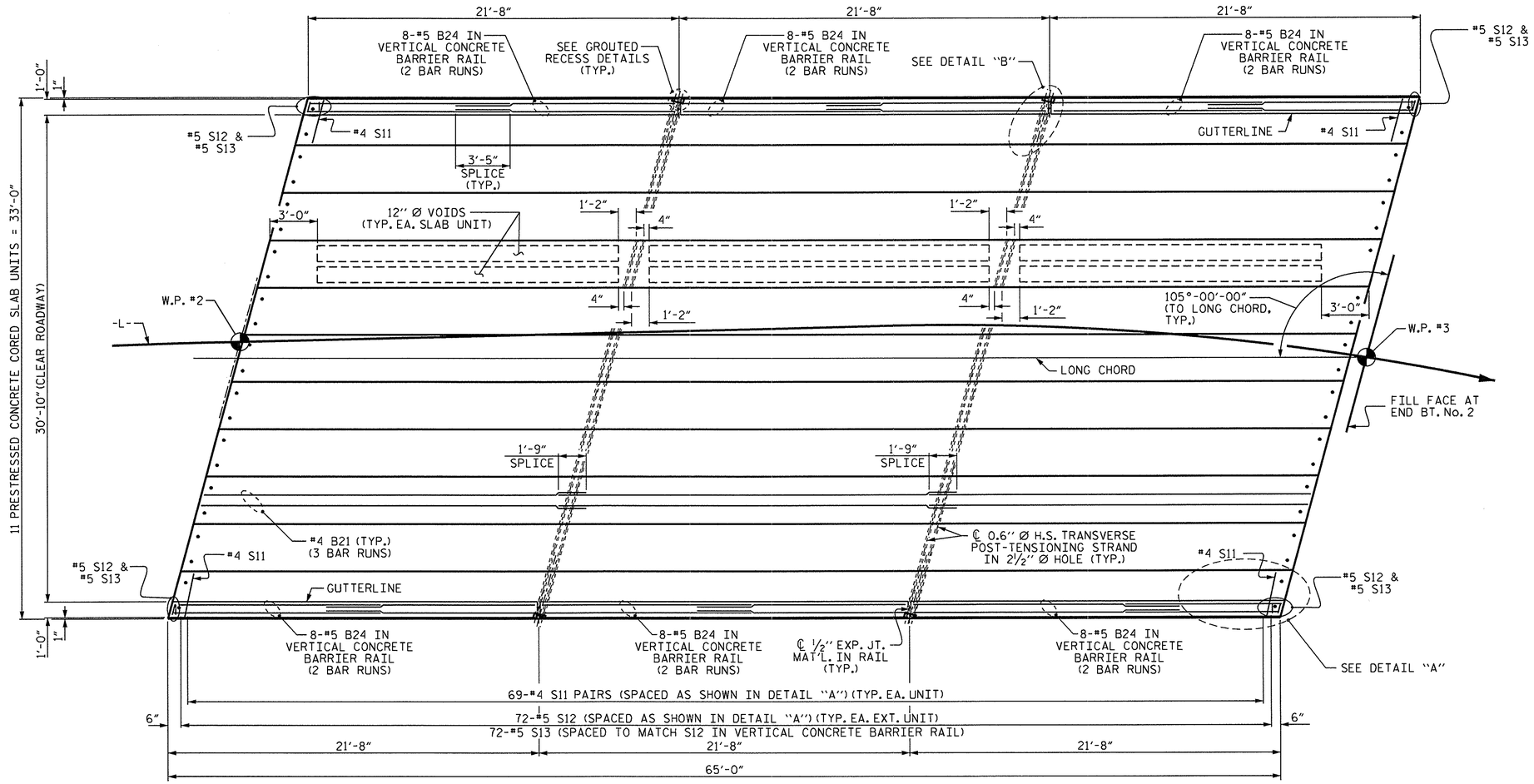

PLAN OF UNIT

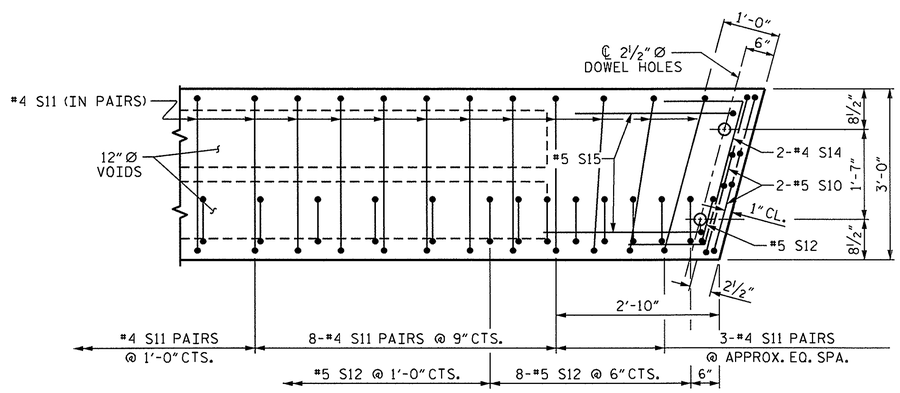

DETAIL "A"

NOTE: EXTERIOR UNIT SHOWN - INTERIOR UNIT SIMILAR EXCEPT OMIT #5 S12 BARS.

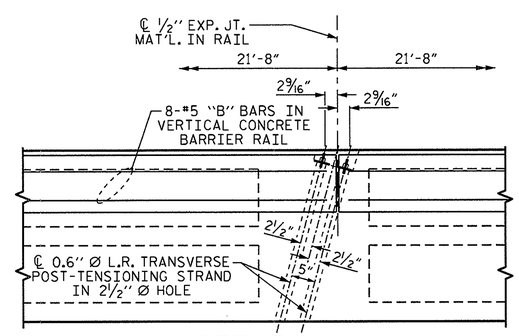

DETAIL "B"

#4 S11 BARS MAY BE SHIFTED AS NECESSARY TO MAINTAIN 1" CLEAR TO GROUTED RECESS AND 2½" Ø TRANSVERSE POST-TENSIONING STRAND HOLES

PROJECT NO. BD-5113B

BUNCOMBE COUNTY

STATION: 13+16.92 -L-

SHEET 4 OF 6

STATE OF NORTH CAROLINA
DEPARTMENT OF TRANSPORTATION
RALEIGH

PLAN OF 65' UNIT
30'-10" CLEAR ROADWAY
105° SKEW

NORTH CAROLINA PROFESSIONAL SEAL 20125 ENGINEER
1-12-12

REVISIONS						SHEET NO.
NO.	BY:	DATE:	NO.	BY:	DATE:	S-9
1			3			TOTAL SHEETS
2			4			21

ASSEMBLED BY :	B.MATHEW	DATE :	9/2011
CHECKED BY :	M.G. CHEEK	DATE :	12/2011
DRAWN BY : MAA	6/10		
CHECKED BY : MKT	7/10		

12-JAN-2012 12:12
S:\OPC4\Marc\Low_Impact_Bridges\BD-5113B\BD-5113B_SD_S*.dgn
mpoole

GRADE 270 STRANDS	
	0.6″ Ø L.R.
AREA (SQUARE INCHES)	0.217
ULTIMATE STRENGTH (LBS. PER STRAND)	58,600
APPLIED PRESTRESS (LBS. PER STRAND)	43,950

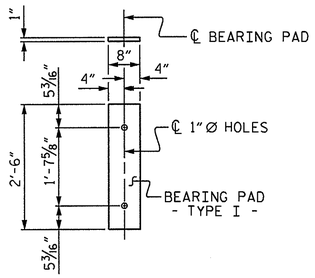

FIXED END
(TYPE I - 11 REQ′D)

ELASTOMERIC BEARING DETAILS

ELASTOMER IN ALL BEARINGS SHALL BE 50 DUROMETER HARDNESS.

BILL OF MATERIAL FOR ONE 25′ CORED SLAB UNIT

				EXTERIOR UNIT		INTERIOR UNIT	
BAR	NUMBER	SIZE	TYPE	LENGTH	WEIGHT	LENGTH	WEIGHT
B1	2	#4	STR	24′-7″	33	24′-7″	33
S1	8	#5	3	4′-3″	35	4′-3″	35
S2	68	#4	3	5′-4″	242	5′-4″	242
✻ S3	34	#5	1	6′-2″	219		
REINFORCING STEEL			LBS.		310		310
✻ EPOXY COATED REINFORCING STEEL			LBS.		219		
5000 P.S.I. CONCRETE			CU. YDS.		3.8		3.8
0.6″ Ø L.R. STRANDS			No.		9		9

DEAD LOAD DEFLECTION AND CAMBER

	3′-0″ x 1′-9″
25′ CORED SLAB UNIT	0.6″ Ø L.R. STRAND
CAMBER (SLAB ALONE IN PLACE)	1/2″ ↑
DEFLECTION DUE TO SUPERIMPOSED DEAD LOAD✻✻	1/8″ ↓
FINAL CAMBER	3/8″ ↑

✻✻ INCLUDES FUTURE WEARING SURFACE

BAR TYPES

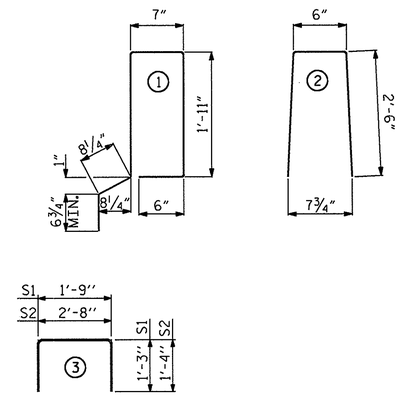

ALL BAR DIMENSIONS ARE OUT TO OUT

BILL OF MATERIAL FOR VERTICAL CONCRETE BARRIER RAIL

BAR	BARS PER PAIR OF EXTERIOR UNITS	TOTAL NO.	SIZE	TYPE	LENGTH	WEIGHT
	25′ UNIT					
✻ B8	16	16	#5	STR	24′-6″	409
✻ S4	68	68	#5	2	5′-6″	390
✻ EPOXY COATED REINFORCING STEEL				LBS.		799
CLASS AA CONCRETE				CU.YDS.		5.2
TOTAL VERTICAL CONCRETE BARRIER RAIL				LN. FT.		50.25

GUTTERLINE ASPHALT THICKNESS & RAIL HEIGHT

30′-10″ CLEAR ROADWAY	ASPHALT OVERLAY THICKNESS:	RAIL HEIGHT
	@ MID-SPAN	@ MID-SPAN
	SUPER	
25′ UNITS	2″	2′-10″

CONCRETE RELEASE STRENGTH

UNIT	PSI
25′ UNITS	4000

CORED SLABS REQUIRED

	NUMBER	LENGTH	TOTAL LENGTH
25′ UNIT			
EXTERIOR C.S.	2	25′-0″	50′-0″
INTERIOR C.S.	9	25′-0″	225′-0″
TOTAL	11		275′-0″

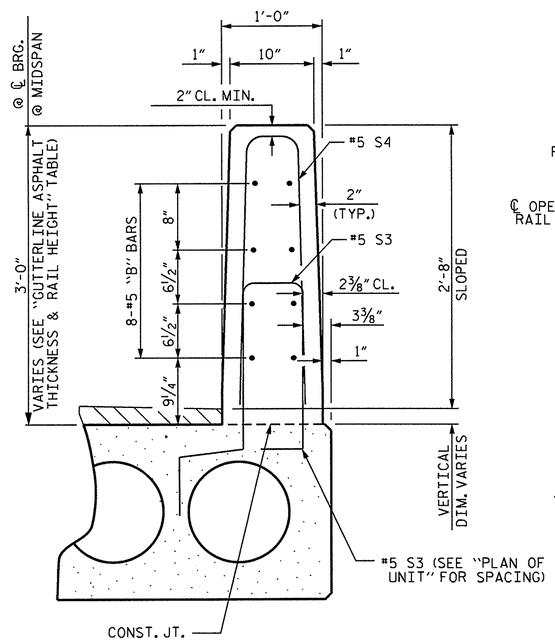

VERTICAL CONCRETE BARRIER RAIL SECTION

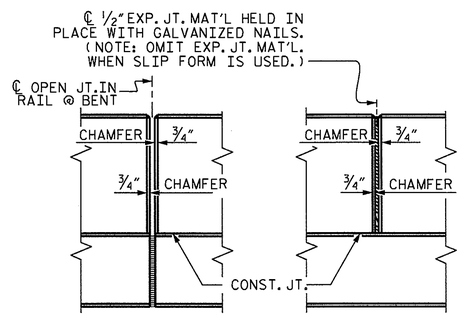

ELEVATION AT EXPANSION JOINTS

NOTES

ALL PRESTRESSING STRANDS SHALL BE 7-WIRE LOW RELAXATION GRADE 270 STRANDS AND SHALL CONFORM TO AASHTO M203 EXCEPT FOR SAMPLING REQUIREMENTS WHICH SHALL BE IN ACCORDANCE WITH THE STANDARD SPECIFICATIONS.

ALL REINFORCING STEEL CAST WITH THE CORED SLAB SECTIONS SHALL BE GRADE 60 AND SHALL BE INCLUDED IN THE UNIT PRICE BID FOR PRESTRESSED CONCRETE CORED SLABS.

RECESSES FOR TRANSVERSE STRANDS SHALL BE GROUTED AFTER THE TENSIONING OF THE STRANDS.

THE 2 1/2″ Ø DOWEL HOLES AT FIXED ENDS OF SLAB SECTIONS SHALL BE FILLED WITH NON-SHRINK GROUT.

THE 2″ Ø BACKER ROD SHALL CONFORM TO THE REQUIREMENTS OF TYPE M BOND BREAKER. SEE SECTION 1028 OF THE STANDARD SPECIFICATIONS.

WHEN CORED SLABS ARE CAST, AN INTERNAL HOLD-DOWN SYSTEM SHALL BE EMPLOYED TO PREVENT VOIDS FROM RISING OR MOVING SIDEWAYS. AT LEAST SIX WEEKS PRIOR TO CASTING CORED SLABS, THE CONTRACTOR SHALL SUBMIT TO THE ENGINEER FOR REVIEW AND COMMENT, DETAILED DRAWINGS OF THE PROPOSED HOLD-DOWN SYSTEM. IN ADDITION TO STRUCTURAL DETAILS, LOCATION AND SPACING OF THE HOLD-DOWNS SHALL BE INDICATED.

ALL REINFORCING STEEL IN THE VERTICAL CONCRETE BARRIER RAIL SHALL BE EPOXY COATED.

PRESTRESSING STRANDS SHALL BE CUT FLUSH WITH THE CORED SLAB UNIT ENDS.

APPLY EPOXY PROTECTIVE COATING TO CORED SLAB UNIT ENDS.

GROOVED CONTRACTION JOINTS, 1/2″ IN DEPTH, SHALL BE TOOLED IN ALL EXPOSED FACES OF THE BARRIER RAIL AND IN ACCORDANCE WITH ARTICLE 825-10(B) OF THE STANDARD SPECIFICATIONS. A CONTRACTION JOINT SHALL BE LOCATED AT EACH THIRD POINT BETWEEN BARRIER RAIL EXPANSION JOINTS. ONLY ONE CONTRACTION JOINT IS REQUIRED AT MIDPOINT OF BARRIER RAIL SEGMENTS LESS THAN 20 FEET IN LENGTH AND NO CONTRACTION JOINTS ARE REQUIRED FOR THOSE SEGMENTS LESS THAN 10 FEET IN LENGTH.

TRANSVERSE POST TENSIONING OF THE CORED SLAB UNITS SHALL BE DONE IN ACCORDANCE WITH THE STANDARD SPECIFICATIONS, EXCEPT THAT THE STRANDS SHALL BE 0.6″ Ø AND TENSIONED TO 43,950 POUNDS.

THE TRANSFER OF LOAD FROM THE ANCHORAGES TO THE CORED SLAB UNIT SHALL BE DONE WHEN THE CONCRETE HAS REACHED A COMPRESSIVE STRENGTH OF NOT LESS THAN THE REQUIRED STRENGTH SHOWN IN THE "CONCRETE RELEASE STRENGTH" TABLE.

FOR GROUT FOR STRUCTURES, SEE SPECIAL PROVISIONS.

FOR VERTICAL CONCRETE BARRIER RAIL, SEE SPECIAL PROVISIONS.

PROJECT NO. BD-5113B
BUNCOMBE COUNTY
STATION: 13+16.92 -L-

SHEET 5 OF 6

STATE OF NORTH CAROLINA
DEPARTMENT OF TRANSPORTATION
RALEIGH

STANDARD
3′-0″ X 1′-9″
PRESTRESSED CONCRETE
CORED SLAB UNIT
105° SKEW

NORTH CAROLINA PROFESSIONAL SEAL 20125 ENGINEER MARSHALL G. CHEEK, JR.
1-12-12

REVISIONS						SHEET NO.
NO.	BY:	DATE:	NO.	BY:	DATE:	S-10
1			3			TOTAL SHEETS
2			4			21

ASSEMBLED BY :	B.MATHEW	DATE :	9/2011
CHECKED BY :	M.G. CHEEK	DATE :	12/2011
DRAWN BY :	DGE 5/09		
CHECKED BY:	BCH 6/09		

12-JAN-2012 11:51
S:\DPG4\Marc\Low_Impact_Bridges\BD-5113B\BD-5113B_SD_S*.dgn
mpoole

GRADE 270 STRANDS	
	0.6"Ø L.R.
AREA (SQUARE INCHES)	0.217
ULTIMATE STRENGTH (LBS. PER STRAND)	58,600
APPLIED PRESTRESS (LBS. PER STRAND)	43,950

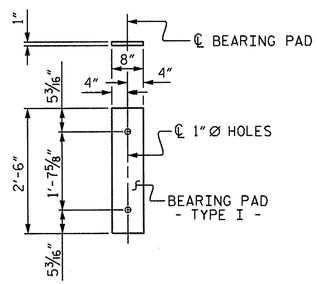

FIXED END
(TYPE I - 11 REQ'D)

ELASTOMERIC BEARING DETAILS

ELASTOMER IN ALL BEARINGS SHALL BE 60 DUROMETER HARDNESS.

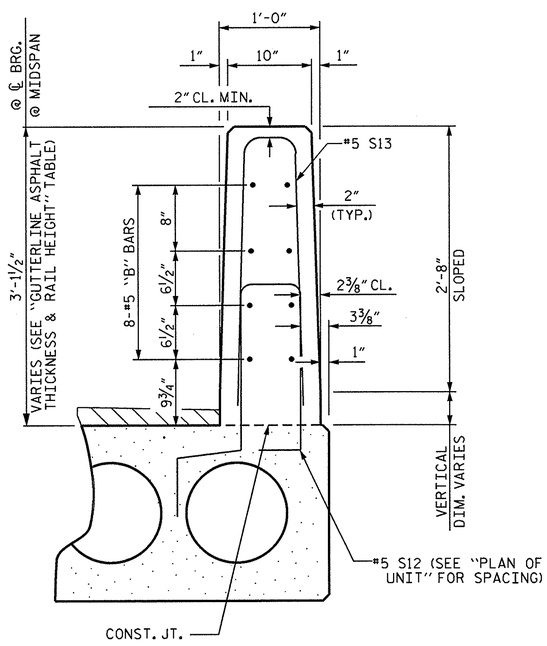

SECTION THRU RAIL

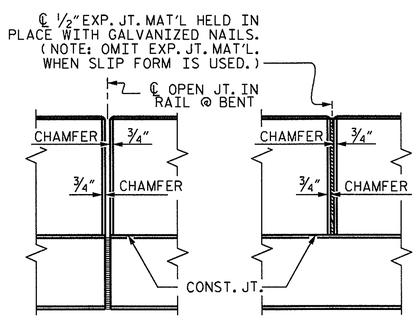

ELEVATION AT EXPANSION JOINTS

VERTICAL CONCRETE BARRIER RAIL DETAILS

BILL OF MATERIAL FOR ONE 65' CORED SLAB UNIT							
				EXTERIOR UNIT		INTERIOR UNIT	
BAR	NUMBER	SIZE	TYPE	LENGTH	WEIGHT	LENGTH	WEIGHT
B21	6	#4	STR	22'-10"	92	22'-10"	92
S10	8	#5	3	4'-10"	40	4'-10"	40
S11	138	#4	3	5'-10"	538	5'-10"	538
*S12	74	#5	1	6'-4"	489		
S14	4	#4	4	5'-8"	15	5'-8"	15
S15	4	#5	3	7'-1"	30	7'-1"	30
REINFORCING STEEL			LBS.		715		715
*EPOXY COATED REINFORCING STEEL			LBS.		489		
6000 P.S.I. CONCRETE			CU. YDS.		11.2		11.2
0.6"Ø L.R. STRANDS			No.		24		24

DEAD LOAD DEFLECTION AND CAMBER	
	3'-0" x 2'-0"
65' CORED SLAB UNIT	0.6"Ø L.R. STRAND
CAMBER (SLAB ALONE IN PLACE)	3 3/8" ↑
DEFLECTION DUE TO SUPERIMPOSED DEAD LOAD**	1/2" ↓
FINAL CAMBER	2 7/8" ↑

** INCLUDES FUTURE WEARING SURFACE

BAR TYPES

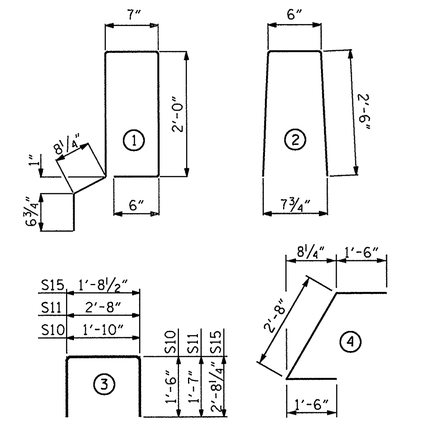

ALL BAR DIMENSIONS ARE OUT TO OUT

BILL OF MATERIAL FOR VERTICAL CONCRETE BARRIER RAIL						
BAR	BARS PER PAIR OF EXTERIOR UNITS	TOTAL NO.	SIZE	TYPE	LENGTH	WEIGHT
	65' UNIT					
*B24	96	96	#5	STR	12'-10"	1285
*S13	148	148	#5	2	5'-6"	849
*EPOXY COATED REINFORCING STEEL				LBS.		2134
CLASS AA CONCRETE				CU.YDS.		13.7
TOTAL VERTICAL CONCRETE BARRIER RAIL				LN. FT.		130.26

GUTTERLINE ASPHALT THICKNESS & RAIL HEIGHT		
	ASPHALT OVERLAY THICKNESS @ MID-SPAN	RAIL HEIGHT @ MID-SPAN
65' UNITS	2"	2'-10"

CORED SLABS REQUIRED			
	NUMBER	LENGTH	TOTAL LENGTH
65' UNIT			
EXTERIOR C.S.	2	65'-0"	130'-0"
INTERIOR C.S.	9	65'-0"	585'-0"
TOTAL	11		715'-0"

CONCRETE RELEASE STRENGTH	
UNIT	PSI
65' UNITS	4800

NOTES

ALL PRESTRESSING STRANDS SHALL BE 7-WIRE LOW RELAXATION GRADE 270 STRANDS AND SHALL CONFORM TO AASHTO M203 EXCEPT FOR SAMPLING REQUIREMENTS WHICH SHALL BE IN ACCORDANCE WITH THE STANDARD SPECIFICATIONS.

ALL REINFORCING STEEL CAST WITH THE CORED SLAB SECTIONS SHALL BE GRADE 60 AND SHALL BE INCLUDED IN THE UNIT PRICE BID FOR PRESTRESSED CONCRETE CORED SLABS.

RECESSES FOR TRANSVERSE STRANDS SHALL BE GROUTED AFTER THE TENSIONING OF THE STRANDS.

THE 2 1/2"Ø DOWEL HOLES AT FIXED ENDS OF SLAB SECTIONS SHALL BE FILLED WITH NON-SHRINK GROUT.

THE 2"Ø BACKER ROD SHALL CONFORM TO THE REQUIREMENTS OF TYPE M BOND BREAKER. SEE SECTION 1028 OF THE STANDARD SPECIFICATIONS.

WHEN CORED SLABS ARE CAST, AN INTERNAL HOLD-DOWN SYSTEM SHALL BE EMPLOYED TO PREVENT VOIDS FROM RISING OR MOVING SIDEWAYS. AT LEAST SIX WEEKS PRIOR TO CASTING CORED SLABS, THE CONTRACTOR SHALL SUBMIT TO THE ENGINEER FOR REVIEW AND COMMENT, DETAILED DRAWINGS OF THE PROPOSED HOLD-DOWN SYSTEM. IN ADDITION TO STRUCTURAL DETAILS, LOCATION AND SPACING OF THE HOLD-DOWNS SHALL BE INDICATED.

THE TRANSFER OF LOAD FROM THE ANCHORAGES TO THE CORED SLAB UNIT SHALL BE DONE WHEN THE CONCRETE HAS REACHED A COMPRESSIVE STRENGTH OF NOT LESS THAN THE REQUIRED STRENGTH SHOWN IN THE "CONCRETE RELEASE STRENGTH" TABLE.

ALL REINFORCING STEEL IN VERTICAL CONCRETE BARRIER RAILS SHALL BE EPOXY COATED.

PRESTRESSING STRANDS SHALL BE CUT FLUSH WITH THE CORED SLAB UNIT ENDS.

APPLY EPOXY PROTECTIVE COATING TO CORED SLAB UNIT ENDS.

GROOVED CONTRACTION JOINTS, 1/2" IN DEPTH, SHALL BE TOOLED IN ALL EXPOSED FACES OF THE BARRIER RAIL AND IN ACCORDANCE WITH ARTICLE 825-10(B) OF THE STANDARD SPECIFICATIONS. A CONTRACTION JOINT SHALL BE LOCATED AT EACH THIRD POINT BETWEEN BARRIER RAIL EXPANSION JOINTS. ONLY ONE CONTRACTION JOINT IS REQUIRED AT MIDPOINT OF BARRIER RAIL SEGMENTS LESS THAN 20 FEET IN LENGTH AND NO CONTRACTION JOINTS ARE REQUIRED FOR THOSE SEGMENTS LESS THAN 10 FEET IN LENGTH.

TRANSVERSE POST TENSIONING OF THE CORED SLAB UNITS SHALL BE DONE IN ACCORDANCE WITH THE STANDARD SPECIFICATIONS, EXCEPT THAT THE STRANDS SHALL BE 0.6"Ø AND TENSIONED TO 43,950 POUNDS.

MAINTAIN A SYMMETRIC TENSION FORCE BETWEEN EACH PAIR OF TRANSVERSE POST TENSIONING STRANDS IN THE DIAPHRAGM.

THE #4 S11 STIRRUPS MAY BE SHIFTED AS NECESSARY TO MAINTAIN 1" CLEAR TO THE GROUTED RECESS.

FOR GROUT FOR STRUCTURES, SEE SPECIAL PROVISIONS.

FOR VERTICAL CONCRETE BARRIER RAIL, SEE SPECIAL PROVISIONS.

PROJECT NO. BD-5113B
BUNCOMBE COUNTY
STATION: 13+16.92 -L-

SHEET 6 OF 6

STATE OF NORTH CAROLINA
DEPARTMENT OF TRANSPORTATION
RALEIGH

STANDARD
3'-0" X 2-0"
PRESTRESSED CONCRETE
CORED SLAB UNIT

NORTH CAROLINA PROFESSIONAL SEAL 20125 ENGINEER MARSHALL G. CHEEK, JR.
1-12-12

REVISIONS						SHEET NO.
NO.	BY:	DATE:	NO.	BY:	DATE:	S-11
1			3			TOTAL SHEETS
2			4			21

ASSEMBLED BY :	B.MATHEW	DATE :	9/2011
CHECKED BY :	M.G. CHEEK	DATE :	12/2011
DRAWN BY : MAA	6/10		
CHECKED BY : MKT	7/10		

12-JAN-2012 11:52
S:\DPG4\Marc\Low_Impact_Bridges\BD-5113B\BD-5113B_SD_S*.dgn
mpoole

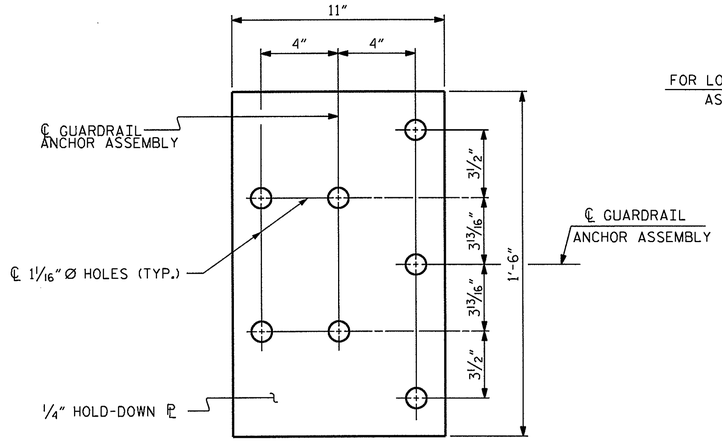

PLAN

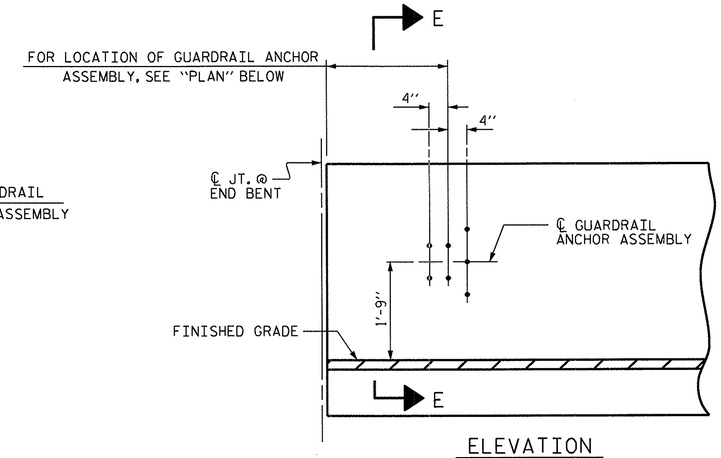

ELEVATION

NOTES

THE GUARDRAIL ANCHOR ASSEMBLY SHALL CONSIST OF A 1/4" HOLD DOWN PLATE AND 7 - 7/8" Ø BOLTS WITH NUTS AND WASHERS.

THE HOLD-DOWN PLATE SHALL CONFORM TO AASHTO M270 GRADE 36. AFTER FABRICATION, THE HOLD-DOWN PLATE SHALL BE HOT-DIP GALVANIZED IN ACCORDANCE WITH AASHTO M111.

BOLTS SHALL CONFORM TO THE REQUIREMENTS OF ASTM A307 AND NUTS SHALL CONFORM TO THE REQUIREMENTS OF AASHTO M291. BOLTS, NUTS AND WASHERS SHALL BE GALVANIZED. (AT THE CONTRACTOR'S OPTION, STAINLESS STEEL BOLTS, NUTS AND WASHERS MAY BE USED AS AN ALTERNATE FOR THE 7/8" Ø GALVANIZED BOLTS, NUTS AND WASHERS. THEY SHALL CONFORM TO OR EXCEED THE MECHANICAL REQUIREMENTS OF ASTM A307. THE USE OF THIS ALTERNATE SHALL BE APPROVED BY THE ENGINEER.)

THE GUARDRAIL ANCHOR ASSEMBLY IS REQUIRED AT ALL POINTS WHERE APPROACH GUARDRAIL IS TO BE ATTACHED TO THE END OF BARRIER RAIL. FOR POINTS OF ATTACHMENT, SEE SKETCH.

AFTER INSTALLATION, THE EXPOSED THREAD OF THE BOLT SHALL BE BURRED WITH A SHARP POINTED TOOL.

THE COST OF THE GUARDRAIL ANCHOR ASSEMBLY SHALL BE INCLUDED IN THE UNIT CONTRACT PRICE BID FOR VERTICAL CONCRETE BARRIER RAIL.

THE VERTICAL REINFORCING BARS MAY BE SHIFTED SLIGHTLY IN THE VERTICAL CONCRETE BARRIER RAIL TO CLEAR ASSEMBLY BOLTS.

THE 1 1/4" Ø HOLES SHALL BE FORMED OR DRILLED WITH A CORE BIT. IMPACT TOOLS WILL NOT BE PERMITTED. ANY CONCRETE DAMAGED BY THIS WORK SHALL BE REPAIRED TO THE SATISFACTION OF THE ENGINEER.

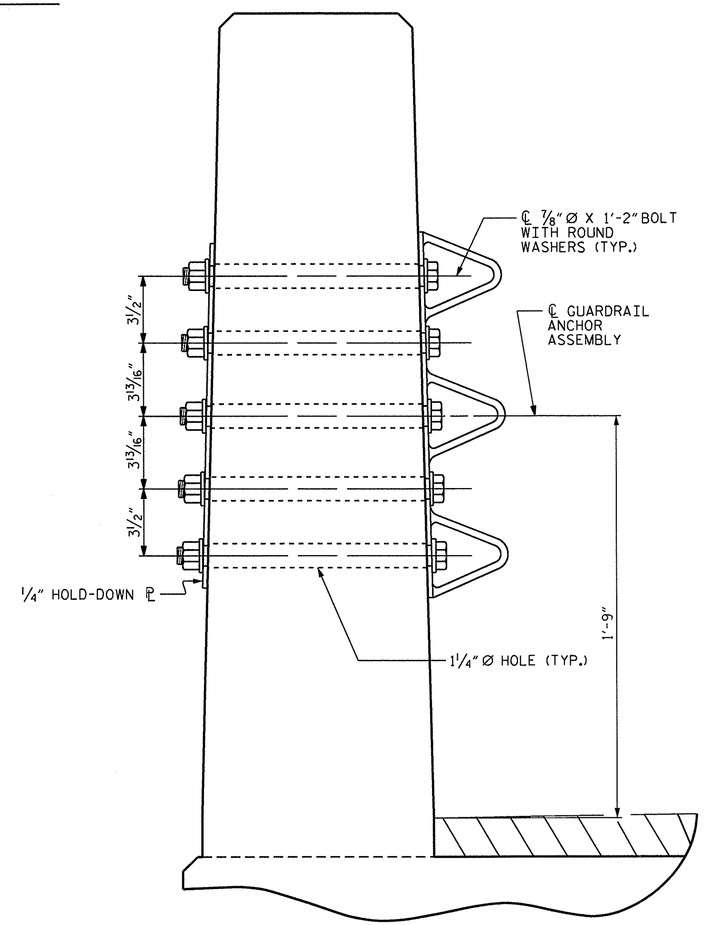

SECTION E-E

GUARDRAIL ANCHOR ASSEMBLY DETAILS

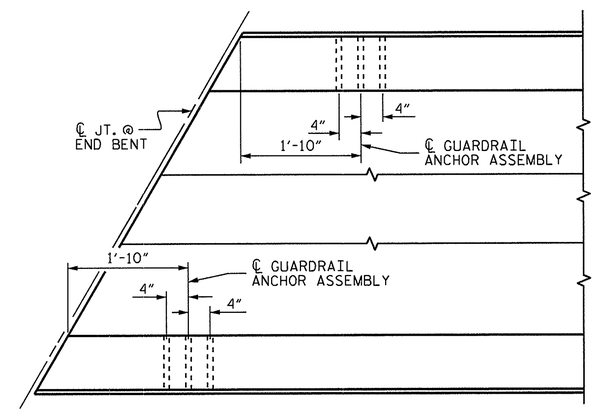

PLAN

LOCATION OF ANCHORS FOR GUARDRAIL

END BENT NO. 1 SHOWN. END BENT NO. 2 SIMILAR.

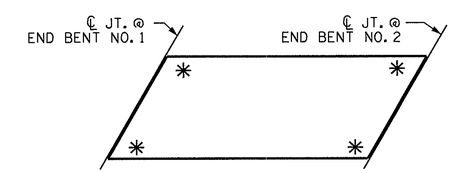

SKETCH SHOWING POINTS OF ATTACHMENT

✳ DENOTES GUARDRAIL ANCHOR ASSEMBLY

PROJECT NO. BD-5113B
BUNCOMBE COUNTY
STATION: 13+16.92 -L-

SHEET 6 OF 6

STATE OF NORTH CAROLINA
DEPARTMENT OF TRANSPORTATION
RALEIGH

STANDARD
GUARDRAIL ANCHORAGE FOR VERTICAL CONCRETE BARRIER RAIL

NORTH CAROLINA PROFESSIONAL SEAL 20125 ENGINEER MARSHALL H. GREEL, JR.
1-12-12

REVISIONS						SHEET NO.
NO.	BY:	DATE:	NO.	BY:	DATE:	S-12
1			3			TOTAL SHEETS
2			4			21

STD. NO. GRA3

ASSEMBLED BY : D. HODGE		DATE : 12/11	
CHECKED BY : M.G. CHEEK		DATE : 12/11	
DRAWN BY : MAA 5/10	ADDED 5/6/10		
CHECKED BY : GM 5/10	REV. 10/1/11		MAA/GM
	REV. 12/5/11		MAA/GM

12-JAN-2012 09:29
S:\OPC4\Marc\Low_Impact_Bridges\BD-5113B\BD5113B_SD_GR.dgn
mpoole

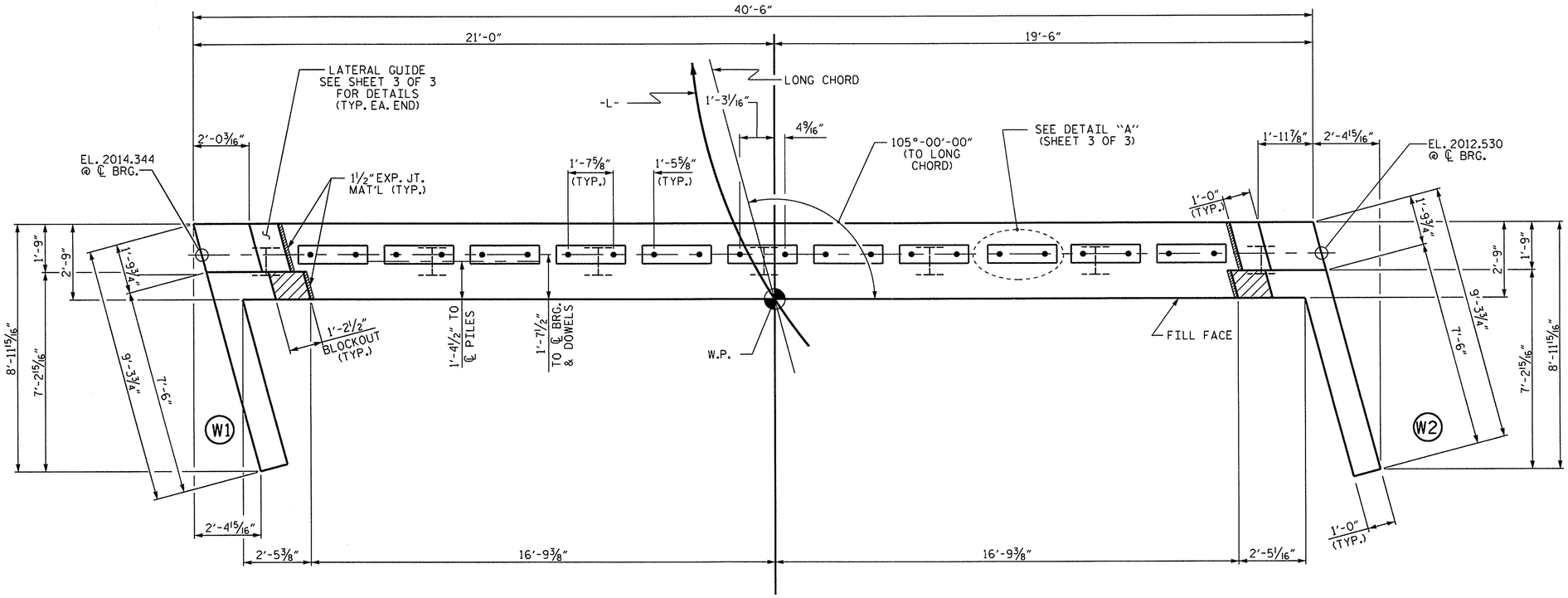

PLAN

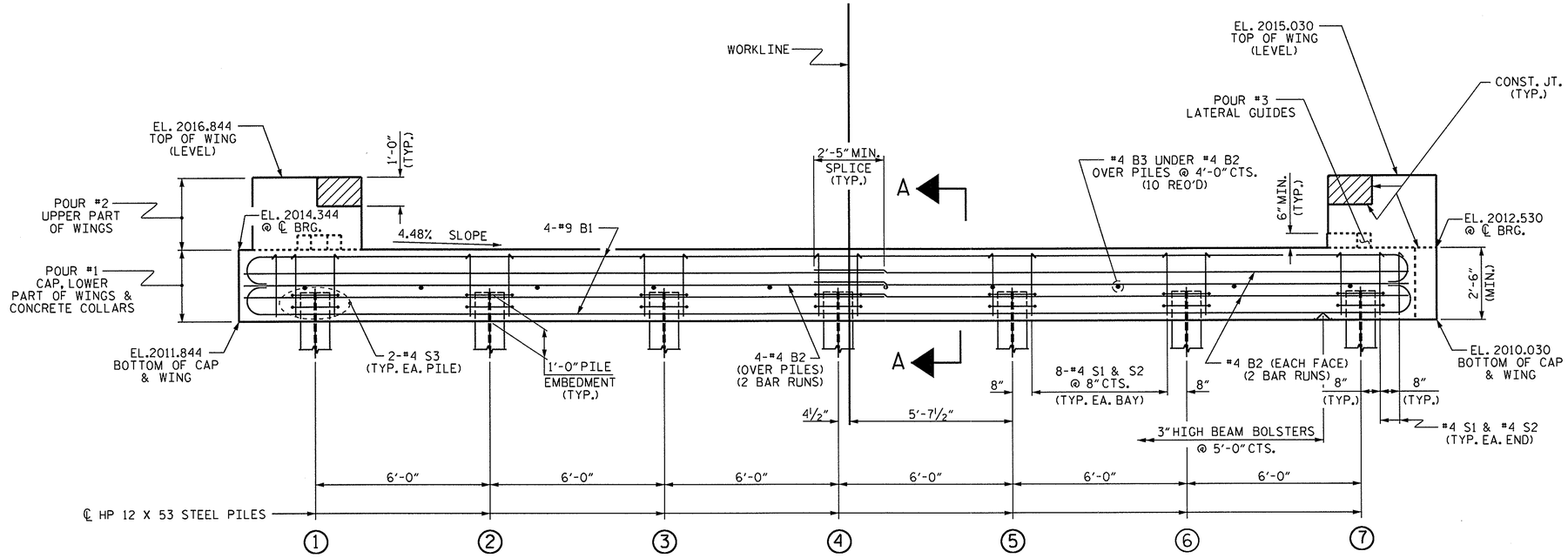

ELEVATION

WINGS NOT SHOWN FOR CLARITY.
FOR SECTION A-A, SEE SHEET 3 OF 3.
CONCRETE COLLARS FOR STEEL PILES NOT SHOWN IN PLAN AND ELEVATION VIEWS FOR CLARITY.
SEE "CORROSION PROTECTION FOR STEEL PILES DETAIL", SHEET 3 OF 3.

NOTES

STIRRUPS IN CAP MAY BE SHIFTED AS NECESSARY TO CLEAR DOWELS.

THE LATERAL GUIDES ARE NOT TO BE POURED UNTIL AFTER THE CORED SLAB UNITS ARE IN PLACE.

THE CONCRETE IN THE SHADED AREA OF THE WING SHALL BE POURED AFTER THE VERTICAL CONCRETE BARRIER RAIL IS CAST IF SLIP FORMING IS USED.

FOR PILE SPLICE DETAILS, SEE SHEET 3 OF 3.

FOR WING DETAILS, SEE SHEET 2 OF 3.

THE CONTRACTOR HAS THE OPTION TO OMIT THE LATERAL GUIDE IF APPROVED BY THE ENGINEER.

TOP OF PILE ELEVATIONS	
1	2012.762
2	2012.493
3	2012.224
4	2011.956
5	2011.687
6	2011.448
7	2011.150

PROJECT NO. BD-5113B
BUNCOMBE COUNTY
STATION: 13+16.92 -L-

SHEET 1 OF 3

STATE OF NORTH CAROLINA
DEPARTMENT OF TRANSPORTATION
RALEIGH

SUBSTRUCTURE

END BENT No. 1

NORTH CAROLINA PROFESSIONAL SEAL 20125 ENGINEER
MARSHALL G. CHEEK, JR.
1-12-12

REVISIONS						SHEET NO.
NO.	BY:	DATE:	NO.	BY:	DATE:	S-13
1			3			TOTAL SHEETS
2			4			21

ASSEMBLED BY : B.MATHEW DATE : 9/2011
CHECKED BY : M.G. CHEEK DATE : 1/2012
DRAWN BY : DGE 02/10
CHECKED BY : MKT 02/10

12-JAN-2012 09:30
S:\DPG4\Marc\Low_Impact_Bridges\BD-5113B\BD-5113B_SD_E*.dgn
mpoole

STD. NO. EB_33_105S

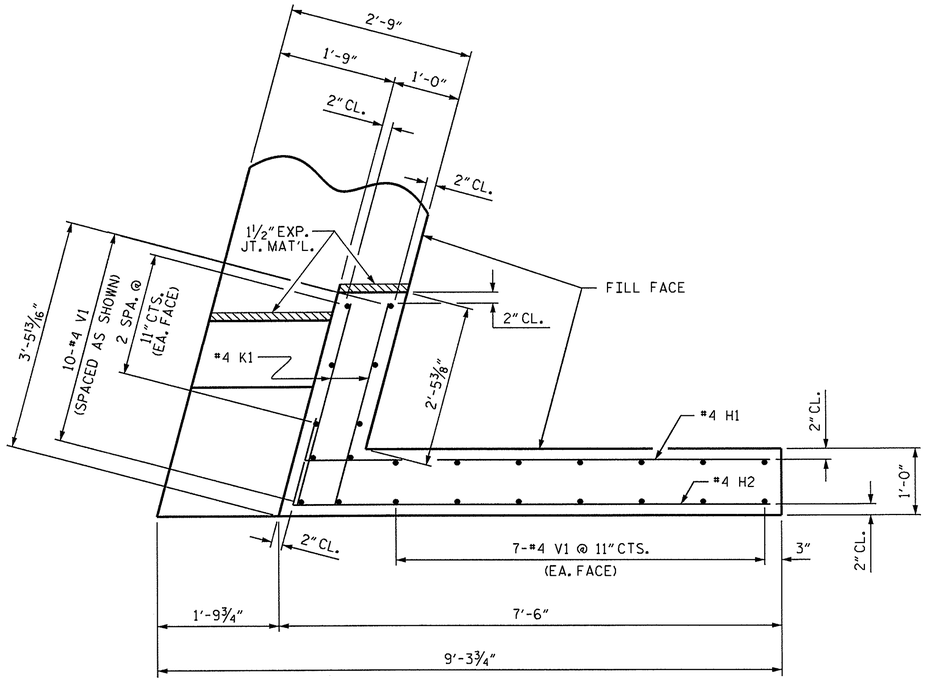

PLAN OF WING (W1)

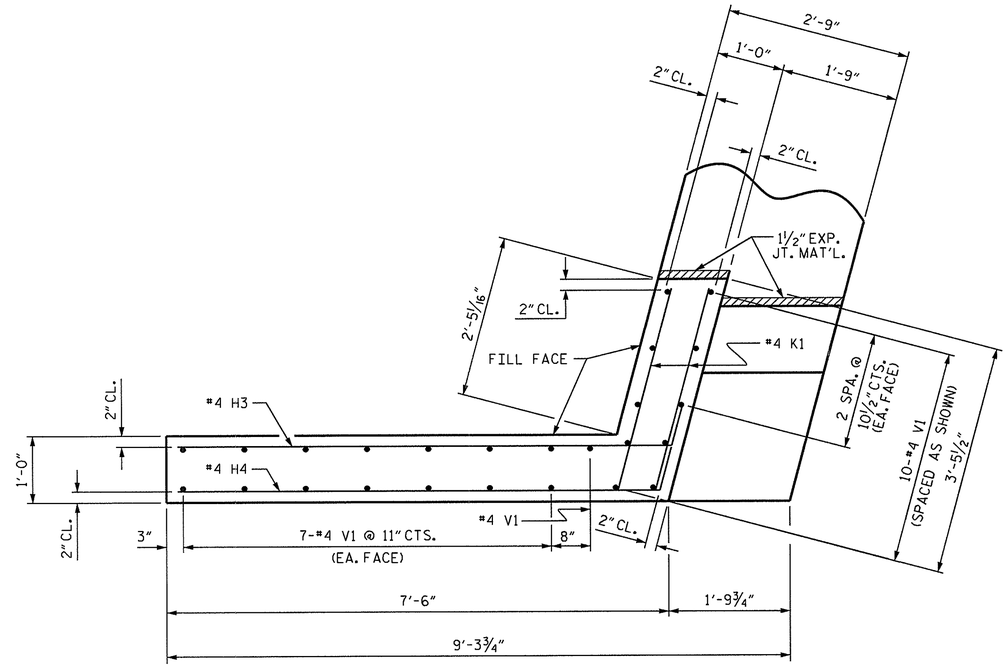

PLAN OF WING (W2)

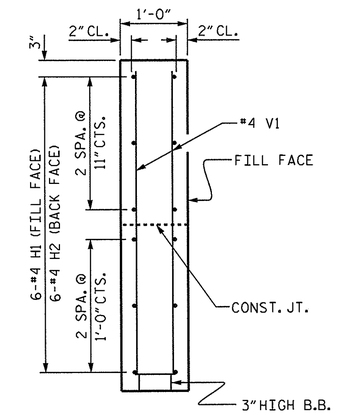

SECTION X-X

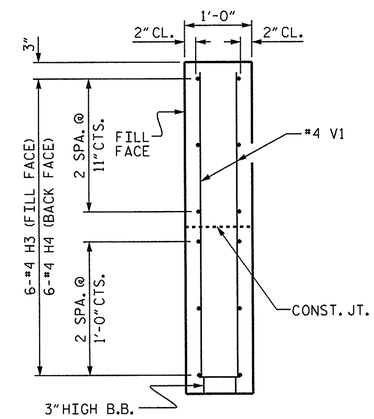

SECTION Y-Y

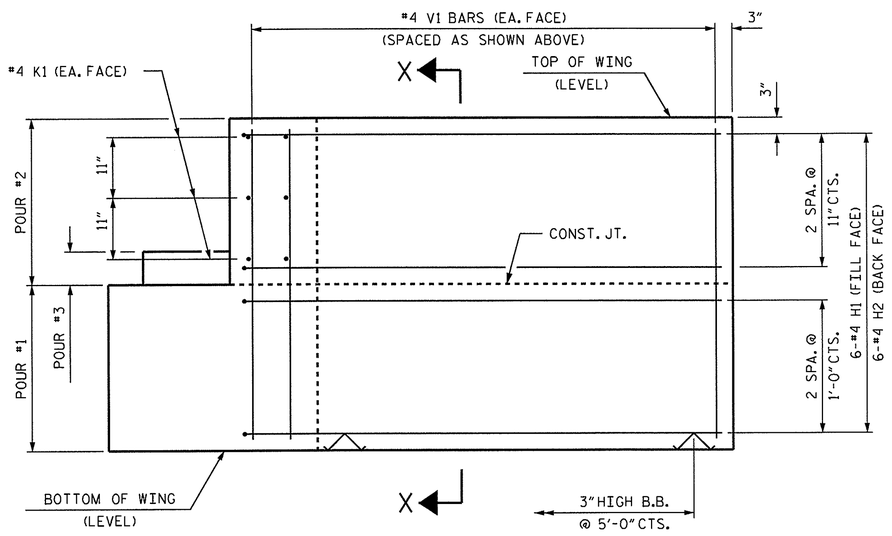

ELEVATION OF WING (W1)

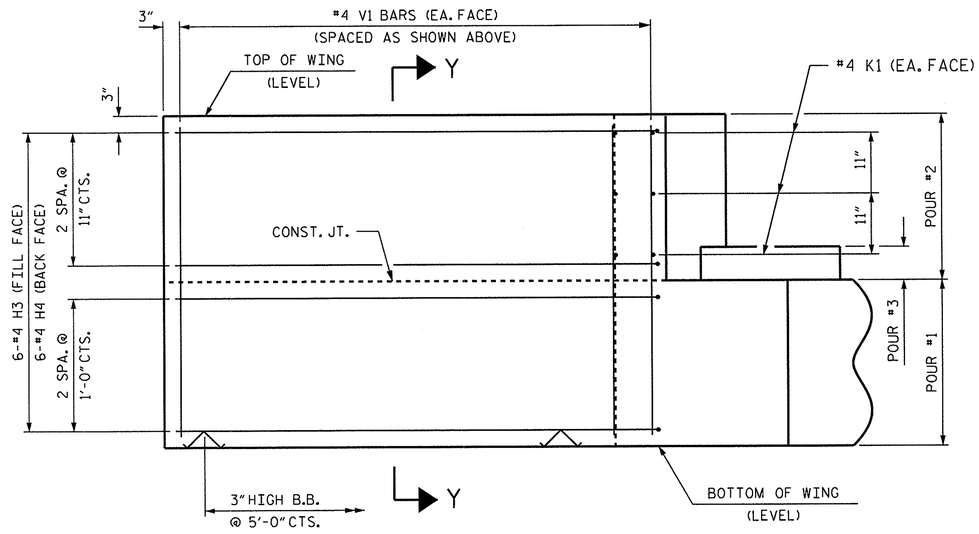

ELEVATION OF WING (W2)

WING DETAILS

PROJECT NO. BD-5113B
BUNCOMBE COUNTY
STATION: 13+16.92 -L-

SHEET 2 OF 3

STATE OF NORTH CAROLINA
DEPARTMENT OF TRANSPORTATION
RALEIGH

SUBSTRUCTURE
END BENT No. 1
WING DETAILS

NORTH CAROLINA PROFESSIONAL SEAL 20125 ENGINEER
1-12-12

REVISIONS						SHEET NO.
NO.	BY:	DATE:	NO.	BY:	DATE:	S-14
1			3			TOTAL SHEETS
2			4			21

ASSEMBLED BY : BMATHEW	DATE : 9/2011
CHECKED BY : M.G. CHEEK	DATE : 1/2012
DRAWN BY : DGE 03/10	
CHECKED BY : MKT 03/10	

12-JAN-2012 09:30
S:\DPG4\Marc\Low_Impact_Bridges\BD-5113B\BD-5113B_SD_E*.dgn
mpoole

STD. NO. EB_33_105S

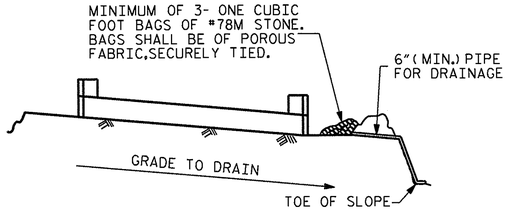

BAGGED STONE AND PIPE SHALL BE PLACED IMMEDIATELY AFTER COMPLETION OF END BENT EXCAVATION. PIPE MAY BE EITHER CONCRETE, CORRUGATED STEEL, CORRUGATED ALUMINUM ALLOY, OR CORRUGATED PLASTIC. PERFORATED PIPE WILL NOT BE ALLOWED.

BAGGED STONE SHALL REMAIN IN PLACE UNTIL THE ENGINEER DIRECTS THAT IT BE REMOVED. THE CONTRACTOR SHALL REMOVE AND DISPOSE OF SILT ACCUMULATIONS AT BAGGED STONE WHEN SO DIRECTED BY THE ENGINEER. BAGS SHALL BE REMOVED AND REPLACED WHENEVER THE ENGINEER DETERMINES THAT THEY HAVE DETERIORATED AND LOST THEIR EFFECTIVENESS.

NO SEPARATE PAYMENT WILL BE MADE FOR THIS WORK AND THE ENTIRE COST OF THIS WORK SHALL BE INCLUDED IN THE UNIT CONTRACT PRICE BID FOR THE SEVERAL PAY ITEMS.

TEMPORARY DRAINAGE AT END BENT

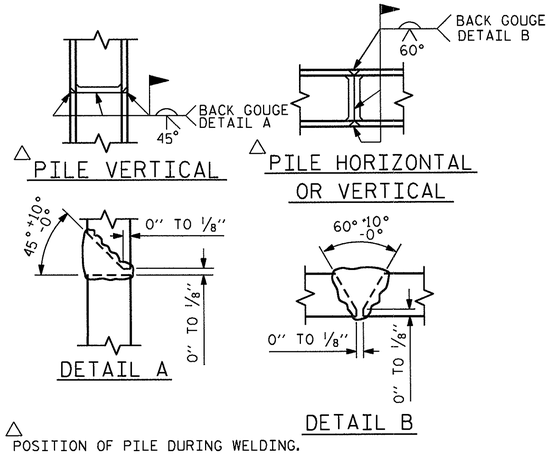

△ POSITION OF PILE DURING WELDING.

PILE SPLICE DETAILS

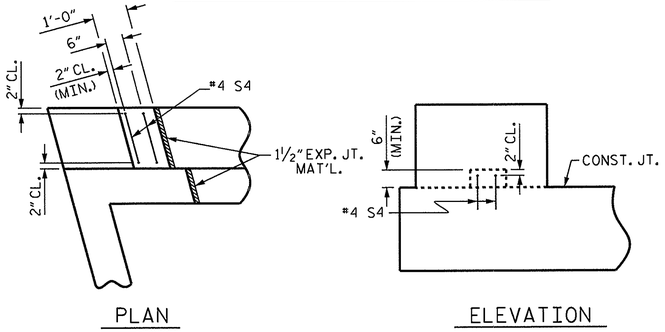

LATERAL GUIDE DETAILS

(LEFT LATERAL GUIDE SHOWN, RIGHT END SIMILAR

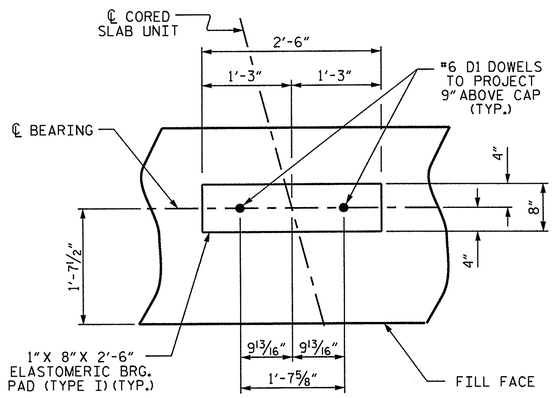

DETAIL "A"

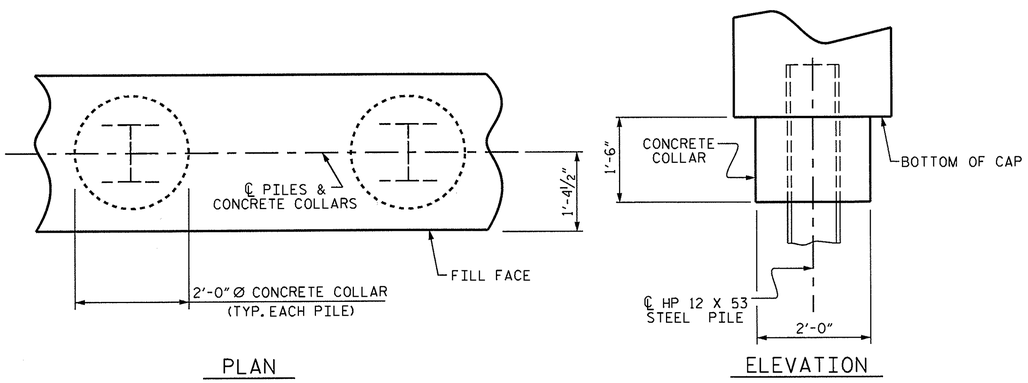

CORROSION PROTECTION FOR STEEL PILES DETAIL

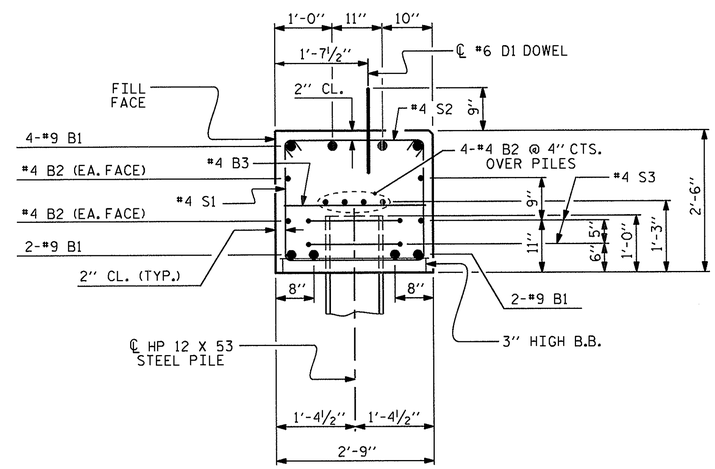

SECTION A-A

(CONCRETE COLLAR NOT SHOWN FOR CLARITY. SEE "CORROSION PROTECTION FOR STEEL PILES DETAIL.")

BAR TYPES

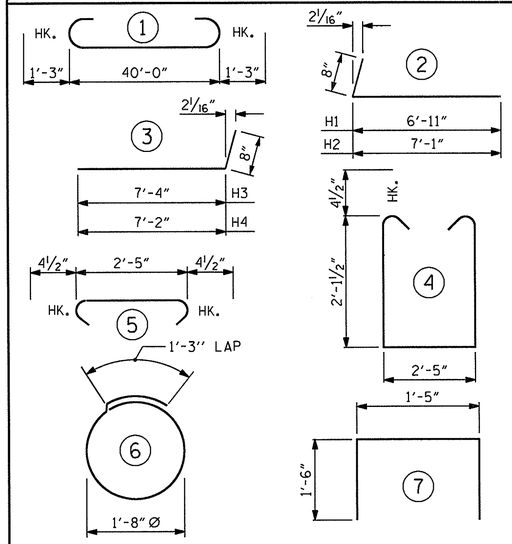

ALL BAR DIMENSIONS ARE OUT TO OUT.

END BENT No. 1
HP 12 X 53 STEEL PILES
NO: 7 70

BILL OF MATERIAL
END BENT No. 1

BAR	NO.	SIZE	TYPE	LENGTH	WEIGHT
B1	8	#9	1	42'-6"	1156
B2	16	#4	STR	21'-4"	228
B3	10	#4	STR	2'-5"	16
D1	22	#6	STR	1'-6"	50
H1	6	#4	2	7'-7"	30
H2	6	#4	2	7'-9"	31
H3	6	#4	3	8'-0"	32
H4	6	#4	3	7'-10"	31
K1	12	#4	STR	3'-1"	25
S1	52	#4	4	7'-5"	258
S2	52	#4	5	3'-2"	110
S3	14	#4	6	6'-6"	61
S4	4	#4	7	4'-5"	12
V1	49	#4	STR	4'-8"	153

REINFORCING STEEL 2193 LBS.

CLASS A CONCRETE BREAKDOWN

POUR #1	CAP, LOWER PART OF WINGS & COLLARS	12.7 C.Y.
POUR #2	UPPER PART OF WINGS	1.8 C.Y.
POUR #3	LATERAL GUIDES	0.1 C.Y.
TOTAL CLASS A CONCRETE		14.6 C.Y.

PROJECT NO. BD-5113B
BUNCOMBE COUNTY
STATION: 13+16.92 -L-

SHEET 3 OF 3

STATE OF NORTH CAROLINA
DEPARTMENT OF TRANSPORTATION
RALEIGH

SUBSTRUCTURE

END BENT No. 1
DETAILS

NORTH CAROLINA PROFESSIONAL SEAL 20125 ENGINEER MARSHALL G. CHEEK, JR.
1-12-12

REVISIONS						SHEET NO.
NO.	BY:	DATE:	NO.	BY:	DATE:	S-15
1			3			TOTAL SHEETS
2			4			21

ASSEMBLED BY :	BMATHEW	DATE :	9/2011
CHECKED BY :	M.G. CHEEK	DATE :	1/2012
DRAWN BY :	DGE	03/10	
CHECKED BY :	MKT	03/10	

12-JAN-2012 09:30
S:\DPG4\Marc\Low_Impact_Bridges\BD-5113B\BD-5113B_SD_E*.dgn
mpoole

STD. NO. EB_33_105S

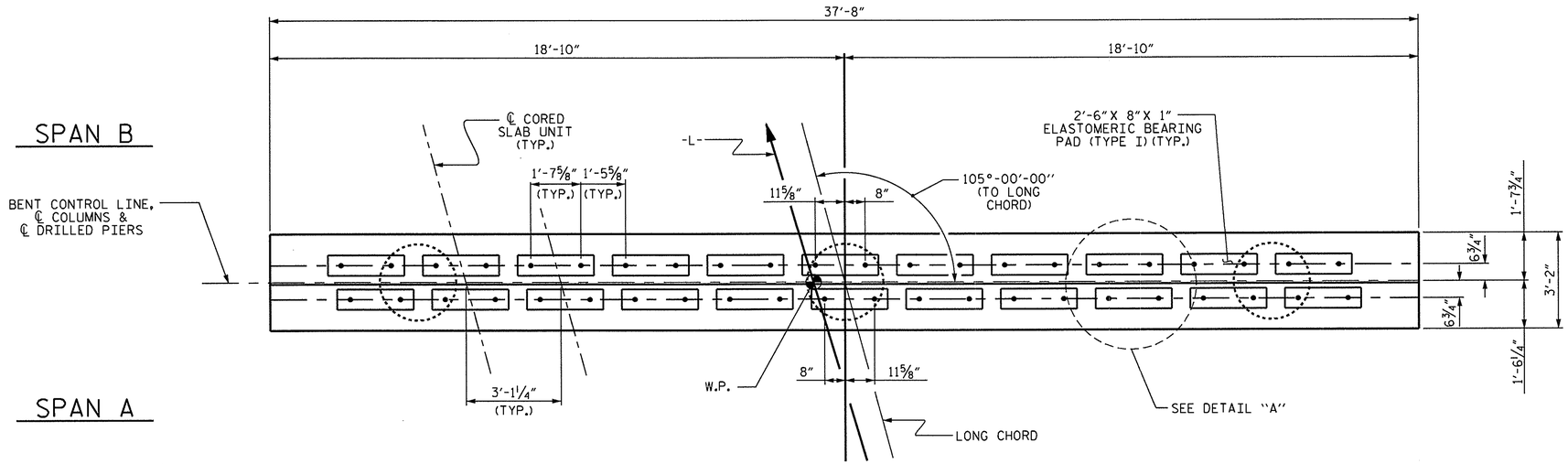

PLAN

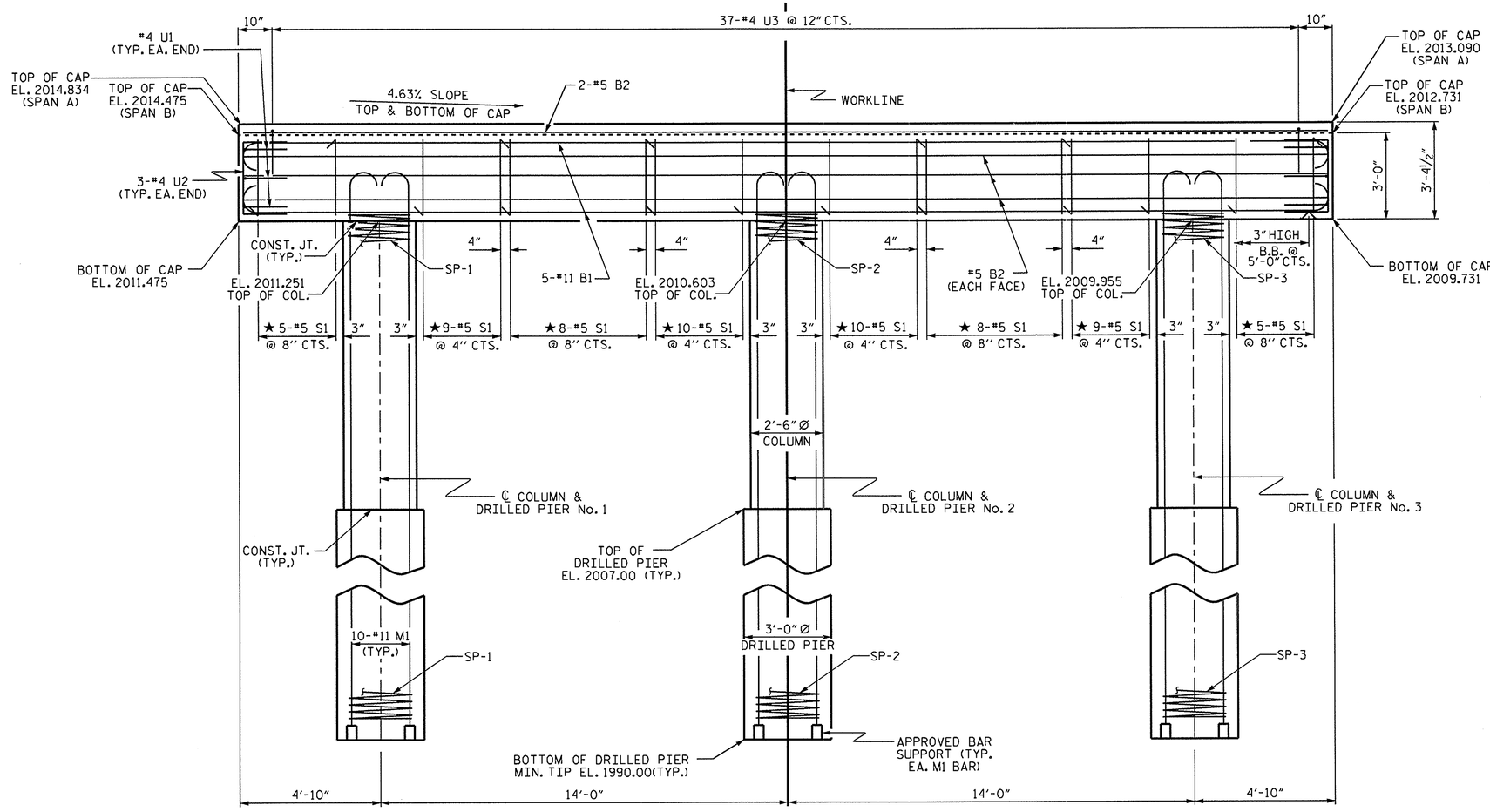

ELEVATION

DIMENSIONS & REINFORCING STEEL ARE TYPICAL FOR EACH COLUMN & DRILLED PIER UNLESS OTHERWISE NOTED.

NOTES

STIRRUPS IN CAP MAY BE SHIFTED AS NECESSARY TO CLEAR DOWELS.

HOOKS ON "V" BARS MAY BE TURNED AS NECESSARY FOR PLACING REINFORCING STEEL.

FOR DRILLED PIERS, SEE SPECIAL PROVISIONS.

ALL STEEL IN THE DRILLED PIERS IS INCLUDED IN THE PAY ITEMS FOR "REINFORCING STEEL" AND "SPIRAL COLUMN REINFORCING STEEL."

★ INVERT ALTERNATE STIRRUPS.

THE LOCATION OF THE CONSTRUCTION JOINT IN THE DRILLED PIERS IS BASED ON AN APPROXIMATE GROUND LINE ELEVATION. IF THE CONSTRUCTION JOINT IS ABOVE THE ACTUAL GROUND LINE ELEVATION, THE CONTRACTOR SHALL PLACE THE CONSTRUCTION JOINT ONE FOOT BELOW THE GROUND LINE.

DRILLED PIERS SHALL BE TERMINATED ONE FOOT ± ABOVE NORMAL WATER SURFACE ELEVATION FOR SHAFTS LOCATED IN WATER.

THE CONTRACTOR'S ATTENTION IS CALLED TO THE FACT THAT THE LONGITUDINAL REINFORCEMENT FOR DRILLED PIERS IS DETAILED WITH 3 FEET OF EXTRA LENGTH.

FOR PERMANENT STEEL CASING, SEE DRILLED PIER SPECIAL PROVISIONS.

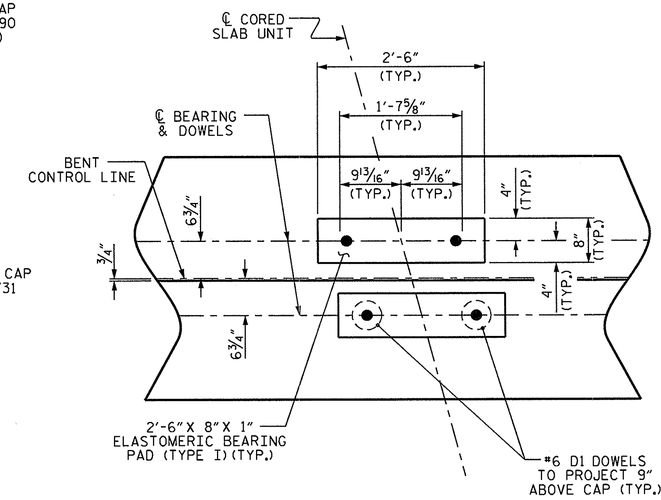

DETAIL "A"

(DIMENSIONS ARE TYPICAL EACH BEARING)

PROJECT NO. BD-5113B

BUNCOMBE COUNTY

STATION: 13+16.92 -L-

SHEET 1 OF 2

STATE OF NORTH CAROLINA
DEPARTMENT OF TRANSPORTATION
RALEIGH

SUBSTRUCTURE

BENT No. 1

NORTH CAROLINA PROFESSIONAL SEAL 20125 ENGINEER MARSHALL G. CHEEK, JR.
1-12-12

ASSEMBLED BY :	BMATHEW	DATE : 9/2011
CHECKED BY :	M.G. CHEEK	DATE : 1/2012
DRAWN BY : DGE	04/10	
CHECKED BY : MKT	04/10	

REVISIONS								SHEET NO.
NO.	BY:	DATE:	NO.	BY:	DATE:			S-16
1			3					TOTAL SHEETS
2			4					21

12-JAN-2012 11:24
S:\DPG4\Marc\Low_Impact_Bridges\BD-5113B\BD-5113B_SD_B*.dgn
wjharris

STD. NO. DP_BT_33_105S_<50'

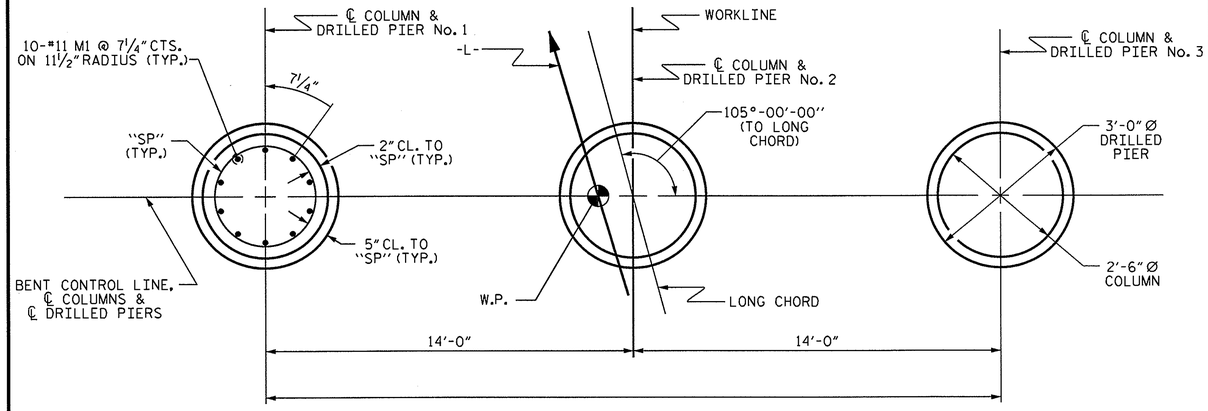

PLAN OF DRILLED PIERS & COLUMNS

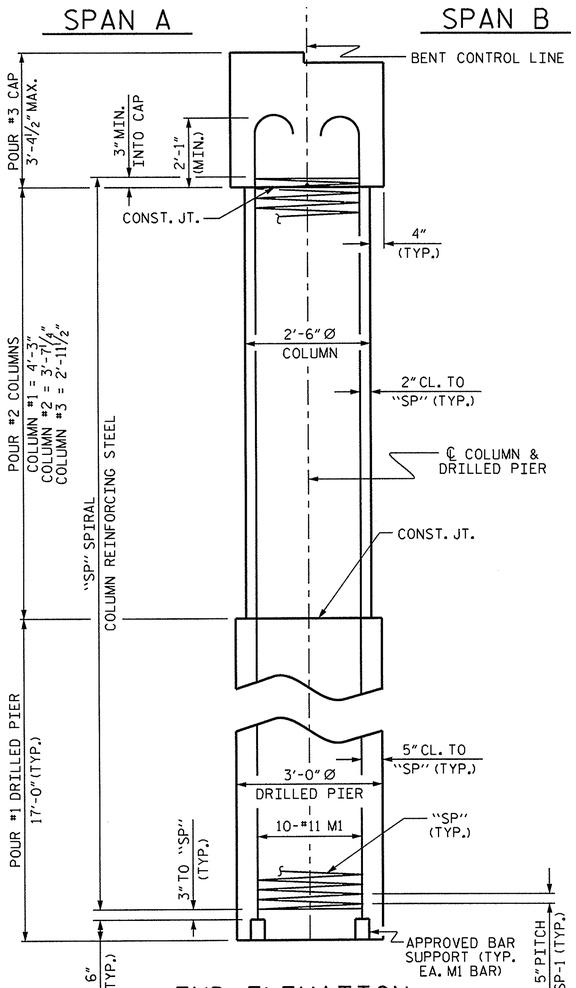

END ELEVATION

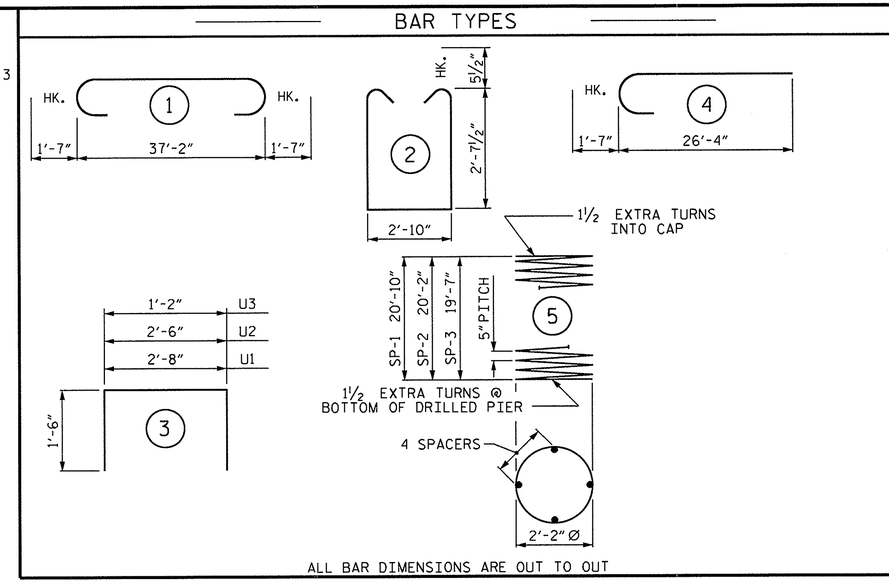

BILL OF MATERIAL

BENT #1

BAR	NO.	SIZE	TYPE	LENGTH	WEIGHT
B1	10	#11	1	40'-4"	2143
B2	8	#5	STR	37'-4"	312
D1	44	#6	STR	1'-6"	99
M1	30	#11	4	27'-5"	4370
S1	64	#5	2	9'-0"	601
U1	6	#4	3	5'-8"	23
U2	6	#4	3	5'-6"	22
U3	37	#4	3	4'-2"	103

REINFORCING STEEL 7673 LBS.

SP-1	1	#5	5	352'-10"	368
SP-2	1	#5	5	346'-2'	361
SP-3	1	#5	5	332'-10"	347

SPIRAL COLUMN REINFORCING STEEL 1076 LBS.

✳ THE "SP" SPIRAL REINFORCING STEEL SHALL BE W31 OR D-31 COLD DRAWN WIRE OR #5 PLAIN OR DEFORMED BAR

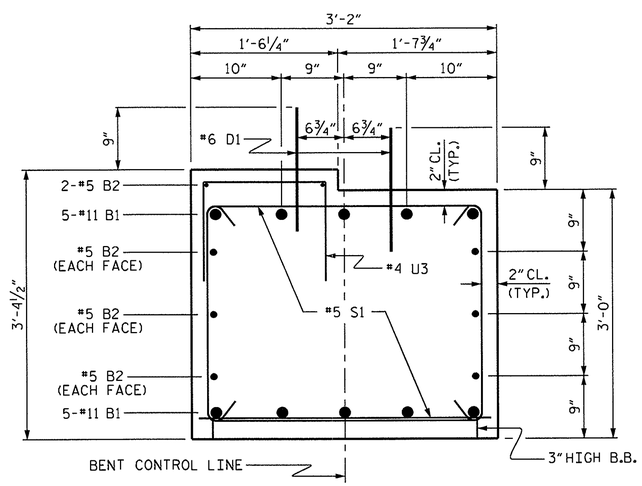

SECTION THRU CAP

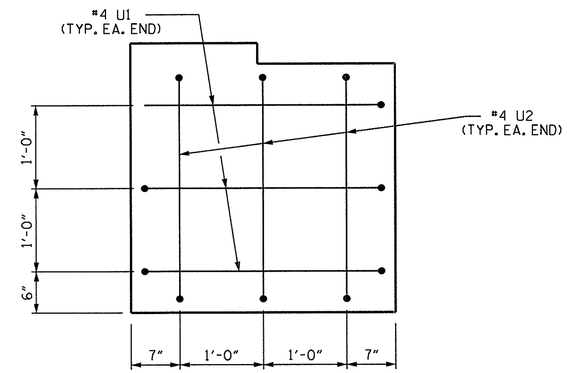

END OF CAP VIEW

(TYPICAL BOTH ENDS)

CLASS A CONCRETE BREAKDOWN (FOR ONE BENT)

POUR #2 (COLUMNS)	2.0 C.Y.
POUR #3 (CAP)	14.1 C.Y.
TOTAL CLASS A CONCRETE	16.1 C.Y.

DRILLED PIERS: (FOR ONE BENT)

DRILLED PIER CONCRETE POUR #1 (DRILLED PIERS)	13.4 C.Y.
3'-0" Ø DRILLED PIER NOT IN SOIL	29.00 LIN. FT.
3'-0" Ø DRILLED PIER IN SOIL	22.00 LIN. FT.
PERMANENT STEEL CASING FOR 3'-0" Ø DRILLED PIER	21.00 LIN. FT.
▲ CSL TUBES	234.00 LIN. FT.

▲ NO SEPARATE PAYMENT WILL BE MADE FOR CSL TUBES. CSL TUBES WILL BE INCLUDED IN THE UNIT PRICE BID FOR DRILLED PIERS.

PROJECT NO. BD-5113B
BUNCOMBE COUNTY
STATION: 13+16.92 -L-

SHEET 2 OF 2

STATE OF NORTH CAROLINA
DEPARTMENT OF TRANSPORTATION
RALEIGH

SUBSTRUCTURE

BENT No. 1

NORTH CAROLINA PROFESSIONAL SEAL 20125 ENGINEER MARSHALL G. CHEEK, JR. 1-26-12

ASSEMBLED BY :	BMATHEW	DATE : 9/2011
CHECKED BY :	M.G. CHEEK	DATE : 1/2012
DRAWN BY :	DGE	03/10
CHECKED BY :	MKT	03/10

REVISIONS						SHEET NO.
NO.	BY:	DATE:	NO.	BY:	DATE:	S-17
1			3			TOTAL SHEETS
2			4			21

26-JAN-2012 10:32
S:\DPG4\Marc\Low_Impact_Bridges\BD-5113B\BD-5113B_SD_B*.dgn
dahodge

STD. NO. DP_BT_33_105S_<50'

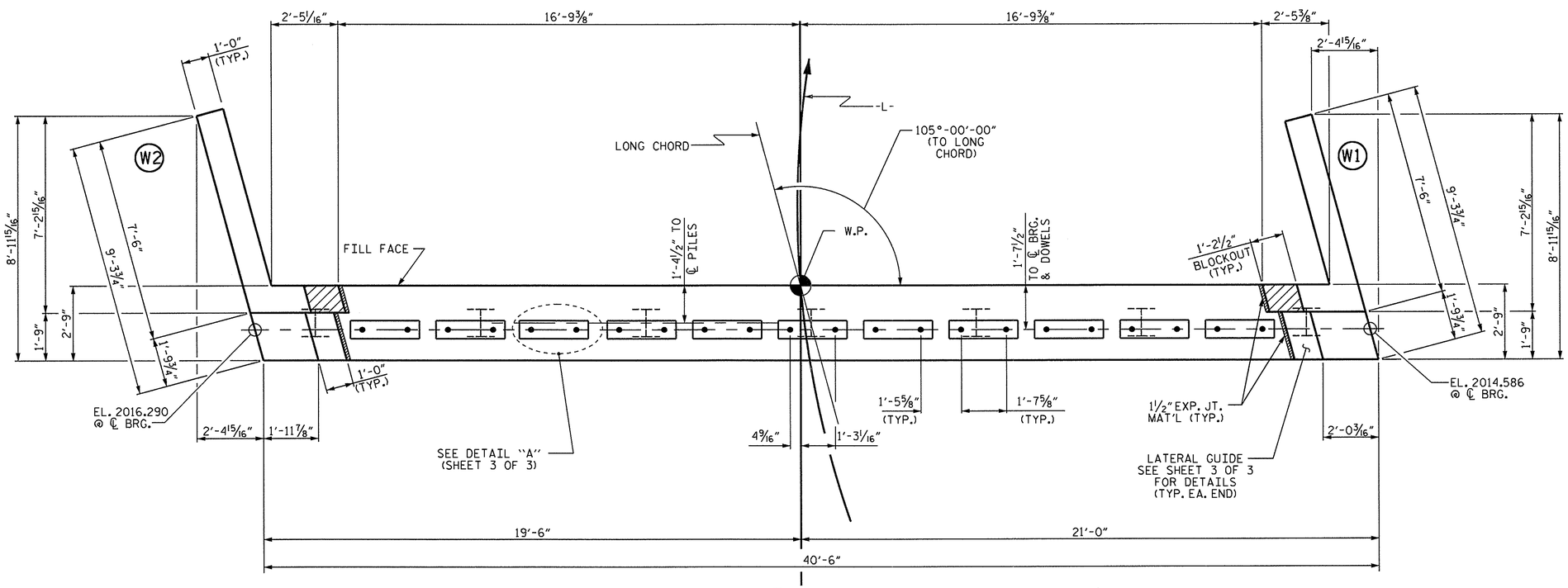

PLAN

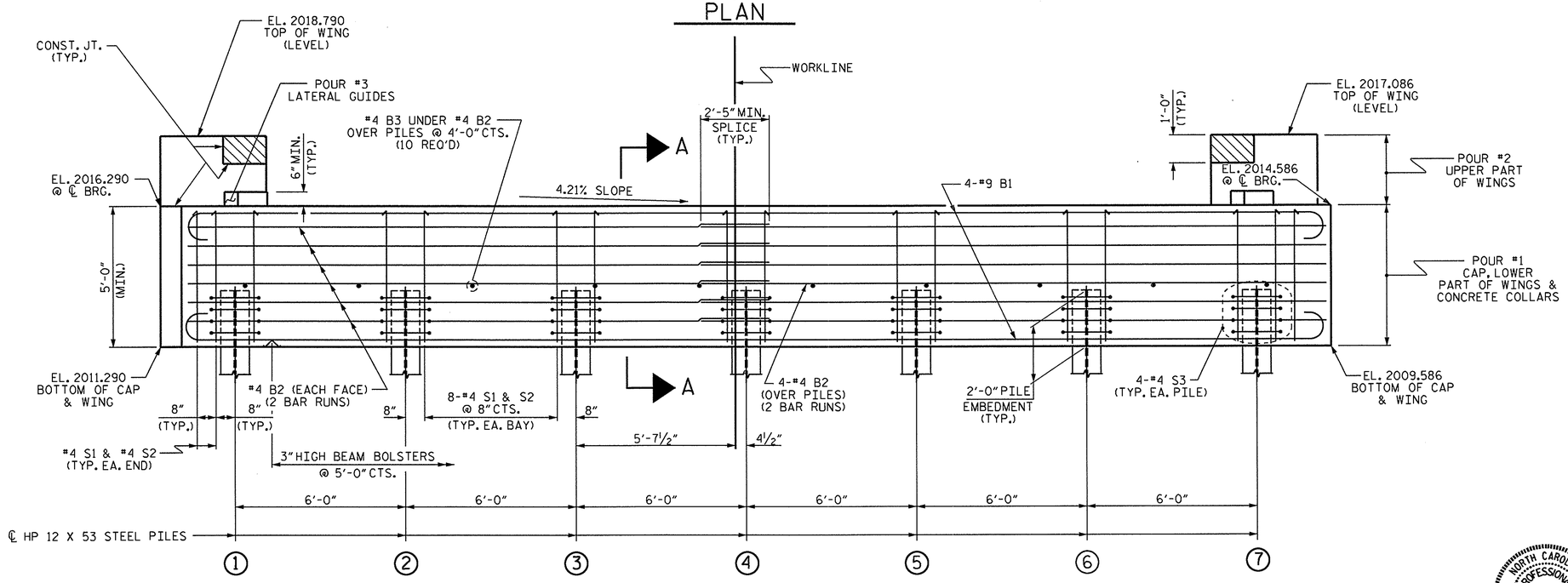

ELEVATION

WINGS NOT SHOWN FOR CLARITY.
FOR SECTION A-A, SEE SHEET 3 OF 3.
CONCRETE COLLARS FOR STEEL PILES NOT SHOWN IN PLAN AND ELEVATION VIEWS FOR CLARITY.
SEE "CORROSION PROTECTION FOR STEEL PILES DETAIL", SHEET 3 OF 3.

NOTES

STIRRUPS IN CAP MAY BE SHIFTED AS NECESSARY TO CLEAR DOWELS.

THE LATERAL GUIDES ARE NOT TO BE POURED UNTIL AFTER THE CORED SLAB UNITS ARE IN PLACE.

THE CONCRETE IN THE SHADED AREA OF THE WING SHALL BE POURED AFTER THE VERTICAL CONCRETE BARRIER RAIL IS CAST IF SLIP FORMING IS USED.

FOR PILE SPLICE DETAILS, SEE SHEET 3 OF 3.

FOR WING DETAILS, SEE SHEET 2 OF 3.

THE CONTRACTOR HAS THE OPTION TO OMIT THE LATERAL GUIDE IF APPROVED BY THE ENGINEER.

TOP OF PILE ELEVATIONS	
1	2014.720
2	2014.467
3	2014.214
4	2013.961
5	2013.708
6	2013.455
7	2013.202

PROJECT NO. BD-5113B
BUNCOMBE COUNTY
STATION: 13+16.92 -L-

SHEET 1 OF 3

STATE OF NORTH CAROLINA
DEPARTMENT OF TRANSPORTATION
RALEIGH

SUBSTRUCTURE

END BENT No. 2

NORTH CAROLINA PROFESSIONAL SEAL 20125 ENGINEER MARSHALL B. CHEEK, JR.
1-12-12

REVISIONS								SHEET NO.
NO.	BY:	DATE:	NO.	BY:	DATE:			S-18
1			3					TOTAL SHEETS
2			4					21

ASSEMBLED BY : BMATHEW	DATE : 9/2011
CHECKED BY : M.G. CHEEK	DATE : 1/2012
DRAWN BY : DGE 02/10	
CHECKED BY : MKT 02/10	

12-JAN-2012 09:30
S:\DPG4\Marc\Low_Impact_Bridges\BD-5113B\BD-5113B_SD_E*.dgn
mpoole

STD. NO. EB_33_105S

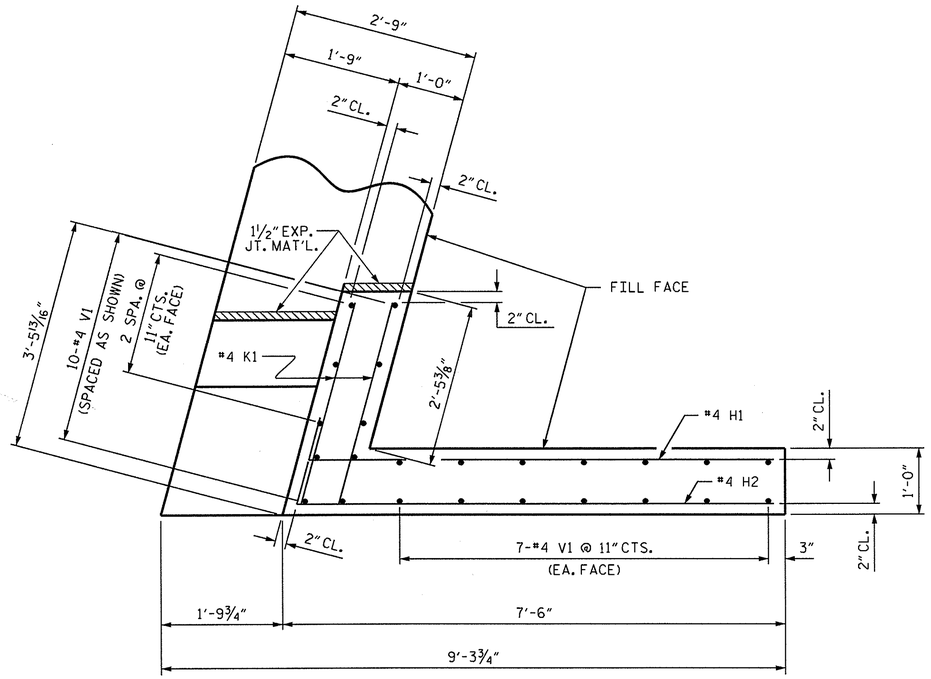

PLAN OF WING (W1)

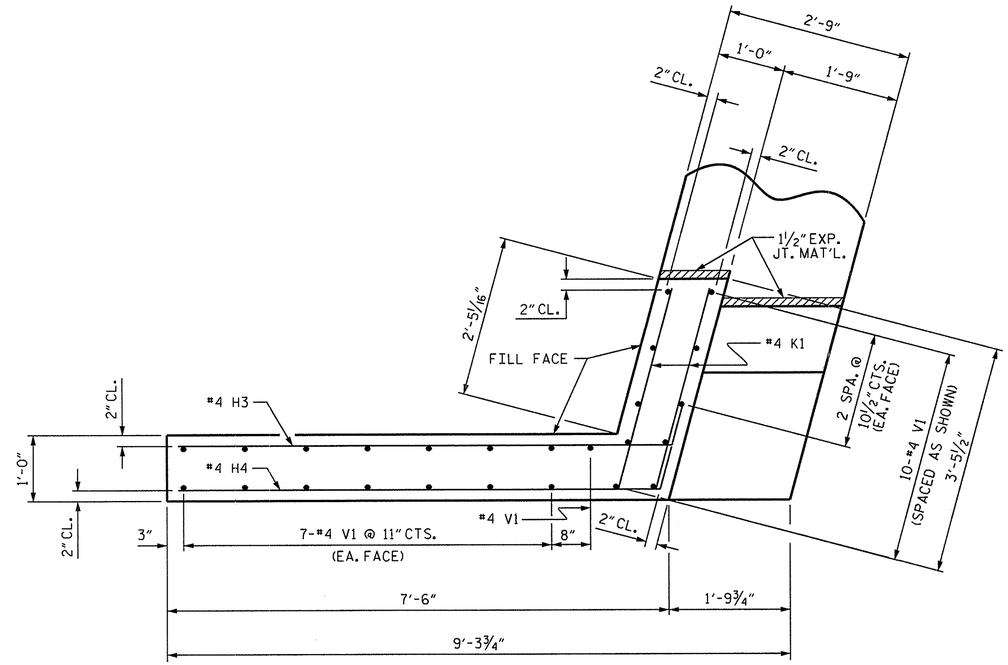

PLAN OF WING (W2)

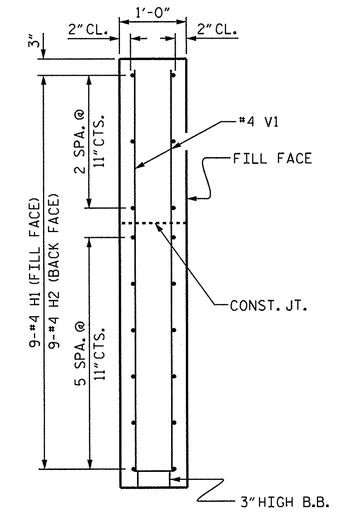

SECTION X-X

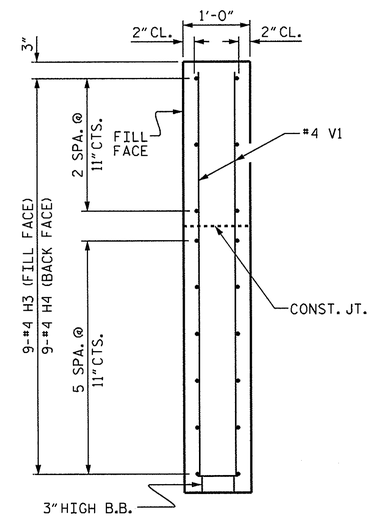

SECTION Y-Y

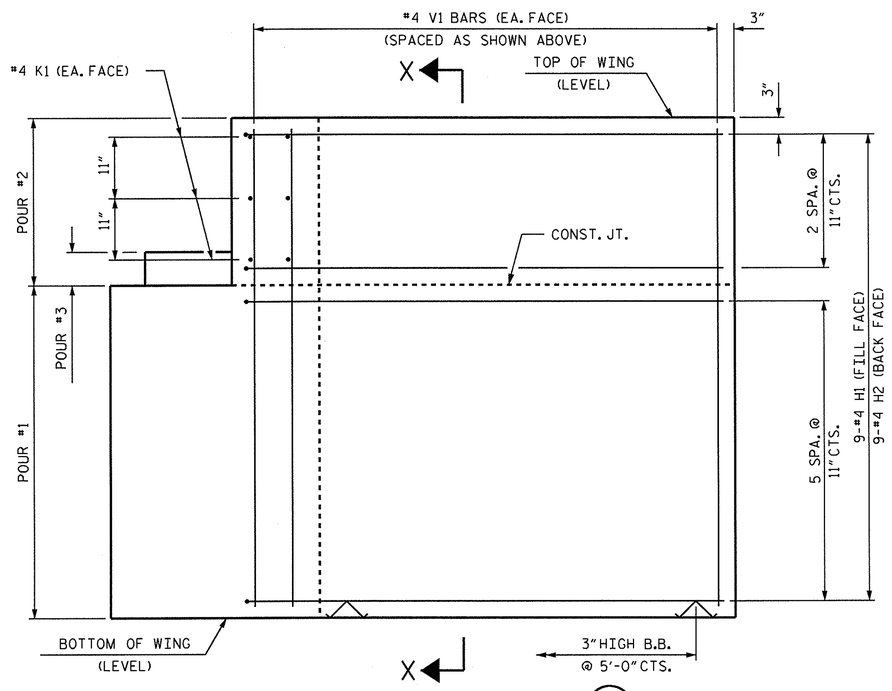

ELEVATION OF WING (W1)

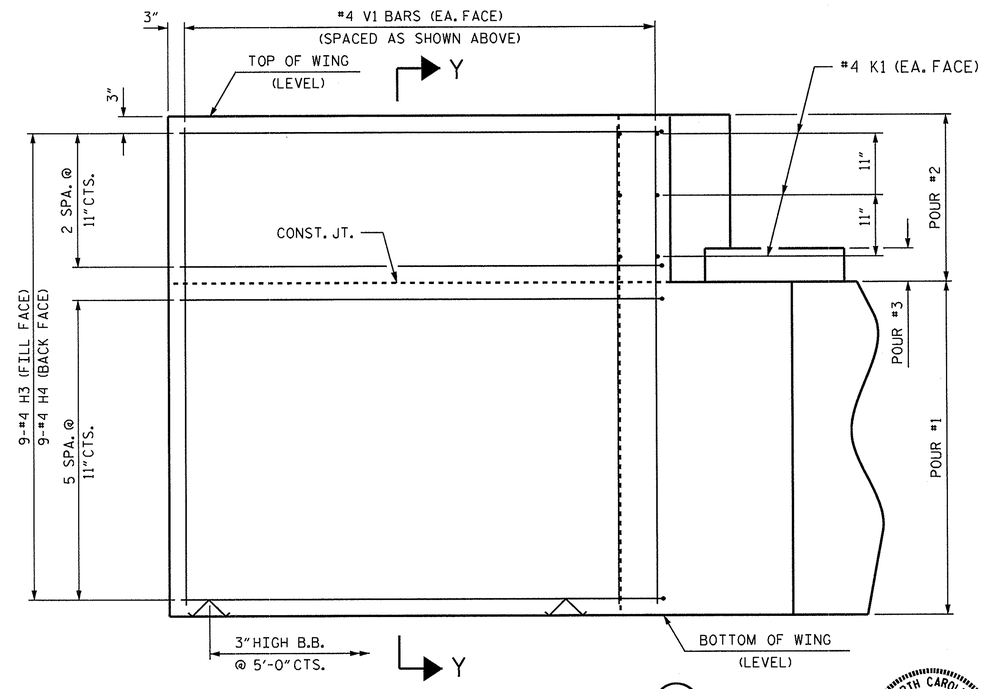

ELEVATION OF WING (W2)

WING DETAILS

PROJECT NO. BD-5113B
BUNCOMBE COUNTY
STATION: 13+16.92 -L-

SHEET 2 OF 3

STATE OF NORTH CAROLINA
DEPARTMENT OF TRANSPORTATION
RALEIGH

SUBSTRUCTURE
END BENT No. 2
WING DETAILS

NORTH CAROLINA PROFESSIONAL SEAL 20125 ENGINEER MARSHALL G. CHEEK, JR.
1-12-12

REVISIONS						SHEET NO.
NO.	BY:	DATE:	NO.	BY:	DATE:	S-19
1			3			TOTAL SHEETS
2			4			21

ASSEMBLED BY : BMATHEW	DATE : 9/2011
CHECKED BY : M.G. CHEEK	DATE : 1/2012
DRAWN BY : DGE 03/10	
CHECKED BY : MKT 03/10	

12-JAN-2012 09:30
S:\DPG4\Marc\Low_Impact_Bridges\BD-5113B\BD-5113B_SD_E*.dgn
mpoole

STD. NO. EB_33_105S

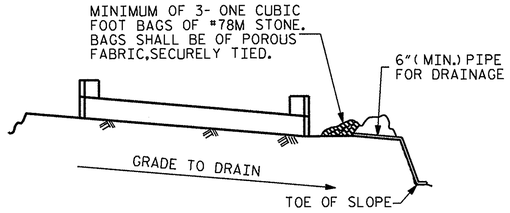

BAGGED STONE AND PIPE SHALL BE PLACED IMMEDIATELY AFTER COMPLETION OF END BENT EXCAVATION. PIPE MAY BE EITHER CONCRETE, CORRUGATED STEEL, CORRUGATED ALUMINUM ALLOY, OR CORRUGATED PLASTIC. PERFORATED PIPE WILL NOT BE ALLOWED.

BAGGED STONE SHALL REMAIN IN PLACE UNTIL THE ENGINEER DIRECTS THAT IT BE REMOVED. THE CONTRACTOR SHALL REMOVE AND DISPOSE OF SILT ACCUMULATIONS AT BAGGED STONE WHEN SO DIRECTED BY THE ENGINEER. BAGS SHALL BE REMOVED AND REPLACED WHENEVER THE ENGINEER DETERMINES THAT THEY HAVE DETERIORATED AND LOST THEIR EFFECTIVENESS.

NO SEPARATE PAYMENT WILL BE MADE FOR THIS WORK AND THE ENTIRE COST OF THIS WORK SHALL BE INCLUDED IN THE UNIT CONTRACT PRICE BID FOR THE SEVERAL PAY ITEMS.

TEMPORARY DRAINAGE AT END BENT

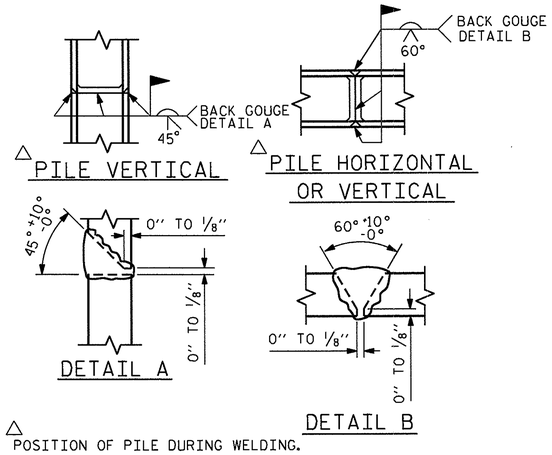

△ POSITION OF PILE DURING WELDING.

PILE SPLICE DETAILS

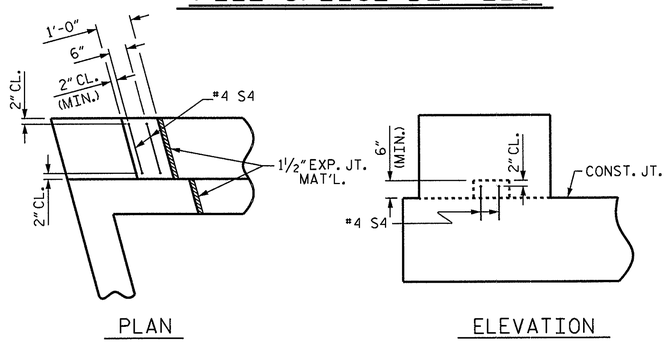

LATERAL GUIDE DETAILS

RIGHT LATERAL GUIDE SHOWN, LEFT END SIMILAR

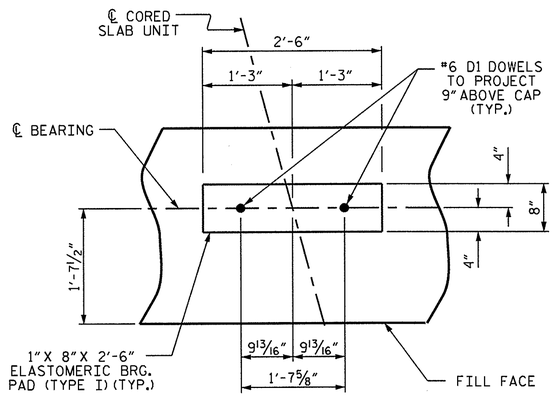

DETAIL "A"

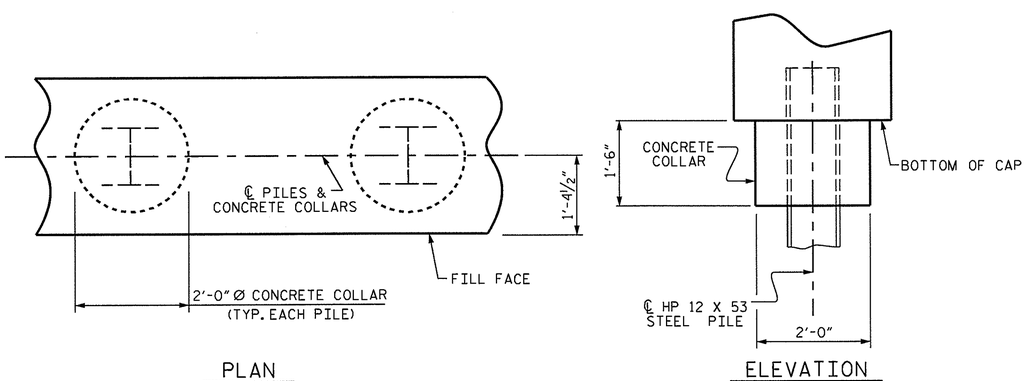

CORROSION PROTECTION FOR STEEL PILES DETAIL

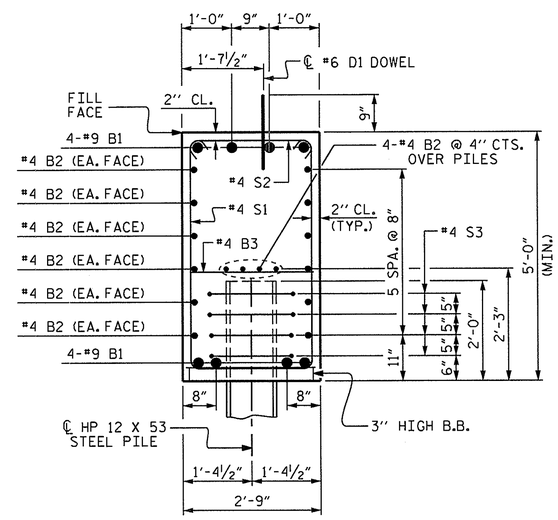

SECTION A-A

(CONCRETE COLLAR NOT SHOWN FOR CLARITY. SEE "CORROSION PROTECTION FOR STEEL PILES DETAIL.")

BAR TYPES

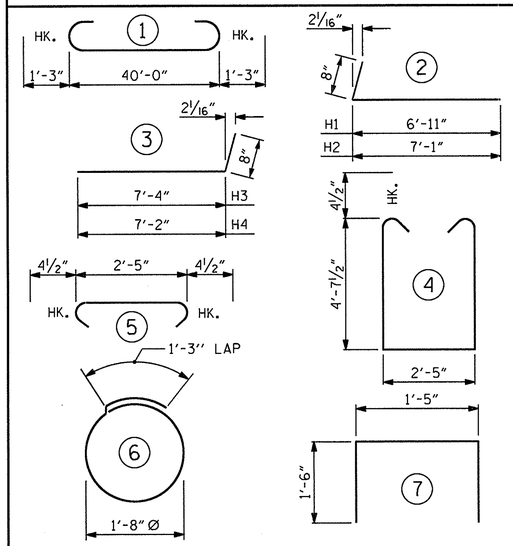

ALL BAR DIMENSIONS ARE OUT TO OUT.

END BENT No. 2
HP 12 X 53 STEEL PILES
NO: 7 105

BILL OF MATERIAL

END BENT No. 2

BAR	NO.	SIZE	TYPE	LENGTH	WEIGHT
B1	8	#9	1	42'-6"	1156
B2	32	#4	STR	21'-4"	456
B3	10	#4	STR	2'-5"	16
D1	22	#6	STR	1'-6"	50
H1	9	#4	2	7'-7"	46
H2	9	#4	2	7'-9"	47
H3	9	#4	3	8'-0"	48
H4	9	#4	3	7'-10"	47
K1	12	#4	STR	3'-1"	25
S1	52	#4	4	12'-5"	431
S2	52	#4	5	3'-2"	110
S3	28	#4	6	6'-6"	122
S4	4	#4	7	4'-5"	12
V1	49	#4	STR	7'-2"	235

REINFORCING STEEL 2801 LBS.

CLASS A CONCRETE BREAKDOWN

POUR #1	CAP, LOWER PART OF WINGS & COLLARS	24.2 C.Y.
POUR #2	UPPER PART OF WINGS	1.8 C.Y.
POUR #3	LATERAL GUIDES	0.1 C.Y.
TOTAL CLASS A CONCRETE		26.1 C.Y.

PROJECT NO. BD-5113B
BUNCOMBE COUNTY
STATION: 13+16.92 -L-

SHEET 3 OF 3

STATE OF NORTH CAROLINA
DEPARTMENT OF TRANSPORTATION
RALEIGH

SUBSTRUCTURE

END BENT No. 2
DETAILS

NORTH CAROLINA PROFESSIONAL SEAL 20125 ENGINEER MARSHALL G. CHEEK, JR.
1-12-12

REVISIONS						SHEET NO.
NO.	BY:	DATE:	NO.	BY:	DATE:	S-20
1			3			TOTAL SHEETS
2			4			21

ASSEMBLED BY :	BMATHEW	DATE :	9/2011
CHECKED BY :	M.G. CHEEK	DATE :	1/2012
DRAWN BY :	DGE	03/10	
CHECKED BY :	MKT	03/10	

12-JAN-2012 09:29
S:\OPC4\Marc\Low_Impact_Bridges\BD-5113B\BD-5113B_SD_E*.dgn
mpoole

STD. NO. EB_33_105S

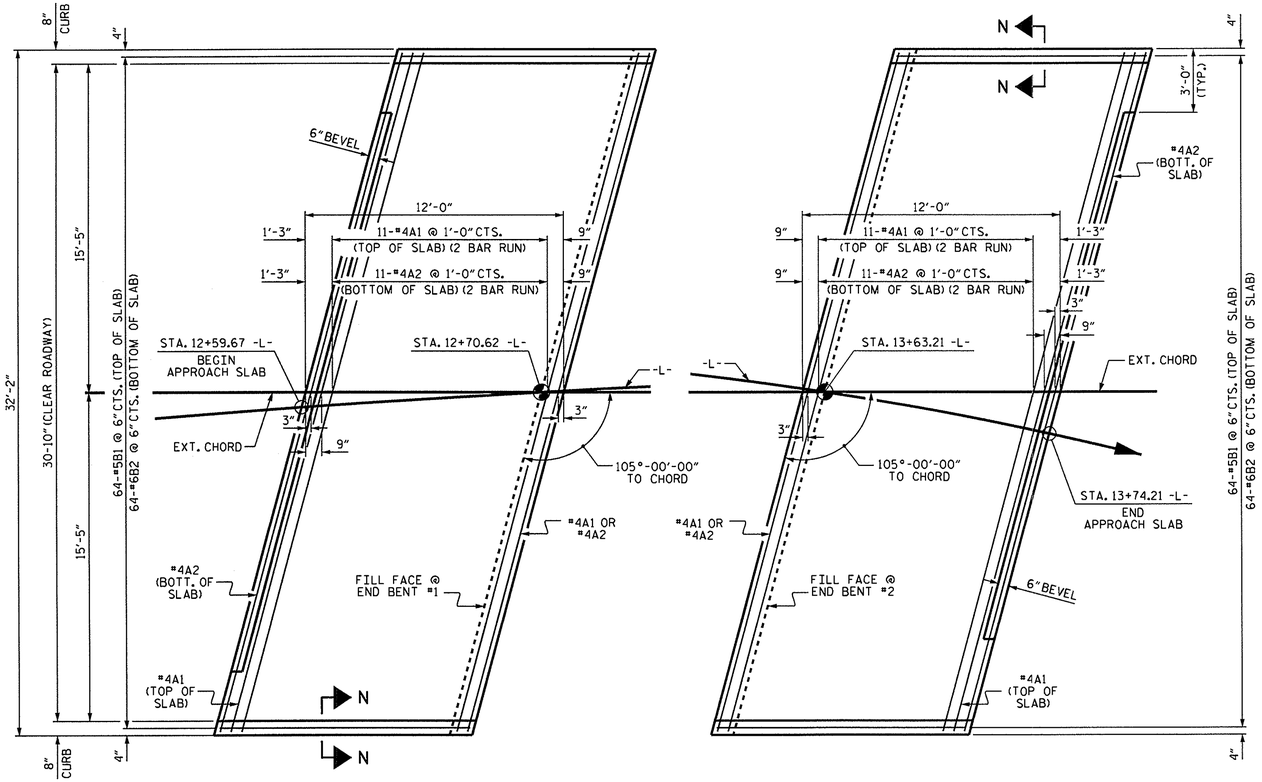

PLAN @ END BENT #1

PLAN @ END BENT #2

DIMENSIONS SHOWN ARE TYPICAL FOR BOTH APPROACH SLABS

NOTES

FOR BRIDGE APPROACH FILL INCLUDING FABRIC, 4"Ø DRAINAGE PIPE, AND #78M STONE BACKFILL, SEE ROADWAY PLANS.

FABRIC SHALL BE TYPE 1 ENGINEERING FABRIC IN ACCORDANCE WITH THE STANDARD SPECIFICATIONS SECTION 1056.

#78M STONE BACKFILL (CLASS V SELECT MATERIAL) SHALL BE IN ACCORDANCE WITH STANDARD SPECIFICATIONS SECTION 1016.

#78M STONE BACKFILL IS TO BE CONTINUOUS ALONG FILL FACE OF BACKWALL FROM OUTSIDE EDGE TO OUTSIDE EDGE OF APPROACH SLAB.

FOR THE 4"Ø DRAINAGE PIPE OUTLET(S), SEE ROADWAY STANDARD DRAWINGS.

AREA BETWEEN THE WINGWALL AND APPROACH SLAB SHALL BE GRADED TO DRAIN THE WATER AWAY FROM THE FILL FACE OF THE BRIDGE AND SHALL BE PAVED. SEE ROADWAY PLANS.

APPROACH SLAB GROOVING IS NOT REQUIRED.

THE JOINT AT THE END BENT SHALL BE GROUTED AS SOON AS PRACTICAL AFTER THE CONSTRUCTION OF THE APPROACH SLABS.

THE CONTRACTOR HAS THE OPTION TO OMIT GROUT BETWEEN THE APPROACH SLAB AND THE CORED SLAB UNITS AND POUR THE APPROACH SLAB DIRECTLY AGAINST THE CORED SLAB UNITS. SEE "OPTIONAL JOINT DETAIL".

BILL OF MATERIAL

APPROACH SLAB AT EB #1

BAR	NO.	SIZE	TYPE	LENGTH	WEIGHT
* A1	26	#4	STR	17'-6"	304
A2	26	#4	STR	17'-5"	302
* B1	64	#5	STR	11'-1"	740
B2	64	#6	STR	11'-7"	1113
REINFORCING STEEL				LBS.	1415
* EPOXY COATED REINFORCING STEEL				LBS.	1044
CLASS AA CONCRETE				C. Y.	16.3

APPROACH SLAB AT EB #2

BAR	NO.	SIZE	TYPE	LENGTH	WEIGHT
* A1	26	#4	STR	17'-6"	304
A2	26	#4	STR	17'-5"	302
* B1	64	#5	STR	11'-1"	740
B2	64	#6	STR	11'-7"	1113
REINFORCING STEEL				LBS.	1415
* EPOXY COATED REINFORCING STEEL				LBS.	1044
CLASS AA CONCRETE				C. Y.	17.3

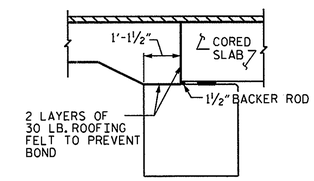

OPTIONAL JOINT DETAIL

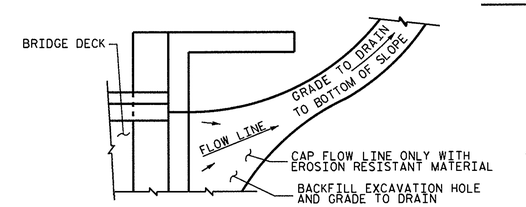

NOTE: IF THE APPROACH SLAB IS NOT CONSTRUCTED IMMEDIATELY AFTER THE BACKFILLING OF THE END BENT EXCAVATION, GRADE TO DRAIN TO THE BOTTOM OF THE SLOPE AND PROVIDE EROSION RESISTANT MATERIAL, SUCH AS FIBERGLASS ROVING OR AS DIRECTED BY THE ENGINEER TO PREVENT SOIL EROSION AND TO PROTECT THE AREA ADJACENT TO THE STRUCTURE. THE CONTRACTOR WILL BE REQUIRED TO REMOVE THESE MATERIALS PRIOR TO CONSTRUCTION OF THE APPROACH SLAB.

TEMPORARY DRAINAGE DETAIL

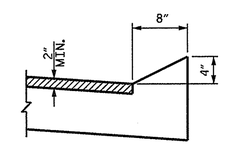

SECTION N-N

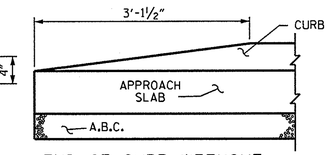

END OF CURB WITHOUT SHOULDER BERM GUTTER

CURB DETAILS

SPLICE LENGTHS

BAR SIZE	EPOXY COATED	UNCOATED
#4	2'-0"	1'-9"
#5	2'-6"	2'-2"
#6	3'-10"	2'-7"

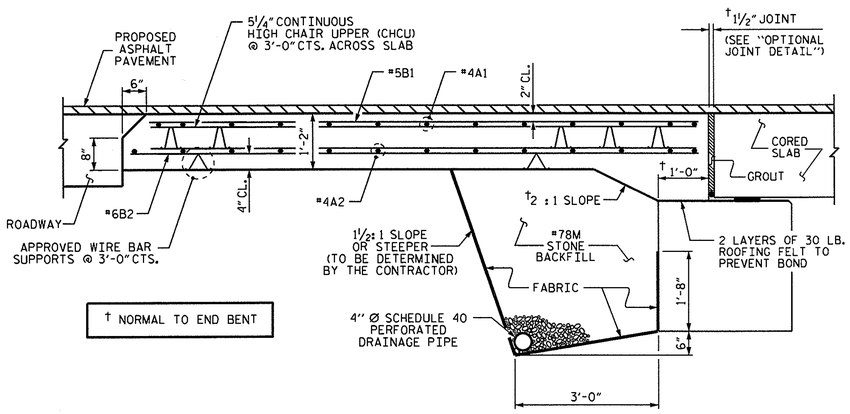

† NORMAL TO END BENT

SECTION THRU SLAB

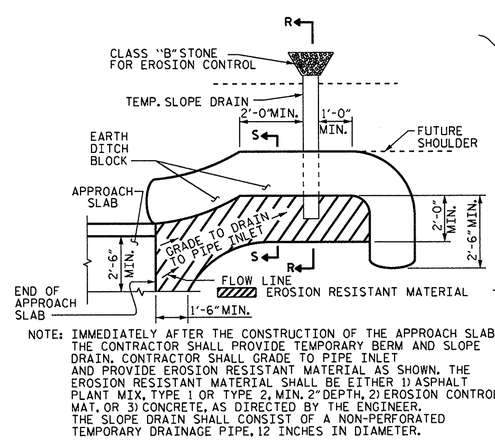

NOTE: IMMEDIATELY AFTER THE CONSTRUCTION OF THE APPROACH SLAB, THE CONTRACTOR SHALL PROVIDE TEMPORARY BERM AND SLOPE DRAIN. CONTRACTOR SHALL GRADE TO PIPE INLET AND PROVIDE EROSION RESISTANT MATERIAL AS SHOWN. THE EROSION RESISTANT MATERIAL SHALL BE EITHER 1) ASPHALT PLANT MIX, TYPE 1 OR TYPE 2, MIN. 2" DEPTH, 2) EROSION CONTROL MAT, OR 3) CONCRETE, AS DIRECTED BY THE ENGINEER. THE SLOPE DRAIN SHALL CONSIST OF A NON-PERFORATED TEMPORARY DRAINAGE PIPE, 12 INCHES IN DIAMETER.

PLAN VIEW

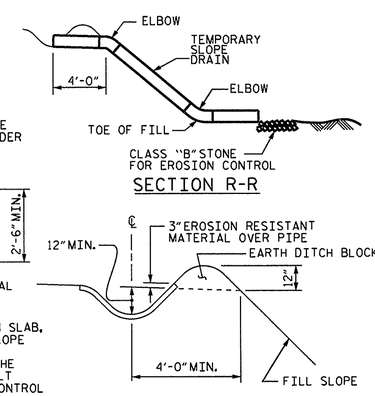

SECTION S-S

TEMPORARY BERM AND SLOPE DRAIN DETAILS

(TO BE USED WHEN SHOULDER BERM GUTTER IS REQUIRED)

BRIDGE NO. BD-5113B

BUNCOMBE COUNTY

STATION: 13+16.92 -L-

STATE OF NORTH CAROLINA
DEPARTMENT OF TRANSPORTATION
RALEIGH

STANDARD
BRIDGE APPROACH SLAB
FOR PRESTRESSED CONCRETE
CORED SLAB UNIT
(SUB-REGIONAL TIER)
105° SKEW

NORTH CAROLINA PROFESSIONAL SEAL 20125 ENGINEER MARSHALL G. CHEEK, JR.
1-26-12

REVISIONS							SHEET NO.
NO.	BY:	DATE:	NO.	BY:	DATE:		S-21
1			3				TOTAL SHEETS
2			4				21

ASSEMBLED BY : B.MATHEW		DATE : 9/2011	
CHECKED BY : M.G. CHEEK		DATE : 1/2012	
DRAWN BY : SHS/MAA 5-09	REV. 12-11	MAA/AAC	
CHECKED BY : BCH 5-09			

26-JAN-2012 10:30
S:\DPG4\Marc\Low_Impact_Bridges\BD-5113B\BD-5113B_SD_AS.dgn
dahodge

STANDARD NOTES

DESIGN DATA:

SPECIFICATIONS	A.A.S.H.T.O. (CURRENT)
LIVE LOAD	SEE PLANS
IMPACT ALLOWANCE	SEE A.A.S.H.T.O.
STRESS IN EXTREME FIBER OF	
STRUCTURAL STEEL - AASHTO M270 GRADE 36	20,000 LBS. PER SQ. IN.
- AASHTO M270 GRADE 50W	27,000 LBS. PER SQ. IN.
- AASHTO M270 GRADE 50	27,000 LBS. PER SQ. IN.
REINFORCING STEEL IN TENSION	
GRADE 60	24,000 LBS. PER SQ. IN.
CONCRETE IN COMPRESSION	1,200 LBS. PER SQ. IN.
CONCRETE IN SHEAR	SEE A.A.S.H.T.O.
STRUCTURAL TIMBER - TREATED OR	
UNTREATED - EXTREME FIBER STRESS	1,800 LBS. PER SQ. IN.
COMPRESSION PERPENDICULAR TO GRAIN OF TIMBER	375 LBS. PER SQ. IN.
EQUIVALENT FLUID PRESSURE OF EARTH	30 LBS. PER CU. FT. (MINIMUM)

MATERIAL AND WORKMANSHIP:

EXCEPT AS MAY OTHERWISE BE SPECIFIED ON PLANS OR IN THE SPECIAL PROVISIONS, ALL MATERIAL AND WORKMANSHIP SHALL BE IN ACCORDANCE WITH THE 2012 "STANDARD SPECIFICATIONS FOR ROADS AND STRUCTURES" OF THE N. C. DEPARTMENT OF TRANSPORTATION.

STEEL SHEET PILING FOR PERMANENT OR TEMPORARY APPLICATIONS SHALL BE HOT ROLLED.

CONCRETE:

UNLESS OTHERWISE REQUIRED ON PLANS, CLASS A CONCRETE SHALL BE USED FOR ALL PORTIONS OF ALL STRUCTURES WITH THE EXCEPTION THAT: CLASS AA CONCRETE SHALL BE USED IN BRIDGE SUPERSTRUCTURES, ABUTMENT BACKWALLS, AND APPROACH SLABS; AND CLASS B CONCRETE SHALL BE USED FOR SLOPE PROTECTION AND RIP RAP.

CONCRETE CHAMFERS:

UNLESS OTHERWISE NOTED ON THE PLANS, ALL EXPOSED CORNERS ON STRUCTURES SHALL BE CHAMFERED 3/4" WITH THE FOLLOWING EXCEPTIONS: TOP CORNERS OF CURBS MAY BE ROUNDED TO 1-1/2" RADIUS WHICH IS BUILT INTO CURB FORMS; CORNERS OF TRANSVERSE FLOOR EXPANSION JOINTS SHALL BE ROUNDED WITH A 1/4" FINISHING TOOL UNLESS OTHERWISE REQUIRED ON PLANS; AND CORNERS OF EXPANSION JOINTS IN THE ROADWAY FACES AND TOPS OF CURBS AND SIDEWALKS SHALL BE ROUNDED TO A 1/4" RADIUS WITH A FINISHING STONE OR TOOL UNLESS OTHERWISE REQUIRED ON PLANS.

DOWELS:

DOWELS WHEN INDICATED ON PLANS AS FOR CULVERT EXTENSIONS, SHALL BE EMBEDDED AT LEAST 12" INTO THE OLD CONCRETE AND GROUTED INTO PLACE WITH 1:2 CEMENT MORTAR.

ALLOWANCE FOR DEAD LOAD DEFLECTION, SETTLEMENT, ETC. IN CASTING SUPERSTRUCTURES:

BRIDGES SHALL BE BUILT ON THE GRADE OR VERTICAL CURVE SHOWN ON PLANS. SLABS, CURBS AND PARAPETS SHALL CONFORM TO THE GRADE OR CURVE.

ALL DIMENSIONS WHICH ARE GIVEN IN SECTION AND ARE AFFECTED BY DEAD LOAD DEFLECTIONS ARE DIMENSIONS AT CENTER LINE OF BEARING UNLESS OTHERWISE NOTED ON PLANS. IN SETTING FORMS FOR STEEL BEAM BRIDGES AND PRESTRESSED CONCRETE GIRDER BRIDGES, ADJUSTMENTS SHALL BE MADE DUE TO THE DEAD LOAD DEFLECTIONS FOR THE ELEVATIONS SHOWN. WHERE BLOCKS ARE SHOWN OVER BEAMS FOR BUILDING UP TO THE SLAB, THE VERTICAL DIMENSIONS OF THE BLOCKS SHALL BE ADJUSTED BETWEEN BEARINGS TO COMPENSATE FOR DEAD LOAD DEFLECTIONS, VERTICAL CURVE ORDINATE, AND ACTUAL BEAM CAMBER. WHERE BOTTOM OF SLAB IS IN LINE WITH BOTTOM OF TOP FLANGES, DEPTH OF SLAB BETWEEN BEARINGS SHALL BE ADJUSTED TO COMPENSATE FOR DEAD LOAD DEFLECTION, VERTICAL CURVE ORDINATE, AND ACTUAL BEAM CAMBER.

IN SETTING FALSEWORK AND FORMS FOR REINFORCED CONCRETE SPANS, AN ALLOWANCE SHALL BE MADE FOR DEAD LOAD DEFLECTIONS, SETTLEMENT OF FALSEWORK, AND PERMANENT CAMBER WHICH SHALL BE PROVIDED FOR IN ADDITION TO THE ELEVATIONS SHOWN. AFTER REMOVAL OF THE FALSEWORK, THE FINISHED STRUCTURES SHALL CONFORM TO THE PROFILE AND ELEVATIONS SHOWN ON THE PLANS AND CONSTRUCTION ELEVATIONS FURNISHED BY THE ENGINEER.

DETAILED DRAWINGS FOR FALSEWORK OR FORMS FOR BRIDGE SUPERSTRUCTURE AND ANY STRUCTURE OR PARTS OF A STRUCTURE AS NOTED ON THE PLANS SHALL BE SUBMITTED TO THE ENGINEER FOR APPROVAL BEFORE CONSTRUCTION OF THE FALSEWORK OR FORMS IS STARTED.

REINFORCING STEEL:

ALL REINFORCING STEEL SHALL BE DEFORMED. DIMENSIONS RELATIVE TO PLACEMENT OF REINFORCING ARE TO CENTERS OF BARS UNLESS OTHERWISE INDICATED IN THE PLANS. DIMENSIONS ON BAR DETAILS ARE TO CENTERS OF BARS OR ARE OUT TO OUT AS INDICATED ON PLANS.

WIRE BAR SUPPORTS SHALL BE PROVIDED FOR REINFORCING STEEL WHERE INDICATED ON THE PLANS. WHEN BAR SUPPORT PIECES ARE PLACED IN CONTINUOUS LINES, THEY SHALL BE SO PLACED THAT THE ENDS OF THE SUPPORTING WIRES SHALL BE LAPPED TO LOCK LEGS ON ADJOINING PIECES.

STRUCTURAL STEEL:

AT THE CONTRACTOR'S OPTION, HE MAY SUBSTITUTE 7/8" Ø SHEAR STUDS FOR THE ¾" Ø STUDS SPECIFIED ON THE PLANS. THIS SUBSTITUTION SHALL BE MADE AT THE RATE OF 3 - 7/8" Ø STUDS FOR 4 - 3/4" Ø STUDS, AND STUD SPACING CHANGES SHALL BE MADE AS NECESSARY TO PROVIDE THE SAME EQUIVALENT NUMBER OF 7/8" Ø STUDS ALONG THE BEAM AS SHOWN FOR 3/4" Ø STUDS BASED ON THE RATIO OF 3 - 7/8" Ø STUDS FOR 4 - 3/4" Ø STUDS. STUDS OF THE LENGTH SPECIFIED ON THE PLANS MUST BE PROVIDED. THE MAXIMUM SPACING SHALL BE 2'-0".

EXCEPT AT THE INTERIOR SUPPORTS OF CONTINUOUS BEAMS WHERE THE COVER PLATE IS IN CONTACT WITH BEARING PLATE, THE CONTRACTOR MAY, AT HIS OPTION, SUBSTITUTE FOR THE COVER PLATES DESIGNATED ON THE PLANS COVER PLATES OF THE EQUIVALENT AREA PROVIDED THESE PLATES ARE AT LEAST 5/16" IN THICKNESS AND DO NOT EXCEED A WIDTH EQUAL TO THE FLANGE WIDTH LESS 2" OR A THICKNESS EQUAL TO 2 TIMES THE FLANGE THICKNESS. THE SIZE OF FILLET WELDS SHALL CONFORM TO THE REQUIREMENTS OF THE CURRENT ANSI/AASHTO/AWS "BRIDGE WELDING CODE". ELECTROSLAG WELDING WILL NOT BE PERMITTED.

WITH THE SOLE EXCEPTION OF EDGES AT SURFACES WHICH BEAR ON OTHER SURFACES, ALL SHARP EDGES AND ENDS OF SHAPES AND PLATES SHALL BE SLIGHTLY ROUNDED BY SUITABLE MEANS TO A RADIUS OF APPROXIMATELY 1/16 INCH OR EQUIVALENT FLAT SURFACE AT A SUITABLE ANGLE PRIOR TO PAINTING, GALVANIZING, OR METALLIZING.

HANDRAILS AND POSTS:

METAL STANDARDS AND FACES OF THE CONCRETE END POSTS FOR THE METAL RAIL SHALL BE SET NORMAL TO THE GRADE OF THE CURB, UNLESS OTHERWISE SHOWN ON PLANS. THE METAL RAIL AND TOPS OF CONCRETE POSTS USED WITH THE ALUMINUM RAIL SHALL BE BUILT PARALLEL TO THE GRADE OF THE CURB.

METAL HANDRAILS SHALL BE IN ACCORDANCE WITH THE PLANS. RAILS SHALL BE AS MANUFACTURED FOR BRIDGE RAILING. CASTINGS SHALL BE OF A UNIFORM APPEARANCE. FINS AND OTHER DEFORMATIONS RESULTING FROM CASTING OR OTHERWISE SHALL BE REMOVED IN A MANNER SO THAT A UNIFORM COLORING OF THE COMPLETED CASTING SHALL BE OBTAINED. CASTINGS WITH DISCOLORATIONS OR OF NON-UNIFORM COLORING WILL NOT BE ACCEPTED. CERTIFIED MILL REPORTS ARE REQUIRED FOR METAL RAILS AND POSTS.

SPECIAL NOTES:

GENERALLY, IN CASE OF DISCREPANCY, THIS STANDARD SHEET OF NOTES SHALL GOVERN OVER THE SPECIFICATIONS, BUT THE REMAINDER OF THE PLANS SHALL GOVERN OVER NOTES HEREON, AND SPECIAL PROVISIONS SHALL GOVERN OVER ALL. SEE SPECIFICATIONS ARTICLE 105-4.

ENGLISH

JANUARY, 1990