09/08/99

TIP PROJECT: BD-5113A

CONTRACT: DM00042

See Sheet 1-A For Index of Sheets

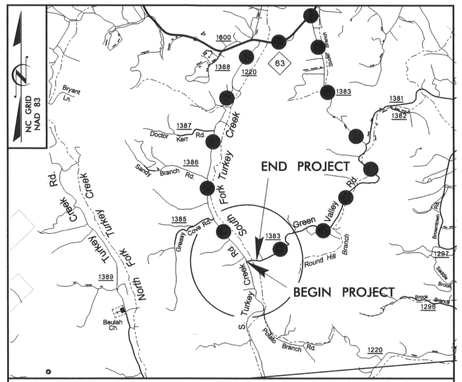

VICINITY MAP

DETOUR ROUTE

STATE OF NORTH CAROLINA
DIVISION OF HIGHWAYS

BUNCOMBE COUNTY

LOCATION: BRIDGE NO. 550 OVER SOUTH FORK TURKEY CREEK ON SR 1383 (GREEN VALLEY ROAD)

TYPE OF WORK: GRADING, DRAINAGE, PAVING, AND STRUCTURE

STATE	STATE PROJECT REFERENCE NO.	SHEET NO.	TOTAL SHEETS
N.C.	BD-5113A	1	

STATE PROJ. NO.	F. A. PROJ. NO.	DESCRIPTION
45359.1.1	BRZ-1383(2)	P.E.
45359.2.1	BRZ-1383(2)	R/W
45359.3.1	BRZ-1383(2)	CONST.

4

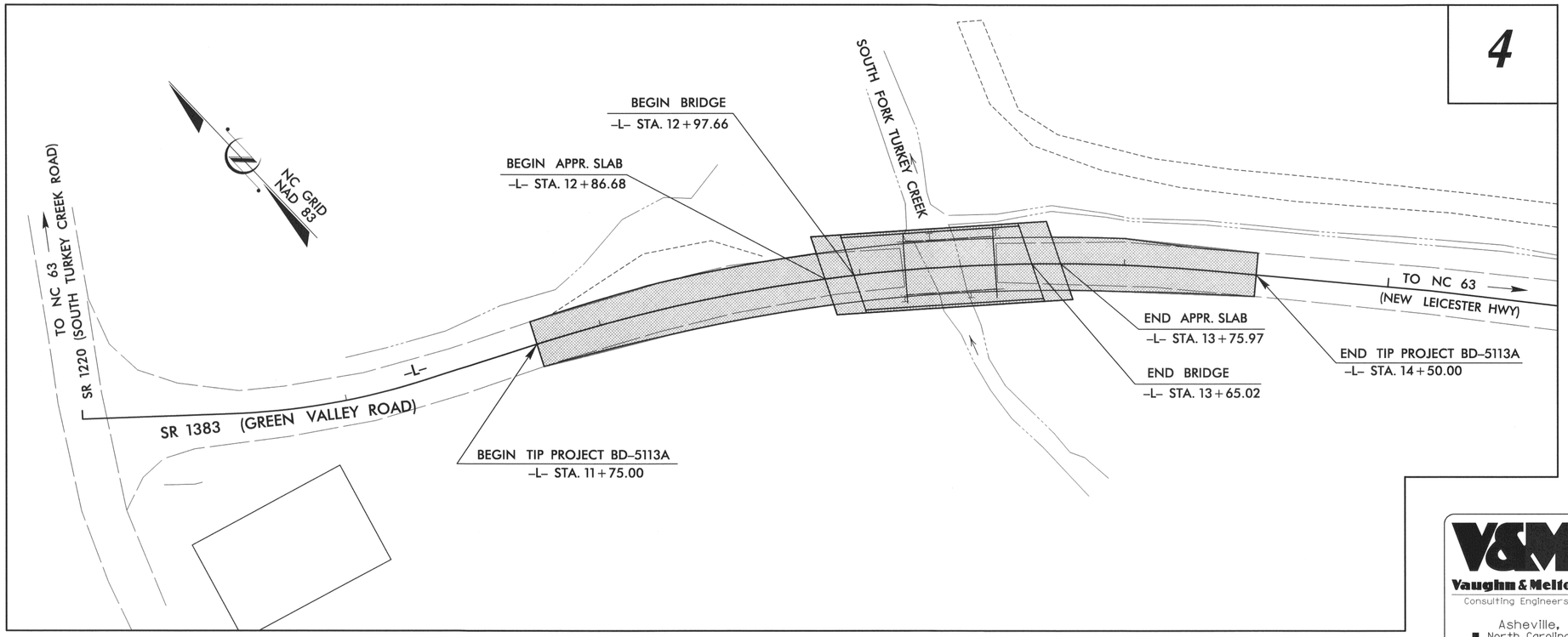

V&M
Vaughn & Melton
Consulting Engineers
Asheville, North Carolina 828-253-2796
Charlotte, North Carolina 704-357-0488
Tri-Cities, Tennessee 423-467-8401
Knoxville, Tennessee 865-546-5800
Middlesboro, Kentucky 606-248-6600
Spartanburg, South Carolina 864-574-4775

Copyright © 1994 Vaughn & Melton, Inc. All Rights Reserved

GRAPHIC SCALES

20 10 0 20 40
PLANS

20 10 0 20 40
PROFILE (HORIZONTAL)

4 2 0 4 8
PROFILE (VERTICAL)

DESIGN DATA

ADT 2007 = 580
ADT 2025 = 1160
T = 6%
V = 40 MPH

FUNCT. CLASS = LOCAL
SUB-REGIONAL TIER

PROJECT LENGTH

LENGTH ROADWAY TIP PROJECT BD-5113A = 0.039 MI
LENGTH STRUCTURE TIP PROJECT BD-5113A = 0.013 MI
TOTAL LENGTH OF TIP PROJECT BD-5113A = 0.052 MI

Prepared In the Office of:
VAUGHN & MELTON
1318-F PATTON AVE.
ASHEVILLE NC, 28806
FOR THE NORTH CAROLINA DIVISION OF HIGHWAYS

2012 STANDARD SPECIFICATIONS

RIGHT OF WAY DATE:
MAY 18, 2012

LETTING DATE:
JUNE 20, 2012

HARDY WILLIS, PE
PROJECT ENGINEER

AARON CARVER, PE
PROJECT DESIGN ENGINEER

NCDOT CONTACT:
GARRY MOORE
DIVISION 13 BRIDGE MANAGER

HYDRAULICS ENGINEER

5/22/12
NORTH CAROLINA PROFESSIONAL SEAL 18462 ENGINEER JAMES C. DAVIS
P.E.
SIGNATURE:

ROADWAY DESIGN ENGINEER

5/21/12
NORTH CAROLINA PROFESSIONAL SEAL 030453 ENGINEER AARON C. CARVER
P.E.
SIGNATURE:

DIVISION OF HIGHWAYS STATE OF NORTH CAROLINA

STATE OF NORTH CAROLINA DEPARTMENT OF TRANSPORTATION

$$$$SYSTIME$$$$
$$$$DGN$$$$
$$$$USERNAME$$$$

PROJECT REFERENCE NO.	SHEET NO.
BD-5113A	1-A

ROADWAY DESIGN ENGINEER

NORTH CAROLINA PROFESSIONAL SEAL 030453 ENGINEER AARON C. CARVER 5/21/12

INDEX OF SHEETS

SHEET NUMBER	SHEET
1	TITLE SHEET
1-A	INDEX OF SHEETS, GENERAL NOTES, AND LIST OF STANDARD DRAWINGS
1-B	CONVENTIONAL SYMBOLS
1-C	SURVEY CONTROL SHEET
2	PAVEMENT SCHEDULE, TYPICAL SECTIONS, AND WEDGING DETAILS
3	SUMMARY OF QUANTITIES
3A	SUMMARY OF DRAINAGE QUANTITIES, SUMMARY OF GUARDRAIL, AND ASPHALT PAVEMENT REMOVAL SUMMARY
3B	EARTHWORK SUMMARY
4	PLAN AND PROFILE SHEET
TMP-1 THRU TMP-2	TRAFFIC MANAGEMENT PLANS
SD-1	SPECIAL SIGN DESIGN
EC-1 THRU EC-2	PLAN AND PROFILE SHEET
X-0	CROSS-SECTION SUMMARY
X-1 THRU X-6	CROSS-SECTIONS
S-1 THRU S-13	STRUCTURE PLANS

GENERAL NOTES:

2012 SPECIFICATIONS
EFFECTIVE: 01-17-12

GRADE LINE:
GRADING AND SURFACING OR RESURFACING AND WIDENING:

THE GRADE LINES SHOWN DENOTE THE FINISHED ELEVATION OF THE PROPOSED SURFACING AT GRADE POINTS SHOWN ON THE TYPICAL SECTIONS. WHERE NO GRADE LINES ARE SHOWN, THE PROFILES SHOWN DENOTE THE TOP ELEVATION OF THE EXISTING PAVEMENT ALONG THE CENTER LINE OF SURVEY ON WHICH THE PROPOSED RESURFACING WILL BE PLACED. GRADE LINES MAY BE ADJUSTED BY THE ENGINEER IN ORDER TO SECURE A PROPER TIE-IN.

CLEARING:

CLEARING ON THIS PROJECT SHALL BE PERFORMED TO THE LIMITS ESTABLISHED BY METHOD II.

SUPERELEVATION:

ALL CURVES ON THIS PROJECT SHALL BE SUPERELEVATED IN ACCORDANCE WITH STD. NO. 225.04 USING THE RATE OF SUPERELEVATION AND RUNOFF SHOWN ON THE PLANS. SUPERELEVATION IS TO BE REVOLVED ABOUT THE GRADE POINTS SHOWN ON THE TYPICAL SECTIONS.

SHOULDER CONSTRUCTION:

ASPHALT, EARTH, AND CONCRETE SHOULDER CONSTRUCTION ON THE HIGH SIDE OF SUPERELEVATED CURVES SHALL BE IN ACCORDANCE WITH STD. NO. 560.01.

UNDERDRAINS:

UNDERDRAINS SHALL BE CONSTRUCTED IN ACCORDANCE WITH STD. NO. 815.03 AT LOCATIONS DIRECTED BY THE ENGINEER.

GUARDRAIL:

THE GUARDRAIL LOCATIONS SHOWN ON THE PLANS MAY BE ADJUSTED DURING CONSTRUCTION AS DIRECTED BY THE ENGINEER. THE CONTRACTOR SHOULD CONSULT WITH THE ENGINEER PRIOR TO ORDERING GUARDRAIL MATERIAL.

TEMPORARY SHORING:

SHORING REQUIRED FOR THE MAINTENANCE OF TRAFFIC WILL BE PAID FOR AS "EXTRA WORK" IN ACCORDANCE WITH SECTION 104-7.

SUBSURFACE PLANS:

NO SUBSURFACE PLANS ARE AVAILABLE ON THIS PROJECT. THE CONTRACTOR SHOULD MAKE HIS OWN INVESTIGATION AS TO THE SUBSURFACE CONDITIONS.

END BENTS:

THE ENGINEER SHALL CHECK THE STRUCTURE END BENT PLANS, DETAILS, AND CROSS-SECTION PRIOR TO SETTING OF THE SLOPE STAKES FOR THE EMBANKMENT OR EXCAVATION APPROACHING A BRIDGE.

UTILITIES:

UTILITY OWNERS ON THIS PROJECT ARE:

RIGHT-OF-WAY MARKERS:

ALL RIGHT-OF-WAY MARKERS ON THIS PROJECT SHALL BE PLACED BY CONTRACT.

2012 ROADWAY ENGLISH STANDARD DRAWINGS

The following Roadway Standards as appear in "Roadway Standard Drawings" Highway Design Branch - N. C. Department of Transportation - Raleigh, N. C., Dated January 17, 2012 are applicable to this project and by reference hereby are considered a part of these plans:

STD.NO.	TITLE
DIVISION 2 - EARTHWORK	
200.02	Method of Clearing - Method II
225.02	Guide for Grading Subgrade - Secondary and Local
225.04	Method of Obtaining Superelevation - Two Lane Pavement
DIVISION 3 - PIPE CULVERTS	
300.01	Method of Pipe Installation - Method 'A'
DIVISION 4 - MAJOR STRUCTURES	
422.11	Bridge Approach Fills
DIVISION 5 - SUBGRADE, BASES AND SHOULDERS	
560.01	Method of Shoulder Construction - High Side of Superelevated Curve - Method I
DIVISION 8 - INCIDENTALS	
815.03	Pipe Underdrain and Blind Drain
840.25	Anchorage for Frames
840.29	Frames and Narrow Slot Flat Grates
840.35	Traffic Bearing Grated Drop Inlet - for Cast Iron Double Frame and Grates
840.46	Traffic Bearing Precast Drainage Structure
840.66	Drainage Structure Steps
846.01	Concrete Curb, Gutter and Curb & Gutter
846.04	Drop Inlet Installation in Shoulder Berm Gutter
862.01	Guardrail Placement
862.02	Guardrail Installation
862.03	Structure Anchor Units
876.02	Guide for Rip Rap at Pipe Outlets

$$$$$$SYSTIME$$$$
$$$$$$$$$$$$$$$$$$$$$$$$DGN$$$$
$$$$USERNAME$$$$

3/15/06

PROJECT REFERENCE NO.	SHEET NO.
BD-5113A	1-B

Note: Not to Scale

S.U.E. = Subsurface Utility Engineering

STATE OF NORTH CAROLINA
DIVISION OF HIGHWAYS

CONVENTIONAL PLAN SHEET SYMBOLS

BOUNDARIES AND PROPERTY:

- State Line
- County Line
- Township Line
- City Line
- Reservation Line
- Property Line
- Existing Iron Pin — EIP
- Property Corner
- Property Monument — ECM
- Parcel/Sequence Number — 123
- Existing Fence Line
- Proposed Woven Wire Fence
- Proposed Chain Link Fence
- Proposed Barbed Wire Fence
- Existing Wetland Boundary — WLB
- Proposed Wetland Boundary — WLB
- Existing Endangered Animal Boundary — EAB
- Existing Endangered Plant Boundary — EPB

BUILDINGS AND OTHER CULTURE:

- Gas Pump Vent or U/G Tank Cap
- Sign — S
- Well — W
- Small Mine
- Foundation
- Area Outline
- Cemetery
- Building
- School
- Church
- Dam

HYDROLOGY:

- Stream or Body of Water
- Hydro, Pool or Reservoir
- Jurisdictional Stream — JS
- Buffer Zone 1 — BZ 1
- Buffer Zone 2 — BZ 2
- Flow Arrow
- Disappearing Stream
- Spring
- Swamp Marsh
- Proposed Lateral, Tail, Head Ditch — FLOW
- False Sump

RAILROADS:

- Standard Gauge — CSX TRANSPORTATION
- RR Signal Milepost — MILEPOST 35
- Switch — SWITCH
- RR Abandoned
- RR Dismantled

RIGHT OF WAY:

- Baseline Control Point
- Existing Right of Way Marker
- Existing Right of Way Line
- Proposed Right of Way Line — RW
- Proposed Right of Way Line with Iron Pin and Cap Marker — RW
- Proposed Right of Way Line with Concrete or Granite Marker — RW
- Existing Control of Access — CA
- Proposed Control of Access — CA
- Existing Easement Line — E
- Proposed Temporary Construction Easement — E
- Proposed Temporary Drainage Easement — TDE
- Proposed Permanent Drainage Easement — PDE
- Proposed Permanent Utility Easement — PUE

ROADS AND RELATED FEATURES:

- Existing Edge of Pavement
- Existing Curb
- Proposed Slope Stakes Cut — C
- Proposed Slope Stakes Fill — F
- Proposed Wheel Chair Ramp — WCR
- Proposed Wheel Chair Ramp Curb Cut — WCC
- Curb Cut for Future Wheel Chair Ramp — CCFR
- Existing Metal Guardrail
- Proposed Guardrail
- Existing Cable Guiderail
- Proposed Cable Guiderail
- Equality Symbol
- Pavement Removal

VEGETATION:

- Single Tree
- Single Shrub
- Hedge
- Woods Line
- Orchard
- Vineyard — Vineyard

EXISTING STRUCTURES:

MAJOR:

- Bridge, Tunnel or Box Culvert — CONC
- Bridge Wing Wall, Head Wall and End Wall — CONC WW

MINOR:

- Head and End Wall — CONC HW
- Pipe Culvert
- Footbridge
- Drainage Box: Catch Basin, DI or JB — CB
- Paved Ditch Gutter
- Storm Sewer Manhole — S
- Storm Sewer — S

UTILITIES:

POWER:

- Existing Power Pole
- Proposed Power Pole
- Existing Joint Use Pole
- Proposed Joint Use Pole
- Power Manhole — P
- Power Line Tower
- Power Transformer
- U/G Power Cable Hand Hole — HH
- H-Frame Pole
- Recorded U/G Power Line — P
- Designated U/G Power Line (S.U.E.*) — P

TELEPHONE:

- Existing Telephone Pole
- Proposed Telephone Pole
- Telephone Manhole — T
- Telephone Booth
- Telephone Pedestal — T
- Telephone Cell Tower
- U/G Telephone Cable Hand Hole — HH
- Recorded U/G Telephone Cable — T
- Designated U/G Telephone Cable (S.U.E.*) — T
- Recorded U/G Telephone Conduit — TC
- Designated U/G Telephone Conduit (S.U.E.*) — TC
- Recorded U/G Fiber Optics Cable — T FO
- Designated U/G Fiber Optics Cable (S.U.E.*) — T FO

WATER:

- Water Manhole — W
- Water Meter
- Water Valve
- Water Hydrant
- Recorded U/G Water Line — W
- Designated U/G Water Line (S.U.E.*) — W
- Above Ground Water Line — A/G Water

TV:

- TV Satellite Dish
- TV Pedestal — C
- TV Tower
- U/G TV Cable Hand Hole — HH
- Recorded U/G TV Cable — TV
- Designated U/G TV Cable (S.U.E.*) — TV
- Recorded U/G Fiber Optic Cable — TV FO
- Designated U/G Fiber Optic Cable (S.U.E.*) — TV FO

GAS:

- Gas Valve
- Gas Meter
- Recorded U/G Gas Line — G
- Designated U/G Gas Line (S.U.E.*) — G
- Above Ground Gas Line — A/G Gas

SANITARY SEWER:

- Sanitary Sewer Manhole
- Sanitary Sewer Cleanout
- U/G Sanitary Sewer Line — SS
- Above Ground Sanitary Sewer — A/G Sanitary Sewer
- Recorded SS Forced Main Line — FSS
- Designated SS Forced Main Line (S.U.E.*) — FSS

MISCELLANEOUS:

- Utility Pole
- Utility Pole with Base
- Utility Located Object
- Utility Traffic Signal Box — S
- Utility Unknown U/G Line — ?UTL
- U/G Tank; Water, Gas, Oil
- A/G Tank; Water, Gas, Oil
- U/G Test Hole (S.U.E.*)
- Abandoned According to Utility Records — AATUR
- End of Information — E.O.I.

PROJECT REFERENCE NO.	SHEET NO.
BD-5113A	1-C

SURVEY CONTROL SHEET BD-5113A

V&M BASELINE STATION BD-5113A -BL3-
LOCALIZED PROJECT COORDINATES
N = 706958.0620
E = 884962.8030
ELEV. = 2284.20

V&M BASELINE STATION BD-5113A -BL2-
LOCALIZED PROJECT COORDINATES
N = 706787.4260
E = 885195.4340
ELEV. = 2267.31

V&M BASELINE STATION BD-5113A -BL1-
LOCALIZED PROJECT COORDINATES
N = 706603.9770
E = 885353.0910
ELEV. = 2269.26

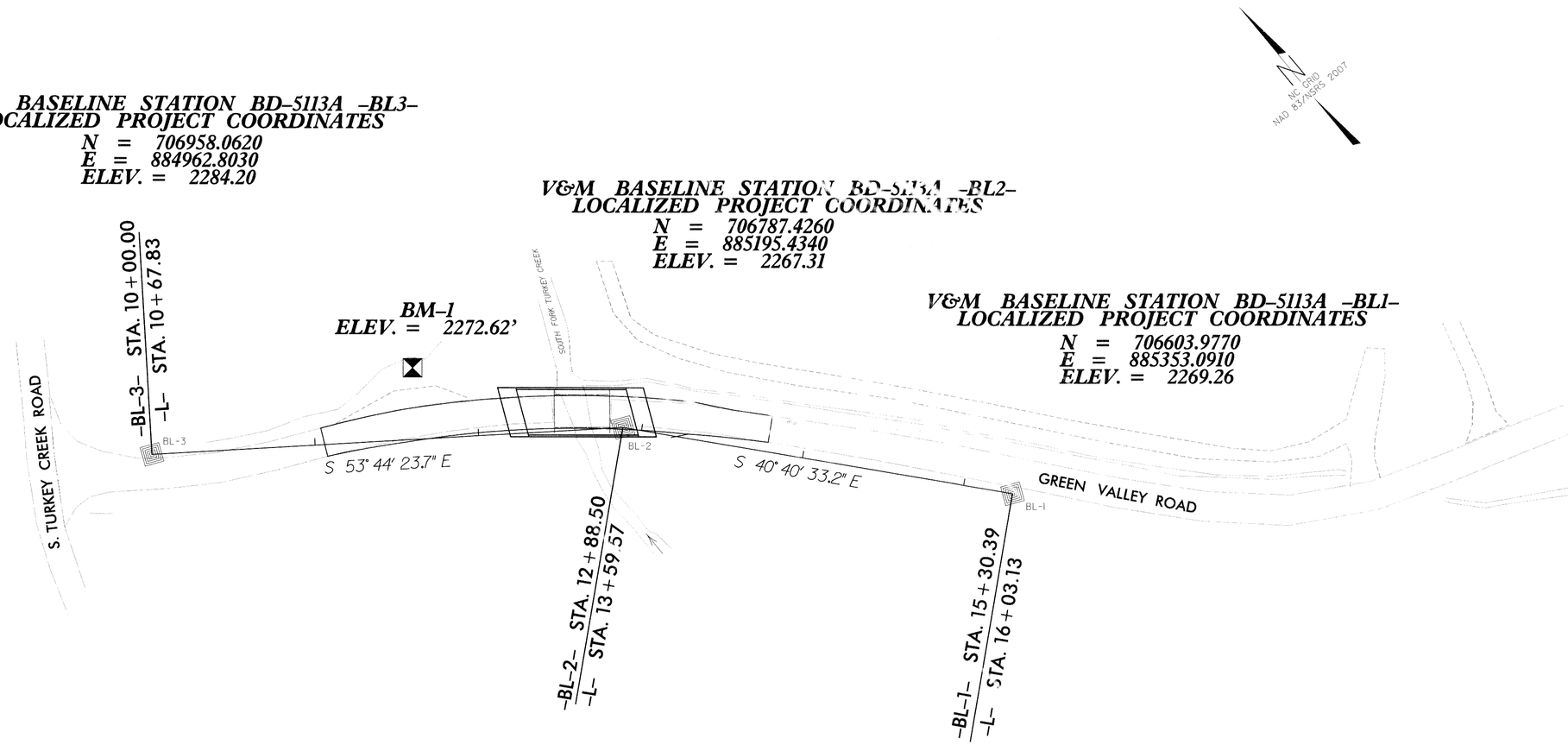

Point	Description	North	East	Elevation	L- Station	Offset
1	BL-1	706603.9770	885353.0910	2269.26	16+03.13	[illegible]
2	BL-2	706787.4260	885195.4340	2267.31	13+59.57	8.[illegible]
3	BL-3	706958.0620	884962.8030	2284.20	10+67.83	1[illegible].30

****
BM-1 ELEVATION = 2272.62'
N 706897.5190 E 885119.4330
L STATION 12+35.15 34.31' LEFT
RR SPIKE IN 36" WHITE OAK
****

NOTE: DRAWING NOT TO SCALE

DATUM DESCRIPTION

THE LOCALIZED COORDINATE SYSTEM DEVELOPED FOR THIS PROJECT IS BASED ON THE STATE PLANE COORDINATES ESTABLISHED BY NCGS FOR MONUMENT "BL-1"
WITH NAD 83/NSRS 2007 STATE PLANE GRID COORDINATES OF
NORTHING: 706603.9770(ft) EASTING: 885353.0910(ft)
ELEVATION: 2269.26(ft)
THE AVERAGE COMBINED GRID FACTOR USED ON THIS PROJECT (GROUND TO GRID) IS: 0.999790903
THE N.C. LAMBERT GRID BEARING AND LOCALIZED HORIZONTAL GROUND DISTANCE FROM "BL-1" TO -L- STATION 11+75 IS
N 46° 05' 58.2" W 422.25'
ALL LINEAR DIMENSIONS ARE LOCALIZED HORIZONTAL DISTANCES
VERTICAL DATUM USED IS NAVD 88

REVISIONS

SYSTEM FILE
DGN
LEVEL
DATE

PROJECT REFERENCE NO.	SHEET NO.
BD-5113A	2
ROADWAY DESIGN ENGINEER	PAVEMENT DESIGN ENGINEER

NORTH CAROLINA PROFESSIONAL SEAL 030453 ENGINEER AARON C. CARVER 5/24/12

NORTH CAROLINA PROFESSIONAL SEAL 20134 ENGINEER ROBERT M. CRISP 5/24/12

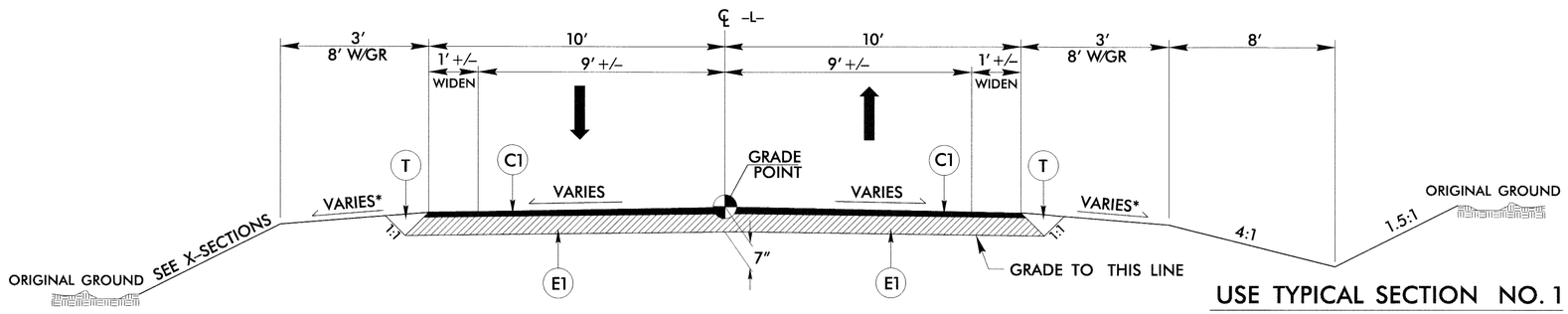

USE TYPICAL SECTION NO. 1

-L- STA. 11+75 TO -L- STA. 12+97.66 (BEG. BRIDGE)
-L- STA. 13+65.02 (END BRIDGE) TO STA. 14+50

TYPICAL SECTION NO. 1

* SEE NCDOT STD. DWG. # 560.01

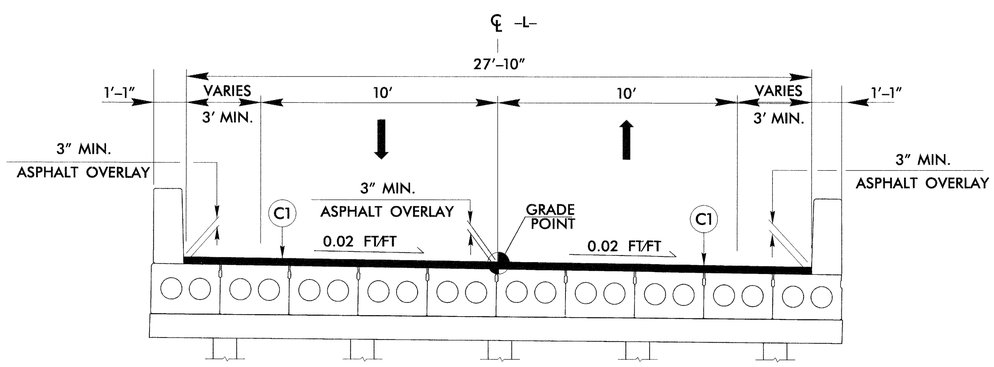

USE TYPICAL SECTION NO. 2

-L- STA. 12+97.66 (BEGIN BRIDGE) TO
-L- STA. 13+65.02 (END BRIDGE)

TYPICAL SECTION NO. 2

C1	PROP. APPROX. 3" ASPHALT CONCRETE SURFACE COURSE, TYPE S9.5B, AT AN AVERAGE RATE OF 165 LBS. PER SQ. YD. IN EACH OF TWO LAYERS.
E1	PROP. APPROX. 4" ASPHALT CONCRETE BASE COURSE, TYPE B25.0B, AT AN AVERAGE RATE OF 456 LBS. PER SQ. YD.
T	EARTH MATERIAL.

NOTE: PAVEMENT EDGE SLOPES ARE 1:1 UNLESS SHOWN OTHERWISE

6/2/99
$$$$$SYSTIME$$$$ $$$$$DGN$$$$$ $$$$$USERNAME$$$$$

PROJECT REFERENCE NO.	SHEET NO.
BD-5113A	3

STATE OF NORTH CAROLINA
DIVISION OF HIGHWAYS

SUMMARY OF QUANTITIES

5/28/99

COMPUTED BY: ACC DATE: 10-04-11
CHECKED BY: ACC DATE: 10-04-11

6/21/00

STATE OF NORTH CAROLINA
DIVISION OF HIGHWAYS

RIGHT OF WAY AREA DATA

PARCEL NO.	PROPERTY OWNERS NAMES	TOTAL ACREAGE	AREA TAKEN (sf)	AREA REMAINING RT. (Acre)	AREA REMAINING LT. (Acre)	CONST. EASE. (sf)	PERM. DRAIN. EASE. (sf)	TEMP. DRAIN. EASE. (sf)
1	ABRAMS, DARLENE ROBINSON	9.35	–	–	9.35	5156	–	–
2	ROBINSON, BOBBY	40.55	–	40.55	–	2891	–	–
3	MILLER, GERALDINE ROBINSON	25.58	–	25.58	–	1050	–	–

PAVEMENT REMOVAL SUMMARY

IN SQUARE YARDS					
LINE	LOCATION	ASPHALT REMOVAL	ASPHALT BREAK-UP	CONCRETE REMOVAL	CONCRETE REMOVAL
-L-	11+75 TO 13+16	313			
-L-	13+52 TO 14+50	218			
	TOTAL	531			
	SAY	540			

Approximate quantities only. Unclassified excavation, borrow excavation, fine grading, clearing and grubbing, and removal of existing pavement will be paid for at the contract lump sum price for "grading".

NOTE: Invert Elevations are for Bid Purposes only and shall not be used for project construction stakeout.
See "Standard Specifications For Roads and Structures, Section 300-5".

SUB-REGIONAL & REGIONAL
LIST OF PIPES, ENDWALLS, ETC. (FOR PIPES 48" & UNDER)

STATION / SIZE / THICKNESS OR GAUGE	LOCATION (LT,RT, OR CL)	STRUCTURE NO. FROM	STRUCTURE NO. TO	TOP ELEVATION	INVERT ELEVATION	INVERT ELEVATION	SLOPE CRITICAL	DRAINAGE PIPE (RCP, CSP, CAAP, HDPE, or PVC) 12"	15"	18"	24"	30"	36"	42"	48"	DO NOT USE RCP	DO NOT USE CSP	DO NOT USE CAAP	DO NOT USE HDPE
-L- 12+52	RT																		
-L- 13+85.04	RT	1		2267.90	2265.98	2265.75			12										
TOTAL									12										

STATION	C.S. PIPE 12" .064	15" .064	18" .064	24" .064	36" .079	42" .109	48" .109	R.C. PIPE (CLASS III) 15"	18"	24"	30"	36"	42"	48"	R.C. PIPE (CLASS IV) 12"	15"	18"	24"	30"	36"	42"	48"
-L- 12+52																						
-L- 13+85.04																						
TOTAL																						

STATION	**" R. C. PIPE (CLASS V)	**" R. C. PIPE CULVERTS, CONTRACTOR DESIGN PIPE	**" R. C. PIPE CULVERTS, CONTRACTOR DESIGN PIPE	15" SIDE DRAIN PIPE	18" SIDE DRAIN PIPE	ENDWALLS STD. 838.01, STD. 838.11 OR STD. 838.80 (UNLESS NOTED OTHERWISE) CU. YDS. R.C.P.	C.S.P.	QUANTITIES FOR DRAINAGE STRUCTURES PER EACH (0' THRU 5.0')	* TOTAL L.F. FOR PAY QUANTITY SHALL BE COL. 'A' + (1.3 X COL.'B') LIN. *FT. A 5.0' THRU 10.0'	B 10.0' AND ABOVE	C.B. STD. 840.01 OR STD. 840.02	FRAME, GRATES AND HOOD STANDARD 840.03 TYPE OF GRATE E	F	G		CONCRETE TRANSITIONAL SECTION CATCH BASIN	DROP INLET		T.B.D.I. STD. 840.35	T.B.D.I. FRAME WITH TWO GRATES STD. 840.29	D.I. TYPE 'D' WITH TWO GRATES STD. 840.19			CORR. STEEL ELBOWS NO. & SIZE	CONC. COLLARS CL. "B" C.Y. STD 840.72	CONC. & BRICK PIPE PLUG, C.Y. STD. 840.71	PIPE REMOVAL LIN.FT.	REMARKS
-L- 12+52				18																								20	
-L- 13+85.04								1									1			1	1								
TOTAL				18				1									1			1	1							20	

ABBREVIATIONS

C.B.	CATCH BASIN
N.D.I.	NARROW DROP INLET
D.I.	DROP INLET
G.D.I.	GRATED DROP INLET
G.D.I. (N.S.)	GRATED DROP INLET (NARROW SLOT)
J.B.	JUNCTION BOX
M.H.	MANHOLE
T.B.D.I.	TRAFFIC BEARING DROP INLET
T.B.J.B.	TRAFFIC BEARING JUNCTION BOX

"N" = DISTANCE FROM EDGE OF LANE TO FACE OF GUARDRAIL.
TOTAL SHOULDER WIDTH = DISTANCE FROM EDGE OF TRAVEL LANE TO SHOULDER BREAK POINT.
FLARE LENGTH = DISTANCE FROM LAST SECTION OF PARALLEL GUARDRAIL TO END OF GUARDRAIL.
W = TOTAL WIDTH OF FLARE FROM BEGINNING OF TAPER TO END OF GUARDRAIL.
G = GATING IMPACT ATTENUATOR TYPE 350
NG = NON-GATING IMPACT ATTENUATOR TYPE 350

GUARDRAIL SUMMARY

SURVEY LINE	BEG. STA.	END STA.	LOCATION	LENGTH STRAIGHT	SHOP CURVED	DOUBLE FACED	WARRANT POINT APPROACH END	TRAILING END	"N" DIST. FROM E.O.L.	TOTAL SHOUL. WIDTH	FLARE LENGTH APPROACH END	TRAILING END	W APPROACH END	TRAILING END	ANCHORS XI MOD	XI	GRAU 350 TL-2	M-350	TYPE III	CAT-1	B-77	BIC	AT-1	IMPACT ATTENUATOR TYPE 350 EA	G	NG	SINGLE FACED GUARDRAIL	REMOVE EXISTING GUARDRAIL	REMOVE AND STOCKPILE EXISTING GUARDRAIL	REMARKS
-L-	12+51.01	12+93.99	LT	43.75				12+97.66	7.0	9.3							1		1											
-L-	12+55.80	13+00.84	RT	43.75			12+97.66		4.1	7.1	25		0.5				1		1											
-L-	13+60.15	14+01.65	LT	43.75			13+65.02		6.2	9.2							1		1											
-L-	13+69.73	14+15.18	RT	43.75				13+65.02	3.0	6.0							1		1											
			SUBTOTAL	175													4		4											
			LESS DEDUCTIONS FOR ANCHORS																											
			GRAU-350 TL-2 4 @ 25'=	-100																										
			TYPE III 4 @ 18.75'	-75																										
			PROJECT TOTALS:	0																										
			ADDITIONAL GUARDRAIL POSTS=5 EA.																											

$$$$$$$$$$$$$$$$SYSTIME$$$$$
$$$$$$$$$$USERNAME$$$$$$$$$$$DGN$$$$$$$$$$$$$$$$$$$$$

COMPUTED BY: ACC	DATE: 10-04-11
CHECKED BY: ACC	DATE: 10-04-11

PROJECT REFERENCE NO.	SHEET NO.
BD-5113A	3-B

DIVISION OF HIGHWAYS
STATE OF NORTH CAROLINA

SUMMARY OF EARTHWORK

IN CUBIC YARDS

LOCATION	UNCLASSIFIED EXCAVATION	UNDERCUT	EMBT + %	BORROW	WASTE
SUMMARY NO.1					
-L- STA. 11+75 TO STA. 12+97.66 (BEG. BRIDGE)	131		21		110
SUBTOTAL SUMMARY NO.1	131		21		110
SUMMARY NO.2					
-L- STA. 13+65.02 (END BRIDGE) TO STA. 14+50	77		159	82	
SUBTOTAL SUMMARY NO.2	77		159	82	
PROJECT TOTAL	208		180	82	110
BORROW IN LIEU OF WASTE				-82	-82
GRAND TOTAL	208				28
SAY	225				50
CONTINGENCY ITEMS:					

INCIDENTAL STONE = 50 TONS

UNDERCUT EXCAVATION = 50 CY

SELECT GRANULAR MATERIAL - 50 CY

CLASS IV SUBGRADE STABILIZATION = 100 TONS

FABRIC FOR SOIL STABILIZATION = 50 SY

Approximate quantities only. Unclassified excavation, borrow excavation, fine grading, clearing and grubbing, and removal of existing pavement will be paid for at the contract lump sum price for "grading".

PROJECT REFERENCE NO.	SHEET NO.
BD-5113A	4
R/W SHEET NO.	
ROADWAY DESIGN ENGINEER	HYDRAULICS ENGINEER

NORTH CAROLINA PROFESSIONAL SEAL 030453 ENGINEER BARON C. CARTER 5/21/12

NORTH CAROLINA PROFESSIONAL SEAL 18462 ENGINEER JAMES C. DAVIS 5/22/12

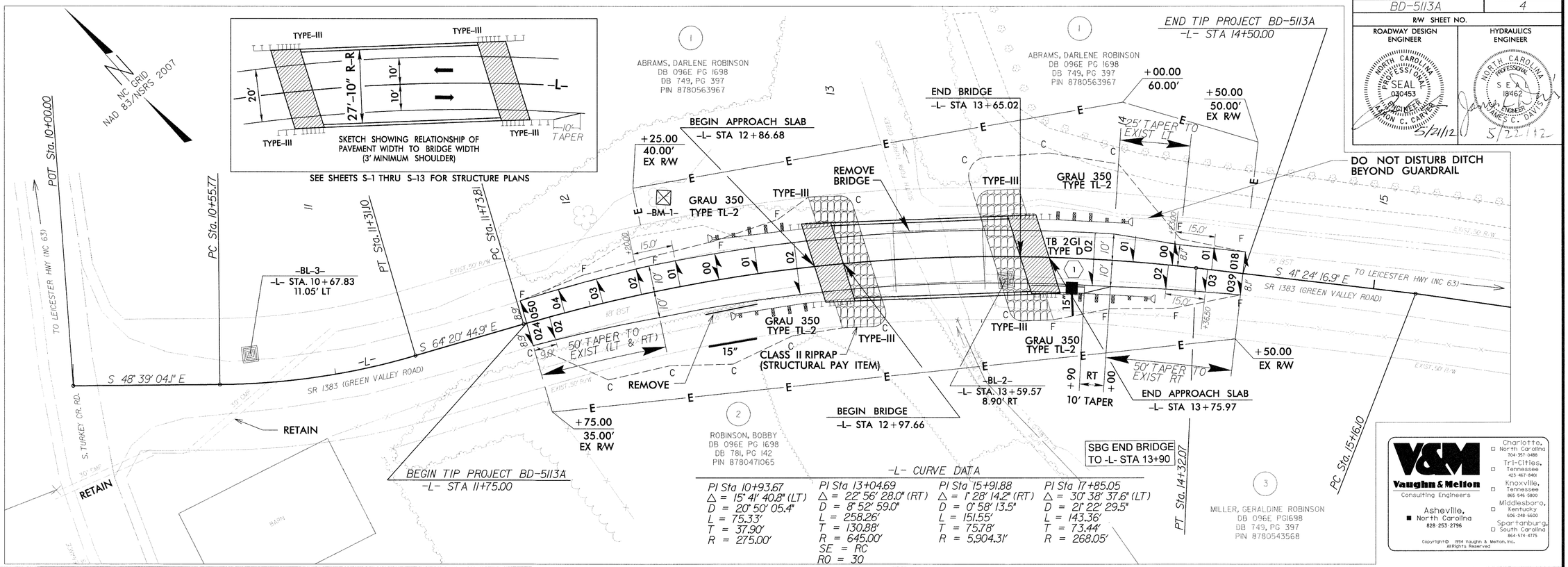

-L- CURVE DATA

PI Sta 10+93.67	PI Sta 13+04.69	PI Sta 15+91.88	PI Sta 17+85.05
Δ = 15° 41' 40.8" (LT)	Δ = 22° 56' 28.0" (RT)	Δ = 1° 28' 14.2" (RT)	Δ = 30° 38' 37.6" (LT)
D = 20° 50' 05.4"	D = 8° 52' 59.0"	D = 0° 58' 13.5"	D = 21° 22' 29.5"
L = 75.33'	L = 258.26'	L = 151.55'	L = 143.36'
T = 37.90'	T = 130.88'	T = 75.78'	T = 73.44'
R = 275.00'	R = 645.00'	R = 5,904.31'	R = 268.05'
	SE = RC		
	RO = 30		

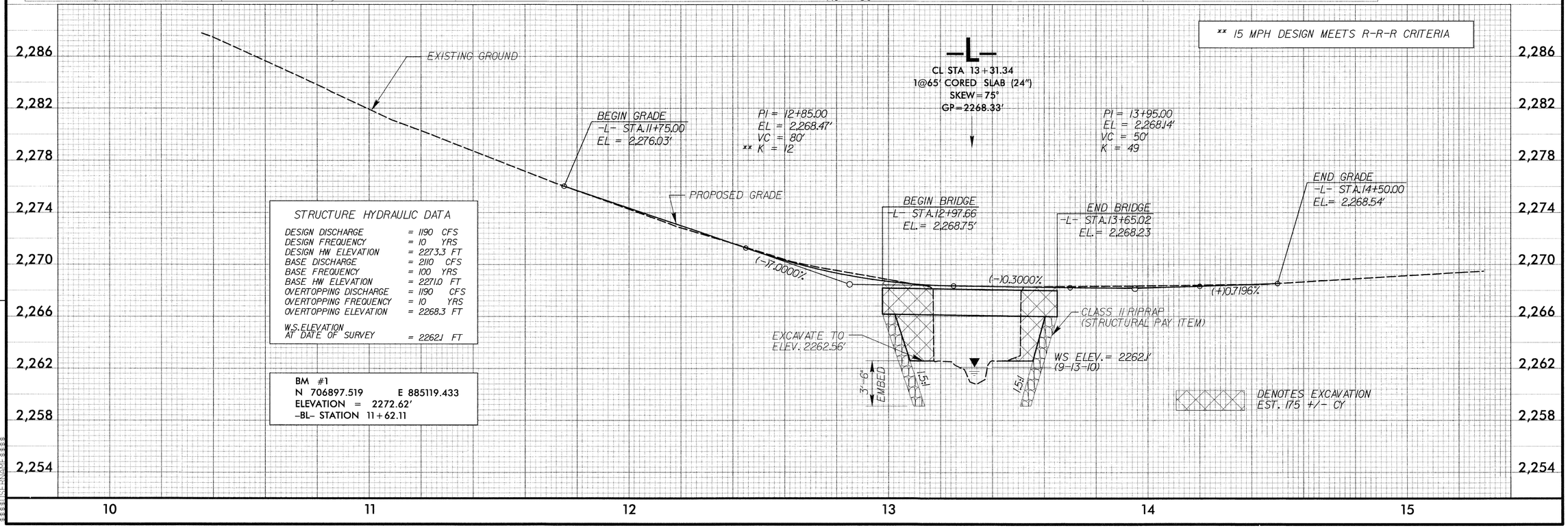

STRUCTURE HYDRAULIC DATA

DESIGN DISCHARGE	= 1190	CFS
DESIGN FREQUENCY	= 10	YRS
DESIGN HW ELEVATION	= 2273.3	FT
BASE DISCHARGE	= 2110	CFS
BASE FREQUENCY	= 100	YRS
BASE HW ELEVATION	= 2271.0	FT
OVERTOPPING DISCHARGE	= 1190	CFS
OVERTOPPING FREQUENCY	= 10	YRS
OVERTOPPING ELEVATION	= 2268.3	FT
W.S. ELEVATION AT DATE OF SURVEY	= 2262.1	FT

BM #1
N 706897.519 E 885119.433
ELEVATION = 2272.62'
-BL- STATION 11+62.11

REVISIONS

8/17/99

MICROSTATION FILE NAME = BD5113A_SHEET4.DGN

STATE OF NORTH CAROLINA
DIVISION OF HIGHWAYS

TRANSPORTATION MANAGEMENT PLAN

BUNCOMBE COUNTY

DIVISION 13

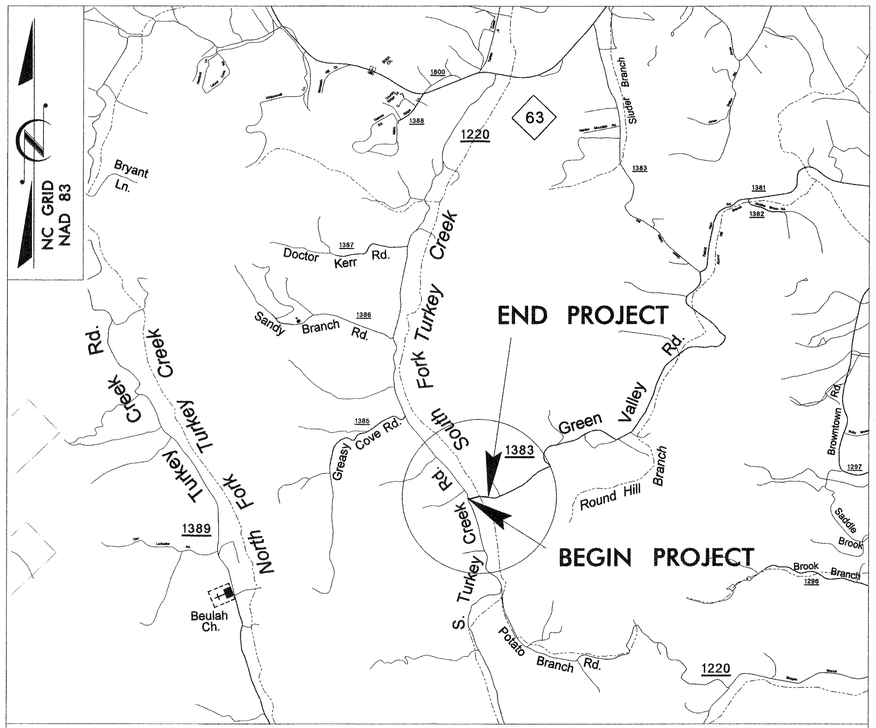

VICINITY MAP

INDEX OF SHEETS

SHEET NO.	TITLE
TMP-1	TITLE SHEET AND INDEX OF SHEETS
TMP-1A	ROADWAY STANDARD DRAWINGS AND LEGEND
TMP-1B	GENERAL NOTES AND PHASING NOTES
TMP-2	OFFSITE DETOUR SIGNING AND ROAD CLOSURE
SD-1	SPECIAL SIGN DESIGN

SHEET NO.
TMP-1

TIP PROJECT: BD-5113A

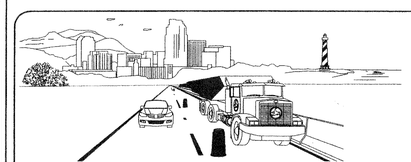

WORK ZONE SAFETY & MOBILITY
"from the MOUNTAINS to the COAST"

N.C.D.O.T. WORK ZONE TRAFFIC CONTROL
1561 MAIL SERVICE CENTER (MSC) RALEIGH, NC 27699-1561
750 N. GREENFIELD PARKWAY, GARNER, NC 27529 (DELIVERY)
PHONE: (919) 773-2800 FAX: (919) 771-2745

J. S. BOURNE, P.E. — STATE TRAFFIC MANAGEMENT ENGINEER
_____ TRAFFIC CONTROL PROJECT ENGINEER
_____ TRAFFIC CONTROL PROJECT DESIGN ENGINEER
_____ TRAFFIC CONTROL DESIGN ENGINEER

DIVISION OF HIGHWAYS · STATE OF NORTH CAROLINA · DEPARTMENT OF TRANSPORTATION · WORK ZONE TRAFFIC CONTROL

V&M
Vaughn & Melton
Consulting Engineers
Asheville, North Carolina 828-253-2796
Charlotte, North Carolina 704-895-9051
Tri-Cities, Tennessee 423-467-8401
Knoxville, Tennessee 865-546-5800
Middlesboro, Kentucky 606-248-6600
Spartanburg, South Carolina 864-574-4775

Copyright© 1994 Vaughn & Melton, Inc.
All Rights Reserved

STV / Ralph Whitehead Associates, Inc.
1000 West Morehead St., Ste. 200
Charlotte, NC 28208
NC License Number F-0991
PROJECT ENGINEER JOHN JOHNSON, PE
DESIGN ENGINEER RICHARD ODYNSKI, PE

APPROVED: _____
DATE: _____

NORTH CAROLINA PROFESSIONAL SEAL 029 ENGINEER RICHARD A. ODYNSKI
4-3-12

4/3/2012
R:\Traffic\TrafficControl\TCP\BD5113A_TCP_TSH.dgn
parkercs

PROJ. REFERENCE NO.	SHEET NO.
BD-5113A	TMP-1A

STV/Ralph Whitehead Associates, Inc.
1000 West Morehead St. Ste. 200
Charlotte, NC 28208
NC License Number F-0991

V&M
Vaughn & Melton
Consulting Engineers
Asheville, North Carolina 828-253-2796
Charlotte, North Carolina 704-895-9051
Tri-Cities, Tennessee 423-467-8401
Knoxville, Tennessee 865-546-5800
Middlesboro, Kentucky 606-248-6600
Spartanburg, South Carolina 864-574-4775

Copyright© 1994 Vaughn & Melton, Inc.
All Rights Reserved

ROADWAY STANDARD DRAWINGS

REV. JUNE 2009

ROADWAY STANDARD DRAWINGS

THE FOLLOWING ROADWAY STANDARDS AS APPEAR IN "ROADWAY STANDARD DRAWINGS" - PROJECT SERVICES UNIT - N.C. DEPARTMENT OF TRANSPORTATION - RALEIGH, N.C., DATED JULY 2006 ARE APPLICABLE TO THIS PROJECT AND BY REFERENCE HEREBY ARE CONSIDERED A PART OF THESE PLANS:

STD.NO.	TITLE
1101.03	TEMPORARY ROAD CLOSURES
1101.05	WORK ZONE VEHICLE ACCESSES
1101.11	TRAFFIC CONTROL DESIGN TABLES
1110.01	STATIONARY WORK ZONE SIGNS
1110.02	PORTABLE WORK ZONE SIGNS
1145.01	BARRICADES

LEGEND

GENERAL

- DIRECTION OF TRAFFIC FLOW
- DIRECTION OF PEDESTRIAN TRAFFIC FLOW
- EXIST. PVMT.
- NORTH ARROW
- PROPOSED PVMT.
- WORK AREA
- REMOVAL

TRAFFIC CONTROL DEVICES

- BARRICADE (TYPE III)
- CONE
- DRUM — SKINNY DRUM — TUBULAR MARKER
- TEMPORARY CRASH CUSHION
- FLASHING ARROW PANEL (TYPE C)
- FLAGGER
- LAW ENFORCEMENT
- TRUCK MOUNTED IMPACT ATTENUATOR (TMIA)
- CHANGEABLE MESSAGE SIGN

TEMPORARY SIGNING

- PORTABLE SIGN
- STATIONARY SIGN
- STATIONARY OR PORTABLE SIGN

SIGNALS

- EXISTING
- PROPOSED
- TEMPORARY

PAVEMENT MARKINGS

- EXISTING LINES
- TEMPORARY LINES

PAVEMENT MARKERS

- CRYSTAL/CRYSTAL
- CRYSTAL/RED
- YELLOW/YELLOW

PAVEMENT MARKING SYMBOLS

- PAVEMENT MARKING SYMBOLS

APPROVED:_____ DATE:_____

NORTH CAROLINA PROFESSIONAL SEAL 019847 ENGINEER RICHARD A. KOCH, JR.
4-3-12

DIVISION OF HIGHWAYS
STATE OF NORTH CAROLINA
DEPARTMENT OF TRANSPORTATION
WORK ZONE TRAFFIC CONTROL

ROADWAY STANDARD DRAWINGS & LEGEND

4/3/2012
R:\Traffic\TrafficControl\TCP\BD5113A_TCP_1A.dgn
pgarkercs

PROJ. REFERENCE NO.	SHEET NO.
BD-5113A	TMP-1B

STV/ Ralph Whitehead Associates, Inc.
1000 West Morehead St., Ste. 200
Charlotte, NC 28208
NC License Number F-0991

Vaughn & Melton
Consulting Engineers
Asheville, North Carolina 828-253-2796
Charlotte, North Carolina 704-895-9051
Tri-Cities, Tennessee 423-467-8401
Knoxville, Tennessee 865-546-5800
Middlesboro, Kentucky 606-248-5600
Spartanburg, South Carolina 864-574-4775
Copyright © 1994 Vaughn & Melton, Inc.
All Rights Reserved

GENERAL NOTES

CHANGES MAY BE REQUIRED WHEN PHYSICAL DIMENSIONS IN THE DETAIL DRAWINGS, STANDARD DETAILS AND ROADWAY DETAILS ARE NOT ATTAINABLE TO MEET FIELD CONDITIONS, OR RESULT IN DUPLICATE, OR UNDESIRED OVERLAPPING OF DEVICES. MODIFICATION MAY INCLUDE: MOVING, SUPPLEMENTING, COVERING OR REMOVAL OF DEVICES, AS DIRECTED BY THE ENGINEER.

THE FOLLOWING GENERAL NOTES APPLY AT ALL TIMES FOR THE DURATION OF THE CONSTRUCTION PROJECT, EXCEPT WHEN OTHERWISE NOTED IN THE PLAN, OR DIRECTED BY THE ENGINEER.

TIME RESTRICTIONS

A) DO NOT CLOSE OR NARROW TRAVEL LANES ON SR 1608 DURING HOLIDAYS AND SPECIAL EVENTS AS FOLLOWS:

1. FOR ANY UNEXPECTED OCCURRENCE THAT CREATES UNUSUALLY HIGH TRAFFIC VOLUMES, AS DIRECTED BY THE ENGINEER.

2. FOR NEW YEAR'S, BETWEEN THE HOURS OF 6:00 A.M. DECEMBER 31st TO 9:00 P.M. JANUARY 2ND. IF NEW YEAR'S DAY IS ON A FRIDAY, SATURDAY, SUNDAY, OR MONDAY THEN UNTIL 9:00 P.M. THE FOLLOWING TUESDAY.

3. FOR EASTER, BETWEEN THE HOURS OF 6:00 A.M. THURSDAY AND 9:00 P.M. MONDAY.

4. FOR MEMORIAL DAY, BETWEEN THE HOURS OF 6:00 A.M. FRIDAY TO 9:00 P.M. TUESDAY.

5. FOR INDEPENDENCE DAY, BETWEEN THE HOURS OF 6:00 A.M. THE DAY BEFORE INDEPENDENCE DAY AND 9:00 P.M. THE DAY AFTER INDEPENDENCE DAY.

   IF INDEPENDENCE DAY IS ON A FRIDAY, SATURDAY, SUNDAY OR MONDAY THEN BETWEEN THE HOURS OF 6:00 A.M. THE THURSDAY BEFORE INDEPENDENCE DAY AND 9:00 P.M. THE TUESDAY AFTER INDEPENDENCE DAY.

6. FOR LABOR DAY, BETWEEN THE HOURS OF 6:00 A.M. FRIDAY AND 9:00 P.M. TUESDAY.

7. FOR THANKSGIVING DAY, BETWEEN THE HOURS OF 6:00 A.M. TUESDAY TO 9:00 P.M. MONDAY.

8. FOR CHRISTMAS, BETWEEN THE HOURS OF 6:00 A.M. THE FRIDAY BEFORE THE WEEK OF CHRISTMAS DAY AND 9:00 P.M. THE FOLLOWING MONDAY AFTER THE WEEK OF CHRISTMAS.

PAVEMENT EDGE DROP OFF REQUIREMENTS

B) BACKFILL AT 6:1 SLOPE UP TO THE EDGE AND ELEVATION OF EXISTING PAVEMENT IN AREAS ADJACENT TO AN OPENED TRAVEL LANE THAT HAS AN EDGE OF PAVEMENT DROP-OFF AS FOLLOWS:

   BACKFILL DROP-OFFS THAT EXCEED 2 INCHES ON ROADWAYS WITH POSTED SPEED LIMITS OF 45 MPH OR GREATER.

   BACKFILL DROP-OFFS THAT EXCEED 3 INCHES ON ROADWAYS WITH POSTED SPEED LIMITS LESS THAN 45 MPH.

   BACKFILL WITH SUITABLE COMPACTED MATERIAL, AS APPROVED BY THE ENGINEER, AT NO EXPENSE TO THE DEPARTMENT.

TRAFFIC PATTERN ALTERATIONS

C) NOTIFY THE ENGINEER TWENTY ONE (21) CALENDAR DAYS PRIOR TO ANY TRAFFIC PATTERN ALTERATION.

SIGNING

D) PROVIDE SIGNING AND DEVICES REQUIRED TO CLOSE THE ROAD ACCORDING TO THE ROADWAY STANDARD DRAWINGS AND TRAFFIC CONTROL PLANS.

E) PROVIDE SIGNING REQUIRED FOR THE OFF-SITE DETOUR ROUTE AS SHOWN IN THE TRAFFIC CONTROL PLANS.

F) COVER OR REMOVE ALL SIGNS AND DEVICES REQUIRED TO CLOSE THE ROAD WHEN ROAD CLOSURE IS NOT IN OPERATION.

G) COVER OR REMOVE ALL SIGNS REQUIRED FOR THE OFF-SITE DETOUR WHEN THE DETOUR IS NOT IN OPERATION.

H) ENSURE ALL NECESSARY SIGNING IS IN PLACE PRIOR TO ALTERING ANY TRAFFIC PATTERN.

PHASING NOTES

STEP 1: USING RSD 1101.03 SHEET 1 OF 9, AND TMP-2, INSTALL DETOUR SIGNS AND PLACE TYPE III BARRICADES TO CLOSE SR 1383 (GREEN VALLEY RD.) TO THRU TRAFFIC AND DETOUR ONTO PROPOSED DETOUR.

STEP 2: AWAY FROM TRAFFIC, PERFORM THE FOLLOWING:

REMOVE EXISTING STRUCTURE AND CONSTRUCT PROPOSED STRUCTURE. SEE ROADWAY AND STRUCTURE PLANS.

CONSTRUCT PROPOSED -L- UP TO BUT NOT INCLUDING FINAL LAYER OF SURFACE COURSE.

STEP 3: PLACE FINAL PAVEMENT MARKINGS AND FINAL LAYER OF SURFACE COURSE AND TIE TO EXISTING MARKINGS (SEE PAVEMENT MARKING PLAN).

STEP 4: REMOVE ALL TRAFFIC CONTROL DEVICES, SIGNING AND DETOUR ROUTE SIGNING.

OPEN SR 1383 TO FINAL TRAFFIC PATTERN.

LOCAL NOTES

1. NOTIFY BUNCOMBE COUNTY EMERGENCY SERVICES AND PUBLIC SCHOOLS AT LEAST ONE MONTH PRIOR TO ROAD CLOSURE.

APPROVED: _____ DATE: _____

NORTH CAROLINA PROFESSIONAL SEAL ENGINEER RICHARD A. CRAMER
4-3-12

DIVISION OF HIGHWAYS
STATE OF NORTH CAROLINA
DEPARTMENT OF TRANSPORTATION
WORK ZONE TRAFFIC CONTROL

GENERAL NOTES AND PHASING NOTES

4/3/2012
R:\Traffic\TrafficControl\TCP\BD5113A_TCP_1B.dgn
parkercs

PROJ. REFERENCE NO.	SHEET NO.
BD-5113A	TMP-2

STV/Ralph Whitehead Associates, Inc.
1000 West Morehead St. Ste. 200
Charlotte, NC 28208
NC License Number F-0991

Vaughn & Melton
Consulting Engineers

Asheville, North Carolina 828-253-2796
Charlotte, North Carolina 704-895-9051
Tri-Cities, Tennessee 423-467-8401
Knoxville, Tennessee 865-546-5800
Middlesboro, Kentucky 606-248-6600
Spartanburg, South Carolina 864-574-4775

Copyright© 1994 Vaughn & Melton, Inc.
All Rights Reserved

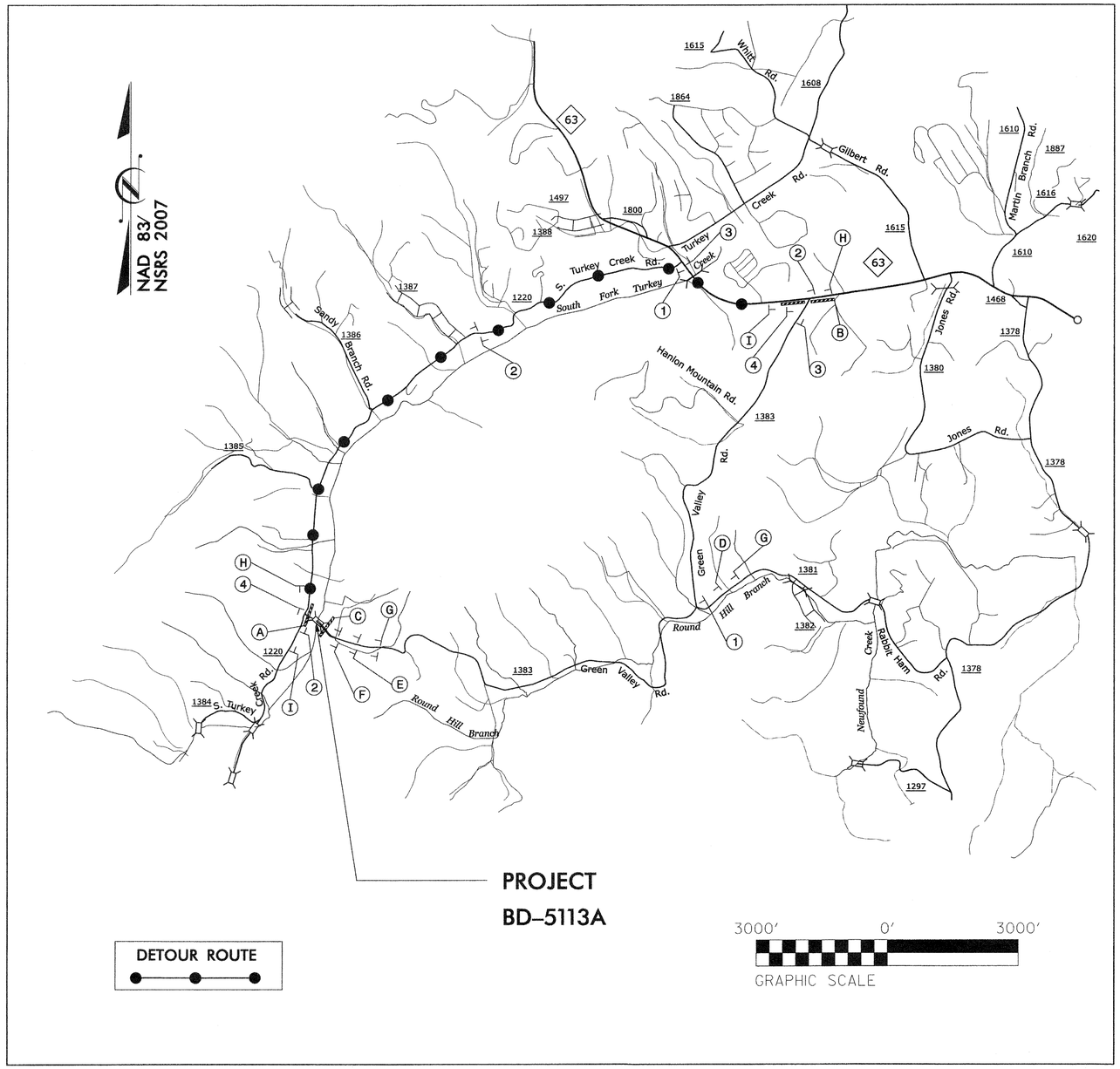

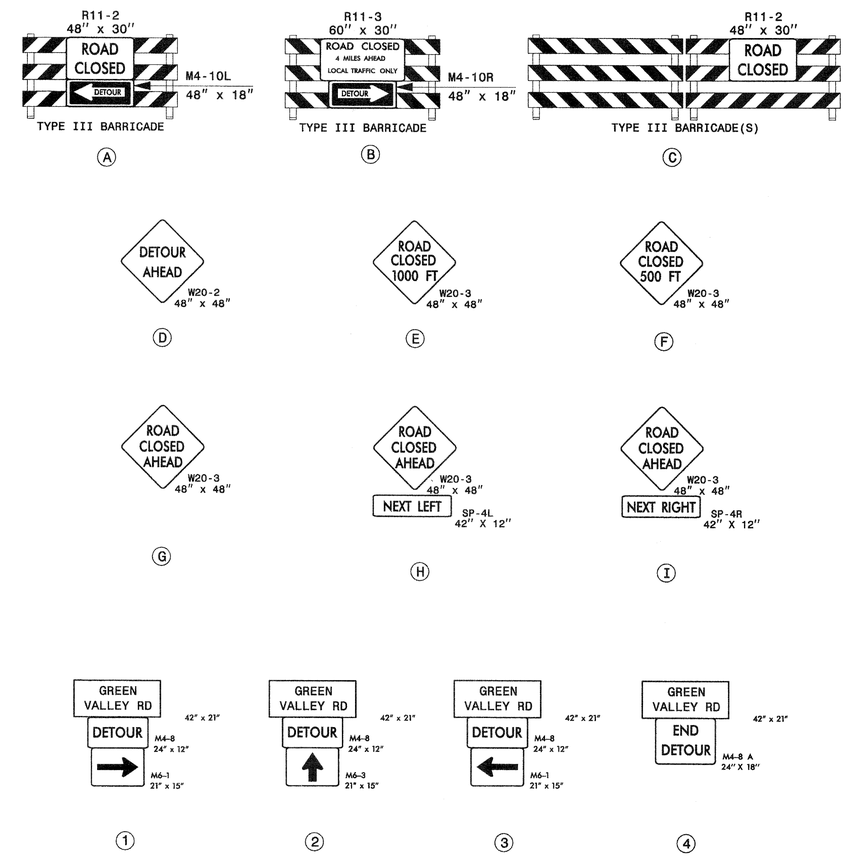

NOTES:

TRAFFIC CONTROL DEVICES Ⓐ THRU Ⓘ SHALL BE INSTALLED ACCORDING TO ROADWAY STANDARD DRAWING 1101.03, SHEET 1 AND 2 OF 9.

TRAFFIC CONTROL DEVICES ① THRU ④ SHALL BE INSTALLED AS PER ENGINEER'S INSTRUCTION.

APPROVED:_____ DATE:_____

NORTH CAROLINA PROFESSIONAL SEAL 025207 ENGINEER RICHARD A. ODOM
4-3-12

DIVISION OF HIGHWAYS
STATE OF NORTH CAROLINA
DEPARTMENT OF TRANSPORTATION
WORK ZONE TRAFFIC CONTROL

OFFSITE DETOUR SIGNING AND ROAD CLOSURE

4/3/2012
R:\Traffic\TrafficControl\TCP\BD5113A_TCP_2.dgn
parkerco

PROJ. REFERENCE NO.	SHEET NO.
BD-5113A	SD-1

STV / Ralph Whitehead Associates, Inc.
1000 West Morehead St., Ste. 200
Charlotte, NC 28208
NC License Number F-0991

Vaughn & Melton
Consulting Engineers
Asheville, North Carolina 828-253-2796
Charlotte, North Carolina 704-895-9051
Tri-Cities, Tennessee 423-467-8401
Knoxville, Tennessee 865-546-5800
Middlesboro, Kentucky 606-248-6600
Spartanburg, South Carolina 864-574-4775

Copyright© 1994 Vaughn & Melton, Inc.
All Rights Reserved

SIGN NUMBER:
TYPE: STATIONARY
QUANTITY: SEE PLANS

BACKG COLOR: FLUORESCENT ORANGE
COPY COLOR: BLACK

SIGN WIDTH: 3'-6"
HEIGHT: 1'-9"
TOTAL AREA: 6.0 Sq.Ft.

MAJ. COPY SERIES: GROUND

ROUTE MARKERS:

BORDER TYPE: INSET
RECESS: 0.5"
WIDTH: 0.5"
RADII: 3"

ARROW TYPES:

NO. Z BARS:
LENGTH:

MAT'L: 0.080" (2.0mm) Aluminum
0.079" (2.0mm) Composite

LETTER POSITIONS

	G	r	e	e	n						
13.7	3.7	2	3.1	3.2	2.6	13.8					14.6
	V	a	l	l	e	y		R	d		
7.7	3.4	3.3	1.6	1.5	2.9	3.1	5	3.4	2.6	7.7	26.7

Letter positions are to the lower left corners

USE NOTES: 1,2

1. Legend and border shall be direct applied non-reflective sheeting.
2. Background shall be Type VII, VIII, or IX (prismatic) fluorescent orange retroreflective sheeting.

DESIGN BY: RAO
PROJECT ID: BD-5113A

CHECKED BY: KAP
DIV: 13

DATE: Nov 11, 2011

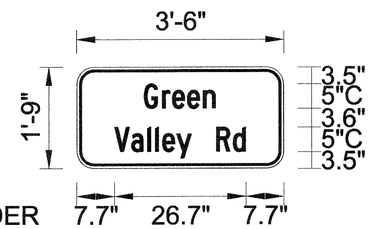

BORDER
R=3"
TH=0.5"
IN=0.5"

Panel Style: WORK ZONE STREET NAME.ssi
M.U.T.C.D.: 2003 Edition

NORTH CAROLINA D.O.T. SIGN DETAIL

APPROVED: _____ DATE: _____

NORTH CAROLINA PROFESSIONAL SEAL 032467 ENGINEER RICHARD A. ODOM, JR.
4-3-12

DIVISION OF HIGHWAYS
STATE OF NORTH CAROLINA
DEPARTMENT OF TRANSPORTATION
WORK ZONE TRAFFIC CONTROL

SPECIAL SIGN DESIGN

4/3/2012
R:\Traffic\TrafficControl\TCP\BD5113A_PSH_SD1.dgn
parkercs

PROJECT REFERENCE NO.	SHEET NO.
BD-5113A	EC-1
R/W SHEET NO.	
ROADWAY DESIGN ENGINEER	HYDRAULICS ENGINEER

ROADSIDE ENVIRONMENTAL UNIT
DEPARTMENT OF TRANSPORTATION
DIVISION OF HIGHWAYS
RALEIGH, N.C.

2012 STANDARD SPECIFICATIONS

EROSION CONTROL PLAN

THESE EROSION AND SEDIMENT CONTROL PLANS COMPLY WITH THE REGULATIONS SET FORTH BY THE NCG-010000 GENERAL CONSTRUCTION PERMIT EFFECTIVE AUGUST 3, 2011 ISSUED BY THE NORTH CAROLINA DEPARTMENT OF ENVIRONMENT AND NATURAL RESOURCES DIVISION OF WATER QUALITY.

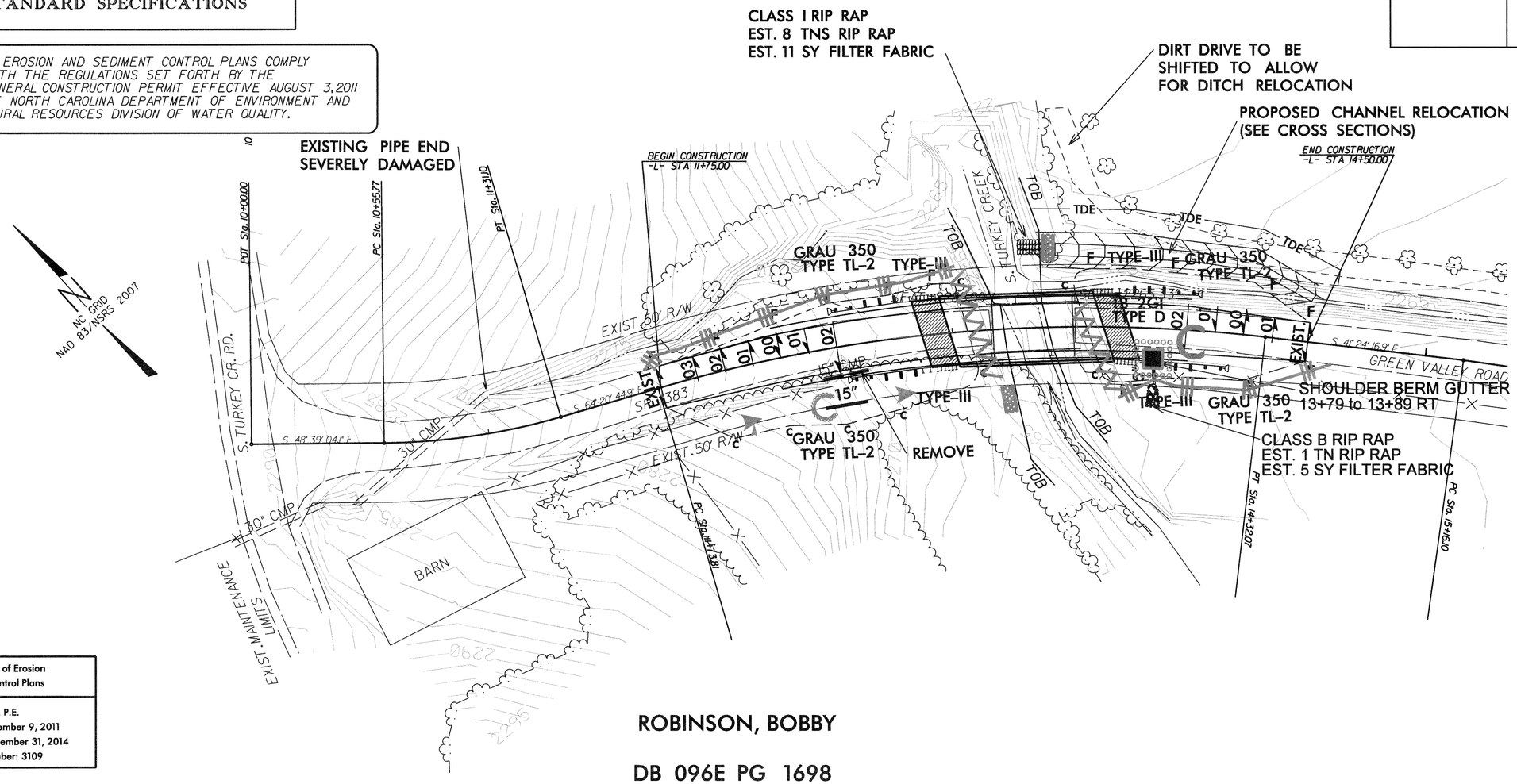

Level III: Designer of Erosion and Sediment Control Plans

Shannon R. Irwin, P.E.
Date Issued: December 9, 2011
Date Expires: December 31, 2014
Certification Number: 3109

ROBINSON, BOBBY

DB 096E PG 1698
DB 781, PG 142
PIN 8780471065

Std. #	Description	Symbol
1605.01	Temporary Silt Fence	
1606.01	Special Sediment Control Fence	
1632.03	Rock Inlet Sediment Trap Type C	
1633.01	Temporary Rock Silt Check Type-A	
1633.02	Temporary Rock Silt Check Type-B	
1635.01	Rock Pipe Inlet Sediment Trap Type-B	

2012 STANDARD DRAWINGS

1604.01	Railroad Erosion Control Detail	1632.01	Rock Inlet Sediment Trap Type A
1605.01	Temporary Silt Fence	1632.02	Rock Inlet Sediment Trap Type B
1606.01	Special Sediment Control Fence	1632.03	Rock Inlet Sediment Trap Type C
1607.01	Gravel Construction Entrance	1633.01	Temporary Rock Silt Check Type A
1622.01	Temporary Berms and Slope Drains	1633.02	Temporary Rock Silt Check Type B
1630.01	Riser Basin	1634.01	Temporary Rock Sediment Dam Type A
1630.02	Silt Basin Type B	1634.02	Temporary Rock Sediment Dam Type B
1630.03	Temporary Silt Ditch	1635.01	Rock Pipe Inlet Sediment Trap Type A
1630.04	Stilling Basin	1635.02	Rock Pipe Inlet Sediment Trap Type B
1630.05	Temporary Diversion	1640.01	Coir Fiber Baffle
1630.06	Special Stilling Basin	1615.01	Temporary Stream Crossing
1631.01	Matting Installation		

PROJECT NO. BD-5113A
COUNTY BUNCOMBE
STATION: 13+31.32
REPLACES BRIDGE NO. 550

STATE OF NORTH CAROLINA
DEPARTMENT OF TRANSPORTATION
RALEIGH

BRIDGE #550 ON SR 1383
OVER S.TURKEY CREEK

REVISIONS						SHEET NO.
NO.	BY	DATE	NO.	BY	DATE	EC-1
1			3			TOTAL SHEETS
2			4			1

PROJECT REFERENCE NO.	SHEET NO.
BD-5113A	EC-2

DIVISION OF HIGHWAYS
STATE OF NORTH CAROLINA

SOIL STABILIZATION TIMEFRAMES

SITE DESCRIPTION	STABILIZATION TIME	TIMEFRAME EXCEPTIONS
PERIMETER DIKES, SWALES, DITCHES AND SLOPES	7 DAYS	NONE
HIGH QUALITY WATER (HQW) ZONES	7 DAYS	NONE
SLOPES STEEPER THAN 3:1	7 DAYS	IF SLOPES ARE 10' OR LESS IN LENGTH AND ARE NOT STEEPER THAN 2:1, 14 DAYS ARE ALLOWED.
SLOPES 3:1 OR FLATTER	14 DAYS	7 DAYS FOR SLOPES GREATER THAN 50' IN LENGTH.
ALL OTHER AREAS WITH SLOPES FLATTER THAN 4:1	14 DAYS	NONE, EXCEPT FOR PERIMETERS AND HQW ZONES.

COMPUTED BY: ACC DATE: 10-04-11
CHECKED BY: ACC DATE: 10-04-11

PROJECT REFERENCE NO.	SHEET NO.
BD-5113A	X-0

DIVISION OF HIGHWAYS
STATE OF NORTH CAROLINA

CROSS SECTION SUMMARY

IN CUBIC YARDS

NORTH CAROLINA PROFESSIONAL SEAL 030453 ENGINEER AARON C. CARVER
5/21/12

L- LOCATION	UNCLASSIFIED EXCAVATION	EMBT
11+75	0	0
12+00	17	3
12+50	70	6
12+97.66 BEGIN BRIDGE	44	9
13+65.02 END BRIDGE	266	0
14+00	48	85
14+50	29	53

NOTE: EMBANKMENT COLUMN DOES NOT INCLUDE BACKFILL FOR UNDERCUT.

Approximate quantities only. Unclassified excavation, borrow excavation, fine grading, clearing and grubbing, and removal of existing pavement will be paid for at the contract lump sum price for "grading".

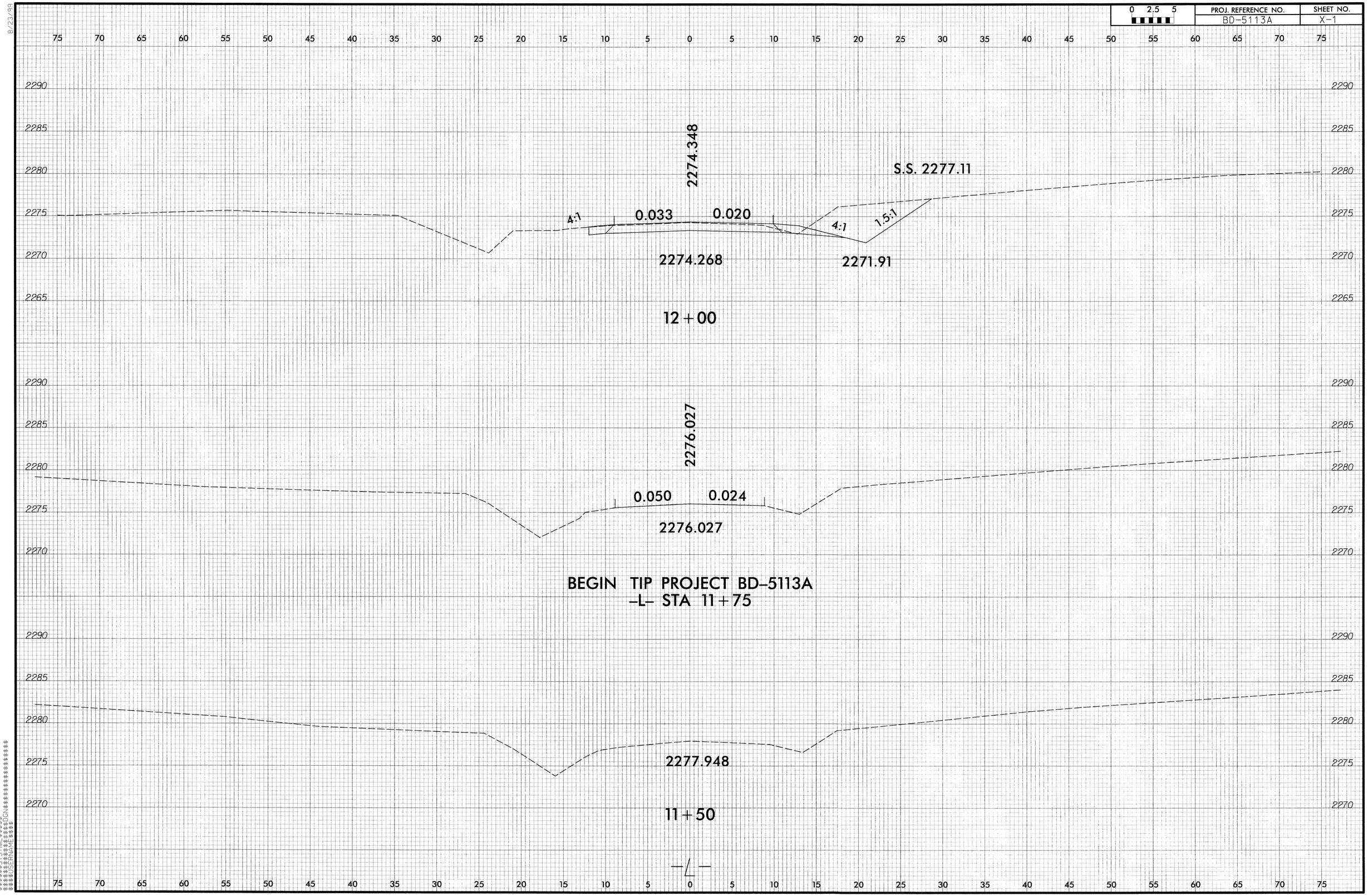

0 2.5 5
PROJ. REFERENCE NO.
BD-5113A
SHEET NO.
X-1
2274.348
S.S. 2277.11
4:1
0.033
0.020
4:1
1.5:1
2274.268
2271.91
12+00
2276.027
0.050
0.024
2276.027
BEGIN TIP PROJECT BD-5113A
-L- STA 11+75
2277.948
11+50
-L-

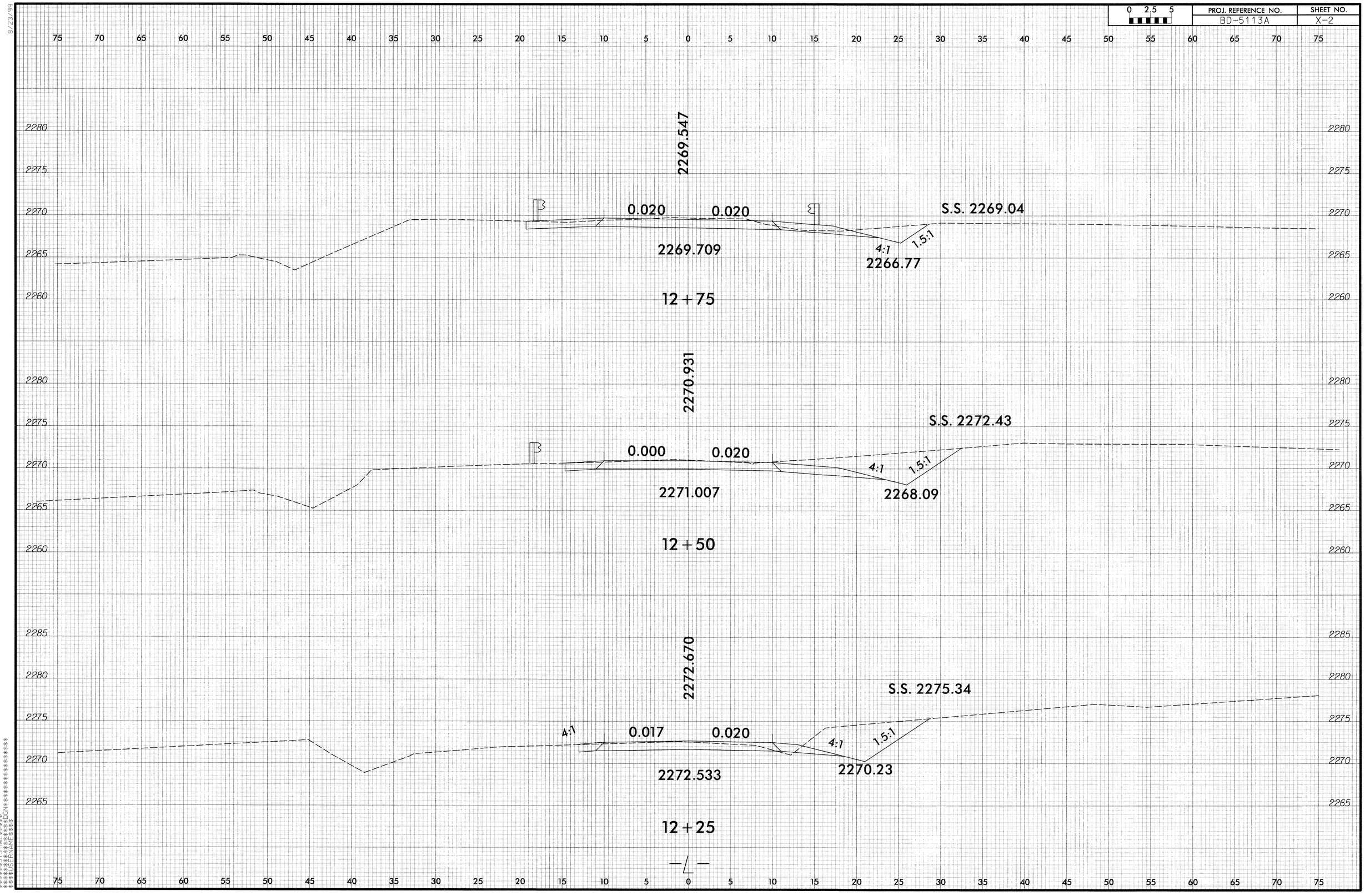

0 2.5 5
PROJ. REFERENCE NO.
BD-5113A
SHEET NO.
X-2
2269.547
0.020
0.020
S.S. 2269.04
2269.709
4:1
1.5:1
2266.77
12+75
2270.931
S.S. 2272.43
0.000
0.020
4:1
1.5:1
2271.007
2268.09
12+50
2272.670
S.S. 2275.34
4:1
0.017
0.020
4:1
1.5:1
2272.533
2270.23
12+25

0 2.5 5	PROJ. REFERENCE NO.	SHEET NO.
	BD-5113A	X-3

0 2.5 5	PROJ. REFERENCE NO.	SHEET NO.
	BD-5113A	X-4

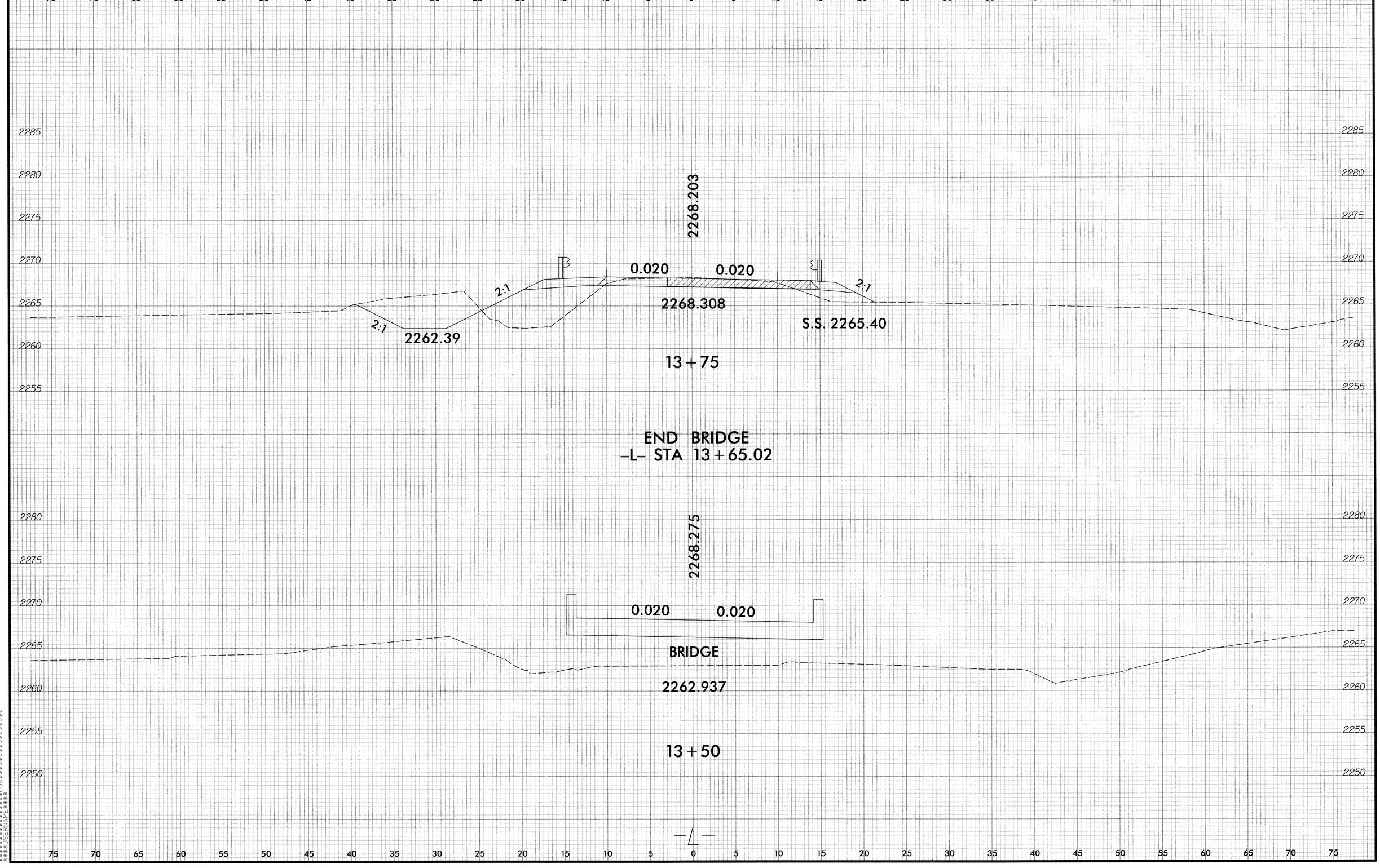

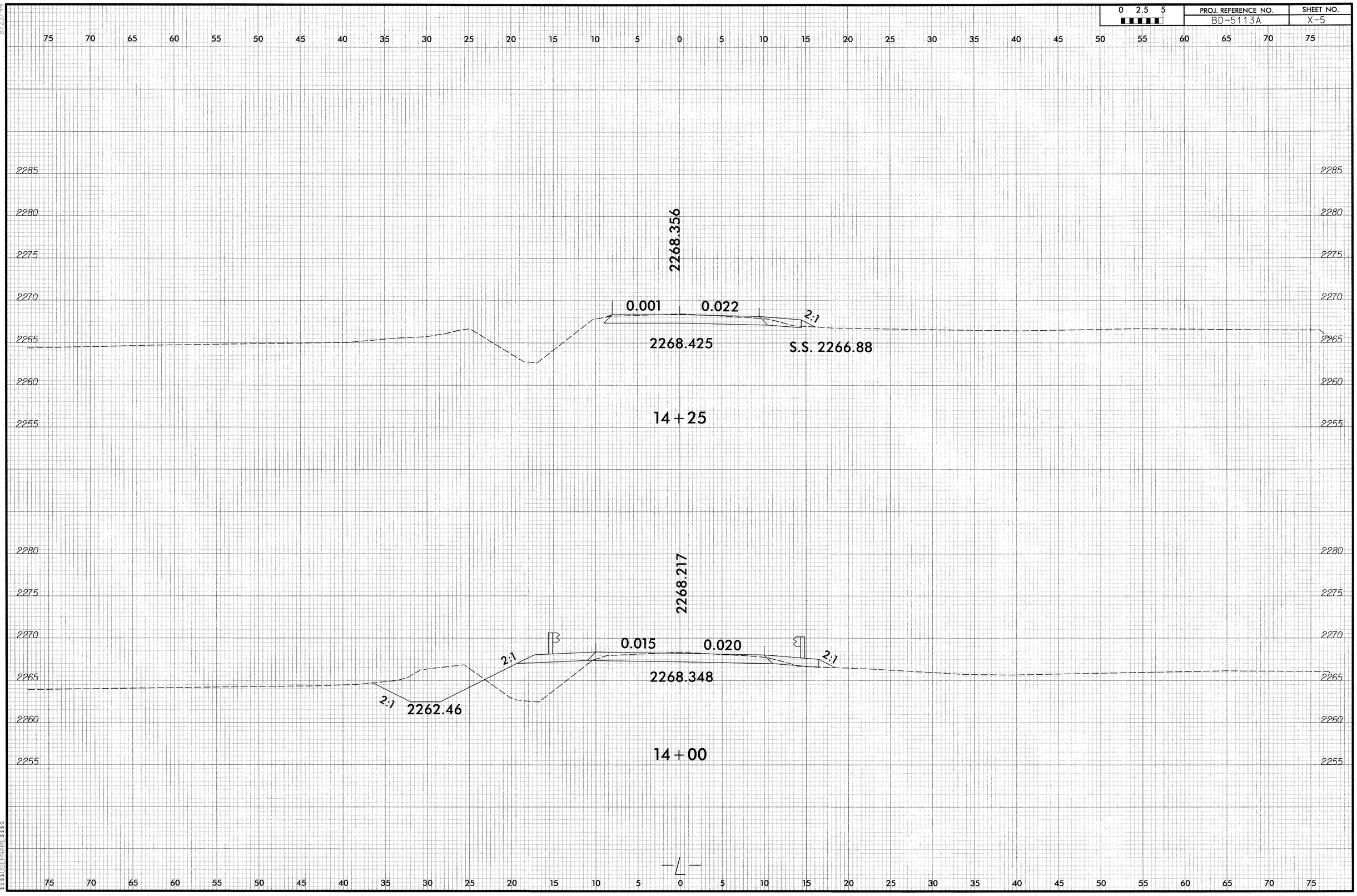

0 2.5 5
PROJ. REFERENCE NO.
BD-5113A
SHEET NO.
X-5
2268.356
0.001
0.022
2:1
2268.425
S.S. 2266.88
14+25
2268.217
0.015
0.020
2:1
2:1
2268.348
2:1
2262.46
14+00

PROJ. REFERENCE NO.	SHEET NO.
BD-5113A	X-6

TIP NO: BD-5113A

CONTRACT: DM00042

STATE	STATE PROJECT REFERENCE NO.	SHEET NO.	TOTAL SHEETS
N.C.	BD-5113A	S-0	

STATE PROJ. NO.	F. A. PROJ. NO.	DESCRIPTION
		CONST.

STATE OF NORTH CAROLINA
DIVISION OF HIGHWAYS
BUNCOMBE COUNTY

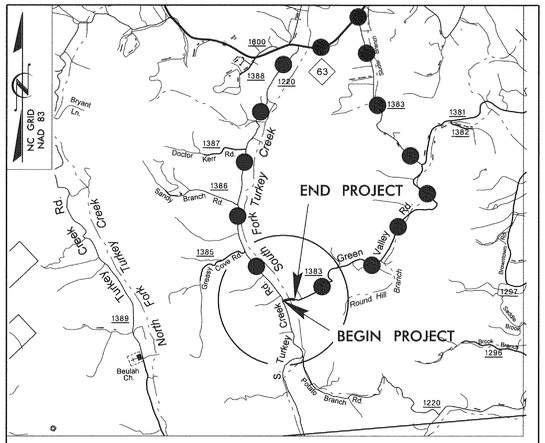

VICINITY MAP NTS.

DETOUR ROUTE

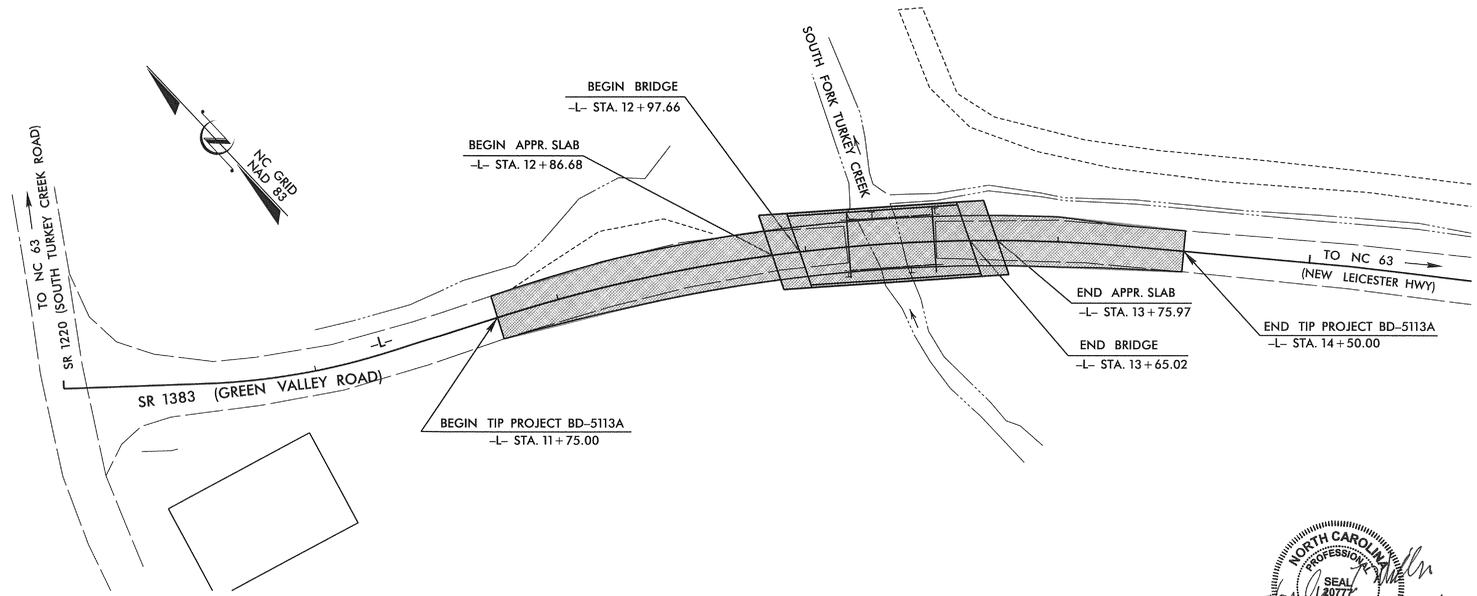

STRUCTURES

NORTH CAROLINA PROFESSIONAL SEAL 20777 ENGINEER HARDY L. WILLIS 5/24/12

V&M Vaughn & Melton Consulting Engineers
Asheville, North Carolina 828-253-2796
Charlotte, North Carolina 704-357-0488
Tri-Cities, Tennessee 423-467-8401
Knoxville, Tennessee 865-546-5800
Middlesboro, Kentucky 606-248-6600
Spartanburg, South Carolina 864-574-4775

Copyright © 2006 Vaughn & Melton, Inc. All Rights Reserved

STATE OF NORTH CAROLINA DEPARTMENT OF TRANSPORTATION

DESIGN DATA

ADT 2007 = 580
ADT 2025 = 1160
T = 6%
V = 40 MPH

FUNCT. CLASS = LOCAL
SUB-REGIONAL TIER

PROJECT LENGTH

LENGTH ROADWAY TIP PROJECT BD-5113A = 0.039 MI
LENGTH STRUCTURE TIP PROJECT BD-5113A = 0.013 MI
TOTAL LENGTH OF TIP PROJECT BD-5113A = 0.052 MI

Prepared in the Office of:
VAUGHN & MELTON
1318-F PATTON AVE.
ASHEVILLE NC, 28806
FOR THE NORTH CAROLINA DIVISION OF HIGHWAYS

2012 STANDARD SPECIFICATIONS

LETTING DATE :
JUNE 20, 2012

HARDY WILLIS, PE
PROJECT ENGINEER

AARON CARVER, PE
PROJECT DESIGN ENGINEER

STRUCTURES MANAGEMENT UNIT
1000 BIRCH RIDGE DR.
RALEIGH, N.C. 27610

DIVISION OF HIGHWAYS
STATE OF NORTH CAROLINA

GARRY MOORE P.E.
STATE DESIGN ENGINEER

DEPARTMENT OF TRANSPORTATION
FEDERAL HIGHWAY ADMINISTRATION

APPROVED
DIVISION ADMINISTRATOR DATE

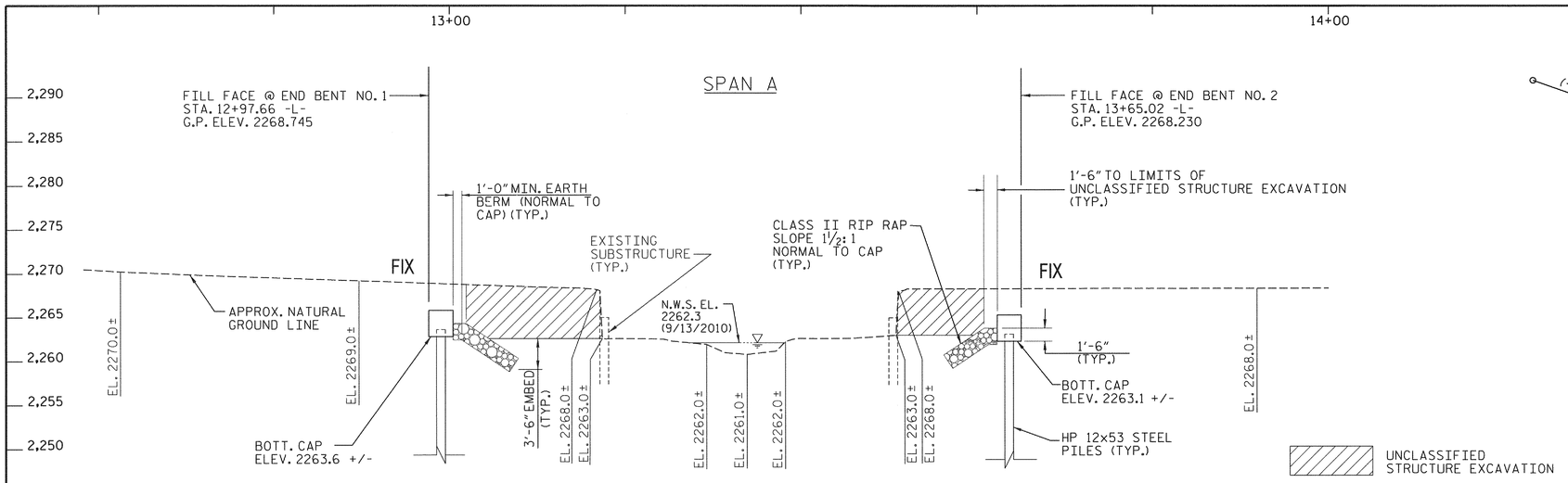

SECTION ALONG ℄ SURVEY -L-

NOTE: SECTIONS AT END BENTS ARE AT RIGHT ANGLES.

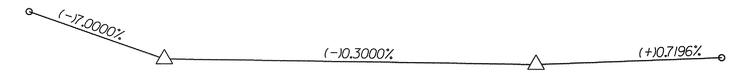

VC1
PVI STA. 12+85.00
EL. 2268.470
V.C. = 80'

VC2
PVI STA. 13+95.00
EL. 2268.140
V.C. = 50'

GRADE DATA -L-

PI Sta 13+04.69
Δ = 22° 56' 28.0" (RT)
D = 8° 52' 59.0"
L = 258.26'
T = 130.88'
R = 645.00'

HORIZONTAL CURVE DATA -L-

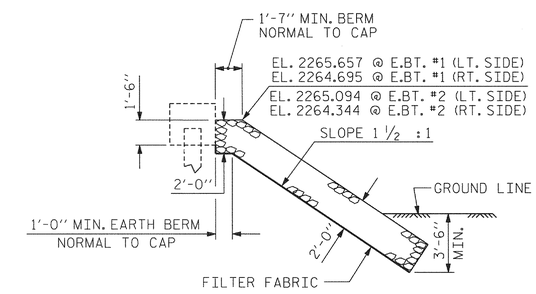

RIP RAP DETAIL

SECTION ALONG ℄ -L-

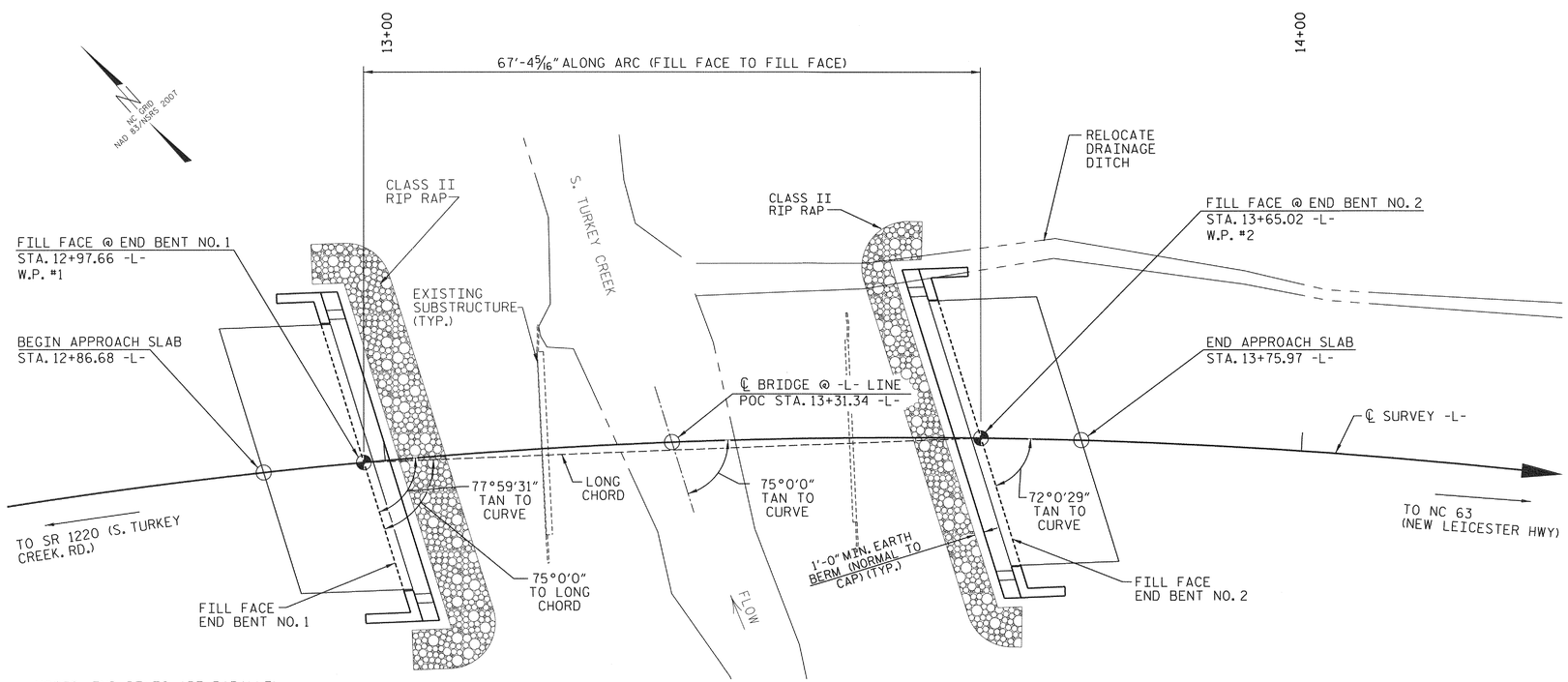

NOTES: END BENTS ARE PARALLEL.

CORED SLABS ARE PARALLEL TO LONG CHORD.

PILES ARE NOT SHOWN IN PLAN VIEW FOR CLARITY.

PLAN ALONG ℄ SURVEY -L-

PROJECT NO. BD-5113A

BUNCOMBE COUNTY

STATION: 13+31.34 -L-

SHEET 1 OF 3 REPLACES BRIDGE NO. 550

NORTH CAROLINA PROFESSIONAL SEAL 20771 ENGINEER HARDY L. WILLIS 5/24/12

Vaughn & Melton Consulting Engineers
Middlesboro, Kentucky 606-248-5600
Knoxville, Tennessee 865-546-5600
Asheville, North Carolina 828-253-2796
Copyright © 2006 Vaughn & Melton, Inc. All Rights Reserved

DRAWN BY: MAF DATE: JAN. 2012
CHECKED BY: HLW DATE: JAN. 2012

STATE OF NORTH CAROLINA
DEPARTMENT OF TRANSPORTATION
RALEIGH

GENERAL DRAWING

FOR BRIDGE on SR 1383
over S. TURKEY CK.
Between SR 1220 & NC 63

JAN. 2012

REVISIONS						SHEET NO.
NO.	BY:	DATE:	NO.	BY:	DATE:	S-1
1			3			TOTAL SHEETS
2			4			13

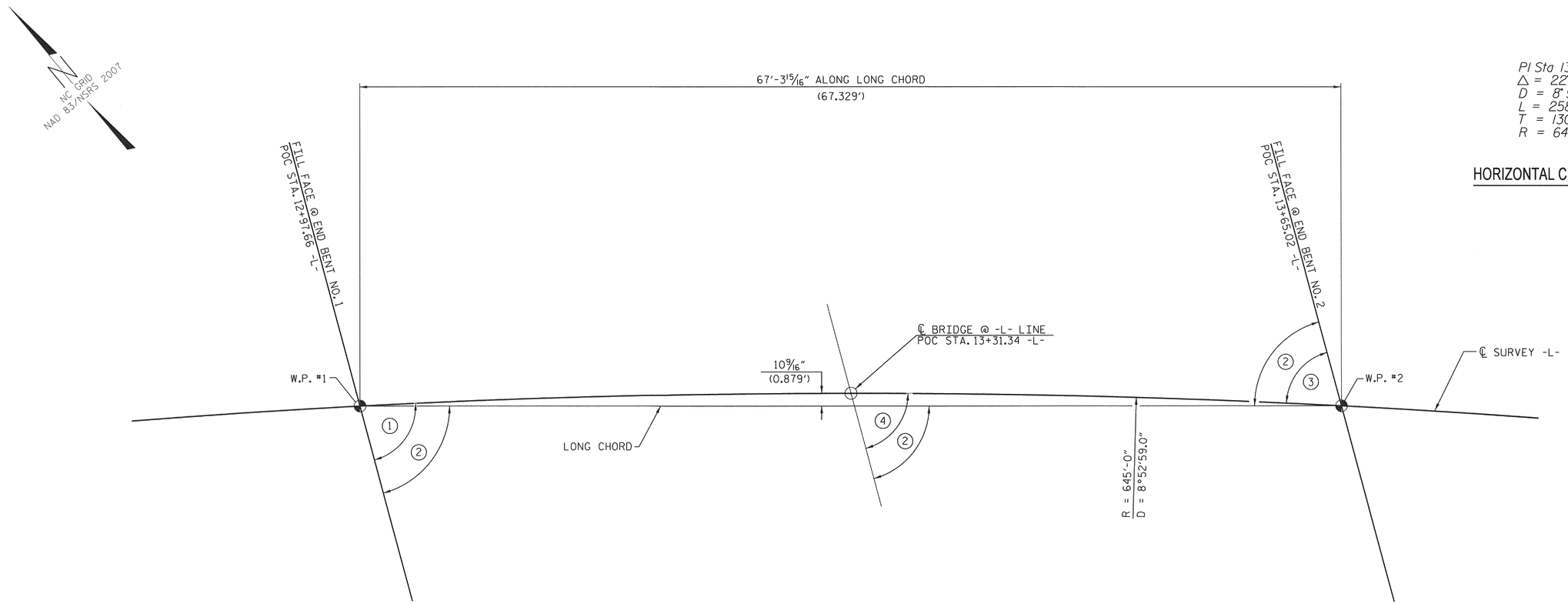

PI Sta 13+04.69
△ = 22° 56' 28.0" (RT)
D = 8° 52' 59.0"
L = 258.26'
T = 130.88'
R = 645.00'

HORIZONTAL CURVE DATA -L-

① 77°59'31" TAN TO CURVE, ℄ SURVEY -L-
② 75°00'00" TO LONG CHORD
③ 72°00'29" TAN TO CURVE, ℄ SURVEY -L-
④ 75°00'00" TAN TO CURVE, ℄ SURVEY -L-

LONG CHORD LAYOUT

END BENTS ARE PARALLEL.

NORTH CAROLINA PROFESSIONAL SEAL 20777 ENGINEER HARDY L. WILLIS
5/24/12

PROJECT NO. BD-5113A
BUNCOMBE COUNTY
STATION: 13+31.34 -L-

SHEET 2 OF 3

STATE OF NORTH CAROLINA
DEPARTMENT OF TRANSPORTATION
RALEIGH

GENERAL DRAWING

FOR BRIDGE on SR 1383
over S. TURKEY CK.
Between SR 1220 & NC 63

JAN. 2012

V&M Vaughn & Melton Consulting Engineers
Middlesboro, Kentucky 606-248-5600
Knoxville, Tennessee 865-546-5600
Asheville, North Carolina 828-253-2796
Copyright © 2006 Vaughn & Melton, Inc. All Rights Reserved

DRAWN BY: MAF DATE: JAN. 2012
CHECKED BY: HLW DATE: JAN. 2012

REVISIONS						SHEET NO.
NO.	BY:	DATE:	NO.	BY:	DATE:	S-2
1			3			TOTAL SHEETS
2			4			13

BM #1 - RR SPIKE IN 36"W. OAK - N 706897.5190 E 885119.4330 ELEV. 2272.62 -L- STA. 12+35.15 34.31' LT.

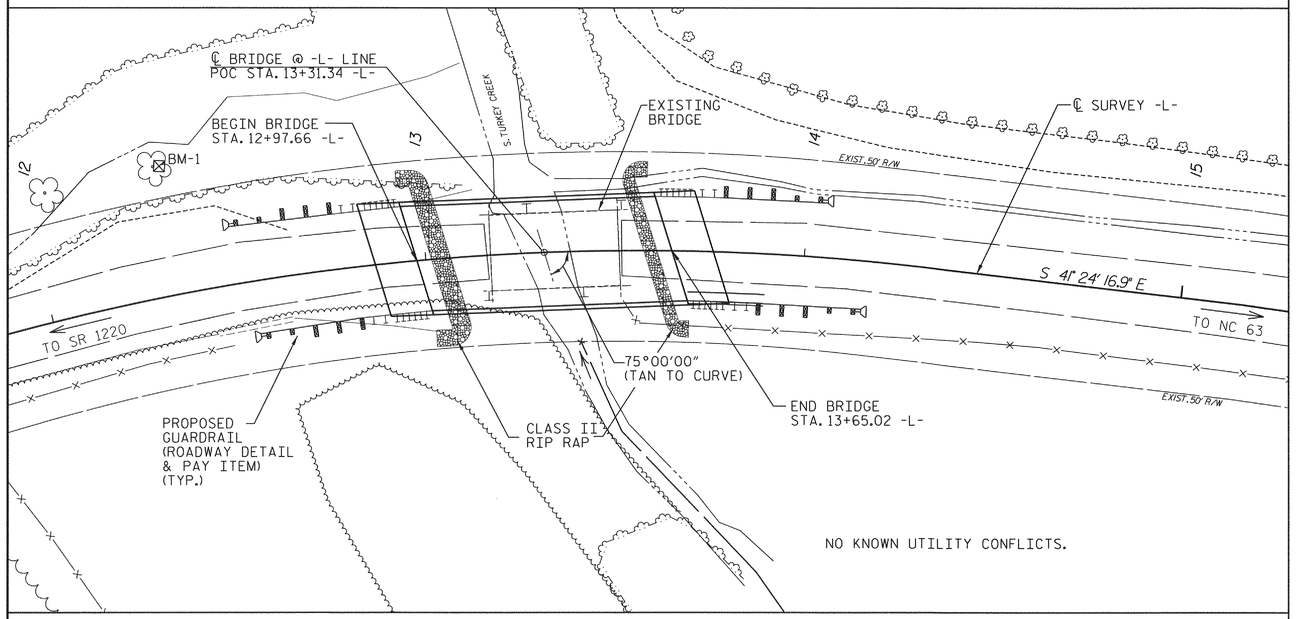

LOCATION SKETCH

GENERAL NOTES:

ASSUMED LIVE LOAD = HL-93 OR ALTERNATE LOADING.

THIS BRIDGE HAS BEEN DESIGNED IN ACCORDANCE WITH THE REQUIREMENTS OF THE AASHTO LRFD BRIDGE DESIGN SPECIFICATIONS.

FOR OTHER DESIGN DATA AND GENERAL NOTES, SEE "STANDARD NOTES" SHEET

FOR EROSION CONTROL MEASURES, SEE EROSION CONTROL PLANS.

THE EXISTING STRUCTURE, CONSISTING OF A ONE SPAN, 34 FT.-8 IN. LONG TIMBER DECK ON I-BEAMS, 20-FEET WIDE, ON TIMBER END BENTS, AND LOCATED AT THE PROPOSED STRUCTURE, SHALL BE REMOVED. THE EXISTING BRIDGE IS PRESENTLY POSTED BELOW THE LEGAL LOAD LIMIT. SHOULD THE STRUCTURAL INTEGRITY OF THE BRIDGE FURTHER DETERIORATE, THIS LOAD LIMITATION MAY BE REDUCED AS FOUND NECESSARY DURING THE LIFE OF THE PROJECT.

REMOVAL OF THE EXISTING BRIDGE SHALL BE PERFORMED SO AS NOT TO ALLOW DEBRIS TO FALL INTO THE WATER. THE CONTRACTOR SHALL REMOVE THE BRIDGE AND SUBMIT PLANS FOR DEMOLITION IN ACCORDANCE WITH ARTICLE 402-2 OF THE STANDARD SPECIFICATIONS.

THE SUBSTRUCTURE OF THE EXISTING BRIDGE INDICATED ON THE PLANS IS FROM THE BEST INFORMATION AVAILABLE. SINCE THIS INFORMATION IS SHOWN FOR THE CONVENIENCE OF THE CONTRACTOR, THE CONTRACTOR SHALL HAVE NO CLAIM WHATSOEVER AGAINST THE DEPARTMENT OF TRANSPORTATION FOR ANY DELAYS OR ADDITIONAL COST INCURRED BASED ON DIFFERENCES BETWEEN THE EXISTING BRIDGE SUBSTRUCTURE SHOWN ON THE PLANS AND THE ACTUAL CONDITIONS AT THE PROJECT SITE.

THIS STRUCTURE HAS BEEN DESIGNED IN ACCORDANCE WITH HEC 18, "EVALUATING SCOUR AT BRIDGES", MAY 2001.

FOR SUBMITTAL OF WORKING DRAWINGS, SEE SPECIAL PROVISIONS.

FOR FALSEWORK AND FORMWORK, SEE SPECIAL PROVISIONS.

FOR CRANE SAFETY, SEE SPECIAL PROVISIONS.

FOR PRESTRESSED CONCRETE MEMBERS, SEE SPECIAL PROVISIONS.

FOR GROUT FOR STRUCTURES, SEE SPECIAL PROVISIONS.

FOR VERTICAL CONCRETE BARRIER RAIL, SEE SPECIAL PROVISIONS.

FOR CURING CONCRETE, SEE SPECIAL PROVISIONS.

THE MATERIAL SHOWN IN THE CROSS-HATCHED AREA SHALL BE EXCAVATED FOR A DISTANCE OF 25 FT. EACH SIDE OF CENTERLINE ROADWAY AS DIRECTED BY THE ENGINEER. THIS WORK WILL BE PAID FOR AT THE CONTRACT LUMP SUM PRICE FOR UNCLASSIFIED STRUCTURE EXCAVATION. SEE SECTION 412 OF THE STANDARD SPECIFICATIONS.

ASPHALT WEARING SURFACE IS INCLUDED IN ROADWAY QUANTITY ON ROADWAY PLANS.

FOR PILES, SEE SPECIAL PROVISIONS.

PILES AT END BENT NO. 1 ARE DESIGNED FOR A FACTORED RESISTANCE OF 95 TONS PER PILE.

DRIVE PILES AT END BENT NO. 1 TO A REQUIRED DRIVING RESISTANCE OF 158 TONS PER PILE.

PILES AT END BENT NO. 2 ARE DESIGNED FOR A FACTORED RESISTANCE OF 95 TONS PER PILE.

DRIVE PILES AT END BENT NO. 2 TO A REQUIRED DRIVING RESISTANCE OF 158 TONS PER PILE.

NOTE:
THE SUBSURFACE INVESTIGATION WAS SURVEYED USING A TEMPORARY BENCHMARK WITH AN ASSUMED ELEVATION OF 100 FEET. THE ACTUAL ELEVATION OF TBM IS 2267.83 FEET.

TOTAL BILL OF MATERIAL

	REMOVAL OF EXISTING STRUCTURE	UNCLASSIFIED STRUCTURE EXCAVATION	CLASS A CONCRETE	BRIDGE APPROACH SLABS	REINFORCING STEEL	HP 12 X 53 STEEL PILES		VERTICAL CONCRETE BARRIER RAIL	RIP RAP CLASS II (2'-0" THICK)	FILTER FABRIC FOR DRAINAGE	ELASTOMERIC BEARINGS	3'-0" x 2'-0" PRESTRESSED CONCRETE CORED SLABS	
	LUMP SUM	LUMP SUM	CU. YARDS	LUMP SUM	LBS.	NO.	LIN. FT.	LIN. FT.	TONS	SQ. YARDS	LUMP SUM	NO.	LIN. FT.
SUPERSTRUCTURE				LUMP SUM				130.26			LUMP SUM	10	650.00
END BENT 1		LUMP SUM	13.7		2039	5	285		61	68			
END BENT 2		LUMP SUM	13.7		2039	5	315		61	68			
TOTAL	LUMP SUM	LUMP SUM	27.4	LUMP SUM	4078	10	600	130.26	122	136	LUMP SUM	10	650.00

HYDROGRAPHIC DATA

DESIGN DISCHARGE = 1390 CFS
DESIGN FREQUENCY = 25 YRS
DESIGN HW ELEVATION = 2273.4 FT
BASE DISCHARGE = 2110 CFS
BASE FREQUENCY = 100 YRS
BASE HW ELEVATION = 2274.3 FT

OVERTOPPING FLOOD DATA

OVERTOPPING DISCHARGE = 1380 CFS
OVERTOPPING FREQUENCY = 25 (-) YRS
OVERTOPPING ELEVATION = 2268.2 FT

NORTH CAROLINA PROFESSIONAL SEAL 20777 ENGINEER HARDY L. WILLIS 5/24/12

PROJECT NO. BD-5113A
BUNCOMBE COUNTY
STATION: 13+31.34 -L-
SHEET 3 OF 3

STATE OF NORTH CAROLINA
DEPARTMENT OF TRANSPORTATION
RALEIGH

GENERAL DRAWING

FOR BRIDGE on SR 1383
over S. TURKEY CK.
Between SR 1220 & NC 63

JAN. 2012

V&M Vaughn & Melton Consulting Engineers
Middlesboro, Kentucky 606-248-5600
Knoxville, Tennessee 865-546-5800
Asheville, North Carolina 828-253-2796
Copyright © 2006 Vaughn & Melton, Inc. All Rights Reserved

DRAWN BY: MAF DATE: JAN. 2012
CHECKED BY: HLW DATE: JAN. 2012

REVISIONS						SHEET NO.
NO.	BY:	DATE:	NO.	BY:	DATE:	S-3
1			3			TOTAL SHEETS
2			4			13

LOAD AND RESISTANCE FACTOR RATING (LRFD) SUMMARY FOR PRESTRESSED CONCRETE GIRDERS

LEVEL		VEHICLE	WEIGHT (W) (TONS)	CONTROLLING LOAD RATING	MINIMUM RATING FACTORS (RF)	TONS = W X RF	STRENGTH I LIMIT STATE											SERVICE III LIMIT STATE						COMMENT NUMBER
								MOMENT					SHEAR						MOMENT					
							LIVELOAD FACTORS	DISTRIBUTION FACTORS (DF)	RATING FACTOR	SPAN	GIRDER LOCATION	DISTANCE FROM LEFT END OF SPAN (ft)	DISTRIBUTION FACTORS (DF)	RATING FACTOR	SPAN	GIRDER LOCATION	DISTANCE FROM LEFT END OF SPAN (ft)	LIVELOAD FACTORS	DISTRIBUTION FACTORS (DF)	RATING FACTOR	SPAN	GIRDER LOCATION	DISTANCE FROM LEFT END OF SPAN (ft)	
DESIGN LOAD RATING		HL-93(Inv)	N/A	(1)	1.03	--	1.75	0.269	1.06	65'	EL	31.982	0.608	1.05	65'	EL	3.198	0.80	0.269	**1.03**	65'	EL	**31.982**	
		HL-93(Opr)	N/A	--	1.362	--	1.35	0.269	1.38	65'	EL	31.982	0.608	1.36	65'	EL	3.198	N/A	--	--	--	--	--	
		HS-20(Inv)	36.000	(2)	1.296	46.666	1.75	0.269	1.36	65'	EL	31.982	0.608	**1.3**	65'	EL	**3.198**	0.80	0.269	1.32	65'	EL	31.982	
		HS-20(Opr)	36.000	--	1.68	60.493	1.35	0.269	1.76	65'	EL	31.982	0.608	1.68	65'	EL	3.198	N/A	--	--	--	--	--	
LEGAL LOAD RATING	SV	SNSH	13.500	--	2.898	39.127	1.4	0.269	3.74	65'	EL	31.982	0.608	3.82	65'	EL	3.198	0.80	0.269	2.90	65'	EL	31.982	
		SNGARBS2	20.000	--	2.194	43.878	1.4	0.269	2.83	65'	EL	31.982	0.608	2.73	65'	EL	3.198	0.80	0.269	2.19	65'	EL	31.982	
		SNAGRIS2	22.000	--	2.092	46.029	1.4	0.269	2.7	65'	EL	31.982	0.608	2.54	65'	EL	3.198	0.80	0.269	2.09	65'	EL	31.982	
		SNCOTTS3	27.250	--	1.443	39.328	1.4	0.269	1.86	65'	EL	31.982	0.608	1.91	65'	EL	3.198	0.80	0.269	1.44	65'	EL	31.982	
		SNAGGRS4	34.925	--	1.219	42.576	1.4	0.269	1.57	65'	EL	31.982	0.608	1.59	65'	EL	3.198	0.80	0.269	1.22	65'	EL	31.982	
		SNS5A	35.550	--	1.191	42.349	1.4	0.269	1.54	65'	EL	31.982	0.608	1.62	65'	EL	3.198	0.80	0.269	1.19	65'	EL	31.982	
		SNS6A	39.950	--	1.098	43.884	1.4	0.269	1.42	65'	EL	31.982	0.608	1.48	65'	EL	3.198	0.80	0.269	1.10	65'	EL	31.982	
		SNS7B	42.000	--	1.046	43.944	1.4	0.269	1.35	65'	EL	31.982	0.608	1.46	65'	EL	3.198	0.80	0.269	1.05	65'	EL	31.982	
	TTST	TNAGRIT3	33.000	--	1.341	44.258	1.4	0.269	1.73	65'	EL	31.982	0.608	1.76	65'	EL	3.198	0.80	0.269	1.34	65'	EL	31.982	
		TNT4A	33.075	--	1.349	44.604	1.4	0.269	1.74	65'	EL	31.982	0.608	1.71	65'	EL	3.198	0.80	0.269	1.35	65'	EL	31.982	
		TNT6A	41.600	--	1.108	46.092	1.4	0.269	1.43	65'	EL	31.982	0.608	1.56	65'	EL	3.198	0.80	0.269	1.11	65'	EL	31.982	
		TNT7A	42.000	--	1.116	46.888	1.4	0.269	1.44	65'	EL	31.982	0.608	1.52	65'	EL	3.198	0.80	0.269	1.12	65'	EL	31.982	
		TNT7B	42.000	--	1.162	48.806	1.4	0.269	1.5	65'	EL	31.982	0.608	1.42	65'	EL	3.198	0.80	0.269	1.16	65'	EL	31.982	
		TNAGRIT4	43.000	--	1.1	47.307	1.4	0.269	1.42	65'	EL	31.982	0.608	1.37	65'	EL	3.198	0.80	0.269	1.10	65'	EL	31.982	
		TNAGT5A	45.000	--	1.035	46.568	1.4	0.269	1.33	65'	EL	31.982	0.608	1.37	65'	EL	3.198	0.80	0.269	1.03	65'	EL	31.982	
		TNAGT5B	45.000	(3)	1.02	45.907	1.4	0.269	1.32	65'	EL	31.982	0.608	1.3	65'	EL	3.198	0.80	0.269	**1.02**	65'	EL	**31.982**	

LOAD FACTORS:

DESIGN LOAD RATING FACTORS	LIMIT STATE	γ_{DC}	γ_{DW}
	STRENGTH I	1.25	1.50
	SERVICE III	1.00	1.00

NOTES:

MINIMUM RATING FACTORS ARE BASED ON THE STRENGTH I AND SERVICE III LIMIT STATES.

ALLOWABLE STRESSES FOR SERVICE III LIMIT STATE ARE AS REQUIRED FOR DESIGN.

COMMENTS:

1.
2.
3.
4.

(#) CONTROLLING LOAD RATING

(1) DESIGN LOAD RATING (HL-93)

(2) DESIGN LOAD RATING (HS-20)

(3) LEGAL LOAD RATING **

** SEE CHART FOR VEHICLE TYPE

GIRDER LOCATION

I - INTERIOR GIRDER
EL - EXTERIOR LEFT GIRDER
ER - EXTERIOR RIGHT GIRDER

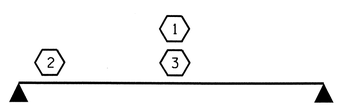

LRFR SUMMARY

FOR SPAN 'A'

PROJECT NO. BD-5113A

BUNCOMBE COUNTY

STATION: 13+31.34 -L-

STATE OF NORTH CAROLINA
DEPARTMENT OF TRANSPORTATION
RALEIGH

STANDARD

LRFR SUMMARY FOR 65' CORED SLAB UNIT 75° SKEW

(NON-INTERSTATE TRAFFIC)

NORTH CAROLINA PROFESSIONAL SEAL 20125 ENGINEER MARSHALL M. CHEEK, JR. 11-28-11

REVISIONS						SHEET NO.
NO.	BY:	DATE:	NO.	BY:	DATE:	S-4
1			3			TOTAL SHEETS
2			4			13

ASSEMBLED BY :	A. SORSENGINH	DATE :	8/12/2011
CHECKED BY :	M.G. CHEEK	DATE :	10/11
DRAWN BY : CVC	6/10		
CHECKED BY : DNS	6/10		

28-NOV-2011 08:37
S:\PG11\sdquady\Low_Impact_Bridges\BD-5113A\BD-5113A_SD_LRFR.dgn
dahodge

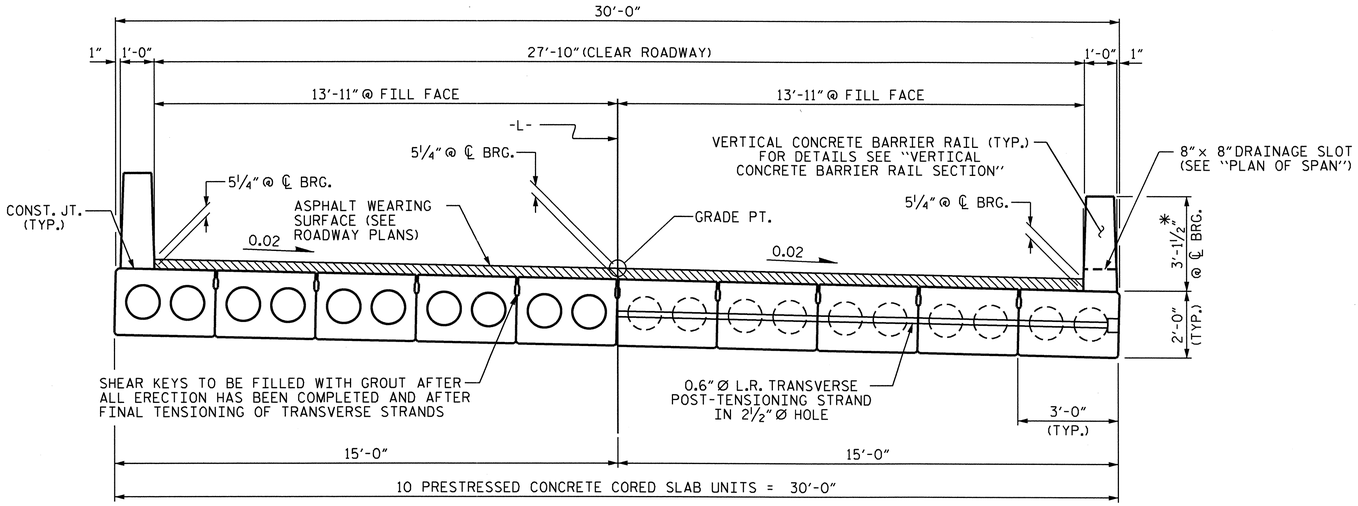

HALF SECTION
AT INTERMEDIATE DIAPHRAGMS

TYPICAL SECTION

HALF SECTION
THROUGH VOIDS

* - THE MAXIMUM BARRIER RAIL HEIGHT AND ASPHALT THICKNESS IS SHOWN. THE HEIGHT OF THE BARRIER RAIL AND ASPHALT THICKNESS VARIES WHILE THE TOP OF THE BARRIER RAIL FOLLOWS THE PROFILE OF THE GUTTERLINE. FOR RAIL HEIGHT DETAILS AND ASPHALT THICKNESS, SEE THE "VERTICAL CONCRETE BARRIER RAIL SECTION" DETAIL.

FIXED END

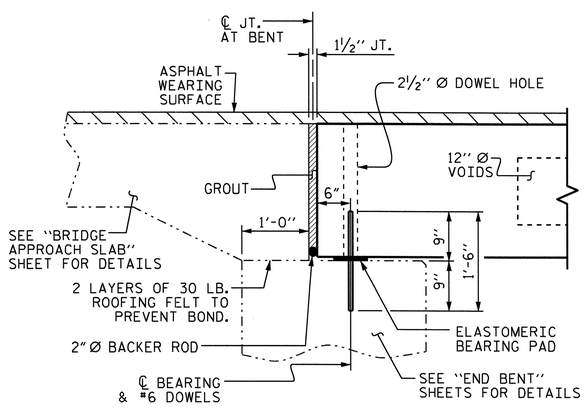

SECTION AT END BENT

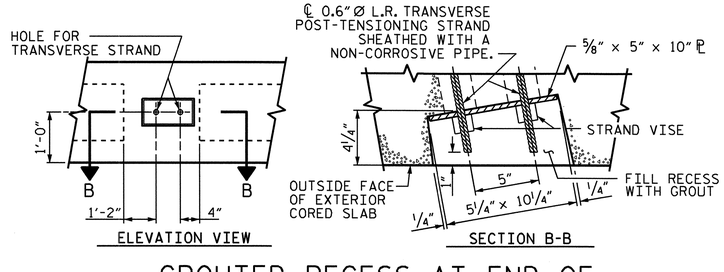

GROUTED RECESS AT END OF POST-TENSIONED STRAND OF CORED SLABS

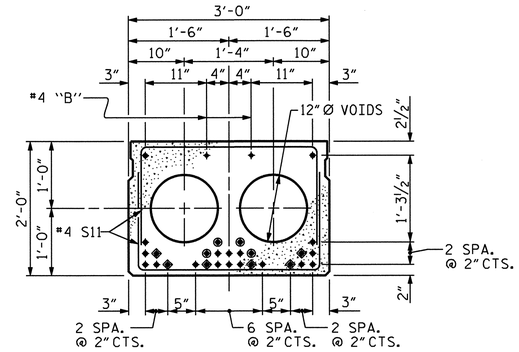

STRAND LAYOUT FOR 65' UNIT

(24 STRANDS REQUIRED)

INTERIOR SLAB SECTION

0.6" Ø LOW RELAXATION

◈ BOND SHALL BE BROKEN ON THESE STRANDS FOR A DISTANCE OF 12'-0" FROM END OF CORED SLAB UNIT. SEE STANDARD SPECIFICATIONS, ARTICLE 1078-7.

◉ OPTIONAL FULL LENGTH DEBONDED STRANDS. THESE STRANDS ARE NOT REQUIRED. IF THE FABRICATOR CHOOSES TO INCLUDE THESE STRANDS IN THE CORED SLAB UNIT, THE STRANDS SHALL BE DEBONDED FOR THE FULL LENGTH OF THE UNIT AT NO ADDITIONAL COST. SEE STANDARD SPECIFICATIONS, ARTICLE 1078-7.

DEBONDING LEGEND

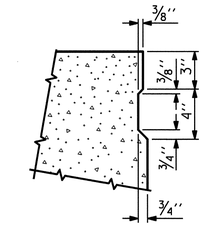

SHEAR KEY DETAIL

NOTE: OMIT SHEAR KEY ON OUTSIDE FACE OF EXTERIOR CORED SLABS.

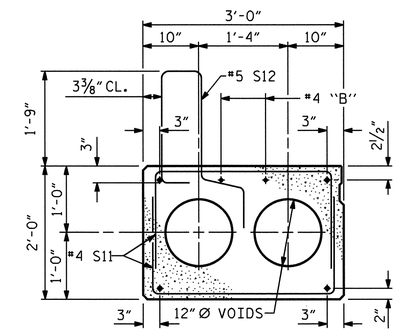

EXTERIOR SLAB SECTION

(FOR PRESTRESSED STRAND LAYOUT, SEE INTERIOR SLAB SECTION.)

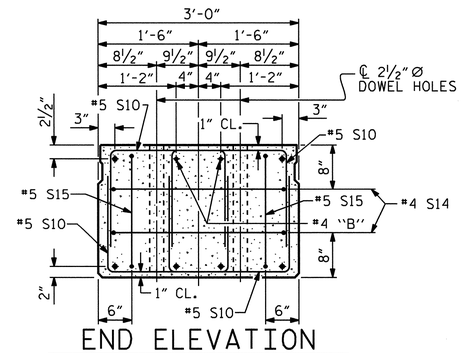

END ELEVATION

SHOWING PLACEMENT OF DOUBLE STIRRUPS AND LOCATION OF DOWEL HOLES. (STRAND LAYOUT NOT SHOWN.) INTERIOR SLAB UNIT SHOWN-EXTERIOR SLAB UNIT SIMILAR EXCEPT SHEAR KEY LOCATION.

PROJECT NO. BD-5113A
BUNCOMBE COUNTY
STATION: 13+31.34 -L-

SHEET 1 OF 3

STATE OF NORTH CAROLINA
DEPARTMENT OF TRANSPORTATION
RALEIGH

STANDARD

3'-0" X 2'-0"
PRESTRESSED CONCRETE
CORED SLAB UNIT

NORTH CAROLINA PROFESSIONAL SEAL 20125 ENGINEER MARSHALL I. GUTCHECK, JR.
11-28-11

ASSEMBLED BY : A. SORSENGINH	DATE : 8/11/2011
CHECKED BY : B. MATHEW	DATE : 9/2011
DRAWN BY : MAA 6/10	
CHECKED BY : MKT 7/10	

REVISIONS						SHEET NO.
NO.	BY:	DATE:	NO.	BY:	DATE:	S-5
1			3			TOTAL SHEETS
2			4			13

28-NOV-2011 08:38
S:\PG11\sdquady\Low_Impact_Bridges\BD-5113A\BD-5113A_SD_S*.dgn
dahodge

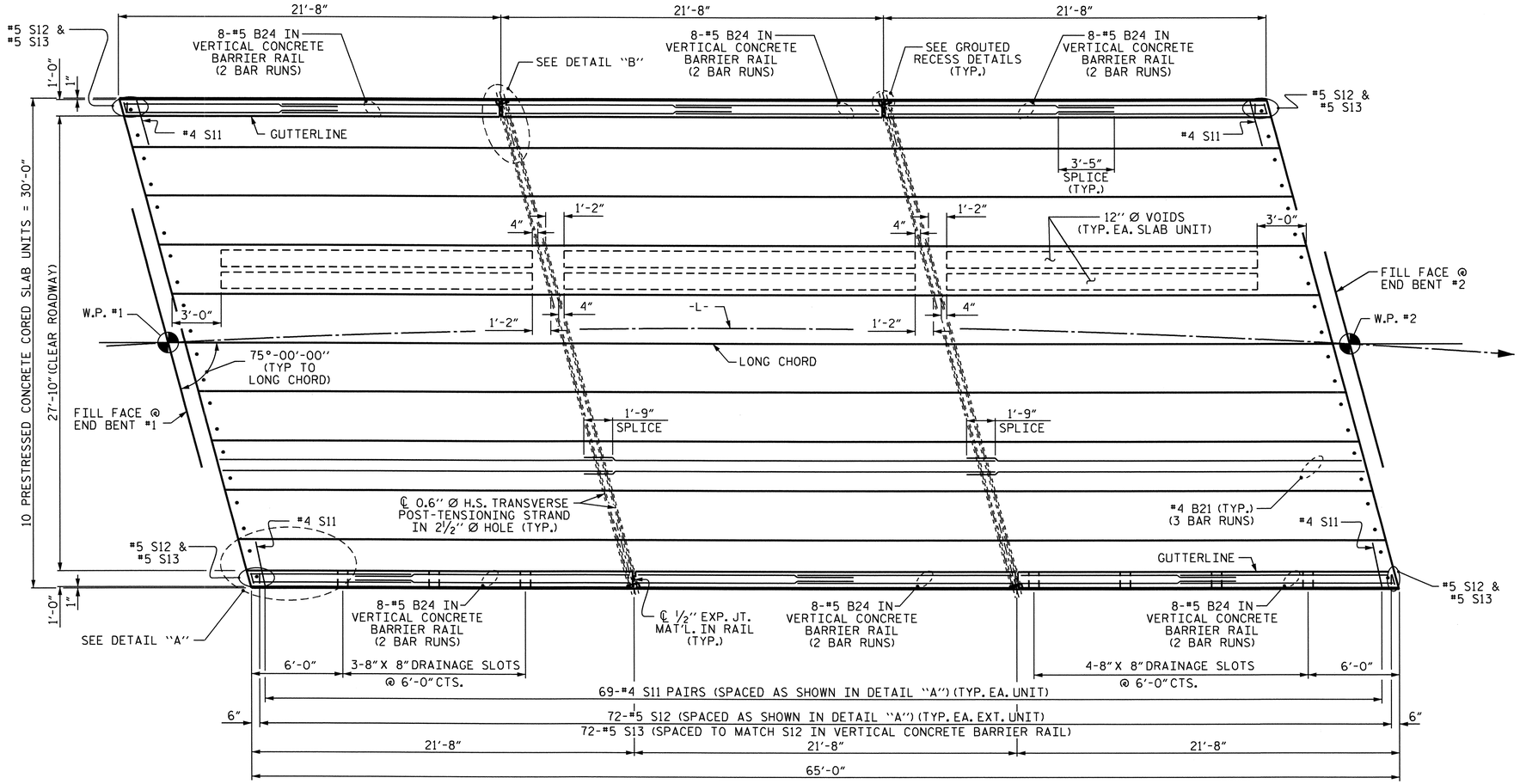

PLAN OF UNIT

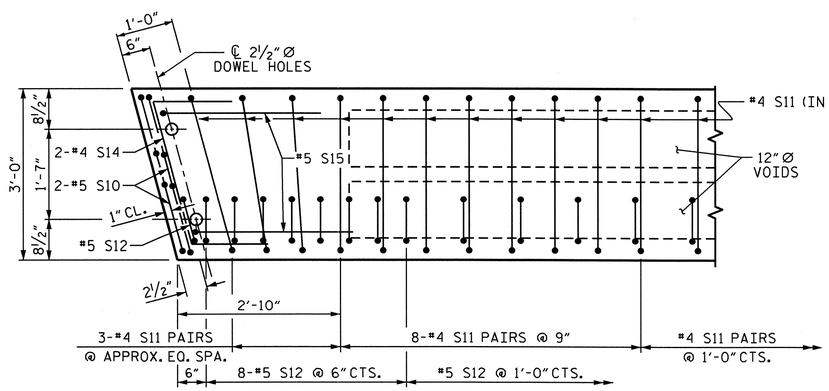

DETAIL "A"

NOTE: EXTERIOR UNIT SHOWN - INTERIOR UNIT SIMILAR EXCEPT OMIT #5 S12 BARS.

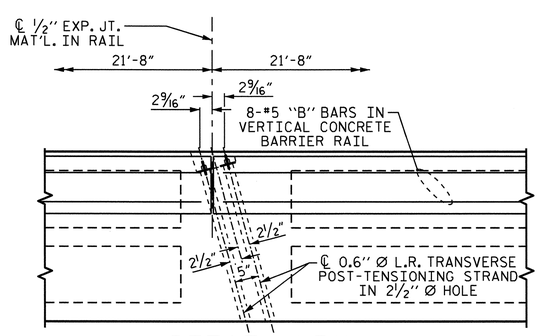

DETAIL "B"

#4 S11 BARS MAY BE SHIFTED AS NECESSARY TO MAINTAIN 1" CLEAR TO GROUTED RECESS AND 2½" Ø TRANSVERSE POST-TENSIONING STRAND HOLES

PROJECT NO. BD-5113A

BUNCOMBE COUNTY

STATION: 13+31.34 -L-

SHEET 2 OF 3

STATE OF NORTH CAROLINA
DEPARTMENT OF TRANSPORTATION
RALEIGH

PLAN OF 65' UNIT
27'-10" CLEAR ROADWAY
75° SKEW

NORTH CAROLINA PROFESSIONAL SEAL 20125 ENGINEER MARSHALL G. CHEEK, JR.
11-28-11

REVISIONS						SHEET NO.
NO.	BY:	DATE:	NO.	BY:	DATE:	S-6
1			3			TOTAL SHEETS
2			4			13

ASSEMBLED BY :	A. SORSENGINH	DATE :	8/11/2011
CHECKED BY :	B. MATHEW	DATE :	9/2011
DRAWN BY : MAA	6/10		
CHECKED BY : MKT	7/10		

28-NOV-2011 08:38
S:\PG11\sdquady\Low_Impact_Bridges\BD-5113A\BD-5113A_SD_S*.dgn
dahodge

GRADE 270 STRANDS	
	0.6" Ø L.R.
AREA (SQUARE INCHES)	0.217
ULTIMATE STRENGTH (LBS. PER STRAND)	58,600
APPLIED PRESTRESS (LBS. PER STRAND)	43,950

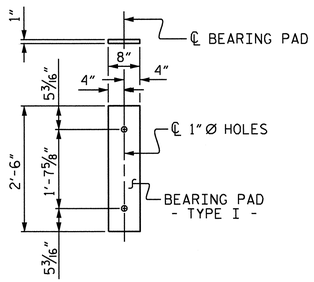

FIXED END
(TYPE I - 20 REQ'D)

ELASTOMERIC BEARING DETAILS

ELASTOMER IN ALL BEARINGS SHALL BE 60 DUROMETER HARDNESS.

BILL OF MATERIAL FOR ONE 65' CORED SLAB UNIT

				EXTERIOR UNIT		INTERIOR UNIT	
BAR	NUMBER	SIZE	TYPE	LENGTH	WEIGHT	LENGTH	WEIGHT
B21	6	#4	STR	22'-10"	92	22'-10"	92
S10	8	#5	3	4'-10"	40	4'-10"	40
S11	138	#4	3	5'-10"	538	5'-10"	538
✱S12	74	#5	1	6'-4"	489		
S14	4	#4	4	5'-8"	15	5'-8"	15
S15	4	#5	3	7'-1"	30	7'-1"	30
REINFORCING STEEL			LBS.		715		715
✱ EPOXY COATED REINFORCING STEEL			LBS.		489		
6000 P.S.I. CONCRETE			CU. YDS.		11.2		11.2
0.6" Ø L.R. STRANDS			No.		24		24

DEAD LOAD DEFLECTION AND CAMBER

	3'-0" x 2'-0"
65' CORED SLAB UNIT	0.6" Ø L.R. STRAND
CAMBER (SLAB ALONE IN PLACE)	3 3/8" ↑
DEFLECTION DUE TO SUPERIMPOSED DEAD LOAD✱✱	1/2" ↓
FINAL CAMBER	2 7/8" ↑

✱✱ INCLUDES FUTURE WEARING SURFACE

BAR TYPES

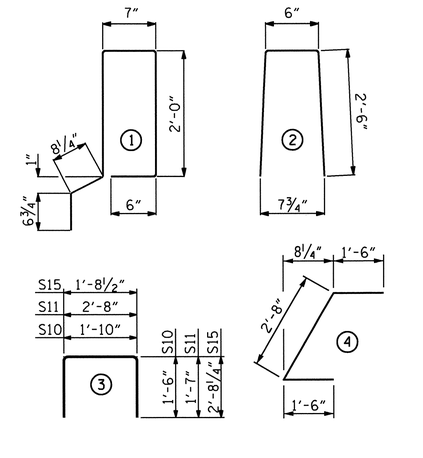

ALL BAR DIMENSIONS ARE OUT TO OUT

NOTES

ALL PRESTRESSING STRANDS SHALL BE 7-WIRE LOW RELAXATION GRADE 270 STRANDS AND SHALL CONFORM TO AASHTO M203 EXCEPT FOR SAMPLING REQUIREMENTS WHICH SHALL BE IN ACCORDANCE WITH THE STANDARD SPECIFICATIONS.

ALL REINFORCING STEEL CAST WITH THE CORED SLAB SECTIONS SHALL BE GRADE 60 AND SHALL BE INCLUDED IN THE UNIT PRICE BID FOR PRESTRESSED CONCRETE CORED SLABS.

RECESSES FOR TRANSVERSE STRANDS SHALL BE GROUTED AFTER THE TENSIONING OF THE STRANDS.

THE 2 1/2" Ø DOWEL HOLES AT FIXED ENDS OF SLAB SECTIONS SHALL BE FILLED WITH NON-SHRINK GROUT.

THE 2" Ø BACKER ROD SHALL CONFORM TO THE REQUIREMENTS OF TYPE M BOND BREAKER. SEE SECTION 1028 OF THE STANDARD SPECIFICATIONS.

WHEN CORED SLABS ARE CAST, AN INTERNAL HOLD-DOWN SYSTEM SHALL BE EMPLOYED TO PREVENT VOIDS FROM RISING OR MOVING SIDEWAYS. AT LEAST SIX WEEKS PRIOR TO CASTING CORED SLABS, THE CONTRACTOR SHALL SUBMIT TO THE ENGINEER FOR REVIEW AND COMMENT, DETAILED DRAWINGS OF THE PROPOSED HOLD-DOWN SYSTEM. IN ADDITION TO STRUCTURAL DETAILS, LOCATION AND SPACING OF THE HOLD-DOWNS SHALL BE INDICATED.

THE TRANSFER OF LOAD FROM THE ANCHORAGES TO THE CORED SLAB UNIT SHALL BE DONE WHEN THE CONCRETE HAS REACHED A COMPRESSIVE STRENGTH OF NOT LESS THAN THE REQUIRED STRENGTH SHOWN IN THE "CONCRETE RELEASE STRENGTH" TABLE.

ALL REINFORCING STEEL IN VERTICAL CONCRETE BARRIER RAILS SHALL BE EPOXY COATED.

PRESTRESSING STRANDS SHALL BE CUT FLUSH WITH THE CORED SLAB UNIT ENDS.

APPLY EPOXY PROTECTIVE COATING TO CORED SLAB UNIT ENDS.

GROOVED CONTRACTION JOINTS, 1/2" IN DEPTH, SHALL BE TOOLED IN ALL EXPOSED FACES OF THE BARRIER RAIL AND IN ACCORDANCE WITH ARTICLE 825-10(B) OF THE STANDARD SPECIFICATIONS. A CONTRACTION JOINT SHALL BE LOCATED AT EACH THIRD POINT BETWEEN BARRIER RAIL EXPANSION JOINTS. ONLY ONE CONTRACTION JOINT IS REQUIRED AT MIDPOINT OF BARRIER RAIL SEGMENTS LESS THAN 20 FEET IN LENGTH AND NO CONTRACTION JOINTS ARE REQUIRED FOR THOSE SEGMENTS LESS THAN 10 FEET IN LENGTH.

TRANSVERSE POST TENSIONING OF THE CORED SLAB UNITS SHALL BE DONE IN ACCORDANCE WITH THE STANDARD SPECIFICATIONS, EXCEPT THAT THE STRANDS SHALL BE 0.6" Ø AND TENSIONED TO 43,950 POUNDS.

MAINTAIN A SYMMETRIC TENSION FORCE BETWEEN EACH PAIR OF TRANSVERSE POST TENSIONING STRANDS IN THE DIAPHRAGM.

THE #4 S11 STIRRUPS MAY BE SHIFTED AS NECESSARY TO MAINTAIN 1" CLEAR TO THE GROUTED RECESS.

BILL OF MATERIAL FOR VERTICAL CONCRETE BARRIER RAIL

BAR	BARS PER PAIR OF EXTERIOR UNITS	TOTAL NO.	SIZE	TYPE	LENGTH	WEIGHT
	65' UNIT					
✱B24	96	96	#5	STR	12'-10"	1285
✱S13	148	148	#5	2	5'-6"	849
✱ EPOXY COATED REINFORCING STEEL				LBS.		2134
CLASS AA CONCRETE				CU.YDS.		13.7
TOTAL VERTICAL CONCRETE BARRIER RAIL				LN. FT.		130.26

GUTTERLINE ASPHALT THICKNESS & RAIL HEIGHT

	ASPHALT OVERLAY THICKNESS @ MID-SPAN	RAIL HEIGHT @ MID-SPAN
60' UNITS	2 3/8"	2'-10 5/8"
65' UNITS	2 3/8"	2'-10 5/8"
70' UNITS	1 3/4"	2'-10"

CONCRETE RELEASE STRENGTH

UNIT	PSI
65' UNITS	4800

CORED SLABS REQUIRED

	NUMBER	LENGTH	TOTAL LENGTH
65' UNIT			
EXTERIOR C.S.	2	65'-0"	130'-0"
INTERIOR C.S.	8	65'-0"	520'-0"
TOTAL	10		650'-0"

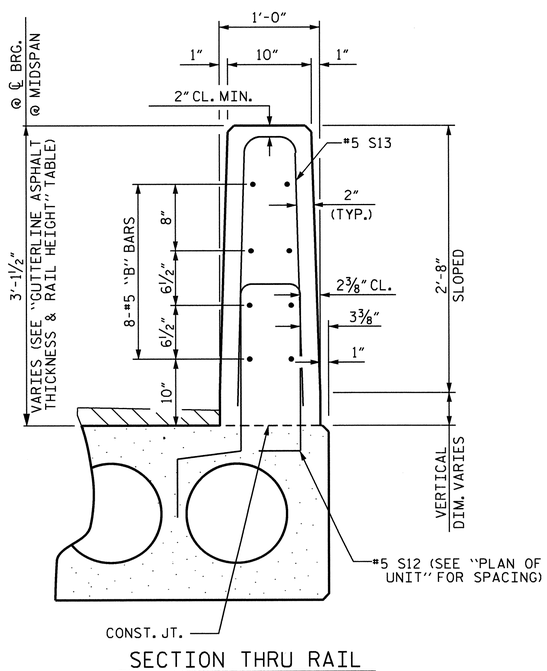

SECTION THRU RAIL

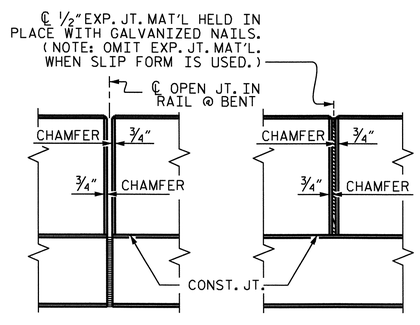

ELEVATION AT EXPANSION JOINTS

VERTICAL CONCRETE BARRIER RAIL DETAILS

PROJECT NO. BD-5113A
BUNCOMBE COUNTY
STATION: 13+31.34 -L-

SHEET 3 OF 3

STATE OF NORTH CAROLINA
DEPARTMENT OF TRANSPORTATION
RALEIGH

STANDARD
3'-0" X 2-0"
PRESTRESSED CONCRETE
CORED SLAB UNIT

NORTH CAROLINA PROFESSIONAL SEAL 20125 ENGINEER MARSHALL L. GOLECKI, JR.
11-28-11

ASSEMBLED BY :	A. SORSENGINH	DATE :	8/2011
CHECKED BY :	B. MATHEW	DATE :	9/2011
DRAWN BY :	MAA	6/10	
CHECKED BY :	MKT	7/10	

REVISIONS						SHEET NO.
NO.	BY:	DATE:	NO.	BY:	DATE:	S-7
1			3			TOTAL SHEETS
2			4			13

28-NOV-2011 08:39
S:\PGII\sdquady\Low_Impact_Bridges\BD-5113A\BD-5113A_SD_S*.dgn
dahodge

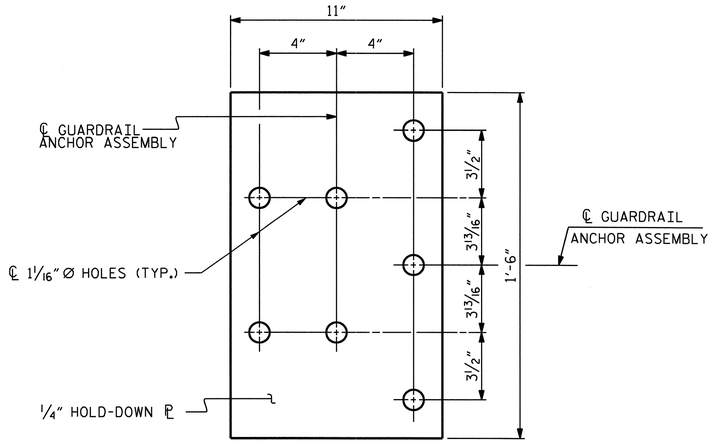

PLAN

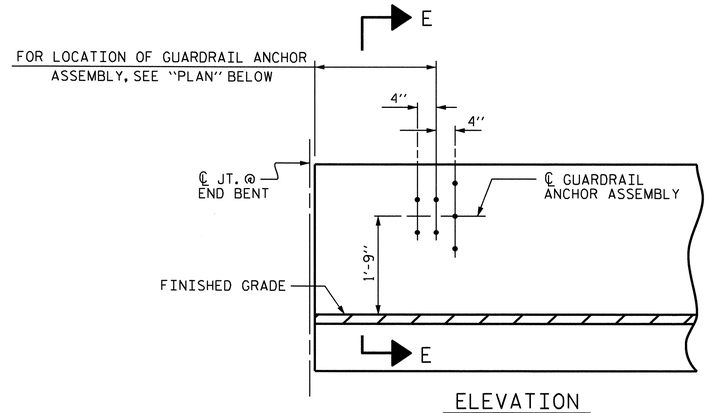

ELEVATION

NOTES

THE GUARDRAIL ANCHOR ASSEMBLY SHALL CONSIST OF A 1/4" HOLD DOWN PLATE AND 7 - 7/8" Ø BOLTS WITH NUTS AND WASHERS.

THE HOLD-DOWN PLATE SHALL CONFORM TO AASHTO M270 GRADE 36. AFTER FABRICATION, THE HOLD-DOWN PLATE SHALL BE HOT-DIP GALVANIZED IN ACCORDANCE WITH AASHTO M111.

BOLTS SHALL CONFORM TO THE REQUIREMENTS OF ASTM A307 AND NUTS SHALL CONFORM TO THE REQUIREMENTS OF AASHTO M291. BOLTS, NUTS AND WASHERS SHALL BE GALVANIZED. (AT THE CONTRACTOR'S OPTION, STAINLESS STEEL BOLTS, NUTS AND WASHERS MAY BE USED AS AN ALTERNATE FOR THE 7/8" Ø GALVANIZED BOLTS, NUTS AND WASHERS. THEY SHALL CONFORM TO OR EXCEED THE MECHANICAL REQUIREMENTS OF ASTM A307. THE USE OF THIS ALTERNATE SHALL BE APPROVED BY THE ENGINEER.)

THE GUARDRAIL ANCHOR ASSEMBLY IS REQUIRED AT ALL POINTS WHERE APPROACH GUARDRAIL IS TO BE ATTACHED TO THE END OF BARRIER RAIL. FOR POINTS OF ATTACHMENT, SEE SKETCH.

AFTER INSTALLATION, THE EXPOSED THREAD OF THE BOLT SHALL BE BURRED WITH A SHARP POINTED TOOL.

THE COST OF THE GUARDRAIL ANCHOR ASSEMBLY SHALL BE INCLUDED IN THE UNIT CONTRACT PRICE BID FOR VERTICAL CONCRETE BARRIER RAIL.

THE VERTICAL REINFORCING BARS MAY BE SHIFTED SLIGHTLY IN THE VERTICAL CONCRETE BARRIER RAIL TO CLEAR ASSEMBLY BOLTS.

THE 1 1/4" Ø HOLES SHALL BE FORMED OR DRILLED WITH A CORE BIT. IMPACT TOOLS WILL NOT BE PERMITTED. ANY CONCRETE DAMAGED BY THIS WORK SHALL BE REPAIRED TO THE SATISFACTION OF THE ENGINEER.

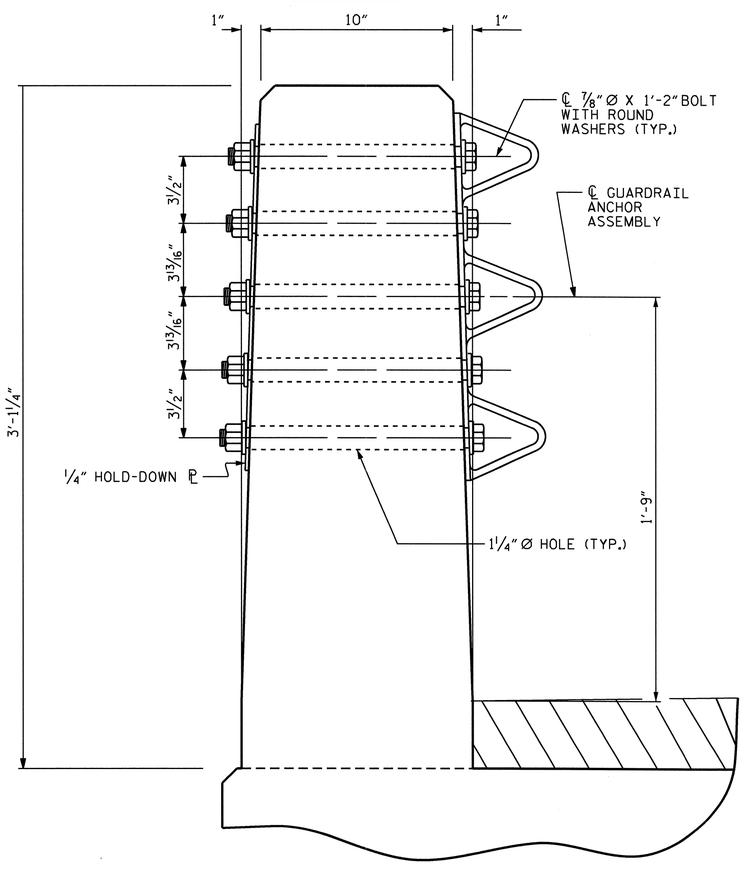

SECTION E-E

GUARDRAIL ANCHOR ASSEMBLY DETAILS

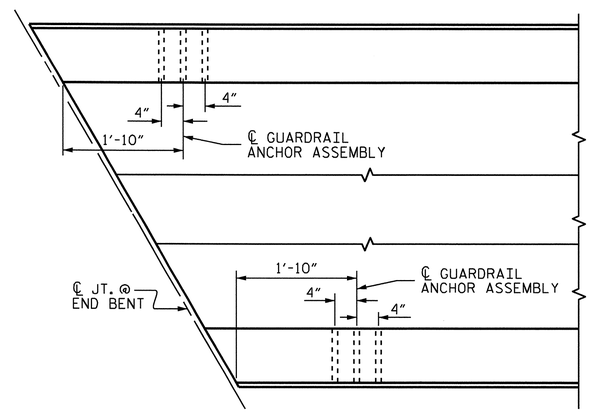

PLAN

LOCATION OF ANCHORS FOR GUARDRAIL

END BENT #1 SHOWN, END BENT #2 SIMILAR.

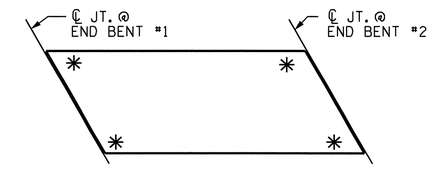

SKETCH SHOWING POINTS OF ATTACHMENT

✳ DENOTES GUARDRAIL ANCHOR ASSEMBLY

PROJECT NO. BD-5113A
BUNCOMBE COUNTY
STATION: 13+31.34 -L-

STATE OF NORTH CAROLINA
DEPARTMENT OF TRANSPORTATION
RALEIGH

STANDARD
GUARDRAIL ANCHORAGE FOR VERTICAL CONCRETE BARRIER RAIL

NORTH CAROLINA PROFESSIONAL SEAL 20125 ENGINEER MARSHALL G. CHEEK, JR.
11-28-11

REVISIONS						SHEET NO.
NO.	BY:	DATE:	NO.	BY:	DATE:	S-8
1			3			TOTAL SHEETS
2			4			13

ASSEMBLED BY : A. SORSENGINH		DATE : 8/2011	
CHECKED BY : B. MATHEW		DATE : 9/2011	
DRAWN BY : MAA 5/10	ADDED 5/6/10		
CHECKED BY : GM 5/10			

28-NOV-2011 08:39
S:\PG11\sdquady\Low_Impact_Bridges\BD-5113A\BD-5113A_SD_GR.dgn
dahodge

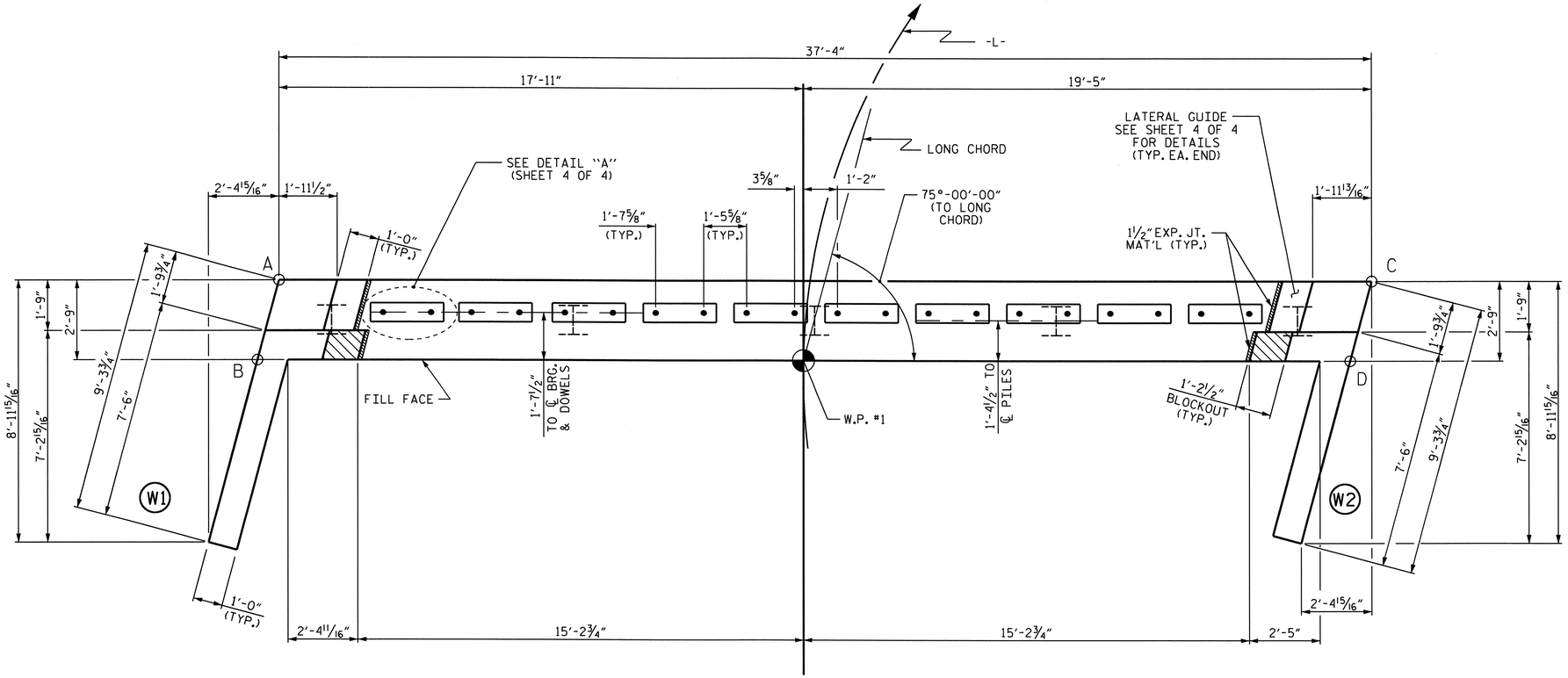

PLAN

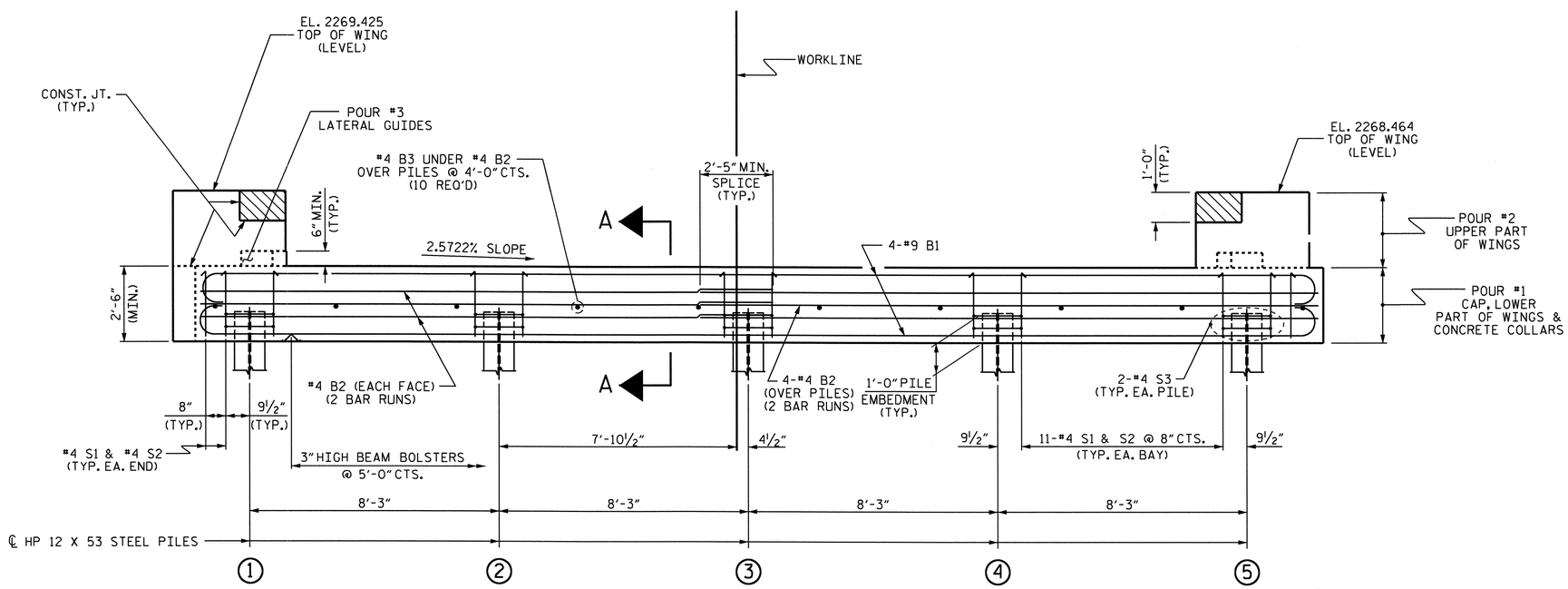

ELEVATION

WINGS NOT SHOWN FOR CLARITY.
FOR SECTION A-A, SEE SHEET 4 OF 4.
CONCRETE COLLARS FOR STEEL PILES NOT SHOWN IN PLAN AND ELEVATION VIEWS FOR CLARITY.
SEE "CORROSION PROTECTION FOR STEEL PILES DETAIL", SHEET 4 OF 4.

NOTES

STIRRUPS IN CAP MAY BE SHIFTED AS NECESSARY TO CLEAR DOWELS.

THE LATERAL GUIDES ARE NOT TO BE POURED UNTIL AFTER THE CORED SLAB UNITS ARE IN PLACE.

THE CONCRETE IN THE SHADED AREA OF THE WING SHALL BE POURED AFTER THE VERTICAL CONCRETE BARRIER RAIL IS CAST IF SLIP FORMING IS USED.

FOR PILE SPLICE DETAILS, SEE SHEET 4 OF 4.

FOR WING DETAILS, SEE SHEET 3 OF 4.

THE CONTRACTOR HAS THE OPTION TO OMIT THE LATERAL GUIDE IF APPROVED BY THE ENGINEER.

ELEVATIONS OF NOTED POINTS		
	TOP OF CAP	BOTTOM OF CAP
POINT A	2266.656	2264.157
POINT B	2266.675	2264.175
POINT C	2265.695	2263.195
POINT D	2265.714	2263.214

TOP OF PILE ELEVATIONS	
1	2265.122
2	2264.910
3	2264.698
4	2264.486
5	2264.273

PROJECT NO. BD-5113A
BUNCOMBE COUNTY
STATION: 13+31.34 -L-

SHEET 1 OF 4

STATE OF NORTH CAROLINA
DEPARTMENT OF TRANSPORTATION
RALEIGH

SUBSTRUCTURE

END BENT No. 1

NORTH CAROLINA PROFESSIONAL SEAL 20125 ENGINEER MARSHALL L. GREEK, JR.
11-28-11

REVISIONS						SHEET NO.
NO.	BY:	DATE:	NO.	BY:	DATE:	S-9
1			3			TOTAL SHEETS
2			4			13

ASSEMBLED BY :	A. SORSENGINH	DATE :	8/2011
CHECKED BY :	B. MATHEW	DATE :	8/2011
DRAWN BY : DGE	03/10		
CHECKED BY : MKT	03/10		

28-NOV-2011 08:40
S:\PG11\sdquady\Low_Impact_Bridges\BD-5113A\BD-5113A_SD_E*.dgn
dahodge

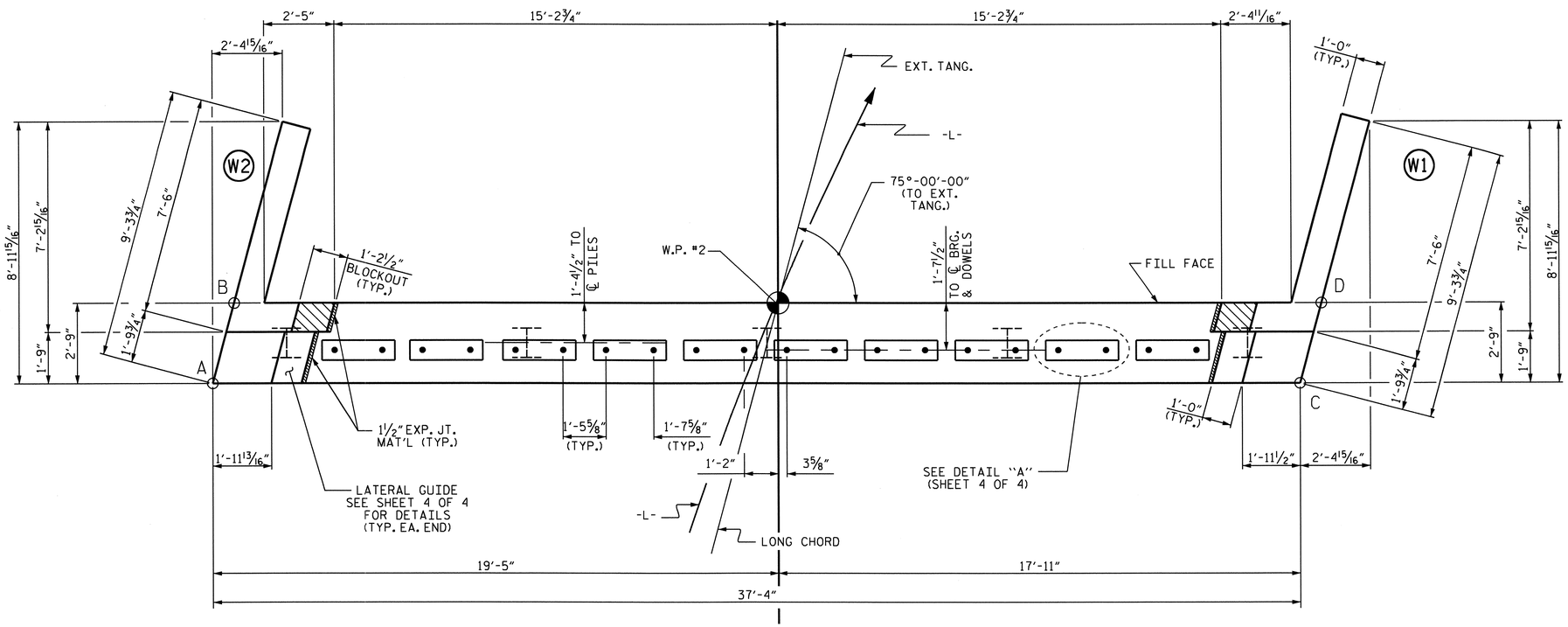

PLAN

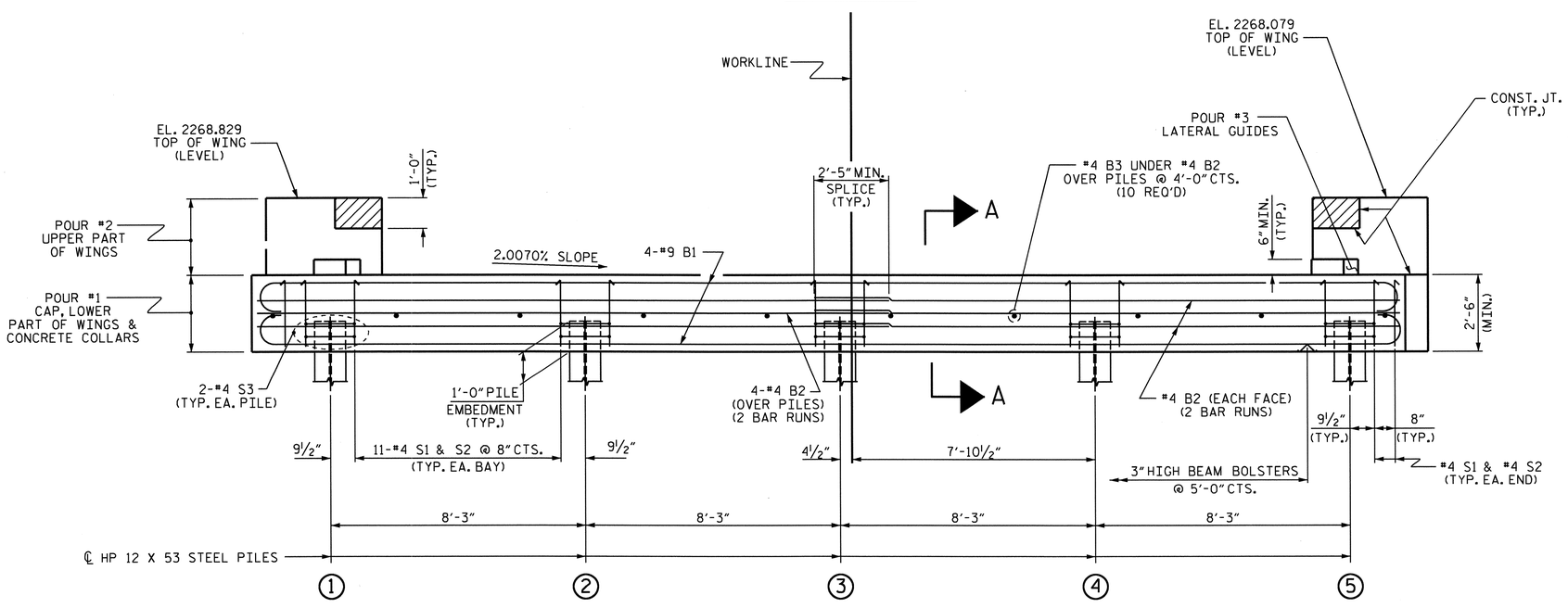

ELEVATION

WINGS NOT SHOWN FOR CLARITY.
FOR SECTION A-A, SEE SHEET 4 OF 4.
CONCRETE COLLARS FOR STEEL PILES NOT SHOWN IN PLAN AND ELEVATION VIEWS FOR CLARITY.
SEE "CORROSION PROTECTION FOR STEEL PILES DETAIL", SHEET 4 OF 4.

NOTES

STIRRUPS IN CAP MAY BE SHIFTED AS NECESSARY TO CLEAR DOWELS.

THE LATERAL GUIDES ARE NOT TO BE POURED UNTIL AFTER THE CORED SLAB UNITS ARE IN PLACE.

THE CONCRETE IN THE SHADED AREA OF THE WING SHALL BE POURED AFTER THE VERTICAL CONCRETE BARRIER RAIL IS CAST IF SLIP FORMING IS USED.

FOR PILE SPLICE DETAILS, SEE SHEET 4 OF 4.

FOR WING DETAILS, SEE SHEET 3 OF 4.

THE CONTRACTOR HAS THE OPTION TO OMIT THE LATERAL GUIDE IF APPROVED BY THE ENGINEER.

ELEVATIONS OF NOTED POINTS		
	TOP OF CAP	BOTTOM OF CAP
POINT A	2266.094	2263.594
POINT B	2266.079	2263.579
POINT C	2265.344	2262.844
POINT D	2265.329	2262.829

TOP OF PILE ELEVATIONS	
1	2264.533
2	2264.387
3	2264.221
4	2264.056
5	2263.890

PROJECT NO. BD-5113A
BUNCOMBE COUNTY
STATION: 13+31.34 -L-

SHEET 2 OF 4

STATE OF NORTH CAROLINA
DEPARTMENT OF TRANSPORTATION
RALEIGH

SUBSTRUCTURE
END BENT No. 2

NORTH CAROLINA PROFESSIONAL SEAL 20125 ENGINEER MARSHALL C. CHEEK, JR.
11-28-11

REVISIONS						SHEET NO.
NO.	BY:	DATE:	NO.	BY:	DATE:	S-10
1			3			TOTAL SHEETS
2			4			13

ASSEMBLED BY :	A. SORSENGINH	DATE :	8/2011
CHECKED BY :	B. MATHEW	DATE :	8/2011
DRAWN BY : DGE	03/10		
CHECKED BY : MKT	03/10		

28-NOV-2011 08:41
S:\PG11\sdquady\Low_Impact_Bridges\BD-5113A\BD-5113A_SD_E*.dgn
dahodge

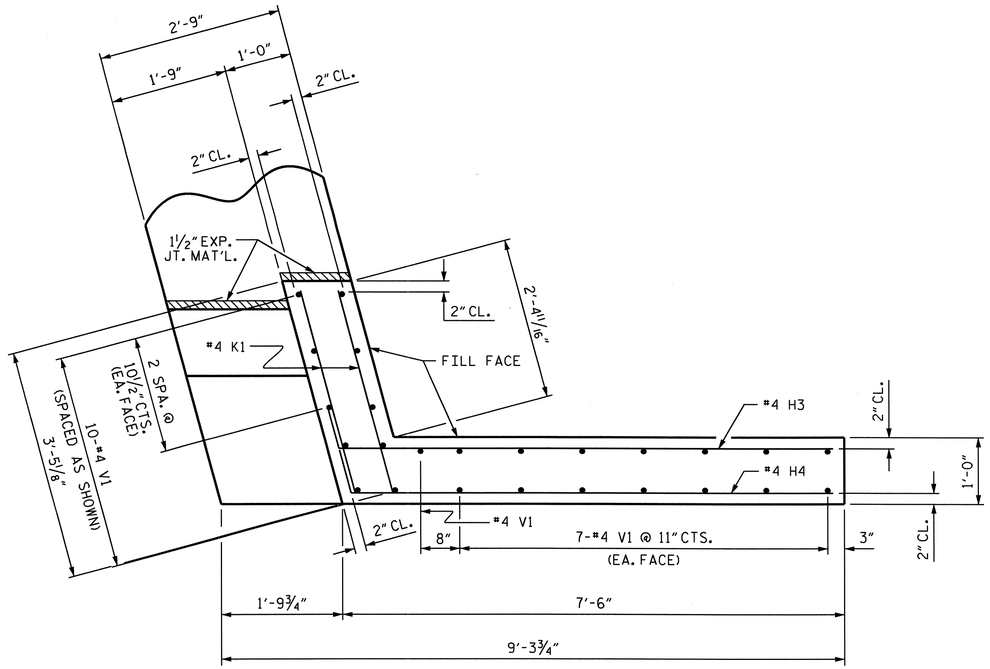

PLAN OF WING (W1)

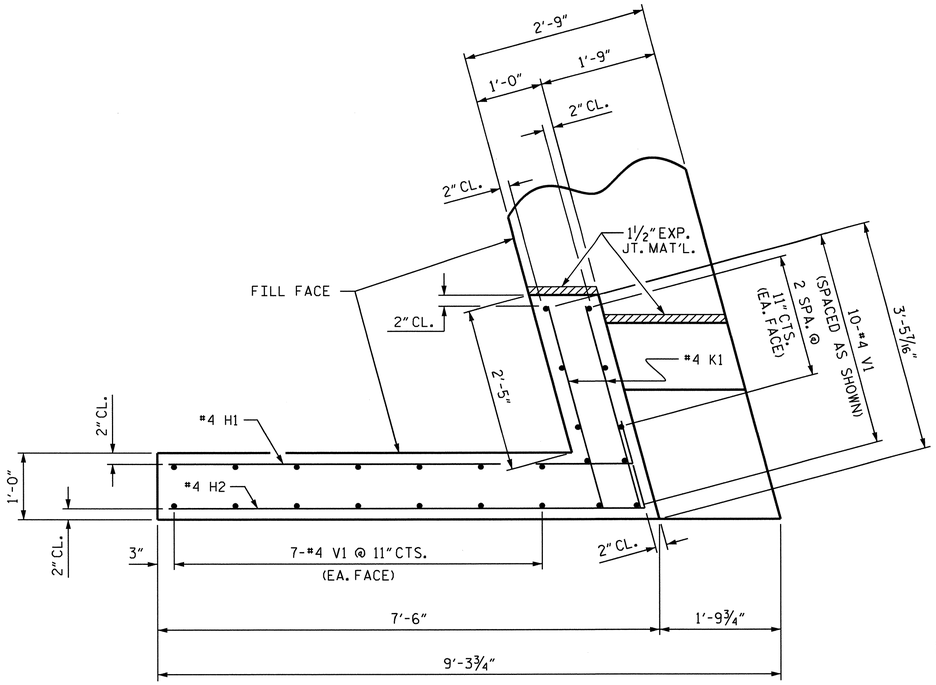

PLAN OF WING (W2)

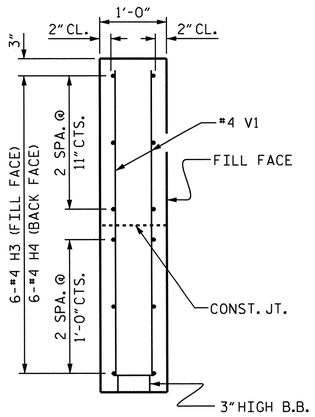

SECTION X-X

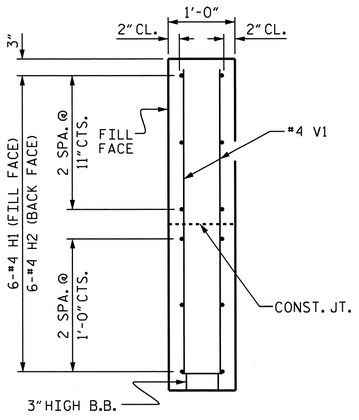

SECTION Y-Y

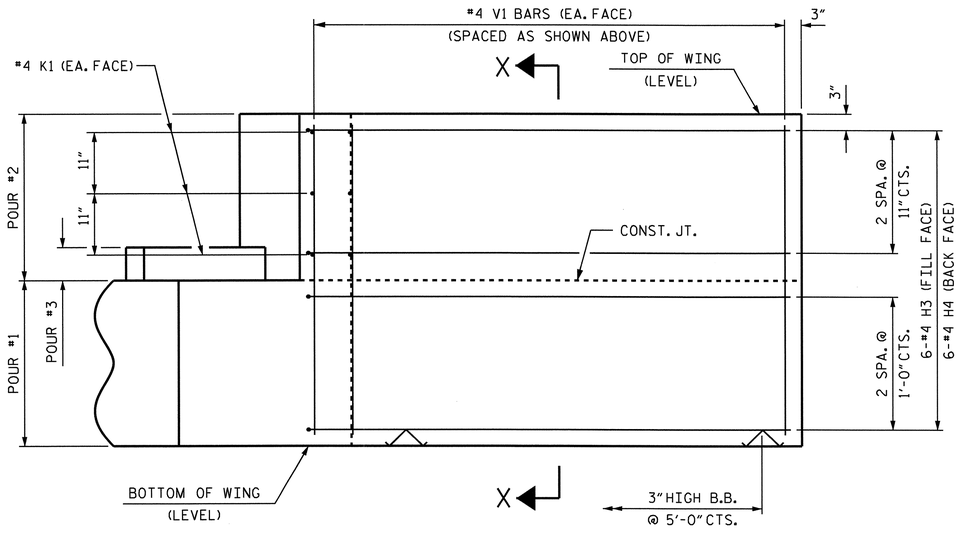

ELEVATION OF WING (W1)

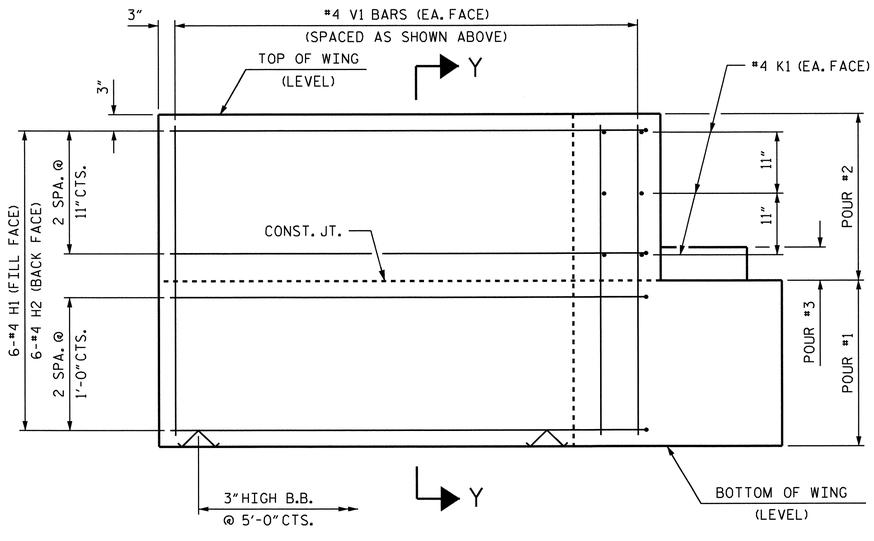

ELEVATION OF WING (W2)

WING DETAILS

PROJECT NO. BD-5113A
BUNCOMBE COUNTY
STATION: 13+31.34 -L-

SHEET 3 OF 4

STATE OF NORTH CAROLINA
DEPARTMENT OF TRANSPORTATION
RALEIGH

SUBSTRUCTURE
END BENT
WING DETAILS

NORTH CAROLINA PROFESSIONAL SEAL 20125 ENGINEER MARSHALL G. CREED, JR.
11-28-11

ASSEMBLED BY : A. SORSENGINH	DATE : 8/2011
CHECKED BY : B. MATHEW	DATE : 9/2011
DRAWN BY : DGE 03/10	
CHECKED BY : MKT 03/10	

REVISIONS						SHEET NO.
NO.	BY:	DATE:	NO.	BY:	DATE:	S-11
1			3			TOTAL SHEETS
2			4			13

28-NOV-2011 08:41
S:\PG11\sdquady\Low_Impact_Bridges\BD-5113A\BD-5113A_SD_E*.dgn
dahodge

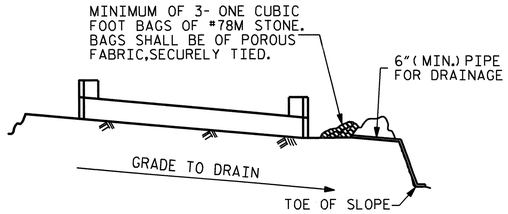

BAGGED STONE AND PIPE SHALL BE PLACED IMMEDIATELY AFTER COMPLETION OF END BENT EXCAVATION. PIPE MAY BE EITHER CONCRETE, CORRUGATED STEEL, CORRUGATED ALUMINUM ALLOY, OR CORRUGATED PLASTIC. PERFORATED PIPE WILL NOT BE ALLOWED.

BAGGED STONE SHALL REMAIN IN PLACE UNTIL THE ENGINEER DIRECTS THAT IT BE REMOVED. THE CONTRACTOR SHALL REMOVE AND DISPOSE OF SILT ACCUMULATIONS AT BAGGED STONE WHEN SO DIRECTED BY THE ENGINEER. BAGS SHALL BE REMOVED AND REPLACED WHENEVER THE ENGINEER DETERMINES THAT THEY HAVE DETERIORATED AND LOST THEIR EFFECTIVENESS.

NO SEPARATE PAYMENT WILL BE MADE FOR THIS WORK AND THE ENTIRE COST OF THIS WORK SHALL BE INCLUDED IN THE UNIT CONTRACT PRICE BID FOR THE SEVERAL PAY ITEMS.

TEMPORARY DRAINAGE AT END BENT

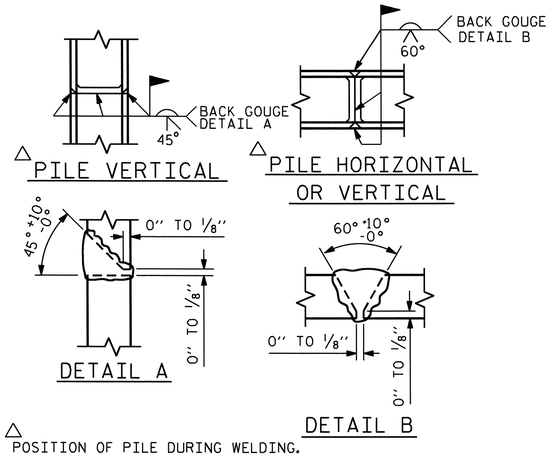

△ POSITION OF PILE DURING WELDING.

PILE SPLICE DETAILS

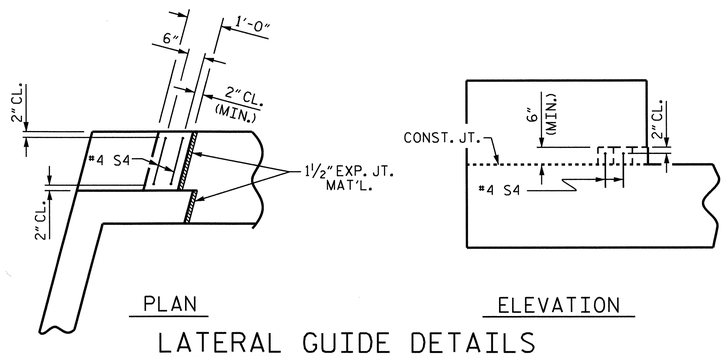

LATERAL GUIDE DETAILS

(END BENT No. 1, LEFT LATERAL GUIDE SHOWN, RIGHT END SIMILAR)
(END BENT No. 2 SIMILAR BY ROTATION)

BAR TYPES

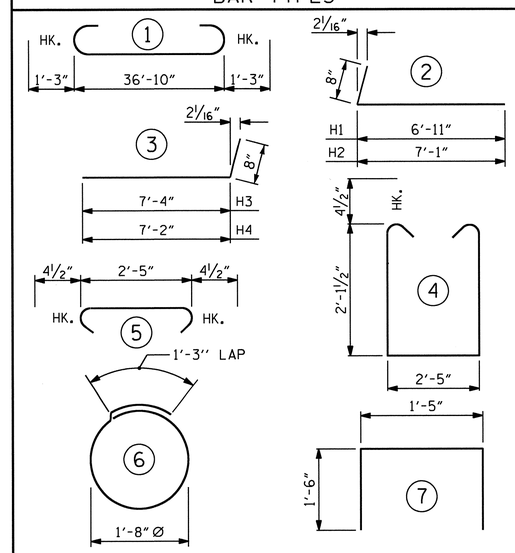

ALL BAR DIMENSIONS ARE OUT TO OUT.

END BENT No. 1	END BENT No. 2
HP 12 X 53 STEEL PILES	HP 12 X 53 STEEL PILES
NO: 5 LIN. FT.= 285	NO: 5 LIN. FT.= 315

BILL OF MATERIAL FOR ONE END BENT

BAR	NO.	SIZE	TYPE	LENGTH	WEIGHT
B1	8	#9	1	39'-4"	1070
B2	16	#4	STR	19'-9"	211
B3	10	#4	STR	2'-5"	16
D1	20	#6	STR	1'-6"	45
H1	6	#4	2	7'-7"	30
H2	6	#4	2	7'-9"	31
H3	6	#4	3	8'-0"	32
H4	6	#4	3	7'-10"	31
K1	12	#4	STR	3'-1"	25
S1	48	#4	4	7'-5"	238
S2	48	#4	5	3'-2"	102
S3	10	#4	6	6'-6"	43
S4	4	#4	7	4'-5"	12
V1	49	#4	STR	4'-8"	153

REINFORCING STEEL (FOR ONE END BENT) 2039 LBS.

CLASS A CONCRETE BREAKDOWN (FOR ONE END BENT)

POUR #1	CAP, LOWER PART OF WINGS & COLLARS	11.6 C.Y.
POUR #2	UPPER PART OF WINGS	2.0 C.Y.
POUR #3	LATERAL GUIDES	0.1 C.Y.
TOTAL CLASS A CONCRETE		13.7 C.Y.

DETAIL "A"

(END BENT No. 1 SHOWN, END BENT No. 2 SIMILAR BY ROTATION)

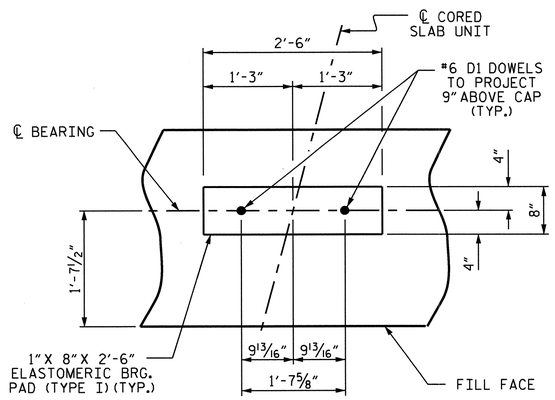

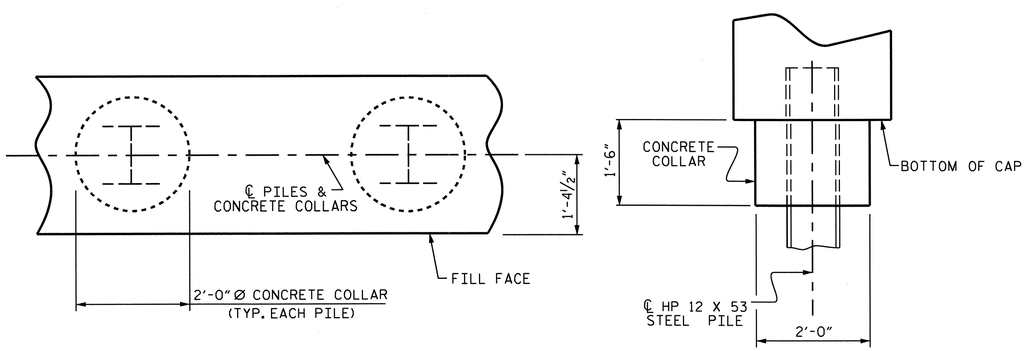

CORROSION PROTECTION FOR STEEL PILES DETAIL

(END BENT No. 1 SHOWN, END BENT No. 2 SIMILAR BY ROTATION)

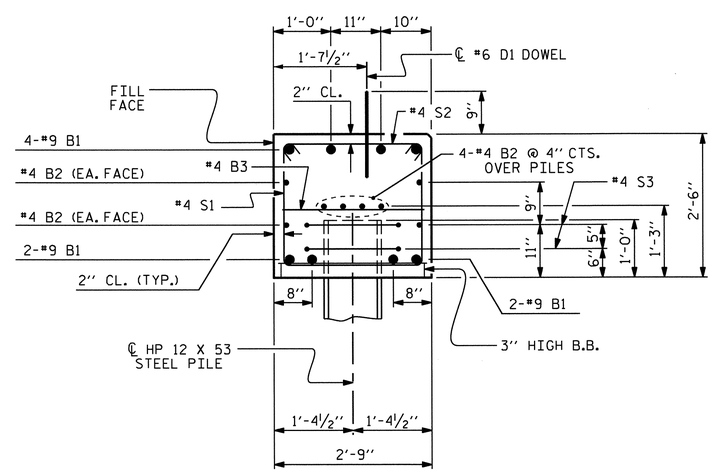

SECTION A-A

(CONCRETE COLLAR NOT SHOWN FOR CLARITY.
SEE "CORROSION PROTECTION FOR STEEL PILES DETAIL.")

PROJECT NO. BD-5113A
BUNCOMBE COUNTY
STATION: 13+31.34 -L-

SHEET 4 OF 4

STATE OF NORTH CAROLINA
DEPARTMENT OF TRANSPORTATION
RALEIGH

SUBSTRUCTURE

END BENT No. 1 & 2 DETAILS

NORTH CAROLINA PROFESSIONAL SEAL 20125 ENGINEER MARSHALL L. GUICHET, JR.
11-28-11

REVISIONS						SHEET NO.
NO.	BY:	DATE:	NO.	BY:	DATE:	S-12
1			3			TOTAL SHEETS
2			4			13

ASSEMBLED BY :	A. SORSENGINH	DATE :	8/2011
CHECKED BY :	B. MATHEW	DATE :	9/2011
DRAWN BY :	DGE	03/10	
CHECKED BY :	MKT	03/10	

28-NOV-2011 08:41
S:\PGII\sdquady\Low_Impact_Bridges\BD-5113A\BD-5113A_SD_E*.dgn
dahodge

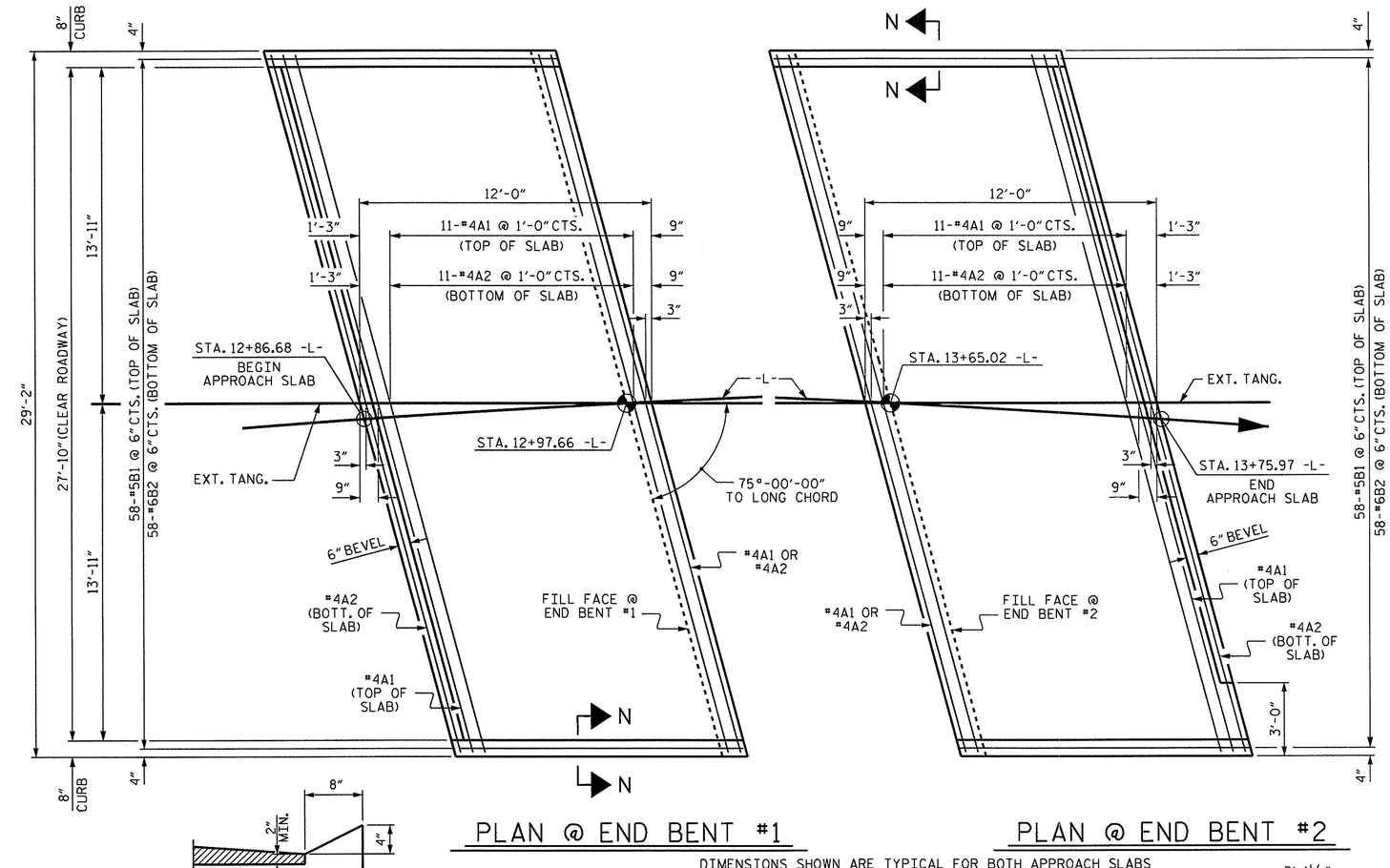

PLAN @ END BENT #1

PLAN @ END BENT #2

DIMENSIONS SHOWN ARE TYPICAL FOR BOTH APPROACH SLABS

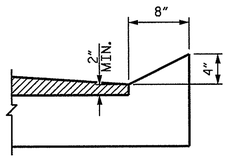

SECTION N-N

SPLICE LENGTHS		
BAR SIZE	EPOXY COATED	UNCOATED
#4	2'-0"	1'-9"
#5	2'-6"	2'-2"
#6	3'-10"	2'-7"

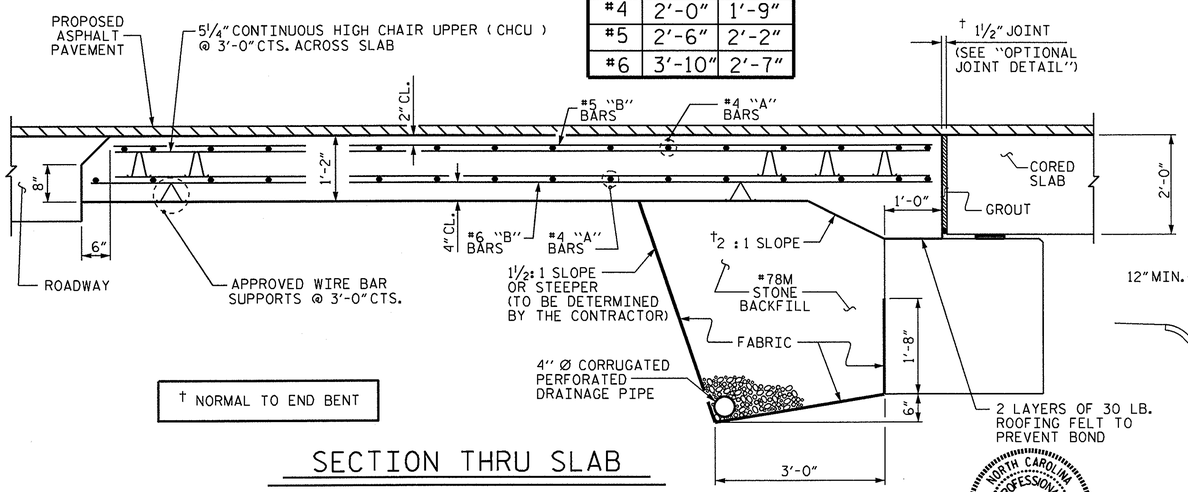

† NORMAL TO END BENT

SECTION THRU SLAB

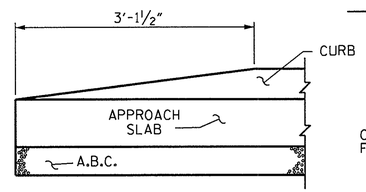

END OF CURB WITHOUT SHOULDER BERM GUTTER

CURB DETAILS

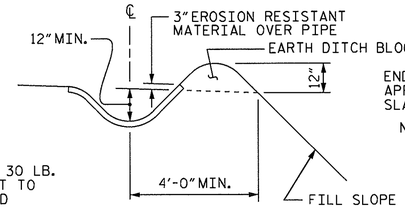

SECTION S-S

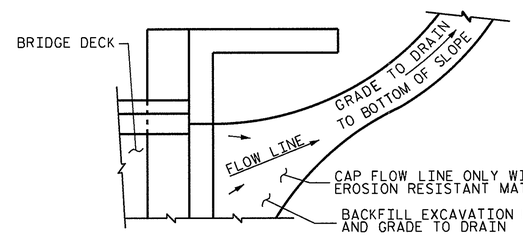

NOTE: IF THE APPROACH SLAB IS NOT CONSTRUCTED IMMEDIATELY AFTER THE BACKFILLING OF THE END BENT EXCAVATION, GRADE TO DRAIN TO THE BOTTOM OF THE SLOPE AND PROVIDE EROSION RESISTANT MATERIAL, SUCH AS FIBERGLASS ROVING OR AS DIRECTED BY THE ENGINEER TO PREVENT SOIL EROSION AND TO PROTECT THE AREA ADJACENT TO THE STRUCTURE. THE CONTRACTOR WILL BE REQUIRED TO REMOVE THESE MATERIALS PRIOR TO CONSTRUCTION OF THE APPROACH SLAB.

TEMPORARY DRAINAGE DETAIL

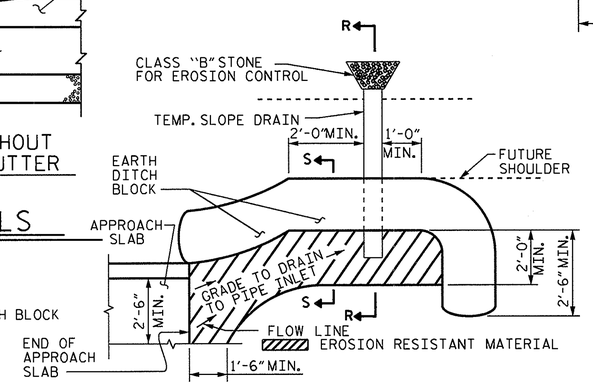

NOTE: IMMEDIATELY AFTER THE CONSTRUCTION OF THE APPROACH SLAB, THE CONTRACTOR SHALL PROVIDE TEMPORARY BERM AND SLOPE DRAIN. CONTRACTOR SHALL GRADE TO PIPE INLET AND PROVIDE EROSION RESISTANT MATERIAL AS SHOWN. THE EROSION RESISTANT MATERIAL SHALL BE EITHER 1) ASPHALT PLANT MIX, TYPE 1 OR TYPE 2, MIN. 2" DEPTH, 2) EROSION CONTROL MAT, OR 3) CONCRETE, AS DIRECTED BY THE ENGINEER. THE SLOPE DRAIN SHALL CONSIST OF A NON-PERFORATED TEMPORARY DRAINAGE PIPE, 12 INCHES IN DIAMETER.

PLAN VIEW

TEMPORARY BERM AND SLOPE DRAIN DETAILS

(TO BE USED WHEN SHOULDER BERM GUTTER IS REQUIRED)

NOTES

FOR BRIDGE APPROACH FILL INCLUDING FABRIC, 4" Ø DRAINAGE PIPE, AND #78M STONE BACKFILL, SEE ROADWAY PLANS.

FABRIC SHALL BE TYPE 1 ENGINEERING FABRIC IN ACCORDANCE WITH THE STANDARD SPECIFICATIONS SECTION 1056.

#78M STONE BACKFILL (CLASS V SELECT MATERIAL) SHALL BE IN ACCORDANCE WITH STANDARD SPECIFICATIONS SECTION 1016.

#78M STONE BACKFILL IS TO BE CONTINUOUS ALONG FILL FACE OF BACKWALL FROM OUTSIDE EDGE TO OUTSIDE EDGE OF APPROACH SLAB.

FOR THE 4" Ø DRAINAGE PIPE OUTLET(S), SEE ROADWAY STANDARD DRAWINGS.

AREA BETWEEN THE WINGWALL AND APPROACH SLAB SHALL BE GRADED TO DRAIN THE WATER AWAY FROM THE FILL FACE OF THE BRIDGE AND SHALL BE PAVED. SEE ROADWAY PLANS.

APPROACH SLAB GROOVING IS NOT REQUIRED.

THE CONTRACTOR HAS THE OPTION TO OMIT GROUT BETWEEN THE APPROACH SLAB AND THE CORED SLAB UNITS AND POUR THE APPROACH SLAB DIRECTLY AGAINST THE CORED SLAB UNITS. SEE "OPTIONAL JOINT DETAIL".

THE JOINT AT THE END BENT SHALL BE GROUTED AS SOON AS PRACTICAL AFTER THE CONSTRUCTION OF THE APPROACH SLABS.

BILL OF MATERIAL

APPROACH SLAB AT EB #1

BAR	NO.	SIZE	TYPE	LENGTH	WEIGHT
* A1	13	#4	STR	29'-10"	259
A2	13	#4	STR	29'-10"	259
* B1	58	#5	STR	11'-1"	670
B2	58	#6	STR	11'-7"	1009
REINFORCING STEEL				LBS.	1268
* EPOXY COATED REINFORCING STEEL				LBS.	929
CLASS AA CONCRETE				C. Y.	18.0

APPROACH SLAB AT EB #2

BAR	NO.	SIZE	TYPE	LENGTH	WEIGHT
* A1	13	#4	STR	29'-10"	259
A2	13	#4	STR	29'-10"	259
* B1	58	#5	STR	11'-1"	670
B2	58	#6	STR	11'-7"	1009
REINFORCING STEEL				LBS.	1268
* EPOXY COATED REINFORCING STEEL				LBS.	929
CLASS AA CONCRETE				C. Y.	18.0

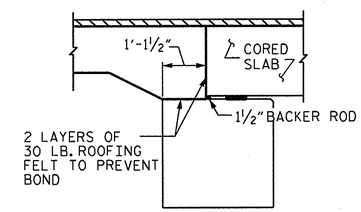

OPTIONAL JOINT DETAIL

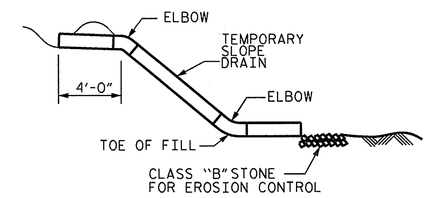

SECTION R-R

PROJECT NO. BD-5113A

BUNCOMBE COUNTY

STATION: 13+31.34 -L-

STATE OF NORTH CAROLINA
DEPARTMENT OF TRANSPORTATION
RALEIGH

STANDARD

BRIDGE APPROACH SLAB FOR PRESTRESSED CONCRETE CORED SLAB UNIT (SUB-REGIONAL TIER)

REVISIONS						SHEET NO.
NO.	BY:	DATE:	NO.	BY:	DATE:	S-13
1			3			TOTAL SHEETS
2			4			13

STD. NO. BAS6

ASSEMBLED BY : A. SORSENGINH		DATE :	8/2011
CHECKED BY : M.G. CHEEK		DATE :	11/11
DRAWN BY : KMM	3-08	REV. 9/27/11	MAA/GM
CHECKED BY : GM	3-08	REV. 10/1/11	MAA/GM

NORTH CAROLINA PROFESSIONAL SEAL 20125 ENGINEER MARSHALL G. CHEEK, JR. 1-26-12

26-JAN-2012 10:31
S:\DPG4\Marc\Low_Impact_Bridges\BD-5113A\BD-5113A_SD_AS.dgn
dahodge

STANDARD NOTES

DESIGN DATA:

SPECIFICATIONS	A.A.S.H.T.O. (CURRENT)
LIVE LOAD	SEE PLANS
IMPACT ALLOWANCE	SEE A.A.S.H.T.O.
STRESS IN EXTREME FIBER OF	
STRUCTURAL STEEL - AASHTO M270 GRADE 36	20,000 LBS. PER SQ. IN.
- AASHTO M270 GRADE 50W	27,000 LBS. PER SQ. IN.
- AASHTO M270 GRADE 50	27,000 LBS. PER SQ. IN.
REINFORCING STEEL IN TENSION	
GRADE 60	24,000 LBS. PER SQ. IN.
CONCRETE IN COMPRESSION	1,200 LBS. PER SQ. IN.
CONCRETE IN SHEAR	SEE A.A.S.H.T.O.
STRUCTURAL TIMBER - TREATED OR	
UNTREATED - EXTREME FIBER STRESS	1,800 LBS. PER SQ. IN.
COMPRESSION PERPENDICULAR TO GRAIN OF TIMBER	375 LBS. PER SQ. IN.
EQUIVALENT FLUID PRESSURE OF EARTH	30 LBS. PER CU. FT. (MINIMUM)

MATERIAL AND WORKMANSHIP:

EXCEPT AS MAY OTHERWISE BE SPECIFIED ON PLANS OR IN THE SPECIAL PROVISIONS, ALL MATERIAL AND WORKMANSHIP SHALL BE IN ACCORDANCE WITH THE 2012 "STANDARD SPECIFICATIONS FOR ROADS AND STRUCTURES" OF THE N. C. DEPARTMENT OF TRANSPORTATION.

STEEL SHEET PILING FOR PERMANENT OR TEMPORARY APPLICATIONS SHALL BE HOT ROLLED.

CONCRETE:

UNLESS OTHERWISE REQUIRED ON PLANS, CLASS A CONCRETE SHALL BE USED FOR ALL PORTIONS OF ALL STRUCTURES WITH THE EXCEPTION THAT: CLASS AA CONCRETE SHALL BE USED IN BRIDGE SUPERSTRUCTURES, ABUTMENT BACKWALLS, AND APPROACH SLABS; AND CLASS B CONCRETE SHALL BE USED FOR SLOPE PROTECTION AND RIP RAP.

CONCRETE CHAMFERS:

UNLESS OTHERWISE NOTED ON THE PLANS, ALL EXPOSED CORNERS ON STRUCTURES SHALL BE CHAMFERED 3/4" WITH THE FOLLOWING EXCEPTIONS: TOP CORNERS OF CURBS MAY BE ROUNDED TO 1-1/2" RADIUS WHICH IS BUILT INTO CURB FORMS; CORNERS OF TRANSVERSE FLOOR EXPANSION JOINTS SHALL BE ROUNDED WITH A 1/4" FINISHING TOOL UNLESS OTHERWISE REQUIRED ON PLANS; AND CORNERS OF EXPANSION JOINTS IN THE ROADWAY FACES AND TOPS OF CURBS AND SIDEWALKS SHALL BE ROUNDED TO A 1/4" RADIUS WITH A FINISHING STONE OR TOOL UNLESS OTHERWISE REQUIRED ON PLANS.

DOWELS:

DOWELS WHEN INDICATED ON PLANS AS FOR CULVERT EXTENSIONS, SHALL BE EMBEDDED AT LEAST 12" INTO THE OLD CONCRETE AND GROUTED INTO PLACE WITH 1:2 CEMENT MORTAR.

ALLOWANCE FOR DEAD LOAD DEFLECTION, SETTLEMENT, ETC. IN CASTING SUPERSTRUCTURES:

BRIDGES SHALL BE BUILT ON THE GRADE OR VERTICAL CURVE SHOWN ON PLANS. SLABS, CURBS AND PARAPETS SHALL CONFORM TO THE GRADE OR CURVE.

ALL DIMENSIONS WHICH ARE GIVEN IN SECTION AND ARE AFFECTED BY DEAD LOAD DEFLECTIONS ARE DIMENSIONS AT CENTER LINE OF BEARING UNLESS OTHERWISE NOTED ON PLANS. IN SETTING FORMS FOR STEEL BEAM BRIDGES AND PRESTRESSED CONCRETE GIRDER BRIDGES, ADJUSTMENTS SHALL BE MADE DUE TO THE DEAD LOAD DEFLECTIONS FOR THE ELEVATIONS SHOWN. WHERE BLOCKS ARE SHOWN OVER BEAMS FOR BUILDING UP TO THE SLAB, THE VERTICAL DIMENSIONS OF THE BLOCKS SHALL BE ADJUSTED BETWEEN BEARINGS TO COMPENSATE FOR DEAD LOAD DEFLECTIONS, VERTICAL CURVE ORDINATE, AND ACTUAL BEAM CAMBER. WHERE BOTTOM OF SLAB IS IN LINE WITH BOTTOM OF TOP FLANGES, DEPTH OF SLAB BETWEEN BEARINGS SHALL BE ADJUSTED TO COMPENSATE FOR DEAD LOAD DEFLECTION, VERTICAL CURVE ORDINATE, AND ACTUAL BEAM CAMBER.

IN SETTING FALSEWORK AND FORMS FOR REINFORCED CONCRETE SPANS, AN ALLOWANCE SHALL BE MADE FOR DEAD LOAD DEFLECTIONS, SETTLEMENT OF FALSEWORK, AND PERMANENT CAMBER WHICH SHALL BE PROVIDED FOR IN ADDITION TO THE ELEVATIONS SHOWN. AFTER REMOVAL OF THE FALSEWORK, THE FINISHED STRUCTURES SHALL CONFORM TO THE PROFILE AND ELEVATIONS SHOWN ON THE PLANS AND CONSTRUCTION ELEVATIONS FURNISHED BY THE ENGINEER.

DETAILED DRAWINGS FOR FALSEWORK OR FORMS FOR BRIDGE SUPERSTRUCTURE AND ANY STRUCTURE OR PARTS OF A STRUCTURE AS NOTED ON THE PLANS SHALL BE SUBMITTED TO THE ENGINEER FOR APPROVAL BEFORE CONSTRUCTION OF THE FALSEWORK OR FORMS IS STARTED.

REINFORCING STEEL:

ALL REINFORCING STEEL SHALL BE DEFORMED. DIMENSIONS RELATIVE TO PLACEMENT OF REINFORCING ARE TO CENTERS OF BARS UNLESS OTHERWISE INDICATED IN THE PLANS. DIMENSIONS ON BAR DETAILS ARE TO CENTERS OF BARS OR ARE OUT TO OUT AS INDICATED ON PLANS.

WIRE BAR SUPPORTS SHALL BE PROVIDED FOR REINFORCING STEEL WHERE INDICATED ON THE PLANS. WHEN BAR SUPPORT PIECES ARE PLACED IN CONTINUOUS LINES, THEY SHALL BE SO PLACED THAT THE ENDS OF THE SUPPORTING WIRES SHALL BE LAPPED TO LOCK LEGS ON ADJOINING PIECES.

STRUCTURAL STEEL:

AT THE CONTRACTOR'S OPTION, HE MAY SUBSTITUTE 7/8" Ø SHEAR STUDS FOR THE ¾" Ø STUDS SPECIFIED ON THE PLANS. THIS SUBSTITUTION SHALL BE MADE AT THE RATE OF 3 - 7/8" Ø STUDS FOR 4 - 3/4" Ø STUDS, AND STUD SPACING CHANGES SHALL BE MADE AS NECESSARY TO PROVIDE THE SAME EQUIVALENT NUMBER OF 7/8" Ø STUDS ALONG THE BEAM AS SHOWN FOR 3/4" Ø STUDS BASED ON THE RATIO OF 3 - 7/8" Ø STUDS FOR 4 - 3/4" Ø STUDS. STUDS OF THE LENGTH SPECIFIED ON THE PLANS MUST BE PROVIDED. THE MAXIMUM SPACING SHALL BE 2'-0".

EXCEPT AT THE INTERIOR SUPPORTS OF CONTINUOUS BEAMS WHERE THE COVER PLATE IS IN CONTACT WITH BEARING PLATE, THE CONTRACTOR MAY, AT HIS OPTION, SUBSTITUTE FOR THE COVER PLATES DESIGNATED ON THE PLANS COVER PLATES OF THE EQUIVALENT AREA PROVIDED THESE PLATES ARE AT LEAST 5/16" IN THICKNESS AND DO NOT EXCEED A WIDTH EQUAL TO THE FLANGE WIDTH LESS 2" OR A THICKNESS EQUAL TO 2 TIMES THE FLANGE THICKNESS. THE SIZE OF FILLET WELDS SHALL CONFORM TO THE REQUIREMENTS OF THE CURRENT ANSI/AASHTO/AWS "BRIDGE WELDING CODE". ELECTROSLAG WELDING WILL NOT BE PERMITTED.

WITH THE SOLE EXCEPTION OF EDGES AT SURFACES WHICH BEAR ON OTHER SURFACES, ALL SHARP EDGES AND ENDS OF SHAPES AND PLATES SHALL BE SLIGHTLY ROUNDED BY SUITABLE MEANS TO A RADIUS OF APPROXIMATELY 1/16 INCH OR EQUIVALENT FLAT SURFACE AT A SUITABLE ANGLE PRIOR TO PAINTING, GALVANIZING, OR METALLIZING.

HANDRAILS AND POSTS:

METAL STANDARDS AND FACES OF THE CONCRETE END POSTS FOR THE METAL RAIL SHALL BE SET NORMAL TO THE GRADE OF THE CURB, UNLESS OTHERWISE SHOWN ON PLANS. THE METAL RAIL AND TOPS OF CONCRETE POSTS USED WITH THE ALUMINUM RAIL SHALL BE BUILT PARALLEL TO THE GRADE OF THE CURB.

METAL HANDRAILS SHALL BE IN ACCORDANCE WITH THE PLANS. RAILS SHALL BE AS MANUFACTURED FOR BRIDGE RAILING. CASTINGS SHALL BE OF A UNIFORM APPEARANCE. FINS AND OTHER DEFORMATIONS RESULTING FROM CASTING OR OTHERWISE SHALL BE REMOVED IN A MANNER SO THAT A UNIFORM COLORING OF THE COMPLETED CASTING SHALL BE OBTAINED. CASTINGS WITH DISCOLORATIONS OR OF NON-UNIFORM COLORING WILL NOT BE ACCEPTED. CERTIFIED MILL REPORTS ARE REQUIRED FOR METAL RAILS AND POSTS.

SPECIAL NOTES:

GENERALLY, IN CASE OF DISCREPANCY, THIS STANDARD SHEET OF NOTES SHALL GOVERN OVER THE SPECIFICATIONS, BUT THE REMAINDER OF THE PLANS SHALL GOVERN OVER NOTES HEREON, AND SPECIAL PROVISIONS SHALL GOVERN OVER ALL. SEE SPECIFICATIONS ARTICLE 105-4.

ENGLISH

JANUARY, 1990