08/17/11

TIP PROJECT: BD-5113F

CONTRACT: DM00071

STATE	STATE PROJECT REFERENCE NO.	SHEET NO.	TOTAL SHEETS
N.C.	BD-5113F	1	

STATE PROJ. NO.	F.A. PROJ. NO.	DESCRIPTION
45359.1.6	BRZ-1390(2)	PE
45359.2.6	BRZ-1390(2)	R/W
45359.3.6	BRZ-1390(2)	CONST.

STATE OF NORTH CAROLINA
DIVISION OF HIGHWAYS

MADISON COUNTY

LOCATION: BRIDGE NO. 59 OVER WALNUT CREEK ON SR 1390 (FISHER LANE)

TYPE OF WORK: GRADING, DRAINAGE, PAVING, AND STRUCTURE

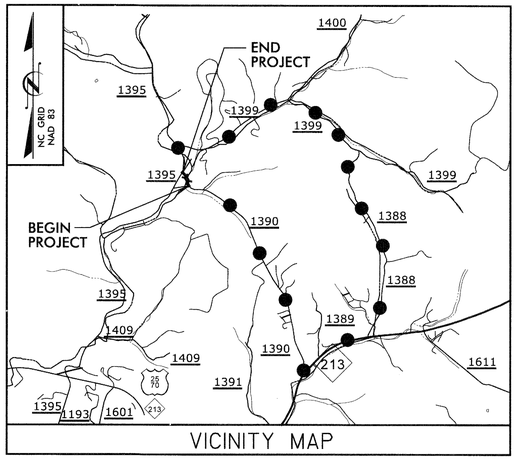

VICINITY MAP

DETOUR ROUTE

4

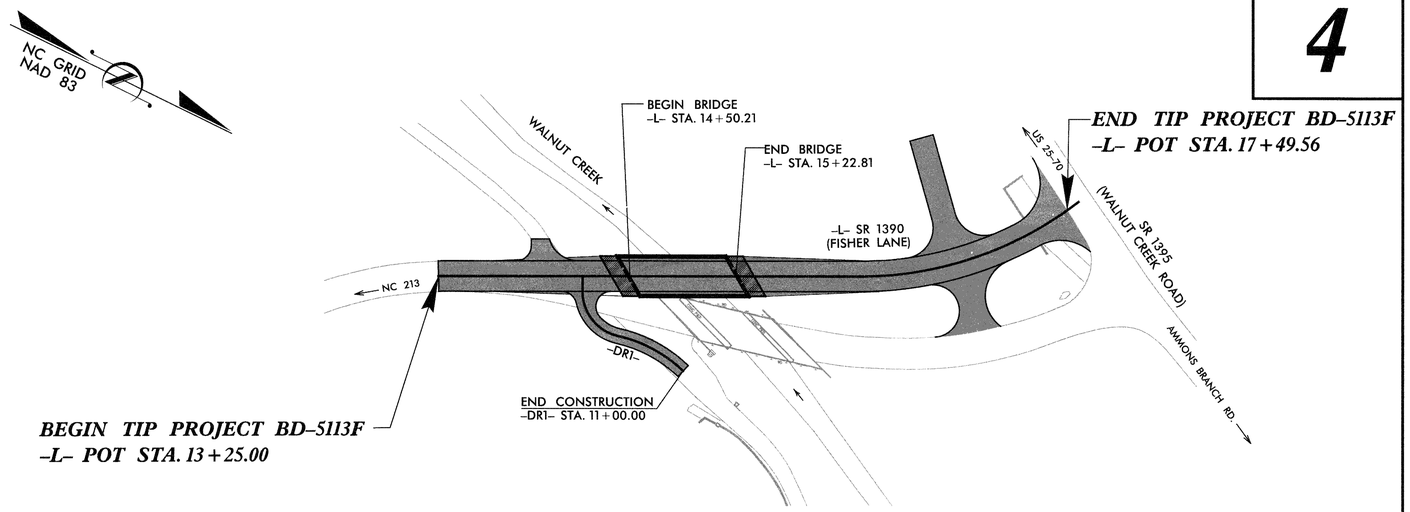

V&M
Vaughn & Melton
Consulting Engineers
Asheville, North Carolina 828-253-2796
Charlotte, North Carolina 704-357-0488
Tri-Cities, Tennessee 423-467-8401
Knoxville, Tennessee 865-546-5800
Middlesboro, Kentucky 606-248-6600
Spartanburg, South Carolina 864-574-4775

Copyright © 1994 Vaughn & Melton, Inc. All Rights Reserved

Clearing on this project shall be performed to the limits established by method II.

GRAPHIC SCALES

30 15 0 30 60 — PLANS

30 15 0 30 60 — PROFILE (HORIZONTAL)

6 3 0 6 12 — PROFILE (VERTICAL)

DESIGN DATA

ADT 2008 = 890
ADT 2025 = 1780

T = 6%
V = 45 MPH

FUNC CLASS = LOCAL

PROJECT LENGTH

LENGTH ROADWAY TIP PROJECT BD-5113F = 0.066 MI
LENGTH STRUCTURE TIP PROJECT BD-5113F = 0.014 MI
TOTAL LENGTH OF TIP PROJECT BD-5113F = 0.080 MI

Prepared In the Office of:
VAUGHN & MELTON
1318-F PATTON AVE.
ASHEVILLE NC, 28806
FOR THE NORTH CAROLINA DIVISION OF HIGHWAYS

2012 STANDARD SPECIFICATIONS

RIGHT OF WAY DATE: FEBRUARY 8, 2013

LETTING DATE: FEBRUARY 5, 2014

HARDY WILLIS, PE
PROJECT ENGINEER

AARON CARVER, PE
PROJECT DESIGN ENGINEER

NCDOT CONTACT:
PAUL SPROUSE, PE
DIVISION 13 - BRIDGE MANAGER

HYDRAULICS ENGINEER

NORTH CAROLINA PROFESSIONAL SEAL 033023 ENGINEER BRADLEY S. RIDNOUR

1/13/14

Bradley S Ridnour, PE
SIGNATURE: *P.E.*

ROADWAY DESIGN ENGINEER

NORTH CAROLINA PROFESSIONAL SEAL 030453 ENGINEER AARON C. CARVER

1/13/14

SIGNATURE: *P.E.*

DIVISION OF HIGHWAYS STATE OF NORTH CAROLINA

STATE OF NORTH CAROLINA DEPARTMENT OF TRANSPORTATION

$$$$SYSTIME$$$$
$$$$DGN$$$$
$$$$USERNAME$$$$

PROJECT REFERENCE NO.	SHEET NO.
BD-5113F	1-A

ROADWAY DESIGN ENGINEER

NORTH CAROLINA PROFESSIONAL SEAL 030453 ENGINEER BARRON C. CARVER

7/13/14

INDEX OF SHEETS

SHEET NUMBER	SHEET
1	TITLE SHEET
1-A	INDEX OF SHEETS, GENERAL NOTES, AND LIST OF STANDARD DRAWINGS
1-B	CONVENTIONAL SYMBOLS
1-C	SURVEY CONTROL SHEET
2	PAVEMENT SCHEDULE, TYPICAL SECTIONS, AND WEDGING DETAILS
3	SUMMARY OF QUANTITIES
3A	SUMMARY OF DRAINAGE QUANTITIES, SUMMARY OF GUARDRAIL, AND ASPHALT PAVEMENT REMOVAL SUMMARY
3B	EARTHWORK SUMMARY
4	PLAN AND PROFILE SHEET
TMP-1 THRU TMP-2	TRAFFIC MANAGEMENT PLANS
SD-1	SPECIAL SIGN DESIGN
PM-1	PAVEMENT MARKING PLAN
EC-1 THRU EC-5	EROSION CONTROL PLANS
X-0	CROSS-SECTION SUMMARY
X-1 THRU X-12	CROSS-SECTIONS
S-00 THRU S-15	STRUCTURE PLANS

GENERAL NOTES:

2012 SPECIFICATIONS
EFFECTIVE: 01-17-12

GRADE LINE:
GRADING AND SURFACING OR RESURFACING AND WIDENING:

THE GRADE LINES SHOWN DENOTE THE FINISHED ELEVATION OF THE PROPOSED SURFACING AT GRADE POINTS SHOWN ON THE TYPICAL SECTIONS. WHERE NO GRADE LINES ARE SHOWN, THE PROFILES SHOWN DENOTE THE TOP ELEVATION OF THE EXISTING PAVEMENT ALONG THE CENTER LINE OF SURVEY ON WHICH THE PROPOSED RESURFACING WILL BE PLACED. GRADE LINES MAY BE ADJUSTED BY THE ENGINEER IN ORDER TO SECURE A PROPER TIE-IN.

CLEARING:

CLEARING ON THIS PROJECT SHALL BE PERFORMED TO THE LIMITS ESTABLISHED BY METHOD II.

SUPERELEVATION:

ALL CURVES ON THIS PROJECT SHALL BE SUPERELEVATED IN ACCORDANCE WITH STD. NO. 225.04 USING THE RATE OF SUPERELEVATION AND RUNOFF SHOWN ON THE PLANS. SUPERELEVATION IS TO BE REVOLVED ABOUT THE GRADE POINTS SHOWN ON THE TYPICAL SECTIONS.

SHOULDER CONSTRUCTION:

ASPHALT, EARTH, AND CONCRETE SHOULDER CONSTRUCTION ON THE HIGH SIDE OF SUPERELEVATED CURVES SHALL BE IN ACCORDANCE WITH STD. NO. 560.01.

UNDERDRAINS:

UNDERDRAINS SHALL BE CONSTRUCTED IN ACCORDANCE WITH STD. NO. 815.03 AT LOCATIONS DIRECTED BY THE ENGINEER.

GUARDRAIL:

THE GUARDRAIL LOCATIONS SHOWN ON THE PLANS MAY BE ADJUSTED DURING CONSTRUCTION AS DIRECTED BY THE ENGINEER. THE CONTRACTOR SHOULD CONSULT WITH THE ENGINEER PRIOR TO ORDERING GUARDRAIL MATERIAL.

TEMPORARY SHORING:

SHORING REQUIRED FOR THE MAINTENANCE OF TRAFFIC WILL BE PAID FOR AS "EXTRA WORK" IN ACCORDANCE WITH SECTION 104-7.

SUBSURFACE PLANS:

NO SUBSURFACE PLANS ARE AVAILABLE ON THIS PROJECT. THE CONTRACTOR SHOULD MAKE HIS OWN INVESTIGATION AS TO THE SUBSURFACE CONDITIONS.

END BENTS:

THE ENGINEER SHALL CHECK THE STRUCTURE END BENT PLANS, DETAILS, AND CROSS-SECTION PRIOR TO SETTING OF THE SLOPE STAKES FOR THE EMBANKMENT OR EXCAVATION APPROACHING A BRIDGE.

UTILITIES:

UTILITY OWNERS ON THIS PROJECT ARE: FRENCH BROAD EMC, TOWN OF MARSHALL, FRONTIER OMMUNICATIONS, AND CHARTER COMMUNICATIONS.

RIGHT-OF-WAY MARKERS:

ALL RIGHT-OF-WAY MARKERS ON THIS PROJECT SHALL BE PLACED BY CONTRACT.

2012 ROADWAY ENGLISH STANDARD DRAWINGS

The following Roadway Standards as appear in "Roadway Standard Drawings" Highway Design Branch - N. C. Department of Transportation - Raleigh, N. C., Dated January 17, 2012 are applicable to this project and by reference hereby are considered a part of these plans:

STD.NO.	TITLE
DIVISION 2 - EARTHWORK	
200.02	Method of Clearing - Method II
225.02	Guide for Grading Subgrade - Secondary and Local
225.04	Method of Obtaining Superelevation - Two Lane Pavement
DIVISION 3 - PIPE CULVERTS	
300.01	Method of Pipe Installation - Method 'A'
DIVISION 4 - MAJOR STRUCTURES	
422.11	Bridge Approach Fills
DIVISION 5 - SUBGRADE, BASES AND SHOULDERS	
560.01	Method of Shoulder Construction - High Side of Superelevated Curve - Method I
DIVISION 8 - INCIDENTALS	
815.03	Pipe Underdrain and Blind Drain
840.18	Concrete Grated Drop Inlet Type "B"
840.22	Frames and Wide Slot Sag Grates
840.25	Anchorage for Frames
840.27	Brick Grated Drop Inlet Type "B"
840.29	Frames and Narrow Slot Flat Grates
840.35	Traffic Bearing Grated Drop Inlet - for Cast Iron Double Frame and Grates
840.46	Traffic Bearing Precast Drainage Structure
840.66	Drainage Structure Steps
846.01	Concrete Curb, Gutter and Curb & Gutter
846.04	Drop Inlet Installation in Shoulder Berm Gutter
862.01	Guardrail Placement
862.02	Guardrail Installation
862.03	Structure Anchor Units
876.02	Guide for Rip Rap at Pipe Outlets

DOCUMENT NOT CONSIDERED FINAL UNLESS ALL SIGNATURES COMPLETED

3/15/06

PROJECT REFERENCE NO.	SHEET NO.
BD-5113F	1-B

Note: Not to Scale

S.U.E. = Subsurface Utility Engineering

STATE OF NORTH CAROLINA
DIVISION OF HIGHWAYS

CONVENTIONAL PLAN SHEET SYMBOLS

BOUNDARIES AND PROPERTY:

- State Line
- County Line
- Township Line
- City Line
- Reservation Line
- Property Line
- Existing Iron Pin — EIP
- Property Corner
- Property Monument — ECM
- Parcel/Sequence Number — 23
- Existing Fence Line
- Proposed Woven Wire Fence
- Proposed Chain Link Fence
- Proposed Barbed Wire Fence
- Existing Wetland Boundary — WLB
- Proposed Wetland Boundary — WLB
- Existing Endangered Animal Boundary — EAB
- Existing Endangered Plant Boundary — EPB

BUILDINGS AND OTHER CULTURE:

- Gas Pump Vent or U/G Tank Cap
- Sign — S
- Well — W
- Small Mine
- Foundation
- Area Outline
- Cemetery
- Building
- School
- Church
- Dam

HYDROLOGY:

- Stream or Body of Water
- Hydro, Pool or Reservoir
- Jurisdictional Stream — JS
- Buffer Zone 1 — BZ 1
- Buffer Zone 2 — BZ 2
- Flow Arrow
- Disappearing Stream
- Spring
- Swamp Marsh
- Proposed Lateral, Tail, Head Ditch — FLOW
- False Sump

RAILROADS:

- Standard Gauge — CSX TRANSPORTATION
- RR Signal Milepost — MILEPOST 35
- Switch — SWITCH
- RR Abandoned
- RR Dismantled

RIGHT OF WAY:

- Baseline Control Point
- Existing Right of Way Marker
- Existing Right of Way Line
- Proposed Right of Way Line — RW
- Proposed Right of Way Line with Iron Pin and Cap Marker — RW
- Proposed Right of Way Line with Concrete or Granite Marker — RW
- Existing Control of Access — CA
- Proposed Control of Access — CA
- Existing Easement Line — E
- Proposed Temporary Construction Easement — E
- Proposed Temporary Drainage Easement — TDE
- Proposed Permanent Drainage Easement — PDE
- Proposed Permanent Utility Easement — PUE

ROADS AND RELATED FEATURES:

- Existing Edge of Pavement
- Existing Curb
- Proposed Slope Stakes Cut — C
- Proposed Slope Stakes Fill — F
- Proposed Wheel Chair Ramp — WCR
- Proposed Wheel Chair Ramp Curb Cut — WCC
- Curb Cut for Future Wheel Chair Ramp — CCFR
- Existing Metal Guardrail
- Proposed Guardrail
- Existing Cable Guiderail
- Proposed Cable Guiderail
- Equality Symbol
- Pavement Removal

VEGETATION:

- Single Tree
- Single Shrub
- Hedge
- Woods Line
- Orchard
- Vineyard — Vineyard

EXISTING STRUCTURES:

MAJOR:

- Bridge, Tunnel or Box Culvert — CONC
- Bridge Wing Wall, Head Wall and End Wall — CONC WW

MINOR:

- Head and End Wall — CONC HW
- Pipe Culvert
- Footbridge
- Drainage Box: Catch Basin, DI or JB — CB
- Paved Ditch Gutter
- Storm Sewer Manhole — S
- Storm Sewer — S

UTILITIES:

POWER:

- Existing Power Pole
- Proposed Power Pole
- Existing Joint Use Pole
- Proposed Joint Use Pole
- Power Manhole — P
- Power Line Tower
- Power Transformer
- U/G Power Cable Hand Hole — HH
- H-Frame Pole
- Recorded U/G Power Line — P
- Designated U/G Power Line (S.U.E.*) — P

TELEPHONE:

- Existing Telephone Pole
- Proposed Telephone Pole
- Telephone Manhole — T
- Telephone Booth
- Telephone Pedestal — T
- Telephone Cell Tower
- U/G Telephone Cable Hand Hole — HH
- Recorded U/G Telephone Cable — T
- Designated U/G Telephone Cable (S.U.E.*) — T
- Recorded U/G Telephone Conduit — TC
- Designated U/G Telephone Conduit (S.U.E.*) — TC
- Recorded U/G Fiber Optics Cable — T FO
- Designated U/G Fiber Optics Cable (S.U.E.*) — T FO

WATER:

- Water Manhole — W
- Water Meter
- Water Valve
- Water Hydrant
- Recorded U/G Water Line — W
- Designated U/G Water Line (S.U.E.*) — W
- Above Ground Water Line — A/G Water

TV:

- TV Satellite Dish
- TV Pedestal — C
- TV Tower
- U/G TV Cable Hand Hole — HH
- Recorded U/G TV Cable — TV
- Designated U/G TV Cable (S.U.E.*) — TV
- Recorded U/G Fiber Optic Cable — TV FO
- Designated U/G Fiber Optic Cable (S.U.E.*) — TV FO

GAS:

- Gas Valve
- Gas Meter
- Recorded U/G Gas Line — G
- Designated U/G Gas Line (S.U.E.*) — G
- Above Ground Gas Line — A/G Gas

SANITARY SEWER:

- Sanitary Sewer Manhole
- Sanitary Sewer Cleanout
- U/G Sanitary Sewer Line — SS
- Above Ground Sanitary Sewer — A/G Sanitary Sewer
- Recorded SS Forced Main Line — FSS
- Designated SS Forced Main Line (S.U.E.*) — FSS

MISCELLANEOUS:

- Utility Pole
- Utility Pole with Base
- Utility Located Object
- Utility Traffic Signal Box — S
- Utility Unknown U/G Line — ?UTL
- U/G Tank; Water, Gas, Oil
- A/G Tank; Water, Gas, Oil
- U/G Test Hole (S.U.E.*)
- Abandoned According to Utility Records — AATUR
- End of Information — E.O.I.

PROJECT REFERENCE NO.	SHEET NO.
BD-5113F	1C
Location and Surveys	

SURVEY CONTROL SHEET BD–5113F

BL

POINT	DESC.	NORTH	EAST	ELEVATION	L STATION	OFFSET
1	BL-1	777409.0662	913420.0450	2036.67	10+95.95	15.96 LT
2	BL-2	777520.7730	913240.1999	2031.77	13+02.21	13.39 LT
3	BL-3	777723.6488	913204.2501	2027.94	14+97.82	48.23 RT
4	BL-4	777949.2556	913077.5009	2029.76	17+39.48	53.06 RT

ROW MARKER CONCRETE OR GRANITE-E

ALIGN	STATION	OFFSET	NORTH	EAST
L	14+00.00	-24.09	777603.6779	913184.0939
L	14+00.00	-45.00	777594.2045	913165.4537
L	15+22.81	-45.00	777703.6865	913109.8121
L	16+68.87	-35.00	777838.4259	913052.5513
L	17+45.28	-45.00	777880.3480	913007.4916

FINAL -L-

TYPE	STATION	NORTH	EAST
POT	10+00.00	777419.5900	913518.3046
PC	10+41.22	777420.0695	913477.0880
PCC	11+41.91	777435.0712	913377.8470
PT	13+29.92	777552.1221	913237.3192
PC	16+68.87	777854.2817	913083.7538
PT	17+68.88	777928.6772	913018.4714

DR-1

TYPE	STATION	NORTH	EAST
POT	10+00.00	777632.6159	913196.4102
PC	10+10.00	777637.1466	913205.3249
PRC	10+50.62	777671.4121	913220.7747
PT	10+98.53	777718.7587	913221.3798
POT	11+66.40	777783.9958	913240.0664

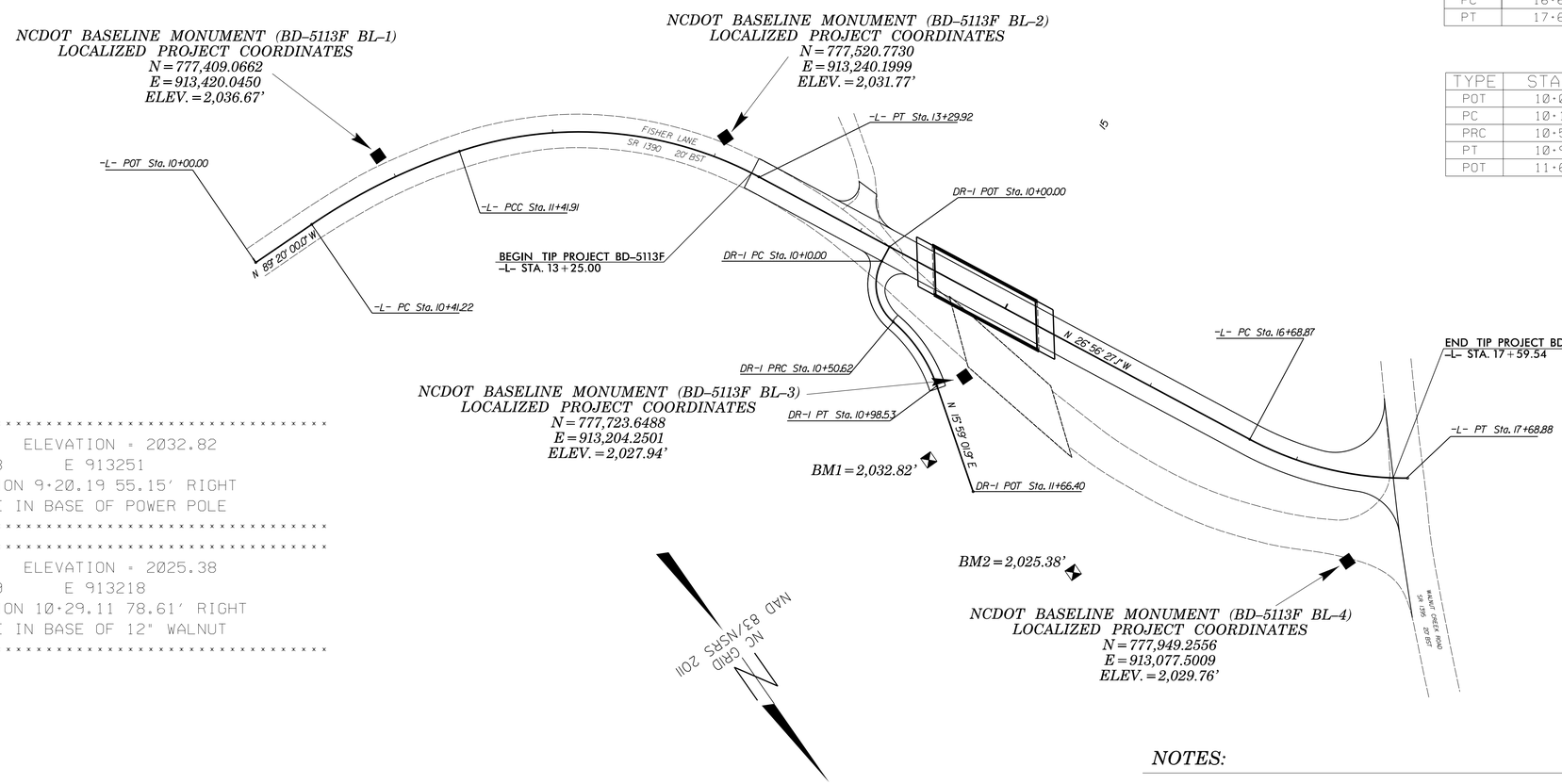


```
*****************************************
BM1        ELEVATION = 2032.82
N 777753       E 913251
BL STATION 9+20.19 55.15' RIGHT
RR SPIKE IN BASE OF POWER POLE
*****************************************
*****************************************
BM2        ELEVATION = 2025.38
N 777859       E 913218
BL STATION 10+29.11 78.61' RIGHT
RR SPIKE IN BASE OF 12" WALNUT
*****************************************
```

DATUM DESCRIPTION

THE LOCALIZED COORDINATE SYSTEM DEVELOPED FOR THIS PROJECT IS BASED ON THE STATE PLANE COORDINATES ESTABLISHED BY NCDOT FOR MONUMENT "560059 BL-3"
WITH NAD 83/NSRS 2011 STATE PLANE GRID COORDINATES OF
NORTHING: 777723.6488(ft) EASTING: 913204.2501(ft)
ELEVATION: 2027.94(ft)
THE AVERAGE COMBINED GRID FACTOR USED ON THIS PROJECT (GROUND TO GRID) IS: 0.999831466
THE N.C. LAMBERT GRID BEARING AND LOCALIZED HORIZONTAL GROUND DISTANCE FROM "560059 BL-3" TO -L- STATION 10+00.00 IS
S 45°55'35" E 437.13'
ALL LINEAR DIMENSIONS ARE LOCALIZED HORIZONTAL DISTANCES
VERTICAL DATUM USED IS NAVD 88

GEOIDAL MODEL — G09NC
NOTE: DRAWING NOT TO SCALE

NOTES:

1. THE CONTROL DATA FOR THIS PROJECT CAN BE FOUND ELECTRONICALLY BY SELECTING PROJECT CONTROL DATA AT:
HTTP://WWW.NCDOT.ORG/DOH/PRECONSTRUCT/HIGHWAY/LOCATION/PROJECT/

THE FILES TO BE FOUND ARE AS FOLLOWS:
BD–5113F_LS_CONTROL.TXT

SITE CALIBRATION INFORMATION HAS NOT BEEN PROVIDED FOR THIS PROJECT. IF FURTHER INFORMATION IS NEEDED, PLEASE CONTACT THE LOCATION AND SURVEYS UNIT.

◆ INDICATES GEODETIC CONTROL MONUMENTS USED OR SET FOR HORIZONTAL PROJECT CONTROL BY THE NCDOT LOCATION AND SURVEYS UNIT.
PROJECT CONTROL ESTABLISHED USING GLOBAL POSITIONING SYSTEM.

6/2/99

PROJECT REFERENCE NO.	SHEET NO.
BD-5113F	2
R/W SHEET NO.	
ROADWAY DESIGN ENGINEER	PAVEMENT DESIGN ENGINEER

NORTH CAROLINA PROFESSIONAL SEAL 030453 ENGINEER — 1/13/14

NORTH CAROLINA PROFESSIONAL SEAL 20134 ENGINEER — 1/13/14

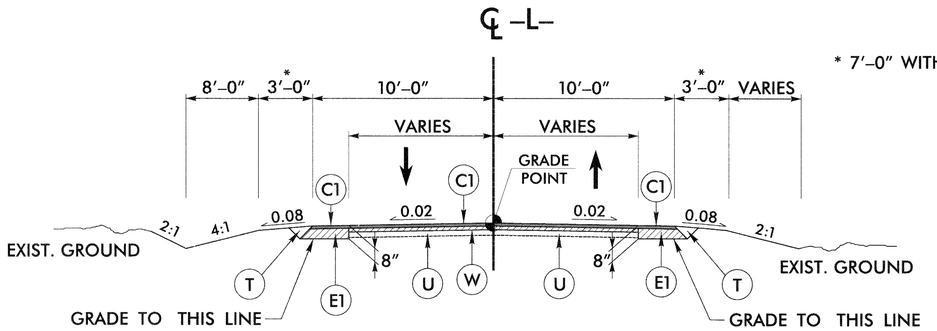

* 7′–0″ WITH GUARDRAIL

TYPICAL SECTION NO. 1

USE TYPICAL SECTION NO. 1

–L– STA. 13+25.00 (BEGIN PROJECT) TO 14+20.00

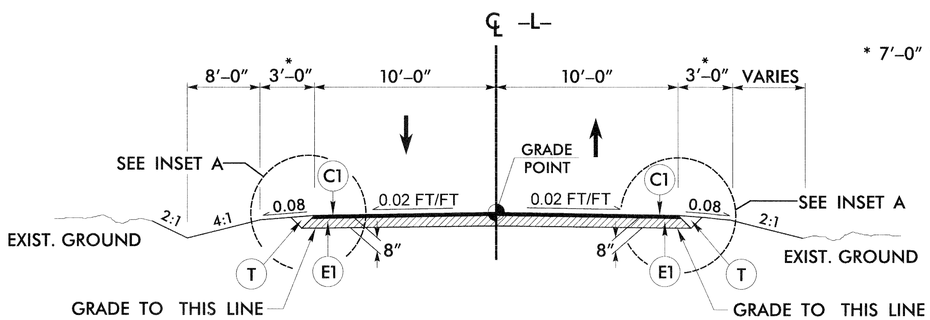

* 7′–0″ WITH GUARDRAIL

TYPICAL SECTION NO. 2

USE TYPICAL SECTION NO. 2

–L– STA. 14+20.00 TO STA. 14+50.21 (BEGIN BRIDGE)
—L– STA. 15+22.81 (END BRIDGE) TO STA. 17+49.56 (END PROJECT)

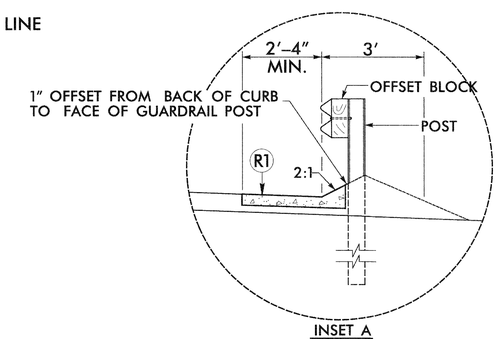

INSET A

SBG END APPROACH SLAB
TO –L– STA. 15+51 LT & RT

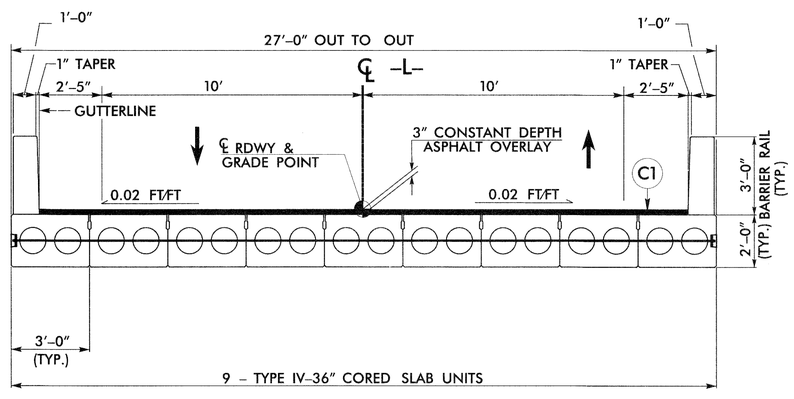

TYPICAL SECTION NO. 3

USE TYPICAL SECTION NO. 3

–L– STA. 14+50.21 (BEGIN BRIDGE) TO
–L– STA. 15+22.81 (END BRIDGE)

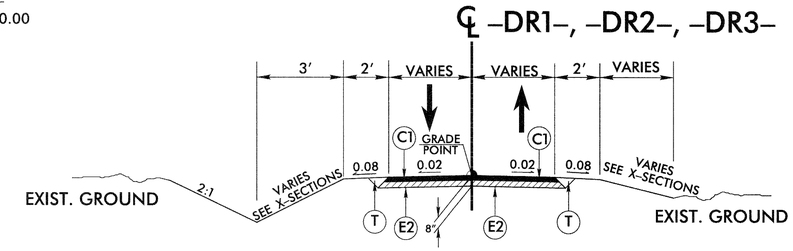

TYPICAL SECTION NO. 4

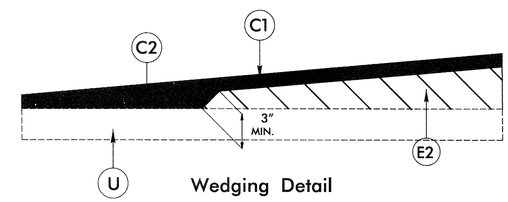

Wedging Detail

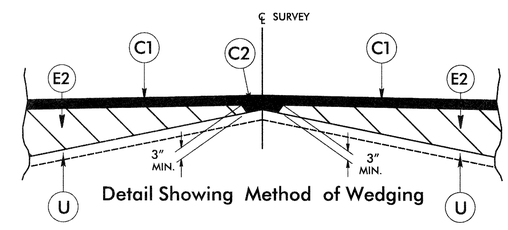

Detail Showing Method of Wedging

	PAVEMENT SCHEDULE
C1	PROP. APPROX. 3″ ASPHALT CONCRETE SURFACE COURSE, TYPE S9.5B, AT AN AVERAGE RATE OF 168 LBS. PER SQ. YD. IN EACH OF TWO 1½″ LAYERS.
C2	PROP. VAR. DEPTH ASPHALT CONCRETE SURFACE COURSE, TYPE S9.5B AT AN AVERAGE RATE OF 112 LBS. PER SQ. YD. PER 1″ DEPTH. TO BE PLACED IN LAYERS NOT TO EXCEED 1½″ IN DEPTH.
E1	PROP. APPROX. 5″ ASPHALT CONCRETE BASE COURSE, TYPE B25.0B, AT AN AVERAGE RATE OF 570 LBS. PER SQ. YD.
E2	PROP. VAR. DEPTH ASPHALT CONCRETE BASE COURSE, TYPE B25.0B, AT AN AVERAGE RATE OF 114 LBS. PER SQ. YD. PER 1″ DEPTH. TO BE PLACED IN LAYERS NOT LESS THAN 3″ IN DEPTH OR GREATER THAN 5½″ IN DEPTH.
R1	SHOULDER BERM GUTTER (SEE NCDOT STANDARD DRAWING NO. 846.01)
T	EARTH MATERIAL
U	EXISTING PAVEMENT
W	PROPOSED WEDGING (SEE APPROPRIATE DETAILS)

NOTE: ALL PAVEMENT SLOPES ARE 1:1 UNLESS SHOWN OTHERWISE.

8/17/99

DATE: 1/13/14 TIME: 9:29:11 AM

6/21/00

COMPUTED BY: NVA DATE: 10-22-13
CHECKED BY: RMS DATE: 10-22-13

STATE OF NORTH CAROLINA
DIVISION OF HIGHWAYS

PROJECT REFERENCE NO.	SHEET NO.
BD-5113F	3-A

PAVEMENT REMOVAL SUMMARY

IN SQUARE YARDS

LINE	LOCATION	ASPHALT REMOVAL	ASPHALT BREAK-UP	CONCRETE REMOVAL	CONCRETE REMOVAL
-L-	STA. 13+25 TO 14+95	162			
-L-	STA. 15+49 TO 17+49.56	151			
-DR1-	STA. 10+10 TO 11+00.00	61			
	TOTAL	374			
	SAY	380			

Approximate quantities only. Unclassified excavation, borrow excavation, fine grading, clearing and grubbing, and removal of existing pavement will be paid for at the contract lump sum price for "grading".

NOTE: Invert Elevations are for Bid Purposes only and shall not be used for project construction stakeout.
See "Standard Specifications For Roads and Structures, Section 300-5".

SUB-REGIONAL & REGIONAL
LIST OF PIPES, ENDWALLS, ETC. (FOR PIPES 48" & UNDER)

STATION / SIZE / THICKNESS OR GAUGE	LOCATION (LT,RT, OR CL)	STRUCTURE NO. FROM	STRUCTURE NO. TO	TOP ELEVATION	INVERT ELEVATION	INVERT ELEVATION	SLOPE CRITICAL	DRAINAGE PIPE (RCP, CSP, CAAP, HDPE, or PVC) 12"	15"	18"	24"	30"	36"	42"	48"	DO NOT USE RCP	DO NOT USE CSP	DO NOT USE CAAP	DO NOT USE HDPE
14+13	CL	4-1		2027.83															
		4-1	OUT		2024.83	2024.61													
15+47	RT	4-2		2027.54															
		4-2	4-3		2024.79	2024.60													
	LT	4-3		2027.45															
		4-3	OUT		2024.45	2022.92			16										
16+69	RT	4-4			2025.74	2025.66													
16+50	LT	4-5			2024.29	2023.42													
TOTAL									16										

STATION	FROM	TO	C.S. PIPE 12" .064	15" .064	18" .064	24" .064	36" .079	42" .109	48" .109	R.C. PIPE (CLASS III) 15"	18"	24"	30"	36"	42"	48"	R.C. PIPE (CLASS IV) 12"	15"	18"	24"	30"	36"	42"	48"	**" R. C. PIPE (CLASS V)	**" R. C. PIPE CULVERTS, CONTRACTOR DESIGN PIPE	**" R. C. PIPE CULVERTS, CONTRACTOR DESIGN PIPE	15" SIDE DRAIN PIPE	18" SIDE DRAIN PIPE
14+13	4-1																												
	4-1	OUT									44																		
15+47	4-2																												
	4-2	4-3								24																			
	4-3																												
	4-3	OUT																											
16+69	4-4																												44
16+50	4-5																												44
TOTAL										24	44																		88

QUANTITIES FOR DRAINAGE STRUCTURES — * TOTAL L.F. FOR PAY QUANTITY SHALL BE COL. 'A' + (1.3 X COL.'B')

STATION	FROM	TO	ENDWALLS STD. 838.01, STD. 838.11 OR STD. 838.80 (UNLESS NOTED OTHERWISE) CU. YDS. R.C.P.	C.S.P.	PER EACH (0' THRU 5.0')	LIN. *FT. A 5.0' THRU 10.0'	LIN. *FT. B 10.0' AND ABOVE	C.B. STD. 840.01 OR STD. 840.02	FRAME, GRATES AND HOOD STANDARD 840.03 TYPE OF GRATE E	F	G		CONCRETE TRANSITIONAL SECTION CATCH BASIN	DROP INLET		T.B.D.I. STD. 840.35	T.B.D.I. FRAME WITH TWO GRATES STD. 840.29	2GI STD. 840.18	FRAME WITH TWO GRATES STD. 840.22		CORR. STEEL ELBOWS NO. & SIZE	CONC. COLLARS CL. "B" C.Y. STD 840.72	CONC. & BRICK PIPE PLUG, C.Y. STD. 840.71	PIPE REMOVAL LIN.FT.	REMARKS
14+13	4-1				1													1	1						
	4-1	OUT																						40	
15+47	4-2				1											1	1								
	4-2	4-3																							
	4-3															1	1								
	4-3	OUT			1																				
16+69	4-4																								
16+50	4-5																								
TOTAL					3											2	2	1	1						

ABBREVIATIONS

- C.B. CATCH BASIN
- N.D.I. NARROW DROP INLET
- D.I. DROP INLET
- G.D.I. GRATED DROP INLET
- G.D.I. (N.S.) GRATED DROP INLET (NARROW SLOT)
- J.B. JUNCTION BOX
- M.H. MANHOLE
- T.B.D.I. TRAFFIC BEARING DROP INLET
- T.B.J.B. TRAFFIC BEARING JUNCTION BOX

"N" = DISTANCE FROM EDGE OF LANE TO FACE OF GUARDRAIL.
TOTAL SHOULDER WIDTH = DISTANCE FROM EDGE OF TRAVEL LANE TO SHOULDER BREAK POINT.
FLARE LENGTH = DISTANCE FROM LAST SECTION OF PARALLEL GUARDRAIL TO END OF GUARDRAIL.
W = TOTAL WIDTH OF FLARE FROM BEGINNING OF TAPER TO END OF GUARDRAIL.
G = GATING IMPACT ATTENUATOR TYPE 350
NG = NON-GATING IMPACT ATTENUATOR TYPE 350

GUARDRAIL SUMMARY

SURVEY LINE	BEG. STA.	END STA.	LOCATION	LENGTH STRAIGHT	LENGTH SHOP CURVED	LENGTH DOUBLE FACED	WARRANT POINT APPROACH END	WARRANT POINT TRAILING END	"N" DIST. FROM E.O.L.	TOTAL SHOUL. WIDTH	FLARE LENGTH APPROACH END	FLARE LENGTH TRAILING END	W APPROACH END	W TRAILING END	ANCHORS XI MOD	XI	GRAU 350	GRAU 350 TL-2	TES	TYPE III	TYPE III SHOP CURVED	B-77	AT-1	IMPACT ATTENUATOR TYPE 350 EA	G	NG	SINGLE FACED GUARDRAIL	REMOVE EXISTING GUARDRAIL	REMOVE AND STOCKPILE EXISTING GUARDRAIL	REMARKS
-L-	14+04.55	14+43.04	LT.	25	25			14+43.04		7										1			1							
-L-	14+38.24	14+57.38	RT.	6.25	18.75		14+57.38			7											1		1							
-L-	15+15.64	15+75.84	LT.	56.25			15+15.64			7								1		1										
-L-	15+29.98	15+90.18	RT.	56.25				15+29.98		7								1		1										
-L-	15+85		RT.	25															2											
			SUBTOTAL	168.75	43.75													2	2	3	1		2							
			LESS DEDUCTIONS FOR ANCHORS																											
			AT-1 2 @ 6.25'	12.50																										
			GRAU-350 TL-2 2 @ 25'=	50																										
			TYPE III 3 @ 18.75'=	56.25																										
			TYPE III SHOP CURVED 1 @ 18.75'=		18.75																									
			PROJECT TOTALS:	50	25																									
			ADDITIONAL GUARDRAIL POSTS=5 EA.																											

$$$$SYSTIME$$$$ $$$$DGN$$$$ $$$$USERNAME$$$$

COMPUTED BY: NVA DATE: 10-22-2013
CHECKED BY: RMS DATE: 10-22-2013

PROJECT REFERENCE NO.	SHEET NO.
BD-5113F	3-B

DIVISION OF HIGHWAYS
STATE OF NORTH CAROLINA

SUMMARY OF EARTHWORK

IN CUBIC YARDS

LOCATION	UNCLASSIFIED EXCAVATION	UNDERCUT	EMBT+%	BORROW	WASTE
SUMMARY NO.1					
-L- STA. 13+25 TO STA. 14+50.21 (BEG. BRIDGE)	2		41	39	
SUBTOTAL SUMMARY NO.1	2		41	39	
SUMMARY NO.2					
-DR-1- STA. 10+10 TO STA. 11+00	138		30		108
SUBTOTAL SUMMARY NO.2	138		30		108
SUMMARY NO.3					
-L- STA. 15+22.81 (END BRIDGE) TO STA. 17+49.56	73		1854	1781	
SUBTOTAL SUMMARY NO.3	73		1854	1781	
PROJECT SUBTOTAL	213		1925	1820	108
EST. 5% FOR REPLACING TOP SOIL ON BORROW PITS				91	
WASTE IN LIEU OF BORROW				-108	
GRAND TOTAL	213		1924	1803	
SAY	220			1805	

CONTINGENCY ITEMS:

INCIDENTAL STONE = 40 TONS

UNDERCUT EXCAVATION = 50 CY

SELECT GRANULAR MATERIAL = 50 CY

CLASS IV SUBGRADE STABILIZATION = 50 TONS

GEOTEXTILE FOR SOIL STABILIZATION = 50 SY

EST. DDE = 50 CY

Approximate quantities only. Unclassified excavation, borrow excavation, fine grading, clearing and grubbing, and removal of existing pavement will be paid for at the contract lump sum price for "grading".

PROJECT REFERENCE NO.	SHEET NO.
BD-5113F	4
R/W SHEET NO.	
ROADWAY DESIGN ENGINEER	HYDRAULICS ENGINEER
NORTH CAROLINA PROFESSIONAL SEAL 030453 ENGINEER AARON C. CARVER 1/13/14	NORTH CAROLINA PROFESSIONAL SEAL 033023 ENGINEER BRADLEY S. RIDNOUR 1/13/14 Bradley S. Ridnour, PE

SKETCH SHOWING RELATIONSHIP OF PAVEMENT WIDTH TO BRIDGE WIDTH

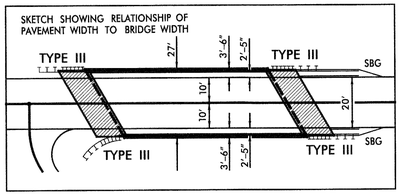

BL-2	777520.7730	913240.1999	2031.77
BL-3	777723.6488	913204.2501	2027.94
BL-4	777949.2556	913077.5009	2029.76

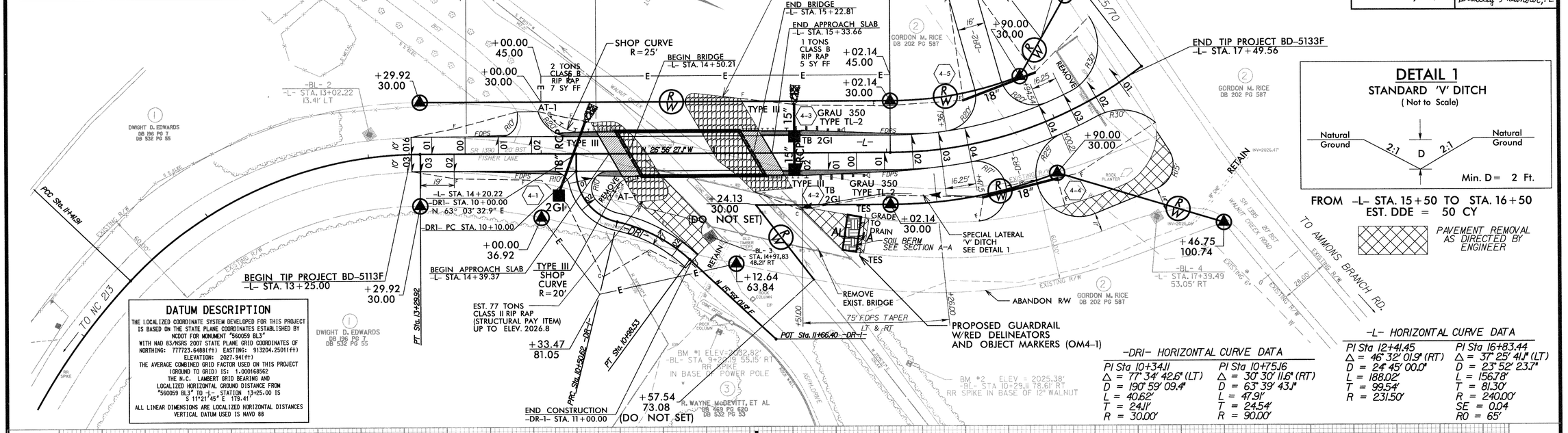

DETAIL 1
STANDARD 'V' DITCH
(Not to Scale)

FROM -L- STA. 15+50 TO STA. 16+50
EST. DDE = 50 CY

PAVEMENT REMOVAL AS DIRECTED BY ENGINEER

DATUM DESCRIPTION

THE LOCALIZED COORDINATE SYSTEM DEVELOPED FOR THIS PROJECT IS BASED ON THE STATE PLANE COORDINATES ESTABLISHED BY NCDOT FOR MONUMENT "560059 BL3"
WITH NAD 83/NSRS 2007 STATE PLANE GRID COORDINATES OF
NORTHING: 777723.6488(ft) EASTING: 913204.2501(ft)
ELEVATION: 2027.94(ft)
THE AVERAGE COMBINED GRID FACTOR USED ON THIS PROJECT (GROUND TO GRID) IS: 1.00016562
THE N.C. LAMBERT GRID BEARING AND LOCALIZED HORIZONTAL GROUND DISTANCE FROM "560059 BL3" TO -L- STATION 13+25.00 IS S 11°21'45" E 119.41'
ALL LINEAR DIMENSIONS ARE LOCALIZED HORIZONTAL DISTANCES
VERTICAL DATUM USED IS NAVD 88

-DR1- HORIZONTAL CURVE DATA

PI Sta 10+34.11	PI Sta 10+75.16
Δ = 77° 34' 42.6" (LT)	Δ = 30° 30' 11.6" (RT)
D = 190° 59' 09.4"	D = 63° 39' 43.1"
L = 40.62'	L = 47.91'
T = 24.11'	T = 24.54'
R = 30.00'	R = 90.00'

-L- HORIZONTAL CURVE DATA

PI Sta 12+41.45	PI Sta 16+83.44
Δ = 46° 32' 01.9" (RT)	Δ = 37° 25' 41.1" (LT)
D = 24° 45' 00.0"	D = 23° 52' 23.7"
L = 188.02'	L = 156.78'
T = 99.54'	T = 81.30'
R = 231.50'	R = 240.00'
	SE = 0.04
	R0 = 65'

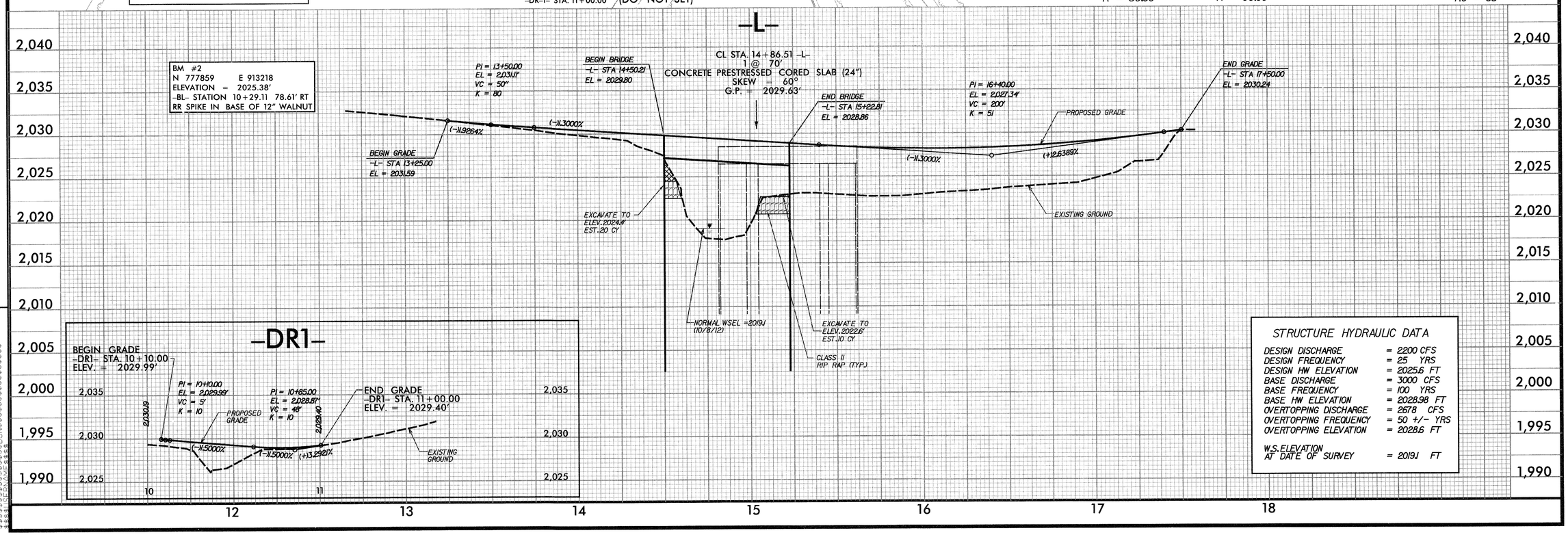

STRUCTURE HYDRAULIC DATA

DESIGN DISCHARGE	= 2200 CFS
DESIGN FREQUENCY	= 25 YRS
DESIGN HW ELEVATION	= 2025.6 FT
BASE DISCHARGE	= 3000 CFS
BASE FREQUENCY	= 100 YRS
BASE HW ELEVATION	= 2028.98 FT
OVERTOPPING DISCHARGE	= 2678 CFS
OVERTOPPING FREQUENCY	= 50 +/- YRS
OVERTOPPING ELEVATION	= 2028.6 FT
W.S. ELEVATION AT DATE OF SURVEY	= 2019.1 FT

REVISIONS

8/17/99

SYSTIME$$$$ CDN$$$$ CELL$$$$ FRAME$$$$

STATE OF NORTH CAROLINA
DIVISION OF HIGHWAYS

TRANSPORTATION MANAGEMENT PLAN

MADISON COUNTY

DIVISION 13

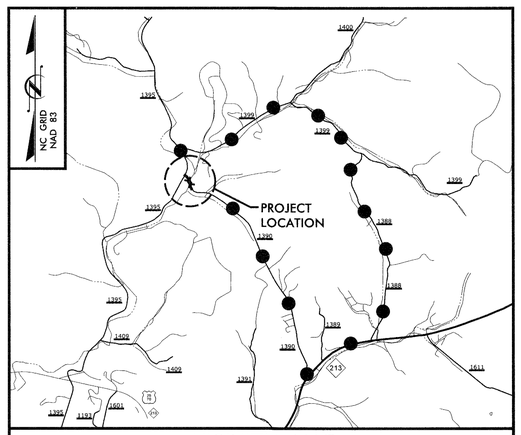

DETOUR ROUTE

LOCATION: BRIDGE NO. 59 OVER WALNUT CREEK ON SR 1390 (FISHER LANE)

INDEX OF SHEETS

SHEET NO.	TITLE
TMP-1	TITLE SHEET, LEGEND AND INDEX OF SHEETS
TMP-1A	LIST OF APPLICABLE ROADWAY STANDARD DRAWINGS, GENERAL NOTES, AND TRANSPORTATION OPERATIONS.
TMP-2	TEMPORARY TRAFFIC CONTROL DETAIL, PHASING NOTES OFF SITE DETOUR SIGNING AND ROAD CLOSURE
SD-1	SPECIAL SIGN DESIGN
PM-1	PAVEMENT MARKING PLAN

LEGEND

GENERAL

- DIRECTION OF TRAFFIC FLOW
- EXIST. PVMT.
- NORTH ARROW
- PROPOSED PVMT.
- WORK AREA

TRAFFIC CONTROL DEVICES

- BARRICADE (TYPE III)

TEMPORARY SIGNING

- STATIONARY SIGN

SHEET NO.
TMP-1

TIP PROJECT: BD-5113F

WORK ZONE SAFETY & MOBILITY
"from the MOUNTAINS to the COAST"

N.C.D.O.T. WORK ZONE TRAFFIC CONTROL
1580 MAIL SERVICE CENTER (MSC) RALEIGH, NC 27699-1580
1020 BIRCH RIDGE DRIVE, RALEIGH, NC 27610 (DELIVERY)
PHONE: (919) 250-4094 FAX: (919) 250-4098

J. S. BOURNE, P.E. — STATE TRAFFIC MANAGEMENT ENGINEER
LLOYD D.BROWN, P.E. — TRAFFIC CONTROL PROJECT ENGINEER
AARON C. CARVER, P.E. — TRAFFIC CONTROL PROJECT DESIGN ENGINEER
AARON C. CARVER, P.E. — TRAFFIC CONTROL DESIGN ENGINEER

DIVISION OF HIGHWAYS · STATE OF NORTH CAROLINA · DEPARTMENT OF TRANSPORTATION · WORK ZONE TRAFFIC CONTROL

V&M Vaughn & Melton
Consulting Engineers
Asheville, North Carolina 828-253-2796
Charlotte, North Carolina 704-357-0488

Copyright © 2006 Vaughn & Melton, Inc.
All Rights Reserved

PROJECT ENGINEER: LLOYD D. BROWN, P.E.
DESIGN ENGINEER: AARON C CARVER, P.E.

APPROVED:
DATE: January 13, 2014

SEAL
NORTH CAROLINA PROFESSIONAL SEAL 20119 ENGINEER LLOYD D. BROWN

$$$$SYSTIME$$$$
$$$$SYSNAME$$$$
$$$$DGNNAME$$$$
$$$$USERNAME$$$$

ROADWAY STANDARD DRAWINGS

THE FOLLOWING ROADWAY STANDARDS AS SHOWN IN "ROADWAY STANDARD DRAWINGS" - PROJECT SERVICES UNIT - N.C. DEPARTMENT OF TRANSPORTATION - RALEIGH, N.C., DATED JANUARY 2012 ARE APPLICABLE TO THIS PROJECT AND BY REFERENCE HEREBY ARE CONSIDERED A PART OF THESE PLANS:

STD. NO.	TITLE
1101.03	TEMPORARY ROAD CLOSURES
1101.05	WORK ZONE VEHICLE ACCESSES
1101.11	TRAFFIC CONTROL DESIGN TABLES
1110.01	STATIONARY WORK ZONE SIGNS
1110.02	PORTABLE WORK ZONE SIGNS
1145.01	BARRICADES

TRANSPORTATION OPERATIONS

CONSTRUCTION

REMOVE AND REPLACE EXISTING STRUCTURE AND APPROACHES ALONG THE EXISTING ROADWAY ALIGNMENT AS SHOWN IN THE CONSTRUCTION PLANS.

TMP DESIGN PARAMETERS

TRAFFIC WILL BE DETOURED OFF-SITE DURING THE CONSTRUCTION PERIOD.

THE OFF-SITE DETOUR WILL INCLUDE NC 213, SR 1388, SR 1399 AND SR 1395 (SEE SHEET TMP-2).

GENERAL NOTES

CHANGES MAY BE REQUIRED WHEN PHYSICAL DIMENSIONS IN THE DETAIL DRAWINGS, STANDARD DETAILS AND ROADWAY DETAILS ARE NOT ATTAINABLE TO MEET FIELD CONDITIONS, OR RESULT IN DUPLICATE, OR UNDESIRED OVERLAPPING OF DEVICES. MODIFICATION MAY INCLUDE: MOVING, SUPPLEMENTING, COVERING OR REMOVAL OF DEVICES, AS DIRECTED BY THE ENGINEER.

THE FOLLOWING GENERAL NOTES APPLY AT ALL TIMES FOR THE DURATION OF THE CONSTRUCTION PROJECT, EXCEPT WHEN OTHERWISE NOTED IN THE PLAN, OR DIRECTED BY THE ENGINEER.

TRAFFIC PATTERN ALTERATIONS

A) NOTIFY THE ENGINEER TWENTY ONE (21) CALENDAR DAYS PRIOR TO ANY TRAFFIC PATTERN ALTERATION.

SIGNING

B) PROVIDE PERMANENT SIGNING.

C) PROVIDE SIGNING AND DEVICES REQUIRED TO CLOSE THE ROAD ACCORDING TO THE ROADWAY STANDARD DRAWINGS AND TRAFFIC CONTROL PLANS.

PROVIDE SIGNING REQUIRED FOR THE OFF-SITE DETOUR ROUTE AS SHOWN IN THE TRAFFIC CONTROL PLANS.

D) COVER OR REMOVE ALL SIGNS AND DEVICES REQUIRED TO CLOSE THE ROAD WHEN ROAD CLOSURE IS NOT IN OPERATION.

COVER OR REMOVE ALL SIGNS REQUIRED FOR THE OFF-SITE DETOUR WHEN THE DETOUR IS NOT IN OPERATION.

E) ENSURE ALL NECESSARY SIGNING IS IN PLACE PRIOR TO ALTERING ANY TRAFFIC PATTERN.

TRAFFIC CONTROL DEVICES

F) PLACE TYPE III BARRICADES WITH "ROAD CLOSED" SIGN R-11-2 ATTACHED OF SUFFICIENT LENGTH TO CLOSE ENTIRE ROADWAY.

PAVEMENT MARKINGS AND MARKERS

G) INSTALL PAVEMENT MARKINGS (PAINT) ON THE FINAL SURFACE OF THE ENTIRE PROJECT.

H) TIE PROPOSED PAVEMENT MARKING LINES TO EXISTING PAVEMENT MARKING LINES.

LOCAL NOTES

1. EMERGENCY VEHICLE ACCESS MUST BE MAINTAINED AT ALL TIMES
2. NOTIFY MADISON COUNTY EMERGENCY SERVICES AND PUBLIC SCHOOLS AT LEAST 30 DAY PRIOR TO ROAD CLOSURE.

Vaughn & Melton
Consulting Engineers
Asheville, North Carolina 828·253·2796
Charlotte, North Carolina 704·357·0488
Tri-Cities, Tennessee 423·467·8401
Knoxville, Tennessee 865·546·5800
Middlesboro, Kentucky 606·248·6600
Spartanburg, South Carolina 864·574·4775

Copyright © 2006 Vaughn & Melton, Inc. All Rights Reserved

APPROVED: [signature] DATE: 1/13/2014

SEAL

NORTH CAROLINA PROFESSIONAL SEAL 20119 ENGINEER LLOYD D. BROWN

DIVISION OF HIGHWAYS · STATE OF NORTH CAROLINA · DEPARTMENT OF TRANSPORTATION · WORK ZONE TRAFFIC CONTROL

ROADWAY STANDARD DRAWINGS, MANAGEMENT STRATEGIES, AND GENERAL NOTES

$$$$SYSTIME$$$$
$$$$$$$$DGN$$$$$$$$$$$$$$$$$$
$$$$USERNAME$$$$

PROJ. REFERENCE NO.	SHEET NO.
BD-5113F	TMP-2

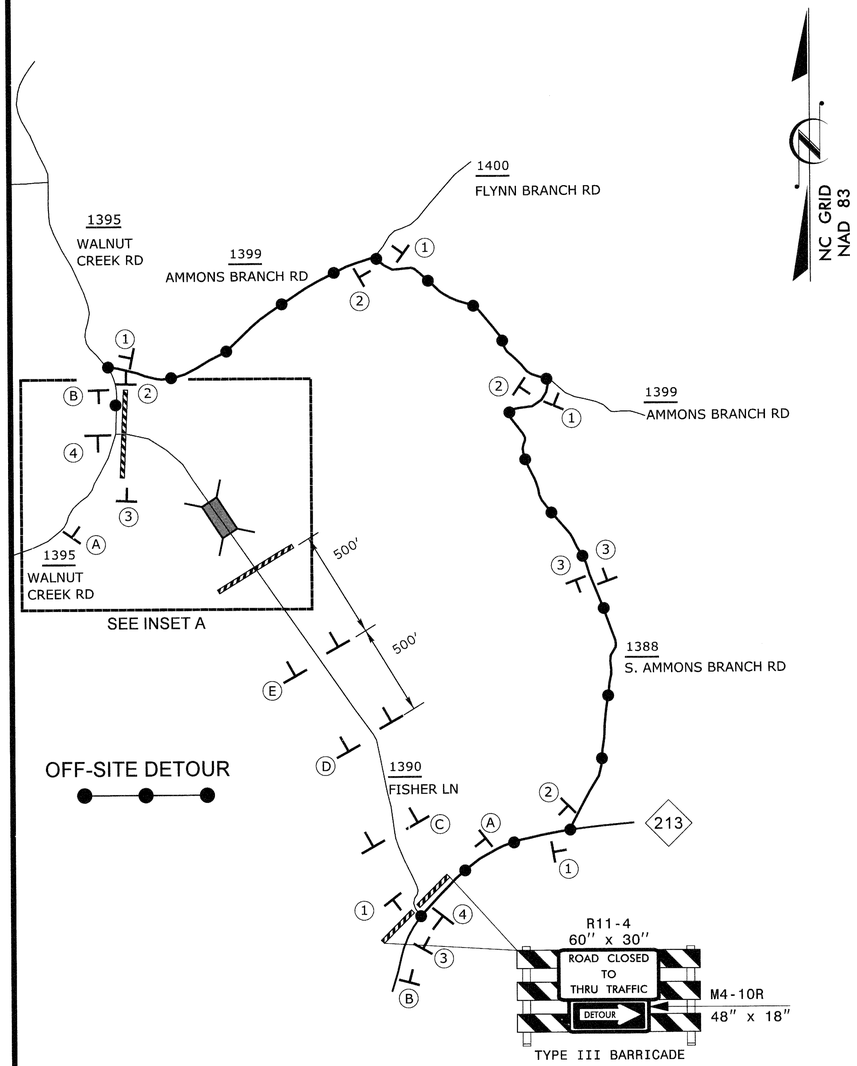

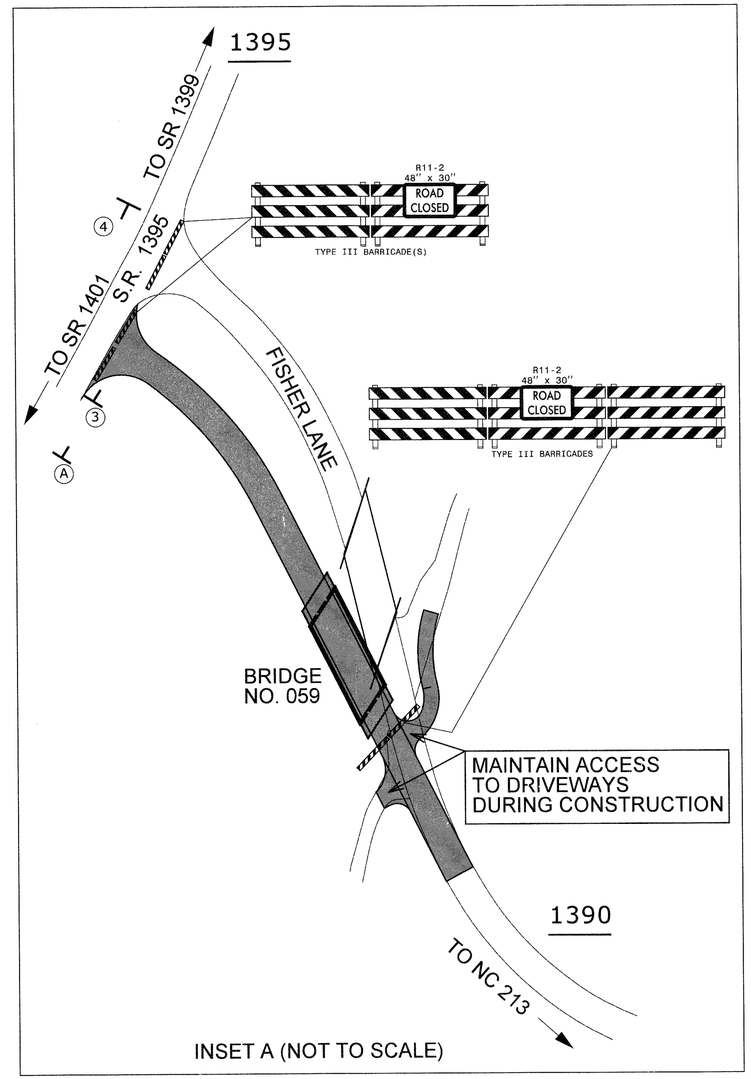

INSET A (NOT TO SCALE)

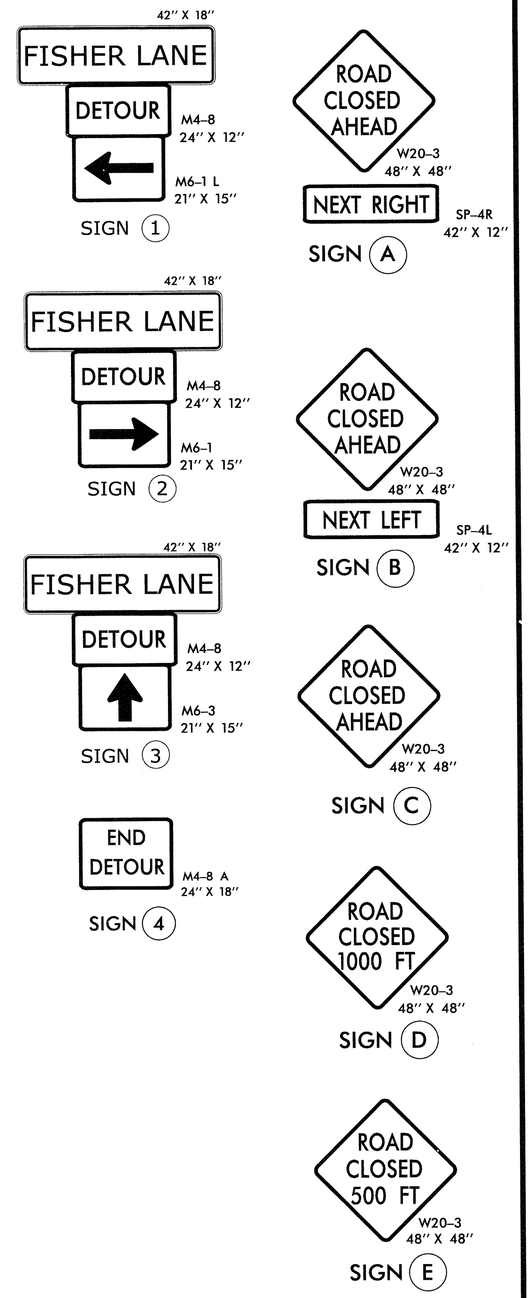

NOTES:

- ALL DETOUR SIGN LOCATIONS ARE APPROXIMATE.
- ALL DETOUR SIGNS ARE BLACK ON ORANGE UNLESS OTHERWISE NOTED.
- TRAFFIC CONTROL DEVICES (A) THROUGH (E) SHALL BE INSTALLED ACCORDING TO ROADWAY STANDARD DRAWING 1101.03, SHEET 1 OF 9.
- TRAFFIC CONTROL DEVICES (1) THROUGH (4) SHALL BE INSTALLED AS PER ENGINEER'S INSTRUCTIONS, AND AS SHOWN HEREON.

* SEE ROADWAY STANDARD DRAWING NO. 1101.03, SHEET 1 OF 9 AND 2 OF 9, FOR ADDITIONAL WORK ZONE SIGNS.

PHASING

STEP 1: - INSTALL OFF-SITE DETOUR ROUTE SIGN ASSEMBLIES FOR THE CLOSING OF SR 1390 (FISHER LANE, -L-).

- USING ROADWAY STANDARD DRAWING NO. 1101.03, SHEETS 1 OF 9 AND 2 OF 9, CLOSE SR 1390 (FISHER LANE, -L-) TO THRU TRAFFIC.

STEP 2: - REMOVE THE EXISTING STRUCTURE AND CONSTRUCT THE PROPOSED STRUCTURE AND ROADWAY UP TO AND INCLUDING THE FINAL LAYER OF SURFACE COURSE AND PLACE FINAL PAVEMENT MARKINGS ON 1390 (FISHER LANE, -L-) FROM STATION 13+25 +/- -L- TO STATION 17+60 +/- -L-. (SEE CONSTRUCTION PLANS).

STEP 3: - REMOVE ALL TRAFFIC CONTROL DEVICES, SIGNING AND DETOUR ROUTE SIGNING.

- OPEN TO FINAL TRAFFIC PATTERN.

$$$$$$SYSTIME$$$$
$$$$$$DGN$$$$$$$$$$$$
$$$$$$USERNAME$$$$$$

V&M
Vaughn & Melton
Consulting Engineers
Asheville, North Carolina 828-253-2796
Charlotte, North Carolina 704-357-0488
Tri-Cities, Tennessee 423-467-8401
Knoxville, Tennessee 865-546-5800
Middlesboro, Kentucky 606-248-6600
Spartanburg, South Carolina 864-574-4775
Copyright © 2006 Vaughn & Melton, Inc.
All Rights Reserved

APPROVED: DATE: 1/13/2014

SEAL

NORTH CAROLINA PROFESSIONAL SEAL 20119 ENGINEER LLOYD D. BROWN

DIVISION OF HIGHWAYS
STATE OF NORTH CAROLINA
DEPARTMENT OF TRANSPORTATION
WORK ZONE TRAFFIC CONTROL

TEMPORARY TRAFFIC CONTROL DETAIL, PHASING NOTES, OFF SITE DETOUR SIGNING AND ROAD CLOSURE

PROJ. REFERENCE NO.	SHEET NO.
BD-5113F	SD-1

SIGN NUMR: FISHER LANE
TYPE: D Ground
QUANTITY: 1

BACKG. COLOR: Orange
COPY COLOR: RGB(0,0,0)

DESIGN BY: ACC
PROJECT ID: ID

CHK BY: CHECKED
DIV: DIV

STD #: STD
DATE: June 17,2013

SIGN WIDTH: 3'-6"
HEIGHT: 1'-6"
TOTAL AREA: 5.3 Sq.Ft.

MAT'L: 0.063 in.(1.6 mm) ALUMINUM

BORDER TYPE: FLUSH
RECESS: 0.47"
WIDTH: 0.63"
RADII: 1.5"

NO. Z BARS:
LENGTH: in.

SYMBOL	X	Y	WID	HT

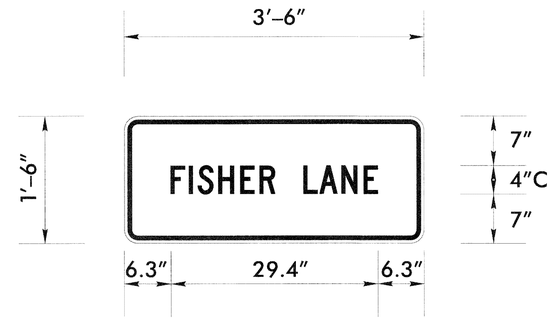

BORDER
R=1.5"
TH=0.63"
IN=0.47"

Panel Style: construction_guide.ssi
M.U.T.C.D.: 2009 Edition

USE NOTES: 1,3,4,6

1. Legend and border shall be direct applied encapsulated lens reflective sheeting.
2. Legend and border shall be direct applied enclosed lens reflective sheeting.
3. Shields shall be encapsulated lens reflective sheeting on 0.8mm aluminum and demountable.
4. Background shall be encapsulated lens reflective sheeting.
5. Background shall be enclosed lens reflective sheeting.
6. Center arrows vertically on sign.

Letter spacings are to start of next letter

	F	I	S	H	E	R		L	A	N	E		Series/Size Text Length
6.3	2.6	1.2	2.9	3.1	2.7	2.2	4	2.3	3.1	3.1	2	6.3	C 2000/4
													29.4

Spacing Factor is 1 unless specified otherwise

FILENAME: GS40_ENGL

APPROVED: DATE: 1/3/2014

SEAL

NORTH CAROLINA PROFESSIONAL SEAL 20119 ENGINEER LLOYD D. BROWN

DIVISION OF HIGHWAYS STATE OF NORTH CAROLINA DEPARTMENT OF TRANSPORTATION WORK ZONE TRAFFIC CONTROL

SPECIAL SIGN DESIGN

$$$$SYSTIME$$$$
$$$$USERNAME$$$$

PROJ. REFERENCE NO.	SHEET NO.
BD-5113F	PM-1

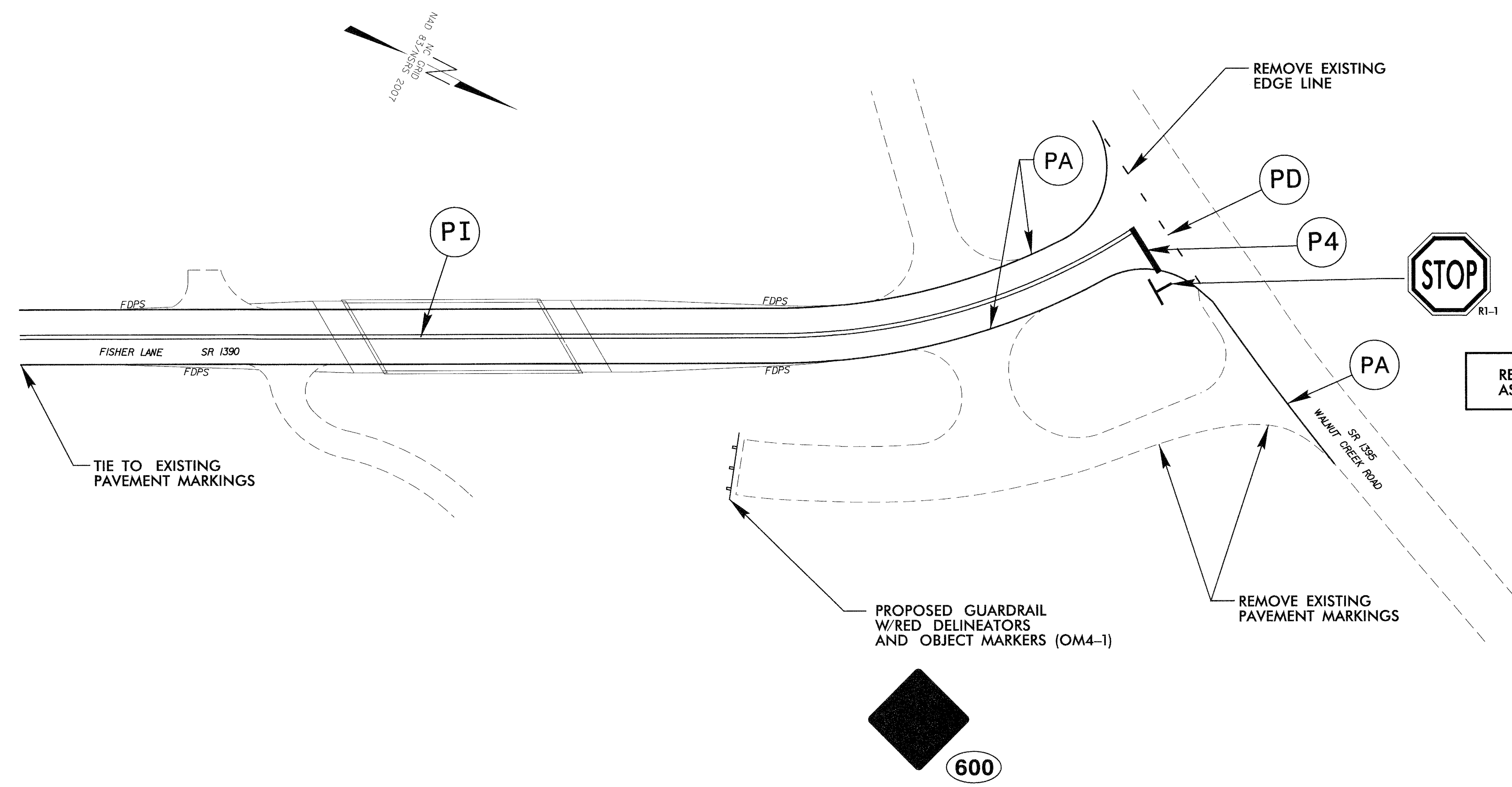

RELOCATE EXISTING SIGNS AS DIRECTED BY THE ENGINEER

END OF ROAD MARKERS

(600) **QUANTITY REQ'D 3**

18 x 18
OM4-3

ONE "U" POST PER SIGN

FINAL PAVEMENT MARKING SCHEDULE

SYMBOL	DESCRIPTION	QUANTITY BREAKDOWN	PAY ITEM	TOTAL QUANTITY
		PAVEMENT MARKING LINES		
PA	WHITE SOLID EDGE LINE	955 FT	PAINT (4")	1910 FT
PD	2' WHITE MINISKIP	14 FT	PAINT (4")	28 FT
PI	YELLOW DOUBLE CENTER LINE	830 FT	PAINT (4")	1660 FT
P4	WHITE STOP BAR	18 FT	PAINT (24")	36 FT

SCALE: 1" = 30'

Vaughn & Melton
Consulting Engineers
Asheville, North Carolina 828·253·2796
Charlotte, North Carolina 704·357·0488
Tri-Cities, Tennessee 423·467·8401
Knoxville, Tennessee 865·546·5800
Middlesboro, Kentucky 606·248·6600
Spartanburg, South Carolina 864·574·4775

Copyright © 2006 Vaughn & Melton, Inc. All Rights Reserved

APPROVED: [signature] DATE: 1/13/2014

SEAL
NORTH CAROLINA PROFESSIONAL SEAL 20119 ENGINEER LLOYD D. BROWN

DIVISION OF HIGHWAYS STATE OF NORTH CAROLINA DEPARTMENT OF TRANSPORTATION WORK ZONE TRAFFIC CONTROL

TRAFFIC CONTROL
PAVEMENT MARKING
& SIGNING PLAN

$$$$$SYSTIME$$$$
$$$$$$$$DGN$$$$$$$$$$$$$$$
$$$$USERNAME$$$$

PROJECT REFERENCE NO.	SHEET NO.
BD-5113F	EC-1/CONST 4

THESE EROSION AND SEDIMENT CONTROL PLANS COMPLY WITH THE REGULATIONS SET FORTH BY THE NCG-010000 GENERAL CONSTRUCTION PERMIT EFFECTIVE AUGUST 3, 2011 ISSUED BY THE NORTH CAROLINA DEPARTMENT OF ENVIRONMENT AND NATURAL RESOURCES DIVISION OF WATER QUALITY.

EROSION CONTROL PLAN

V&M Vaughn & Melton Consulting Engineers
Asheville, North Carolina 828-253-2796
Charlotte, North Carolina 704-895-9051
Tri-Cities, Tennessee 423-467-8401
Knoxville, Tennessee 865-546-5800
Middlesboro, Kentucky 606-248-6600
Spartanburg, South Carolina 864-574-4775

Copyright 1994 Vaughn & Melton, Inc.

CLEARING AND GRUBBING
EROSION CONTROL FOR
CONSTRUCTION SHEET 4

Level III-A: Designer of Erosion and Sediment Control Plans

Garry L. Moore, P.L.S.
Date Issued: November 30, 2010
Date Expires: December 31, 2013
Certification Number: 235

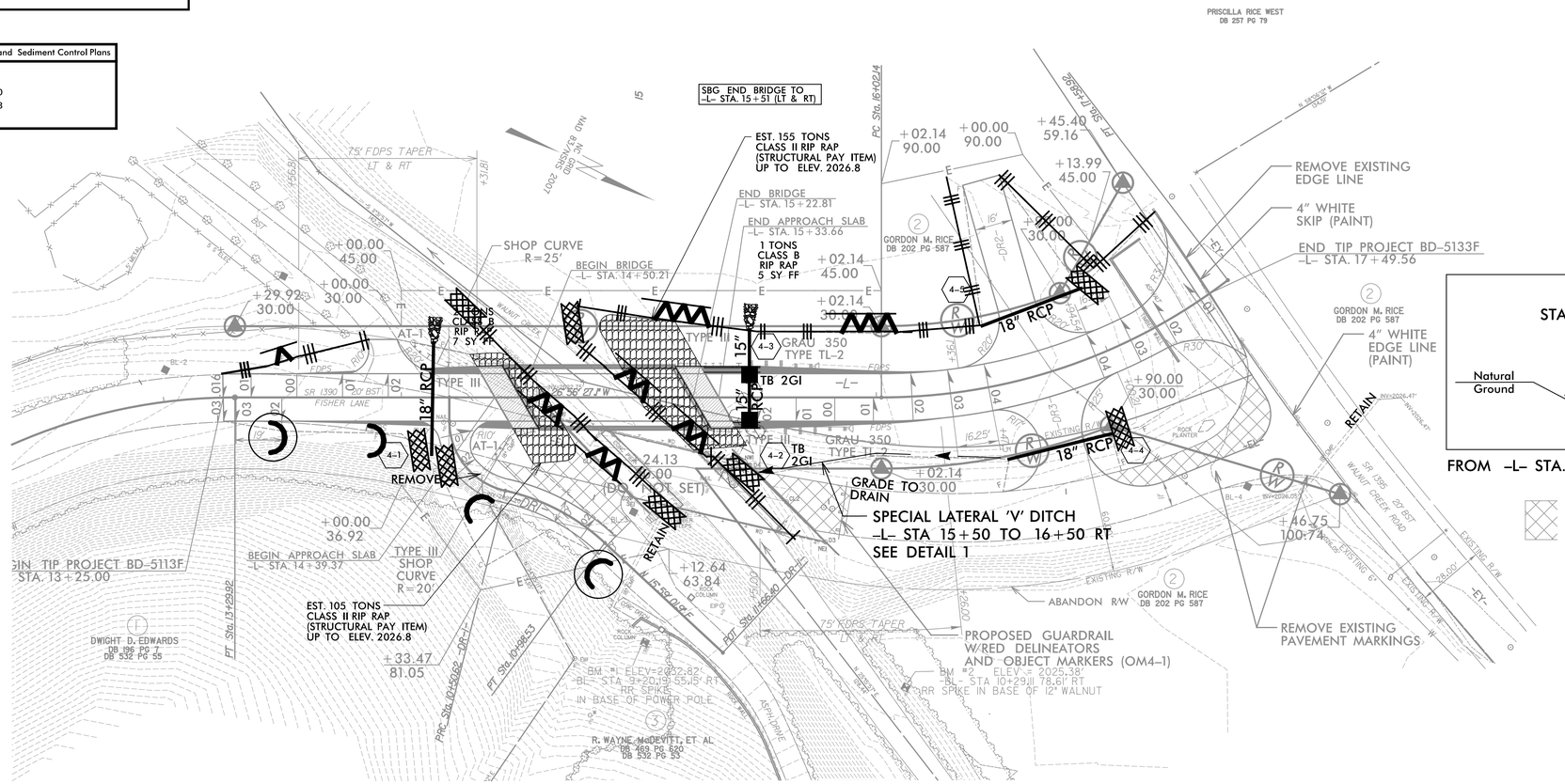

DETAIL 1
STANDARD 'V' DITCH
(Not to Scale)

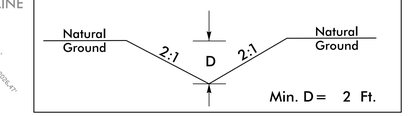

FROM -L- STA. 15+50 TO STA. 16+50 RT

Std. #	Description	Symbol
1605.01	Temporary Silt Fence	
1606.01	Special Sediment Fence	
1633.01	Temporary Rock Silt Check Type-A	
1633.01	Wattle / Coir Fiber Wattle with Polyacrylamide (PAM)	EW

NOTES: ANY DEVIATION FROM OPTIONS GIVEN WILL REQUIRE PRIOR APPROVAL BY ENGINEER.

ADDITIONAL EROSION CONTROL DEVICES MAY NEED TO BE INSTALLED AS DIRECTED BY THE ENGINEER.

ROADSIDE ENVIRONMENTAL UNIT
DEPARTMENT OF TRANSPORTATION
DIVISION OF HIGHWAYS
RALEIGH, N.C.

2012 STANDARD SPECIFICATIONS

PROJECT NO. BD-5113F
COUNTY MADISON
STATION: 14+81.09 -L-
REPLACES BRIDGE NO. 59

STATE OF NORTH CAROLINA
DEPARTMENT OF TRANSPORTATION
RALEIGH

BRIDGE #59 ON SR 1390
OVER WALNUT CREEK

REVISIONS						SHEET NO.
NO.	BY	DATE	NO.	BY	DATE	EC-1
1			3			TOTAL SHEETS
2			4			3

PROJECT REFERENCE NO.	SHEET NO.
BD-5113F	EC-2/CONST 4

THESE EROSION AND SEDIMENT CONTROL PLANS COMPLY WITH THE REGULATIONS SET FORTH BY THE NCG-010000 GENERAL CONSTRUCTION PERMIT EFFECTIVE AUGUST 3, 2011 ISSUED BY THE NORTH CAROLINA DEPARTMENT OF ENVIRONMENT AND NATURAL RESOURCES DIVISION OF WATER QUALITY.

EROSION CONTROL PLAN

PHASE 2

V&M Vaughn & Melton Consulting Engineers

Asheville, North Carolina 828-253-2796

Charlotte, North Carolina 704-895-9051
Tri-Cities, Tennessee 423-467-8401
Knoxville, Tennessee 865-546-5800
Middlesboro, Kentucky 606-248-6600
Spartanburg, South Carolina 864-574-4775

Copyright 1994 Vaughn & Melton, Inc.

Level III-A: Designer of Erosion and Sediment Control Plans

Garry L. Moore, P.L.S.
Date Issued: November 30, 2010
Date Expires: December 31, 2013
Certification Number: 235

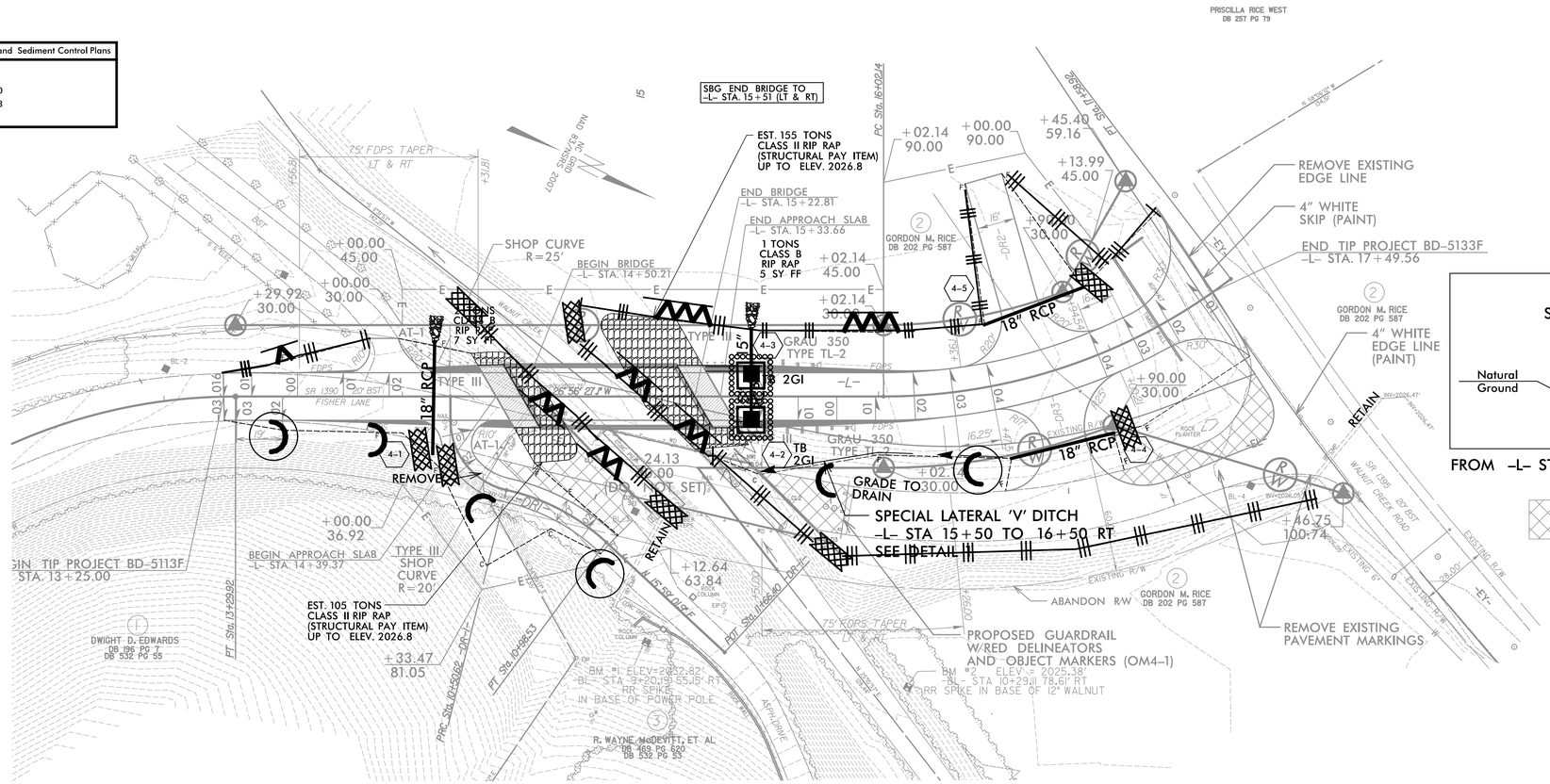

DETAIL 1
STANDARD 'V' DITCH
(Not to Scale)

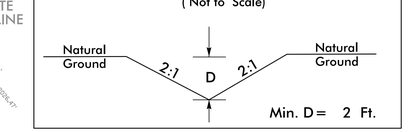

FROM -L- STA. 15+50 TO STA. 16+50 RT

Std. #	Description	Symbol
1605.01	Temporary Silt Fence	
1606.01	Special Sediment Fence	W
1632.03	Rock Inlet Sediment Trap Type C	
1633.01	Temporary Rock Silt Check Type-A	
1633.01	Wattle / Coir Fiber Wattle with Polyacrylamide (PAM)	EW

NOTES: ANY DEVIATION FROM OPTIONS GIVEN WILL REQUIRE PRIOR APPROVAL BY ENGINEER.

ADDITIONAL EROSION CONTROL DEVICES MAY NEED TO BE INSTALLED AS DIRECTED BY THE ENGINEER.

ROADSIDE ENVIRONMENTAL UNIT
DEPARTMENT OF TRANSPORTATION
DIVISION OF HIGHWAYS
RALEIGH, N.C.

2012 STANDARD SPECIFICATIONS

PROJECT NO. BD-5113F
COUNTY MADISON
STATION: 14+81.09 -L-
REPLACES BRIDGE NO. 59

STATE OF NORTH CAROLINA
DEPARTMENT OF TRANSPORTATION
RALEIGH

BRIDGE #59 ON SR 1390 OVER WALNUT CREEK

REVISIONS						SHEET NO.
NO.	BY	DATE	NO.	BY	DATE	EC-1
1			3			TOTAL SHEETS
2			4			3

PROJECT REFERENCE NO.	SHEET NO.
BD-5113F	EC-2A

DIVISION OF HIGHWAYS
STATE OF NORTH CAROLINA

SOIL STABILIZATION SUMMARY SHEET

MATTING FOR EROSION CONTROL

CONST SHEET NO.	LINE	FROM STATION	TO STATION	SIDE	ESTIMATE (SY)
4	L	13+25	14+50	RT	900
4	L	13+25	14+50	LT	320
4	L	15+00	17+45	RT	1405
4	L	15+00	17+45	LT	1065
4	L	13+25	14+25	RT	50
4	Y *DR-1*	10+20	10+98	RT	40
				SUBTOTAL	3780
MISCELLANEOUS MATTING TO BE INSTALLED AS DIRECTED BY THE ENGINEER					
				TOTAL	3780
				SAY	

PERMANENT SOIL REINFORCEMENT MAT

CONST SHEET NO.	LINE	FROM STATION	TO STATION	SIDE	ESTIMATE (SY)
				SUBTOTAL	
		ADDITIONAL PSRM TO BE INSTALLED			
				TOTAL	
				SAY	

PROJECT REFERENCE NO.	SHEET NO.
BD-5113F	EC-3
R/W SHEET NO.	
ROADWAY DESIGN ENGINEER	HYDRAULICS ENGINEER

STATE OF NORTH CAROLINA
DIVISION OF HIGHWAYS

SOIL STABILIZATION TIMEFRAMES

SITE DESCRIPTION	STABILIZATION TIME	TIMEFRAME EXCEPTIONS
PERIMETER DIKES, SWALES, DITCHES, AND SLOPES	7 DAYS	NONE
HIGH QUALITY WATER (HQW) ZONES	7 DAYS	NONE
SLOPES STEEPER THAN 3:1	7 DAYS	IF SLOPES ARE 10′ OR LESS IN LENGTH AND ARE NOT STEEPER THAN 2:1, 14 DAYS ARE ALLOWED.
SLOPES 3:1 OR FLATTER	14 DAYS	7 DAYS FOR SLOPES GREATER THAN 50′ IN LENGTH.
ALL OTHER AREAS WITH SLOPES FLATTER THAN 4:1	14 DAYS	NONE, EXCEPT FOR PERIMETERS AND HQW ZONES.

PROJECT REFERENCE NO.	SHEET NO.
BD-5113F	EC-4
R/W SHEET NO.	
ROADWAY DESIGN ENGINEER	HYDRAULICS ENGINEER

WATTLE WITH POLYACRYLAMIDE DETAIL

WATTLES WITH POLYACRYLAMIDE (PAM):

Description

Wattles are tubular products consisting of excelsior fibers encased in synthetic netting. Wattles are used on slopes or channels to intercept runoff and act as a velocity break. Wattles are to be placed at locations shown on the plans or as directed. Installation shall follow the detail provided in the plans and as directed. Work includes furnishing materials, installation of wattles, matting installation, PAM application, and removing wattles.

Materials

Wattle shall meet the following specifications:

100% Curled Wood(Excelsior) Fibers
Minimum Diameter – 12 in.
Minimum Density – 2.6 lb/ft3 +/- 10%
Net Material – Synthetic
Net Openings – 1 in. x 1 in.
Net Configuration – Totally Encased
Minimum Weight – 20 lb. +/- 10% per 10 ft. length

Anchors: Stakes shall be used as anchors.

Wooden Stakes:

Provide hardwood stakes a minimum of 2-ft. long with a 2 in. x 2 in. nominal square cross section. One end of the stake must be sharpened or beveled to facilitate driving down into the underlying soil.

Matting shall meet the requirements of section 1060-8 of the Standard Specifications, or shall meet specifications provided elsewhere in this contract.

Provide staples made of 0.125" diameter new steel wire formed into a u shape not less than 12" in length with a throat of 1" in width.

Polyacrylamide (PAM) shall be applied in powder form and shall be anionic or neutrally charged. Soil samples shall be obtained in areas where the wattles will be placed, and from offsite material used to construct roadway, and analyzed for the appropriate PAM flocculant to be utilized with each wattle.

Construction Methods

Wattles shall be secured to the soil by wire staples approximately every 1 linear foot and at the end of each section of wattle. A minimum of 4 stakes shall be installed on the downstream side of the wattle with a maximum spacing of 2 linear feet along the wattle, and according to the detail. Install a minimum of 2 stakes on the upstream side of the wattle according to the detail provided in the plans. Stakes shall be driven into the ground a minimum of 10 in. with no more than 2 in. projecting from the top of the wattle. Drive stakes at an angle according to the detail provided in the plans.

Install wattles to the top of the ditch according to the detail provided in the plans. Overlap adjoining sections of wattles a minimum of 6 in.

Installation of matting shall be in accordance with the detail provided in the plans, and in accordance with section 1631-3(B) of the Standard Specifications, or in accordance with specifications provided elsewhere in this contract.

Apply PAM over the lower center portion of the wattle where the water is going to flow over at a rate of 3.5 ounces per wattle. PAM applications shall be done during construction activities after every rainfall event that is equal to or exceeds 0.50 in.

The Contractor shall maintain the wattles until the project is accepted or until the wattles are removed, and shall remove and dispose of silt accumulations at the wattles when so directed in accordance with the requirements of Section 1630 of the Standard Specifications.

The quantity of wattle(s), wooden stakes, staples, matting and PAM as measured above will be paid for at contract price for "Lump Sum for Erosion Control". Such price and payment will be full compensation for all work covered by this provision, including but not limted to, furnishing all materials, placing and maintaining the wattle(s), and removal and disposal of silt accumulations and wattle.

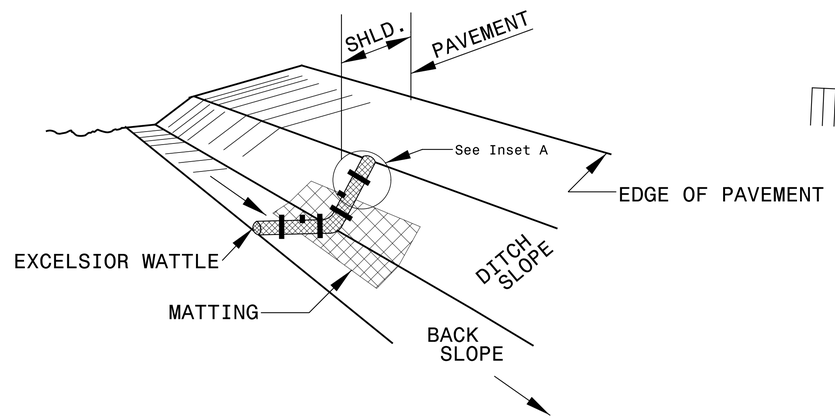

ISOMETRIC VIEW

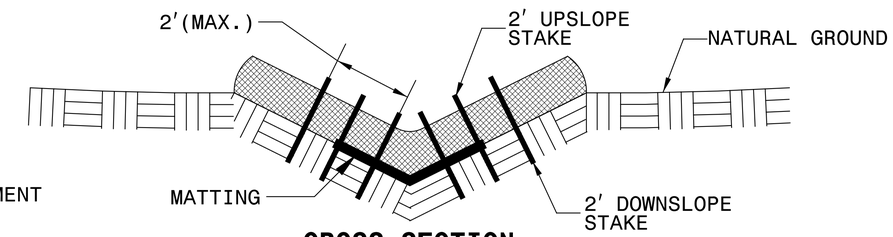

CROSS SECTION VEE DITCH

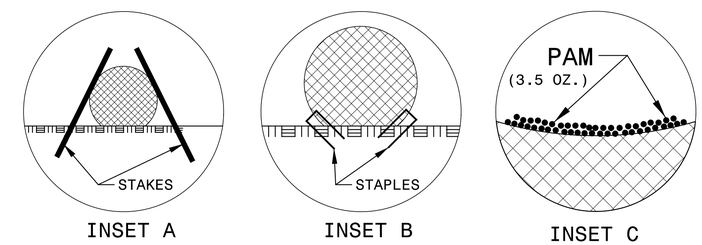

INSET A INSET B INSET C

NOTES:

USE MINIMUM 12 IN. DIAMETER EXCELSIOR WATTLE.

USE 2 FT. WOODEN STAKES WITH A 2 IN. BY 2 IN. CROSS SECTION.

ONLY INSTALL WATTLE(S) TO A HEIGHT IN DITCH SO FLOW WILL NOT WASH AROUND WATTLE AND SCOUR DITCH SLOPES AND AS DIRECTED.

INSTALL A MINIMUM OF 2 UPSLOPE STAKES AND 4 DOWNSLOPE STAKES AT AN ANGLE TO WEDGE WATTLE TO BOTTOM OF DITCH.

PROVIDE STAPLES MADE OF 0.125 IN. DIAMETER STEEL WIRE FORMED INTO A U SHAPE NOT LESS THAN 12" IN LENGTH.

INSTALL STAPLES APPROXIMATELY EVERY 1 LINEAR FOOT ON BOTH SIDES OF WATTLE AND AT EACH END TO SECURE IT TO THE SOIL.

INSTALL MATTING IN ACCORDANCE WITH SECTION 1631 OF THE STANDARD SPECIFICATIONS.

PRIOR TO POLYACRYLAMIDE (PAM) APPLICATION, OBTAIN A SOIL SAMPLE FROM PROJECT LOCATION, AND FROM OFFSITE MATERIAL, AND ANALYZE FOR APPROPRIATE PAM FLOCCULANT TO BE APPLIED TO EACH WATTLE.

INITIALLY APPLY 3.5 OUNCES OF ANIONIC OR NEUTRALLY CHARGED POLYACRYLAMIDE (PAM) OVER WATTLE WHERE WATER WILL FLOW AND AFTER EVERY RAINFALL EVENT THAT IS EQUAL TO OR EXCEEDS 0.50 IN.

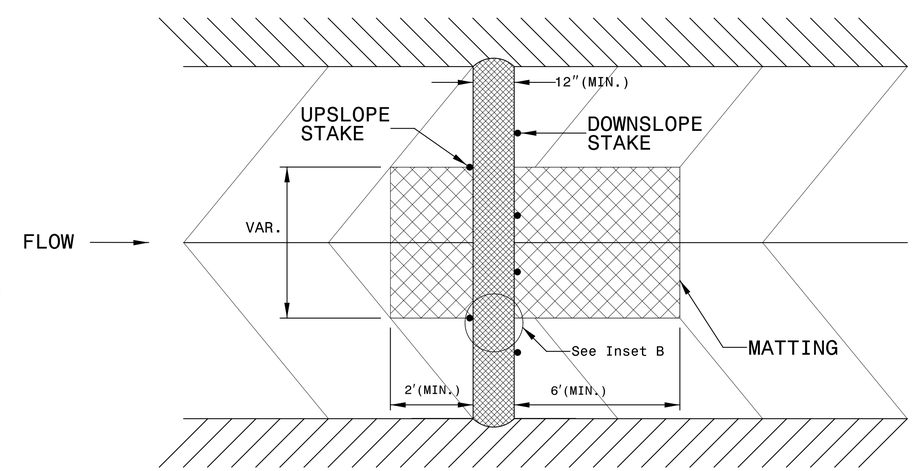

TOP VIEW

PROJECT REFERENCE NO.	SHEET NO.
BD-5113F	EC-5
R/W SHEET NO.	
ROADWAY DESIGN ENGINEER	HYDRAULICS ENGINEER

WATTLE BARRIER DETAIL

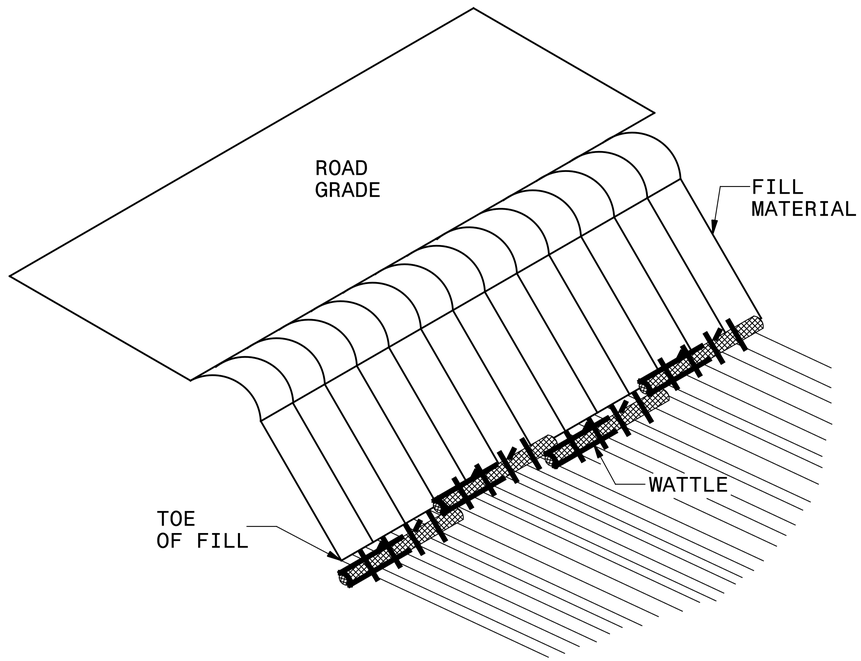

ISOMETRIC VIEW

NOTES:

USE MINIMUM 12 IN. DIAMETER EXCELSIOR WATTLE AND LENGTH OF 10 FT.

EXCAVATE A 1 TO 2 INCH TRENCH FOR WATTLE TO BE PLACED.

DO NOT PLACE WATTLES ON TOE OF SLOPE.

USE 2 FT. WOODEN STAKES WITH A 2 IN. BY 2 IN. NOMINAL CROSS SECTION.

INSTALL A MINIMUM OF 2 UPSLOPE STAKES AND 4 DOWNSLOPE STAKES AT AN ANGLE TO WEDGE WATTLE TO GROUND.

PROVIDE STAPLES MADE OF 0.125 IN. DIAMETER STEEL WIRE FORMED INTO A U SHAPE NOT LESS THAN 12″ IN LENGTH.

INSTALL STAPLES APPROXIMATELY EVERY 1 LINEAR FOOT ON BOTH SIDES OF WATTLE AND AT EACH END TO SECURE IT TO THE SOIL.

FOR BREAKS ALONG LARGE SLOPES, USE MAXIMUM SPACING OF 20 FT.

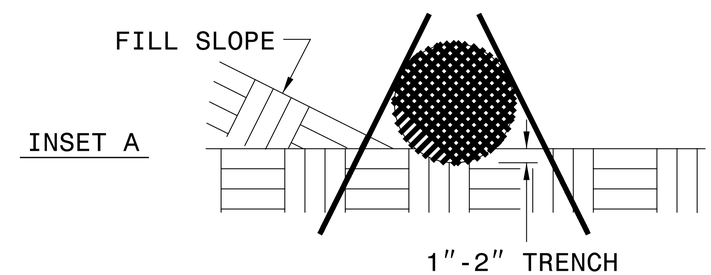

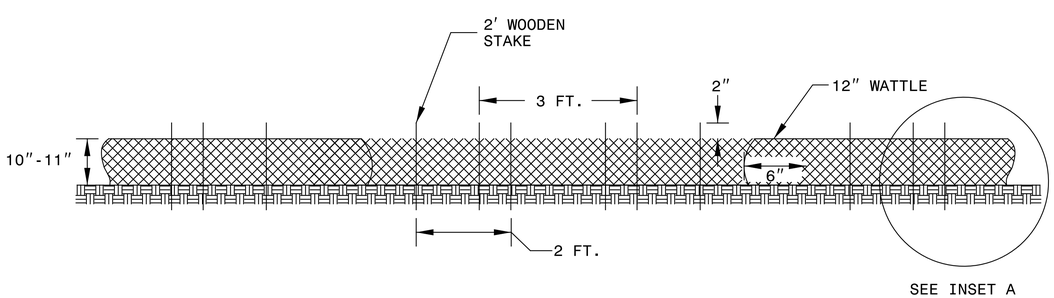

FRONT VIEW

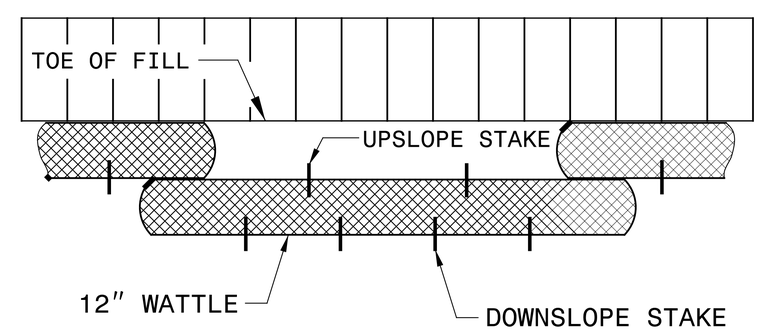

TOP VIEW

COMPUTED BY: NVA	DATE: 10-22-13
CHECKED BY: RMS	DATE: 10-22-13

PROJECT REFERENCE NO.	SHEET NO.
BD-5113F	X-0

DIVISION OF HIGHWAYS
STATE OF NORTH CAROLINA

CROSS SECTION SUMMARY

IN CUBIC YARDS

NORTH CAROLINA PROFESSIONAL SEAL 030453 ENGINEER AARON C. CARTER 11/13/14

-L- LOCATION	UNCLASSIFIED EXCAVATION	EMBT
13+25	0	0
13+50	0	0
14+00	2	6
14+50	0	15
14+50.21 BEGIN BRIDGE	0	15
15+22.81 END BRIDGE	0	0
15+50	32	187
16+00	29	350
16+50	4	370
17+00	4	365
17+49.56	4	335

NOTE: EMBANKMENT COLUMN DOES NOT INCLUDE BACKFILL FOR UNDERCUT.

DR-1	UNCLASSIFIED EXCAVATION	EMBT
10+10	0	0
10+25	0	8
10+50	55	11
10+75	57	5
11+00	26	2

Approximate quantities only. Unclassified excavation, borrow excavation, fine grading, clearing and grubbing, and removal of existing pavement will be paid for at the contract lump sum price for "grading".

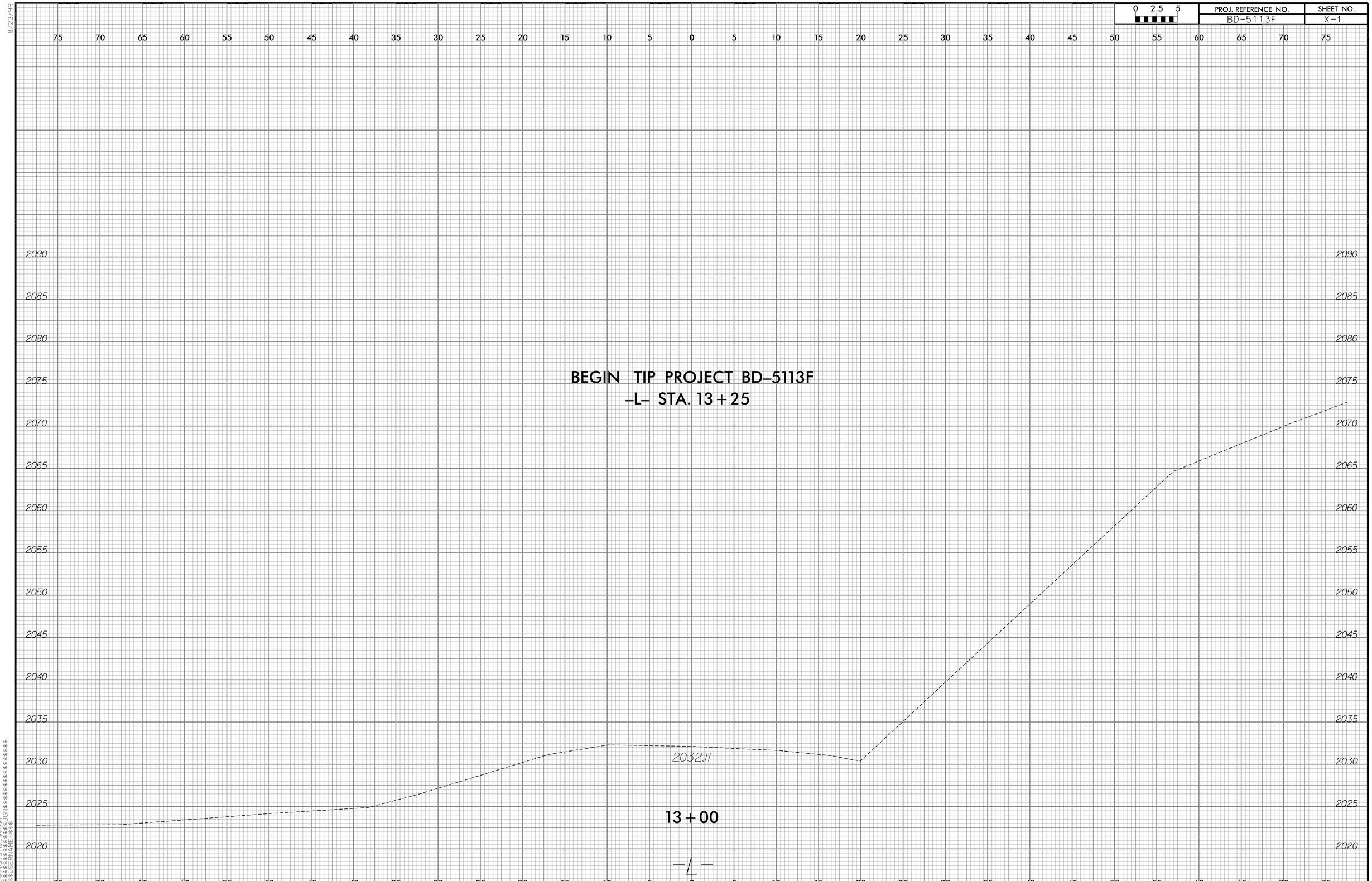

0 2.5 5
PROJ. REFERENCE NO.
BD-5113F
SHEET NO.
X-1
BEGIN TIP PROJECT BD-5113F
-L- STA. 13+25
2032.11
13+00
-L-

8/23/99

0 2.5 5	PROJ. REFERENCE NO.	SHEET NO.
	BD-5113F	X-2

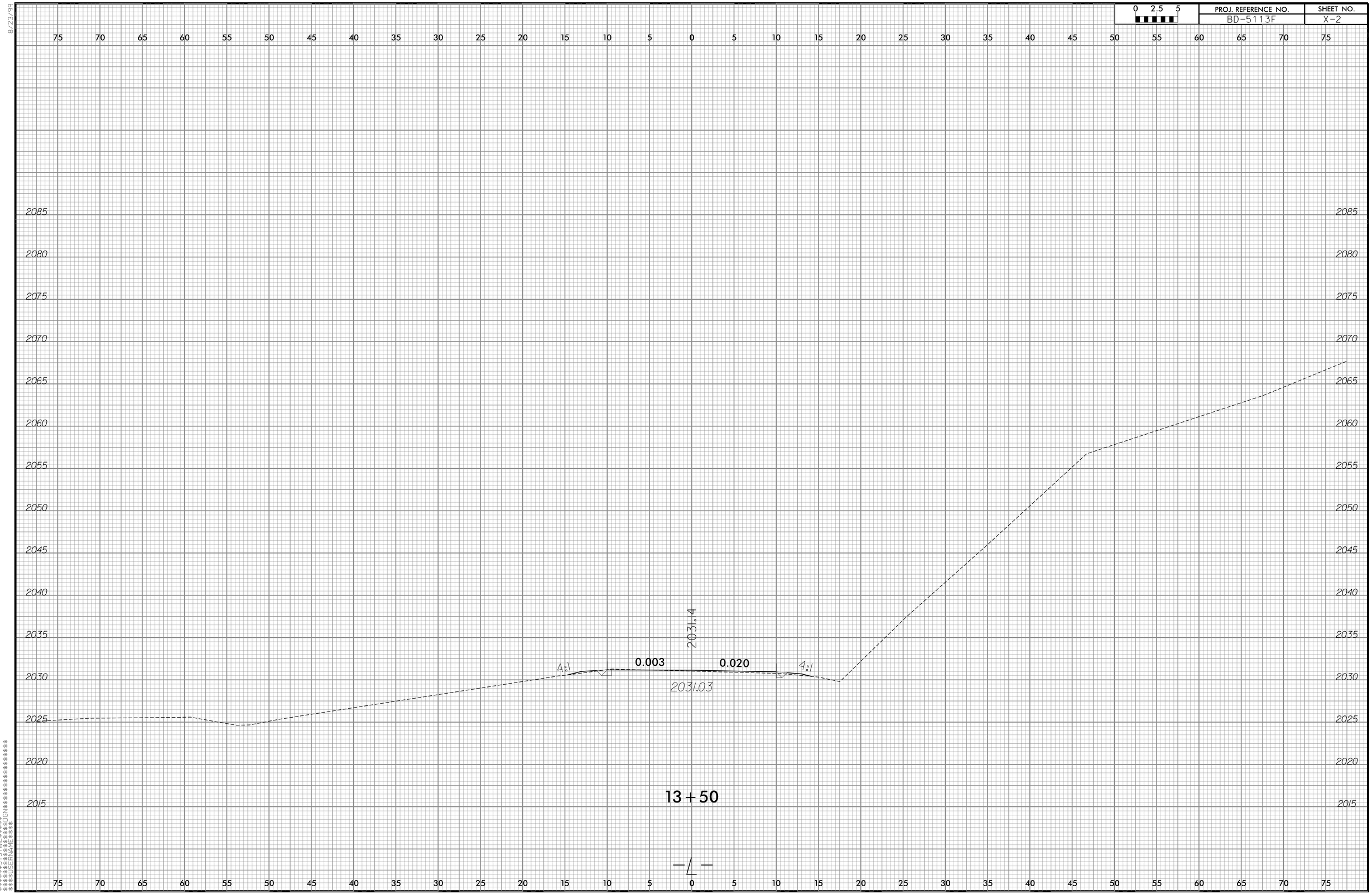

$$$$SYSTIME$$$$
$$$$DGN$$$$
$$$$DATE$$$$
$$$$USER$$$$

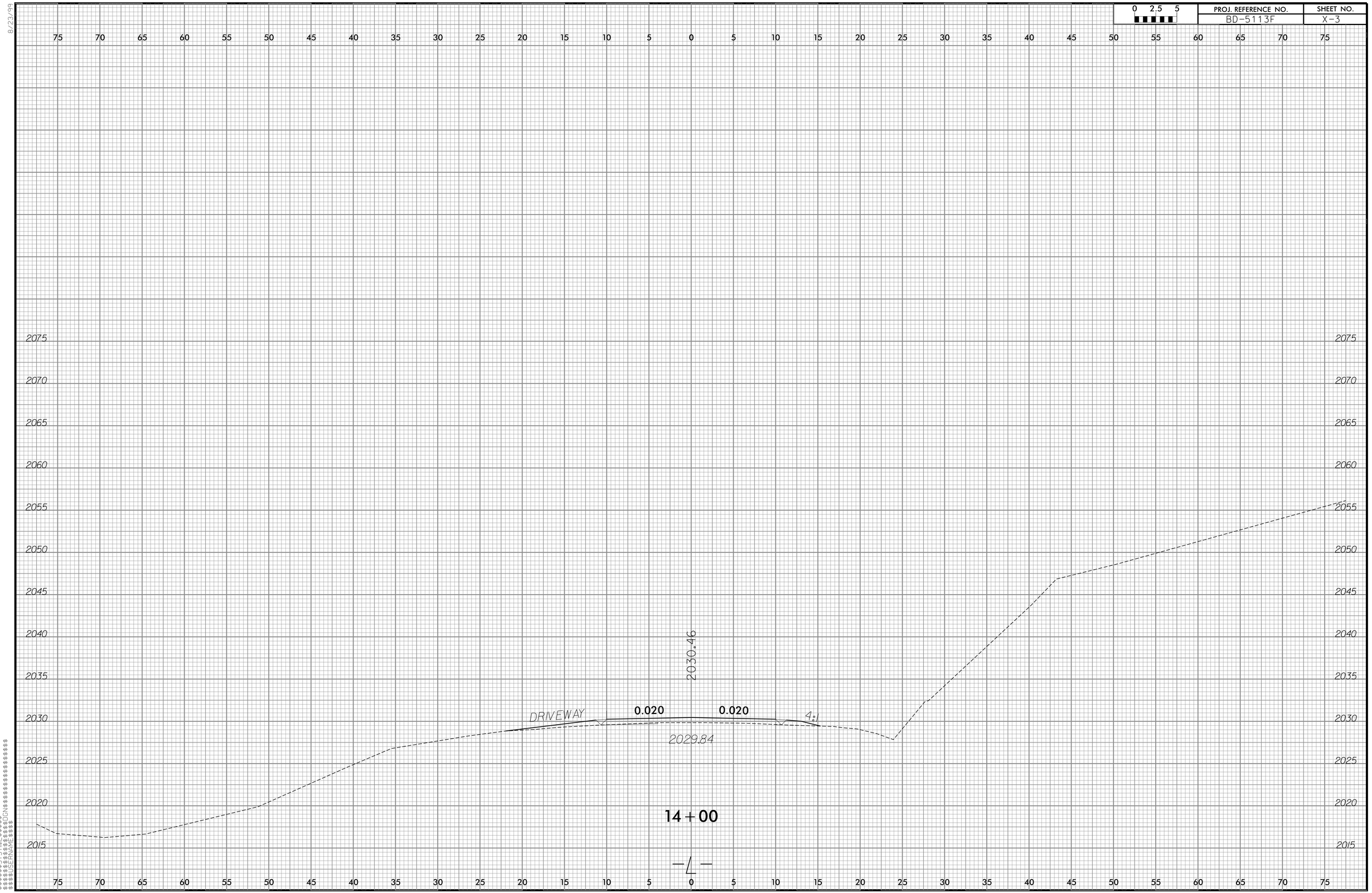

0 2.5 5
PROJ. REFERENCE NO.
BD-5113F
SHEET NO.
X-3
75 70 65 60 55 50 45 40 35 30 25 20 15 10 5 0 5 10 15 20 25 30 35 40 45 50 55 60 65 70 75
2075
2070
2065
2060
2055
2050
2045
2040
2035
2030
2025
2020
2015
2030.46
DRIVEWAY
0.020
0.020
4:1
2029.84
14+00
-L-

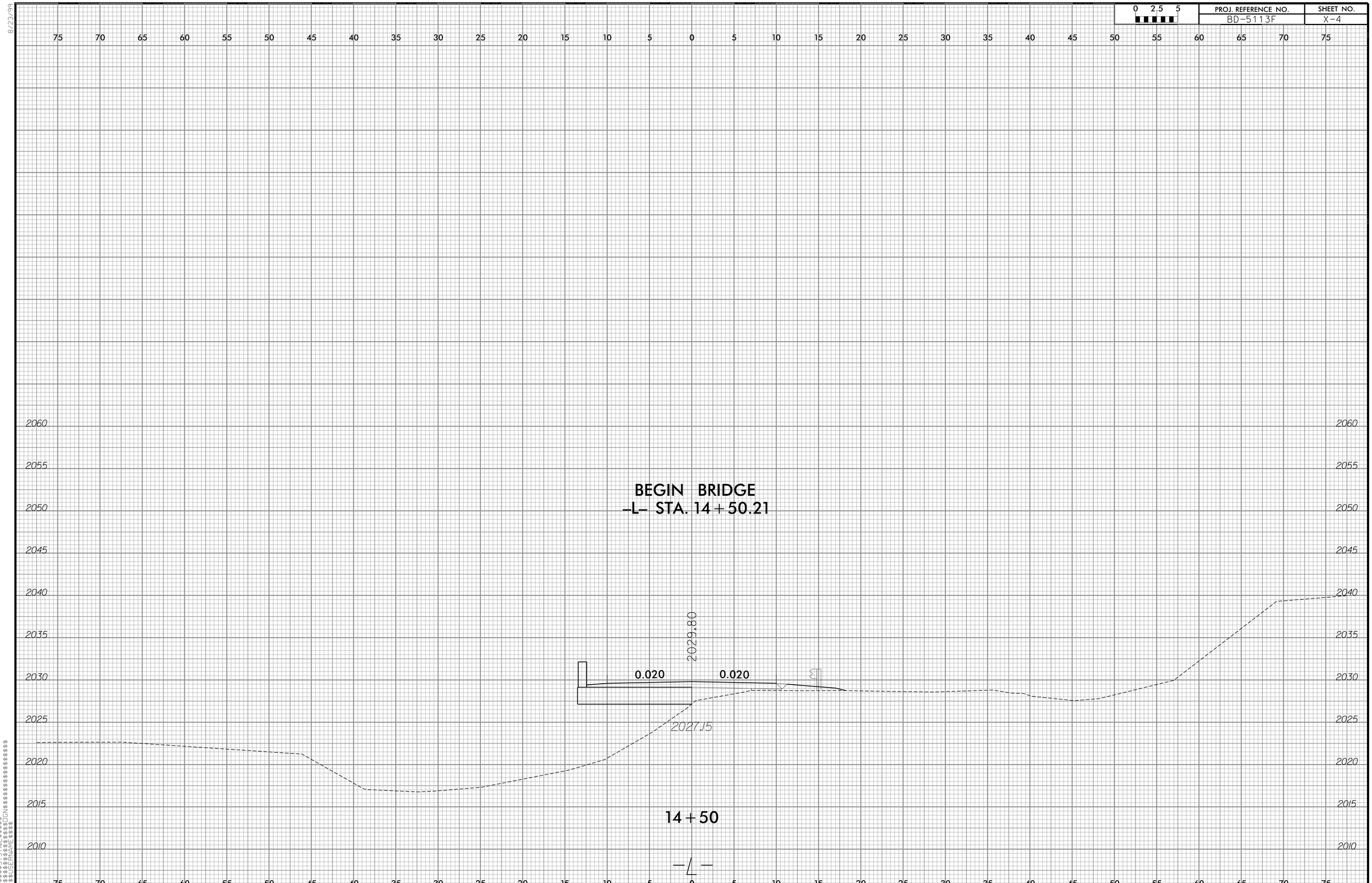

0 2.5 5
PROJ. REFERENCE NO.
BD-5113F
SHEET NO.
X-4
BEGIN BRIDGE
-L- STA. 14+50.21
2029.80
0.020
0.020
2027.15
14+50
-L-

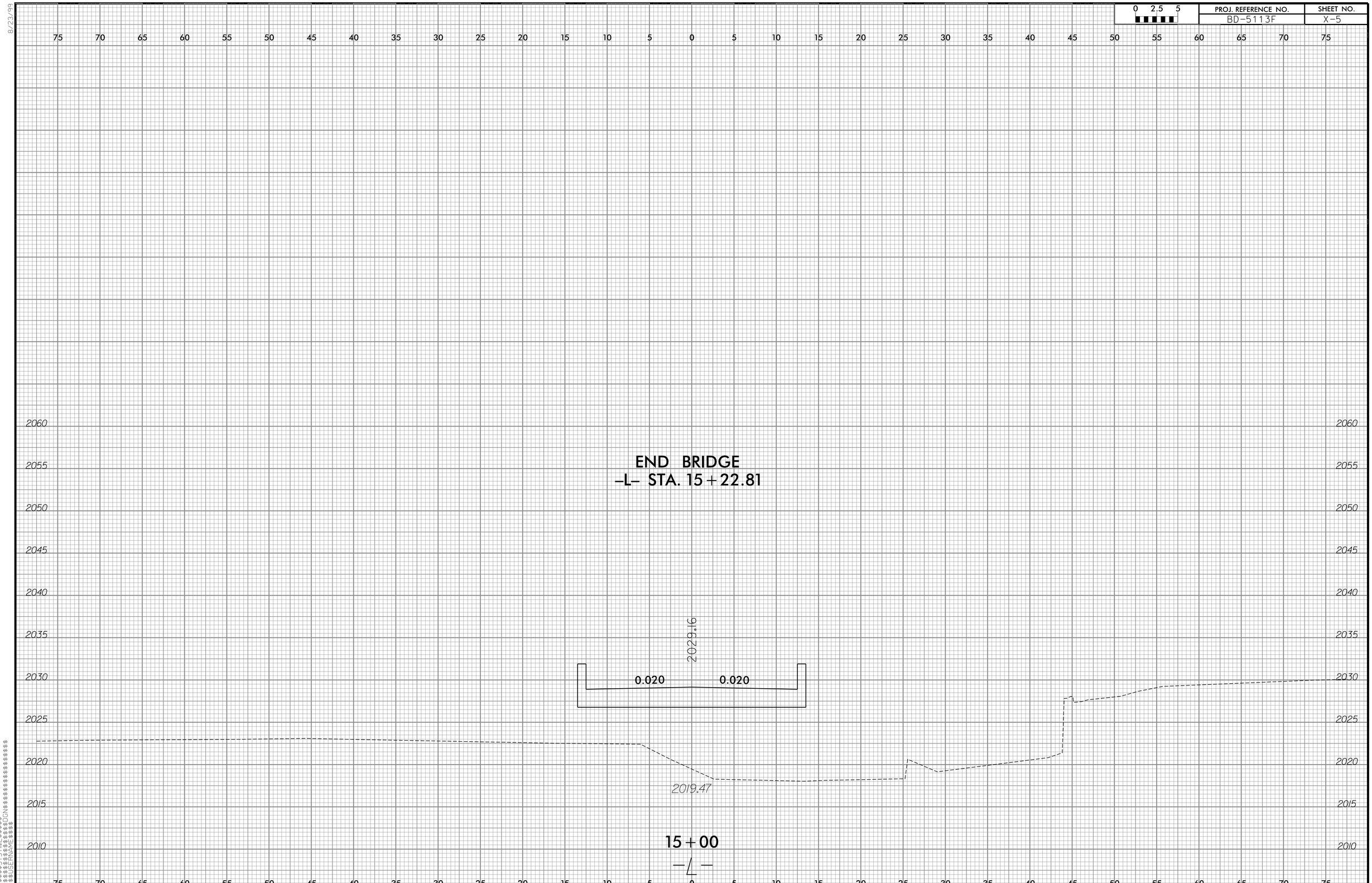

0 2.5 5
PROJ. REFERENCE NO.
BD-5113F
SHEET NO.
X-5
END BRIDGE
-L- STA. 15+22.81
2029.16
0.020
0.020
2019.47
15+00
-L-

PROJ. REFERENCE NO.	SHEET NO.
BD-5113F	X-6

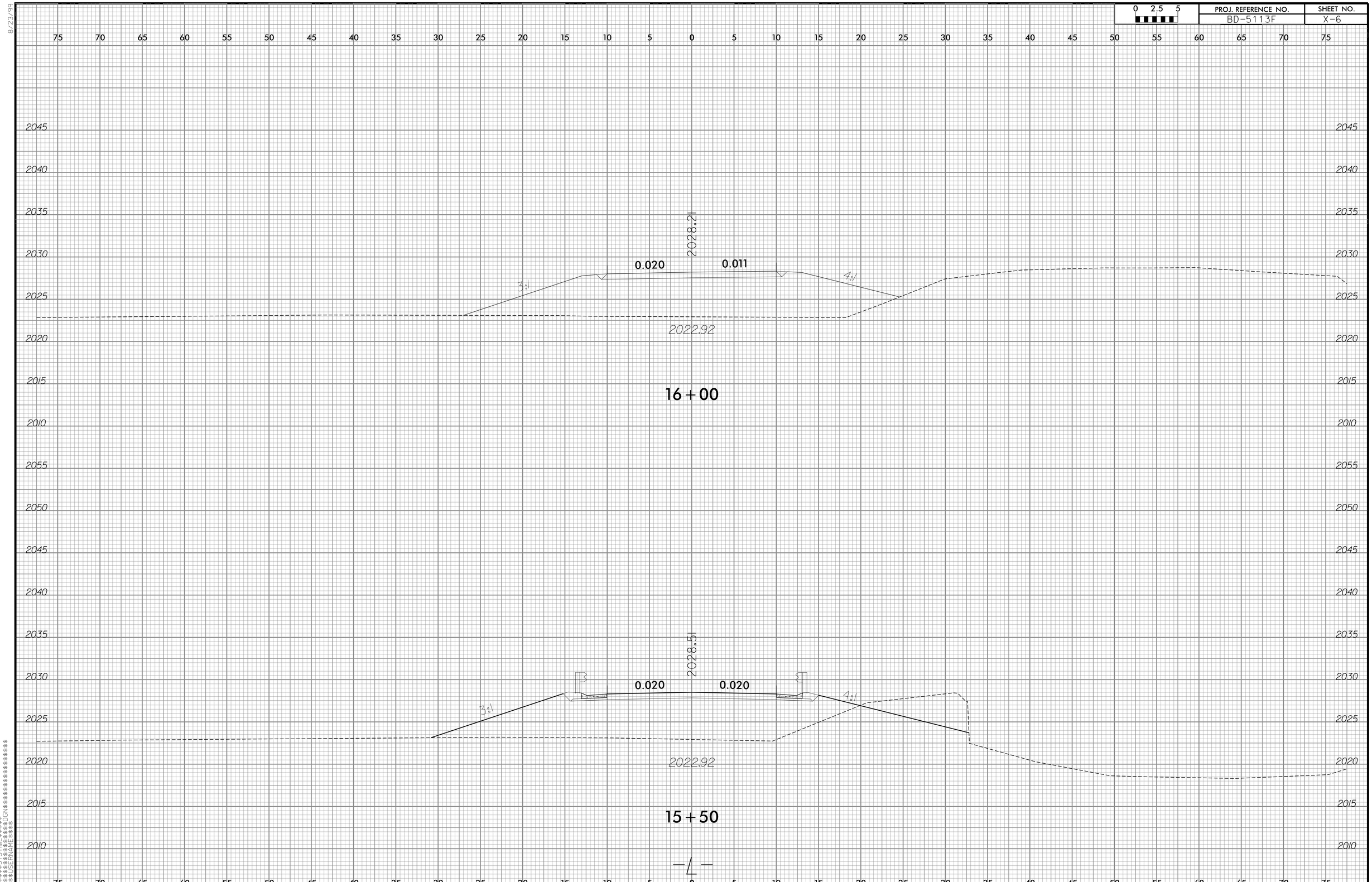

PROJ. REFERENCE NO.	SHEET NO.
BD-5113F	X-7

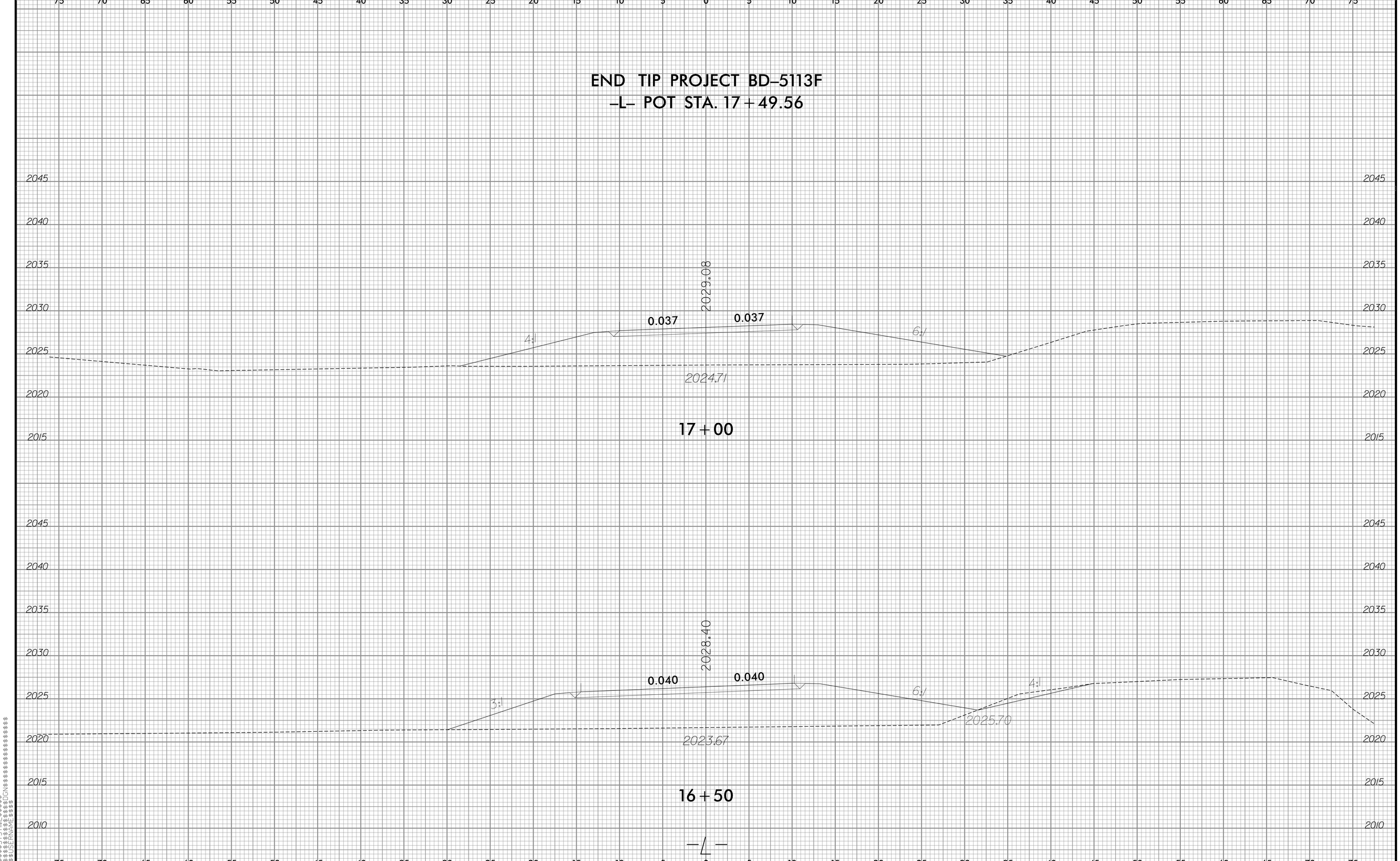

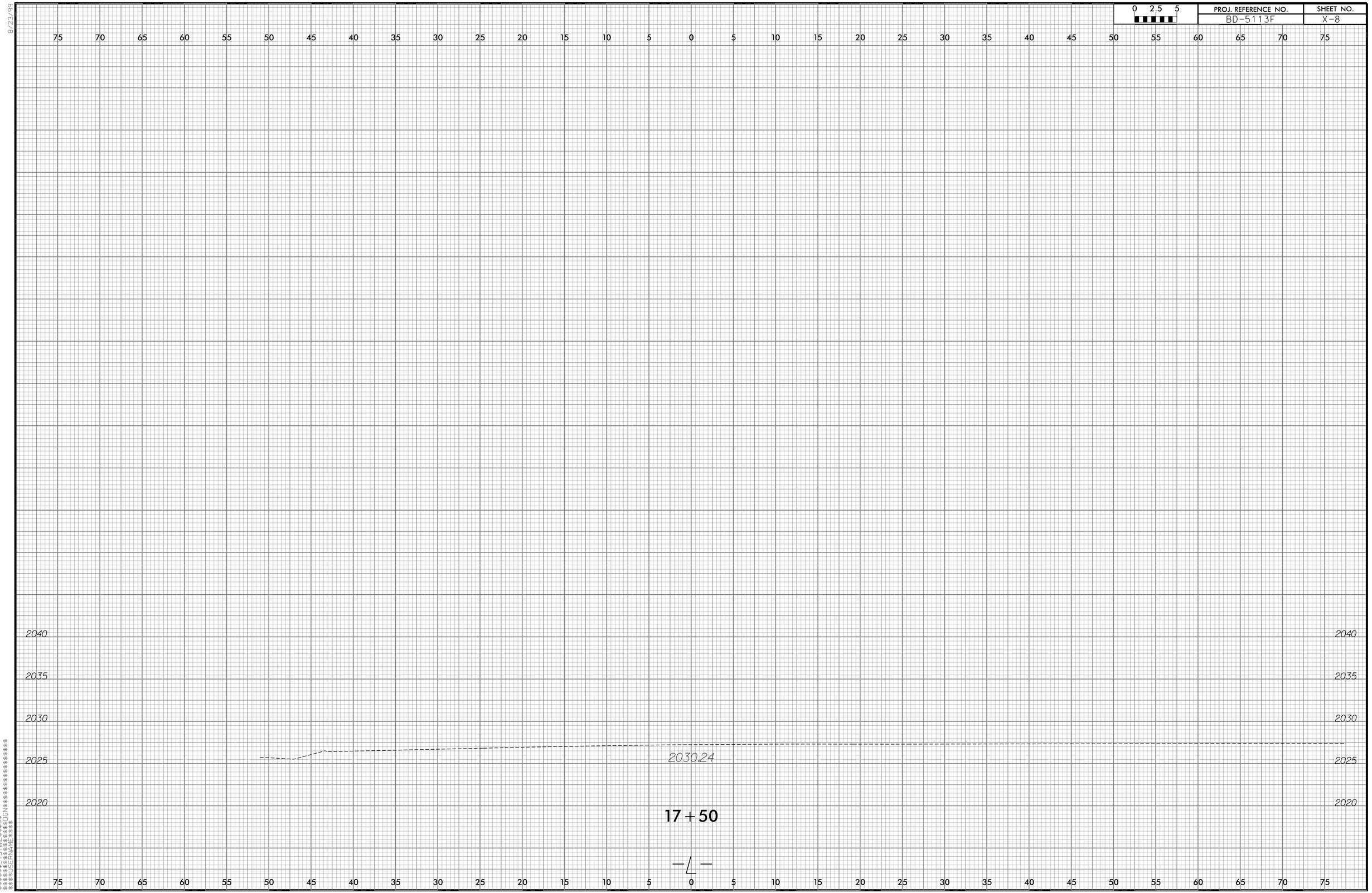

0 2.5 5
PROJ. REFERENCE NO.
BD-5113F
SHEET NO.
X-8
75 70 65 60 55 50 45 40 35 30 25 20 15 10 5 0 5 10 15 20 25 30 35 40 45 50 55 60 65 70 75
2040
2035
2030
2025
2020
2030.24
17+50
-L-

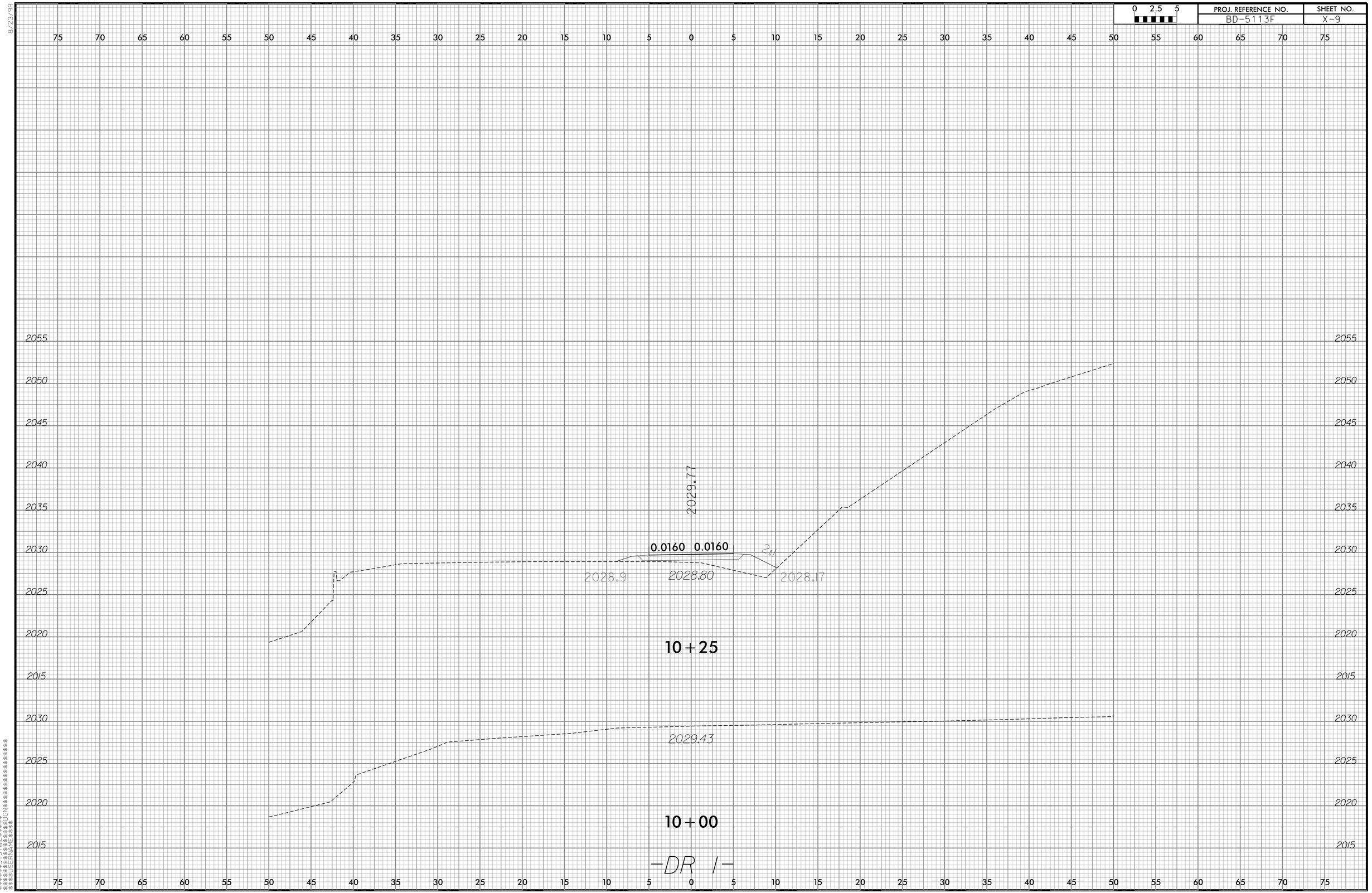

0 2.5 5
PROJ. REFERENCE NO.
BD-5113F
SHEET NO.
X-9
2029.77
0.0160 0.0160
2:1
2028.91
2028.80
2028.17
10+25
2029.43
10+00
-DR 1-

0 2.5 5
PROJ. REFERENCE NO.
BD-5113F
SHEET NO.
X-10
8/23/99
2029.11
0.0200 0.0200
6:1
3:1
2028.66
2028.93
10+75
2029.39
0.0200 0.0200
6:1
2:1
2028.69
2027.22
2028.37
10+50
-DR 1-

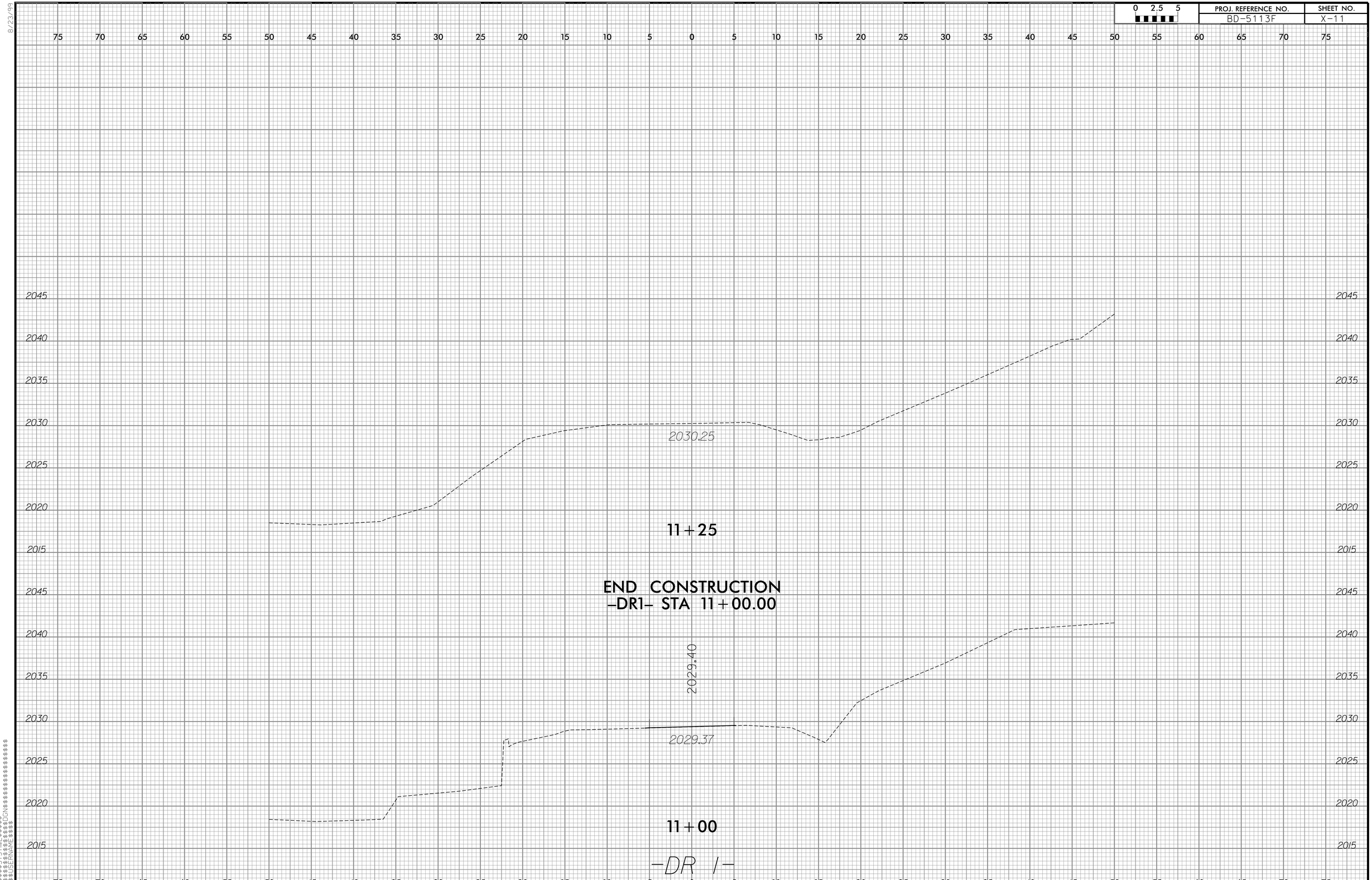

0 2.5 5
PROJ. REFERENCE NO.
BD-5113F
SHEET NO.
X-11
2030.25
11+25
END CONSTRUCTION
-DR1- STA 11+00.00
2029.40
2029.37
11+00
-DR 1-

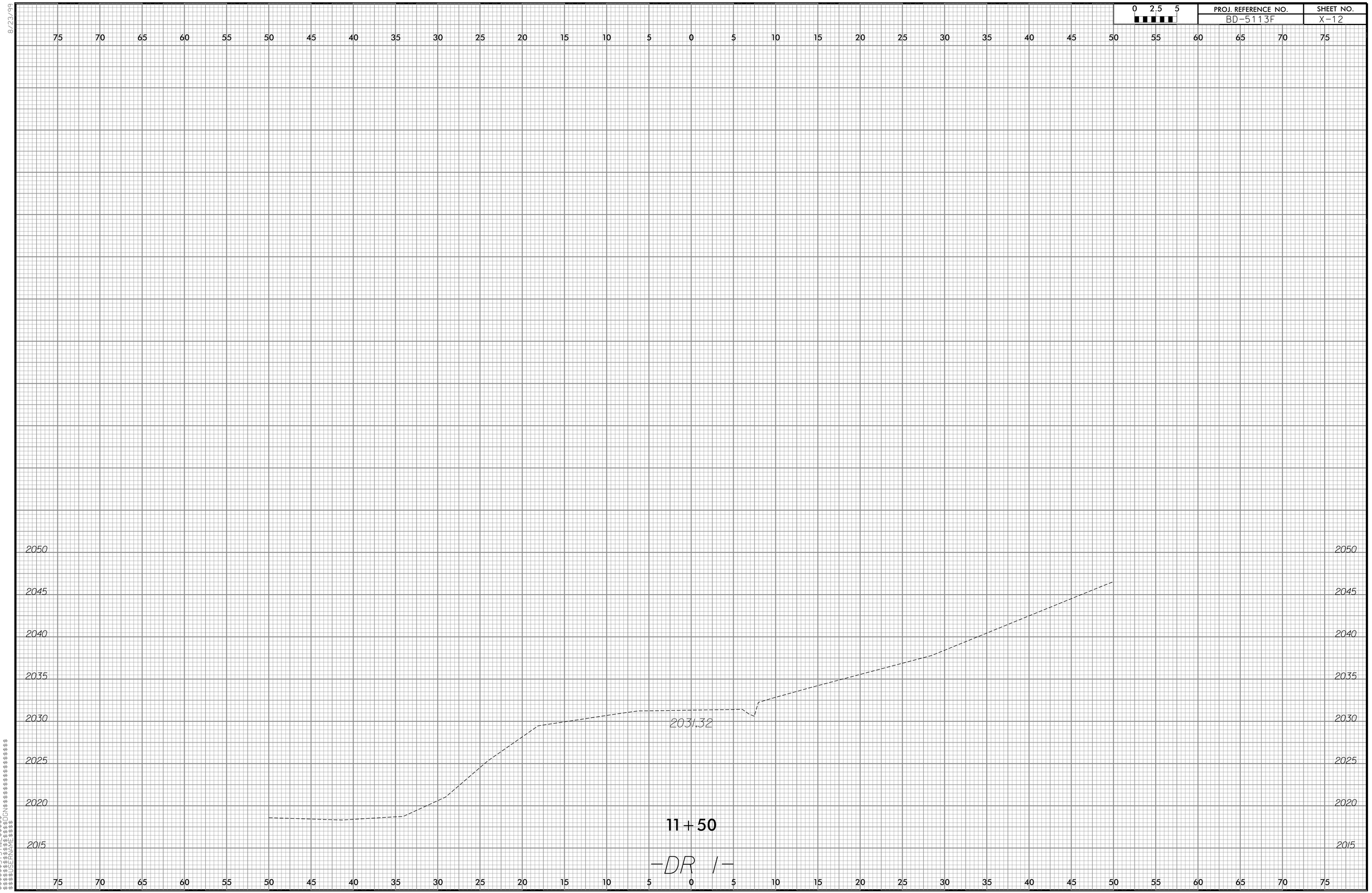

0 2.5 5
PROJ. REFERENCE NO.
BD-5113F
SHEET NO.
X-12
2050
2045
2040
2035
2030
2025
2020
2015
2031.32
11+50
-DR 1-

TIP NO: BD-5113F

CONTRACT: DM00071

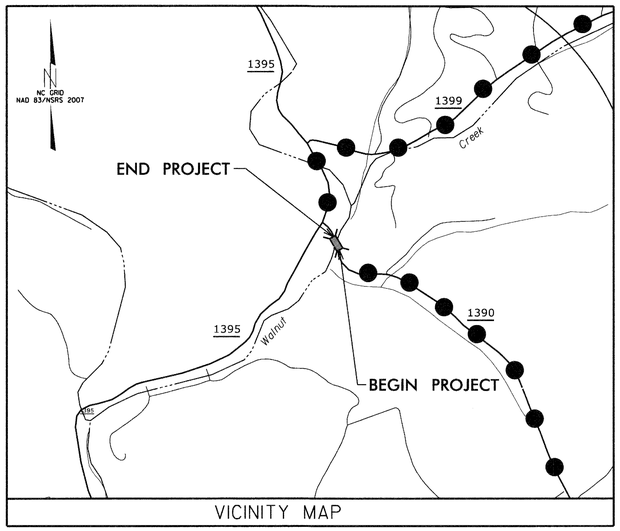

VICINITY MAP

DETOUR ROUTE

STATE OF NORTH CAROLINA
DIVISION OF HIGHWAYS
MADISON COUNTY

STATE	STATE PROJECT REFERENCE NO.	SHEET NO.	TOTAL SHEETS
N.C.	BD-5113F		

STATE PROJ. NO.	F.A. PROJ. NO.	DESCRIPTION
45359.1.6	BRZ-1390(2)	PE
45359.2.6	BRZ-1390(2)	R/W
45359.3.6	BRZ-1390(2)	CONST.

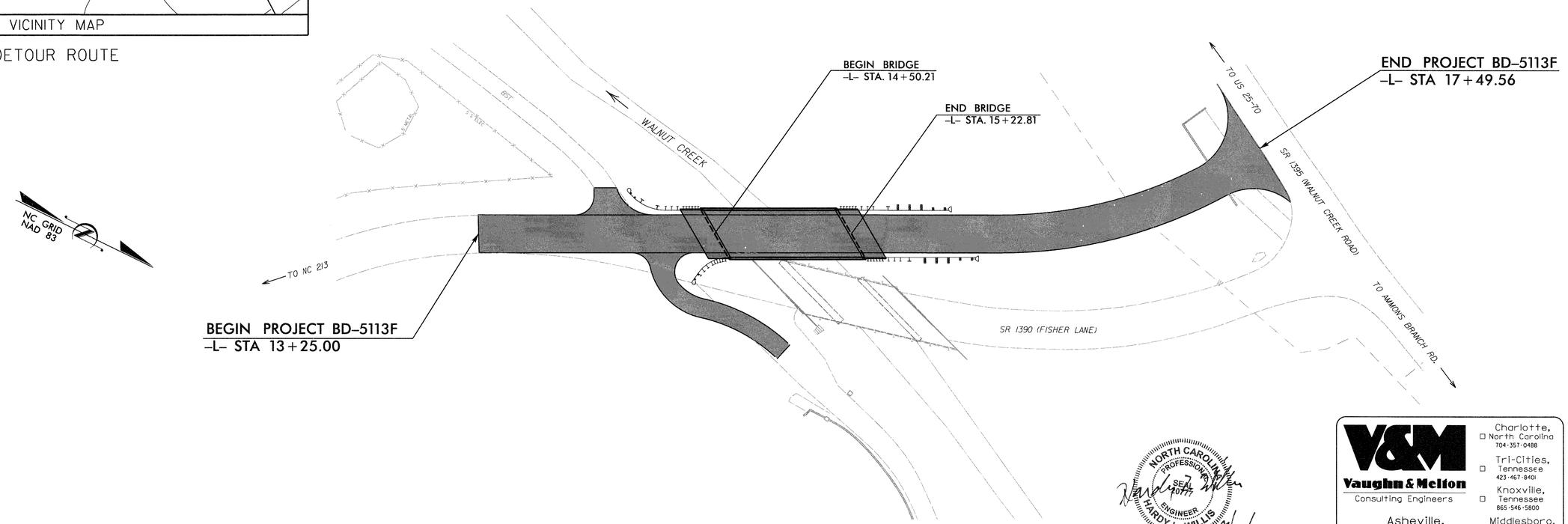

STRUCTURES

NORTH CAROLINA PROFESSIONAL SEAL 20775 ENGINEER HARDY L. WILLIS 9/26/13

V&M
Vaughn & Melton
Consulting Engineers
Charlotte, North Carolina 704-357-0488
Tri-Cities, Tennessee 423-467-8401
Knoxville, Tennessee 865-546-5800
Asheville, North Carolina 828-253-2796
Middlesboro, Kentucky 606-248-6600
Spartanburg, South Carolina 864-574-4775

Copyright © 2006 Vaughn & Melton, Inc. All Rights Reserved

STATE OF NORTH CAROLINA DEPARTMENT OF TRANSPORTATION

DESIGN DATA

ADT 2008 = 890
ADT 2025 = 1780
T = 6%
V = 45 MPH

FUNC CLASS = LOCAL

PROJECT LENGTH

LENGTH ROADWAY TIP PROJECT BD-5113F = 0.068 MI
LENGTH STRUCTURE TIP PROJECT BD-5113F = 0.014 MI
TOTAL LENGTH OF TIP PROJECT BD-5113F = 0.082 MI

Prepared In the Office of:
VAUGHN & MELTON
1318-F PATTON AVE.
ASHEVILLE NC, 28806
FOR THE NORTH CAROLINA DIVISION OF HIGHWAYS

2012 STANDARD SPECIFICATIONS

LETTING DATE :
NOVEMBER 30, 2013

HARDY WILLIS, PE
PROJECT ENGINEER

CHRIS CORDELL, EI
PROJECT DESIGN ENGINEER

STRUCTURES MANAGEMENT UNIT
1000 BIRCH RIDGE DR.
RALEIGH, N.C. 27610

DIVISION OF HIGHWAYS
STATE OF NORTH CAROLINA

GREG PERFETTI P.E.
STATE DESIGN ENGINEER

DEPARTMENT OF TRANSPORTATION
FEDERAL HIGHWAY ADMINISTRATION

PAUL SPROUSE, PE
DIVISION 13 BRIDGE PROGRAM MANAGER

F. A. PROJECT NO. BRZ-1390(2)

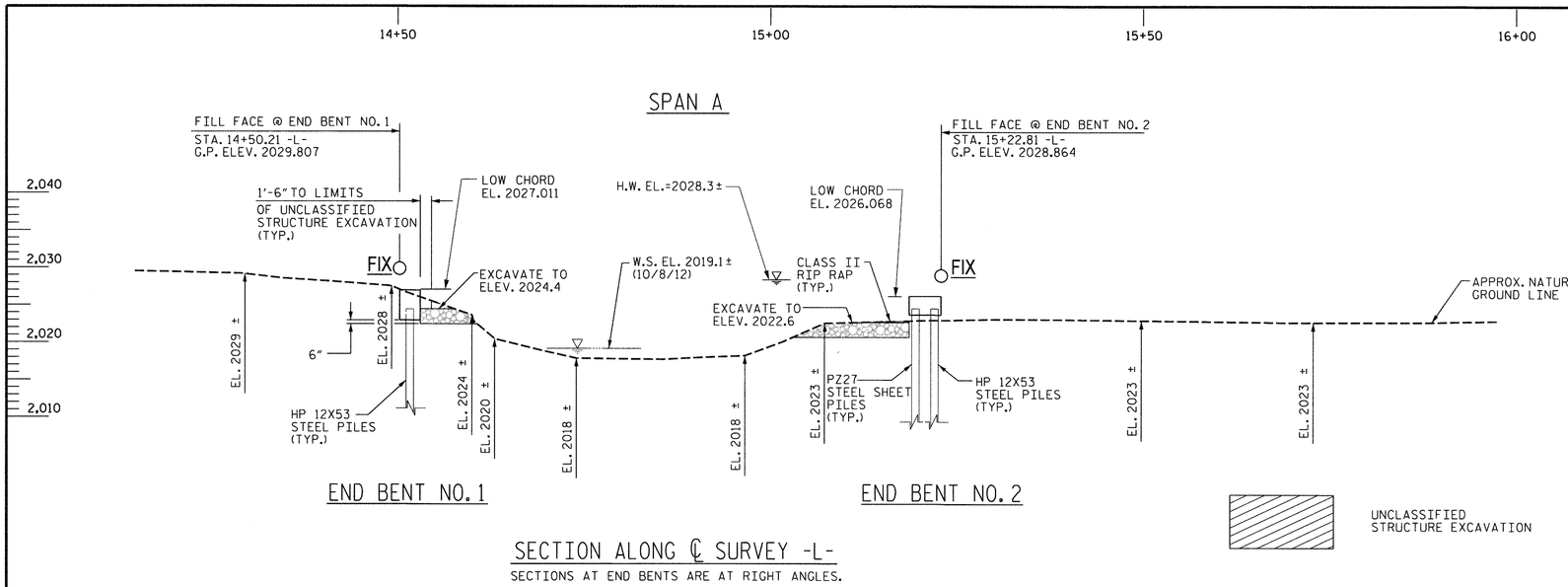

SECTION ALONG ℄ SURVEY -L-

SECTIONS AT END BENTS ARE AT RIGHT ANGLES.

PI = 16+40.000
EL = 2,027.34'
VC = 200'

(-)1.3000% (+)2.6389%

GRADE DATA -L-

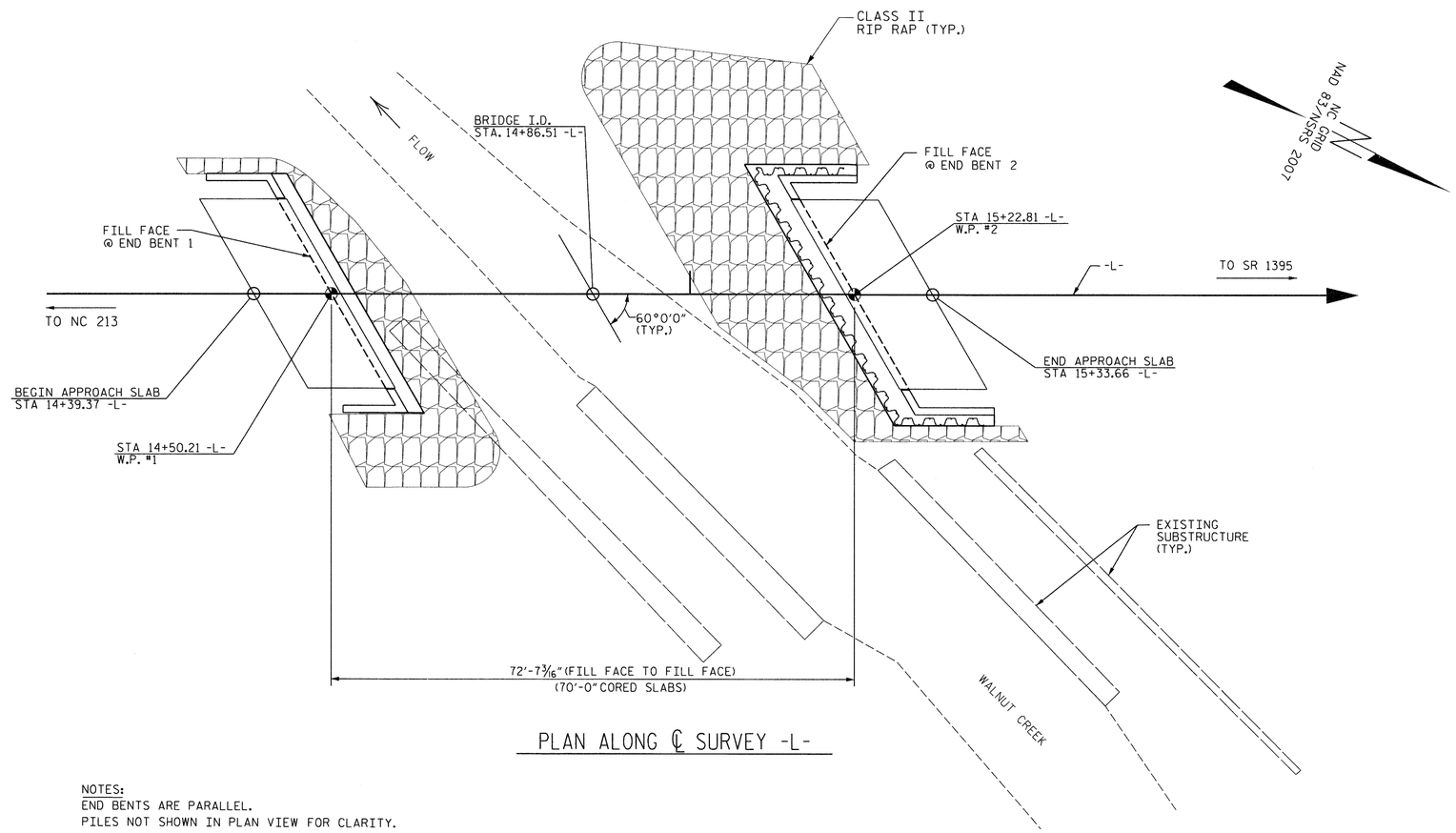

PLAN ALONG ℄ SURVEY -L-

NOTES:
END BENTS ARE PARALLEL.
PILES NOT SHOWN IN PLAN VIEW FOR CLARITY.

NORTH CAROLINA PROFESSIONAL SEAL 20720 ENGINEER HARDY L. WILLIS 9/26/13

PROJECT NO. BD-5113F

MADISON COUNTY

STATION: 14+86.51 -L-

SHEET 1 OF 2 REPLACES BRIDGE NO. 59

STATE OF NORTH CAROLINA
DEPARTMENT OF TRANSPORTATION
RALEIGH

GENERAL DRAWING

FOR BRIDGE ON SR 1390 (FISHER LANE)
OVER WALNUT CREEK
BETWEEN NC 213 AND SR 1395

V&M
Vaughn & Melton
Consulting Engineers
Asheville, North Carolina 828-253-2796
Charlotte, North Carolina 704-357-0488
Tri-Cities, Tennessee 423-467-8401
Knoxville, Tennessee 865-546-5800
Middlesboro, Kentucky 606-248-6600
Spartanburg, South Carolina 864-574-4775

Copyright © 2006 Vaughn & Melton, Inc. All Rights Reserved

DWN. BY: MAF DATE: 9/2013
CHKD. BY: HLW DATE: 9/2013
DES. EGR. OF RECORD: CBC DATE: 9/2013

REVISIONS						SHEET NO.
NO.	BY:	DATE:	NO.	BY:	DATE:	S-1
1			3			TOTAL SHEETS
2			4			15

BM #1 N 777752.7881 E 913251.1343 BL STA 9+20.19 55.15' RT, ELEV. 2032.82' SPIKE IN BOTTOM OF POWER POLE

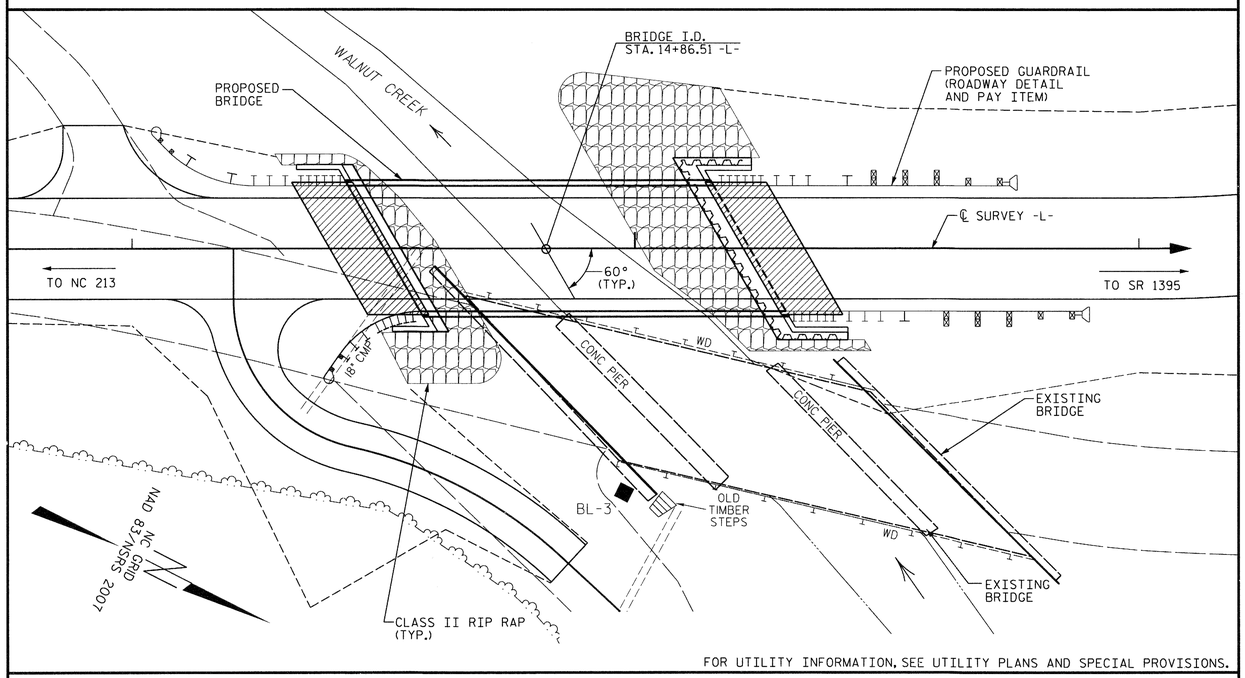

FOR UTILITY INFORMATION, SEE UTILITY PLANS AND SPECIAL PROVISIONS.

LOCATION SKETCH

GENERAL NOTES:

ASSUMED LIVE LOAD = HL-93 OR ALTERNATE LOADING.

THIS BRIDGE HAS BEEN DESIGNED IN ACCORDANCE WITH THE REQUIREMENTS OF THE AASHTO LRFD BRIDGE DESIGN SPECIFICATIONS.

THIS BRIDGE IS LOCATED IN SEISMIC ZONE 1.

FOR OTHER DESIGN DATA AND GENERAL NOTES, SEE "STANDARD NOTES" SHEET SN.

FOR EROSION CONTROL MEASURES, SEE EROSION CONTROL PLANS.

THE EXISTING STRUCTURE, CONSISTING OF A THREE SPAN, 84-FOOT LONG TIMBER DECK ON STEEL I-BEAMS, 25.1 FEET WIDE, ON TIMBER POSTS AND CONCRETE SILLS, AND LOCATED UPSTREAM OF THE PROPOSED STRUCTURE, SHALL BE REMOVED. THE EXISTING BRIDGE IS PRESENTLY POSTED BELOW THE LEGAL LOAD LIMIT.

REMOVAL OF THE EXISTING BRIDGE SHALL BE PERFORMED SO AS NOT TO ALLOW DEBRIS TO FALL INTO THE WATER. THE CONTRACTOR SHALL REMOVE THE BRIDGE AND SUBMIT PLANS FOR DEMOLITION IN ACCORDANCE WITH ARTICLE 402-2 OF THE STANDARD SPECIFICATIONS.

THE SUBSTRUCTURE OF THE EXISTING BRIDGE INDICATED ON THE PLANS IS FROM THE BEST INFORMATION AVAILABLE. SINCE THIS INFORMATION IS SHOWN FOR THE CONVENIENCE OF THE CONTRACTOR, THE CONTRACTOR SHALL HAVE NO CLAIM WHATSOEVER AGAINST THE DEPARTMENT OF TRANSPORTATION FOR ANY DELAYS OR ADDITIONAL COST INCURRED BASED ON DIFFERENCES BETWEEN THE EXISTING BRIDGE SUBSTRUCTURE SHOWN ON THE PLANS AND THE ACTUAL CONDITIONS AT THE PROJECT SITE.

THIS STRUCTURE HAS BEEN DESIGNED IN ACCORDANCE WITH "HEC 18-EVALUATING SCOUR AT BRIDGES", MAY 2001.

FOR SUBMITTAL OF WORKING DRAWINGS, SEE SPECIAL PROVISIONS.

FOR FALSEWORK AND FORMWORK, SEE SPECIAL PROVISIONS.

FOR CRANE SAFETY, SEE SPECIAL PROVISIONS.

FOR GROUT FOR STRUCTURES, SEE SPECIAL PROVISIONS.

THE MATERIAL SHOWN IN THE CROSS-HATCHED AREA SHALL BE EXCAVATED FOR A DISTANCE OF 25 FT. EACH SIDE OF CENTERLINE ROADWAY AS DIRECTED BY THE ENGINEER. THIS WORK WILL BE PAID FOR AT THE CONTRACT LUMP SUM PRICE FOR UNCLASSIFIED STRUCTURE EXCAVATION. SEE SECTION 412 OF THE STANDARD SPECIFICATIONS.

ASPHALT WEARING SURFACE IS INCLUDED IN ROADWAY QUANTITY ON ROADWAY PLANS.

INASMUCH AS THE PAINT SYSTEM ON THE EXISTING STRUCTURAL STEEL CONTAINS LEAD, THE CONTRACTOR'S ATTENTION IS DIRECTED TO ARTICLE 107-1 OF THE STANDARD SPECIFICATIONS. ANY COSTS RESULTING FROM COMPLIANCE WITH APPLICABLE STATE OR FEDERAL REGULATIONS PERTAINING TO HANDLING OF MATERIALS CONTAINING LEAD BASED PAINT SHALL BE INCLUDED IN THE BID PRICE FOR "REMOVAL OF EXISTING STRUCTURE AT STATION 14+86.51 -L-."

THE CONTRACTOR SHALL PROVIDE INDEPENDENT ASSURANCE SAMPLES OF REINFORCING STEEL AS FOLLOWS: FOR PROJECTS REQUIRING UP TO 400 TONS OF REINFORCING STEEL, ONE 30 INCH SAMPLE OF EACH SIZE BAR USED, AND FOR PROJECTS REQUIRING OVER 400 TONS OF REINFORCING STEEL, TWO 30 INCH SAMPLES OF EACH SIZE BAR USED. THE BARS FROM WHICH THE SAMPLES ARE TAKEN MUST THEN BE SPLICED WITH REPLACEMENT BARS OF THE SIZE AND LENGTH OF THE SAMPLE, PLUS A MINIMUM LAP SPLICE OF THIRTY BAR DIAMETERS. PAYMENT FOR THE SAMPLES OF REINFORCING STEEL SHALL BE CONSIDERED INCIDENTAL TO VARIOUS PAY ITEMS.

FOR PILES, SEE SECTION 450 OF THE STANDARD SPECIFICATIONS.

PILES AT END BENT NO. 1 ARE DESIGNED FOR A FACTORED RESISTANCE OF 95 TONS PER PILE.

PILE EXCAVATION IS REQUIRED TO INSTALL PILES AT END BENT 1. EXCAVATE HOLES AT PILE LOCATIONS TO ELEVATION 2011.4 FT. (LT) AND 2008.2 FT. (RT). FOR PILE EXCAVATION, SEE SECTION 450 OF THE STANDARD SPECIFICATIONS.

CONCRETE OR GROUT IS REQUIRED TO FILL HOLES FOR PILE EXCAVATION AT END BENT 1.

PILES AT END BENT NO. 2 ARE DESIGNED FOR A FACTORED RESISTANCE OF 95 TONS PER PILE.

PILE EXCAVATION IS REQUIRED TO INSTALL PILES AT END BENT 2. EXCAVATE HOLES AT PILE LOCATIONS TO ELEVATION 2011.4 FT. (LT) AND 2011.8 FT. (RT). FOR PILE EXCAVATION, SEE SECTION 450 OF THE STANDARD SPECIFICATIONS.

CONCRETE OR GROUT IS REQUIRED TO FILL HOLES FOR PILE EXCAVATION AT END BENT 2.

FOR STEEL SHEET PILES, SEE SECTION 1084 OF THE STANDARD SPECIFICATIONS.

PZ 27 SHEETING IS TO BE DRIVEN IN FRONT (STREAM SIDE) OF HP 12X53 AT END BENT NO. 2 AS SHOWN ON THE STRUCTURE PLANS.

SHEET PILES SHOULD BE DRIVEN TO REFUSAL. REFUSAL IS ESTIMATED AT ELEVATION 2016.4 FT. (RT) AND 2016.6 FT. (LT) FOR END BENT NO. 2

THE SCOUR CRITICAL ELEVATION FOR END BENT 2 IS ELEVATION 2014 FT. SCOUR CRITICAL ELEVATIONS ARE USED TO MONITOR POSSIBLE SCOUR PROBLEMS DURING THE LIFE OF THE STRUCTURE.

HYDRAULIC DATA

DESIGN DISCHARGE	= 2200	CFS
DESIGN FREQUENCY	= 25	YRS
DESIGN HW ELEVATION	= 2025.6	FT
BASE DISCHARGE	= 3000	CFS
BASE FREQUENCY	= 100	YRS
BASE HW ELEVATION	= 2028.98	FT

OVERTOPPING FLOOD DATA

OVERTOPPING DISCHARGE	= 2678	CFS
OVERTOPPING FREQUENCY	= 50(±)	YRS
OVERTOPPING ELEVATION	= 2028.6	FT

DRAINAGE AREA	= 10.3	SQ. MI

TOTAL BILL OF MATERIAL

	REMOVAL OF EXISTING STRUCTURE	PILE EXCAVATION IN SOIL	PILE EXCAVATION NOT IN SOIL	UNCLASSIFIED STRUCTURE EXCAVATION	CLASS A CONCRETE	BRIDGE APPROACH SLABS	REINFORCING STEEL	HP 12 X 53 STEEL PILES		18" STEEL SHEET PILES	VERTICAL CONCRETE BARRIER RAIL	RIP RAP CLASS II (2'-0" THICK)	GEOTEXTILE FOR DRAINAGE	ELASTOMERIC BEARINGS	3'-0" x 2'-0" PRESTRESSED CONCRETE CORED SLABS	
	LUMP SUM	LIN. FT.	LIN. FT.	LUMP SUM	CU. YARDS	LUMP SUM	LBS	NO.	LIN. FT.	SQ. FT.	LIN. FT.	TONS	SQ. YARDS	LUMP SUM	NO.	LIN. FT.
SUPERSTRUCTURE						LUMP SUM					140.29			LUMP SUM	9	630.0
END BENT 1		36	25	LUMP SUM	21.1		2584	5	88			73	83			
END BENT 2		30	25	LUMP SUM	23.2		2905	5	75	490		163	184			
TOTAL	LUMP SUM	66	50	LUMP SUM	44.3	LUMP SUM	5489	10	163	490	140.29	236	267	LUMP SUM	9	630.0

NORTH CAROLINA PROFESSIONAL SEAL ENGINEER HARDY L. WILLIS 9/20/13

PROJECT NO. BD-5113F

MADISON COUNTY

STATION: 14+86.51 -L-

SHEET 2 OF 2

V&M
Vaughn & Melton
Consulting Engineers
Asheville, North Carolina 828-253-2796
Charlotte, North Carolina 704-357-0488
Tri-Cities, Tennessee 423-467-8401
Knoxville, Tennessee 865-546-5800
Middlesboro, Kentucky 606-248-6600
Spartanburg, South Carolina 864-574-4175

Copyright © 2006 Vaughn & Melton, Inc. All Rights Reserved

STATE OF NORTH CAROLINA
DEPARTMENT OF TRANSPORTATION
RALEIGH

GENERAL DRAWING

FOR BRIDGE ON SR 1390 (FISHER LANE) OVER WALNUT CREEK BETWEEN NC 213 AND SR 1395

DWN. BY: MAF DATE: 9/2013
CHKD. BY: HLW DATE: 9/2013
DES. EGR. OF RECORD: CBC DATE: 9/2013

REVISIONS						
NO.	BY:	DATE:	NO.	BY:	DATE:	
1			3			
2			4			

SHEET NO. S-2

TOTAL SHEETS 15

LOAD AND RESISTANCE FACTOR RATING (LRFD) SUMMARY FOR PRESTRESSED CONCRETE GIRDERS

LEVEL		VEHICLE	WEIGHT (W) (TONS)	CONTROLLING LOAD RATING	MINIMUM RATING FACTORS (RF)	TONS = W X RF	STRENGTH I LIMIT STATE											SERVICE III LIMIT STATE						COMMENT NUMBER
							LIVELOAD FACTORS	MOMENT					SHEAR					LIVELOAD FACTORS	MOMENT					
								DISTRIBUTION FACTORS (DF)	RATING FACTOR	SPAN	GIRDER LOCATION	DISTANCE FROM LEFT END OF SPAN (ft)	DISTRIBUTION FACTORS (DF)	RATING FACTOR	SPAN	GIRDER LOCATION	DISTANCE FROM LEFT END OF SPAN (ft)		DISTRIBUTION FACTORS (DF)	RATING FACTOR	SPAN	GIRDER LOCATION	DISTANCE FROM LEFT END OF SPAN (ft)	
DESIGN LOAD RATING		HL-93(Inv)	N/A	1	1.06	--	1.75	0.248	1.14	70'	EL	34.423	0.655	**1.06**	70'	EL	**6.885**	0.80	0.248	1.11	70'	EL	34.423	
		HL-93(Opr)	N/A	--	1.374	--	1.35	0.248	1.48	70'	EL	34.423	0.655	1.37	70'	EL	6.885	N/A	--	--	--	--	--	
		HS-20(Inv)	36.000	2	1.32	47.508	1.75	0.248	1.48	70'	EL	34.423	0.655	**1.32**	70'	EL	**6.885**	0.80	0.248	1.44	70'	EL	34.423	
		HS-20(Opr)	36.000	--	1.711	61.585	1.35	0.248	1.91	70'	EL	34.423	0.655	1.71	70'	EL	6.885	N/A	--	--	--	--	--	
LEGAL LOAD RATING	SV	SNSH	13.500	--	3.204	43.258	1.4	0.248	4.12	70'	EL	34.423	0.655	3.9	70'	EL	6.885	0.80	0.248	3.20	70'	EL	34.423	
		SNGARBS2	20.000	--	2.403	48.063	1.4	0.248	3.09	70'	EL	34.423	0.655	2.78	70'	EL	6.885	0.80	0.248	2.40	70'	EL	34.423	
		SNAGRIS2	22.000	--	2.282	50.21	1.4	0.248	2.94	70'	EL	34.423	0.655	2.58	70'	EL	6.885	0.80	0.248	2.28	70'	EL	34.423	
		SNCOTTS3	27.250	--	1.595	43.463	1.4	0.248	2.05	70'	EL	34.423	0.655	1.95	70'	EL	6.885	0.80	0.248	1.59	70'	EL	34.423	
		SNAGGRS4	34.925	--	1.339	46.755	1.4	0.248	1.72	70'	EL	34.423	0.655	1.62	70'	EL	6.885	0.80	0.248	1.34	70'	EL	34.423	
		SNS5A	35.550	--	1.309	46.526	1.4	0.248	1.68	70'	EL	34.423	0.655	1.65	70'	EL	6.885	0.80	0.248	1.31	70'	EL	34.423	
		SNS6A	39.950	--	1.203	48.069	1.4	0.248	1.55	70'	EL	34.423	0.655	1.5	70'	EL	6.885	0.80	0.248	1.20	70'	EL	34.423	
		SNS7B	42.000	--	1.146	48.129	1.4	0.248	1.47	70'	EL	34.423	0.655	1.48	70'	EL	6.885	0.80	0.248	1.15	70'	EL	34.423	
	TTST	TNAGRIT3	33.000	--	1.468	48.444	1.4	0.248	1.89	70'	EL	34.423	0.655	1.79	70'	EL	6.885	0.80	0.248	1.47	70'	EL	34.423	
		TNT4A	33.075	--	1.475	48.79	1.4	0.248	1.9	70'	EL	34.423	0.655	1.74	70'	EL	6.885	0.80	0.248	1.48	70'	EL	34.423	
		TNT6A	41.600	--	1.208	50.272	1.4	0.248	1.55	70'	EL	34.423	0.655	1.58	70'	EL	6.885	0.80	0.248	1.21	70'	EL	34.423	
		TNT7A	42.000	--	1.216	51.061	1.4	0.248	1.56	70'	EL	34.423	0.655	1.55	70'	EL	6.885	0.80	0.248	1.22	70'	EL	34.423	
		TNT7B	42.000	--	1.261	52.955	1.4	0.248	1.62	70'	EL	34.423	0.655	1.44	70'	EL	6.885	0.80	0.248	1.26	70'	EL	34.423	
		TNAGRIT4	43.000	--	1.197	51.476	1.4	0.248	1.54	70'	EL	34.423	0.655	1.4	70'	EL	6.885	0.80	0.248	1.20	70'	EL	34.423	
		TNAGT5A	45.000	--	1.128	50.745	1.4	0.248	1.45	70'	EL	34.423	0.655	1.39	70'	EL	6.885	0.80	0.248	1.13	70'	EL	34.423	
		TNAGT5B	45.000	3	1.113	50.088	1.4	0.248	1.43	70'	EL	34.423	0.655	1.33	70'	EL	6.885	0.80	0.248	**1.11**	70'	EL	**34.423**	

LOAD FACTORS:

DESIGN LOAD RATING FACTORS	LIMIT STATE	γ_{DC}	γ_{DW}
	STRENGTH I	1.25	1.50
	SERVICE III	1.00	1.00

NOTES:

MINIMUM RATING FACTORS ARE BASED ON THE STRENGTH I AND SERVICE III LIMIT STATES.

ALLOWABLE STRESSES FOR SERVICE III LIMIT STATE ARE AS REQUIRED FOR DESIGN.

COMMENTS:

1.
2.
3.
4.

⟨#⟩ CONTROLLING LOAD RATING

⟨1⟩ DESIGN LOAD RATING (HL-93)

⟨2⟩ DESIGN LOAD RATING (HS-20)

⟨3⟩ LEGAL LOAD RATING **

** SEE CHART FOR VEHICLE TYPE

GIRDER LOCATION

I - INTERIOR GIRDER
EL - EXTERIOR LEFT GIRDER
ER - EXTERIOR RIGHT GIRDER

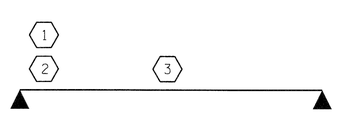

LRFR SUMMARY

FOR SINGLE SPAN

NORTH CAROLINA PROFESSIONAL SEAL 20777 ENGINEER HARDY L. WILLIS 9/26/13

PROJECT NO. BD-5113F

MADISON COUNTY

STATION: 14+86.51 -L-

STATE OF NORTH CAROLINA
DEPARTMENT OF TRANSPORTATION
RALEIGH

STANDARD
LRFR SUMMARY FOR
70' CORED SLAB UNIT
60° SKEW
(NON-INTERSTATE TRAFFIC)

REVISIONS						SHEET NO.
NO.	BY:	DATE:	NO.	BY:	DATE:	S-3
1			3			TOTAL SHEETS
2			4			15

ASSEMBLED BY :	MAF	DATE :	3/13
CHECKED BY :	RTS	DATE :	6/13
DRAWN BY : CVC	6/10		
CHECKED BY : DNS	6/10		

$$$$$$$SYSTIME$$$$$
$$$$$$$$$$$$$$$$$$$$$$$$DGN$$$$$$$$$$$$$$$$$$$$$$$$
$$$$USERNAME$$$$

STD. NO. 24LRFR1_60&120S_70L

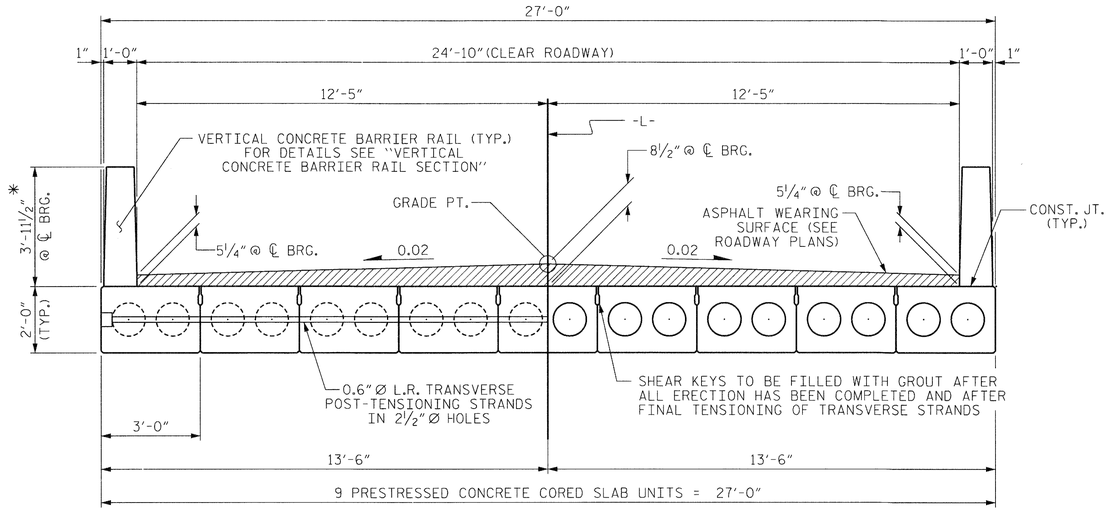

HALF SECTION
AT INTERMEDIATE DIAPHRAGMS

TYPICAL SECTION

HALF SECTION
THROUGH VOIDS

* - THE MAXIMUM BARRIER RAIL HEIGHT AND ASPHALT THICKNESS IS SHOWN. THE HEIGHT OF THE BARRIER RAIL AND ASPHALT THICKNESS VARIES WHILE THE TOP OF THE BARRIER RAIL FOLLOWS THE PROFILE OF THE GUTTERLINE. FOR RAIL HEIGHT DETAILS AND ASPHALT THICKNESS, SEE THE "VERTICAL CONCRETE BARRIER RAIL SECTION" DETAIL.

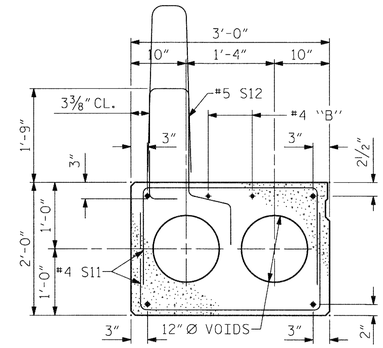

EXTERIOR SLAB SECTION

(FOR PRESTRESSED STRAND LAYOUT, SEE INTERIOR SLAB SECTION.)

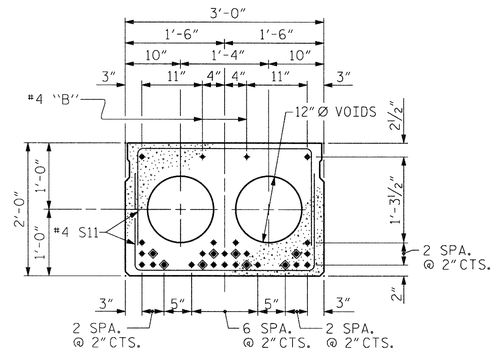

INTERIOR SLAB SECTION (70' UNIT)

(28 STRANDS REQUIRED)

0.6'' Ø LOW RELAXATION STRAND LAYOUT

◈ BOND SHALL BE BROKEN ON THESE STRANDS FOR A DISTANCE OF 12'-0" FROM END OF CORED SLAB UNIT. SEE STANDARD SPECIFICATIONS, ARTICLE 1078-7.

DEBONDING LEGEND

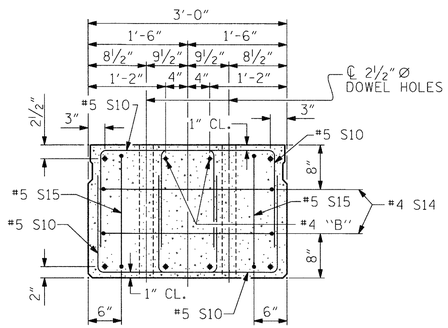

END ELEVATION

SHOWING PLACEMENT OF DOUBLE STIRRUPS AND LOCATION OF DOWEL HOLES.
(STRAND LAYOUT NOT SHOWN.)
INTERIOR SLAB UNIT SHOWN-EXTERIOR SLAB UNIT SIMILAR EXCEPT SHEAR KEY LOCATION.

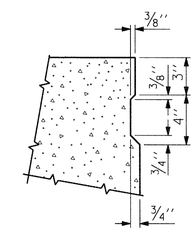

SHEAR KEY DETAIL

NOTE: OMIT SHEAR KEY ON OUTSIDE FACE OF EXTERIOR CORED SLABS.

FIXED END

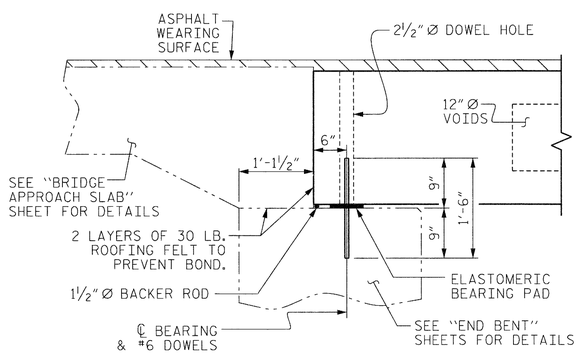

SECTION AT END BENT

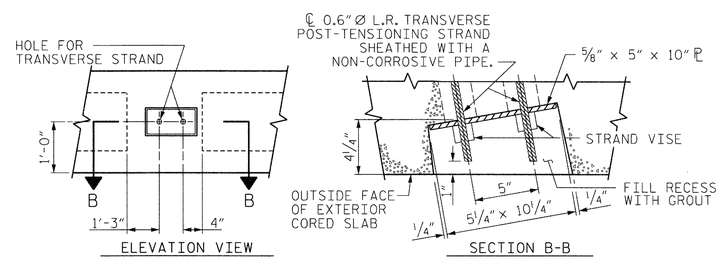

GROUTED RECESS AT END OF POST-TENSIONED STRAND CORED SLABS

NORTH CAROLINA PROFESSIONAL SEAL 019 ENGINEER HARDY L. WILLIS
9/24/13

PROJECT NO. BD-5113F
MADISON COUNTY
STATION: 14+86.51 -L-

SHEET 1 OF 3

STATE OF NORTH CAROLINA
DEPARTMENT OF TRANSPORTATION
RALEIGH

STANDARD
3'-0'' X 2'-0''
PRESTRESSED CONCRETE
CORED SLAB UNIT

REVISIONS						SHEET NO.
NO.	BY:	DATE:	NO.	BY:	DATE:	S-4
1			3			TOTAL SHEETS
2			4			15

ASSEMBLED BY :	MAF	DATE :	3/13
CHECKED BY :	RTS	DATE :	6/13
DRAWN BY : MAA	6/10	REV. 12/11	MAA/AAC
CHECKED BY : MKT	7/10		

$$$$$$SYSTIME$$$$$
$$$$$$$$$$$$$$$$$$$$$$$$DGN$$$$$$$$$$$$$$$$$$$$$$$$
$$$$USERNAME$$$$

STD. NO. 24PCS4_27_60S

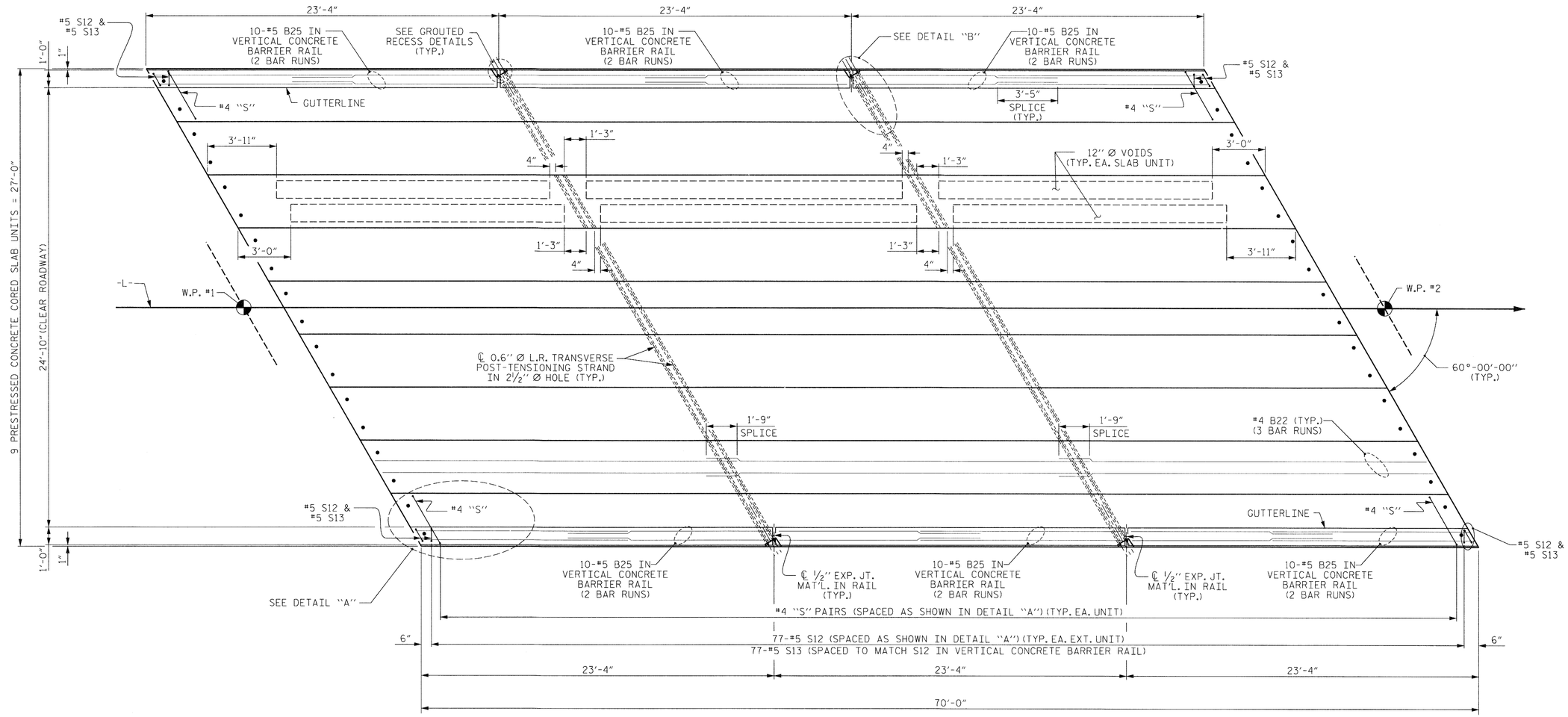

PLAN OF UNIT

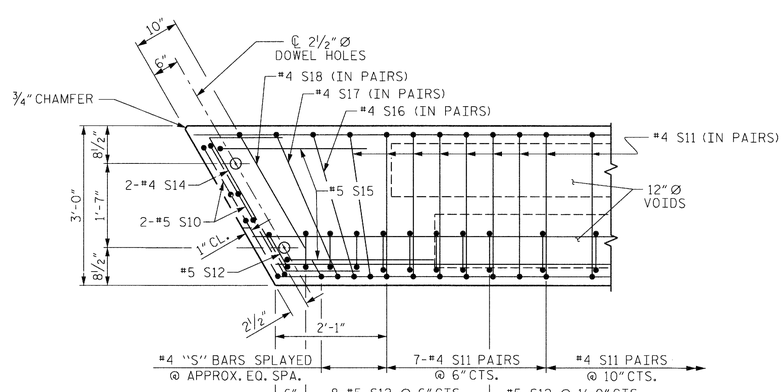

DETAIL "A"

NOTE: EXTERIOR UNIT SHOWN - INTERIOR UNIT SIMILAR EXCEPT OMIT #5 S12 BARS.

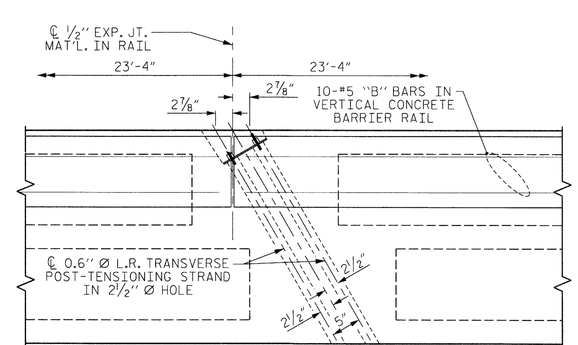

DETAIL "B"

#4 S11 BARS MAY BE SHIFTED AS NECESSARY TO MAINTAIN 1" CLEAR TO GROUTED RECESS AND 2½" Ø TRANSVERSE POST-TENSIONING STRAND HOLES

NORTH CAROLINA PROFESSIONAL SEAL ENGINEER HARDY L. WILLIS 4/26/13

PROJECT NO. BD-5113F

MADISON COUNTY

STATION: 14+86.51 -L-

SHEET 2 OF 3

STATE OF NORTH CAROLINA
DEPARTMENT OF TRANSPORTATION
RALEIGH

PLAN OF 70' UNIT
24'-10" CLEAR ROADWAY
60° SKEW

ASSEMBLED BY :	MAF	DATE :	3/13			
CHECKED BY :	RTS	DATE :	6/13			
DRAWN BY : MAA	6/10	REV. 12/5/11	MAA/AAC			
CHECKED BY : MKT	7/10					

REVISIONS						SHEET NO.
NO.	BY:	DATE:	NO.	BY:	DATE:	S-5
1			3			TOTAL SHEETS
2			4			15

STD. NO. 24PCS_27_60S_70L

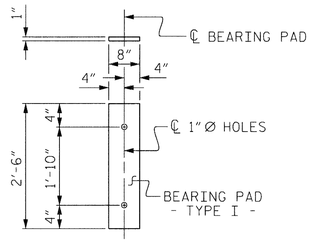

FIXED END
(TYPE I - 18 REQ'D)

ELASTOMERIC BEARING DETAILS

ELASTOMER IN ALL BEARINGS SHALL BE 60 DUROMETER HARDNESS.

CORED SLABS REQUIRED			
	NUMBER	LENGTH	TOTAL LENGTH
70' UNIT			
EXTERIOR C.S.	2	70'-0"	140'-0"
INTERIOR C.S.	7	70'-0"	490'-0"
TOTAL	9		630'-0"

BILL OF MATERIAL FOR ONE 70' CORED SLAB UNIT

				EXTERIOR UNIT		INTERIOR UNIT	
BAR	NUMBER	SIZE	TYPE	LENGTH	WEIGHT	LENGTH	WEIGHT
B22	6	#4	STR	24'-6"	98	24'-6"	98
S10	8	#5	3	5'-0"	42	5'-0"	42
S11	170	#4	3	5'-10"	662	5'-10"	662
✱S12	79	#5	1	6'-4"	522		
S14	4	#4	4	5'-11"	16	5'-11"	16
S15	4	#5	3	7'-1"	30	7'-1"	30
S16	4	#4	3	5'-11"	16	5'-11"	16
S17	4	#4	3	6'-1"	16	6'-1"	16
S18	4	#4	3	6'-3"	17	6'-3"	17
REINFORCING STEEL			LBS.		897		897
✱ EPOXY COATED REINFORCING STEEL			LBS.		522		
9000 P.S.I. CONCRETE			CU. YDS.		12.0		12.0
0.6"Ø L.R. STRANDS			No.		28		28

BAR TYPES

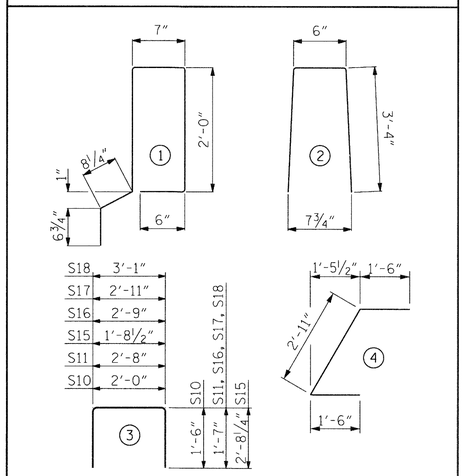

ALL BAR DIMENSIONS ARE OUT TO OUT

BILL OF MATERIAL FOR VERTICAL CONCRETE BARRIER RAIL

BAR	BARS PER PAIR OF EXTERIOR UNITS	TOTAL NO.	SIZE	TYPE	LENGTH	WEIGHT
	70' UNIT					
✱B25	120	120	#5	STR	13'-8"	1711
✱S13	158	158	#5	2	7'-2"	1181
✱ EPOXY COATED REINFORCING STEEL				LBS.		2892
CLASS AA CONCRETE				CU.YDS.		18.9
TOTAL VERTICAL CONCRETE BARRIER RAIL				LN. FT.		140.29

GUTTERLINE ASPHALT THICKNESS & RAIL HEIGHT

27'	ASPHALT OVERLAY THICKNESS @ MID-SPAN	RAIL HEIGHT @ MID-SPAN
70' UNITS	1¾"	3'-8"

NOTES

ALL PRESTRESSING STRANDS SHALL BE 7-WIRE LOW RELAXATION GRADE 270 STRANDS AND SHALL CONFORM TO AASHTO M203 EXCEPT FOR SAMPLING REQUIREMENTS WHICH SHALL BE IN ACCORDANCE WITH THE STANDARD SPECIFICATIONS.

ALL REINFORCING STEEL CAST WITH THE CORED SLAB SECTIONS SHALL BE GRADE 60 AND SHALL BE INCLUDED IN THE UNIT PRICE BID FOR PRESTRESSED CONCRETE CORED SLABS.

RECESSES FOR TRANSVERSE STRANDS SHALL BE GROUTED AFTER THE TENSIONING OF THE STRANDS.

THE 2½"Ø DOWEL HOLES AT FIXED ENDS OF SLAB SECTIONS SHALL BE FILLED WITH NON-SHRINK GROUT.

THE BACKER RODS SHALL CONFORM TO THE REQUIREMENTS OF TYPE M BOND BREAKER. SEE SECTION 1028 OF THE STANDARD SPECIFICATIONS.

WHEN CORED SLABS ARE CAST, AN INTERNAL HOLD-DOWN SYSTEM SHALL BE EMPLOYED TO PREVENT VOIDS FROM RISING OR MOVING SIDEWAYS. AT LEAST SIX WEEKS PRIOR TO CASTING CORED SLABS, THE CONTRACTOR SHALL SUBMIT TO THE ENGINEER FOR REVIEW AND COMMENT, DETAILED DRAWINGS OF THE PROPOSED HOLD-DOWN SYSTEM. IN ADDITION TO STRUCTURAL DETAILS, LOCATION AND SPACING OF THE HOLD-DOWNS SHALL BE INDICATED.

THE TRANSFER OF LOAD FROM THE ANCHORAGES TO THE CORED SLAB UNIT SHALL BE DONE WHEN THE CONCRETE HAS REACHED A COMPRESSIVE STRENGTH OF NOT LESS THAN THE REQUIRED STRENGTH SHOWN IN THE "CONCRETE RELEASE STRENGTH" TABLE.

ALL REINFORCING STEEL IN VERTICAL CONCRETE BARRIER RAILS SHALL BE EPOXY COATED.

PRESTRESSING STRANDS SHALL BE CUT FLUSH WITH THE CORED SLAB UNIT ENDS.

APPLY EPOXY PROTECTIVE COATING TO CORED SLAB UNIT ENDS.

GROOVED CONTRACTION JOINTS, ½" IN DEPTH, SHALL BE TOOLED IN ALL EXPOSED FACES OF THE BARRIER RAIL AND IN ACCORDANCE WITH ARTICLE 825-10(B) OF THE STANDARD SPECIFICATIONS. A CONTRACTION JOINT SHALL BE LOCATED AT EACH THIRD POINT BETWEEN BARRIER RAIL EXPANSION JOINTS. ONLY ONE CONTRACTION JOINT IS REQUIRED AT MIDPOINT OF BARRIER RAIL SEGMENTS LESS THAN 20 FEET IN LENGTH AND NO CONTRACTION JOINTS ARE REQUIRED FOR THOSE SEGMENTS LESS THAN 10 FEET IN LENGTH.

TRANSVERSE POST TENSIONING OF THE CORED SLAB UNITS SHALL BE DONE IN ACCORDANCE WITH THE STANDARD SPECIFICATIONS.

MAINTAIN A SYMMETRIC TENSION FORCE BETWEEN EACH PAIR OF TRANSVERSE POST TENSIONING STRANDS IN THE DIAPHRAGM.

THE #4 S11 STIRRUPS MAY BE SHIFTED AS NECESSARY TO MAINTAIN 1" CLEAR TO THE GROUTED RECESS.

FOR GROUT FOR STRUCTURES, SEE SPECIAL PROVISIONS.

DEAD LOAD DEFLECTION AND CAMBER

	3'-0" x 2'-0"
70' CORED SLAB UNIT	0.6"Ø L.R. STRAND
CAMBER (SLAB ALONE IN PLACE)	4 5/16" ↑
DEFLECTION DUE TO SUPERIMPOSED DEAD LOAD✱✱	13/16" ↓
FINAL CAMBER	3½" ↑

✱✱ INCLUDES FUTURE WEARING SURFACE

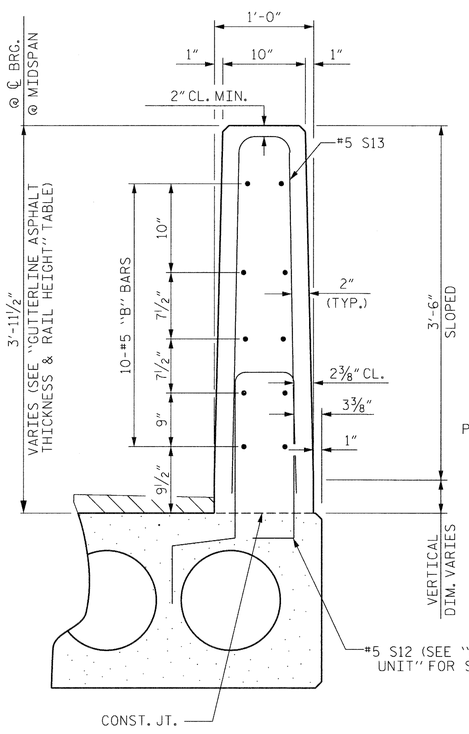

SECTION THRU RAIL

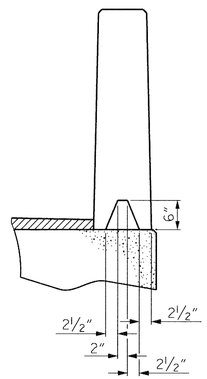

SECTION S-S
AT DAM IN OPEN JOINT
(THIS IS TO BE USED ONLY WHEN SLIP FORM IS USED)

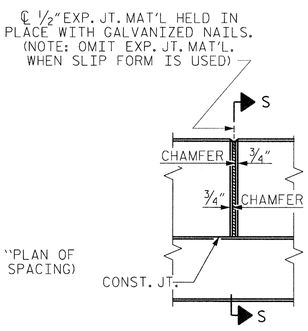

ELEVATION AT EXPANSION JOINTS

VERTICAL CONCRETE BARRIER RAIL DETAILS

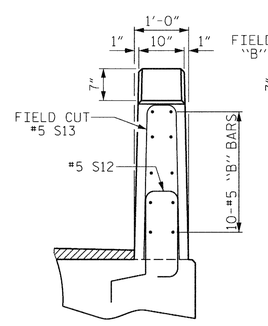

END VIEW

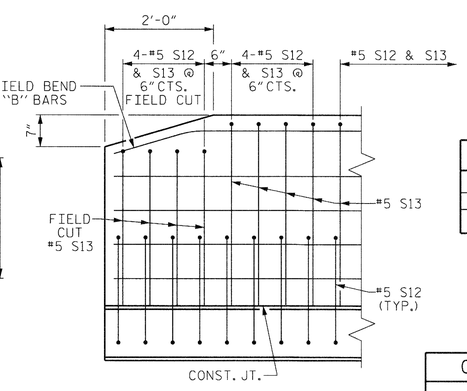

SIDE VIEW

END OF RAIL DETAILS

CONCRETE RELEASE STRENGTH

UNIT	PSI
70' UNITS	5800

GRADE 270 STRANDS

	0.6"Ø L.R.
AREA (SQUARE INCHES)	0.217
ULTIMATE STRENGTH (LBS. PER STRAND)	58,600
APPLIED PRESTRESS (LBS. PER STRAND)	43,950

NORTH CAROLINA PROFESSIONAL SEAL 027772 ENGINEER HARDY L. WILLIS 9/26/13

PROJECT NO. BD-5113F
MADISON COUNTY
STATION: 14+86.51 -L-

SHEET 3 OF 3

STATE OF NORTH CAROLINA
DEPARTMENT OF TRANSPORTATION
RALEIGH

STANDARD
3'-0" X 2'-0"
PRESTRESSED CONCRETE
CORED SLAB UNIT

ASSEMBLED BY : MAF	DATE : 3/13
CHECKED BY : RTS	DATE : 6/13
DRAWN BY : MAA 6/10	REV. 12/11 MAA/AAC
CHECKED BY : MKT 7/10	

REVISIONS								SHEET NO.
NO.	BY:	DATE:	NO.	BY:	DATE:			S-6
1			3					TOTAL SHEETS
2			4					15

$$$$$$SYSTIME$$$$$
$$$$$$$$$$$$$$$$$$$$DGN$$$$$$$$$$$$$$$$$$$$$$$$
$$$$USERNAME$$$$

STD. NO. 24PCS3_27_60&120S

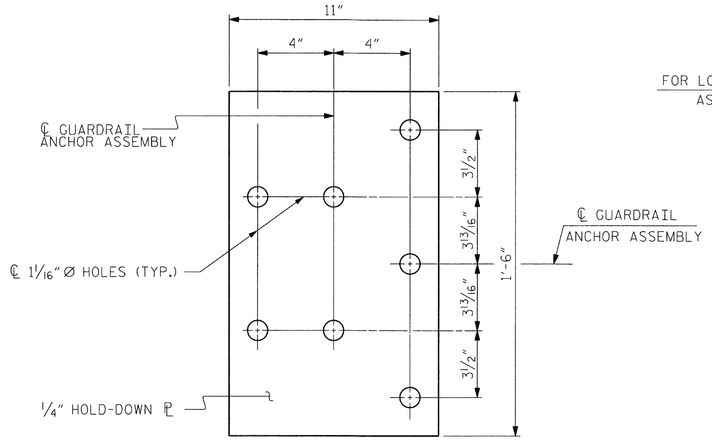

PLAN

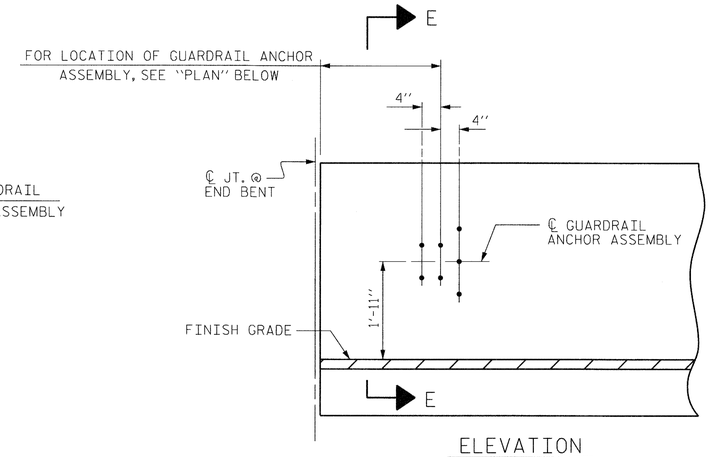

ELEVATION

NOTES

THE GUARDRAIL ANCHOR ASSEMBLY SHALL CONSIST OF A 1/4" HOLD DOWN PLATE AND 7 - 7/8" Ø BOLTS WITH NUTS AND WASHERS.

THE HOLD-DOWN PLATE SHALL CONFORM TO AASHTO M270 GRADE 36. AFTER FABRICATION, THE HOLD-DOWN PLATE SHALL BE HOT-DIP GALVANIZED IN ACCORDANCE WITH AASHTO M111.

BOLTS SHALL CONFORM TO THE REQUIREMENTS OF ASTM A307 AND NUTS SHALL CONFORM TO THE REQUIREMENTS OF AASHTO M291. BOLTS, NUTS AND WASHERS SHALL BE GALVANIZED. (AT THE CONTRACTOR'S OPTION, STAINLESS STEEL BOLTS, NUTS AND WASHERS MAY BE USED AS AN ALTERNATE FOR THE 7/8" Ø GALVANIZED BOLTS, NUTS AND WASHERS. THEY SHALL CONFORM TO OR EXCEED THE MECHANICAL REQUIREMENTS OF ASTM A307. THE USE OF THIS ALTERNATE SHALL BE APPROVED BY THE ENGINEER.)

THE GUARDRAIL ANCHOR ASSEMBLY IS REQUIRED AT ALL POINTS WHERE APPROACH GUARDRAIL IS TO BE ATTACHED TO THE END OF BARRIER RAIL. FOR POINTS OF ATTACHMENT, SEE SKETCH.

AFTER INSTALLATION, THE EXPOSED THREAD OF THE BOLT SHALL BE BURRED WITH A SHARP POINTED TOOL.

THE COST OF THE GUARDRAIL ANCHOR ASSEMBLY SHALL BE INCLUDED IN THE UNIT CONTRACT PRICE BID FOR VERTICAL CONCRETE BARRIER RAIL.

THE VERTICAL REINFORCING BARS MAY BE SHIFTED SLIGHTLY IN THE VERTICAL CONCRETE BARRIER RAIL TO CLEAR ASSEMBLY BOLTS.

THE 1 1/4" Ø HOLES SHALL BE FORMED OR DRILLED WITH A CORE BIT. IMPACT TOOLS WILL NOT BE PERMITTED. ANY CONCRETE DAMAGED BY THIS WORK SHALL BE REPAIRED TO THE SATISFACTION OF THE ENGINEER.

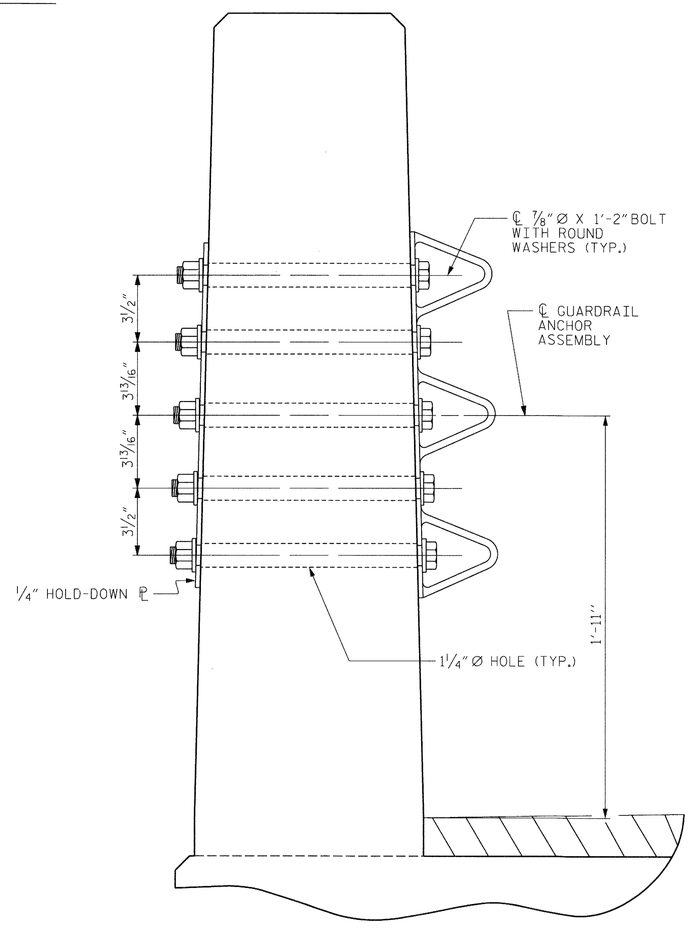

SECTION E-E

GUARDRAIL ANCHOR ASSEMBLY DETAILS

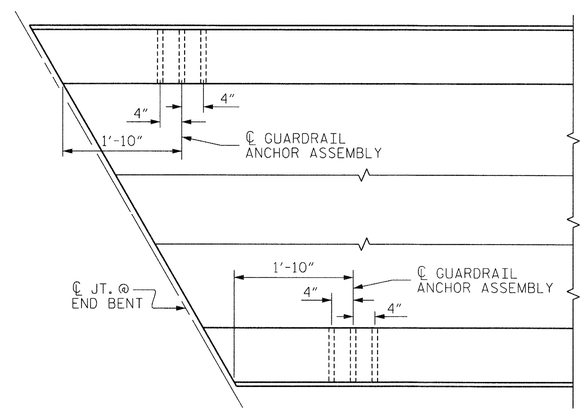

PLAN

LOCATION OF ANCHORS FOR GUARDRAIL

END BENT #1 SHOWN, END BENT #2 SIMILAR.

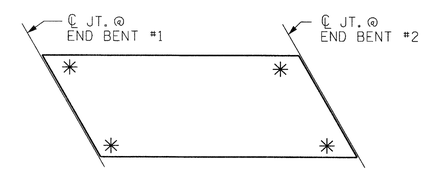

SKETCH SHOWING POINTS OF ATTACHMENT

✳ DENOTES GUARDRAIL ANCHOR ASSEMBLY

PROJECT NO. BD-5113F

MADISON COUNTY

STATION: 14+86.51 -L-

NORTH CAROLINA PROFESSIONAL SEAL 027777 ENGINEER HARDY L. WILLIS 9/20/13

STATE OF NORTH CAROLINA
DEPARTMENT OF TRANSPORTATION
RALEIGH

STANDARD
GUARDRAIL ANCHORAGE FOR VERTICAL CONCRETE BARRIER RAIL

REVISIONS						SHEET NO.
NO.	BY:	DATE:	NO.	BY:	DATE:	S-7
1			3			TOTAL SHEETS
2			4			15

ASSEMBLED BY :	MAF	DATE :	3/13
CHECKED BY :	RTS	DATE :	6/13
DRAWN BY : MAA 5/10	ADDED 5/6/10		
CHECKED BY : GM 5/10	REV. 10/1/11	MAA/GM	
	REV. 12/5/11	MAA/GM	

$$$$$$SYSTIME$$$$$
$$$$$$$$$$$$$$$$$$$$$$$$DGN$$$$$$$$$$$$$$$$$$$$$$$$
$$$$USERNAME$$$$

(SHT 3) STD. NO. GRA3

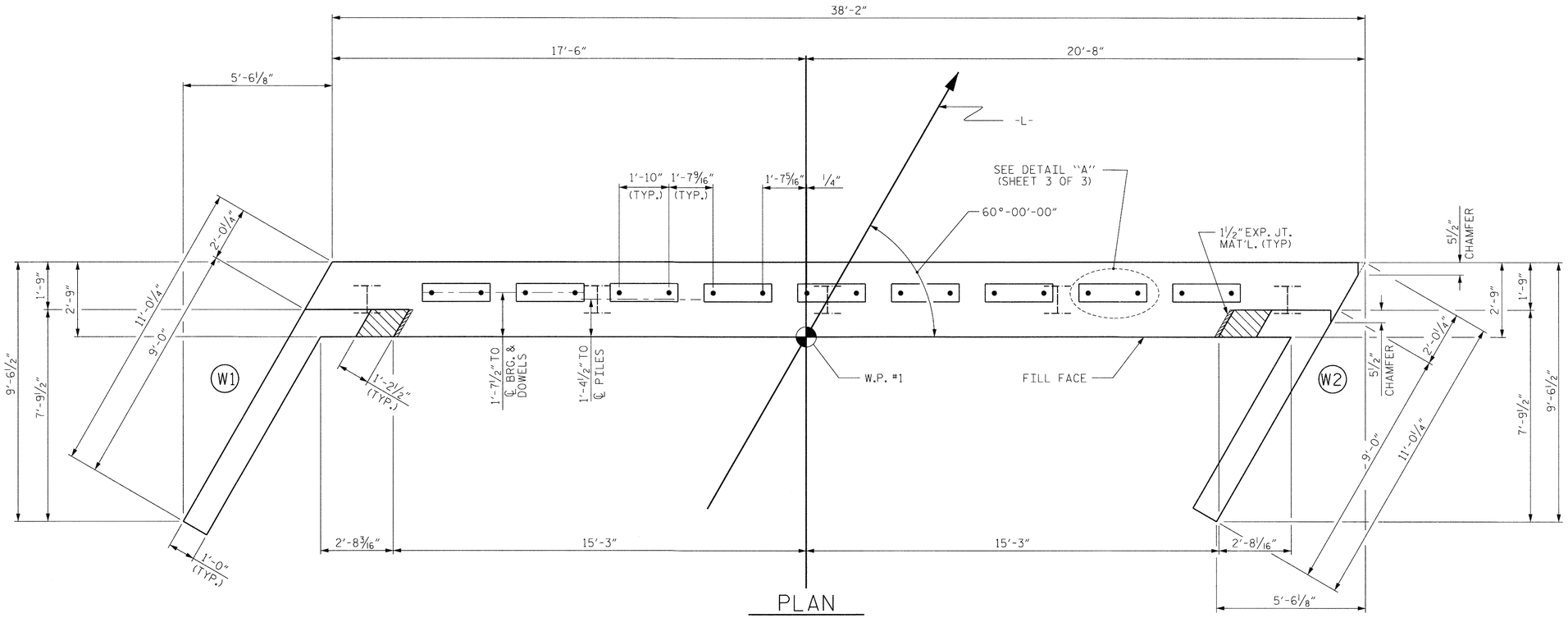

PLAN

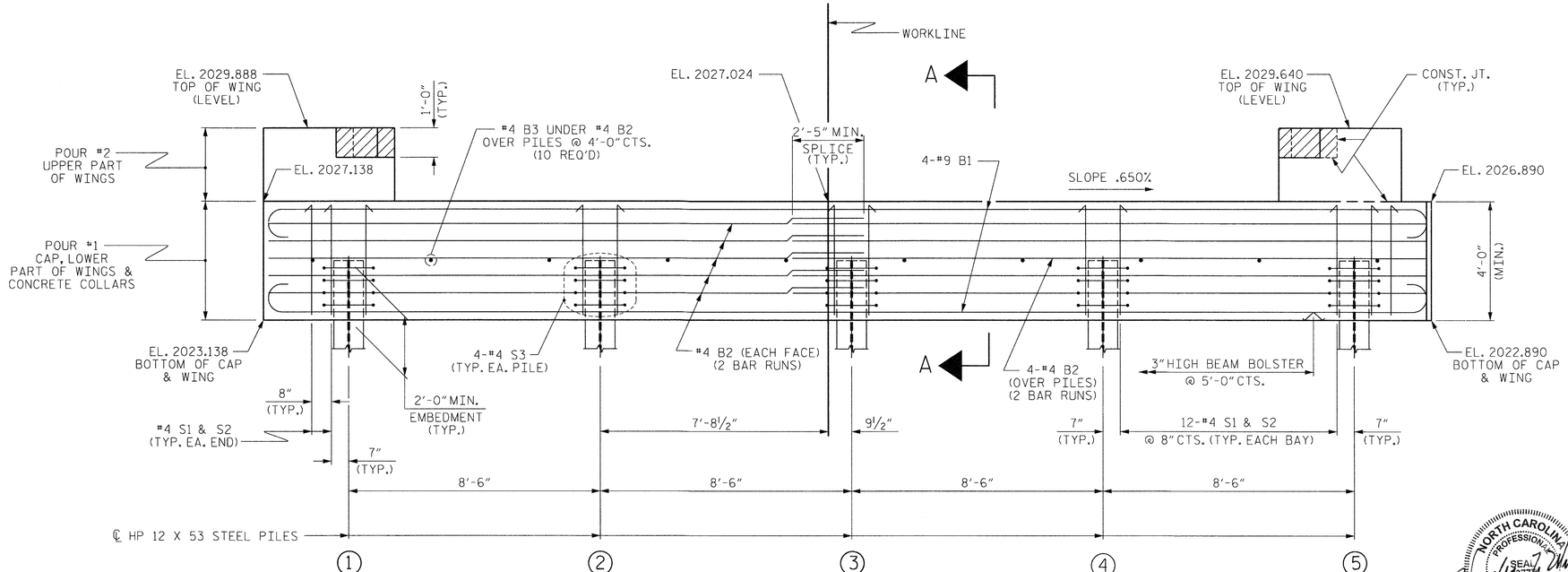

ELEVATION

WINGS NOT SHOWN FOR CLARITY.
FOR SECTION A-A, SEE SHEET 5 OF 5.
CONCRETE COLLARS FOR STEEL PILES NOT SHOWN IN PLAN AND ELEVATION VIEWS FOR CLARITY.
SEE "CORROSION PROTECTION FOR STEEL PILES DETAIL", SHEET 3 OF 3.

NOTES

STIRRUPS IN CAP MAY BE SHIFTED AS NECESSARY TO CLEAR DOWELS.

THE CONCRETE IN THE SHADED AREA OF THE WING SHALL BE POURED AFTER THE VERTICAL CONCRETE BARRIER RAIL IS CAST IF SLIP FORMING IS USED.

FOR PILE SPLICE DETAILS, SEE SHEET 3 OF 3.

FOR WING DETAILS, SEE SHEET 2 OF 3.

TOP OF PILE ELEVATIONS	
1	2025.119
2	2025.064
3	2025.009
4	2024.954
5	2024.898

PROJECT NO. BD-5113F
MADISON COUNTY
STATION: 14+86.51 -L-

SHEET 1 OF 3

STATE OF NORTH CAROLINA
DEPARTMENT OF TRANSPORTATION
RALEIGH

SUBSTRUCTURE
END BENT No. 1

NORTH CAROLINA PROFESSIONAL SEAL 20777 ENGINEER HARDY L. WILLIS
9/24/13

REVISIONS						SHEET NO.
NO.	BY:	DATE:	NO.	BY:	DATE:	S-8
1			3			TOTAL SHEETS
2			4			15

ASSEMBLED BY : DPP DATE : 3/13
CHECKED BY : RTS DATE : 6/13
DRAWN BY : WJH 12/11
CHECKED BY : AAC 12/11

$$$$$$SYSTIME$$$$$
$$$$$$$$$$$$$$$$$$$$$$$$DGN$$$$$$$$$$$$$$$$$$$$$$$$
$$$$USERNAME$$$$

STD. NO. EB_27_60S4

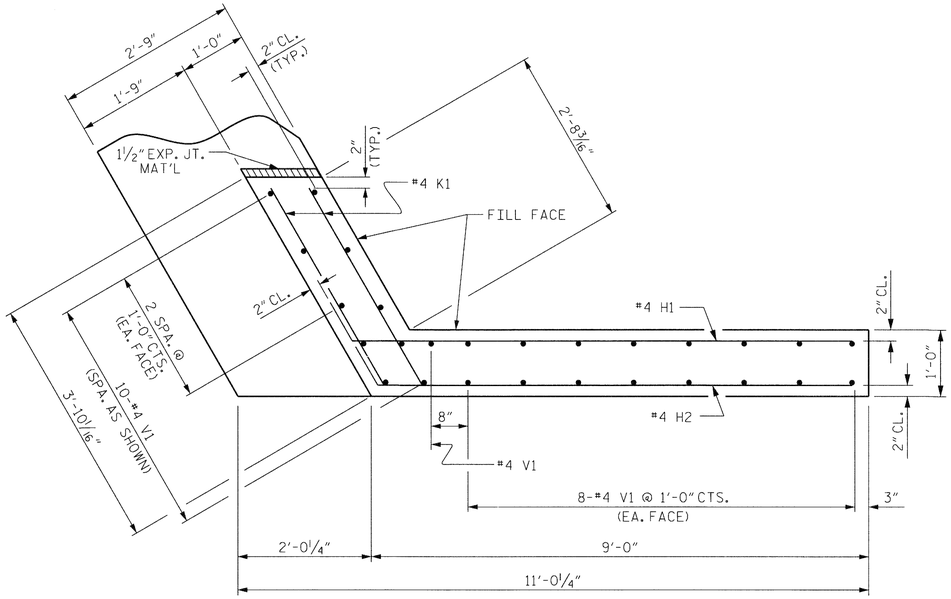

PLAN OF WING (W1)

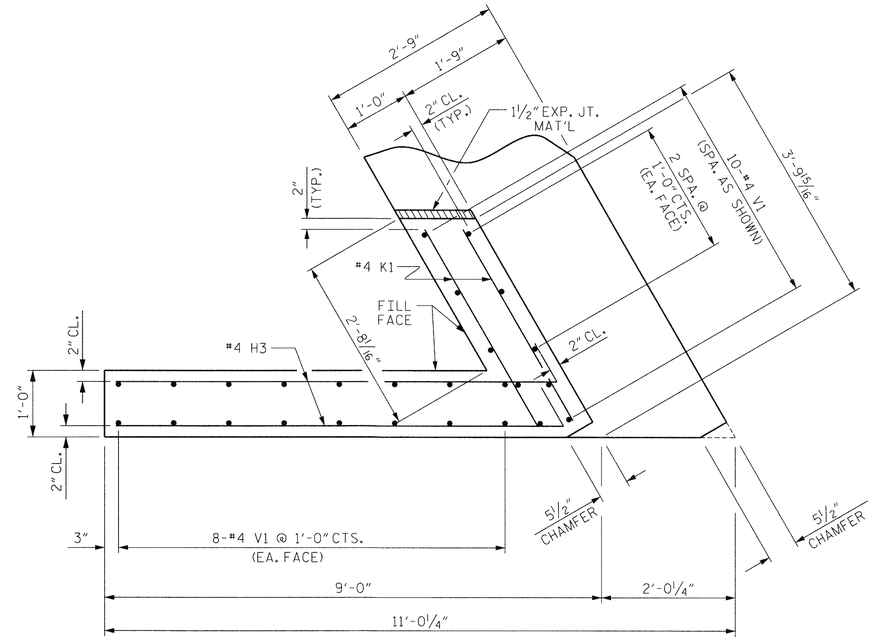

PLAN OF WING (W2)

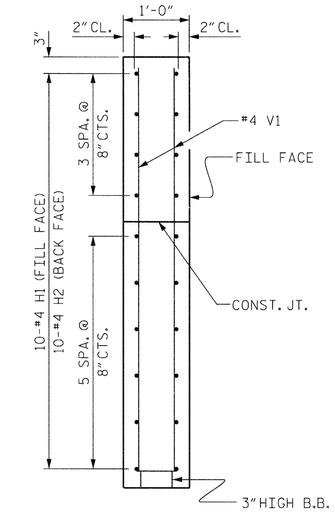

SECTION X-X

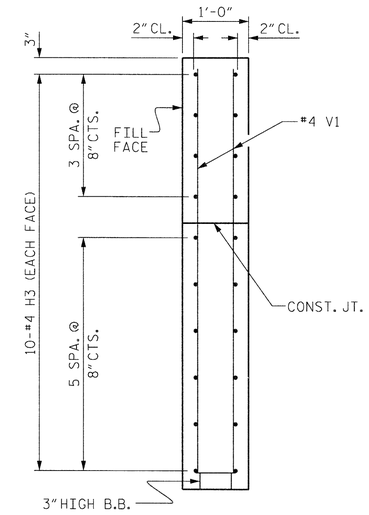

SECTION Y-Y

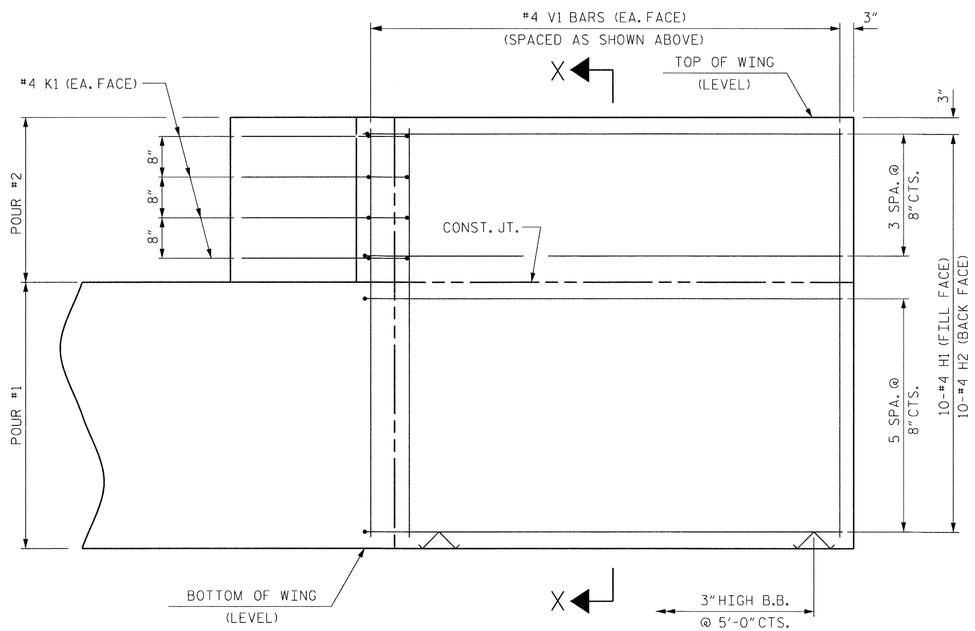

ELEVATION OF WING (W1)

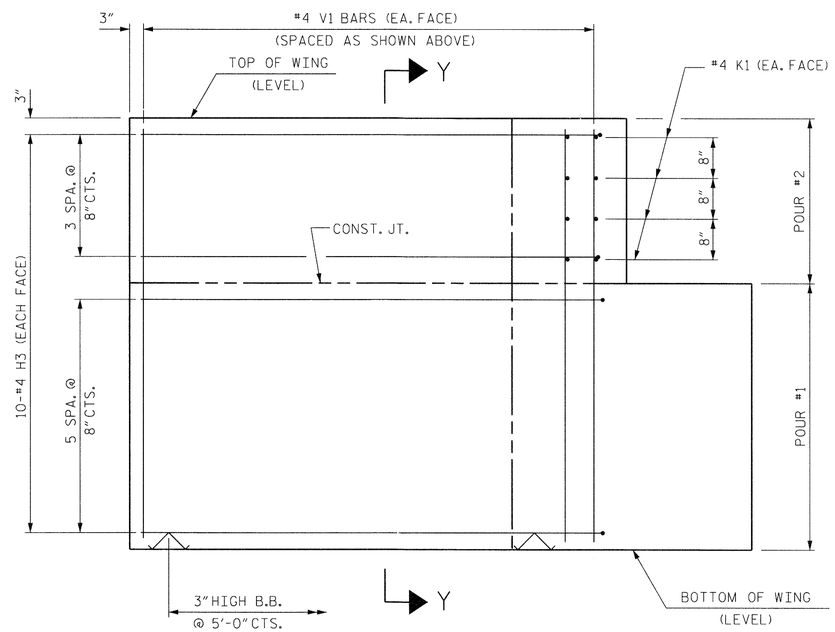

ELEVATION OF WING (W2)

WING DETAILS

PROJECT NO. BD-5113F

MADISON COUNTY

STATION: 14+86.51 -L-

SHEET 2 OF 3

STATE OF NORTH CAROLINA
DEPARTMENT OF TRANSPORTATION
RALEIGH

SUBSTRUCTURE
END BENT NO. 1
WING DETAILS

NORTH CAROLINA PROFESSIONAL SEAL 20277 ENGINEER HARDY L. WILLIS 11/26/13

ASSEMBLED BY :	DPP	DATE :	3/13
CHECKED BY :	RTS	DATE :	6/13
DRAWN BY :	WJH	12/11	
CHECKED BY :	AAC	12/11	

REVISIONS

NO.	BY:	DATE:	NO.	BY:	DATE:
1			3		
2			4		

SHEET NO. S-9

TOTAL SHEETS 15

$$$$$$$SYSTIME$$$$$
$$$$$$$$$$$$$$$$$$$$$$$$DGN$$$$$$$$$$$$$$$$$$$$$$$$
$$$$USERNAME$$$$

STD. NO. EB_27_60S4

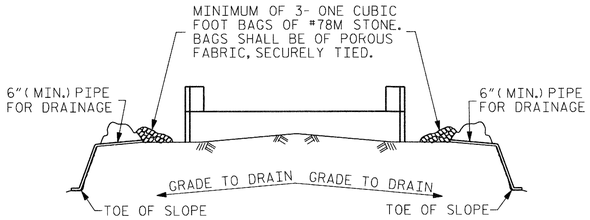

BAGGED STONE AND PIPE SHALL BE PLACED IMMEDIATELY AFTER COMPLETION OF END BENT EXCAVATION. PIPE MAY BE EITHER CONCRETE, CORRUGATED STEEL, CORRUGATED ALUMINUM ALLOY, OR CORRUGATED PLASTIC. PERFORATED PIPE WILL NOT BE ALLOWED.

BAGGED STONE SHALL REMAIN IN PLACE UNTIL THE ENGINEER DIRECTS THAT IT BE REMOVED. THE CONTRACTOR SHALL REMOVE AND DISPOSE OF SILT ACCUMULATIONS AT BAGGED STONE WHEN SO DIRECTED BY THE ENGINEER. BAGS SHALL BE REMOVED AND REPLACED WHENEVER THE ENGINEER DETERMINES THAT THEY HAVE DETERIORATED AND LOST THEIR EFFECTIVENESS.

NO SEPARATE PAYMENT WILL BE MADE FOR THIS WORK AND THE ENTIRE COST OF THIS WORK SHALL BE INCLUDED IN THE UNIT CONTRACT PRICE BID FOR THE SEVERAL PAY ITEMS.

TEMPORARY DRAINAGE AT END BENT

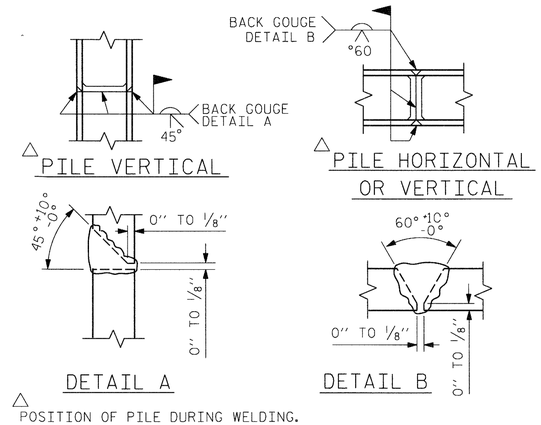

△ POSITION OF PILE DURING WELDING.

PILE SPLICE DETAILS

BAR TYPES

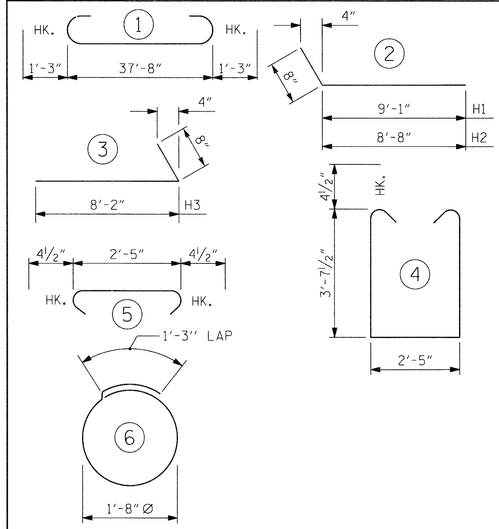

ALL BAR DIMENSIONS ARE OUT TO OUT.

END BENT No. 1	PILE EXCAVATION
HP 12 X 53 STEEL PILES	IN SOIL: 36 LIN. FT.
NO: 5 LIN. FT.= 88	NOT IN SOIL: 25 LIN. FT.

BILL OF MATERIAL END BENT NO. 1

BAR	NO.	SIZE	TYPE	LENGTH	WEIGHT
B1	8	#9	1	40'-2"	1093
B2	28	#4	STR	20'-2"	377
B3	10	#4	STR	2'-5"	16
D1	18	#6	STR	1'-6"	41
H1	10	#4	2	9'-9"	65
H2	10	#4	2	9'-4"	62
H3	20	#4	3	8'-10"	118
K1	16	#4	STR	3'-3"	35
S1	52	#4	4	10'-5"	362
S2	52	#4	5	3'-2"	110
S3	20	#4	6	6'-6"	87
V1	53	#4	STR	6'-2"	218

REINFORCING STEEL (FOR END BENT NO. 1) 2584 LBS.

CLASS A CONCRETE BREAKDOWN (FOR END BENT NO. 1)

POUR #1	CAP, LOWER PART OF WINGS & COLLARS	18.7 C.Y.
POUR #2	UPPER PART OF WINGS	2.4 C.Y.
TOTAL CLASS A CONCRETE		21.1 C.Y.

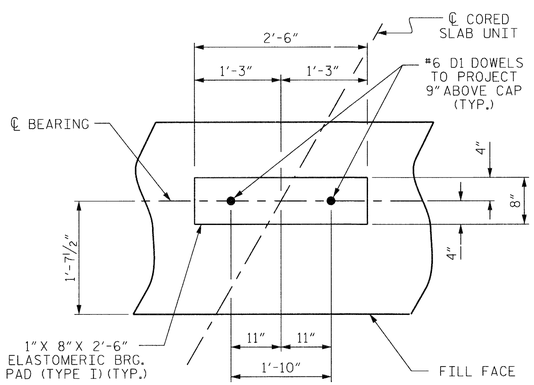

DETAIL "A"

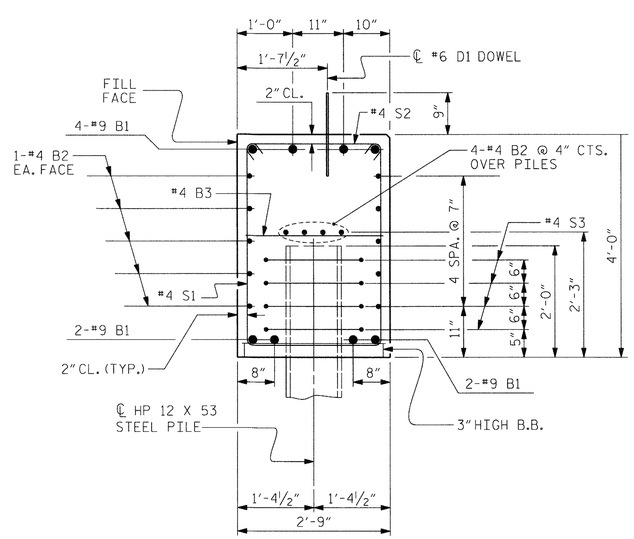

SECTION A-A - END BENT NO. 1

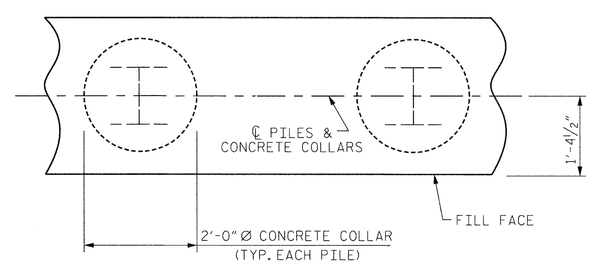

PLAN

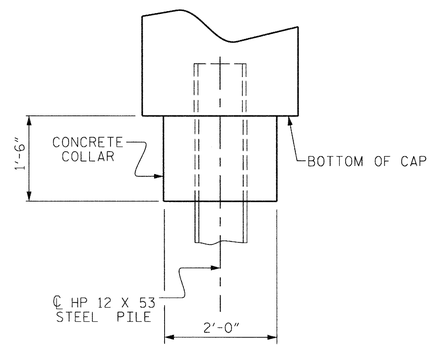

ELEVATION

CORROSION PROTECTION FOR STEEL PILES DETAIL

(END BENT No. 1 ONLY)

PROJECT NO. BD-5113F
MADISON COUNTY
STATION: 14+86.51 -L-

SHEET 3 OF 3

STATE OF NORTH CAROLINA
DEPARTMENT OF TRANSPORTATION
RALEIGH

SUBSTRUCTURE

END BENT NO. 1 DETAILS

NORTH CAROLINA PROFESSIONAL SEAL 20777 ENGINEER HARDY L. WILLIS 9/26/13

ASSEMBLED BY :	DPP	DATE :	3/13
CHECKED BY :	RTS	DATE :	6/13
DRAWN BY :	WJH	12/11	
CHECKED BY :	AAC	12/11	

REVISIONS

NO.	BY:	DATE:	NO.	BY:	DATE:
1			3		
2			4		

SHEET NO. S-10
TOTAL SHEETS 15

$$$$$$$SYSTIME$$$$$
$$$$$$$$$$$$$$$$$$$$DGN$$$$$$$$$$$$$$$$$$$$$$$$
$$$$USERNAME$$$$

STD. NO. EB_27_60S4

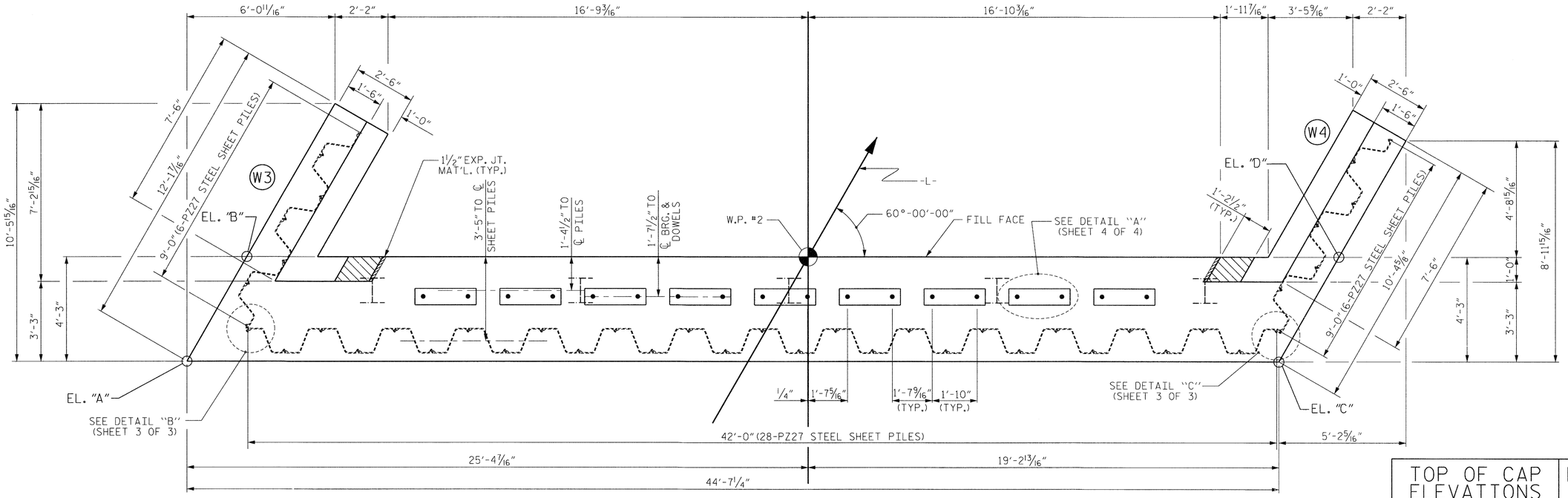

PLAN

TOP OF PILE ELEVATIONS	
1	2024.715
2	2024.659
3	2024.604
4	2024.549
5	2024.494

	TOP OF CAP ELEVATIONS	BOTTOM OF CAP ELEVATIONS
A	2026.303	2023.803
B	2026.239	2023.739
C	2026.013	2023.513
D	2025.949	2023.449

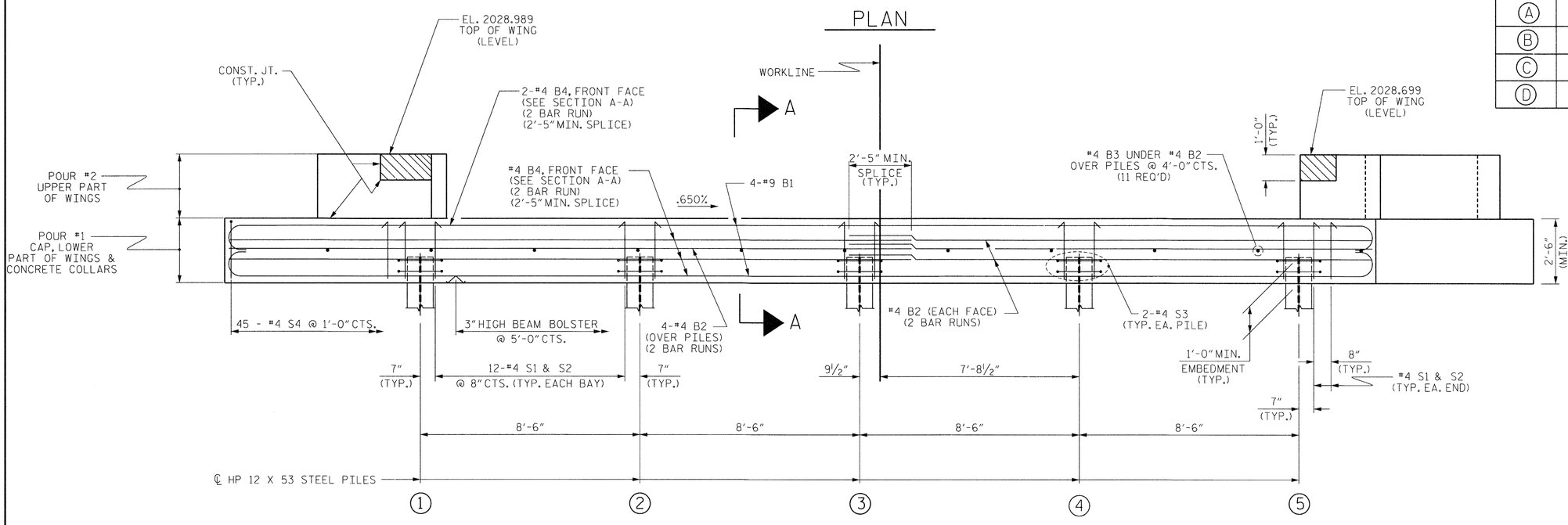

ELEVATION

WINGS NOT SHOWN FOR CLARITY.
FOR SECTION A-A, SEE SHEET 3 OF 3.
SHEET PILES NOT SHOWN FOR CLARITY

NOTES

STIRRUPS IN CAP MAY BE SHIFTED AS NECESSARY TO CLEAR DOWELS.

THE CONCRETE IN THE SHADED AREA OF THE WING SHALL BE POURED AFTER THE VERTICAL CONCRETE BARRIER RAIL IS CAST IF SLIP FORMING IS USED.

FOR PILE SPLICE DETAILS, SEE SHEET 3 OF 3.

FOR WING DETAILS, SEE SHEET 2 OF 3.

PROJECT NO. BD-5113F

MADISON COUNTY

STATION: 14+86.51 -L-

SHEET 1 OF 3

NORTH CAROLINA PROFESSIONAL SEAL 20777 ENGINEER HARDY L. WILLIS 9/26/13

STATE OF NORTH CAROLINA
DEPARTMENT OF TRANSPORTATION
RALEIGH

SUBSTRUCTURE

END BENT No. 2

REVISIONS						SHEET NO.
NO.	BY:	DATE:	NO.	BY:	DATE:	S-11
1			3			TOTAL SHEETS
2			4			15

ASSEMBLED BY : DPP DATE : 3/13
CHECKED BY : RTS DATE : 6/13
DRAWN BY : WJH 12/11
CHECKED BY : AAC 12/11

$$$$$$SYSTIME$$$$$
$$$$$$$$$$$$$$$$$$$$$$$$DGN$$$$$$$$$$$$$$$$$$$$$$$$$
$$$$USERNAME$$$$

STD. NO. EB_27_60S4

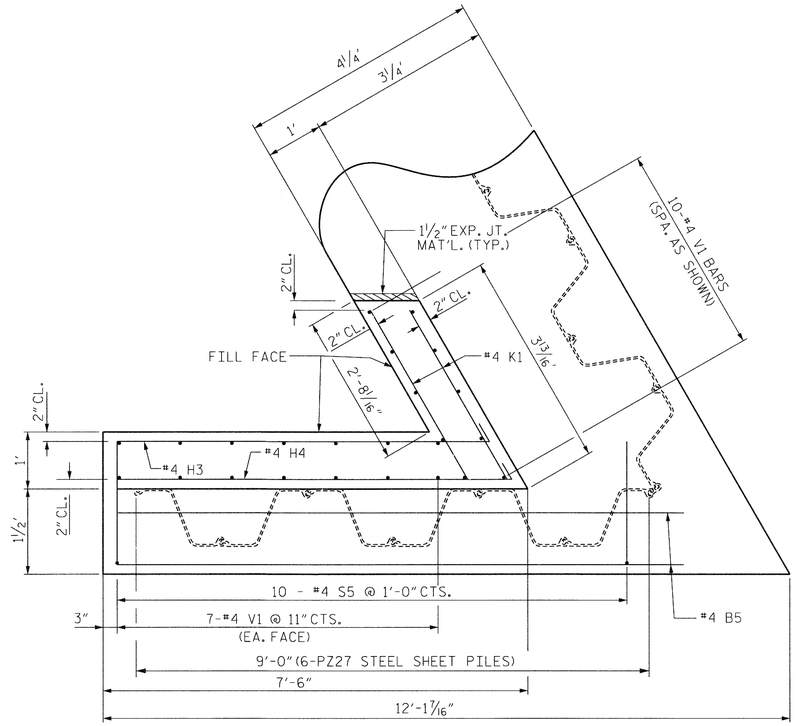

PLAN OF WING (W3)

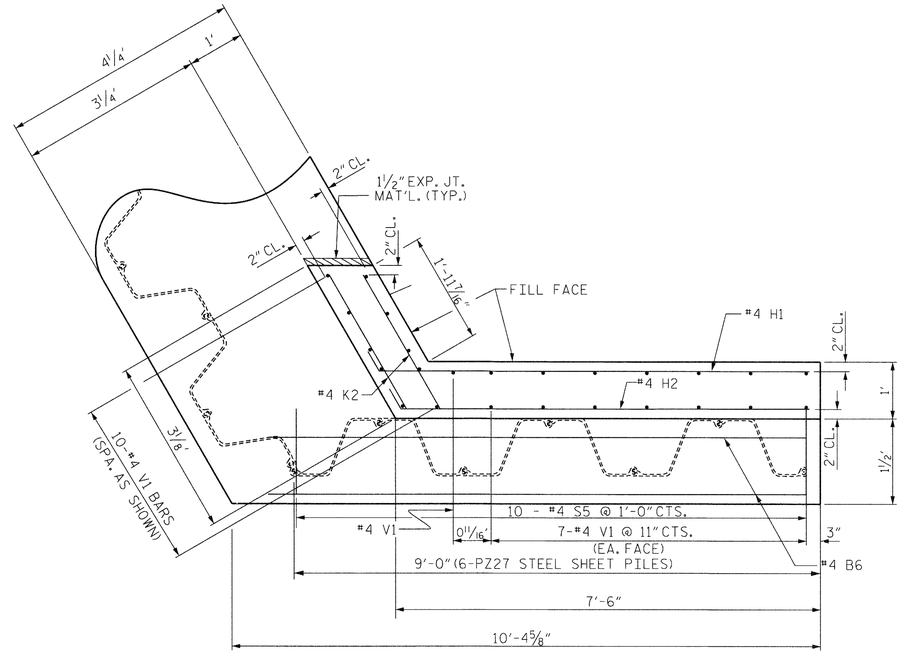

PLAN OF WING (W4)

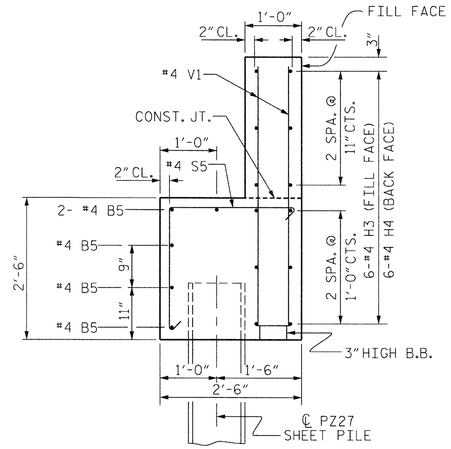

SECTION X-X

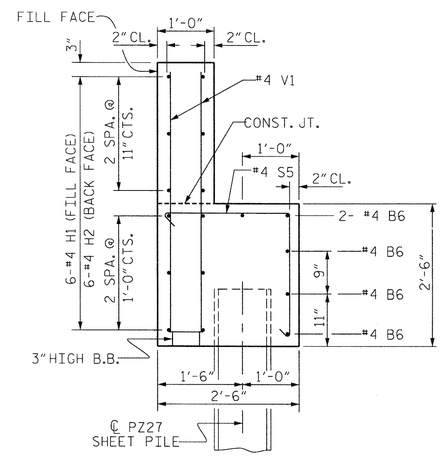

SECTION Y-Y

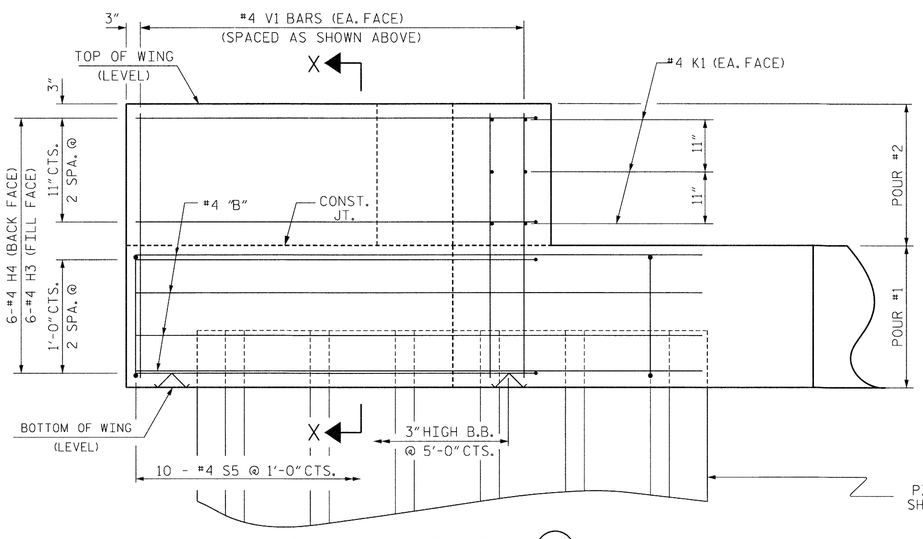

ELEVATION OF WING (W3)

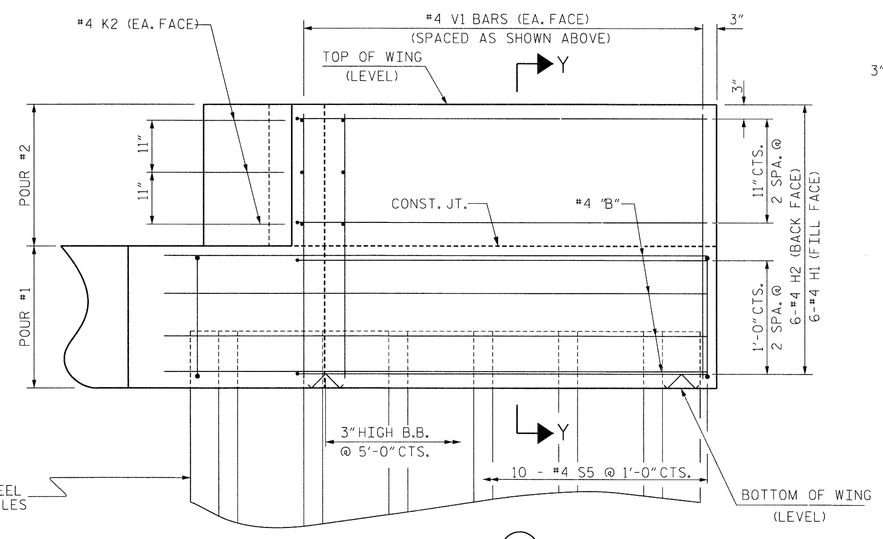

ELEVATION OF WING (W4)

WING DETAILS

PROJECT NO. BD-5113F

MADISON COUNTY

STATION: 14+86.51 -L-

SHEET 2 OF 3

STATE OF NORTH CAROLINA
DEPARTMENT OF TRANSPORTATION
RALEIGH

SUBSTRUCTURE
END BENT NO. 2
WING DETAILS

NORTH CAROLINA PROFESSIONAL SEAL 20774 ENGINEER HARDY L. WILLIS 9/24/13

ASSEMBLED BY :	DPP	DATE :	3/13
CHECKED BY :	RTS	DATE :	6/13
DRAWN BY :	WJH	12/11	
CHECKED BY :	AAC	12/11	

REVISIONS								SHEET NO.
NO.	BY:	DATE:	NO.	BY:	DATE:			S-12
1			3					TOTAL SHEETS
2			4					15

$$$$$$SYSTIME$$$$$
$$$$$$$$$$$$$$$$$$$$$$$$DGN$$$$$$$$$$$$$$$$$$$$$$$$
$$$$USERNAME$$$$

STD. NO. EB_27_60S4

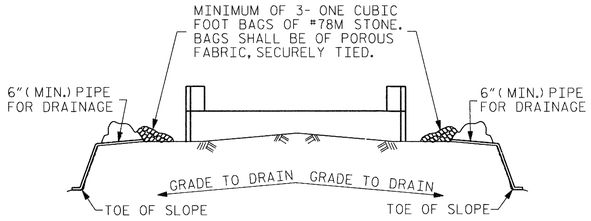

BAGGED STONE AND PIPE SHALL BE PLACED IMMEDIATELY AFTER COMPLETION OF END BENT EXCAVATION. PIPE MAY BE EITHER CONCRETE, CORRUGATED STEEL, CORRUGATED ALUMINUM ALLOY, OR CORRUGATED PLASTIC. PERFORATED PIPE WILL NOT BE ALLOWED.

BAGGED STONE SHALL REMAIN IN PLACE UNTIL THE ENGINEER DIRECTS THAT IT BE REMOVED. THE CONTRACTOR SHALL REMOVE AND DISPOSE OF SILT ACCUMULATIONS AT BAGGED STONE WHEN SO DIRECTED BY THE ENGINEER. BAGS SHALL BE REMOVED AND REPLACED WHENEVER THE ENGINEER DETERMINES THAT THEY HAVE DETERIORATED AND LOST THEIR EFFECTIVENESS.

NO SEPARATE PAYMENT WILL BE MADE FOR THIS WORK AND THE ENTIRE COST OF THIS WORK SHALL BE INCLUDED IN THE UNIT CONTRACT PRICE BID FOR THE SEVERAL PAY ITEMS.

TEMPORARY DRAINAGE AT END BENT

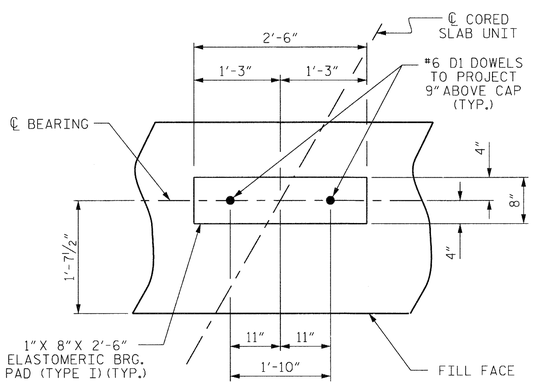

DETAIL "A"

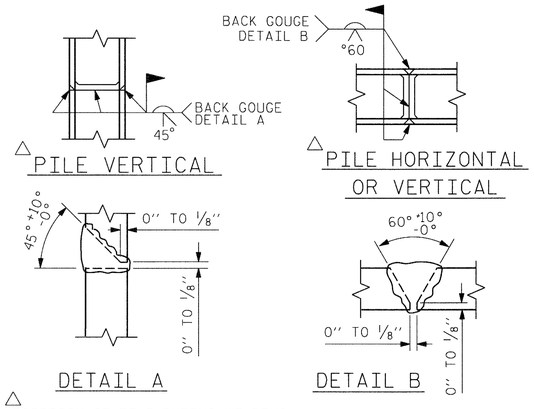

△ POSITION OF PILE DURING WELDING.

PILE SPLICE DETAILS

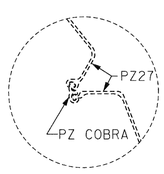

DETAIL "B"

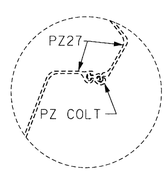

DETAIL "C"

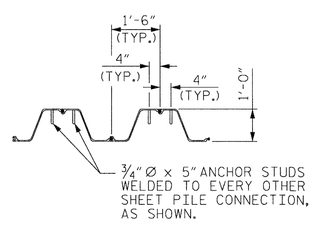

ANCHOR STUD DETAIL

SHEET PILE CONNECTION DETAILS

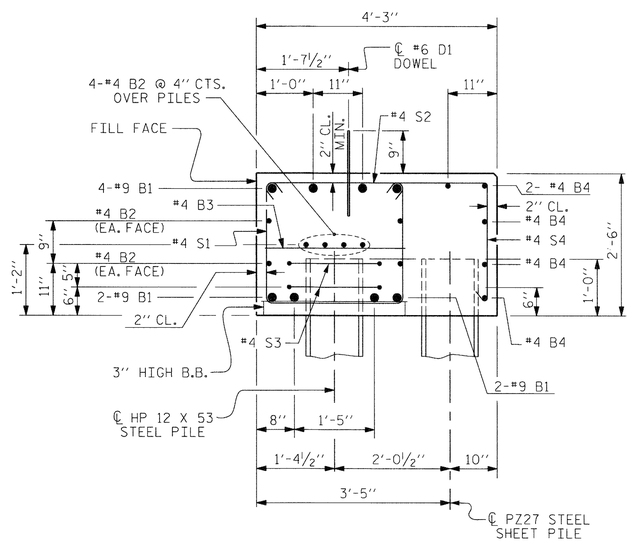

SECTION B-B - END BENT NO. 2

BAR TYPES

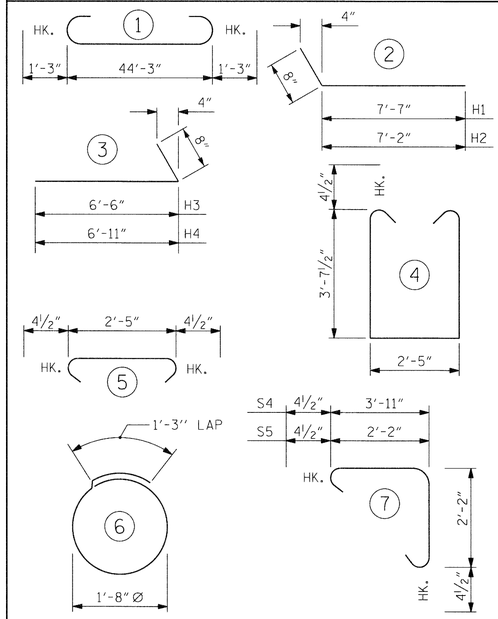

ALL BAR DIMENSIONS ARE OUT TO OUT.

END BENT No. 2	PILE EXCAVATION
HP 12 X 53 STEEL PILES	IN SOIL: 30 LIN. FT.
NO: 5 LIN. FT.= 75	NOT IN SOIL: 25 LIN. FT.

BILL OF MATERIAL END BENT NO. 2

BAR	NO.	SIZE	TYPE	LENGTH	WEIGHT
B1	8	#9	1	46'-9"	1272
B2	16	#4	STR	22'-9"	243
B3	11	#4	STR	3'-11"	29
B4	10	#4	STR	24'-6"	164
B5	5	#4	STR	10'-0"	33
B6	5	#4	STR	9'-6"	32
D1	18	#6	STR	1'-6"	41
H1	6	#4	2	8'-3"	33
H2	6	#4	2	7'-10"	31
H3	6	#4	3	7'-2"	29
H4	6	#4	3	7'-7"	30
K1	6	#4	STR	3'-5"	14
K2	6	#4	STR	2'-8"	11
S1	52	#4	4	10'-5"	362
S2	52	#4	5	3'-2"	110
S3	10	#4	6	6'-6"	43
S4	45	#4	7	6'-10"	205
S5	20	#4	7	5'-1"	68
V1	49	#4	STR	4'-9"	155

REINFORCING STEEL (FOR END BENT NO. 2) 2905 LBS.

CLASS A CONCRETE BREAKDOWN (FOR END BENT NO. 2)

POUR #1	CAP, LOWER PART OF WINGS & COLLARS	21.1 C.Y.
POUR #2	UPPER PART OF WINGS	2.1 C.Y.
TOTAL CLASS A CONCRETE		23.2 C.Y.

18" STEEL SHEET PILES

NO. PZ27:	40	
NO. PZ "COBRA":	1	
NO. PZ "COLT":	1	
TOTAL:	42	SQ. FT.: 493

PROJECT NO. BD-5113F
MADISON COUNTY
STATION: 14+86.51 -L-

SHEET 3 OF 3

STATE OF NORTH CAROLINA
DEPARTMENT OF TRANSPORTATION
RALEIGH

SUBSTRUCTURE

END BENT DETAILS

NORTH CAROLINA PROFESSIONAL SEAL ENGINEER HARDY L. WILLIS 4/26/13

REVISIONS								SHEET NO.
NO.	BY:	DATE:	NO.	BY:	DATE:			S-13
1			3					TOTAL SHEETS
2			4					15

ASSEMBLED BY :	DPP	DATE :	3/13
CHECKED BY :	RTS	DATE :	6/13
DRAWN BY : WJH	12/11		
CHECKED BY : AAC	12/11		

$$$$$$SYSTIME$$$$$
$$$$$$$$$$$$$$$$$$$$$$$$DGN$$$$$$$$$$$$$$$$$$$$$$$$
$$$$USERNAME$$$$

STD. NO. EB_27_60S4

NOTES :

PLACE RIP RAP ALONG STREAM BANKS AS SHOWN

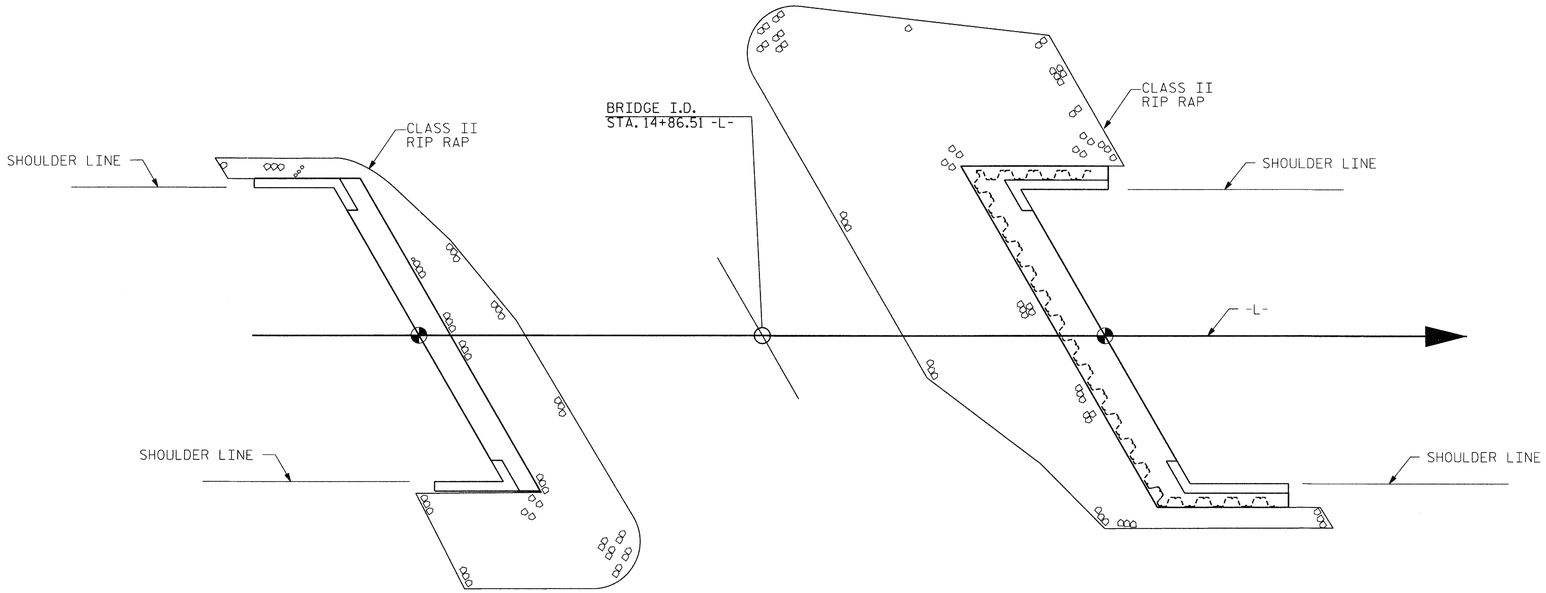

END BENT NO. 1

END BENT NO. 2

ESTIMATED QUANTITIES		
BRIDGE @ STA. 14+86.51	RIP RAP CLASS II (2'-0" THICK)	GEOTEXTILE FOR DRAINAGE
	TONS	SQUARE YARDS
END BENT 1	73	83
END BENT 2	163	184

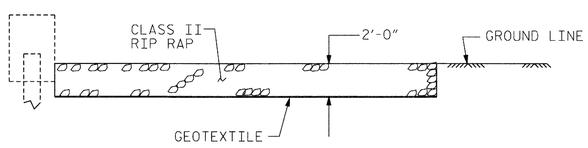

℄ SECTION @ END BENT 1

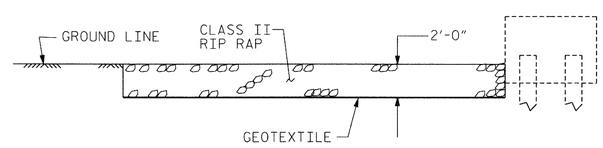

℄ SECTION @ END BENT 2

PROJECT NO. BD-5113F

MADISON COUNTY

STATION: 14+86.51 -L-

NORTH CAROLINA PROFESSIONAL SEAL 20777 ENGINEER HARDY L. WILLIS 9/26/13

STATE OF NORTH CAROLINA
DEPARTMENT OF TRANSPORTATION
RALEIGH

STANDARD

RIP RAP DETAILS

REVISIONS						SHEET NO.
NO.	BY:	DATE:	NO.	BY:	DATE:	S-14
1			3			TOTAL SHEETS
2			4			15

ASSEMBLED BY :	MAF	DATE :	3/13
CHECKED BY :	RTS	DATE :	6/13
DRAWN BY : REK 1/84	REV. 5/1/06R		TLA/GM
CHECKED BY : RDU 1/84	REV. 10/1/11		MAA/GM
	REV. 12/21/11		MAA/GM

$$$$$$$SYSTIME$$$$$
$$$$$$$$$$$$$$$$$$$$$$$$DGN$$$$$$$$$$$$$$$$$$$$$$$$
$$$$USERNAME$$$$

STD. NO. RR1 (Sht 1)

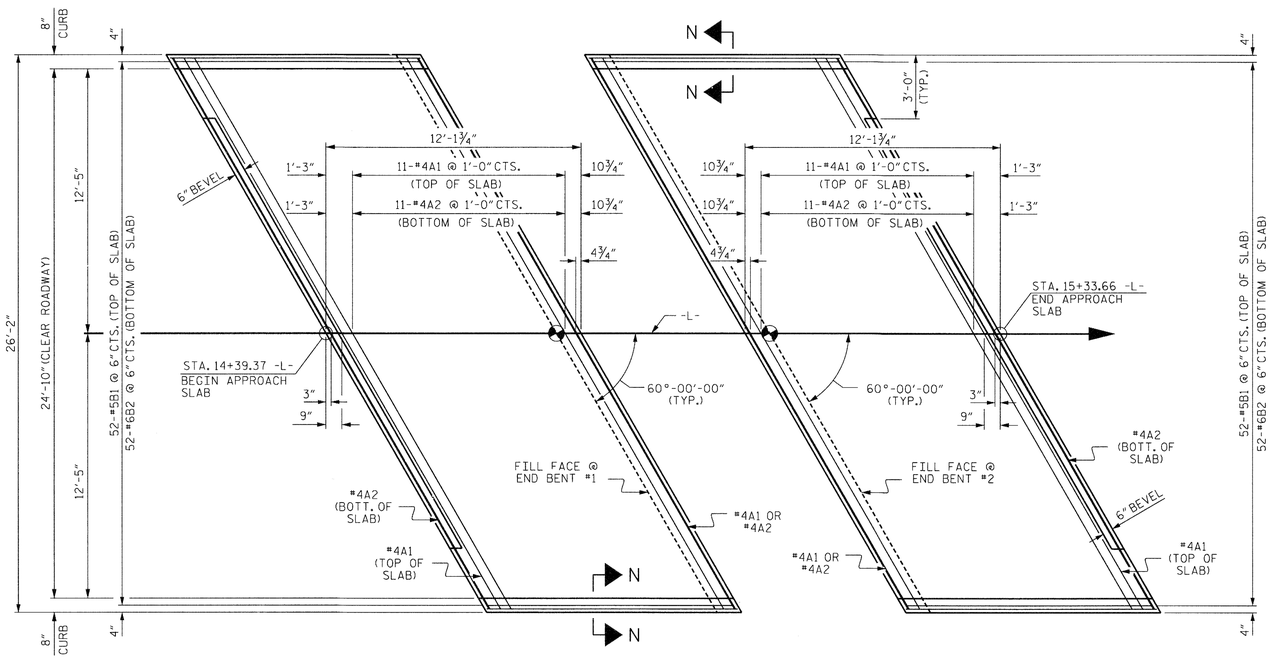

PLAN @ END BENT #1 PLAN @ END BENT #2

DIMENSIONS SHOWN ARE TYPICAL FOR BOTH APPROACH SLABS

NOTES

FOR BRIDGE APPROACH FILL INCLUDING GEOTEXTILE, 4"Ø DRAINAGE PIPE, AND #78M STONE BACKFILL, SEE ROADWAY PLANS.

GEOTEXTILE SHALL BE TYPE 1IN ACCORDANCE WITH THE STANDARD SPECIFICATIONS SECTION 1056.

#78M STONE BACKFILL (CLASS V SELECT MATERIAL) SHALL BE IN ACCORDANCE WITH STANDARD SPECIFICATIONS SECTION 1016.

#78M STONE BACKFILL IS TO BE CONTINUOUS ALONG FILL FACE OF BACKWALL FROM OUTSIDE EDGE TO OUTSIDE EDGE OF APPROACH SLAB.

FOR THE 4"Ø DRAINAGE PIPE OUTLET(S), SEE ROADWAY STANDARD DRAWINGS.

AREA BETWEEN THE WINGWALL AND APPROACH SLAB SHALL BE GRADED TO DRAIN THE WATER AWAY FROM THE FILL FACE OF THE BRIDGE AND SHALL BE PAVED. SEE ROADWAY PLANS.

APPROACH SLAB GROOVING IS NOT REQUIRED.

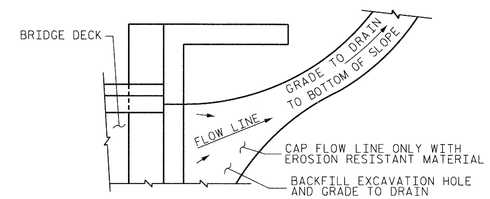

NOTE: IF THE APPROACH SLAB IS NOT CONSTRUCTED IMMEDIATELY AFTER THE BACKFILLING OF THE END BENT EXCAVATION, GRADE TO DRAIN TO THE BOTTOM OF THE SLOPE AND PROVIDE EROSION RESISTANT MATERIAL, SUCH AS FIBERGLASS ROVING OR AS DIRECTED BY THE ENGINEER TO PREVENT SOIL EROSION AND TO PROTECT THE AREA ADJACENT TO THE STRUCTURE. THE CONTRACTOR WILL BE REQUIRED TO REMOVE THESE MATERIALS PRIOR TO CONSTRUCTION OF THE APPROACH SLAB.

TEMPORARY DRAINAGE DETAIL

BILL OF MATERIAL

APPROACH SLAB AT EB #1

BAR	NO.	SIZE	TYPE	LENGTH	WEIGHT
* A1	13	#4	STR	29'-9"	258
A2	13	#4	STR	29'-9"	256
* B1	52	#5	STR	11'-1"	601
B2	52	#6	STR	11'-7"	905
REINFORCING STEEL				LBS.	1163
* EPOXY COATED REINFORCING STEEL				LBS.	859
CLASS AA CONCRETE				C. Y.	16.7

APPROACH SLAB AT EB #2

BAR	NO.	SIZE	TYPE	LENGTH	WEIGHT
* A1	13	#4	STR	29'-9"	258
A2	13	#4	STR	29'-9"	258
* B1	52	#5	STR	11'-1"	601
B2	52	#6	STR	11'-7"	905
REINFORCING STEEL				LBS.	1163
* EPOXY COATED REINFORCING STEEL				LBS.	869
CLASS AA CONCRETE				C. Y.	16.7

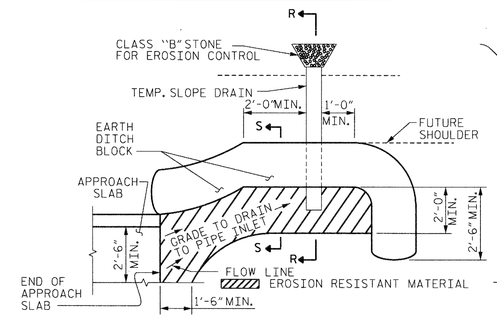

NOTE: IMMEDIATELY AFTER THE CONSTRUCTION OF THE APPROACH SLAB, THE CONTRACTOR SHALL PROVIDE TEMPORARY BERM AND SLOPE DRAIN. CONTRACTOR SHALL GRADE TO PIPE INLET AND PROVIDE EROSION RESISTANT MATERIAL AS SHOWN. THE EROSION RESISTANT MATERIAL SHALL BE EITHER 1) ASPHALT PLANT MIX, TYPE 1 OR TYPE 2, MIN. 2" DEPTH, 2) EROSION CONTROL MAT, OR 3) CONCRETE, AS DIRECTED BY THE ENGINEER. THE SLOPE DRAIN SHALL CONSIST OF A NON-PERFORATED TEMPORARY DRAINAGE PIPE, 12 INCHES IN DIAMETER.

PLAN VIEW

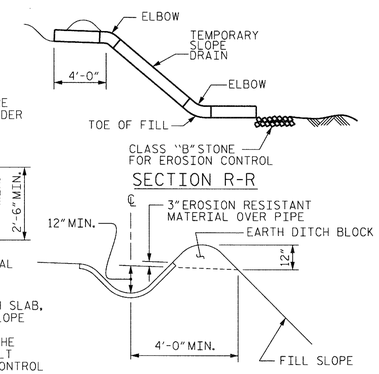

SECTION S-S

TEMPORARY BERM AND SLOPE DRAIN DETAILS

(TO BE USED WHEN SHOULDER BERM GUTTER IS REQUIRED)

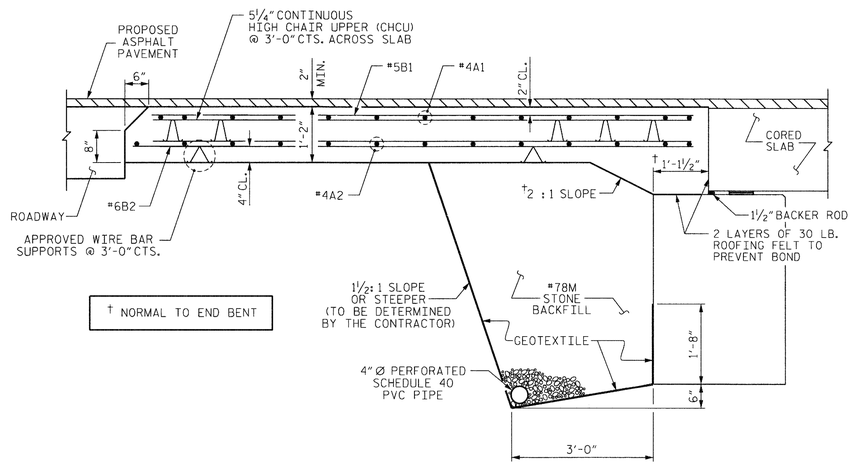

† NORMAL TO END BENT

SECTION THRU SLAB

(4'-0" CAP @ END BENT 1 SHOWN; 2'-6" CAP @ END BENT 2 SIMILAR)

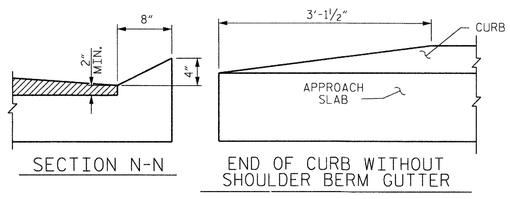

SECTION N-N END OF CURB WITHOUT SHOULDER BERM GUTTER

CURB DETAILS

SPLICE LENGTHS		
BAR SIZE	EPOXY COATED	UNCOATED
#4	2'-0"	1'-9"
#5	2'-6"	2'-2"
#6	3'-10"	2'-7"

NORTH CAROLINA PROFESSIONAL SEAL 20079 ENGINEER HARDY L. WILLIS

9/24/13

PROJECT NO. BD-5113F

MADISON COUNTY

STATION: 14+86.51 -L-

STATE OF NORTH CAROLINA
DEPARTMENT OF TRANSPORTATION
RALEIGH

STANDARD
BRIDGE APPROACH SLAB
FOR PRESTRESSED CONCRETE
CORED SLAB UNIT
(SUB-REGIONAL TIER)
60° SKEW

REVISIONS						
NO.	BY:	DATE:	NO.	BY:	DATE:	
1			3			
2			4			

SHEET NO. S-15

TOTAL SHEETS 15

ASSEMBLED BY :	MAF	DATE :	3/13
CHECKED BY :	RTS	DATE :	6/13
DRAWN BY : SHS/MAA 5-09	REV. 12-11	MAA/AAC	
CHECKED BY : BCH 5-09			

$$$$$$SYSTIME$$$$$
$$$$$$$$$$$$$$$$$$$$$$$$DGN$$$$$$$$$$$$$$$$$$$$$$$$
$$$$USERNAME$$$$

STD. NO. BAS_27_60S

STANDARD NOTES

DESIGN DATA:

SPECIFICATIONS	A.A.S.H.T.O. (CURRENT)
LIVE LOAD	SEE PLANS
IMPACT ALLOWANCE	SEE A.A.S.H.T.O.
STRESS IN EXTREME FIBER OF	
STRUCTURAL STEEL - AASHTO M270 GRADE 36	20,000 LBS. PER SQ. IN.
- AASHTO M270 GRADE 50W	27,000 LBS. PER SQ. IN.
- AASHTO M270 GRADE 50	27,000 LBS. PER SQ. IN.
REINFORCING STEEL IN TENSION	
GRADE 60	24,000 LBS. PER SQ. IN.
CONCRETE IN COMPRESSION	1,200 LBS. PER SQ. IN.
CONCRETE IN SHEAR	SEE A.A.S.H.T.O.
STRUCTURAL TIMBER - TREATED OR	
UNTREATED - EXTREME FIBER STRESS	1,800 LBS. PER SQ. IN.
COMPRESSION PERPENDICULAR TO GRAIN OF TIMBER	375 LBS. PER SQ. IN.
EQUIVALENT FLUID PRESSURE OF EARTH	30 LBS. PER CU. FT. (MINIMUM)

MATERIAL AND WORKMANSHIP:

EXCEPT AS MAY OTHERWISE BE SPECIFIED ON PLANS OR IN THE SPECIAL PROVISIONS, ALL MATERIAL AND WORKMANSHIP SHALL BE IN ACCORDANCE WITH THE 2012 "STANDARD SPECIFICATIONS FOR ROADS AND STRUCTURES" OF THE N. C. DEPARTMENT OF TRANSPORTATION.

STEEL SHEET PILING FOR PERMANENT OR TEMPORARY APPLICATIONS SHALL BE HOT ROLLED.

CONCRETE:

UNLESS OTHERWISE REQUIRED ON PLANS, CLASS A CONCRETE SHALL BE USED FOR ALL PORTIONS OF ALL STRUCTURES WITH THE EXCEPTION THAT: CLASS AA CONCRETE SHALL BE USED IN BRIDGE SUPERSTRUCTURES, ABUTMENT BACKWALLS, AND APPROACH SLABS; AND CLASS B CONCRETE SHALL BE USED FOR SLOPE PROTECTION AND RIP RAP.

CONCRETE CHAMFERS:

UNLESS OTHERWISE NOTED ON THE PLANS, ALL EXPOSED CORNERS ON STRUCTURES SHALL BE CHAMFERED 3/4" WITH THE FOLLOWING EXCEPTIONS: TOP CORNERS OF CURBS MAY BE ROUNDED TO 1-1/2" RADIUS WHICH IS BUILT INTO CURB FORMS; CORNERS OF TRANSVERSE FLOOR EXPANSION JOINTS SHALL BE ROUNDED WITH A 1/4" FINISHING TOOL UNLESS OTHERWISE REQUIRED ON PLANS; AND CORNERS OF EXPANSION JOINTS IN THE ROADWAY FACES AND TOPS OF CURBS AND SIDEWALKS SHALL BE ROUNDED TO A 1/4" RADIUS WITH A FINISHING STONE OR TOOL UNLESS OTHERWISE REQUIRED ON PLANS.

DOWELS:

DOWELS WHEN INDICATED ON PLANS AS FOR CULVERT EXTENSIONS, SHALL BE EMBEDDED AT LEAST 12" INTO THE OLD CONCRETE AND GROUTED INTO PLACE WITH 1:2 CEMENT MORTAR.

ALLOWANCE FOR DEAD LOAD DEFLECTION, SETTLEMENT, ETC. IN CASTING SUPERSTRUCTURES:

BRIDGES SHALL BE BUILT ON THE GRADE OR VERTICAL CURVE SHOWN ON PLANS. SLABS, CURBS AND PARAPETS SHALL CONFORM TO THE GRADE OR CURVE.

ALL DIMENSIONS WHICH ARE GIVEN IN SECTION AND ARE AFFECTED BY DEAD LOAD DEFLECTIONS ARE DIMENSIONS AT CENTER LINE OF BEARING UNLESS OTHERWISE NOTED ON PLANS. IN SETTING FORMS FOR STEEL BEAM BRIDGES AND PRESTRESSED CONCRETE GIRDER BRIDGES, ADJUSTMENTS SHALL BE MADE DUE TO THE DEAD LOAD DEFLECTIONS FOR THE ELEVATIONS SHOWN. WHERE BLOCKS ARE SHOWN OVER BEAMS FOR BUILDING UP TO THE SLAB, THE VERTICAL DIMENSIONS OF THE BLOCKS SHALL BE ADJUSTED BETWEEN BEARINGS TO COMPENSATE FOR DEAD LOAD DEFLECTIONS, VERTICAL CURVE ORDINATE, AND ACTUAL BEAM CAMBER. WHERE BOTTOM OF SLAB IS IN LINE WITH BOTTOM OF TOP FLANGES, DEPTH OF SLAB BETWEEN BEARINGS SHALL BE ADJUSTED TO COMPENSATE FOR DEAD LOAD DEFLECTION, VERTICAL CURVE ORDINATE, AND ACTUAL BEAM CAMBER.

IN SETTING FALSEWORK AND FORMS FOR REINFORCED CONCRETE SPANS, AN ALLOWANCE SHALL BE MADE FOR DEAD LOAD DEFLECTIONS, SETTLEMENT OF FALSEWORK, AND PERMANENT CAMBER WHICH SHALL BE PROVIDED FOR IN ADDITION TO THE ELEVATIONS SHOWN. AFTER REMOVAL OF THE FALSEWORK, THE FINISHED STRUCTURES SHALL CONFORM TO THE PROFILE AND ELEVATIONS SHOWN ON THE PLANS AND CONSTRUCTION ELEVATIONS FURNISHED BY THE ENGINEER.

DETAILED DRAWINGS FOR FALSEWORK OR FORMS FOR BRIDGE SUPERSTRUCTURE AND ANY STRUCTURE OR PARTS OF A STRUCTURE AS NOTED ON THE PLANS SHALL BE SUBMITTED TO THE ENGINEER FOR APPROVAL BEFORE CONSTRUCTION OF THE FALSEWORK OR FORMS IS STARTED.

REINFORCING STEEL:

ALL REINFORCING STEEL SHALL BE DEFORMED. DIMENSIONS RELATIVE TO PLACEMENT OF REINFORCING ARE TO CENTERS OF BARS UNLESS OTHERWISE INDICATED IN THE PLANS. DIMENSIONS ON BAR DETAILS ARE TO CENTERS OF BARS OR ARE OUT TO OUT AS INDICATED ON PLANS.

WIRE BAR SUPPORTS SHALL BE PROVIDED FOR REINFORCING STEEL WHERE INDICATED ON THE PLANS. WHEN BAR SUPPORT PIECES ARE PLACED IN CONTINUOUS LINES, THEY SHALL BE SO PLACED THAT THE ENDS OF THE SUPPORTING WIRES SHALL BE LAPPED TO LOCK LEGS ON ADJOINING PIECES.

STRUCTURAL STEEL:

AT THE CONTRACTOR'S OPTION, HE MAY SUBSTITUTE 7/8" Ø SHEAR STUDS FOR THE 3/4" Ø STUDS SPECIFIED ON THE PLANS. THIS SUBSTITUTION SHALL BE MADE AT THE RATE OF 3 - 7/8" Ø STUDS FOR 4 - 3/4" Ø STUDS, AND STUD SPACING CHANGES SHALL BE MADE AS NECESSARY TO PROVIDE THE SAME EQUIVALENT NUMBER OF 7/8" Ø STUDS ALONG THE BEAM AS SHOWN FOR 3/4" Ø STUDS BASED ON THE RATIO OF 3 - 7/8" Ø STUDS FOR 4 - 3/4" Ø STUDS. STUDS OF THE LENGTH SPECIFIED ON THE PLANS MUST BE PROVIDED. THE MAXIMUM SPACING SHALL BE 2'-0".

EXCEPT AT THE INTERIOR SUPPORTS OF CONTINUOUS BEAMS WHERE THE COVER PLATE IS IN CONTACT WITH BEARING PLATE, THE CONTRACTOR MAY, AT HIS OPTION, SUBSTITUTE FOR THE COVER PLATES DESIGNATED ON THE PLANS COVER PLATES OF THE EQUIVALENT AREA PROVIDED THESE PLATES ARE AT LEAST 5/16" IN THICKNESS AND DO NOT EXCEED A WIDTH EQUAL TO THE FLANGE WIDTH LESS 2" OR A THICKNESS EQUAL TO 2 TIMES THE FLANGE THICKNESS. THE SIZE OF FILLET WELDS SHALL CONFORM TO THE REQUIREMENTS OF THE CURRENT ANSI/AASHTO/AWS "BRIDGE WELDING CODE". ELECTROSLAG WELDING WILL NOT BE PERMITTED.

WITH THE SOLE EXCEPTION OF EDGES AT SURFACES WHICH BEAR ON OTHER SURFACES, ALL SHARP EDGES AND ENDS OF SHAPES AND PLATES SHALL BE SLIGHTLY ROUNDED BY SUITABLE MEANS TO A RADIUS OF APPROXIMATELY 1/16 INCH OR EQUIVALENT FLAT SURFACE AT A SUITABLE ANGLE PRIOR TO PAINTING, GALVANIZING, OR METALLIZING.

HANDRAILS AND POSTS:

METAL STANDARDS AND FACES OF THE CONCRETE END POSTS FOR THE METAL RAIL SHALL BE SET NORMAL TO THE GRADE OF THE CURB, UNLESS OTHERWISE SHOWN ON PLANS. THE METAL RAIL AND TOPS OF CONCRETE POSTS USED WITH THE ALUMINUM RAIL SHALL BE BUILT PARALLEL TO THE GRADE OF THE CURB.

METAL HANDRAILS SHALL BE IN ACCORDANCE WITH THE PLANS. RAILS SHALL BE AS MANUFACTURED FOR BRIDGE RAILING. CASTINGS SHALL BE OF A UNIFORM APPEARANCE. FINS AND OTHER DEFORMATIONS RESULTING FROM CASTING OR OTHERWISE SHALL BE REMOVED IN A MANNER SO THAT A UNIFORM COLORING OF THE COMPLETED CASTING SHALL BE OBTAINED. CASTINGS WITH DISCOLORATIONS OR OF NON-UNIFORM COLORING WILL NOT BE ACCEPTED. CERTIFIED MILL REPORTS ARE REQUIRED FOR METAL RAILS AND POSTS.

SPECIAL NOTES:

GENERALLY, IN CASE OF DISCREPANCY, THIS STANDARD SHEET OF NOTES SHALL GOVERN OVER THE SPECIFICATIONS, BUT THE REMAINDER OF THE PLANS SHALL GOVERN OVER NOTES HEREON, AND SPECIAL PROVISIONS SHALL GOVERN OVER ALL. SEE SPECIFICATIONS ARTICLE 105-4.

ENGLISH

JANUARY, 1990