09/08/99

TIP PROJECT: BD-5113G

CONTRACT: DM00072

See Sheet 1-A For Index of Sheets

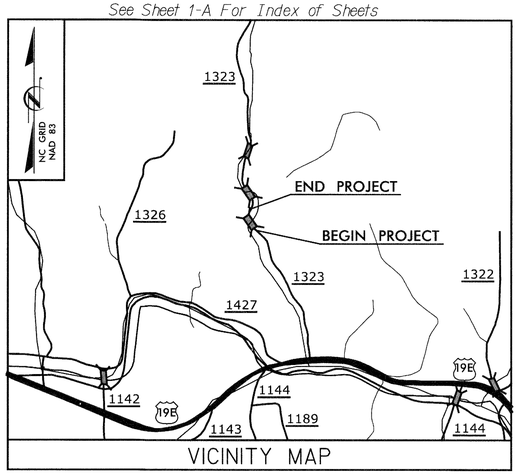

VICINITY MAP

STATE OF NORTH CAROLINA
DIVISION OF HIGHWAYS

YANCEY COUNTY

STATE	STATE PROJECT REFERENCE NO.	SHEET NO.	TOTAL SHEETS
N.C.	BD-5113G	1	

STATE PROJ. NO.	F.A. PROJ. NO.	DESCRIPTION
45359.1.7	BRZ-1323(6)	PE
45359.2.7	BRZ-1323(6)	R/W
45359.3.7	BRZ-1323(6)	CONST.

LOCATION: BRIDGE NO. 25 OVER SHOAL CREEK ON SR 1323 (SHOAL CREEK ROAD)

TYPE OF WORK: GRADING, DRAINAGE, PAVING, AND STRUCTURE

4

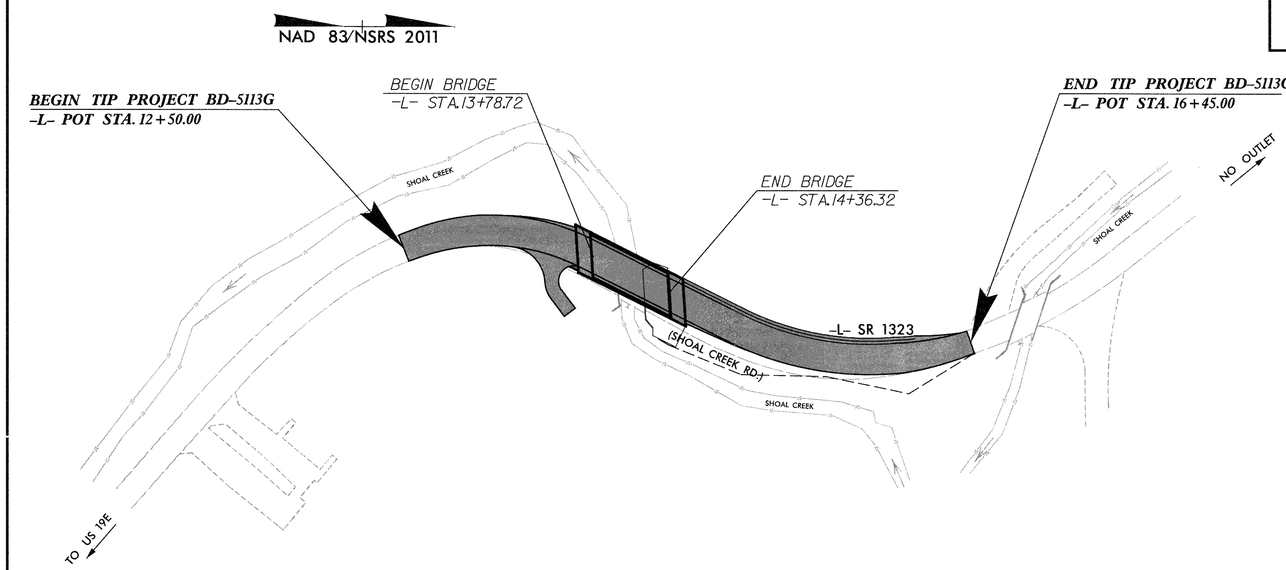

V&M
Vaughn & Melton
Consulting Engineers
Asheville, North Carolina 828-253-2796
Charlotte, North Carolina 704-357-0488
Tri-Cities, Tennessee 423-467-8401
Knoxville, Tennessee 865-546-0800
Middlesboro, Kentucky 606-248-6600
Spartanburg, South Carolina 864-574-4775

Copyright © 1994 Vaughn & Melton, Inc. All Rights Reserved

GRAPHIC SCALES

20 10 0 20 40
PLANS

20 10 0 20 40
PROFILE (HORIZONTAL)

4 2 0 4 8
PROFILE (VERTICAL)

DESIGN DATA

ADT 2010 = 520
ADT 2025 = 1040

T = 6 %
V = 30 MPH
* TTST = DUAL
FUNC CLASS = LOCAL

PROJECT LENGTH

LENGTH ROADWAY TIP PROJECT BD-5113E = 0.064 MI
LENGTH STRUCTURE TIP PROJECT BD-5113E = 0.011 MI
TOTAL LENGTH OF TIP PROJECT BD-5113E = 0.075 MI

Prepared In the Office of:
VAUGHN & MELTON
1318-F PATTON AVE.
ASHEVILLE NC, 28806
FOR THE NORTH CAROLINA DIVISION OF HIGHWAYS

2012 STANDARD SPECIFICATIONS

RIGHT OF WAY DATE:
JULY 23, 2013

LETTING DATE:
APRIL 2, 2014

HARDY WILLIS, PE
PROJECT ENGINEER

AARON CARVER, PE
PROJECT DESIGN ENGINEER

NCDOT CONTACT:
PAUL SPROUSE, PE
DIVISION 13 - BRIDGE MANAGER

HYDRAULICS ENGINEER

NORTH CAROLINA PROFESSIONAL SEAL 033023 ENGINEER BRADLEY S. RIDNOUR

3/7/14
Bradley S Ridnour, PE
P.E.
SIGNATURE:

ROADWAY DESIGN ENGINEER

NORTH CAROLINA PROFESSIONAL SEAL 030453 ENGINEER AARON C. CARVER

3/7/14
P.E.
SIGNATURE:

STATE OF NORTH CAROLINA DEPARTMENT OF TRANSPORTATION

$$$$SYSTIME$$$$
$$$$USERNAME$$$$DGN$$$$

PROJECT REFERENCE NO.	SHEET NO.
BD-5113G	1-A

ROADWAY DESIGN ENGINEER

NORTH CAROLINA PROFESSIONAL SEAL 030453 ENGINEER AARON C. CARVER 7/1/14

INDEX OF SHEETS

SHEET NUMBER	SHEET
1	TITLE SHEET
1-A	INDEX OF SHEETS, GENERAL NOTES, AND LIST OF STANDARD DRAWINGS
1-B	CONVENTIONAL SYMBOLS
1-C	SURVEY CONTROL SHEET
2	PAVEMENT SCHEDULE, TYPICAL SECTIONS, AND WEDGING DETAILS
2-A	STRUCTURE ANCHOR UNIT DETAIL
2-B	MODIFIED CONCRETE FLUME
3A	SUMMARY OF DRAINAGE QUANTITIES, SUMMARY OF GUARDRAIL, AND ASPHALT PAVEMENT REMOVAL SUMMARY
3B	EARTHWORK SUMMARY
4	PLAN AND PROFILE SHEET
TMP-1 THRU TMP-4	TRAFFIC CONTROL PLANS
SIG-1	TEMPORARY TRAFFIC CONTROL SIGNAL PLAN
EC-1 THRU EC-5	EROSION CONTROL PLANS
RF-1	REFORESTATION PLANS
X-0	CROSS-SECTION SUMMARY
X-1 THRU X-8	CROSS-SECTIONS
S-1 THRU S-22	STRUCTURE PLANS
1 - 9	SUBSURFACE INFORMATION

GENERAL NOTES:

2012 SPECIFICATIONS
EFFECTIVE: 01-17-12

GRADE LINE:
GRADING AND SURFACING OR RESURFACING AND WIDENING:

THE GRADE LINES SHOWN DENOTE THE FINISHED ELEVATION OF THE PROPOSED SURFACING AT GRADE POINTS SHOWN ON THE TYPICAL SECTIONS. WHERE NO GRADE LINES ARE SHOWN, THE PROFILES SHOWN DENOTE THE TOP ELEVATION OF THE EXISTING PAVEMENT ALONG THE CENTER LINE OF SURVEY ON WHICH THE PROPOSED RESURFACING WILL BE PLACED. GRADE LINES MAY BE ADJUSTED BY THE ENGINEER IN ORDER TO SECURE A PROPER TIE-IN.

CLEARING:

CLEARING ON THIS PROJECT SHALL BE PERFORMED TO THE LIMITS ESTABLISHED BY METHOD II.

SUPERELEVATION:

ALL CURVES ON THIS PROJECT SHALL BE SUPERELEVATED IN ACCORDANCE WITH STD. NO. 225.04 USING THE RATE OF SUPERELEVATION AND RUNOFF SHOWN ON THE PLANS. SUPERELEVATION IS TO BE REVOLVED ABOUT THE GRADE POINTS SHOWN ON THE TYPICAL SECTIONS.

SHOULDER CONSTRUCTION:

ASPHALT, EARTH, AND CONCRETE SHOULDER CONSTRUCTION ON THE HIGH SIDE OF SUPERELEVATED CURVES SHALL BE IN ACCORDANCE WITH STD. NO. 560.01.

UNDERDRAINS:

UNDERDRAINS SHALL BE CONSTRUCTED IN ACCORDANCE WITH STD. NO. 815.03 AT LOCATIONS DIRECTED BY THE ENGINEER.

GUARDRAIL:

THE GUARDRAIL LOCATIONS SHOWN ON THE PLANS MAY BE ADJUSTED DURING CONSTRUCTION AS DIRECTED BY THE ENGINEER. THE CONTRACTOR SHOULD CONSULT WITH THE ENGINEER PRIOR TO ORDERING GUARDRAIL MATERIAL.

TEMPORARY SHORING:

SHORING REQUIRED FOR THE MAINTENANCE OF TRAFFIC WILL BE PAID FOR AS "EXTRA WORK" IN ACCORDANCE WITH SECTION 104-7.

END BENTS:

THE ENGINEER SHALL CHECK THE STRUCTURE END BENT PLANS, DETAILS, AND CROSS-SECTION PRIOR TO SETTING OF THE SLOPE STAKES FOR THE EMBANKMENT OR EXCAVATION APPROACHING A BRIDGE.

UTILITIES:

UTILITY OWNERS ON THIS PROJECT ARE : FRENCH BROAD EMC AND FRONTIER COMMUNICATIONS.

RIGHT-OF-WAY MARKERS:

ALL RIGHT-OF-WAY MARKERS ON THIS PROJECT SHALL BE PLACED BY CONTRACT.

2012 ROADWAY ENGLISH STANDARD DRAWINGS

The following Roadway Standards as appear in "Roadway Standard Drawings" Highway Design Branch - N. C. Department of Transportation - Raleigh, N. C., Dated January 17, 2012 are applicable to this project and by reference hereby are considered a part of these plans:

STD.NO.	TITLE
DIVISION 2 - EARTHWORK	
200.02	Method of Clearing - Method II
225.02	Guide for Grading Subgrade - Secondary and Local
225.04	Method of Obtaining Superelevation - Two Lane Pavement
DIVISION 3 - PIPE CULVERTS	
300.01	Method of Pipe Installation - Method 'A'
DIVISION 4 - MAJOR STURCTURES	
422.11	Bridge Approach Fills
DIVISION 5 - SUBGRADE, BASES AND SHOULDERS	
560.01	Method of Shoulder Construction - High Side of Superelevated Curve - Method I
DIVISION 8 - INCIDENTALS	
806.01	Concrete Right-of-Way Marker
815.03	Pipe Underdrain and Blind Drain
840.25	Anchorage For Frames
840.29	Frames and Narrow Slot Flat Grates
840.35	Traffic Bearing Grated Drop Inlet - for Cast Iron Double Frame and Grates
840.46	Traffic Bearing Precast Drainage Structure
840.66	Drainage Structure Steps
846.01	Concrete Curb, Gutter and Curb & Gutter
862.01	Guardrail Placement
862.02	Guardrail Installation
862.03	Structure Anchor Units
876.02	Guide for Rip Rap at Pipe Outlets

$$$$$SYSTIME$$$$$
$$$$$DGN$$$$$

3/15/06

PROJECT REFERENCE NO.	SHEET NO.
BD-5113G	1-B

Note: Not to Scale

S.U.E. = Subsurface Utility Engineering

STATE OF NORTH CAROLINA
DIVISION OF HIGHWAYS

CONVENTIONAL PLAN SHEET SYMBOLS

BOUNDARIES AND PROPERTY:

- State Line
- County Line
- Township Line
- City Line
- Reservation Line
- Property Line
- Existing Iron Pin — EIP
- Property Corner
- Property Monument — ECM
- Parcel/Sequence Number — 23
- Existing Fence Line
- Proposed Woven Wire Fence
- Proposed Chain Link Fence
- Proposed Barbed Wire Fence
- Existing Wetland Boundary — WLB
- Proposed Wetland Boundary — WLB
- Existing Endangered Animal Boundary — EAB
- Existing Endangered Plant Boundary — EPB

BUILDINGS AND OTHER CULTURE:

- Gas Pump Vent or U/G Tank Cap
- Sign — S
- Well — W
- Small Mine
- Foundation
- Area Outline
- Cemetery
- Building
- School
- Church
- Dam

HYDROLOGY:

- Stream or Body of Water
- Hydro, Pool or Reservoir
- Jurisdictional Stream — JS
- Buffer Zone 1 — BZ 1
- Buffer Zone 2 — BZ 2
- Flow Arrow
- Disappearing Stream
- Spring
- Swamp Marsh
- Proposed Lateral, Tail, Head Ditch — FLOW
- False Sump

RAILROADS:

- Standard Gauge — CSX TRANSPORTATION
- RR Signal Milepost — MILEPOST 35
- Switch — SWITCH
- RR Abandoned
- RR Dismantled

RIGHT OF WAY:

- Baseline Control Point
- Existing Right of Way Marker
- Existing Right of Way Line
- Proposed Right of Way Line — RW
- Proposed Right of Way Line with Iron Pin and Cap Marker — RW
- Proposed Right of Way Line with Concrete or Granite Marker — RW
- Existing Control of Access — CA
- Proposed Control of Access — CA
- Existing Easement Line — E
- Proposed Temporary Construction Easement — E
- Proposed Temporary Drainage Easement — TDE
- Proposed Permanent Drainage Easement — PDE
- Proposed Permanent Utility Easement — PUE

ROADS AND RELATED FEATURES:

- Existing Edge of Pavement
- Existing Curb
- Proposed Slope Stakes Cut — C
- Proposed Slope Stakes Fill — F
- Proposed Wheel Chair Ramp — WCR
- Proposed Wheel Chair Ramp Curb Cut — WCC
- Curb Cut for Future Wheel Chair Ramp — CCFR
- Existing Metal Guardrail
- Proposed Guardrail
- Existing Cable Guiderail
- Proposed Cable Guiderail
- Equality Symbol
- Pavement Removal

VEGETATION:

- Single Tree
- Single Shrub
- Hedge
- Woods Line
- Orchard
- Vineyard — Vineyard

EXISTING STRUCTURES:

MAJOR:

- Bridge, Tunnel or Box Culvert — CONC
- Bridge Wing Wall, Head Wall and End Wall — CONC WW

MINOR:

- Head and End Wall — CONC HW
- Pipe Culvert
- Footbridge
- Drainage Box: Catch Basin, DI or JB — CB
- Paved Ditch Gutter
- Storm Sewer Manhole — S
- Storm Sewer — S

UTILITIES:

POWER:

- Existing Power Pole
- Proposed Power Pole
- Existing Joint Use Pole
- Proposed Joint Use Pole
- Power Manhole — P
- Power Line Tower
- Power Transformer
- U/G Power Cable Hand Hole — HH
- H-Frame Pole
- Recorded U/G Power Line — P
- Designated U/G Power Line (S.U.E.*) — P

TELEPHONE:

- Existing Telephone Pole
- Proposed Telephone Pole
- Telephone Manhole — T
- Telephone Booth
- Telephone Pedestal — T
- Telephone Cell Tower
- U/G Telephone Cable Hand Hole — HH
- Recorded U/G Telephone Cable — T
- Designated U/G Telephone Cable (S.U.E.*) — T
- Recorded U/G Telephone Conduit — TC
- Designated U/G Telephone Conduit (S.U.E.*) — TC
- Recorded U/G Fiber Optics Cable — T FO
- Designated U/G Fiber Optics Cable (S.U.E.*) — T FO

WATER:

- Water Manhole — W
- Water Meter
- Water Valve
- Water Hydrant
- Recorded U/G Water Line — W
- Designated U/G Water Line (S.U.E.*) — W
- Above Ground Water Line — A/G Water

TV:

- TV Satellite Dish
- TV Pedestal — C
- TV Tower
- U/G TV Cable Hand Hole — HH
- Recorded U/G TV Cable — TV
- Designated U/G TV Cable (S.U.E.*) — TV
- Recorded U/G Fiber Optic Cable — TV FO
- Designated U/G Fiber Optic Cable (S.U.E.*) — TV FO

GAS:

- Gas Valve
- Gas Meter
- Recorded U/G Gas Line — G
- Designated U/G Gas Line (S.U.E.*) — G
- Above Ground Gas Line — A/G Gas

SANITARY SEWER:

- Sanitary Sewer Manhole
- Sanitary Sewer Cleanout
- U/G Sanitary Sewer Line — SS
- Above Ground Sanitary Sewer — A/G Sanitary Sewer
- Recorded SS Forced Main Line — FSS
- Designated SS Forced Main Line (S.U.E.*) — FSS

MISCELLANEOUS:

- Utility Pole
- Utility Pole with Base
- Utility Located Object
- Utility Traffic Signal Box — S
- Utility Unknown U/G Line — ?UTL
- U/G Tank; Water, Gas, Oil
- A/G Tank; Water, Gas, Oil
- U/G Test Hole (S.U.E.*)
- Abandoned According to Utility Records — AATUR
- End of Information — E.O.I.

PROJECT REFERENCE NO.	SHEET NO.
BD-5113G	1-C
Location and Surveys	

SURVEY CONTROL SHEET BD-5113G

BL

POINT	DESC.	NORTH	EAST	ELEVATION	L STATION	OFFSET
1	BL-1	806171.6974	1037463.3250	2565.53	10+47.19	12.61 LT
2	BL-2	806397.9890	1037314.6549	2572.82	13+14.54	15.43 LT
3	BL-3	806538.3271	1037409.3970	2577.49	14+77.83	20.41 RT
4	BL-4	806700.9099	1037418.5706	2582.74	16+32.69	11.84 RT

****
BM1 ELEVATION = 2576.56
N 806460 E 1037326
BL STATION 8+29.00 25 LEFT
SPIKE SET IN BASE OF 24" POPLAR
****
****
BM2 ELEVATION = 2577.29
N 806647 E 1037456
BL STATION 10+52.00 40 RIGHT
SPIKE SET IN ROOT OF 30" OAK
****

NC GRID
NAD 83 NA 2011

ROW MARKER CONCRETE OR GRANITE-E

ALIGN	STATION	OFFSET	NORTH	EAST
L	12+50.00	-11.50	806330.1779	1037331.1368
L	12+50.00	-25.00	806325.1964	1037318.5894
L	12+50.00	11.50	806338.6648	1037352.5136
L	12+50.00	25.00	806343.6463	1037365.0610
L	12+67.71	25.00	806358.3878	1037359.9091
L	12+67.71	-25.00	806343.8751	1037312.0616
L	13+73.68	25.00	806443.0778	1037367.0399
L	13+73.68	-25.00	806465.3868	1037322.2928
L	14+03.73	25.34	806469.8104	1037380.7520
L	14+37.96	26.58	806499.8933	1037397.1310
L	14+84.19	-25.00	806564.2832	1037371.5983
L	14+84.19	25.00	806541.9741	1037416.3455
L	16+40.79	25.00	806713.2465	1037428.5241
L	16+40.79	-25.00	806697.4943	1037381.0702

ROW MARKER PERMANENT EASEMENT-E

ALIGN	STATION	OFFSET	NORTH	EAST
L	13+50.00	25.00	806425.0172	1037359.8701
L	13+50.00	35.00	806422.1259	1037369.4430
L	13+73.68	35.00	806438.6160	1037375.9893
L	15+00.00	25.00	806558.1893	1037423.6442
L	15+20.00	25.00	806579.4413	1037431.0049
L	15+00.00	35.00	806554.4483	1037432.9181
L	15+20.00	35.00	806576.6448	1037440.6060

FINAL -L-

TYPE	STATION	NORTH	EAST
POT	10+00.00	806149.8478	1037507.0175
PC	10+92.88	806211.4320	1037437.4907
PT	11+68.71	806266.0011	1037384.9471
PC	11+84.40	806278.1266	1037374.9989
PCC	12+67.71	806351.1314	1037335.9854
PT	13+73.68	806454.2323	1037344.6663
PC	14+84.19	806553.1254	1037393.9703
PCC	16+40.79	806705.3704	1037404.7971
PT	17+53.76	806804.3937	1037351.5935
POT	18+15.44	806852.9164	1037313.5013

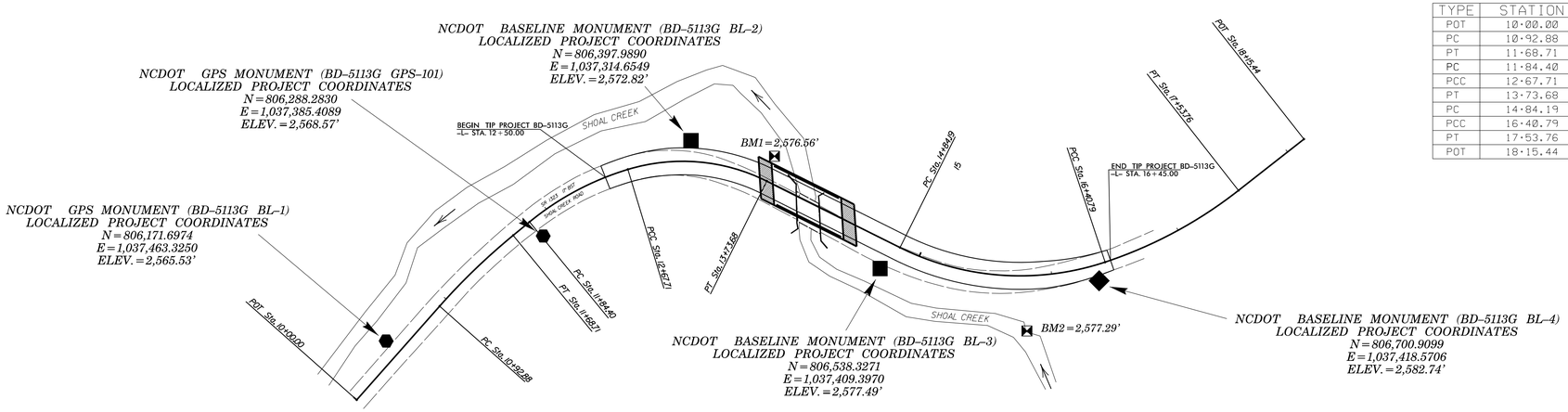

DATUM DESCRIPTION

THE LOCALIZED COORDINATE SYSTEM DEVELOPED FOR THIS PROJECT IS BASED ON THE STATE PLANE COORDINATES ESTABLISHED BY NCDOT FOR MONUMENT "990025 GPS-101" WITH NAD 83/NA 2011 STATE PLANE GRID COORDINATES OF NORTHING: 806288.2830(ft) EASTING: 1037385.4089(ft) ELEVATION: 2568.57(ft)
THE AVERAGE COMBINED GRID FACTOR USED ON THIS PROJECT (GROUND TO GRID) IS: 0.99982286
THE N.C. LAMBERT GRID BEARING AND LOCALIZED HORIZONTAL GROUND DISTANCE FROM "990025 GPS-101" TO -L- STATION 10+00.00 IS S 41°17'52" E 184.26'
ALL LINEAR DIMENSIONS ARE LOCALIZED HORIZONTAL DISTANCES
VERTICAL DATUM USED IS NAVD 88

NOTE: DRAWING NOT TO SCALE

NOTES:

1. THE CONTROL DATA FOR THIS PROJECT CAN BE FOUND ELECTRONICALLY BY SELECTING PROJECT CONTROL DATA AT:
HTTP://WWW.NCDOT.ORG/DOH/PRECONSTRUCT/HIGHWAY/LOCATION/PROJECT/

THE FILES TO BE FOUND ARE AS FOLLOWS:
BD-5113G_LS_CONTROL_131105.TXT

SITE CALIBRATION INFORMATION HAS NOT BEEN PROVIDED FOR THIS PROJECT. IF FURTHER INFORMATION IS NEEDED, PLEASE CONTACT THE LOCATION AND SURVEYS UNIT.

● ■ INDICATES GEODETIC CONTROL MONUMENTS USED OR SET FOR HORIZONTAL PROJECT CONTROL BY THE NCDOT LOCATION AND SURVEYS UNIT.
PROJECT CONTROL ESTABLISHED USING GLOBAL POSITIONING SYSTEM.
NETWORK ESTABLISHED FROM NGS ONLINE POSITIONING SERVICE (OPUS)

6/2/99

PROJECT REFERENCE NO.	SHEET NO.
BD-5113G	2
R/W SHEET NO.	
ROADWAY DESIGN ENGINEER	PAVEMENT DESIGN ENGINEER

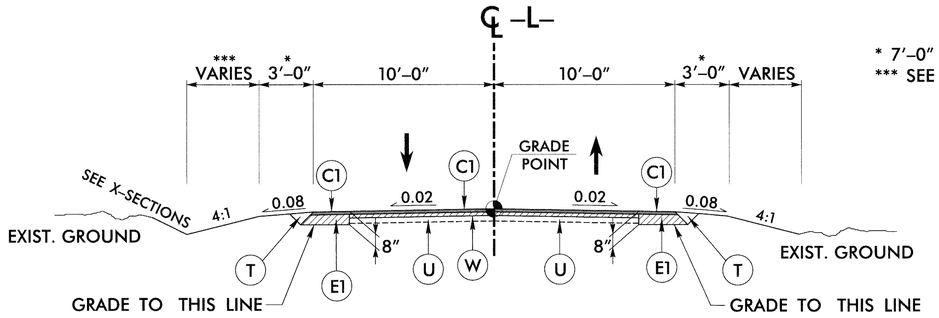

TYPICAL SECTION NO. 1

* 7'-0" WITH GUARDRAIL
*** SEE X-SECTIONS

USE TYPICAL SECTION NO. 1

-L- STA. 12+50.00 (BEGIN PROJECT) TO 13+00.00

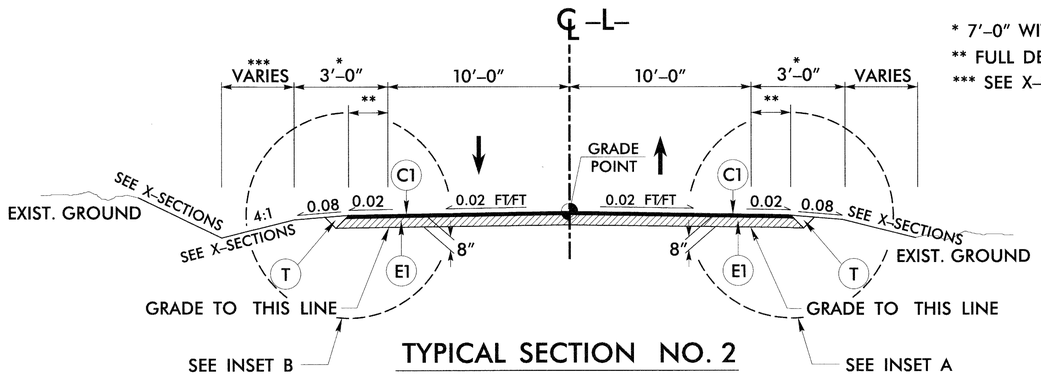

TYPICAL SECTION NO. 2

* 7'-0" WITH GUARDRAIL
** FULL DEPTH PAVED SHOULDER VARIES
*** SEE X-SECTIONS

USE TYPICAL SECTION NO. 2

-L- STA. 13+00.00 TO 13+78.72 (BEGIN BRIDGE)
-L- STA. 14+36.32 (END BRIDGE) TO 16+45.00 (END PROJECT)

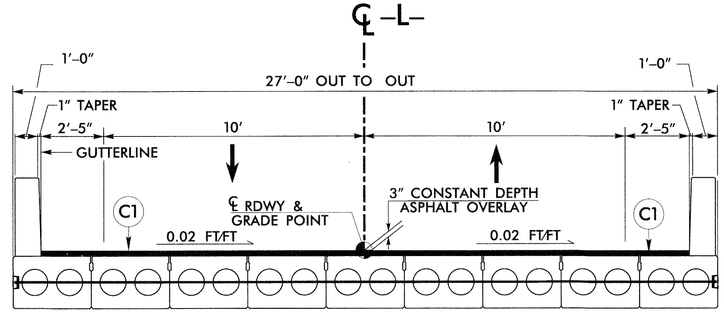

TYPICAL SECTION NO. 3

USE TYPICAL SECTION NO. 3

-L- STA. 13+78.72 (BEGIN BRIDGE) TO
-L- STA. 14+36.32 (END BRIDGE)

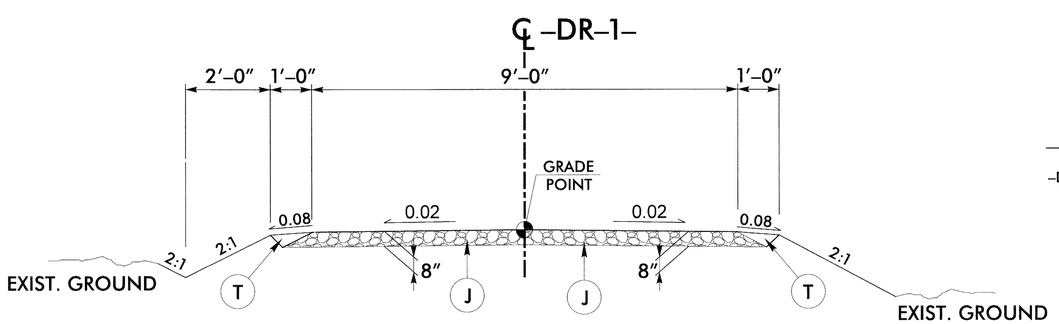

TYPICAL SECTION NO. 4

USE TYPICAL SECTION NO. 4

-DR1- STA. 10+00.00 TO -DR1- STA. 10+95

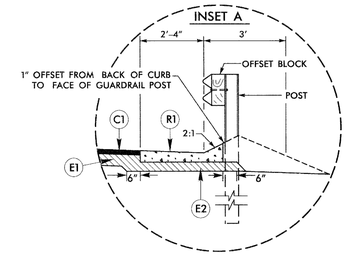

INSET A

-L- STA. 13+86 RT TO BEGIN APPROACH SLAB RT

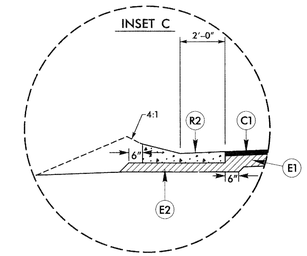

INSET B

BEGIN APPROACH SLAB LT TO -L- STA. 16+08.79 LT

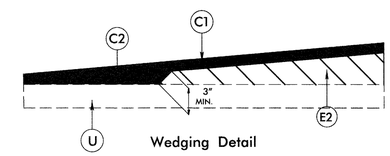

Wedging Detail

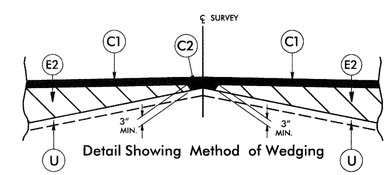

Detail Showing Method of Wedging

	PAVEMENT SCHEDULE
C1	PROP. APPROX. 3" ASPHALT CONCRETE SURFACE COURSE, TYPE S9.5B, AT AN AVERAGE RATE OF 168 LBS. PER SQ. YD. IN EACH OF TWO 1½" LAYERS.
C2	PROP. VAR. DEPTH ASPHALT CONCRETE SURFACE COURSE, TYPE S9.5B AT AN AVERAGE RATE OF 112 LBS. PER SQ. YD. PER 1" DEPTH. TO BE PLACED IN LAYERS NOT TO EXCEED 1½" IN DEPTH.
E1	PROP. APPROX. 5" ASPHALT CONCRETE BASE COURSE, TYPE B25.0B, AT AN AVERAGE RATE OF 570 LBS. PER SQ. YD.
E2	PROP. VAR. DEPTH ASPHALT CONCRETE BASE COURSE, TYPE B25.0B, AT AN AVERAGE RATE OF 114 LBS. PER SQ. YD. PER 1" DEPTH. TO BE PLACED IN LAYERS NOT LESS THAN 3" IN DEPTH OR GREATER THAN 5½" IN DEPTH.
J	8" AGGREGATE BASE COURSE
R1	SHOULDER BERM GUTTER (NCDOT STANDARD DRAWING NO. 846.01)
R2	EXPRESSWAY CURB & GUTTER (NCDOT STANDARD DRAWING NO. 846.01)
T	EARTH MATERIAL
U	EXISTING PAVEMENT
W	PROPOSED WEDGING (SEE APPROPRIATE DETAILS)

NOTE: ALL PAVEMENT SLOPES ARE 1:1 UNLESS SHOWN OTHERWISE.

8/17/99

$$$$$$SYSTIME$$$$
$$$$$$USERNAME$$$$
$$$$$$DGN$$$$$$$$

STATE OF NORTH CAROLINA
DEPT. OF TRANSPORTATION
DIVISION OF HIGHWAYS
RALEIGH, N.C.

ENGLISH DETAIL DRAWING FOR
STRUCTURE ANCHOR UNITS
GUARDRAIL ANCHOR UNIT, TYPE III FOR ATTACHMENT TO RAIL ON BRIDGE - SUB REGIONAL TIER

SHEET 2 OF 7
862d03

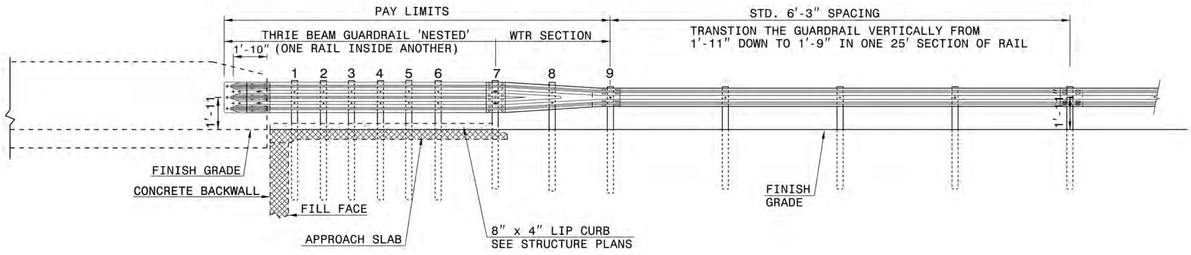

ELEVATION

NOTE:
- **POST NOT REQUIRED FOR SKEW ANGLES GREATER THAN 150° OR LESS THAN 30° UNLESS OTHERWISE DIRECTED BY THE ENGINEER.
- *THE DISTANCE FROM END OF BRIDGE RAIL TO CENTER LINE OF THE FIRST POST SHOULD BE 11½" IF CONCRETE BACKWALL IS NOT PRESENT.
- -SHOULDER BERM GUTTER MUST BE INSTALLED TO THE LIMITS 8" x 4" LIP CURB IS SHOWN IF ANCHOR UNIT IS NOT ADJACENT TO AN APPROACH SLAB.
- -MEASURE GUARDRAIL HEIGHT FROM THE TOP OF ADJACENT SURFACE (SHOULDER, BERM, OR GUTTER).
- -LAP JOINTS IN THE DIRECTION OF TRAFFIC FLOW.
- -SEE SHEET 5 FOR POST SECTIONS 1 THRU 9.

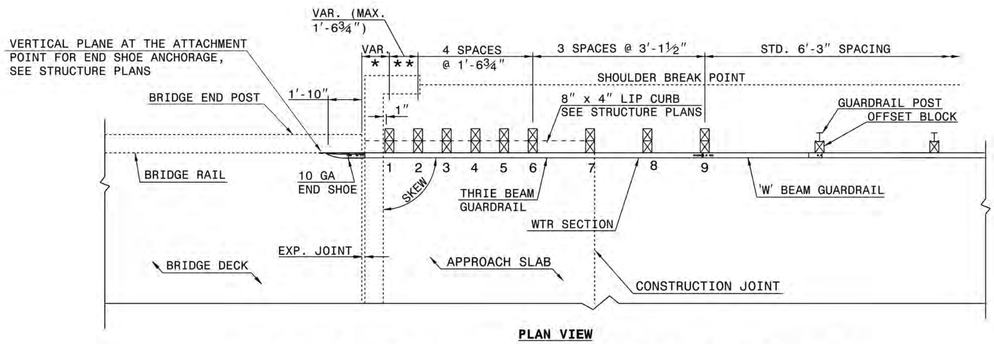

PLAN VIEW

GUARDRAIL ANCHOR UNIT, TYPE III FOR ATTACHMENT TO RAIL ON BRIDGE - SUB REGIONAL TIER

STATE OF NORTH CAROLINA
DEPT. OF TRANSPORTATION
DIVISION OF HIGHWAYS
RALEIGH, N.C.

ENGLISH DETAIL DRAWING FOR
STRUCTURE ANCHOR UNITS
GUARDRAIL ANCHOR UNIT, TYPE III FOR ATTACHMENT TO RAIL ON BRIDGE - SUB REGIONAL TIER

SHEET 2 OF 7
862d03

STATE OF NORTH CAROLINA
DEPT. OF TRANSPORTATION
DIVISION OF HIGHWAYS
RALEIGH, N.C.

ENGLISH DETAIL DRAWING FOR
STRUCTURE ANCHOR UNITS
GUARDRAIL ANCHOR UNIT, TYPE III

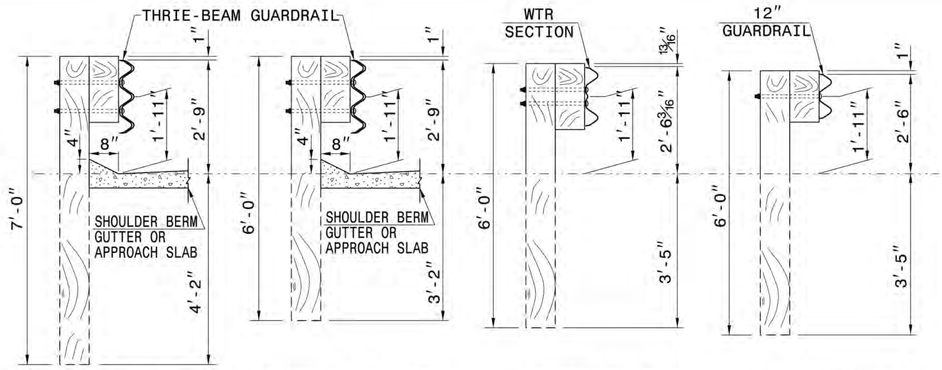

SECTION OF THRIE BEAM POSTS 1 THRU 6

SECTION OF THRIE BEAM POST 7

SECTION OF WTR BEAM POST 8

SECTION OF 'W' BEAM POST 9

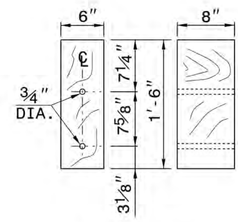

THRIE BEAM OFFSET BLOCK

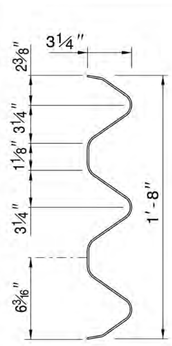

THRIE-BEAM SECTION

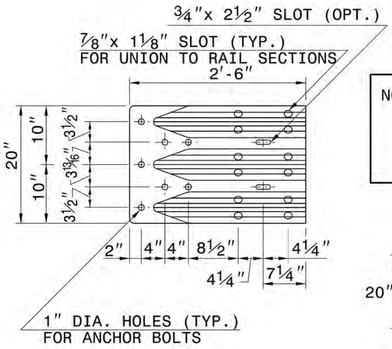

END SHOE

NOTE: THE MID POST AND OFFSET BLOCK OF THE WTR SECTION WILL REQUIRE SPECIAL BOLT HOLE DRILLING IN THE THRIE BEAM OFFSET BLOCK AND LINE POST.

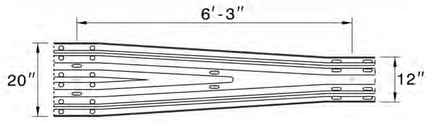

WTR SECTION
ELEVATION VIEW

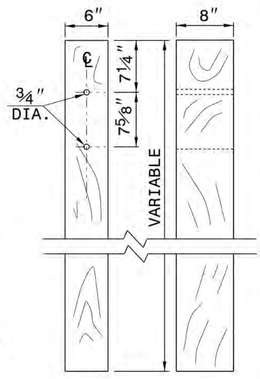

THRIE BEAM LINE POST

SHEET 3 OF 7
862d03

STATE OF NORTH CAROLINA
DEPT. OF TRANSPORTATION
DIVISION OF HIGHWAYS
RALEIGH, N.C.

ENGLISH DETAIL DRAWING FOR
STRUCTURE ANCHOR UNITS
GUARDRAIL ANCHOR UNIT, TYPE III

SHEET 3 OF 7
862d03

CONTRACT STANDARDS AND DEVELOPMENT UNIT
Office 919-707-6950 FAX 919-250-4119

SEE TITLE BLOCK

ORIGINAL BY: J. HOWERTON DATE: 06-22-12
MODIFIED BY: DATE:
CHECKED BY: DATE:
FILE SPEC.:

PROJECT REFERENCE NO. BD-5113G
SHEET NO. 2-A

PROJECT REFERENCE NO.	SHEET NO.
BD-5113G	2-B

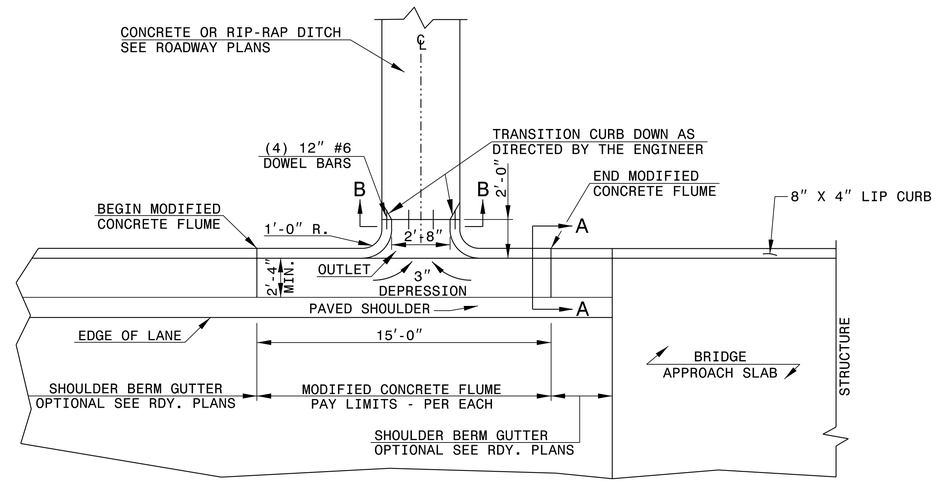

PLAN VIEW

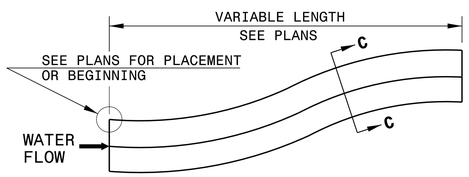

DOWNGRADE OR SAG

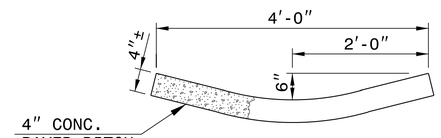

SECTION C-C

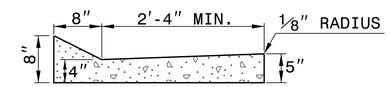

SECTION A-A

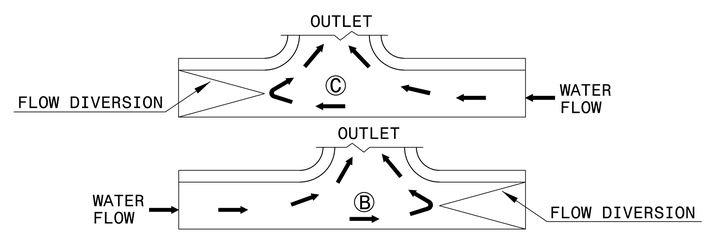

DOWN GRADE

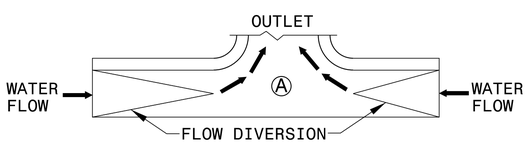

SAG

FLOW DIVERSION EXAMPLES

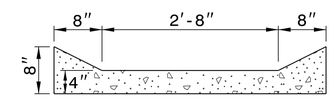

SECTION B-B

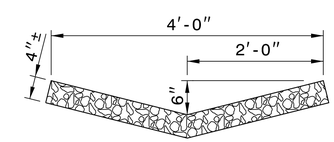

RIP-RAP LINED DITCH

NOTES:

- CONSTRUCT MODIFIED CONCRETE FLUME AND SHOULDER BERM GUTTER IN ACCORDANCE WITH THIS DETAIL.
- CONSTRUCT CONCRETE DITCH IN ACCORDANCE WITH STD. DWG. NO. 850.01.
- CONSTRUCT RIP RAP LINED DITCH IN ACCORDANCE WITH THIS DETAIL, IF CALLED FOR IN PLANS.
- CONCRETE OR RIP RAP LINED DITCH SHALL BE THE TYPE AND LENGTH SPECIFIED BY THE ROADWAY PLANS. THE DITCH SHALL TERMINATE AS SHOWN ON THE PLANS. IF NO TERMINATION IS INDICATED PLACE RIP-RAP AT THE END OF THE DITCH AS INDICATED BY STD. DWG. 876.02 FOR AN 18" PIPE. TRANSITIONS FROM THE DITCH TO TERMINATION SHALL BE AS DIRECTED BY THE ENGINEER.
- MODIFICATIONS SHALL BE AS DICTATED BY SITE CONDITIONS AND DIRECTED BY THE ENGINEER.

MODIFIED CONCRETE FLUME

COMPUTED BY: WCC	DATE: 6/1/13
CHECKED BY: ACC	DATE: 6/1/13

STATE OF NORTH CAROLINA
DIVISION OF HIGHWAYS

PROJECT REFERENCE NO.	SHEET NO.
BD-5113G	3-A

PAVEMENT REMOVAL SUMMARY

IN SQUARE YARDS

LINE	LOCATION	ASPHALT REMOVAL	ASPHALT BREAK-UP	CONCRETE REMOVAL	CONCRETE REMOVAL
–L–	13+00 TO 13+98	192			
–L–	14+17 TO 16+45	486			
	TOTAL	678			
	SAY	680			

Approximate quantities only. Unclassified excavation, borrow excavation, fine grading, clearing and grubbing, and removal of existing pavement will be paid for at the contract lump sum price for "grading".

NOTE: Invert Elevations are for Bid Purposes only and shall not be used for project construction stakeout. See "Standard Specifications For Roads and Structures, Section 300-5".

SUB-REGIONAL & REGIONAL LIST OF PIPES, ENDWALLS, ETC. (FOR PIPES 48" & UNDER)

STATION / SIZE / THICKNESS OR GAUGE	LOCATION (LT,RT, OR CL)	STRUCTURE NO. FROM	STRUCTURE NO. TO	TOP ELEVATION	INVERT ELEVATION	INVERT ELEVATION	SLOPE CRITICAL	DRAINAGE PIPE (RCP, CSP, CAAP, HDPE, or PVC) 12"	15"	18"	24"	30"	36"	42"	48"	DO NOT USE RCP	DO NOT USE CSP	DO NOT USE CAAP	DO NOT USE HDPE
–L– 13+58	RT	4-1																	
–L– 13+72	RT	4-2																	
–L– 15+10	CL	4-3		2578.5	2575.3														
		4-3	OUT		2575.3	2575.1													
–L– 15+58	LT	4-4		2580.0	2576.8														
		4-4	4-3		2576.8	2575.3													
–L– 16+07	LT	4-5		2581.8	2578.6														
		4-5	4-4		2578.6	2576.8													
–L– 16+42	LT	4-6	4-5		2581.22	2578.6													
TOTAL																			

STATION	FROM	TO	C.S. PIPE 12" .064	15" .064	18" .064	24" .064	36" .079	42" .109	48" .109	R.C. PIPE (CLASS III) 15"	18"	24"	30"	36"	42"	48"	R.C. PIPE (CLASS IV) 12"	15"	18"	24"	30"	36"	42"	48"
–L– 13+58	4-1																							
–L– 13+72	4-2																							
–L– 15+10	4-3																							
	4-3	OUT								44														
–L– 15+58	4-4																							
	4-4	4-3								44														
–L– 16+07	4-5																							
	4-5	4-4								44														
–L– 16+42	4-6	4-5		20																				
TOTAL				20						132														

STATION	FROM	TO	**" R. C. PIPE (CLASS V)	**" R. C. PIPE CULVERTS, CONTRACTOR DESIGN PIPE	**" R. C. PIPE CULVERTS, CONTRACTOR DESIGN PIPE	15" SIDE DRAIN PIPE	18" SIDE DRAIN PIPE	ENDWALLS STD. 838.01, STD. 838.11 OR STD. 838.80 (UNLESS NOTED OTHERWISE) CU. YDS. R.C.P.	C.S.P.	QUANTITIES FOR DRAINAGE STRUCTURES PER EACH (0' THRU 5.0')	* TOTAL L.F. FOR PAY QUANTITY SHALL BE COL. 'A' + (1.3 X COL.'B') LIN. *FT. A 5.0' THRU 10.0'	B 10.0' AND ABOVE	C.B. STD. 840.01 OR STD. 840.02	FRAME, GRATES AND HOOD STANDARD 840.03 TYPE OF GRATE E	F	G		CONCRETE TRANSITIONAL SECTION CATCH BASIN	DROP INLET		T.B.D.I. STD. 840.35	T.B.D.I. FRAME WITH TWO GRATES STD. 840.29			MODIFIED CONCRETE FLUME	CORR. STEEL ELBOWS NO. & SIZE	CONC. COLLARS CL. "B" C.Y. STD 840.72	CONC. & BRICK PIPE PLUG, C.Y. STD. 840.71	PIPE REMOVAL LIN.FT.	REMARKS
–L– 13+58	4-1					20																								
–L– 13+72	4-2																								1					
–L– 15+10	4-3									1											1	1								
	4-3	OUT																												
–L– 15+58	4-4									1											1	1								
	4-4	4-3																												
–L– 16+07	4-5									1											1	1								
	4-5	4-4																												
–L– 16+42	4-6	4-5																								2–15"				
TOTAL						20				3											3	3			1					

ABBREVIATIONS

C.B.	CATCH BASIN
N.D.I.	NARROW DROP INLET
D.I.	DROP INLET
G.D.I.	GRATED DROP INLET
G.D.I. (N.S.)	GRATED DROP INLET (NARROW SLOT)
J.B.	JUNCTION BOX
M.H.	MANHOLE
T.B.D.I.	TRAFFIC BEARING DROP INLET
T.B.J.B.	TRAFFIC BEARING JUNCTION BOX

"N" = DISTANCE FROM EDGE OF LANE TO FACE OF GUARDRAIL.
TOTAL SHOULDER WIDTH = DISTANCE FROM EDGE OF TRAVEL LANE TO SHOULDER BREAK POINT.
FLARE LENGTH = DISTANCE FROM LAST SECTION OF PARALLEL GUARDRAIL TO END OF GUARDRAIL.
W = TOTAL WIDTH OF FLARE FROM BEGINNING OF TAPER TO END OF GUARDRAIL.
G = GATING IMPACT ATTENUATOR TYPE 350
NG = NON-GATING IMPACT ATTENUATOR TYPE 350

GUARDRAIL SUMMARY

SURVEY LINE	BEG. STA.	END STA.	LOCATION	LENGTH STRAIGHT	LENGTH SHOP CURVED	LENGTH DOUBLE FACED	WARRANT POINT APPROACH END	WARRANT POINT TRAILING END	"N" DIST. FROM E.O.L.	TOTAL SHOUL. WIDTH	FLARE LENGTH APPROACH END	FLARE LENGTH TRAILING END	W APPROACH END	W TRAILING END	ANCHORS XI MOD	XI	GRAU 350 TL-2	GRAU 350	TYPE III	TYPE III SHOP CURVED	B-77	IA-350 (TL-2)	AT-1	IMPACT ATTENUATOR TYPE 350 EA	G	NG	SINGLE FACED GUARDRAIL	REMOVE EXISTING GUARDRAIL	REMOVE AND STOCKPILE EXISTING GUARDRAIL	REMARKS
–L–	13+16.75	13+71.23	LT	25	31.25		13+71.23		2.5	7							1			1										
–L–	13+73.90	13+85.89	RT	12				13+85.89	2.5	7												1								
–L–	14+29.15	14+41.17	LT	12				14+29.15	2.5	7												1								
–L–	14+43.49	15+02.56	RT	56.25			14+43.49		2.5	7							1		1											
			SUBTOTAL	105.25	31.25												2		1	1		2								
			LESS DEDUCTIONS FOR ANCHORS																											
			GRAU-350 TYPE TL-2 2 @ 25'=	-50																										
			IA-350 TYPE TL-2 2 @ 12' =	-24																										
			TYPE III 1 @ 18.75'=	-18.75																										
			TYPE III (SHOP CURVED) 1 @ 18.75'=		-18.75																									
			PROJECT TOTALS:	12.5	12.5																									
			ADDITIONAL GUARDRAIL POSTS=5 EA.																											

COMPUTED BY: NVA DATE: 11/4/13
CHECKED BY: ACC DATE: 11/4/13

PROJECT REFERENCE NO.	SHEET NO.
BD-5113G	3-B

DIVISION OF HIGHWAYS
STATE OF NORTH CAROLINA

SUMMARY OF EARTHWORK

IN CUBIC YARDS

LOCATION	UNCLASSIFIED EXCAVATION	UNDERCUT	EMBT+%	BORROW	WASTE
SUMMARY NO.1					
–L– STA. 12+50 TO STA. 13+78.72 (BEG. BRIDGE)	408		6		402
SUBTOTAL SUMMARY NO. 1	408		6		402
SUMMARY NO. 2					
–L– STA. 14+36.32 (END BRIDGE) TO STA. 16+45	1027		5		1022
SUBTOTAL SUMMARY NO. 2	1027		5		1022
SUMMARY NO. 3					
–DR–1– STA. 10+10 TO STA. 10+50.33	92		0		92
SUBTOTAL SUMMARY NO. 3	92		0		92
PROJECT SUBTOTAL	1527		11		1516
GRAND TOTAL	1527		11		1516
SAY	1530				

CONTINGENCY ITEMS:

INCIDENTAL STONE = 50 TONS

UNDERCUT EXCAVATION = 50 CY

SELECT GRANULAR MATERIAL = 50 CY

CLASS IV SUBGRADE STABILIZATION = 50 TONS

GEOTEXTILE FOR SOIL STABILIZATION = 50 SY

Approximate quantities only. Unclassified excavation, borrow excavation, fine grading, clearing and grubbing, and removal of existing pavement will be paid for at the contract lump sum price for "grading".

PROJECT REFERENCE NO.	SHEET NO.
BD-5113G	4
R/W SHEET NO.	

ROADWAY DESIGN ENGINEER: NORTH CAROLINA PROFESSIONAL SEAL 030453 ENGINEER JASON C. CARTER 3/7/14

HYDRAULICS ENGINEER: NORTH CAROLINA PROFESSIONAL SEAL 033023 ENGINEER BRADLEY S. RIDNOUR 3/7/14 Bradley S. Ridnour, PE

NAD 83/NSRS 2011

BL-1	806171.6974	1037463.3250	2565.53
BL-2	806397.9890	1037314.6549	2572.82
BL-3	806538.3271	1037409.3970	2577.49
BL-4	806700.9099	1037418.5706	2582.74

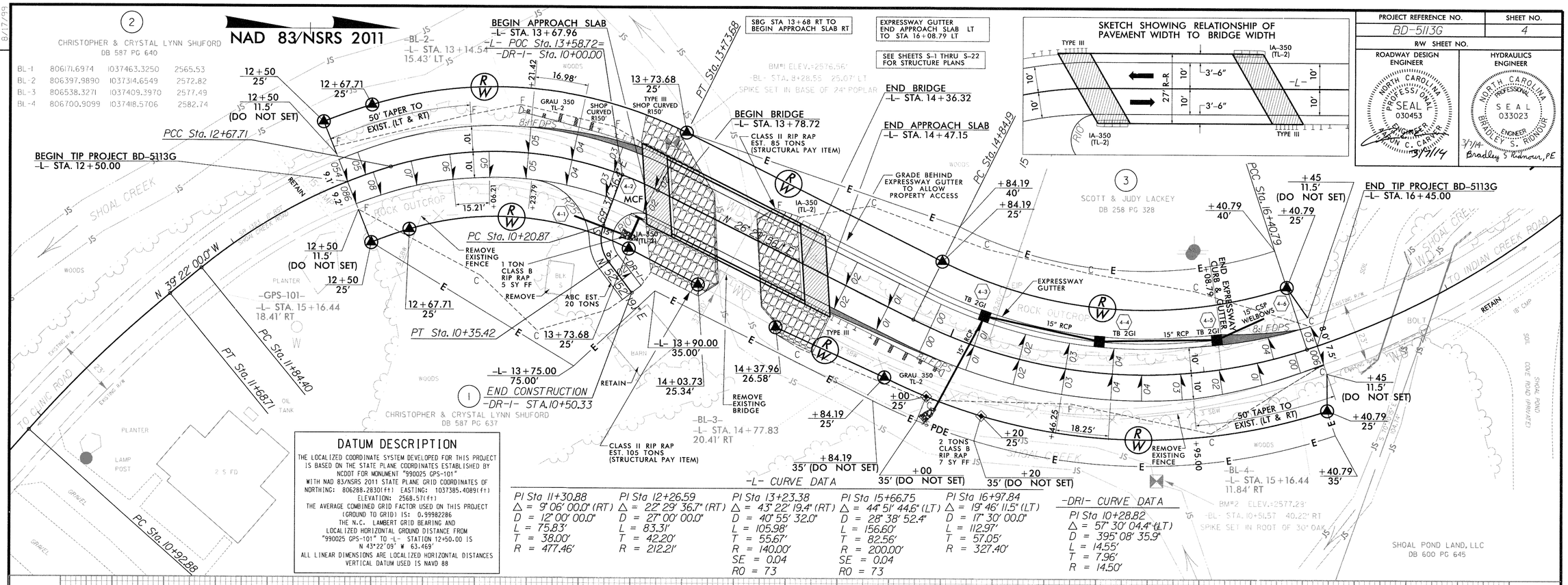

SKETCH SHOWING RELATIONSHIP OF PAVEMENT WIDTH TO BRIDGE WIDTH

DATUM DESCRIPTION

THE LOCALIZED COORDINATE SYSTEM DEVELOPED FOR THIS PROJECT IS BASED ON THE STATE PLANE COORDINATES ESTABLISHED BY NCDOT FOR MONUMENT "990025 GPS-101"
WITH NAD 83/NSRS 2011 STATE PLANE GRID COORDINATES OF
NORTHING: 806288.2830(ft) EASTING: 1037385.4089(ft)
ELEVATION: 2568.57(ft)
THE AVERAGE COMBINED GRID FACTOR USED ON THIS PROJECT (GROUND TO GRID) IS: 0.99982286
THE N.C. LAMBERT GRID BEARING AND LOCALIZED HORIZONTAL GROUND DISTANCE FROM "990025 GPS-101" TO -L- STATION 12+50.00 IS N 43°22'09" W 63.469'
ALL LINEAR DIMENSIONS ARE LOCALIZED HORIZONTAL DISTANCES
VERTICAL DATUM USED IS NAVD 88

-L- CURVE DATA

PI Sta 11+30.88	PI Sta 12+26.59	PI Sta 13+23.38	PI Sta 15+66.75	PI Sta 16+97.84
Δ = 9° 06' 00.0" (RT)	Δ = 22° 29' 36.7" (RT)	Δ = 43° 22' 19.4" (RT)	Δ = 44° 51' 44.6" (LT)	Δ = 19° 46' 11.5" (LT)
D = 12° 00' 00.0"	D = 27° 00' 00.0"	D = 40° 55' 32.0"	D = 28° 38' 52.4"	D = 17° 30' 00.0"
L = 75.83'	L = 83.31'	L = 105.98'	L = 156.60'	L = 112.97'
T = 38.00'	T = 42.20'	T = 55.67'	T = 82.56'	T = 57.05'
R = 477.46'	R = 212.21'	R = 140.00'	R = 200.00'	R = 327.40'
		SE = 0.04	SE = 0.04	
		R0 = 73	R0 = 73	

-DRI- CURVE DATA

PI Sta 10+28.82
Δ = 57° 30' 04.4" (LT)
D = 395° 08' 35.9"
L = 14.55'
T = 7.96'
R = 14.50'

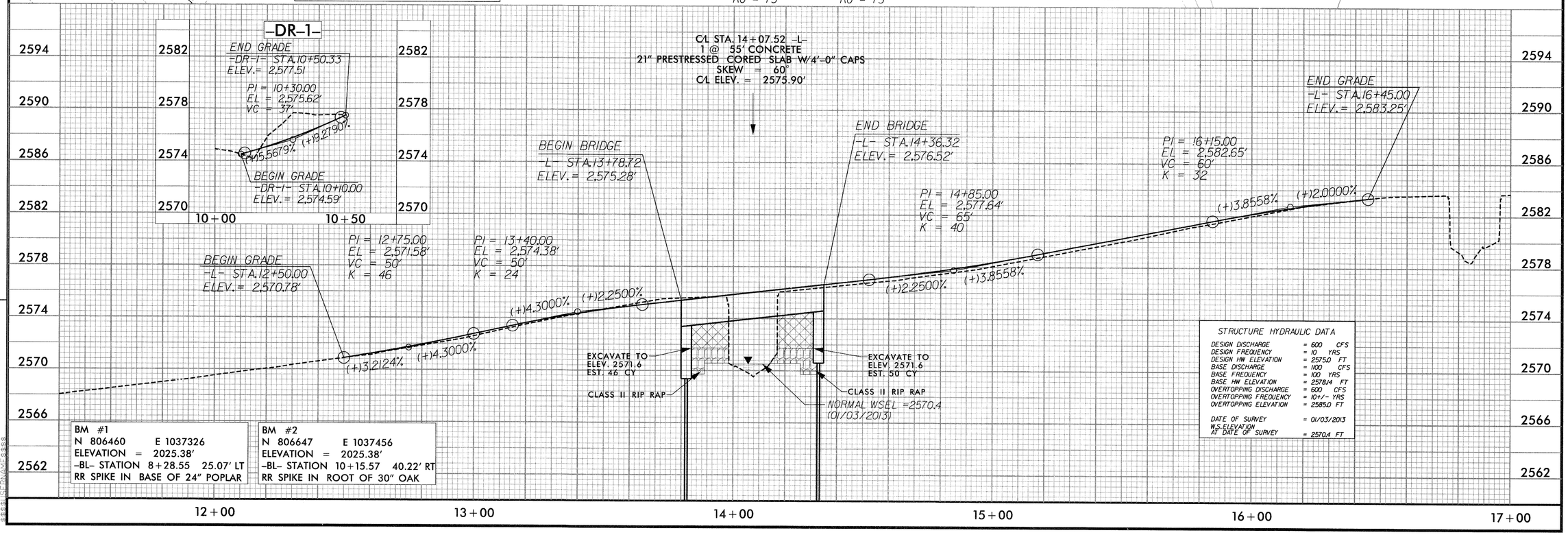

STRUCTURE HYDRAULIC DATA	
DESIGN DISCHARGE	= 600 CFS
DESIGN FREQUENCY	= 10 YRS
DESIGN HW ELEVATION	= 2575.0 FT
BASE DISCHARGE	= 1100 CFS
BASE FREQUENCY	= 100 YRS
BASE HW ELEVATION	= 2578.4 FT
OVERTOPPING DISCHARGE	= 600 CFS
OVERTOPPING FREQUENCY	= 10+/- YRS
OVERTOPPING ELEVATION	= 2585.0 FT
DATE OF SURVEY	= 01/03/2013
W.S. ELEVATION AT DATE OF SURVEY	= 2570.4 FT

BM #1	BM #2
N 806460 E 1037326	N 806647 E 1037456
ELEVATION = 2025.38'	ELEVATION = 2025.38'
-BL- STATION 8+28.55 25.07' LT	-BL- STATION 10+15.57 40.22' RT
RR SPIKE IN BASE OF 24" POPLAR	RR SPIKE IN ROOT OF 30" OAK

REVISIONS

8/17/99

STATE OF NORTH CAROLINA
DIVISION OF HIGHWAYS

TRANSPORTATION MANAGEMENT PLAN

YANCEY COUNTY

DIVISION 13

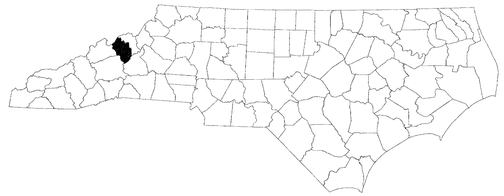

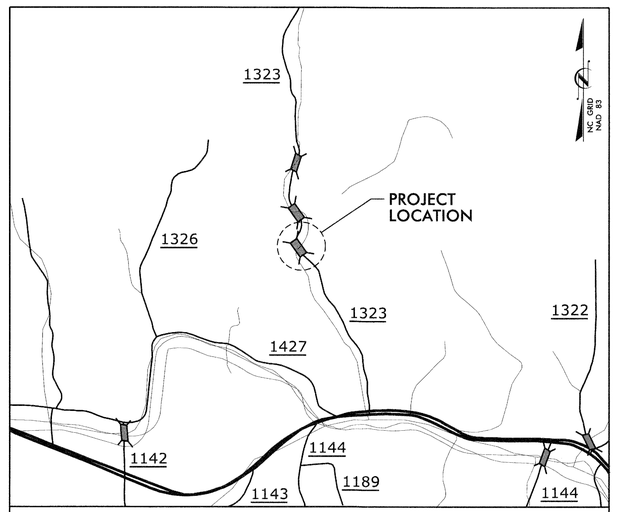

VICINITY MAP

LOCATION: BRIDGE NO. 25 OVER SHOAL CREEK ON SR 1323 (SHOAL CREEK ROAD)

INDEX OF SHEETS

SHEET NO.	TITLE
TMP-1	TITLE SHEET, AND INDEX OF SHEETS
TMP-1A	LIST OF APPLICABLE ROADWAY STANDARD DRAWINGS, LEGEND, AND TEMPORARY PAVEMENT MARKING
TMP-1B	TRANSPORTATION OPERATIONS PLAN: (MANAGEMENT STRATEGIES, GENERAL NOTES AND LOCAL NOTES)
TMP-2	TEMPORARY TRAFFIC CONTROL PHASING
TMP-3	TEMPORARY TRAFFIC CONTROL PHASE I DETAIL
TMP-4	TEMPORARY TRAFFIC CONTROL PHASE II DETAIL
SIG-1	TEMPORARY TRAFFIC CONTROL SIGNAL PLAN

SHEET NO.
TMP-1

TIP PROJECT: BD-5113G

WORK ZONE SAFETY & MOBILITY
"from the MOUNTAINS to the COAST"

N.C.D.O.T. WORK ZONE TRAFFIC CONTROL
1580 MAIL SERVICE CENTER (MSC) RALEIGH, NC 27699-1580
1020 BIRCH RIDGE DRIVE, RALEIGH, NC 27610 (DELIVERY)
PHONE: (919) 250-4094 FAX: (919) 250-4098

J. S. BOURNE, P.E. STATE TRAFFIC MANAGEMENT ENGINEER
LLOYD D. BROWN, P.E. TRAFFIC CONTROL PROJECT ENGINEER
AARON C. CARVER, P.E. TRAFFIC CONTROL PROJECT DESIGN ENGINEER
AARON C. CARVER, P.E. TRAFFIC CONTROL DESIGN ENGINEER

DIVISION OF HIGHWAYS · STATE OF NORTH CAROLINA · DEPARTMENT OF TRANSPORTATION · WORK ZONE TRAFFIC CONTROL

V&M Vaughn & Melton
Consulting Engineers

Copyright © 2006 Vaughn & Melton, Inc.
All Rights Reserved

Asheville, North Carolina 828-253-2796
Charlotte, North Carolina 704-357-0488

PROJECT ENGINEER LLOYD D. BROWN, P.E.
DESIGN ENGINEER AARON C. CARVER, P.E.

APPROVED: [signature]
DATE: March 7, 2014

SEAL

NORTH CAROLINA PROFESSIONAL SEAL 20119 ENGINEER LLOYD D. BROWN

$$$$$$$$SYSTIME$$$$$$$$
$$$$$$$$DGN$$$$$$$$
$$$$$USERNAME$$$$

PROJ. REFERENCE NO.	SHEET NO.
BD-5113G	TMP-1A

ROADWAY STANDARD DRAWINGS

THE FOLLOWING ROADWAY STANDARDS AS SHOWN IN "ROADWAY STANDARD DRAWINGS" - PROJECT SERVICES UNIT - N.C. DEPARTMENT OF TRANSPORTATION - RALEIGH, N.C., DATED JANUARY 2012 ARE APPLICABLE TO THIS PROJECT AND BY REFERENCE HEREBY ARE CONSIDERED A PART OF THESE PLANS:

STD. NO.	TITLE
1101.01	WORK ZONE ADVANCE WARNING SIGNS
1101.02	TEMPORARY LANE CLOSURES
1101.03	TEMPORARY ROAD CLOSURES
1101.04	TEMPORARY SHOULDER CLOSURES
1101.05	WORK ZONE VEHICLE ACCESSES
1101.11	TRAFFIC CONTROL DESIGN TABLES
1110.01	STATIONARY WORK ZONE SIGNS
1110.02	PORTABLE WORK ZONE SIGNS
1115.01	FLASHING ARROW PANELS
1130.01	DRUMS
1135.01	CONES
1145.01	BARRICADES
1150.01	FLAGGING DEVICES
1160.01	TEMPORARY CRASH CUSHION
1165.01	TRUCK MOUNTED IMPACT ATTENUATOR
1170.01	PORTABLE CONCRETE BARRIER
1180.01	SKINNY-DRUM
1205.01	PAVEMENT MARKINGS - LINE TYPES & OFFSETS
1205.04	PAVEMENT MARKINGS - INTERSECTIONS
1205.08	PAVEMENT MARKINGS - SYMBOLS & WORD MESSAGES
1205.12	PAVEMENT MARKINGS - BRIDGES
1261.01	GUARDRAIL & BARRIER DELINEATOR SPACING
1261.02	GUARDRAIL & BARRIER DELINEATOR TYPES
1262.01	GUARDRAIL END DELINEATION

LEGEND

GENERAL

DIRECTION OF TRAFFIC FLOW

DIRECTION OF PEDESTRIAN TRAFFIC FLOW

EXIST. PVMT.

NORTH ARROW

PROPOSED PVMT.

WORK AREA

TEMPORARY PAVEMENT

TEMPORARY PAVEMENT MARKING

SYMBOL	DESCRIPTION
	PAINT (4")
PA	WHITE EDGE LINE
PI	YELLOW DOUBLE CENTER
P4	STOP BAR (24" WHITE)

TRAFFIC CONTROL DEVICES

BARRICADE (TYPE III)

CONE

DRUM SKINNY DRUM TUBULAR MARKER

TEMPORARY CRASH CUSHION

FLASHING ARROW PANEL (TYPE C)

FLAGGER

LAW ENFORCEMENT

TRUCK MOUNTED IMPACT ATTENUATOR (TMIA)

CHANGEABLE MESSAGE SIGN

TEMPORARY SIGNING

PORTABLE SIGN

STATIONARY SIGN

STATIONARY OR PORTABLE SIGN

SIGNALS

EXISTING PROPOSED TEMPORARY

PORTABLE TRAFFIC SIGNAL

PAVEMENT MARKINGS

EXISTING LINES

TEMPORARY LINES

PAVEMENT MARKING SYMBOLS

PAVEMENT MARKING SYMBOLS

Vaughn & Melton
Consulting Engineers

Asheville, North Carolina 828-253-2796

Charlotte, North Carolina 704-357-0488
Tri-Cities, Tennessee 423-467-8401
Knoxville, Tennessee 865-546-5800
Middlesboro, Kentucky 606-248-6600
Spartanburg, South Carolina 864-574-4775

Copyright © 2006 Vaughn & Melton, Inc. All Rights Reserved

APPROVED: DATE: 5/7/2014

SEAL

NORTH CAROLINA PROFESSIONAL SEAL 20119 ENGINEER LOYD D. BROWN

DIVISION OF HIGHWAYS STATE OF NORTH CAROLINA DEPARTMENT OF TRANSPORTATION WORK ZONE TRAFFIC CONTROL

ROADWAY STANDARD DRAWINGS & LEGEND

$$$$$$SYSTIME$$$$$
$$$$$$$$$$$$$$DGN$$$$$$$$$$$$$$$$$
$$$$$USERNAME$$$$

PROJ. REFERENCE NO.	SHEET NO.
BD-5113G	TMP-1B

GENERAL NOTES / LOCAL NOTES

CHANGES MAY BE REQUIRED WHEN PHYSICAL DIMENSIONS IN THE DETAIL DRAWINGS, STANDARD DETAILS, AND ROADWAY DETAILS ARE NOT ATTAINABLE TO MEET FIELD CONDITIONS OR RESULT IN DUPLICATE OR UNDESIRED OVERLAPPING OF DEVICES. MODIFICATION MAY INCLUDE: MOVING, SUPPLEMENTING, COVERING, OR REMOVAL OF DEVICES AS DIRECTED BY THE ENGINEER.

THE FOLLOWING GENERAL NOTES APPLY AT ALL TIMES FOR THE DURATION OF THE CONSTRUCTION PROJECT EXCEPT WHEN OTHERWISE NOTED IN THE PLAN OR DIRECTED BY THE ENGINEER.

LANE AND SHOULDER CLOSURE REQUIREMENTS

A) REMOVE LANE CLOSURE DEVICES FROM THE LANE WHEN WORK IS NOT BEING PERFORMED BEHIND THE LANE CLOSURE OR WHEN A LANE CLOSURE IS NO LONGER NEEDED OR AS DIRECTED BY THE ENGINEER.

B) WHEN PERSONNEL AND/OR EQUIPMENT ARE WORKING WITHIN 15 FT OF AN OPEN TRAVEL LANE, CLOSE THE NEAREST OPEN SHOULDER USING ROADWAY STANDARD DRAWING NO. 1101.04 UNLESS THE WORK AREA IS PROTECTED BY BARRIER OR GUARDRAIL OR A LANE CLOSURE IS INSTALLED.

C) WHEN PERSONNEL AND/OR EQUIPMENT ARE WORKING ON THE SHOULDER ADJACENT TO AN UNDIVIDED FACILITY AND WITHIN 5 FT OF AN OPEN TRAVEL LANE, CLOSE THE NEAREST OPEN TRAVEL LANE USING ROADWAY STANDARD DRAWING NO. 1101.02 UNLESS THE WORK AREA IS PROTECTED BY BARRIER OR GUARDRAIL.

D) WHEN PERSONNEL AND/OR EQUIPMENT ARE WORKING WITHIN A LANE OF TRAVEL OF AN UNDIVIDED OR DIVIDED FACILITY, CLOSE THE LANE ACCORDING TO THE TRAFFIC CONTROL PLANS, ROADWAY STANDARD DRAWINGS, OR AS DIRECTED BY THE ENGINEER. CONDUCT THE WORK SO THAT ALL PERSONNEL AND/OR EQUIPMENT REMAIN WITHIN THE CLOSED TRAVEL LANE.

E) DO NOT WORK SIMULTANEOUSLY WITHIN 15 FT ON BOTH SIDES OF AN OPEN TRAVELWAY, RAMP, OR LOOP WITHIN THE SAME LOCATION UNLESS PROTECTED WITH GUARDRAIL OR BARRIER.

PAVEMENT EDGE DROP OFF REQUIREMENTS

F) BACKFILL AT A 6:1 SLOPE UP TO THE EDGE AND ELEVATION OF EXISTING PAVEMENT IN AREAS ADJACENT TO AN OPENED TRAVEL LANE THAT HAS AN EDGE OF PAVEMENT DROP-OFF AS FOLLOWS:

BACKFILL DROP-OFFS THAT EXCEED 2 INCHES ON ROADWAYS WITH POSTED SPEED LIMITS OF 45 MPH OR GREATER.

BACKFILL DROP-OFFS THAT EXCEED 3 INCHES ON ROADWAYS WITH POSTED SPEED LIMITS LESS THAN 45 MPH.

BACKFILL WITH SUITABLE COMPACTED MATERIAL, AS APPROVED BY THE ENGINEER, AT NO EXPENSE TO THE DEPARTMENT.

G) DO NOT EXCEED A DIFFERENCE OF 2 INCHES IN ELEVATION BETWEEN OPEN LANES OF TRAFFIC FOR NOMINAL LIFTS OF 1.5 INCHES. INSTALL ADVANCE WARNING "UNEVEN LANES" SIGNS (W8-11) IN ADVANCE AND A MINIMUM OF EVERY HALF MILE THROUGHOUT THE UNEVEN AREA.

TRAFFIC PATTERN ALTERATIONS

H) NOTIFY THE ENGINEER TWENTY ONE (21) CALENDAR DAYS PRIOR TO ANY TRAFFIC PATTERN ALTERATION.

SIGNING

I) INSTALL ADVANCE WORK ZONE WARNING SIGNS WHEN WORK IS WITHIN 40 FT FROM THE EDGE OF TRAVEL LANE AND NO MORE THAN THREE (3) DAYS PRIOR TO THE BEGINNING OF CONSTRUCTION.

J) ENSURE ALL NECESSARY SIGNING IS IN PLACE PRIOR TO ALTERING ANY TRAFFIC PATTERN.

K) INSTALL BLACK ON ORANGE "DIP" SIGNS (W8-2) AND/OR "BUMP" SIGNS (W8-1) 100 ft IN ADVANCE OF THE UNEVEN AREA, OR AS DIRECTED BY THE ENGINEER.

TRAFFIC CONTROL DEVICES

L) WHEN LANE CLOSURES ARE NOT IN EFFECT SPACE CHANNELIZING DEVICES IN WORK AREAS NO GREATER IN FEET THAN TWICE THE POSTED SPEED LIMIT (MPH) EXCEPT, 10 FT ON-CENTER IN RADII, AND 3 FT OFF THE EDGE OF AN OPEN TRAVELWAY. REFER TO STANDARD SPECIFICATIONS FOR ROADS AND STRUCTURES SECTIONS 1130 (DRUMS), 1135 (CONES) AND 1180 (SKINNY DRUMS) FOR ADDITIONAL REQUIREMENTS.

M) PLACE TYPE III BARRICADES, WITH "ROAD CLOSED" SIGN R11-2 ATTACHED, OF SUFFICIENT LENGTH TO CLOSE ENTIRE ROADWAY.

PAVEMENT MARKING

N) INSTALL TEMPORARY PAVEMENT MARKINGS ON INTERIM LAYERS OF PAVEMENT AS FOLLOWS:

ROAD NAME	MARKING	MARKER
SR 1323 (SHOAL CREEK ROAD)	PAINT	NONE

O) PLACE ONE APPLICATION OF PAINT FOR TEMPORARY TRAFFIC PATTERNS. PLACE A SECOND APPLICATION OF PAINT SIX (6) MONTHS AFTER THE INITIAL APPLICATION AND EVERY SIX MONTHS AS DIRECTED BY THE ENGINEER.

P) TIE PROPOSED PAVEMENT MARKING LINES TO EXISTING PAVEMENT MARKING LINES.

Q) REMOVE/REPLACE ANY CONFLICTING/DAMAGED PAVEMENT MARKINGS BY THE END OF EACH DAY'S OPERATION.

MISCELLANEOUS

R) IN THE EVENT A TIE-IN CANNOT BE MADE IN ONE DAY'S TIME, BRING THE TIE-IN AREA TO AN APPROPRIATE ROADWAY ELEVATION AS DETERMINED BY THE ENGINEER. PLACE BLACK ON ORANGE "LOOSE GRAVEL" SIGNS (W8-7) AND BLACK ON ORANGE "PAVEMENT ENDS" SIGNS (W8-3) 100 ft AND 200 ft RESPECTIVELY IN ADVANCE OF THE UNEVEN AREAS. USE DRUMS TO DELINEATE THE EDGE OF ROADWAY ALONG UNPAVED AREAS.

MANAGEMENT STRATEGIES

PHASE 1 DEPICTS TRAFFIC TO BE MAINTAINED ON THE EXISTING ROAD, BUT REDUCED TO ONE LANE USING TEMPORARY SIGNALS AND PAVEMENT MARKINGS AS NEW ALIGNMENT IS CONSTRUCTED.

PHASE 2 DEPICTS TRAFFIC SHIFTED TO ONE LANE ON THE NEW ALIGNMENT USING TEMPORARY SIGNALS AND PAVEMENT MARKINGS WHILE THE REMAINDER IS CONSTRUCTED. A FLAGGING OPERATION WILL BE USED TO CONSTRUCT THE NEW TIE-INS.

LOCAL NOTES:

1) **EMERGENCY VEHICLE ACCESS MUST BE MAINTAINED AT ALL TIMES.**
2) **NOTIFY THE YANCEY COUNTY SCHOOL BOARD 30 DAYS BEFORE ANY LANE CLOSURES.**

V&M
Vaughn & Melton
Consulting Engineers
Asheville, North Carolina 828-253-2796
Charlotte, North Carolina 704-357-0488
Tri-Cities, Tennessee 423-467-8401
Knoxville, Tennessee 865-546-5800
Middlesboro, Kentucky 606-248-6600
Spartanburg, South Carolina 864-574-4775
Copyright © 2006 Vaughn & Melton, Inc. All Rights Reserved

APPROVED: DATE: 3/7/2014

SEAL

NORTH CAROLINA PROFESSIONAL SEAL 20119 ENGINEER LOYD D. BROWN

DIVISION OF HIGHWAYS · STATE OF NORTH CAROLINA · DEPARTMENT OF TRANSPORTATION · WORK ZONE TRAFFIC CONTROL

TRANSPORTATION OPERATIONS PLAN
(MANAGEMENT STRATEGIES & GENERAL NOTES)

$$$$SYSTIME$$$$
$$$$$$$$$$DGN$$$$$$$$$$
$$$$USERNAME$$$$

PROJ. REFERENCE NO.	SHEET NO.
BD-5113G	TMP-2

PROJECT PHASING

PHASE I

STEP 1: - ERECT WORK ZONE ADVANCED WARNING SIGNS USING DETAIL DRAWINGS FOR WORK ZONE SIGNS. (SEE RDWY STD. 1101.01 AND TMP-3)

- INSTALL PORTABLE TRAFFIC SIGNALS AS REQUIRED IN THE SIGNAL PLANS (SEE SHEET SIG-1).

NOTE: STEP 2 SHALL BE COMPLETED IN A CONTINUOUS OPERATION.

STEP 2: USING RDWY STD 1101.02 SHEET 1 OF 15 AND FLAGGERS, PERFORM THE FOLLOWING ON SR 1323:

- REMOVE AS NECESSARY EXISTING PAVEMENT MARKINGS, AND PLACE TEMPORARY PAVEMENT MARKINGS (PAINT), FROM -L- STA. 12+25 +/- TO -L- STA. 16+70 +/-. (SEE TMP-3)
- ACTIVATE PORTABLE TRAFFIC SIGNALS AND DIRECT SR 1323 (SHOAL CREEK ROAD) TRAFFIC INTO A ONE LANE, TWO WAY PATTERN IN THE EXISTING NORTHBOUND LANE OF SR 1323 (SHOAL CREEK ROAD). (SEE TMP-3)
- REMOVE EXISTING BRIDGE RAIL (LEFT SIDE), SAW CUT AND REMOVE LEFT SIDE OF EXISTING BRIDGE TO LIMIT SHOWN (SEE SECTION B-B, TMP-3) AND INSTALL TEMPORARY GUARDRAIL FROM -L- STA. 13+45 +/- TO -L- STA. 14+80 +/-.(SEE TMP-3)

STEP 3: -INSTALL TEMPORARY SHORING AS FOLLOWS:

-INSTALL TEMPORARY SHORING NO. 1 BEHIND TEMPORARY GUARDRAIL FROM -L- STA. 13+65 +/- TO -L- STA. 14+00 +/-. (SEE TMP-3)

-INSTALL TEMPORARY SHORING NO. 2 BEHIND TEMPORARY GUARDRAIL FROM -L- STA. 14+20 +/- TO -L- STA. 14+50 +/-. (SEE TMP-3)

STEP 4: - CONSTRUCT -L- (SR 1323 SHOAL CREEK ROAD) FROM STA 12+50 TO STA 16+45 SOUTHBOUND LANE EXCLUDING FINAL PAVEMENT LAYER.

- CONSTRUCT STRUCTURES PER THE STRUCTURE PLANS STAGE 1.

PHASE II

NOTE: STEP 1 SHALL BE COMPLETED IN A CONTINUOUS OPERATION.

STEP 1: USING RDWY STD 1101.02 SHEET 1 OF 15, PERFORM THE FOLLOWING ON SR 1323:

- REMOVE, AS NECESSARY, PAVEMENT MARKINGS PLACED IN STEP 2, PHASE I AND PLACE TEMPORARY PAVEMENT MARKINGS (PAINT) FROM -L- STA. 12+25 +/- TO -L- STA. 16+70+/-. (SEE TMP-4)
- INSTALL TEMPORARY GUARDRAIL FROM -L- STA. 13+45 +/- TO -L- STA. 14+80 +/- (SEE SECTION DETAILS AND PLAN, TMP-4) AND REMOVE GUARDRAIL PLACED IN STEP 2, PHASE I.
- ACTIVATE PORTABLE TRAFFIC SIGNALS AND DIRECT SR 1323 (SHOAL CREEK ROAD) TRAFFIC INTO A ONE LANE, TWO-WAY PATTERN IN THE SOUTHBOUND LANE OF SR 1323 (SHOAL CREEK ROAD). (SEE TMP-4)

STEP 2: - REMOVE NORTHBOUND SIDE OF EXISTING STRUCTURE (SEE STRUCTURE PLANS).

STEP 3: - CONSTRUCT -L- (SR 1323 SHOAL CREEK ROAD) FROM STA 12+50 TO STA 16+45 NORTHBOUND LANE EXCLUDING FINAL PAVEMENT LAYER.

--CONSTRUCT STRUCTURES PER THE STRUCTURE PLANS STAGE 2.

STEP 4: - USING RDWY STD 1101.02 SHEET 1 OF 15, CONSTRUCT GUARDRAIL, REMOVE TEMPORARY GUARDRAIL PLACED IN STEP 1, PHASE II, PLACE THE FINAL LAYER OF SURFACE COURSE, AND THE FINAL PAVEMENT MARKINGS (PAINT) ON THE ENTIRE PROJECT.

STEP 5: - REMOVE ALL TEMPORARY TRAFFIC CONTROL DEVICES.

--OPEN SR 1323 (SHOAL CREEK ROAD) TO 2-LANE, 2-WAY TRAFFIC.

Vaughn & Melton
Consulting Engineers
Asheville, North Carolina 828-253-2796
Charlotte, North Carolina 704-357-0488
Tri-Cities, Tennessee 423-467-8401
Knoxville, Tennessee 865-546-5800
Middlesboro, Kentucky 606-248-6600
Spartanburg, South Carolina 864-574-4775
Copyright © 2006 Vaughn & Melton, Inc. All Rights Reserved

APPROVED: [signature] DATE: 3/7/2014

SEAL

NORTH CAROLINA PROFESSIONAL SEAL 20119 ENGINEER LLOYD D. BROWN

DIVISION OF HIGHWAYS STATE OF NORTH CAROLINA DEPARTMENT OF TRANSPORTATION WORK ZONE TRAFFIC CONTROL

PHASING

$$$$$SYSTIME$$$$
$$$$$$$$$$$$DGN$$$$$$$$$$$$$$$$
$$$$USERNAME$$$$

PROJ. REFERENCE NO.	SHEET NO.
BD-5113G	TMP-3

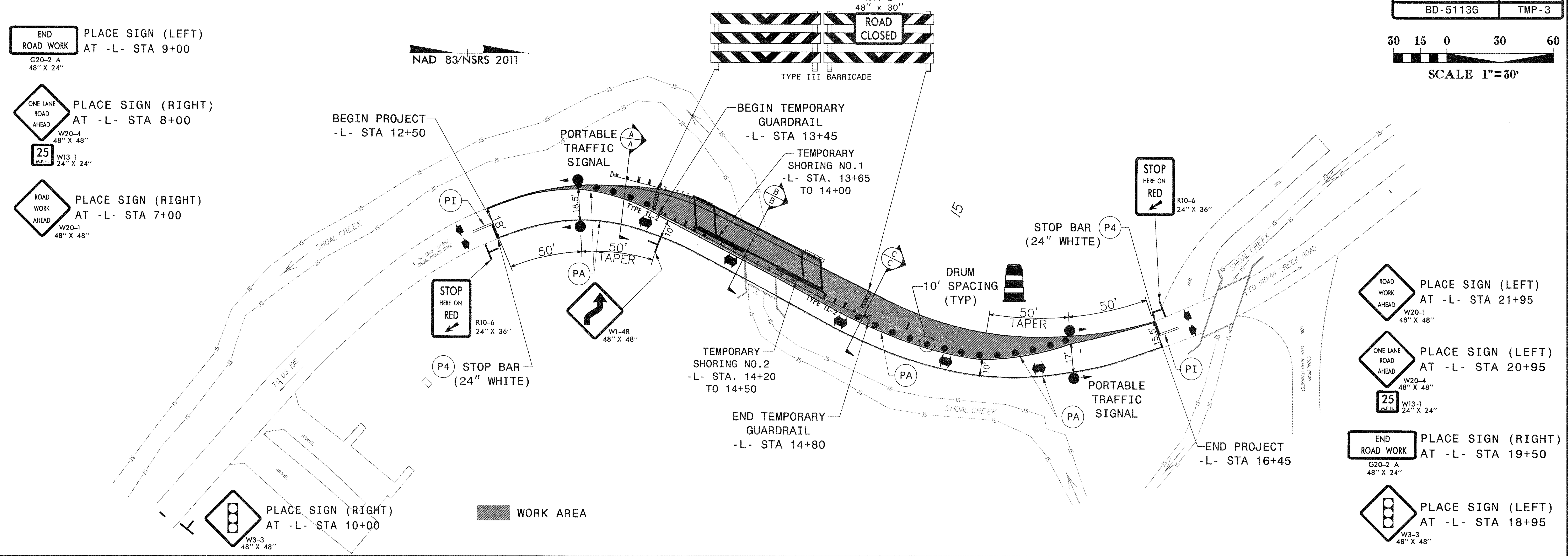

SECTION A-A

-L- STA 13+25

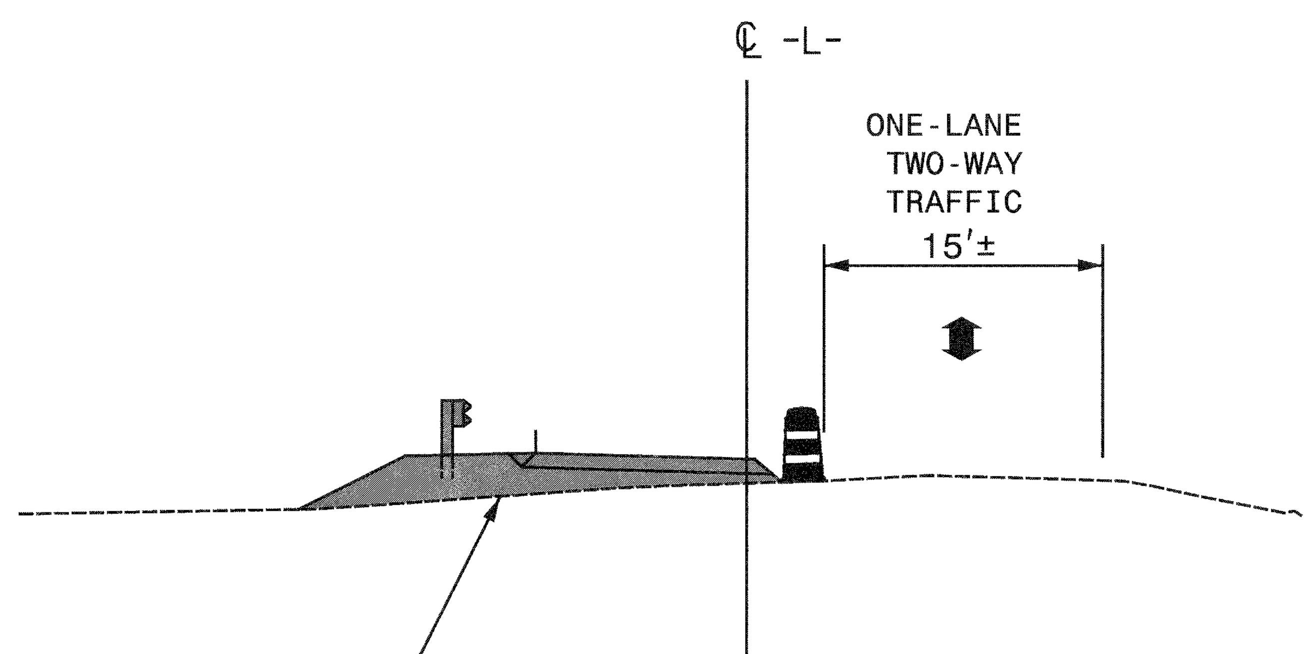

N.T.S

SECTION B-B

-L- STA 14+00

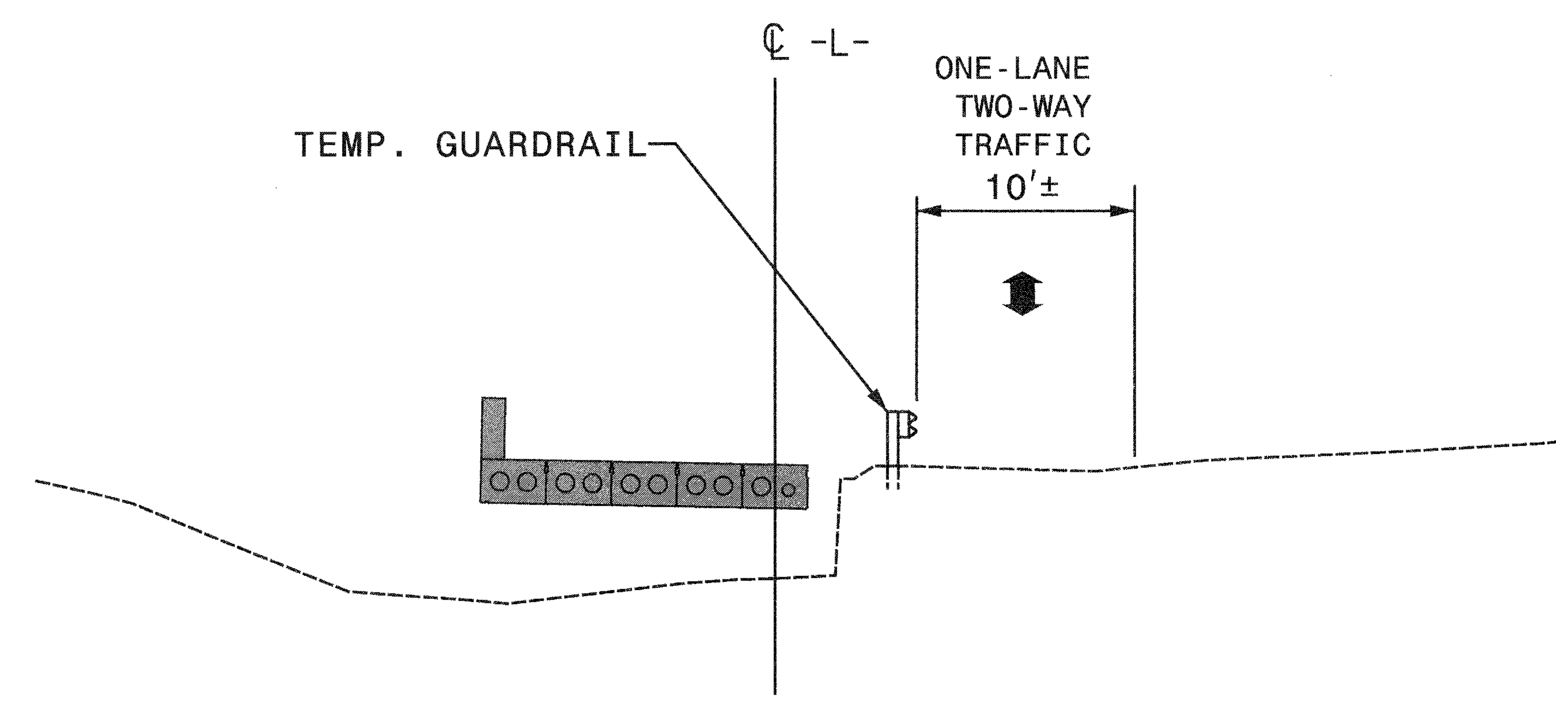

N.T.S

SECTION C-C

-L- STA 14+75

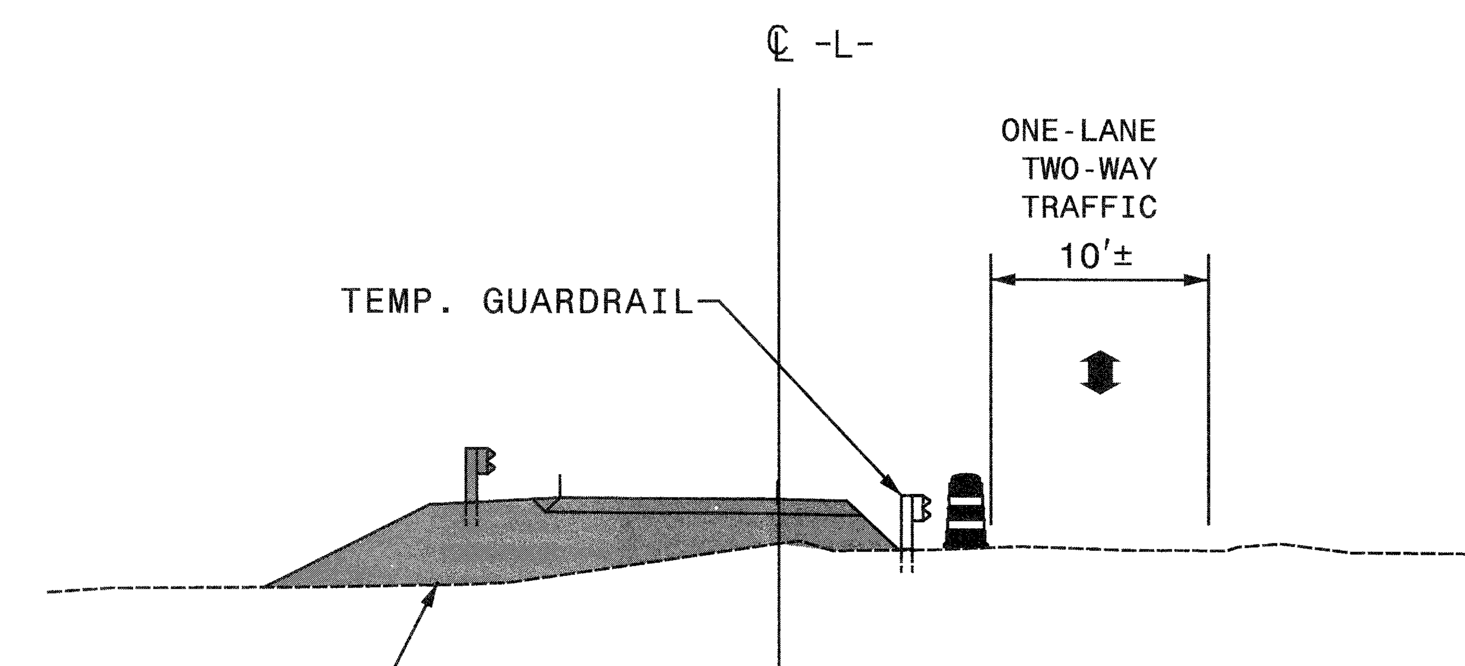

N.T.S

V&M Vaughn & Melton Consulting Engineers
■ Asheville, North Carolina 828-253-2796
□ Charlotte, North Carolina 704-357-0488
□ Tri-Cities, Tennessee 423-467-8401
□ Knoxville, Tennessee 865-546-5800
□ Middlesboro, Kentucky 606-248-6600
□ Spartanburg, South Carolina 864-574-4775

Copyright © 2006 Vaughn & Melton, Inc. All Rights Reserved

APPROVED: DATE: 3/7/2014

SEAL

NORTH CAROLINA PROFESSIONAL SEAL 20119 ENGINEER LLOYD D. BROWN

DIVISION OF HIGHWAYS STATE OF NORTH CAROLINA DEPARTMENT OF TRANSPORTATION WORK ZONE TRAFFIC CONTROL

PHASE I

$$$$SYSTIME$$$$ $$$$$$$$$$$$DGN$$$$$$$$$$$$$$ $$$$USERNAME$$$$

PROJ. REFERENCE NO.	SHEET NO.
BD-5113G	TMP-4

30 15 0 30 60

SCALE 1"=30'

END ROAD WORK — G20-2 A 48" X 24" — PLACE SIGN (LEFT) AT -L- STA 9+00

ONE LANE ROAD AHEAD — W20-4 48" X 48" — 25 M.P.H. W13-1 24" X 24" — PLACE SIGN (RIGHT) AT -L- STA 8+00

ROAD WORK AHEAD — W20-1 48" X 48" — PLACE SIGN (RIGHT) AT -L- STA 7+00

NAD 83/NSRS 2011

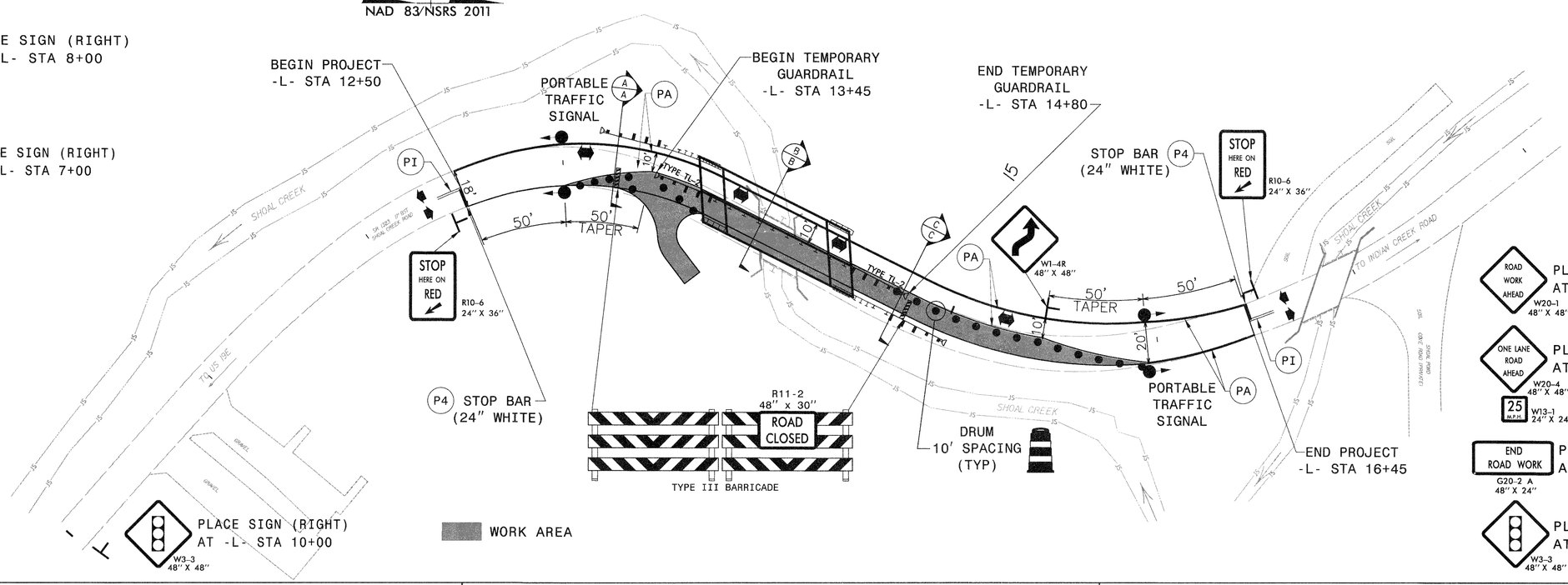

ROAD WORK AHEAD — W20-1 48" X 48" — PLACE SIGN (LEFT) AT -L- STA 21+95

ONE LANE ROAD AHEAD — W20-4 48" X 48" — 25 M.P.H. W13-1 24" X 24" — PLACE SIGN (LEFT) AT -L- STA 20+95

END ROAD WORK — G20-2 A 48" X 24" — PLACE SIGN (RIGHT) AT -L- STA 19+50

W3-3 48" X 48" — PLACE SIGN (LEFT) AT -L- STA 18+95

SECTION A-A

-L- STA 13+25

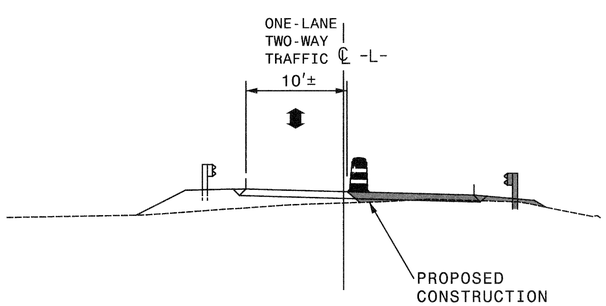

N.T.S

SECTION B-B

-L- STA 14+00

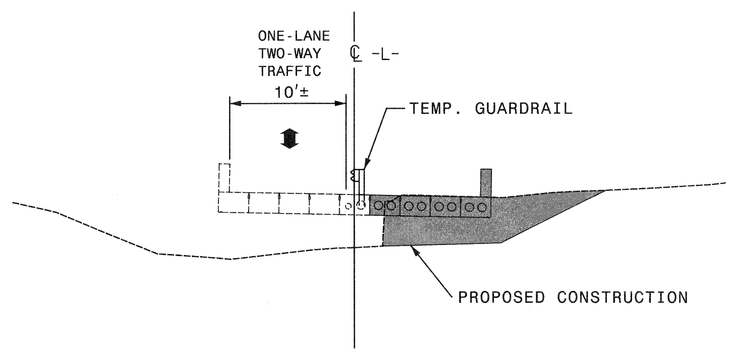

N.T.S

SECTION C-C

-L- STA 14+75

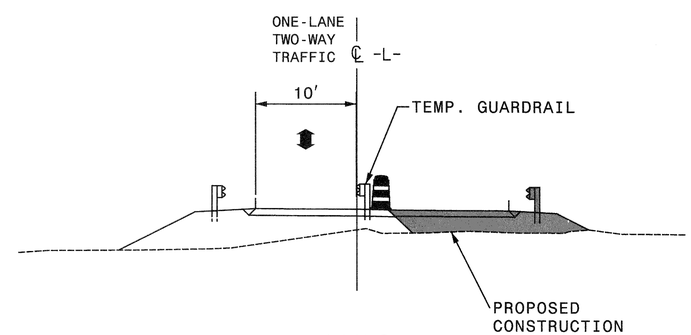

N.T.S

V&M Vaughn & Melton Consulting Engineers
Asheville, North Carolina 828-253-2796
Charlotte, North Carolina 704-357-0488
Tri-Cities, Tennessee 423-467-8401
Knoxville, Tennessee 865-546-5800
Middlesboro, Kentucky 606-248-6600
Spartanburg, South Carolina 864-574-4775

Copyright © 2006 Vaughn & Melton, Inc. All Rights Reserved

APPROVED: DATE: 3/7/2014

SEAL — NORTH CAROLINA PROFESSIONAL SEAL 20119 ENGINEER LLOYD D. BROWN

DIVISION OF HIGHWAYS STATE OF NORTH CAROLINA DEPARTMENT OF TRANSPORTATION WORK ZONE TRAFFIC CONTROL

PHASE II

$$$$SYSTIME$$$$ $$$$DGN$$$$ $$$$USERNAME$$$$

PROJECT REFERENCE NO.	SHEET NO.
BD-5113G	SIG-1

PHASING DIAGRAM

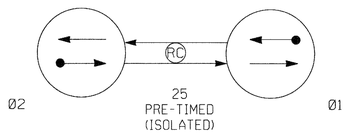

PHASING DIAGRAM DETECTION LEGEND

- DETECTED MOVEMENT
- UNDETECTED MOVEMENT (OVERLAP)
- UNSIGNALIZED MOVEMENT
- PEDESTRIAN MOVEMENT

TABLE OF OPERATION

SIGNAL FACE	Ø2 R/W	Ø2 CLEAR Ø1 1	Ø2 CLEAR Ø1 2	Ø1 R/W	Ø1 CLEAR Ø2 1	Ø1 CLEAR Ø2 2	FLASH
11,12	R	R	R	G	Y	R	R
21,22	G	Y	R	R	R	R	R

SIGNAL FACE I.D.

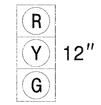

11, 12
21, 22

NOTES

1. PORTABLE TEMPORARY INSTALLATION.
2. SIGNAL HEADS SHALL BE NO CLOSER THAN 40 FEET FROM THE STOPLINE.
3. NO COUNTS AVAILABLE.
4. CONTRACTOR TO UTILIZE NCDOT PRE-APPROVED PORTABLE TRAFFIC SIGNAL MANUFACTURER AND MODEL.

NAD 83/NSRS 2011

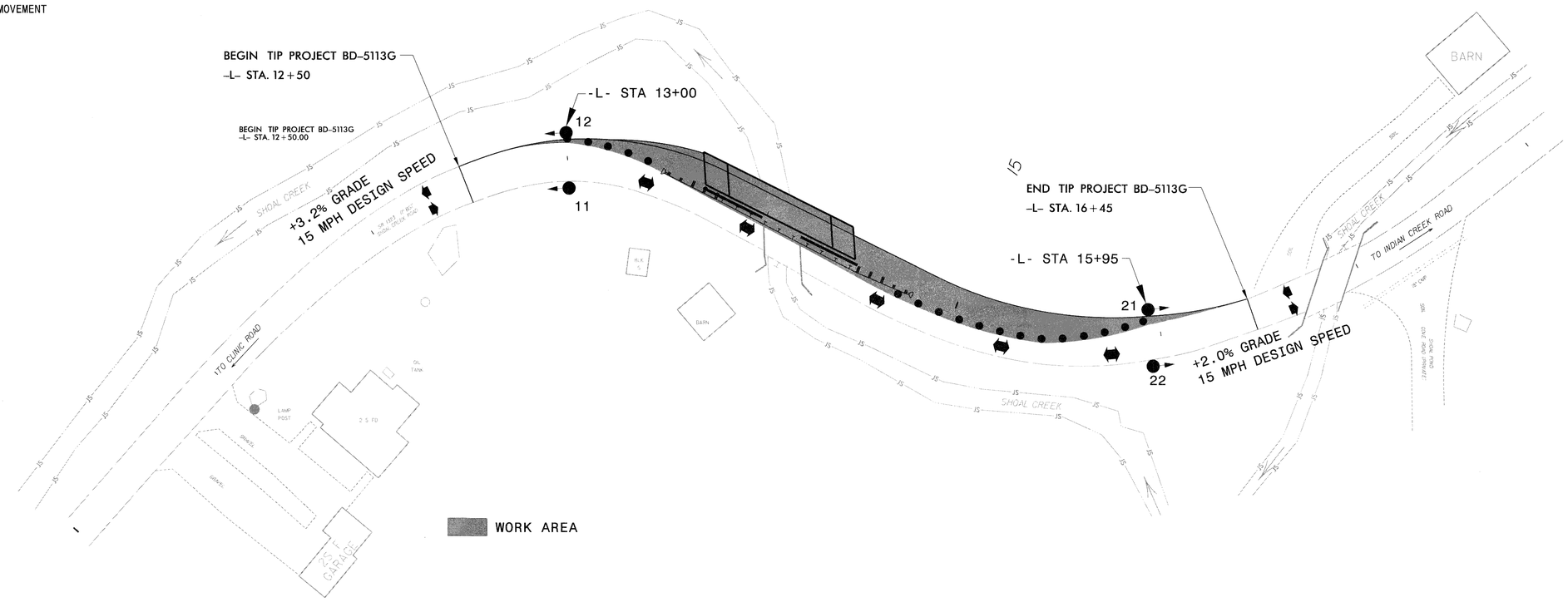

WORK AREA

TIMING CHART
NEMA CONTROLLER

PHASE	Ø1	Ø2
MINIMUM GREEN	40 SEC.	40 SEC.
PASSAGE/GAP	0 SEC.	0 SEC.
YELLOW CHANGE INT.	4.0 SEC.	4.0 SEC.
RED CLEARANCE	25 SEC.	25 SEC.
MAX. 1	40 SEC.	40 SEC.
RECALL POSITION	MAX. RECALL	MAX. RECALL
VEHI. CALL MEMORY	–	–

Prepared in the Offices of:

V&M
Vaughn & Melton
Consulting Engineers

Asheville, North Carolina 828-253-2796
Charlotte, North Carolina 704-357-0468
Tri-Cities, Tennessee 423-467-940
Knoxville, Tennessee 865-546-1600
Middlesboro, Kentucky 606-248-6600
Spartanburg, South Carolina 864-574-4775

Copyright © 2006 Vaughn & Melton, Inc. All Rights Reserved

SCALE 0 30

PORTABLE TRAFFIC SIGNAL PLAN
SR 1323 SHOAL CREEK ROAD

DIV. 13 YANCEY COUNTY

PLAN DATE:	9/17/13	REVIEWED BY:	LDB
PREPARED BY:	WCC	REVIEWED BY:	

REVISIONS	INIT.	DATE

SEAL

NORTH CAROLINA PROFESSIONAL SEAL 20119 ENGINEER LLOYD D. BROWN

SIGNATURE 3/7/2014 DATE

SIG. INVENTORY NO.

PROJECT REFERENCE NO.	SHEET NO.
BD-5113G	EC-1/CONST 4

THESE EROSION AND SEDIMENT CONTROL PLANS COMPLY WITH THE REGULATIONS SET FORTH BY THE NCG-010000 GENERAL CONSTRUCTION PERMIT EFFECTIVE AUGUST 3, 2011 ISSUED BY THE NORTH CAROLINA DEPARTMENT OF ENVIRONMENT AND NATURAL RESOURCES DIVISION OF WATER QUALITY.

EROSION CONTROL PLAN

V&M
Vaughn & Melton
Consulting Engineers
Asheville, North Carolina 828-253-2796
Charlotte, North Carolina 704-895-9051
Tri-Cities, Tennessee 423-467-8401
Knoxville, Tennessee 865-546-5800
Middlesboro, Kentucky 606-248-6600
Spartanburg, South Carolina 864-574-4775

Copyright 1994 Vaughn & Melton, Inc.

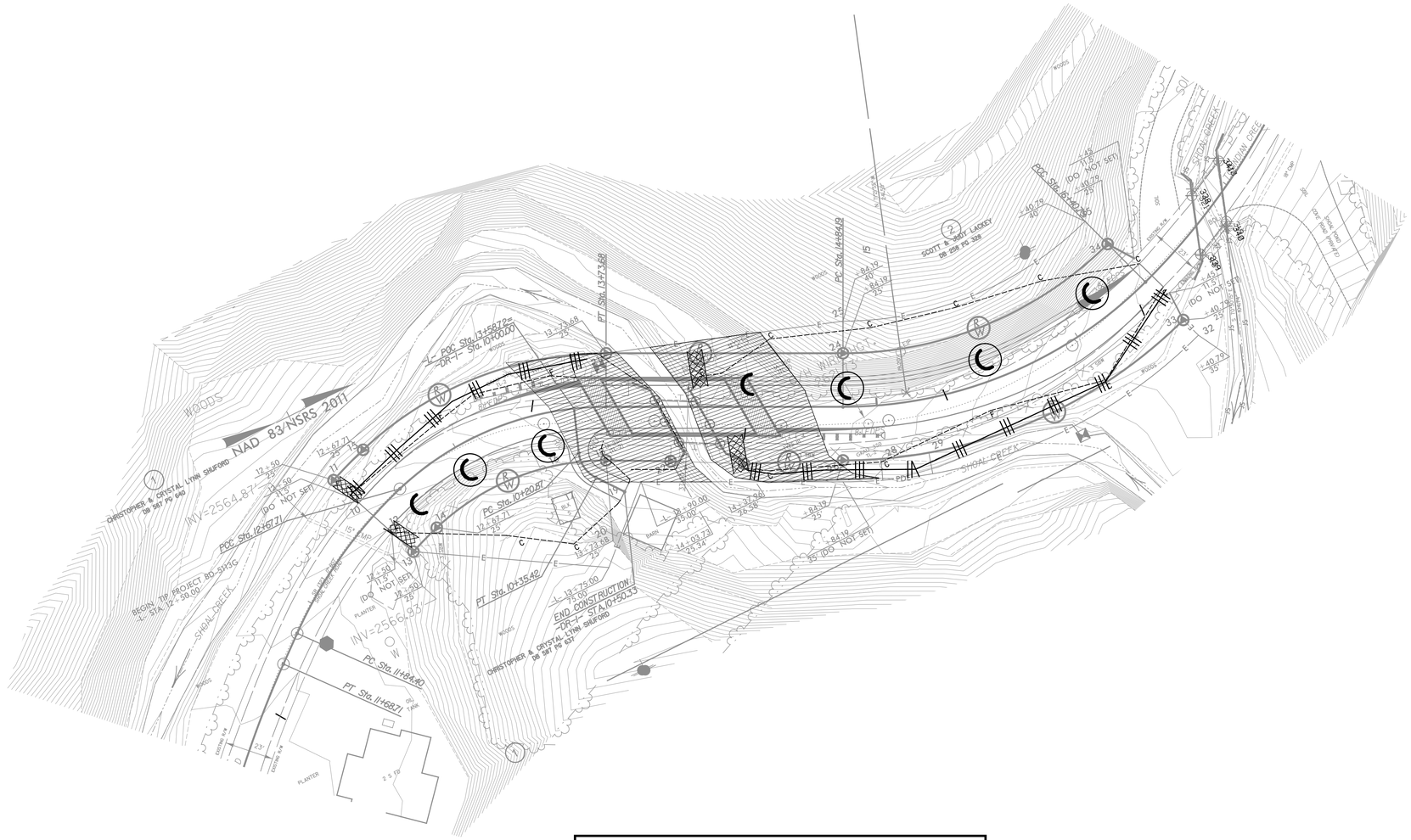

Std. #	Description	Symbol
1605.01	Temporary Silt Fence	
1606.01	Special Sediment Fence	
1633.01	Temporary Rock Silt Check Type-A	
1633.01	Wattle / Coir Fiber Wattle with Polyacrylamide (PAM)	EW
1633.01	Wattle / Coir Fiber Wattle	

NOTES: ANY DEVIATION FROM OPTIONS GIVEN WILL REQUIRE PRIOR APPROVAL BY ENGINEER.

ADDITIONAL EROSION CONTROL DEVICES MAY NEED TO BE INSTALLED AS DIRECTED BY THE ENGINEER.

ROADSIDE ENVIRONMENTAL UNIT
DEPARTMENT OF TRANSPORTATION
DIVISION OF HIGHWAYS
RALEIGH, N.C.

2012 STANDARD SPECIFICATIONS

ENVIRONMENTALLY SENSITIVE AREA
SEE PROJECT SPECIAL PROVISIONS

CLEARING AND GRUBBING
EROSION CONTROL FOR
CONSTRUCTION SHEET 4

Level III-A: Designer of Erosion and Sediment Control Plans

Michael Clark
Date Issued: June 5, 2013
Date Expires: December 31, 2016
Certification Number: 3376

PROJECT NO. BD-5113G
COUNTY YANCEY
STATION: 13+80.02 -L-
REPLACES BRIDGE NO. 25

STATE OF NORTH CAROLINA
DEPARTMENT OF TRANSPORTATION
RALEIGH

BRIDGE #25 ON SR 1323
SHOAL CREEK

REVISIONS						SHEET NO.
NO.	BY	DATE	NO.	BY	DATE	EC-1
1			3			TOTAL SHEETS
2			4			7

$$$$SYSTIME$$$$
$$$$USERNAME$$$$

PROJECT REFERENCE NO.	SHEET NO.
BD-5113G	EC-2/CONST 4

EROSION CONTROL PLAN

PHASE 1

V&M
Vaughn & Melton
Consulting Engineers
Asheville, North Carolina 828-253-2796
Charlotte, North Carolina 704-895-9051
Tri-Cities, Tennessee 423-467-8401
Knoxville, Tennessee 865-546-5800
Middlesboro, Kentucky 606-248-6600
Spartanburg, South Carolina 864-574-4775

Copyright 1994 Vaughn & Melton, Inc.

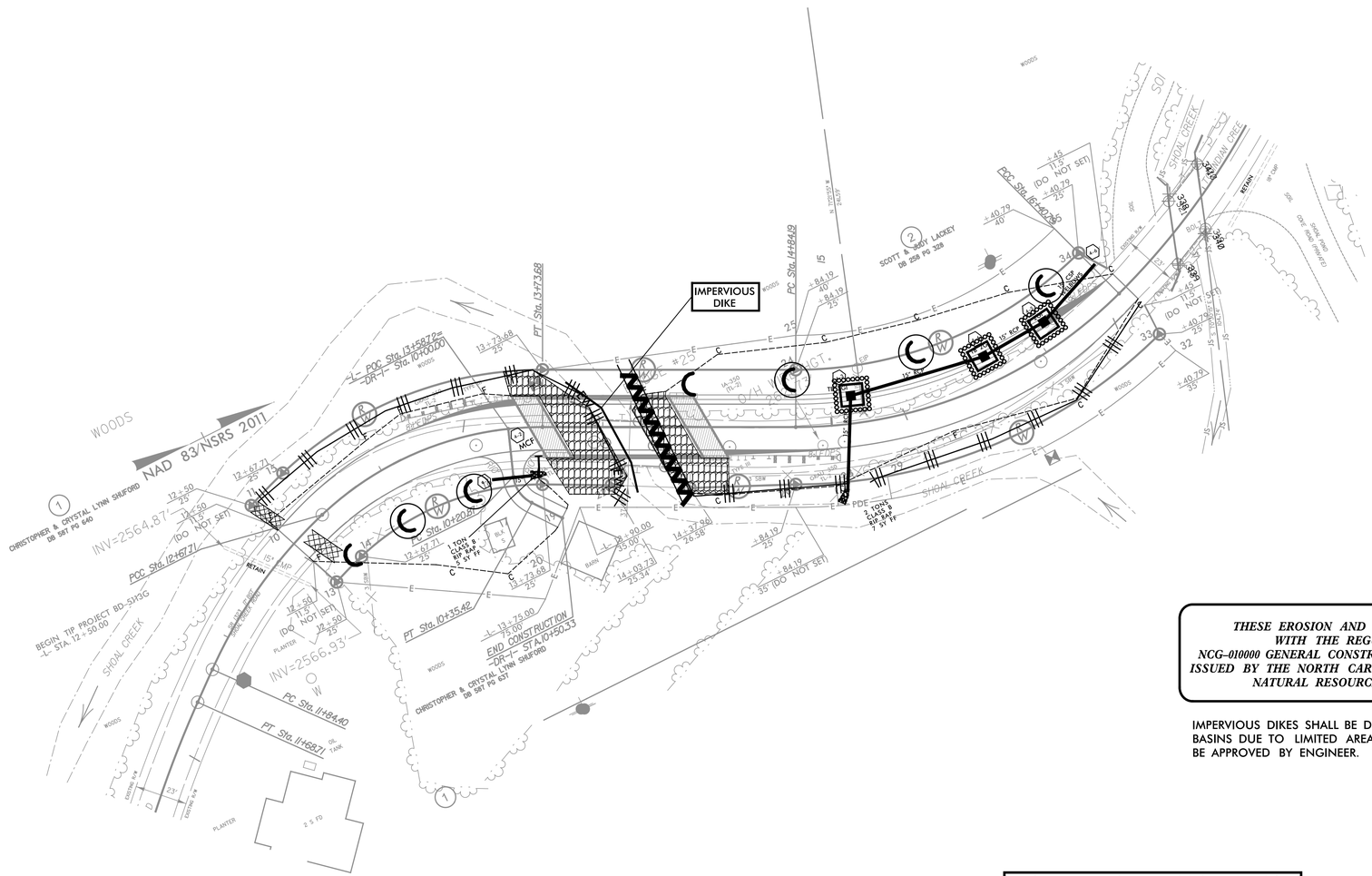

THESE EROSION AND SEDIMENT CONTROL PLANS COMPLY WITH THE REGULATIONS SET FORTH BY THE NCG-010000 GENERAL CONSTRUCTION PERMIT EFFECTIVE AUGUST 3, 2011 ISSUED BY THE NORTH CAROLINA DEPARTMENT OF ENVIRONMENT AND NATURAL RESOURCES DIVISION OF WATER QUALITY.

IMPERVIOUS DIKES SHALL BE DEWATERED WITH SPECIAL STILLING BASINS DUE TO LIMITED AREA FOR INSTALLATION. PLACEMENT SHALL BE APPROVED BY ENGINEER.

Std. #	Description	Symbol
1605.01	Temporary Silt Fence	
1606.01	Special Sediment Fence	
1633.01	Temporary Rock Silt Check Type-A	
1633.01	Wattle/Coir Fiber Wattle with Polyacrylamide (PAM)	EW
1633.01	Wattle/Coir Fiber Wattle	
1632.03	Rock Inlet Sediment Trap C	

NOTES: ANY DEVIATION FROM OPTIONS GIVEN WILL REQUIRE PRIOR APPROVAL BY ENGINEER.

ADDITIONAL EROSION CONTROL DEVICES MAY NEED TO BE INSTALLED AS DIRECTED BY THE ENGINEER.

ROADSIDE ENVIRONMENTAL UNIT
DEPARTMENT OF TRANSPORTATION
DIVISION OF HIGHWAYS
RALEIGH, N.C.

2012 STANDARD SPECIFICATIONS

Level III-A: Designer of Erosion and Sediment Control Plans

Michael Clark
Date Issued: June 5, 2013
Date Expires: December 31, 2016
Certification Number: 3376

Place Matting for Erosion Control on Slope as Work Allows.

PROJECT NO. BD-5113G
COUNTY YANCEY
STATION: 13+80.02 -L-
REPLACES BRIDGE NO. 25

STATE OF NORTH CAROLINA
DEPARTMENT OF TRANSPORTATION
RALEIGH

BRIDGE #25 ON SR 1323
SHOAL CREEK

REVISIONS						SHEET NO.
NO.	BY	DATE	NO.	BY	DATE	EC-2
1			3			TOTAL SHEETS
2			4			7

$$$$SYSTIME$$$$
$$$$USERNAME$$$$

PROJECT REFERENCE NO.	SHEET NO.
BD-5113G	EC-3
R/W SHEET NO.	
ROADWAY DESIGN ENGINEER	HYDRAULICS ENGINEER

STATE OF NORTH CAROLINA
DIVISION OF HIGHWAYS

SOIL STABILIZATION TIMEFRAMES

SITE DESCRIPTION	STABILIZATION TIME	TIMEFRAME EXCEPTIONS
PERIMETER DIKES, SWALES, DITCHES, AND SLOPES	7 DAYS	NONE
HIGH QUALITY WATER (HQW) ZONES	7 DAYS	NONE
SLOPES STEEPER THAN 3:1	7 DAYS	IF SLOPES ARE 10′ OR LESS IN LENGTH AND ARE NOT STEEPER THAN 2:1, 14 DAYS ARE ALLOWED.
SLOPES 3:1 OR FLATTER	14 DAYS	7 DAYS FOR SLOPES GREATER THAN 50′ IN LENGTH.
ALL OTHER AREAS WITH SLOPES FLATTER THAN 4:1	14 DAYS	NONE, EXCEPT FOR PERIMETERS AND HQW ZONES.

PROJECT REFERENCE NO.	SHEET NO.
BD-5113G	EC-3A

DIVISION OF HIGHWAYS
STATE OF NORTH CAROLINA

SOIL STABILIZATION SUMMARY SHEET

MATTING FOR EROSION CONTROL

CONST SHEET NO.	LINE	FROM STATION	TO STATION	SIDE	ESTIMATE (SY)
4	L	14+35	16+45	LT	375
			SUBTOTAL		375
MISCELLANEOUS MATTING TO BE INSTALLED AS DIRECTED BY THE ENGINEER					**3405
				TOTAL	3780
				SAY	

**EROSION CONTROL MATTING TO BE PLACED ON ALL DISTURBED SLOPES

PERMANENT SOIL REINFORCEMENT MAT

CONST SHEET NO.	LINE	FROM STATION	TO STATION	SIDE	ESTIMATE (SY)
4	L	12+50	13+73	LT	245
			SUBTOTAL		245
ADDITIONAL PSRM TO BE INSTALLED					
				TOTAL	245
				SAY	

PROJECT REFERENCE NO.	SHEET NO.
BD-5113G	EC-4
R/W SHEET NO.	
ROADWAY DESIGN ENGINEER	HYDRAULICS ENGINEER

WATTLE WITH POLYACRYLAMIDE DETAIL

WATTLES WITH POLYACRYLAMIDE (PAM):

Description

Wattles are tubular products consisting of excelsior fibers encased in synthetic netting. Wattles are used on slopes or channels to intercept runoff and act as a velocity break. Wattles are to be placed at locations shown on the plans or as directed. Installation shall follow the detail provided in the plans and as directed. Work includes furnishing materials, installation of wattles, matting installation, PAM application, and removing wattles.

Materials

Wattle shall meet the following specifications:

100% Curled Wood(Excelsior) Fibers
Minimum Diameter – 12 in.
Minimum Density – 2.6 lb/ft3 +/- 10%
Net Material – Synthetic
Net Openings – 1 in. x 1 in.
Net Configuration – Totally Encased
Minimum Weight – 20 lb. +/- 10% per 10 ft. length

Anchors: Stakes shall be used as anchors.

Wooden Stakes:

Provide hardwood stakes a minimum of 2-ft. long with a 2 in. x 2 in. nominal square cross section. One end of the stake must be sharpened or beveled to facilitate driving down into the underlying soil.

Matting shall meet the requirements of section 1060-8 of the Standard Specifications, or shall meet specifications provided elsewhere in this contract.

Provide staples made of 0.125" diameter new steel wire formed into a u shape not less than 12" in length with a throat of 1" in width.

Polyacrylamide (PAM) shall be applied in powder form and shall be anionic or neutrally charged. Soil samples shall be obtained in areas where the wattles will be placed, and from offsite material used to construct roadway, and analyzed for the appropriate PAM flocculant to be utilized with each wattle.

Construction Methods

Wattles shall be secured to the soil by wire staples approximately every 1 linear foot and at the end of each section of wattle. A minimum of 4 stakes shall be installed on the downstream side of the wattle with a maximum spacing of 2 linear feet along the wattle, and according to the detail. Install a minimum of 2 stakes on the upstream side of the wattle according to the detail provided in the plans. Stakes shall be driven into the ground a minimum of 10 in. with no more than 2 in. projecting from the top of the wattle. Drive stakes at an angle according to the detail provided in the plans.

Install wattles to the top of the ditch according to the detail provided in the plans. Overlap adjoining sections of wattles a minimum of 6 in.

Installation of matting shall be in accordance with the detail provided in the plans, and in accordance with section 1631-3(B) of the Standard Specifications, or in accordance with specifications provided elsewhere in this contract.

Apply PAM over the lower center portion of the wattle where the water is going to flow over at a rate of 3.5 ounces per wattle. PAM applications shall be done during construction activities after every rainfall event that is equal to or exceeds 0.50 in.

The Contractor shall maintain the wattles until the project is accepted or until the wattles are removed, and shall remove and dispose of silt accumulations at the wattles when so directed in accordance with the requirements of Section 1630 of the Standard Specifications.

The quantity of wattle(s), wooden stakes, staples, matting and PAM as measured above will be paid for at contract price for "Lump Sum for Erosion Control". Such price and payment will be full compensation for all work covered by this provision, including but not limted to, furnishing all materials, placing and maintaining the wattle(s), and removal and disposal of silt accumulations and wattle.

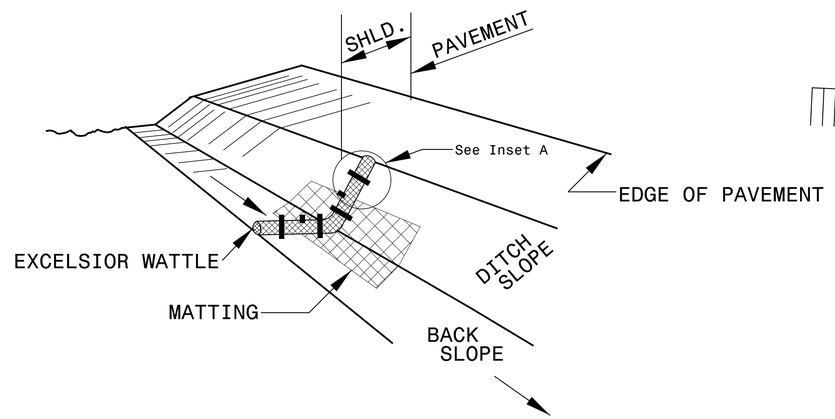

ISOMETRIC VIEW

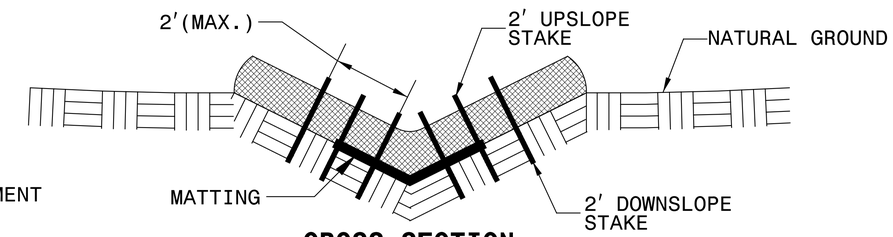

CROSS SECTION VEE DITCH

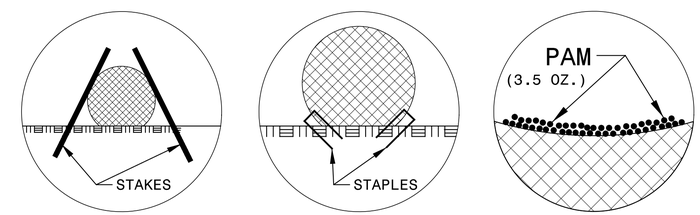

INSET A INSET B INSET C

NOTES:

USE MINIMUM 12 IN. DIAMETER EXCELSIOR WATTLE.

USE 2 FT. WOODEN STAKES WITH A 2 IN. BY 2 IN. CROSS SECTION.

ONLY INSTALL WATTLE(S) TO A HEIGHT IN DITCH SO FLOW WILL NOT WASH AROUND WATTLE AND SCOUR DITCH SLOPES AND AS DIRECTED.

INSTALL A MINIMUM OF 2 UPSLOPE STAKES AND 4 DOWNSLOPE STAKES AT AN ANGLE TO WEDGE WATTLE TO BOTTOM OF DITCH.

PROVIDE STAPLES MADE OF 0.125 IN. DIAMETER STEEL WIRE FORMED INTO A U SHAPE NOT LESS THAN 12" IN LENGTH.

INSTALL STAPLES APPROXIMATELY EVERY 1 LINEAR FOOT ON BOTH SIDES OF WATTLE AND AT EACH END TO SECURE IT TO THE SOIL.

INSTALL MATTING IN ACCORDANCE WITH SECTION 1631 OF THE STANDARD SPECIFICATIONS.

PRIOR TO POLYACRYLAMIDE (PAM) APPLICATION, OBTAIN A SOIL SAMPLE FROM PROJECT LOCATION, AND FROM OFFSITE MATERIAL, AND ANALYZE FOR APPROPRIATE PAM FLOCCULANT TO BE APPLIED TO EACH WATTLE.

INITIALLY APPLY 3.5 OUNCES OF ANIONIC OR NEUTRALLY CHARGED POLYACRYLAMIDE (PAM) OVER WATTLE WHERE WATER WILL FLOW AND AFTER EVERY RAINFALL EVENT THAT IS EQUAL TO OR EXCEEDS 0.50 IN.

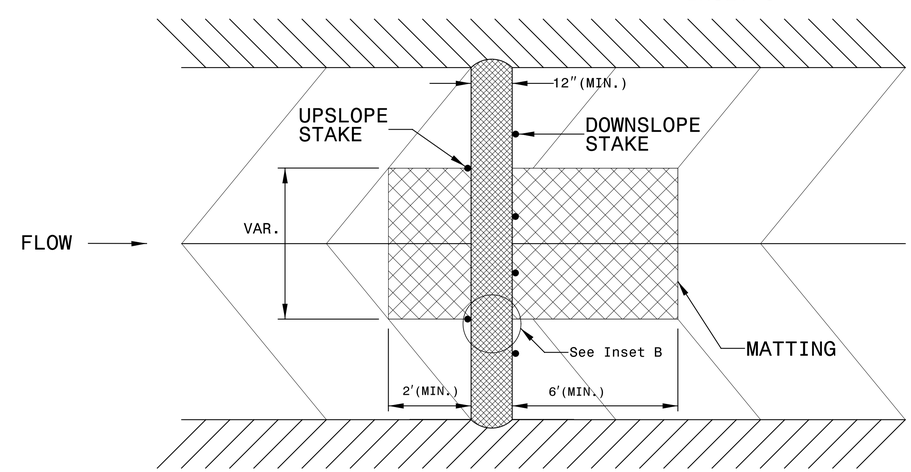

TOP VIEW

PROJECT REFERENCE NO.	SHEET NO.
BD-5113G	EC-5
R/W SHEET NO.	
ROADWAY DESIGN ENGINEER	HYDRAULICS ENGINEER

SILT FENCE WATTLE BREAK DETAIL

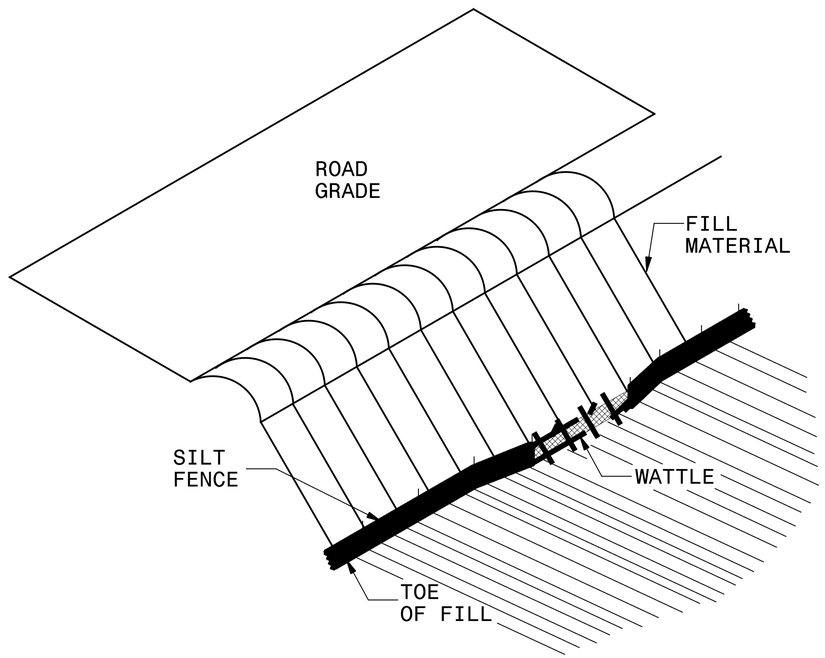

ISOMETRIC VIEW

NOTES:

USE MINIMUM 12 IN. DIAMETER EXCELSIOR WATTLE AND LENGTH OF 10 FT.

EXCAVATE A 1 TO 2 INCH TRENCH FOR WATTLE TO BE PLACED.

DO NOT PLACE WATTLE ON TOE OF SLOPE.

USE 2 FT. WOODEN STAKES WITH A 2 IN. BY 2 IN. NOMINAL CROSS SECTION.

INSTALL A MINIMUM OF 2 UPSLOPE STAKES AND 4 DOWNSLOPE STAKES AT AN ANGLE TO WEDGE WATTLE TO GROUND.

PROVIDE STAPLES MADE OF 0.125 IN. DIAMETER STEEL WIRE FORMED INTO A U SHAPE NOT LESS THAN 12″ IN LENGTH.

INSTALL STAPLES APPROXIMATELY EVERY 1 LINEAR FOOT ON BOTH SIDES OF WATTLE AND AT EACH END TO SECURE IT TO THE SOIL.

WATTLE INSTALLATION CAN BE ON OUTSIDE OF THE SILT FENCE AS DIRECTED.

INSTALL TEMPORARY SILT FENCE IN ACCORDANCE WITH SECTION 1605 OF THE STANDARD SPECIFICATIONS.

INSET A

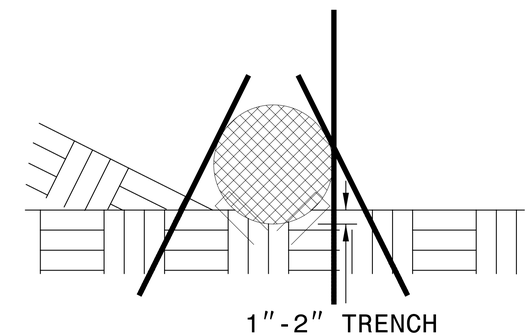

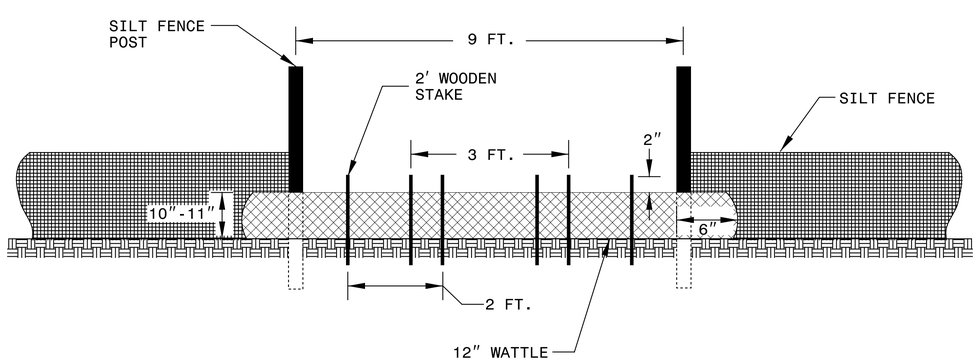

VIEW FROM SLOPE

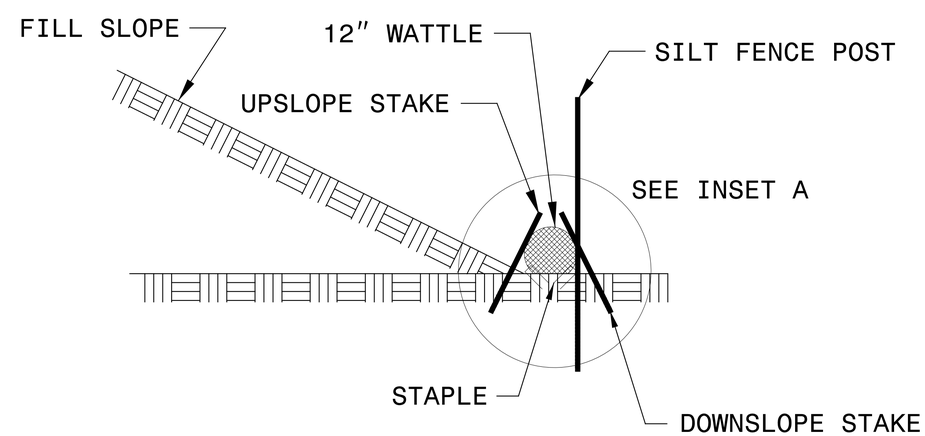

SIDE VIEW

STATE	STATE PROJECT REFERENCE NO.	SHEET NO.	TOTAL SHEETS
N.C.	B-5113G	RF-1	
STATE PROJ. NO.	F.A. PROJ. NO.	DESCRIPTION	

PLANTING DETAILS

SEEDLING / LINER BAREROOT PLANTING DETAIL

HEALING IN

1. Locate a healing-in site in a shady, well protected area.
2. Excavate a flat bottom trench 12 inches deep and provide drainage.

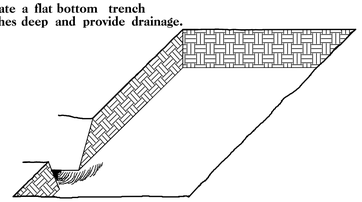

3. Backfill the trench with 2 inches well rotted sawdust. Place a 2 inch layer of well rotted sawdust at a sloping angle at one end of the trench.

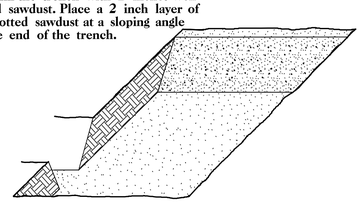

4. Place a single layer of plants against the sloping end so that the root collar is at ground level.

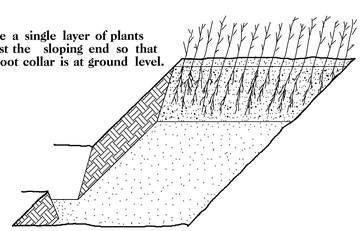

5. Place a 2 inch layer of well rotted sawdust over the roots maintaining a sloping angle.

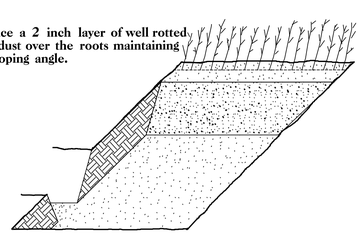

6. Repeat layers of plants and sawdust as necessary and water thoroughly.

DIBBLE PLANTING METHOD
USING THE KBC PLANTING BAR

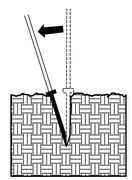

1. Insert planting bar as shown and pull handle toward planter.

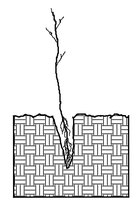

2. Remove planting bar and place seedling at correct depth.

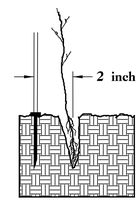

3. Insert planting bar 2 inches toward planter from seedling.

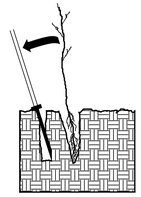

4. Pull handle of bar toward planter, firming soil at bottom.

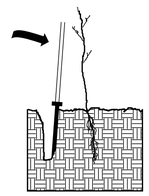

5. Push handle forward firming soil at top.

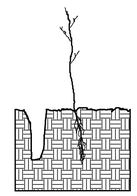

6. Leave compaction hole open. Water thoroughly.

PLANTING NOTES:

PLANTING BAG
During planting, seedlings shall be kept in a moist canvas bag or similar container to prevent the root systems from drying.

KBC PLANTING BAR
Planting bar shall have a blade with a triangular cross section, and shall be 12 inches long, 4 inches wide and 1 inch thick at center.

ROOT PRUNING
All seedlings shall be root pruned, if necessary, so that no roots extend more than 10 inches below the root collar.

REFORESTATION

☐ TREE REFORESTATION SHALL BE PLANTED 6 FT. TO 10 FT. ON CENTER, RANDOM SPACING, AVERAGING 8 FT. ON CENTER, APPROXIMATELY 680 PLANTS PER ACRE.

REFORESTATION

MIXTURE, TYPE, SIZE, AND FURNISH SHALL CONFORM TO THE FOLLOWING:

25%	LIRIODENDRON TULIPIFERA	TULIP POPLAR	12 in – 18 in BR
25%	PLATANUS OCCIDENTALIS	SYCAMORE	12 in – 18 in BR
25%	FRAXINUS PENNSYLVANICA	GREEN ASH	12 in – 18 in BR
25%	BETULA NIGRA	RIVER BIRCH	12 in – 18 in BR

REFORESTATION DETAIL SHEET

N.C.D.O.T. - ROADSIDE ENVIRONMENTAL UNIT

COMPUTED BY: NVA	DATE: 11/4/2013
CHECKED BY: ACC	DATE: 11/4/2013

PROJECT REFERENCE NO.	SHEET NO.
BD-5113G	X-0

DIVISION OF HIGHWAYS
STATE OF NORTH CAROLINA

CROSS SECTION SUMMARY

IN CUBIC YARDS

NORTH CAROLINA PROFESSIONAL SEAL 030453 ENGINEER AARON C. CARVER
3/7/14

-L- LOCATION	UNCLASSIFIED EXCAVATION	EMBT
12+50	0	0
13+00	140	1
13+50	199	2
13+78.72 BEGIN BRIDGE	69	2
14+36.32 END BRIDGE	0	0
14+50	34	0
15+00	277	1
15+50	400	2
16+00	254	1
16+45	62	0

NOTE: EMBANKMENT COLUMN DOES NOT INCLUDE BACKFILL FOR UNDERCUT.

-DR-1- LOCATION	UNCLASSIFIED EXCAVATION	EMBT
10+10	0	0
10+20	5	0
10+30	23	0
10+40	40	0
10+50	24	0
10+50.33	0	0

NOTE: EMBANKMENT COLUMN DOES NOT INCLUDE BACKFILL FOR UNDERCUT.

Approximate quantities only. Unclassified excavation, borrow excavation, fine grading, clearing and grubbing, and removal of existing pavement will be paid for at the contract lump sum price for "grading".

8/23/99

0 2.5 5	PROJ. REFERENCE NO.	SHEET NO.
	BD-5113G	X-1

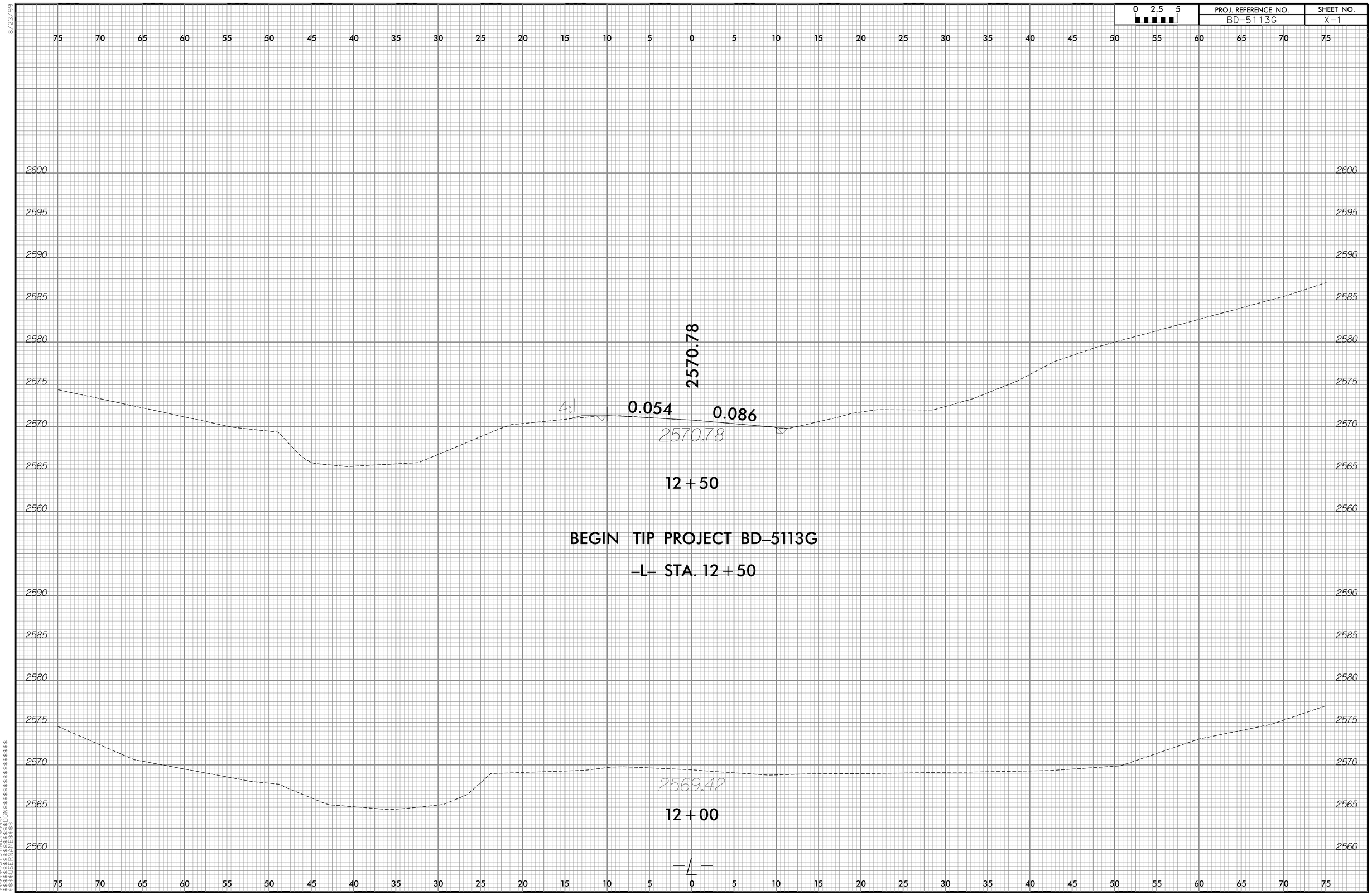

$$$$$$SYTME$$$$$$
$$$$$$SZEPLI$$$$$$
$$$$$$SDSPR$$$$$$
$$$$$$SMEAN$$$$$$
$$$$$$SDON$$$$$$

8/23/99

0 2.5 5	PROJ. REFERENCE NO.	SHEET NO.
	BD-5113G	X-2

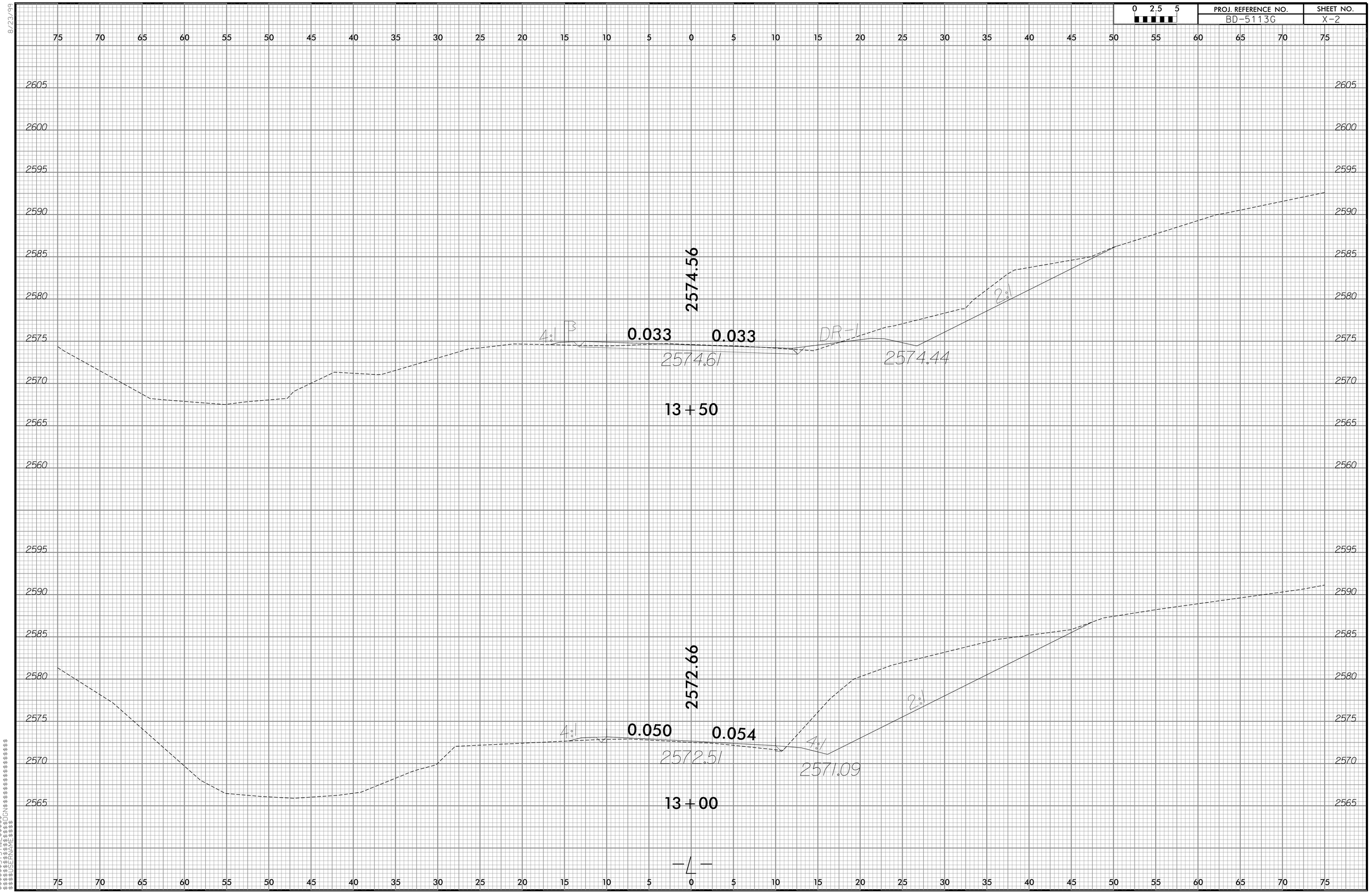

$$$$SYSTIME$$$$
$$$$DUN$$$$
$$$$DATE$$$$
$$$$TIME$$$$

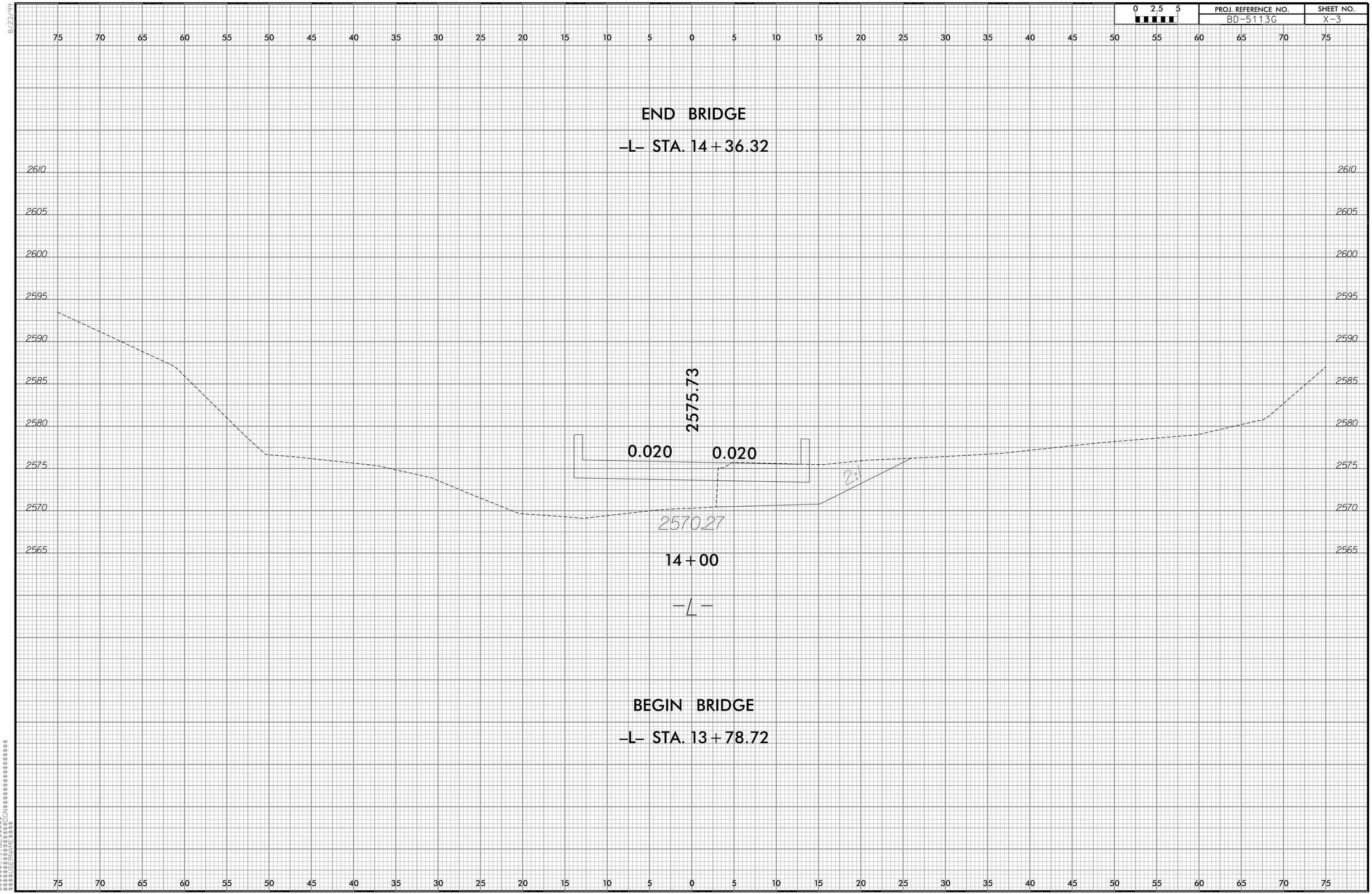

8/23/99
$$$$SYSTIME$$$$
$$$$DGN$$$$
$$$$DGNNAME$$$$

8/23/99

0 2.5 5	PROJ. REFERENCE NO.	SHEET NO.
	BD-5113G	X-4

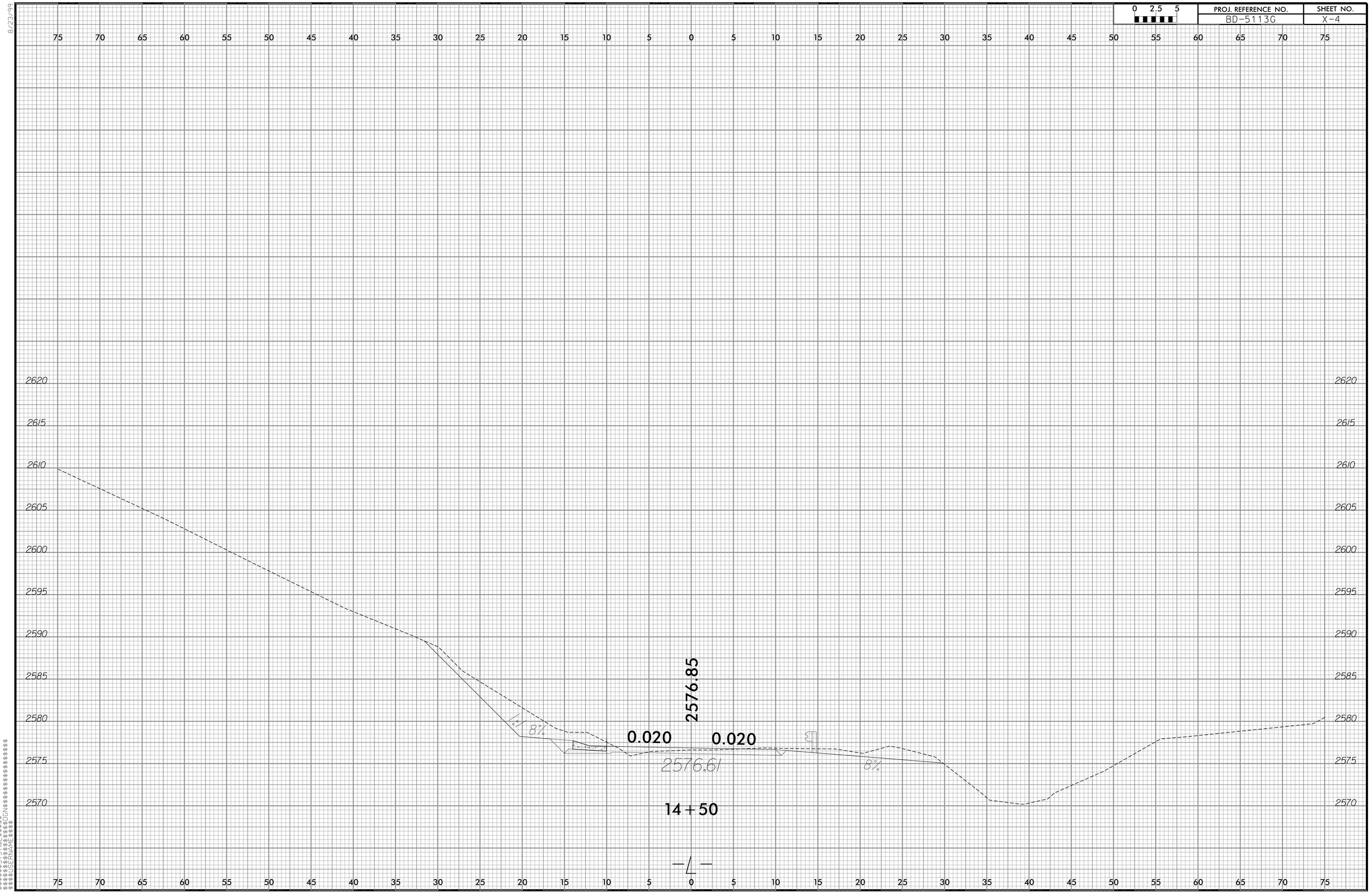

$$$$SYSTIME$$$$
$$$$DUN$$$$
$$$$ENAME$$$$
$$$$SNAME$$$$

8/23/99

0 2.5 5	PROJ. REFERENCE NO.	SHEET NO.
	BD-5113G	X-5

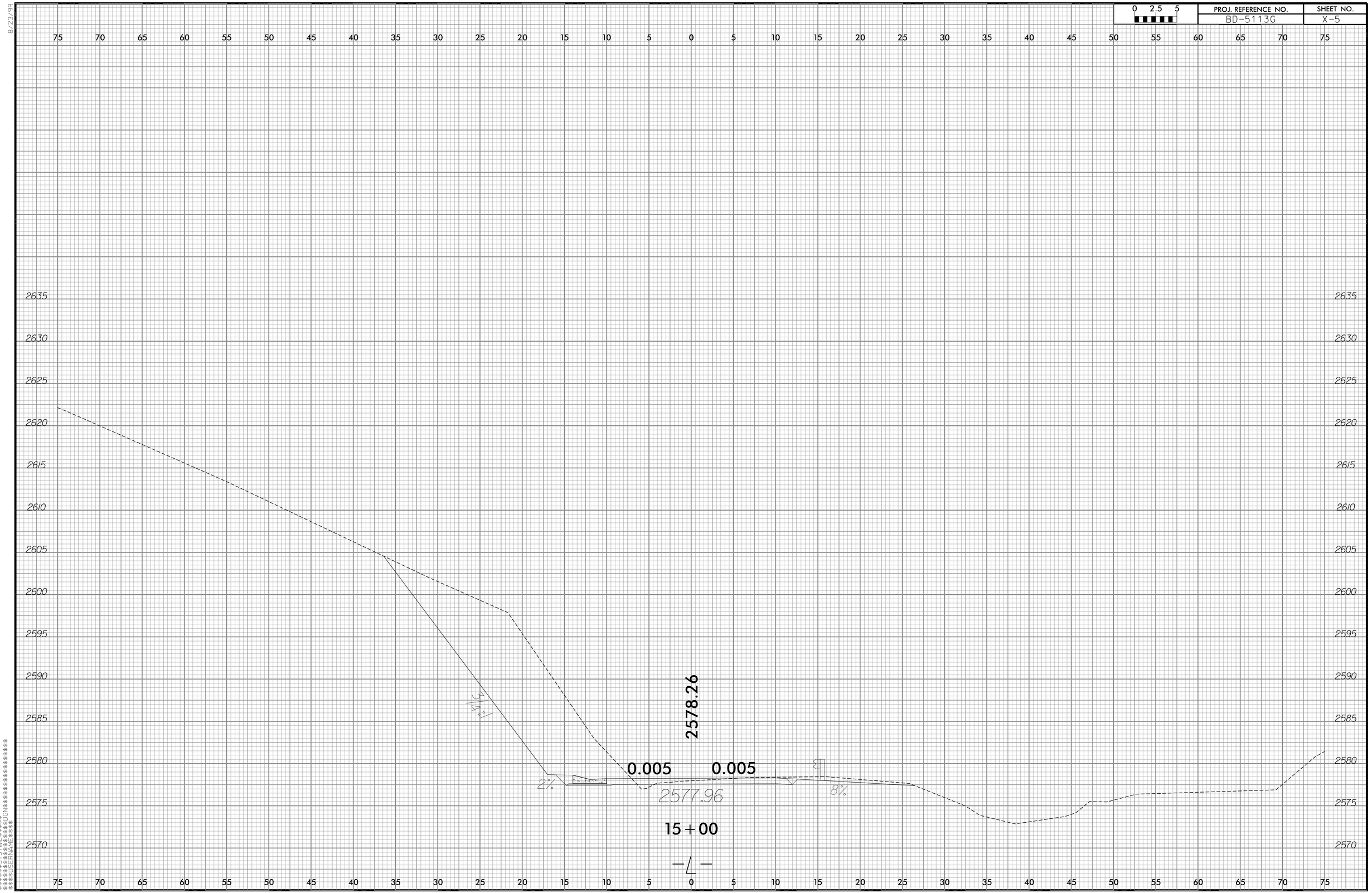

$$$$SYSTIME$$$$
$$$$SYSDATE$$$$
$$$$DWG$$$$
$$$$PAGE$$$$
$$$$CREATE$$$$

8/23/99

0 2.5 5	PROJ. REFERENCE NO.	SHEET NO.
	BD-5113G	X-6

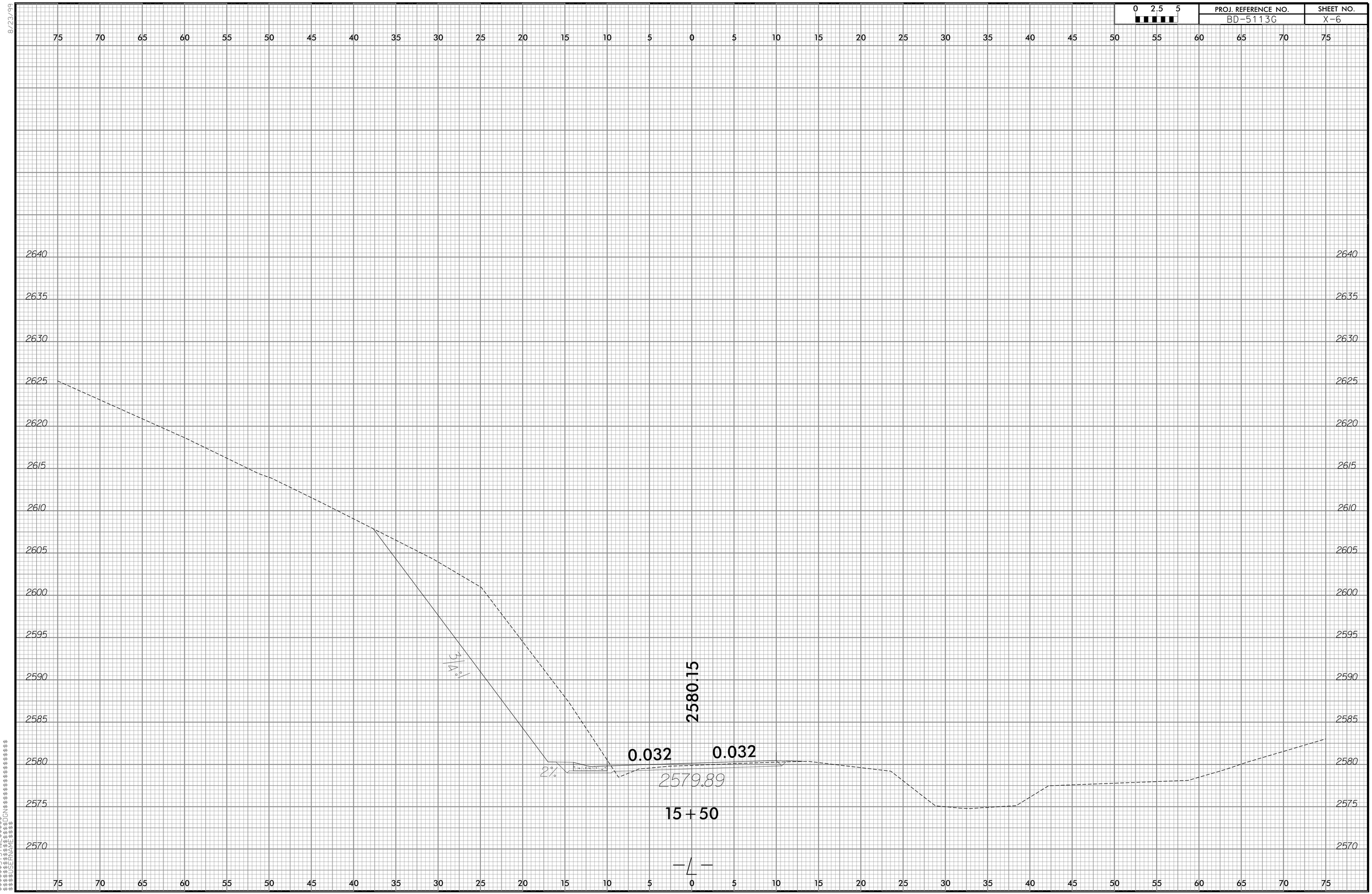

$$$$SYSTIME$$$$
$$$$DWG$$$$
$$$$DATE$$$$

8/23/99

0 2.5 5	PROJ. REFERENCE NO.	SHEET NO.
	BD-5113G	X-7

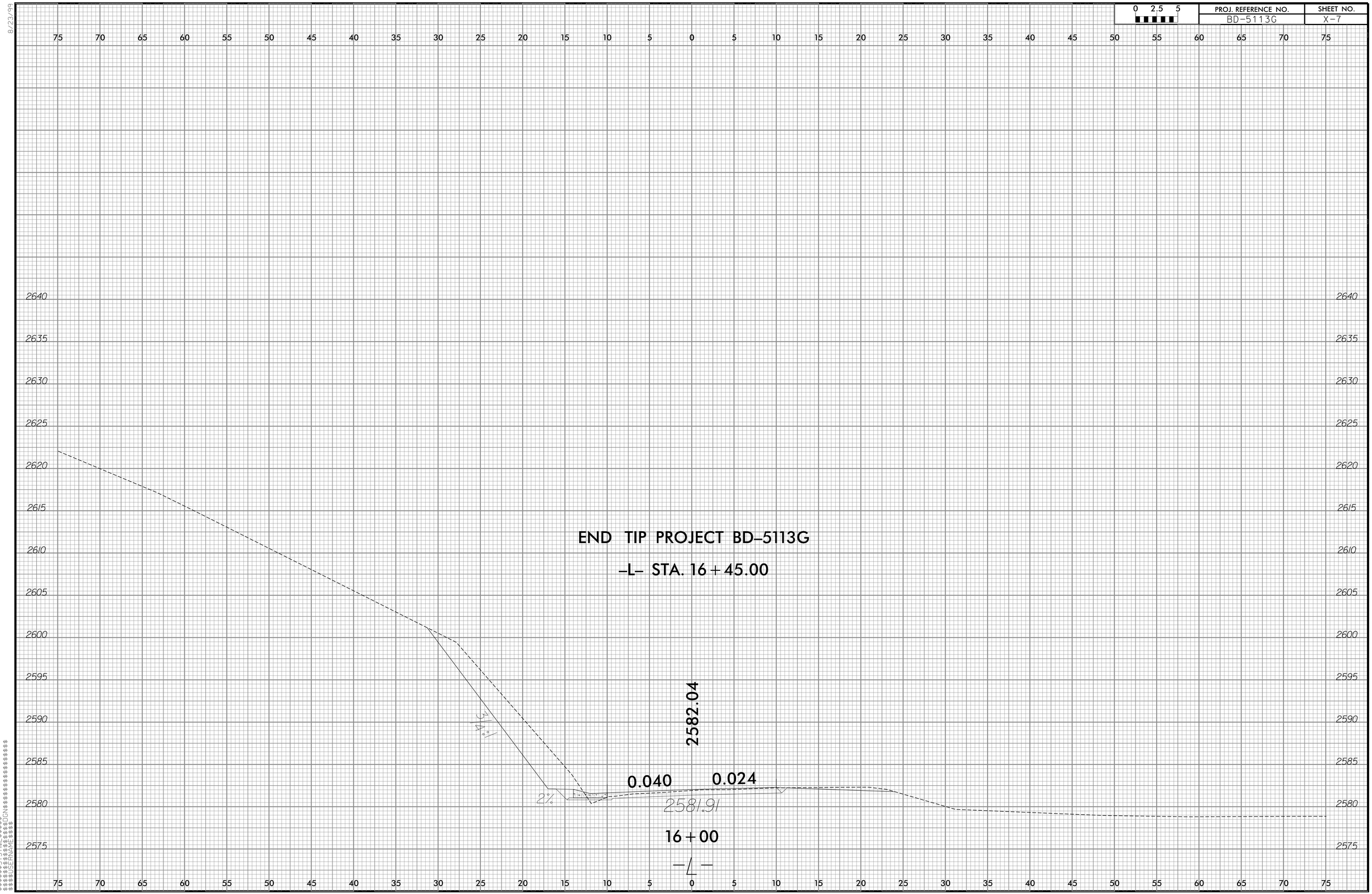

$$$$$$$$SYSTIME$$$$$$$$
$$$$$$$$DUN$$$$$$$$$$$$$$$$
$$$$$$$$PAGE$$$$$$$$
$$$$$$$$FNAME$$$$$$$$

8/23/99

0 2.5 5	PROJ. REFERENCE NO.	SHEET NO.
	BD-5113G	X-8

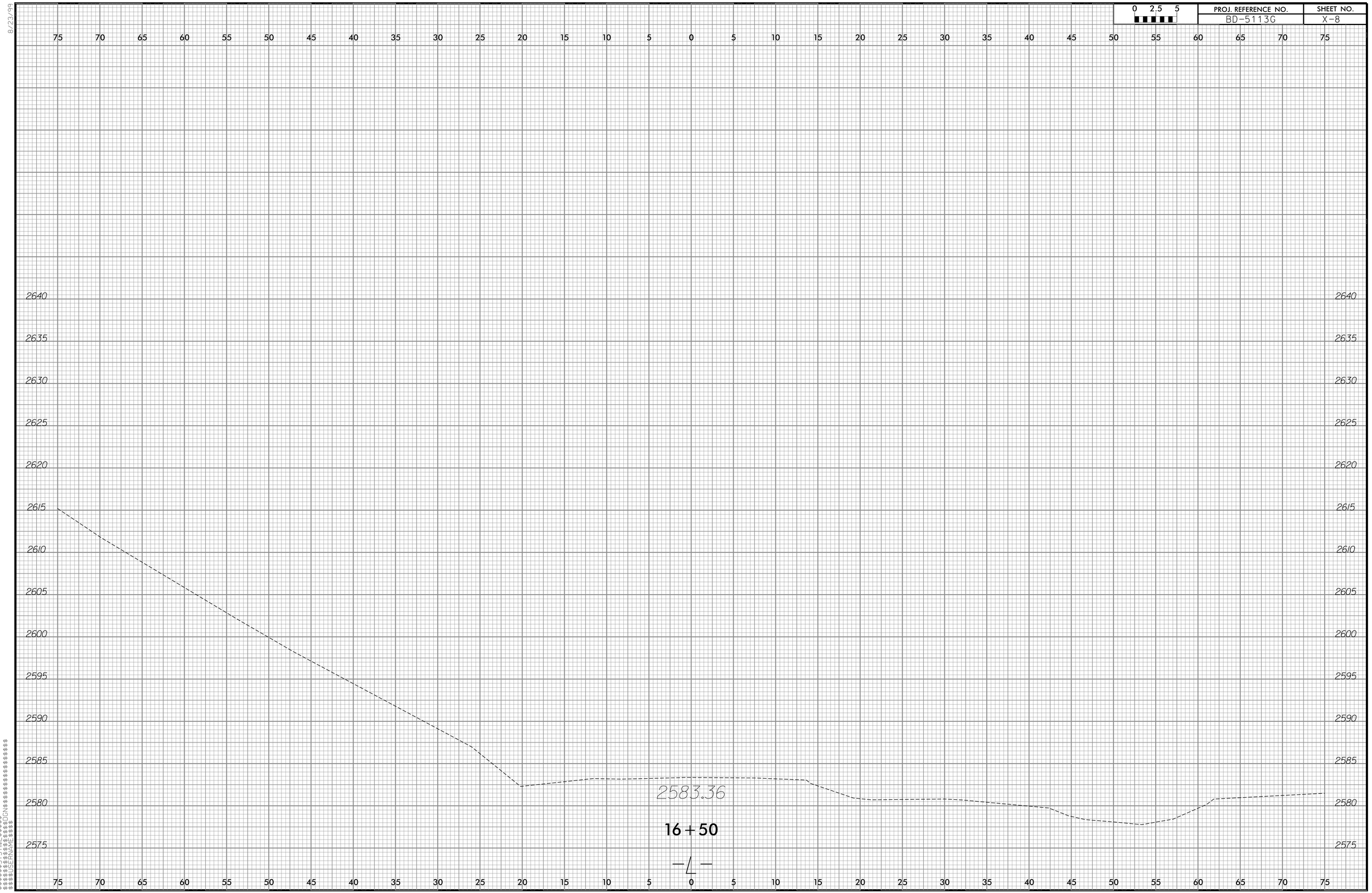

$$$$SYSTIME$$$$
$$$$DUN$$$$
$$$$FNAME$$$$
$$$$SCALE$$$$

TIP NO: BD-5113G

CONTRACT: DM00072

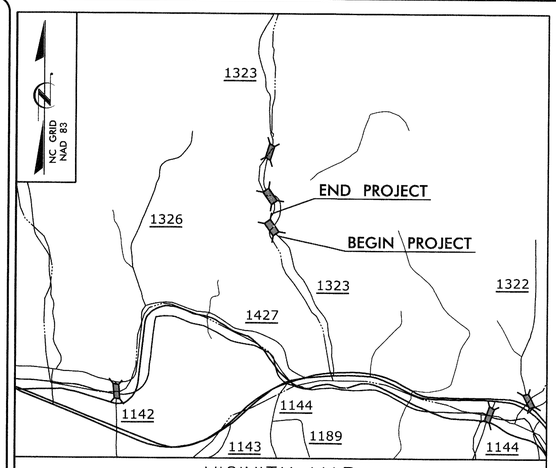

VICINITY MAP

STATE OF NORTH CAROLINA

DIVISION OF HIGHWAYS

YANCEY COUNTY

BRIDGE NO. 25 OVER SHOAL CREEK
ON SR 1323 (SHOAL CREEK RD)

STATE	STATE PROJECT REFERENCE NO.	SHEET NO.	TOTAL SHEETS
N.C.	BD-5113G		

STATE PROJ. NO.	F. A. PROJ. NO.	DESCRIPTION
45359.1.7	BRZ-1323(6)	PE
45359.2.7	BRZ-1323(6)	R/W & UTILITIES
45359.3.7	BRZ-1323(6)	CONST.

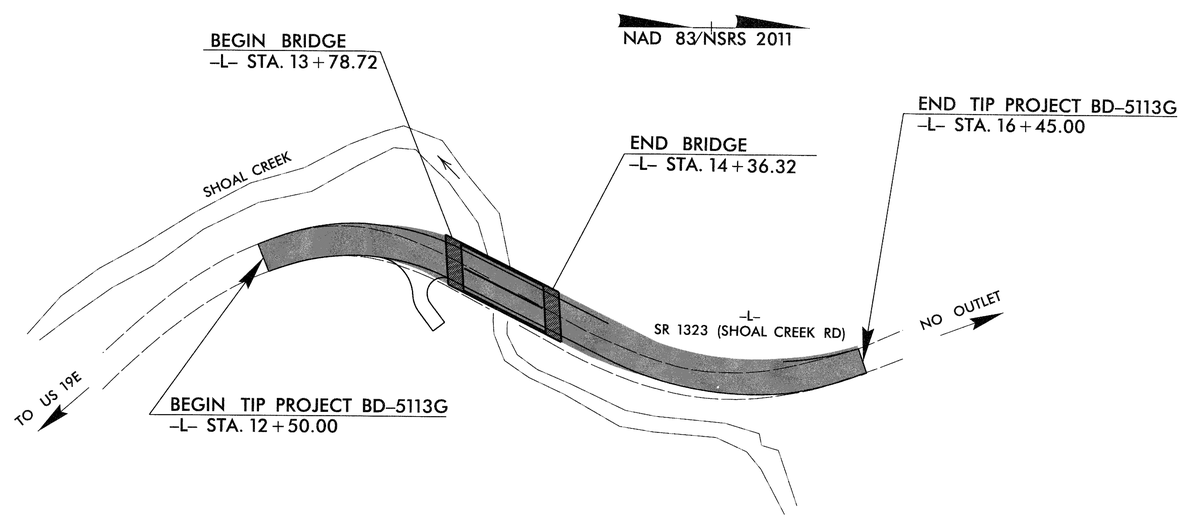

NORTH CAROLINA PROFESSIONAL SEAL 9022 ENGINEER HARDY L. WILLIS 3/5/14

V&M Vaughn & Melton
Consulting Engineers
Asheville, North Carolina 828-253-2796
Charlotte, North Carolina 704-357-0488
Tri-Cities, Tennessee 423-467-8401
Knoxville, Tennessee 865-546-5800
Middlesboro, Kentucky 606-248-6600
Spartanburg, South Carolina 864-574-4775

Copyright © 2006 Vaughn & Melton, Inc. All Rights Reserved

STRUCTURE

STATE OF NORTH CAROLINA DEPARTMENT OF TRANSPORTATION

DESIGN DATA

ADT 2010 = 520
ADT 2025 = 1040

T = 6 %
V = 30 MPH

FUNC CLASS = LOCAL

PROJECT LENGTH

LENGTH ROADWAY TIP PROJECT BD-5113G = 0.064 MI
LENGTH STRUCTURE TIP PROJECT BD-5113G = 0.011 MI
TOTAL LENGTH OF TIP PROJECT BD-5113G = 0.075 MI

Prepared In the Office of:
VAUGHN & MELTON
1318-F PATTON AVE.
ASHEVILLE NC, 28806
FOR THE NORTH CAROLINA DIVISION OF HIGHWAYS

2012 STANDARD SPECIFICATIONS

LETTING DATE :
APRIL 2, 2014

HARDY WILLIS, PE
PROJECT ENGINEER

RYAN SHIPMAN, E. I.
PROJECT DESIGN ENGINEER

STRUCTURES MANAGEMENT UNIT
1000 BIRCH RIDGE DR.
RALEIGH, N.C. 27610

DIVISION OF HIGHWAYS
STATE OF NORTH CAROLINA

PAUL SPROUSE P.E.
STATE DESIGN ENGINEER

DEPARTMENT OF TRANSPORTATION
FEDERAL HIGHWAY ADMINISTRATION

APPROVED
DIVISION ADMINISTRATOR DATE

F. A. PROJECT BRZ-1323(6)

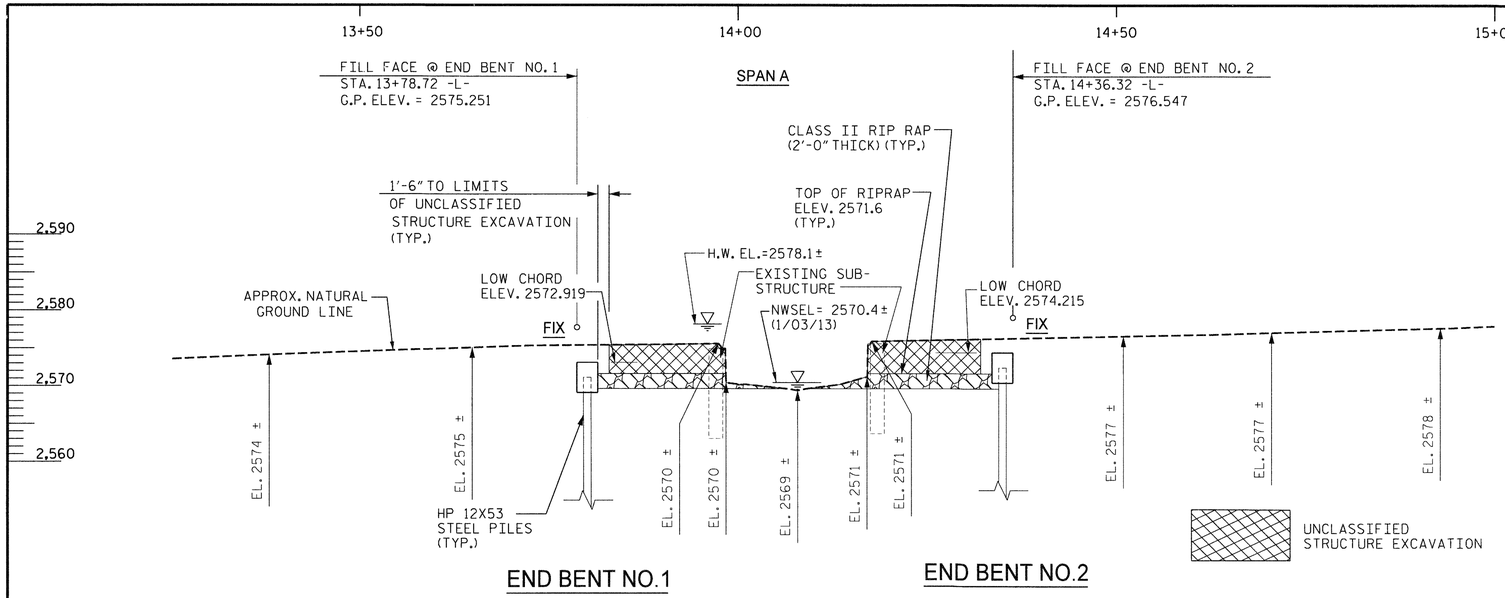

SECTION ALONG ℄ SURVEY -L-

SECTIONS AT END BENTS ARE AT RIGHT ANGLES.

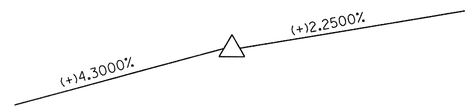

PI = 13+40.00
EL = 2,574.38'
VC = 50'

GRADE DATA -L-

PI Sta. 13+ 23.38
Δ = 43° 22' 19.4" (RT)
D = 40° 55' 32.0"
L= 105.98'
T = 55.67'
R = 140.00'

HORIZONTAL CURVE DATA -L-

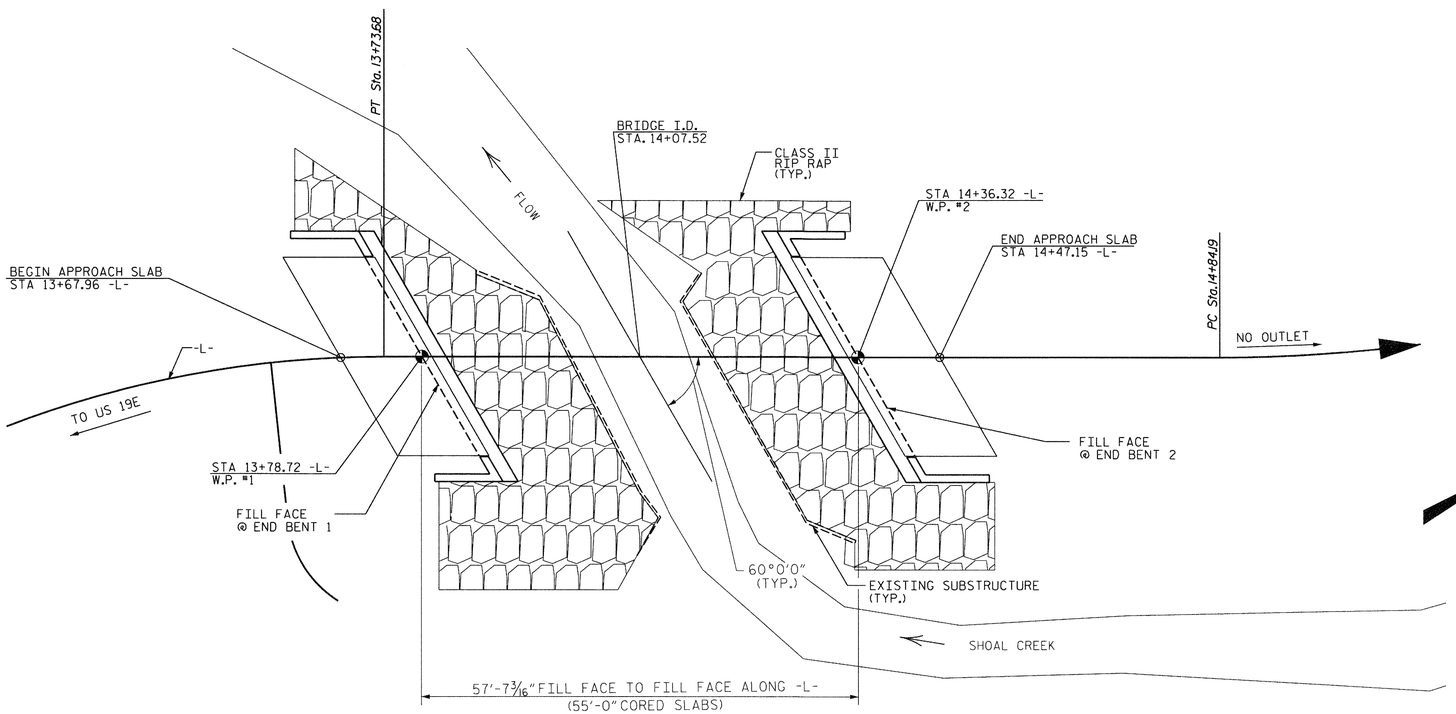

PLAN ALONG ℄ SURVEY -L-

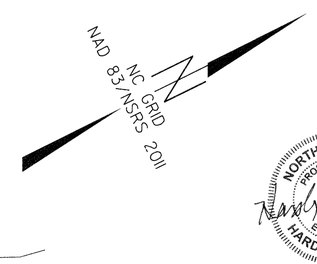

NOTES:
END BENTS ARE PARALLEL.
PILES NOT SHOWN IN PLAN VIEW FOR CLARITY.
CORED SLABS ARE PARALLEL TO ℄ SURVEY -L-

V&M
Vaughn & Melton
Consulting Engineers
Asheville, North Carolina 828-253-2796
Charlotte, North Carolina 704-357-0488
Tri-Cities, Tennessee 423-467-8401
Knoxville, Tennessee 865-546-5800
Middlesboro, Kentucky 606-248-6600
Spartanburg, South Carolina 864-574-4775
Copyright © 2006 Vaughn & Melton, Inc. All Rights Reserved

DWN. BY: DPP DATE: 10/13
CHKD. BY: HLW DATE: 10/13
DES. EGR. OF RECORD: RTS DATE: 10/13

PROJECT NO. BD-5113G
YANCEY COUNTY
STATION: 14+07.52 -L-

SHEET 1 OF 2 REPLACES BR. NO. 25

STATE OF NORTH CAROLINA
DEPARTMENT OF TRANSPORTATION
RALEIGH

GENERAL DRAWING
FOR BRIDGE ON SR 1323
(SHOAL CREEK RD.) OVER SHOAL CREEK
BETWEEN US 19E AND NO OUTLET

OCT. 2013

REVISIONS						SHEET NO.
NO.	BY:	DATE:	NO.	BY:	DATE:	S-1
1			3			TOTAL SHEETS
2			4			22

BM #1 N 806460 E 1037326 BL STA. 8+29.00 25' LT ELEV. 2576.56 SPIKE IN BASE OF 24" POPLAR TREE

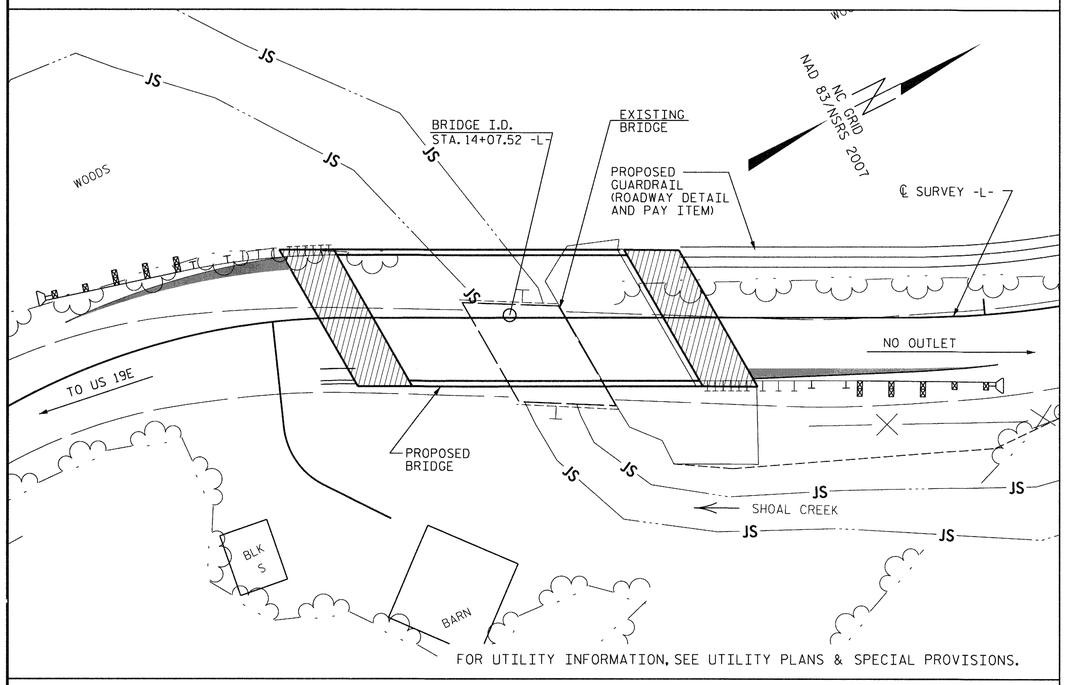

LOCATION SKETCH

GENERAL NOTES:

ASSUMED LIVE LOAD = HL-93 OR ALTERNATE LOADING.

THIS BRIDGE HAS BEEN DESIGNED IN ACCORDANCE WITH THE REQUIREMENTS OF THE AASHTO LRFD BRIDGE DESIGN SPECIFICATIONS.

THIS BRIDGE IS LOCATED IN SEISMIC ZONE 1.

FOR OTHER DESIGN DATA AND GENERAL NOTES, SEE SHEET SN.

FOR EROSION CONTROL MEASURES, SEE EROSION CONTROL PLANS.

THE EXISTING STRUCTURE, CONSISTING OF A SINGLE SPAN, 20.5-FOOT LONG TIMBER DECK ON TIMBER JOISTS, 20.2 FEET WIDE, ON TIMBER VERTICAL END BENTS, AND LOCATED AT THE PROPOSED STRUCTURE, SHALL BE REMOVED. THE EXISTING BRIDGE IS PRESENTLY POSTED BELOW THE LEGAL LOAD LIMIT. SHOULD THE STRUCTURAL INTEGRITY OF THE BRIDGE FURTHER DETERIORATE, THIS LOAD LIMITATION MAY BE REDUCED AS FOUND NECESSARY DURING THE LIFE OF THE PROJECT.

REMOVAL OF THE EXISTING BRIDGE SHALL BE PERFORMED SO AS NOT TO ALLOW DEBRIS TO FALL INTO THE WATER. THE CONTRACTOR SHALL REMOVE THE BRIDGE AND SUBMIT PLANS FOR DEMOLITION IN ACCORDANCE WITH ARTICLE 402-2 OF THE STANDARD SPECIFICATIONS.

THE SUBSTRUCTURE OF THE EXISTING BRIDGE INDICATED ON THE PLANS IS FROM THE BEST INFORMATION AVAILABLE. SINCE THIS INFORMATION IS SHOWN FOR THE CONVENIENCE OF THE CONTRACTOR, THE CONTRACTOR SHALL HAVE NO CLAIM WHATSOEVER AGAINST THE DEPARTMENT OF TRANSPORTATION FOR ANY DELAYS OR ADDITIONAL COST INCURRED BASED ON DIFFERENCES BETWEEN THE EXISTING BRIDGE SUBSTRUCTURE SHOWN ON THE PLANS AND THE ACTUAL CONDITIONS AT THE PROJECT SITE.

THIS STRUCTURE HAS BEEN DESIGNED IN ACCORDANCE WITH "HEC 18 EVALUATING SCOUR AT BRIDGES."

FOR SUBMITTAL OF WORKING DRAWINGS, SEE SPECIAL PROVISIONS.

FOR FALSEWORK AND FORMWORK, SEE SPECIAL PROVISIONS.

FOR CRANE SAFETY, SEE SPECIAL PROVISIONS.

FOR GROUT FOR STRUCTURES, SEE SPECIAL PROVISIONS.

THE MATERIAL SHOWN IN THE CROSS-HATCHED AREA SHALL BE EXCAVATED FOR A DISTANCE OF 25 FT. EACH SIDE OF CENTERLINE ROADWAY AS DIRECTED BY THE ENGINEER. THIS WORK WILL BE PAID FOR AT THE CONTRACT LUMP SUM PRICE FOR UNCLASSIFIED STRUCTURE EXCAVATION. SEE SECTION 412 OF THE STANDARD SPECIFICATIONS.

ASPHALT WEARING SURFACE IS INCLUDED IN ROADWAY QUANTITY ON ROADWAY PLANS.

THE CONTRACTOR SHALL PROVIDE INDEPENDENT ASSURANCE SAMPLES OF REINFORCING STEEL AS FOLLOWS: FOR PROJECTS REQUIRING UP TO 400 TONS OF REINFORCING STEEL, ONE 30 INCH SAMPLE OF EACH SIZE BAR USED, AND FOR PROJECTS REQUIRING OVER 400 TONS OF REINFORCING STEEL, TWO 30 INCH SAMPLES OF EACH SIZE BAR USED. THE BARS FROM WHICH THE SAMPLES ARE TAKEN MUST THEN BE SPLICED WITH REPLACEMENT BARS OF THE SIZE AND LENGTH OF THE SAMPLE, PLUS A MINIMUM LAP SPLICE OF THIRTY BAR DIAMETERS. PAYMENT FOR THE SAMPLES OF REINFORCING STEEL SHALL BE CONSIDERED INCIDENTAL TO VARIOUS PAY ITEMS.

FOUNDATION NOTES:

FOR PILES, SEE SECTION 450 OF THE STANDARD SPECIFICATIONS.

PILES AT END BENT NO. 1 ARE DESIGNED FOR A FACTORED RESISTANCE OF 85 TONS PER PILE.

CONCRETE IS REQUIRED TO FILL HOLES FOR PILES EXCAVATION AT END BENT NO. 1

PILES AT END BENT NO. 2 ARE DESIGNED FOR A FACTORED RESISTANCE OF 85 TONS PER PILE.

CONCRETE IS REQUIRED TO FILL HOLES FOR PILES EXCAVATION AT END BENT NO. 2

PILE EXCAVATION IS REQUIRED TO INSTALL PILES AT END BENT NO. 1. EXCAVATE HOLES AT PILE LOCATIONS TO 2560 FT. (LT. & RT.) OR A MINIMUM PENETRATION OF 5 FT. INTO WEATHERED ROCK OR CRYSTALLINE ROCK.
BASED ON THE SUBSURFACE INVESTIGATION, WEATHERED ROCK OR CRYSTALLINE ROCK IS ANTICIPATED AT ELEVATIONS 2564 (LT) AND 2568 (RT), BUT MAY VARY IN THE FIELD.

PILE EXCAVATION IS REQUIRED TO INSTALL PILES AT END BENT NO. 2. EXCAVATE HOLES AT PILE LOCATIONS TO 2560 FT. (LT. & RT.) OR A MINIMUM PENETRATION OF 5 FT. INTO WEATHERED ROCK OR CRYSTALLINE ROCK.
BASED ON THE SUBSURFACE INVESTIGATION, WEATHERED ROCK OR CRYSTALLINE ROCK IS ANTICIPATED AT ELEVATIONS 2567 (LT) AND 2562 (RT), BUT MAY VARY IN THE FIELD.

HYDRAULIC DATA

DESIGN DISCHARGE	= 600 CFS
DESIGN FREQUENCY	= 10 YRS
DESIGN HW ELEVATION	= 2575.0 FT
BASE DISCHARGE	= 1100 CFS
BASE FREQUENCY	= 100 YRS
BASE HW ELEVATION	= 2578.14 FT

OVERTOPPING FLOOD DATA

OVERTOPPING DISCHARGE	= 600 CFS
OVERTOPPING FREQUENCY	= 10(+/-)YRS
OVERTOPPING ELEVATION	= 2585.0 FT
DRAINAGE AREA	= 2.6 SQ. MI

TOTAL BILL OF MATERIAL

	REMOVAL OF EXISTING STRUCTURE	PILE EXCAVATION IN SOIL	PILE EXCAVATION NOT IN SOIL	UNCLASSIFIED STRUCTURE EXCAVATION	CLASS A CONCRETE	BRIDGE APPROACH SLABS	REINFORCING STEEL	HP 12 X 53 STEEL PILES		RIP RAP CLASS II (2'-0" THICK)	GEOTEXTILE FOR DRAINAGE	VERTICAL CONCRETE BARRIER RAIL	ELASTOMERIC BEARINGS	3'-0" x 1'-9" PRESTRESSED CONCRETE CORED SLAB UNIT	
	LUMP SUM	LIN. FT.	LIN. FT.	LUMP SUM	CU. YARDS	LUMP SUM	LBS.	NO.	LIN. FT.	TONS	SQ. YARDS	LIN. FT.	LUMP SUM	NO.	LIN. FT.
SUPERSTRUCTURE						LUMP SUM						110.29	LUMP SUM	9	495.0
END BENT 1		25	25	LUMP SUM	21.1		2592	5	70	105	119				
END BENT 2		25	25	LUMP SUM	21.1		2592	5	70	85	96				
TOTAL	LUMP SUM	50	50	LUMP SUM	42.2	LUMP SUM	5184	10	140	190	215	110.29	LUMP SUM	9	495.0

NORTH CAROLINA PROFESSIONAL ENGINEER SEAL HARDY L. WILLIS 036114

PROJECT NO. BD-5113G

YANCEY COUNTY

STATION: 14+07.52 -L-

SHEET 2 OF 2

V&M Vaughn & Melton Consulting Engineers
Asheville, North Carolina 828-253-2796
Charlotte, North Carolina 704-357-0488
Tri-Cities, Tennessee 423-467-840
Knoxville, Tennessee 865-546-5806
Middlesboro, Kentucky 606-248-6600
Spartanburg, South Carolina 864-574-4775
Copyright © 2006 Vaughn & Melton, Inc. All Rights Reserved

DWN. BY: DPP DATE: 10/13
CHKD. BY: HLW DATE: 10/13
DES. EGR. OF RECORD: RTS DATE: 10/13

STATE OF NORTH CAROLINA
DEPARTMENT OF TRANSPORTATION
RALEIGH

GENERAL DRAWING
FOR BRIDGE ON SR 1323
(SHOAL CREEK RD.) OVER SHOAL CREEK
BETWEEN US 19E AND NO OUTLET

OCT. 2013

REVISIONS						SHEET NO.
NO.	BY:	DATE:	NO.	BY:	DATE:	S-2
1			3			TOTAL SHEETS
2			4			22

LOAD AND RESISTANCE FACTOR RATING (LRFD) SUMMARY FOR PRESTRESSED CONCRETE GIRDERS

LEVEL		VEHICLE	WEIGHT (W) (TONS)	CONTROLLING LOAD RATING	MINIMUM RATING FACTORS (RF)	TONS = W X RF	STRENGTH I LIMIT STATE											SERVICE III LIMIT STATE						COMMENT NUMBER
								MOMENT					SHEAR						MOMENT					
							LIVELOAD FACTORS	DISTRIBUTION FACTORS (DF)	RATING FACTOR	SPAN	GIRDER LOCATION	DISTANCE FROM LEFT END OF SPAN (ft)	DISTRIBUTION FACTORS (DF)	RATING FACTOR	SPAN	GIRDER LOCATION	DISTANCE FROM LEFT END OF SPAN (ft)	LIVELOAD FACTORS	DISTRIBUTION FACTORS (DF)	RATING FACTOR	SPAN	GIRDER LOCATION	DISTANCE FROM LEFT END OF SPAN (ft)	
DESIGN LOAD RATING		HL-93(Inv)	N/A	1	1.163	--	1.75	0.249	1.36	55'	EL	26.923	0.659	1.21	55'	EL	10.769	0.80	0.249	**1.16**	55'	EL	**26.923**	
		HL-93(Opr)	N/A	--	1.564	--	1.35	0.249	1.76	55'	EL	26.923	0.659	1.56	55'	EL	10.769	N/A	--	--	--	--	--	
		HS-20(Inv)	36.000	2	1.424	51.265	1.75	0.249	1.7	55'	EL	26.923	0.659	**1.42**	55'	EL	**10.769**	0.80	0.249	1.46	55'	EL	26.923	
		HS-20(Opr)	36.000	--	1.846	66.455	1.35	0.249	2.2	55'	EL	26.923	0.659	1.85	55'	EL	10.769	N/A	--	--	--	--	--	
LEGAL LOAD RATING	SV	SNSH	13.500	--	3.057	41.264	1.4	0.249	4.46	55'	EL	26.923	0.659	3.96	55'	EL	10.769	0.80	0.249	3.06	55'	EL	26.923	
		SNGARBS2	20.000	--	2.374	47.473	1.4	0.249	3.46	55'	EL	26.923	0.659	2.9	55'	EL	10.769	0.80	0.249	2.37	55'	EL	26.923	
		SNAGRIS2	22.000	--	2.291	50.392	1.4	0.249	3.34	55'	EL	26.923	0.659	2.72	55'	EL	10.769	0.80	0.249	2.29	55'	EL	26.923	
		SNCOTTS3	27.250	--	1.524	41.521	1.4	0.249	2.22	55'	EL	26.923	0.659	1.98	55'	EL	10.769	0.80	0.249	1.52	55'	EL	26.923	
		SNAGGRS4	34.925	--	1.31	45.74	1.4	0.249	1.91	55'	EL	26.923	0.659	1.71	55'	EL	10.769	0.80	0.249	1.31	55'	EL	26.923	
		SNS5A	35.550	--	1.278	45.439	1.4	0.249	1.86	55'	EL	26.923	0.659	1.76	55'	EL	10.769	0.80	0.249	1.28	55'	EL	26.923	
		SNS6A	39.950	--	1.189	47.481	1.4	0.249	1.73	55'	EL	26.923	0.659	1.63	55'	EL	10.769	0.80	0.249	1.19	55'	EL	26.923	
		SNS7B	42.000	--	1.132	47.562	1.4	0.249	1.65	55'	EL	26.923	0.659	1.64	55'	EL	10.769	0.80	0.249	1.13	55'	EL	26.923	
	TTST	TNAGRIT3	33.000	--	1.454	47.984	1.4	0.249	2.12	55'	EL	26.923	0.659	1.92	55'	EL	10.769	0.80	0.249	1.45	55'	EL	26.923	
		TNT4A	33.075	--	1.465	48.451	1.4	0.249	2.14	55'	EL	26.923	0.659	1.85	55'	EL	10.769	0.80	0.249	1.46	55'	EL	26.923	
		TNT6A	41.600	--	1.213	50.478	1.4	0.249	1.77	55'	EL	26.923	0.659	1.81	55'	EL	10.769	0.80	0.249	1.21	55'	EL	26.923	
		TNT7A	42.000	--	1.228	51.576	1.4	0.249	1.79	55'	EL	26.923	0.659	1.67	55'	EL	10.769	0.80	0.249	1.23	55'	EL	26.923	
		TNT7B	42.000	--	1.282	53.827	1.4	0.249	1.87	55'	EL	26.923	0.659	1.58	55'	EL	10.769	0.80	0.249	1.28	55'	EL	26.923	
		TNAGRIT4	43.000	--	1.213	52.158	1.4	0.249	1.77	55'	EL	26.923	0.659	1.52	55'	EL	10.769	0.80	0.249	1.21	55'	EL	26.923	
		TNAGT5A	45.000	--	1.136	51.134	1.4	0.249	1.66	55'	EL	26.923	0.659	1.55	55'	EL	10.769	0.80	0.249	1.14	55'	EL	26.923	
		TNAGT5B	45.000	3	1.116	50.224	1.4	0.249	1.63	55'	EL	26.923	0.659	1.44	55'	EL	10.769	0.80	0.249	1.12	55'	EL	**26.923**	

LOAD FACTORS:

DESIGN LOAD RATING FACTORS	LIMIT STATE	γ_{DC}	γ_{DW}
	STRENGTH I	1.25	1.50
	SERVICE III	1.00	1.00

NOTES:

MINIMUM RATING FACTORS ARE BASED ON THE STRENGTH I AND SERVICE III LIMIT STATES.

ALLOWABLE STRESSES FOR SERVICE III LIMIT STATE ARE AS REQUIRED FOR DESIGN.

COMMENTS:

1.
2.
3.
4.

(#) CONTROLLING LOAD RATING

(1) DESIGN LOAD RATING (HL-93)

(2) DESIGN LOAD RATING (HS-20)

(3) LEGAL LOAD RATING **

** SEE CHART FOR VEHICLE TYPE

GIRDER LOCATION

I - INTERIOR GIRDER
EL - EXTERIOR LEFT GIRDER
ER - EXTERIOR RIGHT GIRDER

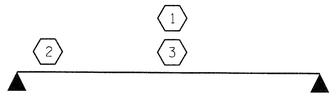

LRFR SUMMARY

FOR SINGLE SPAN

NORTH CAROLINA PROFESSIONAL SEAL 20724 ENGINEER HARDY L. WILLIS 3/5/14

PROJECT NO. BD-5113G

YANCEY COUNTY

STATION: 14+07.52 -L-

STATE OF NORTH CAROLINA
DEPARTMENT OF TRANSPORTATION
RALEIGH

STANDARD

LRFR SUMMARY FOR 55' CORED SLAB UNIT 60° SKEW & 120° SKEW (NON-INTERSTATE TRAFFIC)

REVISIONS						SHEET NO.
NO.	BY:	DATE:	NO.	BY:	DATE:	S-3
1			3			TOTAL SHEETS
2			4			22

ASSEMBLED BY :	DPP	DATE :	10/13
CHECKED BY :	RTS	DATE :	10/13
DRAWN BY : CVC	6/10		
CHECKED BY : DNS	6/10		

$$$$$$$SYSTIME$$$$$
$$$$$$$$$$$$$$$$$$$$$$$$DGN$$$$$$$$$$$$$$$$$$$$$$$
$$$$USERNAME$$$$

STD. NO. 21LRFR1_60&120S_55L

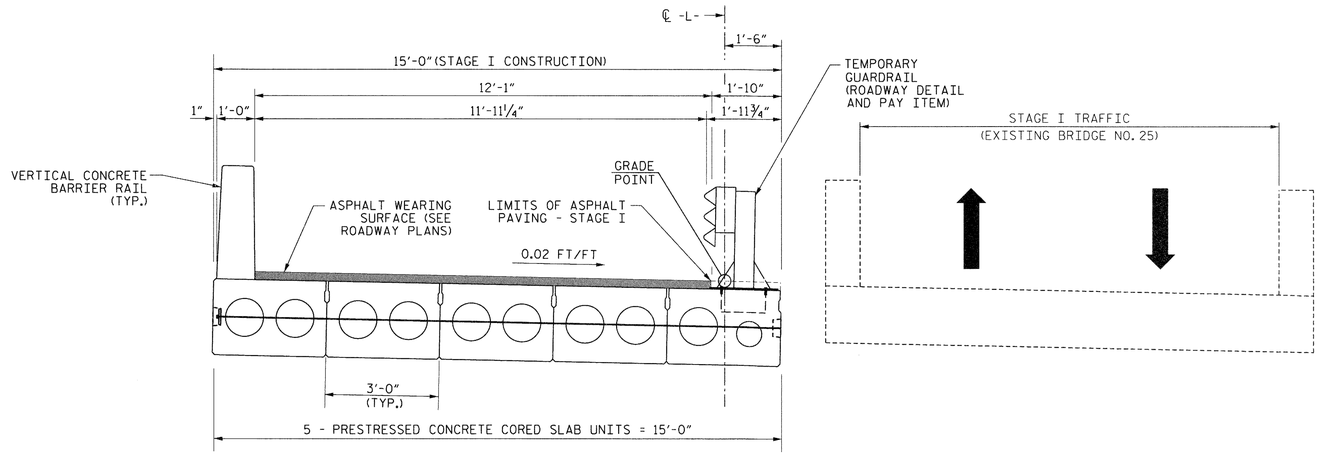

STAGE I

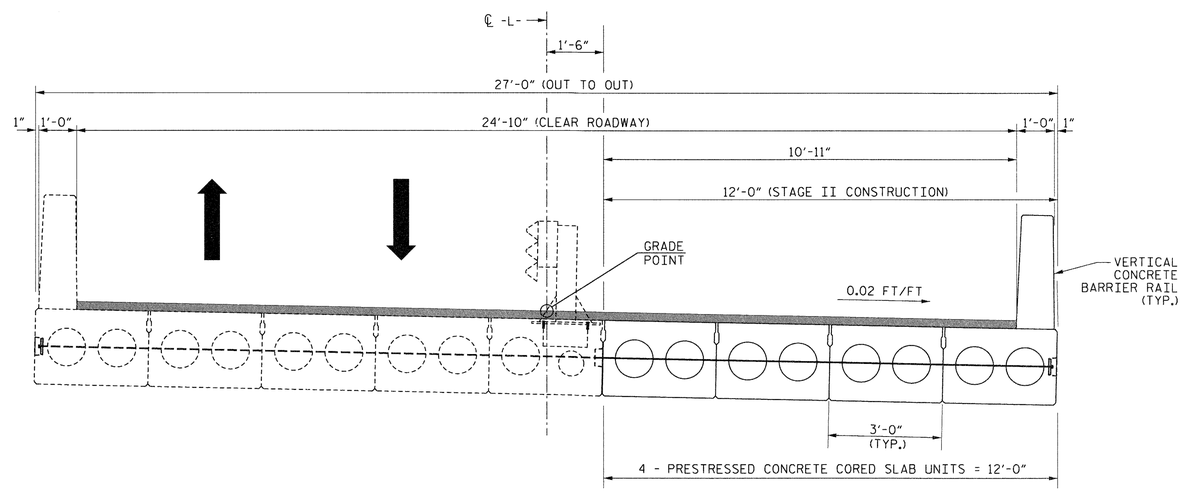

STAGE II

STAGING SEQUENCE

NOTES

FOR TEMPORARY GUARDRAIL DETAILS, SEE "ANCHORAGE DETAILS FOR TEMPORARY GUARDRAIL ANCHOR ASSEMBLY FOR TYPE III CORED SLAB UNIT" SHEET S-10.

FOR PHASING OF TRAFFIC AND OTHER DETAILS, SEE TRAFFIC MANAGEMENT PLANS.

NORTH CAROLINA PROFESSIONAL SEAL ENGINEER HARDY L. WILLIS 3/5/14

PROJECT NO. BD-5113G

YANCEY COUNTY

STATION: 14+07.52 -L-

V&M
Vaughn & Melton
Consulting Engineers
Asheville, North Carolina 828-253-2796
Charlotte, North Carolina 704-357-0488
Tri-Cities, Tennessee 423-467-8401
Knoxville, Tennessee 865-546-5800
Middlesboro, Kentucky 606-248-6600
Spartanburg, South Carolina 864-574-4775

Copyright © 2006 Vaughn & Melton, Inc. All Rights Reserved

DWN. BY: DPP DATE: 8/2013
CHKD. BY: HLW DATE: 8/2013
DES. EGR. OF RECORD: RTS DATE: 8/2013

STATE OF NORTH CAROLINA
DEPARTMENT OF TRANSPORTATION
RALEIGH

CONSTRUCTION STAGING

AUG. 2013

REVISIONS						SHEET NO.
NO.	BY:	DATE:	NO.	BY:	DATE:	S-4
1			3			TOTAL SHEETS
2			4			22

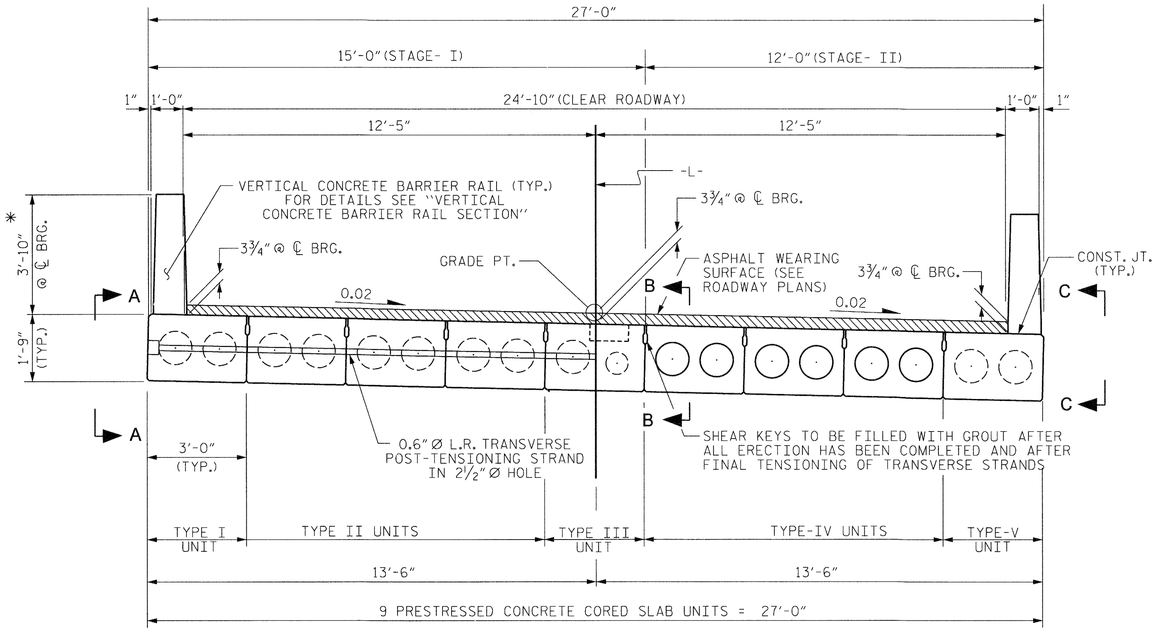

HALF SECTION
AT INTERMEDIATE DIAPHRAGMS

HALF SECTION
THROUGH VOIDS

TYPICAL SECTION

✱ - THE MAXIMUM BARRIER RAIL HEIGHT AND ASPHALT THICKNESS IS SHOWN. THE HEIGHT OF THE BARRIER RAIL AND ASPHALT THICKNESS VARIES WHILE THE TOP OF THE BARRIER RAIL FOLLOWS THE PROFILE OF THE GUTTERLINE. FOR RAIL HEIGHT DETAILS AND ASPHALT THICKNESS, SEE THE "VERTICAL CONCRETE BARRIER RAIL SECTION" DETAIL.

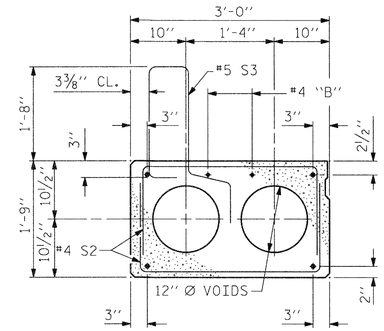

EXT. SLAB SECTION

TYPE I & V

(FOR PRESTRESSED STRAND LAYOUT, SEE "INTERIOR SLAB SECTION - TYPE II & IV)

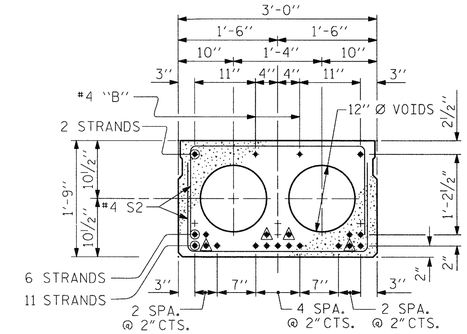

STRAND LAYOUT FOR 55' UNIT

TYPE II &IV (19 STRANDS REQUIRED)

INTERIOR SLAB SECTION

0.6" Ø LOW RELAXATION

⚠ BOND SHALL BE BROKEN ON THESE STRANDS FOR A DISTANCE OF 6'-0" FROM END OF CORED SLAB UNIT. SEE STANDARD SPECIFICATIONS, ARTICLE 1078-7.

DEBONDING LEGEND

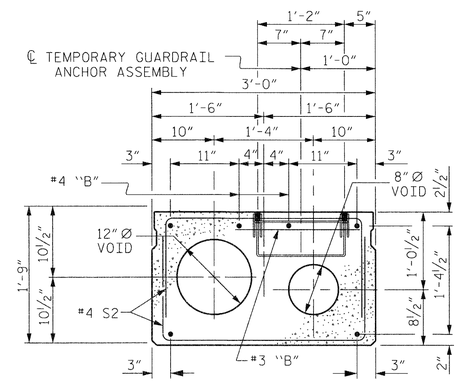

INTERIOR SLAB SECTION

TYPE III

(FOR PRESTRESSED STRAND LAYOUT, SEE "INTERIOR SLAB SECTION - TYPE II & IV

FOR TEMPORARY GUARDRAIL ANCHOR ASSEMBLY LOCATION, SEE SECTION OF ANCHOR ASSEMBLY LOCATION ON "ANCHORAGE DETAILS FOR TEMPORARY GUARDRAIL ANCHOR ASSEMBLY FOR TYPE III CORED SLAB UNIT" SHEET.

FIXED END

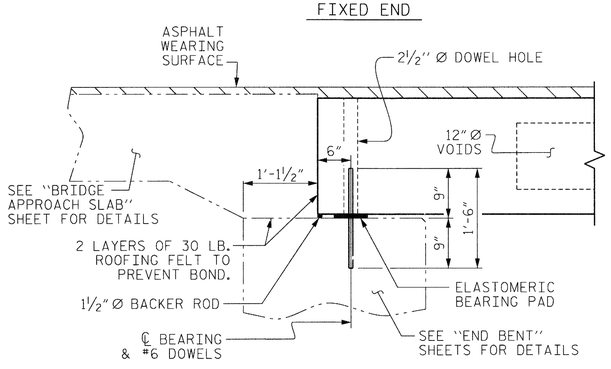

SECTION AT END BENT

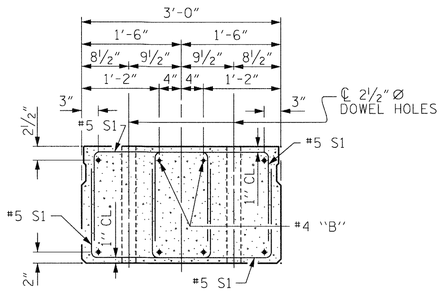

END ELEVATION

SHOWING PLACEMENT OF DOUBLE STIRRUPS AND LOCATION OF DOWEL HOLES. (STRAND LAYOUT NOT SHOWN.) INTERIOR SLAB UNIT SHOWN-EXTERIOR SLAB UNIT SIMILAR EXCEPT SHEAR KEY LOCATION.

NORTH CAROLINA PROFESSIONAL SEAL 20774 ENGINEER HARDY L. WILLIS 3/5/14

PROJECT NO. BD-5113G
YANCEY COUNTY
STATION: 14+07.52 -L-

SHEET 1 OF 5

STATE OF NORTH CAROLINA
DEPARTMENT OF TRANSPORTATION
RALEIGH

STANDARD
3'-0" X 1'-9"
PRESTRESSED CONCRETE
CORED SLAB UNIT
60° SKEW

REVISIONS						SHEET NO.
NO.	BY:	DATE:	NO.	BY:	DATE:	S-5
1			3			TOTAL SHEETS
2			4			22

ASSEMBLED BY :	DPP	DATE :	10/13
CHECKED BY :	RTS	DATE :	10/13
DRAWN BY : DGE	5/09	REV. 12/11	MAA/AAC
CHECKED BY : BCH	6/09		

STD. NO. 21"PCS2_27_60S

$$$$$$SYSTIME$$$$$
$$$$$$$$$$$$$$$$$$$$DGN$$$$$$$$$$$$$$$$$$$$$$$
$$$$$USERNAME$$$$

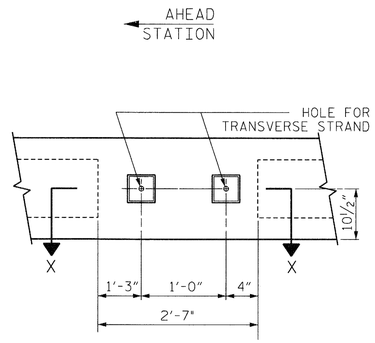

VIEW A-A
SEE SHEET 1 OF 5

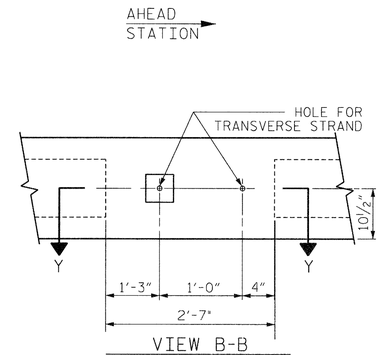

VIEW B-B
SEE SHEET 1 OF 5

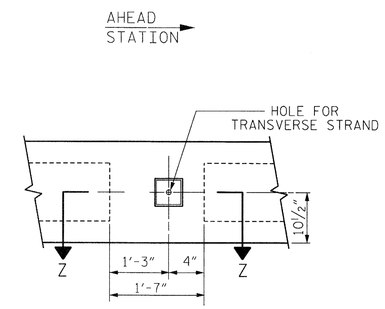

VIEW C-C
SEE SHEET 1 OF 5

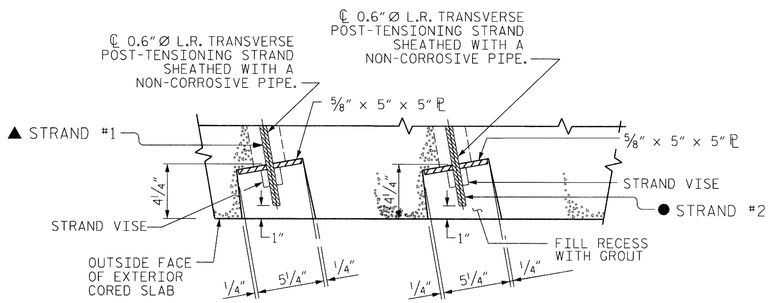

SECTION X-X
(TYPE I UNIT)

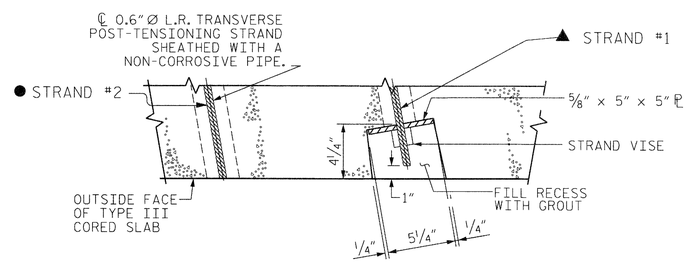

SECTION Y-Y
(TYPE III UNIT)

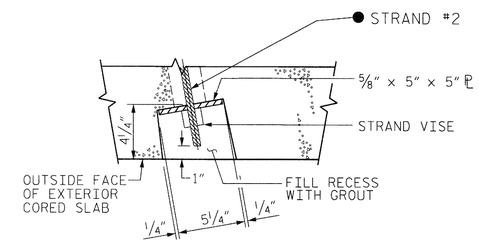

SECTION Z-Z
(TYPE V UNIT)

▲ STRAND #1 GOES THROUGH 5 CORED SLAB UNITS (TO BE TENSIONED DURING STAGE I CONSTRUCTION).	● STRAND #2 GOES THROUGH 9 CORED SLAB UNITS (TO BE TENSIONED DURING STAGE II CONSTRUCTION).

GROUTED RECESS AT END OF POST-TENSIONED STRAND

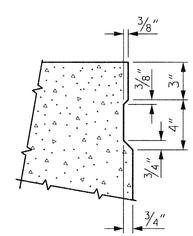

SHEAR KEY DETAIL

NOTE: OMIT SHEAR KEY ON OUTSIDE FACE OF EXTERIOR CORED SLABS.

NORTH CAROLINA PROFESSIONAL SEAL 027724 ENGINEER HARDY L. WILLIS
3/5/14

PROJECT NO. BD-5113G
YANCEY COUNTY
STATION: 14+07.52 -L-

SHEET 2 OF 5

STATE OF NORTH CAROLINA
DEPARTMENT OF TRANSPORTATION
RALEIGH

STANDARD
3'-0" X 1'-9"
PRESTRESSED CONCRETE
CORED SLAB UNIT

REVISIONS						SHEET NO.
NO.	BY:	DATE:	NO.	BY:	DATE:	S-6
1			3			TOTAL SHEETS
2			4			22

DRAWN BY :	DPP	DATE :	10/13
CHECKED BY :	RTS	DATE :	10/13

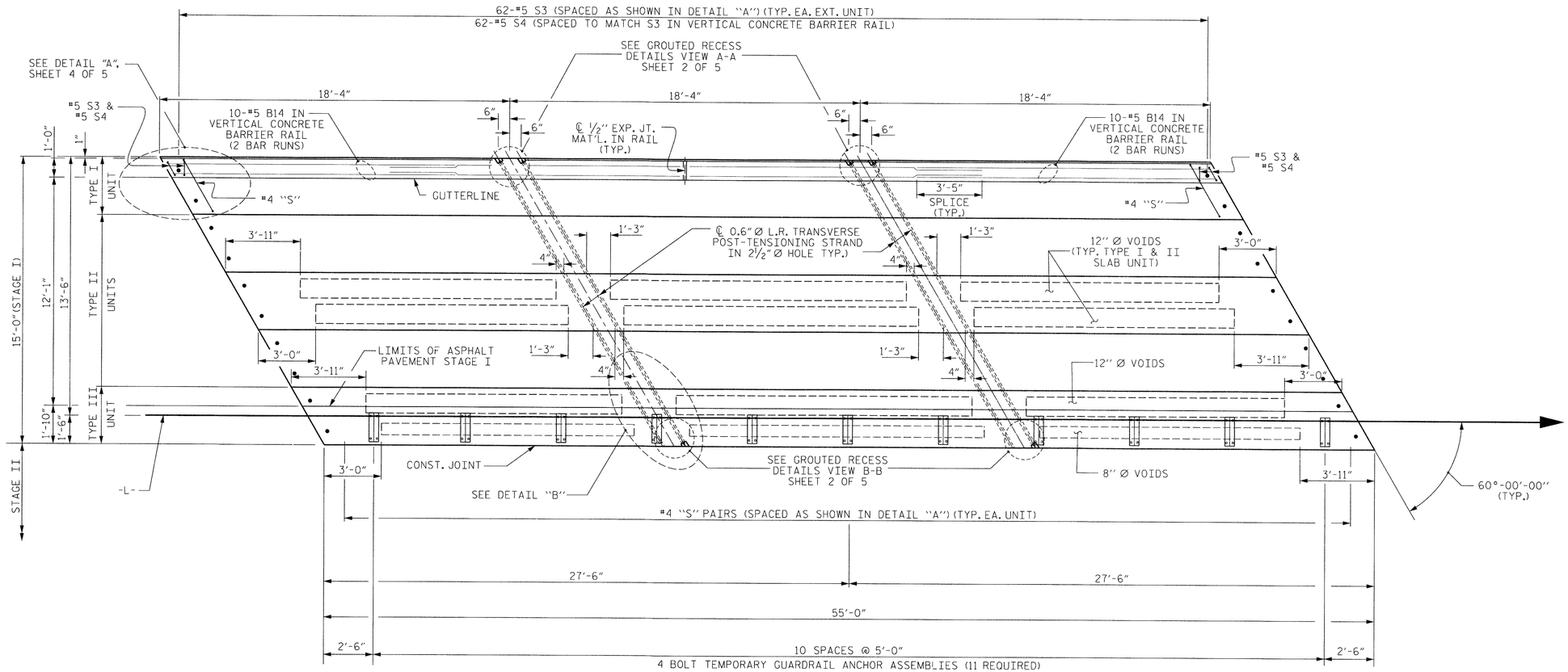

PLAN OF UNIT
(STAGE I)

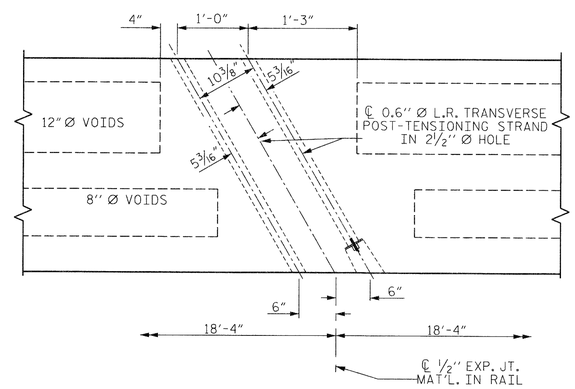

DETAIL "B"

#4 S2 BARS MAY BE SHIFTED AS NECESSARY TO MAINTAIN 1" CLEAR TO GROUTED RECESS AND 2 1/2" Ø TRANSVERSE POST-TENSIONING STRAND HOLES

ASSEMBLED BY : DPP	DATE : 10/13		
CHECKED BY : RTS	DATE : 10/13		
DRAWN BY : DGE 5/09	REV. 12/5/11 MAA/AAC		
CHECKED BY : BCH 6/09			

PROJECT NO. BD-5113G

YANCEY COUNTY

STATION: 14+07.52 -L-

SHEET 3 OF 5

STATE OF NORTH CAROLINA
DEPARTMENT OF TRANSPORTATION
RALEIGH

PLAN OF 55' UNIT
24'-10" CLEAR ROADWAY
60° SKEW
STAGE I

NORTH CAROLINA PROFESSIONAL SEAL 20774 ENGINEER HARDY L. WILLIS 3/5/14

REVISIONS							
NO.	BY:	DATE:	NO.	BY:	DATE:		
1			3				
2			4				

SHEET NO. S-7

TOTAL SHEETS 22

STD. NO. 21" PCS 27 60S 55L

$$$$$$SYSTIME$$$$$
$$$$$$$$$$$$$$$$$$$$$$$$DGN$$$$$$$$$$$$$$$$$$$$$$$$

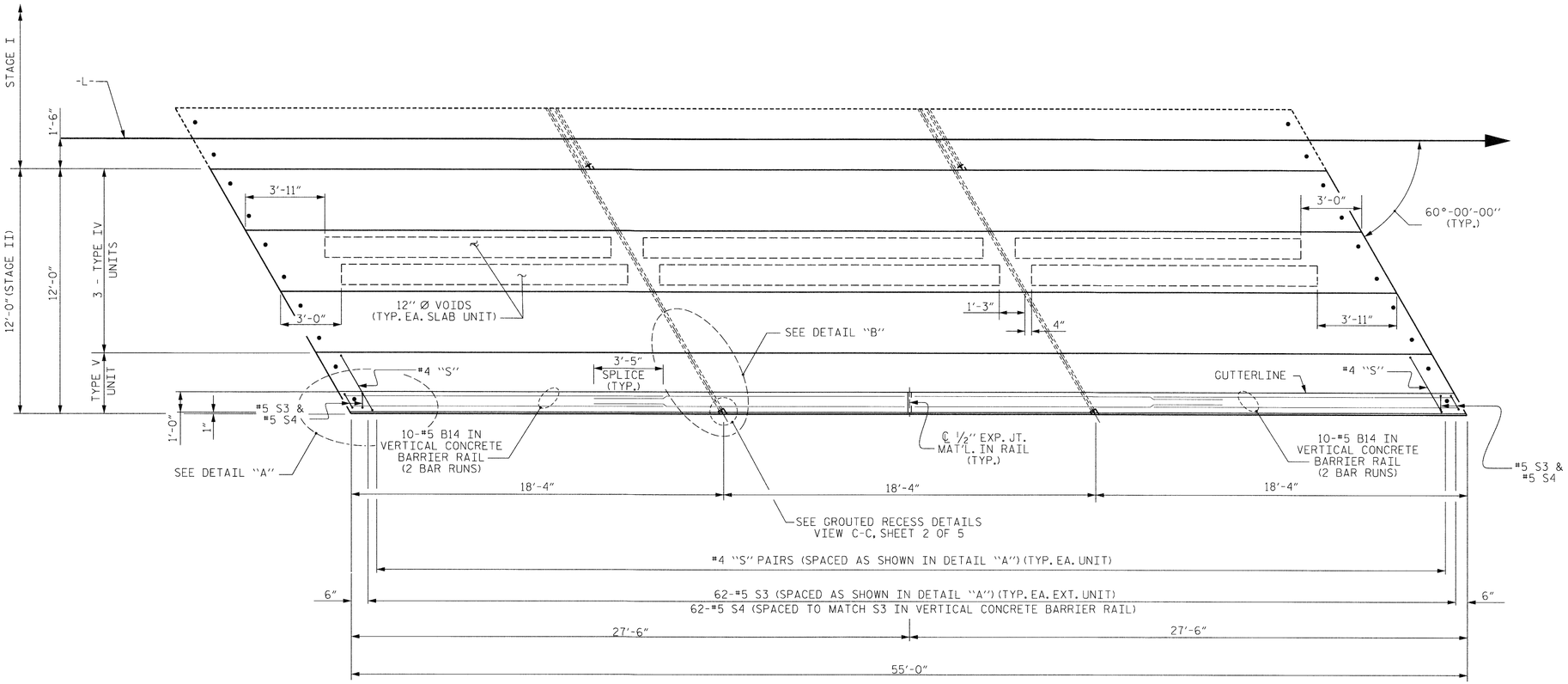

PLAN OF UNIT
(STAGE II)

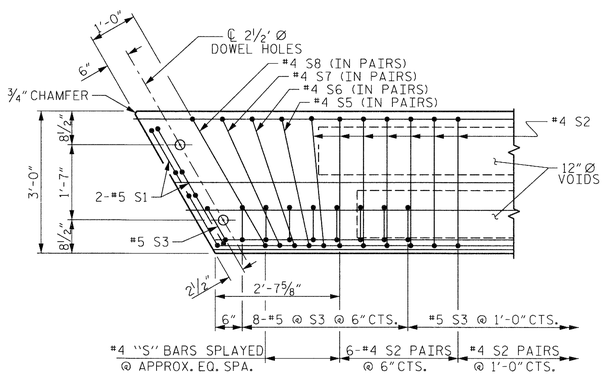

DETAIL "A"

NOTE: EXTERIOR UNIT SHOWN - INTERIOR UNIT SIMILAR EXCEPT OMIT #5 S3 BARS.

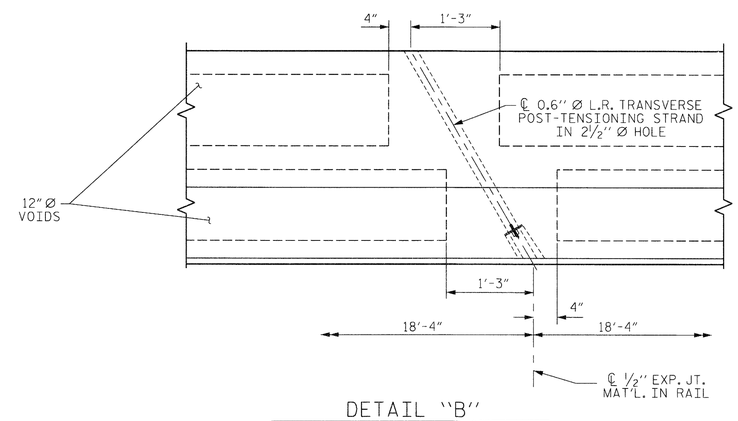

DETAIL "B"

#4 S2 BARS MAY BE SHIFTED AS NECESSARY TO MAINTAIN 1" CLEAR TO GROUTED RECESS AND 2 1/2" Ø TRANSVERSE POST-TENSIONING STRAND HOLES

NORTH CAROLINA PROFESSIONAL SEAL 20777 ENGINEER HARDY L. WILLIS 3/5/14

PROJECT NO. BD-5113G
YANCEY COUNTY
STATION: 14+07.52 -L-

SHEET 4 OF 5

STATE OF NORTH CAROLINA
DEPARTMENT OF TRANSPORTATION
RALEIGH

PLAN OF 55' UNIT
24'-10" CLEAR ROADWAY
60° SKEW
STAGE II

REVISIONS						SHEET NO.
NO.	BY:	DATE:	NO.	BY:	DATE:	S-8
1			3			TOTAL SHEETS
2			4			23

ASSEMBLED BY : DPP		DATE : 10/13	
CHECKED BY : RTS		DATE : 10/13	
DRAWN BY : DGE 5/09	REV. 12/5/11	MAA/AAC	
CHECKED BY : BCH 6/09			

$$$$$$SYSTIME$$$$$
$$$$$$$$$$$$$$$$$$$$$$$$DGN$$$$$$$$$$$$$$$$$$$$$$$$
$$$$USERNAME$$$$

STD. NO. 21"PCS_27_60S_55L

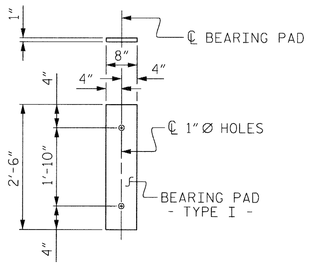

FIXED END
(TYPE I - 18 REQ'D)

ELASTOMERIC BEARING DETAILS

ELASTOMER IN ALL BEARINGS SHALL BE 50 DUROMETER HARDNESS.

BILL OF MATERIAL FOR ONE 55' CORED SLAB UNIT

BAR	NUMBER	SIZE	TYPE	EXTERIOR UNIT LENGTH	EXTERIOR UNIT WEIGHT	INTERIOR UNIT LENGTH	INTERIOR UNIT WEIGHT
B7	4	#4	STR	28'-3"	75	28'-3"	75
S1	8	#5	3	4'-6"	38	4'-6"	38
S2	112	#4	3	5'-4"	399	5'-4"	399
✳ S3	64	#5	1	6'-2"	412		
S5	4	#4	3	5'-5"	14	5'-5"	14
S6	4	#4	3	5'-6"	15	5'-6"	15
S7	4	#4	3	5'-7"	15	5'-7"	15
S8	4	#4	3	5'-9"	15	5'-9"	15
REINFORCING STEEL			LBS.		571		571
✳ EPOXY COATED REINFORCING STEEL			LBS.		412		
6500 P.S.I. CONCRETE			CU. YDS.		8.0		8.0
0.6"Ø L.R. STRANDS			No.		19		19

BAR TYPES

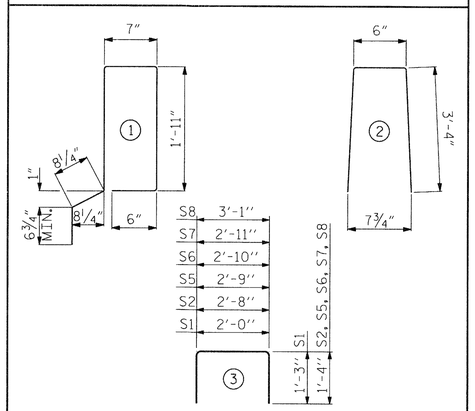

ALL BAR DIMENSIONS ARE OUT TO OUT

NOTES

ALL PRESTRESSING STRANDS SHALL BE 7-WIRE LOW RELAXATION GRADE 270 STRANDS AND SHALL CONFORM TO AASHTO M203 EXCEPT FOR SAMPLING REQUIREMENTS WHICH SHALL BE IN ACCORDANCE WITH THE STANDARD SPECIFICATIONS.

ALL REINFORCING STEEL CAST WITH THE CORED SLAB SECTIONS SHALL BE GRADE 60 AND SHALL BE INCLUDED IN THE UNIT PRICE BID FOR PRESTRESSED CONCRETE CORED SLABS.

RECESSES FOR TRANSVERSE STRANDS SHALL BE GROUTED AFTER THE TENSIONING OF THE STRANDS.

THE 2½"Ø DOWEL HOLES AT FIXED ENDS OF SLAB SECTIONS SHALL BE FILLED WITH NON-SHRINK GROUT.

THE BACKER RODS SHALL CONFORM TO THE REQUIREMENTS OF TYPE M BOND BREAKER. SEE SECTION 1028 OF THE STANDARD SPECIFICATIONS.

WHEN CORED SLABS ARE CAST, AN INTERNAL HOLD-DOWN SYSTEM SHALL BE EMPLOYED TO PREVENT VOIDS FROM RISING OR MOVING SIDEWAYS. AT LEAST SIX WEEKS PRIOR TO CASTING CORED SLABS, THE CONTRACTOR SHALL SUBMIT TO THE ENGINEER FOR REVIEW AND COMMENT, DETAILED DRAWINGS OF THE PROPOSED HOLD-DOWN SYSTEM. IN ADDITION TO STRUCTURAL DETAILS, LOCATION AND SPACING OF THE HOLD-DOWNS SHALL BE INDICATED.

ALL REINFORCING STEEL IN THE VERTICAL CONCRETE BARRIER RAIL SHALL BE EPOXY COATED.

PRESTRESSING STRANDS SHALL BE CUT FLUSH WITH THE CORED SLAB UNIT ENDS.

APPLY EPOXY PROTECTIVE COATING TO CORED SLAB UNIT ENDS.

GROOVED CONTRACTION JOINTS, ½" IN DEPTH, SHALL BE TOOLED IN ALL EXPOSED FACES OF THE BARRIER RAIL AND IN ACCORDANCE WITH ARTICLE 825-10(B) OF THE STANDARD SPECIFICATIONS. A CONTRACTION JOINT SHALL BE LOCATED AT EACH THIRD POINT BETWEEN BARRIER RAIL EXPANSION JOINTS. ONLY ONE CONTRACTION JOINT IS REQUIRED AT MIDPOINT OF BARRIER RAIL SEGMENTS LESS THAN 20 FEET IN LENGTH AND NO CONTRACTION JOINTS ARE REQUIRED FOR THOSE SEGMENTS LESS THAN 10 FEET IN LENGTH.

TRANSVERSE POST TENSIONING OF THE CORED SLAB UNITS SHALL BE DONE IN ACCORDANCE WITH THE STANDARD SPECIFICATIONS.

THE TRANSFER OF LOAD FROM THE ANCHORAGES TO THE CORED SLAB UNIT SHALL BE DONE WHEN THE CONCRETE HAS REACHED A COMPRESSIVE STRENGTH OF NOT LESS THAN THE REQUIRED STRENGTH SHOWN IN THE "CONCRETE RELEASE STRENGTH" TABLE.

FOR GROUT FOR STRUCTURES, SEE SPECIAL PROVISIONS.

CORED SLABS REQUIRED

	NUMBER	LENGTH	TOTAL LENGTH
55' UNIT			
EXTERIOR C.S.	2	55'-0"	110'-0"
INTERIOR C.S.	7	55'-0"	385'-0"
TOTAL	9		495'-0"

DEAD LOAD DEFLECTION AND CAMBER

	3'-0" x 1'-9"
55' CORED SLAB UNIT	0.6"Ø L.R. STRAND
CAMBER (SLAB ALONE IN PLACE)	2½" ↑
DEFLECTION DUE TO SUPERIMPOSED DEAD LOAD✱✱	¼" ↓
FINAL CAMBER	2¼" ↑

✱✱ INCLUDES FUTURE WEARING SURFACE

GUTTERLINE ASPHALT THICKNESS & RAIL HEIGHT

24'-10" CLEAR ROADWAY	ASPHALT OVERLAY THICKNESS	RAIL HEIGHT
	@ MID-SPAN	@ MID-SPAN
	SUPERELEVATED SECTION	
55' UNITS	1½"	3'-7¾"

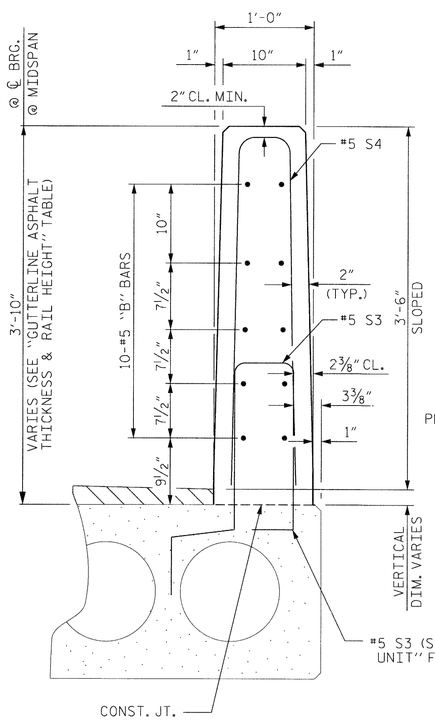

VERTICAL CONCRETE BARRIER RAIL SECTION

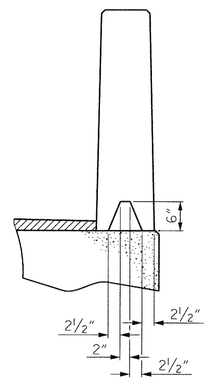

SECTION S-S
AT DAM IN OPEN JOINT
(THIS IS TO BE USED ONLY WHEN SLIP FORM IS USED)

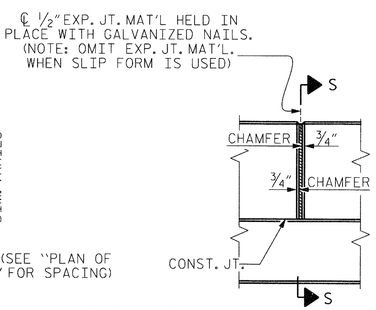

ELEVATION AT EXPANSION JOINTS

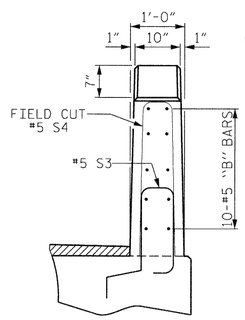

END VIEW

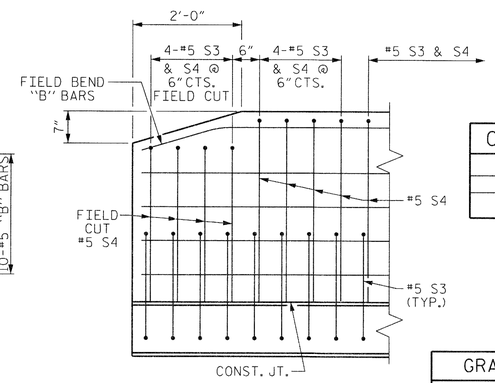

SIDE VIEW

END OF RAIL DETAILS

BILL OF MATERIAL FOR VERTICAL CONCRETE BARRIER RAIL

BAR	BARS PER PAIR OF EXTERIOR UNITS	TOTAL NO.	SIZE	TYPE	LENGTH	WEIGHT
	55' UNIT					
✳B14	80	80	#5	STR	15'-6"	1293
✳ S4	128	128	#5	2	7'-2"	957
✳ EPOXY COATED REINFORCING STEEL				LBS.		2250
CLASS AA CONCRETE				CU.YDS.		14.4
TOTAL VERTICAL CONCRETE BARRIER RAIL				LN. FT.		110.29

CONCRETE RELEASE STRENGTH

UNIT	PSI
55' UNITS	4900

GRADE 270 STRANDS

	0.6"Ø L.R.
AREA (SQUARE INCHES)	0.217
ULTIMATE STRENGTH (LBS. PER STRAND)	58,600
APPLIED PRESTRESS (LBS. PER STRAND)	43,950

NORTH CAROLINA PROFESSIONAL SEAL 20777 ENGINEER HARDY L. WILLIS 3/5/14

PROJECT NO. BD-5113G
YANCEY COUNTY
STATION: 14+07.52 -L-

SHEET 5 OF 5

STATE OF NORTH CAROLINA
DEPARTMENT OF TRANSPORTATION
RALEIGH

STANDARD
3'-0" X 1'-9"
PRESTRESSED CONCRETE
CORED SLAB UNIT
60° SKEW

REVISIONS						SHEET NO.
NO.	BY:	DATE:	NO.	BY:	DATE:	S-9
1			3			TOTAL SHEETS
2			4			22

ASSEMBLED BY :	DPP	DATE :	10/13
CHECKED BY :	RTS	DATE :	10/13
DRAWN BY : DGE 5/09	REV. 12/11 MAA/AAC		
CHECKED BY : BCH 6/09			

$$$$$$SYSTIME$$$$$
$$$$$$$$$$$$$$$$$$$$$$$$DGN$$$$$$$$$$$$$$$$$$$$$$$$
$$$$USERNAME$$$$

STD. NO. 21"PCS3_27_60S

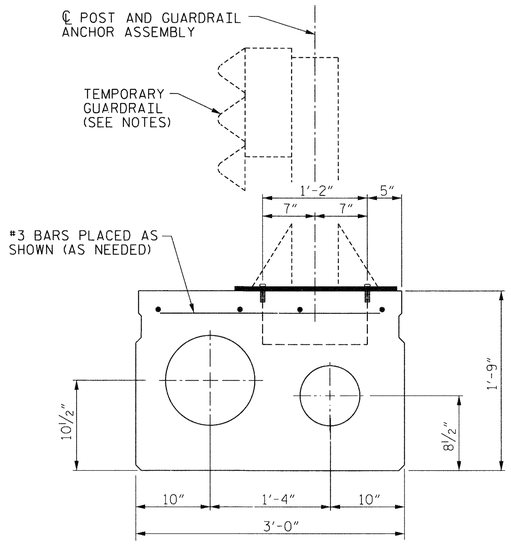

SECTION OF ANCHOR ASSEMBLY LOCATION

(TYPE III UNIT - STAGE I)
THE #3 BARS ARE INCIDENTAL AND THEIR COST SHALL BE INCLUDED IN THE PRICE BID FOR THE PRESTRESSED CONCRETE CORED SLABS.

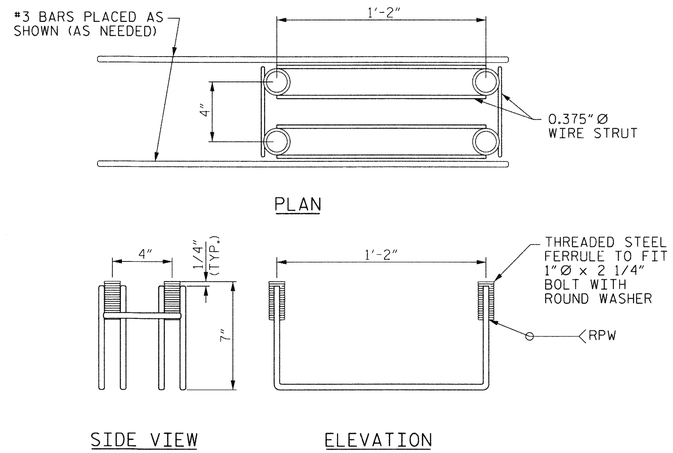

MINIMUM LENGTH OF THREADS IN INSERT (FERRULE): 2 1/2"

TEMPORARY GUARDRAIL ANCHOR ASSEMBLY

(11 ASSEMBLIES REQUIRED IN THE TYPE III CORED SLAB UNITS)
(6 ASSEMBLIES REQUIRED IN THE APPROACH SLABS)

NOTES

THE TEMPORARY GUARDRAIL ANCHOR ASSEMBLY SHALL CONSIST OF THE FOLLOWING COMPONENTS:

A. FERRULES SHALL BE MADE FROM STEEL MEETING THE REQUIREMENTS OF AASHTO M169, GRADE 12L14 AND SHALL HAVE A MINIMUM LENGTH OF THREADS OF 2½".

B. 4 - 1"Ø X 2¼" BOLTS WITH WASHERS. BOLTS SHALL CONFORM TO THE REQUIREMENTS OF ASTM A307. BOLTS AND WASHERS SHALL BE GALVANIZED. (AT THE CONTRACTOR'S OPTION STAINLESS STEEL BOLTS AND WASHERS MAY BE USED AS AN ALTERNATE FOR THE 1"Ø X 2¼" GALVANIZED BOLTS AND WASHERS. THEY SHALL CONFORM TO OR EXCEED THE MECHANICAL REQUIREMENTS OF ASTM A307. THE USE OF THIS ALTERNATE SHALL BE APPROVED BY THE ENGINEER.)

C. WIRE STRUTS SHOWN IN THE TEMPORARY GUARDRAIL ANCHOR ASSEMBLY DETAIL ARE THE MINIMUM ALLOWABLE SIZE AND SHALL HAVE A MINIMUM TENSILE STRENGTH OF 100,000 PSI.

TEMPORARY GUARDRAIL ANCHOR ASSEMBLY WITH BOLTS SHALL BE ASSEMBLED IN THE SHOP. BOLT THREADS MAY BE RECUT AS NECESSARY TO ENSURE FIT.

THE COST OF THE TEMPORARY GUARDRAIL ANCHOR ASSEMBLY COMPLETE IN PLACE SHALL BE INCLUDED, AS APPLICABLE, IN THE UNIT CONTRACT PRICE BID FOR 3'-0" X 1'-9" PRESTRESSED CONCRETE CORED SLAB OR LUMP SUM PRICE BID FOR APPROACH SLABS.

FERRULES SHALL BE PLUGGED DURING CASTING OF THE CORED SLAB UNITS OR POURING OF APPROACH SLAB AS RECOMMENDED BY THE MANUFACTURER.

AT THE CONTRACTOR'S OPTION, FERRULES WITH OPEN OR CLOSED ENDS MAY BE USED.

PAYMENT FOR TEMPORARY GUARDRAIL, POST, AND POST BASE PLATES IS INCLUDED IN ROADWAY PAY ITEMS.

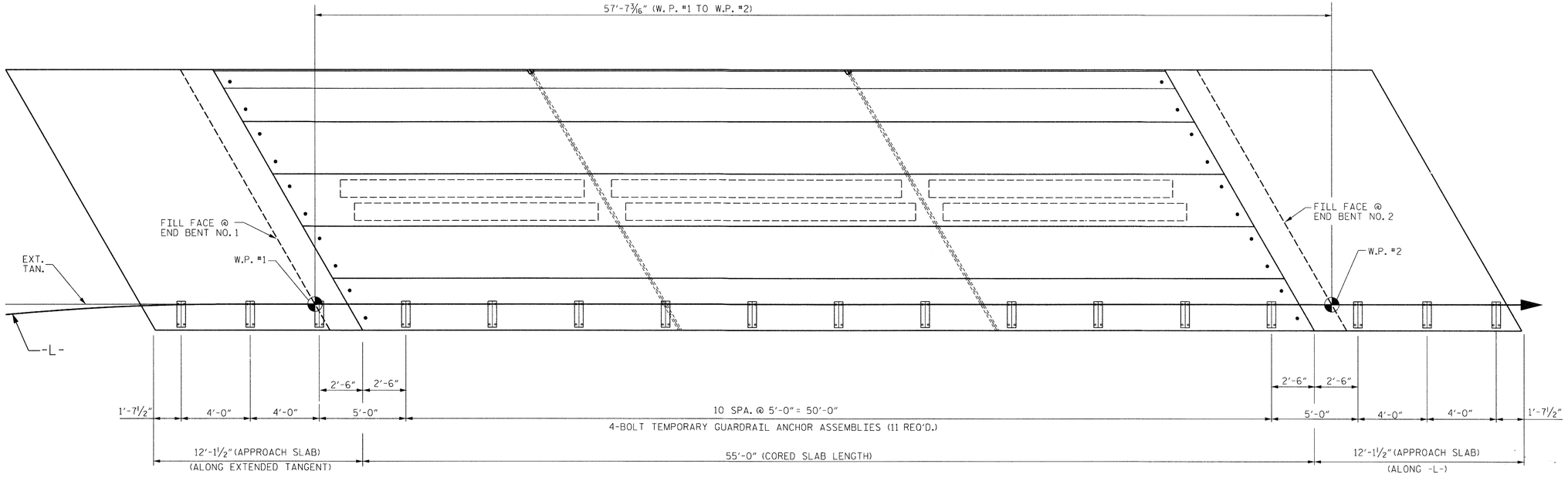

RAIL POST SPACING FOR TEMPORARY GUARDRAIL - STAGE I

PROJECT NO. BD-5113G
YANCEY COUNTY
STATION: 14+07.52 -L-

STATE OF NORTH CAROLINA
DEPARTMENT OF TRANSPORTATION
RALEIGH

ANCHORAGE DETAILS FOR TEMPORARY GUARDRAIL ANCHOR ASSEMBLY FOR TYPE III CORED SLAB UNIT - STAGE I

NORTH CAROLINA PROFESSIONAL SEAL 027 ENGINEER HARDY L. WILLIS 3/5/14

REVISIONS						SHEET NO.
NO.	BY:	DATE:	NO.	BY:	DATE:	S-10
1			3			TOTAL SHEETS
2			4			22

ASSEMBLED BY : DPP		DATE : 10/13	
CHECKED BY : RTS		DATE : 10/13	
DRAWN BY : DGE 5/09	REV. 12/11	MAA/AAC	
CHECKED BY : BCH 6/09			

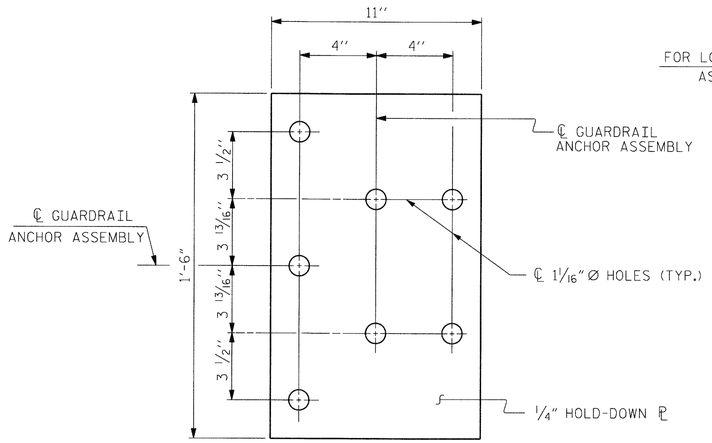

PLAN

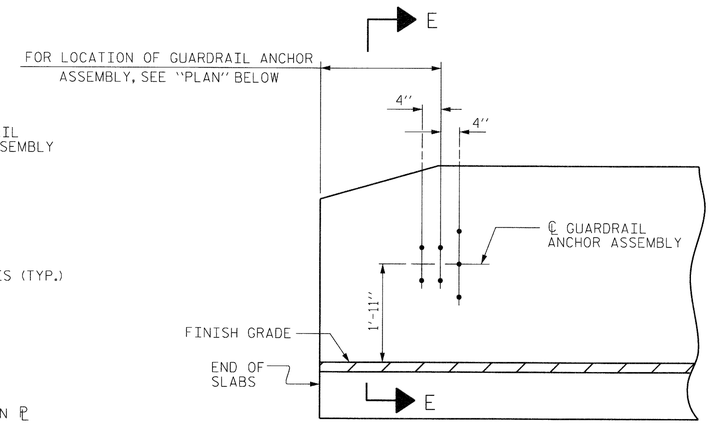

ELEVATION

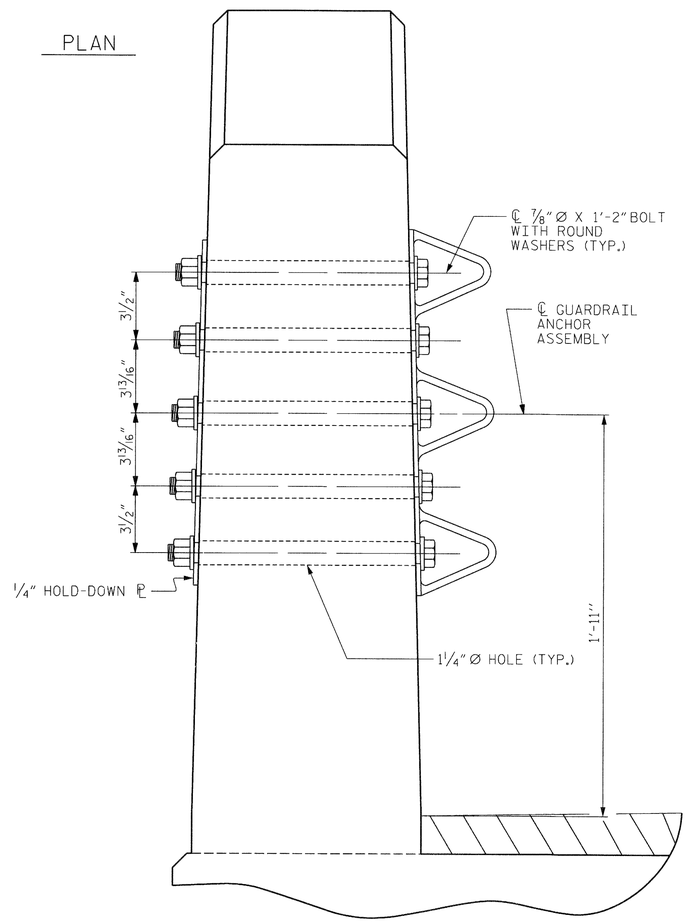

SECTION E-E

GUARDRAIL ANCHOR ASSEMBLY DETAILS

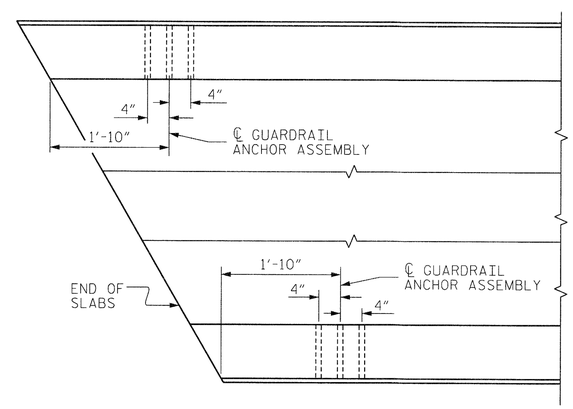

PLAN

LOCATION OF ANCHORS FOR GUARDRAIL

END BENT #1 SHOWN, END BENT #2 SIMILAR.

NOTES (FOR VERTICAL CONCRETE BARRIER RAIL)

THE GUARDRAIL ANCHOR ASSEMBLY SHALL CONSIST OF A 1/4" HOLD DOWN PLATE AND 7 - 7/8" Ø BOLTS WITH NUTS AND WASHERS.

THE HOLD-DOWN PLATE SHALL CONFORM TO AASHTO M270 GRADE 36. AFTER FABRICATION, THE HOLD-DOWN PLATE SHALL BE HOT-DIP GALVANIZED IN ACCORDANCE WITH AASHTO M111.

BOLTS SHALL CONFORM TO THE REQUIREMENTS OF ASTM A307 AND NUTS SHALL CONFORM TO THE REQUIREMENTS OF AASHTO M291. BOLTS, NUTS AND WASHERS SHALL BE GALVANIZED. (AT THE CONTRACTOR'S OPTION, STAINLESS STEEL BOLTS, NUTS AND WASHERS MAY BE USED AS AN ALTERNATE FOR THE 7/8" Ø GALVANIZED BOLTS, NUTS AND WASHERS. THEY SHALL CONFORM TO OR EXCEED THE MECHANICAL REQUIREMENTS OF ASTM A307. THE USE OF THIS ALTERNATE SHALL BE APPROVED BY THE ENGINEER.)

THE GUARDRAIL ANCHOR ASSEMBLY IS REQUIRED AT ALL POINTS WHERE APPROACH GUARDRAIL IS TO BE ATTACHED TO THE END OF BARRIER RAIL. FOR POINTS OF ATTACHMENT, SEE SKETCH.

AFTER INSTALLATION, THE EXPOSED THREAD OF THE BOLT SHALL BE BURRED WITH A SHARP POINTED TOOL.

THE COST OF THE GUARDRAIL ANCHOR ASSEMBLY SHALL BE INCLUDED IN THE UNIT CONTRACT PRICE BID FOR VERTICAL CONCRETE BARRIER RAIL.

THE VERTICAL REINFORCING BARS MAY BE SHIFTED SLIGHTLY IN THE VERTICAL CONCRETE BARRIER RAIL TO CLEAR ASSEMBLY BOLTS.

THE 1 1/4" Ø HOLES SHALL BE FORMED OR DRILLED WITH A CORE BIT. IMPACT TOOLS WILL NOT BE PERMITTED. ANY CONCRETE DAMAGED BY THIS WORK SHALL BE REPAIRED TO THE SATISFACTION OF THE ENGINEER.

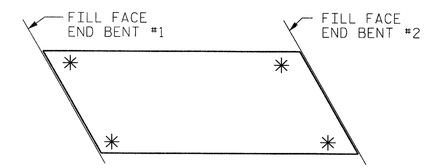

SKETCH SHOWING POINTS OF ATTACHMENT

✳ DENOTES GUARDRAIL ANCHOR ASSEMBLY

PROJECT NO. BD-5113G
YANCEY COUNTY
STATION: 14+07.52 -L-

NORTH CAROLINA PROFESSIONAL SEAL 19777 ENGINEER HARDY L. WILLIS
3/5/14

STATE OF NORTH CAROLINA
DEPARTMENT OF TRANSPORTATION
RALEIGH

STANDARD
GUARDRAIL ANCHORAGE DETAILS FOR METAL RAILS & VERTICAL CONCRETE BARRIER RAIL

ASSEMBLED BY : DPP	DATE : 10/13
CHECKED BY : RTS	DATE : 10/13

DRAWN BY : MAA 5/10	REV. 10/1/11 MAA/GM
CHECKED BY : GM 5/10	REV. 12/5/11 MAA/GM
	REV. 6/13 MAA/GM

REVISIONS								SHEET NO.
NO.	BY:	DATE:	NO.	BY:	DATE:			S-11
1			3					TOTAL SHEETS
2			4					22

STD. NO. GRA3

$$$$$$SYSTIME$$$$$
$$$$$$$$$$$$$$$$$$$$$$DGN$$$$$$$$$$$$$$$$$$$$$$$$
$$$$USERNAME$$$$

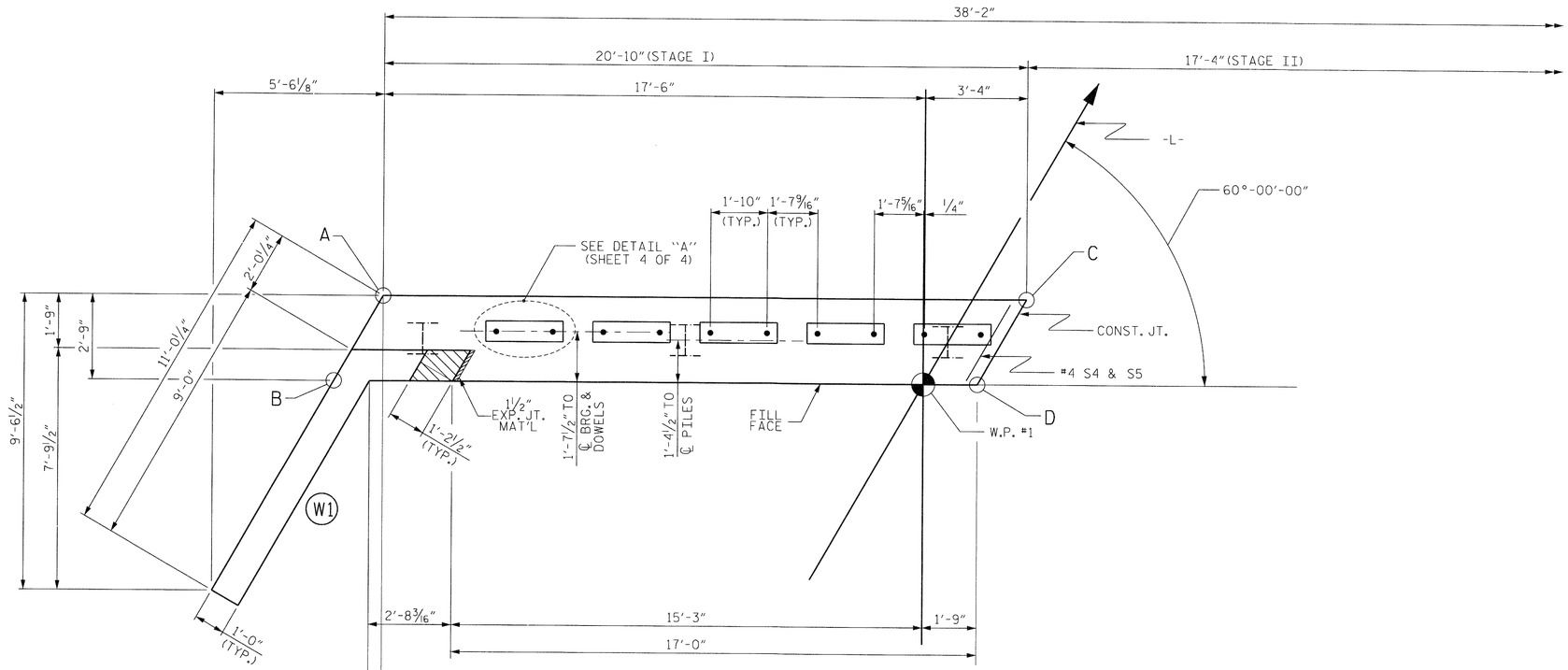

PLAN

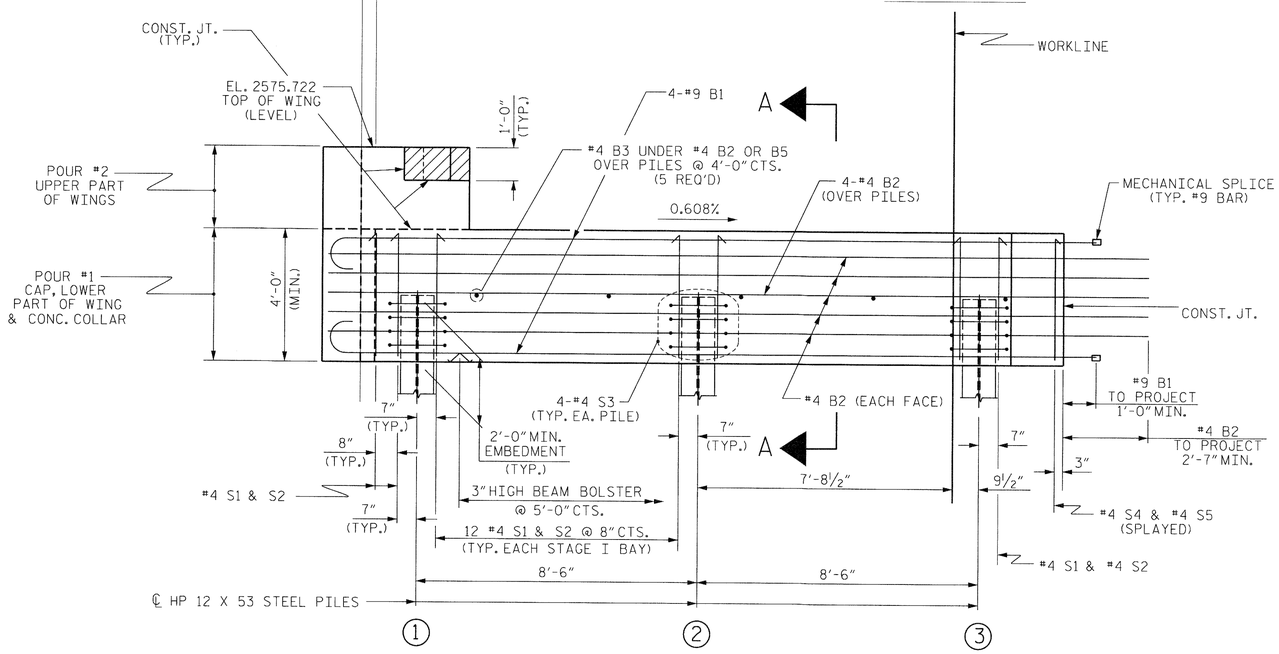

ELEVATION

WINGS NOT SHOWN FOR CLARITY.
FOR SECTION A-A, SEE SHEET 4 OF 4.
CONCRETE COLLARS FOR STEEL PILES NOT SHOWN IN PLAN AND ELEVATION VIEWS FOR CLARITY.
SEE "CORROSION PROTECTION FOR STEEL PILES DETAIL", SHEET 4 OF 4.

NOTES

STIRRUPS IN CAP MAY BE SHIFTED AS NECESSARY TO CLEAR DOWELS.

THE CONCRETE IN THE SHADED AREA OF THE WING SHALL BE POURED AFTER THE VERTICAL CONCRETE BARRIER RAIL IS CAST IF SLIP FORMING IS USED.

FOR PILE SPLICE DETAILS, SEE SHEET 4 OF 4.

FOR WING DETAILS, SEE SHEET 3 OF 4.

ELEVATIONS OF NOTED POINTS		
	TOP OF CAP	BOTTOM OF CAP
POINT A	2573.293	2569.293
POINT B	2573.222	2569.222
POINT C	2573.166	2569.166
POINT D	2573.095	2569.095

TOP OF PILE ELEVATIONS	
1	2571.247
2	2571.195
3	2571.144

PROJECT NO. BD-5113G
YANCEY COUNTY
STATION: 14+07.52 -L-

SHEET 1 OF 4

STATE OF NORTH CAROLINA
DEPARTMENT OF TRANSPORTATION
RALEIGH

SUBSTRUCTURE
END BENT No. 1
STAGE I

NORTH CAROLINA PROFESSIONAL SEAL 40777 ENGINEER HARDY L. WILLIS 3/5/14

REVISIONS						SHEET NO.
NO.	BY:	DATE:	NO.	BY:	DATE:	S-12
1			3			TOTAL SHEETS
2			4			22

ASSEMBLED BY : DPP	DATE : 10/13
CHECKED BY : RTS	DATE : 10/13
DRAWN BY : WJH 12/11	
CHECKED BY : AAC 12/11	

$$$$$$$SYSTIME$$$$$
$$$$$$$$$$$$$$$$$$$$$$$$DGN$$$$$$$$$$$$$$$$$$$$$$$$
$$$$USERNAME$$$$

STD. NO. EB_27_60S4

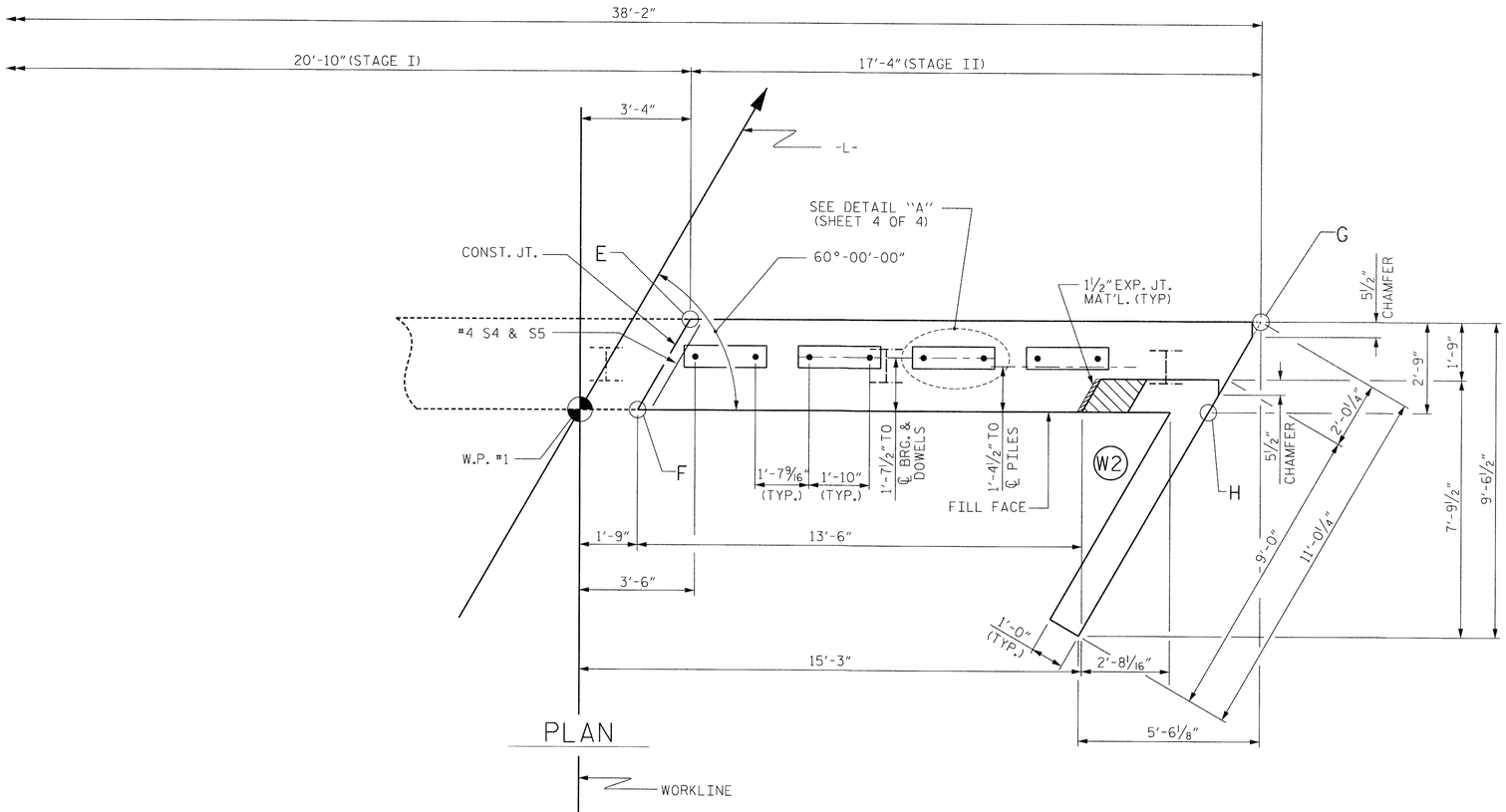

PLAN

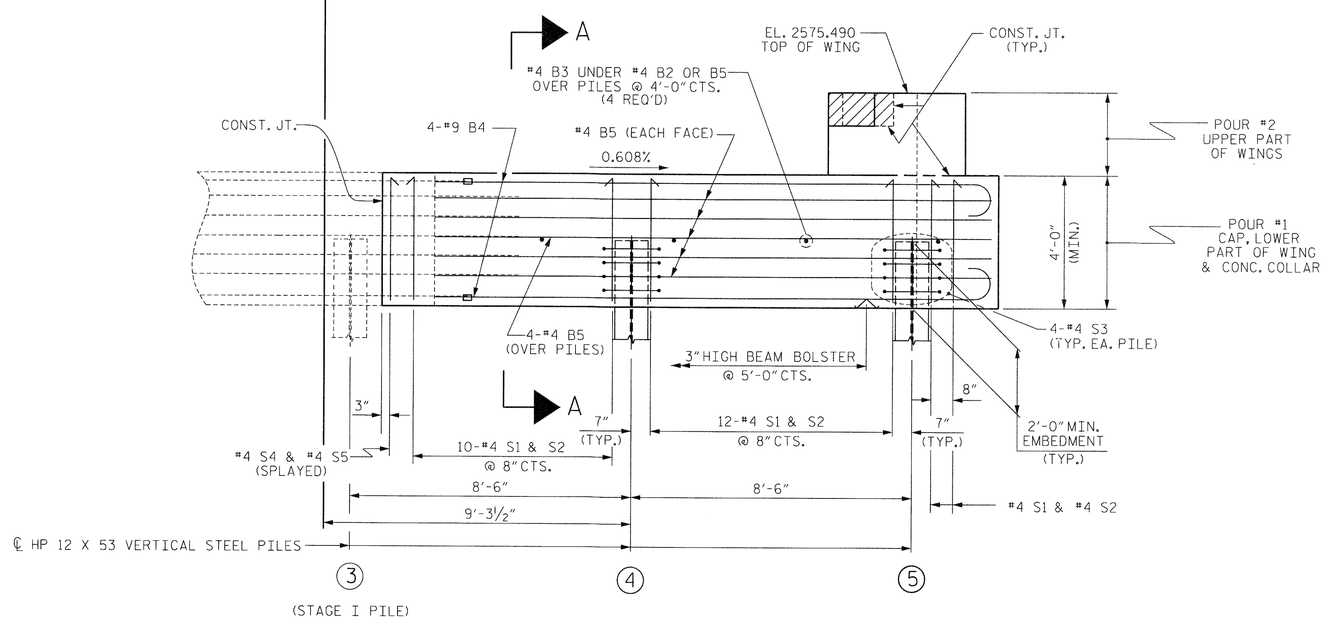

ELEVATION

WINGS NOT SHOWN FOR CLARITY.
FOR SECTION A-A, SEE SHEET 4 OF 4.
CONCRETE COLLARS FOR STEEL PILES NOT SHOWN IN PLAN AND ELEVATION VIEWS FOR CLARITY.
SEE "CORROSION PROTECTION FOR STEEL PILES DETAIL", SHEET 4 OF 4.

NOTES

STIRRUPS IN CAP MAY BE SHIFTED AS NECESSARY TO CLEAR DOWELS.

THE CONCRETE IN THE SHADED AREA OF THE WING SHALL BE POURED AFTER THE VERTICAL CONCRETE BARRIER RAIL IS CAST IF SLIP FORMING IS USED.

FOR PILE SPLICE DETAILS, SEE SHEET 4 OF 4.

FOR WING DETAILS, SEE SHEET 3 OF 4.

ELEVATIONS OF NOTED POINTS		
	TOP OF CAP	BOTTOM OF CAP
POINT E	2573.166	2569.166
POINT F	2573.095	2569.095
POINT G	2573.061	2569.061
POINT H	2572.990	2568.990

TOP OF PILE ELEVATIONS	
4	2571.092
5	2571.040

PROJECT NO. BD-5113G
YANCEY COUNTY
STATION: 14+07.52 -L-

SHEET 2 OF 4

STATE OF NORTH CAROLINA
DEPARTMENT OF TRANSPORTATION
RALEIGH

SUBSTRUCTURE
END BENT No. 1
STAGE II

NORTH CAROLINA PROFESSIONAL ENGINEER SEAL 24777 HARDY L. WILLIS 3/5/14

REVISIONS							SHEET NO.
NO.	BY:	DATE:	NO.	BY:	DATE:		S-13
1			3				TOTAL SHEETS
2			4				22

ASSEMBLED BY : DPP	DATE : 10/13
CHECKED BY : RTS	DATE : 10/13
DRAWN BY : WJH 12/11	
CHECKED BY : AAC 12/11	

$$$$$$$SYSTIME$$$$$
$$$$$$$$$$$$$$$$$$$$$$$$DGN$$$$$$$$$$$$$$$$$$$$$$$
$$$$USERNAME$$$$$

STD. NO. EB_27_60S4

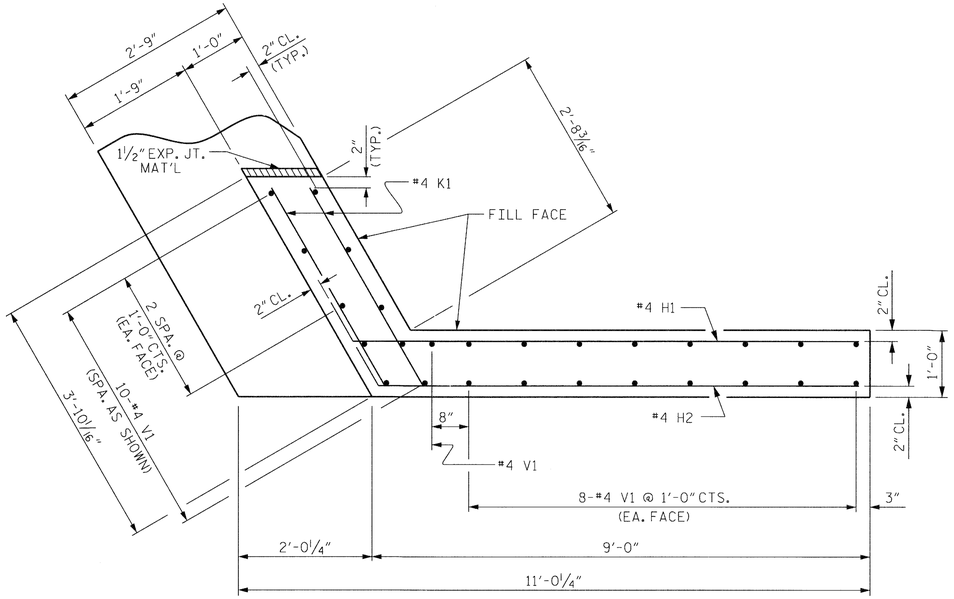

PLAN OF WING (W1)

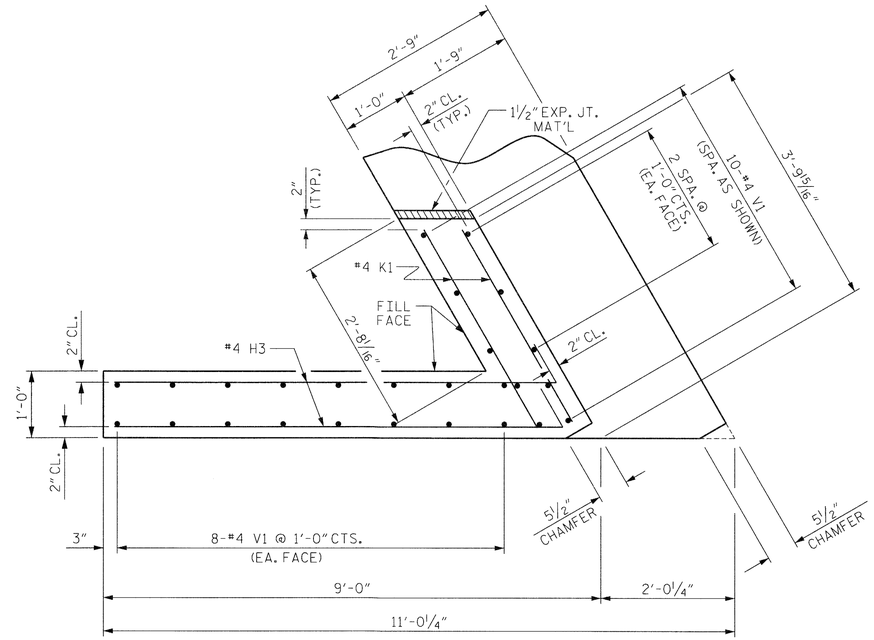

PLAN OF WING (W2)

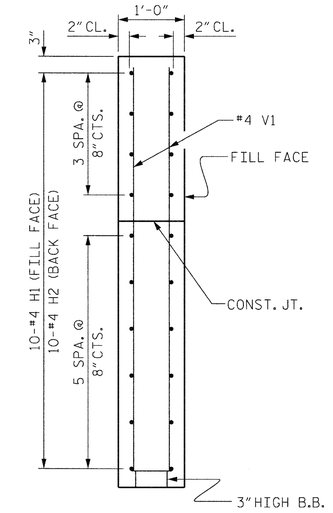

SECTION X-X

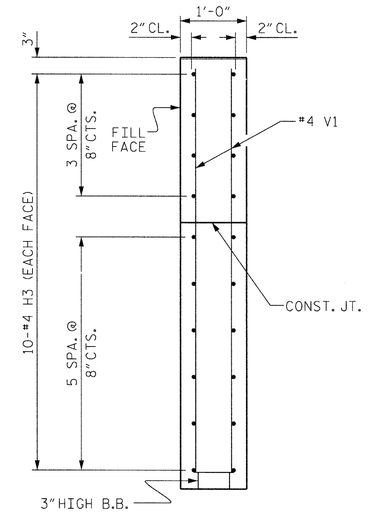

SECTION Y-Y

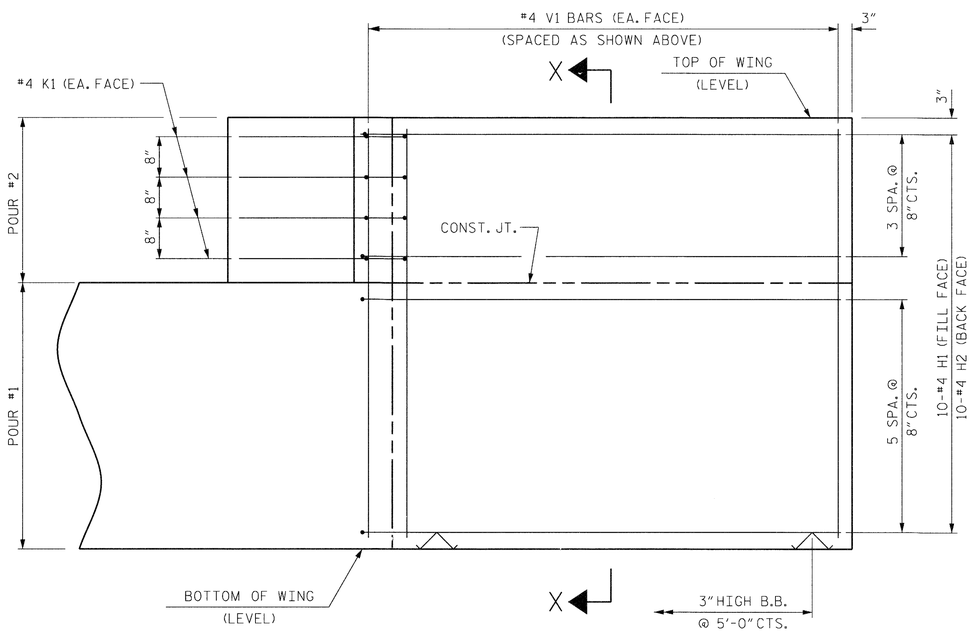

ELEVATION OF WING (W1)

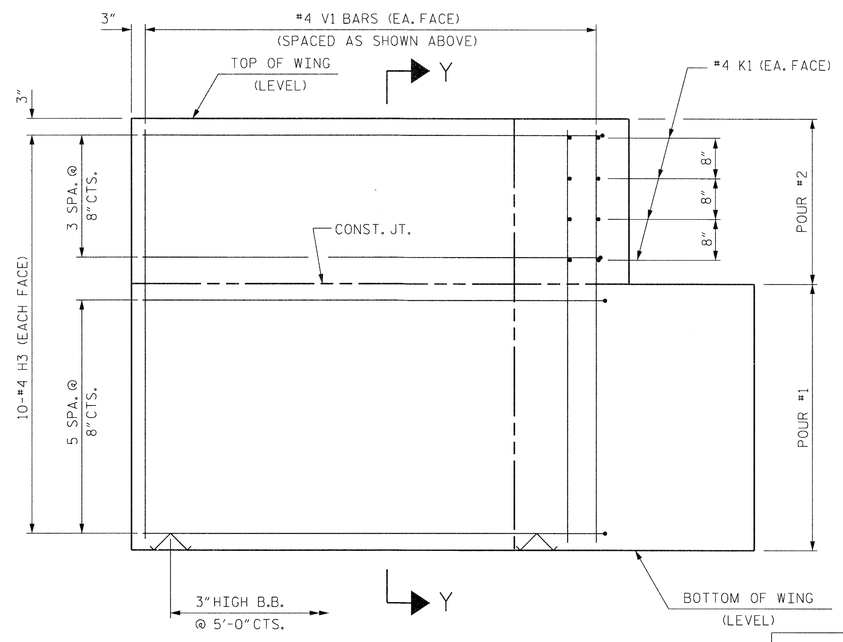

ELEVATION OF WING (W2)

WING DETAILS

PROJECT NO. BD-5113G

YANCEY COUNTY

STATION: 14+07.52 -L-

SHEET 3 OF 4

STATE OF NORTH CAROLINA
DEPARTMENT OF TRANSPORTATION
RALEIGH

SUBSTRUCTURE
END BENT NO.1
WING DETAILS

NORTH CAROLINA PROFESSIONAL SEAL 19774 ENGINEER HARDY L. WILLIS 3/5/14

REVISIONS						SHEET NO.
NO.	BY:	DATE:	NO.	BY:	DATE:	S-14
1			3			TOTAL SHEETS
2			4			22

ASSEMBLED BY :	DPP	DATE :	10/13
CHECKED BY :	RTS	DATE :	10/13
DRAWN BY :	WJH	12/11	
CHECKED BY :	AAC	12/11	

$$$$$$SYSTIME$$$$$
$$$$$$$$$$$$$$$$$$$$$$DGN$$$$$$$$$$$$$$$$$$$$$$
$$$$USERNAME$$$$

STD. NO. EB_27_60S4

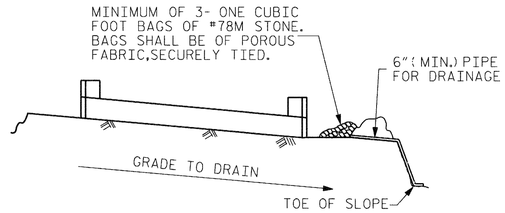

BAGGED STONE AND PIPE SHALL BE PLACED IMMEDIATELY AFTER COMPLETION OF END BENT EXCAVATION. PIPE MAY BE EITHER CONCRETE, CORRUGATED STEEL, CORRUGATED ALUMINUM ALLOY, OR CORRUGATED PLASTIC. PERFORATED PIPE WILL NOT BE ALLOWED.

BAGGED STONE SHALL REMAIN IN PLACE UNTIL THE ENGINEER DIRECTS THAT IT BE REMOVED. THE CONTRACTOR SHALL REMOVE AND DISPOSE OF SILT ACCUMULATIONS AT BAGGED STONE WHEN SO DIRECTED BY THE ENGINEER. BAGS SHALL BE REMOVED AND REPLACED WHENEVER THE ENGINEER DETERMINES THAT THEY HAVE DETERIORATED AND LOST THEIR EFFECTIVENESS.

NO SEPARATE PAYMENT WILL BE MADE FOR THIS WORK AND THE ENTIRE COST OF THIS WORK SHALL BE INCLUDED IN THE UNIT CONTRACT PRICE BID FOR THE SEVERAL PAY ITEMS.

TEMPORARY DRAINAGE AT END BENT

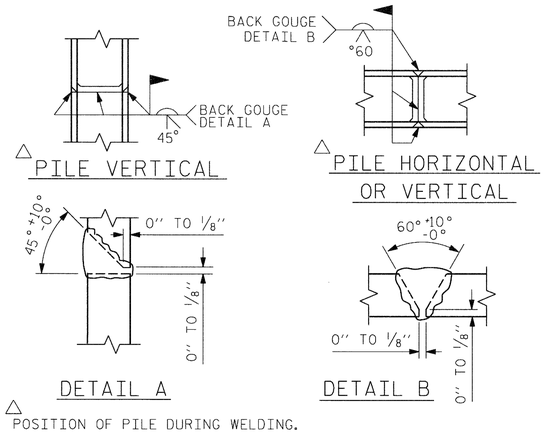

△ POSITION OF PILE DURING WELDING.

PILE SPLICE DETAILS

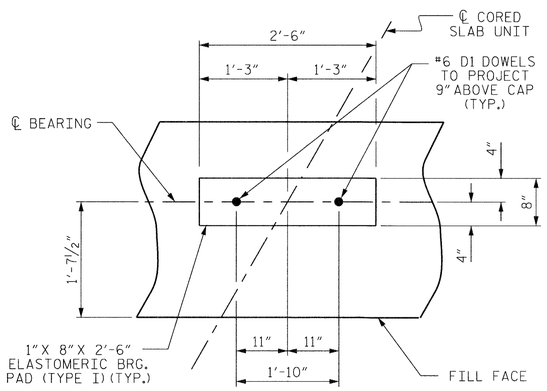

DETAIL "A"

(END BENT No. 1 SHOWN, END BENT No. 2 SIMILAR BY ROTATION)

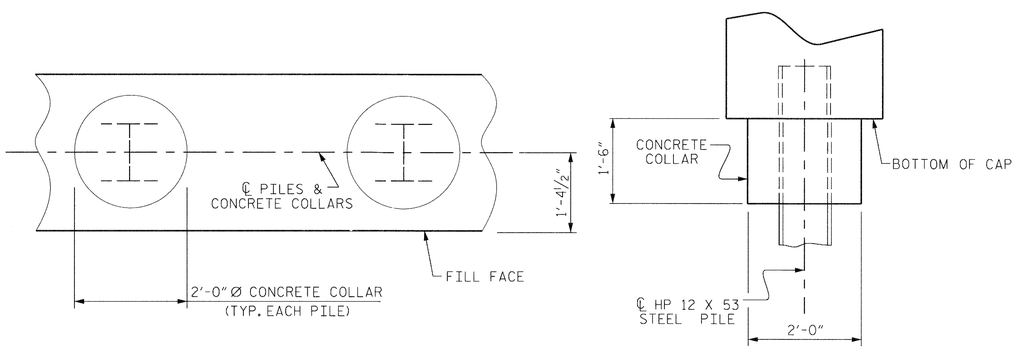

PLAN

ELEVATION

CORROSION PROTECTION FOR STEEL PILES DETAIL

BAR TYPES

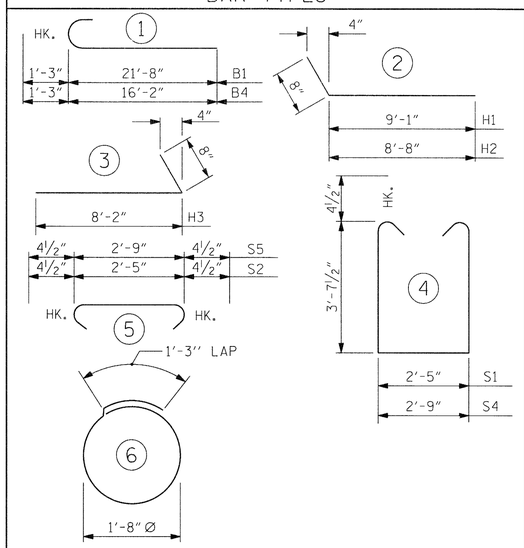

ALL BAR DIMENSIONS ARE OUT TO OUT.

END BENT No. 1
HP 12 X 53 STEEL PILES
NO: 5 LIN. FT.= 63

BILL OF MATERIAL FOR END BENT NO. 1

STAGE I

BAR	NO.	SIZE	TYPE	LENGTH	WEIGHT
B1	8	#9	1	22'-11"	623
B2	14	#4	STR	23'-3"	217
B3	5	#4	STR	2'-5"	8
D1	10	#6	STR	1'-6"	23
H1	10	#4	2	9'-9"	65
H2	10	#4	2	9'-4"	62
K1	8	#4	STR	3'-3"	17
S1	27	#4	4	10'-5"	188
S2	27	#4	5	3'-2"	57
S3	12	#4	6	6'-6"	52
S4	1	#4	4	10'-9"	7
S5	1	#4	5	3'-6"	2
V1	27	#4	STR	6'-2"	111

REINFORCING STEEL (FOR STAGE I) 1432 LBS.

CLASS A CONCRETE BREAKDOWN (FOR STAGE I)

POUR #1 CAP, LOWER PART OF WINGS & COLLARS 10.3 C.Y.

POUR #2 UPPER PART OF WINGS 1.1 C.Y.

TOTAL CLASS A CONCRETE 11.4 C.Y.

STAGE II

BAR	NO.	SIZE	TYPE	LENGTH	WEIGHT
B3	4	#4	STR	2'-5"	6
B4	8	#9	1	17'-5"	474
B5	14	#4	STR	16'-11"	158
D1	8	#6	STR	1'-6"	18
H3	20	#4	3	8'-10"	118
K1	8	#4	STR	3'-3"	17
S1	24	#4	4	10'-5"	167
S2	24	#4	5	3'-2"	51
S3	8	#4	6	6'-6"	35
S4	1	#4	4	10'-9"	7
S5	1	#4	5	3'-6"	2
V1	26	#4	STR	6'-2"	107

REINFORCING STEEL (FOR STAGE II) 1160 LBS.

CLASS A CONCRETE BREAKDOWN (FOR STAGE II)

POUR #1 CAP, LOWER PART OF WINGS & COLLARS 8.6 C.Y.

POUR #2 UPPER PART OF WINGS 1.1 C.Y.

TOTAL CLASS A CONCRETE 9.7 C.Y.

TOTAL BILL OF MATERIAL

	CLASS A CONCRETE	REINFORCING STEEL	HP 12X53 STEEL PILES		PILE EXCAVATION IN SOIL	PILE EXCAVATION NOT IN SOIL
	CU. YDS.	LBS.	NO.	LIN. FT.	LIN. FT.	LIN. FT.
END BENT No. 1	21.1	2592	5	63	25	25

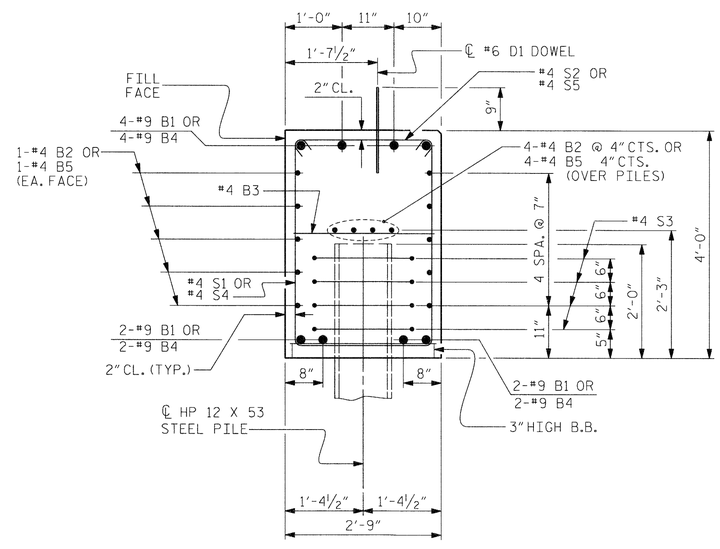

SECTION A-A

(CONCRETE COLLAR NOT SHOWN FOR CLARITY. SEE "CORROSION PROTECTION FOR STEEL PILES DETAIL.")

PROJECT NO. BD-5113G
YANCEY COUNTY
STATION: 14+07.52 -L-

SHEET 4 OF 4

STATE OF NORTH CAROLINA
DEPARTMENT OF TRANSPORTATION
RALEIGH

SUBSTRUCTURE

END BENT No. 1 DETAILS

NORTH CAROLINA PROFESSIONAL SEAL 30777 ENGINEER HARDY L. WILLIS 3/5/14

REVISIONS						SHEET NO.
NO.	BY:	DATE:	NO.	BY:	DATE:	S-15
1			3			TOTAL SHEETS
2			4			22

ASSEMBLED BY :	DPP	DATE :	10/13
CHECKED BY :	RTS	DATE :	10/13
DRAWN BY :	WJH	12/11	
CHECKED BY :	AAC	12/11	

$$$$$$SYSTIME$$$$$
$$$$$$$$$$$$$$$$$$$$$$DGN$$$$$$$$$$$$$$$$$$$$$$$
$$$$USERNAME$$$$

STD. NO. EB_27_60S4

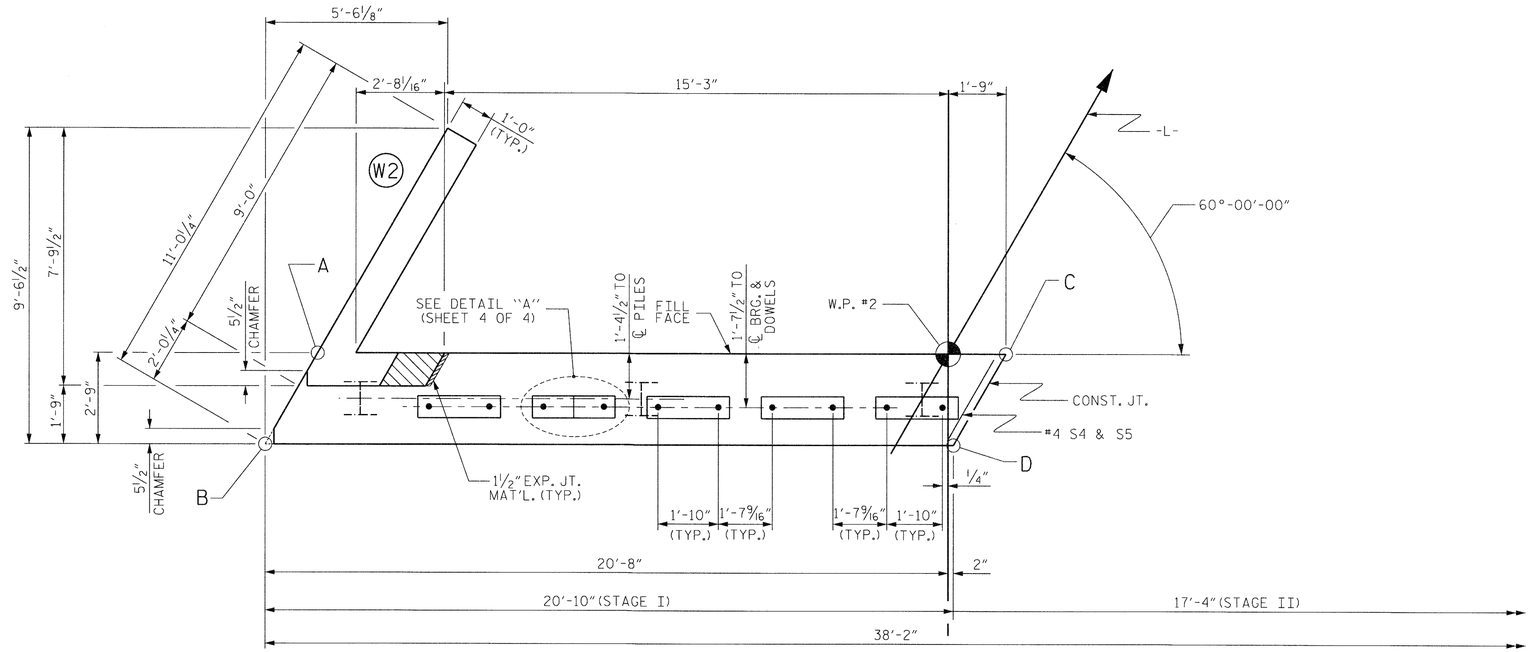

PLAN

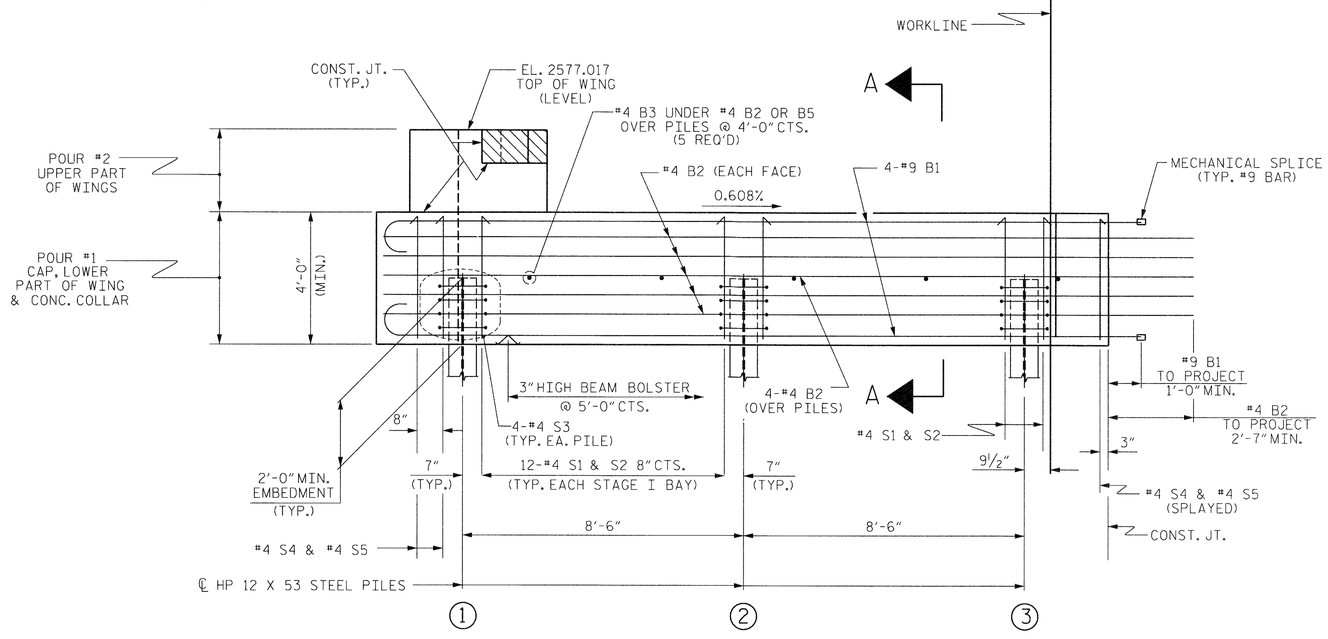

ELEVATION

WINGS NOT SHOWN FOR CLARITY.
FOR SECTION A-A, SEE SHEET 4 OF 4.
CONCRETE COLLARS FOR STEEL PILES NOT SHOWN IN PLAN AND ELEVATION VIEWS FOR CLARITY.
SEE "CORROSION PROTECTION FOR STEEL PILES DETAIL", SHEET 4 OF 4.

NOTES

STIRRUPS IN CAP MAY BE SHIFTED AS NECESSARY TO CLEAR DOWELS.

THE CONCRETE IN THE SHADED AREA OF THE WING SHALL BE POURED AFTER THE VERTICAL CONCRETE BARRIER RAIL IS CAST IF SLIP FORMING IS USED.

FOR PILE SPLICE DETAILS, SEE SHEET 4 OF 4.

FOR WING DETAILS, SEE SHEET 3 OF 4.

ELEVATIONS OF NOTED POINTS		
	TOP OF CAP	BOTTOM OF CAP
POINT A	2574.517	2570.517
POINT B	2574.446	2570.446
POINT C	2574.391	2570.391
POINT D	2574.319	2570.319

TOP OF PILE ELEVATIONS	
1	2572.459
2	2572.407
3	2572.356

PROJECT NO. BD-5113G
YANCEY COUNTY
STATION: 14+07.52 -L-

SHEET 1 OF 4

STATE OF NORTH CAROLINA
DEPARTMENT OF TRANSPORTATION
RALEIGH

SUBSTRUCTURE
END BENT No. 2
STAGE I

NORTH CAROLINA PROFESSIONAL ENGINEER SEAL HARDY L. WILLIS 3/5/14

REVISIONS						SHEET NO.
NO.	BY:	DATE:	NO.	BY:	DATE:	S-16
1			3			TOTAL SHEETS
2			4			22

ASSEMBLED BY : DPP		DATE : 10/13	
CHECKED BY : RTS		DATE : 10/13	
DRAWN BY : WJH	12/11		
CHECKED BY : AAC	12/11		

$$$$$$SYSTIME$$$$$
$$$$$$$$$$$$$$$$$$$$$$$$DGN$$$$$$$$$$$$$$$$$$$$$$$$
$$$$USERNAME$$$$

STD. NO. EB_27_60S4

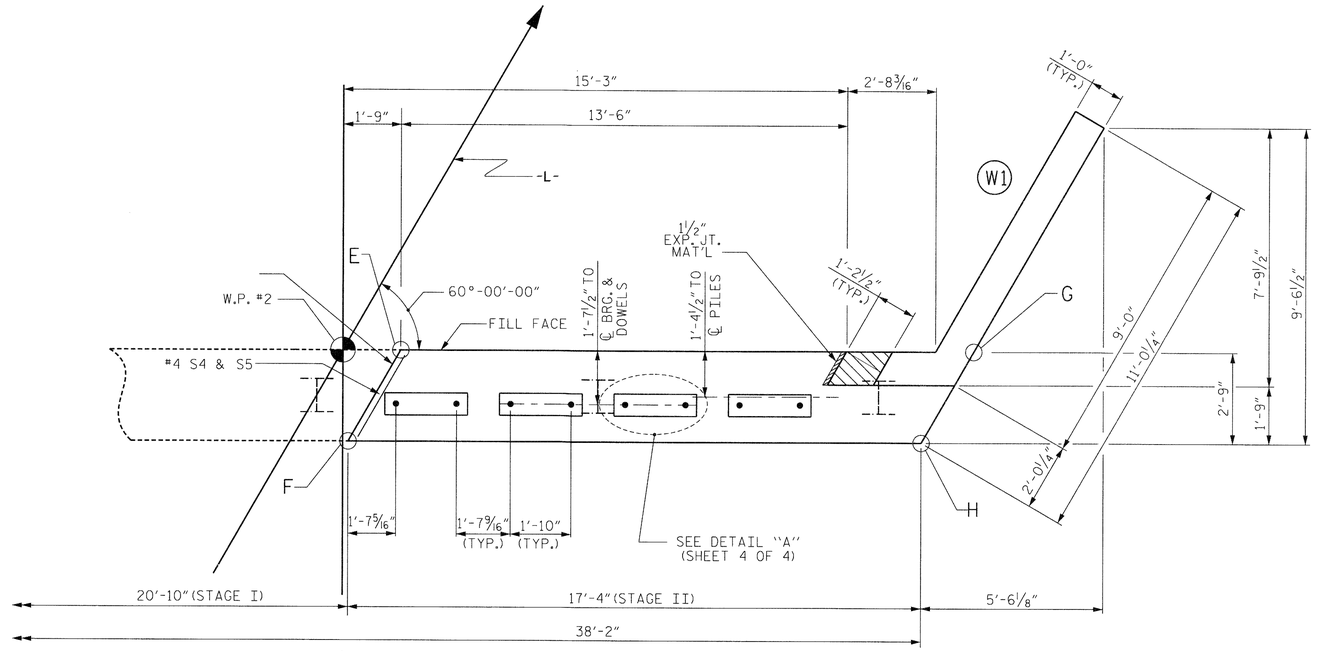

PLAN

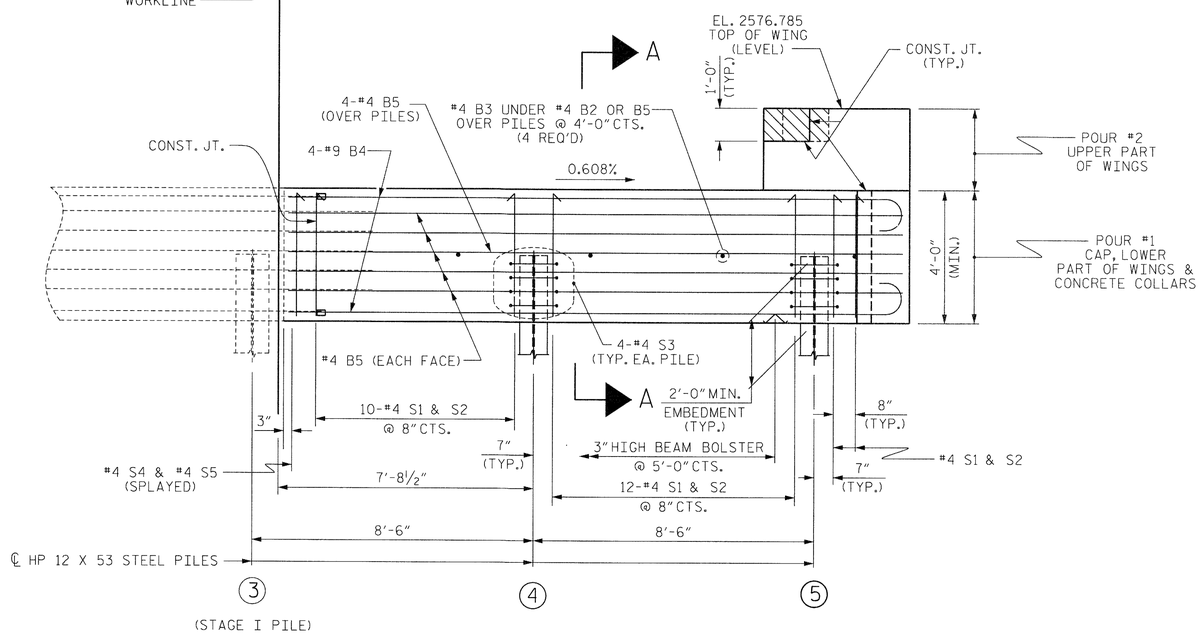

ELEVATION

WINGS NOT SHOWN FOR CLARITY.
FOR SECTION A-A, SEE SHEET 4 OF 4.
CONCRETE COLLARS FOR STEEL PILES NOT SHOWN IN PLAN AND ELEVATION VIEWS FOR CLARITY.
SEE "CORROSION PROTECTION FOR STEEL PILES DETAIL", SHEET 4 OF 4.

NOTES

STIRRUPS IN CAP MAY BE SHIFTED AS NECESSARY TO CLEAR DOWELS.

THE CONCRETE IN THE SHADED AREA OF THE WING SHALL BE POURED AFTER THE VERTICAL CONCRETE BARRIER RAIL IS CAST IF SLIP FORMING IS USED.

FOR PILE SPLICE DETAILS, SEE SHEET 4 OF 4.

FOR WING DETAILS, SEE SHEET 3 OF 4.

ELEVATIONS OF NOTED POINTS		
	TOP OF CAP	BOTTOM OF CAP
POINT E	2574.391	2570.391
POINT F	2574.319	2570.319
POINT G	2574.285	2570.285
POINT H	2574.214	2570.214

TOP OF PILE ELEVATIONS	
4	2572.304
5	2572.253

PROJECT NO. BD-5113G
YANCEY COUNTY
STATION: 14+07.52 -L-

SHEET 2 OF 4

STATE OF NORTH CAROLINA
DEPARTMENT OF TRANSPORTATION
RALEIGH

SUBSTRUCTURE
END BENT No. 2
STAGE II

NORTH CAROLINA PROFESSIONAL SEAL 10774 ENGINEER HARDY L. WILLIS
7/5/14

REVISIONS						
NO.	BY:	DATE:	NO.	BY:	DATE:	
1			3			
2			4			

SHEET NO. S-17
TOTAL SHEETS 22

ASSEMBLED BY : DPP	DATE : 10/13	
CHECKED BY : RTS	DATE : 10/13	
DRAWN BY : WJH 12/11		
CHECKED BY : AAC 12/11		

$$$$$$SYSTIME$$$$$
$$$$$$$$$$$$$$$$$$$$$$$$DGN$$$$$$$$$$$$$$$$$$$$$$$$
$$$$USERNAME$$$$

STD. NO. EB_27_60S4

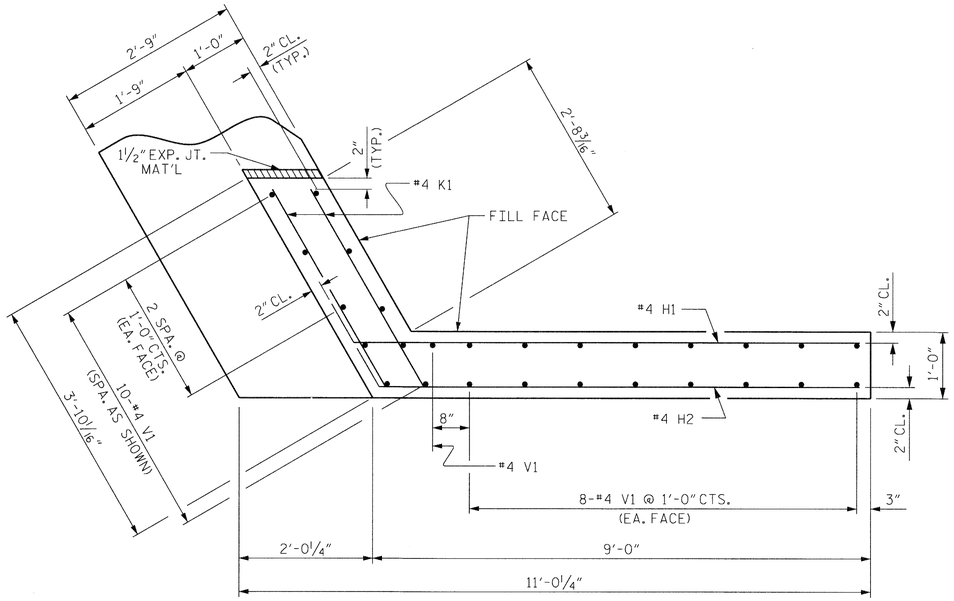

PLAN OF WING (W1)

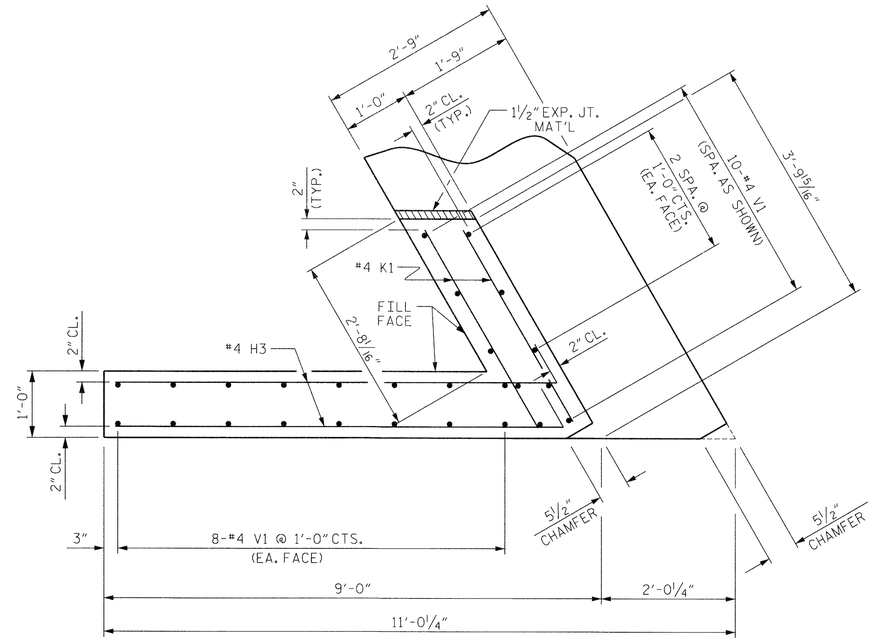

PLAN OF WING (W2)

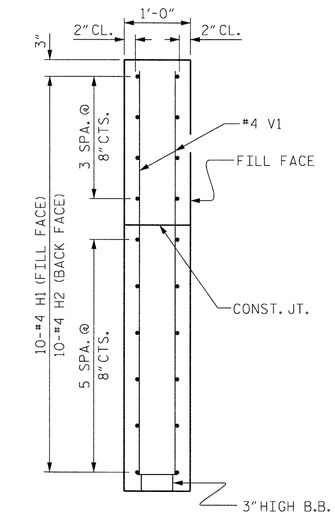

SECTION X-X

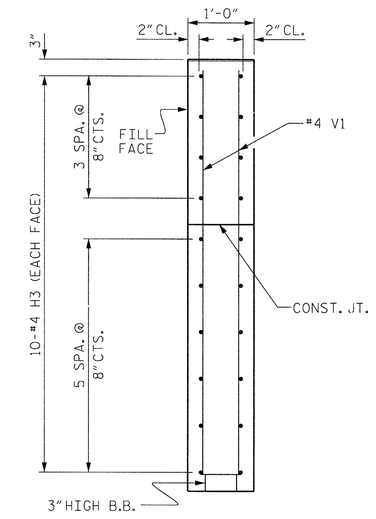

SECTION Y-Y

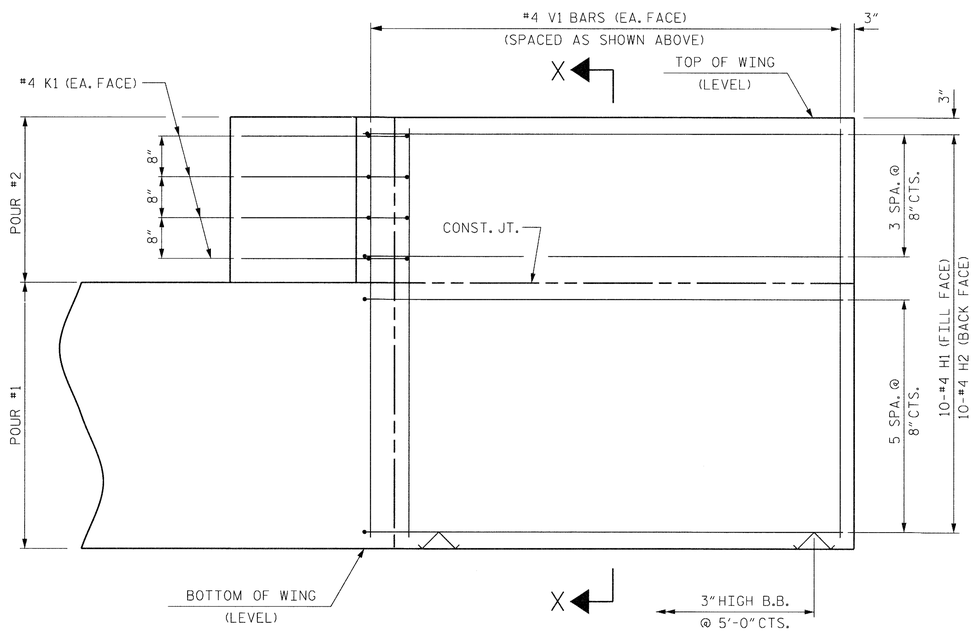

ELEVATION OF WING (W1)

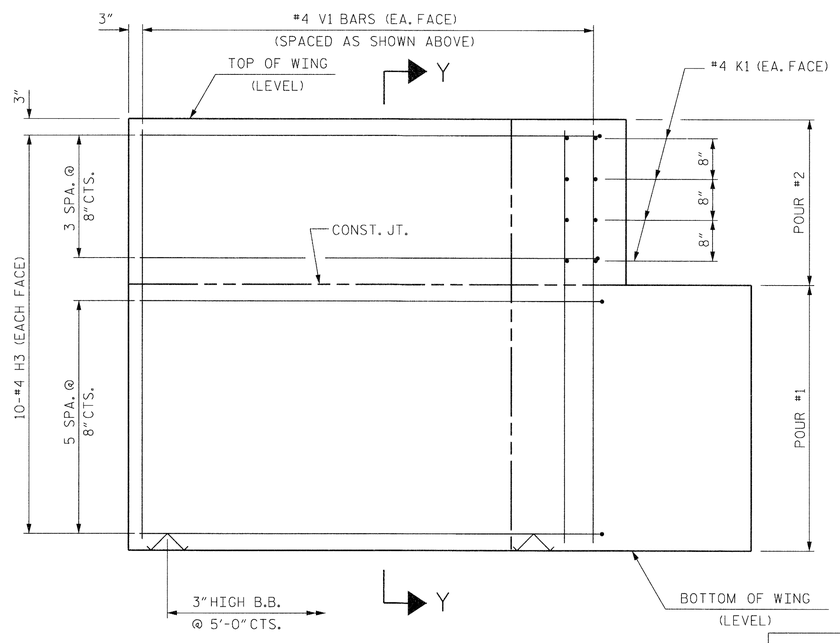

ELEVATION OF WING (W2)

WING DETAILS

PROJECT NO. BD-5113G

YANCEY COUNTY

STATION: 14+07.52 -L-

SHEET 3 OF 4

STATE OF NORTH CAROLINA
DEPARTMENT OF TRANSPORTATION
RALEIGH

SUBSTRUCTURE
END BENT NO. 2
WING DETAILS

NORTH CAROLINA PROFESSIONAL SEAL ENGINEER HARDY L. WILLIS 3/5/14

REVISIONS						SHEET NO.
NO.	BY:	DATE:	NO.	BY:	DATE:	S-18
1			3			TOTAL SHEETS
2			4			22

ASSEMBLED BY :	DPP	DATE :	10/13
CHECKED BY :	RTS	DATE :	10/13
DRAWN BY :	WJH	12/11	
CHECKED BY :	AAC	12/11	

$$$$$$SYSTIME$$$$$
$$$$$$$$$$$$$$$$$$$$$$$$DGN$$$$$$$$$$$$$$$$$$$$$$$$
$$$$USERNAME$$$$

STD. NO. EB_27_60S4

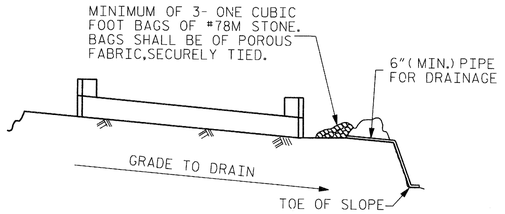

BAGGED STONE AND PIPE SHALL BE PLACED IMMEDIATELY AFTER COMPLETION OF END BENT EXCAVATION. PIPE MAY BE EITHER CONCRETE, CORRUGATED STEEL, CORRUGATED ALUMINUM ALLOY, OR CORRUGATED PLASTIC. PERFORATED PIPE WILL NOT BE ALLOWED.

BAGGED STONE SHALL REMAIN IN PLACE UNTIL THE ENGINEER DIRECTS THAT IT BE REMOVED. THE CONTRACTOR SHALL REMOVE AND DISPOSE OF SILT ACCUMULATIONS AT BAGGED STONE WHEN SO DIRECTED BY THE ENGINEER. BAGS SHALL BE REMOVED AND REPLACED WHENEVER THE ENGINEER DETERMINES THAT THEY HAVE DETERIORATED AND LOST THEIR EFFECTIVENESS.

NO SEPARATE PAYMENT WILL BE MADE FOR THIS WORK AND THE ENTIRE COST OF THIS WORK SHALL BE INCLUDED IN THE UNIT CONTRACT PRICE BID FOR THE SEVERAL PAY ITEMS.

TEMPORARY DRAINAGE AT END BENT

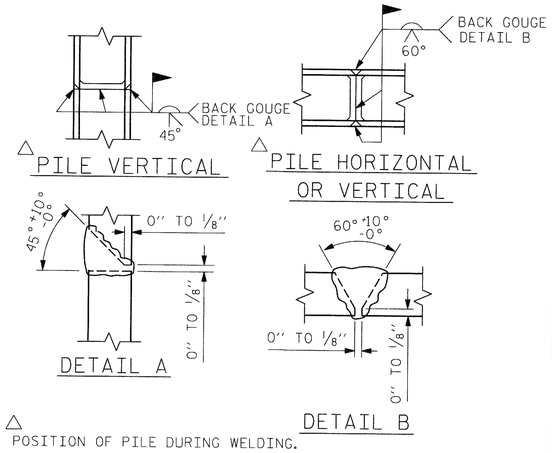

PILE SPLICE DETAILS

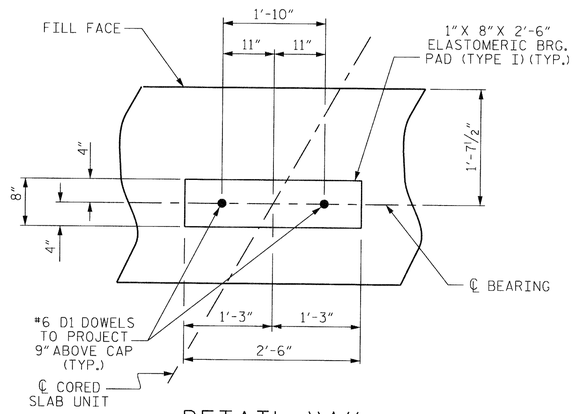

DETAIL "A"

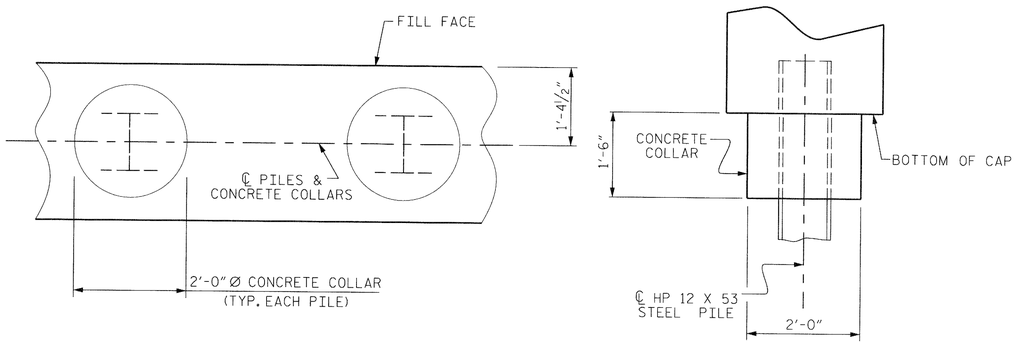

CORROSION PROTECTION FOR STEEL PILES DETAIL

BAR TYPES

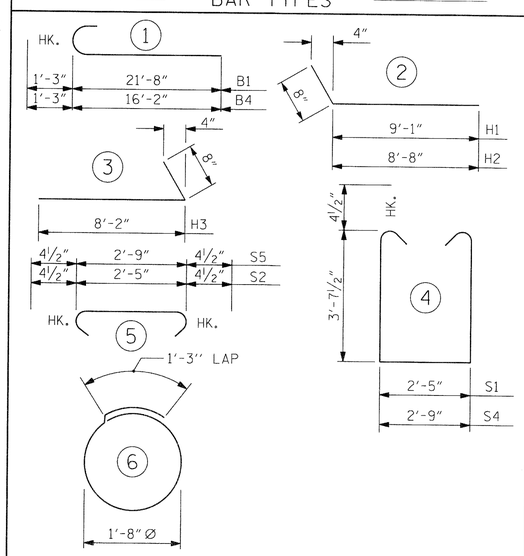

ALL BAR DIMENSIONS ARE OUT TO OUT.

END BENT No. 2
HP 12 X 53 STEEL PILES
NO: 5 LIN. FT.= 63

BILL OF MATERIAL FOR END BENT NO. 2

STAGE I

BAR	NO.	SIZE	TYPE	LENGTH	WEIGHT
B1	8	#9	1	22'-11"	623
B2	14	#4	STR	23'-3"	217
B3	5	#4	STR	2'-5"	8
D1	10	#6	STR	1'-6"	23
H3	20	#4	3	8'-10"	118
K1	8	#4	STR	3'-3"	17
S1	27	#4	4	10'-5"	188
S2	27	#4	5	3'-2"	57
S3	12	#4	6	6'-6"	52
S4	1	#4	4	10'-9"	7
S5	1	#4	5	3'-6"	2
V1	26	#4	STR	6'-2"	107

REINFORCING STEEL (FOR STAGE I) 1419 LBS.

CLASS A CONCRETE BREAKDOWN (FOR STAGE I)

POUR #1 CAP, LOWER PART OF WINGS & COLLARS 10.3 C.Y.

POUR #2 UPPER PART OF WINGS 1.1 C.Y.

TOTAL CLASS A CONCRETE 11.4 C.Y.

STAGE II

BAR	NO.	SIZE	TYPE	LENGTH	WEIGHT
B3	4	#4	STR	2'-5"	6
B4	8	#9	1	17'-5"	474
B5	14	#4	STR	16'-11"	158
D1	8	#6	STR	1'-6"	18
H1	10	#4	2	9'-9"	65
H2	10	#4	2	9'-4"	62
K1	8	#4	STR	3'-3"	17
S1	24	#4	4	10'-5"	167
S2	24	#4	5	3'-2"	51
S3	8	#4	6	6'-6"	35
S4	1	#4	4	10'-9"	7
S5	1	#4	5	3'-6"	2
V1	27	#4	STR	6'-2"	111

REINFORCING STEEL (FOR STAGE II) 1173 LBS.

CLASS A CONCRETE BREAKDOWN (FOR STAGE II)

POUR #1 CAP, LOWER PART OF WINGS & COLLARS 8.6 C.Y.

POUR #2 UPPER PART OF WINGS 1.1 C.Y.

TOTAL CLASS A CONCRETE 9.7 C.Y.

TOTAL BILL OF MATERIAL

	CLASS A CONCRETE	REINFORCING STEEL	HP 12X53 STEEL PILES		PILE EXCAVATION IN SOIL	PILE EXCAVATION NOT IN SOIL
	CU. YDS.	LBS.	NO.	LIN. FT.	LIN. FT.	LIN. FT.
END BENT No. 1	21.1	2592	5	63	25	25

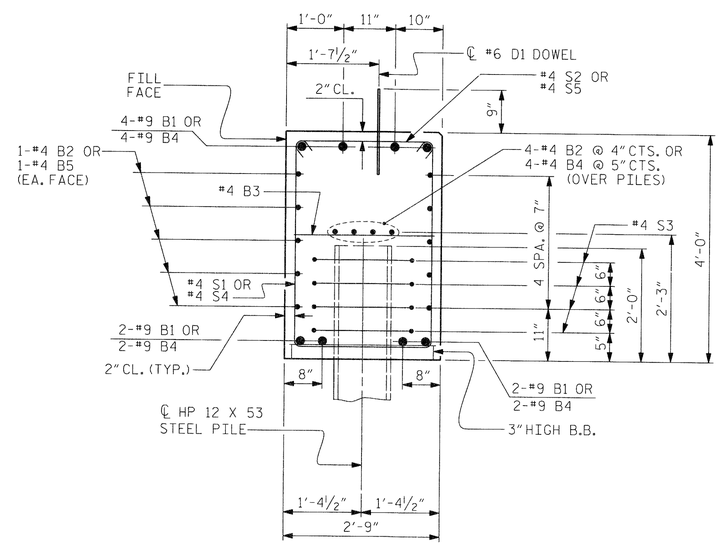

SECTION A-A

(CONCRETE COLLAR NOT SHOWN FOR CLARITY. SEE "CORROSION PROTECTION FOR STEEL PILES DETAIL.")

PROJECT NO. BD-5113G
YANCEY COUNTY
STATION: 14+07.52 -L-

SHEET 4 OF 4

STATE OF NORTH CAROLINA
DEPARTMENT OF TRANSPORTATION
RALEIGH

SUBSTRUCTURE

END BENT No. 2 DETAILS

NORTH CAROLINA PROFESSIONAL SEAL 17777 ENGINEER HARDY L. WILLIS 3/5/14

REVISIONS								SHEET NO.
NO.	BY:	DATE:	NO.	BY:	DATE:			S-19
1			3					TOTAL SHEETS
2			4					22

ASSEMBLED BY :	DPP	DATE :	10/13
CHECKED BY :	RTS	DATE :	10/13
DRAWN BY : WJH	12/11		
CHECKED BY : AAC	12/11		

$$$$$$SYSTIME$$$$$
$$$$$$$$$$$$$$$$$$$$$$$$DGN$$$$$$$$$$$$$$$$$$$$$$$$
$$$$USERNAME$$$$

STD. NO. EB 27 60S4

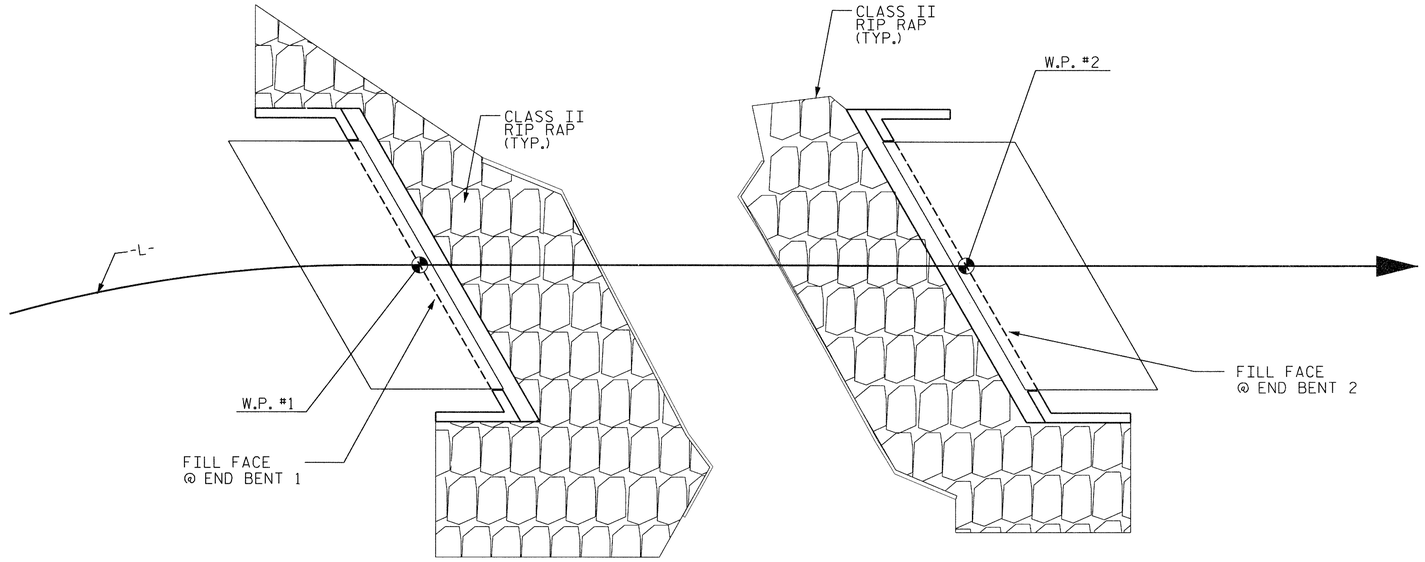

END BENT NO. 1

END BENT NO. 2

PLAN

NOTES :

PLACE RIP RAP ON ALL EXCAVATED AREAS.

ESTIMATED QUANTITIES		
BRIDGE @ STA. 14+07.52	RIP RAP CLASS II (2'-0" THICK)	GEOTEXTILE FOR DRAINAGE
	TONS	SQUARE YARDS
END BENT 1	105	119
END BENT 2	85	96

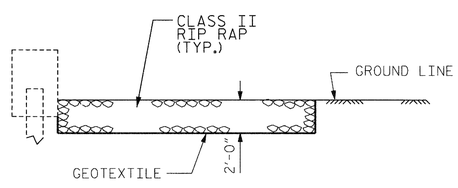

℄ SECTION
@ END BENT NO. 1

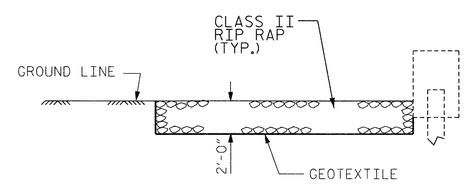

℄ SECTION
@ END BENT NO. 2

PROJECT NO. BD-5113G

YANCEY COUNTY

STATION: 14+07.52 -L-

STATE OF NORTH CAROLINA
DEPARTMENT OF TRANSPORTATION
RALEIGH

STANDARD

RIP RAP DETAILS

NORTH CAROLINA PROFESSIONAL SEAL 027711 ENGINEER HARDY L. WILLIS 9/5/14

REVISIONS						SHEET NO.
NO.	BY:	DATE:	NO.	BY:	DATE:	S-20
1			3			TOTAL SHEETS
2			4			22

ASSEMBLED BY : RWW	DATE : 10/13	
CHECKED BY : DTS	DATE : 10/13	
DRAWN BY : REK 1/84	REV. 5/1/06R	TLA/GM
CHECKED BY : RDU 1/84	REV. 10/1/11	MAA/GM
	REV. 12/21/11	MAA/GM

STD. NO. RR1

$$$$$$$SYSTIME$$$$$
$$$$$$$$$$$$$$$$$$$$$$DGN$$$$$$$$$$$$$$$$$$$$$$$
$$$$USERNAME$$$$

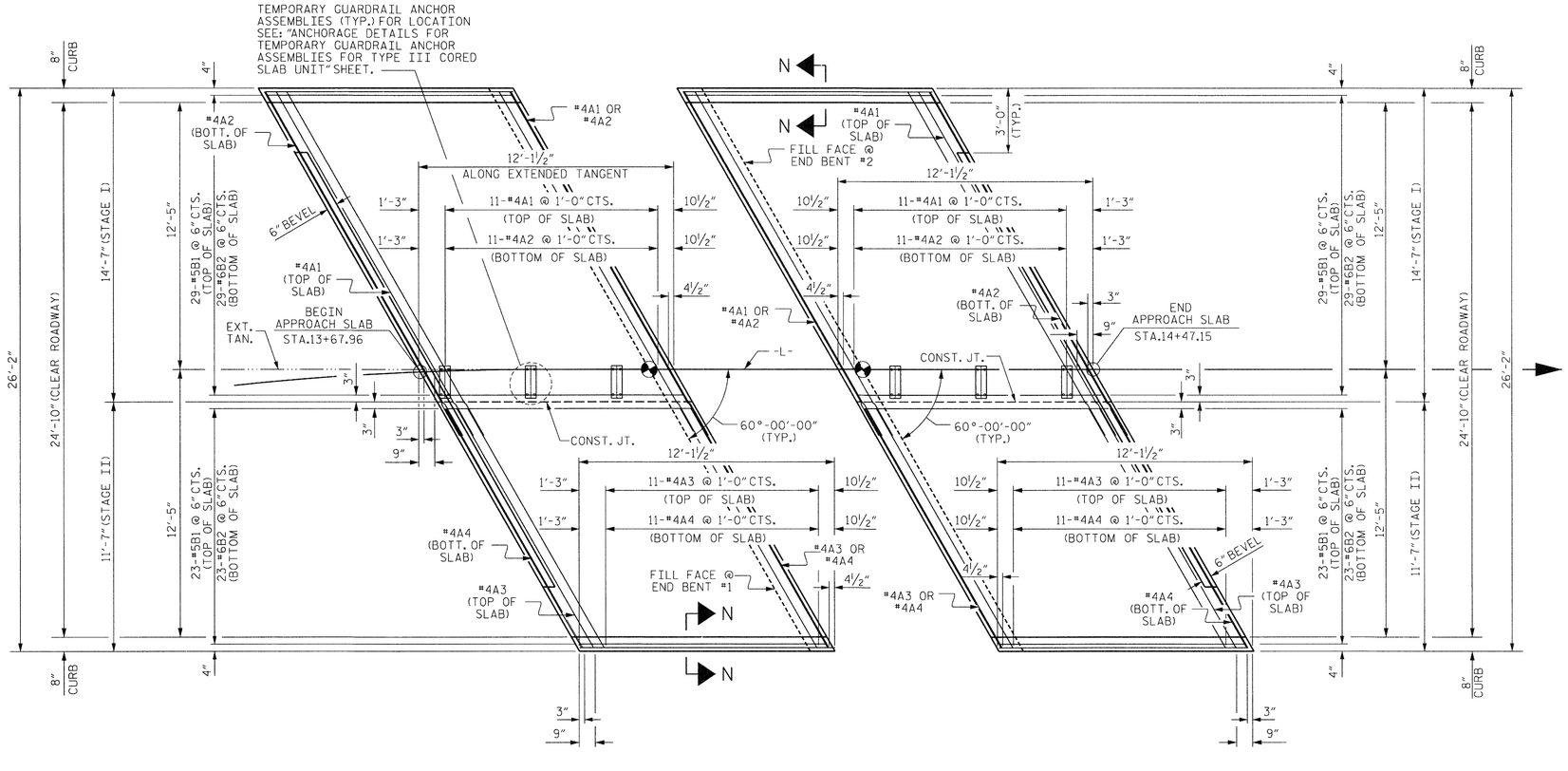

PLAN @ END BENT #1

PLAN @ END BENT #2

DIMENSIONS SHOWN ARE TYPICAL FOR BOTH APPROACH SLABS

BILL OF MATERIAL

APPROACH SLAB AT EB #1 STAGE I

BAR	NO.	SIZE	TYPE	LENGTH	WEIGHT
* A1	13	#4	STR	18'-10"	164
A2	13	#4	STR	18'-7"	161
* B1	29	#5	STR	11'-1"	335
B2	29	#6	STR	11'-7"	499
REINFORCING STEEL				LBS.	665
* EPOXY COATED REINFORCING STEEL				LBS.	499
CLASS AA CONCRETE				C.Y.	8.6

APPROACH SLAB AT EB #2 STAGE I

BAR	NO.	SIZE	TYPE	LENGTH	WEIGHT
* A1	13	#4	STR	18'-10"	164
A2	13	#4	STR	18'-7"	161
* B1	29	#5	STR	11'-1"	335
B2	29	#6	STR	11'-7"	499
REINFORCING STEEL				LBS.	665
* EPOXY COATED REINFORCING STEEL				LBS.	499
CLASS AA CONCRETE				C.Y.	8.6

APPROACH SLAB AT EB #1 STAGE II

BAR	NO.	SIZE	TYPE	LENGTH	WEIGHT
* A3	13	#4	STR	13'-0"	113
A4	13	#4	STR	13'-0"	113
* B1	23	#5	STR	11'-1"	266
B2	23	#6	STR	11'-7"	400
REINFORCING STEEL				LBS.	513
* EPOXY COATED REINFORCING STEEL				LBS.	379
CLASS AA CONCRETE				C.Y.	6.8

APPROACH SLAB AT EB #2 STAGE II

BAR	NO.	SIZE	TYPE	LENGTH	WEIGHT
* A3	13	#4	STR	13'-0"	113
A4	13	#4	STR	13'-0"	113
* B1	23	#5	STR	11'-1"	266
B2	23	#6	STR	11'-7"	400
REINFORCING STEEL				LBS.	513
* EPOXY COATED REINFORCING STEEL				LBS.	379
CLASS AA CONCRETE				C.Y.	6.8

SPLICE LENGTHS

BAR SIZE	EPOXY COATED	UNCOATED
#4	2'-0"	1'-9"
#5	2'-6"	2'-2"
#6	3'-10"	2'-7"

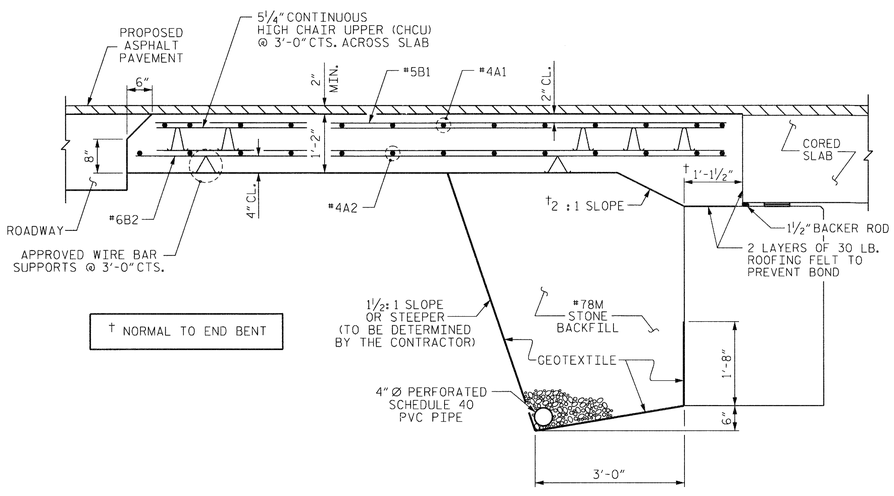

SECTION THRU SLAB

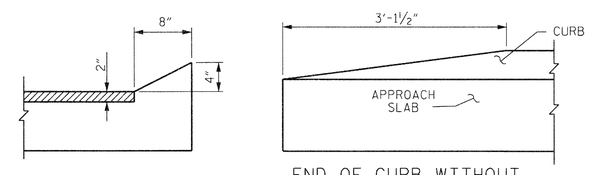

SECTION N-N

END OF CURB WITHOUT SHOULDER BERM GUTTER

CURB DETAILS

PROJECT NO. BD-5113G

YANCEY COUNTY

STATION: 14+07.52 -L-

SHEET 1 OF 2

STATE OF NORTH CAROLINA
DEPARTMENT OF TRANSPORTATION
RALEIGH

STANDARD
BRIDGE APPROACH SLAB
FOR PRESTRESSED CONCRETE
CORED SLAB UNIT
(SUB-REGIONAL TIER)
60° SKEW

NORTH CAROLINA PROFESSIONAL SEAL 20777 ENGINEER HARDY L. WILLIS 3/5/14

REVISIONS						SHEET NO.
NO.	BY:	DATE:	NO.	BY:	DATE:	S-21
1			3			TOTAL SHEETS
2			4			22

ASSEMBLED BY : DPP		DATE : 10/13	
CHECKED BY : RTS		DATE : 10/13	
DRAWN BY : SHS/MAA 5-09	REV. 12-11	MAA/AAC	
CHECKED BY : BCH 5-09			

$$$$$$SYSTIME$$$$$
$$$$$$$$$$$$$$$$$$$$$$$$DGN$$$$$$$$$$$$$$$$$$$$$$$
$$$$USERNAME$$$$

STD. NO. BAS_27_60S

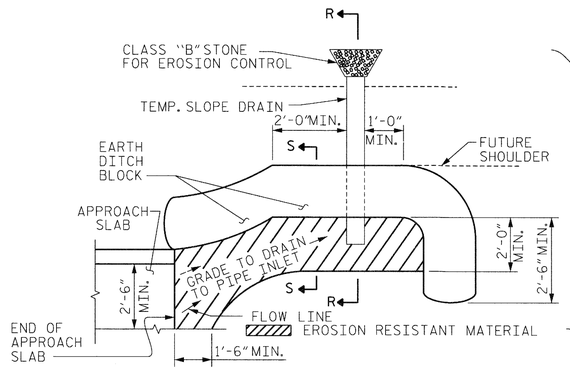

NOTE: IMMEDIATELY AFTER THE CONSTRUCTION OF THE APPROACH SLAB, THE CONTRACTOR SHALL PROVIDE TEMPORARY BERM AND SLOPE DRAIN. CONTRACTOR SHALL GRADE TO PIPE INLET AND PROVIDE EROSION RESISTANT MATERIAL AS SHOWN. THE EROSION RESISTANT MATERIAL SHALL BE EITHER 1) ASPHALT PLANT MIX, TYPE 1 OR TYPE 2, MIN. 2" DEPTH, 2) EROSION CONTROL MAT, OR 3) CONCRETE, AS DIRECTED BY THE ENGINEER. THE SLOPE DRAIN SHALL CONSIST OF A NON-PERFORATED TEMPORARY DRAINAGE PIPE, 12 INCHES IN DIAMETER.

PLAN VIEW

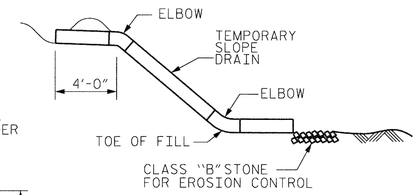

SECTION R-R

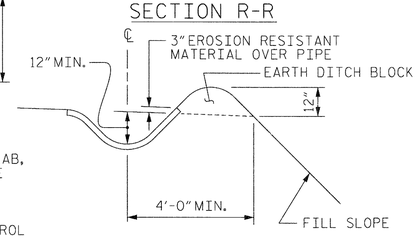

SECTION S-S

TEMPORARY BERM AND SLOPE DRAIN DETAILS

(TO BE USED WHEN SHOULDER BERM GUTTER IS REQUIRED)

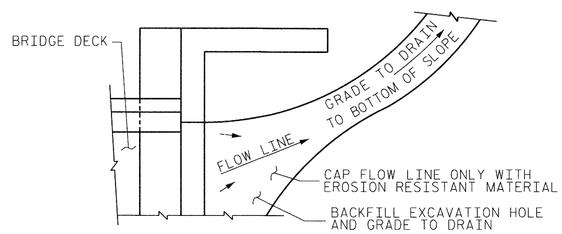

NOTE: IF THE APPROACH SLAB IS NOT CONSTRUCTED IMMEDIATELY AFTER THE BACKFILLING OF THE END BENT EXCAVATION, GRADE TO DRAIN TO THE BOTTOM OF THE SLOPE AND PROVIDE EROSION RESISTANT MATERIAL, SUCH AS FIBERGLASS ROVING OR AS DIRECTED BY THE ENGINEER TO PREVENT SOIL EROSION AND TO PROTECT THE AREA ADJACENT TO THE STRUCTURE. THE CONTRACTOR WILL BE REQUIRED TO REMOVE THESE MATERIALS PRIOR TO CONSTRUCTION OF THE APPROACH SLAB.

TEMPORARY DRAINAGE DETAIL

NOTES

FOR BRIDGE APPROACH FILL INCLUDING GEOTEXTILE, 4" Ø DRAINAGE PIPE, AND #78M STONE BACKFILL, SEE ROADWAY PLANS.

GEOTEXTILE SHALL BE TYPE 1IN ACCORDANCE WITH THE STANDARD SPECIFICATIONS SECTION 1056.

#78M STONE BACKFILL (CLASS V SELECT MATERIAL) SHALL BE IN ACCORDANCE WITH STANDARD SPECIFICATIONS SECTION 1016.

#78M STONE BACKFILL IS TO BE CONTINUOUS ALONG FILL FACE OF BACKWALL FROM OUTSIDE EDGE TO OUTSIDE EDGE OF APPROACH SLAB.

FOR THE 4" Ø DRAINAGE PIPE OUTLET(S), SEE ROADWAY STANDARD DRAWINGS.

AREA BETWEEN THE WINGWALL AND APPROACH SLAB SHALL BE GRADED TO DRAIN THE WATER AWAY FROM THE FILL FACE OF THE BRIDGE AND SHALL BE PAVED. SEE ROADWAY PLANS.

APPROACH SLAB GROOVING IS NOT REQUIRED.

PROJECT NO. BD-5113G

YANCEY COUNTY

STATION: 14+07.52 -L-

SHEET 2 OF 2

STATE OF NORTH CAROLINA
DEPARTMENT OF TRANSPORTATION
RALEIGH

STANDARD
BRIDGE APPROACH SLAB
FOR PRESTRESSED CONCRETE
CORED SLAB UNIT
(SUB-REGIONAL TIER)
60° SKEW

NORTH CAROLINA PROFESSIONAL SEAL 027 ENGINEER HARDY L. WILLIS 3/5/14

REVISIONS						SHEET NO.
NO.	BY:	DATE:	NO.	BY:	DATE:	S-22
1			3			TOTAL SHEETS
2			4			22

ASSEMBLED BY :	DPP	DATE :	10/13
CHECKED BY :	RTS	DATE :	10/13
DRAWN BY : SHS/MAA	5-09	REV. 12-11	MAA/AAC
CHECKED BY : BCH	5-09		

$$$$$$SYSTIME$$$$$
$$$$$$$$$$$$$$$$$$$$DGN$$$$$$$$$$$$$$$$$$$$$
$$$$USERNAME$$$$

STD. NO. BAS_27_75S

STANDARD NOTES

DESIGN DATA:

SPECIFICATIONS	A.A.S.H.T.O. (CURRENT)
LIVE LOAD	SEE PLANS
IMPACT ALLOWANCE	SEE A.A.S.H.T.O.
STRESS IN EXTREME FIBER OF	
STRUCTURAL STEEL - AASHTO M270 GRADE 36	20,000 LBS. PER SQ. IN.
- AASHTO M270 GRADE 50W	27,000 LBS. PER SQ. IN.
- AASHTO M270 GRADE 50	27,000 LBS. PER SQ. IN.
REINFORCING STEEL IN TENSION	
GRADE 60	24,000 LBS. PER SQ. IN.
CONCRETE IN COMPRESSION	1,200 LBS. PER SQ. IN.
CONCRETE IN SHEAR	SEE A.A.S.H.T.O.
STRUCTURAL TIMBER - TREATED OR	
UNTREATED - EXTREME FIBER STRESS	1,800 LBS. PER SQ. IN.
COMPRESSION PERPENDICULAR TO GRAIN OF TIMBER	375 LBS. PER SQ. IN.
EQUIVALENT FLUID PRESSURE OF EARTH	30 LBS. PER CU. FT. (MINIMUM)

MATERIAL AND WORKMANSHIP:

EXCEPT AS MAY OTHERWISE BE SPECIFIED ON PLANS OR IN THE SPECIAL PROVISIONS, ALL MATERIAL AND WORKMANSHIP SHALL BE IN ACCORDANCE WITH THE 2012 "STANDARD SPECIFICATIONS FOR ROADS AND STRUCTURES" OF THE N. C. DEPARTMENT OF TRANSPORTATION.

STEEL SHEET PILING FOR PERMANENT OR TEMPORARY APPLICATIONS SHALL BE HOT ROLLED.

CONCRETE:

UNLESS OTHERWISE REQUIRED ON PLANS, CLASS A CONCRETE SHALL BE USED FOR ALL PORTIONS OF ALL STRUCTURES WITH THE EXCEPTION THAT: CLASS AA CONCRETE SHALL BE USED IN BRIDGE SUPERSTRUCTURES, ABUTMENT BACKWALLS, AND APPROACH SLABS; AND CLASS B CONCRETE SHALL BE USED FOR SLOPE PROTECTION AND RIP RAP.

CONCRETE CHAMFERS:

UNLESS OTHERWISE NOTED ON THE PLANS, ALL EXPOSED CORNERS ON STRUCTURES SHALL BE CHAMFERED 3/4" WITH THE FOLLOWING EXCEPTIONS: TOP CORNERS OF CURBS MAY BE ROUNDED TO 1-1/2" RADIUS WHICH IS BUILT INTO CURB FORMS; CORNERS OF TRANSVERSE FLOOR EXPANSION JOINTS SHALL BE ROUNDED WITH A 1/4" FINISHING TOOL UNLESS OTHERWISE REQUIRED ON PLANS; AND CORNERS OF EXPANSION JOINTS IN THE ROADWAY FACES AND TOPS OF CURBS AND SIDEWALKS SHALL BE ROUNDED TO A 1/4" RADIUS WITH A FINISHING STONE OR TOOL UNLESS OTHERWISE REQUIRED ON PLANS.

DOWELS:

DOWELS WHEN INDICATED ON PLANS AS FOR CULVERT EXTENSIONS, SHALL BE EMBEDDED AT LEAST 12" INTO THE OLD CONCRETE AND GROUTED INTO PLACE WITH 1:2 CEMENT MORTAR.

ALLOWANCE FOR DEAD LOAD DEFLECTION, SETTLEMENT, ETC. IN CASTING SUPERSTRUCTURES:

BRIDGES SHALL BE BUILT ON THE GRADE OR VERTICAL CURVE SHOWN ON PLANS. SLABS, CURBS AND PARAPETS SHALL CONFORM TO THE GRADE OR CURVE.

ALL DIMENSIONS WHICH ARE GIVEN IN SECTION AND ARE AFFECTED BY DEAD LOAD DEFLECTIONS ARE DIMENSIONS AT CENTER LINE OF BEARING UNLESS OTHERWISE NOTED ON PLANS. IN SETTING FORMS FOR STEEL BEAM BRIDGES AND PRESTRESSED CONCRETE GIRDER BRIDGES, ADJUSTMENTS SHALL BE MADE DUE TO THE DEAD LOAD DEFLECTIONS FOR THE ELEVATIONS SHOWN. WHERE BLOCKS ARE SHOWN OVER BEAMS FOR BUILDING UP TO THE SLAB, THE VERTICAL DIMENSIONS OF THE BLOCKS SHALL BE ADJUSTED BETWEEN BEARINGS TO COMPENSATE FOR DEAD LOAD DEFLECTIONS, VERTICAL CURVE ORDINATE, AND ACTUAL BEAM CAMBER. WHERE BOTTOM OF SLAB IS IN LINE WITH BOTTOM OF TOP FLANGES, DEPTH OF SLAB BETWEEN BEARINGS SHALL BE ADJUSTED TO COMPENSATE FOR DEAD LOAD DEFLECTION, VERTICAL CURVE ORDINATE, AND ACTUAL BEAM CAMBER.

IN SETTING FALSEWORK AND FORMS FOR REINFORCED CONCRETE SPANS, AN ALLOWANCE SHALL BE MADE FOR DEAD LOAD DEFLECTIONS, SETTLEMENT OF FALSEWORK, AND PERMANENT CAMBER WHICH SHALL BE PROVIDED FOR IN ADDITION TO THE ELEVATIONS SHOWN. AFTER REMOVAL OF THE FALSEWORK, THE FINISHED STRUCTURES SHALL CONFORM TO THE PROFILE AND ELEVATIONS SHOWN ON THE PLANS AND CONSTRUCTION ELEVATIONS FURNISHED BY THE ENGINEER.

DETAILED DRAWINGS FOR FALSEWORK OR FORMS FOR BRIDGE SUPERSTRUCTURE AND ANY STRUCTURE OR PARTS OF A STRUCTURE AS NOTED ON THE PLANS SHALL BE SUBMITTED TO THE ENGINEER FOR APPROVAL BEFORE CONSTRUCTION OF THE FALSEWORK OR FORMS IS STARTED.

REINFORCING STEEL:

ALL REINFORCING STEEL SHALL BE DEFORMED. DIMENSIONS RELATIVE TO PLACEMENT OF REINFORCING ARE TO CENTERS OF BARS UNLESS OTHERWISE INDICATED IN THE PLANS. DIMENSIONS ON BAR DETAILS ARE TO CENTERS OF BARS OR ARE OUT TO OUT AS INDICATED ON PLANS.

WIRE BAR SUPPORTS SHALL BE PROVIDED FOR REINFORCING STEEL WHERE INDICATED ON THE PLANS. WHEN BAR SUPPORT PIECES ARE PLACED IN CONTINUOUS LINES, THEY SHALL BE SO PLACED THAT THE ENDS OF THE SUPPORTING WIRES SHALL BE LAPPED TO LOCK LEGS ON ADJOINING PIECES.

STRUCTURAL STEEL:

AT THE CONTRACTOR'S OPTION, HE MAY SUBSTITUTE 7/8" Ø SHEAR STUDS FOR THE 3/4" Ø STUDS SPECIFIED ON THE PLANS. THIS SUBSTITUTION SHALL BE MADE AT THE RATE OF 3 - 7/8" Ø STUDS FOR 4 - 3/4" Ø STUDS, AND STUD SPACING CHANGES SHALL BE MADE AS NECESSARY TO PROVIDE THE SAME EQUIVALENT NUMBER OF 7/8" Ø STUDS ALONG THE BEAM AS SHOWN FOR 3/4" Ø STUDS BASED ON THE RATIO OF 3 - 7/8" Ø STUDS FOR 4 - 3/4" Ø STUDS. STUDS OF THE LENGTH SPECIFIED ON THE PLANS MUST BE PROVIDED. THE MAXIMUM SPACING SHALL BE 2'-0".

EXCEPT AT THE INTERIOR SUPPORTS OF CONTINUOUS BEAMS WHERE THE COVER PLATE IS IN CONTACT WITH BEARING PLATE, THE CONTRACTOR MAY, AT HIS OPTION, SUBSTITUTE FOR THE COVER PLATES DESIGNATED ON THE PLANS COVER PLATES OF THE EQUIVALENT AREA PROVIDED THESE PLATES ARE AT LEAST 5/16" IN THICKNESS AND DO NOT EXCEED A WIDTH EQUAL TO THE FLANGE WIDTH LESS 2" OR A THICKNESS EQUAL TO 2 TIMES THE FLANGE THICKNESS. THE SIZE OF FILLET WELDS SHALL CONFORM TO THE REQUIREMENTS OF THE CURRENT ANSI/AASHTO/AWS "BRIDGE WELDING CODE". ELECTROSLAG WELDING WILL NOT BE PERMITTED.

WITH THE SOLE EXCEPTION OF EDGES AT SURFACES WHICH BEAR ON OTHER SURFACES, ALL SHARP EDGES AND ENDS OF SHAPES AND PLATES SHALL BE SLIGHTLY ROUNDED BY SUITABLE MEANS TO A RADIUS OF APPROXIMATELY 1/16 INCH OR EQUIVALENT FLAT SURFACE AT A SUITABLE ANGLE PRIOR TO PAINTING, GALVANIZING, OR METALLIZING.

HANDRAILS AND POSTS:

METAL STANDARDS AND FACES OF THE CONCRETE END POSTS FOR THE METAL RAIL SHALL BE SET NORMAL TO THE GRADE OF THE CURB, UNLESS OTHERWISE SHOWN ON PLANS. THE METAL RAIL AND TOPS OF CONCRETE POSTS USED WITH THE ALUMINUM RAIL SHALL BE BUILT PARALLEL TO THE GRADE OF THE CURB.

METAL HANDRAILS SHALL BE IN ACCORDANCE WITH THE PLANS. RAILS SHALL BE AS MANUFACTURED FOR BRIDGE RAILING. CASTINGS SHALL BE OF A UNIFORM APPEARANCE. FINS AND OTHER DEFORMATIONS RESULTING FROM CASTING OR OTHERWISE SHALL BE REMOVED IN A MANNER SO THAT A UNIFORM COLORING OF THE COMPLETED CASTING SHALL BE OBTAINED. CASTINGS WITH DISCOLORATIONS OR OF NON-UNIFORM COLORING WILL NOT BE ACCEPTED. CERTIFIED MILL REPORTS ARE REQUIRED FOR METAL RAILS AND POSTS.

SPECIAL NOTES:

GENERALLY, IN CASE OF DISCREPANCY, THIS STANDARD SHEET OF NOTES SHALL GOVERN OVER THE SPECIFICATIONS, BUT THE REMAINDER OF THE PLANS SHALL GOVERN OVER NOTES HEREON, AND SPECIAL PROVISIONS SHALL GOVERN OVER ALL. SEE SPECIFICATIONS ARTICLE 105-4.

ENGLISH

JANUARY, 1990

STATE	STATE PROJECT REFERENCE NO.	SHEET NO.	TOTAL SHEETS
N.C.	45359.1.7 BD-5113G	1	9

STATE OF NORTH CAROLINA
DEPARTMENT OF TRANSPORTATION
DIVISION OF HIGHWAYS
GEOTECHNICAL ENGINEERING UNIT

STRUCTURE SUBSURFACE INVESTIGATION

PROJ. REFERENCE NO. 45359.1.7 BD-5113G F.A. PROJ. _____

COUNTY YANCEY

PROJECT DESCRIPTION BRIDGE NO. 25 ON SR 1323 OVER SHOAL CREEK

SITE DESCRIPTION _____

CONTENTS

SHEET	DESCRIPTION
1	TITLE SHEET
2	LEGEND
3	SITE PLAN
4	PROFILE
5-6	CROSS SECTIONS
7-9	BORE LOGS AND CORE REPORT
9	CORE PHOTOGRAPH

CAUTION NOTICE

THE SUBSURFACE INFORMATION AND THE SUBSURFACE INVESTIGATION ON WHICH IT IS BASED WERE MADE FOR THE PURPOSE OF STUDY, PLANNING, AND DESIGN AND NOT FOR CONSTRUCTION OR PAY PURPOSES. THE VARIOUS FIELD BORING LOGS, ROCK CORES, AND SOIL TEST DATA AVAILABLE MAY BE REVIEWED OR INSPECTED IN RALEIGH BY CONTACTING THE N.C. DEPARTMENT OF TRANSPORTATION, GEOTECHNICAL ENGINEERING UNIT AT (919) 250-4088. NEITHER THE SUBSURFACE PLANS AND REPORTS, NOR THE FIELD BORING LOGS, ROCK CORES, OR SOIL TEST DATA ARE PART OF THE CONTRACT.

GENERAL SOIL AND ROCK STRATA DESCRIPTIONS AND INDICATED BOUNDARIES ARE BASED ON A GEOTECHNICAL INTERPRETATION OF ALL AVAILABLE SUBSURFACE DATA AND MAY NOT NECESSARILY REFLECT THE ACTUAL SUBSURFACE CONDITIONS BETWEEN BORINGS OR BETWEEN SAMPLED STRATA WITHIN THE BOREHOLE. THE LABORATORY SAMPLE DATA AND THE IN SITU (IN-PLACE) TEST DATA CAN BE RELIED ON ONLY TO THE DEGREE OF RELIABILITY INHERENT IN THE STANDARD TEST METHOD. THE OBSERVED WATER LEVELS OR SOIL MOISTURE CONDITIONS INDICATED IN THE SUBSURFACE INVESTIGATIONS ARE AS RECORDED AT THE TIME OF THE INVESTIGATION. THESE WATER LEVELS OR SOIL MOISTURE CONDITIONS MAY VARY CONSIDERABLY WITH TIME ACCORDING TO CLIMATIC CONDITIONS INCLUDING TEMPERATURES, PRECIPITATION, AND WIND, AS WELL AS OTHER NON-CLIMATIC FACTORS.

THE BIDDER OR CONTRACTOR IS CAUTIONED THAT DETAILS SHOWN ON THE SUBSURFACE PLANS ARE PRELIMINARY ONLY AND IN MANY CASES THE FINAL DESIGN DETAILS ARE DIFFERENT. FOR BIDDING AND CONSTRUCTION PURPOSES, REFER TO THE CONSTRUCTION PLANS AND DOCUMENTS FOR FINAL DESIGN INFORMATION ON THIS PROJECT. THE DEPARTMENT DOES NOT WARRANT OR GUARANTEE THE SUFFICIENCY OR ACCURACY OF THE INVESTIGATION MADE, NOR THE INTERPRETATIONS MADE, OR OPINION OF THE DEPARTMENT AS TO THE TYPE OF MATERIALS AND CONDITIONS TO BE ENCOUNTERED. THE BIDDER OR CONTRACTOR IS CAUTIONED TO MAKE SUCH INDEPENDENT SUBSURFACE INVESTIGATIONS AS HE DEEMS NECESSARY TO SATISFY HIMSELF AS TO CONDITIONS TO BE ENCOUNTERED ON THIS PROJECT. THE CONTRACTOR SHALL HAVE NO CLAIM FOR ADDITIONAL COMPENSATION OR FOR AN EXTENSION OF TIME FOR ANY REASON RESULTING FROM THE ACTUAL CONDITIONS ENCOUNTERED AT THE SITE DIFFERING FROM THOSE INDICATED IN THE SUBSURFACE INFORMATION.

PERSONNEL

P.Q. LOCKAMY

D.O. CHEEK

C.J. COFFEY

INVESTIGATED BY P.Q. LOCKAMY

CHECKED BY J.C. KUHNE

SUBMITTED BY J.C. KUHNE

DATE 4.13

NORTH CAROLINA LICENSED SEAL 1907 GEOLOGIST Patrick Q. Lockamy

P.Q. Lockamy 4-4-13

PROJECT: 45359.1.7

ID: BD-5113G

DRAWN BY: J.T. WILLIAMS

NOTE - THE INFORMATION CONTAINED HEREIN IS NOT IMPLIED OR GUARANTEED BY THE N. C. DEPARTMENT OF TRANSPORTATION AS BEING ACCURATE NOR IT IS CONSIDERED TO BE PART OF THE PLANS, SPECIFICATIONS, OR CONTRACT FOR THE PROJECT.

NOTE - BY HAVING REQUESTED THIS INFORMATION THE CONTRACTOR SPECIFICALLY WAIVES ANY CLAIMS FOR INCREASED COMPENSATION OR EXTENSION OF TIME BASED ON DIFFERENCES BETWEEN THE CONDITIONS INDICATED HEREIN AND THE ACTUAL CONDITIONS AT THE PROJECT SITE.

PROJECT REFERENCE NO.	SHEET NO.
45359.1.7 BD-5113G	2 OF 9

NORTH CAROLINA DEPARTMENT OF TRANSPORTATION
DIVISION OF HIGHWAYS
GEOTECHNICAL ENGINEERING UNIT

SUBSURFACE INVESTIGATION

SOIL AND ROCK LEGEND, TERMS, SYMBOLS, AND ABBREVIATIONS

SOIL DESCRIPTION

SOIL IS CONSIDERED TO BE THE UNCONSOLIDATED, SEMI-CONSOLIDATED, OR WEATHERED EARTH MATERIALS THAT CAN BE PENETRATED WITH A CONTINUOUS FLIGHT POWER AUGER, AND YIELD LESS THAN 100 BLOWS PER FOOT ACCORDING TO STANDARD PENETRATION TEST (AASHTO T206, ASTM D-1586). SOIL CLASSIFICATION IS BASED ON THE AASHTO SYSTEM. BASIC DESCRIPTIONS GENERALLY SHALL INCLUDE: CONSISTENCY, COLOR, TEXTURE, MOISTURE, AASHTO CLASSIFICATION, AND OTHER PERTINENT FACTORS SUCH AS MINERALOGICAL COMPOSITION, ANGULARITY, STRUCTURE, PLASTICITY, ETC. EXAMPLE:

VERY STIFF, GRAY, SILTY CLAY, MOIST WITH INTERBEDDED FINE SAND LAYERS, HIGHLY PLASTIC, A-7-6

SOIL LEGEND AND AASHTO CLASSIFICATION

GENERAL CLASS.	GRANULAR MATERIALS (≤ 35% PASSING #200)							SILT-CLAY MATERIALS (> 35% PASSING #200)				ORGANIC MATERIALS		
GROUP CLASS.	A-1		A-3	A-2				A-4	A-5	A-6	A-7	A-1, A-2 A-3	A-4, A-5 A-6, A-7	
	A-1-a	A-1-b		A-2-4	A-2-5	A-2-6	A-2-7				A-7-5 A-7-6			
SYMBOL														
% PASSING # 10	50 MX													
# 40	30 MX	50 MX	51 MN											
# 200	15 MX	25 MX	10 MX	35 MX	35 MX	35 MX	35 MX	36 MN	36 MX	36 MN	36 MN	GRANULAR SOILS	SILT-CLAY SOILS	MUCK, PEAT
LIQUID LIMIT	6 MX		NP	40 MX	41 MN	40 MX	41 MN	40 MX	41 MN	40 MX	41 MN	SOILS WITH LITTLE OR MODERATE AMOUNTS OF ORGANIC MATTER		HIGHLY ORGANIC SOILS
PLASTIC INDEX				10 MX	10 MX	11 MN	11 MN	10 MX	10 MX	11 MN	11 MN			
GROUP INDEX	0		0	0		4 MX		8 MX	12 MX	16 MX	No MX			
USUAL TYPES OF MAJOR MATERIALS	STONE FRAGS. GRAVEL, AND SAND		FINE SAND	SILTY OR CLAYEY GRAVEL AND SAND				SILTY SOILS		CLAYEY SOILS				
GEN. RATING AS A SUBGRADE	EXCELLENT TO GOOD							FAIR TO POOR				FAIR TO POOR	POOR	UNSUITABLE

PI OF A-7-5 SUBGROUP IS ≤ LL - 30 ; PI OF A-7-6 SUBGROUP IS > LL - 30

CONSISTENCY OR DENSENESS

PRIMARY SOIL TYPE	COMPACTNESS OR CONSISTENCY	RANGE OF STANDARD PENETRATION RESISTENCE (N-VALUE)	RANGE OF UNCONFINED COMPRESSIVE STRENGTH (TONS/FT^2)
GENERALLY GRANULAR MATERIAL (NON-COHESIVE)	VERY LOOSE LOOSE MEDIUM DENSE DENSE VERY DENSE	<4 4 TO 10 10 TO 30 30 TO 50 >50	N/A
GENERALLY SILT-CLAY MATERIAL (COHESIVE)	VERY SOFT SOFT MEDIUM STIFF STIFF VERY STIFF HARD	<2 2 TO 4 4 TO 8 8 TO 15 15 TO 30 >30	<0.25 0.25 TO 0.50 0.5 TO 1.0 1 TO 2 2 TO 4 >4

TEXTURE OR GRAIN SIZE

U.S. STD. SIEVE SIZE	4	10	40	60	200	270
OPENING (MM)	4.76	2.00	0.42	0.25	0.075	0.053

BOULDER (BLDR.)	COBBLE (COB.)	GRAVEL (GR.)	COARSE SAND (CSE. SD.)	FINE SAND (F SD.)	SILT (SL.)	CLAY (CL.)

GRAIN SIZE MM: 305 | 75 | 2.0 | 0.25 | 0.05 | 0.005
GRAIN SIZE IN.: 12 | 3

SOIL MOISTURE - CORRELATION OF TERMS

SOIL MOISTURE SCALE (ATTERBERG LIMITS)	FIELD MOISTURE DESCRIPTION	GUIDE FOR FIELD MOISTURE DESCRIPTION
	- SATURATED - (SAT.)	USUALLY LIQUID; VERY WET, USUALLY FROM BELOW THE GROUND WATER TABLE
LL — LIQUID LIMIT PLASTIC RANGE (PI) PL — PLASTIC LIMIT	- WET - (W)	SEMISOLID; REQUIRES DRYING TO ATTAIN OPTIMUM MOISTURE
OM — OPTIMUM MOISTURE SL — SHRINKAGE LIMIT	- MOIST - (M)	SOLID; AT OR NEAR OPTIMUM MOISTURE
	- DRY - (D)	REQUIRES ADDITIONAL WATER TO ATTAIN OPTIMUM MOISTURE

PLASTICITY

	PLASTICITY INDEX (PI)	DRY STRENGTH
NONPLASTIC	0-5	VERY LOW
LOW PLASTICITY	6-15	SLIGHT
MED. PLASTICITY	16-25	MEDIUM
HIGH PLASTICITY	26 OR MORE	HIGH

COLOR

DESCRIPTIONS MAY INCLUDE COLOR OR COLOR COMBINATIONS (TAN, RED, YELLOW-BROWN, BLUE-GRAY). MODIFIERS SUCH AS LIGHT, DARK, STREAKED, ETC. ARE USED TO DESCRIBE APPEARANCE.

GRADATION

WELL GRADED - INDICATES A GOOD REPRESENTATION OF PARTICLE SIZES FROM FINE TO COARSE.
UNIFORM - INDICATES THAT SOIL PARTICLES ARE ALL APPROXIMATELY THE SAME SIZE. (ALSO POORLY GRADED)
GAP-GRADED - INDICATES A MIXTURE OF UNIFORM PARTICLES OF TWO OR MORE SIZES.

ANGULARITY OF GRAINS

THE ANGULARITY OR ROUNDNESS OF SOIL GRAINS IS DESIGNATED BY THE TERMS: ANGULAR, SUBANGULAR, SUBROUNDED, OR ROUNDED.

MINERALOGICAL COMPOSITION

MINERAL NAMES SUCH AS QUARTZ, FELDSPAR, MICA, TALC, KAOLIN, ETC. ARE USED IN DESCRIPTIONS WHENEVER THEY ARE CONSIDERED OF SIGNIFICANCE.

COMPRESSIBILITY

SLIGHTLY COMPRESSIBLE	LIQUID LIMIT LESS THAN 31
MODERATELY COMPRESSIBLE	LIQUID LIMIT EQUAL TO 31-50
HIGHLY COMPRESSIBLE	LIQUID LIMIT GREATER THAN 50

PERCENTAGE OF MATERIAL

ORGANIC MATERIAL	GRANULAR SOILS	SILT - CLAY SOILS
TRACE OF ORGANIC MATTER	2 - 3%	3 - 5%
LITTLE ORGANIC MATTER	3 - 5%	5 - 12%
MODERATELY ORGANIC	5 - 10%	12 - 20%
HIGHLY ORGANIC	>10%	>20%

OTHER MATERIAL	
TRACE	1 - 10%
LITTLE	10 - 20%
SOME	20 - 35%
HIGHLY	35% AND ABOVE

GROUND WATER

- WATER LEVEL IN BORE HOLE IMMEDIATELY AFTER DRILLING
- STATIC WATER LEVEL AFTER 24 HOURS
- PW PERCHED WATER, SATURATED ZONE, OR WATER BEARING STRATA
- SPRING OR SEEP

MISCELLANEOUS SYMBOLS

- ROADWAY EMBANKMENT (RE) WITH SOIL DESCRIPTION
- SOIL SYMBOL
- ARTIFICIAL FILL (AF) OTHER THAN ROADWAY EMBANKMENT
- INFERRED SOIL BOUNDARY
- INFERRED ROCK LINE
- ALLUVIAL SOIL BOUNDARY
- 26/025 DIP & DIP DIRECTION OF ROCK STRUCTURES
- SPT DPT DMT VST PMT TEST BORING
- AUGER BORING
- CORE BORING
- MW MONITORING WELL
- PIEZOMETER INSTALLATION
- SLOPE INDICATOR INSTALLATION
- CONE PENETROMETER TEST
- SOUNDING ROD
- TEST BORING W/ CORE
- SPT N-VALUE
- REF SPT REFUSAL

ABBREVIATIONS

AR - AUGER REFUSAL
BT - BORING TERMINATED
CL. - CLAY
CPT - CONE PENETRATION TEST
CSE. - COARSE
DMT - DILATOMETER TEST
DPT - DYNAMIC PENETRATION TEST
e - VOID RATIO
F - FINE
FOSS. - FOSSILIFEROUS
FRAC. - FRACTURED, FRACTURES
FRAGS. - FRAGMENTS
HI. - HIGHLY
MED. - MEDIUM
MICA. - MICACEOUS
MOD. - MODERATELY
NP - NON PLASTIC
ORG. - ORGANIC
PMT - PRESSUREMETER TEST
SAP. - SAPROLITIC
SD. - SAND, SANDY
SL. - SILT, SILTY
SLI. - SLIGHTLY
TCR - TRICONE REFUSAL
w - MOISTURE CONTENT
V - VERY
VST - VANE SHEAR TEST
WEA. - WEATHERED
γ - UNIT WEIGHT
γ_d - DRY UNIT WEIGHT

SAMPLE ABBREVIATIONS
S - BULK
SS - SPLIT SPOON
ST - SHELBY TUBE
RS - ROCK
RT - RECOMPACTED TRIAXIAL
CBR - CALIFORNIA BEARING RATIO

EQUIPMENT USED ON SUBJECT PROJECT

DRILL UNITS:
- [ ] MOBILE B-___
- [ ] BK-51
- [ ] CME-45C
- [x] CME-550
- [ ] PORTABLE HOIST
- [ ] _____
- [ ] _____

ADVANCING TOOLS:
- [ ] CLAY BITS
- [ ] 6" CONTINUOUS FLIGHT AUGER
- [ ] 8" HOLLOW AUGERS
- [ ] HARD FACED FINGER BITS
- [ ] TUNG.-CARBIDE INSERTS
- [x] CASING [x] W/ ADVANCER
- [x] TRICONE 2 15/16" STEEL TEETH
- [ ] TRICONE _____" TUNG.-CARB.
- [x] CORE BIT
- [ ] _____

HAMMER TYPE:
- [x] AUTOMATIC [ ] MANUAL

CORE SIZE:
- [ ] -B_____
- [x] -N XWL
- [ ] -H_____

HAND TOOLS:
- [ ] POST HOLE DIGGER
- [ ] HAND AUGER
- [ ] SOUNDING ROD
- [ ] VANE SHEAR TEST
- [ ] _____

ROCK DESCRIPTION

HARD ROCK IS NON-COASTAL PLAIN MATERIAL THAT IF TESTED, WOULD YIELD SPT REFUSAL. AN INFERRED ROCK LINE INDICATES THE LEVEL AT WHICH NON-COASTAL PLAIN MATERIAL WOULD YIELD SPT REFUSAL. SPT REFUSAL IS PENETRATION BY A SPLIT SPOON SAMPLER EQUAL TO OR LESS THAN 0.1 FOOT PER 60 BLOWS. IN NON-COASTAL PLAIN MATERIAL, THE TRANSITION BETWEEN SOIL AND ROCK IS OFTEN REPRESENTED BY A ZONE OF WEATHERED ROCK.
ROCK MATERIALS ARE TYPICALLY DIVIDED AS FOLLOWS:

WEATHERED ROCK (WR)	NON-COASTAL PLAIN MATERIAL THAT WOULD YIELD SPT N VALUES > 100 BLOWS PER FOOT IF TESTED.
CRYSTALLINE ROCK (CR)	FINE TO COARSE GRAIN IGNEOUS AND METAMORPHIC ROCK THAT WOULD YIELD SPT REFUSAL IF TESTED. ROCK TYPE INCLUDES GRANITE, GNEISS, GABBRO, SCHIST, ETC.
NON-CRYSTALLINE ROCK (NCR)	FINE TO COARSE GRAIN METAMORPHIC AND NON-COASTAL PLAIN SEDIMENTARY ROCK THAT WOULD YEILD SPT REFUSAL IF TESTED. ROCK TYPE INCLUDES PHYLLITE, SLATE, SANDSTONE, ETC.
COASTAL PLAIN SEDIMENTARY ROCK (CP)	COASTAL PLAIN SEDIMENTS CEMENTED INTO ROCK, BUT MAY NOT YIELD SPT REFUSAL. ROCK TYPE INCLUDES LIMESTONE, SANDSTONE, CEMENTED SHELL BEDS, ETC.

WEATHERING

FRESH	ROCK FRESH, CRYSTALS BRIGHT, FEW JOINTS MAY SHOW SLIGHT STAINING. ROCK RINGS UNDER HAMMER IF CRYSTALLINE.
VERY SLIGHT (V. SLI.)	ROCK GENERALLY FRESH, JOINTS STAINED, SOME JOINTS MAY SHOW THIN CLAY COATINGS IF OPEN, CRYSTALS ON A BROKEN SPECIMEN FACE SHINE BRIGHTLY. ROCK RINGS UNDER HAMMER BLOWS IF OF A CRYSTALLINE NATURE.
SLIGHT (SLI.)	ROCK GENERALLY FRESH, JOINTS STAINED AND DISCOLORATION EXTENDS INTO ROCK UP TO 1 INCH. OPEN JOINTS MAY CONTAIN CLAY. IN GRANITOID ROCKS SOME OCCASIONAL FELDSPAR CRYSTALS ARE DULL AND DISCOLORED. CRYSTALLINE ROCKS RING UNDER HAMMER BLOWS.
MODERATE (MOD.)	SIGNIFICANT PORTIONS OF ROCK SHOW DISCOLORATION AND WEATHERING EFFECTS. IN GRANITOID ROCKS, MOST FELDSPARS ARE DULL AND DISCOLORED, SOME SHOW CLAY. ROCK HAS DULL SOUND UNDER HAMMER BLOWS AND SHOWS SIGNIFICANT LOSS OF STRENGTH AS COMPARED WITH FRESH ROCK.
MODERATELY SEVERE (MOD. SEV.)	ALL ROCK EXCEPT QUARTZ DISCOLORED OR STAINED. IN GRANITOID ROCKS, ALL FELDSPARS DULL AND DISCOLORED AND A MAJORITY SHOW KAOLINIZATION. ROCK SHOWS SEVERE LOSS OF STRENGTH AND CAN BE EXCAVATED WITH A GEOLOGIST'S PICK. ROCK GIVES "CLUNK" SOUND WHEN STRUCK. *IF TESTED, WOULD YIELD SPT REFUSAL*
SEVERE (SEV.)	ALL ROCK EXCEPT QUARTZ DISCOLORED OR STAINED. ROCK FABRIC CLEAR AND EVIDENT BUT REDUCED IN STRENGTH TO STRONG SOIL. IN GRANITOID ROCKS ALL FELDSPARS ARE KAOLINIZED TO SOME EXTENT. SOME FRAGMENTS OF STRONG ROCK USUALLY REMAIN. *IF TESTED, YIELDS SPT N VALUES > 100 BPF*
VERY SEVERE (V. SEV.)	ALL ROCK EXCEPT QUARTZ DISCOLORED OR STAINED. ROCK FABRIC ELEMENTS ARE DISCERNIBLE BUT THE MASS IS EFFECTIVELY REDUCED TO SOIL STATUS, WITH ONLY FRAGMENTS OF STRONG ROCK REMAINING. SAPROLITE IS AN EXAMPLE OF ROCK WEATHERED TO A DEGREE SUCH THAT ONLY MINOR VESTIGES OF THE ORIGINAL ROCK FABRIC REMAIN. *IF TESTED, YIELDS SPT N VALUES < 100 BPF*
COMPLETE	ROCK REDUCED TO SOIL. ROCK FABRIC NOT DISCERNIBLE, OR DISCERNIBLE ONLY IN SMALL AND SCATTERED CONCENTRATIONS. QUARTZ MAY BE PRESENT AS DIKES OR STRINGERS. SAPROLITE IS ALSO AN EXAMPLE.

ROCK HARDNESS

VERY HARD	CANNOT BE SCRATCHED BY KNIFE OR SHARP PICK. BREAKING OF HAND SPECIMENS REQUIRES SEVERAL HARD BLOWS OF THE GEOLOGIST'S PICK.
HARD	CAN BE SCRATCHED BY KNIFE OR PICK ONLY WITH DIFFICULTY. HARD HAMMER BLOWS REQUIRED TO DETACH HAND SPECIMEN.
MODERATELY HARD	CAN BE SCRATCHED BY KNIFE OR PICK. GOUGES OR GROOVES TO 0.25 INCHES DEEP CAN BE EXCAVATED BY HARD BLOW OF A GEOLOGIST'S PICK. HAND SPECIMENS CAN BE DETACHED BY MODERATE BLOWS.
MEDIUM HARD	CAN BE GROOVED OR GOUGED 0.05 INCHES DEEP BY FIRM PRESSURE OF KNIFE OR PICK POINT. CAN BE EXCAVATED IN SMALL CHIPS TO PEICES 1 INCH MAXIMUM SIZE BY HARD BLOWS OF THE POINT OF A GEOLOGIST'S PICK.
SOFT	CAN BE GROVED OR GOUGED READILY BY KNIFE OR PICK. CAN BE EXCAVATED IN FRAGMENTS FROM CHIPS TO SEVERAL INCHES IN SIZE BY MODERATE BLOWS OF A PICK POINT. SMALL, THIN PIECES CAN BE BROKEN BY FINGER PRESSURE.
VERY SOFT	CAN BE CARVED WITH KNIFE. CAN BE EXCAVATED READILY WITH POINT OF PICK. PIECES 1 INCH OR MORE IN THICKNESS CAN BE BROKEN BY FINGER PRESSURE. CAN BE SCRATCHED READILY BY FINGERNAIL.

FRACTURE SPACING

TERM	SPACING
VERY WIDE	MORE THAN 10 FEET
WIDE	3 TO 10 FEET
MODERATELY CLOSE	1 TO 3 FEET
CLOSE	0.16 TO 1 FEET
VERY CLOSE	LESS THAN 0.16 FEET

BEDDING

TERM	THICKNESS
VERY THICKLY BEDDED	> 4 FEET
THICKLY BEDDED	1.5 - 4 FEET
THINLY BEDDED	0.16 - 1.5 FEET
VERY THINLY BEDDED	0.03 - 0.16 FEET
THICKLY LAMINATED	0.008 - 0.03 FEET
THINLY LAMINATED	< 0.008 FEET

INDURATION

FOR SEDIMENTARY ROCKS, INDURATION IS THE HARDENING OF THE MATERIAL BY CEMENTING, HEAT, PRESSURE, ETC.

FRIABLE	RUBBING WITH FINGER FREES NUMEROUS GRAINS; GENTLE BLOW BY HAMMER DISINTEGRATES SAMPLE.
MODERATELY INDURATED	GRAINS CAN BE SEPARATED FROM SAMPLE WITH STEEL PROBE; BREAKS EASILY WHEN HIT WITH HAMMER.
INDURATED	GRAINS ARE DIFFICULT TO SEPARATE WITH STEEL PROBE; DIFFICULT TO BREAK WITH HAMMER.
EXTREMELY INDURATED	SHARP HAMMER BLOWS REQUIRED TO BREAK SAMPLE; SAMPLE BREAKS across GRAINS.

TERMS AND DEFINITIONS

ALLUVIUM (ALLUV.) - SOILS THAT HAVE BEEN TRANSPORTED BY WATER.

AQUIFER - A WATER BEARING FORMATION OR STRATA.

ARENACEOUS - APPLIED TO ROCKS THAT HAVE BEEN DERIVED FROM SAND OR THAT CONTAIN SAND.

ARGILLACEOUS - APPLIED TO ALL ROCKS OR SUBSTANCES COMPOSED OF CLAY MINERALS. OR HAVING A NOTABLE PROPORTION OF CLAY IN THEIR COMPOSITION, AS SHALE, SLATE, ETC.

ARTESIAN - GROUND WATER THAT IS UNDER SUFFICIENT PRESSURE TO RISE ABOVE THE LEVEL AT WHICH IT IS ENCOUNTERED, BUT WHICH DOES NOT NECESSARILY RISE TO OR ABOVE THE GROUND SURFACE.

CALCAREOUS (CAL.C.) - SOILS THAT CONTAIN APPRECIABLE AMOUNTS OF CALCIUM CARBONATE.

COLLUVIUM - ROCK FRAGMENTS MIXED WITH SOIL DEPOSITED BY GRAVITY ON SLOPE OR AT BOTTOM OF SLOPE.

CORE RECOVERY (REC.) - TOTAL LENGTH OF ALL MATERIAL RECOVERED IN THE CORE BARREL DIVIDED BY TOTAL LENGTH OF CORE RUN AND EXPRESSED AS A PERCENTAGE.

DIKE - A TABULAR BODY OF IGNEOUS ROCK THAT CUTS ACROSS THE STRUCTURE OF ADJACENT ROCKS OR CUTS MASSIVE ROCK.

DIP - THE ANGLE AT WHICH A STRATUM OR ANY PLANAR FEATURE IS INCLINED FROM THE HORIZONTAL.

DIP DIRECTION (DIP AZIMUTH) - THE DIRECTION OR BEARING OF THE HORIZONTAL TRACE OF THE LINE OF DIP, MEASURED CLOCKWISE FROM NORTH.

FAULT - A FRACTURE OR FRACTURE ZONE ALONG WHICH THERE HAS BEEN DISPLACEMENT OF THE SIDES RELATIVE TO ONE ANOTHER PARALLEL TO THE FRACTURE.

FISSILE - A PROPERTY OF SPLITTING ALONG CLOSELY SPACED PARALLEL PLANES.

FLOAT - ROCK FRAGMENTS ON SURFACE NEAR THEIR ORIGINAL POSITION AND DISLODGED FROM PARENT MATERIAL.

FLOOD PLAIN (FP) - LAND BORDERING A STREAM, BUILT OF SEDIMENTS DEPOSITED BY THE STREAM.

FORMATION (FM.) - A MAPPABLE GEOLOGIC UNIT THAT CAN BE RECOGNIZED AND TRACED IN THE FIELD.

JOINT - FRACTURE IN ROCK ALONG WHICH NO APPRECIABLE MOVEMENT HAS OCCURRED.

LEDGE - A SHELF-LIKE RIDGE OR PROJECTION OF ROCK WHOSE THICKNESS IS SMALL COMPARED TO ITS LATERAL EXTENT.

LENS - A BODY OF SOIL OR ROCK THAT THINS OUT IN ONE OR MORE DIRECTIONS.

MOTTLED (MOT.) - IRREGULARLY MARKED WITH SPOTS OF DIFFERENT COLORS. MOTTLING IN SOILS USUALLY INDICATES POOR AERATION AND LACK OF GOOD DRAINAGE.

PERCHED WATER - WATER MAINTAINED ABOVE THE NORMAL GROUND WATER LEVEL BY THE PRESENCE OF AN INTERVENING IMPERVIOUS STRATUM.

RESIDUAL (RES.) SOIL - SOIL FORMED IN PLACE BY THE WEATHERING OF ROCK.

ROCK QUALITY DESIGNATION (RQD) - A MEASURE OF ROCK QUALITY DESCRIBED BY TOTAL LENGTH OF ROCK SEGMENTS EQUAL TO OR GREATER THAN 4 INCHES DIVIDED BY THE TOTAL LENGTH OF CORE RUN AND EXPRESSED AS A PERCENTAGE.

SAPROLITE (SAP.) - RESIDUAL SOIL THAT RETAINS THE RELIC STRUCTURE OR FABRIC OF THE PARENT ROCK.

SILL - AN INTRUSIVE BODY OF IGNEOUS ROCK OF APPROXIMATELY UNIFORM THICKNESS AND RELATIVELY THIN COMPARED WITH ITS LATERAL EXTENT, THAT HAS BEEN EMPLACED PARALLEL TO THE BEDDING OR SCHISTOSITY OF THE INTRUDED ROCKS.

SLICKENSIDE - POLISHED AND STRIATED SURFACE THAT RESULTS FROM FRICTION ALONG A FAULT OR SLIP PLANE.

STANDARD PENETRATION TEST (PENETRATION RESISTANCE) (SPT) - NUMBER OF BLOWS (N OR BPF) OF A 140 LB. HAMMER FALLING 30 INCHES REQUIRED TO PRODUCE A PENETRATION OF 1 FOOT INTO SOIL WITH A 2 INCH OUTSIDE DIAMETER SPLIT SPOON SAMPLER. SPT REFUSAL IS PENETRATION EQUAL TO OR LESS THAN 0.1 FOOT PER 60 BLOWS.

STRATA CORE RECOVERY (REC.) - TOTAL LENGTH OF STRATA MATERIAL RECOVERED DIVIDED BY TOTAL LENGTH OF STRATUM AND EXPRESSED AS A PERCENTAGE.

STRATA ROCK QUALITY DESIGNATION (SRQD) - A MEASURE OF ROCK QUALITY DESCRIBED BY TOTAL LENGTH OF ROCK SEGMENTS WITHIN A STRATUM EQUAL TO OR GREATER THAN 4 INCHES DIVIDED BY THE TOTAL LENGTH OF STRATA AND EXPRESSED AS A PERCENTAGE.

TOPSOIL (TS.) - SURFACE SOILS USUALLY CONTAINING ORGANIC MATTER.

BENCH MARK: BL-2 EL STA. 13+13.18 17.26 LT N 806397.9890 E 1037314.6549

ELEVATION: 2572.82 FT.

NOTES:

PROJECT REFERENCE NO.	SHEET
45359.1.7 BD-5113G	3 OF 9

SITE PLAN

0 40 80
FEET

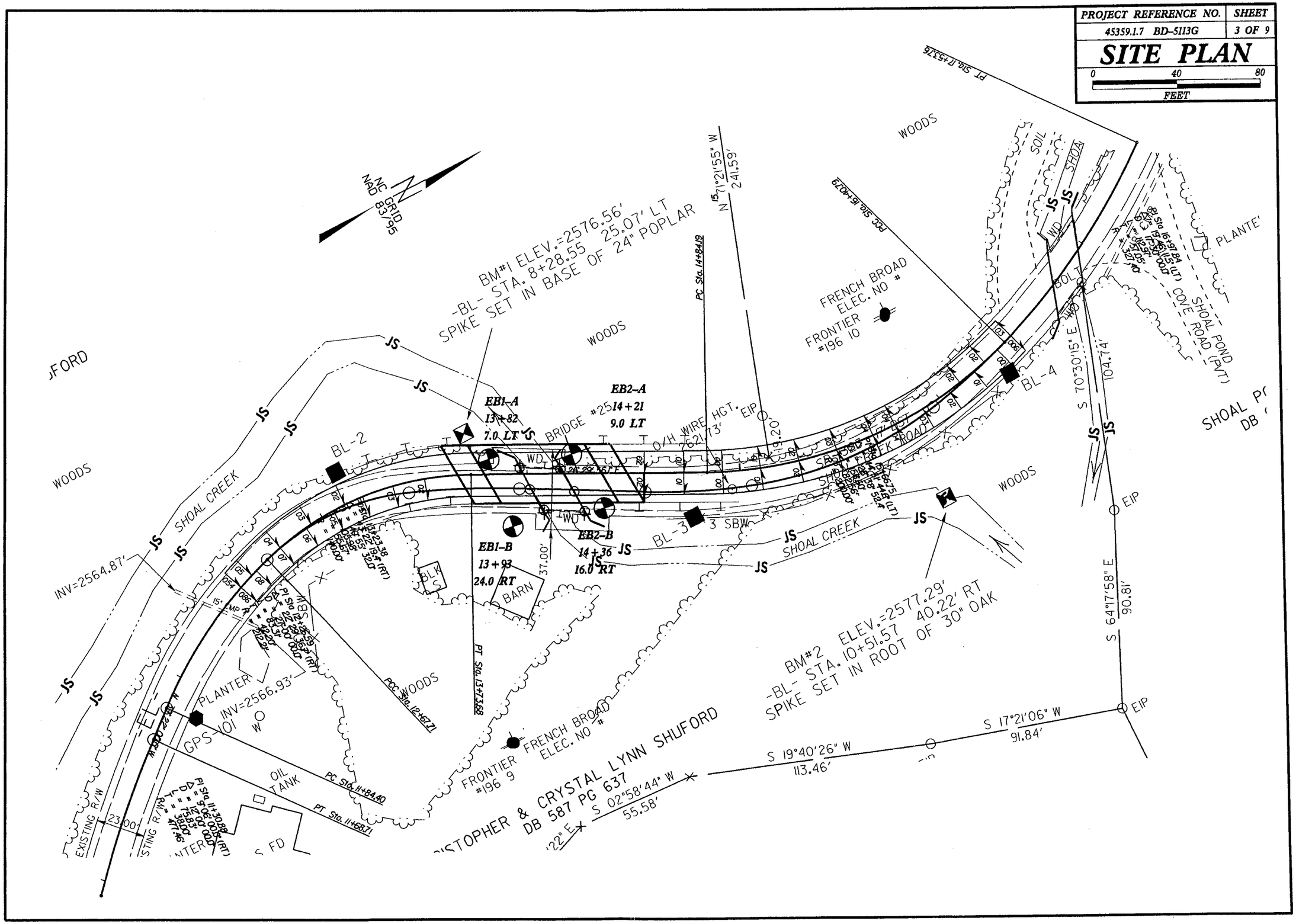

PROJECT REFERENCE NO.	SHEET
45359.1.7 BD-5113G	4 OF 9

PROFILE 19' RT OF ℄ OF -L-

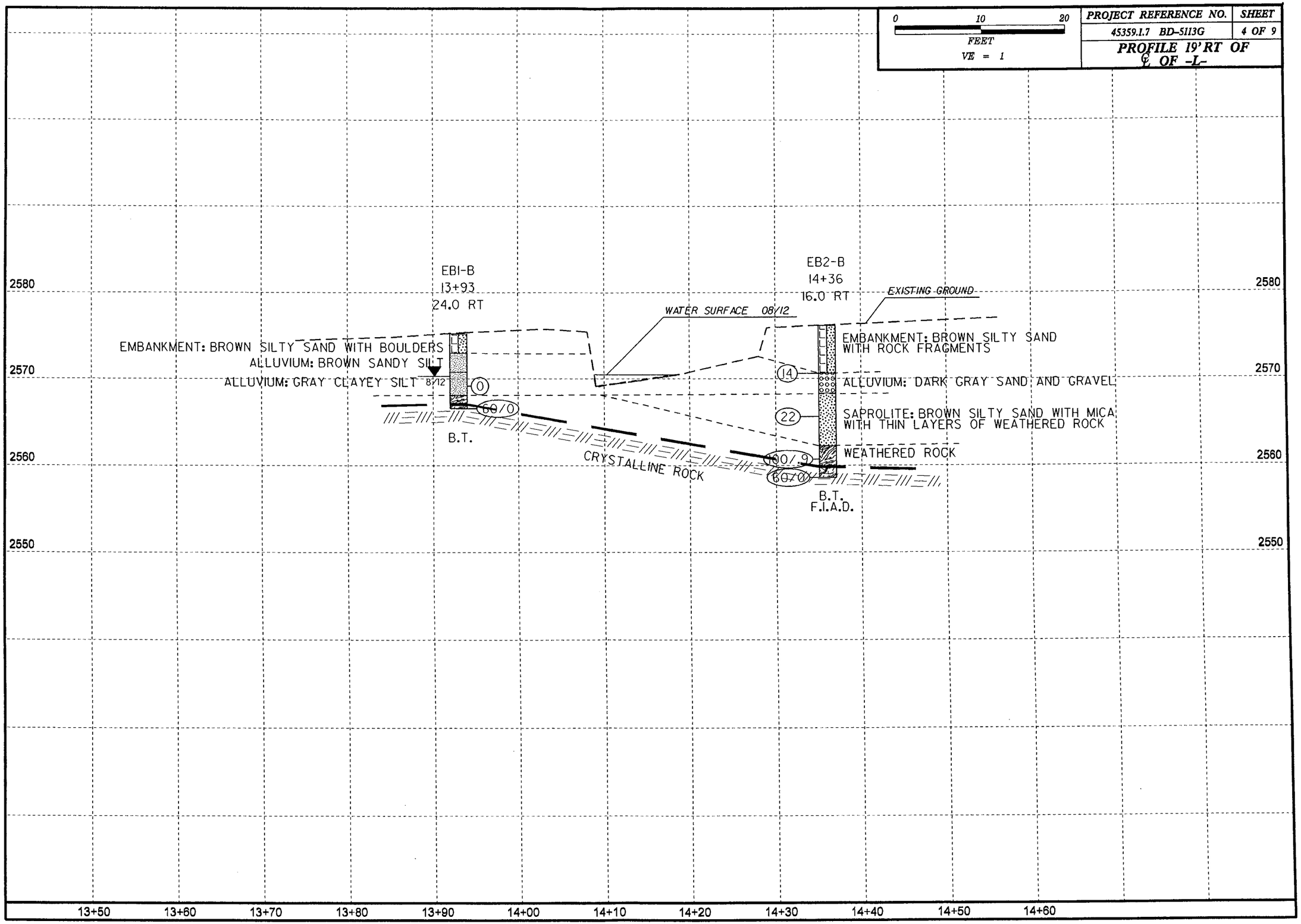

PROJECT REFERENCE NO.	SHEET
45359.1.7 BD-5113G	5 OF 9

CROSS SECTION ON 71.8° SKEW

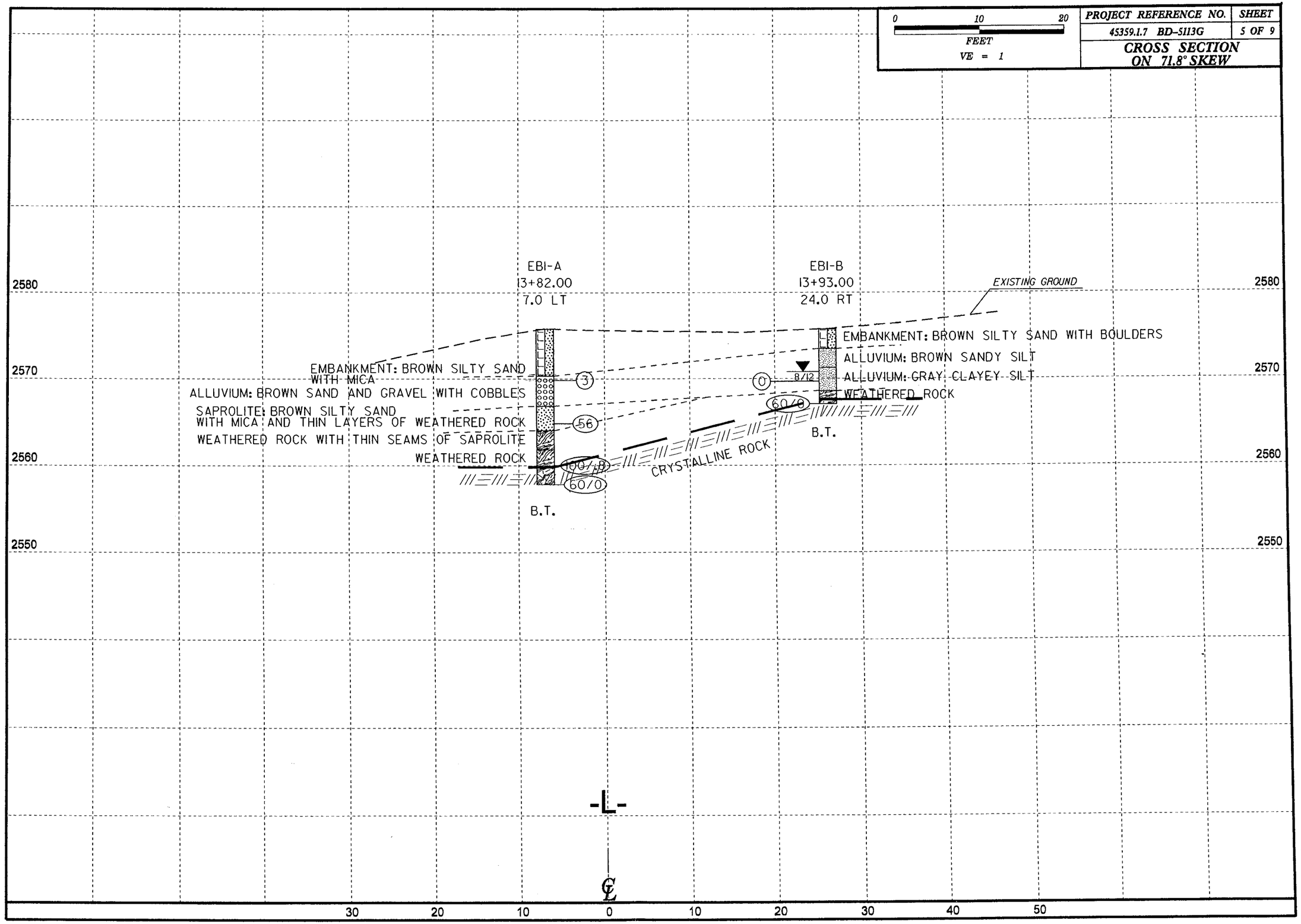

PROJECT REFERENCE NO.	SHEET
45359.1.7 BD-5113G	6 OF 9

CROSS SECTION ON 58.3° SKEW

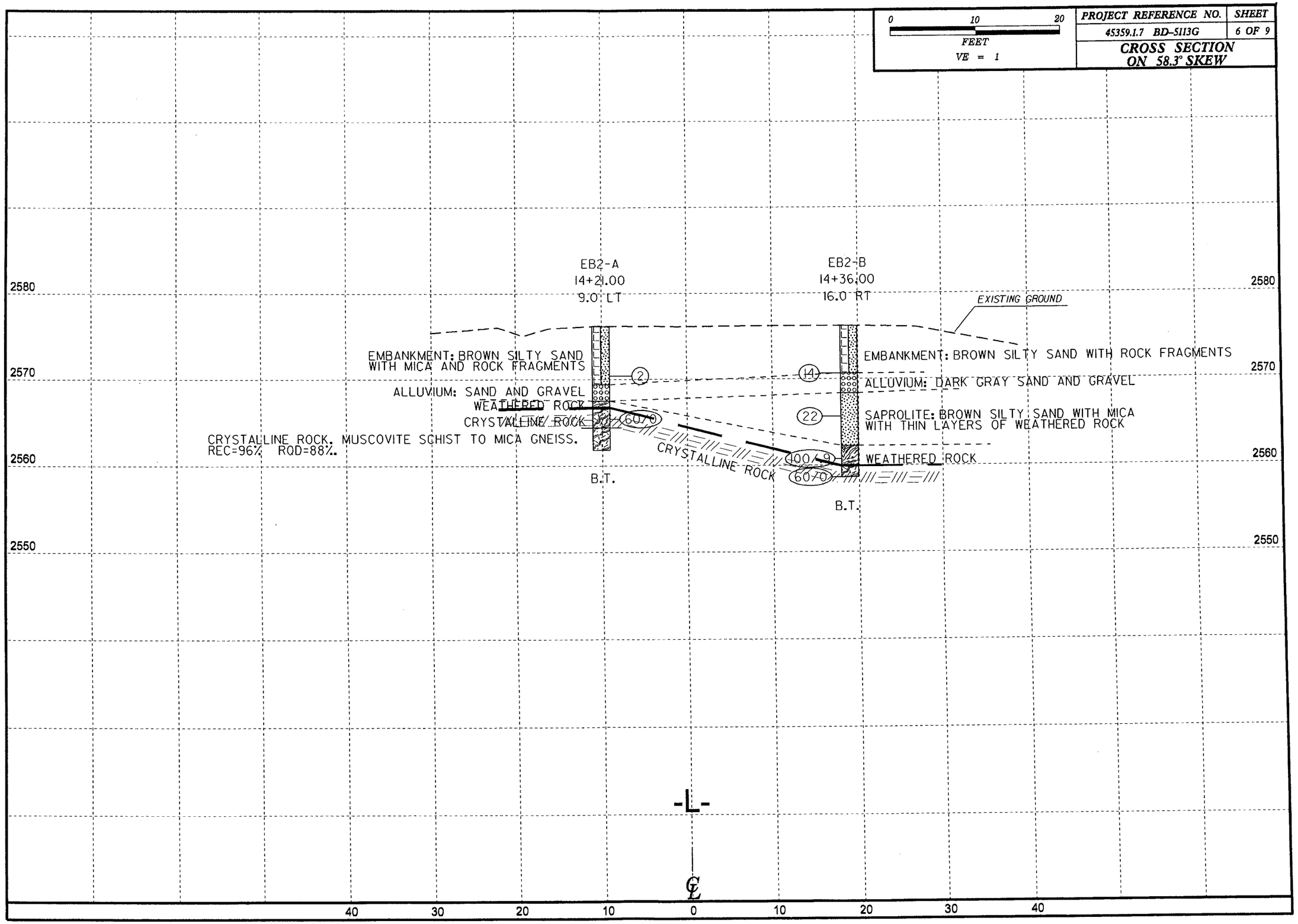

NCDOT GEOTECHNICAL ENGINEERING UNIT
BORELOG REPORT

SHEET

WBS 45359.1.7	TIP BD5113G	COUNTY YANCEY	GEOLOGIST Lockamy, P. Q.
SITE DESCRIPTION YANCEY COUNTY BRIDGE 25 ON SR-1323 OVER SHOAL CREEK			GROUND WTR (ft)
BORING NO. EB1A	STATION 13+82	OFFSET 7 ft LT	ALIGNMENT -L- / 0 HR. N/A
COLLAR ELEV. 2,575.8 ft	TOTAL DEPTH 18.0 ft	NORTHING 806,465	EASTING 1,037,342 / 24 HR. Caved
DRILL RIG/HAMMER EFF./DATE AFO0071 CME-550X 72% 09/03/2009		DRILL METHOD NW Casing w/ SPT	HAMMER TYPE Automatic
DRILLER Cheek, D. O.	START DATE 08/28/12	COMP. DATE 08/28/12	SURFACE WATER DEPTH N/A

ELEV (ft)	DRIVE ELEV (ft)	DEPTH (ft)	BLOW COUNT 0.5ft	0.5ft	0.5ft	BLOWS PER FOOT 0 25 50 75 100	SAMP. NO.	MOI	LOG	SOIL AND ROCK DESCRIPTION ELEV. (ft)	DEPTH (ft)
2580											
2575										2,575.8 GROUND SURFACE	0.0
										EMBANKMENT: BROWN SILTY SAND WITH MICA	
2570	2,570.8	5.0	3	1	2	3				2,570.3	5.5
										ALLUVIUM: BROWN SAND AND GRAVEL WITH COBBLES	
										2,566.8	9.0
2565	2,565.8	10.0	20	36	20	56				SAPROLITE: BROWN SILTY SAND WITH MICA AND THIN LAYERS OF WEATHERED ROCK	
										2,564.0	11.8
										WEATHERED ROCK WITH THIN SEAMS OF SAPROLITE	
										2,561.8	14.0
2560	2,560.8	15.0	37	63/.3		100/.8				WEATHERED ROCK	
										2,559.8	16.0
										CRYSTALLINE ROCK	
	2,557.8	18.0	60/0			60/0				2,557.8	18.0
										Boring Terminated WITH STANDARD PENETRATION TEST REFUSAL at Elevation 2,557.8 ft IN CRYSTALLINE ROCK	

NCDOT BORE SINGLE BD5113G_GEO_PDEA_BRDG990025.GPJ NC_DOT.GDT 4/1/13

NCDOT GEOTECHNICAL ENGINEERING UNIT
BORELOG REPORT

SHEET 7/9

WBS 45359.1.7	TIP BD5113G	COUNTY YANCEY	GEOLOGIST Lockamy, P. Q.
SITE DESCRIPTION YANCEY COUNTY BRIDGE 25 ON SR-1323 OVER SHOAL CREEK			GROUND WTR (ft)
BORING NO. EB1B	STATION 13+93	OFFSET 24 ft RT	ALIGNMENT -L- / 0 HR. N/A
COLLAR ELEV. 2,575.8 ft	TOTAL DEPTH 8.7 ft	NORTHING 806,461	EASTING 1,037,375 / 24 HR. 5.0
DRILL RIG/HAMMER EFF./DATE AFO0071 CME-550X 72% 09/03/2009		DRILL METHOD NW Casing w/ SPT	HAMMER TYPE Automatic
DRILLER Cheek, D. O.	START DATE 08/28/12	COMP. DATE 08/28/12	SURFACE WATER DEPTH N/A

ELEV (ft)	DRIVE ELEV (ft)	DEPTH (ft)	BLOW COUNT 0.5ft	0.5ft	0.5ft	BLOWS PER FOOT 0 25 50 75 100	SAMP. NO.	MOI	LOG	SOIL AND ROCK DESCRIPTION ELEV. (ft)	DEPTH (ft)
2580											
2575										2,575.8 GROUND SURFACE	0.0
										EMBANKMENT: BROWN SILTY SAND WITH BOULDERS	
										2,573.5	2.3
										ALLUVIUM: BROWN SANDY SILT	
										2,571.3	4.5
2570	2,570.7	5.1	0	0	0	0				ALLUVIUM: GRAY CLAYEY SILT	
										2,568.6	7.2
										WEATHERED ROCK	
										2,567.6	8.2
	2,567.1	8.7	60/0			60/0				CRYSTALLINE ROCK	
										2,567.1	8.7
										Boring Terminated WITH STANDARD PENETRATION TEST REFUSAL at Elevation 2,567.1 ft IN CRYSTALLINE ROCK	

NCDOT BORE SINGLE BD5113G_GEO_PDEA_BRDG990025.GPJ NC_DOT.GDT 4/1/13

NCDOT GEOTECHNICAL ENGINEERING UNIT
BORELOG REPORT

SHEET

WBS 45359.1.7	TIP BD5113G	COUNTY YANCEY	GEOLOGIST Lockamy, P. Q.
SITE DESCRIPTION YANCEY COUNTY BRIDGE 25 ON SR-1323 OVER SHOAL CREEK			GROUND WTR (ft)
BORING NO. EB2A	STATION 14+21	OFFSET 9 ft LT	ALIGNMENT -L-
COLLAR ELEV. 2,576.2 ft	TOTAL DEPTH 14.4 ft	NORTHING 806,501	EASTING 1,037,358
DRILL RIG/HAMMER EFF./DATE AFO0071 CME-550X 72% 09/03/2009		DRILL METHOD NW Casing W/SPT & Core	HAMMER TYPE Automatic
DRILLER Cheek, D. O.	START DATE 08/28/12	COMP. DATE 08/28/12	SURFACE WATER DEPTH N/A

0 HR. N/A
24 HR. Caved

ELEV (ft)	DRIVE ELEV (ft)	DEPTH (ft)	BLOW COUNT 0.5ft	0.5ft	0.5ft	BLOWS PER FOOT 0 25 50 75 100	SAMP. NO.	MOI	LOG	SOIL AND ROCK DESCRIPTION ELEV. (ft)	DEPTH (ft)
2580											
										2,576.2 GROUND SURFACE	0.0
2575										EMBANKMENT: BROWN SILTY SAND WITH MICA AND ROCK FRAGMENTS	
	2,571.4	4.8	1	1	1	2					
2570										2,569.4	6.8
										ALLUVIUM: SAND AND GRAVEL	
										2,567.5	8.7
	2,566.4	9.8	60/0			60/0				2,566.7 WEATHERED ROCK	9.5
2565										CRYSTALLINE ROCK	
										2,564.4	11.8
										CRYSTALLINE ROCK. MUSCOVITE SCHIST TO MICA GNEISS. REC=96% RQD=88%.	
										2,561.8	14.4
										Boring Terminated at Elevation 2,561.8 ft IN CRYSTALLINE ROCK	

NCDOT BORE SINGLE BD5113G_GEO_PDEA_BRDG990025.GPJ NC_DOT.GDT 4/1/13

NCDOT GEOTECHNICAL ENGINEERING UNIT
BORELOG REPORT

SHEET 8/9

WBS 45359.1.7	TIP BD5113G	COUNTY YANCEY	GEOLOGIST Lockamy, P. Q.
SITE DESCRIPTION YANCEY COUNTY BRIDGE 25 ON SR-1323 OVER SHOAL CREEK			GROUND WTR (ft)
BORING NO. EB2B	STATION 14+36	OFFSET 16 ft RT	ALIGNMENT -L-
COLLAR ELEV. 2,576.2 ft	TOTAL DEPTH 17.6 ft	NORTHING 806,503	EASTING 1,037,387
DRILL RIG/HAMMER EFF./DATE AFO0071 CME-550X 72% 09/03/2009		DRILL METHOD NW Casing w/ SPT	HAMMER TYPE Automatic
DRILLER Cheek, D. O.	START DATE 09/04/12	COMP. DATE 09/04/12	SURFACE WATER DEPTH N/A

0 HR. FIAD
24 HR. N/A

ELEV (ft)	DRIVE ELEV (ft)	DEPTH (ft)	BLOW COUNT 0.5ft	0.5ft	0.5ft	BLOWS PER FOOT 0 25 50 75 100	SAMP. NO.	MOI	LOG	SOIL AND ROCK DESCRIPTION ELEV. (ft)	DEPTH (ft)
2580											
										2,576.2 GROUND SURFACE	0.0
2575										EMBANKMENT: BROWN SILTY SAND WITH ROCK FRAGMENTS	
	2,571.6	4.6	1	1	13	14				2,570.6	5.6
2570										ALLUVIUM: DARK GRAY SAND AND GRAVEL	
										2,568.3	7.9
	2,566.6	9.6	25	10	12	22				SAPROLITE: BROWN SILTY SAND WITH MICA WITH THIN LAYERS OF WEATHERED ROCK	
2565											
										2,562.2	14.0
	2,561.6	14.6	65	35/.4		100/.9				WEATHERED ROCK	
2560										2,559.9	16.3
										CRYSTALLINE ROCK	
	2,558.6	17.6	60/0			60/0				2,558.6	17.6
										Boring Terminated WITH STANDARD PENETRATION TEST REFUSAL at Elevation 2,558.6 ft IN CRYSTALLINE ROCK	

NCDOT BORE SINGLE BD5113G_GEO_PDEA_BRDG990025.GPJ NC_DOT.GDT 4/1/13

NCDOT GEOTECHNICAL ENGINEERING UNIT
CORE BORING REPORT

SHEET

WBS 45359.1.7	**TIP** BD5113G	**COUNTY** YANCEY	**GEOLOGIST** Lockamy, P. Q.
SITE DESCRIPTION YANCEY COUNTY BRIDGE 25 ON SR-1323 OVER SHOAL CREEK			**GROUND WTR (ft)**
BORING NO. EB2A	**STATION** 14+21	**OFFSET** 9 ft LT	**ALIGNMENT** -L-	**0 HR.** N/A
COLLAR ELEV. 2,576.2 ft	**TOTAL DEPTH** 14.4 ft	**NORTHING** 806,501	**EASTING** 1,037,358	**24 HR.** Caved
DRILL RIG/HAMMER EFF./DATE AFO0071 CME-550X 72% 09/03/2009		**DRILL METHOD** NW Casing W/SPT & Core	**HAMMER TYPE** Automatic
DRILLER Cheek, D. O.	**START DATE** 08/28/12	**COMP. DATE** 08/28/12	**SURFACE WATER DEPTH** N/A
CORE SIZE N/A	**TOTAL RUN** 0.0 ft		

ELEV (ft)	RUN ELEV (ft)	DEPTH (ft)	RUN (ft)	DRILL RATE (Min/ft)	RUN REC. (ft) %	RUN RQD (ft) %	SAMP. NO.	STRATA REC. (ft) %	STRATA RQD (ft) %	LOG	DESCRIPTION AND REMARKS	ELEV. (ft)	DEPTH (ft)
2576.19											Ground Surface		
2575											EMBANKMENT: BROWN SILTY SAND WITH MICA AND ROCK FRAGMENTS		
2570				N=2								2,569.4	6.8
											ALLUVIUM: SAND AND GRAVEL	2,567.5	8.7
											WEATHERED ROCK	2,565.7	9.5
2565				N=60/0							CRYSTALLINE ROCK	2,564.4	11.8
											CRYSTALLINE ROCK. MUSCOVITE SCHIST TO MICA GNEISS. REC=96% RQD=88%. 3 BREAKS ON FOLIATION AT 40 TO 60 DEGREES. VERY HARD AND FRESH.	2,561.8	14.4

Boring Terminated at Elevation 2,561.8 ft IN CRYSTALLINE ROCK

NCDOT CORE SINGLE BD5113G_GEO_PDEA_BRDG990025.GPJ NC_DOT.GDT 4/1/13

45359.1.7 BD-5113G Yancey County Bridge 25 on SR-1323 over Shoal Creek.
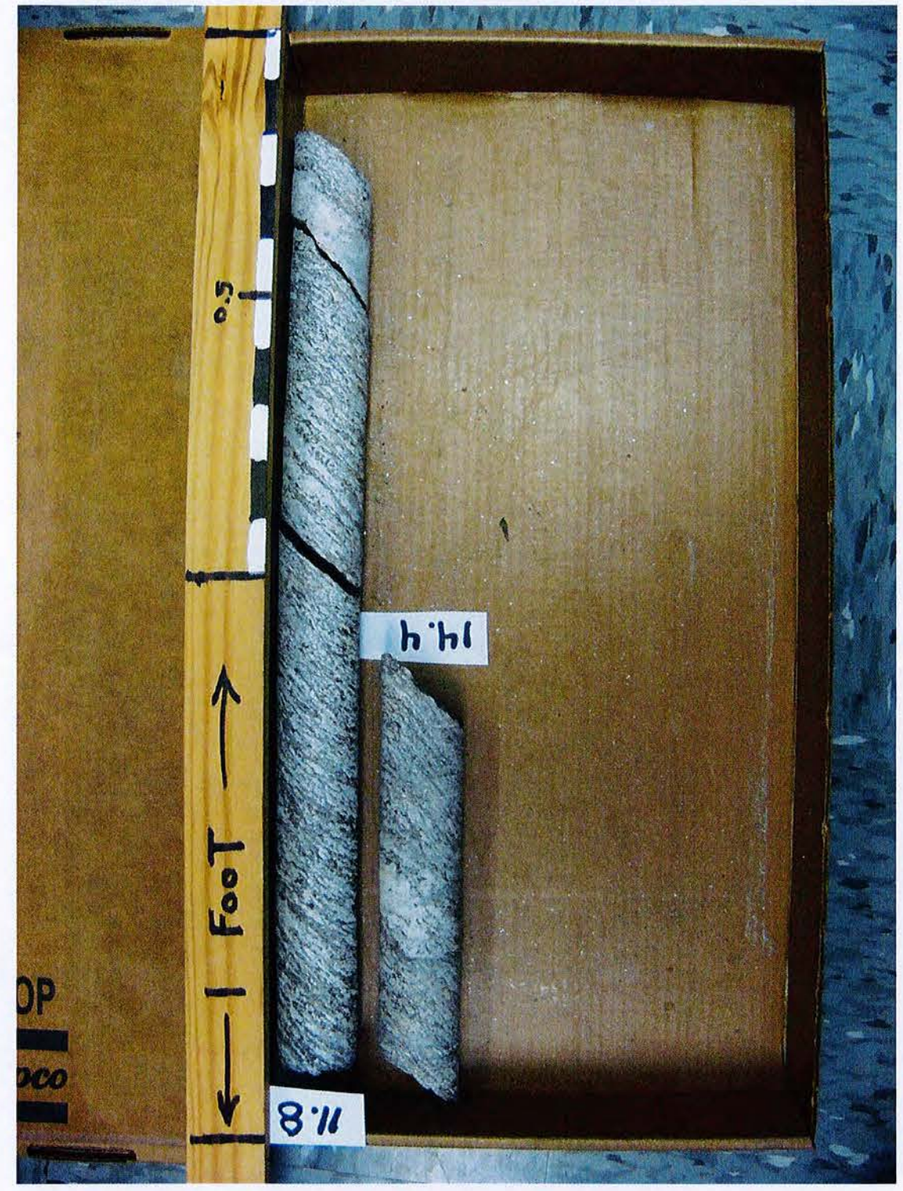
EB2-A 14+21 -L- 9 Ft. Lt.