08/17/11

# TIP PROJECT: BD-5113H

# CONTRACT: DM00073

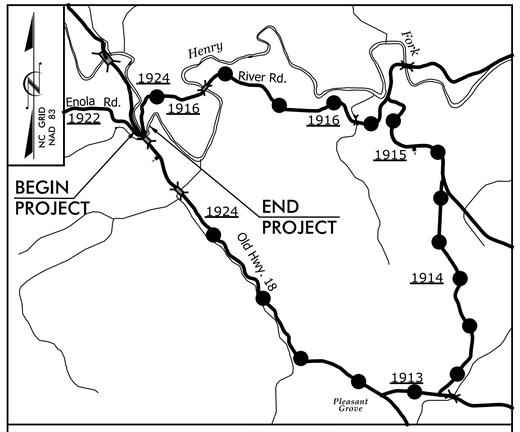


VICINITY MAP

DETOUR ROUTE

STATE OF NORTH CAROLINA
DIVISION OF HIGHWAYS

# BURKE COUNTY

***LOCATION: BRIDGE NO. 73 OVER HENRY FORK ON SR 1916 (RIVER ROAD)***

***TYPE OF WORK: GRADING, DRAINAGE, PAVING, AND STRUCTURE***

| STATE | STATE PROJECT REFERENCE NO. | SHEET NO. | TOTAL SHEETS |
|---|---|---|---|
| N.C. | BD-5113H | 1 | |

| STATE PROJ. NO. | F.A. PROJ. NO. | DESCRIPTION |
|---|---|---|
| 45359.1.8 | BRZ-1916(9) | P.E. |
| 45359.2.8 | BRZ-1916(9) | R/W |
| 45359.3.8 | BRZ-1916(9) | CONST. |

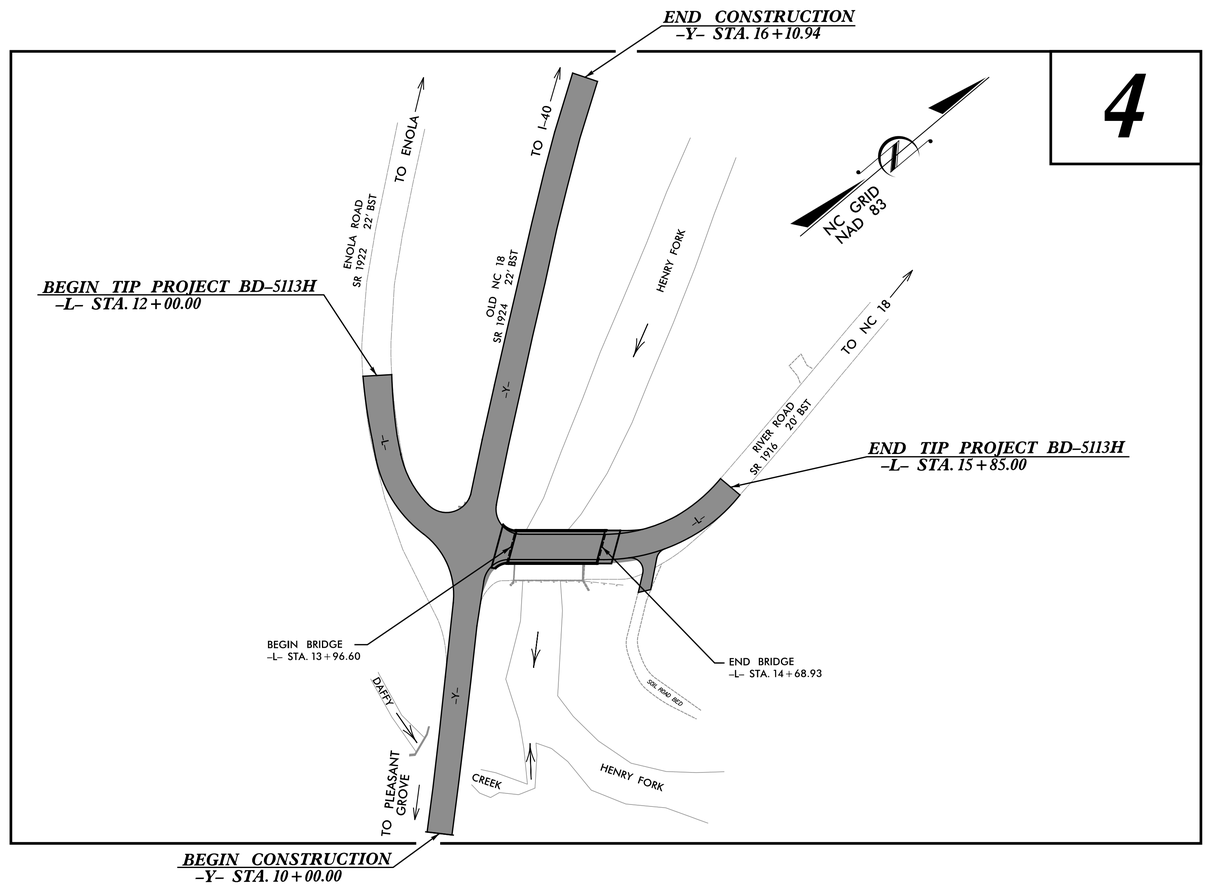



V&M
Vaughn & Melton
Consulting Engineers
Charlotte, North Carolina 704-357-0488
Tri-Cities, Tennessee 423-467-8401
Knoxville, Tennessee 865-546-5800
Asheville, North Carolina 828-253-2796
Middlesboro, Kentucky 606-248-6600
Spartanburg, South Carolina 864-574-4775

Copyright © 2006 Vaughn & Melton, Inc. All Rights Reserved

## GRAPHIC SCALES

30 15 0 30 60
PLANS

20 10 0 20 40
PROFILE (HORIZONTAL)

4 2 0 4 8
PROFILE (VERTICAL)

## DESIGN DATA

ADT 2009 = 550
ADT 2025 = 1100

T = 6%
V = 20 MPH

FUNC CLASS = LOCAL

## PROJECT LENGTH

LENGTH ROADWAY TIP PROJECT BD-5113H = 0.059 MI
LENGTH STRUCTURE TIP PROJECT BD-5113H = 0.014 MI
TOTAL LENGTH OF TIP PROJECT BD-5113H = 0.073 MI

Prepared In the Office of:
**VAUGHN & MELTON**
1318-F PATTON AVE.
ASHEVILLE NC, 28806
FOR THE NORTH CAROLINA DIVISION OF HIGHWAYS

2012 STANDARD SPECIFICATIONS

RIGHT OF WAY DATE:
JULY 30, 2013

LETTING DATE:
APRIL 16, 2014

REECE SCHULER, PE
PROJECT ENGINEER

DENNIS BOUTON, PE
PROJECT DESIGN ENGINEER

NCDOT CONTACT:
PAUL SPROUSE, PE
DIVISION 13 - BRIDGE MANAGER

HYDRAULICS ENGINEER

NORTH CAROLINA PROFESSIONAL SEAL 033023 ENGINEER BRADLEY S. RIDNOUR

Bradley S Ridnour, PE P.E.
SIGNATURE: 3/14/14

ROADWAY DESIGN ENGINEER

NORTH CAROLINA PROFESSIONAL SEAL 26960 ENGINEER REECE M. SCHULER

P.E.
SIGNATURE: 3/14/14

DIVISION OF HIGHWAYS
STATE OF NORTH CAROLINA

STATE OF NORTH CAROLINA · DEPARTMENT OF TRANSPORTATION

$$$$SYSTIME$$$$
$$$$DGN$$$$
$$$$USERNAME$$$$

| PROJECT REFERENCE NO. | SHEET NO. |
| --- | --- |
| BD-5113H | 1-A |

ROADWAY DESIGN ENGINEER

NORTH CAROLINA PROFESSIONAL SEAL 26960 ENGINEER REECE M. SCHULER

3/14/14

INDEX OF SHEETS

| SHEET NUMBER | SHEET |
| --- | --- |
| 1 | TITLE SHEET |
| 1-A | INDEX OF SHEETS, GENERAL NOTES, AND LIST OF STANDARD DRAWINGS |
| 1-B | CONVENTIONAL SYMBOLS |
| 1-C | SURVEY CONTROL SHEET |
| 2 | PAVEMENT SCHEDULE, TYPICAL SECTIONS, AND WEDGING DETAILS |
| 2-A | STRUCTURE ANCHOR UNIT DETAIL |
| 3-A | SUMMARY OF DRAINAGE QUANTITIES, SUMMARY OF GUARDRAIL, AND ASPHALT PAVEMENT REMOVAL SUMMARY |
| 3-B | EARTHWORK SUMMARY |
| 4 | PLAN SHEETS |
| 5 THRU 7 | PROFILE SHEETS |
| TMP-1 THRU TMP-4 | TRAFFIC MANAGEMENT PLANS |
| SD-1 | SPECIAL SIGN DESIGN |
| PM-1 | PAVEMENT MARKING PLAN |
| EC-1 THRU EC-4 | EROSION CONTROL PLANS |
| UC-1 THRU UC-3 | UTILITY CONSTRUCTION PLANS |
| UO-1 THRU UO-2 | UTILITIES BY OTHERS PLANS |
| X-0 | CROSS-SECTION SUMMARY |
| X-1 THRU X-4 | CROSS-SECTIONS |
| S-1 THRU S-18 | STRUCTURE PLANS |
| RW-1 THRU RW-4 | RETAINING WALL PLANS |

GENERAL NOTES:

2012 SPECIFICATIONS
EFFECTIVE: 01-17-12

GRADE LINE:
GRADING AND SURFACING OR RESURFACING AND WIDENING:

THE GRADE LINES SHOWN DENOTE THE FINISHED ELEVATION OF THE PROPOSED SURFACING AT GRADE POINTS SHOWN ON THE TYPICAL SECTIONS. WHERE NO GRADE LINES ARE SHOWN, THE PROFILES SHOWN DENOTE THE TOP ELEVATION OF THE EXISTING PAVEMENT ALONG THE CENTER LINE OF SURVEY ON WHICH THE PROPOSED RESURFACING WILL BE PLACED. GRADE LINES MAY BE ADJUSTED BY THE ENGINEER IN ORDER TO SECURE A PROPER TIE-IN.

CLEARING:

CLEARING ON THIS PROJECT SHALL BE PERFORMED TO THE LIMITS ESTABLISHED BY METHOD II.

SUPERELEVATION:

ALL CURVES ON THIS PROJECT SHALL BE SUPERELEVATED IN ACCORDANCE WITH STD. NO. 225.04 USING THE RATE OF SUPERELEVATION AND RUNOFF SHOWN ON THE PLANS. SUPERELEVATION IS TO BE REVOLVED ABOUT THE GRADE POINTS SHOWN ON THE TYPICAL SECTIONS.

SHOULDER CONSTRUCTION:

ASPHALT, EARTH, AND CONCRETE SHOULDER CONSTRUCTION ON THE HIGH SIDE OF SUPERELEVATED CURVES SHALL BE IN ACCORDANCE WITH STD. NO. 560.01.

GUARDRAIL:

THE GUARDRAIL LOCATIONS SHOWN ON THE PLANS MAY BE ADJUSTED DURING CONSTRUCTION AS DIRECTED BY THE ENGINEER. THE CONTRACTOR SHOULD CONSULT WITH THE ENGINEER PRIOR TO ORDERING GUARDRAIL MATERIAL.

TEMPORARY SHORING:

SHORING REQUIRED FOR THE MAINTENANCE OF TRAFFIC NOT SHOWN ON THE PLANS WILL BE PAID FOR AT THE CONTRACT PRICE FOR "TEMPORARY SHORING".

END BENTS:

THE ENGINEER SHALL CHECK THE STRUCTURE END BENT PLANS, DETAILS, AND CROSS-SECTION PRIOR TO SETTING OF THE SLOPE STAKES FOR THE EMBANKMENT OR EXCAVATION APPROACHING A BRIDGE.

UTILITIES:

UTILITY OWNERS ON THIS PROJECT ARE: AT&T, BURKE COUNTY WATER & SEWER DIVISION, AND RUTHERFORD EMC.

RIGHT-OF-WAY MARKERS:

ALL RIGHT-OF-WAY MARKERS ON THIS PROJECT SHALL BE PLACED BY CONTRACT.

2012 ROADWAY ENGLISH STANDARD DRAWINGS

The following Roadway Standards as appear in "Roadway Standard Drawings" Highway Design Branch - N. C. Department of Transportation - Raleigh, N. C., Dated January 17, 2012 are applicable to this project and by reference hereby are considered a part of these plans:

| STD.NO. | TITLE |
| --- | --- |
| DIVISION 2 - EARTHWORK | |
| 200.02 | Method of Clearing - Method II |
| 225.02 | Guide for Grading Subgrade - Secondary and Local |
| 225.04 | Method of Obtaining Superelevation - Two Lane Pavement |
| DIVISION 3 - PIPE CULVERTS | |
| 300.01 | Method of Pipe Installation - Method 'A' |
| DIVISION 4 - MAJOR STRUCTURES | |
| 422.11 | Bridge Approach Fills |
| DIVISION 5 - SUBGRADE, BASES AND SHOULDERS | |
| 560.01 | Method of Shoulder Construction - High Side of Superelevated Curve - Method I |
| DIVISION 8 - INCIDENTALS | |
| 806.01 | Concrete Right-of-Way Marker |
| 840.18 | Concrete Grated Drop Inlet Type "B" |
| 840.22 | Frames and Wide Slot Sag Grates |
| 840.25 | Anchorage for Frames |
| 840.29 | Traffic Bearing Grated Drop Inlet - for Cast Iron Double Frame and Grates |
| 840.35 | Traffic Bearing Precast Drainage Structure |
| 840.66 | Drainage Structure Steps |
| 862.01 | Guardrail Placement |
| 862.02 | Guardrail Installation |
| 862.03 | Structure Anchor Units |
| 876.02 | Guide for Rip Rap at Pipe Outlets |

$$$$SYSTIME$$$$ $$$$$$$$$$$$DGN$$$$$$$$$$$$$$$$$$ $$$$USERNAME$$$$

3/15/06

| PROJECT REFERENCE NO. | SHEET NO. |
|---|---|
| BD-5113H | 1-B |

***Note: Not to Scale***

****S.U.E. = Subsurface Utility Engineering***

STATE OF NORTH CAROLINA
DIVISION OF HIGHWAYS

# CONVENTIONAL PLAN SHEET SYMBOLS

## *BOUNDARIES AND PROPERTY:*

- State Line
- County Line
- Township Line
- City Line
- Reservation Line
- Property Line
- Existing Iron Pin — EIP
- Property Corner
- Property Monument — ECM
- Parcel/Sequence Number — 123
- Existing Fence Line
- Proposed Woven Wire Fence
- Proposed Chain Link Fence
- Proposed Barbed Wire Fence
- Existing Wetland Boundary — WLB
- Proposed Wetland Boundary — WLB
- Existing Endangered Animal Boundary — EAB
- Existing Endangered Plant Boundary — EPB

## *BUILDINGS AND OTHER CULTURE:*

- Gas Pump Vent or U/G Tank Cap
- Sign — S
- Well — W
- Small Mine
- Foundation
- Area Outline
- Cemetery
- Building
- School
- Church
- Dam

## *HYDROLOGY:*

- Stream or Body of Water
- Hydro, Pool or Reservoir
- Jurisdictional Stream — JS
- Buffer Zone 1 — BZ 1
- Buffer Zone 2 — BZ 2
- Flow Arrow
- Disappearing Stream
- Spring
- Swamp Marsh
- Proposed Lateral, Tail, Head Ditch — FLOW
- False Sump

## *RAILROADS:*

- Standard Gauge — CSX TRANSPORTATION
- RR Signal Milepost — MILEPOST 35
- Switch — SWITCH
- RR Abandoned
- RR Dismantled

## *RIGHT OF WAY:*

- Baseline Control Point
- Existing Right of Way Marker
- Existing Right of Way Line
- Proposed Right of Way Line — RW
- Proposed Right of Way Line with Iron Pin and Cap Marker — RW
- Proposed Right of Way Line with Concrete or Granite Marker — RW
- Existing Control of Access — CA
- Proposed Control of Access — CA
- Existing Easement Line — E
- Proposed Temporary Construction Easement — E
- Proposed Temporary Drainage Easement — TDE
- Proposed Permanent Drainage Easement — PDE
- Proposed Permanent Utility Easement — PUE

## *ROADS AND RELATED FEATURES:*

- Existing Edge of Pavement
- Existing Curb
- Proposed Slope Stakes Cut — C
- Proposed Slope Stakes Fill — F
- Proposed Wheel Chair Ramp — WCR
- Proposed Wheel Chair Ramp Curb Cut — WCC
- Curb Cut for Future Wheel Chair Ramp — CCFR
- Existing Metal Guardrail
- Proposed Guardrail
- Existing Cable Guiderail
- Proposed Cable Guiderail
- Equality Symbol
- Pavement Removal

## *VEGETATION:*

- Single Tree
- Single Shrub
- Hedge
- Woods Line
- Orchard
- Vineyard — Vineyard

## *EXISTING STRUCTURES:*

MAJOR:

- Bridge, Tunnel or Box Culvert — CONC
- Bridge Wing Wall, Head Wall and End Wall — CONC WW

MINOR:

- Head and End Wall — CONC HW
- Pipe Culvert
- Footbridge
- Drainage Box: Catch Basin, DI or JB — CB
- Paved Ditch Gutter
- Storm Sewer Manhole — S
- Storm Sewer — S

## *UTILITIES:*

POWER:

- Existing Power Pole
- Proposed Power Pole
- Existing Joint Use Pole
- Proposed Joint Use Pole
- Power Manhole — P
- Power Line Tower
- Power Transformer
- U/G Power Cable Hand Hole — HH
- H-Frame Pole
- Recorded U/G Power Line — P
- Designated U/G Power Line (S.U.E.*) — P

TELEPHONE:

- Existing Telephone Pole
- Proposed Telephone Pole
- Telephone Manhole — T
- Telephone Booth
- Telephone Pedestal — T
- Telephone Cell Tower
- U/G Telephone Cable Hand Hole — HH
- Recorded U/G Telephone Cable — T
- Designated U/G Telephone Cable (S.U.E.*) — T
- Recorded U/G Telephone Conduit — TC
- Designated U/G Telephone Conduit (S.U.E.*) — TC
- Recorded U/G Fiber Optics Cable — T FO
- Designated U/G Fiber Optics Cable (S.U.E.*) — T FO

WATER:

- Water Manhole — W
- Water Meter
- Water Valve
- Water Hydrant
- Recorded U/G Water Line — W
- Designated U/G Water Line (S.U.E.*) — W
- Above Ground Water Line — A/G Water

TV:

- TV Satellite Dish
- TV Pedestal — C
- TV Tower
- U/G TV Cable Hand Hole — HH
- Recorded U/G TV Cable — TV
- Designated U/G TV Cable (S.U.E.*) — TV
- Recorded U/G Fiber Optic Cable — TV FO
- Designated U/G Fiber Optic Cable (S.U.E.*) — TV FO

GAS:

- Gas Valve
- Gas Meter
- Recorded U/G Gas Line — G
- Designated U/G Gas Line (S.U.E.*) — G
- Above Ground Gas Line — A/G Gas

SANITARY SEWER:

- Sanitary Sewer Manhole
- Sanitary Sewer Cleanout
- U/G Sanitary Sewer Line — SS
- Above Ground Sanitary Sewer — A/G Sanitary Sewer
- Recorded SS Forced Main Line — FSS
- Designated SS Forced Main Line (S.U.E.*) — FSS

MISCELLANEOUS:

- Utility Pole
- Utility Pole with Base
- Utility Located Object
- Utility Traffic Signal Box — S
- Utility Unknown U/G Line — ?UTL
- U/G Tank; Water, Gas, Oil
- A/G Tank; Water, Gas, Oil
- U/G Test Hole (S.U.E.*)
- Abandoned According to Utility Records — AATUR
- End of Information — E.O.I.

| PROJECT REFERENCE NO. | SHEET NO. |
|---|---|
| BD-5113H | 1C |
| Location and Surveys | |

# SURVEY CONTROL SHEET BD-5113H

BL

| POINT | DESC. | NORTH | EAST | ELEVATION | L STATION | OFFSET |
|---|---|---|---|---|---|---|
| 1 | BL-1 | 704471.7961 | 1223969.2705 | 1176.98 | 10+99.26 | 16.83 RT |
| 2 | BL-2 | 704320.2830 | 1224231.8050 | 1157.16 | 13+56.67 | 68.54 RT |
| 3 | BL-3 | 704480.4428 | 1224289.8061 | 1159.18 | 14+93.67 | 2.48 RT |
| 4 | BL-4 | 704706.3110 | 1224290.9358 | 1161.91 | 17+21.48 | 11.59 RT |

BY

| POINT | DESC. | NORTH | EAST | ELEVATION | Y1 STATION | OFFSET |
|---|---|---|---|---|---|---|
| 6 | BY-6 | 704572.2274 | 1224081.9244 | 1178.11 | 14+54.79 | 15.05 RT |
| Y2 | BL-2 | 704320.2830 | 1224231.8050 | 1157.16 | 11+65.81 | 25.91 LT |
| 5 | BY-5 | 704177.0955 | 1224381.5841 | 1158.05 | OUTSIDE PROJECT LIMITS | |

**********
BM1 ELEVATION - 1156.99
N 704299 E 1224240
BL STATION 8+03.00 23 RIGHT
RR SPIKE SET IN BASE OF 26" POPLAR
**********
**********
BM2 ELEVATION - 1159.91
N 704463 E 1224337
BL STATION 9+73.00 51 RIGHT
RR SPIKE SET IN BASE OF 14" JACK PINE
**********
**********
BM3 ELEVATION - 1179.78
N 704609 E 1224076
BY STATION 5+00.00
N 9°06'52.41" W DIST 37.03
RR SPIKE SET IN BASE OF 12" POPLAR
**********

ROW MARKER CONCRETE OR GRANITE-E

| ALIGN | STATION | OFFSET | NORTH | EAST |
|---|---|---|---|---|
| L | 14+00.64 | -40.00 | 704435.0871 | 1224198.7852 |
| L | 14+70.31 | -40.00 | 704488.3465 | 1224243.7000 |
| L | 15+83.64 | -40.00 | 704561.6988 | 1224263.5832 |
| L | 15+83.64 | -25.00 | 704564.2541 | 1224278.3640 |
| Y1 | 13+09.00 | -25.00 | 704431.8359 | 1224138.0432 |

ROW MARKER PERMANENT EASEMENT-E

| ALIGN | STATION | OFFSET | NORTH | EAST |
|---|---|---|---|---|
| Y1 | 11+27.00 | -30.00 | 704289.1293 | 1224255.3099 |
| Y1 | 11+24.00 | -51.00 | 704272.6016 | 1224242.0119 |
| Y1 | 11+43.00 | -53.00 | 704285.1208 | 1224227.5803 |
| Y1 | 11+60.00 | -39.80 | 704306.5544 | 1224225.6215 |

FINAL -L-

| TYPE | STATION | NORTH | EAST |
|---|---|---|---|
| POT | 10+00.00 | 704560.4859 | 1223920.9641 |
| PC | 10+90.93 | 704488.9433 | 1223977.0942 |
| PCC | 12+65.52 | 704377.8179 | 1224110.0903 |
| PT | 13+87.63 | 704399.3519 | 1224220.9739 |
| PC | 14+70.31 | 704462.5587 | 1224274.2776 |
| PT | 15+83.64 | 704568.5129 | 1224302.9986 |
| POT | 17+67.58 | 704749.7647 | 1224271.6638 |

FINAL -Y1-

| TYPE | STATION | NORTH | EAST |
|---|---|---|---|
| POT | 10+00.00 | 704216.8021 | 1224363.9275 |
| PC | 11+85.94 | 704352.6756 | 1224237.0014 |
| PT | 13+03.94 | 704442.8965 | 1224161.0284 |
| PC | 15+06.16 | 704604.0774 | 1224038.9070 |
| PT | 16+10.94 | 704690.7680 | 1223980.1304 |

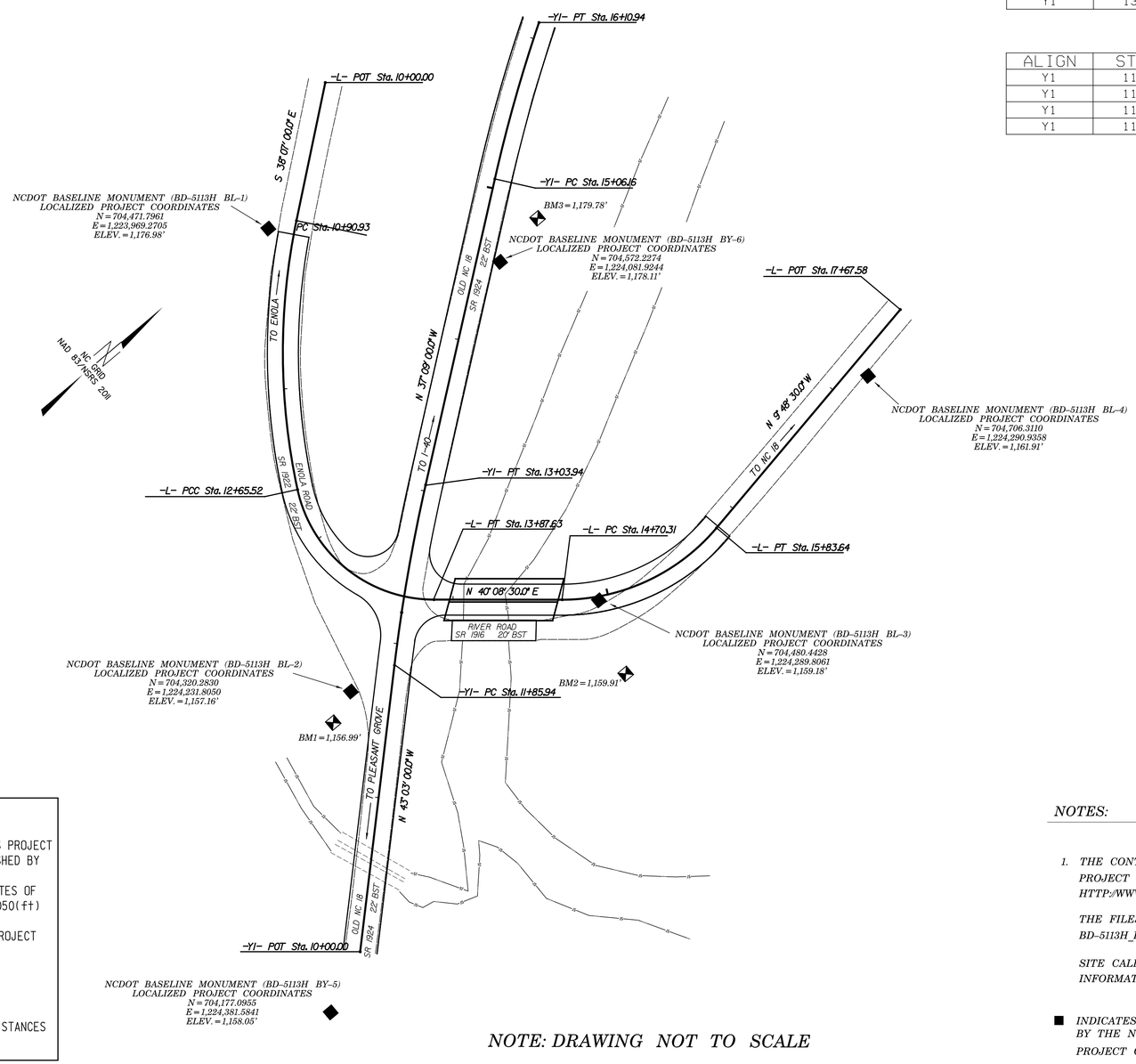


## DATUM DESCRIPTION

THE LOCALIZED COORDINATE SYSTEM DEVELOPED FOR THIS PROJECT IS BASED ON THE STATE PLANE COORDINATES ESTABLISHED BY NCDOT FOR MONUMENT "110073 BL-2" WITH NAD 83/NSRS 2011 STATE PLANE GRID COORDINATES OF NORTHING: 704320.2830(ft) EASTING: 1224231.8050(ft) ELEVATION: 1157.16(ft)
THE AVERAGE COMBINED GRID FACTOR USED ON THIS PROJECT (GROUND TO GRID) IS: 0.99988287
THE N.C. LAMBERT GRID BEARING AND LOCALIZED HORIZONTAL GROUND DISTANCE FROM "110073 BL-2" TO -L- STATION 10+00.00 IS N 52°18'18" W 392.84'
ALL LINEAR DIMENSIONS ARE LOCALIZED HORIZONTAL DISTANCES
VERTICAL DATUM USED IS NAVD 88

NOTE: DRAWING NOT TO SCALE

*NOTES:*

1. *THE CONTROL DATA FOR THIS PROJECT CAN BE FOUND ELECTRONICALLY BY SELECTING PROJECT CONTROL DATA AT:*
   *HTTP://WWW.NCDOT.ORG/DOH/PRECONSTRUCT/HIGHWAY/LOCATION/PROJECT/*

   *THE FILES TO BE FOUND ARE AS FOLLOWS:*
   *BD-5113H_LS_CONTROL.TXT*

   *SITE CALIBRATION INFORMATION HAS NOT BEEN PROVIDED FOR THIS PROJECT. IF FURTHER INFORMATION IS NEEDED, PLEASE CONTACT THE LOCATION AND SURVEYS UNIT.*

■ *INDICATES GEODETIC CONTROL MONUMENTS USED OR SET FOR HORIZONTAL PROJECT CONTROL BY THE NCDOT LOCATION AND SURVEYS UNIT.*
*PROJECT CONTROL ESTABLISHED USING GLOBAL POSITIONING SYSTEM.*

6/2/99

| PROJECT REFERENCE NO. | SHEET NO. |
|---|---|
| BD-5113H | 2 |
| R/W SHEET NO. | |
| ROADWAY DESIGN ENGINEER | PAVEMENT DESIGN ENGINEER |

NORTH CAROLINA PROFESSIONAL SEAL 26960 ENGINEERING REECE M. SCHILLER 3/14/14

NORTH CAROLINA PROFESSIONAL SEAL 20134 ENGINEER ROBERT M. CROSS 3/14/14

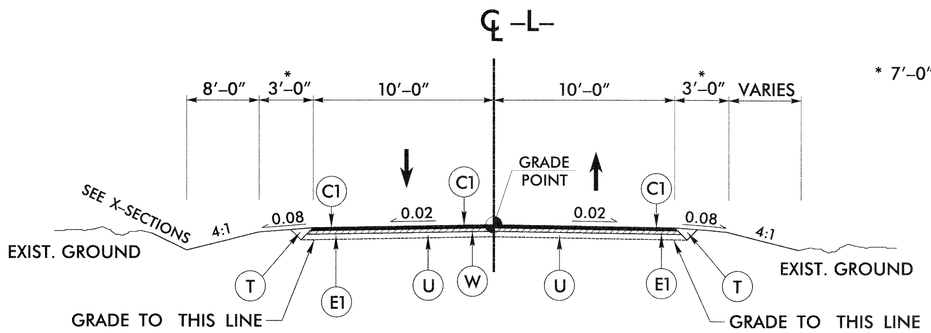


* 7'-0" WITH GUARDRAIL

## TYPICAL SECTION NO. 1

## USE TYPICAL SECTION NO. 1

-L- STA. 12+00.00 (BEGIN PROJECT) TO 12+80.00

NOTE: INCIDENTAL MILLING REQUIRED FROM 12+00 TO 12+50 TO ENSURE SMOOTH TRANSITION.

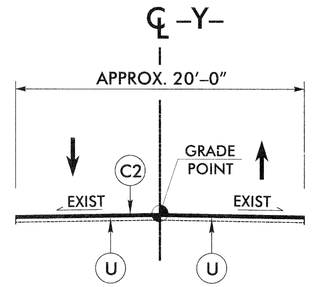


## TYPICAL SECTION NO. 4

-Y- STA. 10+00.00 TO 16+10.94
-L- STA. 13+58.32 TO 13+79.71

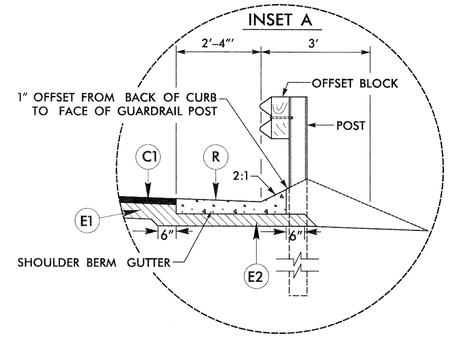


## USE INSET A

-L- END BRIDGE TO 14+85 RT

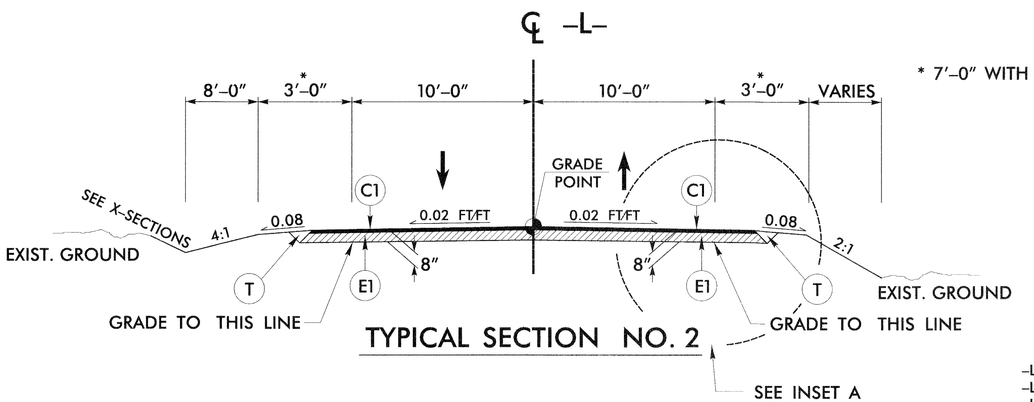


* 7'-0" WITH GUARDRAIL

## TYPICAL SECTION NO. 2

## USE TYPICAL SECTION NO. 2

-L- STA. 12+80.00 TO STA. 13+58.32
-L- STA. 13+79.71 TO STA. 13+96.60 (BEGIN BRIDGE)
-L- STA. 14+68.93 (END BRIDGE) TO STA. 15+85.00 (END PROJECT)

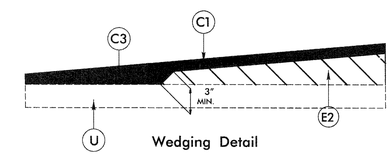


Wedging Detail

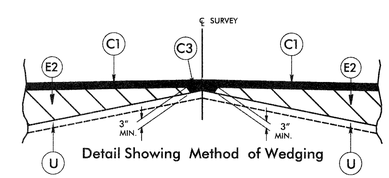


Detail Showing Method of Wedging

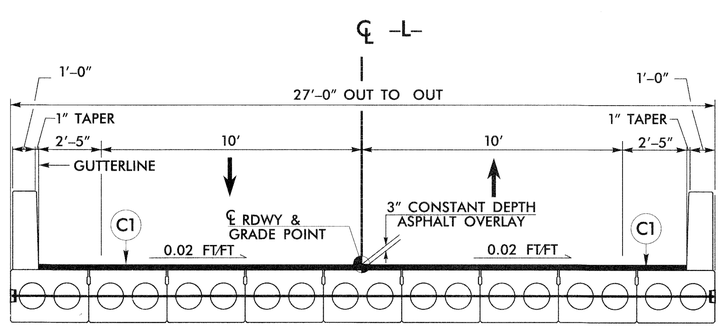


## TYPICAL SECTION NO. 3

## USE TYPICAL SECTION NO. 3

-L- STA. 13+96.60 (BEGIN BRIDGE) TO
-L- STA. 14+68.93 (END BRIDGE)

| | PAVEMENT SCHEDULE |
|---|---|
| C1 | PROP. APPROX. 3" ASPHALT CONCRETE SURFACE COURSE, TYPE S9.5B, AT AN AVERAGE RATE OF 168 LBS. PER SQ. YD. IN EACH OF TWO 1½" LAYERS. |
| C2 | PROP. APPROX. 2.5" ASPHALT CONCRETE SURFACE COURSE, TYPE S9.5B, AT AN AVERAGE RATE OF 168 LBS. PER SQ. YD. |
| C3 | PROP. VAR. DEPTH ASPHALT CONCRETE SURFACE COURSE, TYPE S9.5B AT AN AVERAGE RATE OF 112 LBS. PER SQ. YD. PER 1" DEPTH. TO BE PLACED IN LAYERS NOT TO EXCEED 1½" IN DEPTH. |
| E1 | PROP. APPROX. 5" ASPHALT CONCRETE BASE COURSE, TYPE B25.0B, AT AN AVERAGE RATE OF 570 LBS. PER SQ. YD. |
| E2 | PROP. VAR. DEPTH ASPHALT CONCRETE BASE COURSE, TYPE B25.0B, AT AN AVERAGE RATE OF 114 LBS. PER SQ. YD. PER 1" DEPTH. TO BE PLACED IN LAYERS NOT LESS THAN 3" IN DEPTH OR GREATER THAN 5½" IN DEPTH. |
| R | SHOULDER BERM GUTTER (NCDOT STANDARD DRAWING NO. 846.01) |
| T | EARTH MATERIAL |
| U | EXISTING PAVEMENT |
| W | PROPOSED WEDGING (SEE APPROPRIATE DETAILS) |

NOTE: ALL PAVEMENT SLOPES ARE 1:1 UNLESS SHOWN OTHERWISE.

8/17/99

STATE OF NORTH CAROLINA
DEPT. OF TRANSPORTATION
DIVISION OF HIGHWAYS
RALEIGH, N.C.

ENGLISH DETAIL DRAWING FOR
**STRUCTURE ANCHOR UNITS**
GUARDRAIL ANCHOR UNIT, TYPE III FOR ATTACHMENT TO RAIL ON BRIDGE - SUB REGIONAL TIER

SHEET 2 OF 7
**862d03**

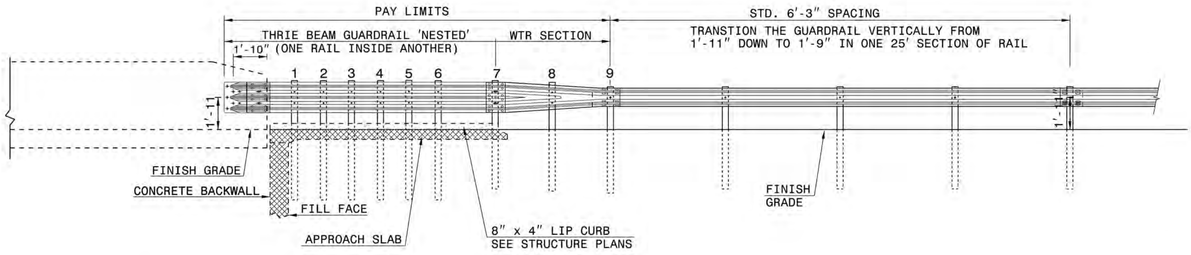


**ELEVATION**

NOTE:
- **POST NOT REQUIRED FOR SKEW ANGLES GREATER THAN 150° OR LESS THAN 30° UNLESS OTHERWISE DIRECTED BY THE ENGINEER.
- *THE DISTANCE FROM END OF BRIDGE RAIL TO CENTER LINE OF THE FIRST POST SHOULD BE 11½" IF CONCRETE BACKWALL IS NOT PRESENT.
- -SHOULDER BERM GUTTER MUST BE INSTALLED TO THE LIMITS 8" x 4" LIP CURB IS SHOWN IF ANCHOR UNIT IS NOT ADJACENT TO AN APPROACH SLAB.
- -MEASURE GUARDRAIL HEIGHT FROM THE TOP OF ADJACENT SURFACE (SHOULDER, BERM, OR GUTTER).
- -LAP JOINTS IN THE DIRECTION OF TRAFFIC FLOW.
- -SEE SHEET 5 FOR POST SECTIONS 1 THRU 9.

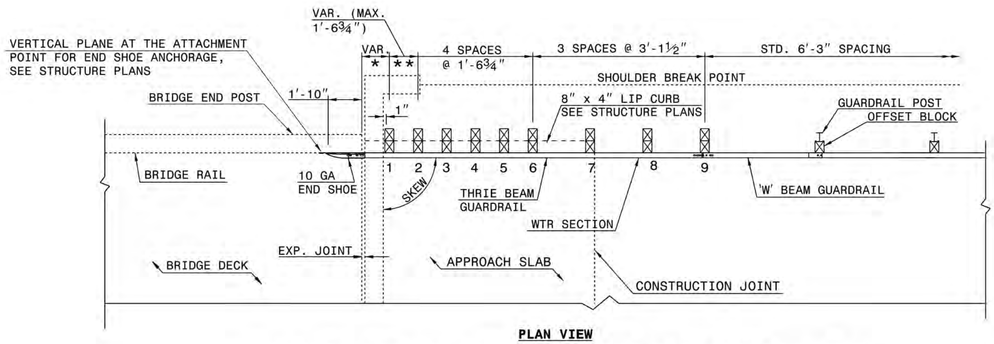


**PLAN VIEW**

## GUARDRAIL ANCHOR UNIT, TYPE III FOR ATTACHMENT TO RAIL ON BRIDGE - SUB REGIONAL TIER


STATE OF NORTH CAROLINA
DEPT. OF TRANSPORTATION
DIVISION OF HIGHWAYS
RALEIGH, N.C.

ENGLISH DETAIL DRAWING FOR
**STRUCTURE ANCHOR UNITS**
GUARDRAIL ANCHOR UNIT, TYPE III FOR ATTACHMENT TO RAIL ON BRIDGE - SUB REGIONAL TIER

SHEET 2 OF 7
862d03


STATE OF NORTH CAROLINA
DEPT. OF TRANSPORTATION
DIVISION OF HIGHWAYS
RALEIGH, N.C.

ENGLISH DETAIL DRAWING FOR
**STRUCTURE ANCHOR UNITS**
GUARDRAIL ANCHOR UNIT, TYPE III

SHEET 3 OF 7
**862d03**

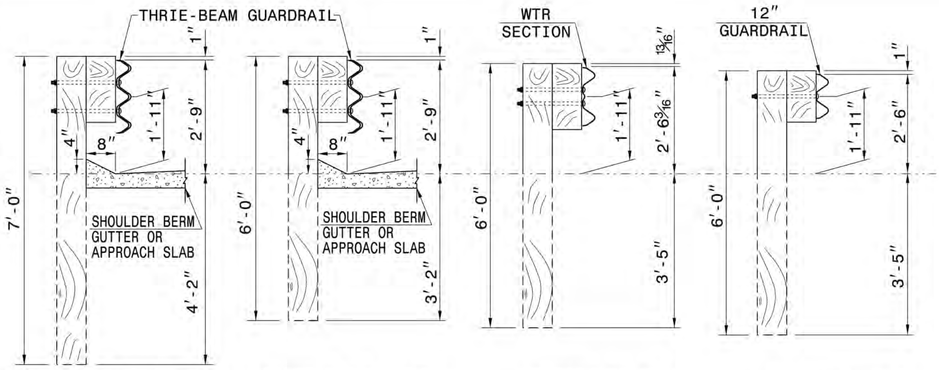


**SECTION OF THRIE BEAM POSTS 1 THRU 6**

**SECTION OF THRIE BEAM POST 7**

**SECTION OF WTR BEAM POST 8**

**SECTION OF 'W' BEAM POST 9**

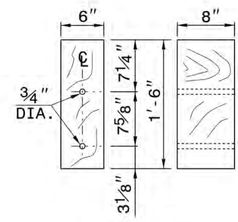


**THRIE BEAM OFFSET BLOCK**

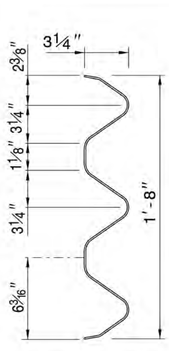


**THRIE-BEAM SECTION**

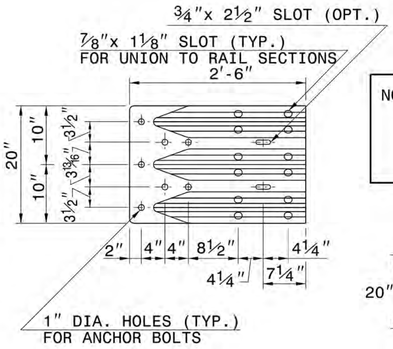


**END SHOE**

NOTE: THE MID POST AND OFFSET BLOCK OF THE WTR SECTION WILL REQUIRE SPECIAL BOLT HOLE DRILLING IN THE THRIE BEAM OFFSET BLOCK AND LINE POST.

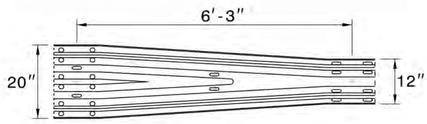


**WTR SECTION**
ELEVATION VIEW

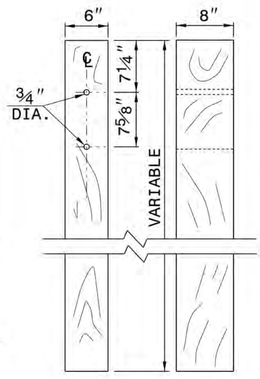


**THRIE BEAM LINE POST**


STATE OF NORTH CAROLINA
DEPT. OF TRANSPORTATION
DIVISION OF HIGHWAYS
RALEIGH, N.C.

ENGLISH DETAIL DRAWING FOR
**STRUCTURE ANCHOR UNITS**
GUARDRAIL ANCHOR UNIT, TYPE III

SHEET 3 OF 7
862d03



**CONTRACT STANDARDS AND DEVELOPMENT UNIT**
Office 919-707-6950 FAX 919-250-4119


**SEE TITLE BLOCK**

ORIGINAL BY: J. HOWERTON DATE: 06-22-12
MODIFIED BY: DATE:
CHECKED BY: DATE:
FILE SPEC.:

PROJECT REFERENCE NO. BD-6713H
SHEET NO. 2-A

| COMPUTED BY: CWW | DATE: 6/13 |
|---|---|
| CHECKED BY: ACC | DATE: 6/13 |

| PROJECT REFERENCE NO. | SHEET NO. |
|---|---|
| BD-5113H | 3-A |

STATE OF NORTH CAROLINA
DIVISION OF HIGHWAYS

# PAVEMENT REMOVAL SUMMARY

| IN SQUARE YARDS | | | | | |
|---|---|---|---|---|---|
| LINE | LOCATION | ASPHALT REMOVAL | ASPHALT BREAK-UP | CONCRETE REMOVAL | |
| -L- | STA. 12+83 TO 13+68 | 208 | | | |
| -L- | STA. 13+77 TO 13+99 | 41 | | | |
| -L- | STA. 14+55 TO 14+69 | 68 | | | |
| -L- | STA. 15+05 TO 15+75 | 31 | | | |
| | TOTAL | 348 | | | |
| | SAY | 350 | | | |

Approximate quantities only. Unclassified excavation, borrow excavation, fine grading, clearing and grubbing, and removal of existing pavement will be paid for at the contract lump sum price for "grading".

NOTE: Invert Elevations are for Bid Purposes only and shall not be used for project construction stakeout. See "Standard Specifications For Roads and Structures, Section 300-5".

# SUB-REGIONAL & REGIONAL
# LIST OF PIPES, ENDWALLS, ETC. (FOR PIPES 48" & UNDER)

| STATION / SIZE / THICKNESS OR GAUGE | LOCATION (LT,RT, OR CL) | STRUCTURE NO. FROM | STRUCTURE NO. TO | TOP ELEVATION | INVERT ELEVATION | INVERT ELEVATION | SLOPE CRITICAL | DRAINAGE PIPE (RCP, CSP, CAAP, HDPE, or PVC) 12" | 15" | 18" | 24" | 30" | 36" | 42" | 48" | DO NOT USE RCP | DO NOT USE CSP | DO NOT USE CAAP | DO NOT USE HDPE |
|---|---|---|---|---|---|---|---|---|---|---|---|---|---|---|---|---|---|---|---|
| -L- 13+16 | LT | 4-1 | OUT | 1161.00 | 1157.00 | | | | | | | | | | | | | | |
| | | | | | 1157.00 | 1154.92 | | | | | | | | | | | | | |
| -L- 14+80 | RT | 4-2 | OUT | 1158.98 | 1156.31 | 1156.31 | | | 8 | | | | | | | | | | |
| | | | | | | 1156.27 | | | | | | | | | | | | | |
| TOTAL | | | | | | | | | 8 | | | | | | | | | | |

| STATION / SIZE / THICKNESS OR GAUGE | C.S. PIPE 12" | 15" | 18" | 24" | 36" | 42" | 48" | R.C. PIPE (CLASS III) 15" | 18" | 24" | 30" | 36" | 42" | 48" | R.C. PIPE (CLASS IV) 12" | 15" | 18" | 24" | 30" | 36" | 42" | 48" |
|---|---|---|---|---|---|---|---|---|---|---|---|---|---|---|---|---|---|---|---|---|---|---|
| | .064 | .064 | .064 | .064 | .079 | .109 | .109 | | | | | | | | | | | | | | | |
| -L- 13+16 | | | | | | | | | | | | | | | | | | | | | | |
| | | | | | | | | | | 104 | | | | | | | | | | | | |
| -L- 14+80 | | | | | | | | | | | | | | | | | | | | | | |
| | | | | | | | | | | | | | | | | | | | | | | |
| TOTAL | | | | | | | | | | 104 | | | | | | | | | | | | |

| STATION | *** R.C. PIPE (CLASS V) | *** R.C. PIPE CULVERTS, CONTRACTOR DESIGN PIPE | *** R.C. PIPE CULVERTS, CONTRACTOR DESIGN PIPE | 15" SIDE DRAIN PIPE | 18" SIDE DRAIN PIPE | ENDWALLS STD. 838.01, STD. 838.11 OR STD. 838.80 (UNLESS NOTED OTHERWISE) CU. YDS. R.C.P. | C.S.P. | QUANTITIES FOR DRAINAGE STRUCTURES * TOTAL L.F. FOR PAY QUANTITY SHALL BE COL. "A" + (1.3 X COL. "B") PER EACH (0' THRU 5.0') | LIN. FT. A: 5.0' THRU 10.0' | LIN. FT. B: 10.0' AND ABOVE | C.B. STD. 840.01 OR STD. 840.02 | FRAME, GRATES AND HOOD STANDARD 840.03 TYPE OF GRATE E | F | G | CONCRETE TRANSITIONAL SECTION CATCH BASIN | DROP INLET | T.B.D.I. STD. 840.35 | T.B.D.I. FRAME WITH TWO GRATES STD. 840.29 | 2GI STD. 840.18 | D.I. FRAME WITH TWO GRATES STD. 840.22 | CORR. STEEL ELBOWS NO. & SIZE | CONC. COLLARS CL. "B" C.Y. STD 840.72 | CONC. & BRICK PIPE PLUG, C.Y. STD. 840.71 | PIPE REMOVAL LIN.FT. | REMARKS |
|---|---|---|---|---|---|---|---|---|---|---|---|---|---|---|---|---|---|---|---|---|---|---|---|---|---|---|---|---|---|---|---|---|---|
| -L- 13+16 | | | | | | | | 1 | | | | | | | | | | 1 | 1 | | | | | | | | | | | | | | REMOVE HEADWALL |
| | | | | | | | | | | | | | | | | | | | | | | | | | | | | | | | | 108 | REMOVE 18" CMP |
| -L- 14+80 | | | | | | | | 1 | | | | | | | | | | 1 | 1 | | | | | | | | | | | | | | |
| TOTAL | | | | | | | | 2 | | | | | | | | | | 1 | 1 | 1 | 1 | | | | | | | | | | | | |

ABBREVIATIONS

| | |
|---|---|
| C.B. | CATCH BASIN |
| N.D.I. | NARROW DROP INLET |
| D.I. | DROP INLET |
| G.D.I. | GRATED DROP INLET |
| G.D.I. (N.S.) | GRATED DROP INLET (NARROW SLOT) |
| J.B. | JUNCTION BOX |
| M.H. | MANHOLE |
| T.B.D.I. | TRAFFIC BEARING DROP INLET |
| T.B.J.B. | TRAFFIC BEARING JUNCTION BOX |

"N" = DISTANCE FROM EDGE OF LANE TO FACE OF GUARDRAIL.
TOTAL SHOULDER WIDTH = DISTANCE FROM EDGE OF TRAVEL LANE TO SHOULDER BREAK POINT.
FLARE LENGTH = DISTANCE FROM LAST SECTION OF PARALLEL GUARDRAIL TO END OF GUARDRAIL.
W = TOTAL WIDTH OF FLARE FROM BEGINNING OF TAPER TO END OF GUARDRAIL.
G = GATING IMPACT ATTENUATOR TYPE 350
NG = NON-GATING IMPACT ATTENUATOR TYPE 350

# GUARDRAIL SUMMARY

| SURVEY LINE | BEG. STA. | END STA. | LOCATION | LENGTH STRAIGHT | LENGTH SHOP CURVED | LENGTH DOUBLE FACED | WARRANT POINT APPROACH END | WARRANT POINT TRAILING END | "N" DIST. FROM E.O.L. | TOTAL SHOUL. WIDTH | FLARE LENGTH APPROACH END | FLARE LENGTH TRAILING END | W APPROACH END | W TRAILING END | ANCHORS XI MOD | XI | GRAU 350 | GRAU 350 TL-2 | | TYPE III | TYPE III SHOP CURVED | B-77 | AT-1 | IMPACT ATTENUATOR TYPE 350 EA | G | NG | SINGLE FACED GUARDRAIL | REMOVE EXISTING GUARDRAIL | REMOVE AND STOCKPILE EXISTING GUARDRAIL | REMARKS |
|---|---|---|---|---|---|---|---|---|---|---|---|---|---|---|---|---|---|---|---|---|---|---|---|---|---|---|---|---|---|---|
| -L- | 14+00.92 | 14+01.10 | LT. | 50 | 31.25 | | | 14+01.10 | | 7 | | | | | | | 1 | | | | 1 | | | | | | | | | |
| -L- | 13+80.31 | 13+94.44 | RT. | 50 | 31.25 | | 13+94.44 | | | 7 | | | | | | | 1 | | | | 1 | | | | | | | | | |
| -L- | 14+71.18 | 15+38.37 | LT. | 25 | 31.25 | | 14+71.18 | | | 7 | | | | | | | | 1 | | | 1 | | | | | | | 30' | | |
| -L- | 14+64.44 | 14+94.78 | RT. | 25 | 12.5 | | | 14+94.78 | | 7 | | | | | | | | | | 1 | | | 1 | | | | | 31' | | |
| | | SUBTOTAL | | 150 | 106.25 | | | | | | | | | | | | 2 | 1 | | 1 | 3 | | 1 | | | | | | | |
| | | LESS DEDUCTIONS FOR ANCHORS | | | | | | | | | | | | | | | | | | | | | | | | | | | | |
| | | AT-1 1 @ 6.25' | | - 6.25 | | | | | | | | | | | | | | | | | | | | | | | | | | |
| | | GRAU-350 TL-2 1 @ 25'= | | - 25 | | | | | | | | | | | | | | | | | | | | | | | | | | |
| | | TYPE III 1 @ 18.75'= | | - 18.75 | | | | | | | | | | | | | | | | | | | | | | | | | | |
| | | TYPE III 3 @ 18.75'= | | | - 56.25 | | | | | | | | | | | | | | | | | | | | | | | | | |
| | | GRAU-350 2 @ 50'= | | - 100 | | | | | | | | | | | | | | | | | | | | | | | | | | |
| | | PROJECT TOTALS: | | 0 | 50 | | | | | | | | | | | | | | | | | | | | | | | | | |
| | | SAY: | | | | | | | | | | | | | | | | | | | | | | | | | | | | |
| | | ADDITIONAL GUARDRAIL POSTS=5 EA. | | | | | | | | | | | | | | | | | | | | | | | | | | | | |

6/21/00
$$$$SYSTIME$$$$
$$$$SYSLEGEND$$$$
$$$$SYSNAME$$$$

| COMPUTED BY: NVA | DATE: 11-14-13 |
|---|---|
| CHECKED BY: RMS | DATE: 11-14-13 |

| PROJECT REFERENCE NO. | SHEET NO. |
|---|---|
| BD-5113H | 3-B |

DIVISION OF HIGHWAYS
STATE OF NORTH CAROLINA

# SUMMARY OF EARTHWORK

## IN CUBIC YARDS

| LOCATION | UNCLASSIFIED EXCAVATION | UNDERCUT | EMBT+% | BORROW | WASTE |
|---|---|---|---|---|---|
| SUMMARY NO.1 | | | | | |
| -L- STA. 12+00 TO STA. 13+96.60 (BEG. BRIDGE) | 385 | | 54 | | 331 |
| SUBTOTAL SUMMARY NO.1 | 385 | | 54 | | 331 |
| | | | | | |
| SUMMARY NO.2 | | | | | |
| -L- STA. 14+68.93 (END BRIDGE) TO STA. 15+85 | 24 | | 34 | 10 | |
| SUBTOTAL SUMMARY NO.3 | 24 | | 34 | 10 | |
| | | | | | |
| | | | | | |
| PROJECT SUBTOTAL | 409 | | 88 | 10 | 331 |
| WASTE IN LIEU OF BORROW | | | | -10 | -10 |
| | | | | | |
| GRAND TOTAL | 409 | | 88 | | 321 |
| SAY | 415 | | | | |
| | | | | | |
| | | | | | |
| | | | | | |
| | | | | | |
| | | | | | |

CONTINGENCY ITEMS:

INCIDENTAL STONE = 50 TONS

UNDERCUT EXCAVATION = 50 CY

SELECT GRANULAR MATERIAL = 50 CY

CLASS IV SUBGRADE STABILIZATION = 50 TONS

GEOTEXTILE FOR SOIL STABILIZATION = 50 SY

Approximate quantities only. Unclassified excavation, borrow excavation, fine grading, clearing and grubbing, and removal of existing pavement will be paid for at the contract lump sum price for "grading".

| PROJECT REFERENCE NO. | SHEET NO. |
|---|---|
| BD-5113H | 4 |
| R/W SHEET NO. | |
| ROADWAY DESIGN ENGINEER | HYDRAULICS ENGINEER |
| NORTH CAROLINA PROFESSIONAL SEAL 026861 ENGINEER REECE M. SCHULER 3/14/14 | NORTH CAROLINA PROFESSIONAL SEAL 033023 ENGINEER BRADLEY S. RIDNOUR 3/14/14 Bradley S Ridnour, PE |

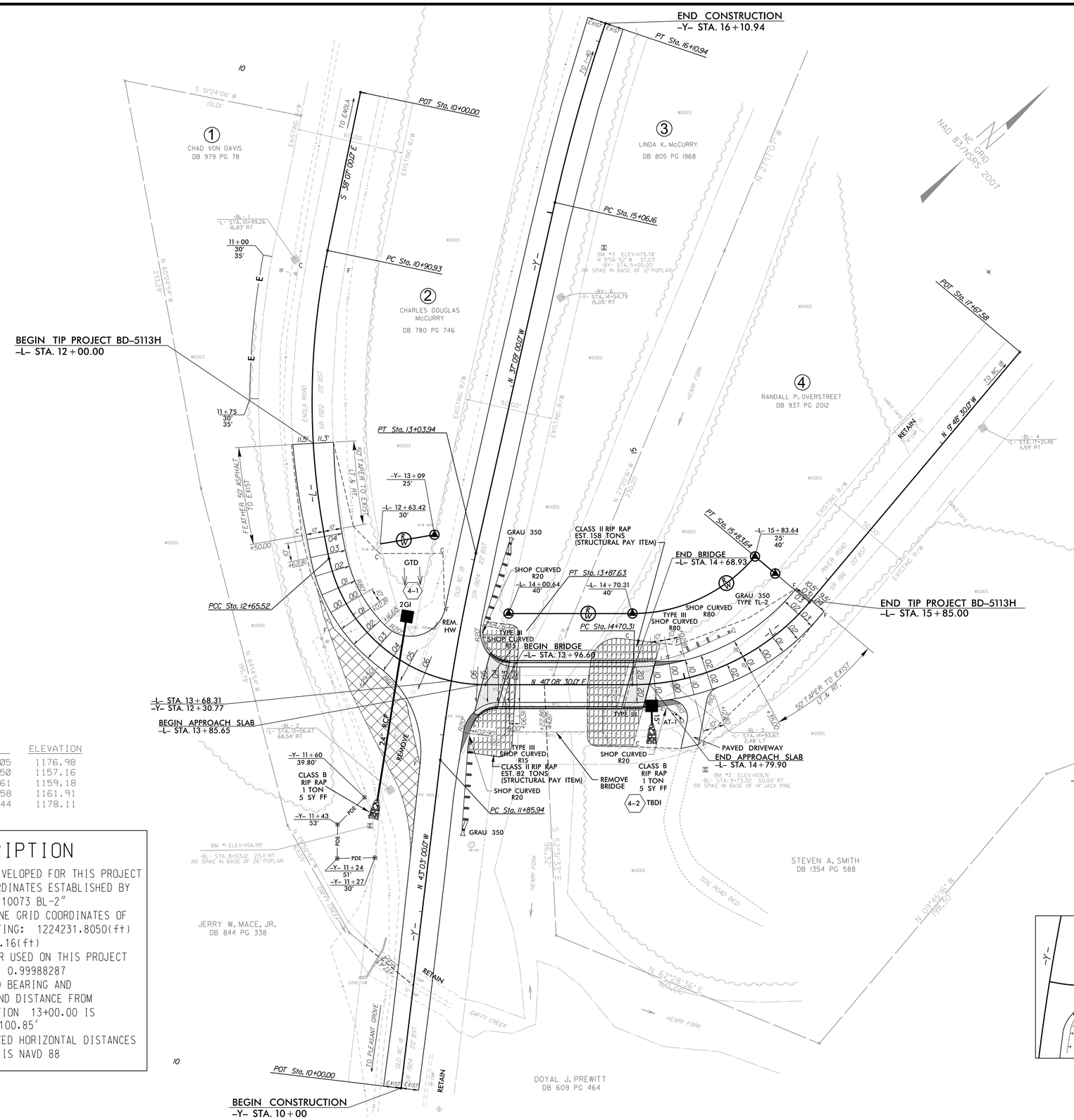


| POINT | NORTH | EAST | ELEVATION |
|---|---|---|---|
| BL-1 | 704471.7961 | 1223969.2705 | 1176.98 |
| BL-2 | 704320.2830 | 1224231.8050 | 1157.16 |
| BL-3 | 704480.4428 | 1224289.8061 | 1159.18 |
| BL-4 | 704706.3110 | 1224290.9358 | 1161.91 |
| BY-6 | 704572.2274 | 1224081.9244 | 1178.11 |

## DATUM DESCRIPTION

THE LOCALIZED COORDINATE SYSTEM DEVELOPED FOR THIS PROJECT IS BASED ON THE STATE PLANE COORDINATES ESTABLISHED BY NCDOT FOR MONUMENT "110073 BL-2"
WITH NAD 83/NSRS 2011 STATE PLANE GRID COORDINATES OF NORTHING: 704320.2830(ft) EASTING: 1224231.8050(ft)
ELEVATION: 1157.16(ft)
THE AVERAGE COMBINED GRID FACTOR USED ON THIS PROJECT (GROUND TO GRID) IS: 0.99988287
THE N.C. LAMBERT GRID BEARING AND LOCALIZED HORIZONTAL GROUND DISTANCE FROM "110073 BL-2" TO -L- STATION 13+00.00 IS N 61°51'18" W 100.85'
ALL LINEAR DIMENSIONS ARE LOCALIZED HORIZONTAL DISTANCES
VERTICAL DATUM USED IS NAVD 88

### -L- CURVE DATA

| PI Sta 11+79.53 | PI Sta 13+38.06 | PI Sta 15+30.86 |
|---|---|---|
| Δ = 24° 00' 19.8" (LT) | Δ = 77° 44' 10.2" (LT) | Δ = 49° 57' 00.0" (LT) |
| D = 13° 45' 00.0" | D = 63° 39' 43.3" | D = 44° 04' 25.2" |
| L = 174.59' | L = 122.11' | L = 113.33' |
| T = 88.59' | T = 72.54' | T = 60.55' |
| R = 416.70' | R = 90.00' | R = 130.00' |
| | S.E. = 0.06 | S.E. = 0.03 |
| | R0 = 60 | R0 = 30 |

### -Y- CURVE DATA

PI Sta 15+58.60
Δ = 6° 01' 30.6" (RT)
D = 5° 45' 00.0"
L = 104.79'
T = 52.44'
R = 996.45'

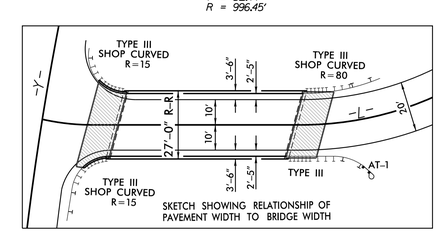


SKETCH SHOWING RELATIONSHIP OF PAVEMENT WIDTH TO BRIDGE WIDTH

REVISIONS

8/17/99

| PROJECT REFERENCE NO. | SHEET NO. |
|---|---|
| BD-5113H | 5 |

ROADWAY DESIGN ENGINEER

NORTH CAROLINA PROFESSIONAL SEAL 26960 ENGINEER REECE M. SCHILLER

3/14/14

HYDRAULICS ENGINEER

3/14/14

NORTH CAROLINA PROFESSIONAL SEAL 033023 ENGINEER BRADLEY S. RIDNOUR

Bradley S Ridnour, PE

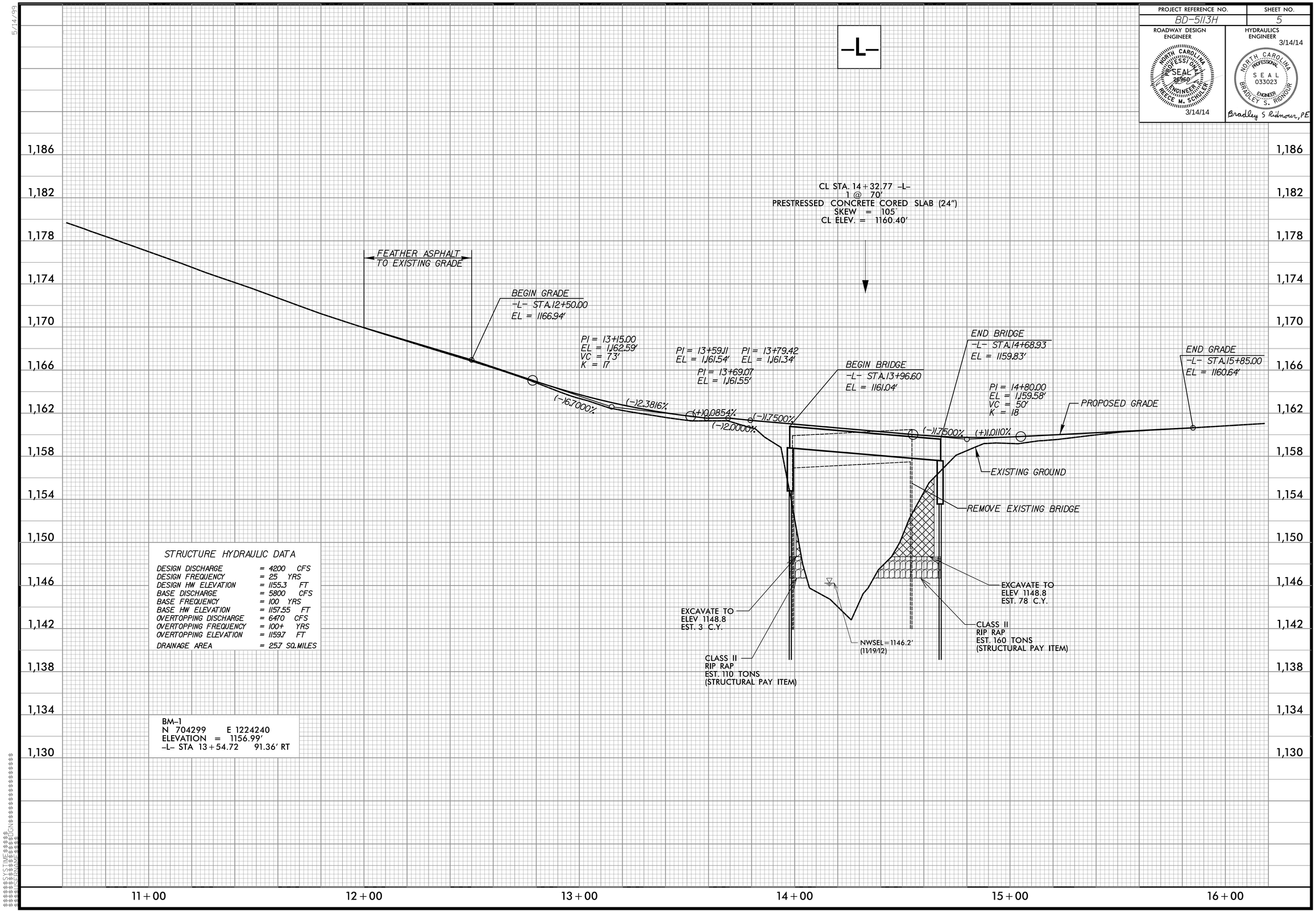


STRUCTURE HYDRAULIC DATA

| | | |
|---|---|---|
| DESIGN DISCHARGE | = 4200 | CFS |
| DESIGN FREQUENCY | = 25 | YRS |
| DESIGN HW ELEVATION | = 1155.3 | FT |
| BASE DISCHARGE | = 5800 | CFS |
| BASE FREQUENCY | = 100 | YRS |
| BASE HW ELEVATION | = 1157.55 | FT |
| OVERTOPPING DISCHARGE | = 6470 | CFS |
| OVERTOPPING FREQUENCY | = 100+ | YRS |
| OVERTOPPING ELEVATION | = 1159.7 | FT |
| DRAINAGE AREA | = 25.7 | SQ.MILES |

BM-1
N 704299 E 1224240
ELEVATION = 1156.99'
-L- STA 13+54.72 91.36' RT

5/14/99

TIME: 9:00 AM
DATE: 5/14/99
USER: 6
CWBL: 6

| PROJECT REFERENCE NO. | SHEET NO. |
| --- | --- |
| BD-5113H | 6 |
| ROADWAY DESIGN ENGINEER | HYDRAULICS ENGINEER |
| NORTH CAROLINA PROFESSIONAL ENGINEER SEAL 26960 REECE M. SCHULER 3/14/14 | 3/14/14 NORTH CAROLINA PROFESSIONAL ENGINEER SEAL 033023 BRADLEY S. RIDNOUR Bradley S Ridnour, PE |

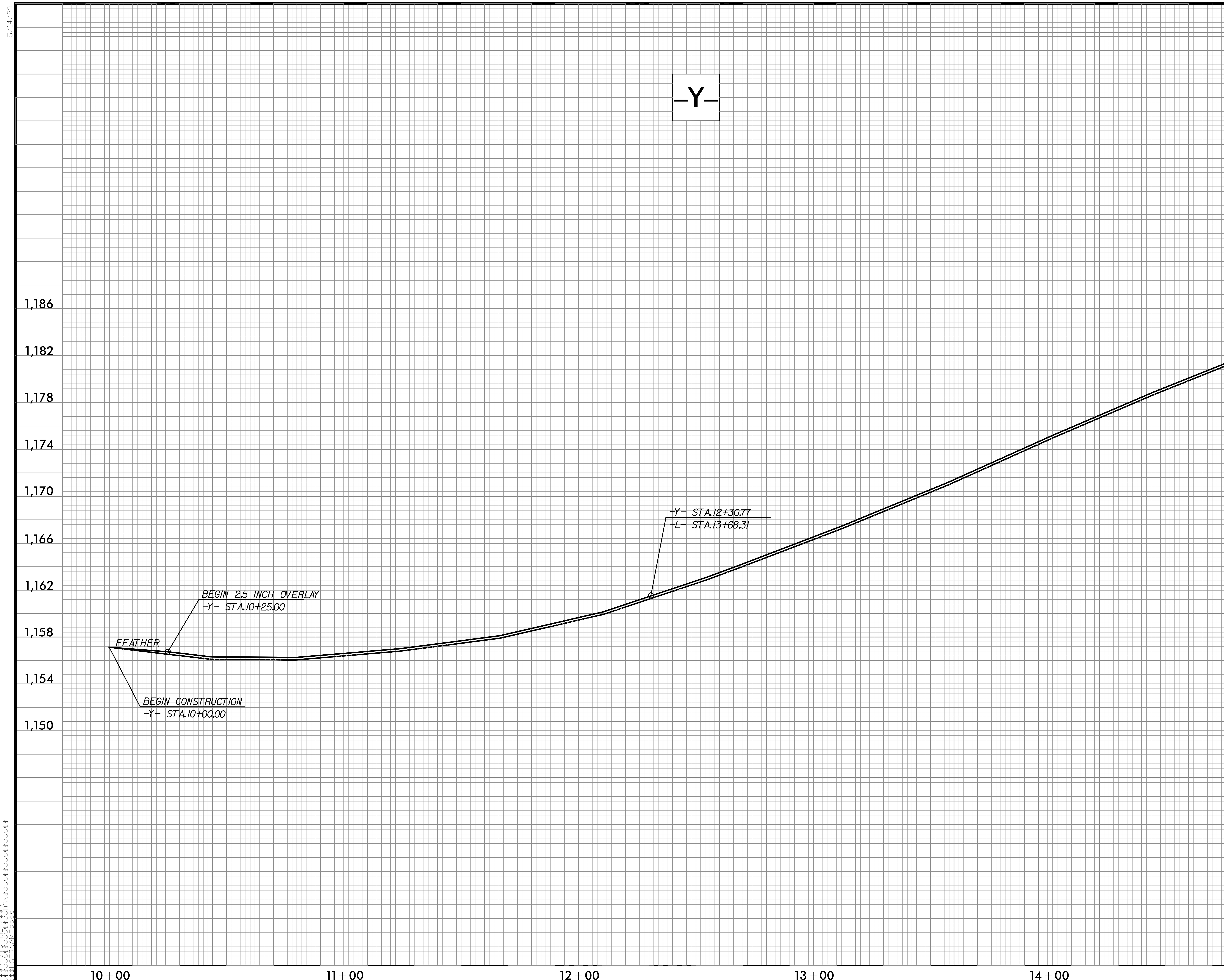

| PROJECT REFERENCE NO. | SHEET NO. |
|---|---|
| BD-5113H | 7 |

ROADWAY DESIGN ENGINEER

NORTH CAROLINA PROFESSIONAL SEAL 26960 ENGINEER RECCE M. SCHILLER

3/14/14

HYDRAULICS ENGINEER 3/14/14

NORTH CAROLINA PROFESSIONAL SEAL 033023 ENGINEER BRADLEY S. RIDNOUR

Bradley S Ridnour, PE

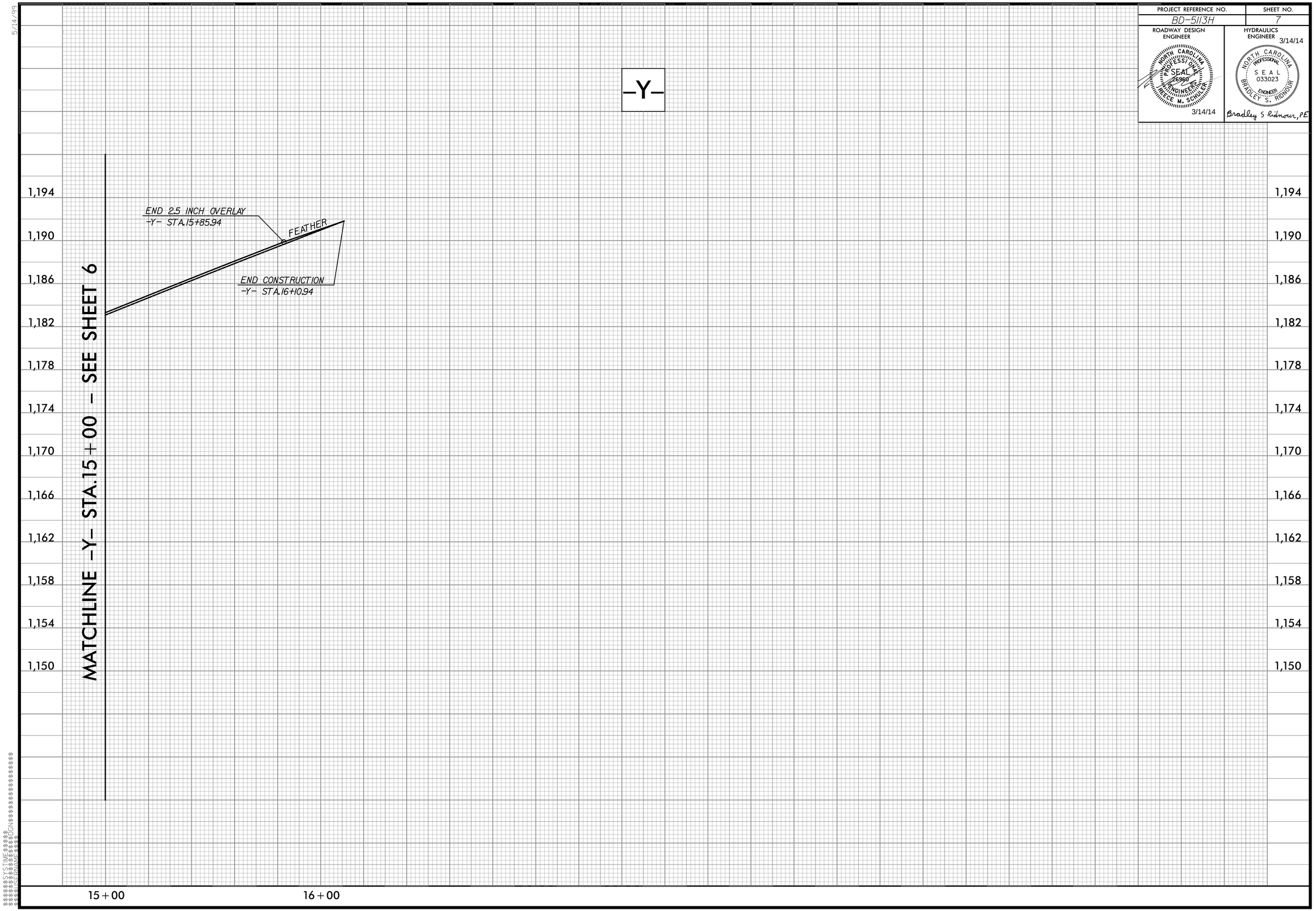


5/14/99

$$$$SYTLE$$$$
$$$$CN$$$$
$$$$LENGTH$$$$
$$$$RADIUS$$$$

STATE OF NORTH CAROLINA
DIVISION OF HIGHWAYS

# TRANSPORTATION MANAGEMENT PLAN

# BURKE COUNTY

## DIVISION 13

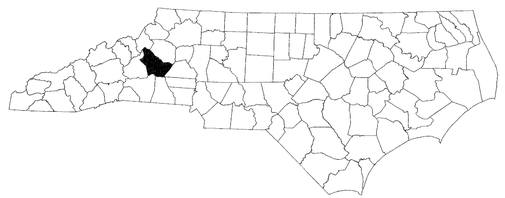

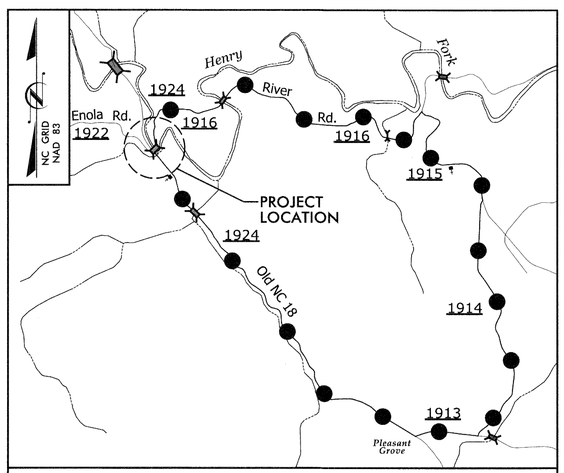


VICINITY MAP

DETOUR ROUTE

**LOCATION: BRIDGE NO. 73 OVER HENRY FORK ON SR 1916 (RIVER ROAD)**

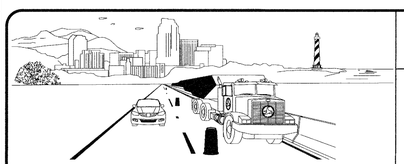

WORK ZONE SAFETY & MOBILITY
"from the MOUNTAINS to the COAST"


N.C.D.O.T. WORK ZONE TRAFFIC CONTROL
1580 MAIL SERVICE CENTER (MSC) RALEIGH, NC 27699-1580
1020 BIRCH RIDGE DRIVE, RALEIGH, NC 27610 (DELIVERY)
PHONE: (919) 250-4094 FAX: (919) 250-4098

J. S. BOURNE, P.E. — STATE TRAFFIC MANAGEMENT ENGINEER
LLOYD D. BROWN, P.E. — TRAFFIC CONTROL PROJECT ENGINEER
AARON C. CARVER, P.E. — TRAFFIC CONTROL PROJECT DESIGN ENGINEER
AARON C. CARVER, P.E. — TRAFFIC CONTROL DESIGN ENGINEER


DIVISION OF HIGHWAYS · STATE OF NORTH CAROLINA · DEPARTMENT OF TRANSPORTATION · WORK ZONE TRAFFIC CONTROL

## INDEX OF SHEETS


| SHEET NO. | TITLE |
|---|---|
| TMP-1 | TITLE SHEET, LEGEND, INDEX OF SHEETS, AND TEMPORARY PAVEMENT MARKING. |
| TMP-1A | LIST OF APPLICABLE ROADWAY STANDARD DRAWINGS, GENERAL NOTES, TRANSPORTATION OPERATIONS AND LOCAL NOTES. |
| TMP-2 | TEMPORARY TRAFFIC CONTROL DETAIL, PHASING NOTES OFFSITE DETOUR SIGNING AND ROAD CLOSURE |
| TMP-3 | TEMPORARY TRAFFIC CONTROL DETAIL PHASE I |
| TMP-4 | TEMPORARY TRAFFIC CONTROL DETAIL PHASE II |
| SD-1 | SPECIAL SIGN DESIGN |
| PM-1 | PAVEMENT MARKING PLANS |


## LEGEND

### GENERAL

- DIRECTION OF TRAFFIC FLOW
- EXIST. PVMT.
- NORTH ARROW
- PROPOSED PVMT.
- TEMPORARY DETOUR
- WORK AREA
- TEMPORARY PAVEMENT

### TRAFFIC CONTROL DEVICES

- BARRICADE (TYPE III)
- DRUM
- FLAGGER

### TEMPORARY SIGNING

- PORTABLE SIGN
- STATIONARY SIGN
- STATIONARY OR PORTABLE SIGN

### PAVEMENT MARKINGS

- EXISTING LINES
- TEMPORARY LINES

### TEMPORARY PAVEMENT MARKING

| SYMBOL | DESCRIPTION |
|---|---|
| | PAINT |
| PA | WHITE EDGE LINE (4") |
| PI | YELLOW DOUBLE CENTER (4") |
| P4 | STOP BAR (24"WHITE) |


V&M Vaughn & Melton
Consulting Engineers
Asheville, North Carolina 828-253-2796
Charlotte, North Carolina 704-357-0488


Copyright © 2006 Vaughn & Melton, Inc.
All Rights Reserved


PROJECT ENGINEER: LLOYD D. BROWN, P.E.
DESIGN ENGINEER: AARON C. CARVER, P.E.

APPROVED:
DATE: March 14, 2014

SEAL

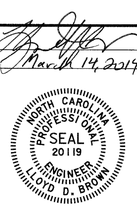


SHEET NO.
TMP-1

TIP PROJECT: BD-5113H

$$$$$$$$SYSTIME$$$$
$$$$$$$$$$$$$$$$DGN$$$$
$$$$USERNAME$$$$

# ROADWAY STANDARD DRAWINGS

THE FOLLOWING ROADWAY STANDARDS AS SHOWN IN "ROADWAY STANDARD DRAWINGS" - PROJECT SERVICES UNIT - N.C. DEPARTMENT OF TRANSPORTATION - RALEIGH, N.C., DATED JANUARY 2012 ARE APPLICABLE TO THIS PROJECT AND BY REFERENCE HEREBY ARE CONSIDERED A PART OF THESE PLANS:

| STD. NO. | TITLE |
|---|---|
| 1101.01 | WORK ZONE ADVANCE WARNING SIGNS |
| 1101.02 | TEMPORARY LANE CLOSURES |
| 1101.03 | TEMPORARY ROAD CLOSURES |
| 1101.05 | WORK ZONE VEHICLE ACCESSES |
| 1101.11 | TRAFFIC CONTROL DESIGN TABLES |
| 1110.01 | STATIONARY WORK ZONE SIGNS |
| 1130.01 | DRUMS |
| 1145.01 | BARRICADES |
| 1205.01 | PAVEMENT MARKINGS - LINE TYPES & OFFSETS |
| 1205.04 | PAVEMENT MARKINGS - INTERSECTIONS |
| 1205.08 | PAVEMENT MARKINGS - SYMBOLS & WORD MESSAGES |
| 1205.12 | PAVEMENT MARKINGS - BRIDGES |

# TRANSPORTATION OPERATIONS

CONSTRUCTION

REMOVE AND REPLACE EXISTING STRUCTURE AND APPROACHES ALONG THE EXISTING ROADWAY ALIGNMENT AS SHOWN IN THE CONSTRUCTION PLANS, AND CONSTRUCT NEW ALIGNMENT AS SHOWN. PROVIDE OVERLAY ON -Y- AS SHOWN.

TMP DESIGN PARAMETERS

TRAFFIC WILL BE DETOURED OFF-SITE DURING THE CONSTRUCTION PERIOD.

THE OFF-SITE DETOUR WILL INCLUDE SR 1924 (OLD NC 18), SR 1913, SR 1914, SR 1915 AND SR 1916 (SEE SHEET TMP-2).

# GENERAL NOTES

CHANGES MAY BE REQUIRED WHEN PHYSICAL DIMENSIONS IN THE DETAIL DRAWINGS, STANDARD DETAILS AND ROADWAY DETAILS ARE NOT ATTAINABLE TO MEET FIELD CONDITIONS, OR RESULT IN DUPLICATE, OR UNDESIRED OVERLAPPING OF DEVICES. MODIFICATIONS MAY INCLUDE: MOVING, SUPPLEMENTING, COVERING OR REMOVAL OF DEVICES, AS DIRECTED BY THE ENGINEER.

THE FOLLOWING GENERAL NOTES APPLY AT ALL TIMES FOR THE DURATION OF THE CONSTRUCTION PROJECT, EXCEPT WHEN OTHERWISE NOTED IN THE PLAN, OR DIRECTED BY THE ENGINEER.

TRAFFIC PATTERN ALTERATIONS

A) NOTIFY THE ENGINEER TWENTY ONE (21) CALENDAR DAYS PRIOR TO ANY TRAFFIC PATTERN ALTERATION.

SIGNING

B) PROVIDE PERMANENT SIGNING.

C) PROVIDE SIGNING AND DEVICES REQUIRED TO CLOSE THE ROAD ACCORDING TO THE ROADWAY STANDARD DRAWINGS AND TRAFFIC CONTROL PLANS.

PROVIDE SIGNING REQUIRED FOR THE OFF-SITE DETOUR ROUTE AS SHOWN IN THE TRAFFIC CONTROL PLANS.

D) COVER OR REMOVE ALL SIGNS AND DEVICES REQUIRED TO CLOSE THE ROAD WHEN ROAD CLOSURE IS NOT IN OPERATION.

COVER OR REMOVE ALL SIGNS REQUIRED FOR THE OFF-SITE DETOUR WHEN THE DETOUR IS NOT IN OPERATION.

E) ENSURE ALL NECESSARY SIGNING IS IN PLACE PRIOR TO ALTERING ANY TRAFFIC PATTERN.

TRAFFIC CONTROL DEVICES

F) PLACE TYPE III BARRICADES WITH "ROAD CLOSED" SIGN R11-2 ATTACHED OF SUFFICIENT LENGTH TO CLOSE ENTIRE ROADWAY.

PAVEMENT MARKINGS AND MARKERS

G) INSTALL PAVEMENT MARKINGS (PAINT) ON THE FINAL SURFACE OF THE ENTIRE PROJECT.

H) TIE PROPOSED PAVEMENT MARKING LINES TO EXISTING PAVEMENT MARKING LINES.

I) FINAL PAVEMENT MARKING APPLICATIONS OF PAINT SHALL BE PLACED IN TWO APPLICATIONS.

# LOCAL NOTES

1. NOTIFY BURKE COUNTY EMERGENCY SERVICES AND PUBLIC SCHOOLS AT LEAST THIRTY (30) DAYS PRIOR TO ROAD CLOSURE.


V&M
Vaughn & Melton
Consulting Engineers
Asheville, North Carolina 828-253-2796
Charlotte, North Carolina 704-357-0488
Tri-Cities, Tennessee 423-467-8401
Knoxville, Tennessee 865-546-5800
Middlesboro, Kentucky 606-248-6600
Spartanburg, South Carolina 864-574-4775

Copyright © 2006 Vaughn & Melton, Inc. All Rights Reserved

APPROVED: DATE: 3/14/14

SEAL

NORTH CAROLINA PROFESSIONAL SEAL 20119 ENGINEER LLOYD D. BROWN

DIVISION OF HIGHWAYS · STATE OF NORTH CAROLINA · DEPARTMENT OF TRANSPORTATION · WORK ZONE TRAFFIC CONTROL

ROADWAY STANDARD DRAWINGS, GENERAL NOTES & TRANSPORTATION OPERATIONS

$$$$$$$$$$ SYSTIME $$$$$$$$$$ SYSDATE $$$$$$$$$$ DGN $$$$$$$$$$ SYSNAME $$$$$$$$$$

| PROJ. REFERENCE NO. | SHEET NO. |
|---|---|
| BD-5113H | TMP-2 |

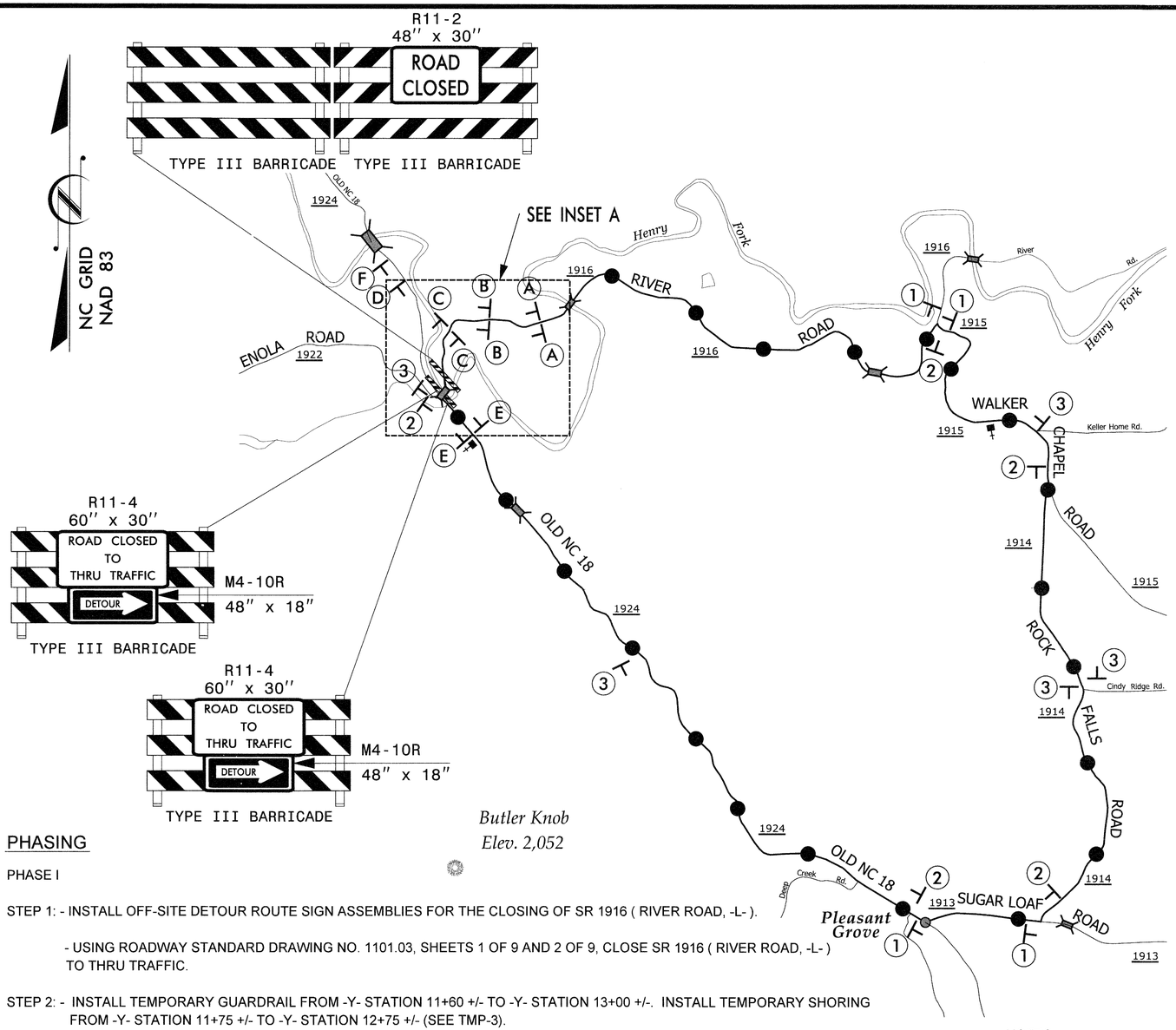


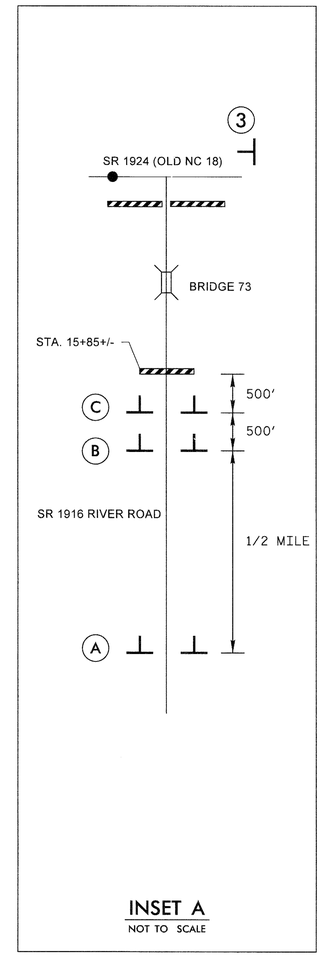


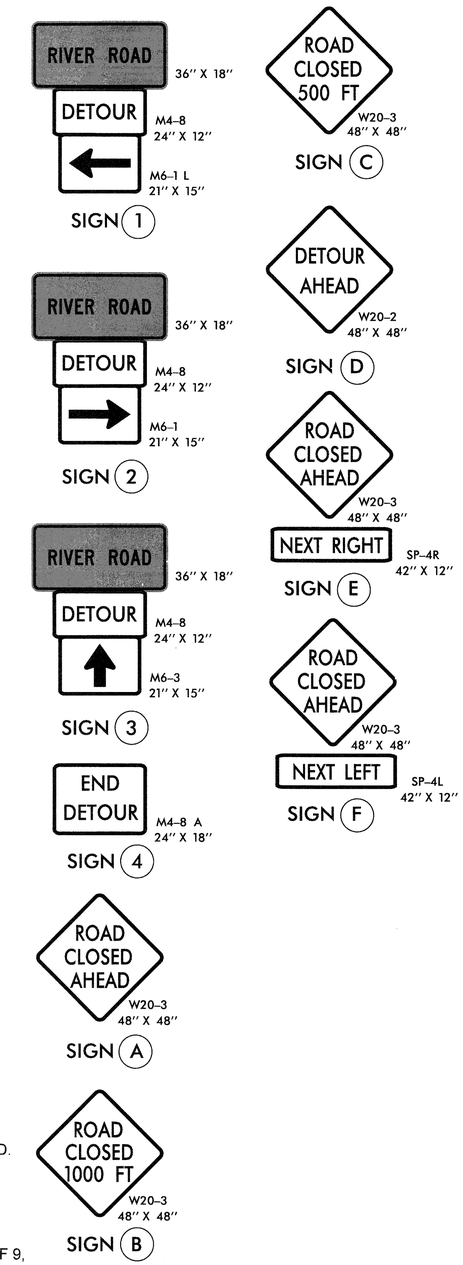


## PHASING

PHASE I

STEP 1: - INSTALL OFF-SITE DETOUR ROUTE SIGN ASSEMBLIES FOR THE CLOSING OF SR 1916 ( RIVER ROAD, -L- ).

- USING ROADWAY STANDARD DRAWING NO. 1101.03, SHEETS 1 OF 9 AND 2 OF 9, CLOSE SR 1916 ( RIVER ROAD, -L- ) TO THRU TRAFFIC.

STEP 2: - INSTALL TEMPORARY GUARDRAIL FROM -Y- STATION 11+60 +/- TO -Y- STATION 13+00 +/-. INSTALL TEMPORARY SHORING FROM -Y- STATION 11+75 +/- TO -Y- STATION 12+75 +/- (SEE TMP-3).

STEP 3: - REMOVE THE EXISTING STRUCTURE AND CONSTRUCT THE PROPOSED STRUCTURE AND ROADWAY UP TO BUT NOT INCLUDING THE FINAL LAYER OF SURFACE COURSE ON SR 1916 ( RIVER ROAD, -L- ) FROM -L- STATION 13+96+/- TO -L- STATION 15+85 +/-. USING FLAGGERS, DRUMS, AND RDWY STANDARD DRAWING 1101.02 CONSTRUCT PROPOSED ROADWAY UP TO BUT NOT INCLUDING THE FINAL LAYER OF SURFACE COURSE ON SR 1922 ( ENOLA ROAD ) FROM -L- STATION 12+00+/- TO -L- STATION 13+68+/- -L- (SEE TMP-3).

STEP 4: - REMOVE TEMPORARY SHORING PLACED IN STEP 2.

PHASE II

STEP 1: - REMOVE TEMPORARY GUARDRAIL PLACED IN PHASE I AND USING FLAGGERS, DRUMS, AND RDWY STANDARD DRAWING 1101.02 CONSTRUCT PROPOSED ROADWAY AND APPROACH SLAB FROM -L- STATION 13+79 +/- TO -L- STATION 13+96 +/- AND CONSTRUCT THE FINAL LAYER OF SURFACE COURSE AND PLACE FINAL PAVEMENT MARKINGS ON SR 1916 ( RIVER ROAD, -L- ) FROM -L- STATION 13+79+/- TO -L- STATION 15+85+/-, SR 1922 ( ENOLA ROAD ) FROM -L- STATION 12+00+/- TO -L- STATION 13+57 +/-, AND SR 1924 ( OLD NC 18, -Y- ) FROM -Y- STATION 10+00+/- TO -Y- STATION 16+11 +/- (SEE TMP-4).

STEP 2: - REMOVE ALL TRAFFIC CONTROL DEVICES, SIGNING AND DETOUR ROUTE SIGNING.

STEP 3: - OPEN SR 1916 ( RIVER ROAD, -L- ) TO FINAL TRAFFIC PATTERN.

NOTES:

- ALL DETOUR SIGN LOCATIONS ARE APPROXIMATE.
- ALL DETOUR SIGNS ARE BLACK ON ORANGE UNLESS OTHERWISE NOTED.
- TRAFFIC CONTROL DEVICES (A) THROUGH (F) SHALL BE INSTALLED ACCORDING TO ROADWAY STANDARD DRAWING 1101.03, SHEET 1 OF 9.
- TRAFFIC CONTROL DEVICES (1) THROUGH (4) SHALL BE INSTALLED AS PER ENGINEER'S INSTRUCTIONS, AND AS SHOWN HEREON.
- SEE ROADWAY STANDARD DRAWING NO. 1101.03, SHEET 1 OF 9 AND 2 OF 9, FOR ADDITIONAL WORK ZONE SIGNS.


V&M
Vaughn & Melton
Consulting Engineers
Asheville, North Carolina 828-253-2796
Charlotte, North Carolina 704-357-0488
Tri-Cities, Tennessee 423-467-8401
Knoxville, Tennessee 865-546-5800
Middlesboro, Kentucky 606-248-6600
Spartanburg, South Carolina 864-574-4775

Copyright © 2006 Vaughn & Melton, Inc. All Rights Reserved

APPROVED: DATE: 7/28/14

SEAL

NORTH CAROLINA PROFESSIONAL SEAL 20119 ENGINEER LLOYD D. BROWN

DIVISION OF HIGHWAYS STATE OF NORTH CAROLINA DEPARTMENT OF TRANSPORTATION WORK ZONE TRAFFIC CONTROL

# TEMPORARY TRAFFIC CONTROL DETAIL, PHASING NOTES, OFFSITE DETOUR SIGNING AND ROAD CLOSURE

$$$$$$$$$$ SYSTIME$$$$$$$$$$ SYSLETNAME$$$$$$$$$$ DGN$$$$$$$$$$

| PROJ. REFERENCE NO. | SHEET NO. |
|---|---|
| BD-5113H | TMP-3 |

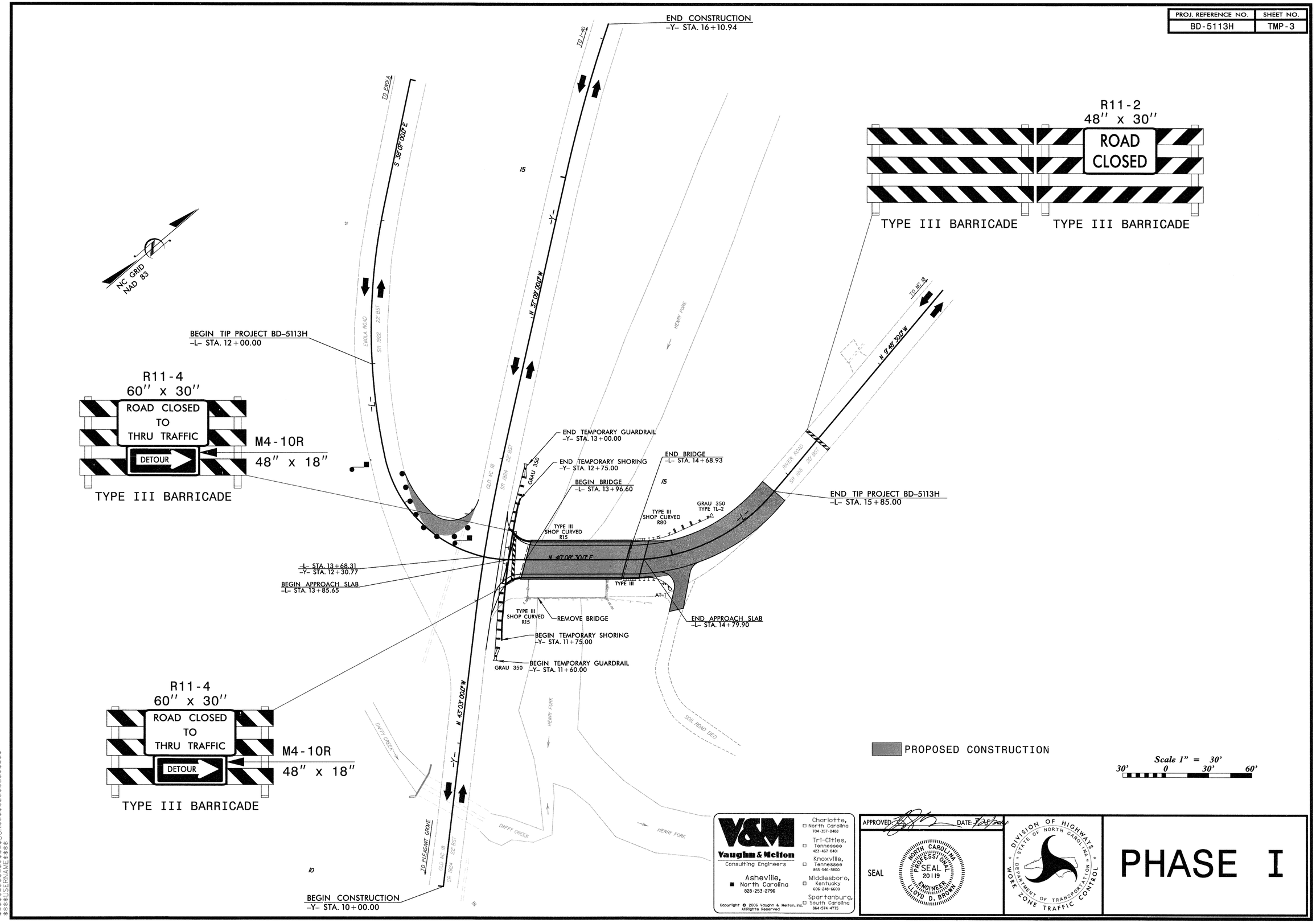


V&M
Vaughn & Melton
Consulting Engineers

Asheville, North Carolina 828-253-2796
Charlotte, North Carolina 704-357-0488
Tri-Cities, Tennessee 423-467-8401
Knoxville, Tennessee 865-546-5800
Middlesboro, Kentucky 606-248-6600
Spartanburg, South Carolina 864-574-4775

Copyright © 2006 Vaughn & Melton, Inc.
All Rights Reserved

APPROVED: DATE: 7/28/2006

SEAL

NORTH CAROLINA PROFESSIONAL SEAL 20119 ENGINEER LLOYD D. BROWN

DIVISION OF HIGHWAYS
STATE OF NORTH CAROLINA
DEPARTMENT OF TRANSPORTATION
WORK ZONE TRAFFIC CONTROL

# PHASE I

$$$$SYSTIME$$$$
$$$$DGN$$$$
$$$$USERNAME$$$$

| PROJ. REFERENCE NO. | SHEET NO. |
|---|---|
| BD-5113H | TMP-4 |

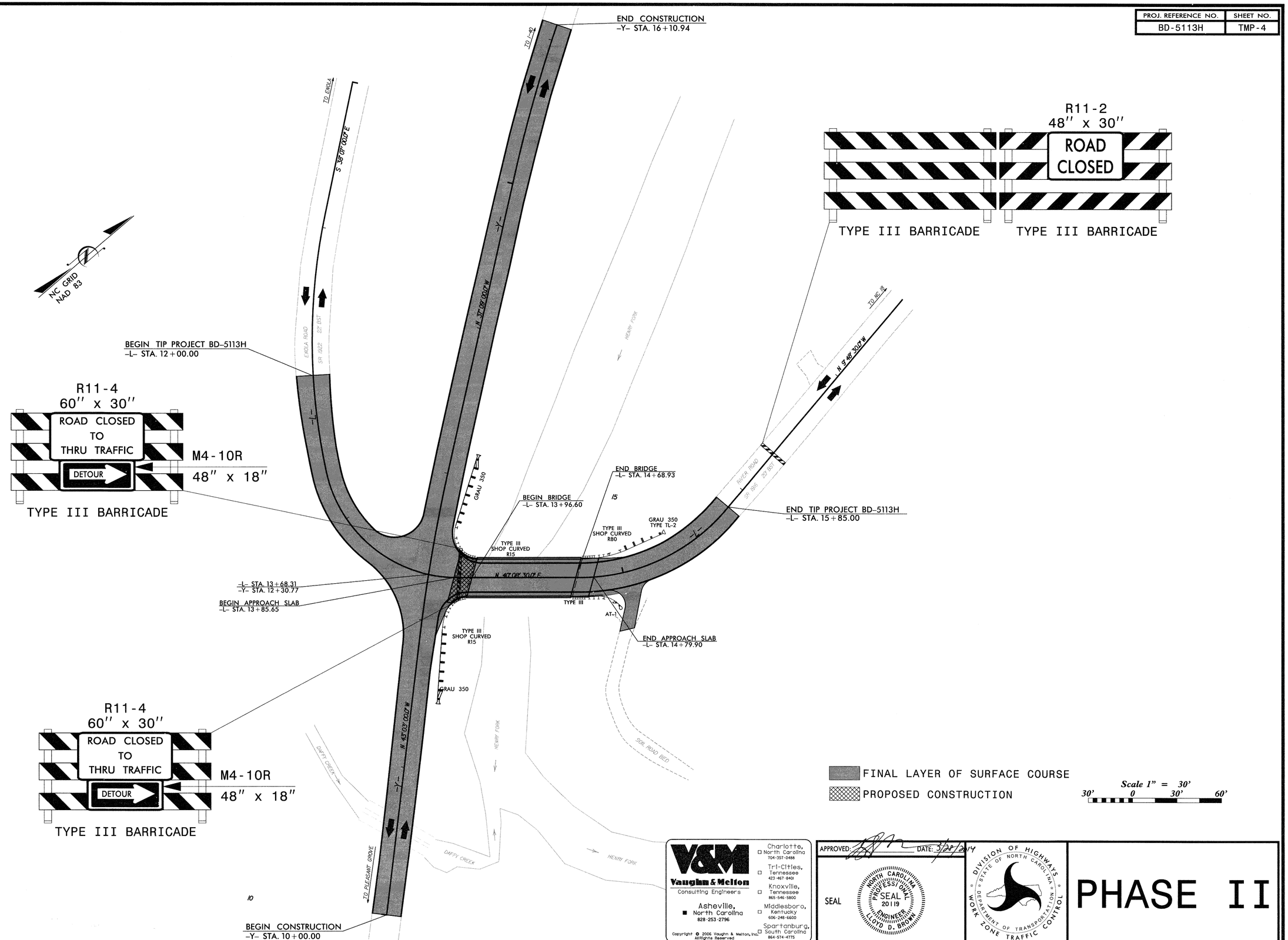


V&M
Vaughn & Melton
Consulting Engineers
Asheville, North Carolina 828-253-2796
Charlotte, North Carolina 704-357-0488
Tri-Cities, Tennessee 423-467-8401
Knoxville, Tennessee 865-546-5800
Middlesboro, Kentucky 606-248-6600
Spartanburg, South Carolina 864-574-4775

Copyright © 2006 Vaughn & Melton, Inc. All Rights Reserved

APPROVED: DATE: 3/27/2014

SEAL

NORTH CAROLINA PROFESSIONAL SEAL 20119 ENGINEER LLOYD D. BROWN

DIVISION OF HIGHWAYS
STATE OF NORTH CAROLINA
DEPARTMENT OF TRANSPORTATION
WORK ZONE TRAFFIC CONTROL

# PHASE II

$$$$$$$$$$SYSTIME$$$$$$$$$$DGN$$$$$$$$$$$$$$$$$$$$$$USERNAME$$$$$$$$$$

| PROJ. REFERENCE NO. | SHEET NO. |
|---|---|
| BD-5113H | SD-1 |

SIGN NUMR: RIVER ROAD
TYPE: D Ground
QUANTITY: 1

BACKG. COLOR: Orange
COPY COLOR: RGB(0,0,0)

DESIGN BY: ACC
PROJECT ID: ID

CHK BY: ACC
DIV: DIV

STD #: STD
DATE: Nov. 5,2013

SIGN WIDTH: 3'-0"
HEIGHT: 1'-6"
TOTAL AREA: 4.5 Sq.Ft.

MAT'L: 0.063 in.(1.6 mm) ALUMINUM

BORDER TYPE: FLUSH
RECESS: 0.47"
WIDTH: 0.63"
RADII: 1.5"

NO. Z BARS:
LENGTH: in.

| SYMBOL | X | Y | WID | HT |
|---|---|---|---|---|
| | | | | |

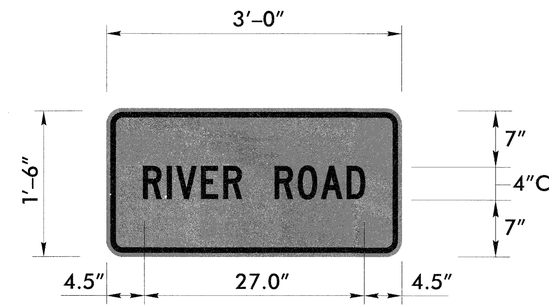


BORDER
R=1.5"
TH=0.63"
IN=0.47"

Panel Style: construction_guide.ssi
M.U.T.C.D.: 2009 Edition

USE NOTES: 1,3,4,6

1. Legend and border shall be direct applied encapsulated lens reflective sheeting.
2. Legend and border shall be direct applied enclosed lens reflective sheeting.
3. Shields shall be encapsulated lens reflective sheeting on 0.8mm aluminum and demountable.
4. Background shall be encapsulated lens reflective sheeting.
5. Background shall be enclosed lens reflective sheeting.
6. Center arrows vertically on sign.

**Letter spacings are to start of next letter**

| | | | | | | | | | | | | | | | | | | | | | | | | | | | | Series/Size Text Length |
|---|---|---|---|---|---|---|---|---|---|---|---|---|---|---|---|---|---|---|---|---|---|---|---|---|---|---|---|---|
| | | R | I | V | E | R | | R | O | A | D | | | | | | | | | | | | | | | | | C 2000 |
| | 4.5 | 2.9 | 1.1 | 3 | 2.7 | 2.2 | 4 | 2.8 | 2.8 | 3.1 | 2.2 | 4.5 | | | | | | | | | | | | | | | 27.1 | 4 |
| | | | | | | | | | | | | | | | | | | | | | | | | | | | | |
| | | | | | | | | | | | | | | | | | | | | | | | | | | | | |
| | | | | | | | | | | | | | | | | | | | | | | | | | | | | |
| | | | | | | | | | | | | | | | | | | | | | | | | | | | | |
| | | | | | | | | | | | | | | | | | | | | | | | | | | | | |
| | | | | | | | | | | | | | | | | | | | | | | | | | | | | |
| | | | | | | | | | | | | | | | | | | | | | | | | | | | | |
| | | | | | | | | | | | | | | | | | | | | | | | | | | | | |

Spacing Factor is 1 unless specified otherwise

FILENAME: GS40_ENGL

APPROVED: DATE: 3/14/14

SEAL

NORTH CAROLINA PROFESSIONAL SEAL 20119 ENGINEER LOYD D. BROWN

DIVISION OF HIGHWAYS
STATE OF NORTH CAROLINA
DEPARTMENT OF TRANSPORTATION
WORK ZONE TRAFFIC CONTROL

# SPECIAL SIGN DESIGN

$$$$$SYSTIME$$$$
$$$$$USERNAME$$$$

| PROJ. REFERENCE NO. | SHEET NO. |
|---|---|
| BD-5113H | PM-1 |

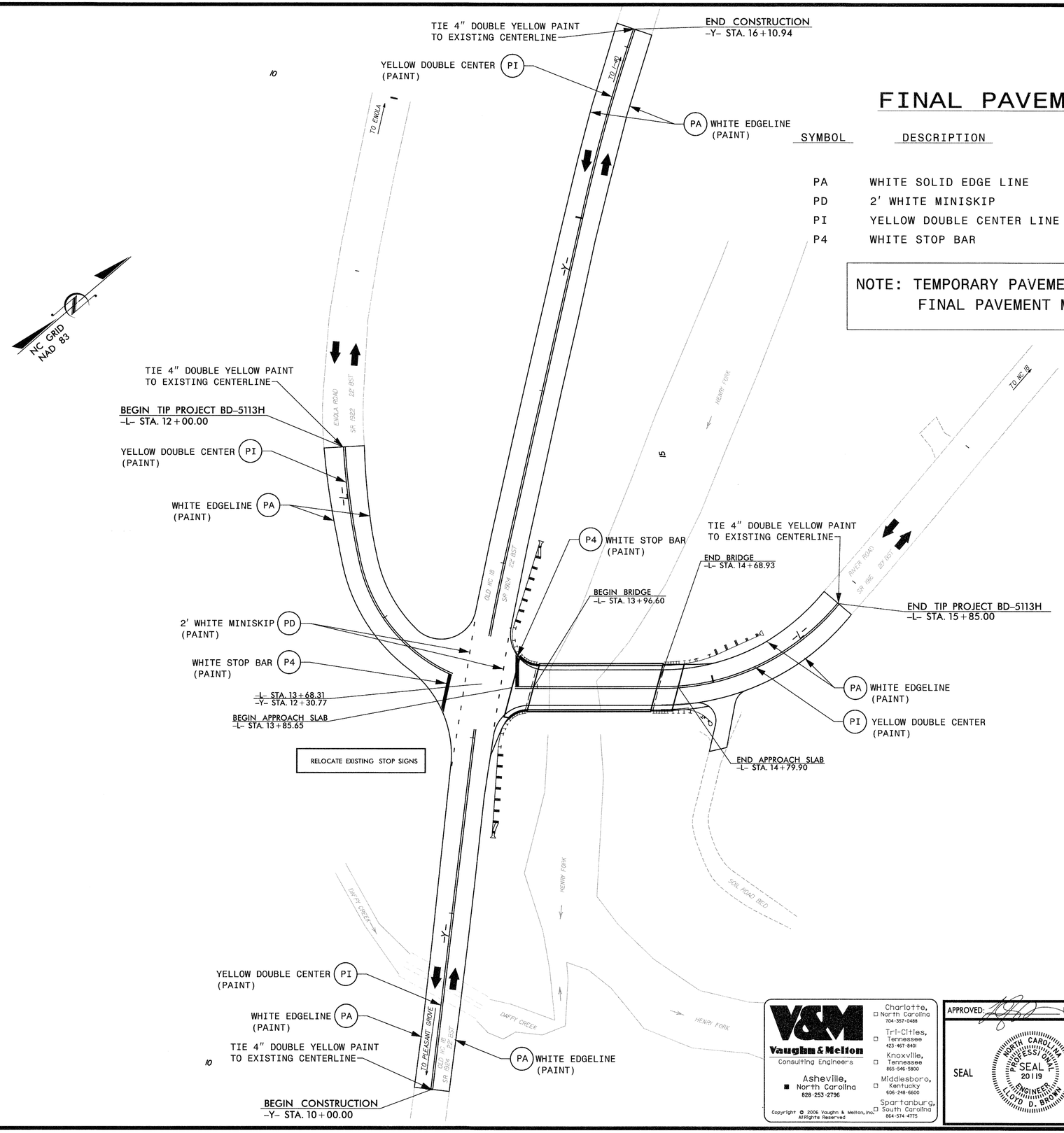


# FINAL PAVEMENT MARKING SCHEDULE

| SYMBOL | DESCRIPTION | QUANTITY BREAKDOWN | PAY ITEM | TOTAL QUANTITY |
|---|---|---|---|---|
| | | PAVEMENT MARKING LINES | | |
| PA | WHITE SOLID EDGE LINE | 1,865 FT | PAINT (4") | 3,730 FT |
| PD | 2' WHITE MINISKIP | 36 FT | PAINT (4") | 72 FT |
| PI | YELLOW DOUBLE CENTER LINE | 1,810 FT | PAINT (4") | 3,620 FT |
| P4 | WHITE STOP BAR | 40 FT | PAINT (4") | 80 FT |

NOTE: TEMPORARY PAVEMENT MARKINGS = 1 COAT OF PAINT
FINAL PAVEMENT MARKINGS = 2 COATS OF PAINT

Scale 1" = 30'
30' 0 30' 60'


Vaughn & Melton
Consulting Engineers
Asheville, North Carolina 828-253-2796
Charlotte, North Carolina 704-357-0448
Tri-Cities, Tennessee 423-467-8401
Knoxville, Tennessee 865-546-5800
Middlesboro, Kentucky 606-248-6600
Spartanburg, South Carolina 864-574-4775

Copyright © 2006 Vaughn & Melton, Inc. All Rights Reserved

APPROVED: DATE: 5/4/2014

SEAL

NORTH CAROLINA PROFESSIONAL SEAL 20119 ENGINEER LLOYD D. BROWN

DIVISION OF HIGHWAYS STATE OF NORTH CAROLINA DEPARTMENT OF TRANSPORTATION WORK ZONE TRAFFIC CONTROL

# TRAFFIC CONTROL PAVEMENT MARKING & SIGNING PLAN

$$$$$SYSTIME$$$$$
$$$$$DGN$$$$$
$$$$$USERNAME$$$$$

| PROJECT REFERENCE NO. | SHEET NO. |
|---|---|
| BD-5113H | EC-1/CONST 4 |

*THESE EROSION AND SEDIMENT CONTROL PLANS COMPLY WITH THE REGULATIONS SET FORTH BY THE NCG-010000 GENERAL CONSTRUCTION PERMIT EFFECTIVE AUGUST 3, 2011 ISSUED BY THE NORTH CAROLINA DEPARTMENT OF ENVIRONMENT AND NATURAL RESOURCES DIVISION OF WATER QUALITY.*

# EROSION CONTROL PLAN


V&M
Vaughn & Melton
Consulting Engineers
Asheville, North Carolina 828-253-2796
Charlotte, North Carolina 704-895-9051
Tri-Cities, Tennessee 423-467-8401
Knoxville, Tennessee 865-546-5800
Middlesboro, Kentucky 606-248-6600
Spartanburg, South Carolina 864-574-4775

Copyright 1994 Vaughn & Melton, Inc.

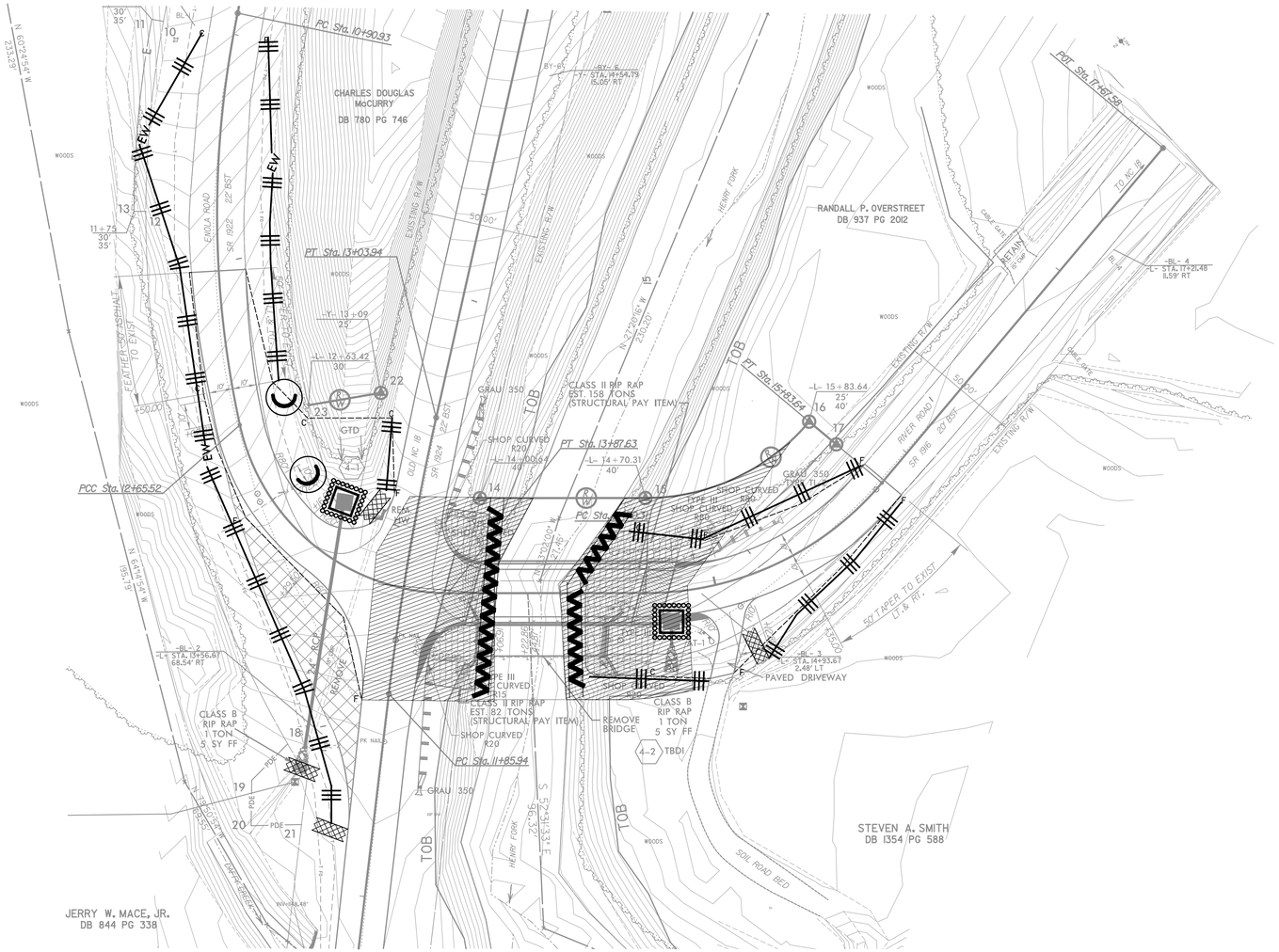


| Std. # | Description | Symbol |
|---|---|---|
| 1605.01 | Temporary Silt Fence | |
| 1606.01 | Special Sediment Fence | |
| 1632.03 | Rock Inlet Sediment Trap Type C | |
| 1633.01 | Temporary Rock Silt Check Type-A | |
| 1633.01 | Wattle/Coir Fiber Wattle with Polyacrylamide (PAM) | EW |

NOTES: ANY DEVIATION FROM OPTIONS GIVEN WILL REQUIRE PRIOR APPROVAL BY ENGINEER.

ADDITIONAL EROSION CONTROL DEVICES MAY NEED TO BE INSTALLED AS DIRECTED BY THE ENGINEER.

ROADSIDE ENVIRONMENTAL UNIT
DEPARTMENT OF TRANSPORTATION
DIVISION OF HIGHWAYS
RALEIGH, N.C.

2012 STANDARD SPECIFICATIONS

ENVIRONMENTALLY SENSITIVE AREA
SEE PROJECT SPECIAL PROVISIONS

CLEARING AND GRUBBING
EROSION CONTROL FOR
CONSTRUCTION SHEET 4

Level III-A: Designer of Erosion and Sediment Control Plans
Michael Clark
Date Issued: June 5, 2013
Date Expires: December 31, 2016
Certification Number: 3376

PROJECT NO. BD-5113H
COUNTY BURKE
STATION: 13+87 -L-
REPLACES BRIDGE NO. 73

STATE OF NORTH CAROLINA
DEPARTMENT OF TRANSPORTATION
RALEIGH

BRIDGE #73 ON SR 1916
SHOAL CREEK

| REVISIONS | | | | | | SHEET NO. |
|---|---|---|---|---|---|---|
| NO. | BY | DATE | NO. | BY | DATE | EC-1 |
| 1 | | | 3 | | | TOTAL SHEETS |
| 2 | | | 4 | | | 6 |

$$$$SYSTIME$$$$
$$$$DGN$$$$
$$$$CELLNAME$$$$

| PROJECT REFERENCE NO. | SHEET NO. |
|---|---|
| BD-5113H | EC-2 |
| R/W SHEET NO. | |
| ROADWAY DESIGN ENGINEER | HYDRAULICS ENGINEER |

STATE OF NORTH CAROLINA
DIVISION OF HIGHWAYS

# SOIL STABILIZATION TIMEFRAMES

| SITE DESCRIPTION | STABILIZATION TIME | TIMEFRAME EXCEPTIONS |
|---|---|---|
| PERIMETER DIKES, SWALES, DITCHES, AND SLOPES | 7 DAYS | NONE |
| HIGH QUALITY WATER (HQW) ZONES | 7 DAYS | NONE |
| SLOPES STEEPER THAN 3:1 | 7 DAYS | IF SLOPES ARE 10' OR LESS IN LENGTH AND ARE NOT STEEPER THAN 2:1, 14 DAYS ARE ALLOWED. |
| SLOPES 3:1 OR FLATTER | 14 DAYS | 7 DAYS FOR SLOPES GREATER THAN 50' IN LENGTH. |
| ALL OTHER AREAS WITH SLOPES FLATTER THAN 4:1 | 14 DAYS | NONE, EXCEPT FOR PERIMETERS AND HQW ZONES. |

| PROJECT REFERENCE NO. | SHEET NO. |
|---|---|
| BD-5113H | EC-2A |

DIVISION OF HIGHWAYS
STATE OF NORTH CAROLINA

# SOIL STABILIZATION SUMMARY SHEET

## MATTING FOR EROSION CONTROL

| CONST SHEET NO. | LINE | FROM STATION | TO STATION | SIDE | ESTIMATE (SY) |
|---|---|---|---|---|---|
| 4 | L | 13+00 | 13+50 | LT | 100 |
| | | | SUBTOTAL | | 100 |
| MISCELLANEOUS MATTING TO BE INSTALLED AS DIRECTED BY THE ENGINEER | | | | | **1100 |
| | | | | TOTAL | 1200 |
| | | | | SAY | |

**EROSION CONTROL MATTING TO BE PLACED ON ALL DISTURBED SLOPES

## PERMANENT SOIL REINFORCEMENT MAT

| CONST SHEET NO. | LINE | FROM STATION | TO STATION | SIDE | ESTIMATE (SY) |
|---|---|---|---|---|---|
| | | | SUBTOTAL | | |
| | | ADDITIONAL PSRM TO BE INSTALLED | | | |
| | | | | TOTAL | |
| | | | | SAY | |

| PROJECT REFERENCE NO. | SHEET NO. |
|---|---|
| BD-5113H | EC-3 |
| R/W SHEET NO. | |
| ROADWAY DESIGN ENGINEER | HYDRAULICS ENGINEER |

# WATTLE WITH POLYACRYLAMIDE DETAIL

WATTLES WITH POLYACRYLAMIDE (PAM):

Description

Wattles are tubular products consisting of excelsior fibers encased in synthetic netting. Wattles are used on slopes or channels to intercept runoff and act as a velocity break. Wattles are to be placed at locations shown on the plans or as directed. Installation shall follow the detail provided in the plans and as directed. Work includes furnishing materials, installation of wattles, matting installation, PAM application, and removing wattles.

Materials

Wattle shall meet the following specifications:

100% Curled Wood(Excelsior) Fibers
Minimum Diameter – 12 in.
Minimum Density – 2.6 lb/ft3 +/- 10%
Net Material – Synthetic
Net Openings – 1 in. x 1 in.
Net Configuration – Totally Encased
Minimum Weight – 20 lb. +/- 10% per 10 ft. length

Anchors: Stakes shall be used as anchors.

Wooden Stakes:

Provide hardwood stakes a minimum of 2-ft. long with a 2 in. x 2 in. nominal square cross section. One end of the stake must be sharpened or beveled to facilitate driving down into the underlying soil.

Matting shall meet the requirements of section 1060-8 of the Standard Specifications, or shall meet specifications provided elsewhere in this contract.

Provide staples made of 0.125" diameter new steel wire formed into a u shape not less than 12" in length with a throat of 1" in width.

Polyacrylamide (PAM) shall be applied in powder form and shall be anionic or neutrally charged. Soil samples shall be obtained in areas where the wattles will be placed, and from offsite material used to construct roadway, and analyzed for the appropriate PAM flocculant to be utilized with each wattle.

Construction Methods

Wattles shall be secured to the soil by wire staples approximately every 1 linear foot and at the end of each section of wattle. A minimum of 4 stakes shall be installed on the downstream side of the wattle with a maximum spacing of 2 linear feet along the wattle, and according to the detail. Install a minimum of 2 stakes on the upstream side of the wattle according to the detail provided in the plans. Stakes shall be driven into the ground a minimum of 10 in. with no more than 2 in. projecting from the top of the wattle. Drive stakes at an angle according to the detail provided in the plans.

Install wattles to the top of the ditch according to the detail provided in the plans. Overlap adjoining sections of wattles a minimum of 6 in.

Installation of matting shall be in accordance with the detail provided in the plans, and in accordance with section 1631-3(B) of the Standard Specifications, or in accordance with specifications provided elsewhere in this contract.

Apply PAM over the lower center portion of the wattle where the water is going to flow over at a rate of 3.5 ounces per wattle. PAM applications shall be done during construction activities after every rainfall event that is equal to or exceeds 0.50 in.

The Contractor shall maintain the wattles until the project is accepted or until the wattles are removed, and shall remove and dispose of silt accumulations at the wattles when so directed in accordance with the requirements of Section 1630 of the Standard Specifications.

The quantity of wattle(s), wooden stakes, staples, matting and PAM as measured above will be paid for at contract price for "Lump Sum for Erosion Control". Such price and payment will be full compensation for all work covered by this provision, including but not limted to, furnishing all materials, placing and maintaining the wattle(s), and removal and disposal of silt accumulations and wattle.

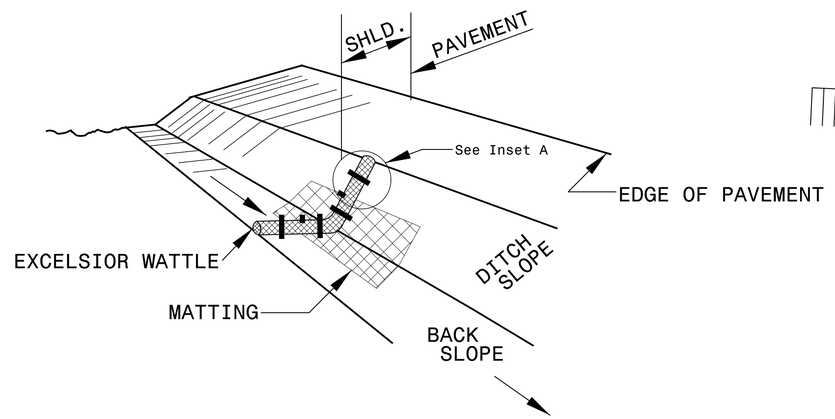


**ISOMETRIC VIEW**

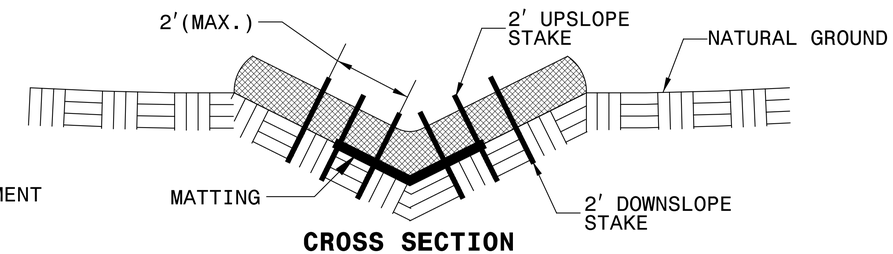


**CROSS SECTION VEE DITCH**

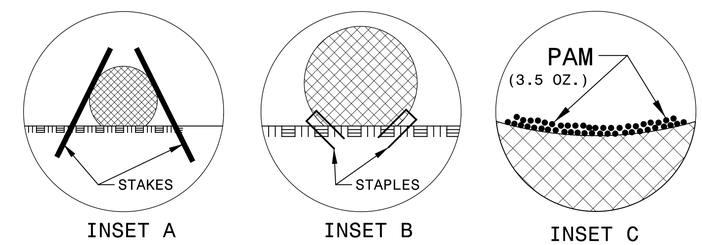


INSET A INSET B INSET C

NOTES:

USE MINIMUM 12 IN. DIAMETER EXCELSIOR WATTLE.

USE 2 FT. WOODEN STAKES WITH A 2 IN. BY 2 IN. CROSS SECTION.

ONLY INSTALL WATTLE(S) TO A HEIGHT IN DITCH SO FLOW WILL NOT WASH AROUND WATTLE AND SCOUR DITCH SLOPES AND AS DIRECTED.

INSTALL A MINIMUM OF 2 UPSLOPE STAKES AND 4 DOWNSLOPE STAKES AT AN ANGLE TO WEDGE WATTLE TO BOTTOM OF DITCH.

PROVIDE STAPLES MADE OF 0.125 IN. DIAMETER STEEL WIRE FORMED INTO A U SHAPE NOT LESS THAN 12" IN LENGTH.

INSTALL STAPLES APPROXIMATELY EVERY 1 LINEAR FOOT ON BOTH SIDES OF WATTLE AND AT EACH END TO SECURE IT TO THE SOIL.

INSTALL MATTING IN ACCORDANCE WITH SECTION 1631 OF THE STANDARD SPECIFICATIONS.

PRIOR TO POLYACRYLAMIDE (PAM) APPLICATION, OBTAIN A SOIL SAMPLE FROM PROJECT LOCATION, AND FROM OFFSITE MATERIAL, AND ANALYZE FOR APPROPRIATE PAM FLOCCULANT TO BE APPLIED TO EACH WATTLE.

INITIALLY APPLY 3.5 OUNCES OF ANIONIC OR NEUTRALLY CHARGED POLYACRYLAMIDE (PAM) OVER WATTLE WHERE WATER WILL FLOW AND AFTER EVERY RAINFALL EVENT THAT IS EQUAL TO OR EXCEEDS 0.50 IN.

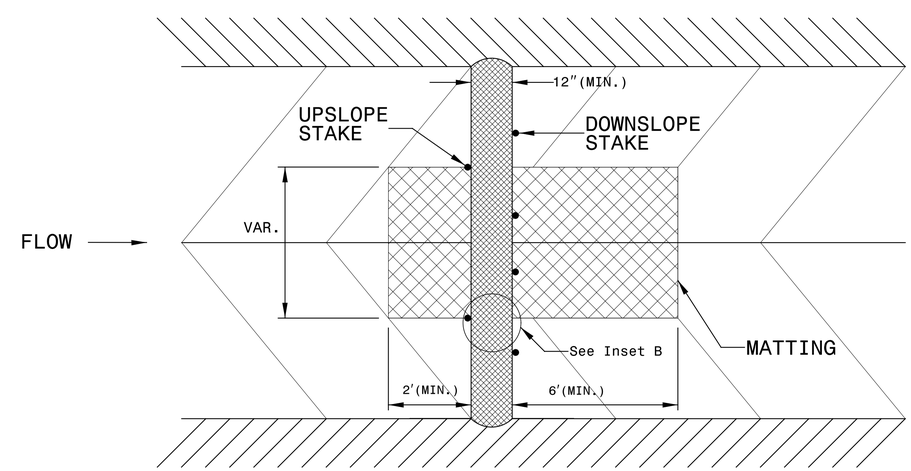


**TOP VIEW**

| PROJECT REFERENCE NO. | SHEET NO. |
|---|---|
| BD-5113H | EC-4 |
| R/W SHEET NO. | |
| ROADWAY DESIGN ENGINEER | HYDRAULICS ENGINEER |

# SILT FENCE WATTLE BREAK DETAIL

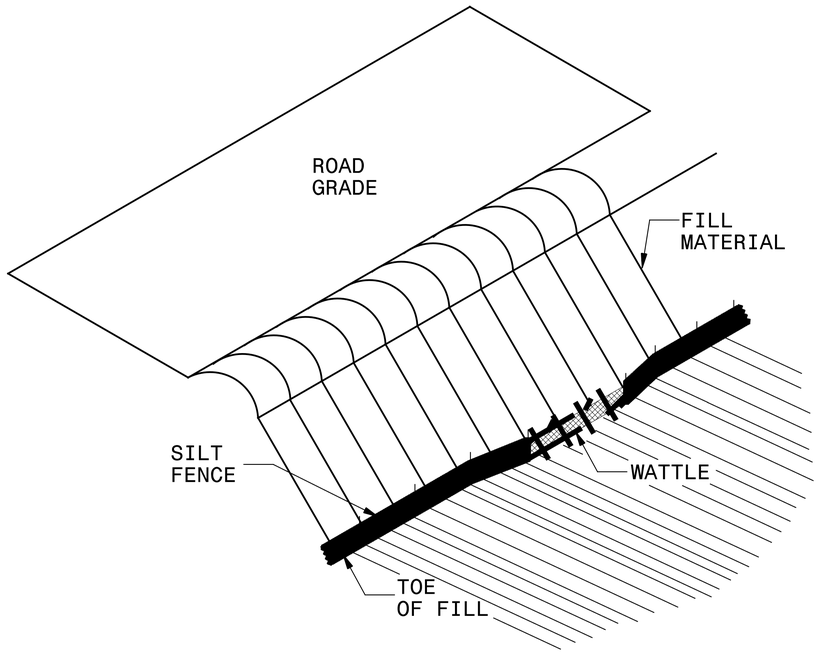


**ISOMETRIC VIEW**

NOTES:

USE MINIMUM 12 IN. DIAMETER EXCELSIOR WATTLE AND LENGTH OF 10 FT.

EXCAVATE A 1 TO 2 INCH TRENCH FOR WATTLE TO BE PLACED.

DO NOT PLACE WATTLE ON TOE OF SLOPE.

USE 2 FT. WOODEN STAKES WITH A 2 IN. BY 2 IN. NOMINAL CROSS SECTION.

INSTALL A MINIMUM OF 2 UPSLOPE STAKES AND 4 DOWNSLOPE STAKES AT AN ANGLE TO WEDGE WATTLE TO GROUND.

PROVIDE STAPLES MADE OF 0.125 IN. DIAMETER STEEL WIRE FORMED INTO A U SHAPE NOT LESS THAN 12″ IN LENGTH.

INSTALL STAPLES APPROXIMATELY EVERY 1 LINEAR FOOT ON BOTH SIDES OF WATTLE AND AT EACH END TO SECURE IT TO THE SOIL.

WATTLE INSTALLATION CAN BE ON OUTSIDE OF THE SILT FENCE AS DIRECTED.

INSTALL TEMPORARY SILT FENCE IN ACCORDANCE WITH SECTION 1605 OF THE STANDARD SPECIFICATIONS.

INSET A

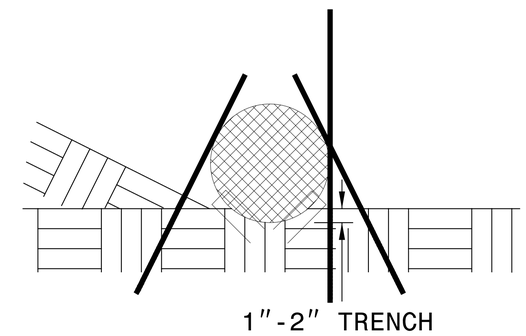


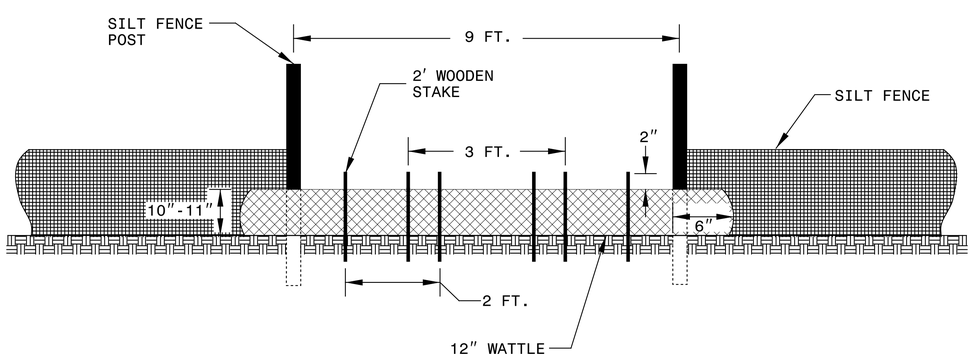


**VIEW FROM SLOPE**

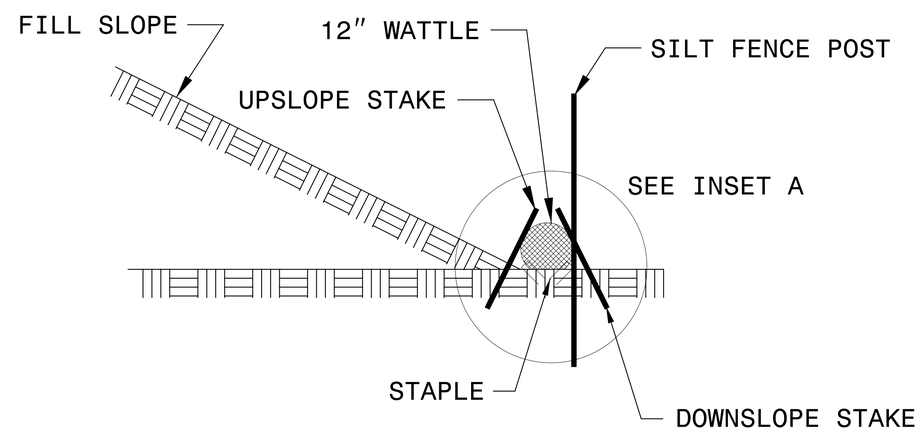


**SIDE VIEW**

| T.I.P. NO. | SHEET NO. |
|---|---|
| BD-5113H | UC-1 |

STATE OF NORTH CAROLINA
DIVISION OF HIGHWAYS

# UTILITIY CONSTRUCTION
# BURKE COUNTY

***LOCATION: BRIDGE NO. 73 OVER HENRY FORK RIVER ON SR 1916 (RIVER ROAD)***

***TYPE OF WORK: WATER LINE CONSTRUCTION***

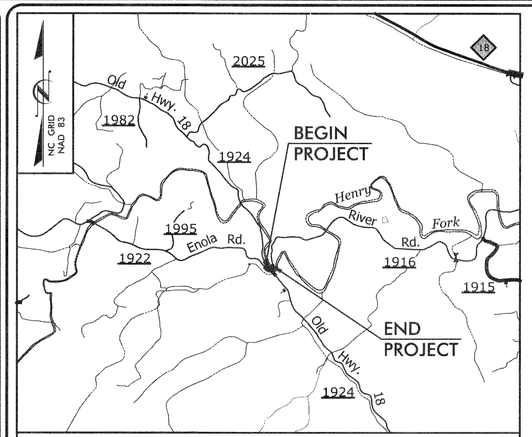


VICINITY MAP

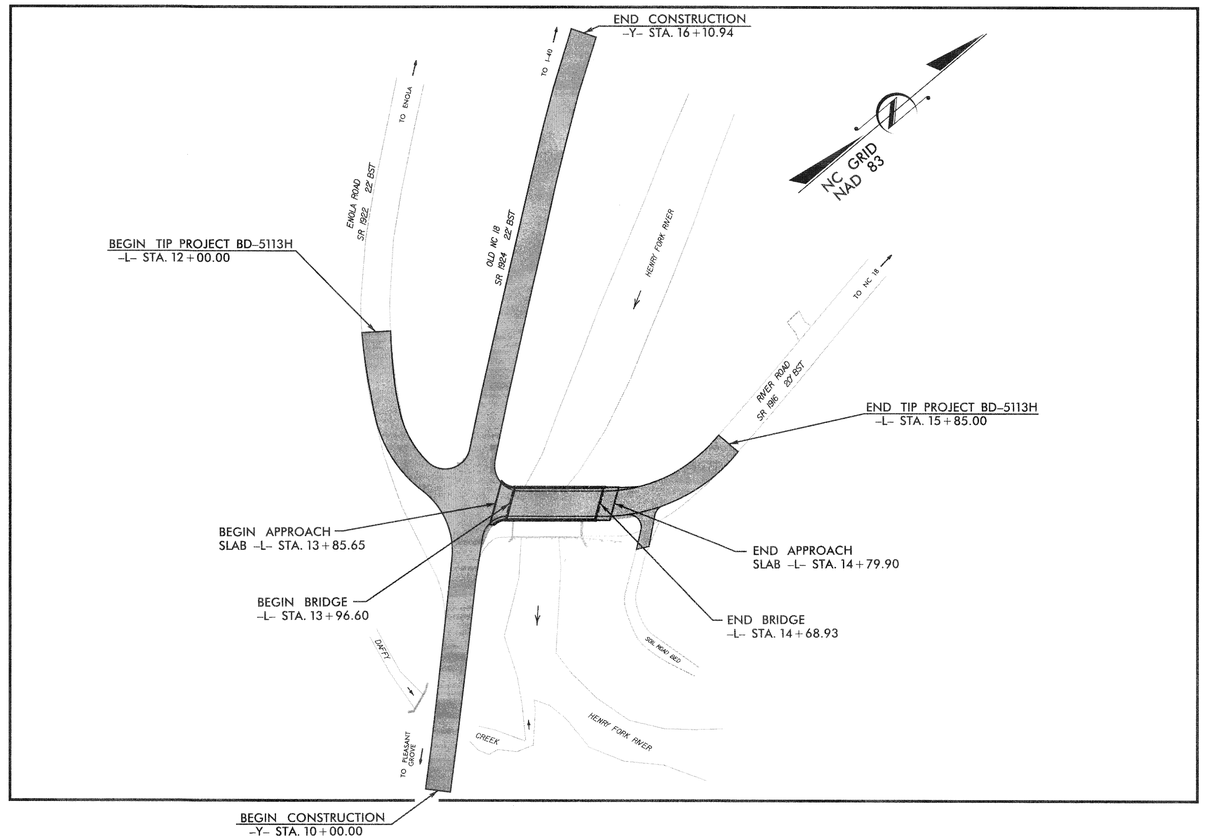



Vaughn & Melton
Consulting Engineers
Asheville, North Carolina 828-253-2796
Charlotte, North Carolina 704-357-0488
Tri-Cities, Tennessee 423-467-9401
Knoxville, Tennessee 865-546-5800
Middlesboro, Kentucky 606-248-6600
Spartanburg, South Carolina 864-574-4775

Copyright © 2006 Vaughn & Melton, Inc. All Rights Reserved

## GRAPHIC SCALES

30 15 0 30 60
PLANS

## INDEX OF SHEETS


| SHEET NO. | DESCRIPTION |
|---|---|
| UC-1 | TITLE SHEET |
| UC-2 | SYMBOLOGY SHEET |
| UC-3 | UTILITY PLAN, NOTES & DETAIL |


## UTILITY OWNERS ON PROJECT

*(1) WATER - BURKE COUNTY WATER & SEWER DEPARTMENT*

SEAL
NORTH CAROLINA PROFESSIONAL SEAL 16267 ENGINEER MICHAEL A. CALHOUN
Michael A. Calhoun 3-13-14


Vaughn & Melton
Consulting Engineers
1318-F Patton Ave.
Asheville, NC 28806
828-253-2796



*PREPARED FOR THE OFFICE OF:*

***DIVISION OF HIGHWAYS UTILITIES ENGINEERING SECTION***

*1591 MAIL SERVICES CENTER*
*RALEIGH NC 27699-1591*
*PHONE (919) 250-4128*
*FAX (919) 250-4119*

*Roger Worthington, P.E.* — *UTILITIES SECTION ENGINEER*
*Xxxxx Xxxxx, P.E.* — *UTILITIES SQUAD LEADER PROJECT ENGINEER*
*Michael A. Calhoun, P.E.* — *UTILITIES PROJECT ENGINEER*


***TIP PROJECT: BD-5113H***

***CONTRACT:***


05/26/13
V&M PROJECT #31232.04
P:\DGN\UTILITIES\BD5113H_UTILITIES\UC-1.DGN

| PROJECT REFERENCE NO. | SHEET NO. |
|---|---|
| BD-5113H | UC-2 |

STATE OF NORTH CAROLINA
DIVISION OF HIGHWAYS

# UTILITIES PLAN SHEET SYMBOLS

## PROPOSED WATER SYMBOLS

- Water Line (Sized as Shown) — 12" WL
- 11¼ Degree Bend
- 22½ Degree Bend
- 45 Degree Bend
- 90 Degree Bend
- Plug
- Tee
- Cross
- Reducer
- Gate Valve — GV
- Butterfly Valve — BV
- Tapping Valve — TGV
- Line Stop — LS
- Line Stop with Bypass — LS/BP
- Blow Off — BO
- Fire Hydrant — PFH
- Relocate Fire Hydrant — RFH
- Remove Fire Hydrant — REM FH
- Water Meter — PWM
- Relocate Water Meter — RWM
- Remove Water Meter — REM WM
- Water Pump Station — PS(W)
- RPZ Backflow Preventer — PBPZ
- DCV Backflow Preventer — PBFP
- Relocate RPZ Backflow Preventer — RBPZ
- Relocate DCV Backflow Preventer — RBFP

## PROPOSED MISCELLANOUS UTILITIES SYMBOLS

- Power Pole
- Telephone Pole
- Joint Use Pole
- Telephone Pedestal — TEL PED
- Utility Line by Others (Type as Shown)
- Trenchless Installation — 12" TL INSTALL
- Encasement by Open Cut — 24" ENCAS BY OC
- Encasement — 24" ENCASEMENT
- Thrust Block
- Air Release Valve — AR
- Utility Vault — UV
- Concrete Pier — CP
- Steel Pier — SP
- Plan Note — NOTE
- Pay Item Note — PAY ITEM

## EXISTING UTILITIES SYMBOLS

- Power Pole
- Telephone Pole
- Joint Use Pole
- Utility Pole
- Utility Pole with Base
- H-Frame Pole
- Power Transmission Line Tower
- Water Manhole
- Power Manhole
- Telephone Manhole
- Sanitary Sewer Manhole
- Hand Hole for Cable
- Power Transformer
- Telephone Pedestal
- CATV Pedestal
- Gas Valve
- Gas Meter
- Located Miscellaneous Utility Object
- Abandoned According to Utility Records — AATUR
- End of Information — E.O.I.
- *Underground Power Line — P
- *Underground Telephone Cable — T
- *Underground Telephone Conduit — TC
- *Underground Fiber Optics Telephone Cable — T FO
- *Underground TV Cable — TV
- *Underground Fiber Optics TV Cable — TV FO
- *Underground Gas Pipeline — G
- Aboveground Gas Pipeline — A/G Gas
- *Underground Water Line — W
- Aboveground Water Line — A/G Water
- *Underground Gravity Sanitary Sewer Line — SS
- Aboveground Gravity Sanitary Sewer Line — A/G Sanitary Sewer
- *Underground SS Forced Main Line — FSS
- Underground Unknown Utility Line — ?UTL
- SUE Test Hole
- Water Meter
- Water Valve
- Fire Hydrant
- Sanitary Sewer Cleanout

*For Existing Utilities

- Utility Line Drawn from Record (Type as Shown) — W
- Designated Utility Line (Type as Shown) — W

9/11/13
V&M PROJECT #31232-04
TRANSPORTATION\31232-04\UTILITIESUC PLANSUC-2.DGN
REV: 2/1/2012

| PROJECT REFERENCE NO. | SHEET NO. |
|---|---|
| BD-5113H | UC-3 |
| DESIGNED BY: MAC | |
| DRAWN BY: LAM | |
| CHECKED BY: MAC | |
| APPROVED BY: | |
| REVISED: | |
| NORTH CAROLINA DEPARTMENT OF TRANSPORTATION | |
| UTILITIES ENGINEERING SEC. PHONE:(919)250-4128 FAX:(919)250-4119 | UTILITY CONSTRUCTION PLANS ONLY |

NORTH CAROLINA PROFESSIONAL SEAL 16267 ENGINEER MICHAEL A. CALHOUN

Michael A. Calhoun 3-13-14

# UTILITY CONSTRUCTION

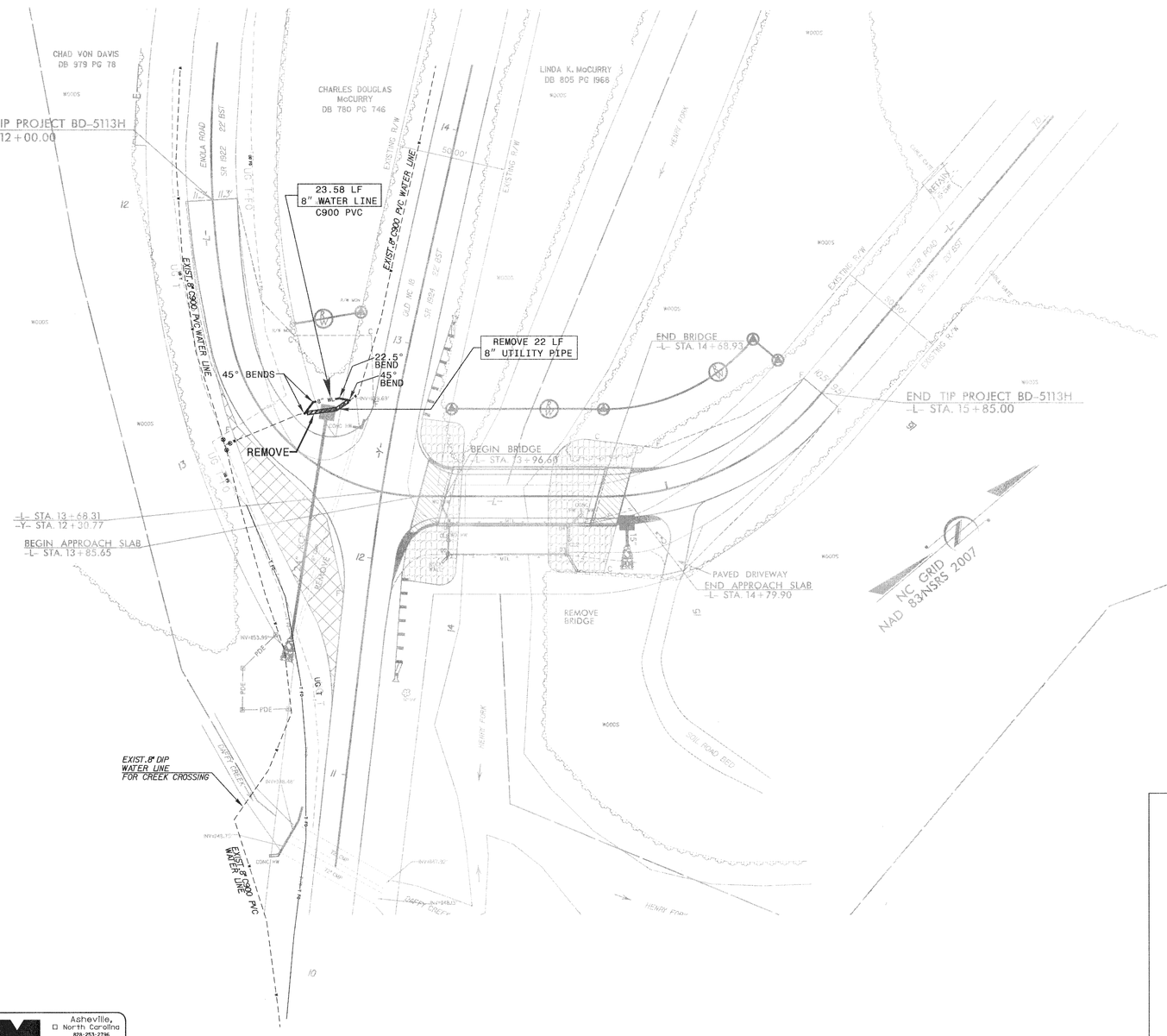


## GENERAL NOTES:

1. THE PROPOSED UTILITY CONSTRUCTION SHALL MEET THE APPLICABLE REQUIREMENTS OF THE NC DEPARTMENT OF TRANSPORTATION'S "STANDARD SPECIFICATIONS FOR ROADS AND STRUCTURES" DATED JANUARY 2012.
2. THE EXISTING WATER LINE BELONGS TO THE BURKE COUNTY WATER & SEWER DEPARTMENT.
3. ALL WATER LINES TO BE INSTALLED WITHIN COMPLIANCE OF THE RULES AND REGULATIONS OF THE NORTH CAROLINA DEPT. OF ENVIRONMENTAL AND NATURAL RESOURCES, DIVISION OF WATER QUALITY, PUBLIC WATER SUPPLY SECTION.
4. THE UTILITY OWNER OWNS THE EXISTING UTILITY FACILITIES AND WILL OWN THE NEW UTILITY FACILITIES AFTER ACCEPTANCE BY THE DEPARTMENT. THE DEPARTMENT OWNS THE CONSTRUCTION CONTRACT AND HAS ADMINISTRATIVE AUTHORITY. COMMUNICATIONS AND DECISIONS BETWEEN THE CONTRACTOR AND UTILITY OWNER ARE NOT BINDING UPON THE DEPARTMENT OR THIS CONTRACT UNLESS AUTHORIZED BY THE ENGINEER. AGREEMENTS BETWEEN THE UTILITY OWNER AND CONTRACTOR FOR THE WORK THAT IS NOT PART OF THIS CONTRACT OR IS SECONDARY TO THIS CONTRACT ARE ALLOWED, BUT ARE NOT BINDING UPON THE DEPARTMENT.
5. CONTRACTOR TO PROVIDE ACCESS FOR THE DEPARTMENT PERSONNEL AND THE OWNER'S REPRESENTATIVES TO ALL PHASES OF CONSTRUCTION. NOTIFY DEPARTMENT PERSONNEL AND THE UTILITY OWNER TWO WEEKS PRIOR TO COMMENCEMENT OF ANY WORK AND ONE WEEK PRIOR TO SERVICE INTERRUPTION. KEEP UTILITY OWNERS' REPRESENTATIVES INFORMED OF WORK PROGRESS AND PROVIDE OPPROTUNITY FOR INSPECTION OF CONSTRUCTION AND TESTING.
6. THE PLANS DEPICT THE BEST AVAILABLE INFORMATION FOR THE LOCATION, SIZE, AND TYPE OF MATERIAL FOR ALL EXISTING UTILITIES. MAKE INVESTIGATIONS FOR DETERMINING THE EXACT LOCATION, SIZE, AND TYPE MATERIAL OF THE EXISTING FACILITIES AS NECESSARY FOR THE CONSTRUCTION OF THE PROPOSED UTILITIES AND FOR AVOIDING DAMAGE TO EXISTING FACILITIES. REPAIR ANY DAMAGE INCURRED TO EXISTING FACILITIES TO THE ORIGINAL OR BETTER CONDITION AT NO ADDITONAL COST TO THE DEPARTMENT.
7. MAKE FINAL CONNECTIONS OF THE NEW WORK TO THE EXISTING SYSTEM WHERE INDICATED ON THE PLANS, AS REQUIRED TO FIT THE ACTUAL CONDITIONS, OR AS DIRECTED.
8. MAKE CONNECTIONS BETWEEN EXISTING AND PROPOSED UTILITIES AT TIMES MOST CONVENIENT TO THE PUBLIC, WITHOUT ENDANGERING THE UTILITY SERVICE, AND IN ACCORDANCE WITH THE UTILITY OWNER'S REQUIREMENTS. MAKE CONNECTIONS USING 2 LINE STOPS AND /OR ON WEEKENDS, AT NIGHT, AND ON HOLIDAYS IF NECESSARY.
9. ALL UTILITY MATERIALS SHALL BE APPROVED PRIOR TO DELIVERY TO THE PROJECT. SEE 1500-7, " SUBMITTALS AND RECORDS" IN SECTION 1500 OF THE STANDARD SPECIFICATIONS.

## TRENCH DETAIL

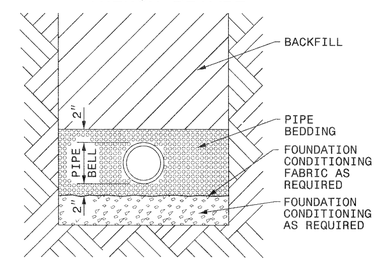


PLACE FOUNDATION CONDITIONING MATERIAL BELOW BEDDING IF REQUIRED, AS DIRECTED BY ENGINEER. PIPE BEDDED IN SELECT MATERIAL, CLASS II (TYPE 1) OR CLASS III. TRENCH BACKFILLED IN LOOSE 6" LAYERS COMPACTED TO TOP OF TRENCH USING LOCAL EXCAVATED MATERIAL IF APPROVED BY THE ENGINEER, OR SELECT MATERIAL. ALL MATERIAL SHALL BE FREE OF ROCKS, FOREIGN MATERIAL, AND FROZEN EARTH. COMPACTION SHALL BE TO APPROXIMATELY 95% DENSITY IN ACCORDANCE WITH AASHTO T-99 AS MODIFIED BY THE DEPARTMENT OF TRANSPORTATION.


V&M
Vaughn & Melton
Consulting Engineers
Charlotte, North Carolina 704-357-0488
Asheville, North Carolina 828-253-2796
Tri-Cities, Tennessee 423-467-8401
Knoxville, Tennessee 865-546-5800
Middlesboro, Kentucky 606-248-6600
Spartanburg, South Carolina 864-574-4715



Copyright © 2006 Vaughn & Melton, Inc.
All Rights Reserved


REVISIONS

V:\PROJECT\5113H\C\4
V:\PROJECT\5113H\C\4\UTILITIES\UC PLANS\UC-3.DGN

06/26/13

TIP PROJECT: BD-5113H

CONTRACT:

| T.I.P. NO. | SHEET NO. |
|---|---|
| BD-5113H | UO-1 |

STATE OF NORTH CAROLINA
DIVISION OF HIGHWAYS

# UTILITIES BY OTHERS
# BURKE COUNTY

**LOCATION: BRIDGE NO. 73 OVER HENRY FORK RIVER ON SR 1916 (RIVER ROAD)**

**TYPE OF WORK: UNDERGROUND TELEPHONE**

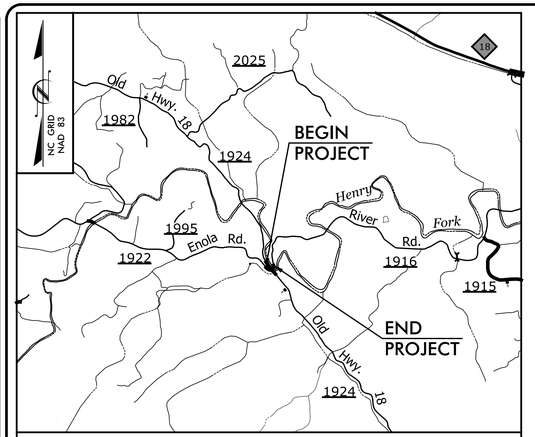


VICINITY MAP

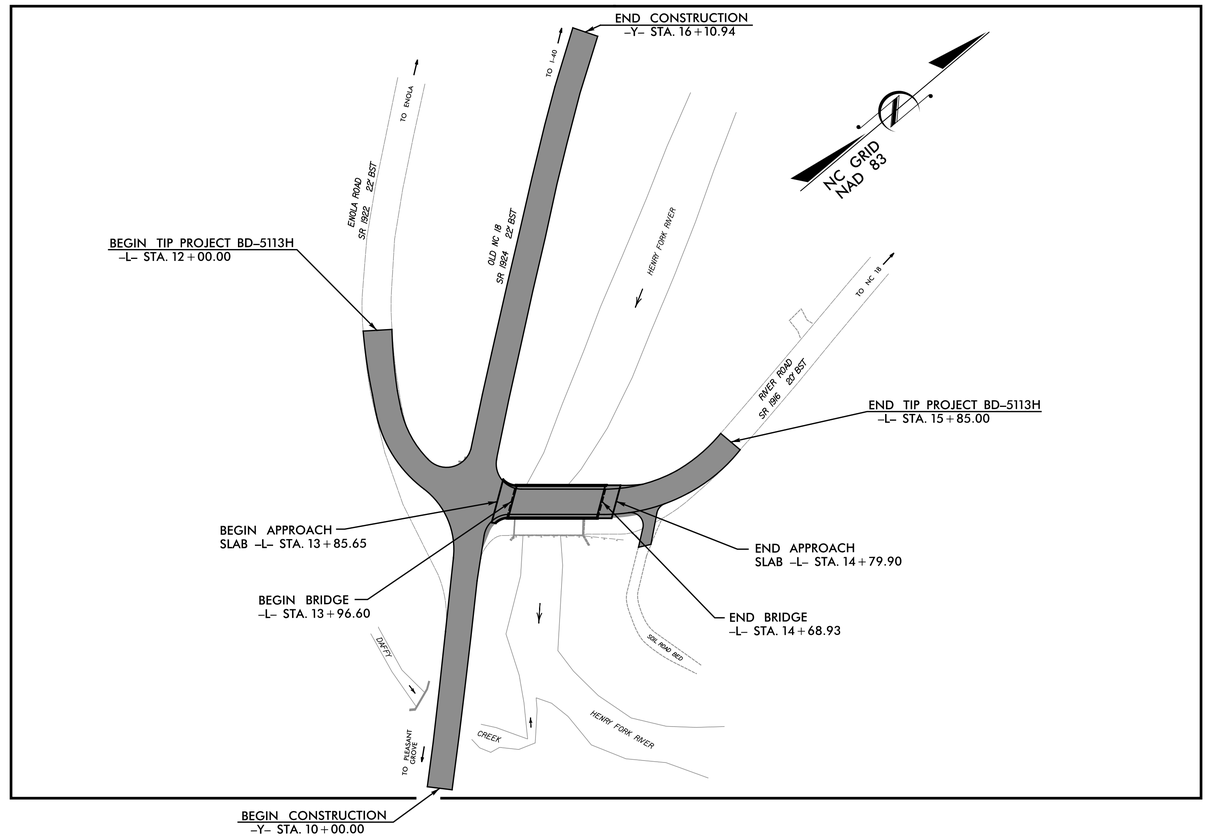



Vaughn & Melton
Consulting Engineers
Asheville, North Carolina 828-253-2796
Charlotte, North Carolina 704-357-0488
Tri-Cities, Tennessee 423-467-8401
Knoxville, Tennessee 865-546-5800
Middlesboro, Kentucky 606-248-6600
Spartanburg, South Carolina 864-574-4775

Copyright © 2006 Vaughn & Melton, Inc. All Rights Reserved

## GRAPHIC SCALES

20 10 0 20 40
PLANS

## INDEX OF SHEETS

| SHEET NO. | DESCRIPTION |
|---|---|
| UO-1 | TITLE SHEET |
| UO-2 | UTILITIES BY OTHERS PLAN SHEET |

## UTILITY OWNERS ON PROJECT

(1) TELEPHONE - AT&T

## PLANS PREPARED BY:


Vaughn & Melton
Consulting Engineers
1318-F Patton Ave.
Asheville, NC 28806
828-253-2796



PREPARED FOR THE OFFICE OF:
DIVISION OF HIGHWAYS
UTILITIES ENGINEERING SECTION
1591 MAIL SERVICES CENTER
RALEIGH NC 27699-1591
PHONE (919) 250-4128
FAX (919) 250-4119

| | |
|---|---|
| Roger Worthington, P.E. | UTILITIES SECTION ENGINEER |
| Xxxxx Xxxxx, P.E. | UTILITIES SQUAD LEADER PROJECT ENGINEER |
| Lynn Mann, P.G. | UTILITIES PROJECT DESIGNER |


V&M PROJECT #13232-04
TRANSPORTATION\13232-04\UTILITIES\BURKE73UO-2.DGN

# TIP PROJECT: BD-5113H

# CONTRACT:

| PROJECT REFERENCE NO. | SHEET NO. |
|---|---|
| BD-5113H | U0-2 |

## UTILITIES BY OTHERS

NOTE:
ALL PROPOSED UTILITY WORK SHOWN ON THIS SHEET WILL BE DONE BY OTHERS

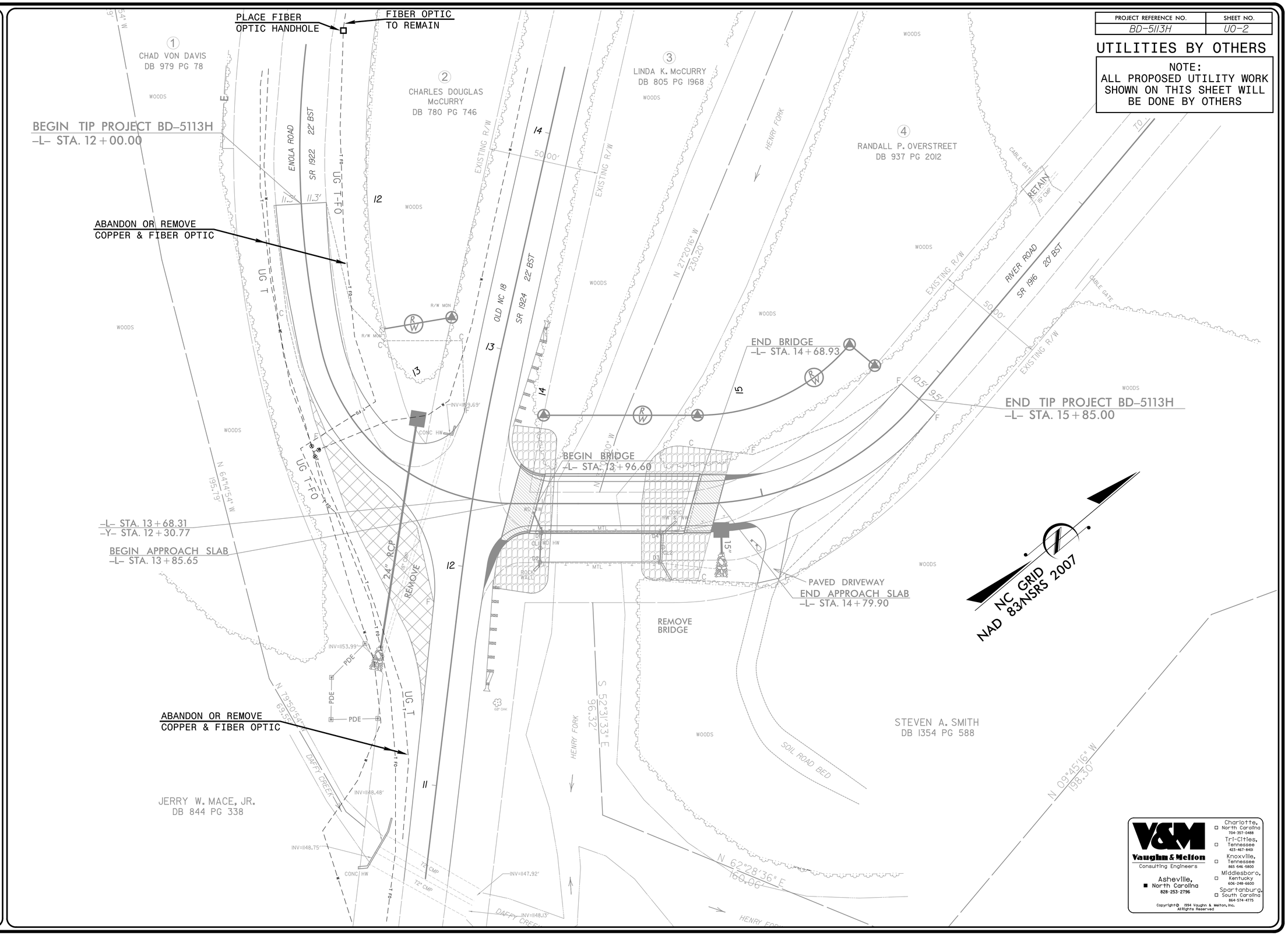


V&M PROJECT #31232-04
TRANSPORTATION\31232-04\UTILITIES\BURKE73U0-2.DGN

| COMPUTED BY: NVA | DATE: 11-14-13 |
|---|---|
| CHECKED BY: RMS | DATE: 11-14-13 |

| PROJECT REFERENCE NO. | SHEET NO. |
|---|---|
| BD-5113H | X-0 |

DIVISION OF HIGHWAYS
STATE OF NORTH CAROLINA

NORTH CAROLINA PROFESSIONAL SEAL 26960 ENGINEER REECE M. SCHULER
3/14/14

# CROSS SECTION SUMMARY

## IN CUBIC YARDS

| -L- LOCATION | UNCLASSIFIED EXCAVATION | EMBT |
|---|---|---|
| | | |
| | | |
| | | |
| 12+00 | 0 | 0 |
| 12+50 | 1 | 2 |
| 13+00 | 184 | 9 |
| 13+50 | 189 | 17 |
| 13+96.60 BEGIN BRIDGE | 11 | 19 |
| 14+68.93 END BRIDGE | 0 | 0 |
| 15+00 | 12 | 13 |
| 15+50 | 11 | 13 |
| 15+85 | 1 | 3 |
| | | |
| | | |
| | | |
| | | |

NOTE: EMBANKMENT COLUMN DOES NOT INCLUDE BACKFILL FOR UNDERCUT.

Approximate quantities only. Unclassified excavation, borrow excavation, fine grading, clearing and grubbing, and removal of existing pavement will be paid for at the contract lump sum price for "grading".

| 0 5 10 | PROJ. REFERENCE NO. | SHEET NO. |
|---|---|---|
| | BD-5113H | X-1 |

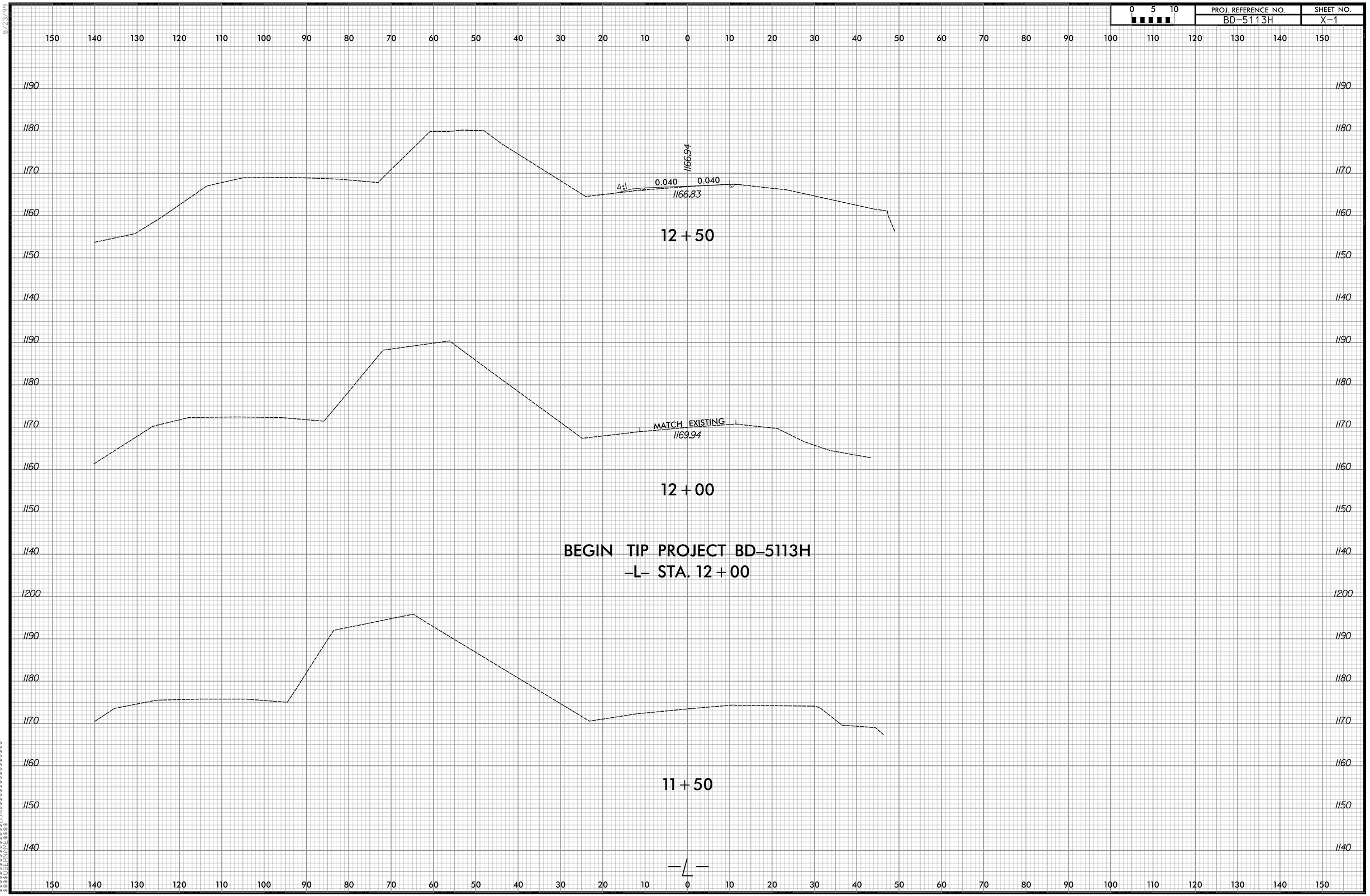


8/23/99

$$$$$SYSTIME$$$$
$$$$$SAVEDATE$$$$
$$$$$USERNAME$$$$

| 0 5 10 | PROJ. REFERENCE NO. | SHEET NO. |
|---|---|---|
| | BD-5113H | X-2 |

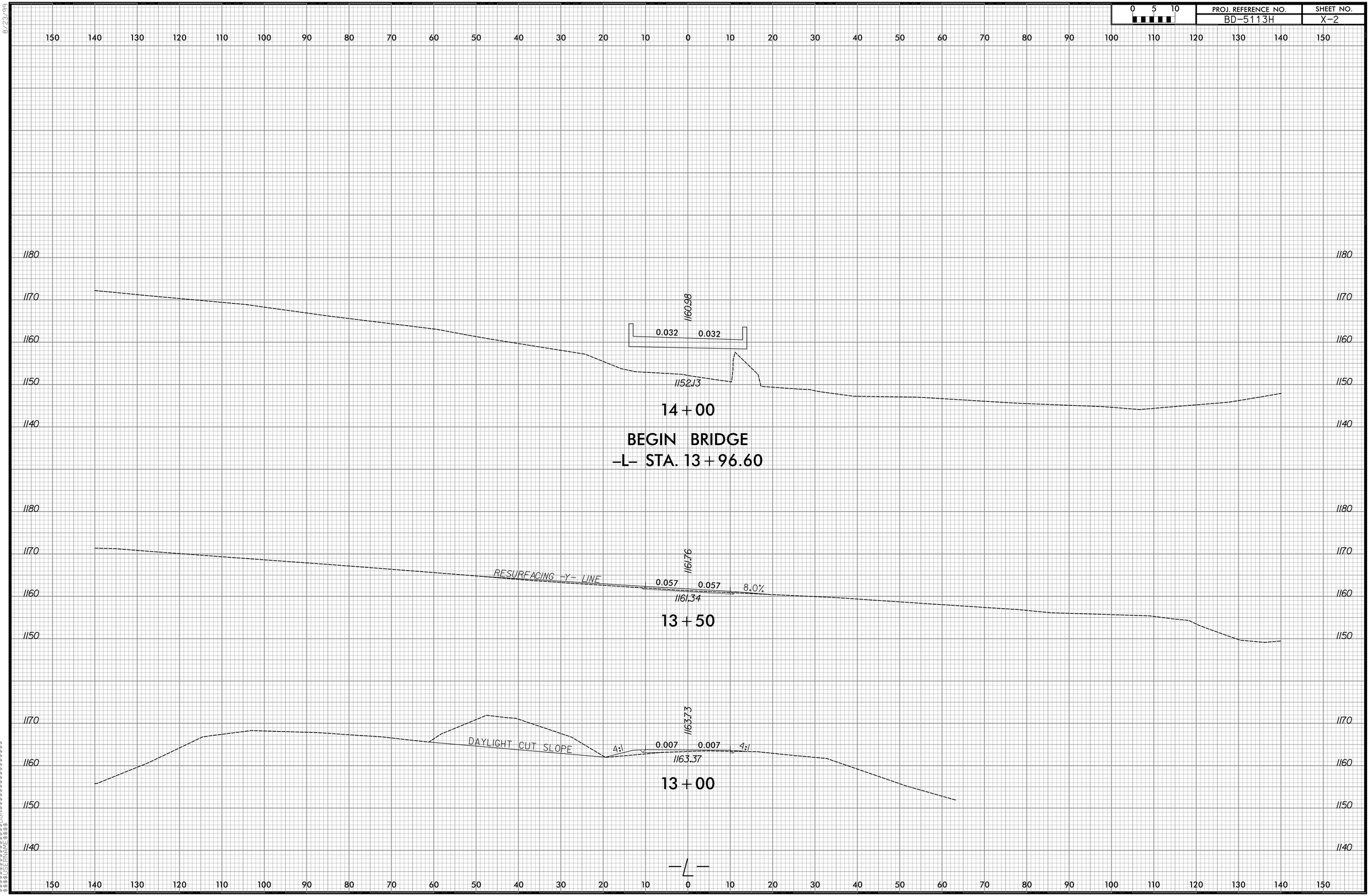


8/23/99

$$$$SYSTIME$$$$
$$$$TIME$$$$
$$$$DGN$$$$
$$$$FRAME$$$$

| 0 5 10 | PROJ. REFERENCE NO. | SHEET NO. |
|---|---|---|
| | BD-5113H | X-3 |

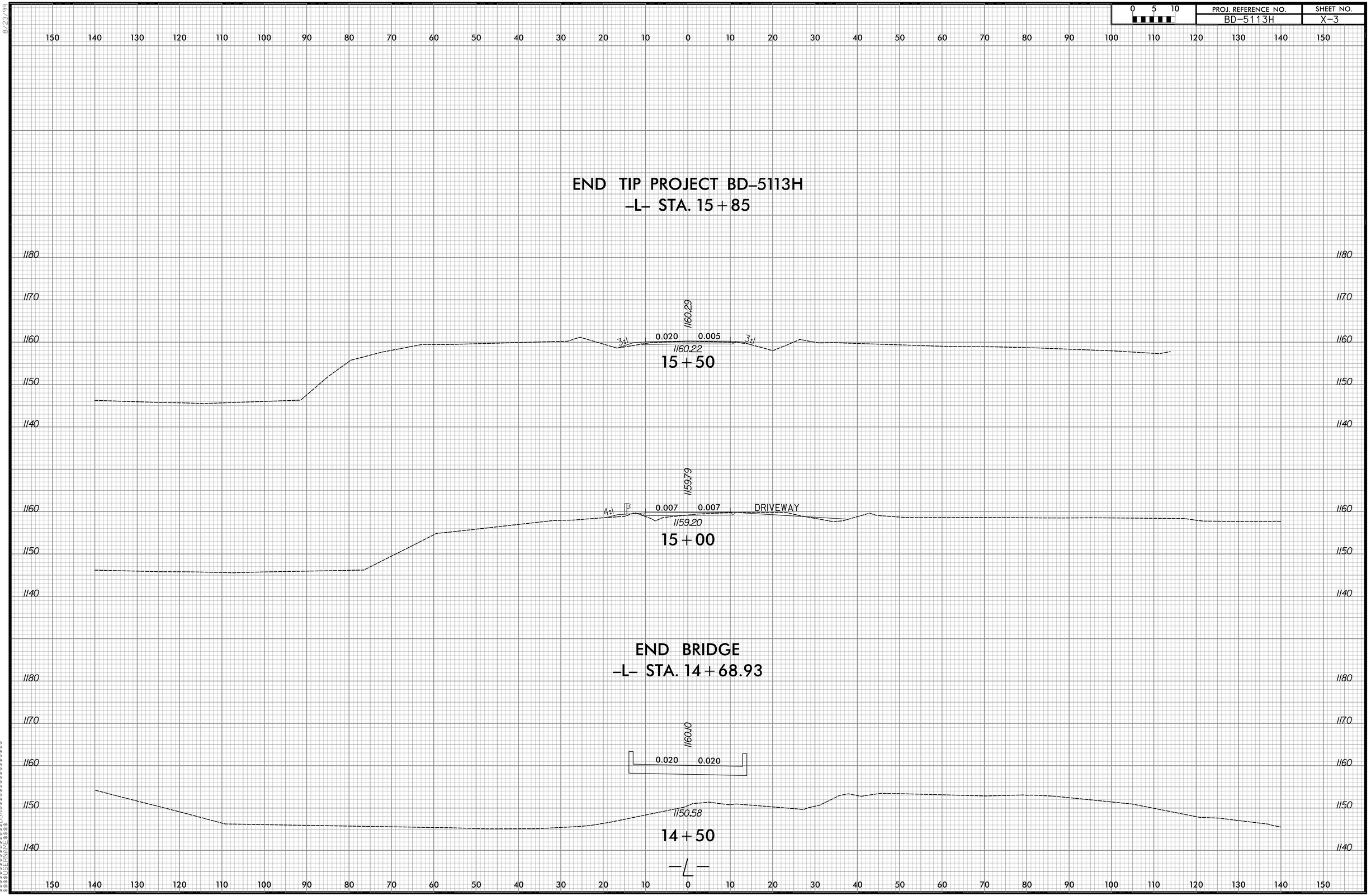


8/23/99

$$$$SYSTIME$$$$
$$$$SYSTIME$$$$
$$$$DGN$$$$$$$$$$$$$$$$$$$$
$$$$DGNFRAME$$$$

8/23/99

| 0 5 10 | PROJ. REFERENCE NO. | SHEET NO. |
|---|---|---|
| | BD-5113H | X-4 |

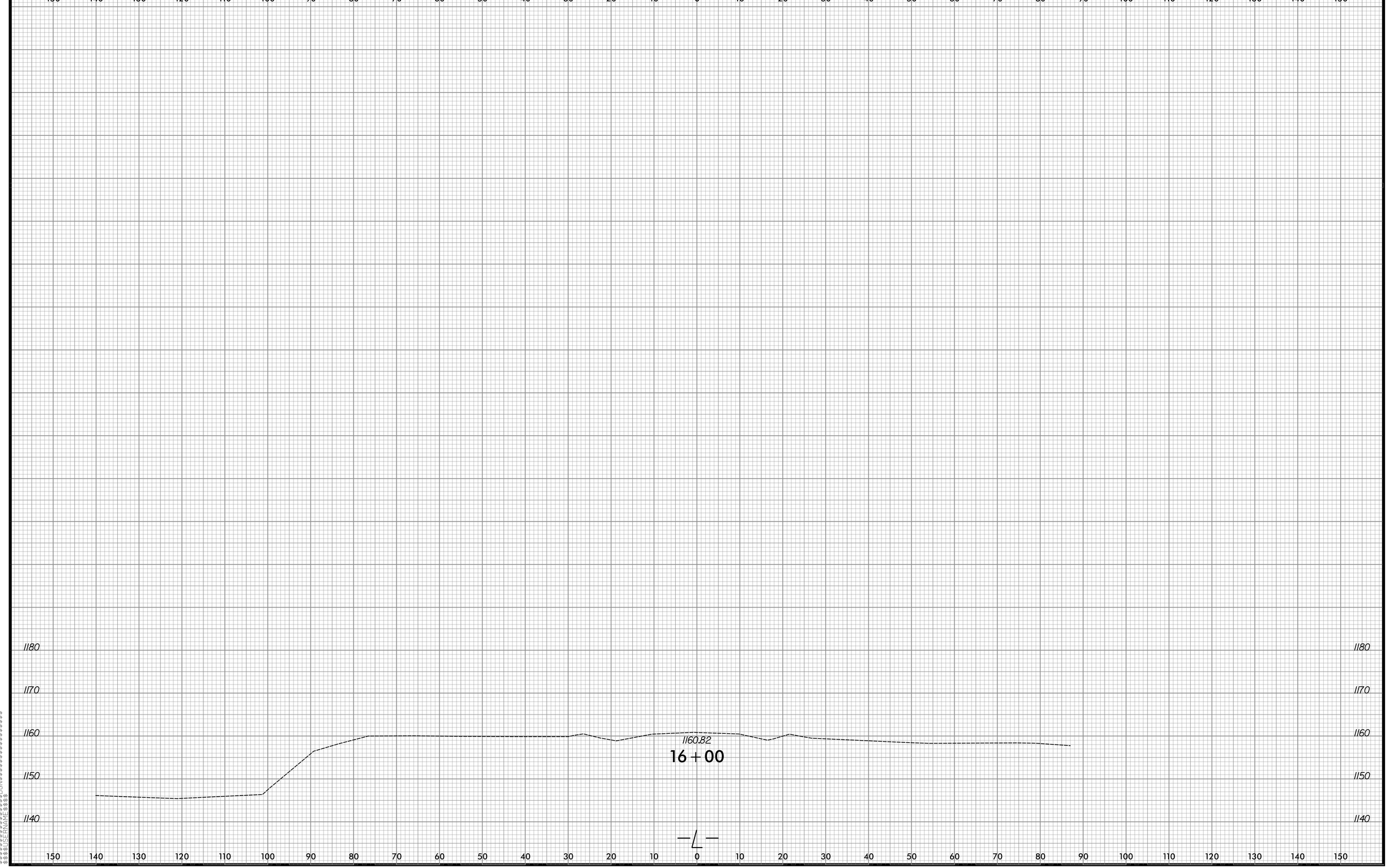


$$$$SYSTIME$$$$
$$$$SYSTIME$$$$
$$$$DGN$$$$$$$$$$$$$$$$$$
$$$$DGNFRAME$$$$

TIP NO: BD-5113H

CONTRACT: DM00073

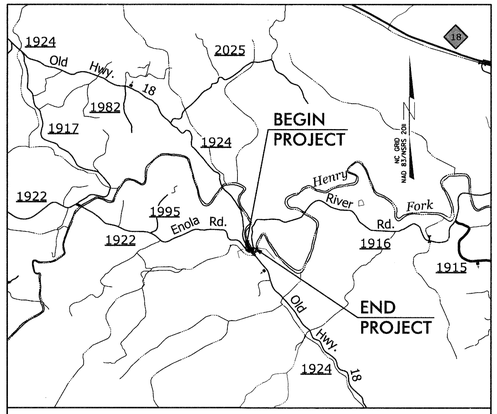


VICINITY MAP

STATE OF NORTH CAROLINA

DIVISION OF HIGHWAYS

# BURKE COUNTY

| STATE | STATE PROJECT REFERENCE NO. | SHEET NO. | TOTAL SHEETS |
|---|---|---|---|
| N.C. | BD-5113H | | |

| STATE PROJ. NO. | F. A. PROJ. NO. | DESCRIPTION |
|---|---|---|
| 45359.1.8 | BRZ-1916(9) | P.E. |
| 45359.2.8 | BRZ-1916(9) | R/W |
| 45359.3.8 | BRZ-1916(9) | CONST. |

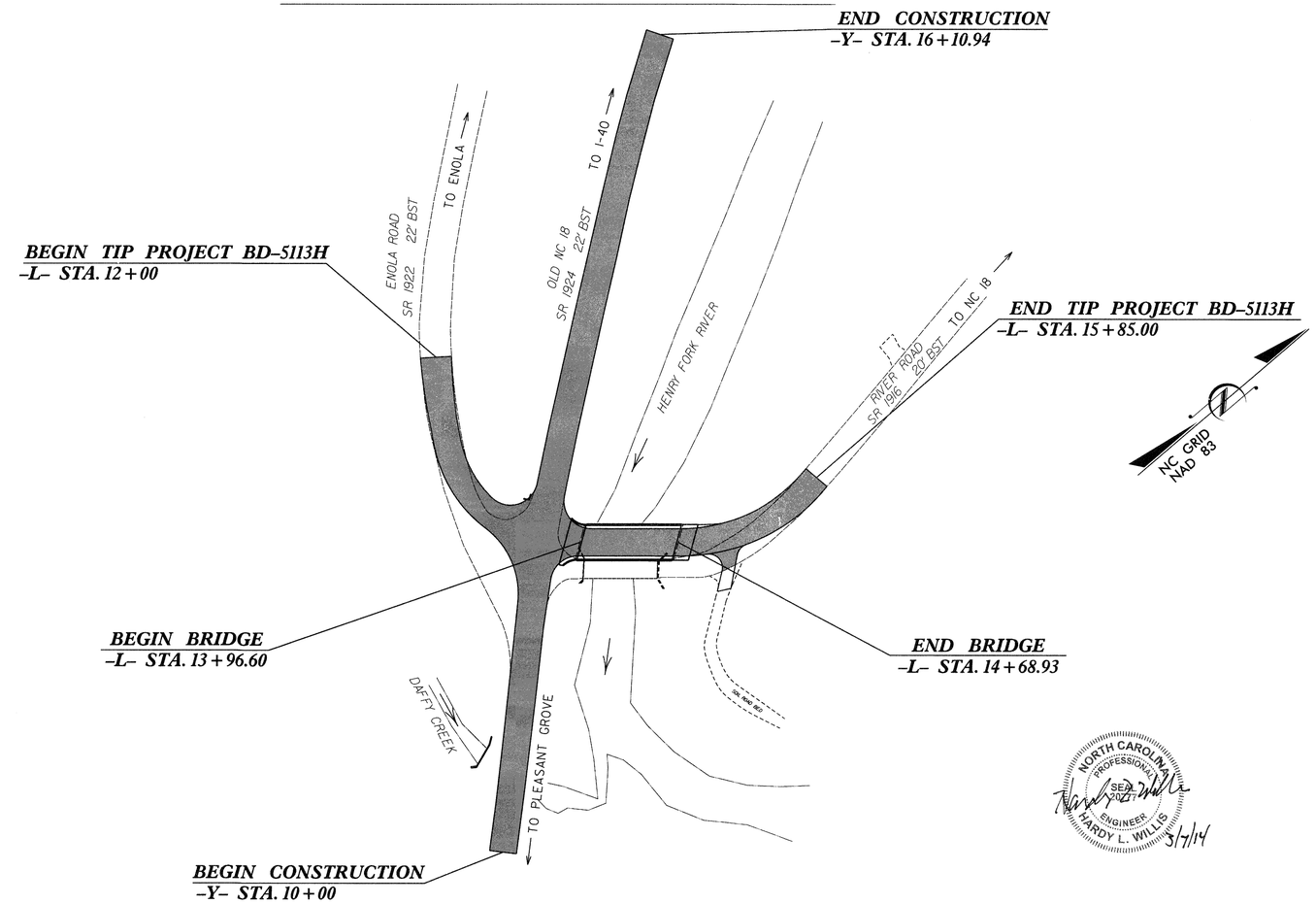


## STRUCTURE

NORTH CAROLINA PROFESSIONAL SEAL 024121 ENGINEER HARDY L. WILLIS 3/7/14


V&M Vaughn & Melton
Consulting Engineers
Asheville, North Carolina 828-253-2796
Charlotte, North Carolina 704-357-0488
Tri-Cities, Tennessee 423-467-8401
Knoxville, Tennessee 865-546-5800
Middlesboro, Kentucky 606-248-6600
Spartanburg, South Carolina 864-574-4775


Copyright © 2006 Vaughn & Melton, Inc. All Rights Reserved

STATE OF NORTH CAROLINA DEPARTMENT OF TRANSPORTATION

### DESIGN DATA

ADT 2009 = 550
ADT 2025 = 1100

T = 6%
V = 20 MPH

FUNC CLASS = LOCAL

### PROJECT LENGTH

LENGTH ROADWAY TIP PROJECT BD-5113H = 0.059 MI
LENGTH STRUCTURE TIP PROJECT BD-5113H = 0.014 MI
TOTAL LENGTH TIP PROJECT BD-5113H = 0.073 MI

Prepared in the Office of:
VAUGHN & MELTON
1318-F PATTON AVE.
ASHEVILLE NC, 28806
FOR THE NORTH CAROLINA DIVISION OF HIGHWAYS

2012 STANDARD SPECIFICATIONS

LETTING DATE :
APRIL 16, 2014

HARDY WILLIS, PE
PROJECT ENGINEER

RYAN SHIPMAN, EI
PROJECT DESIGN ENGINEER

STRUCTURES MANAGEMENT UNIT
1000 BIRCH RIDGE DR.
RALEIGH, N.C. 27610

DIVISION OF HIGHWAYS
STATE OF NORTH CAROLINA

P.E.
STATE DESIGN ENGINEER

DEPARTMENT OF TRANSPORTATION
FEDERAL HIGHWAY ADMINISTRATION

APPROVED
DIVISION ADMINISTRATOR DATE

F. A. PROJECT BRZ-1916(9)

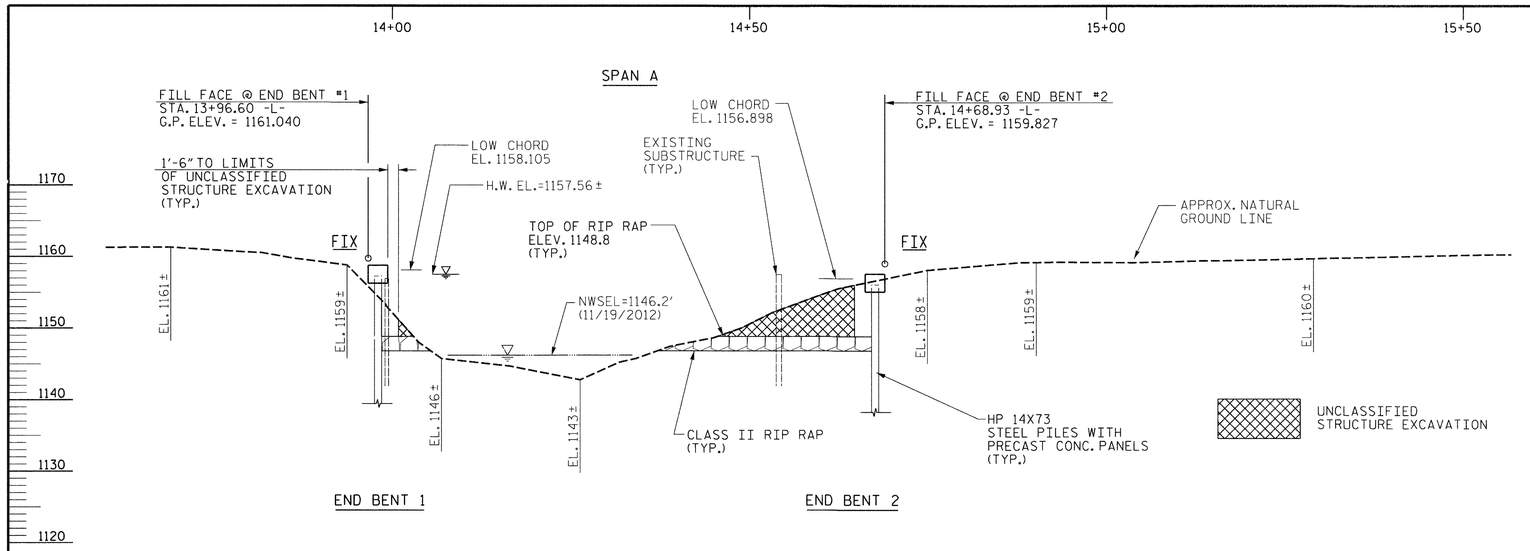


## SECTION ALONG ℄ SURVEY -L-

SECTIONS AT END BENTS ARE AT RIGHT ANGLES.

PI = 14+80.00
EL = 1,159.58'
VC = 50'

(-)1.7500% (+)1.0110%

## VERTICAL GRADE DATA -L-

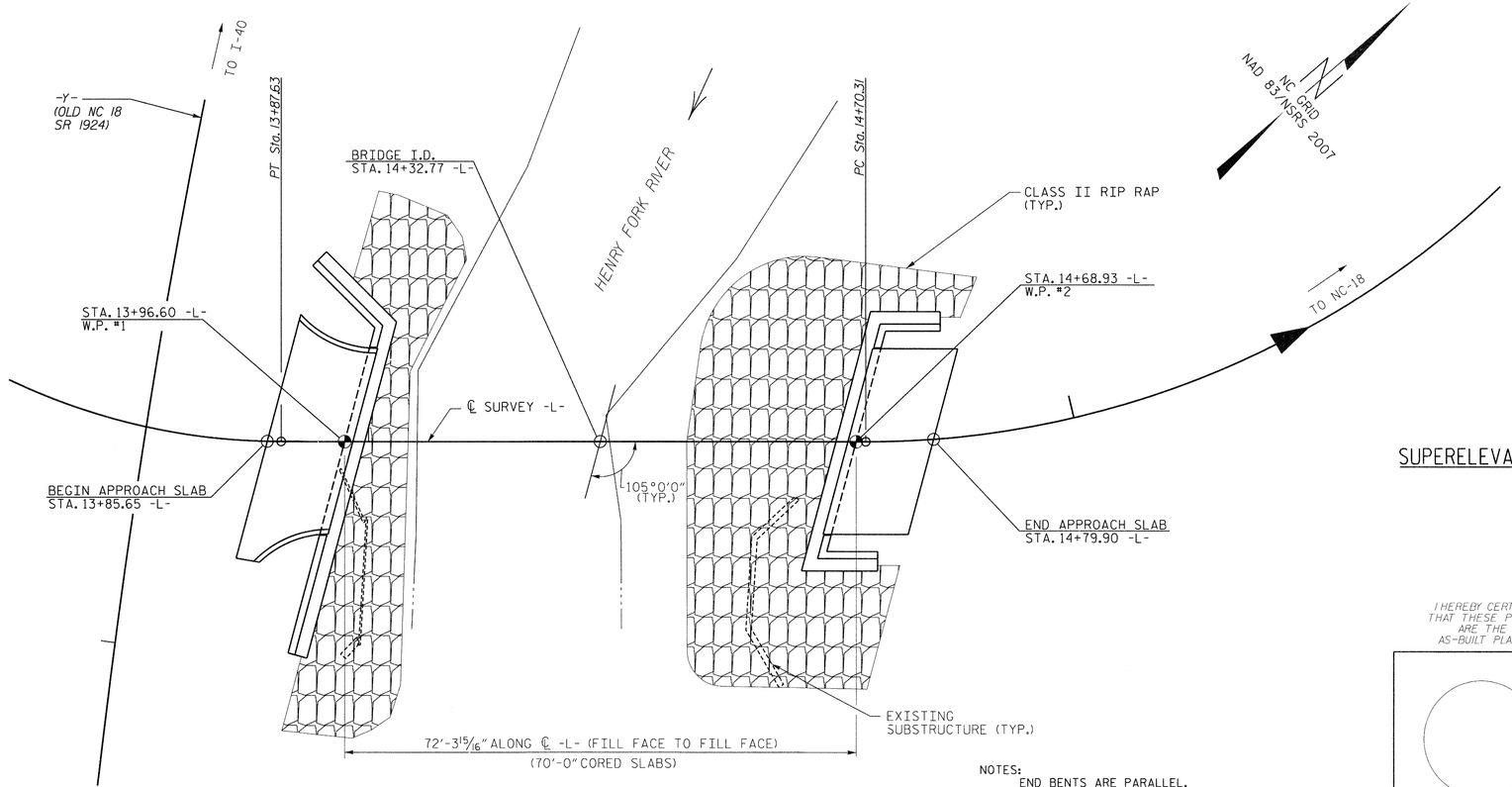


## PLAN ALONG ℄ SURVEY -L-

NOTES:
END BENTS ARE PARALLEL.
PILES NOT SHOWN IN PLAN VIEW FOR CLARITY.
CORED SLABS PARALLEL TO ℄ SURVEY -L-.

PI Sta 15+30.86
△ = 49° 57' 00.0" (LT)
D = 44° 04' 25.2"
L = 113.33'
T = 60.55'
R = 130.00'

## HORIZONTAL CURVE DATA -L-

## SUPERELEVATION TRANSITION DATA -L-

NORTH CAROLINA PROFESSIONAL SEAL 20177 ENGINEER HARDY L. WILLIS 3/7/14

PROJECT NO. BD-5113H
BURKE COUNTY
STATION: 14+32.77 -L-

SHEET 1 OF 2 REPLACES BRIDGE NO. 73

I HEREBY CERTIFY THAT THESE PLANS ARE THE AS-BUILT PLANS.

V&M Vaughn & Melton Consulting Engineers
Asheville, North Carolina 828-253-2796
Charlotte, North Carolina 704-357-0488
Tri-Cities, Tennessee 423-467-8410
Knoxville, Tennessee 865-546-5800
Middlesboro, Kentucky 606-248-6600
Spartanburg, South Carolina 864-574-4775
Copyright © 2006 Vaughn & Melton, Inc. All Rights Reserved

DWN. BY: RWW DATE: 11/2013
CHKD. BY: HLW DATE: 11/2013
DES. EGR. OF RECORD: RTS DATE: 11/2013

STATE OF NORTH CAROLINA
DEPARTMENT OF TRANSPORTATION
RALEIGH

GENERAL DRAWING

BRIDGE over HENRY FORK RIVER
on SR 1916 (RIVER ROAD)
Between SR 1924 & SR 1995

| REVISIONS | | | | | | SHEET NO. |
|---|---|---|---|---|---|---|
| NO. | BY: | DATE: | NO. | BY: | DATE: | S-1 |
| 1 | | | 3 | | | TOTAL SHEETS |
| 2 | | | 4 | | | 18 |

BM1 N 704299 E 1224240 ELEV. 1156.99' -BL- STA. 8+03.00 23' RT RR SPIKE IN BASE OF 26" POPLAR

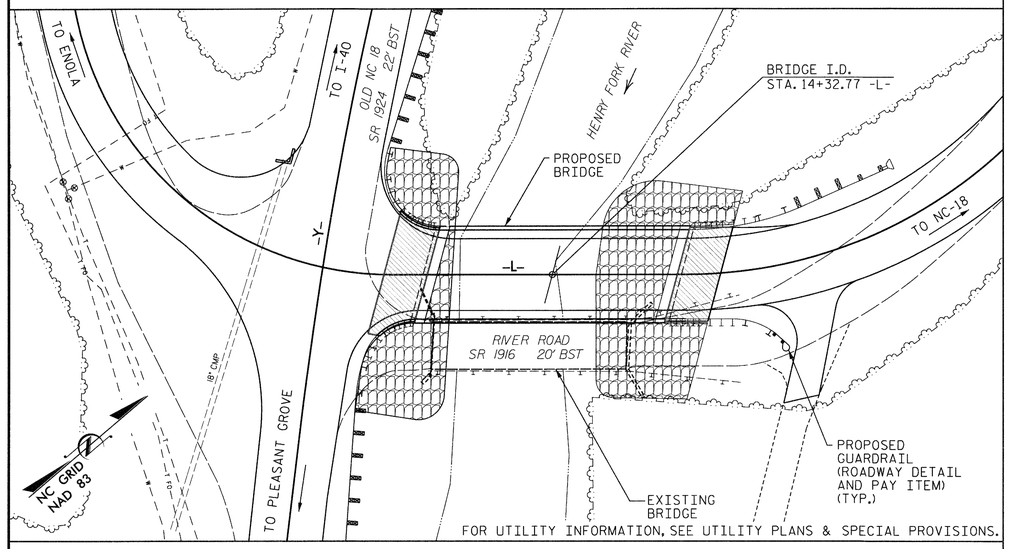


LOCATION SKETCH

## GENERAL NOTES:

ASSUMED LIVE LOAD = HL-93 OR ALTERNATE LOADING.

THIS BRIDGE HAS BEEN DESIGNED IN ACCORDANCE WITH THE REQUIREMENTS OF THE AASHTO LRFD BRIDGE DESIGN SPECIFICATIONS. THIS BRIDGE IS LOCATED IN SEISMIC PERFORMANCE ZONE 1.

FOR OTHER DESIGN DATA AND GENERAL NOTES, SEE "STANDARD NOTES" SHEET

FOR EROSION CONTROL MEASURES, SEE EROSION CONTROL PLANS.

THE EXISTING STRUCTURE, CONSISTING OF A SINGLE SPAN, 55.5 FOOT LONG TIMBER DECK ON STEEL I-BEAMS, 14-FEET WIDE, ONE RUBBLE MASONRY VERTICAL ABUTMENT AND ONE TIMBER ABUTMENT, AND LOCATED AT THE PROPOSED STRUCTURE, SHALL BE REMOVED. THE EXISTING BRIDGE IS PRESENTLY POSTED BELOW THE LEGAL LOAD LIMIT. SHOULD THE STRUCTURAL INTEGRITY OF THE BRIDGE FURTHER DETERIORATE, THIS LOAD LIMITATION MAY BE REDUCED AS FOUND NECESSARY DURING THE LIFE OF THE PROJECT.

REMOVAL OF THE EXISTING BRIDGE SHALL BE PERFORMED SO AS NOT TO ALLOW DEBRIS TO FALL INTO THE WATER. THE CONTRACTOR SHALL REMOVE THE BRIDGE AND SUBMIT PLANS FOR DEMOLITION IN ACCORDANCE WITH ARTICLE 402-2 OF THE STANDARD SPECIFICATIONS.

THE SUBSTRUCTURE OF THE EXISTING BRIDGE INDICATED ON THE PLANS IS FROM THE BEST INFORMATION AVAILABLE. SINCE THIS INFORMATION IS SHOWN FOR THE CONVENIENCE OF THE CONTRACTOR, THE CONTRACTOR SHALL HAVE NO CLAIM WHATSOEVER AGAINST THE DEPARTMENT OF TRANSPORTATION FOR ANY DELAYS OR ADDITIONAL COST INCURRED BASED ON DIFFERENCES BETWEEN THE EXISTING BRIDGE SUBSTRUCTURE SHOWN ON THE PLANS AND THE ACTUAL CONDITIONS AT THE PROJECT SITE.

THIS STRUCTURE HAS BEEN DESIGNED IN ACCORDANCE WITH HEC 18, "EVALUATING SCOUR AT BRIDGES". MAY 2001.

FOR SUBMITTAL OF WORKING DRAWINGS, SEE SPECIAL PROVISIONS.

FOR FALSEWORK AND FORMWORK, SEE SPECIAL PROVISIONS.

FOR CRANE SAFETY, SEE SPECIAL PROVISIONS.

FOR GROUT FOR STRUCTURES, SEE SPECIAL PROVISIONS.

THE MATERIAL SHOWN IN THE CROSS-HATCHED AREA SHALL BE EXCAVATED FOR A DISTANCE OF 25 FT. EACH SIDE OF CENTERLINE ROADWAY AS DIRECTED BY THE ENGINEER. THIS WORK WILL BE PAID FOR AT THE CONTRACT LUMP SUM PRICE FOR UNCLASSIFIED STRUCTURE EXCAVATION. SEE SECTION 412 OF THE STANDARD SPECIFICATIONS.

ASPHALT WEARING SURFACE IS INCLUDED IN ROADWAY QUANTITY ON ROADWAY PLANS.

THE CONTRACTOR SHALL PROVIDE INDEPENDENT ASSURANCE SAMPLES OF REINFORCING STEEL AS FOLLOWS: FOR PROJECTS REQUIRING UP TO 400 TONS OF REINFORCING STEEL, ONE 30 INCH SAMPLE OF EACH SIZE BAR USED, AND FOR PROJECTS REQUIRING OVER 400 TONS OF REINFORCING STEEL, TWO 30 INCH SAMPLES OF EACH SIZE BAR USED. THE BARS FROM WHICH THE SAMPLES ARE TAKEN MUST THEN BE SPLICED WITH REPLACEMENT BARS OF THE SIZE AND LENGTH OF THE SAMPLE, PLUS A MINIMUM LAP SPLICE OF THIRTY BAR DIAMETERS.

INASMUCH AS THE PAINT SYSTEM ON THE EXISTING STRUCTURAL STEEL CONTAINS LEAD, THE CONTRACTOR'S ATTENTION IS DIRECTED TO ARTICLE 107-1 OF THE STANDARD SPECIFICATIONS. ANY COSTS RESULTING FROM COMPLIANCE WITH APPLICABLE STATE OR FEDERAL REGULATIONS PERTAINING TO HANDLING OF MATERIALS CONTAINING LEAD BASED PAINT SHALL BE INCLUDED IN THE BID PRICE FOR "REMOVAL OF EXISTING STRUCTURE AT STATION 14+32.77."

FOR PILES, SEE SECTION 450 OF THE STANDARD SPECIFICATIONS.

PILES AT END BENT NO. 1 ARE DESIGNED FOR A FACTORED RESISTANCE OF 95 TONS PER PILE.

PILE EXCAVATION IS REQUIRED TO INSTALL PILES AT END BENT NO. 1. EXCAVATE HOLES AT PILE LOCATIONS TO ELEVATION 1142.5 FT. FOR PILE EXCAVATION, SEE SECTION 450 OF THE STANDARD SPECIFICATIONS.

CONCRETE IS REQUIRED TO FILL HOLES FOR PILE EXCAVATION AT END BENT NO. 1.

PILES AT BENT NO. 2 ARE DESIGNED FOR A FACTORED RESISTANCE OF 95 TONS PER PILE.

PILE EXCAVATION IS REQUIRED TO INSTALL PILES AT END BENT NO. 2. EXCAVATE HOLES AT PILE LOCATIONS TO ELEVATION 1138.0 FT. FOR PILE EXCAVATION, SEE SECTION 450 OF THE STANDARD SPECIFICATIONS.

CONCRETE IS REQUIRED TO FILL HOLES FOR PILE EXCAVATION AT BENT NO. 2.

EXCAVATION WILL BE REQUIRED TO INSTALL PRECAST PANELS. SEE PILE PANEL RETAINING WALL PLANS.

END BENT PILE QUANTITIES INCLUDE WING WALL/ABUTMENT PILES AND THE ESTIMATED EXCAVATION REQUIRED.

PILE EXCAVATION DESIGN IS BASED ON A MINIMUM PENETRATION OF 6 FT. INTO WEATHERED ROCK AS DEFINED BY ARTICLE 411-1 OF THE STANDARD SPECIFICATIONS.

### HYDRAULIC DATA

| | |
|---|---|
| DESIGN DISCHARGE | = 4200 CFS |
| DESIGN FREQUENCY | = 25 YRS |
| DESIGN HW ELEVATION | = 1155.3 FT |
| BASE DISCHARGE | = 5800 CFS |
| BASE FREQUENCY | = 100 YRS |
| BASE HW ELEVATION | = 1157.55 FT |

### OVERTOPPING FLOOD DATA

| | |
|---|---|
| OVERTOPPING DISCHARGE | = 6470 CFS |
| OVERTOPPING FREQUENCY | = 100+ YRS |
| OVERTOPPING ELEVATION | = 1159.7 FT |
| DRAINAGE AREA | = 25.7 SQ. MI. |

### TOTAL BILL OF MATERIAL

| | REMOVAL OF EXISTING STRUCTURE | UNCLASSIFIED STRUCTURE EXCAVATION | PILE EXCAVATION IN SOIL | PILE EXCAVATION NOT IN SOIL | CLASS A CONCRETE | BRIDGE APPROACH SLABS | REINFORCING STEEL | HP 14 X 73 GALVANIZED STEEL PILES | | VERTICAL CONCRETE BARRIER RAIL | RIP RAP CLASS II (2'-0" THICK) | GEOTEXTILE FOR DRAINAGE | ELASTOMERIC BEARINGS | 3'-0" x 2'-0" PRESTRESSED CONCRETE CORED SLAB UNIT | |
|---|---|---|---|---|---|---|---|---|---|---|---|---|---|---|---|
| | LUMP SUM | LUMP SUM | LIN. FT. | LIN. FT. | CU. YARDS | LUMP SUM | LBS. | NO. | LIN. FT. | LIN. FT. | TONS | SQ. YARDS | LUMP SUM | NO. | LIN. FT. |
| SUPERSTRUCTURE | | | | | | LUMP SUM | | | | 140.26 | | | LUMP SUM | 9 | 630.0 |
| | | | | | | | | | | | | | | | |
| END BENT 1 | | LUMP SUM | 25 | 55 | 19.1 | | 2,849 | 11 | 165 | | 82 | 93 | | | |
| END BENT 2 | | LUMP SUM | 45 | 45 | 15.7 | | 2,244 | 9 | 180 | | 158 | 179 | | | |
| | | | | | | | | | | | | | | | |
| | | | | | | | | | | | | | | | |
| | | | | | | | | | | | | | | | |
| TOTAL | LUMP SUM | LUMP SUM | 70 | 100 | 34.8 | LUMP SUM | 5,093 | 20 | 345 | 140.26 | 240 | 272 | LUMP SUM | 9 | 630.0 |

NORTH CAROLINA PROFESSIONAL SEAL 20247 ENGINEER HARDY L. WILLIS 3/7/14

PROJECT NO. BD-5113H

BURKE COUNTY

STATION: 14+32.77 -L-

SHEET 2 OF 2


V&M Vaughn & Melton Consulting Engineers
Asheville, North Carolina 828-253-2796
Charlotte, North Carolina 704-357-0488
Tri-Cities, Tennessee 423-467-8410
Knoxville, Tennessee 865-546-9600
Middlesboro, Kentucky 606-248-6600
Spartanburg, South Carolina 864-574-4775

Copyright © 2006 Vaughn & Melton, Inc. All Rights Reserved

STATE OF NORTH CAROLINA
DEPARTMENT OF TRANSPORTATION
RALEIGH

GENERAL DRAWING

BRIDGE over HENRY FORK RIVER on SR 1916 (RIVER ROAD) Between SR 1924 & SR 1995

DWN. BY: RWW DATE: 11/2013
CHKD. BY: HLW DATE: 11/2013
DES. EGR. OF RECORD: RTS DATE: 11/2013

| REVISIONS | | | | | | SHEET NO. |
|---|---|---|---|---|---|---|
| NO. | BY: | DATE: | NO. | BY: | DATE: | S-2 |
| 1 | | | 3 | | | TOTAL SHEETS |
| 2 | | | 4 | | | 18 |

# LOAD AND RESISTANCE FACTOR RATING (LRFD) SUMMARY FOR PRESTRESSED CONCRETE GIRDERS

| LEVEL | | VEHICLE | WEIGHT (W) (TONS) | CONTROLLING LOAD RATING | MINIMUM RATING FACTORS (RF) | TONS = W X RF | STRENGTH I LIMIT STATE | | | | | | | | | | | SERVICE III LIMIT STATE | | | | | | COMMENT NUMBER |
|---|---|---|---|---|---|---|---|---|---|---|---|---|---|---|---|---|---|---|---|---|---|---|---|---|
| | | | | | | | LIVELOAD FACTORS | MOMENT | | | | | SHEAR | | | | | LIVELOAD FACTORS | MOMENT | | | | | |
| | | | | | | | | DISTRIBUTION FACTORS (DF) | RATING FACTOR | SPAN | GIRDER LOCATION | DISTANCE FROM LEFT END OF SPAN (ft) | DISTRIBUTION FACTORS (DF) | RATING FACTOR | SPAN | GIRDER LOCATION | DISTANCE FROM LEFT END OF SPAN (ft) | | DISTRIBUTION FACTORS (DF) | RATING FACTOR | SPAN | GIRDER LOCATION | DISTANCE FROM LEFT END OF SPAN (ft) | |
| DESIGN LOAD RATING | | HL-93(Inv) | N/A | 1 | 1.208 | -- | 1.75 | 0.225 | **1.208** | 70' | EL | **34.5** | 0.608 | 2.750 | 70' | EL | 2.0 | 0.80 | 0.225 | 1.630 | 70' | EL | 34.5 | |
| | | HL-93(Opr) | N/A | -- | 1.566 | -- | 1.35 | 0.225 | 1.566 | 70' | EL | 34.5 | 0.608 | 3.565 | 70' | EL | 2.0 | N/A | -- | -- | -- | -- | -- | |
| | | HS-20(Inv) | 36.000 | 2 | 1.568 | 56.464 | 1.75 | 0.225 | **1.568** | 70' | EL | **34.5** | 0.608 | 3.463 | 70' | EL | 2.0 | 0.80 | 0.225 | 2.115 | 70' | EL | 34.5 | |
| | | HS-20(Opr) | 36.000 | -- | 2.033 | 73.194 | 1.35 | 0.225 | 2.033 | 70' | EL | 34.5 | 0.608 | 4.489 | 70' | EL | 2.0 | N/A | -- | -- | -- | -- | -- | |
| LEGAL LOAD RATING | SV | SNSH | 13.500 | -- | 4.377 | 59.091 | 1.4 | 0.225 | 4.377 | 70' | EL | 34.5 | 0.608 | 10.313 | 70' | EL | 2.0 | 0.80 | 0.225 | 4.720 | 70' | EL | 34.5 | |
| | | SNGARBS2 | 20.000 | -- | 3.283 | 65.656 | 1.4 | 0.225 | 3.283 | 70' | EL | 34.5 | 0.608 | 7.331 | 70' | EL | 2.0 | 0.80 | 0.225 | 3.540 | 70' | EL | 34.5 | |
| | | SNAGRIS2 | 22.000 | -- | 3.120 | 68.631 | 1.4 | 0.225 | 3.120 | 70' | EL | 34.5 | 0.608 | 6.809 | 70' | EL | 2.0 | 0.80 | 0.225 | 3.365 | 70' | EL | 34.5 | |
| | | SNCOTTS3 | 27.250 | -- | 2.180 | 59.407 | 1.4 | 0.225 | 2.180 | 70' | EL | 34.5 | 0.608 | 5.157 | 70' | EL | 2.0 | 0.80 | 0.225 | 2.350 | 70' | EL | 34.5 | |
| | | SNAGGRS4 | 34.925 | -- | 1.827 | 63.819 | 1.4 | 0.225 | 1.827 | 70' | EL | 34.5 | 0.608 | 4.276 | 70' | EL | 2.0 | 0.80 | 0.225 | 1.973 | 70' | EL | 34.5 | |
| | | SNS5A | 35.550 | -- | 1.787 | 63.522 | 1.4 | 0.225 | 1.787 | 70' | EL | 34.5 | 0.608 | 4.329 | 70' | EL | 2.0 | 0.80 | 0.225 | 1.929 | 70' | EL | 34.5 | |
| | | SNS6A | 39.950 | -- | 1.656 | 66.151 | 1.4 | 0.225 | 1.656 | 70' | EL | 34.5 | 0.608 | 3.977 | 70' | EL | 2.0 | 0.80 | 0.225 | 1.786 | 70' | EL | 34.5 | |
| | | SNS7B | 42.000 | -- | 1.564 | 65.693 | 1.4 | 0.225 | 1.564 | 70' | EL | 34.5 | 0.608 | 3.868 | 70' | EL | 2.0 | 0.80 | 0.225 | 1.689 | 70' | EL | 34.5 | |
| | TTST | TNAGRIT3 | 33.000 | -- | 2.002 | 66.075 | 1.4 | 0.225 | 2.002 | 70' | EL | 34.5 | 0.608 | 4.696 | 70' | EL | 2.0 | 0.80 | 0.225 | 2.164 | 70' | EL | 34.5 | |
| | | TNT4A | 33.075 | -- | 2.017 | 66.698 | 1.4 | 0.225 | 2.017 | 70' | EL | 34.5 | 0.608 | 4.584 | 70' | EL | 2.0 | 0.80 | 0.225 | 2.174 | 70' | EL | 34.5 | |
| | | TNT6A | 41.600 | -- | 1.651 | 68.682 | 1.4 | 0.225 | 1.651 | 70' | EL | 34.5 | 0.608 | 4.117 | 70' | EL | 2.0 | 0.80 | 0.225 | 1.780 | 70' | EL | 34.5 | |
| | | TNT7A | 42.000 | -- | 1.661 | 69.750 | 1.4 | 0.225 | 1.661 | 70' | EL | 34.5 | 0.608 | 4.038 | 70' | EL | 2.0 | 0.80 | 0.225 | 1.791 | 70' | EL | 34.5 | |
| | | TNT7B | 42.000 | -- | 1.721 | 72.302 | 1.4 | 0.225 | 1.721 | 70' | EL | 34.5 | 0.608 | 3.784 | 70' | EL | 2.0 | 0.80 | 0.225 | 1.857 | 70' | EL | 34.5 | |
| | | TNAGRIT4 | 43.000 | -- | 1.632 | 70.172 | 1.4 | 0.225 | 1.632 | 70' | EL | 34.5 | 0.608 | 3.665 | 70' | EL | 2.0 | 0.80 | 0.225 | 1.763 | 70' | EL | 34.5 | |
| | | TNAGT5A | 45.000 | -- | 1.539 | 69.234 | 1.4 | 0.225 | 1.539 | 70' | EL | 34.5 | 0.608 | 3.634 | 70' | EL | 2.0 | 0.80 | 0.225 | 1.661 | 70' | EL | 34.5 | |
| | | TNAGT5B | 45.000 | 3 | 1.518 | 68.304 | 1.4 | 0.225 | **1.518** | 70' | EL | **34.5** | 0.608 | 3.483 | 70' | EL | 2.0 | 0.80 | 0.225 | 1.640 | 70' | EL | 34.5 | |

## LOAD FACTORS:

| DESIGN LOAD RATING FACTORS | LIMIT STATE | $\gamma_{DC}$ | $\gamma_{DW}$ |
|---|---|---|---|
| | STRENGTH I | 1.25 | 1.50 |
| | SERVICE III | 1.00 | 1.00 |

## NOTES:

MINIMUM RATING FACTORS ARE BASED ON THE STRENGTH I AND SERVICE III LIMIT STATES.

ALLOWABLE STRESSES FOR SERVICE III LIMIT STATE ARE AS REQUIRED FOR DESIGN.

## COMMENTS:

1.
2.
3.
4.

(#) CONTROLLING LOAD RATING

(1) DESIGN LOAD RATING (HL-93)

(2) DESIGN LOAD RATING (HS-20)

(3) LEGAL LOAD RATING **

** SEE CHART FOR VEHICLE TYPE

GIRDER LOCATION

I - INTERIOR GIRDER
EL - EXTERIOR LEFT GIRDER
ER - EXTERIOR RIGHT GIRDER

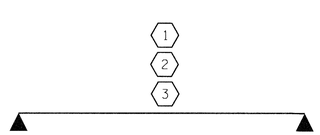


LRFR SUMMARY

FOR SPAN A

PROJECT NO. BD-5113H

BURKE COUNTY

STATION: 14+32.77 -L-

STATE OF NORTH CAROLINA
DEPARTMENT OF TRANSPORTATION
RALEIGH

LRFR SUMMARY FOR 70' CORED SLAB UNIT 105° SKEW

(NON-INTERSTATE TRAFFIC)

NORTH CAROLINA PROFESSIONAL SEAL 027172 ENGINEER HARDY L. WILLIS 3/7/14

| REVISIONS | | | | | | SHEET NO. |
|---|---|---|---|---|---|---|
| NO. | BY: | DATE: | NO. | BY: | DATE: | S-3 |
| 1 | | | 3 | | | TOTAL SHEETS |
| 2 | | | 4 | | | 18 |

| | | |
|---|---|---|
| ASSEMBLED BY : | RWW | DATE : 11/2013 |
| CHECKED BY : | HLW | DATE : 11/2013 |
| DRAWN BY : CVC | 6/10 | |
| CHECKED BY : DNS | 6/10 | |

$$$$$$$SYSTIME$$$$$
$$$$$$$$$$$$$$$$$$$$$$$$DGN$$$$$$$$$$$$$$$$$$$$$$$$
$$$$USERNAME$$$$

STD. NO. 24LRFR1_75&105S_70L

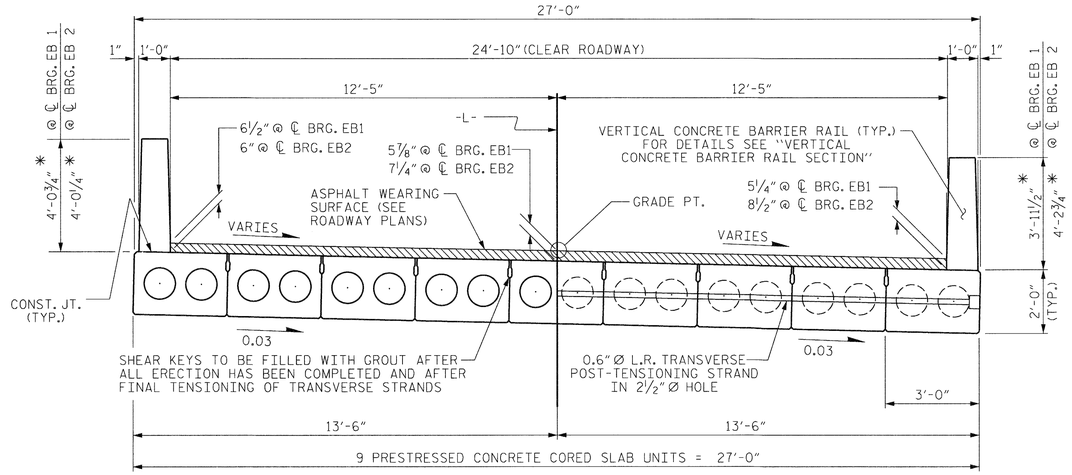


HALF SECTION
AT INTERMEDIATE DIAPHRAGMS

## TYPICAL SECTION

HALF SECTION
THROUGH VOIDS

✱ - THE MAXIMUM BARRIER RAIL HEIGHTS AND ASPHALT THICKNESSES ARE SHOWN. THE HEIGHT OF THE BARRIER RAIL AND ASPHALT THICKNESS VARIES WHILE THE TOP OF THE BARRIER RAIL FOLLOWS THE PROFILE OF THE GUTTERLINE. FOR RAIL HEIGHT DETAILS AND ASPHALT THICKNESS, SEE THE "VERTICAL CONCRETE BARRIER RAIL SECTION" DETAIL.

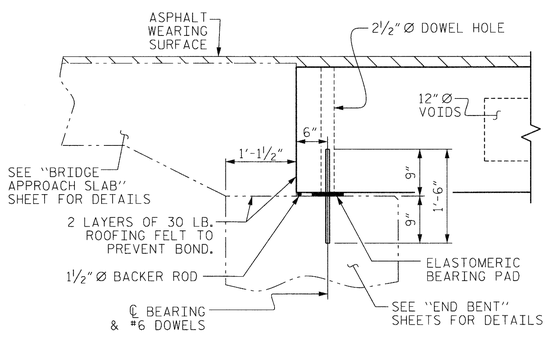


## SECTION AT END BENT

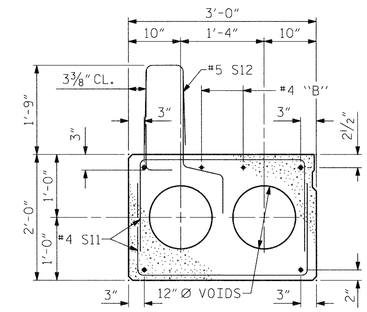


## EXTERIOR SLAB SECTION

(FOR PRESTRESSED STRAND LAYOUT, SEE INTERIOR SLAB SECTION.)

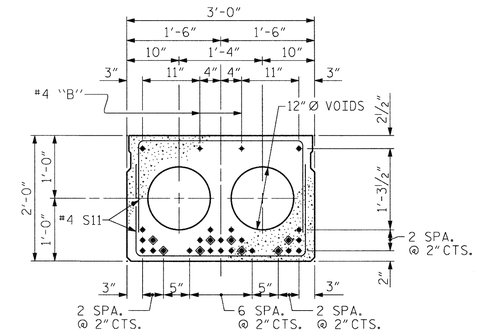


## INTERIOR SLAB SECTION (70' UNIT)

(28 STRANDS REQUIRED)

## 0.6'' Ø LOW RELAXATION STRAND LAYOUT

◈ BOND SHALL BE BROKEN ON THESE STRANDS FOR A DISTANCE OF 12'-0" FROM END OF CORED SLAB UNIT. SEE STANDARD SPECIFICATIONS, ARTICLE 1078-7.

## DEBONDING LEGEND

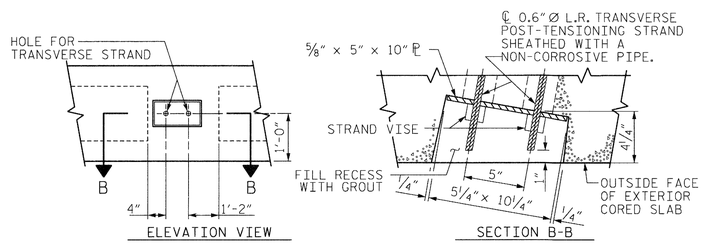


## GROUTED RECESS AT END OF POST-TENSIONED STRAND CORED SLABS

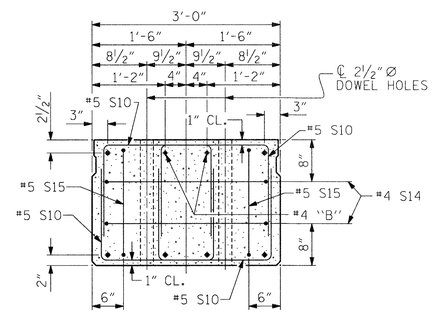


## END ELEVATION

SHOWING PLACEMENT OF DOUBLE STIRRUPS AND LOCATION OF DOWEL HOLES. (STRAND LAYOUT NOT SHOWN.) INTERIOR SLAB UNIT SHOWN-EXTERIOR SLAB UNIT SIMILAR EXCEPT SHEAR KEY LOCATION.

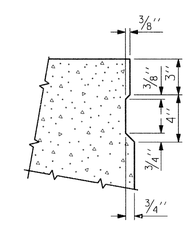


## SHEAR KEY DETAIL

NOTE: OMIT SHEAR KEY ON OUTSIDE FACE OF EXTERIOR CORED SLABS.

PROJECT NO. BD-5113H
BURKE COUNTY
STATION: 14+32.77 -L-

SHEET 1 OF 3

STATE OF NORTH CAROLINA
DEPARTMENT OF TRANSPORTATION
RALEIGH

STANDARD

## 3'-0" X 2'-0" PRESTRESSED CONCRETE CORED SLAB UNIT

NORTH CAROLINA PROFESSIONAL SEAL ENGINEER HARDY L. WILLIS 3/7/14

| | | | |
|---|---|---|---|
| ASSEMBLED BY : | RWW | DATE : 11/2013 | |
| CHECKED BY : | HLW | DATE : 11/2013 | |
| DRAWN BY : MAA | 6/10 | REV. 12/11 | MAA/AAC |
| CHECKED BY : MKT | 7/10 | | |

| REVISIONS | | | | | | SHEET NO. |
|---|---|---|---|---|---|---|
| NO. | BY: | DATE: | NO. | BY: | DATE: | S-4 |
| 1 | | | 3 | | | TOTAL SHEETS |
| 2 | | | 4 | | | 18 |

STD. NO. 24PCS4_27_105S

$$$$$$SYSTIME$$$$$
$$$$$$$$$$$$$$$$$$$$$$$$DGN$$$$$$$$$$$$$$$$$$$$$$$$
<<<<<USERNAME<<<<<

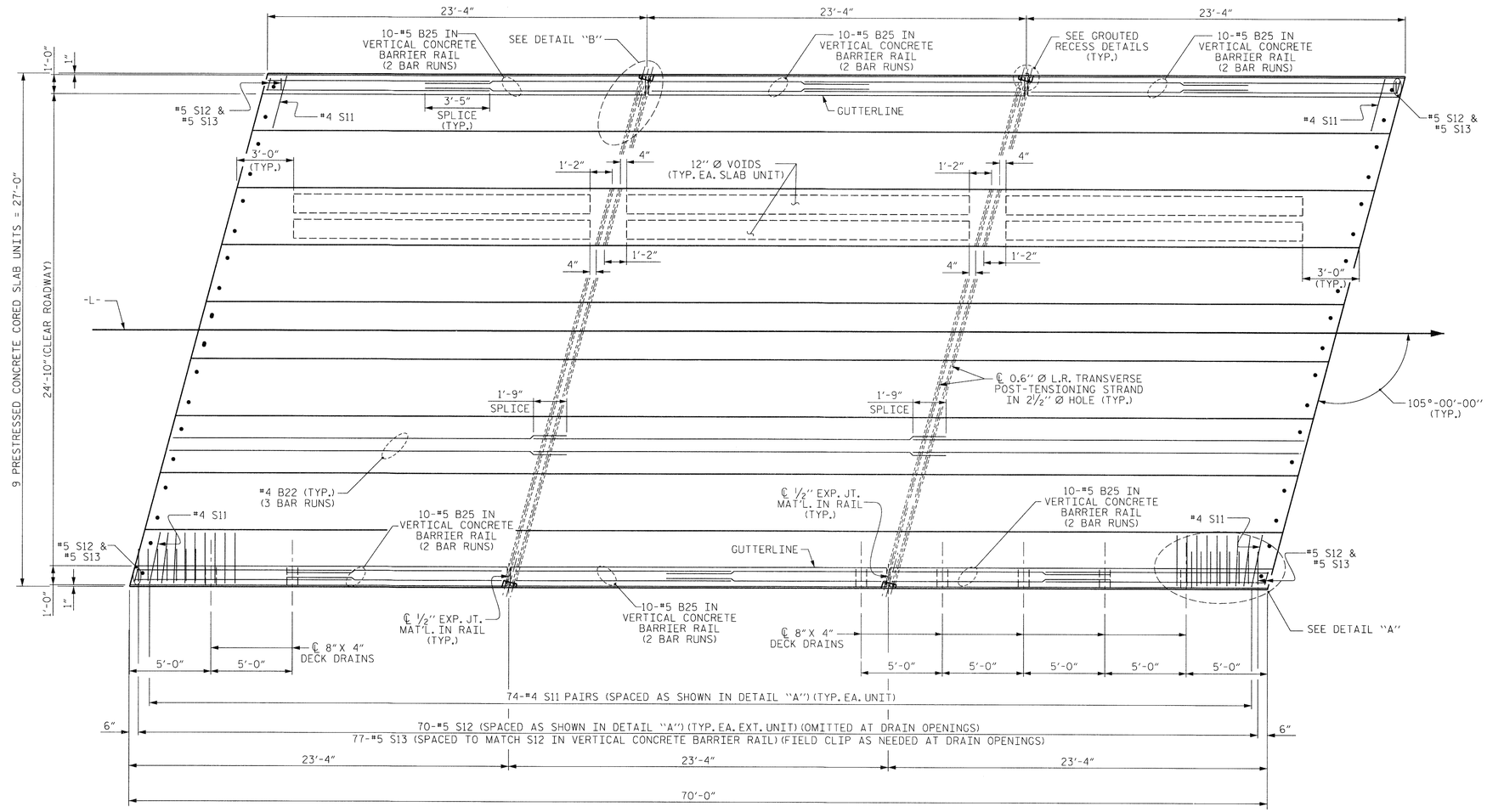


## PLAN OF UNIT

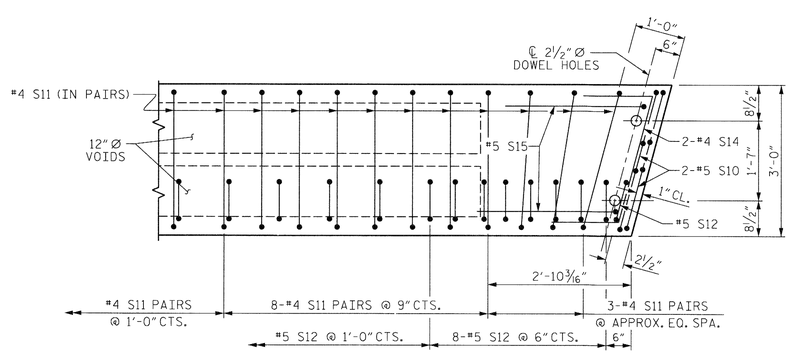


## DETAIL "A"

NOTE: EXTERIOR UNIT SHOWN - INTERIOR UNIT SIMILAR EXCEPT OMIT #5 S12 BARS.

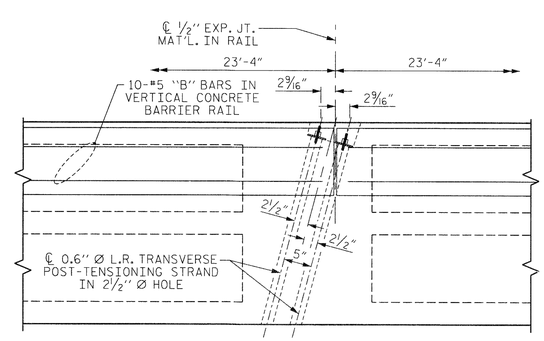


## DETAIL "B"

#4 S11 BARS MAY BE SHIFTED AS NECESSARY TO MAINTAIN 1" CLEAR TO GROUTED RECESS AND 2½" Ø TRANSVERSE POST-TENSIONING STRAND HOLES

| | | | |
|---|---|---|---|
| ASSEMBLED BY : | RWW | DATE : 11/2013 | |
| CHECKED BY : | HLW | DATE : 11/2013 | |
| DRAWN BY : MAA | 6/10 | REV. 12/5/11 | MAA/AAC |
| CHECKED BY : MKT | 7/10 | | |

$$$$$$SYSTIME$$$$$
$$$$$$$$$$$$$$$$$$$$$$DGN$$$$$$$$$$$$$$$$$$$$$$
$$$$USERNAME$$$$

NORTH CAROLINA PROFESSIONAL SEAL 027772 ENGINEER HARDY L. WILLIS
9/7/14

PROJECT NO. BD-5113H
BURKE COUNTY
STATION: 14+32.77 -L-

SHEET 2 OF 3

STATE OF NORTH CAROLINA
DEPARTMENT OF TRANSPORTATION
RALEIGH

PLAN OF 70' UNIT
24'-10" CLEAR ROADWAY
105° SKEW

| REVISIONS | | | | | | SHEET NO. |
|---|---|---|---|---|---|---|
| NO. | BY: | DATE: | NO. | BY: | DATE: | S-5 |
| 1 | | | 3 | | | TOTAL SHEETS |
| 2 | | | 4 | | | 18 |

STD. NO. 24PCS_27_105S_70L

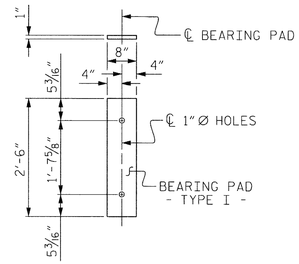


FIXED END
( TYPE I - 18 REQ'D )

## ELASTOMERIC BEARING DETAILS

ELASTOMER IN ALL BEARINGS SHALL BE 60 DUROMETER HARDNESS.

## BILL OF MATERIAL FOR ONE 70' CORED SLAB UNIT

| BAR | NUMBER | SIZE | TYPE | EXTERIOR UNIT LENGTH | EXTERIOR UNIT WEIGHT | INTERIOR UNIT LENGTH | INTERIOR UNIT WEIGHT |
|---|---|---|---|---|---|---|---|
| B22 | 6 | #4 | STR | 24'-6" | 98 | 24'-6" | 98 |
| S10 | 8 | #5 | 3 | 4'-10" | 40 | 4'-10" | 40 |
| S11 | 148 | #4 | 3 | 5'-10" | 577 | 5'-10" | 577 |
| ✳S12 | 72 | #5 | 1 | 6'-4" | 476 | | |
| S14 | 4 | #4 | 4 | 5'-8" | 15 | 5'-8" | 15 |
| S15 | 4 | #5 | 3 | 7'-1" | 30 | 7'-1" | 30 |
| REINFORCING STEEL | | | LBS. | | 760 | | 760 |
| ✳EPOXY COATED REINFORCING STEEL | | | LBS. | | 476 | | |
| 9500 P.S.I. CONCRETE | | | CU. YDS. | | 12.0 | | 12.0 |
| 0.6"Ø L.R. STRANDS | | | No. | | 28 | | 28 |

## BAR TYPES

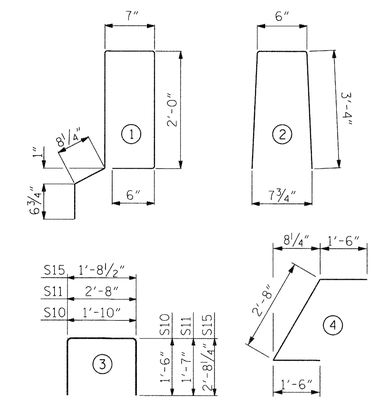


ALL BAR DIMENSIONS ARE OUT TO OUT

## NOTES

ALL PRESTRESSING STRANDS SHALL BE 7-WIRE LOW RELAXATION GRADE 270 STRANDS AND SHALL CONFORM TO AASHTO M203 EXCEPT FOR SAMPLING REQUIREMENTS WHICH SHALL BE IN ACCORDANCE WITH THE STANDARD SPECIFICATIONS.

ALL REINFORCING STEEL CAST WITH THE CORED SLAB SECTIONS SHALL BE GRADE 60 AND SHALL BE INCLUDED IN THE UNIT PRICE BID FOR PRESTRESSED CONCRETE CORED SLABS.

RECESSES FOR TRANSVERSE STRANDS SHALL BE GROUTED AFTER THE TENSIONING OF THE STRANDS.

THE 2 1/2"Ø DOWEL HOLES AT FIXED ENDS OF SLAB SECTIONS SHALL BE FILLED WITH NON-SHRINK GROUT.

THE BACKER RODS SHALL CONFORM TO THE REQUIREMENTS OF TYPE M BOND BREAKER. SEE SECTION 1028 OF THE STANDARD SPECIFICATIONS.

WHEN CORED SLABS ARE CAST, AN INTERNAL HOLD-DOWN SYSTEM SHALL BE EMPLOYED TO PREVENT VOIDS FROM RISING OR MOVING SIDEWAYS. AT LEAST SIX WEEKS PRIOR TO CASTING CORED SLABS, THE CONTRACTOR SHALL SUBMIT TO THE ENGINEER FOR REVIEW AND COMMENT, DETAILED DRAWINGS OF THE PROPOSED HOLD-DOWN SYSTEM. IN ADDITION TO STRUCTURAL DETAILS, LOCATION AND SPACING OF THE HOLD-DOWNS SHALL BE INDICATED.

THE TRANSFER OF LOAD FROM THE ANCHORAGES TO THE CORED SLAB UNIT SHALL BE DONE WHEN THE CONCRETE HAS REACHED A COMPRESSIVE STRENGTH OF NOT LESS THAN THE REQUIRED STRENGTH SHOWN IN THE "CONCRETE RELEASE STRENGTH" TABLE.

ALL REINFORCING STEEL IN VERTICAL CONCRETE BARRIER RAILS SHALL BE EPOXY COATED.

PRESTRESSING STRANDS SHALL BE CUT FLUSH WITH THE CORED SLAB UNIT ENDS.

APPLY EPOXY PROTECTIVE COATING TO CORED SLAB UNIT ENDS.

GROOVED CONTRACTION JOINTS, 1/2" IN DEPTH, SHALL BE TOOLED IN ALL EXPOSED FACES OF THE BARRIER RAIL AND IN ACCORDANCE WITH ARTICLE 825-10(B) OF THE STANDARD SPECIFICATIONS. A CONTRACTION JOINT SHALL BE LOCATED AT EACH THIRD POINT BETWEEN BARRIER RAIL EXPANSION JOINTS. ONLY ONE CONTRACTION JOINT IS REQUIRED AT MIDPOINT OF BARRIER RAIL SEGMENTS LESS THAN 20 FEET IN LENGTH AND NO CONTRACTION JOINTS ARE REQUIRED FOR THOSE SEGMENTS LESS THAN 10 FEET IN LENGTH.

TRANSVERSE POST TENSIONING OF THE CORED SLAB UNITS SHALL BE DONE IN ACCORDANCE WITH THE STANDARD SPECIFICATIONS.

MAINTAIN A SYMMETRIC TENSION FORCE BETWEEN EACH PAIR OF TRANSVERSE POST TENSIONING STRANDS IN THE DIAPHRAGM.

THE #4 S11 STIRRUPS MAY BE SHIFTED AS NECESSARY TO MAINTAIN 1" CLEAR TO THE GROUTED RECESS.

FOR GROUT FOR STRUCTURES, SEE SPECIAL PROVISIONS.

THE BOTTOM TWO #5 "B" BARS IN THE VERTICAL CONCRETE BARRIER RAIL MAY BE FIELD CUT TO AVOID DRAINS.

THE DRAIN OPENING AT THE GUTTERLINE SHALL BE 4" X 8". THE HEIGHT OF THE BLOCKOUT IN THE VERTICAL CONCRETE BARRIER RAIL SHALL EXTEND FROM THE TOP OF THE CORED SLAB UNIT TO THE TOP OF THE DRAIN OPENING.

APPLY EPOXY PROTECTIVE COATING TO EXTERIOR FACE OF THE EXTERIOR CORED SLAB UNITS THAT REQUIRE DRAINS IN THE BARRIER RAIL.

## CORED SLABS REQUIRED

| | NUMBER | LENGTH | TOTAL LENGTH |
|---|---|---|---|
| 70' UNIT | | | |
| EXTERIOR C.S. | 2 | 70'-0" | 140'-0" |
| INTERIOR C.S. | 7 | 70'-0" | 490'-0" |
| TOTAL | 9 | | 630'-0" |

## DEAD LOAD DEFLECTION AND CAMBER

| | 3'-0" x 2'-0" |
|---|---|
| 70' CORED SLAB UNIT | 0.6"Ø L.R. STRAND |
| CAMBER ( SLAB ALONE IN PLACE ) | 3 3/16" ↑ |
| DEFLECTION DUE TO SUPERIMPOSED DEAD LOAD✳✳ | 1" ↓ |
| FINAL CAMBER | 2 3/16" ↑ |

✳✳ INCLUDES FUTURE WEARING SURFACE

## GUTTERLINE ASPHALT THICKNESS & RAIL HEIGHT

| | ASPHALT OVERLAY THICKNESS @ MID-SPAN | RAIL HEIGHT @ MID-SPAN |
|---|---|---|
| 70' UNITS | 4 1/16" LT.<br>4 11/16" RT. | 3'-10 5/16" LT.<br>3'-10 15/16" RT. |

## BILL OF MATERIAL FOR VERTICAL CONCRETE BARRIER RAIL

| BAR | BARS PER PAIR OF EXTERIOR UNITS | TOTAL NO. | SIZE | TYPE | LENGTH | WEIGHT |
|---|---|---|---|---|---|---|
| | 70' UNIT | | | | | |
| ✳B25 | 120 | 120 | #5 | STR | 13'-8" | 1711 |
| ✳S13 | 158 | 158 | #5 | 2 | 7'-2" | 1181 |
| ✳EPOXY COATED REINFORCING STEEL | | | | LBS. | | 2892 |
| CLASS AA CONCRETE | | | | CU.YDS. | | 18.9 |
| TOTAL VERTICAL CONCRETE BARRIER RAIL | | | | LN. FT. | | 140.26 |

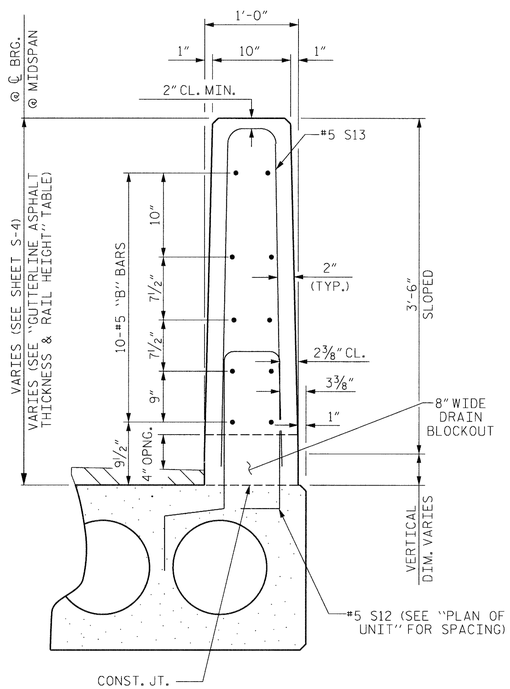


SECTION THRU RAIL

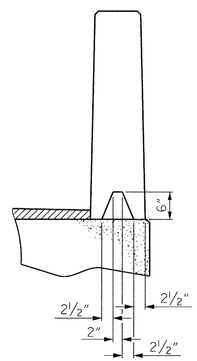


SECTION S-S
AT DAM IN OPEN JOINT
(THIS IS TO BE USED ONLY WHEN SLIP FORM IS USED)

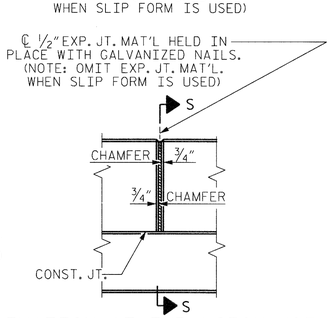


ELEVATION AT EXPANSION JOINTS

## VERTICAL CONCRETE BARRIER RAIL DETAILS

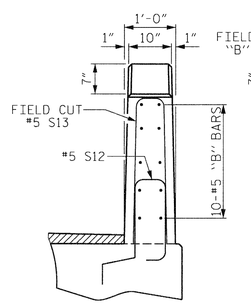


END VIEW

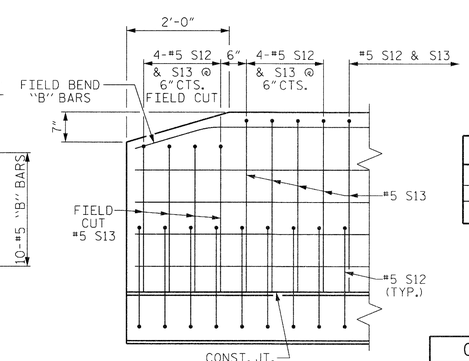


SIDE VIEW

## END OF RAIL DETAILS

## CONCRETE RELEASE STRENGTH

| UNIT | PSI |
|---|---|
| 70' UNITS | 6000 |

## GRADE 270 STRANDS

| | 0.6"Ø L.R. |
|---|---|
| AREA ( SQUARE INCHES ) | 0.217 |
| ULTIMATE STRENGTH ( LBS. PER STRAND ) | 58,600 |
| APPLIED PRESTRESS ( LBS. PER STRAND ) | 43,950 |

PROJECT NO. BD-5113H
BURKE COUNTY
STATION: 14+32.77 -L-

SHEET 3 OF 3

STATE OF NORTH CAROLINA
DEPARTMENT OF TRANSPORTATION
RALEIGH

STANDARD
3'-0" X 2'-0"
PRESTRESSED CONCRETE
CORED SLAB UNIT

NORTH CAROLINA PROFESSIONAL SEAL 22417 ENGINEER HARDY L. WILLIS 3/7/14

| ASSEMBLED BY : | RWW | DATE : 11/2013 |
|---|---|---|
| CHECKED BY : | HLW | DATE : 11/2013 |
| DRAWN BY : MAA | 6/10 | REV. 12/11 MAA/AAC |
| CHECKED BY : MKT | 7/10 | |

| REVISIONS | | | | | | SHEET NO. |
|---|---|---|---|---|---|---|
| NO. | BY: | DATE: | NO. | BY: | DATE: | S-6 |
| 1 | | | 3 | | | TOTAL SHEETS |
| 2 | | | 4 | | | 18 |

$$$$$$$SYSTIME$$$$$
$$$$$$$$$$$$$$$$$$$$$$DGN$$$$$$$$$$$$$$$$$$$$$$$
$$$$USERNAME$$$$

STD. NO. 24PCS3_27_75&105S

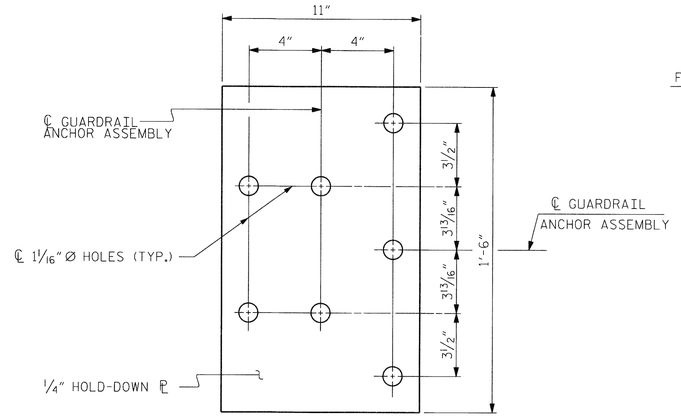


PLAN

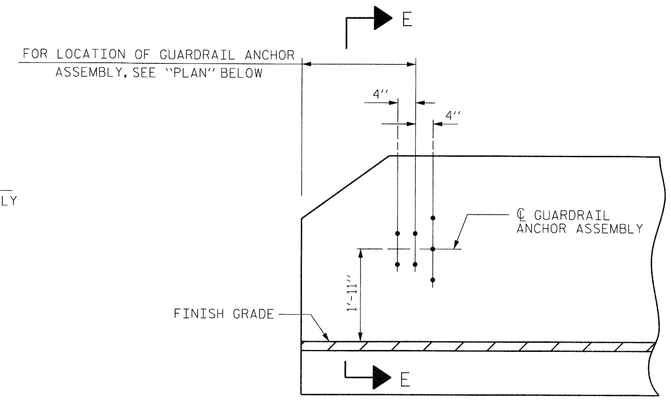


ELEVATION

## NOTES (FOR VERTICAL CONCRETE BARRIER RAIL)

THE GUARDRAIL ANCHOR ASSEMBLY SHALL CONSIST OF A 1/4" HOLD DOWN PLATE AND 7 - 7/8" Ø BOLTS WITH NUTS AND WASHERS.

THE HOLD-DOWN PLATE SHALL CONFORM TO AASHTO M270 GRADE 36. AFTER FABRICATION, THE HOLD-DOWN PLATE SHALL BE HOT-DIP GALVANIZED IN ACCORDANCE WITH AASHTO M111.

BOLTS SHALL CONFORM TO THE REQUIREMENTS OF ASTM A307 AND NUTS SHALL CONFORM TO THE REQUIREMENTS OF AASHTO M291. BOLTS, NUTS AND WASHERS SHALL BE GALVANIZED. (AT THE CONTRACTOR'S OPTION, STAINLESS STEEL BOLTS, NUTS AND WASHERS MAY BE USED AS AN ALTERNATE FOR THE 7/8" Ø GALVANIZED BOLTS, NUTS AND WASHERS. THEY SHALL CONFORM TO OR EXCEED THE MECHANICAL REQUIREMENTS OF ASTM A307. THE USE OF THIS ALTERNATE SHALL BE APPROVED BY THE ENGINEER.)

THE GUARDRAIL ANCHOR ASSEMBLY IS REQUIRED AT ALL POINTS WHERE APPROACH GUARDRAIL IS TO BE ATTACHED TO THE END OF BARRIER RAIL. FOR POINTS OF ATTACHMENT, SEE SKETCH.

AFTER INSTALLATION, THE EXPOSED THREAD OF THE BOLT SHALL BE BURRED WITH A SHARP POINTED TOOL.

THE COST OF THE GUARDRAIL ANCHOR ASSEMBLY SHALL BE INCLUDED IN THE UNIT CONTRACT PRICE BID FOR VERTICAL CONCRETE BARRIER RAIL.

THE VERTICAL REINFORCING BARS MAY BE SHIFTED SLIGHTLY IN THE VERTICAL CONCRETE BARRIER RAIL TO CLEAR ASSEMBLY BOLTS.

THE 1 1/4" Ø HOLES SHALL BE FORMED OR DRILLED WITH A CORE BIT. IMPACT TOOLS WILL NOT BE PERMITTED. ANY CONCRETE DAMAGED BY THIS WORK SHALL BE REPAIRED TO THE SATISFACTION OF THE ENGINEER.

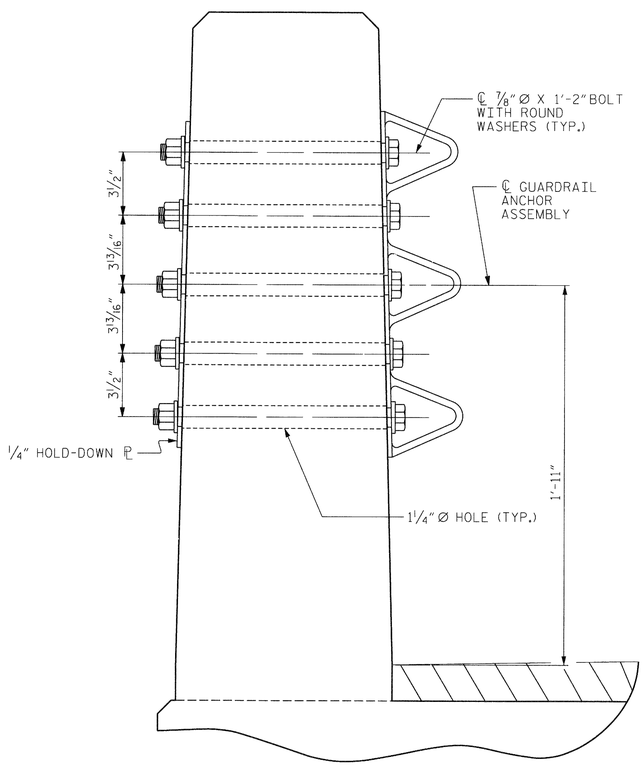


SECTION E-E

## GUARDRAIL ANCHOR ASSEMBLY DETAILS

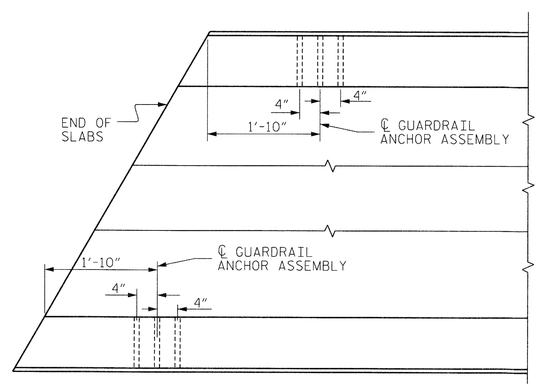


PLAN

## LOCATION OF ANCHORS FOR GUARDRAIL

END BENT #1 SHOWN, END BENT #2 SIMILAR.

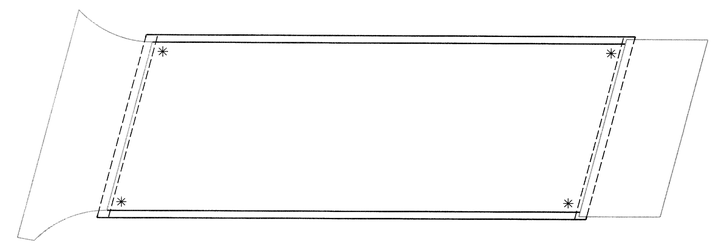

## SKETCH SHOWING POINTS OF ATTACHMENT

✱ LOCATION OF GUARDRAIL ATTACHMENT

PROJECT NO. BD-5113H

BURKE COUNTY

STATION: 14+32.77 -L-

| | | | |
|---|---|---|---|
| ASSEMBLED BY : RWW | | DATE : 11/2013 | |
| CHECKED BY : HLW | | DATE : 11/2013 | |
| DRAWN BY : MAA 5/10 | ADDED 5/6/10 | | |
| CHECKED BY : GM 5/10 | REV. 10/1/11 | MAA/GM | |
| | REV. 12/5/11 | MAA/GM | |

NORTH CAROLINA PROFESSIONAL SEAL ENGINEER HARDY L. WILLIS 3/7/14

STATE OF NORTH CAROLINA
DEPARTMENT OF TRANSPORTATION
RALEIGH

STANDARD

# GUARDRAIL ANCHORAGE DETAILS FOR VERTICAL CONCRETE BARRIER RAIL

| REVISIONS | | | | | | SHEET NO. |
|---|---|---|---|---|---|---|
| NO. | BY: | DATE: | NO. | BY: | DATE: | S-7 |
| 1 | | | 3 | | | TOTAL SHEETS |
| 2 | | | 4 | | | 18 |

STD. NO. GRA3

$$$$$$SYSTIME$$$$$
$$$$$$$$$$$$$$$$$$$$$$$$DGN$$$$$$$$$$$$$$$$$$$$$$$$
$$$$USERNAME$$$$

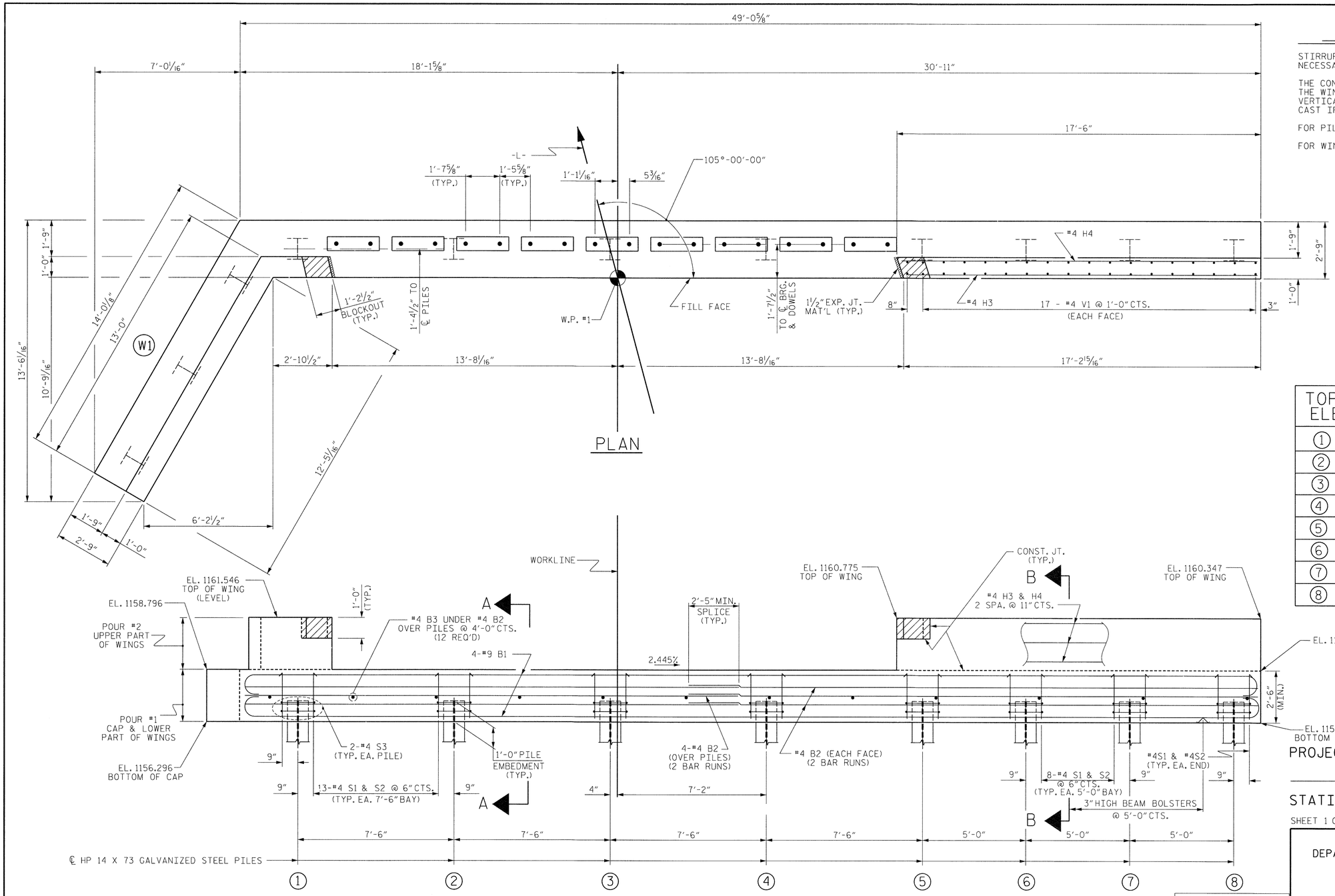


## NOTES

STIRRUPS IN CAP MAY BE SHIFTED AS NECESSARY TO CLEAR DOWELS.

THE CONCRETE IN THE SHADED AREA OF THE WING SHALL BE POURED AFTER THE VERTICAL CONCRETE BARRIER RAIL IS CAST IF SLIP FORMING IS USED.

FOR PILE SPLICE DETAILS, SEE SHEET 4 OF 4.

FOR WINGWALL W1 DETAILS, SEE SHEET 3 OF 4.

| TOP OF PILE ELEVATIONS | |
|---|---|
| 1 | 1157.229 |
| 2 | 1157.046 |
| 3 | 1156.862 |
| 4 | 1156.679 |
| 5 | 1156.496 |
| 6 | 1156.373 |
| 7 | 1156.251 |
| 8 | 1156.129 |

## ELEVATION

WINGS NOT SHOWN FOR CLARITY.
FOR SECTION A-A AND B-B, SEE SHEET 4 OF 4.

PROJECT NO. BD-5113H
BURKE COUNTY
STATION: 14+32.77 -L-

SHEET 1 OF 4

STATE OF NORTH CAROLINA
DEPARTMENT OF TRANSPORTATION
RALEIGH

SUBSTRUCTURE

END BENT NO. 1

NORTH CAROLINA PROFESSIONAL SEAL ENGINEER HARDY L. WILLIS 3/7/14

| ASSEMBLED BY : RWW | DATE : 11/2013 |
|---|---|
| CHECKED BY : HLW | DATE : 11/2013 |
| DRAWN BY : DGE 03/10 | |
| CHECKED BY : MKT 03/10 | |

| REVISIONS | | | | | | SHEET NO. |
|---|---|---|---|---|---|---|
| NO. | BY: | DATE: | NO. | BY: | DATE: | S-8 |
| 1 | | | 3 | | | TOTAL SHEETS |
| 2 | | | 4 | | | 18 |

$$$$$$SYSTIME$$$$$
$$$$$$$$$$$$$$$$$$$$$$$$DGN$$$$$$$$$$$$$$$$$$$$$$$$
$$$$USERNAME$$$$

STD. NO. EB_27_105S

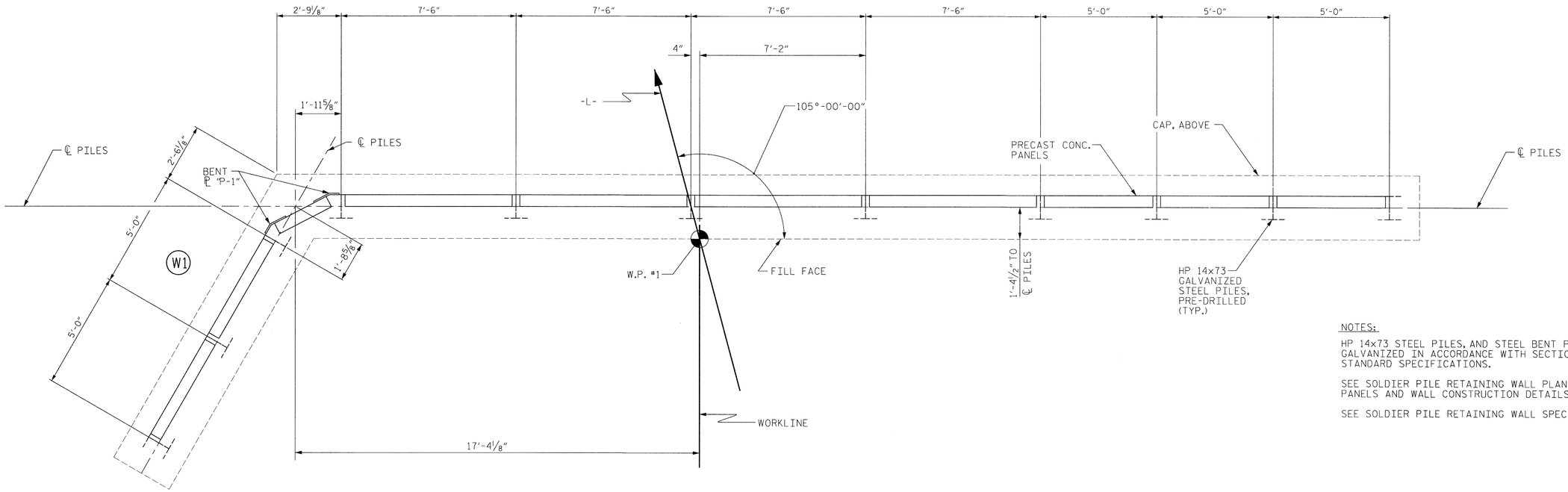


PLAN

NOTES:

HP 14x73 STEEL PILES, AND STEEL BENT PLATES SHALL BE GALVANIZED IN ACCORDANCE WITH SECTION 1076 OF THE STANDARD SPECIFICATIONS.

SEE SOLDIER PILE RETAINING WALL PLANS FOR CONCRETE PANELS AND WALL CONSTRUCTION DETAILS.

SEE SOLDIER PILE RETAINING WALL SPECIAL PROVISIONS.

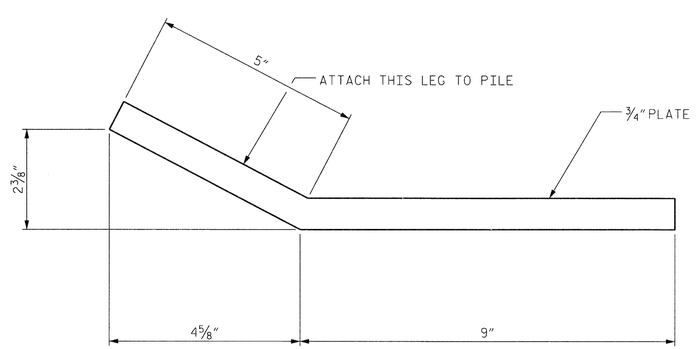


BENT PLATE "P-1"

(2 REQUIRED)

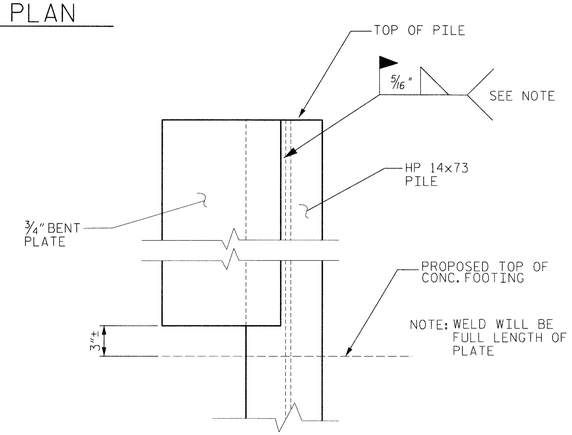


TYPICAL WELDING DETAIL
FOR BENT PLATES

NORTH CAROLINA PROFESSIONAL SEAL 30777 ENGINEER HARDY L. WILLIS 3/7/14

V&M Vaughn & Melton Consulting Engineers
Asheville, North Carolina 828-253-2796
Charlotte, North Carolina 704-357-0488
Tri-Cities, Tennessee 423-467-9410
Knoxville, Tennessee 865-546-5600
Middlesboro, Kentucky 606-248-5600
Spartanburg, South Carolina 864-574-4775
Copyright © 2006 Vaughn & Melton, Inc. All Rights Reserved

| | | | |
|---|---|---|---|
| DWN. BY: RWW | DATE: 11/13 | | |
| CHKD. BY: HLW | DATE: 11/13 | | |
| DES. EGR. OF RECORD: RTS | DATE: 11/13 | | |

PROJECT NO. BD-5113H

BURKE COUNTY

STATION: 14+32.77 -L-

SHEET 2 OF 4

STATE OF NORTH CAROLINA
DEPARTMENT OF TRANSPORTATION
RALEIGH

SUBSTRUCTURE

END BENT NO. 1
PILE LAYOUT

| REVISIONS | | | | | | SHEET NO. |
|---|---|---|---|---|---|---|
| NO. | BY: | DATE: | NO. | BY: | DATE: | S-9 |
| 1 | | | 3 | | | TOTAL SHEETS |
| 2 | | | 4 | | | 18 |

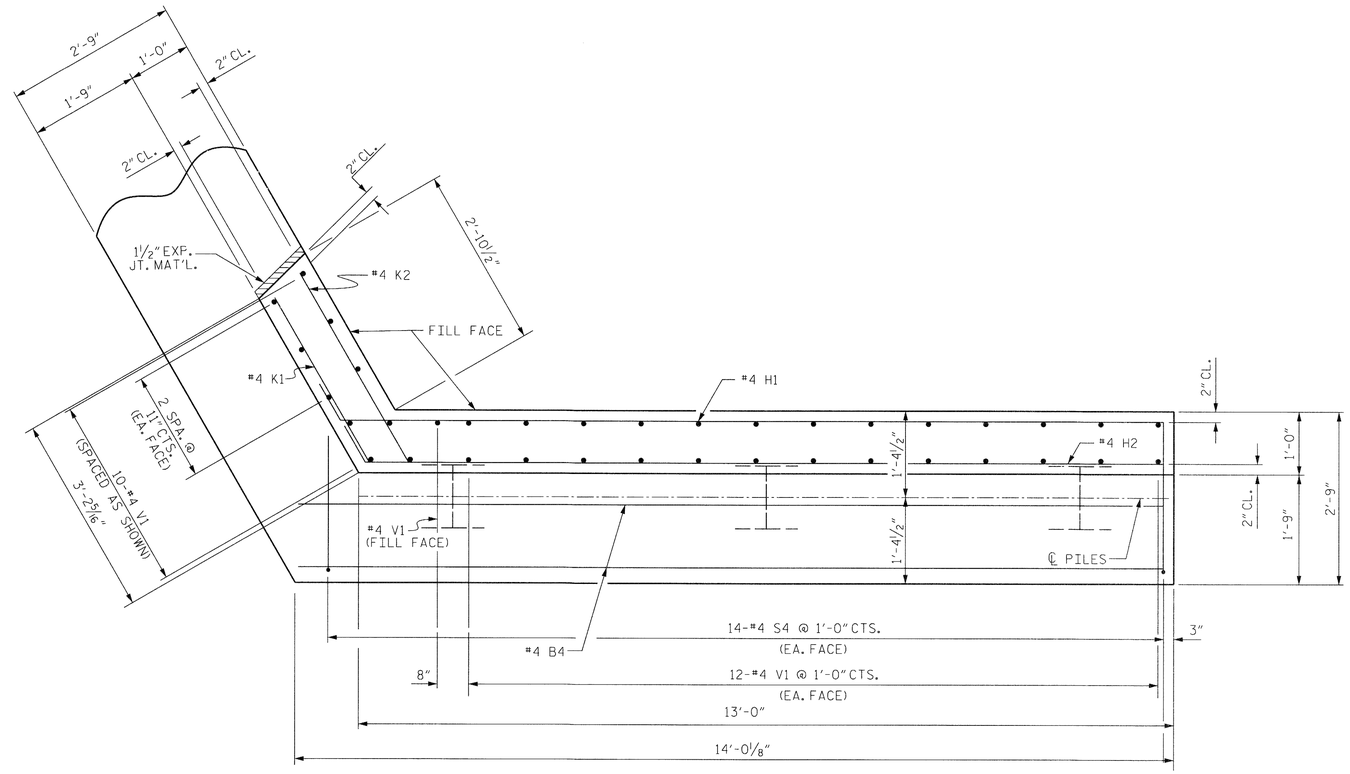


PLAN OF WING (W1)

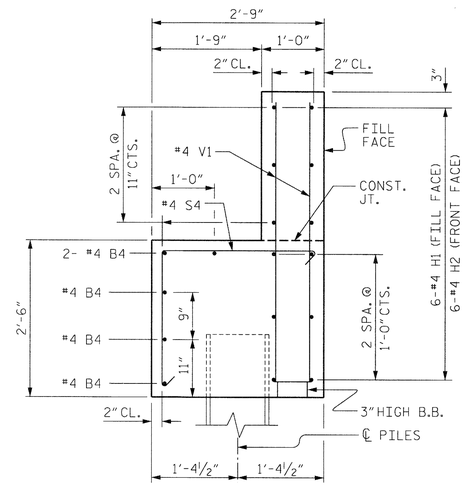


SECTION X-X

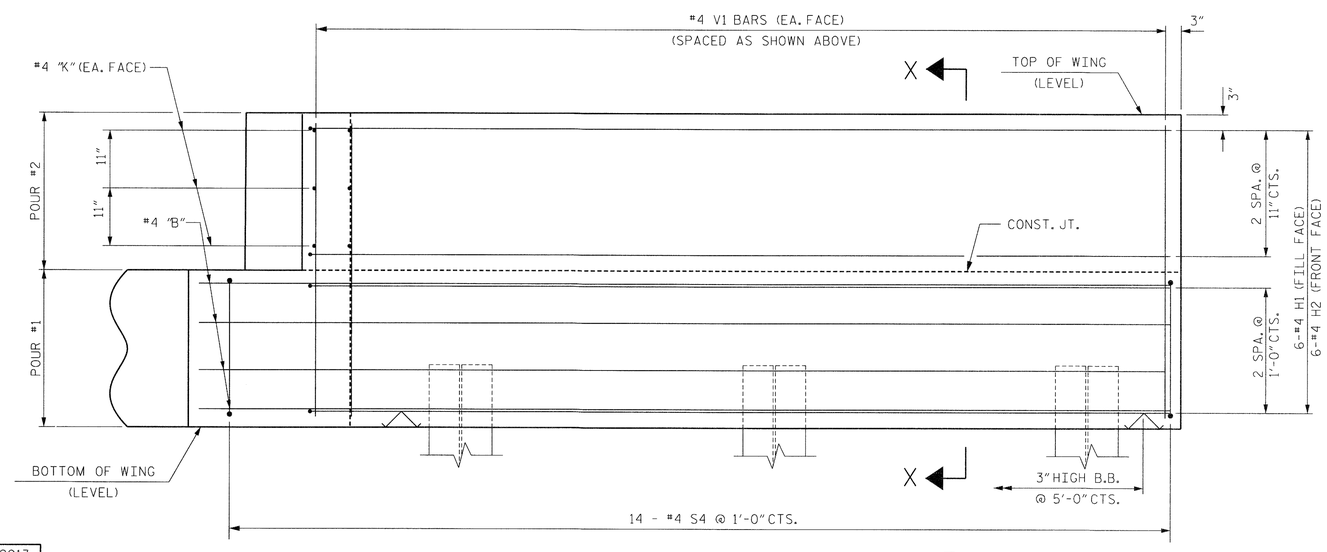


ELEVATION OF WING (W1)

PROJECT NO. BD-5113H

BURKE COUNTY

STATION: 14+32.77 -L-

SHEET 3 OF 4

STATE OF NORTH CAROLINA
DEPARTMENT OF TRANSPORTATION
RALEIGH

SUBSTRUCTURE
END BENT NO. 1
WINGWALL DETAILS

NORTH CAROLINA PROFESSIONAL SEAL 027 ENGINEER HARDY L. WILLIS
3/7/14

| REVISIONS | | | | | | SHEET NO. |
|---|---|---|---|---|---|---|
| NO. | BY: | DATE: | NO. | BY: | DATE: | S-10 |
| 1 | | | 3 | | | TOTAL SHEETS |
| 2 | | | 4 | | | 18 |

| | | |
|---|---|---|
| ASSEMBLED BY : | RWW | DATE : 11/2013 |
| CHECKED BY : | HLW | DATE : 11/2013 |
| DRAWN BY : DGE | 03/10 | |
| CHECKED BY : MKT | 03/10 | |

$$$$$$SYSTIME$$$$$
$$$$$$$$$$$$$$$$$$$$DGN$$$$$$$$$$$$$$$$$$$$
$$$$USERNAME$$$$

STD. NO. EB_27_105S

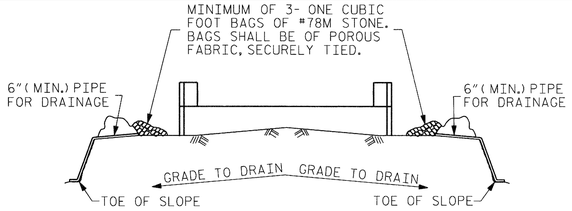


BAGGED STONE AND PIPE SHALL BE PLACED IMMEDIATELY AFTER COMPLETION OF END BENT EXCAVATION. PIPE MAY BE EITHER CONCRETE, CORRUGATED STEEL, CORRUGATED ALUMINUM ALLOY, OR CORRUGATED PLASTIC. PERFORATED PIPE WILL NOT BE ALLOWED.

BAGGED STONE SHALL REMAIN IN PLACE UNTIL THE ENGINEER DIRECTS THAT IT BE REMOVED. THE CONTRACTOR SHALL REMOVE AND DISPOSE OF SILT ACCUMULATIONS AT BAGGED STONE WHEN SO DIRECTED BY THE ENGINEER. BAGS SHALL BE REMOVED AND REPLACED WHENEVER THE ENGINEER DETERMINES THAT THEY HAVE DETERIORATED AND LOST THEIR EFFECTIVENESS.

NO SEPARATE PAYMENT WILL BE MADE FOR THIS WORK AND THE ENTIRE COST OF THIS WORK SHALL BE INCLUDED IN THE UNIT CONTRACT PRICE BID FOR THE SEVERAL PAY ITEMS.

## TEMPORARY DRAINAGE AT END BENT

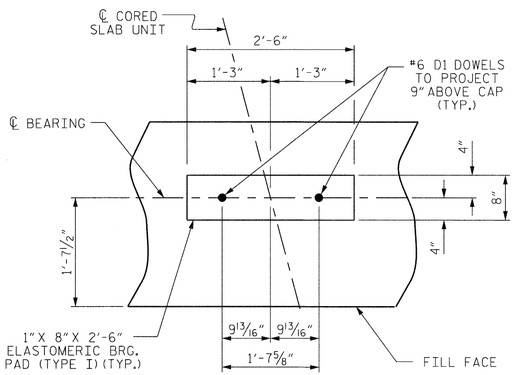


## DETAIL "A"

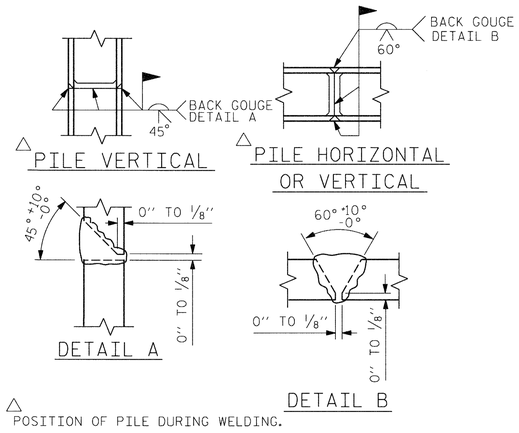


△ POSITION OF PILE DURING WELDING.

## PILE SPLICE DETAILS

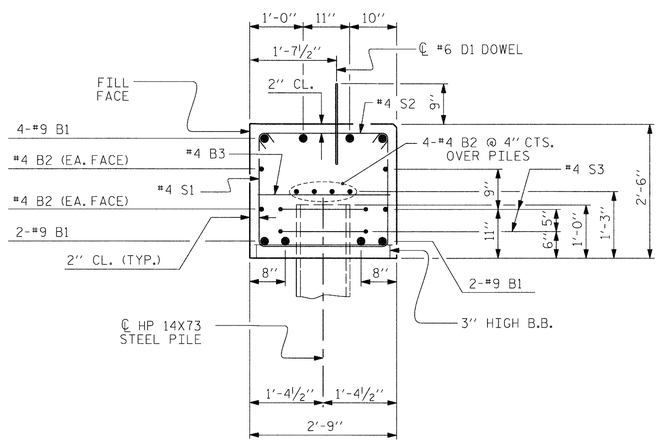


## SECTION A-A

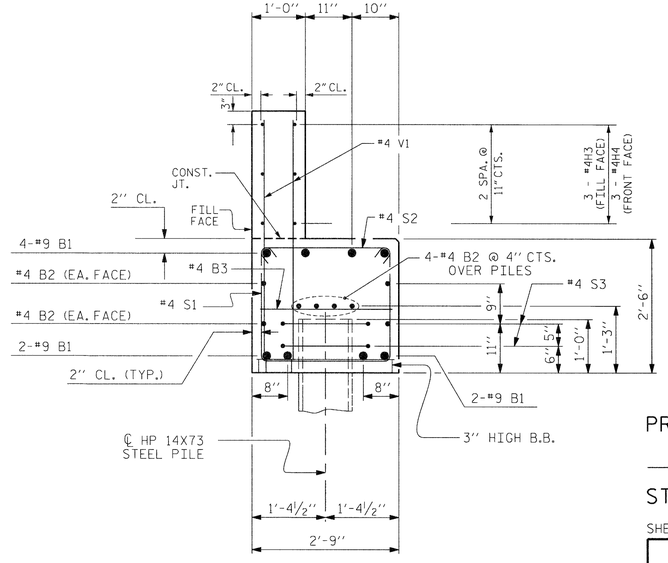


## SECTION B-B

### BAR TYPES

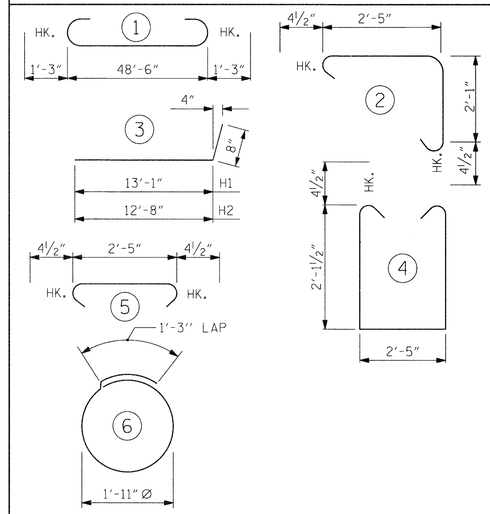


ALL BAR DIMENSIONS ARE OUT TO OUT.

END BENT No. 1
HP 14 X 73 STEEL PILES
NO: 11 LIN. FT.= 165

PILE EXCAVATION IN SOIL 25 LIN. FT.
PILE EXCAVATION NOT IN SOIL 55 LIN. FT.

### BILL OF MATERIAL FOR END BENT 1

| BAR | NO. | SIZE | TYPE | LENGTH | WEIGHT |
|---|---|---|---|---|---|
| B1 | 8 | #9 | 1 | 51'-0" | 1387 |
| B2 | 16 | #4 | STR | 25'-5" | 272 |
| B3 | 12 | #4 | STR | 2'-5" | 19 |
| B4 | 5 | #4 | STR | 13'-9" | 46 |
| D1 | 18 | #6 | STR | 1'-6" | 41 |
| H1 | 6 | #4 | 3 | 13'-9" | 55 |
| H2 | 6 | #4 | 3 | 13'-4" | 53 |
| H3 | 3 | #4 | STR | 16'-10" | 34 |
| H4 | 3 | #4 | STR | 17'-1" | 34 |
| K1 | 3 | #4 | STR | 3'-0" | 6 |
| K2 | 3 | #4 | STR | 3'-5" | 7 |
| S1 | 78 | #4 | 4 | 7'-5" | 386 |
| S2 | 78 | #4 | 5 | 3'-2" | 165 |
| S3 | 16 | #4 | 6 | 7'-4" | 78 |
| S4 | 14 | #4 | 2 | 5'-3" | 49 |
| V1 | 71 | #4 | STR | 4'-7" | 217 |
| REINFORCING STEEL | | | | | 2849 LBS. |

CLASS A CONCRETE BREAKDOWN

| | | |
|---|---|---|
| POUR #1 | CAP & LOWER PART OF WINGS | 15.7 C.Y. |
| POUR #2 | UPPER PART OF WINGS | 3.4 C.Y. |
| TOTAL CLASS A CONCRETE | | 19.1 C.Y. |

PROJECT NO. BD-5113H
BURKE COUNTY
STATION: 14+32.77 -L-

SHEET 4 OF 4

STATE OF NORTH CAROLINA
DEPARTMENT OF TRANSPORTATION
RALEIGH

SUBSTRUCTURE

END BENT NO. 1
DETAILS

NORTH CAROLINA PROFESSIONAL SEAL ENGINEER HARDY L. WILLIS 031 3/7/14

| | | | |
|---|---|---|---|
| ASSEMBLED BY : | RWW | DATE : 11/2013 | |
| CHECKED BY : | HLW | DATE : 11/2013 | |
| DRAWN BY : | DGE | 03/10 | |
| CHECKED BY : | MKT | 03/10 | |

| REVISIONS | | | | | | SHEET NO. |
|---|---|---|---|---|---|---|
| NO. | BY: | DATE: | NO. | BY: | DATE: | S-11 |
| 1 | | | 3 | | | TOTAL SHEETS |
| 2 | | | 4 | | | 18 |

$$$$$$SYSTIME$$$$$
$$$$$$$$$$$$$$$$$$$$DGN$$$$$$$$$$$$$$$$$$$$$$
$$$$USERNAME$$$$

STD. NO. EB_27_105S

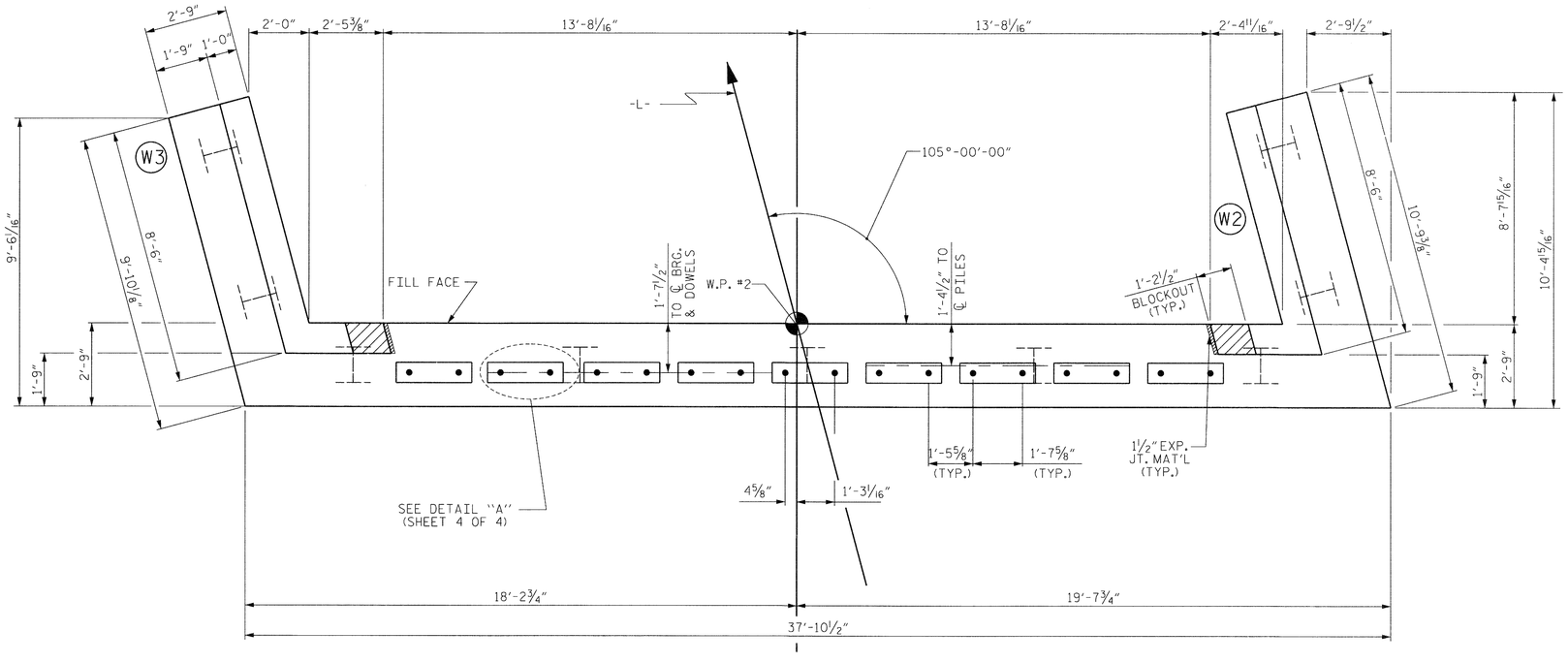


PLAN

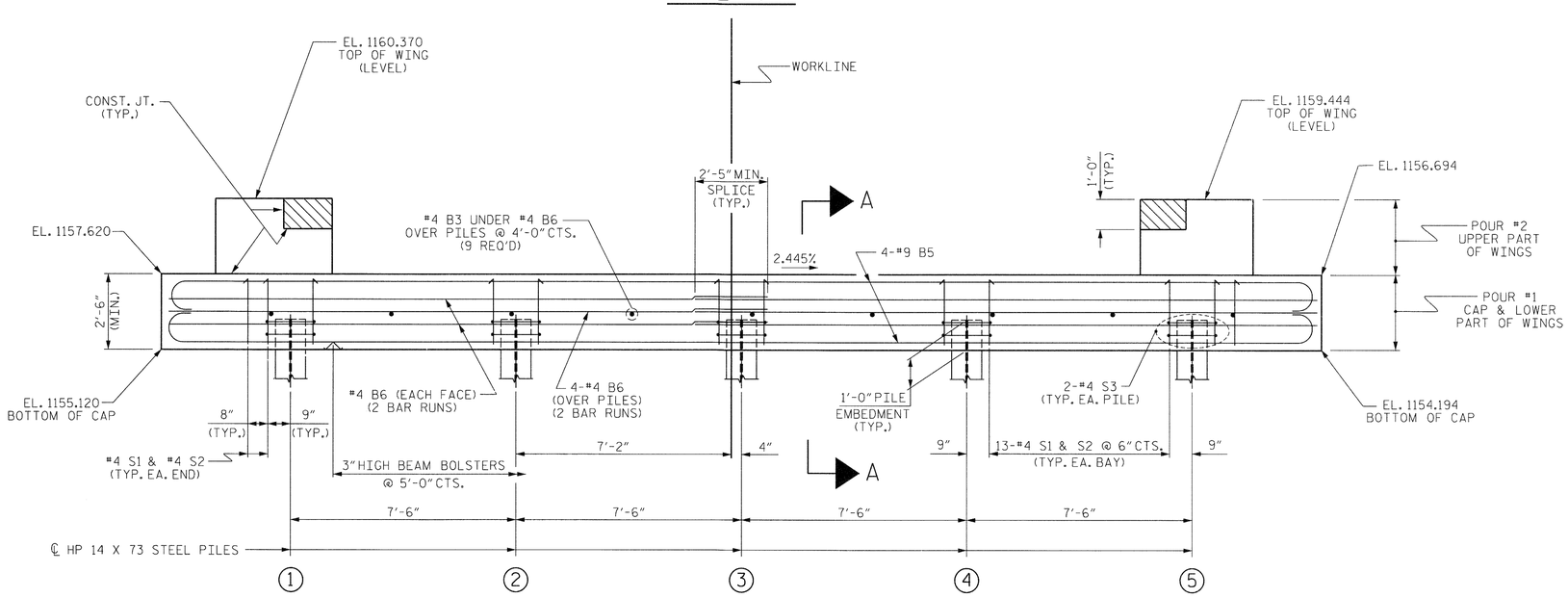


ELEVATION

WINGS NOT SHOWN FOR CLARITY.
FOR SECTION A-A, SEE SHEET 4 OF 4.
SHEET PILES NOT SHOWN FOR CLARITY

## NOTES

STIRRUPS IN CAP MAY BE SHIFTED AS NECESSARY TO CLEAR DOWELS.

THE CONCRETE IN THE SHADED AREA OF THE WING SHALL BE POURED AFTER THE VERTICAL CONCRETE BARRIER RAIL IS CAST IF SLIP FORMING IS USED.

FOR PILE SPLICE DETAILS, SEE SHEET 4 OF 4.

FOR WING DETAILS, SEE SHEET 3 OF 4.

| TOP OF PILE ELEVATIONS | |
|---|---|
| 1 | 1156.034 |
| 2 | 1155.851 |
| 3 | 1155.667 |
| 4 | 1155.484 |
| 5 | 1155.300 |

PROJECT NO. BD-5113H
BURKE COUNTY
STATION: 14+32.77 -L-

SHEET 1 OF 4

STATE OF NORTH CAROLINA
DEPARTMENT OF TRANSPORTATION
RALEIGH

SUBSTRUCTURE

END BENT NO. 2

NORTH CAROLINA PROFESSIONAL SEAL 019172 ENGINEER HARDY L. WILLIS 3/7/14

| ASSEMBLED BY : RWW | DATE : 11/2013 |
|---|---|
| CHECKED BY : HLW | DATE : 11/2013 |
| DRAWN BY : DGE 03/10 | |
| CHECKED BY : MKT 03/10 | |

| REVISIONS | | | | | | SHEET NO. |
|---|---|---|---|---|---|---|
| NO. | BY: | DATE: | NO. | BY: | DATE: | S-12 |
| 1 | | | 3 | | | TOTAL SHEETS |
| 2 | | | 4 | | | 18 |

$$$$$$SYSTIME$$$$$
$$$$$$$$$$$$$$$$$$$$DGN$$$$$$$$$$$$$$$$$$$$$$$$
$$$$USERNAME$$$$

STD. NO. EB_27_105S

NOTES:

HP 14x73 STEEL PILES, AND STEEL BENT PLATES SHALL BE GALVANIZED IN ACCORDANCE WITH SECTION 1076 OF THE STANDARD SPECIFICATIONS.

SEE SOLDIER PILE RETAINING WALL PLANS FOR CONCRETE PANELS AND WALL CONSTRUCTION DETAILS.

SEE SOLDIER PILE RETAINING WALL SPECIAL PROVISIONS.

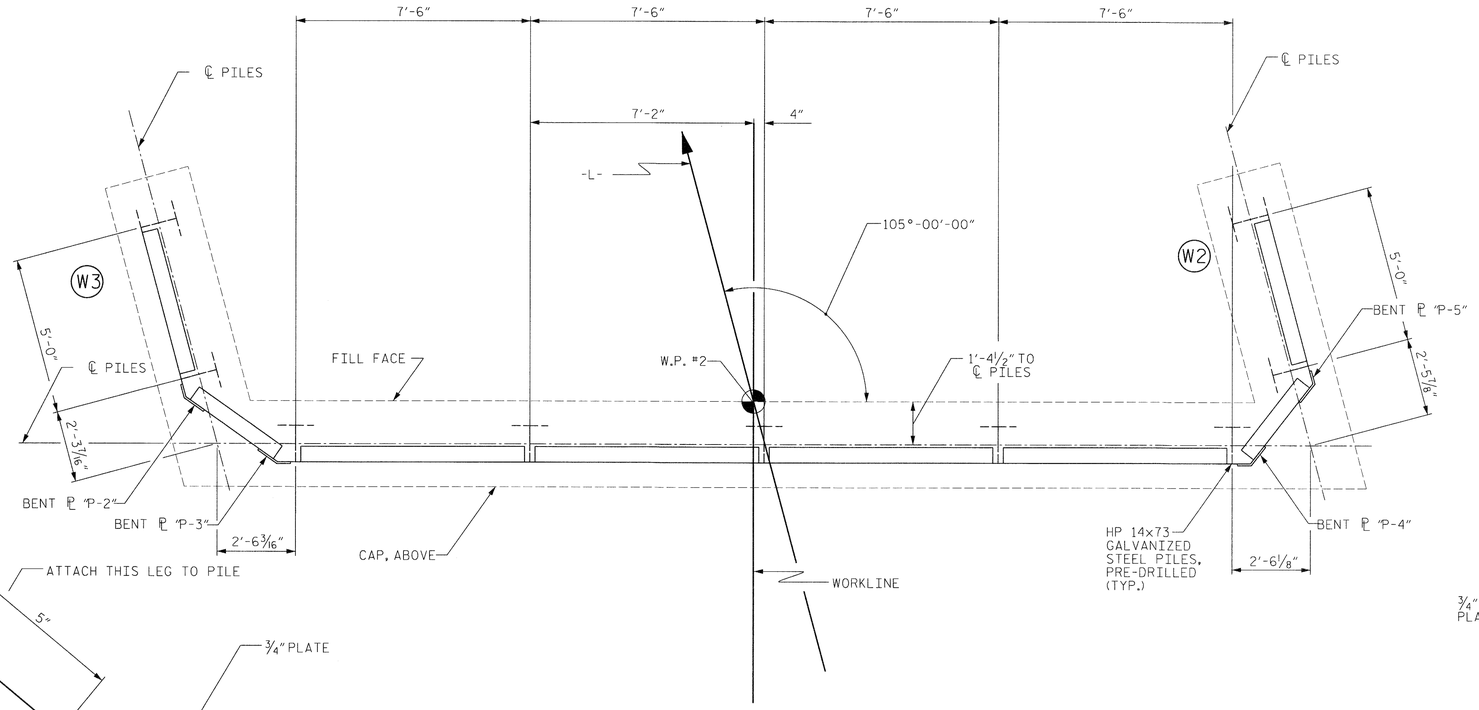


PLAN

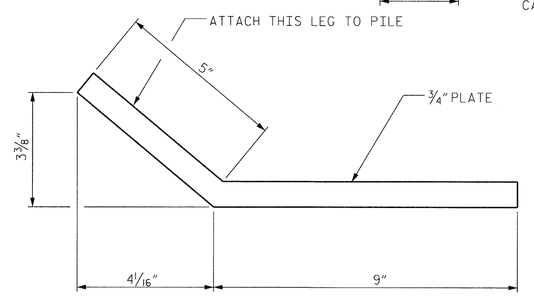


BENT PLATE "P-2"
(1 REQ'D)

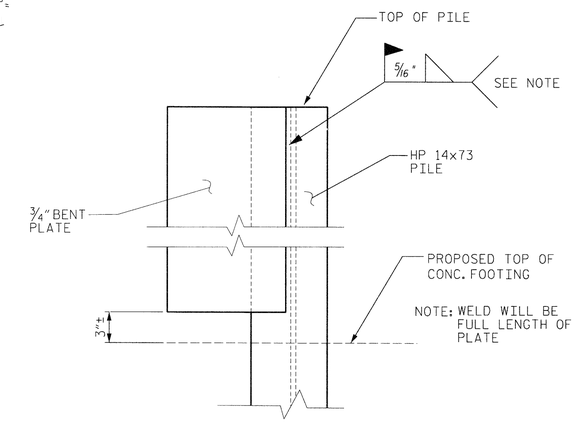


TYPICAL WELDING DETAIL FOR BENT PLATES

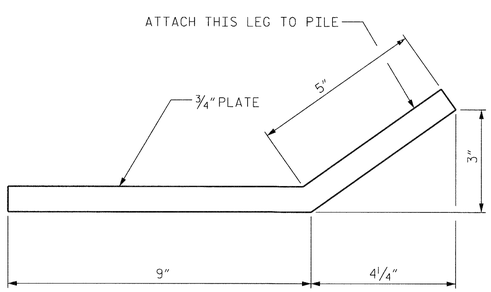


BENT PLATE "P-3"
(1 REQ'D)

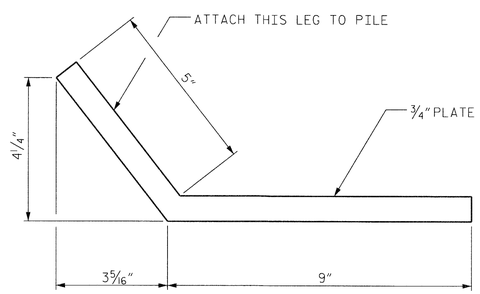


BENT PLATE "P-4"
(1 REQ'D)

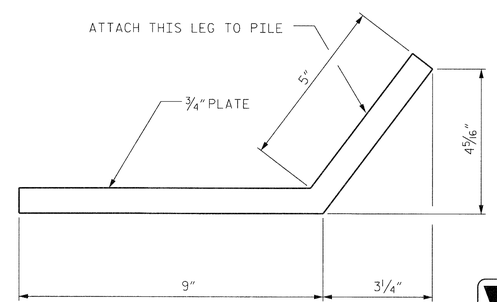


BENT PLATE "P-5"
(1 REQ'D)

NORTH CAROLINA PROFESSIONAL SEAL ENGINEER HARDY L. WILLIS 3/7/14

V&M Vaughn & Melton Consulting Engineers
Asheville, North Carolina 828-253-2796
Charlotte, North Carolina 704-357-0468
Tri-Cities, Tennessee 423-467-9400
Knoxville, Tennessee 865-546-5600
Middlesboro, Kentucky 606-248-5600
Spartanburg, South Carolina 864-574-4775
Copyright © 2006 Vaughn & Melton, Inc. All Rights Reserved

DWN. BY: RWW DATE: 11/13
CHKD. BY: HLW DATE: 11/13
DES. EGR. OF RECORD: RTS DATE: 11/13

PROJECT NO. BD-5113H
BURKE COUNTY
STATION: 14+32.77 -L-
SHEET 2 OF 4

STATE OF NORTH CAROLINA
DEPARTMENT OF TRANSPORTATION
RALEIGH

SUBSTRUCTURE
END BENT NO. 2
PILE LAYOUT

| REVISIONS | | | | | | SHEET NO. |
|---|---|---|---|---|---|---|
| NO. | BY: | DATE: | NO. | BY: | DATE: | S-13 |
| 1 | | | 3 | | | TOTAL SHEETS |
| 2 | | | 4 | | | 18 |

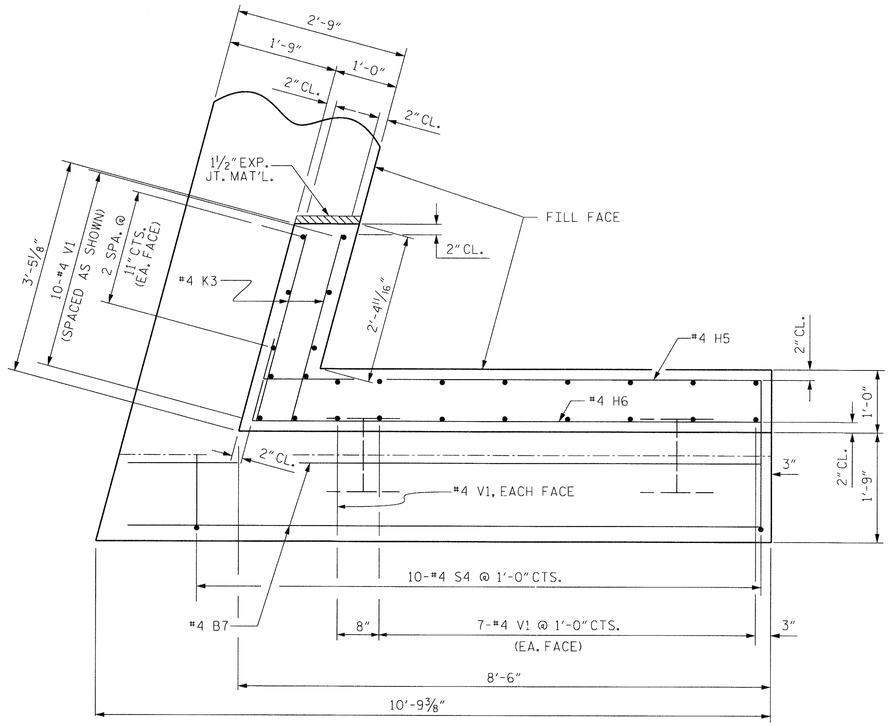


PLAN OF WING (W2)

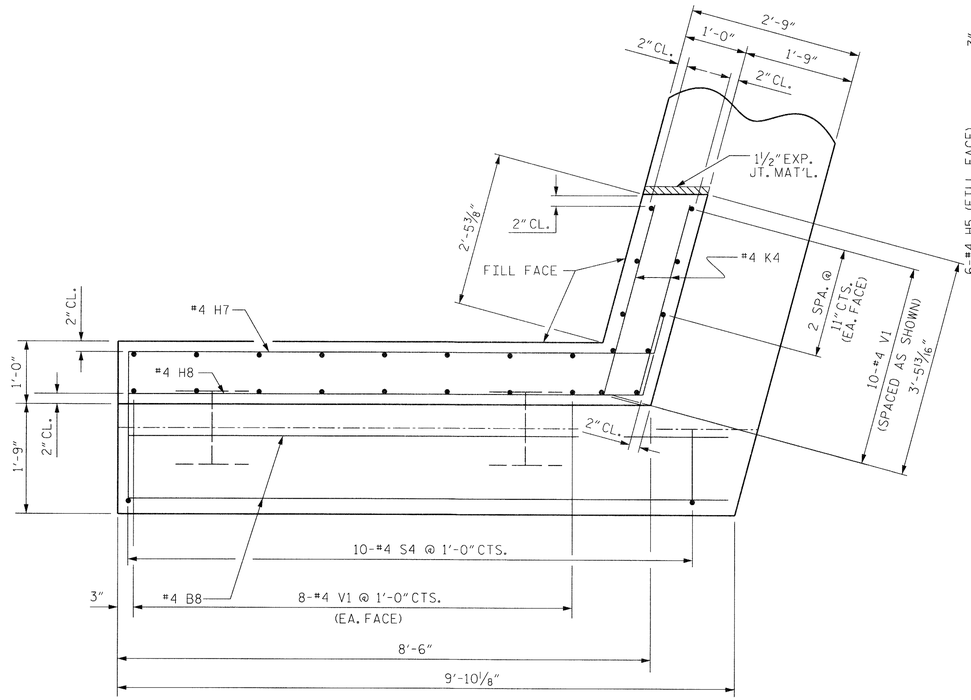


PLAN OF WING (W3)

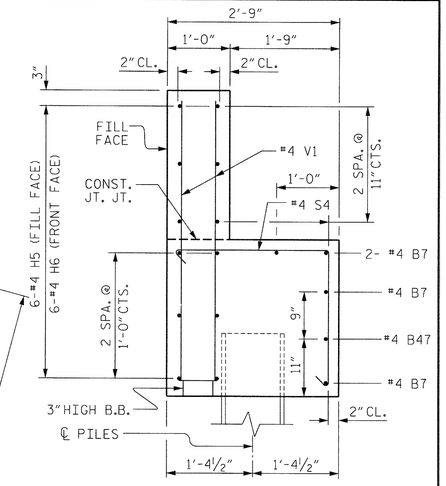


SECTION X-X

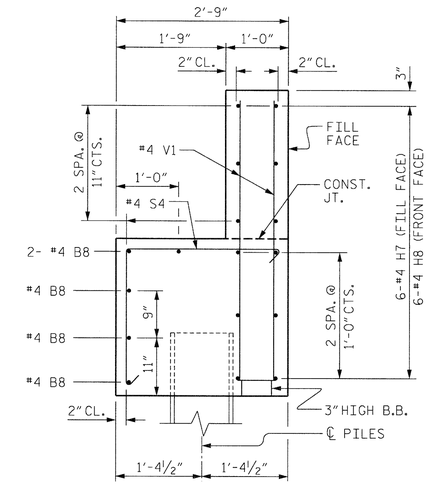


SECTION Y-Y

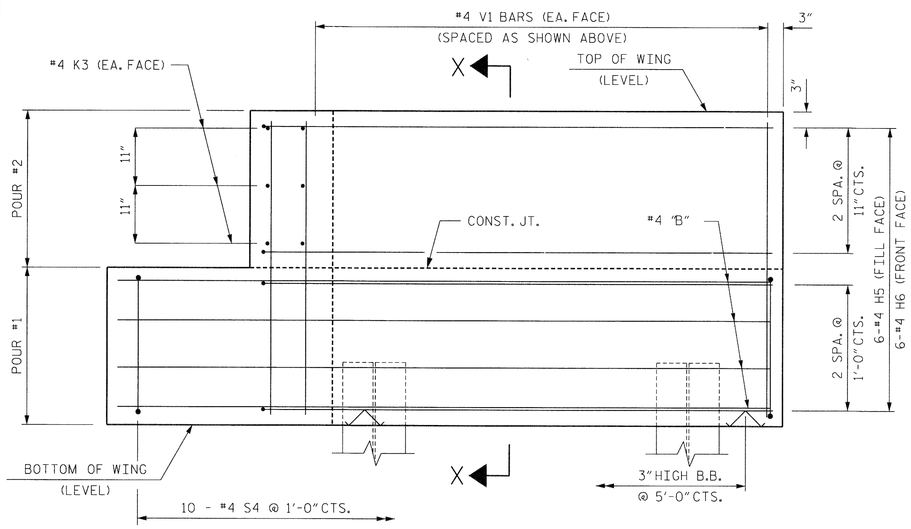


ELEVATION OF WING (W2)

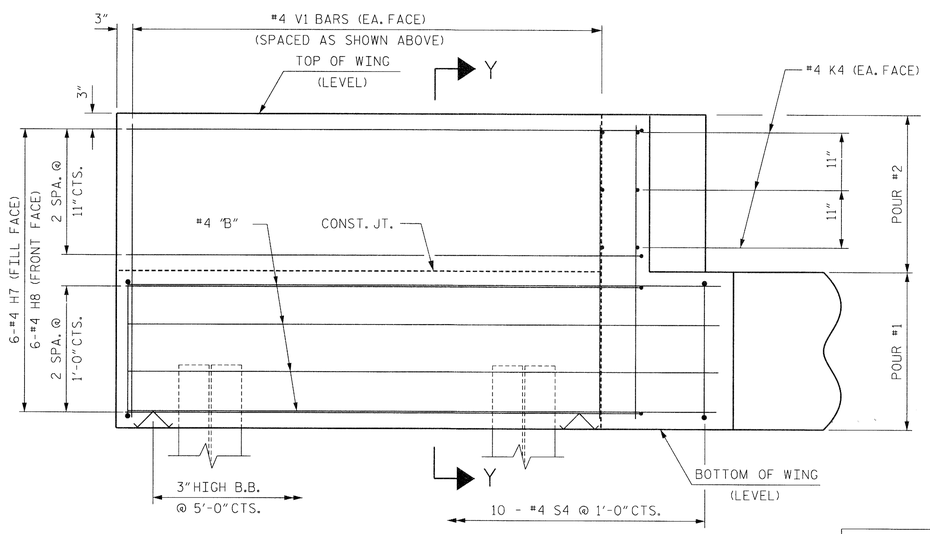


ELEVATION OF WING (W2)

PROJECT NO. BD-5113H

BURKE COUNTY

STATION: 14+32.77 -L-

SHEET 3 OF 4

STATE OF NORTH CAROLINA
DEPARTMENT OF TRANSPORTATION
RALEIGH

SUBSTRUCTURE
END BENT NO. 2
WINGWALL DETAILS

NORTH CAROLINA PROFESSIONAL SEAL ENGINEER HARDY L. WILLIS 3/7/14

| | | | |
|---|---|---|---|
| ASSEMBLED BY : | RWW | DATE : 11/2013 | |
| CHECKED BY : | HLW | DATE : 11/2013 | |
| DRAWN BY : | DGE | 03/10 | |
| CHECKED BY : | MKT | 03/10 | |

| REVISIONS | | | | | | SHEET NO. |
|---|---|---|---|---|---|---|
| NO. | BY: | DATE: | NO. | BY: | DATE: | S-14 |
| 1 | | | 3 | | | TOTAL SHEETS |
| 2 | | | 4 | | | 18 |

$$$$$$SYSTIME$$$$$
$$$$$$$$$$$$$$$$$$$$DGN$$$$$$$$$$$$$$$$$$$$$$$$
$$$$USERNAME$$$$

STD. NO. EB_27_105S

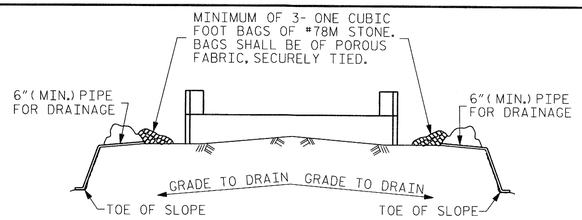


BAGGED STONE AND PIPE SHALL BE PLACED IMMEDIATELY AFTER COMPLETION OF END BENT EXCAVATION. PIPE MAY BE EITHER CONCRETE, CORRUGATED STEEL, CORRUGATED ALUMINUM ALLOY, OR CORRUGATED PLASTIC. PERFORATED PIPE WILL NOT BE ALLOWED.

BAGGED STONE SHALL REMAIN IN PLACE UNTIL THE ENGINEER DIRECTS THAT IT BE REMOVED. THE CONTRACTOR SHALL REMOVE AND DISPOSE OF SILT ACCUMULATIONS AT BAGGED STONE WHEN SO DIRECTED BY THE ENGINEER. BAGS SHALL BE REMOVED AND REPLACED WHENEVER THE ENGINEER DETERMINES THAT THEY HAVE DETERIORATED AND LOST THEIR EFFECTIVENESS.

NO SEPARATE PAYMENT WILL BE MADE FOR THIS WORK AND THE ENTIRE COST OF THIS WORK SHALL BE INCLUDED IN THE UNIT CONTRACT PRICE BID FOR THE SEVERAL PAY ITEMS.

## TEMPORARY DRAINAGE AT END BENT

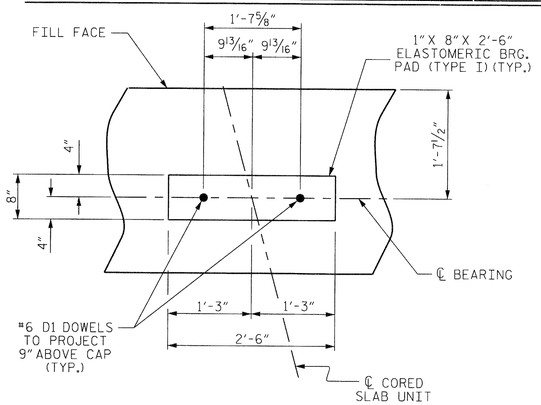


## DETAIL "A"

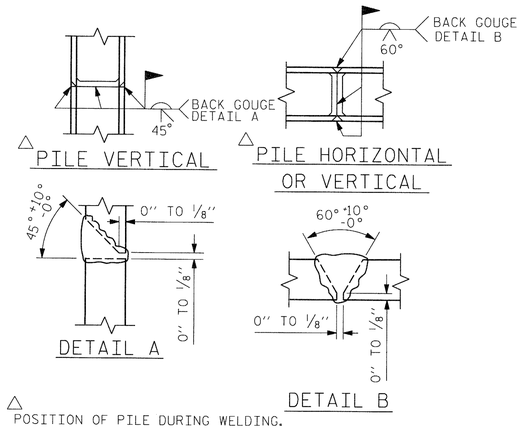


△ POSITION OF PILE DURING WELDING.

## PILE SPLICE DETAILS

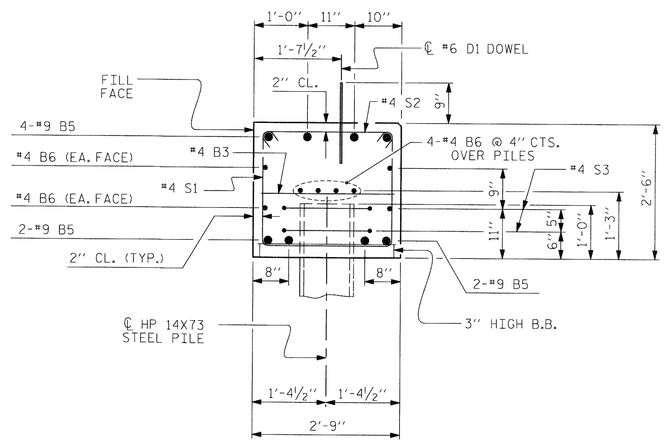


## SECTION A-A

## BAR TYPES

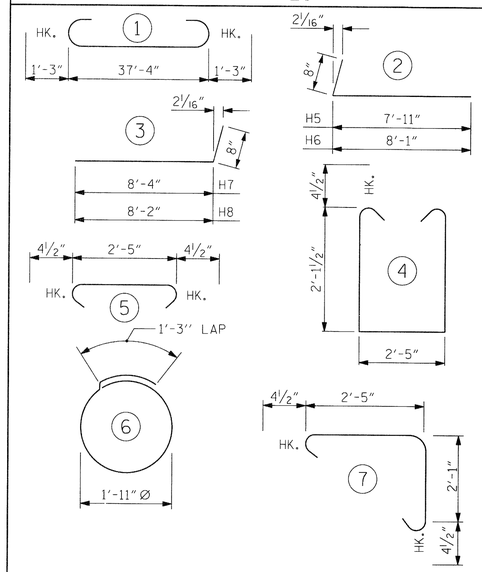


ALL BAR DIMENSIONS ARE OUT TO OUT.

END BENT No. 2
HP 14 X 73 STEEL PILES
NO: 9 LIN. FT.= 180

PILE EXCAVATION IN SOIL 45 LIN. FT.
PILE EXCAVATION NOT IN SOIL 45 LIN. FT.

## BILL OF MATERIAL
### FOR END BENT NO. 2

| BAR | NO. | SIZE | TYPE | LENGTH | WEIGHT |
|---|---|---|---|---|---|
| B3 | 9 | #4 | STR | 2'-5" | 15 |
| B5 | 8 | #9 | 1 | 39'-10" | 1083 |
| B6 | 16 | #4 | STR | 20'-0" | 214 |
| B7 | 5 | #4 | STR | 10'-1" | 34 |
| B8 | 5 | #4 | STR | 9'-6" | 32 |
| | | | | | |
| D1 | 18 | #6 | STR | 1'-6" | 41 |
| | | | | | |
| H5 | 6 | #4 | 2 | 8'-7" | 34 |
| H6 | 6 | #4 | 2 | 8'-9" | 35 |
| H7 | 6 | #4 | 3 | 9'-0" | 36 |
| H8 | 6 | #4 | 3 | 8'-10" | 35 |
| | | | | | |
| K3 | 6 | #4 | STR | 3'-0" | 12 |
| K4 | 6 | #4 | STR | 3'-1" | 12 |
| | | | | | |
| S1 | 56 | #4 | 4 | 7'-5" | 277 |
| S2 | 56 | #4 | 5 | 3'-2" | 118 |
| S3 | 10 | #4 | 6 | 7'-4" | 49 |
| S4 | 20 | #4 | 7 | 5'-3" | 70 |
| | | | | | |
| V1 | 48 | #4 | STR | 4'-7" | 147 |

REINFORCING STEEL 2244 LBS.

POUR #1 CAP & LOWER PART OF WINGS 13.5 C.Y.

POUR #2 UPPER PART OF WINGS 2.2 C.Y.

TOTAL CLASS A CONCRETE 15.7 C.Y.

PROJECT NO. BD-5113H
BURKE COUNTY
STATION: 14+32.77 -L-

SHEET 4 OF 4

STATE OF NORTH CAROLINA
DEPARTMENT OF TRANSPORTATION
RALEIGH

SUBSTRUCTURE

END BENT NO. 2
DETAILS

NORTH CAROLINA PROFESSIONAL SEAL ENGINEER HARDY L. WILLIS 3/1/14

| REVISIONS | | | | | | SHEET NO. |
|---|---|---|---|---|---|---|
| NO. | BY: | DATE: | NO. | BY: | DATE: | S-15 |
| 1 | | | 3 | | | TOTAL SHEETS |
| 2 | | | 4 | | | 18 |

| | | | |
|---|---|---|---|
| ASSEMBLED BY : | RWW | DATE : 11/2013 | |
| CHECKED BY : | HLW | DATE : 11/2013 | |
| DRAWN BY : DGE | 03/10 | | |
| CHECKED BY : MKT | 03/10 | | |

$$$$$$SYSTIME$$$$$
$$$$$$$$$$$$$$$$$$$$$$$$DGN$$$$$$$$$$$$$$$$$$$$$$$$
$$$$USERNAME$$$$

STD. NO. EB_27_105S

NOTES :

PLACE RIPRAP ALONG STREAM BANKS AS SHOWN.

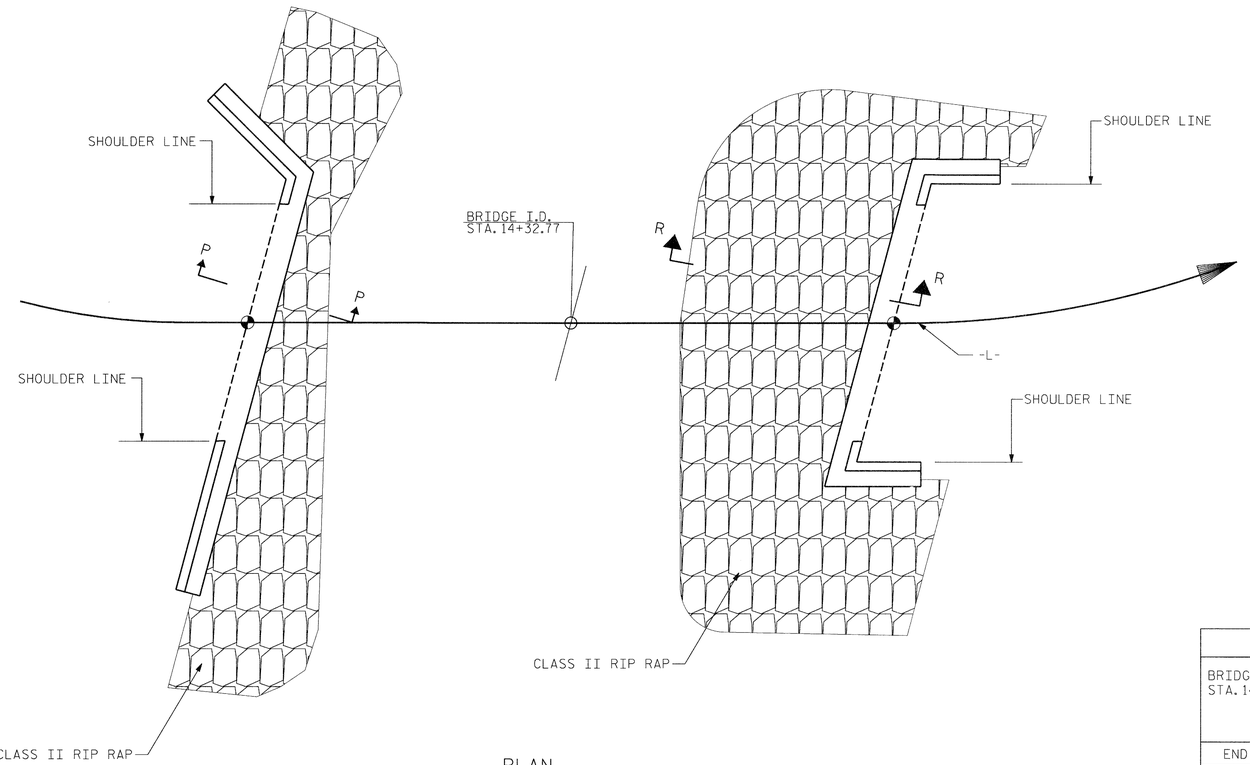


PLAN

| ESTIMATED QUANTITIES | | |
|---|---|---|
| BRIDGE @ STA. 14+32.77 | RIP RAP CLASS II (2'-0" THICK) | GEOTEXTILE FOR DRAINAGE |
| | TONS | SQUARE YARDS |
| END BENT 1 | 82 | 93 |
| END BENT 2 | 158 | 179 |

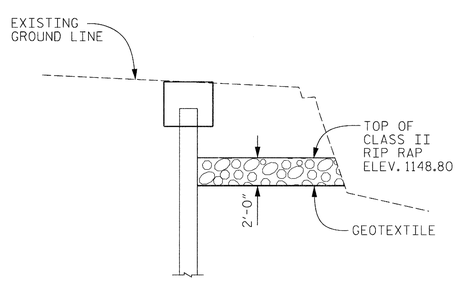


SECTION P-P

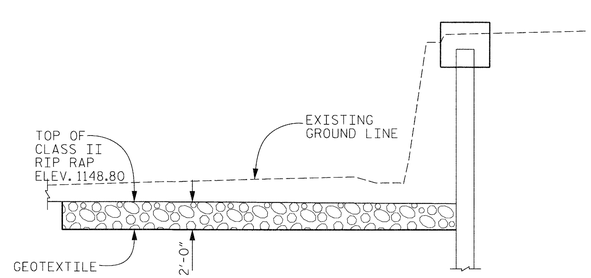


SECTION R-R

PROJECT NO. BD-5113H

BURKE COUNTY

STATION: 14+32.77 -L-

STATE OF NORTH CAROLINA
DEPARTMENT OF TRANSPORTATION
RALEIGH

STANDARD

RIP RAP DETAILS

NORTH CAROLINA PROFESSIONAL SEAL ENGINEER HARDY L. WILLIS 3/7/14

| REVISIONS | | | | | | SHEET NO. |
|---|---|---|---|---|---|---|
| NO. | BY: | DATE: | NO. | BY: | DATE: | S-16 |
| 1 | | | 3 | | | TOTAL SHEETS |
| 2 | | | 4 | | | 18 |

| | | | |
|---|---|---|---|
| ASSEMBLED BY : RWW | | DATE : 11/2013 | |
| CHECKED BY : HLW | | DATE : 11/2013 | |
| DRAWN BY : REK 1/84 | REV. 5/1/06R | TLA/GM | |
| CHECKED BY : RDU 1/84 | REV. 10/1/11 | MAA/GM | |
| | REV. 12/21/11 | MAA/GM | |

$$$$$$SYSTIME$$$$$
$$$$$$$$$$$$$$$$$$$$$$$$DGN$$$$$$$$$$$$$$$$$$$$$$$$
$$$$USERNAME$$$$

STD. NO. RR1

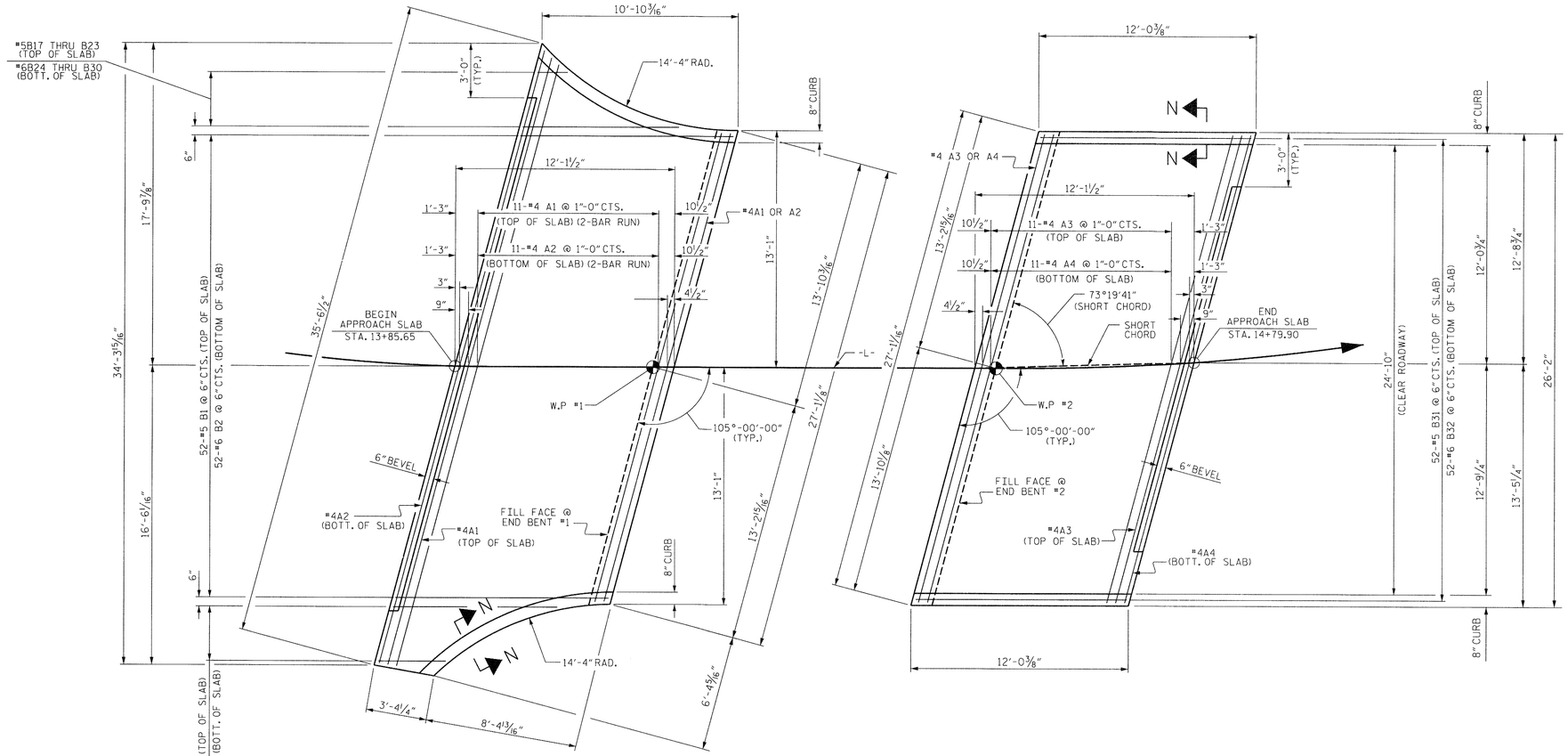


FOR SECTION N-N, SEE 2 OF 2

PLAN @ END BENT #1

PLAN @ END BENT #2

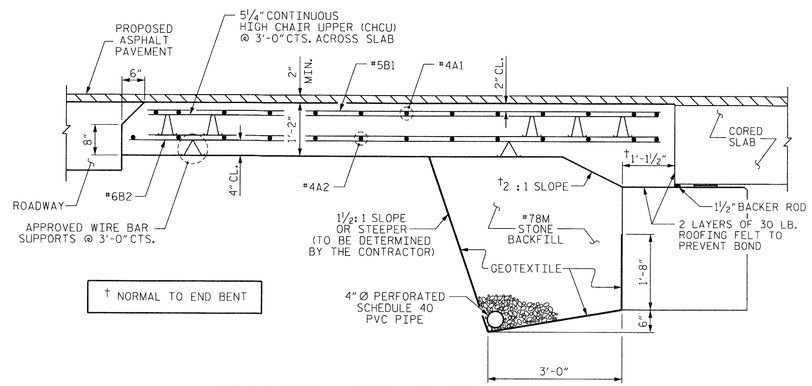


† NORMAL TO END BENT

SECTION THRU SLAB

## BILL OF MATERIAL

### APPROACH SLAB AT EB #1

| BAR | NO. | SIZE | TYPE | LENGTH | WEIGHT |
|---|---|---|---|---|---|
| * A1 | 26 | #4 | STR | 18'-8" | 324 |
| A2 | 26 | #4 | STR | 18'-6" | 321 |
| * B1 | 52 | #5 | STR | 11'-3" | 610 |
| B2 | 52 | #6 | STR | 11'-9" | 918 |
| * B3 | 1 | #5 | STR | 8'-6" | 9 |
| * B4 | 1 | #5 | STR | 6'-11" | 7 |
| * B5 | 1 | #5 | STR | 5'-10" | 6 |
| * B6 | 1 | #5 | STR | 5'-0" | 5 |
| * B7 | 1 | #5 | STR | 4'-3" | 4 |
| * B8 | 1 | #5 | STR | 3'-8" | 4 |
| * B9 | 1 | #5 | STR | 3'-2" | 3 |
| B10 | 1 | #6 | STR | 9'-0" | 14 |
| B11 | 1 | #6 | STR | 7'-5" | 11 |
| B12 | 1 | #6 | STR | 6'-4" | 10 |
| B13 | 1 | #6 | STR | 5'-6" | 8 |
| B14 | 1 | #6 | STR | 4'-9" | 7 |
| B15 | 1 | #6 | STR | 4'-2" | 6 |
| B16 | 1 | #6 | STR | 3'-8" | 6 |
| * B17 | 1 | #5 | STR | 8'-1" | 8 |
| * B18 | 1 | #5 | STR | 6'-2" | 6 |
| * B19 | 1 | #5 | STR | 4'-10" | 5 |
| * B20 | 1 | #5 | STR | 3'-9" | 4 |
| * B21 | 1 | #5 | STR | 2'-9" | 3 |
| * B22 | 1 | #5 | STR | 1'-11" | 2 |
| * B23 | 1 | #5 | STR | 1'-2" | 1 |
| B24 | 1 | #6 | STR | 8'-7" | 13 |
| B25 | 1 | #6 | STR | 6'-8" | 10 |
| B26 | 1 | #6 | STR | 5'-4" | 8 |
| B27 | 1 | #6 | STR | 4'-3" | 6 |
| B28 | 1 | #6 | STR | 3'-3" | 5 |
| B29 | 1 | #6 | STR | 2'-5" | 4 |
| B30 | 1 | #6 | STR | 1'-8" | 3 |

REINFORCING STEEL 1350 LBS.

* EPOXY COATED REINFORCING STEEL 1001 LBS.

CLASS AA CONCRETE 17.6 C. Y.

### APPROACH SLAB AT EB #2

| BAR | NO. | SIZE | TYPE | LENGTH | WEIGHT |
|---|---|---|---|---|---|
| * A3 | 13 | #4 | STR | 26'-8" | 232 |
| A4 | 13 | #4 | STR | 26'-8" | 232 |
| * B31 | 52 | #5 | STR | 11'-2" | 606 |
| B32 | 52 | #6 | STR | 11'-8" | 911 |

REINFORCING STEEL 1143 LBS.

* EPOXY COATED REINFORCING STEEL 838 LBS.

CLASS AA CONCRETE 15.2 C. Y.

### SPLICE LENGTHS

| BAR SIZE | EPOXY COATED | UNCOATED |
|---|---|---|
| #4 | 2'-0" | 1'-9" |
| #5 | 2'-6" | 2'-2" |
| #6 | 3'-10" | 2'-7" |

PROJECT NO. BD-5113H

BURKE COUNTY

STATION: 14+32.77 -L-

SHEET 1 OF 2

STATE OF NORTH CAROLINA
DEPARTMENT OF TRANSPORTATION
RALEIGH

STANDARD
BRIDGE APPROACH SLAB
FOR PRESTRESSED CONCRETE
CORED SLAB UNIT
(SUB-REGIONAL TIER)
105° SKEW

NORTH CAROLINA PROFESSIONAL SEAL ENGINEER HARDY L. WILLIS 3/7/14

| REVISIONS | | | | | | SHEET NO. |
|---|---|---|---|---|---|---|
| NO. | BY: | DATE: | NO. | BY: | DATE: | S-17 |
| 1 | | | 3 | | | TOTAL SHEETS |
| 2 | | | 4 | | | 18 |

| | | | |
|---|---|---|---|
| ASSEMBLED BY : | RWW | DATE : 11/2013 | |
| CHECKED BY : | HLW | DATE : 11/2013 | |
| DRAWN BY : SHS/MAA 5-09 | REV. 12-11 | MAA/AAC | |
| CHECKED BY : BCH 5-09 | | | |

$$$$$$$SYSTIME$$$$$
$$$$$$$$$$$$$$$$$$$$$$$$$DGN$$$$$$$$$$$$$$$$$$$$$$$$
@@@@@COMAME@@@@

STD. NO. BAS_27_105S

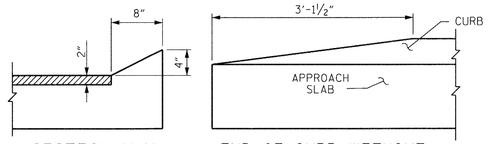


SECTION N-N

END OF CURB WITHOUT SHOULDER BERM GUTTER

## CURB DETAILS

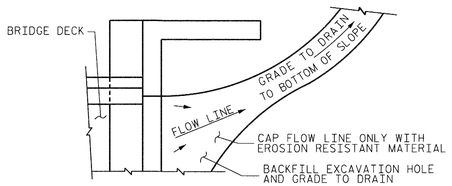


NOTE: IF THE APPROACH SLAB IS NOT CONSTRUCTED IMMEDIATELY AFTER THE BACKFILLING OF THE END BENT EXCAVATION, GRADE TO DRAIN TO THE BOTTOM OF THE SLOPE AND PROVIDE EROSION RESISTANT MATERIAL, SUCH AS FIBERGLASS ROVING OR AS DIRECTED BY THE ENGINEER TO PREVENT SOIL EROSION AND TO PROTECT THE AREA ADJACENT TO THE STRUCTURE. THE CONTRACTOR WILL BE REQUIRED TO REMOVE THESE MATERIALS PRIOR TO CONSTRUCTION OF THE APPROACH SLAB.

## TEMPORARY DRAINAGE DETAIL

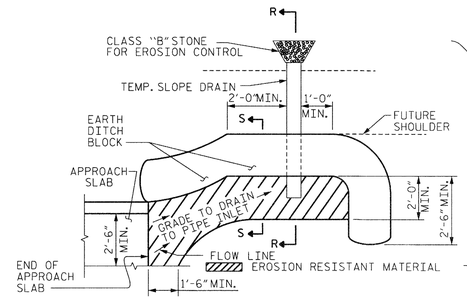


NOTE: IMMEDIATELY AFTER THE CONSTRUCTION OF THE APPROACH SLAB, THE CONTRACTOR SHALL PROVIDE TEMPORARY BERM AND SLOPE DRAIN. CONTRACTOR SHALL GRADE TO PIPE INLET AND PROVIDE EROSION RESISTANT MATERIAL AS SHOWN. THE EROSION RESISTANT MATERIAL SHALL BE EITHER 1) ASPHALT PLANT MIX, TYPE 1 OR TYPE 2, MIN. 2" DEPTH, 2) EROSION CONTROL MAT, OR 3) CONCRETE, AS DIRECTED BY THE ENGINEER. THE SLOPE DRAIN SHALL CONSIST OF A NON-PERFORATED TEMPORARY DRAINAGE PIPE, 12 INCHES IN DIAMETER.

PLAN VIEW

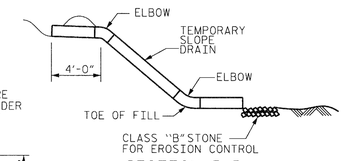


SECTION R-R

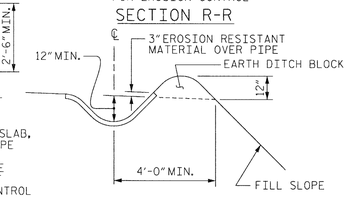


SECTION S-S

## TEMPORARY BERM AND SLOPE DRAIN DETAILS

(TO BE USED WHEN SHOULDER BERM GUTTER IS REQUIRED)

## NOTES

FOR BRIDGE APPROACH FILL INCLUDING GEOTEXTILE, 4" Ø DRAINAGE PIPE, AND #78M STONE BACKFILL, SEE ROADWAY PLANS.

GEOTEXTILE SHALL BE TYPE 1 IN ACCORDANCE WITH THE STANDARD SPECIFICATIONS SECTION 1056.

#78M STONE BACKFILL (CLASS V SELECT MATERIAL) SHALL BE IN ACCORDANCE WITH STANDARD SPECIFICATIONS SECTION 1016.

#78M STONE BACKFILL IS TO BE CONTINUOUS ALONG FILL FACE OF BACKWALL FROM OUTSIDE EDGE TO OUTSIDE EDGE OF APPROACH SLAB.

FOR THE 4" Ø DRAINAGE PIPE OUTLET(S), SEE ROADWAY STANDARD DRAWINGS.

AREA BETWEEN THE WINGWALL AND APPROACH SLAB SHALL BE GRADED TO DRAIN THE WATER AWAY FROM THE FILL FACE OF THE BRIDGE AND SHALL BE PAVED. SEE ROADWAY PLANS.

APPROACH SLAB GROOVING IS NOT REQUIRED.

PROJECT NO. BD-5113H

BURKE COUNTY

STATION: 14+32.77 -L-

SHEET 2 OF 2

STATE OF NORTH CAROLINA
DEPARTMENT OF TRANSPORTATION
RALEIGH

STANDARD
BRIDGE APPROACH SLAB
FOR PRESTRESSED CONCRETE
CORED SLAB UNIT
(SUB-REGIONAL TIER)
105° SKEW

NORTH CAROLINA PROFESSIONAL ENGINEER SEAL HARDY L. WILLIS 5/7/14

| REVISIONS | | | | | | | SHEET NO. |
|---|---|---|---|---|---|---|---|
| NO. | BY: | DATE: | NO. | BY: | DATE: | | S-18 |
| 1 | | | 3 | | | | TOTAL SHEETS |
| 2 | | | 4 | | | | 18 |

| | | | |
|---|---|---|---|
| ASSEMBLED BY : | RWW | DATE : 11/2013 | |
| CHECKED BY : | HLW | DATE : 11/2013 | |
| DRAWN BY : SHS/MAA 5-09 | REV. 12-11 | MAA/AAC | |
| CHECKED BY : BCH 5-09 | | | |

$$$$$$$SYSTIME$$$$$$
$$$$$$$$$$$$$$$$$$$$$$$$DGN$$$$$$$$$$$$$$$$$$$$$$$$

STD. NO. BAS_27_105S

# STANDARD NOTES

## DESIGN DATA:

| | |
|---|---|
| SPECIFICATIONS | A.A.S.H.T.O. (CURRENT) |
| LIVE LOAD | SEE PLANS |
| IMPACT ALLOWANCE | SEE A.A.S.H.T.O. |
| STRESS IN EXTREME FIBER OF | |
| STRUCTURAL STEEL - AASHTO M270 GRADE 36 | 20,000 LBS. PER SQ. IN. |
| - AASHTO M270 GRADE 50W | 27,000 LBS. PER SQ. IN. |
| - AASHTO M270 GRADE 50 | 27,000 LBS. PER SQ. IN. |
| REINFORCING STEEL IN TENSION | |
| GRADE 60 | 24,000 LBS. PER SQ. IN. |
| CONCRETE IN COMPRESSION | 1,200 LBS. PER SQ. IN. |
| CONCRETE IN SHEAR | SEE A.A.S.H.T.O. |
| STRUCTURAL TIMBER - TREATED OR | |
| UNTREATED - EXTREME FIBER STRESS | 1,800 LBS. PER SQ. IN. |
| COMPRESSION PERPENDICULAR TO GRAIN OF TIMBER | 375 LBS. PER SQ. IN. |
| EQUIVALENT FLUID PRESSURE OF EARTH | 30 LBS. PER CU. FT. (MINIMUM) |

## MATERIAL AND WORKMANSHIP:

EXCEPT AS MAY OTHERWISE BE SPECIFIED ON PLANS OR IN THE SPECIAL PROVISIONS, ALL MATERIAL AND WORKMANSHIP SHALL BE IN ACCORDANCE WITH THE 2012 "STANDARD SPECIFICATIONS FOR ROADS AND STRUCTURES" OF THE N. C. DEPARTMENT OF TRANSPORTATION.

STEEL SHEET PILING FOR PERMANENT OR TEMPORARY APPLICATIONS SHALL BE HOT ROLLED.

## CONCRETE:

UNLESS OTHERWISE REQUIRED ON PLANS, CLASS A CONCRETE SHALL BE USED FOR ALL PORTIONS OF ALL STRUCTURES WITH THE EXCEPTION THAT: CLASS AA CONCRETE SHALL BE USED IN BRIDGE SUPERSTRUCTURES, ABUTMENT BACKWALLS, AND APPROACH SLABS; AND CLASS B CONCRETE SHALL BE USED FOR SLOPE PROTECTION AND RIP RAP.

## CONCRETE CHAMFERS:

UNLESS OTHERWISE NOTED ON THE PLANS, ALL EXPOSED CORNERS ON STRUCTURES SHALL BE CHAMFERED 3/4" WITH THE FOLLOWING EXCEPTIONS: TOP CORNERS OF CURBS MAY BE ROUNDED TO 1-1/2" RADIUS WHICH IS BUILT INTO CURB FORMS; CORNERS OF TRANSVERSE FLOOR EXPANSION JOINTS SHALL BE ROUNDED WITH A 1/4" FINISHING TOOL UNLESS OTHERWISE REQUIRED ON PLANS; AND CORNERS OF EXPANSION JOINTS IN THE ROADWAY FACES AND TOPS OF CURBS AND SIDEWALKS SHALL BE ROUNDED TO A 1/4" RADIUS WITH A FINISHING STONE OR TOOL UNLESS OTHERWISE REQUIRED ON PLANS.

## DOWELS:

DOWELS WHEN INDICATED ON PLANS AS FOR CULVERT EXTENSIONS, SHALL BE EMBEDDED AT LEAST 12" INTO THE OLD CONCRETE AND GROUTED INTO PLACE WITH 1:2 CEMENT MORTAR.

## ALLOWANCE FOR DEAD LOAD DEFLECTION, SETTLEMENT, ETC. IN CASTING SUPERSTRUCTURES:

BRIDGES SHALL BE BUILT ON THE GRADE OR VERTICAL CURVE SHOWN ON PLANS. SLABS, CURBS AND PARAPETS SHALL CONFORM TO THE GRADE OR CURVE.

ALL DIMENSIONS WHICH ARE GIVEN IN SECTION AND ARE AFFECTED BY DEAD LOAD DEFLECTIONS ARE DIMENSIONS AT CENTER LINE OF BEARING UNLESS OTHERWISE NOTED ON PLANS. IN SETTING FORMS FOR STEEL BEAM BRIDGES AND PRESTRESSED CONCRETE GIRDER BRIDGES, ADJUSTMENTS SHALL BE MADE DUE TO THE DEAD LOAD DEFLECTIONS FOR THE ELEVATIONS SHOWN. WHERE BLOCKS ARE SHOWN OVER BEAMS FOR BUILDING UP TO THE SLAB, THE VERTICAL DIMENSIONS OF THE BLOCKS SHALL BE ADJUSTED BETWEEN BEARINGS TO COMPENSATE FOR DEAD LOAD DEFLECTIONS, VERTICAL CURVE ORDINATE, AND ACTUAL BEAM CAMBER. WHERE BOTTOM OF SLAB IS IN LINE WITH BOTTOM OF TOP FLANGES, DEPTH OF SLAB BETWEEN BEARINGS SHALL BE ADJUSTED TO COMPENSATE FOR DEAD LOAD DEFLECTION, VERTICAL CURVE ORDINATE, AND ACTUAL BEAM CAMBER.

IN SETTING FALSEWORK AND FORMS FOR REINFORCED CONCRETE SPANS, AN ALLOWANCE SHALL BE MADE FOR DEAD LOAD DEFLECTIONS, SETTLEMENT OF FALSEWORK, AND PERMANENT CAMBER WHICH SHALL BE PROVIDED FOR IN ADDITION TO THE ELEVATIONS SHOWN. AFTER REMOVAL OF THE FALSEWORK, THE FINISHED STRUCTURES SHALL CONFORM TO THE PROFILE AND ELEVATIONS SHOWN ON THE PLANS AND CONSTRUCTION ELEVATIONS FURNISHED BY THE ENGINEER.

DETAILED DRAWINGS FOR FALSEWORK OR FORMS FOR BRIDGE SUPERSTRUCTURE AND ANY STRUCTURE OR PARTS OF A STRUCTURE AS NOTED ON THE PLANS SHALL BE SUBMITTED TO THE ENGINEER FOR APPROVAL BEFORE CONSTRUCTION OF THE FALSEWORK OR FORMS IS STARTED.

## REINFORCING STEEL:

ALL REINFORCING STEEL SHALL BE DEFORMED. DIMENSIONS RELATIVE TO PLACEMENT OF REINFORCING ARE TO CENTERS OF BARS UNLESS OTHERWISE INDICATED IN THE PLANS. DIMENSIONS ON BAR DETAILS ARE TO CENTERS OF BARS OR ARE OUT TO OUT AS INDICATED ON PLANS.

WIRE BAR SUPPORTS SHALL BE PROVIDED FOR REINFORCING STEEL WHERE INDICATED ON THE PLANS. WHEN BAR SUPPORT PIECES ARE PLACED IN CONTINUOUS LINES, THEY SHALL BE SO PLACED THAT THE ENDS OF THE SUPPORTING WIRES SHALL BE LAPPED TO LOCK LEGS ON ADJOINING PIECES.

## STRUCTURAL STEEL:

AT THE CONTRACTOR'S OPTION, HE MAY SUBSTITUTE 7/8" Ø SHEAR STUDS FOR THE 3/4" Ø STUDS SPECIFIED ON THE PLANS. THIS SUBSTITUTION SHALL BE MADE AT THE RATE OF 3 - 7/8" Ø STUDS FOR 4 - 3/4" Ø STUDS, AND STUD SPACING CHANGES SHALL BE MADE AS NECESSARY TO PROVIDE THE SAME EQUIVALENT NUMBER OF 7/8" Ø STUDS ALONG THE BEAM AS SHOWN FOR 3/4" Ø STUDS BASED ON THE RATIO OF 3 - 7/8" Ø STUDS FOR 4 - 3/4" Ø STUDS. STUDS OF THE LENGTH SPECIFIED ON THE PLANS MUST BE PROVIDED. THE MAXIMUM SPACING SHALL BE 2'-0".

EXCEPT AT THE INTERIOR SUPPORTS OF CONTINUOUS BEAMS WHERE THE COVER PLATE IS IN CONTACT WITH BEARING PLATE, THE CONTRACTOR MAY, AT HIS OPTION, SUBSTITUTE FOR THE COVER PLATES DESIGNATED ON THE PLANS COVER PLATES OF THE EQUIVALENT AREA PROVIDED THESE PLATES ARE AT LEAST 5/16" IN THICKNESS AND DO NOT EXCEED A WIDTH EQUAL TO THE FLANGE WIDTH LESS 2" OR A THICKNESS EQUAL TO 2 TIMES THE FLANGE THICKNESS. THE SIZE OF FILLET WELDS SHALL CONFORM TO THE REQUIREMENTS OF THE CURRENT ANSI/AASHTO/AWS "BRIDGE WELDING CODE". ELECTROSLAG WELDING WILL NOT BE PERMITTED.

WITH THE SOLE EXCEPTION OF EDGES AT SURFACES WHICH BEAR ON OTHER SURFACES, ALL SHARP EDGES AND ENDS OF SHAPES AND PLATES SHALL BE SLIGHTLY ROUNDED BY SUITABLE MEANS TO A RADIUS OF APPROXIMATELY 1/16 INCH OR EQUIVALENT FLAT SURFACE AT A SUITABLE ANGLE PRIOR TO PAINTING, GALVANIZING, OR METALLIZING.

## HANDRAILS AND POSTS:

METAL STANDARDS AND FACES OF THE CONCRETE END POSTS FOR THE METAL RAIL SHALL BE SET NORMAL TO THE GRADE OF THE CURB, UNLESS OTHERWISE SHOWN ON PLANS. THE METAL RAIL AND TOPS OF CONCRETE POSTS USED WITH THE ALUMINUM RAIL SHALL BE BUILT PARALLEL TO THE GRADE OF THE CURB.

METAL HANDRAILS SHALL BE IN ACCORDANCE WITH THE PLANS. RAILS SHALL BE AS MANUFACTURED FOR BRIDGE RAILING. CASTINGS SHALL BE OF A UNIFORM APPEARANCE. FINS AND OTHER DEFORMATIONS RESULTING FROM CASTING OR OTHERWISE SHALL BE REMOVED IN A MANNER SO THAT A UNIFORM COLORING OF THE COMPLETED CASTING SHALL BE OBTAINED. CASTINGS WITH DISCOLORATIONS OR OF NON-UNIFORM COLORING WILL NOT BE ACCEPTED. CERTIFIED MILL REPORTS ARE REQUIRED FOR METAL RAILS AND POSTS.

## SPECIAL NOTES:

GENERALLY, IN CASE OF DISCREPANCY, THIS STANDARD SHEET OF NOTES SHALL GOVERN OVER THE SPECIFICATIONS, BUT THE REMAINDER OF THE PLANS SHALL GOVERN OVER NOTES HEREON, AND SPECIAL PROVISIONS SHALL GOVERN OVER ALL. SEE SPECIFICATIONS ARTICLE 105-4.

ENGLISH

JANUARY, 1990

GEOTECHNICAL ENGINEER

NORTH CAROLINA PROFESSIONAL SEAL 29869 ENGINEER SHANE C. CLARK

SIGNATURE 3/14/14 DATE

ENGINEER

SIGNATURE DATE

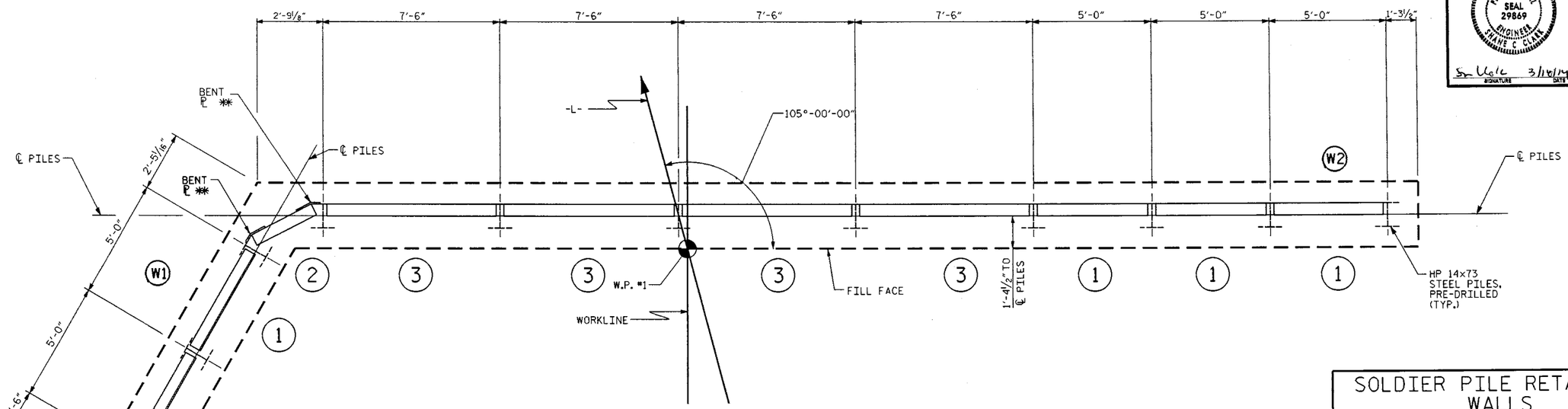


## PLAN OF WALL LAYOUT

** FOR BENT PLATE DIMENSIONS AND DETAILS, SEE BRIDGE PLANS, END BENT DETAILS SHEETS

| SOLDIER PILE RETAINING WALLS | |
|---|---|
| END BENT NO. 1 | 625 SF |
| END BENT NO. 2 | 350 SF |

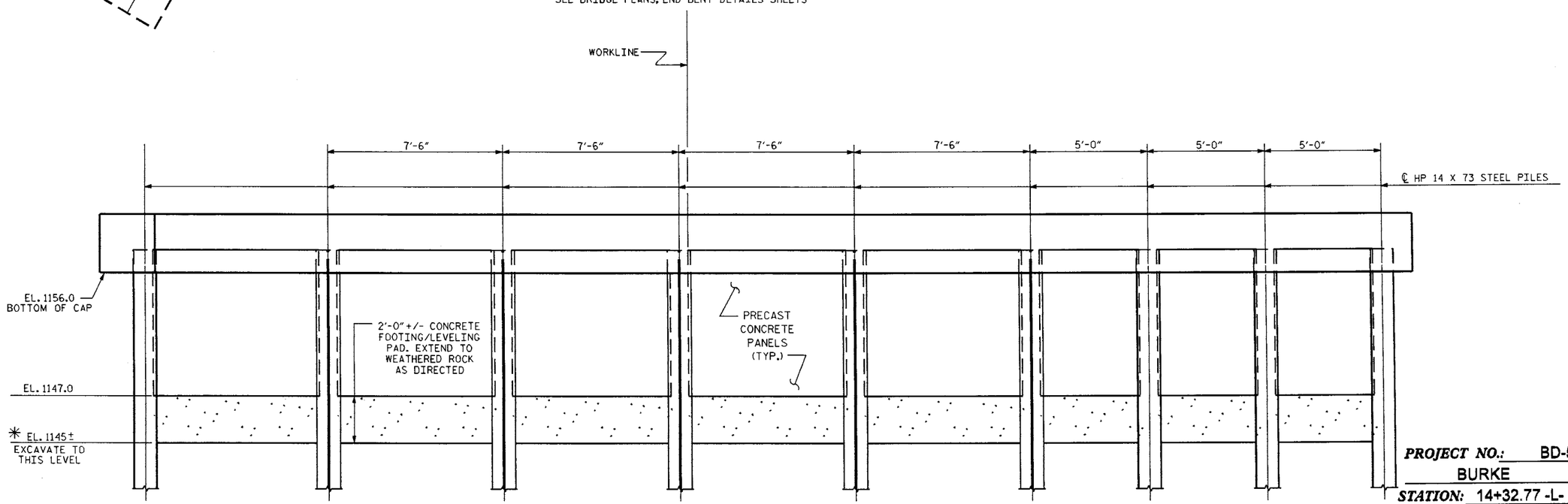


* EXTEND INTO WEATHERED ROCK AS DIRECTED BY THE ENGINEER

## ELEVATION

PROJECT NO.: BD-5113H

BURKE COUNTY

STATION: 14+32.77 -L-

SHEET 1 OF 4

**GEOTECHNICAL ENGINEERING UNIT**

☐ EASTERN REGIONAL OFFICE

☒ WESTERN REGIONAL OFFICE

☐ CONTRACT OFFICE

STATE OF NORTH CAROLINA
DEPARTMENT OF TRANSPORTATION
RALEIGH

# END BENT NO. 1 ABUTMENT WALL DETAILS

| REVISIONS | | | | | | SHEET NO. |
|---|---|---|---|---|---|---|
| NO. | BY | DATE | NO. | BY | DATE | |
| 1 | | | 3 | | | TOTAL SHEETS |
| 2 | | | 4 | | | |

| | |
|---|---|
| PREPARED BY: EJS | DATE: 9/13 |
| REVIEWED BY: SCC | DATE: 3/14 |

| GEOTECHNICAL ENGINEER | ENGINEER |
|---|---|
| NORTH CAROLINA PROFESSIONAL SEAL 29869 ENGINEER SHANE C. CLARK — SIGNATURE 3/18/14 DATE | SIGNATURE DATE |

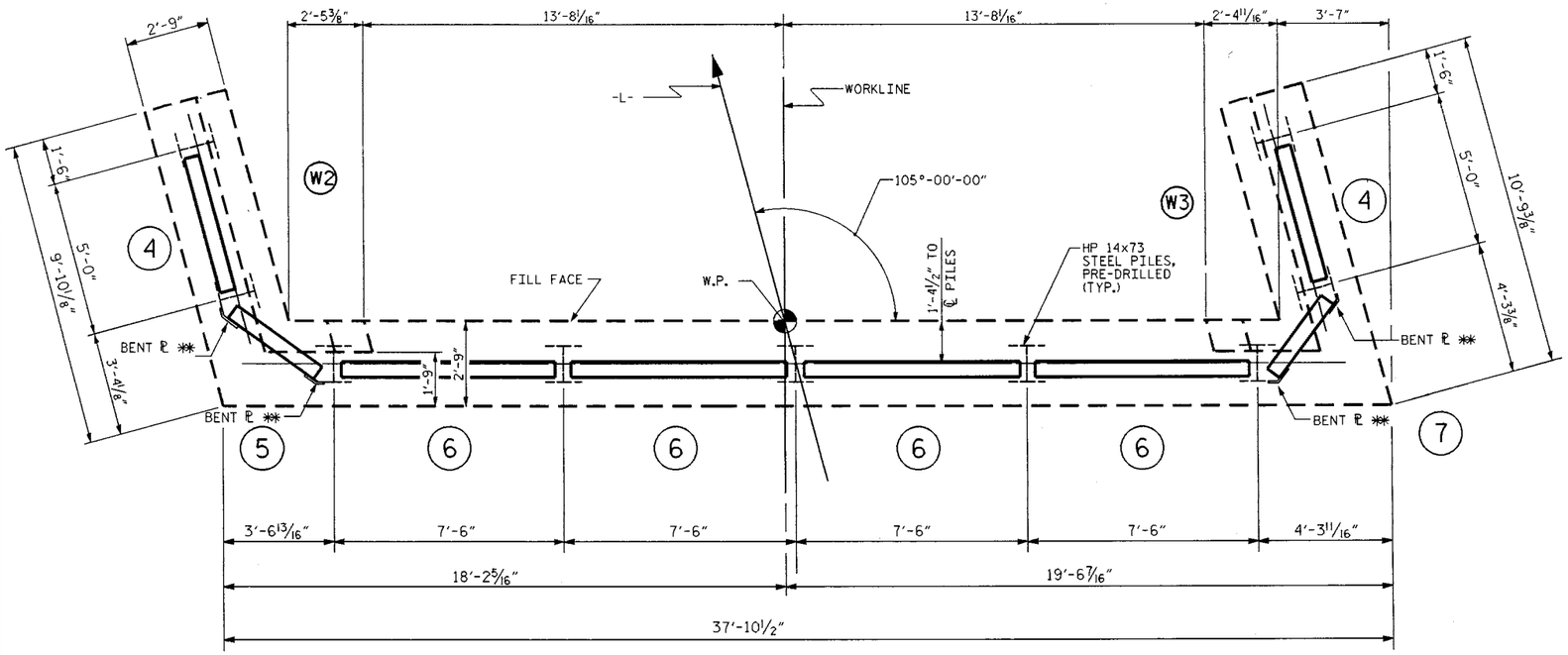


## PLAN

** FOR BENT PLATE DIMENSIONS AND DETAILS, SEE BRIDGE PLANS, END BENT DETAILS SHEETS

NOTE: NUMBER IN CIRCLE DENOTES PANEL TYPE AND LOCATION

ALL PILES ARE HP 14 X 73

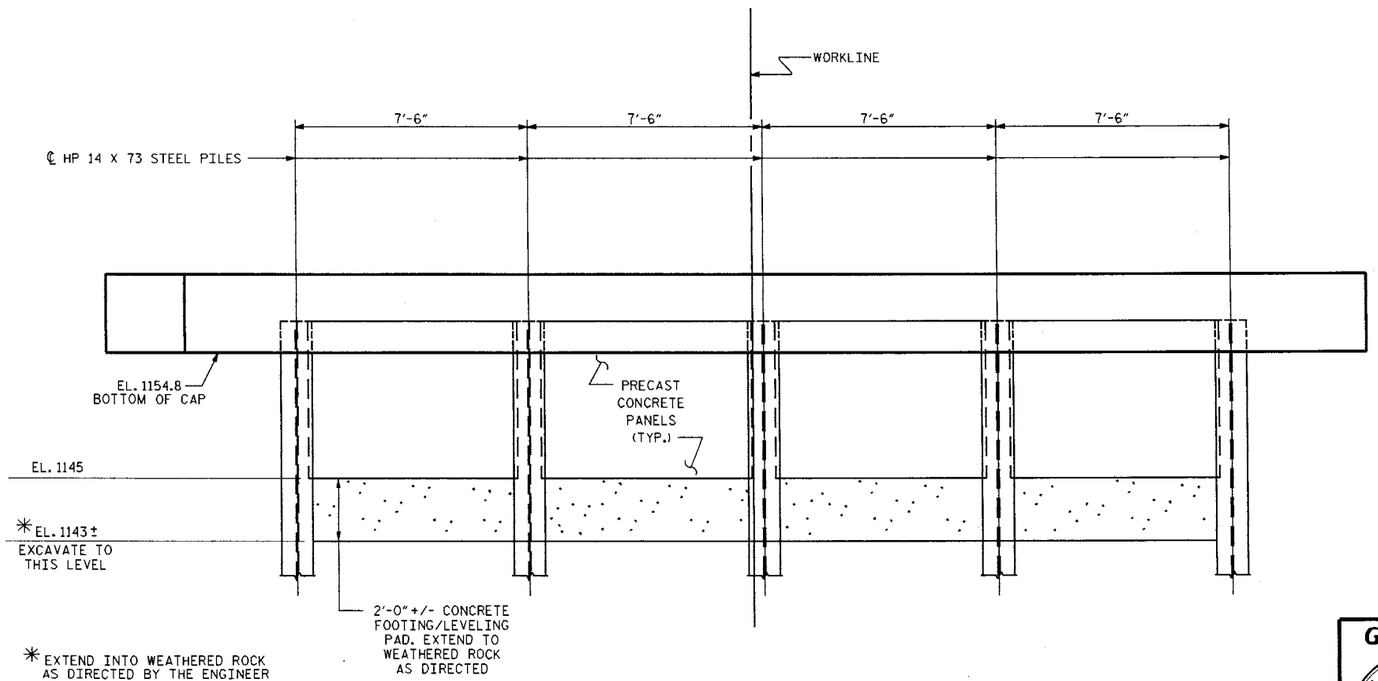


## ELEVATION

| | |
|---|---|
| PREPARED BY: EJS | DATE: 9/13 |
| REVIEWED BY: SCC | DATE: 11/13 |

**GEOTECHNICAL ENGINEERING UNIT**

☐ EASTERN REGIONAL OFFICE
☒ WESTERN REGIONAL OFFICE
☐ CONTRACT OFFICE

STATE OF NORTH CAROLINA
DEPARTMENT OF TRANSPORTATION
RALEIGH

PROJECT NO.: BD-5113H
BURKE COUNTY
STATION: 14+32.77 -L-

SHEET 2 OF 4

# END BENT NO. 2 ABUTMENT WALL DETAILS

| REVISIONS | | | | | | | SHEET NO. |
|---|---|---|---|---|---|---|---|
| NO. | BY | DATE | NO. | BY | DATE | | |
| 1 | | | 3 | | | | TOTAL SHEETS |
| 2 | | | 4 | | | | |

| GEOTECHNICAL ENGINEER | ENGINEER |
|---|---|
| NORTH CAROLINA PROFESSIONAL SEAL 29869 ENGINEER SHANE C. CLARK — SIGNATURE 7/10/14 DATE | SIGNATURE DATE |

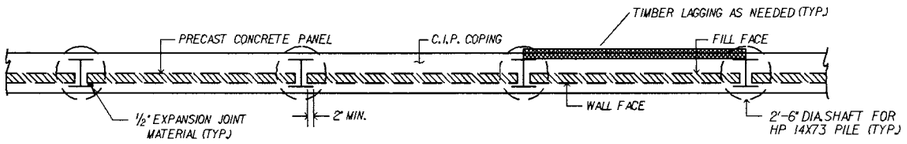


PLAN VIEW
N.T.S.

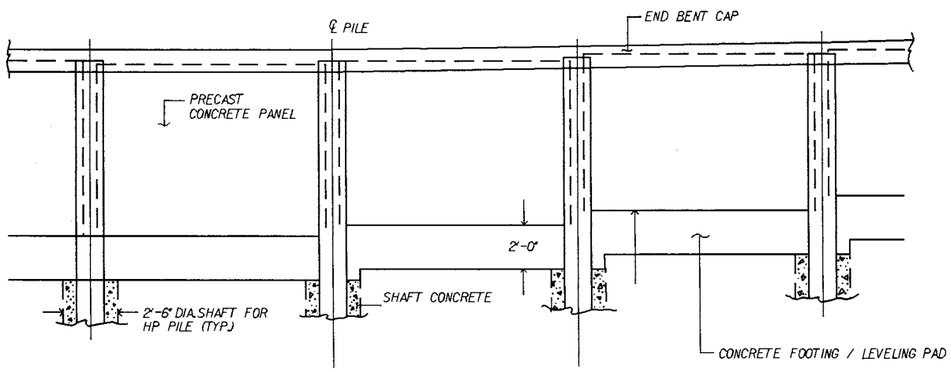


ELEVATION VIEW
N.T.S.

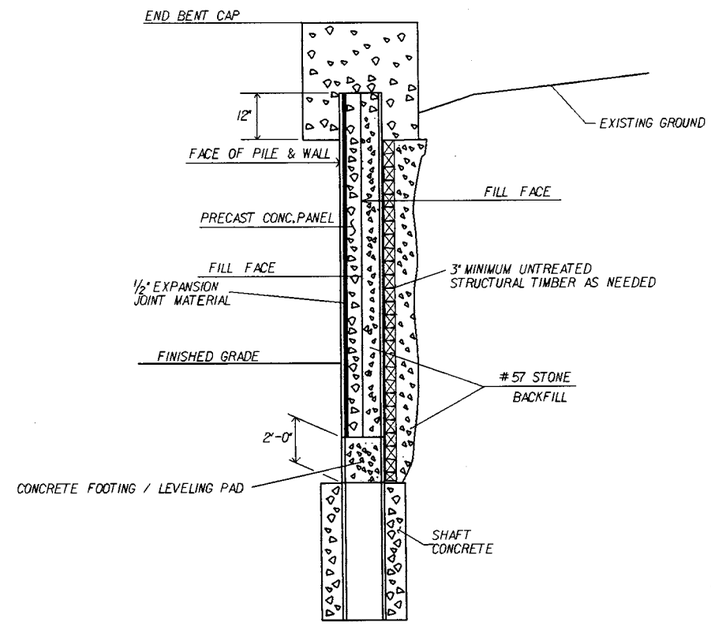


TYPICAL SECTION
N.T.S.

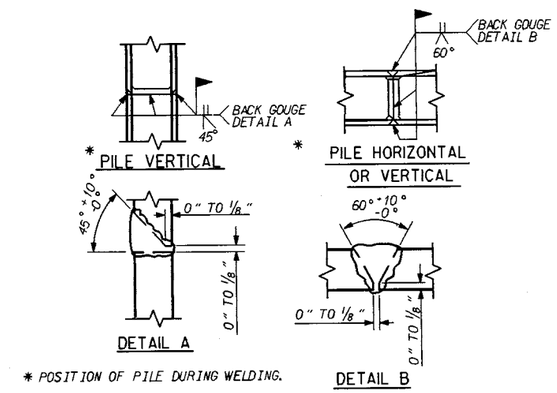


PILE SPLICE DETAILS
N.T.S.

NOTES:

1. PILES SHALL BE INSTALLED TO THE CUT OFF ELEVATIONS AND LENGTHS SHOWN ON THE PLANS BY PRE-AUGERING OR DRILLING. THE EXCAVATED HOLE SHALL BE 2'-0" MINIMUM DIAMETER AND BACKFILLED WITH CONCRETE TO THE BOTTOM OF THE CUSHIONING MATERIAL.
2. PILES SHALL BE ASTM GRADE 50 STEEL WITH THE ADDITION OF 0.2% MINIMUM COPPER.
3. PILES SHALL BE HOT DIP GALVANIZED AS DIRECTED TO 1'-6" BELOW FINISHED GRADE.
4. SPLICING OF PILES IS ONLY ALLOWED IN THE PORTION OF THE PILE PERMANENTLY BELOW GROUND.
5. THE TOP OF THE INSTALLED PILES SHALL BE WITHIN 2" OF THEIR PLAN LOCATION IN ANY DIRECTION.
6. CONCRETE PANELS SHALL HAVE A MINIMUM BEARING DISTANCE OF 2" ON THE PILE FLANGE. 2" THICK EXPANSION JOINT MATERIAL SHALL BE PLACED BETWEEN THE CONCRETE PANELS AND PILE FLANGES FOR THE WIDTH OF THE BEARING SURFACE.
7. THE CONCRETE PANELS SHALL HAVE A PLAIN GRAY COLOR FACE. SEE SPECIAL PROVISIONS FOR COLOR, TEXTURE AND AGGREGATE REQUIREMENTS.
8. EXCAVATION TO INSTALL PANELS AND TIMBER LAGGING SHALL BE LIMITED TO 6" BEHIND THE PILES. ANY OVEREXCAVATION SHALL BE BACKFILLED WITH NO.57 STONE.
9. CONCRETE PANELS SHALL BE HELD SECURELY AGAINST PILES UNTIL BACKFILL IS PLACED.
10. BOTH CUSHIONING MATERIAL AND BACKFILL MATERIAL BEHIND THE PANELS SHALL BE NO.57 STONE AND COMPACTED AS REQUIRED BY THE ENGINEER. THE STONE SHALL BE RODDED AND SPREAD IN ORDER TO FILL ALL VOIDS AND INSURE MAXIMUM DENSITY. FLUSHING THE STONE WITH WATER TO AID COMPACTION WILL NOT BE ALLOWED.
11. BACKFILLING SHALL BE COMPLETED PRIOR TO FORMING THE CAP.
12. THE CONTRACTOR SHALL VERIFY THE LOCATION OF DRAINAGE STRUCTURES AND UTILITIES PRIOR TO INSTALLING PILES.

15. EXCAVATION SEQUENCE:
    - DRILL MINIMUM 2'-6" DIA. SHAFTS FOR 14" PILES FROM NATURAL GROUND, INSTALL PILES AND BACKFILL WITH CONCRETE TO THE TOP OF SHAFT ELEVATIONS BEFORE EXCAVATING TO INSTALL PANELS OR TIMBER LAGGING.
    - EXCAVATION TO INSTALL THE PANELS OR LAGGING SHALL BE VERTICAL. HAVE A MAXIMUM LIFT HEIGHT OF 4'-0" AND BE LIMITED IN EXTENT TO ONLY WHAT IS NECESSARY.
    - TIMBER LAGGING IS NEEDED ONLY TO MEET OSHA REQUIREMENTS FOR SAFE EXCAVATION HEIGHTS. IF CUT IS LESS THAN 4'-0" HIGH, LAGGING IS NOT REQUIRED.
    - THE LAGGING SHALL HAVE A MINIMUM BEARING DISTANCE OF 3" ON THE PILE FLANGE.
    - UNTREATED STRUCTURAL TIMBERS SHALL BE A MINIMUM OF 3" THICK AND SHALL CONFORM TO THE APPLICABLE PARTS OF SECTIONS 445 AND 1082 OF THE STANDARD SPECIFICATIONS.
    - PLACE BACKFILL BEHIND THE LAGGING IMMEDIATELY AFTER INSTALLATION.
    - WHERE PRACTICAL, THE TOP FEW PIECES OF LAGGING SHALL BE REMOVED PRIOR TO BACKFILLING BEHIND PANELS. ALL OTHER LAGGING SHALL BE LEFT IN PLACE.
    - THE CONTRACTOR MAY ELECT TO USE AN ALTERNATE METHOD OF PROVIDING A SAFE EXCAVATION, HOWEVER, THE ALTERNATE METHOD MUST BE SUBMITTED TO THE ENGINEER FOR REVIEW AND APPROVAL.

16. IF NECESSARY, SPECIAL MEASURES SHALL BE TAKEN TO INSURE THE STABILITY OF THE SHAFT SUCH AS INSTALLING TEMPORARY CASINGS PRIOR TO DRILLING, INSTALLING THE PILE AND PLACING CONCRETE IMMEDIATELY AFTER A SHAFT IS EXCAVATED BEFORE CAVING OCCURS, INSTALLING WELL POINTS, OR OTHER MEASURES. IF CAVING OCCURS, THE SHAFT EXCAVATION OPERATION SHALL BE HALTED UNTIL SPECIAL MEASURES ARE IMPLEMENTED.

17. SHAFT EXCAVATION MAY REQUIRE SPECIALTY DRILLING EQUIPMENT TO PENETRATE INTO WEATHERED ROCK AND FRESH ROCK.

18. THE CONTRACTOR'S ATTENTION IS CALLED TO THE FACT THAT THE PRECAST CONCRETE PANELS ARE TO BE PICKED UP FROM THE END WITH THE FILL FACE FACING UP. THEN THE PANELS CAN BE LOWERED INTO PLACE BETWEEN THE PILES.

| | |
|---|---|
| PREPARED BY: EJS | DATE: 9/13 |
| REVIEWED BY: EJS | DATE: 11/13 |

**PROJECT NO.:** BD-5113H
BURKE **COUNTY**
**STATION:** 14+32.77 -L-
SHEET 3 OF 4

**GEOTECHNICAL ENGINEERING UNIT**

☐ EASTERN REGIONAL OFFICE
☒ WESTERN REGIONAL OFFICE
☐ CONTRACT OFFICE

STATE OF NORTH CAROLINA
DEPARTMENT OF TRANSPORTATION
RALEIGH

END BENT
ABUTMENT WALL
DETAILS

| REVISIONS | | | | | | SHEET NO. |
|---|---|---|---|---|---|---|
| NO. | BY | DATE | NO. | BY | DATE | |
| 1 | | | 3 | | | TOTAL SHEETS |
| 2 | | | 4 | | | |

| GEOTECHNICAL ENGINEER | ENGINEER |
|---|---|
| NORTH CAROLINA PROFESSIONAL SEAL 29869 ENGINEER SHANE C. CLARK — SIGNATURE 3/18/13 DATE | SIGNATURE DATE |

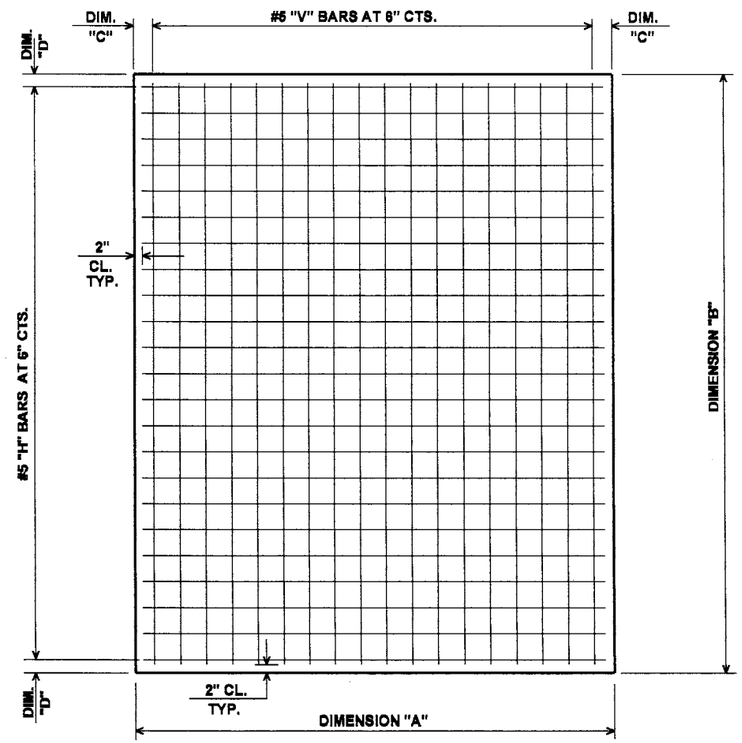


## PRECAST PANEL DETAILS

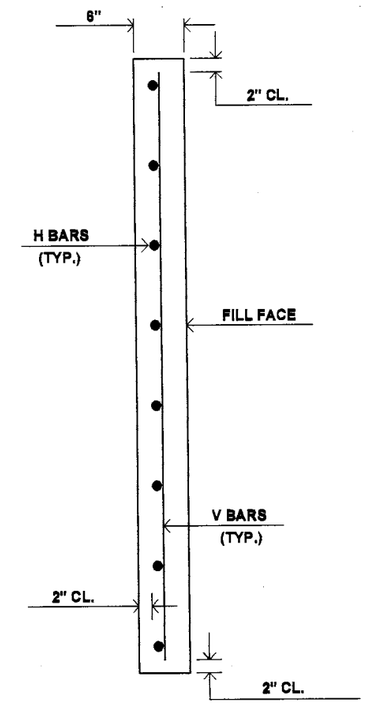


## SECTION THRU PANELS

| | PANEL | QUANTITY | DIM. "A" | DIM. "B" | DIM. "C" | DIM. "D" | "V" BARS | "H" BARS |
|---|---|---|---|---|---|---|---|---|
| END BT. 1 | 1 | 5 | 4'-3" | 10'-0" | 4½" | 3" | 8 @ 6" CTS. | 20 @ 6" CTS. |
| | 2 | 1 | 2'-10" | 10'-0" | 5" | 3" | 5 @ 6" CTS. | 20 @ 6" CTS. |
| | 3 | 4 | 6'-9" | 10'-0" | 4½" | 3" | 13 @ 6" CTS. | 20 @ 6" CTS. |
| END BT. 2 | 4 | 2 | 4'-3" | 10'-9" | 4½" | 4½" | 8 @ 6" CTS. | 21 @ 6" CTS. |
| | 5 | 1 | 3'-4" | 10'-9" | 5" | 4½" | 6 @ 6" CTS. | 21 @ 6" CTS. |
| | 6 | 4 | 6'-9" | 10'-9" | 4½" | 4½" | 13 @ 6" CTS. | 21 @ 6" CTS. |
| | 7 | 1 | 2'-11" | 10'-9" | 2½" | 4½" | 6 @ 6" CTS. | 21 @ 6" CTS. |

PROJECT NO.: BD-5113H
BURKE COUNTY
STATION: 14+32.77 -L-
SHEET 4 OF 4

| | |
|---|---|
| PREPARED BY: EJS | DATE: 10/13 |
| REVIEWED BY: SCC | DATE: 11/13 |

GEOTECHNICAL ENGINEERING UNIT
☐ EASTERN REGIONAL OFFICE
☒ WESTERN REGIONAL OFFICE
☐ CONTRACT OFFICE
STATE OF NORTH CAROLINA
DEPARTMENT OF TRANSPORTATION
RALEIGH

PRECAST PANEL DETAILS

| REVISIONS | | | | | | SHEET NO. |
|---|---|---|---|---|---|---|
| NO. | BY | DATE | NO. | BY | DATE | |
| 1 | | | 3 | | | TOTAL SHEETS |
| 2 | | | 4 | | | |