TIP NO: BP-5500Z

CONTRACT:

VICINITY MAP

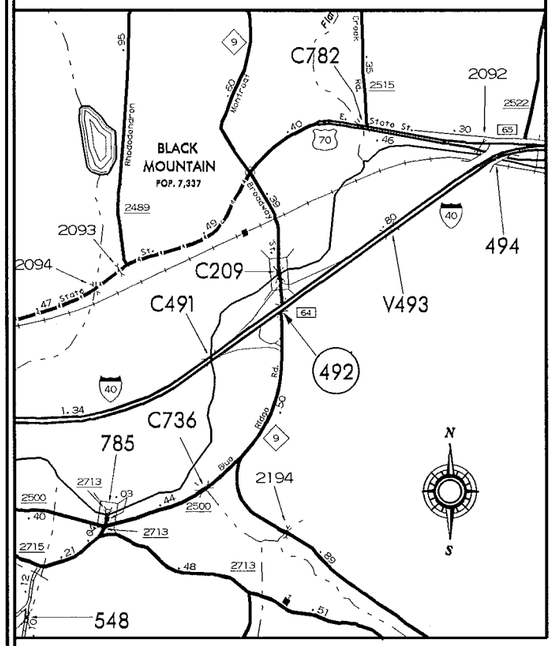

STATE OF NORTH CAROLINA

DIVISION OF HIGHWAYS

BUNCOMBE COUNTY

STATE	STATE PROJECT REFERENCE NO.	SHEET NO.	TOTAL SHEETS
N.C.	BP-5500Z	1	

STATE PROJ. NO.	F.A. PROJ. NO.	DESCRIPTION
50070.1.1		P.E.
50070.3.FS26		CONST.

LOCATION: BRIDGE #492 ON I40 OVER NC9

TYPE OF WORK: BRIDGE PRESERVATION WITH LATEX MODIFIED CONCRETE OVERLAY – VERY EARLY STRENGTH

STATE OF NORTH CAROLINA DEPARTMENT OF TRANSPORTATION

DESIGN DATA

BUNCOMBE
BRIDGE #492 ADT 2010 = 29,000

PROJECT LENGTH

BUNCOMBE
BRIDGE #492 = 0.034 MILE

Prepared in the Office of:

STRUCTURES MANAGEMENT UNIT

NORTH CAROLINA DEPARTMENT OF TRANSPORTATION

2012 STANDARD SPECIFICATIONS

LETTING DATE:

MAY 21, 2014

TIMOTHY M. SHERRILL
PROJECT ENGINEER

NORTH CAROLINA PROFESSIONAL SEAL 035635 ENGINEER DAVID N. SNOKE
3/19/14

DAVID N. SNOKE
PROJECT DESIGN ENGINEER

STANDARD NOTES

DESIGN DATA:

SPECIFICATIONS	A.A.S.H.T.O. (CURRENT)
LIVE LOAD	SEE PLANS
IMPACT ALLOWANCE	SEE A.A.S.H.T.O.
STRESS IN EXTREME FIBER OF	
STRUCTURAL STEEL - AASHTO M270 GRADE 36	20,000 LBS. PER SQ. IN.
- AASHTO M270 GRADE 50W	27,000 LBS. PER SQ. IN.
- AASHTO M270 GRADE 50	27,000 LBS. PER SQ. IN.
REINFORCING STEEL IN TENSION	
GRADE 60	24,000 LBS. PER SQ. IN.
CONCRETE IN COMPRESSION	1,200 LBS. PER SQ. IN.
CONCRETE IN SHEAR	SEE A.A.S.H.T.O.
STRUCTURAL TIMBER - TREATED OR	
UNTREATED - EXTREME FIBER STRESS	1,800 LBS. PER SQ. IN.
COMPRESSION PERPENDICULAR TO GRAIN OF TIMBER	375 LBS. PER SQ. IN.
EQUIVALENT FLUID PRESSURE OF EARTH	30 LBS. PER CU. FT. (MINIMUM)

MATERIAL AND WORKMANSHIP:

EXCEPT AS MAY OTHERWISE BE SPECIFIED ON PLANS OR IN THE SPECIAL PROVISIONS, ALL MATERIAL AND WORKMANSHIP SHALL BE IN ACCORDANCE WITH THE 2012 "STANDARD SPECIFICATIONS FOR ROADS AND STRUCTURES" OF THE N. C. DEPARTMENT OF TRANSPORTATION.

STEEL SHEET PILING FOR PERMANENT OR TEMPORARY APPLICATIONS SHALL BE HOT ROLLED.

CONCRETE:

UNLESS OTHERWISE REQUIRED ON PLANS, CLASS A CONCRETE SHALL BE USED FOR ALL PORTIONS OF ALL STRUCTURES WITH THE EXCEPTION THAT: CLASS AA CONCRETE SHALL BE USED IN BRIDGE SUPERSTRUCTURES, ABUTMENT BACKWALLS, AND APPROACH SLABS; AND CLASS B CONCRETE SHALL BE USED FOR SLOPE PROTECTION AND RIP RAP.

CONCRETE CHAMFERS:

UNLESS OTHERWISE NOTED ON THE PLANS, ALL EXPOSED CORNERS ON STRUCTURES SHALL BE CHAMFERED 3/4" WITH THE FOLLOWING EXCEPTIONS: TOP CORNERS OF CURBS MAY BE ROUNDED TO 1-1/2" RADIUS WHICH IS BUILT INTO CURB FORMS; CORNERS OF TRANSVERSE FLOOR EXPANSION JOINTS SHALL BE ROUNDED WITH A 1/4" FINISHING TOOL UNLESS OTHERWISE REQUIRED ON PLANS; AND CORNERS OF EXPANSION JOINTS IN THE ROADWAY FACES AND TOPS OF CURBS AND SIDEWALKS SHALL BE ROUNDED TO A 1/4" RADIUS WITH A FINISHING STONE OR TOOL UNLESS OTHERWISE REQUIRED ON PLANS.

DOWELS:

DOWELS WHEN INDICATED ON PLANS AS FOR CULVERT EXTENSIONS, SHALL BE EMBEDDED AT LEAST 12" INTO THE OLD CONCRETE AND GROUTED INTO PLACE WITH 1:2 CEMENT MORTAR.

ALLOWANCE FOR DEAD LOAD DEFLECTION, SETTLEMENT, ETC. IN CASTING SUPERSTRUCTURES:

BRIDGES SHALL BE BUILT ON THE GRADE OR VERTICAL CURVE SHOWN ON PLANS. SLABS, CURBS AND PARAPETS SHALL CONFORM TO THE GRADE OR CURVE.

ALL DIMENSIONS WHICH ARE GIVEN IN SECTION AND ARE AFFECTED BY DEAD LOAD DEFLECTIONS ARE DIMENSIONS AT CENTER LINE OF BEARING UNLESS OTHERWISE NOTED ON PLANS. IN SETTING FORMS FOR STEEL BEAM BRIDGES AND PRESTRESSED CONCRETE GIRDER BRIDGES, ADJUSTMENTS SHALL BE MADE DUE TO THE DEAD LOAD DEFLECTIONS FOR THE ELEVATIONS SHOWN. WHERE BLOCKS ARE SHOWN OVER BEAMS FOR BUILDING UP TO THE SLAB, THE VERTICAL DIMENSIONS OF THE BLOCKS SHALL BE ADJUSTED BETWEEN BEARINGS TO COMPENSATE FOR DEAD LOAD DEFLECTIONS, VERTICAL CURVE ORDINATE, AND ACTUAL BEAM CAMBER. WHERE BOTTOM OF SLAB IS IN LINE WITH BOTTOM OF TOP FLANGES, DEPTH OF SLAB BETWEEN BEARINGS SHALL BE ADJUSTED TO COMPENSATE FOR DEAD LOAD DEFLECTION, VERTICAL CURVE ORDINATE, AND ACTUAL BEAM CAMBER.

IN SETTING FALSEWORK AND FORMS FOR REINFORCED CONCRETE SPANS, AN ALLOWANCE SHALL BE MADE FOR DEAD LOAD DEFLECTIONS, SETTLEMENT OF FALSEWORK, AND PERMANENT CAMBER WHICH SHALL BE PROVIDED FOR IN ADDITION TO THE ELEVATIONS SHOWN. AFTER REMOVAL OF THE FALSEWORK, THE FINISHED STRUCTURES SHALL CONFORM TO THE PROFILE AND ELEVATIONS SHOWN ON THE PLANS AND CONSTRUCTION ELEVATIONS FURNISHED BY THE ENGINEER.

DETAILED DRAWINGS FOR FALSEWORK OR FORMS FOR BRIDGE SUPERSTRUCTURE AND ANY STRUCTURE OR PARTS OF A STRUCTURE AS NOTED ON THE PLANS SHALL BE SUBMITTED TO THE ENGINEER FOR APPROVAL BEFORE CONSTRUCTION OF THE FALSEWORK OR FORMS IS STARTED.

REINFORCING STEEL:

ALL REINFORCING STEEL SHALL BE DEFORMED. DIMENSIONS RELATIVE TO PLACEMENT OF REINFORCING ARE TO CENTERS OF BARS UNLESS OTHERWISE INDICATED IN THE PLANS. DIMENSIONS ON BAR DETAILS ARE TO CENTERS OF BARS OR ARE OUT TO OUT AS INDICATED ON PLANS.

WIRE BAR SUPPORTS SHALL BE PROVIDED FOR REINFORCING STEEL WHERE INDICATED ON THE PLANS. WHEN BAR SUPPORT PIECES ARE PLACED IN CONTINUOUS LINES, THEY SHALL BE SO PLACED THAT THE ENDS OF THE SUPPORTING WIRES SHALL BE LAPPED TO LOCK LEGS ON ADJOINING PIECES.

STRUCTURAL STEEL:

AT THE CONTRACTOR'S OPTION, HE MAY SUBSTITUTE 7/8" Ø SHEAR STUDS FOR THE 3/4" Ø STUDS SPECIFIED ON THE PLANS. THIS SUBSTITUTION SHALL BE MADE AT THE RATE OF 3 - 7/8" Ø STUDS FOR 4 - 3/4" Ø STUDS, AND STUD SPACING CHANGES SHALL BE MADE AS NECESSARY TO PROVIDE THE SAME EQUIVALENT NUMBER OF 7/8" Ø STUDS ALONG THE BEAM AS SHOWN FOR 3/4" Ø STUDS BASED ON THE RATIO OF 3 - 7/8" Ø STUDS FOR 4 - 3/4" Ø STUDS. STUDS OF THE LENGTH SPECIFIED ON THE PLANS MUST BE PROVIDED. THE MAXIMUM SPACING SHALL BE 2'-0".

EXCEPT AT THE INTERIOR SUPPORTS OF CONTINUOUS BEAMS WHERE THE COVER PLATE IS IN CONTACT WITH BEARING PLATE, THE CONTRACTOR MAY, AT HIS OPTION, SUBSTITUTE FOR THE COVER PLATES DESIGNATED ON THE PLANS COVER PLATES OF THE EQUIVALENT AREA PROVIDED THESE PLATES ARE AT LEAST 5/16" IN THICKNESS AND DO NOT EXCEED A WIDTH EQUAL TO THE FLANGE WIDTH LESS 2" OR A THICKNESS EQUAL TO 2 TIMES THE FLANGE THICKNESS. THE SIZE OF FILLET WELDS SHALL CONFORM TO THE REQUIREMENTS OF THE CURRENT ANSI/AASHTO/AWS "BRIDGE WELDING CODE". ELECTROSLAG WELDING WILL NOT BE PERMITTED.

WITH THE SOLE EXCEPTION OF EDGES AT SURFACES WHICH BEAR ON OTHER SURFACES, ALL SHARP EDGES AND ENDS OF SHAPES AND PLATES SHALL BE SLIGHTLY ROUNDED BY SUITABLE MEANS TO A RADIUS OF APPROXIMATELY 1/16 INCH OR EQUIVALENT FLAT SURFACE AT A SUITABLE ANGLE PRIOR TO PAINTING, GALVANIZING, OR METALLIZING.

HANDRAILS AND POSTS:

METAL STANDARDS AND FACES OF THE CONCRETE END POSTS FOR THE METAL RAIL SHALL BE SET NORMAL TO THE GRADE OF THE CURB, UNLESS OTHERWISE SHOWN ON PLANS. THE METAL RAIL AND TOPS OF CONCRETE POSTS USED WITH THE ALUMINUM RAIL SHALL BE BUILT PARALLEL TO THE GRADE OF THE CURB.

METAL HANDRAILS SHALL BE IN ACCORDANCE WITH THE PLANS. RAILS SHALL BE AS MANUFACTURED FOR BRIDGE RAILING. CASTINGS SHALL BE OF A UNIFORM APPEARANCE. FINS AND OTHER DEFORMATIONS RESULTING FROM CASTING OR OTHERWISE SHALL BE REMOVED IN A MANNER SO THAT A UNIFORM COLORING OF THE COMPLETED CASTING SHALL BE OBTAINED. CASTINGS WITH DISCOLORATIONS OR OF NON-UNIFORM COLORING WILL NOT BE ACCEPTED. CERTIFIED MILL REPORTS ARE REQUIRED FOR METAL RAILS AND POSTS.

SPECIAL NOTES:

GENERALLY, IN CASE OF DISCREPANCY, THIS STANDARD SHEET OF NOTES SHALL GOVERN OVER THE SPECIFICATIONS, BUT THE REMAINDER OF THE PLANS SHALL GOVERN OVER NOTES HEREON, AND SPECIAL PROVISIONS SHALL GOVERN OVER ALL. SEE SPECIFICATIONS ARTICLE 105-4.

ENGLISH

JANUARY, 1990

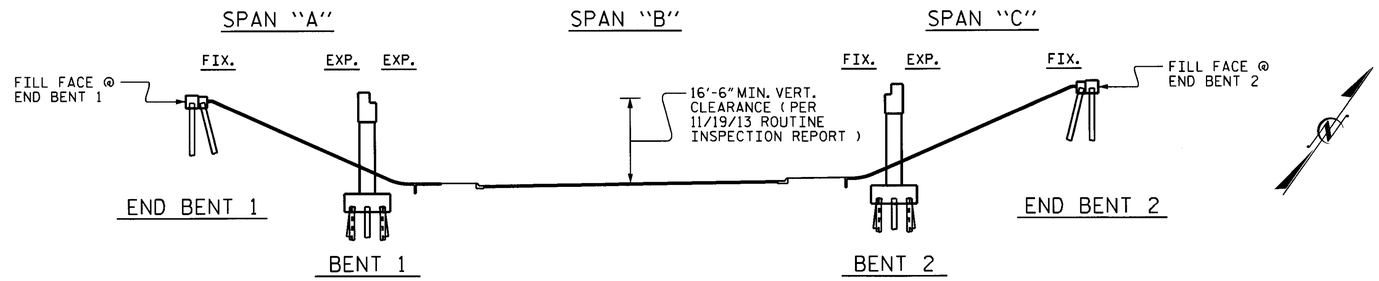

SECTION ALONG ℄ MEDIAN

(SECTIONS TAKEN AT RIGHT ANGLES)

SCOPE OF WORK:

PARTIALLY REMOVE BRIDGE DECK CONCRETE USING SCARIFICATION AND HYDRO-DEMOLITION METHODS.

OVERLAY PREPARED BRIDGE DECK WITH LATEX MODIFIED CONCRETE - VERY EARLY STRENGTH.

DEMOLISH EXISTING BRIDGE DECK JOINTS.

RECONSTRUCT BRIDGE DECK JOINTS AND INSTALL NEW FOAM JOINT SEALS AND SYTHETIC RUBBER EXPANSION JOINT SEALS.

MILL AND PAVE ASPHALT APPROACHES.

GROOVE CONCRETE BRIDGE DECK.

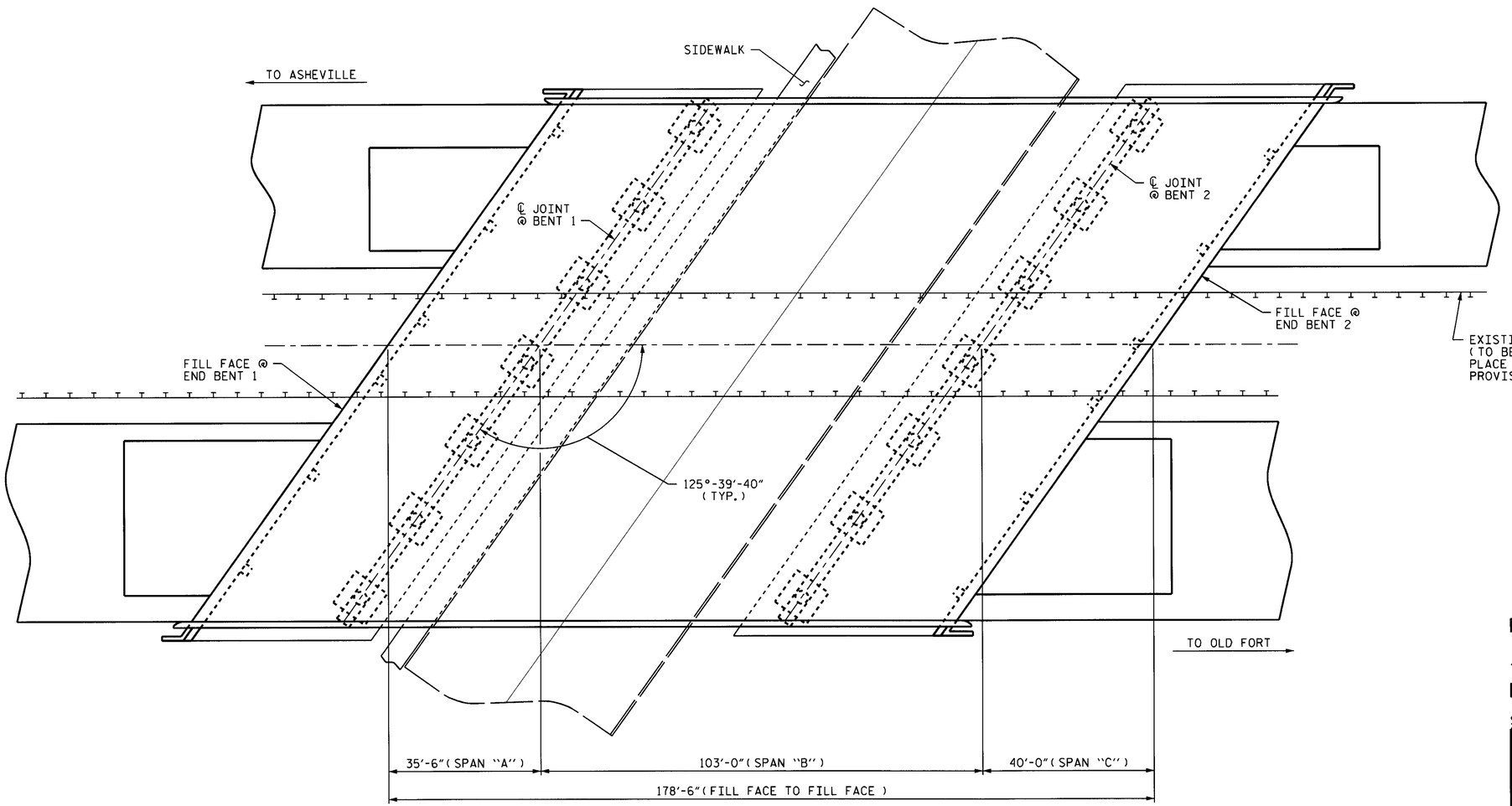

PLAN

(PILES NOT SHOWN FOR CLARITY)

PROJECT NO. BP-5500Z

BUNCOMBE COUNTY

BRIDGE NO. 492

SHEET 1 OF 2

STATE OF NORTH CAROLINA
DEPARTMENT OF TRANSPORTATION
RALEIGH

GENERAL DRAWING

BRIDGE #492 ON I40 OVER NC9

NORTH CAROLINA PROFESSIONAL SEAL 035635 ENGINEER DAVID N. SNOKE

3/19/14

REVISIONS						SHEET NO.
NO.	BY:	DATE:	NO.	BY:	DATE:	S-1
1			3			TOTAL SHEETS
2			4			8

DRAWN BY : P.C. BREWER DATE : 2/14
CHECKED BY : D.N. SNOKE DATE : 3/14
DESIGN ENGINEER OF RECORD: - DATE : -

19-MAR-2014 13:18
S:\PRS\POC\Squad C\Preservation_Projects\BP-5500\Z\100492_SD_GD.dgn
pbrewer

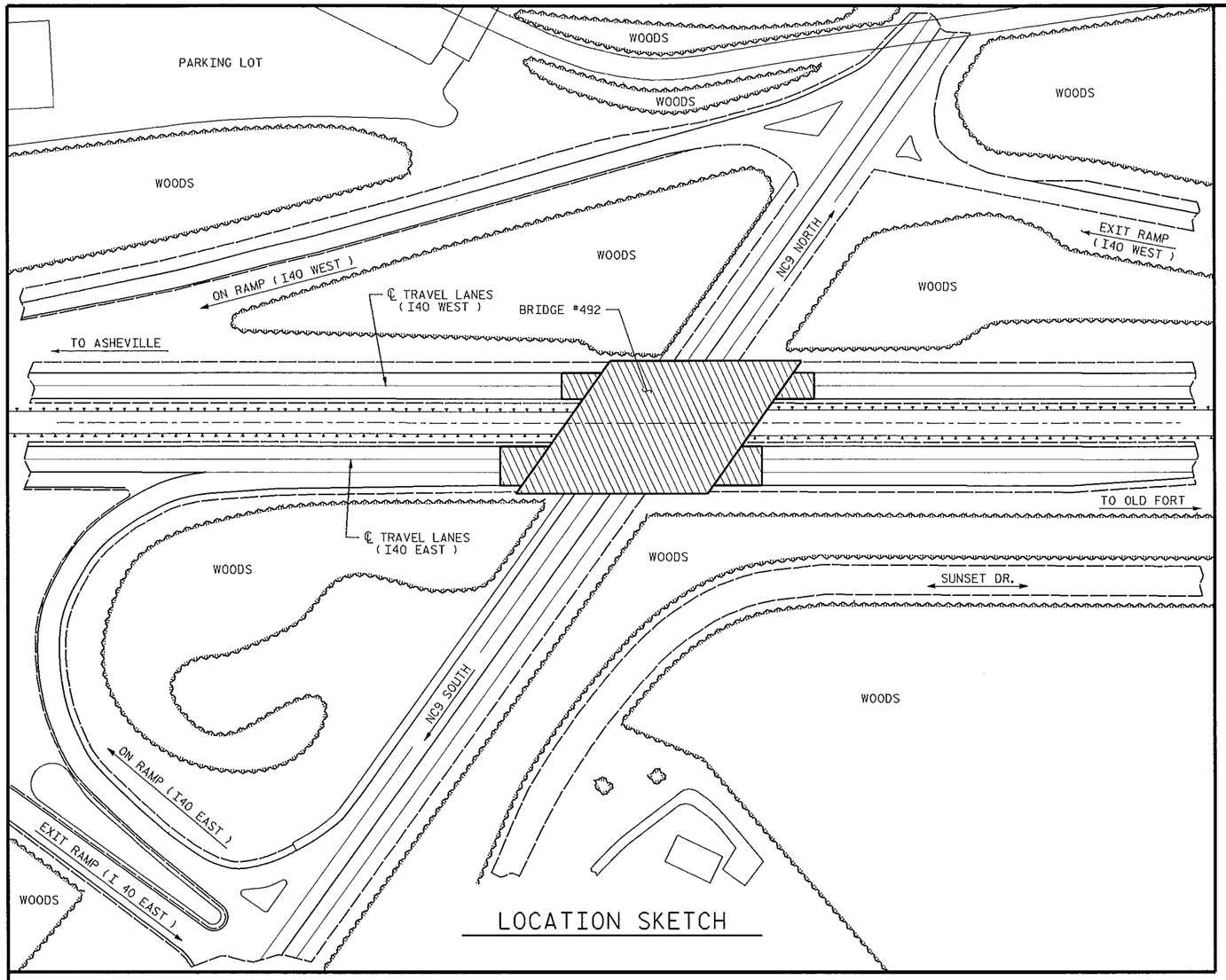

LOCATION SKETCH

NOTES:

EXISTING DIMENSIONS AND BRIDGE CONDITION ARE FROM BEST INFORMATION AVAILABLE. THE CONTRACTOR SHALL FIELD VERIFY THE INFORMATION SHOWN ON THE PLANS AND NOTIFY THE ENGINEER IF ACTUAL DIMENSIONS AND CONDITIONS DIFFER.

IT IS THE CONTRACTOR'S RESPONSIBILITY TO FOLLOW ALL STATE AND FEDERAL SAFETY REQUIREMENTS.

THE CONTRACTOR MUST COLLECT, TREAT AND DISPOSE OF RUN-OFF WATER FROM THE HYDRO-DEMOLITION PROCESS, SEE MANAGING HYDRO-DEMOLITION WATER SPECIAL PROVISION.

EXISTING JOINTS AND DECK DRAINS SHALL BE SEALED PRIOR TO BEGINNING SURFACE PREPARATION OF BRIDGE DECK.

DURING CONSTRUCTION, BERMS OR APPROPRIATE MEASURES SHALL BE USED TO ENSURE HYDRO-DEMOLITION WATER DOES NOT FLOW OR MIGRATE INTO ACTIVE TRAVEL LANES.

THE CONTRACTOR SHALL PROVIDE A METHOD OF HANDLING UNEXPECTED BLOW THROUGH OF THE DECK.

LONGITUDINAL CONSTRUCTION JOINTS OF OVERLAYS SHALL BE LOCATED ALONG THE CENTERLINE OR EDGE OF TRAVEL LANES.

REMOVE & RESET EXISITING GUARDRAIL AS NEEDED FOR JOINT WORK ACCORDING TO THE STANDARD SPECIFICATIONS.

FOR "SCARIFYING BRIDGE DECK", "HYDRO-DEMOLITION OF BRIDGE DECK", AND "CLASS II SURFACE PREPARATION" SEE "OVERLAY SURFACE PREPARATION" SPECIAL PROVISION.

FOR "BRIDGE JOINT DEMOLITION", SEE SPECIAL PROVISIONS.

FOR OVERLAY OF BRIDGE DECK WITH "LATEX MODIFIED CONCRETE - VERY EARLY STRENGTH", SEE SPECIAL PROVISIONS.

FOR "SYNTHETIC RUBBER EXPANSION JOINT SEAL", SEE SPECIAL PROVISIONS.

FOR "FOAM JOINT SEALS", SEE SPECIAL PROVISIONS.

FOR "ELASTOMERIC CONCRETE", SEE SPECIAL PROVISIONS.

FOR "SUBMITTAL OF WORKING DRAWINGS", SEE SPECIAL PROVISIONS.

FOR "FALSEWORK AND FORMWORK", SEE SPECIAL PROVISIONS.

FOR "CRANE SAFETY", SEE SPECIAL PROVISIONS.

FOR "GROUT FOR STRUCTURES", SEE SPECIAL PROVISIONS.

FOR CONTROL OF TRAFFIC AND LIMITS ON PHASING OF CONSTRUCTION, SEE TRANSPORTATION MANAGEMENT PLAN.

ROADWAY MILLING IS INCLUDED TO ENSURE A SMOOTH TRANSITION ONTO THE BRIDGE FLOOR. DIMENSIONS SHOWN ARE APPROXIMATE. CONTRACTOR SHALL MILL AS REQUIRED TO PROVIDE A SMOOTH TRANSITION TO THE ROADWAY AT BOTH ENDS OF THE BRIDGE.

TOTAL BILL OF MATERIAL

INCIDENTAL MILLING	ASPHALT CONCRETE SURFACE COURSE TYPE S9.5C	REMOVE & RESET EXISTING GUARDRAIL	GROOVING BRIDGE FLOORS	CLASS II SURFACE PREPARATION	LATEX MODIFIED CONCRETE - VERY EARLY STRENGTH	PLACING & FINISHING LATEX MODIFIED CONCRETE OVERLAY - VERY EARLY STRENGTH	SYTHETIC RUBBER EXPANSION JOINT SEAL	FOAM JOINT SEALS	BRIDGE JOINT DEMOLITION	SCARIFYING BRIDGE DECK	HYDRO-DEMOLITION OF BRIDGE DECK
SQ. YDS.	TON	LIN. FT.	SQ. FT.	SQ. YDS.	CU. YDS.	SQ. YDS.	LUMP SUM	LUMP SUM	SQ. FT.	SQ. YDS.	SQ. YDS.
642	72	40	19,416	15	112.1	2,306	LUMP SUM	LUMP SUM	410	2,306	2,306

PROJECT NO. BP-5500Z
BUNCOMBE COUNTY
BRIDGE NO. 492
SHEET 2 OF 2

STATE OF NORTH CAROLINA
DEPARTMENT OF TRANSPORTATION
RALEIGH

GENERAL DRAWING

BRIDGE #492 ON I40
OVER NC9

NORTH CAROLINA PROFESSIONAL SEAL 035635 ENGINEER DAVID N. SNOKE
3/19/14

REVISIONS						SHEET NO.
NO.	BY:	DATE:	NO.	BY:	DATE:	S-2
1			3			TOTAL SHEETS
2			4			8

DRAWN BY : P.C. BREWER DATE : 2/14
CHECKED BY : D.N. SNOKE DATE : 3/14
DESIGN ENGINEER OF RECORD: - DATE : -

08-APR-2014 08:25
S:\PRS\POC\Squad C\Preservation_Projects\BP-5500\Z\100492_SD_GD.dgn
pbrewer

THERE ARE NO CLASS II REPAIRS, SCARIFICATION, HYDRO-DEMOLITION, OR LMC IN THE MEDIAN AREA (BETWEEN THE GUARDRAIL)

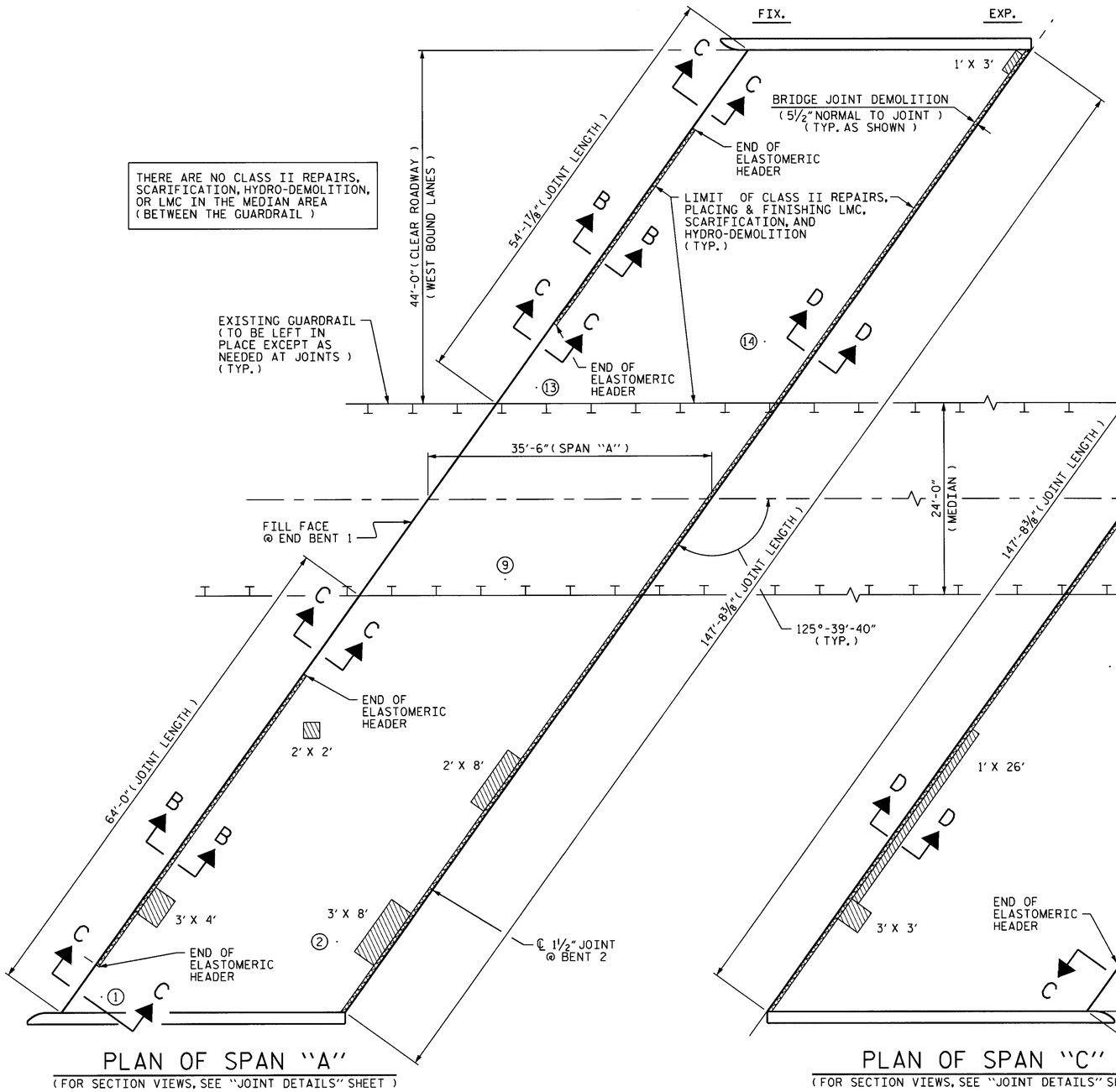

PLAN OF SPAN "A"

(FOR SECTION VIEWS, SEE "JOINT DETAILS" SHEET)

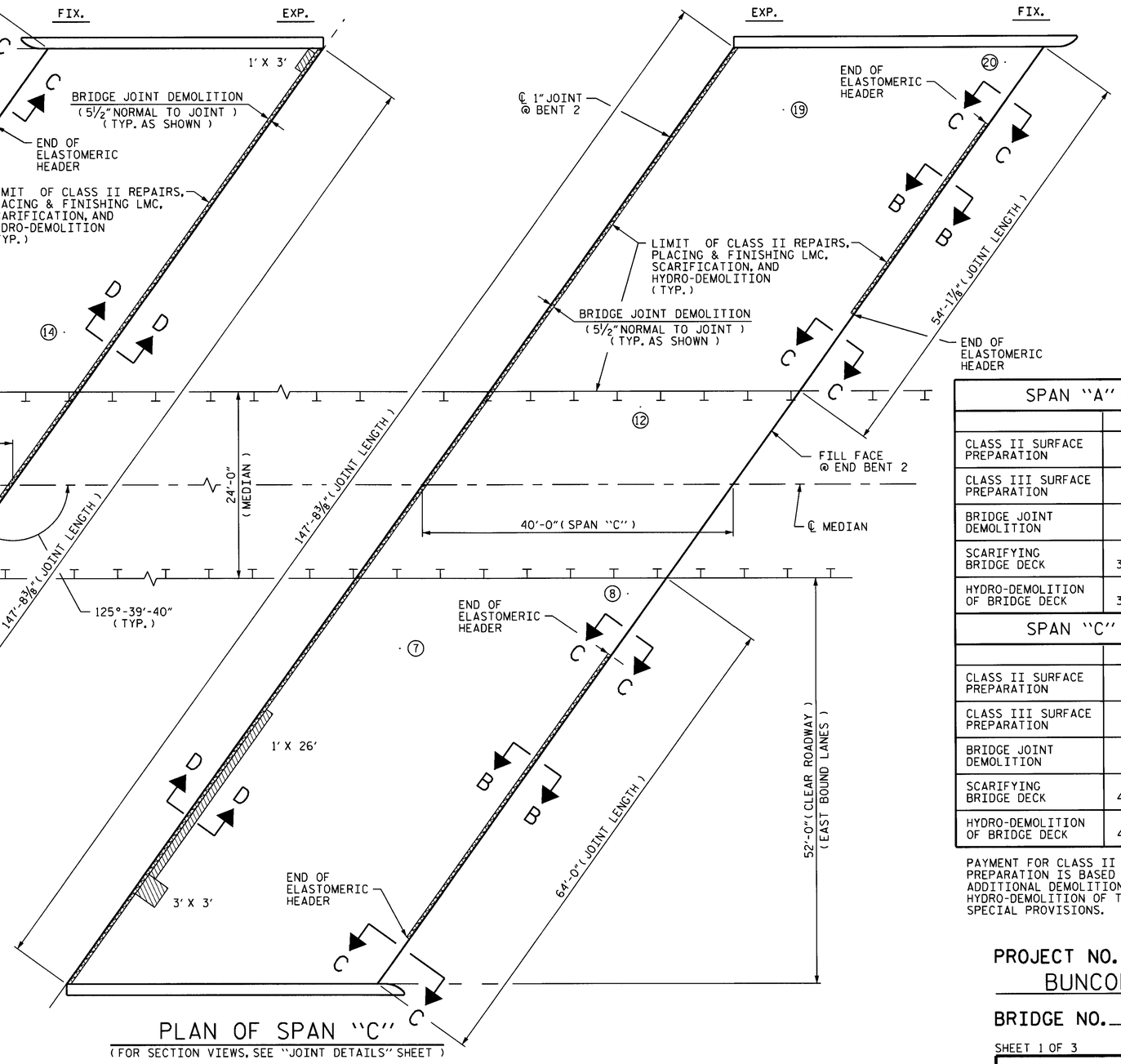

PLAN OF SPAN "C"

(FOR SECTION VIEWS, SEE "JOINT DETAILS" SHEET)

SPAN "A" QUANTITIES

	ESTIMATE	ACTUAL
CLASS II SURFACE PREPARATION	7 SQ. YDS.	
CLASS III SURFACE PREPARATION	0 SQ. YDS.	
BRIDGE JOINT DEMOLITION	102 SQ. FT.	
SCARIFYING BRIDGE DECK	373 SQ. YDS.	
HYDRO-DEMOLITION OF BRIDGE DECK	373 SQ. YDS.	

SPAN "C" QUANTITIES

	ESTIMATE	ACTUAL
CLASS II SURFACE PREPARATION	4 SQ. YDS.	
CLASS III SURFACE PREPARATION	0 SQ. YDS.	
BRIDGE JOINT DEMOLITION	102 SQ. FT.	
SCARIFYING BRIDGE DECK	422 SQ. YDS.	
HYDRO-DEMOLITION OF BRIDGE DECK	422 SQ. YDS.	

PAYMENT FOR CLASS II & CLASS III SURFACE PREPARATION IS BASED ON THE SQARE FEET OF ADDITIONAL DEMOLITION REQUIRED FOLLOWING HYDRO-DEMOLITION OF THE BRIDGE DECK. SEE SPECIAL PROVISIONS.

DECK EVALUATION RESULTS

TEST LOCATION	REBAR COVER	CONCRETE STRENGTH	TEST LOCATION	REBAR COVER	CONCRETE STRENGTH
1	2½"	3,480 PSI	12	2½"	3,500 PSI
2	2½"	3,960 PSI	13	2¼"	3,500 PSI
7	2½"	5,500 PSI	14	2½"	3,600 PSI
8	2½"	4,420 PSI	19	2½"	3,600 PSI
9	3"	3,620 PSI	20	2½"	3,600 PSI

CLASS II SURFACE PREPARATION

JOINT DEMOLITION

SCARIFICATION

NORTH CAROLINA PROFESSIONAL SEAL 035635 ENGINEER DAVID N. SNOKE

3/19/14

PROJECT NO. BP-5500Z

BUNCOMBE COUNTY

BRIDGE NO. 492

SHEET 1 OF 3

STATE OF NORTH CAROLINA
DEPARTMENT OF TRANSPORTATION
RALEIGH

SURFACE PREPARATION

SPANS "A" & "C"

REVISIONS						SHEET NO.
NO.	BY:	DATE:	NO.	BY:	DATE:	S-3
1			3			TOTAL SHEETS
2			4			8

DRAWN BY :	P.C. BREWER	DATE :	2/14
CHECKED BY :	D.N. SNOKE	DATE :	3/14
DESIGN ENGINEER OF RECORD:	-	DATE :	-

19-MAR-2014 13:18
S:\PRS\PDC\Squad C\Preservation_Projects\BP-5500\Z\100492_SD_LMC.dgn
pbrewer

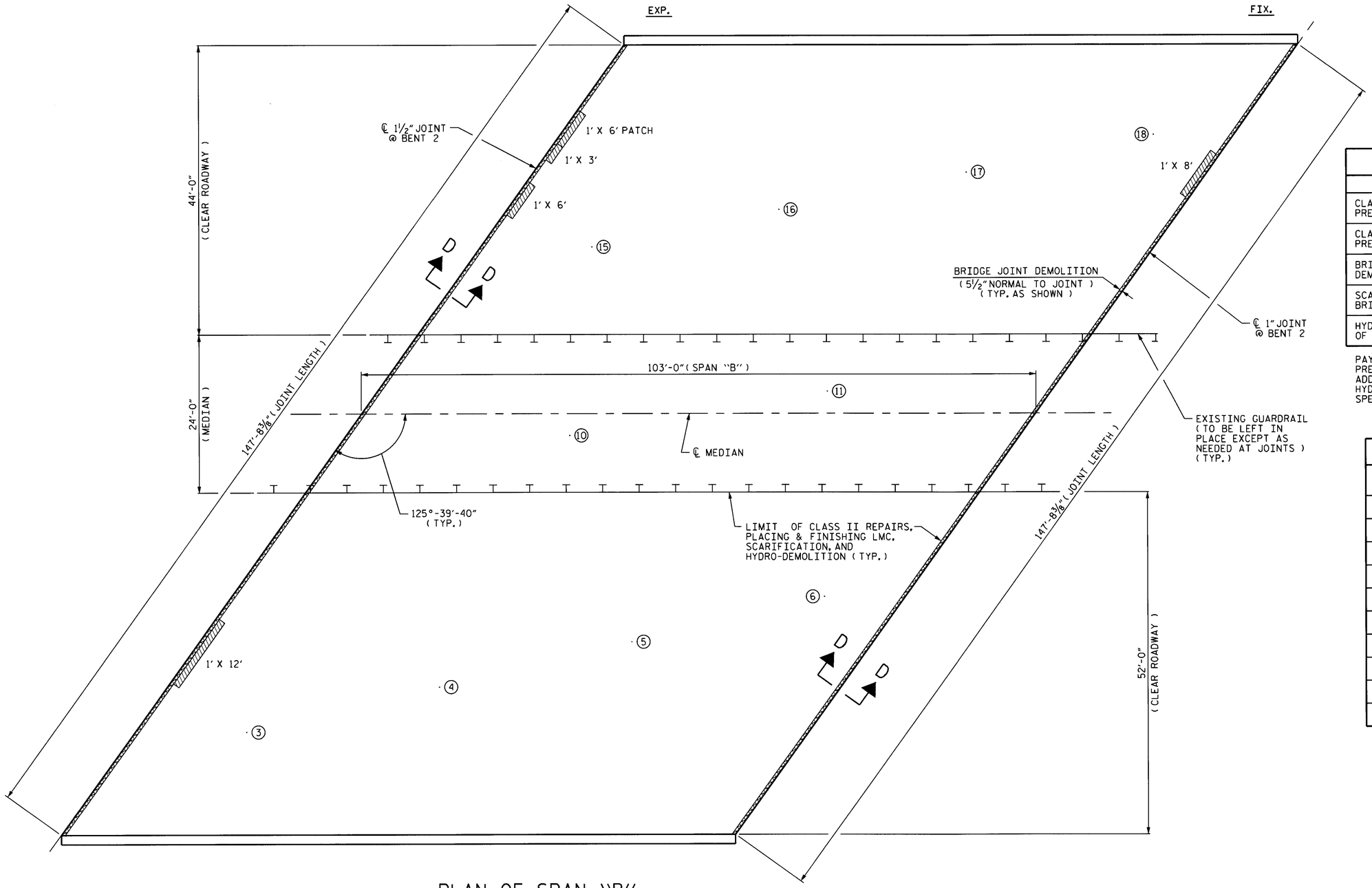

PLAN OF SPAN "B"

(FOR SECTION VIEWS, SEE "JOINT DETAILS" SHEET)

THERE ARE NO CLASS II REPAIRS, SCARIFICATION, HYDRO-DEMOLITION, OR LMC IN THE MEDIAN AREA (BETWEEN THE GUARDRAIL)

CLASS II SURFACE PREPARATION

JOINT DEMOLITION

SCARIFICATION

SPAN "B" QUANTITIES

	ESTIMATE	ACTUAL
CLASS II SURFACE PREPARATION	4 SQ. YDS.	
CLASS III SURFACE PREPARATION	0 SQ. YDS.	
BRIDGE JOINT DEMOLITION	136 SQ. FT.	
SCARIFYING BRIDGE DECK	1,089 SQ. YDS.	
HYDRO-DEMOLITION OF BRIDGE DECK	1,089 SQ. YDS.	

PAYMENT FOR CLASS II & CLASS III SURFACE PREPARATION IS BASED ON THE SQARE FEET OF ADDITIONAL DEMOLITION REQUIRED FOLLOWING HYDRO-DEMOLITION OF THE BRIDGE DECK. SEE SPECIAL PROVISIONS.

DECK EVALUATION RESULTS

TEST LOCATION	REBAR COVER	CONCRETE STRENGTH
③	2½"	4,740 PSI
④	2½"	4,980 PSI
⑤	2½"	4,700 PSI
⑥	2¾"	4,960 PSI
⑩	3"	4,040 PSI
⑪	2½"	4,140 PSI
⑮	2½"	5,440 PSI
⑯	2½"	5,000 PSI
⑰	2½"	5,200 PSI
⑱	2½"	5,300 PSI

PROJECT NO. BP-5500Z

BUNCOMBE COUNTY

BRIDGE NO. 492

SHEET 2 OF 3

STATE OF NORTH CAROLINA
DEPARTMENT OF TRANSPORTATION
RALEIGH

SURFACE PREPARATION

SPAN "B"

NORTH CAROLINA PROFESSIONAL SEAL 035635 ENGINEER DAVID N. SNOKE

3/19/14

REVISIONS						SHEET NO.
NO.	BY:	DATE:	NO.	BY:	DATE:	S-4
1			3			TOTAL SHEETS
2			4			8

DRAWN BY : P.C. BREWER DATE : 2/14
CHECKED BY : D.N. SNOKE DATE : 3/14
DESIGN ENGINEER OF RECORD: - DATE : -

19-MAR-2014 13:18
S:\PRS\PDC\Squad C\Preservation_Projects\BP-5500\Z\100492_SD_LMC.dgn
pbrewer

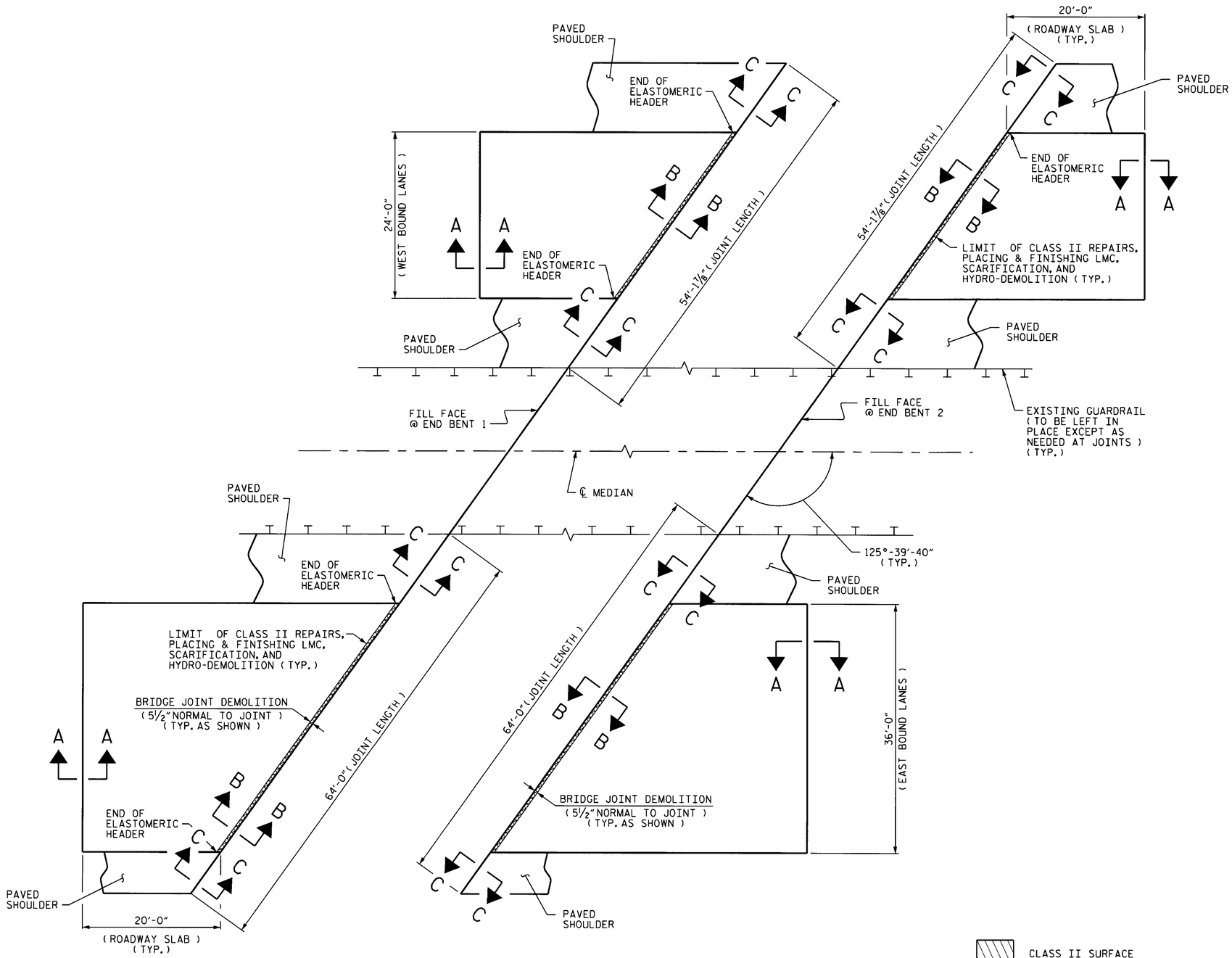

ROADWAY SLAB AT END BENT 1

(FOR SECTION VIEWS, SEE "JOINT DETAILS" SHEET)

ROADWAY SLAB AT END BENT 2

(FOR SECTION VIEWS, SEE "JOINT DETAILS" SHEET)

CLASS II SURFACE PREPARATION

JOINT DEMOLITION

SCARIFICATION

ROADWAY SLAB QUANTITIES

EAST BOUND LANES (2 REQ'D)

	ESTIMATE	ACTUAL
CLASS II SURFACE PREPARATION	0 SQ. YDS.	
CLASS III SURFACE PREPARATION	0 SQ. YDS.	
BRIDGE JOINT DEMOLITION	21 SQ. FT.	
SCARIFYING BRIDGE DECK	133 SQ. YDS.	
HYDRO-DEMOLITION OF BRIDGE DECK	133 SQ. YDS.	

WEST BOUND LANES (2 REQ'D)

	ESTIMATE	ACTUAL
CLASS II SURFACE PREPARATION	0 SQ. YDS.	
CLASS III SURFACE PREPARATION	0 SQ. YDS.	
BRIDGE JOINT DEMOLITION	14 SQ. FT.	
SCARIFYING BRIDGE DECK	78 SQ. YDS.	
HYDRO-DEMOLITION OF BRIDGE DECK	78 SQ. YDS.	

PAYMENT FOR CLASS II & CLASS III SURFACE PREPARATION IS BASED ON THE SQARE FEET OF ADDITIONAL DEMOLITION REQUIRED FOLLOWING HYDRO-DEMOLITION OF THE BRIDGE DECK. SEE SPECIAL PROVISIONS.

PROJECT NO. BP-5500Z

BUNCOMBE COUNTY

BRIDGE NO. 492

SHEET 3 OF 3

STATE OF NORTH CAROLINA
DEPARTMENT OF TRANSPORTATION
RALEIGH

SURFACE PREPARATION

ROADWAY SLABS

NORTH CAROLINA PROFESSIONAL SEAL 035635 ENGINEER DAVID N. SNOKE

3/19/14

REVISIONS								SHEET NO.
NO.	BY:	DATE:	NO.	BY:	DATE:			S-5
1			3					TOTAL SHEETS
2			4					8

DRAWN BY : P.C. BREWER DATE : 2/14
CHECKED BY : D.N. SNOKE DATE : 3/14
DESIGN ENGINEER OF RECORD: - DATE : -

19-MAR-2014 13:19
S:\PRES\PDC\Squad C\Preservation_Projects\BP-5500\Z\100492_SD_LMC.dgn
pbrewer

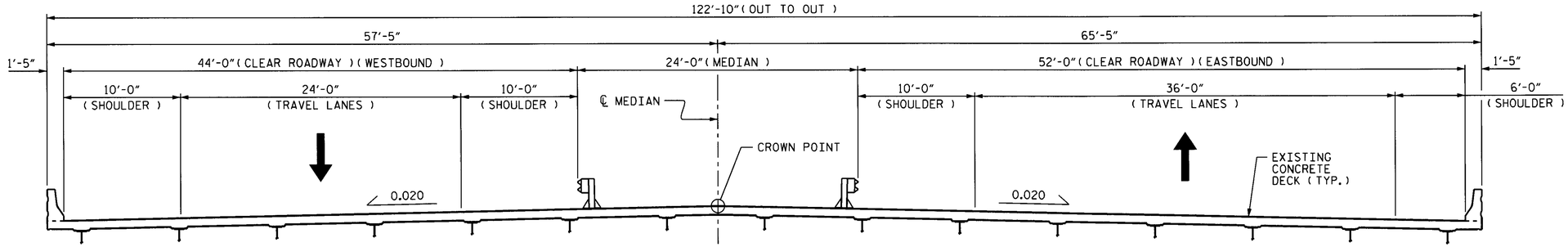

TYPICAL SECTION

(EXISTING) (LOOKING EAST)

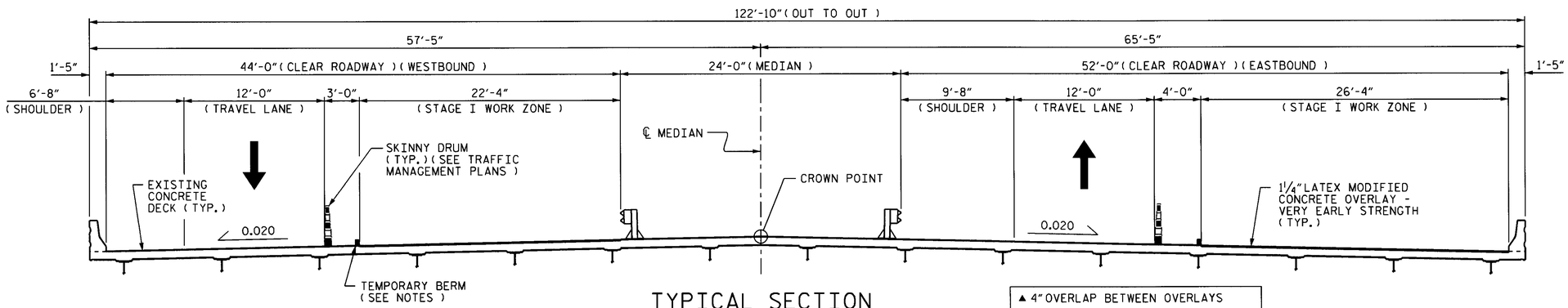

TYPICAL SECTION

(STAGE I WORK ZONES) (LOOKING EAST)

▲ 4" OVERLAP BETWEEN OVERLAYS

PREVIOUSLY POURED LMC - VERY EARLY STRENGTH TO BE HYDRO-DEMOLITIONED & RECAST WITH LMC - VERY EARLY STRENGTH

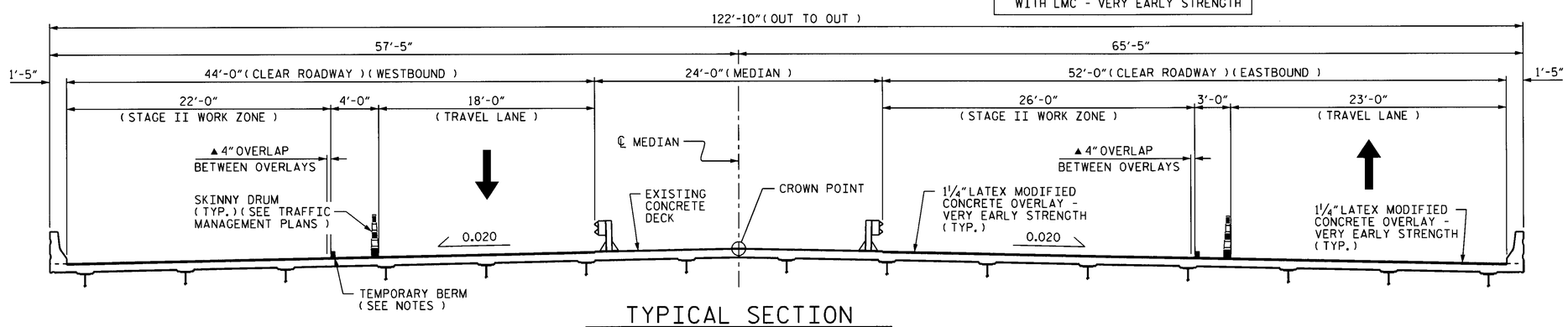

TYPICAL SECTION

(STAGE II WORK ZONES) (LOOKING EAST)

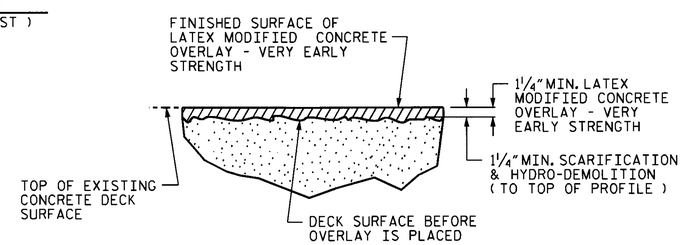

DETAIL FOR LATEX MODIFIED CONCRETE OVERLAY

NOTE:

THE WORK STAGING ON THIS PLAN SHEET INDICATES THAT THE STAGE I LMC - VERY EARLY STRENGTH WORK IS PERFORMED FIRST, FOLLOWED BY THE STAGE II LMC - VERY EARLY STRENGTH WORK. THE CONTRACTOR MAY ELECT TO SEQUENCE THE WORK DIFFERENTLY, BUT THE DIMENSIONS OF THE WORK ZONE, CLEAR ROADWAY AREAS, AND THE LOCATIONS OF THE SKINNY DRUM SHALL MATCH THAT INDICATED ON THIS PLAN SHEET, RESPECTIVE TO THE LANE WHERE THE LMC - VERY EARLY STRENGTH WORK IS BEING PERFORMED.

PROJECT NO. BP-5500Z

BUNCOMBE COUNTY

BRIDGE NO. 492

STATE OF NORTH CAROLINA
DEPARTMENT OF TRANSPORTATION
RALEIGH

STAGING SEQUENCE

NORTH CAROLINA PROFESSIONAL SEAL 035635 ENGINEER DAVID N. SNOKE

3/19/14

REVISIONS						SHEET NO.
NO.	BY:	DATE:	NO.	BY:	DATE:	S-6
1			3			TOTAL SHEETS
2			4			8

DRAWN BY : P.C. BREWER DATE : 3/14
CHECKED BY : D.N. SNOKE DATE : 3/14
DESIGN ENGINEER OF RECORD: - DATE : -

19-MAR-2014 13:19
S:\PRS\PDC\Squad C\Preservation_Projects\BP-5500\Z\100492_SD_LMC.dgn
pbrewer

IF THE EMBEDDED PORTION OF THE EXISITNG PLASTIC WATERSTOP IS EXPOSED DURING REMOVAL OF UNSOUND CONCRETE OR IF UNSOUND CONCRETE IS REMOVED TO WITHIN 2" OF THE WATERSTOP, THE ENTIRE WATERSTOP SHALL BE REMOVED.

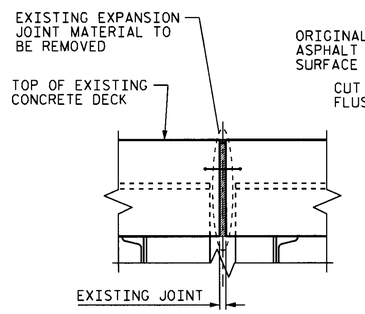

SECTION D-D
(EXISTING JOINT)

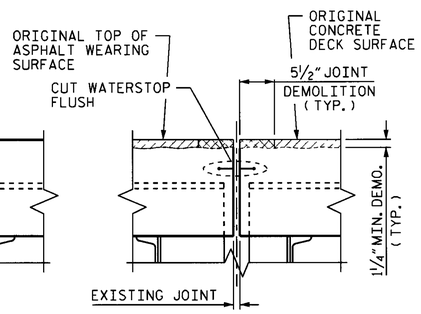

SECTION D-D
(MINIMUM EXISTING JOINT DEMOLITION)

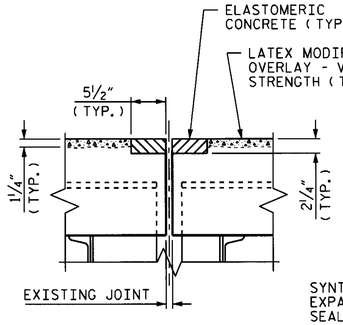

SECTION D-D
(PROPOSED JOINT PRE-SAWED DIMENSIONS)

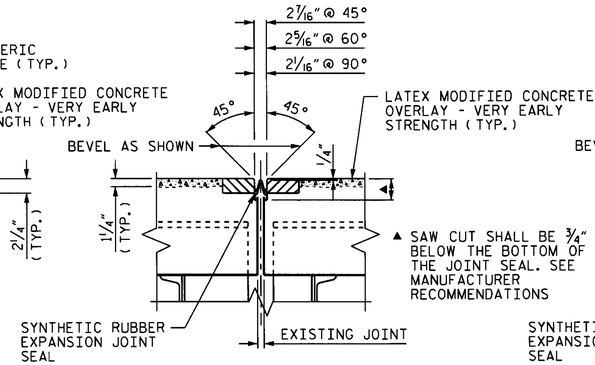

SECTION D-D
(BENT 1)
(PROPOSED SYNTHETIC RUBBER EXPANSION JOINT SEAL)

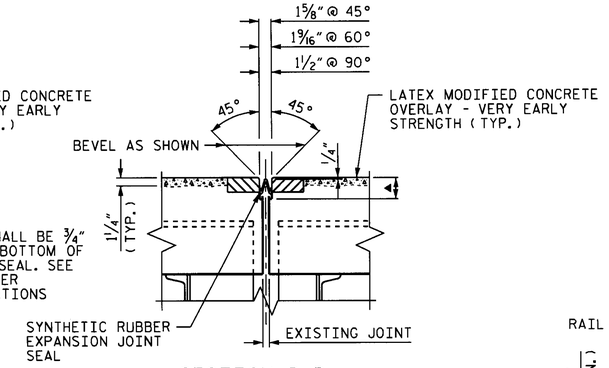

SECTION D-D
(BENT 2)
(PROPOSED SYNTHETIC RUBBER EXPANSION JOINT SEAL)

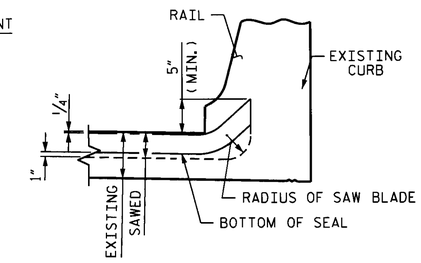

SECTION E-E

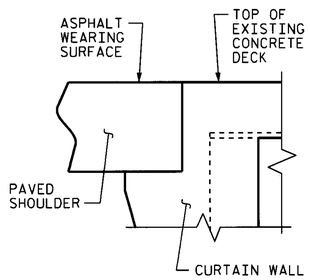

SECTION C-C
(EXISTING COLD JOINT)

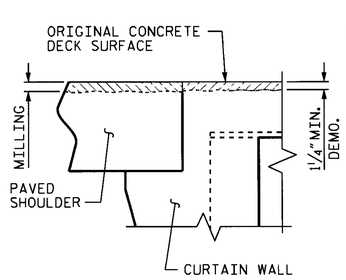

SECTION C-C
(MINIMUM EXISTING JOINT DEMOLITION)

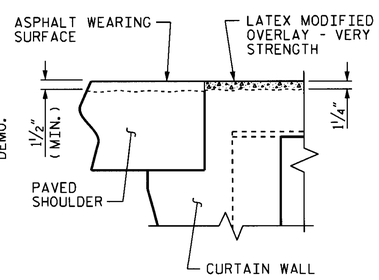

SECTION C-C
(PROPOSED JOINT PRE-SAWED)

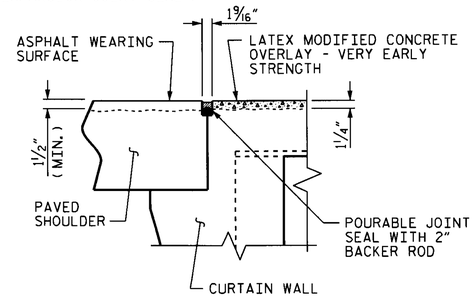

SECTION C-C
(PROPOSED POURABLE JOINT SEAL)

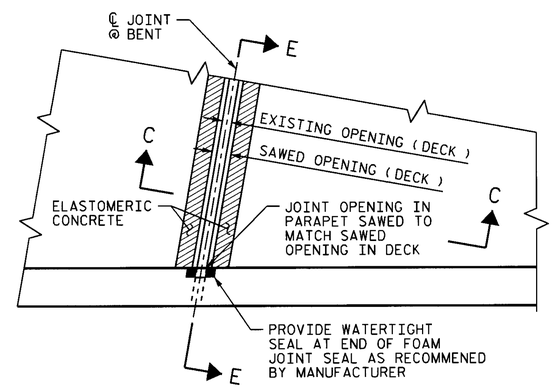

PLAN

JOINT SEAL DETAILS AT BENT

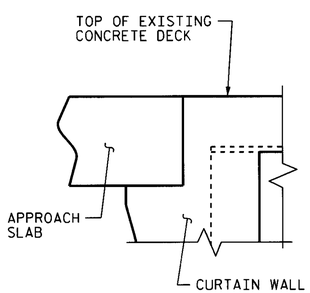

SECTION B-B
(EXISTING COLD JOINT)

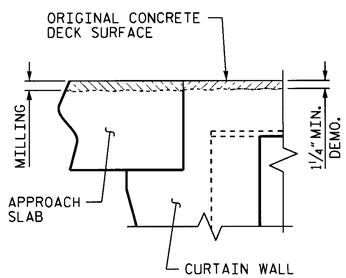

SECTION B-B
(MINIMUM EXISTING JOINT DEMOLITION)

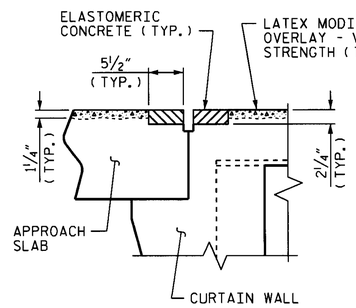

SECTION B-B
(PROPOSED JOINT PRE-SAWED DIMENSIONS)

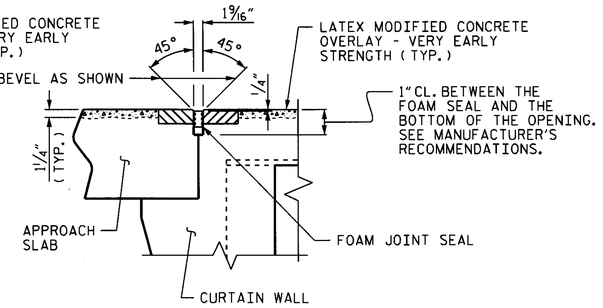

SECTION B-B
(PROPOSED FOAM JOINT SEAL - FIXED)

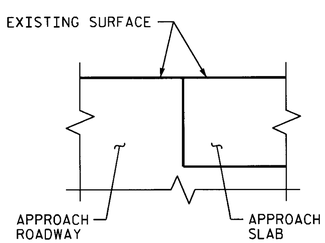

SECTION A-A
(EXISTING)

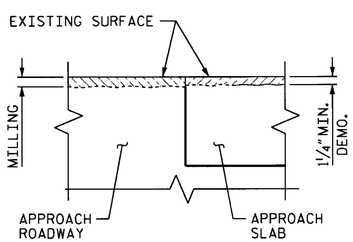

SECTION A-A
(MINIMUM EXISTING JOINT DEMOLITION & APPROACH MILLING)

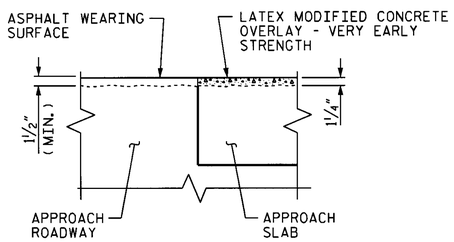

SECTION A-A
(PROPOSED)

HYDRO-DEMOLITION OR EXCAVATION OF CONCRETE AT THE EXISTING JOINT SHALL RESULT IN THE BOTTOM OF THE EXCAVATION BEING REASONABLY FLAT, TO PROVIDE SUFFICIENT SUBSTRATE FOR PLACEMENT AND SUPPORT OF REPAIR CONCRETE.

NOTES:

SYNTHETIC RUBBER EXPANSION JOINT SEALS SHALL ACCOMMODATE A MINIMUM OF 1" EXPANSION AND MEET THE MANUFACTURER'S RECOMMENDATION FOR THE SIZE OF OPENING ON THE PLANS.

CONTRACTOR SHALL SUBMIT FOR APPROVAL THE PROPOSED SYNTHETIC RUBBER EXPANSION JOINT SEAL, WITH SUPPORTING INFORMATION AND DOCUMENTATION CONFIRMING THE APPROPRIATE SEAL SIZE.

POURABLE JOINT SEAL TO BE INSTALLED ACCORDING TO THE STANDARD SPECIFICATIONS AND SHALL BE INCLUDED IN THE PAYMENT FOR OTHER ITEMS.

NORTH CAROLINA PROFESSIONAL SEAL 035635 ENGINEER DAVID N. SNOKE
3/19/14

PROJECT NO. BP-5500Z
BUNCOMBE COUNTY
BRIDGE NO. 492

STATE OF NORTH CAROLINA
DEPARTMENT OF TRANSPORTATION
RALEIGH

JOINT DETAILS

REVISIONS						SHEET NO.
NO.	BY:	DATE:	NO.	BY:	DATE:	S-7
1			3			TOTAL SHEETS
2			4			8

DRAWN BY : P.C. BREWER DATE : 12/13
CHECKED BY : D.N. SNOKE DATE : 3/14
DESIGN ENGINEER OF RECORD: - DATE : -

19-MAR-2014 13:19
S:\PRS\POC\Squad C\Preservation_Projects\BP-5500\Z\100492_SD_LMC.dgn
pbrewer

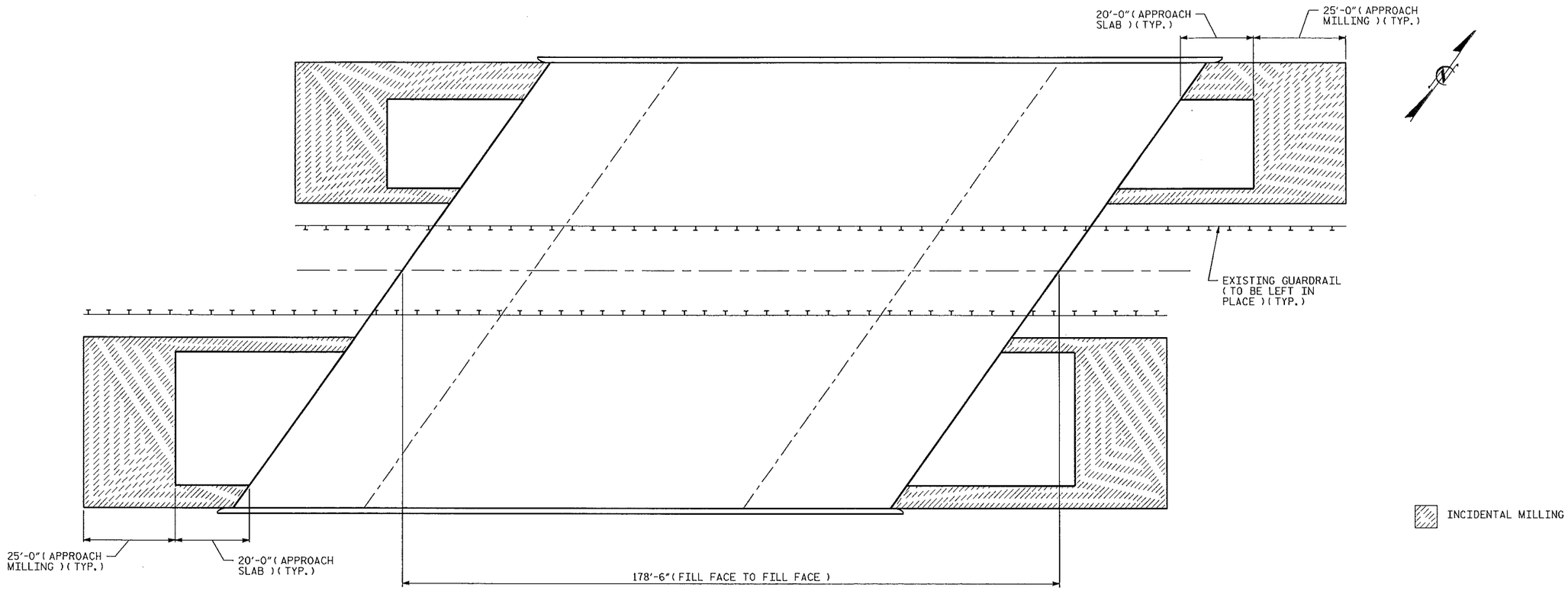

INCIDENTAL MILLING

PLAN

C1	PROPOSED VARIABLE DEPTH ASPHALT CONCRETE SURFACE COURSE, TYPE S9.5C AT AN AVERAGE RATE OF 112 LBS. PER SQ. YD. PER 1" DEPTH. TO BE PLACED IN LAYERS NOT LESS THAN 1½" IN DEPTH OR GREATER THAN 2" IN DEPTH.

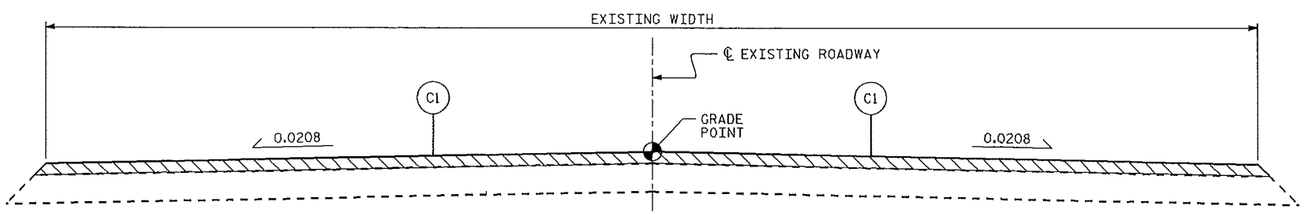

TYPICAL ROADWAY SECTION

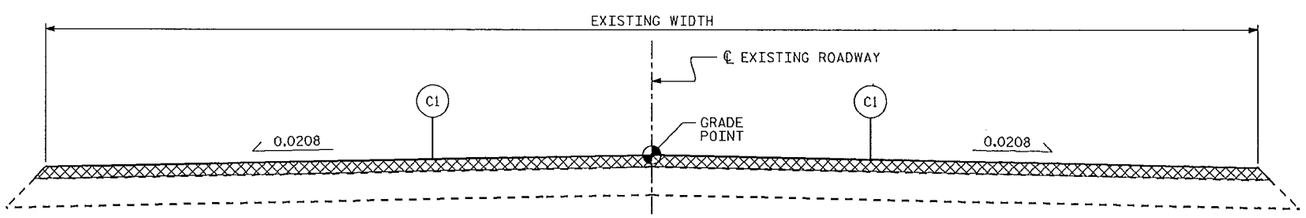

TYPICAL ROADWAY MILLING SECTION

(MILL TO 1½" DEPTH)

NOTE:

INCIDENTAL MILLING - EXISTING APPROACH ASPHALT PAVING TO BE MILLED AS NECESSARY TO ATTAIN MINIMUM 1½" DEPTH OF NEW ASPHALT PAVING. PROVIDE NEW ASPHALT PAVING THICKNESS TO CREATE A SMOOTH TRANSITION TO THE BRIDGE DECK, AS SHOWN. NEW ASPHALT PAVING THICKNESS MAY EXCEED 1½" DUE TO SETTLEMENT OF THE EXISTING APPROACH ASPHALT PAVING.

PROJECT NO. BP-5500Z
BUNCOMBE COUNTY
BRIDGE NO. 492

NORTH CAROLINA PROFESSIONAL SEAL 035635 ENGINEER DAVID N. SNOKE
3/19/14

STATE OF NORTH CAROLINA
DEPARTMENT OF TRANSPORTATION
RALEIGH

APPROACH PAVEMENT

REVISIONS							SHEET NO.
NO.	BY:	DATE:	NO.	BY:	DATE:		S-8
1			3				TOTAL SHEETS
2			4				8

DRAWN BY :	P.C. BREWER	DATE :	2/14
CHECKED BY :	D.N. SNOKE	DATE :	3/14
DESIGN ENGINEER OF RECORD:	-	DATE :	-

08-APR-2014 08:22
S:\PRS\PDC\Squad C\Preservation_Projects\BP-5500\Z\I00492_SD_LMC.dgn
pbrewer

STATE OF NORTH CAROLINA
DIVISION OF HIGHWAYS

TRANSPORTATION MANAGEMENT PLAN

BUNCOMBE COUNTY

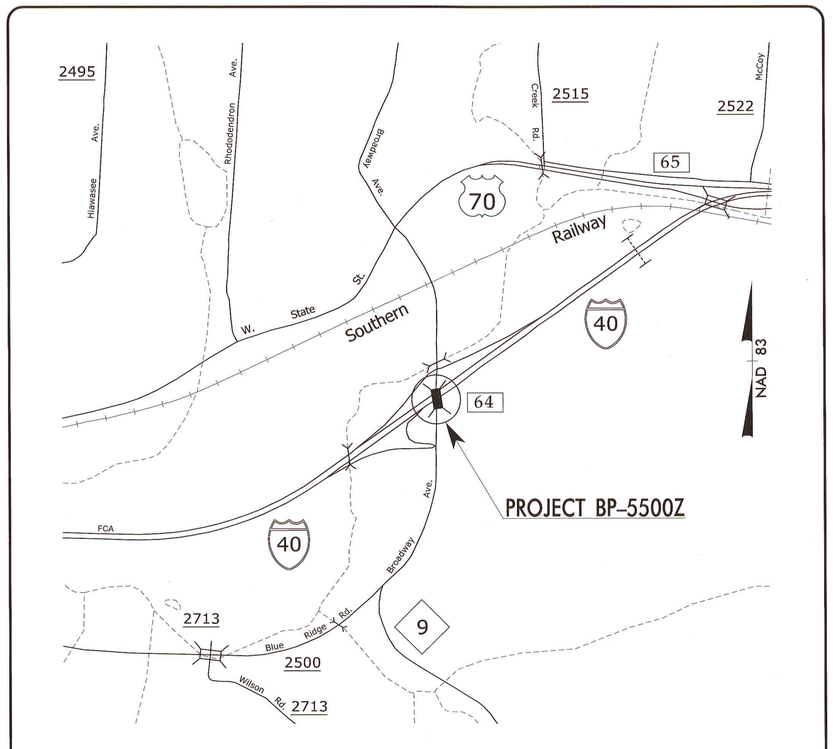

VICINITY MAP

INDEX OF SHEETS

SHEET NO.	TITLE
TMP-1	TITLE SHEET, AND INDEX OF SHEETS
TMP-1A	LIST OF APPLICABLE ROADWAY STANDARD DRAWINGS, AND LEGEND
TMP-2	TRANSPORTATION OPERATIONS PLAN: (GENERAL NOTES)
TMP-3	TEMPORARY TRAFFIC CONTROL PHASING
TMP-4	BRIDGE NO. 492 - PLAN VIEW
TMP-5	BRIDGE NO. 492 - TYPICAL SECTIONS
TMP-6	BRIDGE NO. 492 - DETOUR ROUTE

SHEET NO.
TMP-1

BP-5500Z

TIP PROJECT:

WORK ZONE SAFETY & MOBILITY
"from the MOUNTAINS to the COAST"

N.C.D.O.T. WORK ZONE TRAFFIC CONTROL
1561 MAIL SERVICE CENTER (MSC) RALEIGH, NC 27699-1561
750 N. GREENFIELD PARKWAY, GARNER, NC 27529 (DELIVERY)
PHONE: (919) 773-2800 FAX: (919) 771-2745

J. S. BOURNE, P.E. — STATE TRAFFIC MANAGEMENT ENGINEER
G. L. GETTIER, P.E. — TRAFFIC CONTROL PROJECT ENGINEER
J. W. WOOLARD, P.E. — TRAFFIC CONTROL PROJECT DESIGN ENGINEER
C. D. REICH, E.I. — TRAFFIC CONTROL DESIGN ENGINEER

DIVISION OF HIGHWAYS · STATE OF NORTH CAROLINA · DEPARTMENT OF TRANSPORTATION · WORK ZONE TRAFFIC CONTROL

APPROVED:
DATE:
SEAL
NORTH CAROLINA PROFESSIONAL SEAL 19862 ENGINEER J. W. WOOLARD
3/10/14

3/10/2014
S:\TMU\WZTC\DesignGroup3\Squad3A\BP-5500Z\TCP\BP5500Z_TC_TMP01.dgn
User:cdreich

PROJ. REFERENCE NO.	SHEET NO.
BP-5500Z	TMP-1A

ROADWAY STANDARD DRAWINGS

THE FOLLOWING ROADWAY STANDARDS AS SHOWN IN "ROADWAY STANDARD DRAWINGS" - PROJECT SERVICES UNIT - N.C. DEPARTMENT OF TRANSPORTATION - RALEIGH, N.C., DATED JANUARY 2012 ARE APPLICABLE TO THIS PROJECT AND BY REFERENCE HEREBY ARE CONSIDERED A PART OF THESE PLANS:

STD. NO.	TITLE
1101.01	WORK ZONE ADVANCE WARNING SIGNS
1101.02	TEMPORARY LANE CLOSURES
1101.03	TEMPORARY ROAD CLOSURES
1101.04	TEMPORARY SHOULDER CLOSURES
1101.05	WORK ZONE VEHICLE ACCESSES
1101.11	TRAFFIC CONTROL DESIGN TABLES
1110.01	STATIONARY WORK ZONE SIGNS
1110.02	PORTABLE WORK ZONE SIGNS
1115.01	FLASHING ARROW BOARDS
1130.01	DRUMS
1145.01	BARRICADES
1180.01	SKINNY DRUM
1205.01	PAVEMENT MARKINGS - LINE TYPES AND OFFSETS
1205.02	PAVEMENT MARKINGS - TWO-LANE AND MULTI-LANE ROADWAYS
1205.12	PAVEMENT MARKINGS - BRIDGES
1250.01	RAISED PAVEMENT MARKERS

LEGEND

GENERAL

- DIRECTION OF TRAFFIC FLOW
- DIRECTION OF PEDESTRIAN TRAFFIC FLOW
- EXIST. PVMT.
- NORTH ARROW
- PROPOSED PVMT.
- TEMP. SHORING (LOCATION PURPOSES ONLY)
- WORK AREA
- REMOVAL
- USER DEFINED (IF NEEDED)
- USER DEFINED (IF NEEDED)

SIGNALS

EXISTING PROPOSED TEMPORARY

PAVEMENT MARKINGS

- EXISTING LINES
- TEMPORARY LINES

TRAFFIC CONTROL DEVICES

- BARRICADE (TYPE III)
- CONE
- DRUM SKINNY DRUM TUBULAR MARKER
- TEMPORARY CRASH CUSHION
- FLASHING ARROW BOARD
- FLAGGER
- LAW ENFORCEMENT
- TRUCK MOUNTED ATTENUATOR (TMA)
- CHANGEABLE MESSAGE SIGN

TEMPORARY SIGNING

- PORTABLE SIGN
- STATIONARY SIGN
- STATIONARY OR PORTABLE SIGN

PAVEMENT MARKERS

- CRYSTAL/CRYSTAL
- CRYSTAL/RED
- YELLOW/YELLOW

PAVEMENT MARKING SYMBOLS

PAVEMENT MARKING SYMBOLS

TEMPORARY PAVEMENT MARKING

- CA 4" WHITE EDGE LINE (COLD APPLIED PLASTIC, TYPE IV)
- CB 4" YELLOW EDGE LINE (COLD APPLIED PLASTIC, TYPE IV)
- CD 4" WHITE 3'-9'/SP MINI-SKIP (COLD APPLIED PLASTIC, TYPE IV)
- CN 8" WHITE GORE LINE (COLD APPLIED PLASTIC, TYPE IV)
- MH YELLOW & YELLOW TEMPORARY RAISED MARKER
- MM CRYSTAL & CRYSTAL TEMPORARY RAISED MARKER

APPROVED: DATE: 3/17/14

SEAL

NORTH CAROLINA PROFESSIONAL SEAL 19862 ENGINEER J. W. WOOLARD JR.

DIVISION OF HIGHWAYS · STATE OF NORTH CAROLINA · DEPARTMENT OF TRANSPORTATION · WORK ZONE TRAFFIC CONTROL

ROADWAY STANDARD DRAWINGS & LEGEND

3/14/2014
S:\TMU\WZTC\DesignGroup3\Squad3A\BP-5500Z\TCP\BP5500Z_TC_TMP01A.dgn
User:cdrelch

PROJ. REFERENCE NO.	SHEET NO.
BP-5500Z	TMP-2

GENERAL NOTES

CHANGES MAY BE REQUIRED WHEN PHYSICAL DIMENSIONS IN THE DETAIL DRAWINGS, STANDARD DETAILS, AND ROADWAY DETAILS ARE NOT ATTAINABLE TO MEET FIELD CONDITIONS OR RESULT IN DUPLICATE OR UNDESIRED OVERLAPPING OF DEVICES. MODIFICATION MAY INCLUDE: MOVING, SUPPLEMENTING, COVERING, OR REMOVAL OF DEVICES AS DIRECTED BY THE ENGINEER.

THE FOLLOWING GENERAL NOTES APPLY AT ALL TIMES FOR THE DURATION OF THE CONSTRUCTION PROJECT EXCEPT WHEN OTHERWISE NOTED IN THE PLAN OR DIRECTED BY THE ENGINEER.

TIME RESTRICTIONS

A) DO NOT CLOSE OR NARROW TRAVEL LANES AS FOLLOWS:

ROAD NAMES	DAY AND TIME RESTRICTIONS
I-40 EB & I-40 WB	MONDAY TO SUNDAY, 6:00 AM TO 6:00 PM
I-40 EB LOOP	MONDAY TO SUNDAY, 6:00 AM TO 6:00 PM

B) DO NOT CLOSE OR NARROW TRAVEL LANES DURING HOLIDAYS AND SPECIAL EVENTS AS FOLLOWS:

ROAD NAMES
I-40

HOLIDAY

1. FOR ANY UNEXPECTED OCCURRENCE THAT CREATES UNUSUALLY HIGH TRAFFIC VOLUMES, AS DIRECTED BY THE ENGINEER.

2. FOR NEW YEAR'S, BETWEEN THE HOURS OF 6:00 A.M. DECEMBER 31st TO 6:00 P.M. JANUARY 2ND. IF NEW YEAR'S DAY IS ON A FRIDAY, SATURDAY, SUNDAY, OR MONDAY THEN UNTIL 6:00 P.M. THE FOLLOWING TUESDAY.

3. FOR EASTER, BETWEEN THE HOURS OF 6:00 A.M. THURSDAY AND 6:00 P.M. MONDAY.

4. FOR MEMORIAL DAY, BETWEEN THE HOURS OF 6:00 A.M. FRIDAY AND 6:00 P.M. TUESDAY.

5. FOR INDEPENDENCE DAY, BETWEEN THE HOURS OF 6:00 A.M. THE DAY BEFORE INDEPENDENCE DAY AND 6:00 P.M. THE DAY AFTER INDEPENDENCE DAY.

   IF INDEPENDENCE DAY IS ON A FRIDAY, SATURDAY, SUNDAY OR MONDAY THEN BETWEEN THE HOURS OF 6:00 A.M. THE THURSDAY BEFORE INDEPENDENCE DAY AND 6:00 P.M. THE TUESDAY AFTER INDEPENDENCE DAY.

6. FOR LABOR DAY, BETWEEN THE HOURS OF 6:00 A.M. FRIDAY AND 6:00 P.M. TUESDAY.

7. FOR THANKSGIVING DAY, BETWEEN THE HOURS OF 6:00 A.M. TUESDAY TO 6:00 P.M. MONDAY.

8. FOR CHRISTMAS, BETWEEN THE HOURS OF 6:00 A.M. THE FRIDAY BEFORE THE WEEK OF CHRISTMAS DAY AND 6:00 P.M. THE FOLLOWING TUESDAY AFTER THE WEEK OF CHRISTMAS.

LANE AND SHOULDER CLOSURE REQUIREMENTS

C) REMOVE LANE CLOSURE DEVICES FROM THE LANE WHEN WORK IS NOT BEING PERFORMED BEHIND THE LANE CLOSURE OR WHEN A LANE CLOSURE IS NO LONGER NEEDED OR AS DIRECTED BY THE ENGINEER.

D) WHEN PERSONNEL AND/OR EQUIPMENT ARE WORKING WITHIN 15 FT OF AN OPEN TRAVEL LANE, CLOSE THE NEAREST OPEN SHOULDER USING ROADWAY STANDARD DRAWING NO. 1101.04 UNLESS THE WORK AREA IS PROTECTED BY BARRIER OR GUARDRAIL OR A LANE CLOSURE IS INSTALLED.

E) WHEN PERSONNEL AND/OR EQUIPMENT ARE WORKING ON THE SHOULDER ADJACENT TO AN UNDIVIDED FACILITY AND WITHIN 5 FT OF AN OPEN TRAVEL LANE, CLOSE THE NEAREST OPEN TRAVEL LANE USING ROADWAY STANDARD DRAWING NO. 1101.02 UNLESS THE WORK AREA IS PROTECTED BY BARRIER OR GUARDRAIL.

F) WHEN PERSONNEL AND/OR EQUIPMENT ARE WORKING WITHIN A LANE OF TRAVEL OF AN UNDIVIDED OR DIVIDED FACILITY, CLOSE THE LANE ACCORDING TO THE TRAFFIC CONTROL PLANS, ROADWAY STANDARD DRAWINGS, OR AS DIRECTED BY THE ENGINEER. CONDUCT THE WORK SO THAT ALL PERSONNEL AND/OR EQUIPMENT REMAIN WITHIN THE CLOSED TRAVEL LANE.

G) DO NOT WORK SIMULTANEOUSLY WITHIN 15 FT ON BOTH SIDES OF AN OPEN TRAVELWAY, RAMP, OR LOOP WITHIN THE SAME LOCATION UNLESS PROTECTED WITH GUARDRAIL OR BARRIER.

TRAFFIC PATTERN ALTERATIONS

H) NOTIFY THE ENGINEER TWENTY ONE (21) CALENDAR DAYS PRIOR TO ANY TRAFFIC PATTERN ALTERATION.

SIGNING

I) INSTALL ADVANCE WORK ZONE WARNING SIGNS WHEN WORK IS WITHIN 40 FT FROM THE EDGE OF TRAVEL LANE AND NO MORE THAN THREE (3) DAYS PRIOR TO THE BEGINNING OF CONSTRUCTION.

J) ENSURE ALL NECESSARY SIGNING IS IN PLACE PRIOR TO ALTERING ANY TRAFFIC PATTERN.

K) COVER OR REMOVE ALL SIGNS AND DEVICES REQUIRED TO CLOSE THE ROAD WHEN ROAD CLOSURE IS NOT IN OPERATION.

   COVER OR REMOVE ALL SIGNS REQUIRED FOR THE OFF-SITE DETOUR WHEN THE DETOUR IS NOT IN OPERATION.

L) ENSURE ALL NECESSARY SIGNING IS IN PLACE PRIOR TO ALTERING ANY TRAFFIC PATTERN.

TRAFFIC CONTROL DEVICES

M) WHEN LANE CLOSURES ARE NOT IN EFFECT SPACE CHANNELIZING DEVICES IN WORK AREAS NO GREATER IN FEET THAN TWICE THE POSTED SPEED LIMIT (MPH) EXCEPT, 10 FT ON-CENTER IN RADII, AND 3 FT OFF THE EDGE OF AN OPEN TRAVELWAY. REFER TO STANDARD SPECIFICATIONS FOR ROADS AND STRUCTURES SECTIONS 1130 (DRUMS), 1135 (CONES) AND 1180 (SKINNY DRUMS) FOR ADDITIONAL REQUIREMENTS.

N) PLACE TYPE III BARRICADES, WITH "ROAD CLOSED" SIGN R11-2 ATTACHED, OF SUFFICIENT LENGTH TO CLOSE ENTIRE ROADWAY.

PAVEMENT MARKINGS AND MARKERS

O) INSTALL TEMPORARY PAVEMENT MARKINGS AND TEMPORARY PAVEMENT MARKERS ON INTERIM LAYERS OF PAVEMENT AS FOLLOWS:

ROAD NAME	MARKING	MARKER
I-40	COLD APPLIED PLASTIC, TYPE IV	TEMPORARY RAISED

P) TIE PROPOSED PAVEMENT MARKING LINES TO EXISTING PAVEMENT MARKING LINES.

MISCELLANEOUS

Q) ENSURE THAT THE OVERSIZE/OVERWEIGHT PERMIT UNIT (919-733-4740) HAS BEEN ADVISED OF THE ONGOING TRAFFIC OPERATIONS THROUGH THE DIVISION OFFICE.

APPROVED: _____ DATE: _____

SEAL

NORTH CAROLINA PROFESSIONAL SEAL 19862 ENGINEER H. W. WOOLARD, JR. 3/17/10

DIVISION OF HIGHWAYS STATE OF NORTH CAROLINA DEPARTMENT OF TRANSPORTATION WORK ZONE TRAFFIC CONTROL

TRANSPORTATION OPERATIONS PLAN

3/14/2014
S:\TMU\WZTC\DesignGroup3\Squad3A\BP-5500Z\TCP\BP5500Z_TC_TMP02.dgn
User:cdwelch

PROJ. REFERENCE NO.	SHEET NO.
BP-5500Z	TMP-3

PHASING
BRIDGE NO. 492

NOTE: THE EXISTING PAVEMENT MARKINGS AND TRAFFIC PATTERN ARE TO BE RECORDED BEFORE STARTING ANY WORK.

STEP 1:

INSTALL WORK ZONE ADVANCE WARNING SIGNS ON I-40 EB & WB AS SHOWN ON RSD 1101.01, SHEET 1 OF 3.

STEP 2:

USING RSD 1101.02, SHEET 4 OF 15, MILL AND FILL EXISTING RUMBLE STRIPS ON THE INSIDE AND OUTSIDE SHOULDERS OF I-40 (SEE TMP-4).

STEP 3:

USING RSD 1101.02, SHEET 4 OF 15, INSTALL TEMPORARY PAVEMENT MARKING AND PLACE TRAFFIC IN THE PATTERN SHOWN ON THE STAGE 1 PLAN AND TYPICAL ON SHEETS TMP-4 AND TMP-5.

STEP 4:

NOTE: ONLY MILL AS MUCH AS CAN BE FILLED WITH LMC OVERLAY, CURED, AND TRAFFIC PLACED ON BY 6:00 AM

NOTE: LOOP CLOSURE MUST BE REMOVED AND OFF-SITE DETOUR SIGNS COVERED BY 6:00 AM

UTILIZING THE TRAFFIC PATTERN AS SHOWN ON THE STAGE 1 PLAN AND TYPICAL ON SHEETS TMP-4 AND TMP-5, COMPLETE THE WORK ON STAGE 1 OF THE BRIDGE.

CLOSE THE I-40 EB LOOP AND PLACE IN AN OFF-SITE DETOUR. (SEE TMP-6 FOR DETOUR ROUTE AND SIGNING)

STEP 5:

USING RSD 1101.02, SHEET 4 OF 15, INSTALL TEMPORARY PAVEMENT MARKINGS AND PLACE TRAFFIC IN THE PATTERN SHOWN ON THE STAGE 2 PLAN AND TYPICAL ON SHEETS TMP-4 AND TMP-5.

STEP 6:

NOTE: ONLY MILL AS MUCH AS CAN BE FILLED WITH LMC OVERLAY, CURED, AND TRAFFIC PLACED ON BY 6:00 AM

UTILIZING THE TRAFFIC PATTERN AS SHOWN ON THE STAGE 2 PLAN AND TYPICAL ON SHEETS TMP-4 AND TMP-5, COMPLETE THE WORK ON STAGE 2 OF THE BRIDGE.

STEP 7:

ONCE STAGE 2 CONSTRUCTION IS COMPLETE, USING RSD 1101.02, SHEET 4 OF 15, COMPLETE ADDITIONAL ROADWAY WORK (RE-INSTALLATION OF RUMBLE STRIPS), PLACE FINAL PAVEMENT MARKINGS TO MATCH THE EXISTING PAVEMENT MARKINGS IN PLACE PRIOR TO CONSTRUCTION, AND OPEN TRAFFIC BACK UP TO THE EXISTING PATTERN.

STEP 8:

REMOVE ALL REMAINING TEMPORARY SIGNS AND TRAFFIC CONTROL DEVICES.

APPROVED: _____ DATE: _____

SEAL

NORTH CAROLINA PROFESSIONAL SEAL 19862 ENGINEER J. W. WOOLARD, JR.

4/9/14

DIVISION OF HIGHWAYS · STATE OF NORTH CAROLINA · DEPARTMENT OF TRANSPORTATION · WORK ZONE TRAFFIC CONTROL

TEMPORARY TRAFFIC CONTROL PHASING

4/9/2014
S:\TMU\WZTC\DesignGroup3\SquadJA\BP-5500Z\TCP\BP5500Z_TC_TMP03.dgn
User:sdreich

PROJ. REFERENCE NO.	SHEET NO.
BP-5500Z	TMP-4

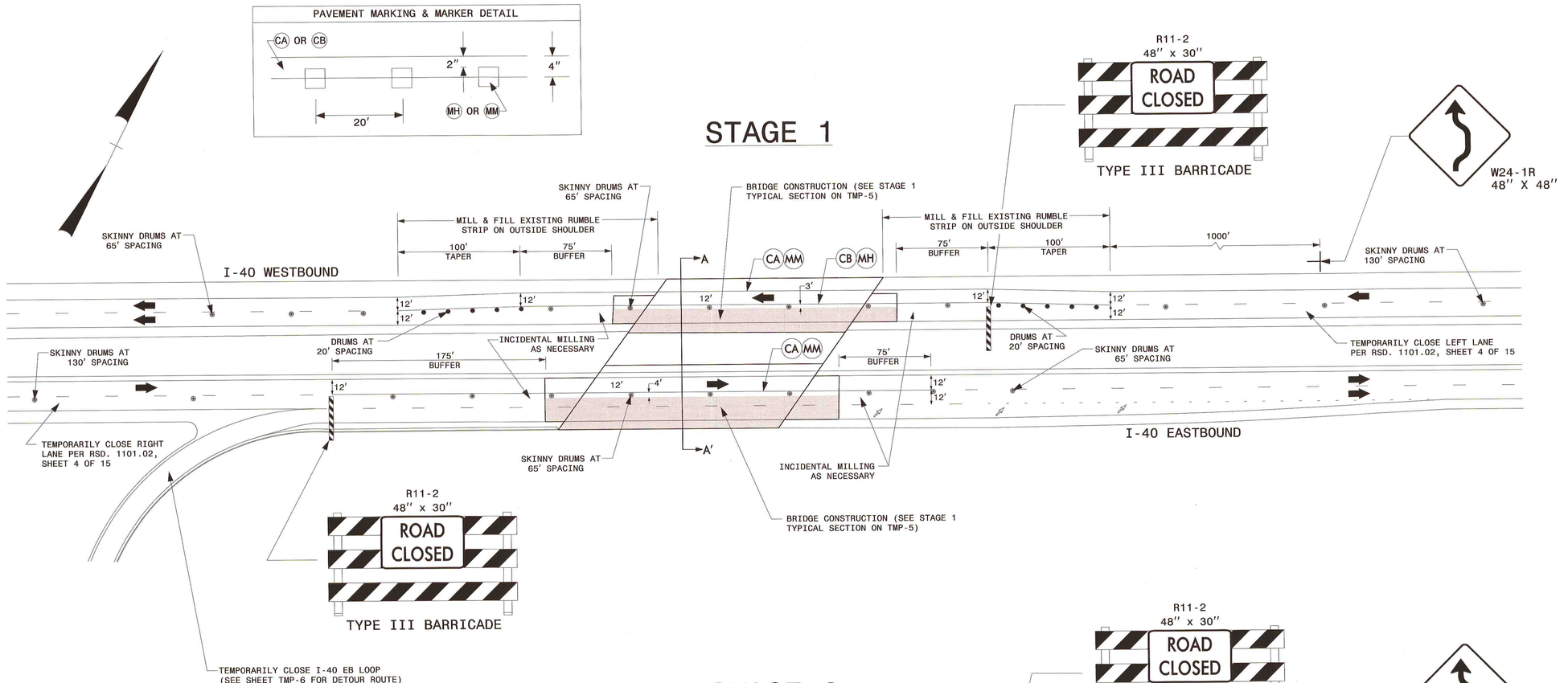

APPROVED: DATE:

SEAL

NORTH CAROLINA PROFESSIONAL SEAL 19862 ENGINEER J. W. WOOLARD, JR. 3/17/14

DIVISION OF HIGHWAYS STATE OF NORTH CAROLINA DEPARTMENT OF TRANSPORTATION WORK ZONE TRAFFIC CONTROL

PLAN VIEW

3/17/2014
S:\TIM\WZTC\DesignGroup3\Saud3A\BP-5500Z\TCP\BP5500Z_TC_TMP04.dgn
User:cdreich

PROJ. REFERENCE NO.	SHEET NO.
BP-5500Z	TMP-5

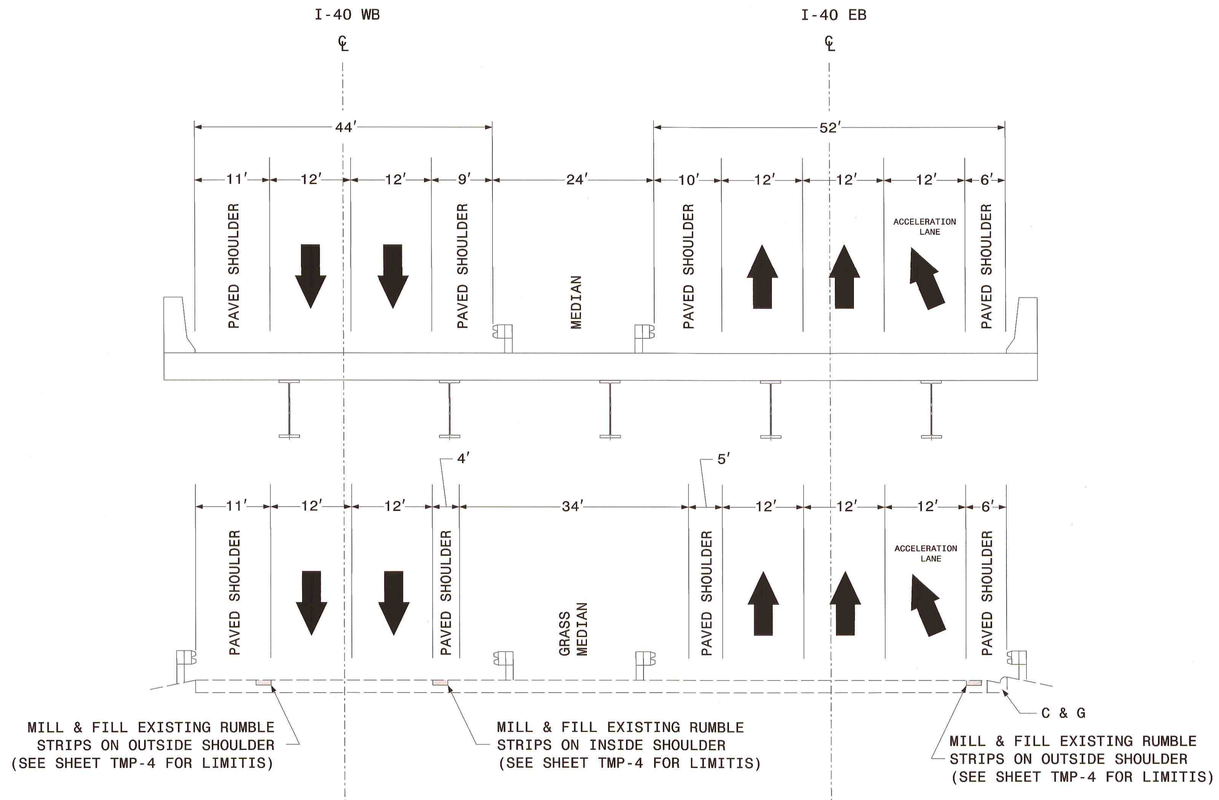

EXISTING

ROADWAY APPROACH

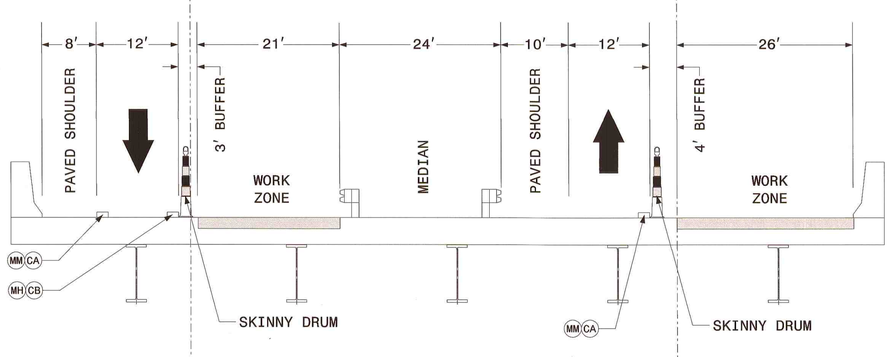

SECTION A-A′
STAGE 1

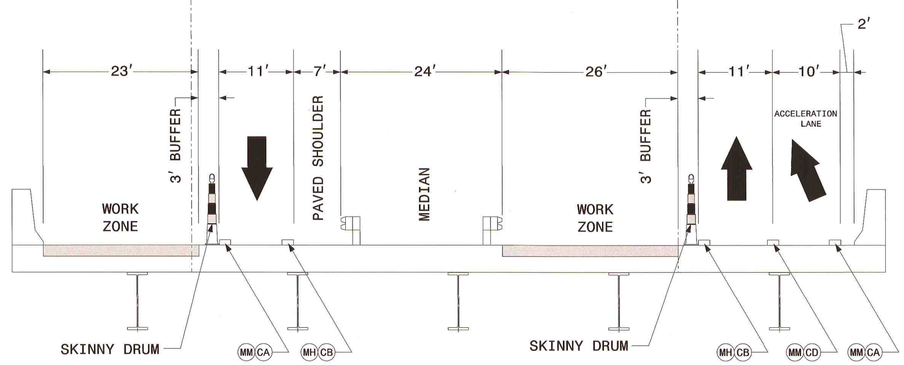

SECTION B-B′
STAGE 2

APPROVED: DATE:

SEAL

NORTH CAROLINA PROFESSIONAL SEAL 19862 ENGINEER J. W. WOOLARD, JR. 3/17/14

DIVISION OF HIGHWAYS STATE OF NORTH CAROLINA DEPARTMENT OF TRANSPORTATION WORK ZONE TRAFFIC CONTROL

TYPICAL SECTIONS

3/17/2014
S:\TMU\WZTC\DesignGroup3\Squad3A\BP-5500Z\TCP\BP5500Z_TC_TMP05.dgn
User:rcarlech

PROJ. REFERENCE NO.	SHEET NO.
BP-5500Z	TMP-6

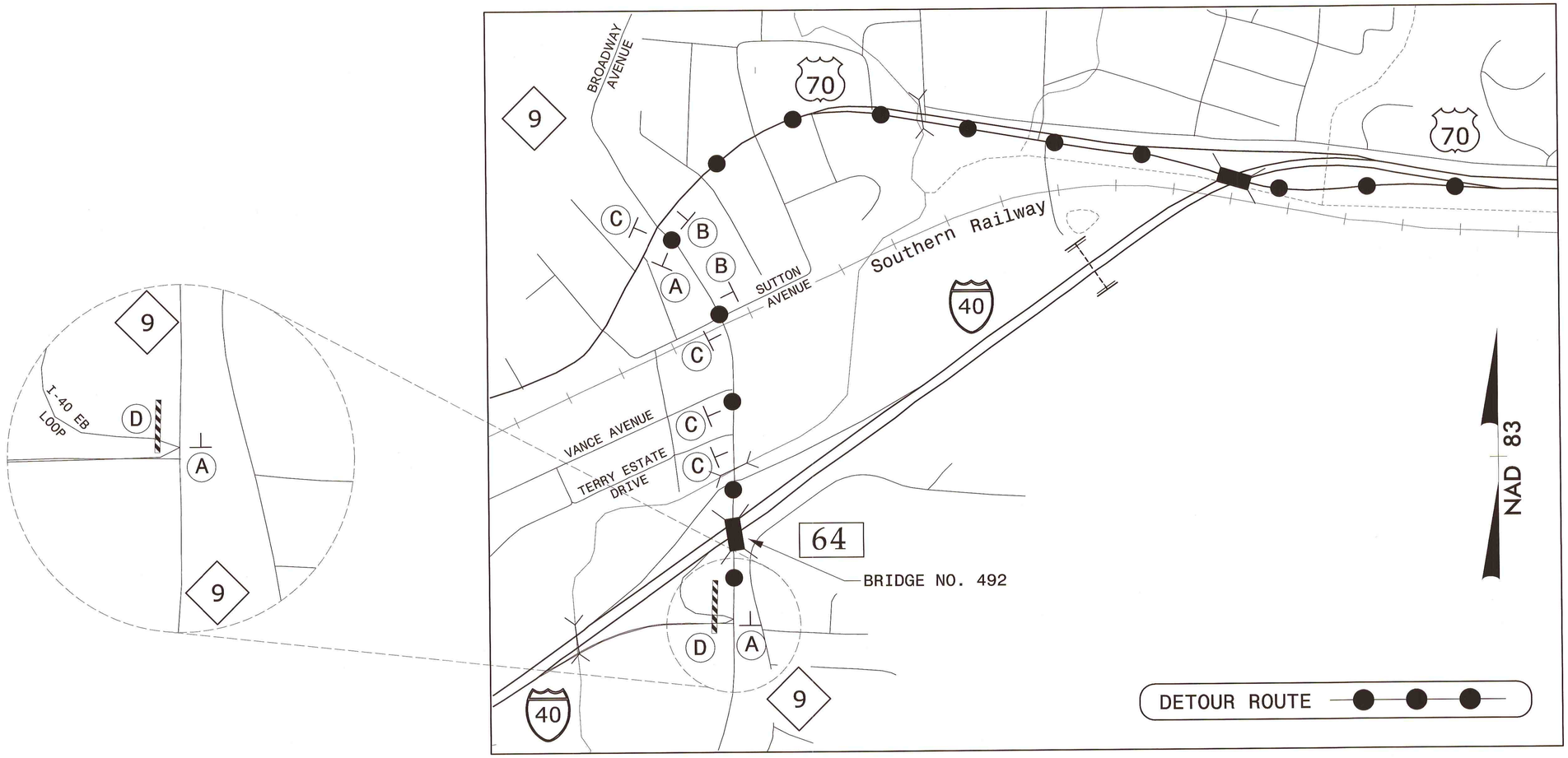

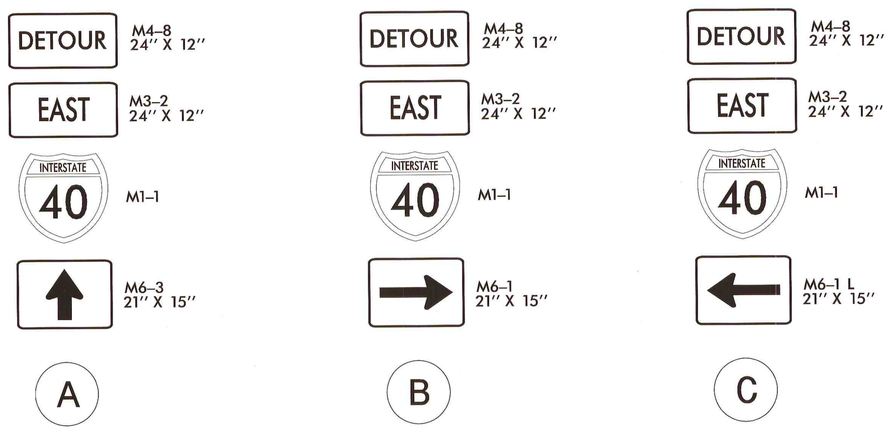

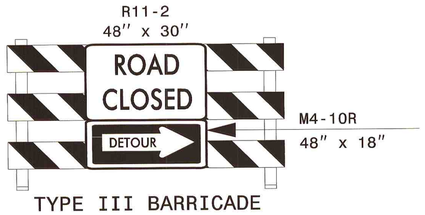

TYPE III BARRICADE

D

APPROVED: DATE:

SEAL

NORTH CAROLINA PROFESSIONAL SEAL 19862 ENGINEER J.W. WOOLARD, JR.

3/10/14

DIVISION OF HIGHWAYS STATE OF NORTH CAROLINA DEPARTMENT OF TRANSPORTATION WORK ZONE TRAFFIC CONTROL

I-40 EB LOOP
DETOUR ROUTE

3/10/2014
S:\TMU\WZTC\DesignGroup3\Squad3A\BP-5500Z\TCP\BP5500Z_TC_TMP06.dgn
User:cdreich