02/27/12

PROJECT: 17BP.13.R.1

CONTRACT: DM00107

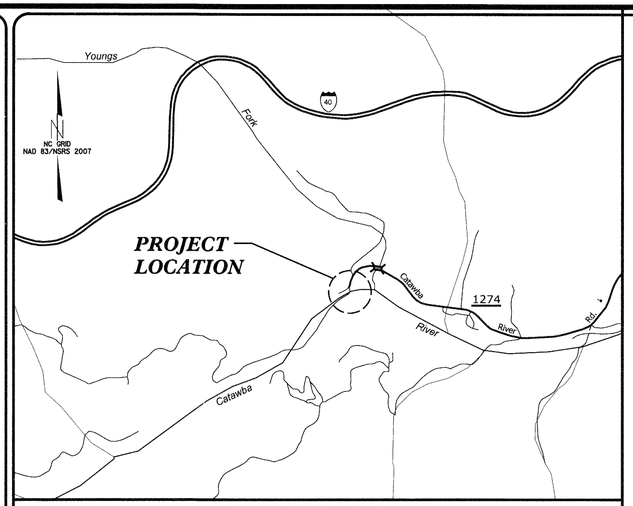

VICINITY MAP

See Sheet 1-A For Index of Sheets

STATE OF NORTH CAROLINA
DIVISION OF HIGHWAYS

McDOWELL COUNTY

STATE	STATE PROJECT REFERENCE NO.	SHEET NO.	TOTAL SHEETS
N.C.	17BP.13.R.1	1	

STATE PROJ. NO.	F.A. PROJ. NO.	DESCRIPTION
17BP.13.R.1	N/A	PE
17BP.13.R.1	N/A	RW
17BP.13.R.1	N/A	CONST.

LOCATION: BRIDGE NO. 85 OVER CATAWBA RIVER ON SR 1274 (CATAWBA RIVER RD.)

TYPE OF WORK: GRADING, DRAINAGE, PAVING, AND STRUCTURE

4

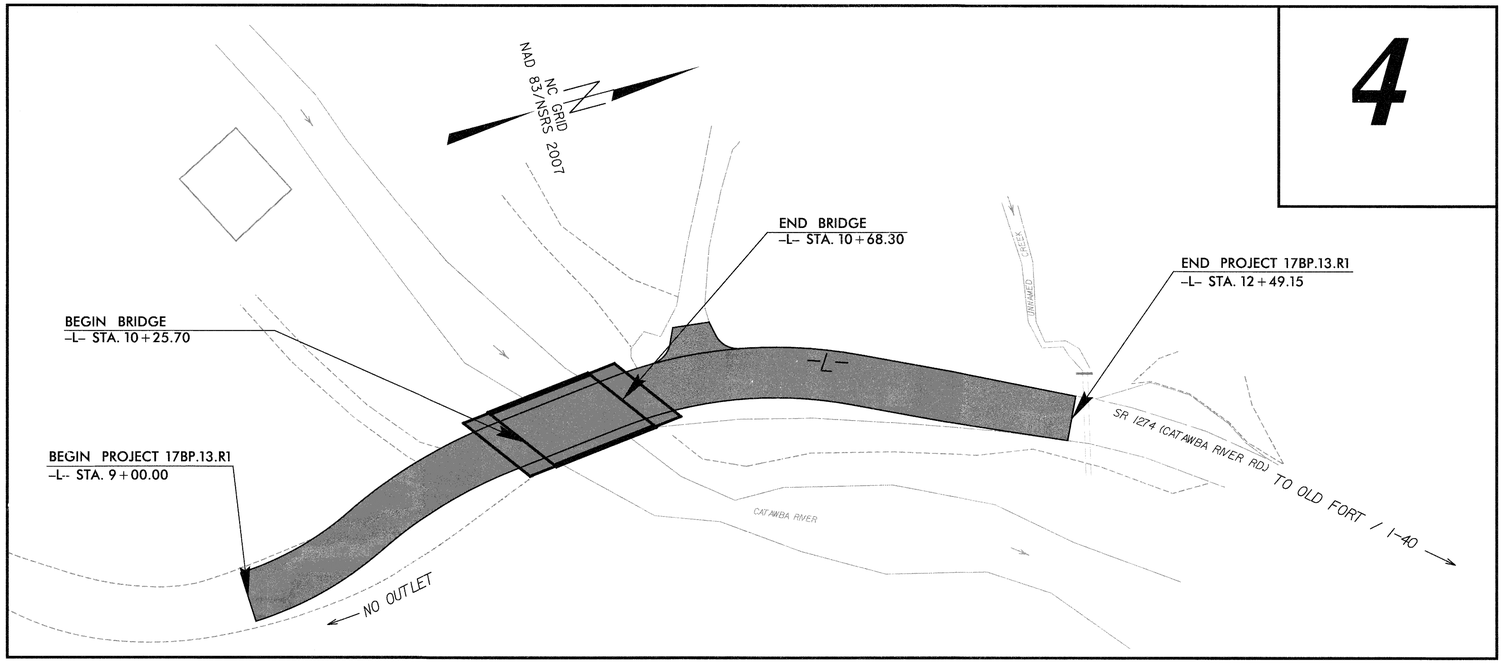

V&M
Vaughn & Melton
Consulting Engineers
Asheville, North Carolina 828-253-2796
Charlotte, North Carolina 704-357-0488
Tri-Cities, Tennessee 423-467-8401
Knoxville, Tennessee 865-546-5800
Middlesboro, Kentucky 606-248-6600
Spartanburg, South Carolina 864-574-4775

Copyright © 1994 Vaughn & Melton, Inc. All Rights Reserved

GRAPHIC SCALES

20 10 0 20 40
PLANS

20 10 0 20 40
PROFILE (HORIZONTAL)

5 0 5 10
PROFILE (VERTICAL)

DESIGN DATA

ADT 1998 = 100
ADT 2025 = 200

V = 20 MPH
* TTST = 17
FUNC CLASS = LOCAL

SUBREGIONAL TIER

PROJECT LENGTH

LENGTH OF ROADWAY	=	0.058 MI.
LENGTH OF STRUCTURE	=	0.008 MI.
TOTAL LENGTH	=	0.066 MI.

Prepared In the Office of:
VAUGHN & MELTON
1318-F PATTON AVE.
ASHEVILLE NC, 28806
FOR THE NORTH CAROLINA DIVISION OF HIGHWAYS

2012 STANDARD SPECIFICATIONS

RIGHT OF WAY DATE:
NOVEMBER 6, 2012

LETTING DATE:
JULY 16, 2014

HARDY WILLIS, PE
PROJECT ENGINEER

AARON CARVER, PE
PROJECT DESIGN ENGINEER

HYDRAULICS ENGINEER

NORTH CAROLINA PROFESSIONAL SEAL 033023 ENGINEER BRADLEY S. RIDMOUR

Bradley S Ridmour, PE 6/12/14
P.E.
SIGNATURE:

ROADWAY DESIGN ENGINEER

NORTH CAROLINA PROFESSIONAL SEAL 030453 ENGINEER AARON C. CARVER

6/12/14
P.E.
SIGNATURE:

DIVISION OF HIGHWAYS
STATE OF NORTH CAROLINA

STATE OF NORTH CAROLINA DEPARTMENT OF TRANSPORTATION

$$$$SYSTIME$$$$
$$$$USERNAME$$$$
$$$$DGN$$$$

PROJECT REFERENCE NO.	SHEET NO.
17.BP.13.R.1	1-A

ROADWAY DESIGN ENGINEER

NORTH CAROLINA PROFESSIONAL SEAL 030453 ENGINEER AARON C. CARTER 12/12/14

INDEX OF SHEETS

SHEET NUMBER	SHEET
1	TITLE SHEET
1-A	INDEX OF SHEETS, GENERAL NOTES, AND LIST OF STANDARD DRAWINGS
1-B	CONVENTIONAL SYMBOLS
1-C	SURVEY CONTROL SHEET
2	PAVEMENT SCHEDULE, TYPICAL SECTIONS, AND WEDGING DETAILS
2-A	STRUCTURE ANCHOR UNIT DETAILS
2-B	MODIFIED CONCRETE FLUME DETAIL
3-A	SUMMARY OF DRAINAGE QUANTITIES, SUMMARY OF GUARDRAIL, AND ASPHALT PAVEMENT REMOVAL SUMMARY
3-B	EARTHWORK SUMMARY
4	PLAN SHEET
EC-1 THRU EC-3	EROSION CONTROL PLANS
X-0	CROSS-SECTION SUMMARY
X-1 THRU X-5	CROSS-SECTIONS
S-1 THRU S-22	STRUCTURE PLANS

GENERAL NOTES:

2012 SPECIFICATIONS
EFFECTIVE: 01-17-12

GRADE LINE:
GRADING AND SURFACING OR RESURFACING AND WIDENING:

THE GRADE LINES SHOWN DENOTE THE FINISHED ELEVATION OF THE PROPOSED SURFACING AT GRADE POINTS SHOWN ON THE TYPICAL SECTIONS. WHERE NO GRADE LINES ARE SHOWN, THE PROFILES SHOWN DENOTE THE TOP ELEVATION OF THE EXISTING PAVEMENT ALONG THE CENTER LINE OF SURVEY ON WHICH THE PROPOSED RESURFACING WILL BE PLACED. GRADE LINES MAY BE ADJUSTED BY THE ENGINEER IN ORDER TO SECURE A PROPER TIE-IN.

CLEARING:

CLEARING ON THIS PROJECT SHALL BE PERFORMED TO THE LIMITS ESTABLISHED BY METHOD II.

SUPERELEVATION:

ALL CURVES ON THIS PROJECT SHALL BE SUPERELEVATED IN ACCORDANCE WITH STD. NO. 225.04 USING THE RATE OF SUPERELEVATION AND RUNOFF SHOWN ON THE PLANS. SUPERELEVATION IS TO BE REVOLVED ABOUT THE GRADE POINTS SHOWN ON THE TYPICAL SECTIONS.

SHOULDER CONSTRUCTION:

ASPHALT, EARTH, AND CONCRETE SHOULDER CONSTRUCTION ON THE HIGH SIDE OF SUPERELEVATED CURVES SHALL BE IN ACCORDANCE WITH STD. NO. 560.01.

UNDERDRAINS:

UNDERDRAINS SHALL BE CONSTRUCTED IN ACCORDANCE WITH STD. NO. 815.03 AT LOCATIONS DIRECTED BY THE ENGINEER.

GUARDRAIL:

THE GUARDRAIL LOCATIONS SHOWN ON THE PLANS MAY BE ADJUSTED DURING CONSTRUCTION AS DIRECTED BY THE ENGINEER. THE CONTRACTOR SHOULD CONSULT WITH THE ENGINEER PRIOR TO ORDERING GUARDRAIL MATERIAL.

END BENTS:

THE ENGINEER SHALL CHECK THE STRUCTURE END BENT PLANS, DETAILS, AND CROSS-SECTION PRIOR TO SETTING OF THE SLOPE STAKES FOR THE EMBANKMENT OR EXCAVATION APPROACHING A BRIDGE.

UTILITIES:

UTILITY OWNERS ON THIS PROJECT ARE DUKE ENERGY AND FRONTIER COMMUNICATIONS.

RIGHT-OF-WAY MARKERS:

ALL RIGHT-OF-WAY MARKERS ON THIS PROJECT SHALL BE PLACED BY CONTRACT.

2012 ROADWAY ENGLISH STANDARD DRAWINGS

The following Roadway Standards as appear in "Roadway Standard Drawings" Highway Design Branch - N. C. Department of Transportation - Raleigh, N. C., Dated January 17, 2012 are applicable to this project and by reference hereby are considered a part of these plans:

STD.NO.	TITLE
DIVISION 2 - EARTHWORK	
200.02	Method of Clearing - Method II
225.02	Guide for Grading Subgrade - Secondary and Local
225.04	Method of Obtaining Superelevation - Two Lane Pavement
DIVISION 3 - PIPE CULVERTS	
300.01	Method of Pipe Installation - Method 'A'
DIVISION 4 - MAJOR STRUCTURES	
422.11	Bridge Approach Fills
DIVISION 5 - SUBGRADE, BASES AND SHOULDERS	
560.01	Method of Shoulder Construction - High Side of Superelevated Curve - Method I
DIVISION 8 - INCIDENTALS	
815.03	Pipe Underdrain and Blind Drain
840.25	Anchorage for Frames
840.29	Frames and Narrow Slot Flat Grates
840.36	Traffic Bearing Grated Drop Inlet - for Steel Double Frame and Grates
840.37	Steel Grate and Frame
840.46	Traffic Bearing Precast Drainage Structure
840.66	Drainage Structure Steps
846.01	Concrete Curb, Gutter and Curb & Gutter
846.04	Drop Inlet Installation in Shoulder Berm Gutter
862.01	Guardrail Placement
862.02	Guardrail Installation
876.02	Guide for Rip Rap at Pipe Outlets

STIMESON CONSULTING

3/15/06

PROJECT REFERENCE NO.	SHEET NO.
17BP.13.R.1	1-B

Note: Not to Scale

****S.U.E. = Subsurface Utility Engineering***

STATE OF NORTH CAROLINA
DIVISION OF HIGHWAYS

CONVENTIONAL PLAN SHEET SYMBOLS

BOUNDARIES AND PROPERTY:

- State Line
- County Line
- Township Line
- City Line
- Reservation Line
- Property Line
- Existing Iron Pin — EIP
- Property Corner
- Property Monument — ECM
- Parcel/Sequence Number — 123
- Existing Fence Line
- Proposed Woven Wire Fence
- Proposed Chain Link Fence
- Proposed Barbed Wire Fence
- Existing Wetland Boundary — WLB
- Proposed Wetland Boundary — WLB
- Existing Endangered Animal Boundary — EAB
- Existing Endangered Plant Boundary — EPB

BUILDINGS AND OTHER CULTURE:

- Gas Pump Vent or U/G Tank Cap
- Sign — S
- Well — W
- Small Mine
- Foundation
- Area Outline
- Cemetery
- Building
- School
- Church
- Dam

HYDROLOGY:

- Stream or Body of Water
- Hydro, Pool or Reservoir
- Jurisdictional Stream — JS
- Buffer Zone 1 — BZ 1
- Buffer Zone 2 — BZ 2
- Flow Arrow
- Disappearing Stream
- Spring
- Swamp Marsh
- Proposed Lateral, Tail, Head Ditch — FLOW
- False Sump

RAILROADS:

- Standard Gauge — CSX TRANSPORTATION
- RR Signal Milepost — MILEPOST 35
- Switch — SWITCH
- RR Abandoned
- RR Dismantled

RIGHT OF WAY:

- Baseline Control Point
- Existing Right of Way Marker
- Existing Right of Way Line
- Proposed Right of Way Line — RW
- Proposed Right of Way Line with Iron Pin and Cap Marker — RW
- Proposed Right of Way Line with Concrete or Granite Marker — RW
- Existing Control of Access — CA
- Proposed Control of Access — CA
- Existing Easement Line — E
- Proposed Temporary Construction Easement — E
- Proposed Temporary Drainage Easement — TDE
- Proposed Permanent Drainage Easement — PDE
- Proposed Permanent Utility Easement — PUE

ROADS AND RELATED FEATURES:

- Existing Edge of Pavement
- Existing Curb
- Proposed Slope Stakes Cut — C
- Proposed Slope Stakes Fill — F
- Proposed Wheel Chair Ramp — WCR
- Proposed Wheel Chair Ramp Curb Cut — WCC
- Curb Cut for Future Wheel Chair Ramp — CCFR
- Existing Metal Guardrail
- Proposed Guardrail
- Existing Cable Guiderail
- Proposed Cable Guiderail
- Equality Symbol
- Pavement Removal

VEGETATION:

- Single Tree
- Single Shrub
- Hedge
- Woods Line
- Orchard
- Vineyard — Vineyard

EXISTING STRUCTURES:

MAJOR:

- Bridge, Tunnel or Box Culvert — CONC
- Bridge Wing Wall, Head Wall and End Wall — CONC WW

MINOR:

- Head and End Wall — CONC HW
- Pipe Culvert
- Footbridge
- Drainage Box: Catch Basin, DI or JB — CB
- Paved Ditch Gutter
- Storm Sewer Manhole — S
- Storm Sewer — S

UTILITIES:

POWER:

- Existing Power Pole
- Proposed Power Pole
- Existing Joint Use Pole
- Proposed Joint Use Pole
- Power Manhole — P
- Power Line Tower
- Power Transformer
- U/G Power Cable Hand Hole — HH
- H-Frame Pole
- Recorded U/G Power Line — P
- Designated U/G Power Line (S.U.E.*) — P

TELEPHONE:

- Existing Telephone Pole
- Proposed Telephone Pole
- Telephone Manhole — T
- Telephone Booth
- Telephone Pedestal — T
- Telephone Cell Tower
- U/G Telephone Cable Hand Hole — HH
- Recorded U/G Telephone Cable — T
- Designated U/G Telephone Cable (S.U.E.*) — T
- Recorded U/G Telephone Conduit — TC
- Designated U/G Telephone Conduit (S.U.E.*) — TC
- Recorded U/G Fiber Optics Cable — T FO
- Designated U/G Fiber Optics Cable (S.U.E.*) — T FO

WATER:

- Water Manhole — W
- Water Meter
- Water Valve
- Water Hydrant
- Recorded U/G Water Line — W
- Designated U/G Water Line (S.U.E.*) — W
- Above Ground Water Line — A/G Water

TV:

- TV Satellite Dish
- TV Pedestal — C
- TV Tower
- U/G TV Cable Hand Hole — HH
- Recorded U/G TV Cable — TV
- Designated U/G TV Cable (S.U.E.*) — TV
- Recorded U/G Fiber Optic Cable — TV FO
- Designated U/G Fiber Optic Cable (S.U.E.*) — TV FO

GAS:

- Gas Valve
- Gas Meter
- Recorded U/G Gas Line — G
- Designated U/G Gas Line (S.U.E.*) — G
- Above Ground Gas Line — A/G Gas

SANITARY SEWER:

- Sanitary Sewer Manhole
- Sanitary Sewer Cleanout
- U/G Sanitary Sewer Line — SS
- Above Ground Sanitary Sewer — A/G Sanitary Sewer
- Recorded SS Forced Main Line — FSS
- Designated SS Forced Main Line (S.U.E.*) — FSS

MISCELLANEOUS:

- Utility Pole
- Utility Pole with Base
- Utility Located Object
- Utility Traffic Signal Box — S
- Utility Unknown U/G Line — ?UTL
- U/G Tank; Water, Gas, Oil
- A/G Tank; Water, Gas, Oil
- U/G Test Hole (S.U.E.*)
- Abandoned According to Utility Records — AATUR
- End of Information — E.O.I.

PROJECT REFERENCE NO.	SHEET NO.
17BP.13.R.1	1C
Location and Surveys	

SURVEY CONTROL SHEET

BL

POINT	DESC.	NORTH	EAST	ELEVATION	L STATION	OFFSET
3	BL-3	694097.6970	1040084.3597	1580.40	9+70.63	158.53 LT
4	BL-4	694194.6106	1040218.7640	1576.42	10+13.01	3.24 LT
GPS-1	85-1	694358.6966	1040200.2293	1577.04	11+64.42	35.89 LT

****
BM1 ELEVATION = 1573.09
N 694348 E 1040269
BL STATION 8+12.00 67' RIGHT
RR SPIKE IN BASE OF 14" HOLLY TREE
****

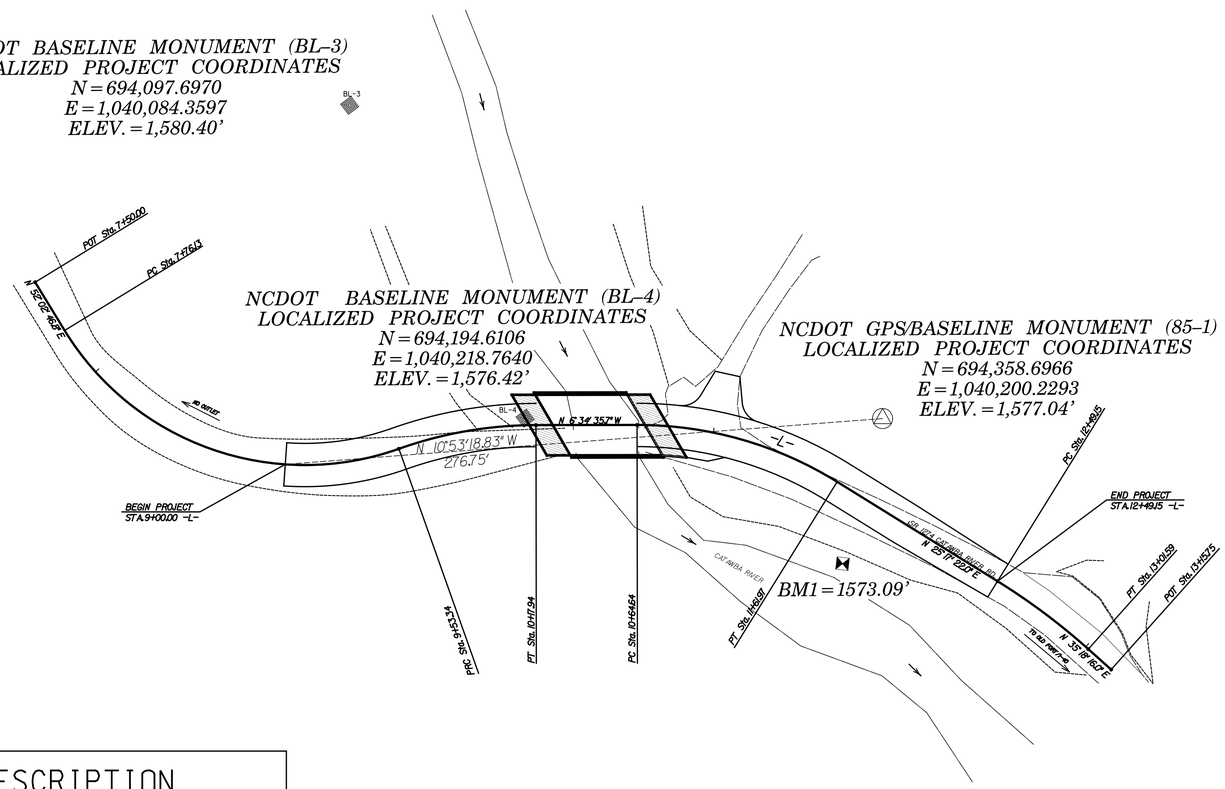

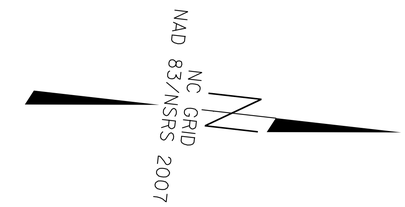

FINAL -L-

TYPE	STATION	NORTH	EAST
POT	7+50.00	693962.5787	1040181.9716
PC	7+76.13	693978.6496	1040202.5757
PRC	9+53.34	694138.2592	1040239.4094
PT	10+17.94	694199.9572	1040221.3483
PC	10+64.64	694246.3497	1040215.9997
PT	11+61.97	694341.1512	1040231.6199
PC	12+49.15	694419.9813	1040268.8650
PT	13+01.59	694465.2002	1040295.2856

FINAL ROW MARKER IRON PIN AND CAP-E

ALIGN	STATION	OFFSET	NORTH	EAST
L	8+90.00	-30.00	694077.9102	1040222.5698
L	9+53.34	-30.00	694125.0814	1040212.4586
L	10+17.94	-30.00	694196.5213	1040191.5457
L	10+64.64	-30.00	694242.9158	1040186.1969
L	11+61.97	-30.00	694353.9669	1040204.4951
L	12+49.15	-30.00	694432.7942	1040241.7388
L	8+90.00	30.00	694075.9630	1040282.5382
L	9+53.34	30.00	694151.4369	1040266.3603
L	9+94.15	30.00	694183.6891	1040254.6831
L	9+92.00	44.00	694185.4134	1040268.6839
L	10+17.94	30.00	694203.3932	1040251.1509
L	10+33.74	30.00	694219.0910	1040249.3411
L	11+20.00	38.52	694293.7172	1040256.1314

DATUM DESCRIPTION

THE LOCALIZED COORDINATE SYSTEM DEVELOPED FOR THIS PROJECT IS BASED ON THE STATE PLANE COORDINATES ESTABLISHED BY NCGS FOR MONUMENT "85-1"
WITH NAD 83/NSRS 2007 STATE PLANE GRID COORDINATES OF
NORTHING: 694358.6966(ft) EASTING: 1040200.2293(ft)
ELEVATION: 1577.04(ft)
THE AVERAGE COMBINED GRID FACTOR USED ON THIS PROJECT (GROUND TO GRID) IS: 0.99982201
THE N.C. LAMBERT GRID BEARING AND LOCALIZED HORIZONTAL GROUND DISTANCE FROM "85-1" TO -L- STATION 9+00 IS
N 10° 53' 18.83" W 276.75'
ALL LINEAR DIMENSIONS ARE LOCALIZED HORIZONTAL DISTANCES
VERTICAL DATUM USED IS NAVD 88

NOTE: DRAWING NOT TO SCALE

NOTES:

SITE CALIBRATION INFORMATION HAS NOT BEEN PROVIDED FOR THIS PROJECT. IF FURTHER INFORMATION IS NEEDED, PLEASE CONTACT THE LOCATION AND SURVEYS UNIT.

INDICATES GEODETIC CONTROL MONUMENTS USED OR SET FOR HORIZONTAL PROJECT CONTROL BY THE NCDOT LOCATION AND SURVEYS UNIT.

PROJECT CONTROL ESTABLISHED USING GLOBAL POSITIONING SYSTEM.

SYTINE
DESIGN
USER: RONNIE

PROJECT REFERENCE NO.	SHEET NO.
17.BP.13.R.1	2
R/W SHEET NO.	
ROADWAY DESIGN ENGINEER	PAVEMENT DESIGN ENGINEER

NORTH CAROLINA PROFESSIONAL SEAL 030453 ENGINEER AARON C. CARVER 8/27/13

NORTH CAROLINA PROFESSIONAL SEAL 20134 ENGINEER ROBERT M. CHEE 8/28/13

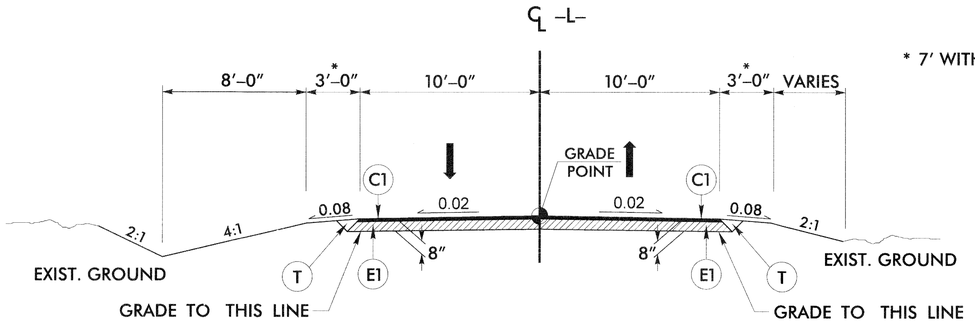

* 7' WITH GUARDRAIL

TYPICAL SECTION NO. 1

USE TYPICAL SECTION NO. 1

-L- STA. 9+00.00 (BEGIN PROJECT) TO 10+25.70 (BEGIN BRIDGE)

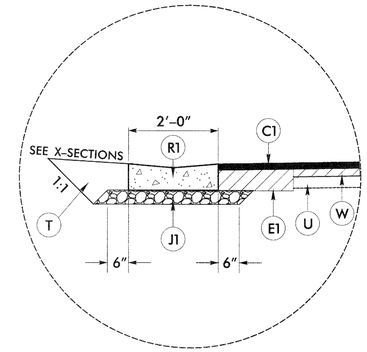

INSET A

VALLEY GUTTER -L- STA. 11+11.46 (LT.) TO 12+30 (LT.)

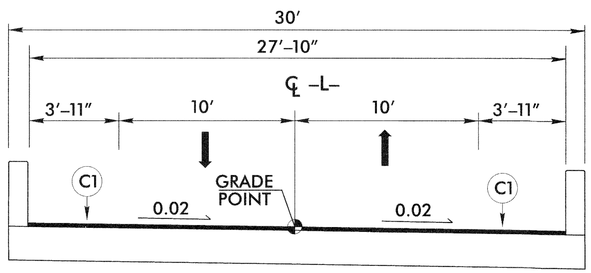

TYPICAL SECTION NO. 2

USE TYPICAL SECTION NO. 2

-L- STA. 10+25.70 (BEGIN BRIDGE) TO
-L- STA. 10+68.30 (END BRIDGE)

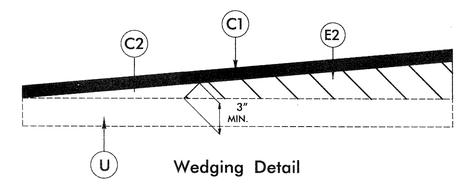

Wedging Detail

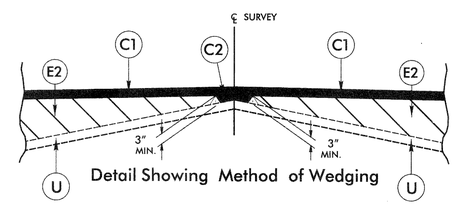

Detail Showing Method of Wedging

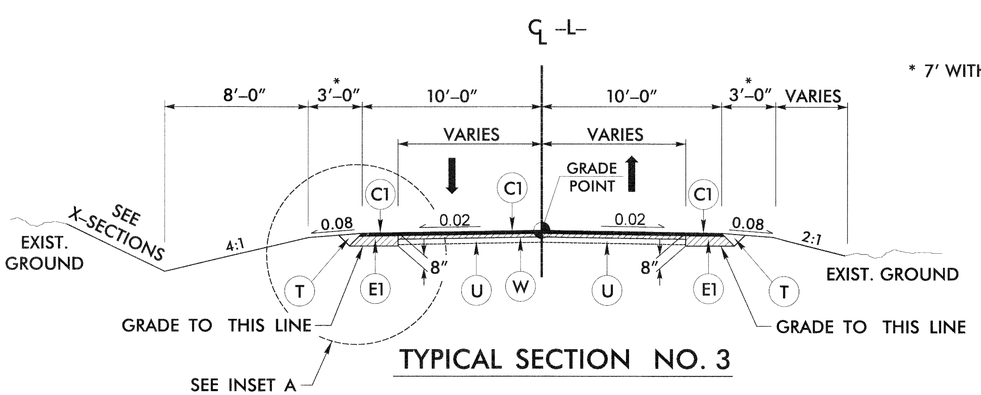

* 7' WITH GUARDRAIL

TYPICAL SECTION NO. 3

USE TYPICAL SECTION NO. 3

-L- STA. 10+68.30 (END BRIDGE) TO STA. 12+49.15 (END PROJECT)

	PAVEMENT SCHEDULE
C1	PROP. APPROX. 3" ASPHALT CONCRETE SURFACE COURSE, TYPE S9.5B, AT AN AVERAGE RATE OF 168 LBS. PER SQ. YD. IN EACH OF TWO LAYERS.
C2	PROP. VAR. DEPTH ASPHALT CONCRETE SURFACE COURSE, TYPE S9.5B AT AN AVERAGE RATE OF 112 LBS. PER SQ. YD. PER 1" DEPTH. TO BE PLACED IN LAYERS NOT TO EXCEED 2" IN DEPTH.
E1	PROP. APPROX. 5" ASPHALT CONCRETE BASE COURSE, TYPE B25.0B, AT AN AVERAGE RATE OF 570 LBS. PER SQ. YD.
E2	PROP. VAR. DEPTH ASPHALT CONCRETE BASE COURSE, TYPE B25.0B, AT AN AVERAGE RATE OF 114 LBS. PER SQ. YD. PER 1" DEPTH. TO BE PLACED IN LAYERS NOT LESS THAN 3" IN DEPTH OR GREATER THAN 5½" IN DEPTH.
J1	6" AGGREGATE BASE COURSE
R1	2'-0" VALLEY GUTTER NCDOT STANDARD DRAWING NO. 846.01
T	EARTH MATERIAL
U	EXISTING PAVEMENT
W	PROPOSED WEDGING (SEE APPROPRIATE DETAILS)

NOTE: ALL PAVEMENT SLOPES ARE 1:1 UNLESS SHOWN OTHERWISE.

STATE OF NORTH CAROLINA
DEPT. OF TRANSPORTATION
DIVISION OF HIGHWAYS
RALEIGH, N.C.

ENGLISH DETAIL DRAWING FOR
STRUCTURE ANCHOR UNITS
GUARDRAIL ANCHOR UNIT, TYPE III FOR ATTACHMENT TO RAIL ON BRIDGE - SUB REGIONAL TIER

SHEET 2 OF 7
862d03

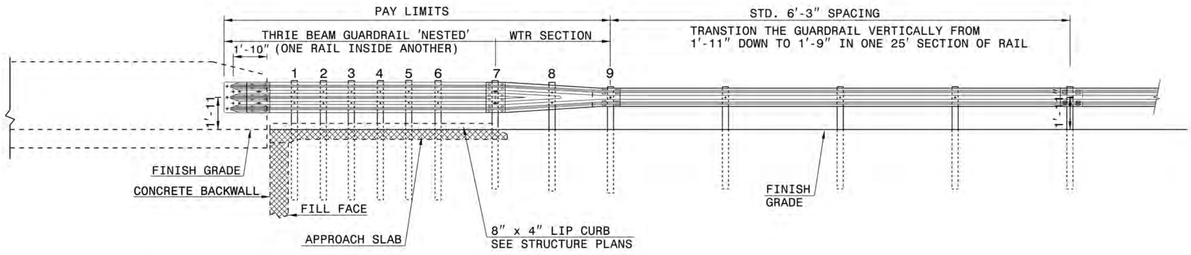

ELEVATION

NOTE:
- **POST NOT REQUIRED FOR SKEW ANGLES GREATER THAN 150° OR LESS THAN 30° UNLESS OTHERWISE DIRECTED BY THE ENGINEER.
- *THE DISTANCE FROM END OF BRIDGE RAIL TO CENTER LINE OF THE FIRST POST SHOULD BE 11½" IF CONCRETE BACKWALL IS NOT PRESENT.
- -SHOULDER BERM GUTTER MUST BE INSTALLED TO THE LIMITS 8" x 4" LIP CURB IS SHOWN IF ANCHOR UNIT IS NOT ADJACENT TO AN APPROACH SLAB.
- -MEASURE GUARDRAIL HEIGHT FROM THE TOP OF ADJACENT SURFACE (SHOULDER, BERM, OR GUTTER).
- -LAP JOINTS IN THE DIRECTION OF TRAFFIC FLOW.
- -SEE SHEET 5 FOR POST SECTIONS 1 THRU 9.

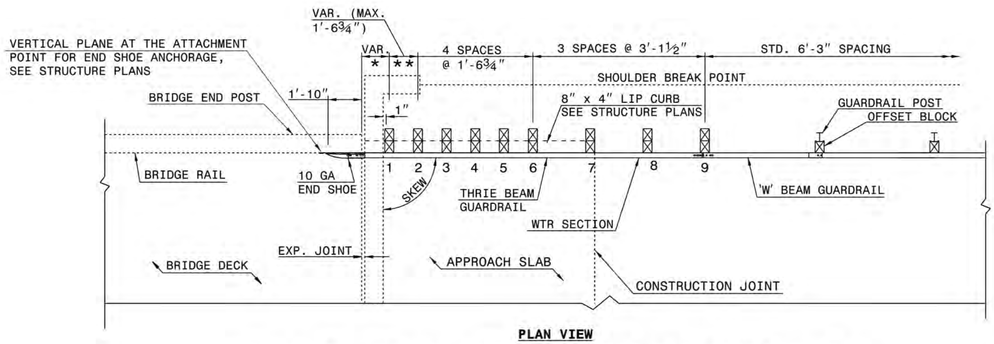

PLAN VIEW

GUARDRAIL ANCHOR UNIT, TYPE III FOR ATTACHMENT TO RAIL ON BRIDGE - SUB REGIONAL TIER

STATE OF NORTH CAROLINA
DEPT. OF TRANSPORTATION
DIVISION OF HIGHWAYS
RALEIGH, N.C.

ENGLISH DETAIL DRAWING FOR
STRUCTURE ANCHOR UNITS
GUARDRAIL ANCHOR UNIT, TYPE III FOR ATTACHMENT TO RAIL ON BRIDGE - SUB REGIONAL TIER

SHEET 2 OF 7
862d03

STATE OF NORTH CAROLINA
DEPT. OF TRANSPORTATION
DIVISION OF HIGHWAYS
RALEIGH, N.C.

ENGLISH DETAIL DRAWING FOR
STRUCTURE ANCHOR UNITS
GUARDRAIL ANCHOR UNIT, TYPE III

SHEET 3 OF 7
862d03

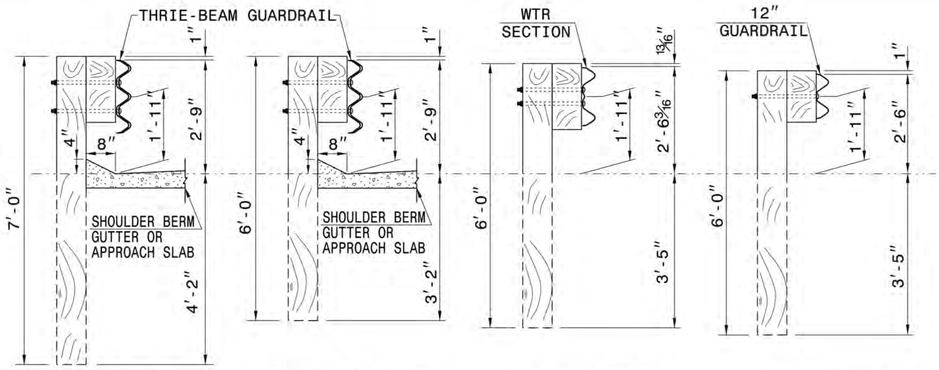

SECTION OF THRIE BEAM POSTS 1 THRU 6

SECTION OF THRIE BEAM POST 7

SECTION OF WTR BEAM POST 8

SECTION OF 'W' BEAM POST 9

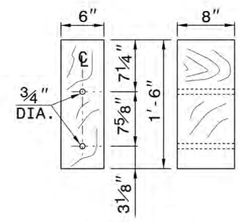

THRIE BEAM OFFSET BLOCK

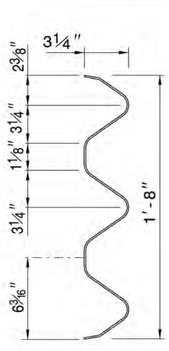

THRIE-BEAM SECTION

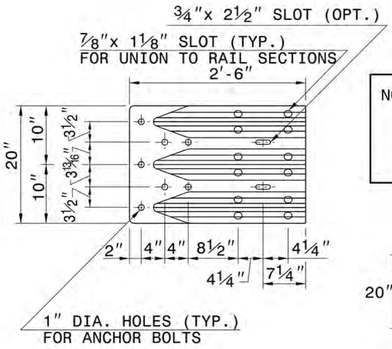

END SHOE

NOTE: THE MID POST AND OFFSET BLOCK OF THE WTR SECTION WILL REQUIRE SPECIAL BOLT HOLE DRILLING IN THE THRIE BEAM OFFSET BLOCK AND LINE POST.

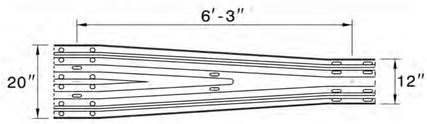

WTR SECTION
ELEVATION VIEW

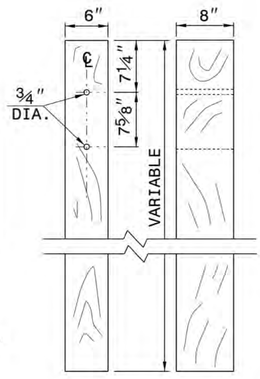

THRIE BEAM LINE POST

STATE OF NORTH CAROLINA
DEPT. OF TRANSPORTATION
DIVISION OF HIGHWAYS
RALEIGH, N.C.

ENGLISH DETAIL DRAWING FOR
STRUCTURE ANCHOR UNITS
GUARDRAIL ANCHOR UNIT, TYPE III

SHEET 3 OF 7
862d03

CONTRACT STANDARDS AND DEVELOPMENT UNIT
Office 919-707-6950 FAX 919-250-4119

SEE TITLE BLOCK

ORIGINAL BY: J. HOWERTON DATE: 06-22-12
MODIFIED BY: DATE:
CHECKED BY: DATE:
FILE SPEC.:

PROJECT REFERENCE NO. 17.BP.13.R.1
SHEET NO. ZA

PROJECT REFERENCE NO.	SHEET NO.
17BP.13.R.1	2-B

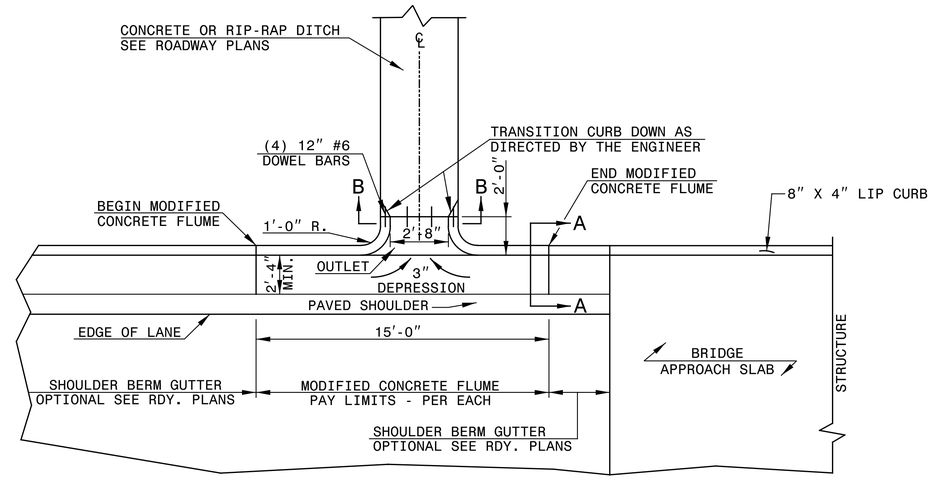

PLAN VIEW

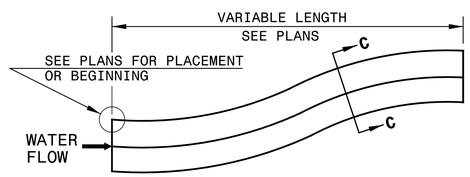

DOWNGRADE OR SAG

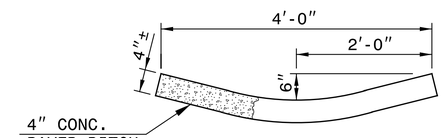

SECTION C-C

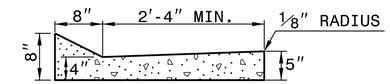

SECTION A-A

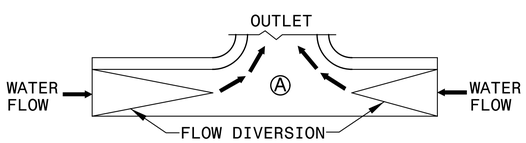

SAG

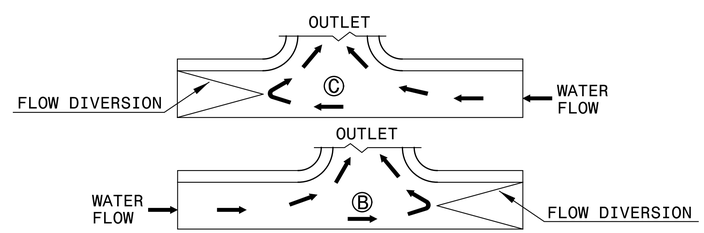

DOWN GRADE

FLOW DIVERSION EXAMPLES

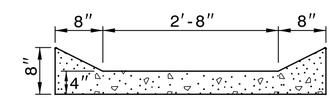

SECTION B-B

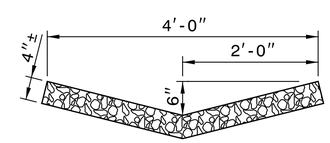

RIP-RAP LINED DITCH

NOTES:

- CONSTRUCT MODIFIED CONCRETE FLUME AND SHOULDER BERM GUTTER IN ACCORDANCE WITH THIS DETAIL.
- CONSTRUCT CONCRETE DITCH IN ACCORDANCE WITH STD. DWG. NO. 850.01.
- CONSTRUCT RIP RAP LINED DITCH IN ACCORDANCE WITH THIS DETAIL, IF CALLED FOR IN PLANS.
- CONCRETE OR RIP RAP LINED DITCH SHALL BE THE TYPE AND LENGTH SPECIFIED BY THE ROADWAY PLANS. THE DITCH SHALL TERMINATE AS SHOWN ON THE PLANS. IF NO TERMINATION IS INDICATED PLACE RIP-RAP AT THE END OF THE DITCH AS INDICATED BY STD. DWG. 876.02 FOR AN 18" PIPE. TRANSITIONS FROM THE DITCH TO TERMINATION SHALL BE AS DIRECTED BY THE ENGINEER.
- MODIFICATIONS SHALL BE AS DICTATED BY SITE CONDITIONS AND DIRECTED BY THE ENGINEER.

MODIFIED CONCRETE FLUME

8/17/99

DGN: stdmisc001.dgn
DWN: CTMEYER
CKD: CTMEYER

COMPUTED BY: WCC	DATE: 10-25-12
CHECKED BY: ACC	DATE: 10-25-12

6/21/00

STATE OF NORTH CAROLINA
DIVISION OF HIGHWAYS

PROJECT REFERENCE NO.	SHEET NO.
17BPJ3.R.1	3-A

RIGHT OF WAY AREA DATA

PARCEL NO.	PROPERTY OWNERS NAMES	TOTAL ACREAGE	AREA TAKEN (sf)	AREA REMAINING RT. (Acre)	AREA REMAINING LT. (Acre)	CONST. EASE. (sf)	PERM. UTIL. EASE. (sf)	TEMP. DRAIN. EASE. (sf)
1	UNITED STATES OF AMERICA	88.13	3239		88.06	4057	1006	
2	PAT L. & MARGARET J. THOMAS	17.00	2897		16.93			

PAVEMENT REMOVAL SUMMARY

		IN SQUARE YARDS			
LINE	LOCATION	ASPHALT REMOVAL	ASPHALT BREAK-UP	CONCRETE REMOVAL	CONCRETE REMOVAL
-L-	10+78 TO 10+96 LT	20			
-L-	10+68 TO 12+49 RT	87			
	TOTAL	107			
	SAY	110			

Approximate quantities only. Unclassified excavation, borrow excavation, fine grading, clearing and grubbing, and removal of existing pavement will be paid for at the contract lump sum price for "grading".

NOTE: Invert Elevations are for Bid Purposes only and shall not be used for project construction stakeout. See "Standard Specifications For Roads and Structures, Section 300-5".

SUB-REGIONAL & REGIONAL LIST OF PIPES, ENDWALLS, ETC. (FOR PIPES 48" & UNDER)

STATION / SIZE / THICKNESS OR GAUGE	LOCATION (LT,RT, OR CL)	STRUCTURE NO. FROM	STRUCTURE NO. TO	TOP ELEVATION	INVERT ELEVATION	INVERT ELEVATION	SLOPE CRITICAL	DRAINAGE PIPE (RCP, CSP, CAAP, HDPE, or PVC) 12"	15"	18"	24"	30"	36"	42"	48"	DO NOT USE RCP	DO NOT USE CSP	DO NOT USE CAAP	DO NOT USE HDPE	C.S. PIPE 12" .064	15" .064	18" .064	24" .064	36" .079	42" .109	48" .109	R.C. PIPE (CLASS III) 15"	18"	24"	30"	36"	42"	48"	R.C. PIPE (CLASS IV) 12"	15"	18"	24"	30"	36"	42"	48"
-L- 9+87	LT	4-1																																							
-L- 10+94	RT	4-2																																							
-L- 12+17	LT																																								
TOTAL																																									

STATION	*** R. C. PIPE (CLASS V)	*** R. C. PIPE CULVERTS, CONTRACTOR DESIGN PIPE	*** R. C. PIPE CULVERTS, CONTRACTOR DESIGN PIPE	15" SIDE DRAIN PIPE	18" SIDE DRAIN PIPE	ENDWALLS STD. 838.01, STD. 838.11 OR STD. 838.80 (UNLESS NOTED OTHERWISE) CU. YDS. R.C.P.	C.S.P.	QUANTITIES FOR DRAINAGE STRUCTURES * TOTAL L.F. FOR PAY QUANTITY SHALL BE COL. 'A' + (1.3 X COL.'B') PER EACH (0' THRU 5.0')	LIN. *FT. A 5.0' THRU 10.0'	B 10.0' AND ABOVE	C.B. STD. 840.01 OR STD. 840.02	FRAME, GRATES AND HOOD STANDARD 840.03 TYPE OF GRATE E	F	G		CONCRETE TRANSITIONAL SECTION CATCH BASIN	DROP INLET		MODIFIED CONCRETE FLUME					CORR. STEEL ELBOWS NO. & SIZE	CONC. COLLARS CL. "B" C.Y. STD 840.72	CONC. & BRICK PIPE PLUG, C.Y. STD. 840.71	PIPE REMOVAL LIN.FT.	REMARKS
-L- 9+87					40																							
-L- 10+94																			1									
-L- 12+17																											18	
TOTAL					40														1								18	

ABBREVIATIONS

C.B.	CATCH BASIN
N.D.I.	NARROW DROP INLET
D.I.	DROP INLET
G.D.I.	GRATED DROP INLET
G.D.I. (N.S.)	GRATED DROP INLET (NARROW SLOT)
J.B.	JUNCTION BOX
M.H.	MANHOLE
T.B.D.I.	TRAFFIC BEARING DROP INLET
T.B.J.B.	TRAFFIC BEARING JUNCTION BOX

"N" = DISTANCE FROM EDGE OF LANE TO FACE OF GUARDRAIL.
TOTAL SHOULDER WIDTH = DISTANCE FROM EDGE OF TRAVEL LANE TO SHOULDER BREAK POINT.
FLARE LENGTH = DISTANCE FROM LAST SECTION OF PARALLEL GUARDRAIL TO END OF GUARDRAIL.
W = TOTAL WIDTH OF FLARE FROM BEGINNING OF TAPER TO END OF GUARDRAIL.
G = GATING IMPACT ATTENUATOR TYPE 350
NG = NON-GATING IMPACT ATTENUATOR TYPE 350

GUARDRAIL SUMMARY

SURVEY LINE	BEG. STA.	END STA.	LOCATION	LENGTH STRAIGHT	LENGTH SHOP CURVED	TEMPORARY STRAIGHT	WARRANT POINT APPROACH END	WARRANT POINT TRAILING END	"N" DIST. FROM E.O.L.	TOTAL SHOUL. WIDTH	FLARE LENGTH APPROACH END	FLARE LENGTH TRAILING END	W APPROACH END	W TRAILING END	ANCHORS XI MOD	XI	GRAU 350 TL-2	M-350	TYPE III	TYPE III SHOP CURVED	IA-350 TL-2	AT-1	TEMP ANCHORS GRAU TL-2	IMPACT ATTENUATOR TYPE 350 EA	G	NG	SINGLE FACED GUARDRAIL	REMOVE EXISTING GUARDRAIL	REMOVE AND STOCKPILE EXISTING GUARDRAIL	REMARKS
-L-	10+00.81	10+17.64	LT	6.25	18.75		10+17.64		4	7										1		1								
-L-	9+70.55	10+33.78	RT	43.75	12.5			10+33.78	4	7	25		0.5				1		1											
-L-	10+60.19	10+71.67	LT	12.0				10+60.19	4	7											1									
-L-	10+77.36	11+42.86	RT	37.5	18.75		10+77.36		4	7		25		0.5			1			1										
			SUBTOTAL	99.5	50												2		1	2	1	1								
			LESS DEDUCTIONS FOR ANCHORS																											
			GRAU-350 TL-2 2 @ 25'=	-50																										
			TYPE III 1 @ 18.75'=	-18.75																										
			TYPE III 2 @ 18.75'=		-37.5																									
			AT-1 1 @ 6.25'=	-6.25																										
			IA-350 TL-2 1 @ 12.0'=	-12.0																										
			PROJECT TOTALS:	12.5	12.5																									
			ADDITIONAL GUARDRAIL POSTS=5 EA.																											

$$$$SYSTIME$$$$ $$$$DGN$$$$ $$$$USERNAME$$$$

COMPUTED BY: CBC DATE: 06-12-12
CHECKED BY: ACC DATE: 06-12-12

PROJECT REFERENCE NO.	SHEET NO.
17BP.13.R.1	3-B

DIVISION OF HIGHWAYS
STATE OF NORTH CAROLINA

SUMMARY OF EARTHWORK

IN CUBIC YARDS

LOCATION	UNCLASSIFIED EXCAVATION	UNDERCUT	EMBT+%	BORROW	WASTE
SUMMARY NO.1					
-L- STA. 9+00.00 TO STA. 10+25.70 (BEG. BRIDGE)	161		18		143
SUBTOTAL SUMMARY NO.1	161		18		143
SUMMARY NO.2					
-L- STA. 10+68.30 (END BRIDGE) TO STA. 12+49.15	3		81	78	
SUBTOTAL SUMMARY NO.2	3		81	78	
PROJECT SUBTOTAL	164		99	78	143
BORROW IN LIEU OF WASTE				-78	-78
GRAND TOTAL	164		99		65
SAY	165				70

CONTINGENCY ITEMS:

INCIDENTAL STONE = 50 TONS

UNDERCUT EXCAVATION = 50 CY

SELECT GRANULAR MATERIAL = 50 CY

CLASS IV SUBGRADE STABILIZATION = 50 TONS

GEOTEXTILE FOR SOIL STABILIZATION = 50 SY

Approximate quantities only. Unclassified excavation, borrow excavation, fine grading, clearing and grubbing, and removal of existing pavement will be paid for at the contract lump sum price for "grading".

PROJECT REFERENCE NO.	SHEET NO.
17BP.13.R.1	4
R/W SHEET NO.	

ROADWAY DESIGN ENGINEER: NORTH CAROLINA PROFESSIONAL SEAL 030453 ENGINEER AARON C. CARTER 8/27/13

HYDRAULICS ENGINEER: NORTH CAROLINA PROFESSIONAL SEAL 033023 ENGINEER BRADLEY S. RIDNOUR Bradley S. Ridnour, PE 8/27/13

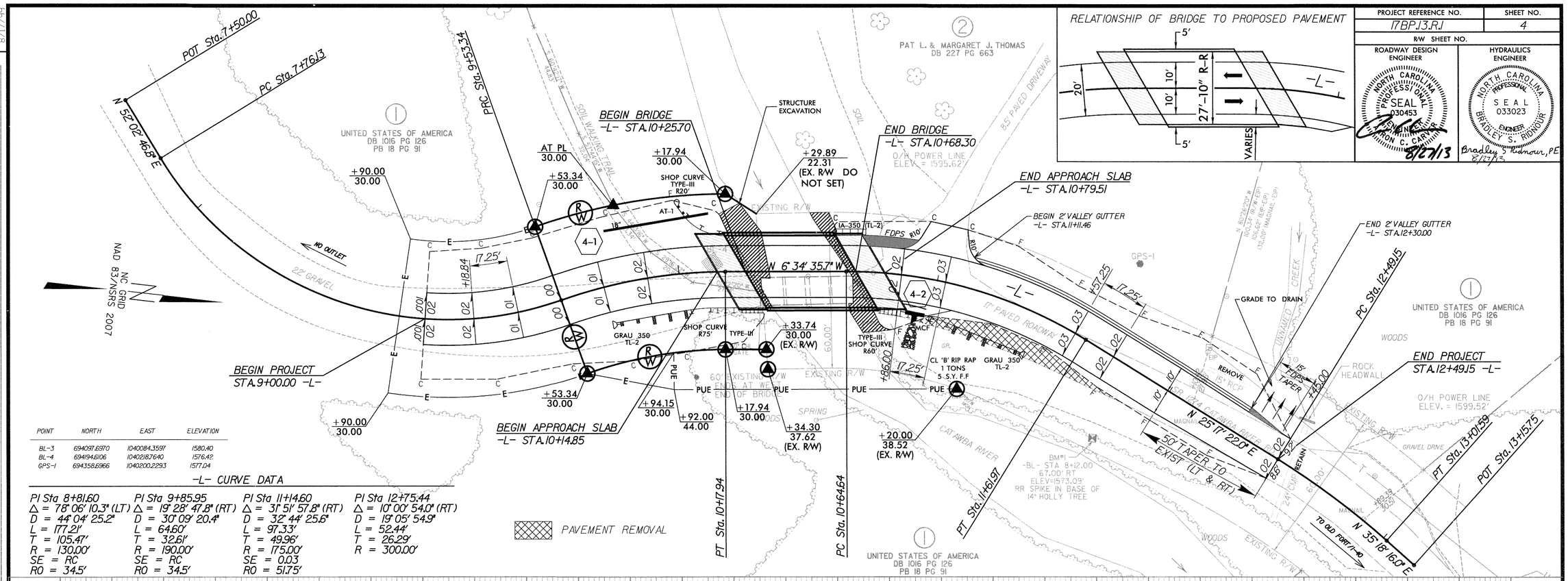

POINT	NORTH	EAST	ELEVATION
BL-3	694097.6970	1040084.3597	1580.40
BL-4	694194.6106	1040187.6740	1576.42
GPS-1	694358.6966	1040200.2293	1577.04

-L- CURVE DATA

PI Sta 8+81.60	PI Sta 9+85.95	PI Sta 11+14.60	PI Sta 12+75.44
Δ = 78° 06' 10.3" (LT)	Δ = 19° 28' 47.8" (RT)	Δ = 31° 51' 57.8" (RT)	Δ = 10° 00' 54.0" (RT)
D = 44° 04' 25.2"	D = 30° 09' 20.4"	D = 32° 44' 25.6"	D = 19° 05' 54.9"
L = 177.21'	L = 64.60'	L = 97.33'	L = 52.44'
T = 105.47'	T = 32.61'	T = 49.96'	T = 26.29'
R = 130.00'	R = 190.00'	R = 175.00'	R = 300.00'
SE = RC	SE = RC	SE = 0.03	
RO = 34.5'	RO = 34.5'	RO = 51.75'	

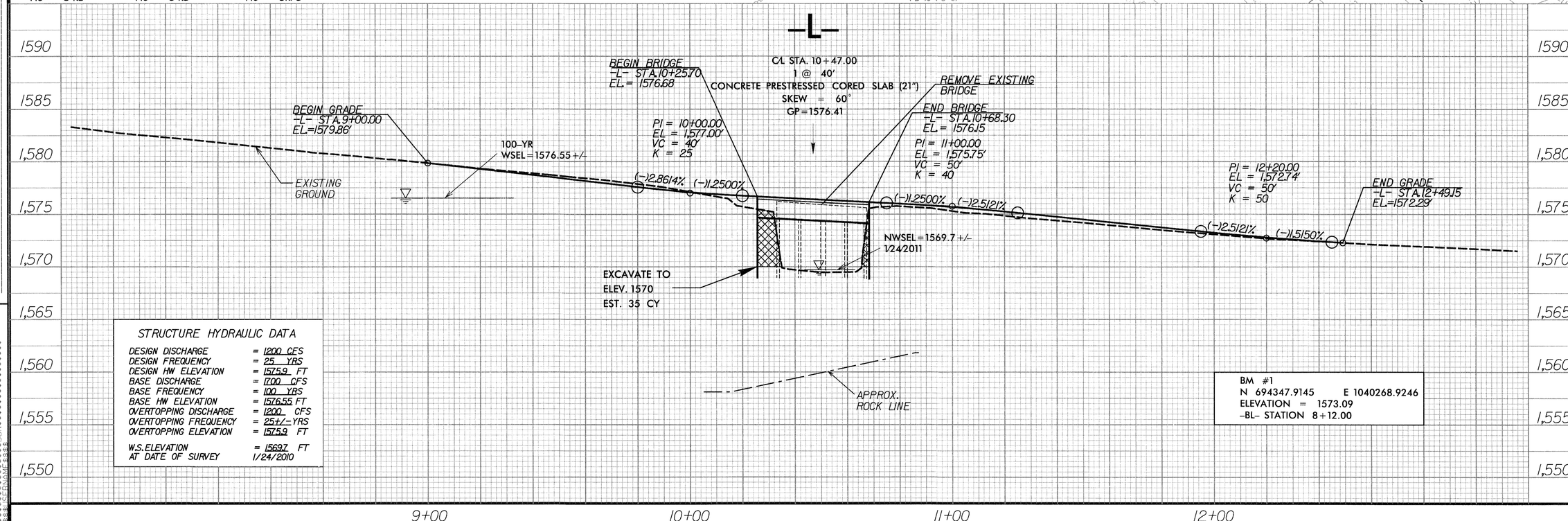

STRUCTURE HYDRAULIC DATA

DESIGN DISCHARGE	= 1200 CFS
DESIGN FREQUENCY	= 25 YRS
DESIGN HW ELEVATION	= 1575.9 FT
BASE DISCHARGE	= 1700 CFS
BASE FREQUENCY	= 100 YRS
BASE HW ELEVATION	= 1576.55 FT
OVERTOPPING DISCHARGE	= 1200 CFS
OVERTOPPING FREQUENCY	= 25+/- YRS
OVERTOPPING ELEVATION	= 1575.9 FT
W.S. ELEVATION AT DATE OF SURVEY	= 1569.7 FT 1/24/2010

BM #1
N 694347.9145 E 1040268.9246
ELEVATION = 1573.09
-BL- STATION 8+12.00

REVISIONS

8/17/99

PROJECT REFERENCE NO.	SHEET NO.
17BP.13.R.1	EC-1/CONST 04
R/W SHEET NO.	

ROADSIDE ENVIRONMENTAL UNIT
DEPARTMENT OF TRANSPORTATION
DIVISION OF HIGHWAYS
RALEIGH, N.C.

2012 STANDARD SPECIFICATIONS

EROSION CONTROL PLAN

THESE EROSION AND SEDIMENT CONTROL PLANS COMPLY WITH THE REGULATIONS SET FORTH BY THE NCG-010000 GENERAL CONSTRUCTION PERMIT EFFECTIVE AUGUST 3, 2011 ISSUED BY THE NORTH COROLINA DEPARTMENT OF ENVIRONMENT AND NATURAL RESOURCES DIVISION OF WATER QUALITY.

ENVIRONMENTALLY SENSITIVE AREA
SEE PROJECT SPECIAL PROVISIONS

Std. #	Description	Symbol
	Wattle	EW
	Wattle with Polyacrylamide (PAM)	
1635.02	Rock Pipe Inlet Sediment Trap Type-B	B
1605.01	Temporary Silt Fence	
1606.01	Special Sediment Control Fence	
1632.03	Rock Inlet Sediment Trap Type C	
1633.01	Temporary Rock Silt Check Type-A	

Level III-A: Designer of Erosion and Sediment Control Plans

Aaron C. Carver, P.E.
Date Issued: May 2, 2007
Date Expires: December 31, 2013
Certification Number: 302

NOTES: ANY DEVIATION FROM OPTIONS GIVEN WILL REQUIRE PRIOR APPROVAL BY ENGINEER.

ADDITIONAL EROSION CONTROL DEVICES MAY NEED TO BE INSTALLED AS DIRECTED BY THE ENGINEER.

PROJECT NO. 17BP.13.R.1
COUNTY McDOWELL
STATION: 10+25.70 -L-
REPLACES BRIDGE NO. 85

STATE OF NORTH CAROLINA
DEPARTMENT OF TRANSPORTATION
RALEIGH

BRIDGE #85 ON SR 1274
OVER CATAWBA RIVER

REVISIONS						SHEET NO.
NO.	BY	DATE	NO.	BY	DATE	EC-1
1			3			TOTAL SHEETS
2			4			3

PROJECT REFERENCE NO.	SHEET NO.
17BPJ3.R.1	EC-1A
R/W SHEET NO.	
ROADWAY DESIGN ENGINEER	HYDRAULICS ENGINEER

WATTLE WITH POLYACRYLAMIDE DETAIL

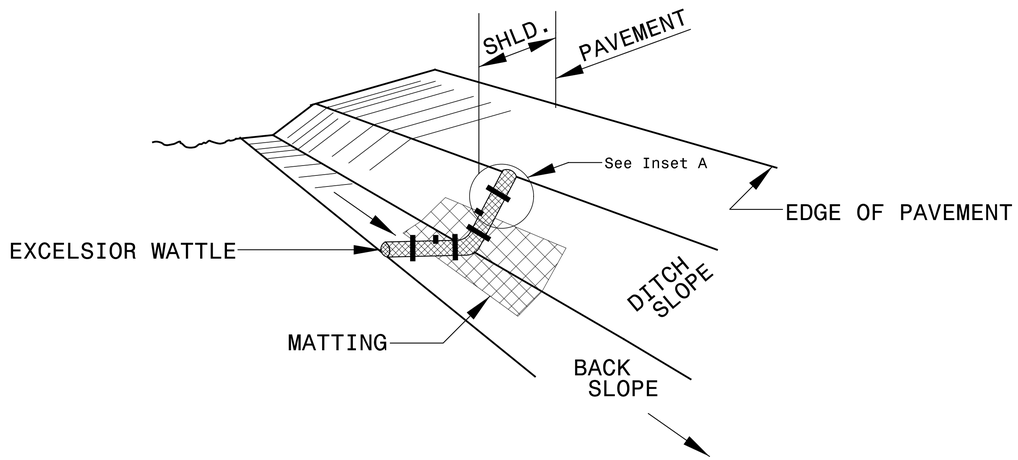

ISOMETRIC VIEW

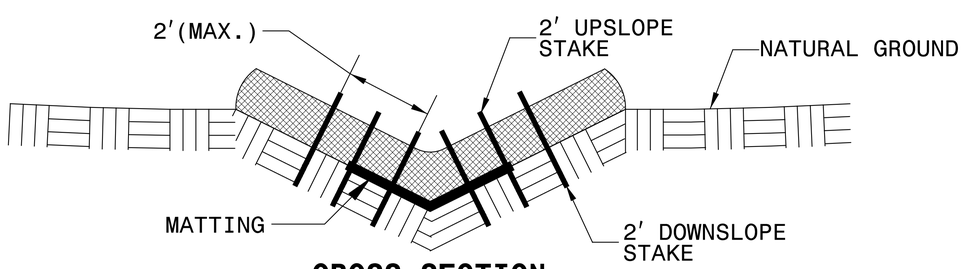

CROSS SECTION VEE DITCH

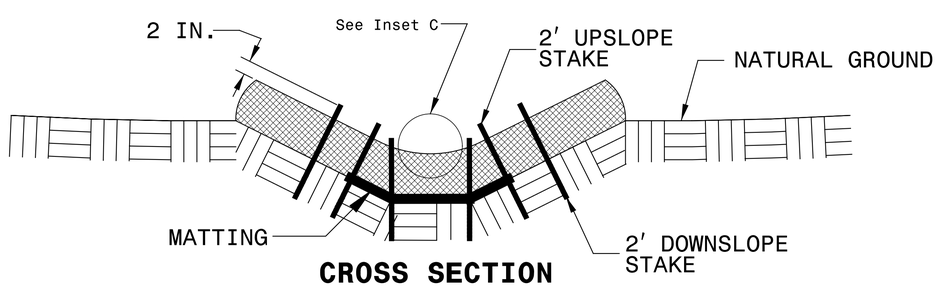

CROSS SECTION TRAPEZOIDAL DITCH

NOTES:

USE MINIMUM 12 IN. DIAMETER EXCELSIOR WATTLE.

USE 2 FT. WOODEN STAKES WITH A 2 IN. BY 2 IN. CROSS SECTION.

ONLY INSTALL WATTLE(S) TO A HEIGHT IN DITCH SO FLOW WILL NOT WASH AROUND WATTLE AND SCOUR DITCH SLOPES AND AS DIRECTED.

INSTALL A MINIMUM OF 2 UPSLOPE STAKES AND 4 DOWNSLOPE STAKES AT AN ANGLE TO WEDGE WATTLE TO BOTTOM OF DITCH.

PROVIDE STAPLES MADE OF 0.125 IN. DIAMETER STEEL WIRE FORMED INTO A U SHAPE NOT LESS THAN 12″ IN LENGTH.

INSTALL STAPLES APPROXIMATELY EVERY 1 LINEAR FOOT ON BOTH SIDES OF WATTLE AND AT EACH END TO SECURE IT TO THE SOIL.

INSTALL MATTING IN ACCORDANCE WITH SECTION 1631 OF THE STANDARD SPECIFICATIONS.

PRIOR TO POLYACRYLAMIDE (PAM) APPLICATION, OBTAIN A SOIL SAMPLE FROM PROJECT LOCATION, AND FROM OFFSITE MATERIAL, AND ANALYZE FOR APPROPRIATE PAM FLOCCULANT TO BE APPLIED TO EACH WATTLE.

INITIALLY APPLY 3.5 OUNCES OF ANIONIC OR NEUTRALLY CHARGED POLYACRYLAMIDE (PAM) OVER WATTLE WHERE WATER WILL FLOW AND AFTER EVERY RAINFALL EVENT THAT IS EQUAL TO OR EXCEEDS 0.50 IN.

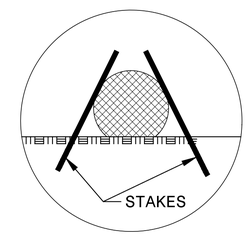

INSET A

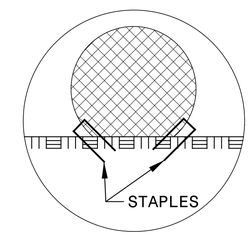

INSET B

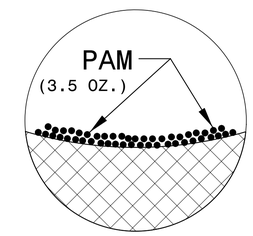

INSET C

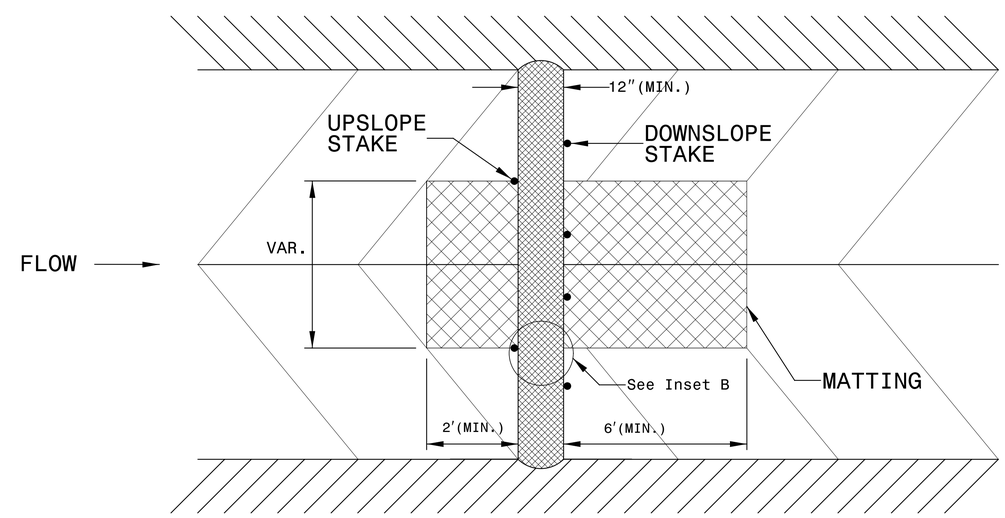

TOP VIEW

PROJECT REFERENCE NO.	SHEET NO.
17BPJ3.R1	EC-1B
R/W SHEET NO.	
ROADWAY DESIGN ENGINEER	HYDRAULICS ENGINEER

SILT FENCE WATTLE BREAK DETAIL

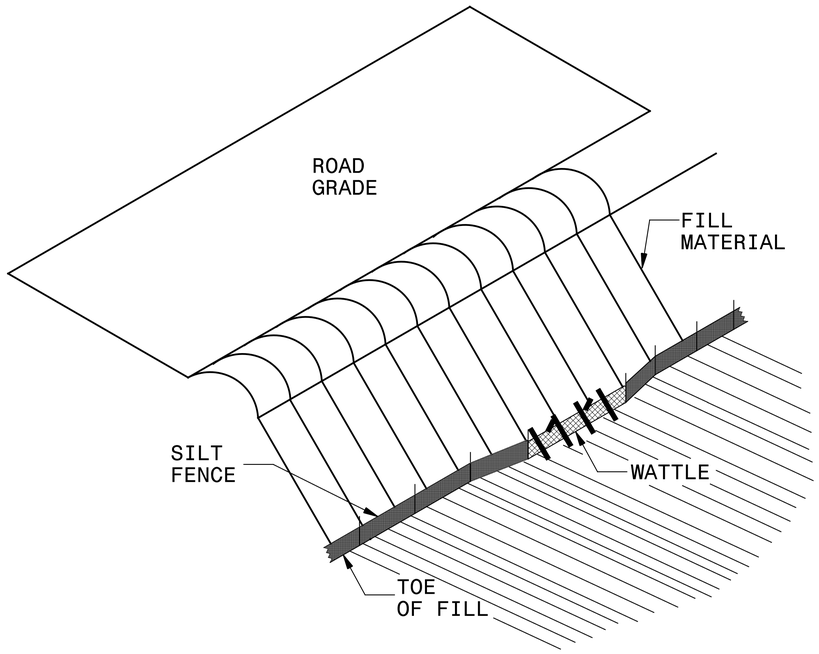

ISOMETRIC VIEW

NOTES:

USE MINIMUM 12 IN. DIAMETER EXCELSIOR WATTLE AND LENGTH OF 10 FT.

EXCAVATE A 1 TO 2 INCH TRENCH FOR WATTLE TO BE PLACED.

DO NOT PLACE WATTLE ON TOE OF SLOPE.

USE 2 FT. WOODEN STAKES WITH A 2 IN. BY 2 IN. NOMINAL CROSS SECTION.

INSTALL A MINIMUM OF 2 UPSLOPE STAKES AND 4 DOWNSLOPE STAKES AT AN ANGLE TO WEDGE WATTLE TO GROUND.

PROVIDE STAPLES MADE OF 0.125 IN. DIAMETER STEEL WIRE FORMED INTO A U SHAPE NOT LESS THAN 12″ IN LENGTH.

INSTALL STAPLES APPROXIMATELY EVERY 1 LINEAR FOOT ON BOTH SIDES OF WATTLE AND AT EACH END TO SECURE IT TO THE SOIL.

WATTLE INSTALLATION CAN BE ON OUTSIDE OF THE SILT FENCE AS DIRECTED.

INSTALL TEMPORARY SILT FENCE IN ACCORDANCE WITH SECTION 1605 OF THE STANDARD SPECIFICATIONS.

INSET A

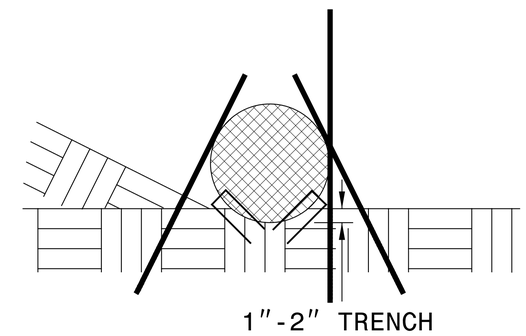

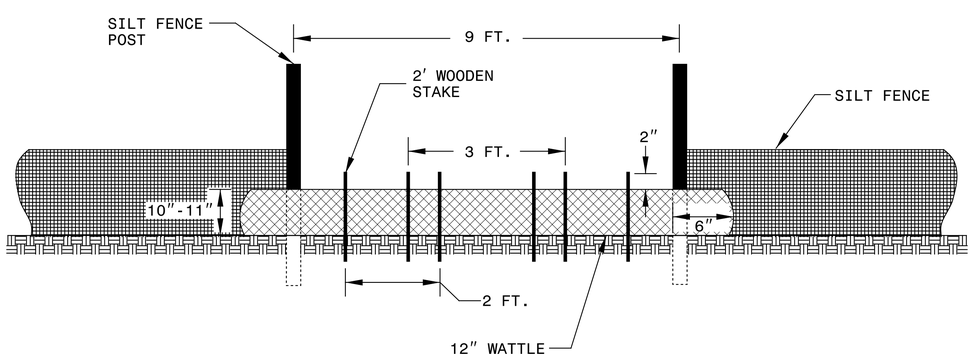

VIEW FROM SLOPE

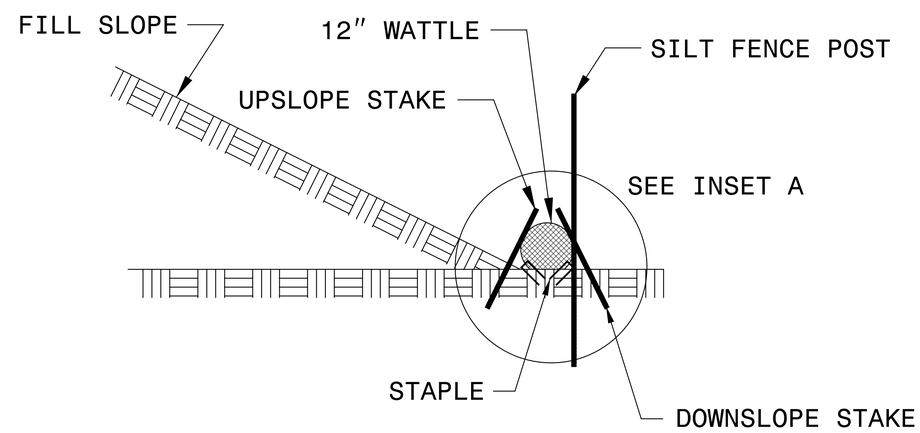

SIDE VIEW

PROJECT REFERENCE NO.	SHEET NO.
17BP.13.R.1	EC-2
R/W SHEET NO.	
ROADWAY DESIGN ENGINEER	HYDRAULICS ENGINEER

STATE OF NORTH CAROLINA
DIVISION OF HIGHWAYS

SOIL STABILIZATION TIMEFRAMES

SITE DESCRIPTION	STABILIZATION TIME	TIMEFRAME EXCEPTIONS
PERIMETER DIKES, SWALES, DITCHES, AND SLOPES	7 DAYS	NONE
HIGH QUALITY WATER (HQW) ZONES	7 DAYS	NONE
SLOPES STEEPER THAN 3:1	7 DAYS	IF SLOPES ARE 10' OR LESS IN LENGTH AND ARE NOT STEEPER THAN 2:1, 14 DAYS ARE ALLOWED.
SLOPES 3:1 OR FLATTER	14 DAYS	7 DAYS FOR SLOPES GREATER THAN 50' IN LENGTH.
ALL OTHER AREAS WITH SLOPES FLATTER THAN 4:1	14 DAYS	NONE, EXCEPT FOR PERIMETERS AND HQW ZONES.

PROJECT REFERENCE NO.	SHEET NO.
17BP.13.R.1	EC-3

DIVISION OF HIGHWAYS
STATE OF NORTH CAROLINA

SOIL STABILIZATION SUMMARY SHEET

MATTING FOR EROSION CONTROL

CONST SHEET NO.	LINE	FROM STATION	TO STATION	SIDE	ESTIMATE (SY)
4	-L-	9+00	10+00	LT	175
4	-L-	11+00	12+49.15	LT	210
4	-L-	9+00	10+25	RT	175
			SUBTOTAL		560
MISCELLANEOUS MATTING TO BE INSTALLED AS DIRECTED BY THE ENGINEER					
				TOTAL	560
				SAY	560

PERMANENT SOIL REINFORCEMENT MAT

CONST SHEET NO.	LINE	FROM STATION	TO STATION	SIDE	ESTIMATE (SY)
			SUBTOTAL		
		ADDITIONAL PSRM TO BE INSTALLED			
				TOTAL	
				SAY	

COMPUTED BY: CBC DATE: 06-08-12
CHECKED BY: ACC DATE: 06-08-12

PROJECT REFERENCE NO.	SHEET NO.
17BP.13.R.1	X-0

NORTH CAROLINA PROFESSIONAL SEAL 030453 ENGINEER AARON C. CARVER
8/24/13

DIVISION OF HIGHWAYS
STATE OF NORTH CAROLINA

CROSS SECTION SUMMARY

IN CUBIC YARDS

-L- LOCATION	UNCLASSIFIED EXCAVATION	EMBT
9+00	0	0
9+25	24	4
9+50	30	1
9+75	41	0
10+00	40	5
10+25	25	5
10+25.70 BEGIN BRIDGE	1	0
10+68.30 END BRIDGE	0	0
10+75	3	0
11+00	0	5
11+25	0	11
11+50	0	12
11+75	0	12
12+00	0	15
12+25	0	14
12+49.15	0	1

NOTE: EMBANKMENT COLUMN DOES NOT INCLUDE BACKFILL FOR UNDERCUT.

Approximate quantities only. Unclassified excavation, borrow excavation, fine grading, clearing and grubbing, and removal of existing pavement will be paid for at the contract lump sum price for "grading".

0 2.5 5	PROJ. REFERENCE NO.	SHEET NO.
	17BP.13.R.1	X-1

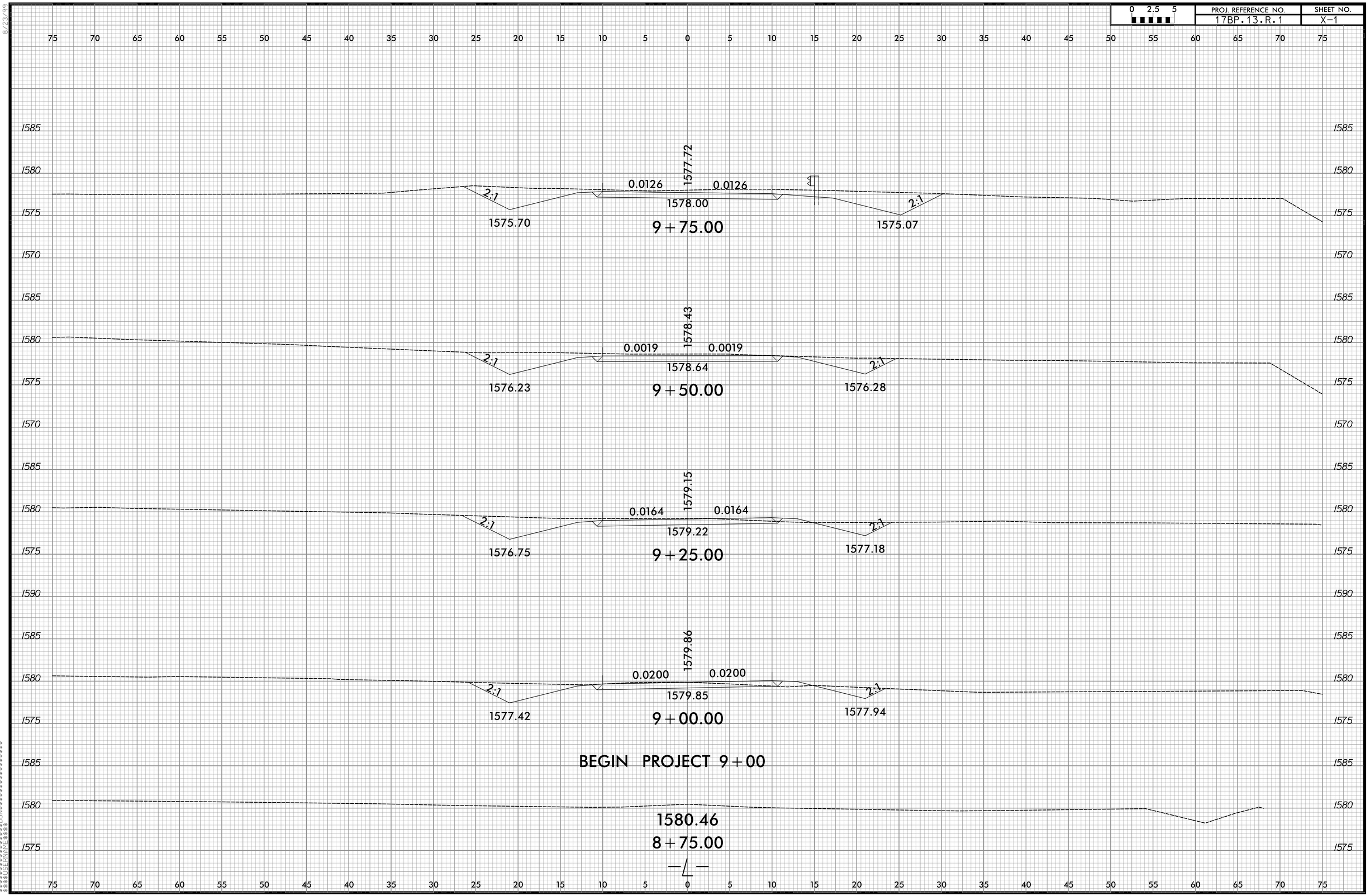

8/23/99

$$$$CYTNE$$$$
$$$$SENAME$$$$DN$$$$
$$$$SERNAME$$$$

0 2.5 5	PROJ. REFERENCE NO.	SHEET NO.
	17BP.13.R.1	X-2

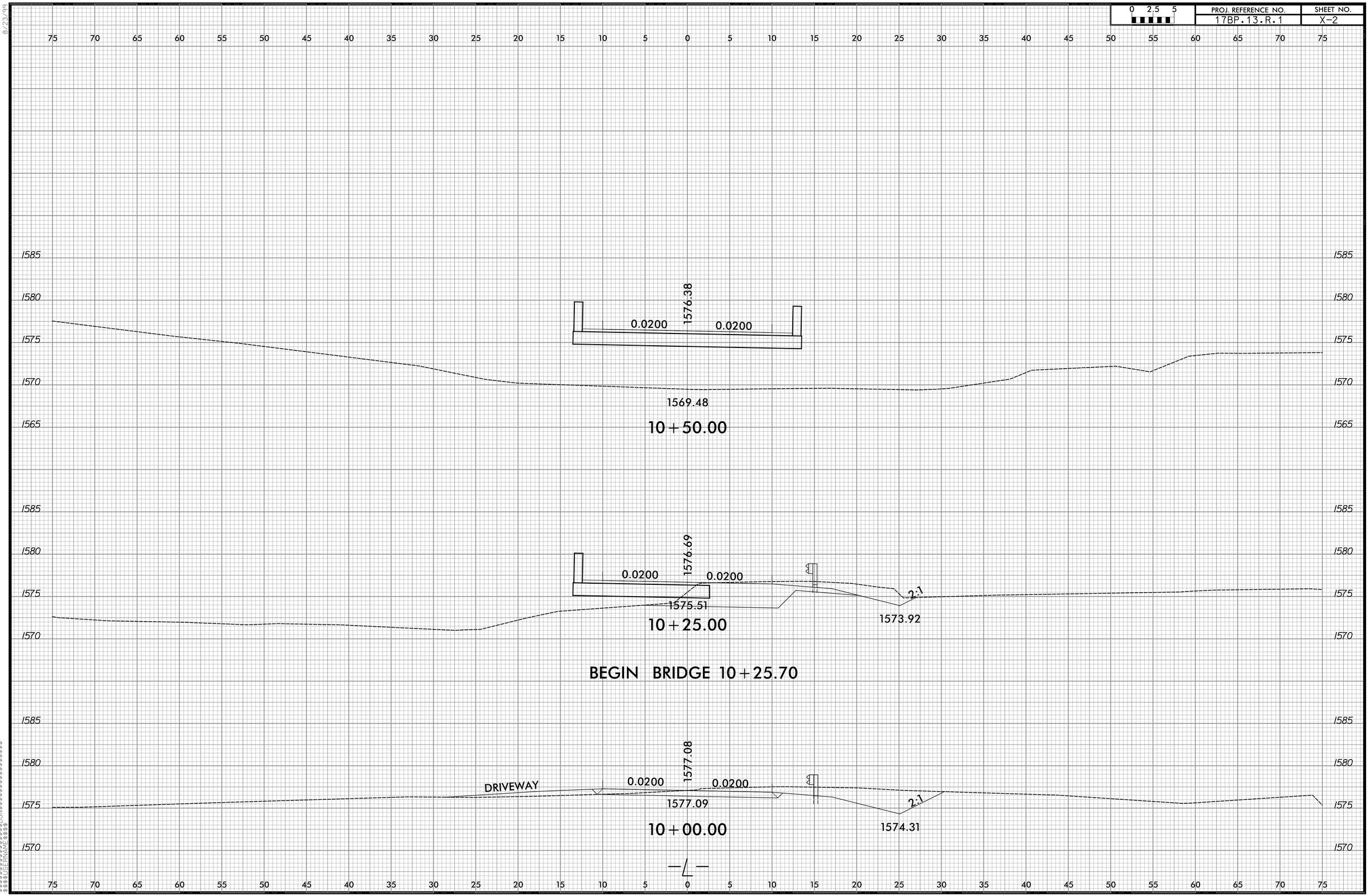

8/23/99

$$$$CYTNE$$$$
$$$$SENAME$$$$
$$$$DGN$$$$
$$$$SERNAME$$$$

0 2.5 5	PROJ. REFERENCE NO.	SHEET NO.
	17BP.13.R.1	X-3

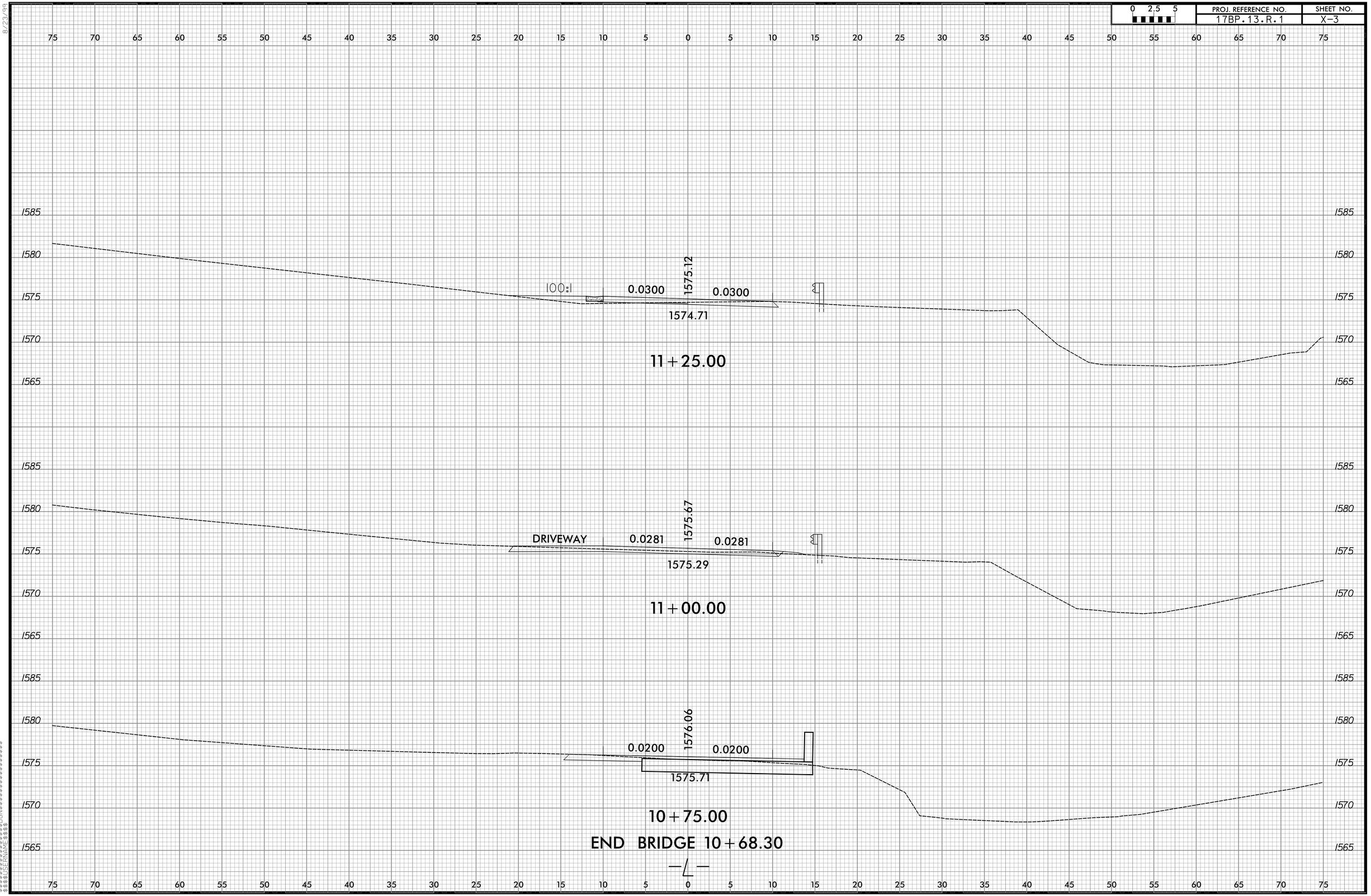

8/23/99

$$$$SYSTIME$$$$
$$$$SAVE$$$$DGN$$$$$$$$$$$$$$$$$$
$$$$DERNAME$$$$

8/23/99

0 2.5 5	PROJ. REFERENCE NO.	SHEET NO.
	17BP.13.R.1	X-4

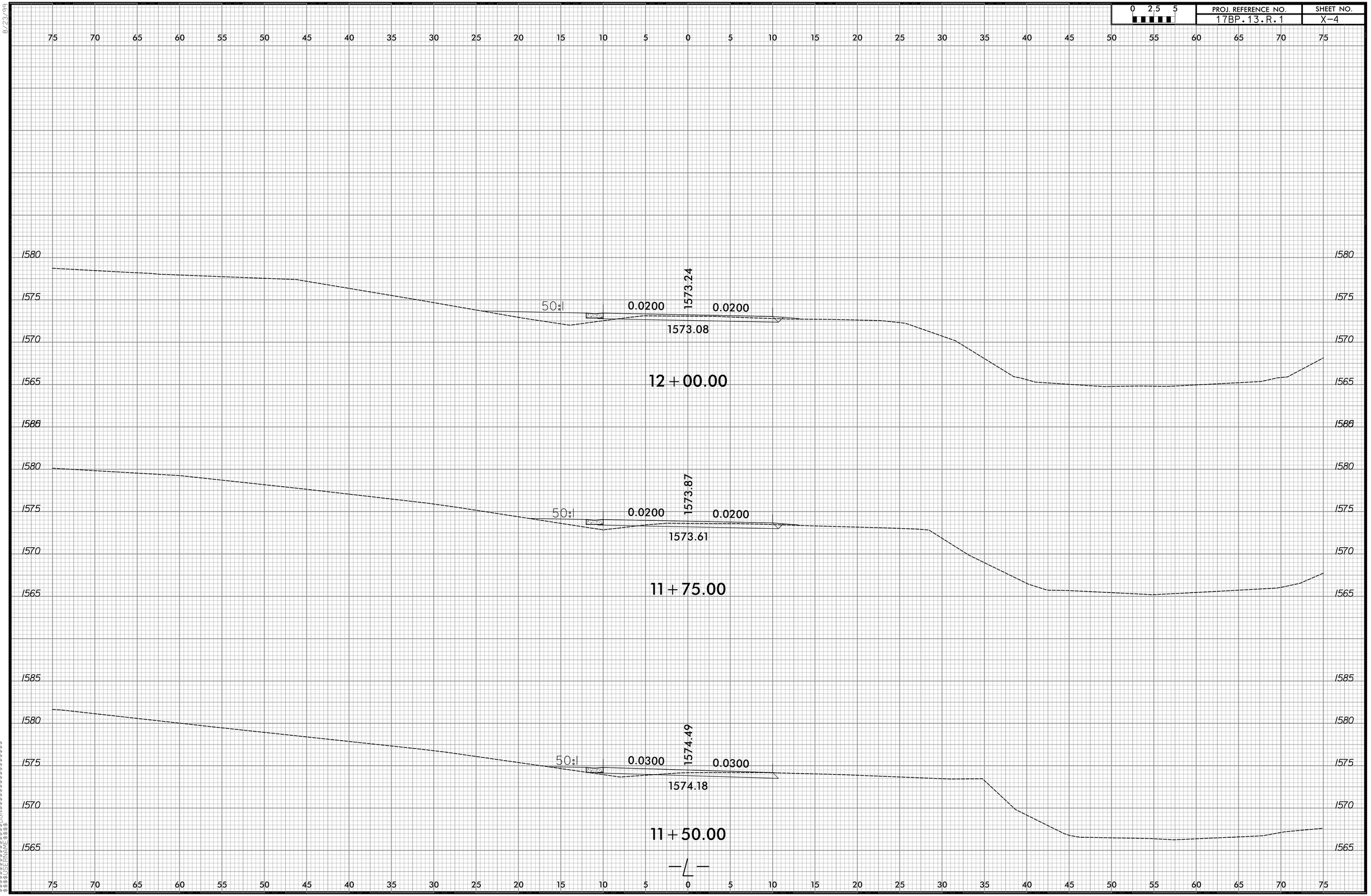

$$$$CYTNE$$$$
$$$$ENGNE$$$$
$$$$DSRKAE$$$$

8/23/99

0 2.5 5	PROJ. REFERENCE NO.	SHEET NO.
	17BP.13.R.1	X-5

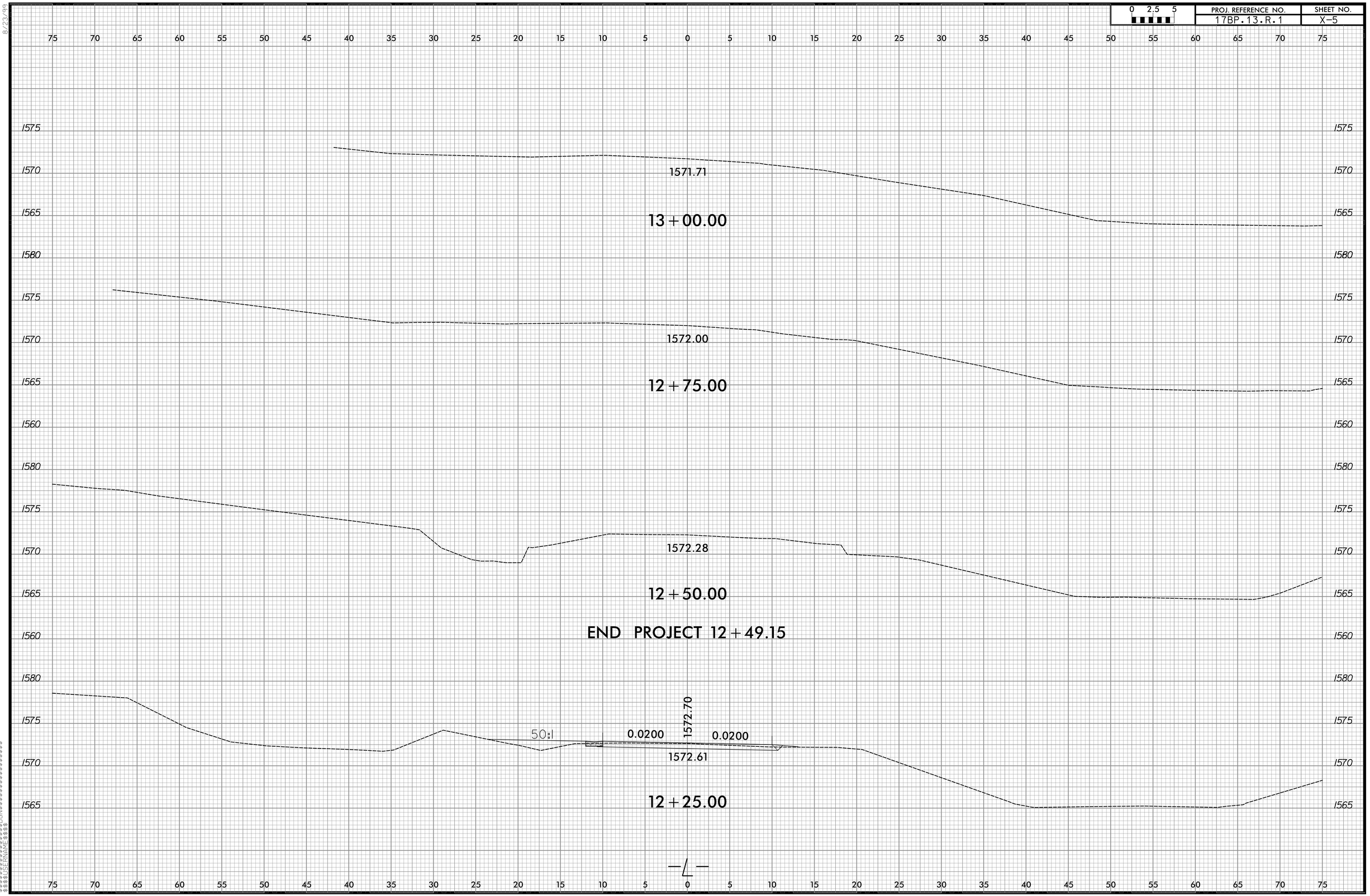

$$$$CYTNE$$$$
$$$$SENAME$$$$
$$$$DGN$$$$
$$$$SERKAE$$$$

TIP NO: 17BP.13.R.1

CONTRACT: DM00107

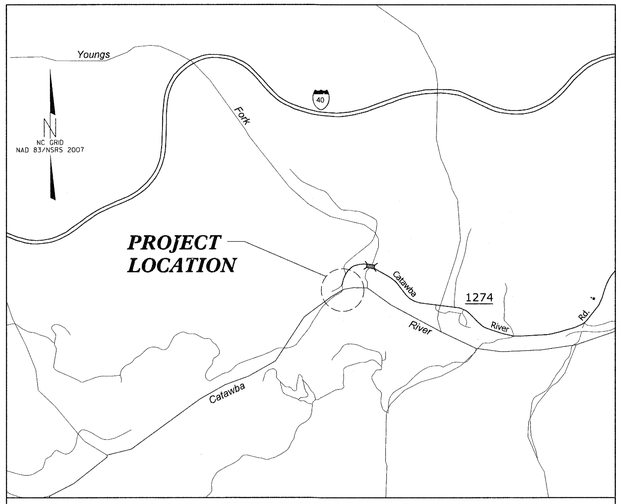

VICINITY MAP

STATE OF NORTH CAROLINA

DIVISION OF HIGHWAYS

McDOWELL COUNTY

STATE	STATE PROJECT REFERENCE NO.	SHEET NO.	TOTAL SHEETS
N.C.	17BP.13.R.1		

STATE PROJ. NO.	F. A. PROJ. NO.	DESCRIPTION
17BP.13.R.1	N/A	PE
17BP.13.R.1	N/A	RW
17BP.13.R.1	N/A	CONST.

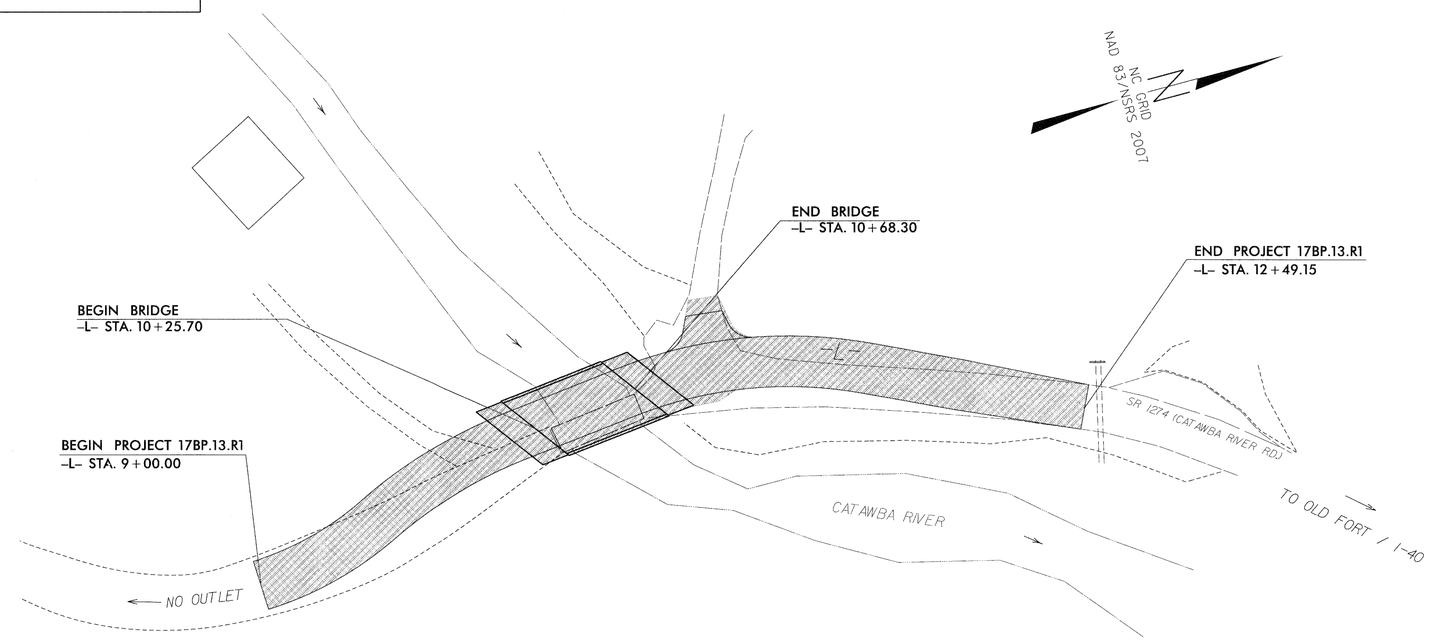

NORTH CAROLINA PROFESSIONAL SEAL 20777 ENGINEER HARDY L. WILLIS 9/12/14

V&M Vaughn & Melton Consulting Engineers

Charlotte, North Carolina 704-357-0488
Tri-Cities, Tennessee 423-467-8401
Knoxville, Tennessee 865-546-5800
Asheville, North Carolina 828-253-2796
Middlesboro, Kentucky 606-248-6600
Spartanburg, South Carolina 864-574-4775

Copyright © 2006 Vaughn & Melton, Inc. All Rights Reserved

STRUCTURE

STATE OF NORTH CAROLINA DEPARTMENT OF TRANSPORTATION

DESIGN DATA

ADT 1998 = 100
ADT 2025 = 200

V = 20 MPH
* TTST = 17
FUNC CLASS = LOCAL

SUBREGIONAL TIER

PROJECT LENGTH

LENGTH OF ROADWAY = 0.058 MI.
LENGTH OF STRUCTURE = 0.008 MI.
TOTAL LENGTH = 0.066 MI.

Prepared In the Office of:
VAUGHN & MELTON
1318-F PATTON AVE.
ASHEVILLE NC, 28806
FOR THE NORTH CAROLINA DIVISION OF HIGHWAYS

2012 STANDARD SPECIFICATIONS

LETTING DATE :

HARDY WILLIS, PE
PROJECT ENGINEER

CHRIS CORDELL, EI
PROJECT DESIGN ENGINEER

STRUCTURES MANAGEMENT UNIT
1000 BIRCH RIDGE DR.
RALEIGH, N.C. 27610

DIVISION OF HIGHWAYS
STATE OF NORTH CAROLINA

PAUL SPROUSE, P.E.
DIVISION 13 BRIDGE PROGRAM MANAGER

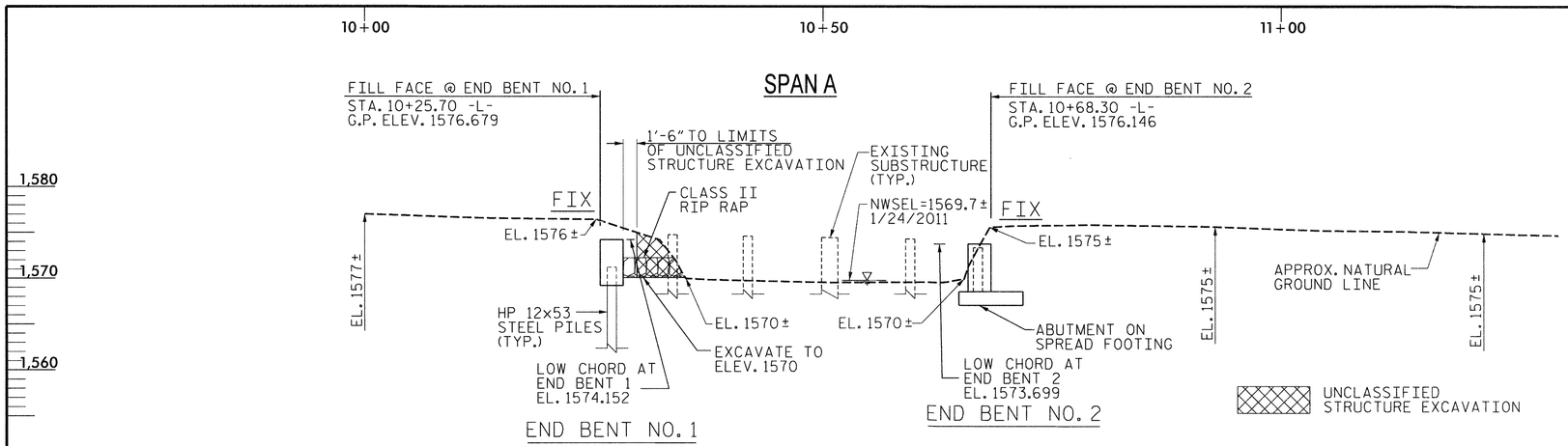

SECTION ALONG -L-

(SECTIONS AT END BENTS ARE AT RIGHT ANGLES).

THE APPROXIMATE GROUND LINE ELEVATIONS, AS SHOWN, ARE ALONG THE EDGE OF BRIDGE ON THE UPSTREAM SIDE.

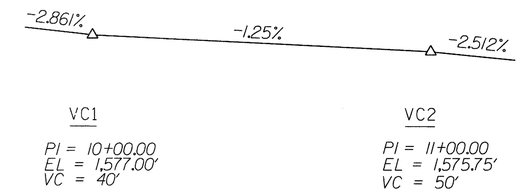

GRADE DATA -L-

HORIZONTAL CURVE DATA -L-

PI Sta 9+85.95	PI Sta 11+14.60
△ = 19° 28' 47.8" (RT)	△ = 31° 51' 57.8" (RT)
D = 30° 09' 20.4"	D = 32° 44' 25.6"
L = 64.60'	L = 97.33'
T = 32.61'	T = 49.96'
R = 190.00'	R = 175.00'

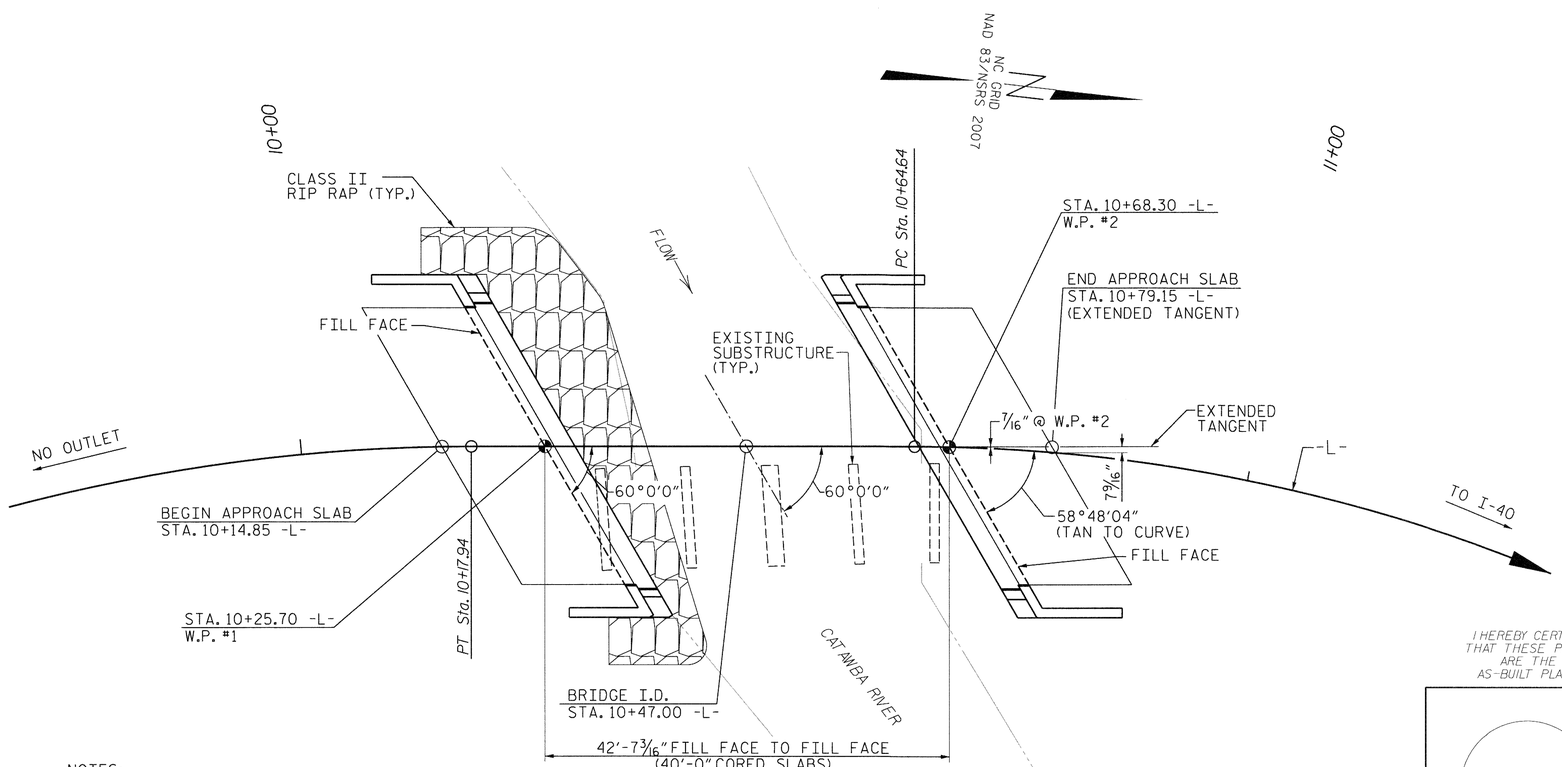

NOTES:
END BENTS ARE PARALLEL.
PILES NOT SHOWN IN PLAN VIEW FOR CLARITY.
CORED SLABS ARE PARALLEL TO TANGENT PORTION OF C/L.

PLAN ALONG -L-

NORTH CAROLINA PROFESSIONAL SEAL 20977 ENGINEER HARDY L. WILLIS 10/2/14

PROJECT NO. 17BP.13.R.1
McDOWELL COUNTY
STATION: 10+47.00 -L-

SHEET 1 OF 3 REPLACES BRIDGE NO. 85

I HEREBY CERTIFY THAT THESE PLANS ARE THE AS-BUILT PLANS.

V&M Vaughn & Melton Consulting Engineers
Asheville, North Carolina 828-253-2796
Charlotte, North Carolina 704-357-0488
Tri-Cities, Tennessee 423-467-8401
Knoxville, Tennessee 865-546-5800
Middlesboro, Kentucky 606-248-6600
Spartanburg, South Carolina 864-574-4775
Copyright © 2006 Vaughn & Melton, Inc. All Rights Reserved

STATE OF NORTH CAROLINA
DEPARTMENT OF TRANSPORTATION
RALEIGH

GENERAL DRAWING
For BRIDGE on SR 1274 (Catawba River Road) over CATAWBA RIVER
Between NO OUTLET & I-40

DWN. BY: MAF	DATE: 12/2012	
CHKD. BY: HLW	DATE: 12/2012	
DES. EGR. OF RECORD: CBC	DATE: 12/2012	

REVISIONS						SHEET NO.
NO.	BY	DATE	NO.	BY	DATE	S-1
						TOTAL SHEETS 22

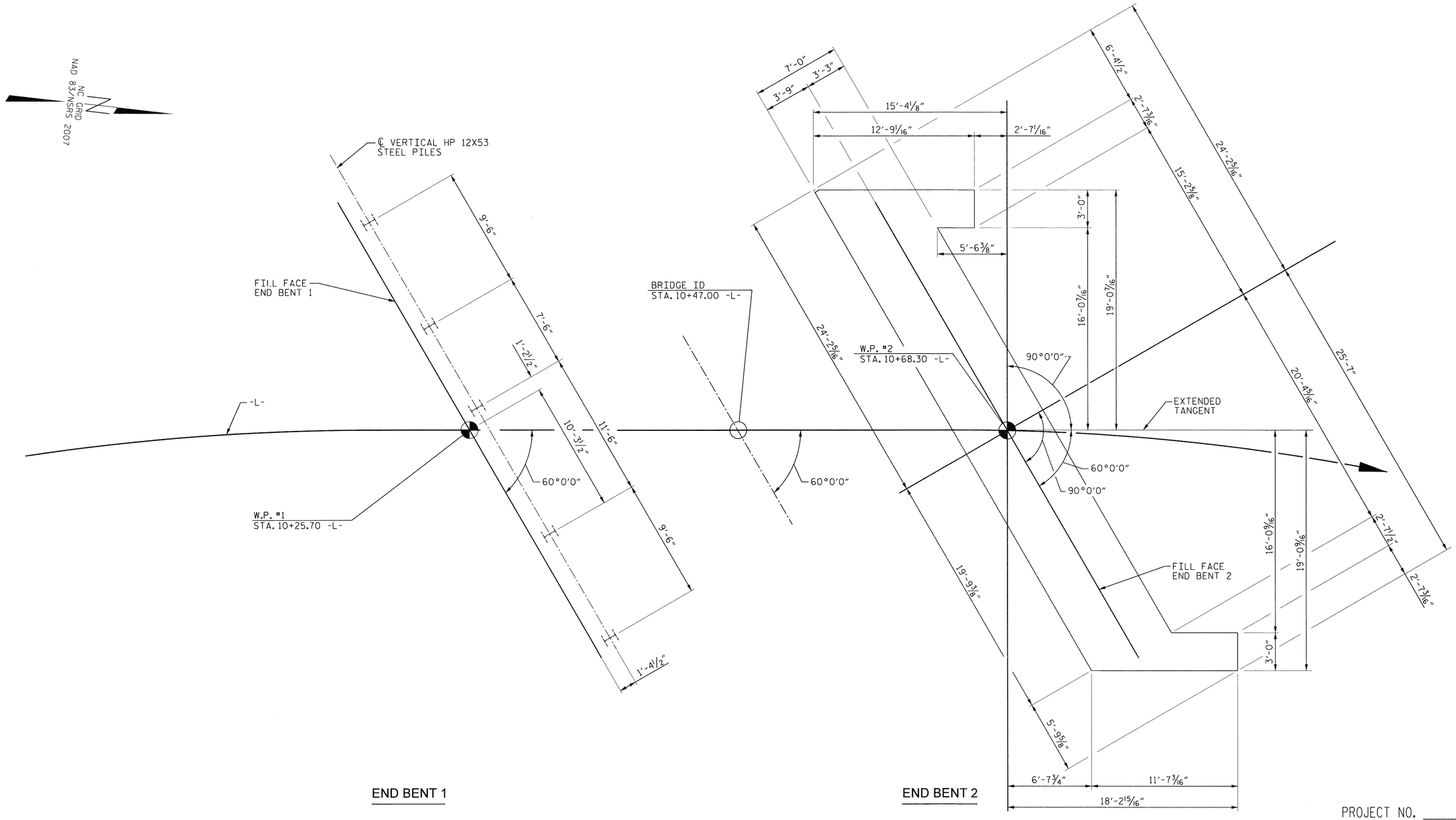

END BENT 1

END BENT 2

FOUNDATION LAYOUT

PROJECT NO. 17BP.13.R.1
McDOWELL COUNTY
STATION: 10+47.00 -L-

SHEET 2 OF 3

NORTH CAROLINA PROFESSIONAL SEAL 20977 ENGINEER HARDY L. WILLIS 6/12/14

V&M
Vaughn & Melton
Consulting Engineers
Asheville, North Carolina 828-253-2796
Charlotte, North Carolina 704-357-0488
Tri-Cities, Tennessee 423-467-8401
Knoxville, Tennessee 865-546-5800
Middlesboro, Kentucky 606-248-6600
Spartanburg, South Carolina 864-574-4775

Copyright © 2006 Vaughn & Melton, Inc. All Rights Reserved

STATE OF NORTH CAROLINA
DEPARTMENT OF TRANSPORTATION
RALEIGH

FOUNDATION LAYOUT
For BRIDGE on SR 1274
(Catawba River Road) over
CATAWBA RIVER
Between NO OUTLET & I-40

DWN. BY: MAF	DATE: 12/2012
CHKD. BY: HLW	DATE: 12/2012
DES. EGR. OF RECORD: CBC	DATE: 12/2012

REVISIONS						SHEET NO.
NO.	BY	DATE	NO.	BY	DATE	S-2
						TOTAL SHEETS 22

BM#1 N 694347.9145 E 1040268.9246 -BL- STA 8+12.00 67.00' RT ELEV=1573.09' RR SPIKE IN BASE OF 14" HOLLY TREE

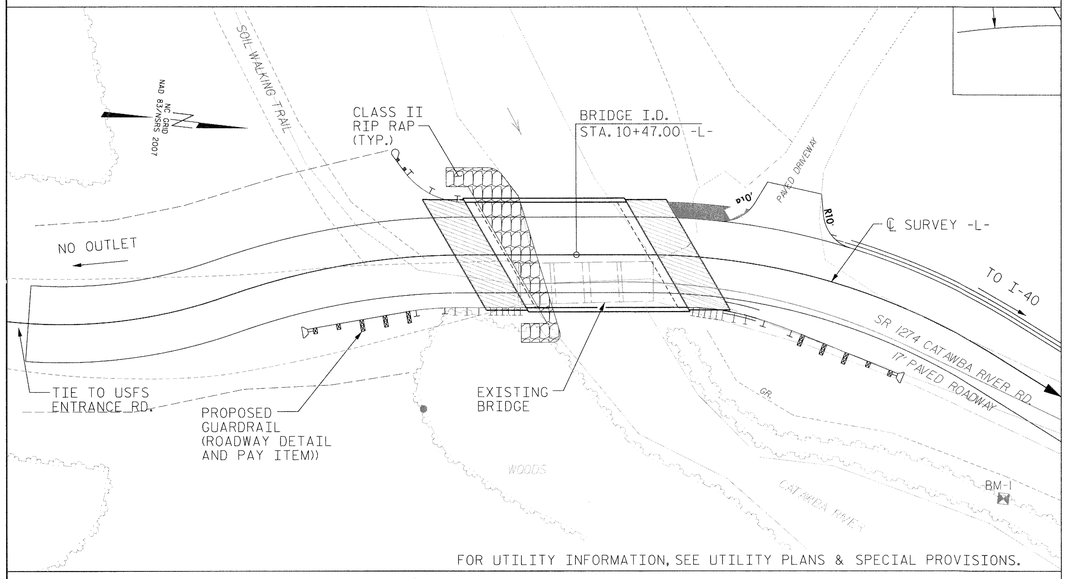

FOR UTILITY INFORMATION, SEE UTILITY PLANS & SPECIAL PROVISIONS.

LOCATION SKETCH

GENERAL NOTES:

ASSUMED LIVE LOAD = HL-93 OR ALTERNATE LOADING.

THIS BRIDGE HAS BEEN DESIGNED IN ACCORDANCE WITH THE REQUIREMENTS OF THE AASHTO LRFD BRIDGE DESIGN SPECIFICATIONS.

THIS BRIDGE IS LOCATED IN SEISMIC ZONE 1.

FOR OTHER DESIGN DATA AND GENERAL NOTES, SEE "STANDARD NOTES" SHEET SN.

FOR EROSION CONTROL MEASURES, SEE EROSION CONTROL PLANS.

THE EXISTING STRUCTURE, CONSISTING OF A TWO SPAN, 36-FOOT LONG TIMBER DECK ON TIMBER BEAMS, 12.9 FEET WIDE, ON TIMBER VERTICAL END BENTS AND A CENTRAL TIMBER PIER, AND LOCATED AT THE PROPOSED STRUCTURE, SHALL BE REMOVED. THE EXISTING BRIDGE IS PRESENTLY POSTED BELOW THE LEGAL LOAD LIMIT. SHOULD THE STRUCTURAL INTEGRITY OF THE BRIDGE FURTHER DETERIORATE, THIS LOAD LIMITATION MAY BE REDUCED AS FOUND NECESSARY DURING THE LIFE OF THE PROJECT.

REMOVAL OF THE EXISTING BRIDGE SHALL BE PERFORMED SO AS NOT TO ALLOW DEBRIS TO FALL INTO THE WATER. THE CONTRACTOR SHALL REMOVE THE BRIDGE AND SUBMIT PLANS FOR DEMOLITION IN ACCORDANCE WITH ARTICLE 402-2 OF THE STANDARD SPECIFICATIONS.

THE SUBSTRUCTURE OF THE EXISTING BRIDGE INDICATED ON THE PLANS IS FROM THE BEST INFORMATION AVAILABLE. SINCE THIS INFORMATION IS SHOWN FOR THE CONVENIENCE OF THE CONTRACTOR, THE CONTRACTOR SHALL HAVE NO CLAIM WHATSOEVER AGAINST THE DEPARTMENT OF TRANSPORTATION FOR ANY DELAYS OR ADDITIONAL COST INCURRED BASED ON DIFFERENCES BETWEEN THE EXISTING BRIDGE SUBSTRUCTURE SHOWN ON THE PLANS AND THE ACTUAL CONDITIONS AT THE PROJECT SITE.

THIS STRUCTURE HAS BEEN DESIGNED IN ACCORDANCE WITH "HEC 18, EVALUATING SCOUR AT BRIDGES."

FOR SUBMITTAL OF WORKING DRAWINGS, SEE SPECIAL PROVISIONS.

FOR FALSEWORK AND FORMWORK, SEE SPECIAL PROVISIONS.

FOR CRANE SAFETY, SEE SPECIAL PROVISIONS.

FOR GROUT FOR STRUCTURES, SEE SPECIAL PROVISIONS.

THE MATERIAL SHOWN IN THE CROSS-HATCHED AREA SHALL BE EXCAVATED FOR A DISTANCE OF 25 FT. EACH SIDE OF CENTERLINE ROADWAY AS DIRECTED BY THE ENGINEER. THIS WORK WILL BE PAID FOR AT THE CONTRACT LUMP SUM PRICE FOR UNCLASSIFIED STRUCTURE EXCAVATION. SEE SECTION 412 OF THE STANDARD SPECIFICATIONS.

ASPHALT WEARING SURFACE IS INCLUDED IN ROADWAY QUANTITY ON ROADWAY PLANS.

THE CONTRACTOR SHALL PROVIDE A TEMPORARY PEDESTRIAN BRIDE FOR ACCESS ACROSS THE CATAWBA RIVER DURING THE LIFE OF THE PROJECT. SEE SPECIAL PROVISIONS FOR TEMPORARY PEDESTRIAN BRIDGE.

FOR PILES, SEE SECTION 450 OF THE STANDARD SPECIFICATIONS.

PILES AT END BENT NO. 1 ARE DESIGNED FOR A FACTORED RESISTANCE OF 70 TONS PER PILE.

DRIVE PILES AT END BENT NO. 1 TO A REQUIRED DRIVING RESISTANCE OF 120 TONS PER PILE.

IT HAS BEEN ESTIMATED THAT A HAMMER WITH AN EQUIVALENT RATED ENERGY IN THE RANGE OF 30 TO 55 FT-KIPS PER BLOW WILL BE REQUIRED TO DRIVE PILES AT END BENT 1. THE ESTIMATED ENERGY RANGE DOES NOT RELEASE THE CONTRACTOR FROM PROVIDING DRIVING EQUIPMENT IN ACCORDANCE WITH SUBARTICLE 450-3(D)(2) OF THE STANDARD SPECIFICATIONS.

PILE EXCAVATION IS REQUIRED TO INSTALL PILES AT END BENT 1. EXCAVATE HOLES AT PILE LOCATIONS TO ELEVATION 1,558 FT. FOR PILE EXCAVATION, SEE SECTION 450 OF THE STANDARD SPECIFICATIONS,

THE SPREAD FOOTING AT END BENT 2 IS DESIGNED FOR A FACTORED RESISTANCE OF 6 TSF. CHECK FIELD CONDITIONS FOR THE REQUIRED RESISTANCE OF 14 TSF JUST BEFORE PLACING CONCRETE.

KEY SPREAD FOOTING AT LEAST 12" INTO ROCK WITH MINIMUM THICKNESS AS SHOWN ON THE PLANS.

HYDRAULIC DATA

DESIGN DISCHARGE	= 1200	*CFS*
DESIGN FREQUENCY	= 25	*YRS*
DESIGN HW ELEVATION	= 1575.9	*FT*
BASE DISCHARGE	= 1700	*CFS*
BASE FREQUENCY	= 100	*YRS*
BASE HW ELEVATION	= 1576.55	*FT*

OVERTOPPING FLOOD DATA

OVERTOPPING DISCHARGE	= 1200	*CFS*
OVERTOPPING FREQUENCY	= 25 +/-	*YRS*
OVERTOPPING ELEVATION	= 1575.9	*FT*
DRAINAGE AREA	= 4.5	*SQ.MI.*

TOTAL BILL OF MATERIAL

	REMOVAL OF EXISTING STRUCTURE	UNCLASSIFIED STRUCTURE EXCAVATION	FOUNDATION EXCAVATION FOR END BENT NO. 2	CLASS AA CONCRETE	CLASS A CONCRETE	BRIDGE APPROACH SLABS	REINFORCING STEEL	EPOXY COATED REINFORCING STEEL	HP 12 X 53 STEEL PILES		PILE EXCAVATION IN SOIL	PILE EXCAVATION NOT IN SOIL	2 - TUBE METAL RAIL	RIP RAP CLASS II (2'-0" THICK)	GEOTEXTILE FOR DRAINAGE	ELASTOMERIC BEARINGS	3'-0" x 1'-9" PRESTRESSED CONCRETE CORED SLAB UNIT		TEMPORARY PEDESTRIAN BRIDGE
	LUMP SUM	LUMP SUM	LUMP SUM	CU. YARDS	CU. YARDS	LUMP SUM	LBS.	LBS.	NO.	LIN. FT.	LIN. FT.	LIN. FT.	LIN. FT.	TONS	SQ. YARDS	LUMP SUM	NO.	LIN. FT.	LUMP SUM
SUPERSTRUCTURE				6.2		LUMP SUM		567					65.0			LUMP SUM	10	400.0	
END BENT 1		LUMP SUM			27.6		2,956		5	75	27	23		44	49				
END BENT 2			LUMP SUM		47.4		2,636												
TOTAL	LUMP SUM	LUMP SUM	LUMP SUM	6.2	75.0	LUMP SUM	5,592	567	5	75	27	23	65.0	44	49	LUMP SUM	10	400.0	1

PROJECT NO. 17BP.13.R.1
McDOWELL COUNTY
STATION: 10+47.00 -L-

SHEET 3 OF 3

NORTH CAROLINA PROFESSIONAL SEAL 20177 ENGINEER HARDY L. WILLIS 6/12/14

V&M
Vaughn & Melton
Consulting Engineers
Asheville, North Carolina 828-253-2796
Charlotte, North Carolina 704-357-0488
Tri-Cities, Tennessee 423-467-8401
Knoxville, Tennessee 865-546-5800
Middlesboro, Kentucky 606-248-6600
Spartanburg, South Carolina 864-574-4715

Copyright © 2006 Vaughn & Melton, Inc. All Rights Reserved

STATE OF NORTH CAROLINA
DEPARTMENT OF TRANSPORTATION
RALEIGH

GENERAL DRAWING

For BRIDGE on SR 1274 (Catawba River Road) over CATAWBA RIVER Between NO OUTLET & I-40

DWN. BY: MAF DATE: 12/2012
CHKD. BY: HLW DATE: 12/2012
DES. EGR. OF RECORD: CBC DATE: 12/2012

REVISIONS						
NO.	BY	DATE	NO.	BY	DATE	
1	AW	03/2014				

SHEET NO. S-3
TOTAL SHEETS 22

LOAD AND RESISTANCE FACTOR RATING (LRFD) SUMMARY FOR PRESTRESSED CONCRETE GIRDERS

LEVEL		VEHICLE	WEIGHT (W) (TONS)	CONTROLLING LOAD RATING	MINIMUM RATING FACTORS (RF)	TONS = W X RF	STRENGTH I LIMIT STATE											SERVICE III LIMIT STATE						COMMENT NUMBER
							LIVELOAD FACTORS	MOMENT					SHEAR					LIVELOAD FACTORS	MOMENT					
								DISTRIBUTION FACTORS (DF)	RATING FACTOR	SPAN	GIRDER LOCATION	DISTANCE FROM LEFT END OF SPAN (ft)	DISTRIBUTION FACTORS (DF)	RATING FACTOR	SPAN	GIRDER LOCATION	DISTANCE FROM LEFT END OF SPAN (ft)		DISTRIBUTION FACTORS (DF)	RATING FACTOR	SPAN	GIRDER LOCATION	DISTANCE FROM LEFT END OF SPAN (ft)	
DESIGN LOAD RATING		HL-93(Inv)	N/A	1	1.352	--	1.75	0.252	1.95	40'	EL	19.423	0.653	**1.35**	40'	EL	**7.769**	0.80	0.252	1.72	40'	EL	19.423	
		HL-93(Opr)	N/A	--	1.753	--	1.35	0.252	2.52	40'	EL	19.423	0.653	1.75	40'	EL	7.769	N/A	--	--	--	--	--	
		HS-20(Inv)	36.000	2	1.544	55.583	1.75	0.252	2.45	40'	EL	19.423	0.653	**1.54**	40'	EL	**7.769**	0.80	0.252	2.14	40'	EL	19.423	
		HS-20(Opr)	36.000	--	2.001	72.053	1.35	0.252	3.17	40'	EL	19.423	0.653	2	40'	EL	7.769	N/A	--	--	--	--	--	
LEGAL LOAD RATING	SV	SNSH	13.500	--	3.929	53.037	1.4	0.252	5.64	40'	EL	19.423	0.653	3.93	40'	EL	7.769	0.80	0.252	3.99	40'	EL	19.423	
		SNGARBS2	20.000	--	2.985	59.708	1.4	0.252	4.63	40'	EL	15.538	0.653	2.99	40'	EL	7.769	0.80	0.252	3.28	40'	EL	19.423	
		SNAGRIS2	22.000	--	2.852	62.746	1.4	0.252	4.53	40'	EL	15.538	0.653	2.85	40'	EL	7.769	0.80	0.252	3.23	40'	EL	15.538	
		SNCOTTS3	27.250	--	1.98	53.947	1.4	0.252	2.82	40'	EL	19.423	0.653	1.98	40'	EL	7.769	0.80	0.252	1.99	40'	EL	19.423	
		SNAGGRS4	34.925	--	1.782	62.222	1.4	0.252	2.54	40'	EL	19.423	0.653	1.78	40'	EL	7.769	0.80	0.252	1.79	40'	EL	19.423	
		SNS5A	35.550	--	1.746	62.059	1.4	0.252	2.47	40'	EL	19.423	0.653	1.89	40'	EL	7.769	0.80	0.252	1.75	40'	EL	19.423	
		SNS6A	39.950	--	1.662	66.381	1.4	0.252	2.35	40'	EL	19.423	0.653	1.79	40'	EL	7.769	0.80	0.252	1.66	40'	EL	19.423	
		SNS7B	42.000	--	1.585	66.556	1.4	0.252	2.24	40'	EL	19.423	0.653	1.86	40'	EL	7.769	0.80	0.252	1.58	40'	EL	19.423	
	TTST	TNAGRIT3	33.000	--	2.045	67.476	1.4	0.252	2.89	40'	EL	19.423	0.653	2.07	40'	EL	7.769	0.80	0.252	2.04	40'	EL	19.423	
		TNT4A	33.075	--	1.951	64.52	1.4	0.252	2.93	40'	EL	19.423	0.653	1.95	40'	EL	7.769	0.80	0.252	2.07	40'	EL	19.423	
		TNT6A	41.600	--	1.757	73.106	1.4	0.252	2.49	40'	EL	19.423	0.653	1.91	40'	EL	7.769	0.80	0.252	1.76	40'	EL	19.423	
		TNT7A	42.000	--	1.795	75.386	1.4	0.252	2.55	40'	EL	19.423	0.653	1.79	40'	EL	7.769	0.80	0.252	1.80	40'	EL	19.423	
		TNT7B	42.000	--	1.729	72.638	1.4	0.252	2.61	40'	EL	19.423	0.653	1.73	40'	EL	7.769	0.80	0.252	1.84	40'	EL	19.423	
		TNAGRIT4	43.000	--	1.661	71.441	1.4	0.252	2.53	40'	EL	15.538	0.653	1.66	40'	EL	7.769	0.80	0.252	1.79	40'	EL	19.423	
		TNAGT5A	45.000	--	1.659	74.644	1.4	0.252	2.35	40'	EL	19.423	0.653	1.77	40'	EL	7.769	0.80	0.252	1.66	40'	EL	19.423	
		TNAGT5B	45.000	3	1.568	70.561	1.4	0.252	2.28	40'	EL	19.423	0.653	**1.57**	40'	EL	**7.769**	0.80	0.252	1.61	40'	EL	19.423	

LOAD FACTORS:

DESIGN LOAD RATING FACTORS	LIMIT STATE	γ_{DC}	γ_{DW}
	STRENGTH I	1.25	1.50
	SERVICE III	1.00	1.00

NOTES:

MINIMUM RATING FACTORS ARE BASED ON THE STRENGTH I AND SERVICE III LIMIT STATES.

ALLOWABLE STRESSES FOR SERVICE III LIMIT STATE ARE AS REQUIRED FOR DESIGN.

COMMENTS:

1.
2.
3.
4.

(#) CONTROLLING LOAD RATING

(1) DESIGN LOAD RATING (HL-93)
(2) DESIGN LOAD RATING (HS-20)
(3) LEGAL LOAD RATING **

** SEE CHART FOR VEHICLE TYPE

GIRDER LOCATION

I - INTERIOR GIRDER
EL - EXTERIOR LEFT GIRDER
ER - EXTERIOR RIGHT GIRDER

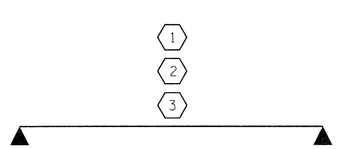

LRFR SUMMARY

FOR SINGLE SPAN

NORTH CAROLINA PROFESSIONAL SEAL 20774 ENGINEER HARDY L. WILLIS 6/12/14

PROJECT NO. 17BP.13.R.1

McDOWELL COUNTY

STATION: 10+47.00

STATE OF NORTH CAROLINA
DEPARTMENT OF TRANSPORTATION
RALEIGH

STANDARD

LRFR SUMMARY FOR 40' CORED SLAB UNIT 60° SKEW & 120° SKEW (NON-INTERSTATE TRAFFIC)

REVISIONS						SHEET NO.
NO.	BY:	DATE:	NO.	BY:	DATE:	S-4
1			3			TOTAL SHEETS
2			4			22

ASSEMBLED BY :	MAF	DATE :	12/12
CHECKED BY :	HLW	DATE :	12/12
DRAWN BY : CVC	6/10		
CHECKED BY : DNS	6/10		

$$$$$$SYSTIME$$$$$
$$$$$$$$$$$$$$$$$$$$$$$$DGN$$$$$$$$$$$$$$$$$$$$$$$$
$$$$USERNAME$$$$

STD. NO. 21LRFR1_60&120S_40L

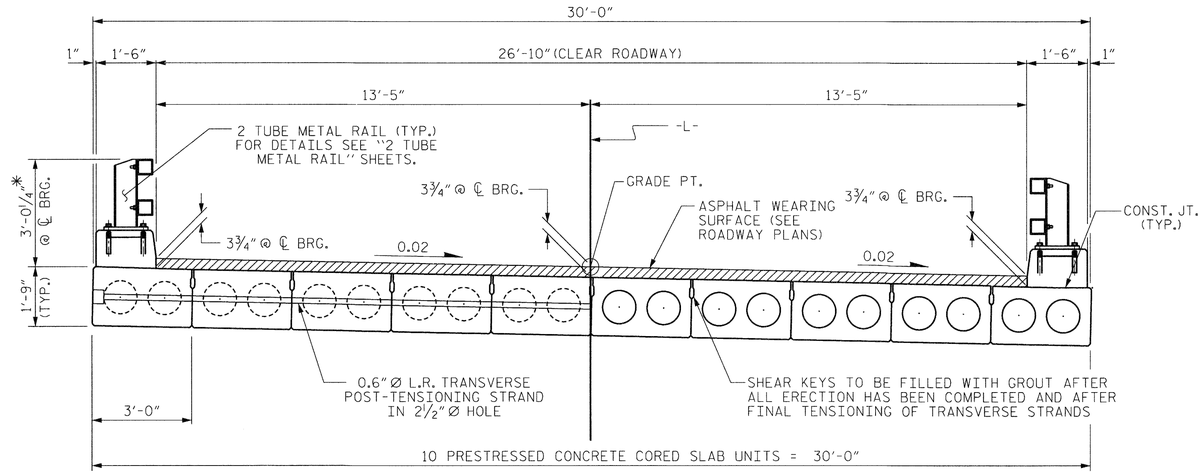

1 HALF SECTION AT INTERMEDIATE DIAPHRAGMS

HALF SECTION THROUGH VOIDS

TYPICAL SECTION

THE MAXIMUM RAIL HEIGHT AND ASPHALT THICKNESS IS SHOWN. THE HEIGHT OF THE CONCRETE PARAPET AND ASPHALT THICKNESS VARIES WHILE THE TOP OF THE RAIL FOLLOWS THE PROFILE OF THE GUTTERLINE. FOR RAIL HEIGHT DETAILS AND ASPHALT THICKNESS SEE THE "PARAPET AND END POST DETAILS" SHEET.

AHEAD STATION →

FIXED END

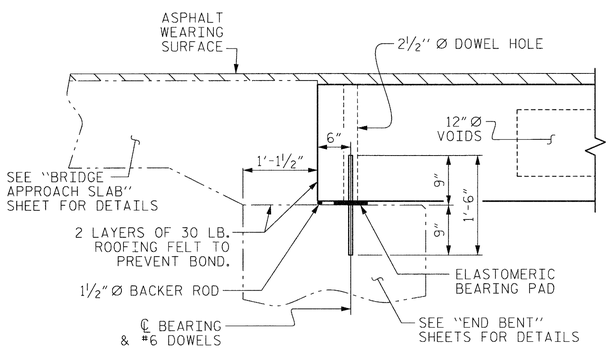

SECTION AT END BENT

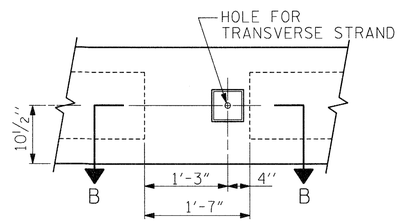

ELEVATION VIEW

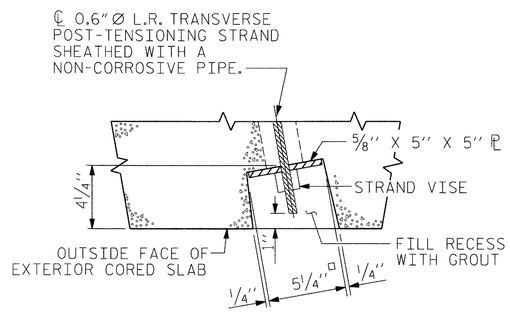

SECTION B-B

1 GROUTED RECESS AT END OF POST-TENSIONED STRAND

◉ BOND SHALL BE BROKEN ON THESE STRANDS FOR A DISTANCE OF 2'-0" FROM END OF CORED SLAB UNIT. SEE STANDARD SPECIFICATIONS, ARTICLE 1078-7.

◉ OPTIONAL FULL LENGTH DEBONDED STRANDS. THESE STRANDS ARE NOT REQUIRED. IF THE FABRICATOR CHOOSES TO INCLUDE THESE STRANDS IN THE CORED SLAB UNIT, THE STRANDS SHALL BE DEBONDED FOR THE FULL LENGTH OF THE UNIT AT NO ADDITIONAL COST. SEE STANDARD SPECIFICATIONS, ARTICLE 1078-7.

DEBONDING LEGEND

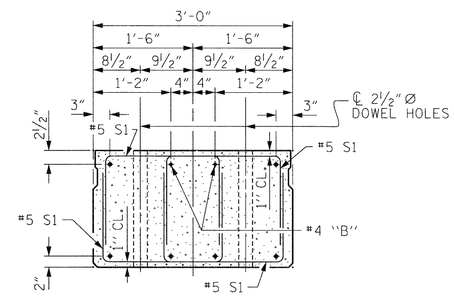

END ELEVATION

SHOWING PLACEMENT OF DOUBLE STIRRUPS AND LOCATION OF DOWEL HOLES. (STRAND LAYOUT NOT SHOWN.) INTERIOR SLAB UNIT SHOWN-EXTERIOR SLAB UNIT SIMILAR EXCEPT SHEAR KEY LOCATION.

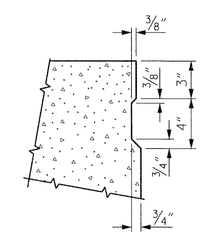

SHEAR KEY DETAIL

NOTE: OMIT SHEAR KEY ON OUTSIDE FACE OF EXTERIOR CORED SLABS.

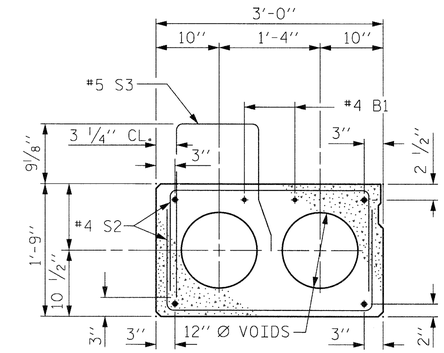

EXTERIOR SLAB SECTION

(FOR PRESTRESSED STRAND LAYOUT, SEE INTERIOR SLAB SECTION.)

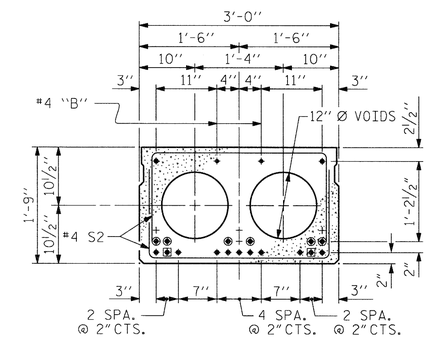

INTERIOR SLAB SECTION (40' UNIT)

(13 STRANDS REQUIRED)

0.6" Ø LOW RELAXATION STRAND LAYOUT

PROJECT NO. 17BP.13.R.1

McDOWELL COUNTY

STATION: 10+47.00

SHEET 1 OF 3

STATE OF NORTH CAROLINA
DEPARTMENT OF TRANSPORTATION
RALEIGH

STANDARD
3'-0" X 1'-9"
PRESTRESSED CONCRETE
CORED SLAB UNIT
60° SKEW

NORTH CAROLINA PROFESSIONAL SEAL 20776 ENGINEER RICHARDY L. WILLIS 12/12/14

REVISIONS							SHEET NO.
NO.	BY:	DATE:	NO.	BY:	DATE:		S-5
1	AW	03/2014	3				TOTAL SHEETS
2			4				22

ASSEMBLED BY : MAF		DATE : 12/12	
CHECKED BY : HLW		DATE : 12/12	
DRAWN BY : DGE	5/09	REV. 12/11	MAA/AAC
CHECKED BY : BCH	6/09		

$$$$$$SYSTIME$$$$$
$$$$$$$$$$$$$$$$$$$$$$$$DGN$$$$$$$$$$$$$$$$$$$$$$$$
$$$$USERNAME$$$$

STD. NO. 21"PCS2_30_60S

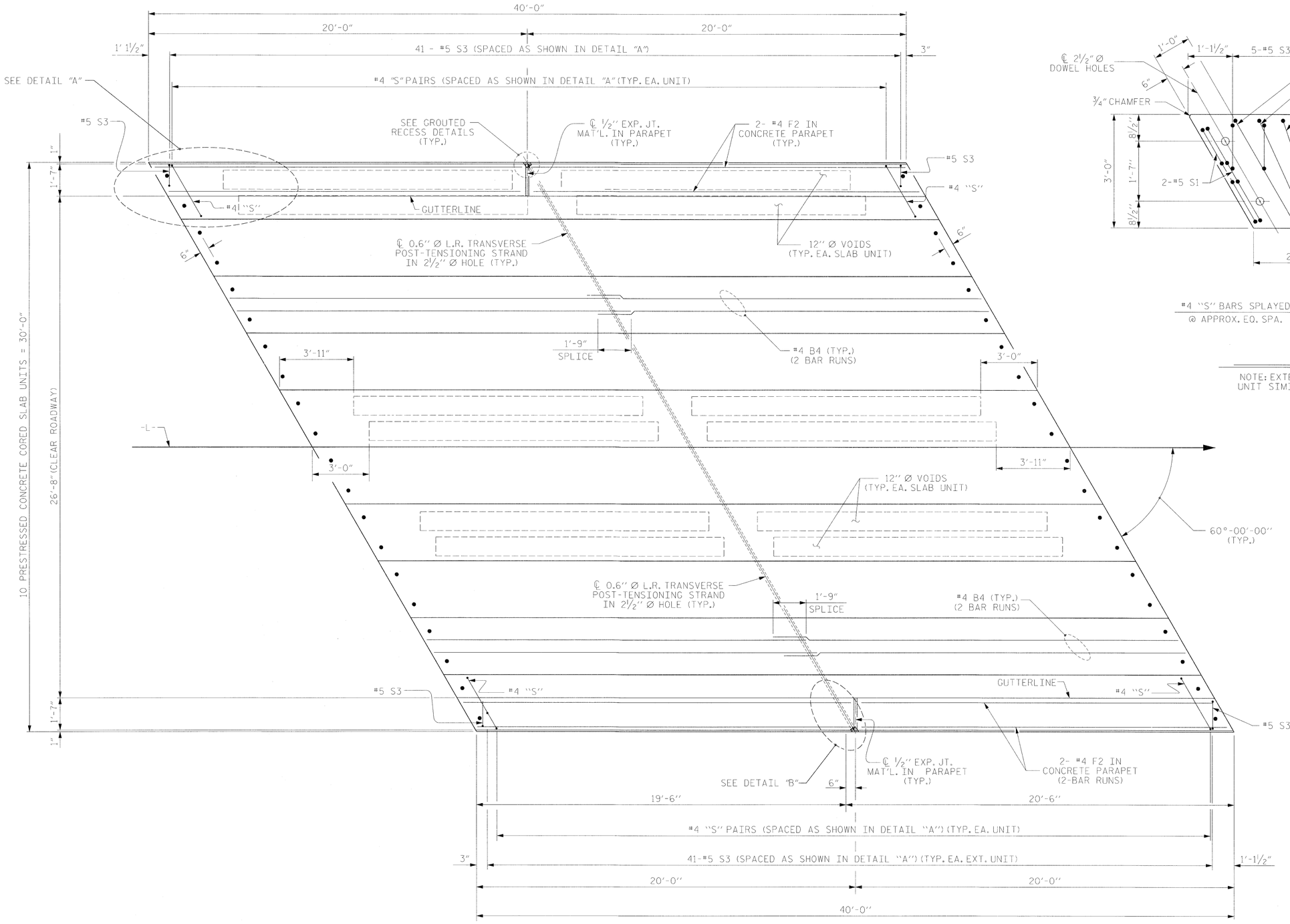

⚠ PLAN OF UNIT

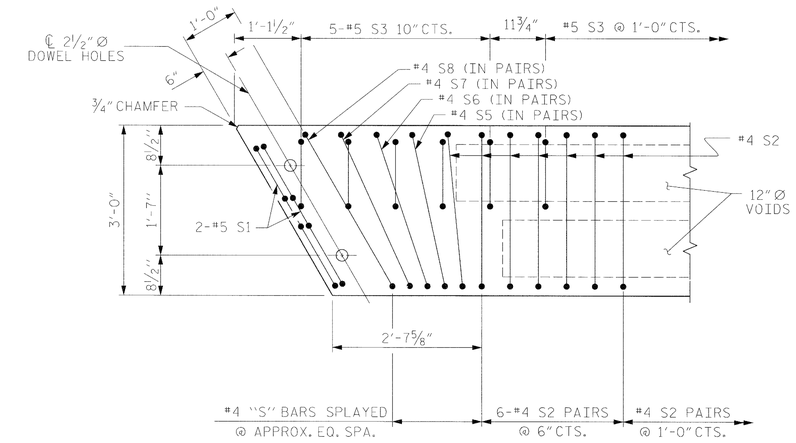

DETAIL "A"

NOTE: EXTERIOR UNIT SHOWN - INTERIOR UNIT SIMILAR EXCEPT OMIT #5 S3 BARS.

PROJECT NO. 17BP.13.R.1

McDOWELL COUNTY

STATION: 10+47.00

SHEET 2 OF 3

STATE OF NORTH CAROLINA
DEPARTMENT OF TRANSPORTATION
RALEIGH

PLAN OF 40' UNIT 27'-10" CLEAR ROADWAY 60° SKEW

NORTH CAROLINA PROFESSIONAL SEAL 2077 ENGINEER HARDY L. WILLIS 8/12/14

REVISIONS						SHEET NO.
NO.	BY:	DATE:	NO.	BY:	DATE:	S-6
1	AW	03/2014	3			TOTAL SHEETS
2			4			22

ASSEMBLED BY :	MAF	DATE :	12/12
CHECKED BY :	HLW	DATE :	12/12
DRAWN BY : DGE	3/09	REV. 12/5/11	MAA/AAC
CHECKED BY : BCH	3/09		

$$$$$$SYSTIME$$$$$
$$$$$$$$$$$$$$$$$$$$$$$$DGN$$$$$$$$$$$$$$$$$$$$$$$
$$$$USERNAME$$$$

STD.NO. 21"PCS_30_60S_40L

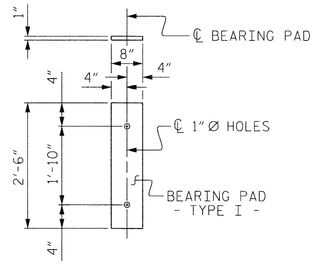

FIXED END
(TYPE I - 20 REQ'D)

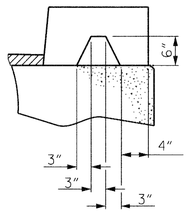

SECTION S-S
AT DAM IN OPEN JOINT
(THIS IS TO BE USED ONLY
WHEN SLIP FORM IS USED)

ELASTOMERIC BEARING DETAILS

ELASTOMER IN ALL BEARINGS SHALL BE 50 DUROMETER HARDNESS.

CORED SLABS REQUIRED			
	NUMBER	LENGTH	TOTAL LENGTH
40' UNIT			
EXTERIOR C.S.	2	40'-0"	80'-0"
INTERIOR C.S.	8	40'-0"	320'-0"
TOTAL	10		400'-0"

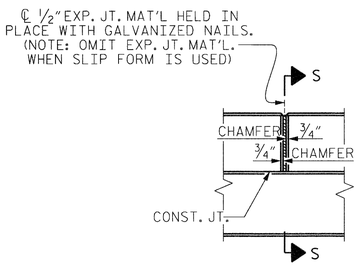

ELEVATION AT EXPANSION JOINTS

BILL OF MATERIAL FOR PARAPET & END POSTS					
BAR	NO.	SIZE	TYPE	LENGTH	WEIGHT
✳ E1	8	# 7	STR	2'-4"	44
✳ E2	8	# 7	STR	2'-5"	52
✳ E3	8	# 7	STR	2'-6"	60
✳ E4	8	# 7	STR	2'-7"	68
✳ E5	8	# 7	STR	2'-8"	74
✳ F1	32	# 6	STR	3'-5"	164
✳ F2	8	# 4	STR	19'-8"	105
✳ EPOXY COATED REINFORCING STEEL				LBS.	567
CLASS AA CONCRETE				CU.YDS.	6.2
TOTAL LIN. FT. OF CONCRETE PARAPET					80.00

GRADE 270 STRANDS	
	0.6"Ø L.R.
AREA (SQUARE INCHES)	0.217
ULTIMATE STRENGTH (LBS. PER STRAND)	58,600
APPLIED PRESTRESS (LBS. PER STRAND)	43,950

BAR TYPES

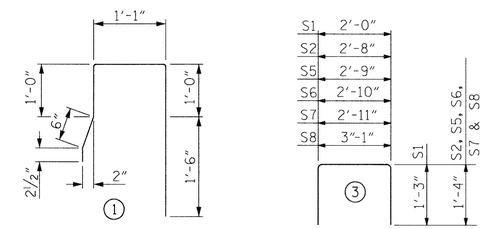

ALL BAR DIMENSIONS ARE OUT TO OUT

BILL OF MATERIAL FOR ONE 40' CORED SLAB UNIT							
				EXTERIOR UNIT		INTERIOR UNIT	
BAR	NUMBER	SIZE	TYPE	LENGTH	WEIGHT	LENGTH	WEIGHT
B4	4	#4	STR	20'-9"	55	20'-9"	55
S1	8	#5	3	4'-6"	38	4'-6"	38
S2	82	#4	3	5'-4"	292	5'-4"	292
✳ S3	41	#5	1	5'-4"	226		
S5	4	#4	3	5'-5"	14	5'-5"	14
S6	4	#4	3	5'-6"	15	5'-6"	15
S7	4	#4	3	5'-7"	15	5'-7"	15
S8	4	#4	3	5'-9"	15	5'-9"	15
REINFORCING STEEL				LBS.	444		444
✳ EPOXY COATED REINFORCING STEEL				LBS.	226		-
6500 P.S.I. CONCRETE				CU. YDS.	5.9		5.9
0.6"Ø L.R. STRANDS				No.	13		13

NOTES

ALL PRESTRESSING STRANDS SHALL BE 7-WIRE LOW RELAXATION GRADE 270 STRANDS AND SHALL CONFORM TO AASHTO M203 EXCEPT FOR SAMPLING REQUIREMENTS WHICH SHALL BE IN ACCORDANCE WITH THE STANDARD SPECIFICATIONS.

ALL REINFORCING STEEL CAST WITH THE CORED SLAB SECTIONS SHALL BE GRADE 60 AND SHALL BE INCLUDED IN THE UNIT PRICE BID FOR PRESTRESSED CONCRETE CORED SLABS.

RECESSES FOR TRANSVERSE STRANDS SHALL BE GROUTED AFTER THE TENSIONING OF THE STRANDS.

THE 2½"Ø DOWEL HOLES AT FIXED ENDS OF SLAB SECTIONS SHALL BE FILLED WITH GROUT. THE 2½"Ø DOWEL HOLES AT EXPANSION ENDS OF SLAB SECTIONS SHALL BE FILLED WITH JOINT SEALER MATERIAL TO 1½" ABOVE THE TOP OF DOWELS AND THEN FILLED WITH GROUT.

THE JOINT SEALER MATERIAL SHALL CONFORM TO THE REQUIREMENTS OF TYPE SL LOW MODULUS SILICONE SEALANT. THE 2"Ø BACKER ROD SHALL CONFORM TO THE REQUIREMENTS OF TYPE M BOND BREAKER. SEE SECTION 1028 OF THE STANDARD SPECIFICATIONS.

WHEN CORED SLABS ARE CAST, AN INTERNAL HOLD-DOWN SYSTEM SHALL BE EMPLOYED TO PREVENT VOIDS FROM RISING OR MOVING SIDEWAYS. AT LEAST SIX WEEKS PRIOR TO CASTING CORED SLABS, THE CONTRACTOR SHALL SUBMIT TO THE ENGINEER FOR REVIEW AND COMMENT, DETAILED DRAWINGS OF THE PROPOSED HOLD-DOWN SYSTEM. IN ADDITION TO STRUCTURAL DETAILS, LOCATION AND SPACING OF THE HOLD-DOWNS SHALL BE INDICATED. WHEN A CONCRETE WEARING SURFACE IS DETAILED ON THE CORED SLAB BRIDGE TYPICAL SECTION, THE TOP SURFACE OF THE CORED SLAB UNITS SHALL HAVE A ⅜" RAKED FINISH.

THE TRANSFER OF LOAD FROM THE ANCHORAGES TO THE CORED SLAB UNIT SHALL BE DONE WHEN THE CONCRETE HAS REACHED A COMPRESSIVE STRENGTH OF NOT LESS THAN THE REQUIRED STRENGTH SHOWN IN THE "CONCRETE RELEASE STRENGTH" TABLE.

ALL REINFORCING STEEL IN PARAPETS AND END POSTS SHALL BE EPOXY COATED.

PRESTRESSING STRANDS SHALL BE CUT FLUSH WITH THE CORED SLAB UNIT ENDS.

APPLY EPOXY PROTECTIVE COATING TO CORED SLAB UNIT ENDS.

GROOVED CONTRACTION JOINTS, ½" IN DEPTH, SHALL BE TOOLED IN ALL EXPOSED FACES OF THE PARAPET AND IN ACCORDANCE WITH ARTICLE 825-10(B) OF THE STANDARD SPECIFICATIONS. A CONTRACTION JOINT SHALL BE LOCATED AT EACH THIRD POINT BETWEEN PARAPET EXPANSION JOINTS. ONLY ONE CONTRACTION JOINT IS REQUIRED AT MIDPOINT OF PARAPET SEGMENTS LESS THAN 20 FEET IN LENGTH AND NO CONTRACTION JOINTS ARE REQUIRED FOR THOSE SEGMENTS LESS THAN 10 FEET IN LENGTH.

TRANSVERSE POST TENSIONING OF THE CORED SLAB UNITS SHALL BE DONE IN ACCORDANCE WITH THE STANDARD SPECIFICATIONS, EXCEPT THAT THE STRANDS SHALL BE 0.6"Ø AND TENSIONED TO 43,950 POUNDS.

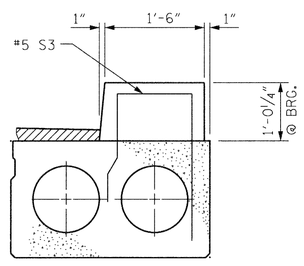

TWO TUBE
RAIL PARAPET SECTION

GUTTERLINE ASPHALT THICKNESS	
27'-10" CLEAR ROADWAY	ASPHALT OVERLAY THICKNESS
	@ MID-SPAN
	SUPERED SECTION
40' UNIT	2⅝"

CONCRETE RELEASE STRENGTH	
UNIT	PSI
40' UNIT	4000

DEAD LOAD DEFLECTION AND CAMBER	
	3'-0" x 1'-9"
40' CORED SLAB UNIT	0.6"Ø L.R. STRAND
CAMBER (SLAB ALONE IN PLACE)	1¼" ↑
DEFLECTION DUE TO SUPERIMPOSED DEAD LOAD✳✳	⅛" ↓
FINAL CAMBER	1⅛" ↑

✳✳ INCLUDES FUTURE WEARING SURFACE

NORTH CAROLINA PROFESSIONAL SEAL 20177 ENGINEER HARDY L. WILLIS
6/12/14

PROJECT NO. 17BP.13.R.1
McDOWELL COUNTY
STATION: 10+47.00

SHEET 3 OF 3

STATE OF NORTH CAROLINA
DEPARTMENT OF TRANSPORTATION
RALEIGH

STANDARD

3'-0" X 1'-9"
PRESTRESSED CONCRETE
CORED SLAB UNIT

REVISIONS						SHEET NO.
NO.	BY:	DATE:	NO.	BY:	DATE:	S-7
1			3			TOTAL SHEETS
2			4			22

ASSEMBLED BY : RWW		DATE : 12/13	
CHECKED BY : HLW		DATE : 12/13	
DRAWN BY : WJH 4/89	REV. 10/1/11	MAA/GM	
CHECKED BY : FCJ 5/89	REV. 10/12	MAA/GM	
	REV. 6/13	MAA/GM	

$$$$$$SYSTIME$$$$$
$$$$$$$$$$$$$$$$$$$$$$$$DGN$$$$$$$$$$$$$$$$$$$$$$$$
$$$$USERNAME$$$$

(SHT 5) STD. NO. PCS3

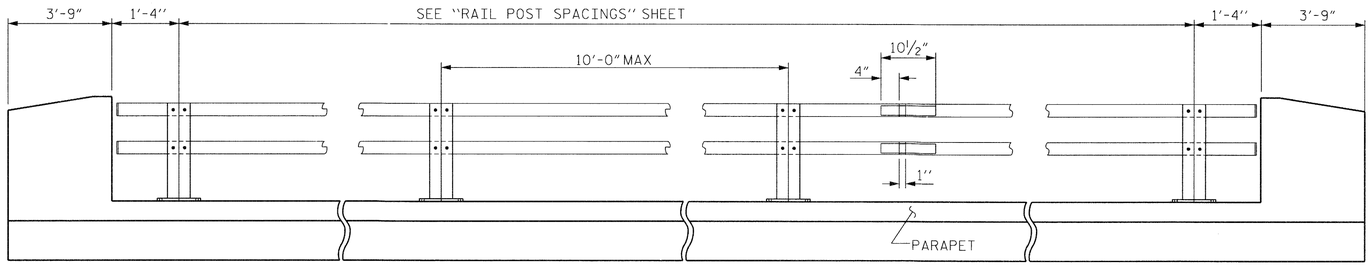

ELEVATION

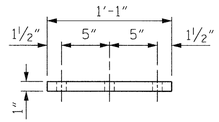

FRONT ELEVATION

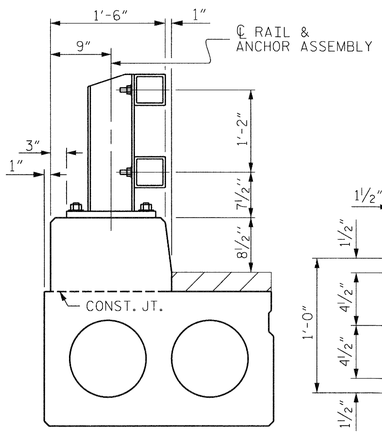

SECTION THRU RAIL

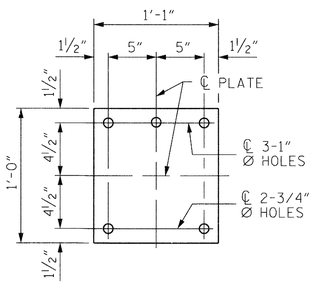

PLAN

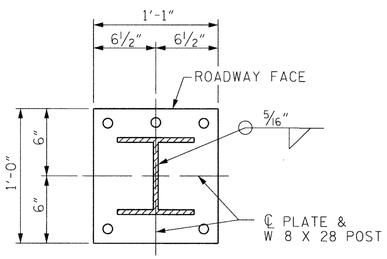

POST ATTACHMENT DETAIL

POST BASE DETAILS

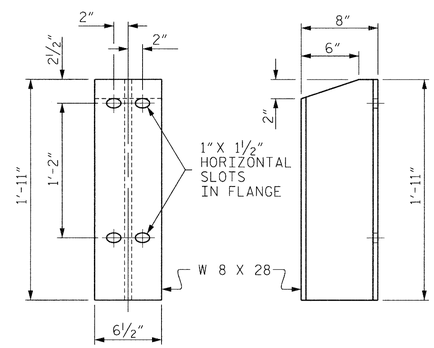

FRONT ELEVATION SIDE ELEVATION

DETAILS OF POST

NOTES

METAL RAIL SHALL BE GALVANIZED STEEL IN ACCORDANCE WITH THE REQUIREMENTS OF THE GENERAL NOTES AND THE FOLLOWING SPECIFICATIONS.

GALVANIZED STEEL RAILS

MATERIAL AND GALVANIZING ARE TO CONFORM TO THE FOLLOWING SPECIFICATIONS:

POST, POST BASES AND RAIL SPLICE BARS: AASHTO M270 GRADE 36 STRUCTURAL STEEL GALVANIZED TO AASHTO M111

THE CUT ENDS OF GALVANIZED STEEL RAILING, AFTER GRINDING SMOOTH SHALL BE GIVEN TWO COATS OF ZINC RICH PAINT MEETING THE REQUIREMENTS OF FEDERAL SPECIFICATION MIL-P-26915 USAF TYPE 1, OR OF FEDERAL SPECIFICATIONS TT-P-641.

SHIMS: SHIMS SHALL MEET THE REQUIREMENTS OF ASTM A570 FOR GRADE 33 OR A611 FOR GRADE C AND SHALL BE GALVANIZED IN ACCORDANCE WITH AASHTO M111.

RAIL CAPS: RAIL CAPS SHALL MEET THE REQUIREMENTS OF ASTM A570 FOR GRADE 33 OR A611 FOR GRADE C AND SHALL BE GALVANIZED IN ACCORDANCE WITH AASHTO M111.

RAILS: ASTM A5000, A501 OR A618 - GALVANIZED TO AASHTO M111. ALUMINUM WILL NOT BE ALLOWED.

THE REDUCED BASE WELDED STUDS AND THE CUT ENDS OF THE GALVANIZED RAILING (AFTER GRINDING SMOOTH) SHALL BE GIVEN TWO COATS OF ZINC RICH PAINT MEETING THE REQUIREMENTS OF FEDERAL SPECIFICATION MIL-P-26915 USAF TYPE 1, OR OF FEDERAL SPECIFICATIONS TT-P-641.

STUDS, NUTS, AND WASHERS: REDUCED BASE WELDED STUDS SHALL MEET THE REQUIREMENTS OF ASTM A108. NUTS SHALL CONFORM TO ASTM A563 DH AND WASHERS TO A436. NUTS AND WASHERS SHALL BE GALVANIZED.

GENERAL NOTES

RAILING SHALL BE CONTINUOUS FROM END POST TO END POST OF BRIDGE. EACH JOINT IN RAIL LENGTH SHALL BE SPLICED AS DETAILED. PANEL LENGTHS OF RAIL SHALL BE ATTACHED TO A MINIMUM OF THREE POSTS.

FOR END OF RAIL TO CLEAR FACE OF CONCRETE END POST DIMENSION, SEE "STANDARD 2 TUBE METAL RAIL", SHEET 2 OF 2.

CERTIFIED MILL REPORTS ARE REQUIRED FOR RAILS AND POSTS. SHOP INSPECTION IS NOT REQUIRED.

METAL RAIL POSTS SHALL BE SET NORMAL TO CURB GRADE.

METHOD OF MEASUREMENT FOR METAL RAILS: FOR LENGTH OF METAL RAILS TO BE PAID FOR, SEE THE STANDARD SPECIFICATIONS.

CURVED RAIL USAGE: WHERE RAILS ARE TO BE USED ON BRIDGES ON HORIZONTAL AND/OR VERTICAL CURVATURE THE CONTRACTOR MAY, AT HIS OPTION, HAVE THE REQUIRED CURVATURE IN THE RAIL FORMED IN THE SHOP OR IN THE FIELD. IN EITHER EVENT, THE RAIL SHALL CONFORM WITHOUT BUCKLING OR KINKING TO THE REQUIRED CURVATURE IN A UNIFORM MANNER ACCEPTABLE TO THE ENGINEER.

TO INSURE FUTURE IDENTIFICATION OF THE FABRICATOR, A PERMANENT IDENTIFYING MARK SHALL BE PLACED ON EACH POST. THE METHOD OF MARKING AND LOCATION SHALL BE SUCH THAT IT DOES NOT DETRACT FROM THE APPEARANCE OF THE POST, BUT REMAINS VISIBLE AFTER RAIL PLACEMENT.

SHIMS SHALL BE USED AS NECESSARY FOR POST ALIGNMENT.

MINOR VARIATIONS IN DETAILS OF METAL RAIL WILL BE CONSIDERED. DETAILS OF SUCH VARIATIONS, IF DESIRED, SHALL BE SUBMITTED FOR APPROVAL.

GROOVED CONTRACTION JOINTS, ½" IN DEPTH, SHALL BE TOOLED IN ALL EXPOSED FACES OF THE PARAPET IN ACCORDANCE WITH ARTICLE 825-10(B) OF THE STANDARD SPECIFICATIONS. THE CONTRACTION JOINT SHALL BE LOCATED AT A SPACING OF 8 FT. TO 10 FT. BETWEEN EXPANSION JOINTS. NO CONTRACTION JOINTS WILL BE REQUIRED FOR SEGMENTS LESS THAN 10 FEET IN LENGTH.

PAY LENGTH 65.0 LIN. FT.

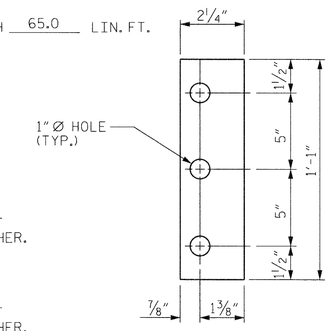

SHIM DETAILS

NOTES

STRUCTURAL CONCRETE ANCHOR ASSEMBLY

THE STRUCTURAL CONCRETE ANCHOR ASSEMBLY SHALL CONSIST OF THE FOLLOWING COMPONENTS:

A. FERRULES SHALL BE MADE FROM STEEL MEETING THE REQUIREMENTS OF AASHTO M169, GRADE 12L14 AND SHALL HAVE A MINIMUM LENGTH OF THREADS OF 2" FOR ¾" FERRULES AND 1¾" FOR ⅝" FERRULES.

B. 3 - ¾" Ø X 2½" BOLTS WITH WASHERS. BOLTS SHALL CONFORM TO THE REQUIREMENTS OF ASTM A307. BOLTS AND WASHERS SHALL BE GALVANIZED. AT THE CONTRACTOR'S OPTION, STAINLESS STEEL BOLTS AND WASHERS MAY BE USED AS AN ALTERNATE FOR THE ¾" Ø X 2½" GALVANIZED BOLTS AND WASHERS. THEY SHALL CONFORM TO OR EXCEED THE MECHANICAL REQUIREMENTS OF ASTM A307. THE USE OF THIS ALTERNATE SHALL BE APPROVED BY THE ENGINEER.

C. 2 - ⅝" Ø X 2¼" BOLTS WITH WASHERS. BOLTS SHALL CONFORM TO THE REQUIREMENTS OF ASTM A307. BOLTS AND WASHERS SHALL BE GALVANIZED. AT THE CONTRACTOR'S OPTION, STAINLESS STEEL BOLTS AND WASHERS MAY BE USED AS AN ALTERNATE FOR THE ⅝" Ø X 2¼" GALVANIZED BOLTS AND WASHERS. THEY SHALL CONFORM TO OR EXCEED THE MECHANICAL REQUIREMENTS OF ASTM A307. THE USE OF THIS ALTERNATE SHALL BE APPROVED BY THE ENGINEER.

D. WIRE STRUT SHOWN IN THE CONCRETE ANCHOR ASSEMBLY DETAIL IS THE MINIMUM ALLOWABLE SIZE AND SHALL HAVE A MINIMUM TENSILE STRENGTH OF 100,000 PSI. AS AN OPTION, A 7/16" Ø WIRE STRUT WITH A MINIMUM TENSILE STRENGTH OF 90,000 PSI IS ACCEPTABLE.

E. THE METAL RAIL ANCHOR ASSEMBLIES TO BE HOT DIPPED GALVANIZED TO CONFORM TO REQUIREMENTS OF AASHTO M111.

F. THE COST OF THE METAL RAIL ANCHOR ASSEMBLY WITH BOLTS AND WASHERS COMPLETE IN PLACE SHALL BE INCLUDED IN THE PRICE BID FOR LINEAR FEET OF METAL RAIL.

G. BOLTS TO BE TIGHTENED ONE-HALF TURN WITH A WRENCH FROM A FINGER-TIGHT POSITION.

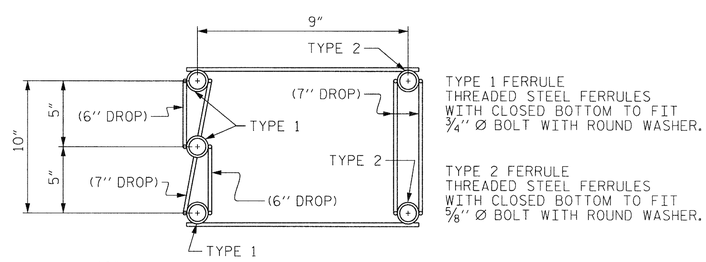

PLAN

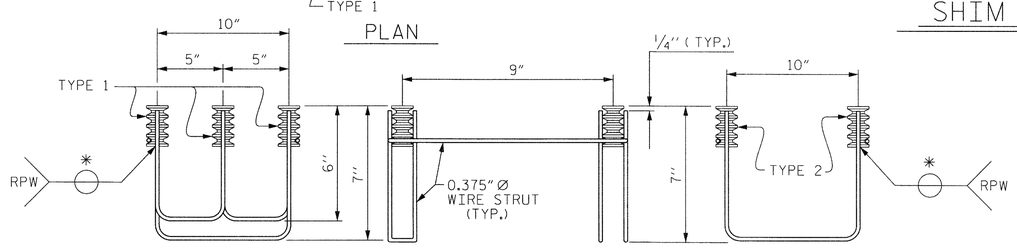

LEFT SIDE VIEW ELEVATION RIGHT SIDE VIEW

5-BOLT METAL RAIL ANCHOR ASSEMBLY

(10 ASSEMBLIES REQUIRED)

* EACH WELDED ATTACHMENT OF WIRE TO FERRULE SHALL DEVELOP THE TENSILE STRENGTH OF THE WIRE.

PROJECT NO. 17BP.13.R.1

McDOWELL COUNTY

STATION: 10+47.00

SHEET 1 OF 2

STATE OF NORTH CAROLINA
DEPARTMENT OF TRANSPORTATION
RALEIGH

STANDARD

2 TUBE METAL RAIL

NORTH CAROLINA PROFESSIONAL SEAL 20772 ENGINEER HARDY L. WILLIS 6/12/14

ASSEMBLED BY : RWW	DATE : 12/13
CHECKED BY : HLW	DATE : 12/13
DRAWN BY : RWW 8/13	ADDED 8/13
CHECKED BY :	

REVISIONS								SHEET NO.
NO.	BY:	DATE:	NO.	BY:	DATE:			S-8
1			3					TOTAL SHEETS
2			4					22

STD. NO. BMR8

$$$$$$SYSTIME$$$$$
$$$$$$$$$$$$$$$$$$$$$$$$DGN$$$$$$$$$$$$$$$$$$$$$$$
$$$$USERNAME$$$$

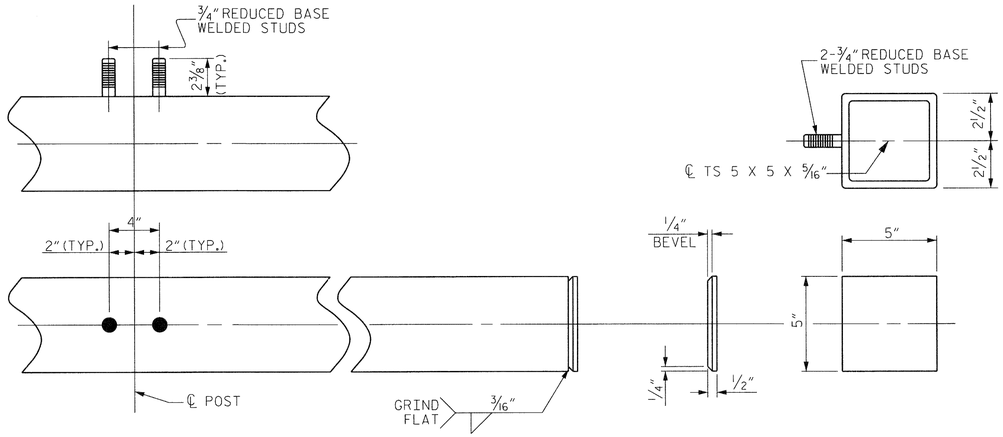

RAIL CAP AND ATTACHMENT STUD DETAILS

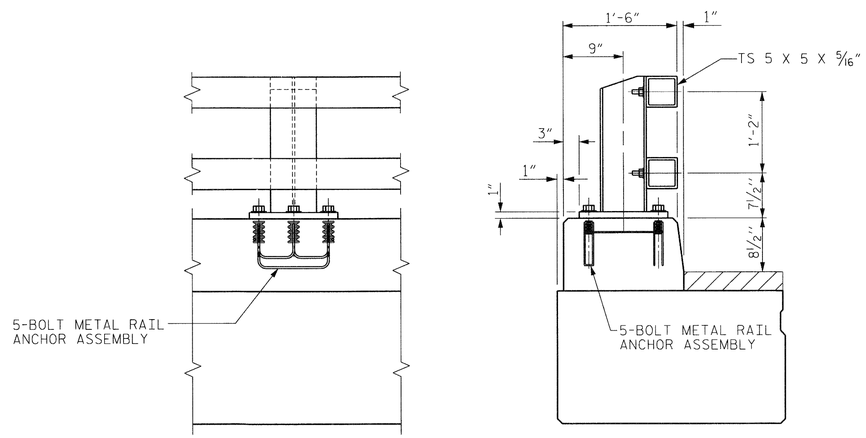

RAIL POST ATTACHMENT DETAILS

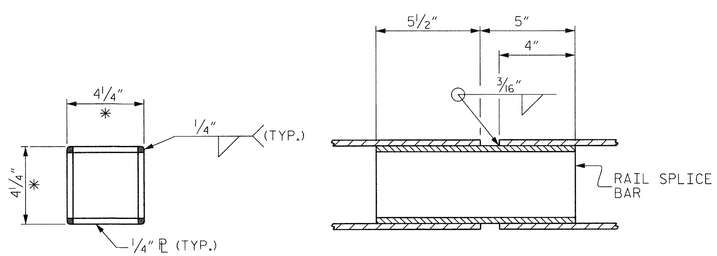

RAIL SPLICE DETAILS

* - DIMENSION AFTER GRINDING RADIUS ON CORNERS TO MATCH INSIDE OF METAL RAIL.

NOTES

STRUCTURAL CONCRETE INSERT

THE STRUCTURAL CONCRETE INSERT ASSEMBLY SHALL CONSIST OF THE FOLLOWING COMPONENTS:

A. FERRULES SHALL BE MADE FROM STEEL MEETING THE REQUIREMENTS OF AASHTO M169, GRADE 12L14 AND SHALL HAVE A MINIMUM LENGTH OF THREADS OF 1 1/2".

B. 1 - 3/4" Ø X 1 5/8" BOLT WITH WASHER. BOLT SHALL CONFORM TO THE REQUIREMENTS OF ASTM A307. BOLT AND WASHER SHALL BE GALVANIZED. (AT THE CONTRACTOR'S OPTION, STAINLESS STEEL BOLT AND WASHER MAY BE USED AS AN ALTERNATE FOR THE 3/4" Ø X 1 5/8" GALVANIZED BOLT AND WASHER. THEY SHALL CONFORM TO OR EXCEED THE MECHANICAL REQUIREMENTS OF ASTM A307. THE USE OF THIS ALTERNATE SHALL BE APPROVED BY THE ENGINEER.)

C. WIRE STRUT SHOWN IN THE CONCRETE INSERT ASSEMBLY DETAIL IS THE MINIMUM ALLOWABLE SIZE AND SHALL HAVE A MINIMUM TENSILE STRENGTH OF 100,000 PSI. AS AN OPTION, A 7/16" Ø WIRE STRUT WITH A MINIMUM TENSILE STRENGTH OF 90,000 PSI IS ACCEPTABLE.

NOTES

METAL RAIL TO END POST CONNECTION

THE METAL RAIL TO END POST CONNECTION SHALL CONSIST OF THE FOLLOWING COMPONENTS:

A. 1/2" PLATES SHALL CONFORM TO AASHTO M270 GRADE 36 AND SHALL BE GALVANIZED AFTER FABRICATION.

B. 3/4" STRUCTURAL CONCRETE INSERT SHALL HAVE A WORKING LOAD SHEAR CAPACITY OF 4800 LBS. THE FERRULES SHALL ENGAGE A 3/4"Ø X 1 5/8" BOLT WITH 2" O.D. WASHER IN PLACE. THE 3/4"Ø X 1 5/8" BOLT SHALL HAVE N. C. THREADS.

C. NUTS FOR RAIL ATTACHMENT TO ANGLE SHALL CONFORM TO THE REQUIREMENTS OF ASTM F593 TYPE 305 STAINLESS STEEL.

THE COST OF THE ATTACHMENT BRACE AND NUTS USED IN THE METAL RAIL TO END POST CONNECTION SHALL BE INCLUDED IN THE UNIT CONTRACT PRICE BID FOR LINEAR FEET OF SPECIAL STEEL 2 BAR METAL RAIL.

THE 3/4" STRUCTURAL CONCRETE INSERT WITH BOLT SHALL BE ASSEMBLED IN THE SHOP.

THE COST OF THE 3/4" STRUCTURAL CONCRETE INSERT ASSEMBLY, AND THE 1/2" PLATES COMPLETE IN PLACE SHALL BE INCLUDED IN THE VARIOUS PAY ITEMS.

THE CONTRACTOR, AT HIS OPTION, MAY USE AN ADHESIVE BONDING SYSTEM IN LIEU OF THE STRUCTURAL CONCRETE INSERT EMBEDDED IN THE PARAPET. IF THE ADHESIVE BONDING SYSTEM IS USED, THE 3/4" Ø X 1 5/8" BOLT WITH WASHER SHALL BE REPLACED WITH A 3/4"Ø BOLT AND 2" O.D. WASHER. THE CONTRACTOR SHALL DESIGN THE ANCHOR BOLTS WITH SUFFICIENT PROJECTION TO ACCOMMODATE THE THICKNESS OF THE RAIL POST BASE PLATE, AS WELL AS THE NUT AND ANY WASHERS NECESSARY. THE CONTRACTOR SHALL DESIGN THE EMBEDMENT DEPTH OF THE ADHESIVELY ANCHORED BOLTS IN ACCORDANCE WITH THE ADHESIVE MANUFACTURER'S RECOMMENDATIONS AND THE REQUIREMENTS OF 420-13 (B) (4) OF THE NCDOT STANDARD SPECIFICATIONS. FIELD TESTING OF THE ADHESIVELY ANCHORED BOLTS SHALL BE IN ACCORDANCE WITH LEVEL 2 FIELD TESTING OF 420-13 (C) OF THE NCDOT STANDARD SPECIFICATIONS. ALL SPECIFICATIONS THAT APPLY TO THE 3*4" Ø X 1 5/8"' BOLT SHALL APPLY TO THE 3*4"Ø ADHESIVELY ANCHORED BOLT.

PROJECT NO. 17BP.13.R.1
McDOWELL COUNTY
STATION: 10+47.00

SHEET 2 OF 2

NORTH CAROLINA PROFESSIONAL SEAL 20774 ENGINEER HARDY L. WILLIS 6/12/14

STATE OF NORTH CAROLINA
DEPARTMENT OF TRANSPORTATION
RALEIGH

STANDARD

2 TUBE METAL RAIL

ASSEMBLED BY : RWW	DATE : 12/13
CHECKED BY : HLW	DATE : 12/13
DRAWN BY : RWW 8/13	ADDED 8/13
CHECKED BY :	

REVISIONS						SHEET NO.
NO.	BY:	DATE:	NO.	BY:	DATE:	S-9
1			3			TOTAL SHEETS
2			4			22

STD. NO. BMR9

$$$$$$SYSTIME$$$$$
$$$$$$$$$$$$$$$$$$$$$$$$DGN$$$$$$$$$$$$$$$$$$$$$$$$
$$$$USERNAME$$$$

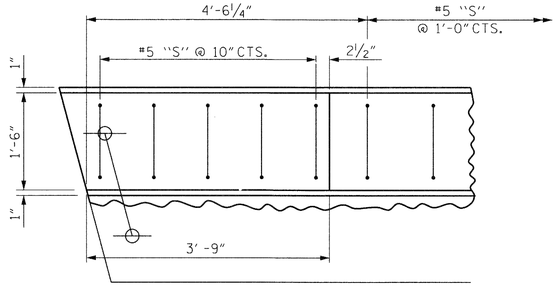

PLAN OF PARAPET

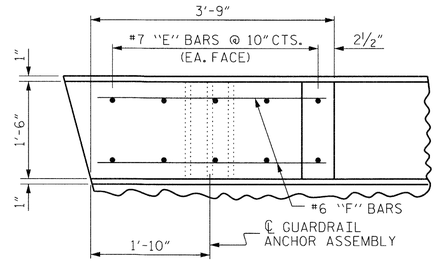

PLAN OF END POST

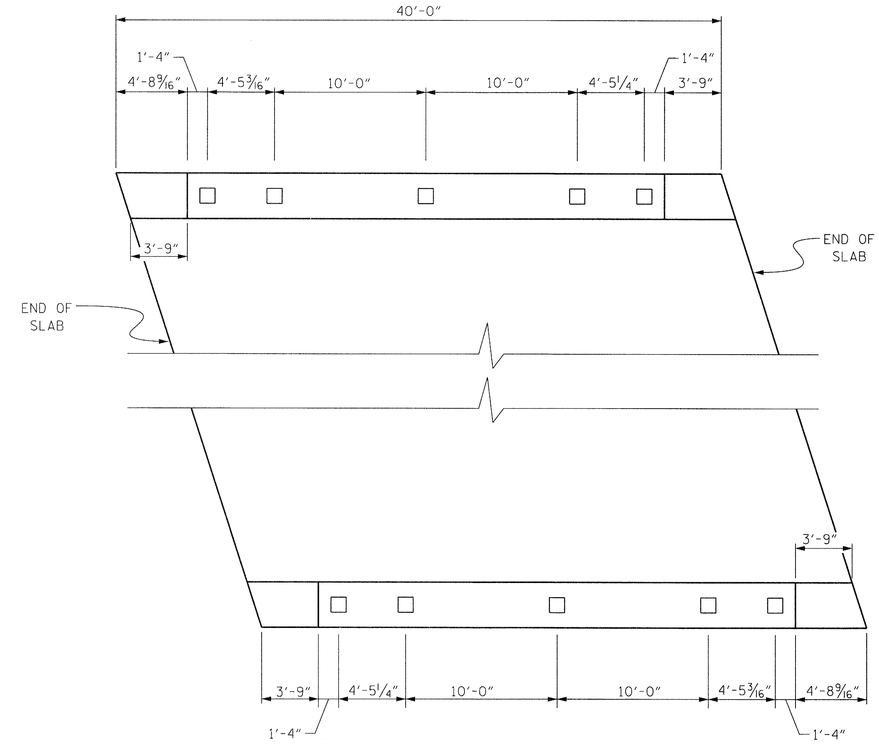

PLAN - RAIL POST SPACING

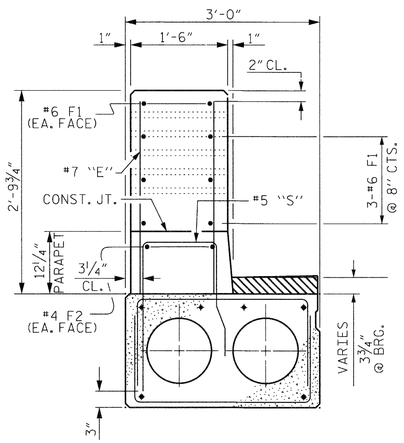

END VIEW

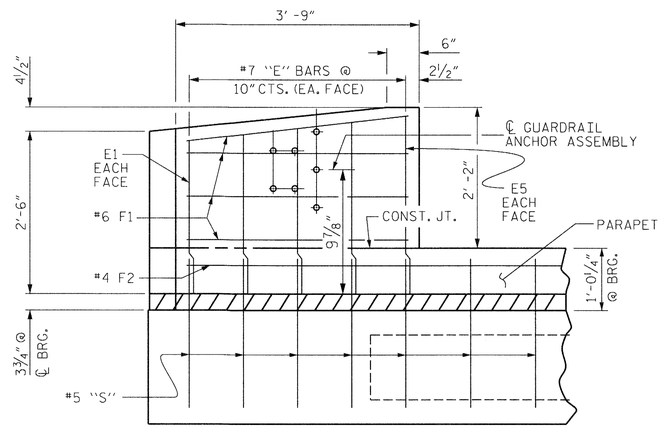

ELEVATION

PARAPET AND END POST FOR TWO TUBE METAL RAIL

PROJECT NO. 17BP.13.R.1

McDOWELL COUNTY

STATION: 10+47.00

V&M
Vaughn & Melton
Consulting Engineers
Asheville, North Carolina 828-253-2796
Charlotte, North Carolina 704-357-0488
Tri-Cities, Tennessee 423-467-8401
Knoxville, Tennessee 865-546-5800
Middlesboro, Kentucky 606-248-6600
Spartanburg, South Carolina 864-574-4775

Copyright © 2006 Vaughn & Melton, Inc. All Rights Reserved

STATE OF NORTH CAROLINA
DEPARTMENT OF TRANSPORTATION
RALEIGH

PARAPET AND END POST DETAILS

DWN. BY: MAF	DATE: 12/2012
CHKD. BY: HLW	DATE: 12/2012
DES. EGR. OF RECORD: CBC	DATE: 12/2012

REVISIONS						
NO.	BY:	DATE:	NO.	BY:	DATE:	
1			3			
2			4			

SHEET NO. S-10

TOTAL SHEETS 22

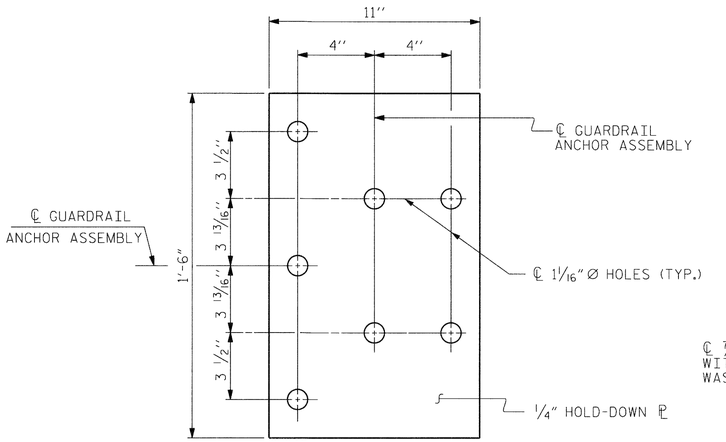

PLAN

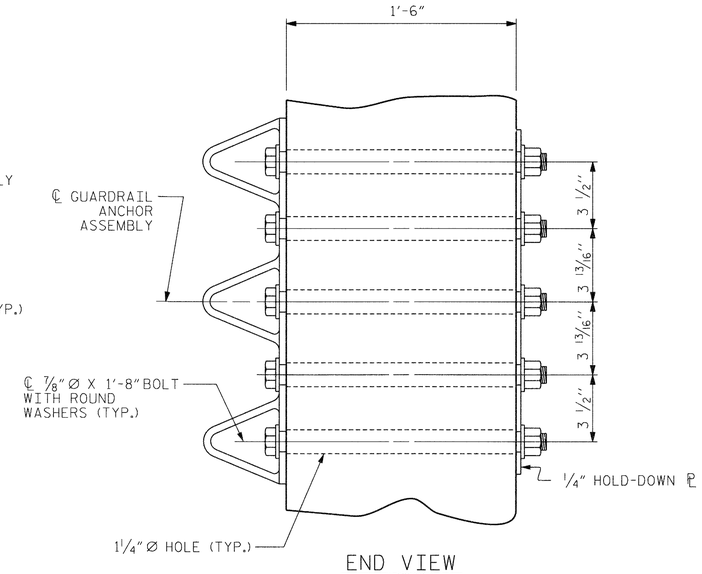

END VIEW

GUARDRAIL ANCHOR ASSEMBLY DETAILS

NOTES (FOR METAL RAILS)

THE GUARDRAIL ANCHOR ASSEMBLY SHALL CONSIST OF A 1/4" HOLD DOWN PLATE AND 7 - 7/8" Ø BOLTS WITH NUTS AND WASHERS.

THE HOLD-DOWN PLATE SHALL CONFORM TO AASHTO M270 GRADE 36. AFTER FABRICATION, THE HOLD-DOWN PLATE SHALL BE HOT-DIP GALVANIZED IN ACCORDANCE WITH AASHTO M111.

BOLTS SHALL CONFORM TO THE REQUIREMENTS OF ASTM A307 AND NUTS SHALL CONFORM TO THE REQUIREMENTS OF AASHTO M291. BOLTS, NUTS AND WASHERS SHALL BE GALVANIZED. AT THE CONTRACTOR'S OPTION, STAINLESS STEEL BOLTS, NUTS AND WASHERS MAY BE USED AS AN ALTERNATE FOR THE 7/8" Ø GALVANIZED BOLTS, NUTS AND WASHERS. THEY SHALL CONFORM TO OR EXCEED THE MECHANICAL REQUIREMENTS OF ASTM A307. THE USE OF THIS ALTERNATE SHALL BE APPROVED BY THE ENGINEER.

THE GUARDRAIL ANCHOR ASSEMBLY IS REQUIRED AT ALL POINTS WHERE APPROACH GUARDRAIL IS TO BE ATTACHED TO THE END OF THE PARAPET. FOR POINTS OF ATTACHMENT, SEE SKETCH.

AFTER INSTALLATION, THE EXPOSED THREAD OF THE BOLT SHALL BE BURRED WITH A SHARP POINTED TOOL.

THE COST OF THE GUARDRAIL ANCHOR ASSEMBLIES WITH BOLTS, NUTS AND WASHERS COMPLETE IN PLACE, SHALL BE INCLUDED IN THE VARIOUS PAY ITEMS.

THE VERTICAL REINFORCING BARS MAY BE SHIFTED SLIGHTLY IN THE END POST TO CLEAR ASSEMBLY BOLTS.

THE 1 1/4" Ø HOLES SHALL BE FORMED OR DRILLED WITH A CORE BIT. IMPACT TOOLS WILL NOT BE PERMITTED. ANY CONCRETE DAMAGED BY THIS WORK SHALL BE REPAIRED TO THE SATISFACTION OF THE ENGINEER.

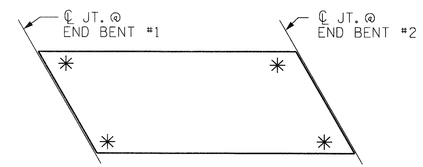

SKETCH SHOWING POINTS OF ATTACHMENT

✳ DENOTES GUARDRAIL ANCHOR ASSEMBLY

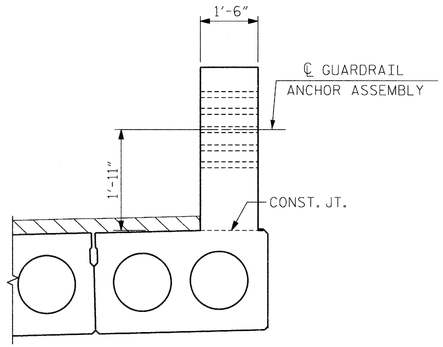

END VIEW

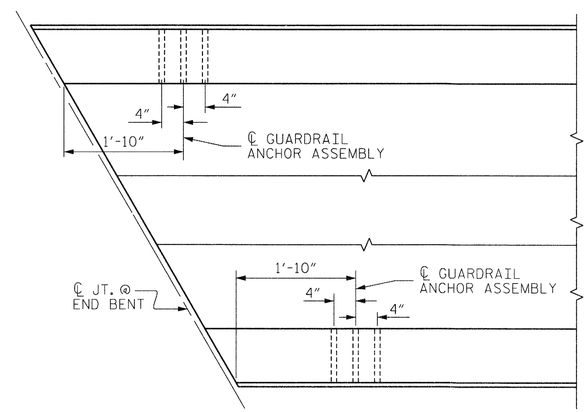

PLAN

LOCATION OF GUARDRAIL ANCHORS AT END POST

END BENT #1 SHOWN, END BENT #2 SIMILAR.

PROJECT NO. 17BP.13.R.1

McDOWELL COUNTY

STATION: 10+47.00

STATE OF NORTH CAROLINA
DEPARTMENT OF TRANSPORTATION
RALEIGH

STANDARD
GUARDRAIL ANCHORAGE DETAILS FOR METAL RAILS & VERTICAL CONCRETE BARRIER RAIL

NORTH CAROLINA PROFESSIONAL SEAL 20274 ENGINEER HARDY L. WILLIS 6/12/14

REVISIONS						SHEET NO.
NO.	BY:	DATE:	NO.	BY:	DATE:	S-11
1			3			TOTAL SHEETS
2			4			22

STD. NO. GRA3

ASSEMBLED BY : RWW		DATE : 12/13	
CHECKED BY : HLW		DATE : 12/13	
DRAWN BY : MAA 5/10	REV. 10/1/11	MAA/GM	
CHECKED BY : GM 5/10	REV. 12/5/11	MAA/GM	
	REV. 6/13	MAA/GM	

$$$$$$SYSTIME$$$$$
$$$$$$$$$$$$$$$$$$$$$$$$DGN$$$$$$$$$$$$$$$$$$$$$$$$
$$$$USERNAME$$$$

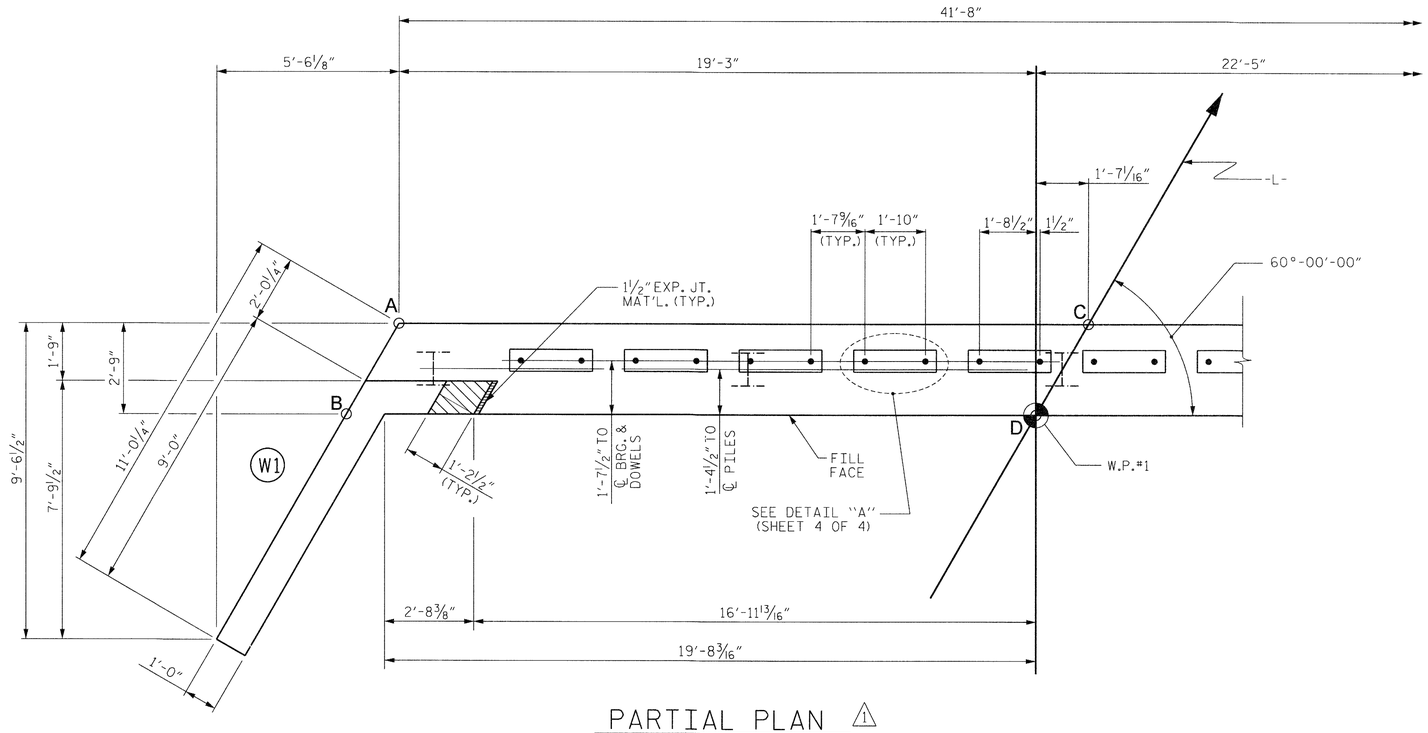

PARTIAL PLAN 1

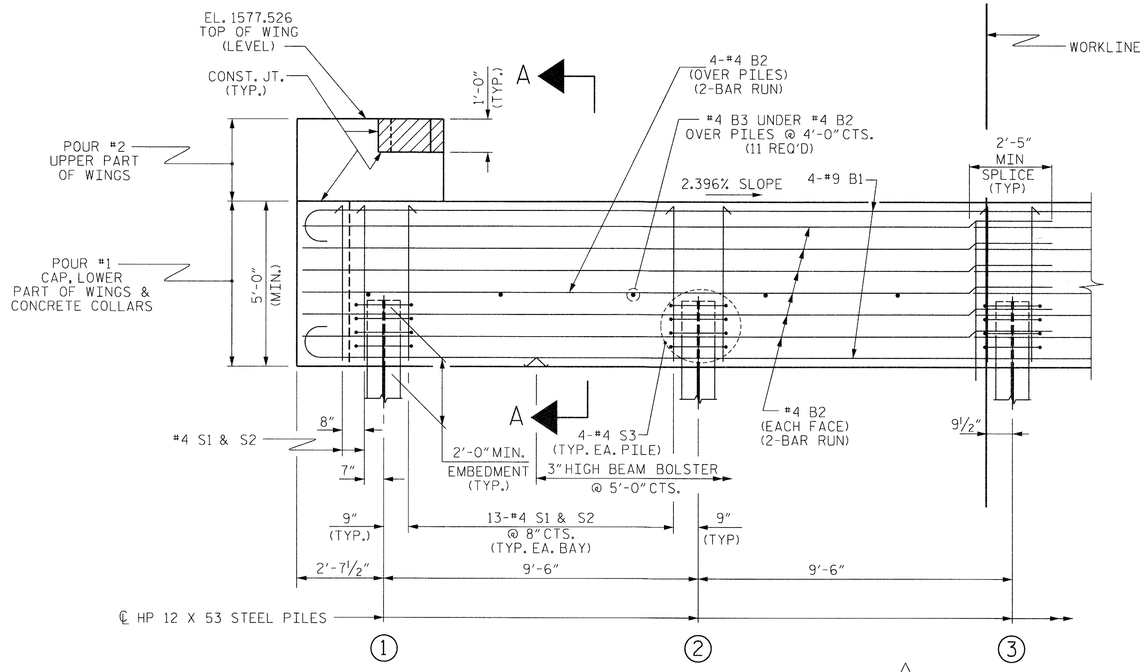

PARTIAL ELEVATION 1

WINGS NOT SHOWN FOR CLARITY.
FOR SECTION A-A, SEE SHEET 4 OF 4.
CONCRETE COLLARS FOR STEEL PILES NOT SHOWN IN PLAN AND ELEVATION VIEWS FOR CLARITY.
SEE "CORROSION PROTECTION FOR STEEL PILES DETAIL", SHEET 4 OF 4.

NOTES

STIRRUPS IN CAP MAY BE SHIFTED AS NECESSARY TO CLEAR DOWELS.

THE LATERAL GUIDES ARE NOT TO BE POURED UNTIL AFTER THE CORED SLAB UNITS ARE IN PLACE.

THE CONCRETE IN THE SHADED AREA OF THE WING SHALL BE POURED AFTER THE VERTICAL CONCRETE BARRIER RAIL IS CAST IF SLIP FORMING IS USED.

FOR PILE SPLICE DETAILS, SEE SHEET 4 OF 4.

FOR WING DETAILS, SEE SHEET 3 OF 4.

ELEVATIONS OF NOTED POINTS

	TOP OF CAP	BOTTOM OF CAP
POINT A	1574.986	1569.986
POINT B	1575.026	1570.026
POINT C	1574.487	1569.487
POINT D	1574.527	1569.527

TOP OF PILE ELEVATIONS

1	1571.878
2	1571.649
3	1571.469

PROJECT NO. 17BP.13.R.1
McDOWELL COUNTY
STATION: 10+47.00

SHEET 1 OF 4

STATE OF NORTH CAROLINA
DEPARTMENT OF TRANSPORTATION
RALEIGH

SUBSTRUCTURE

END BENT No. 1

NORTH CAROLINA PROFESSIONAL SEAL 20777 ENGINEER HARDY L. WILLIS 6/12/14

REVISIONS						SHEET NO.
NO.	BY:	DATE:	NO.	BY:	DATE:	S-12
1	AW	03/2014	3			TOTAL SHEETS
2			4			22

ASSEMBLED BY :	MAF	DATE :	12/12
CHECKED BY :	HLW	DATE :	12/12
DRAWN BY :	DGE	02/10	
CHECKED BY :	MKT	02/10	

$$$$$$SYSTIME$$$$$
$$$$$$$$$$$$$$$$$$$$DGN$$$$$$$$$$$$$$$$$$$$$
$$$$USERNAME$$$$

STD. NO. EB_30_60S

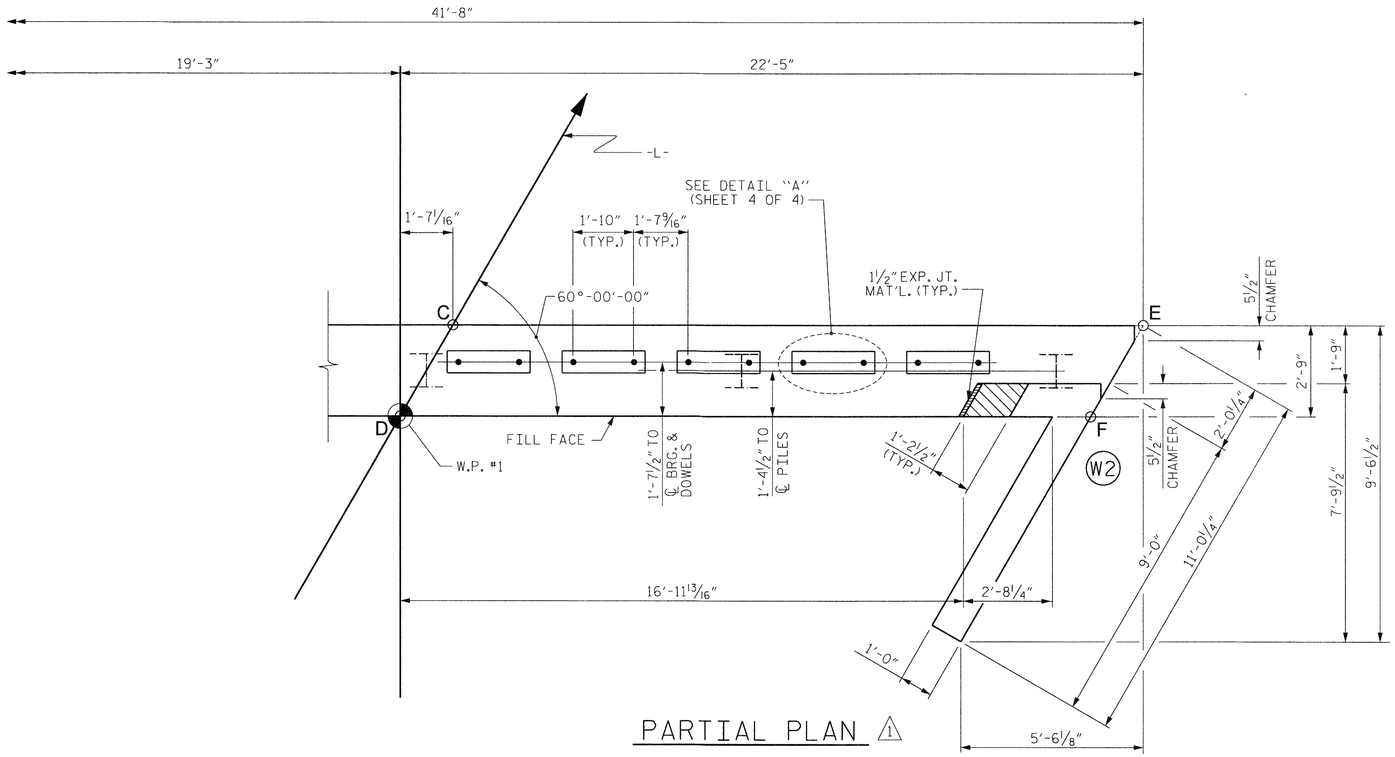

PARTIAL PLAN 1

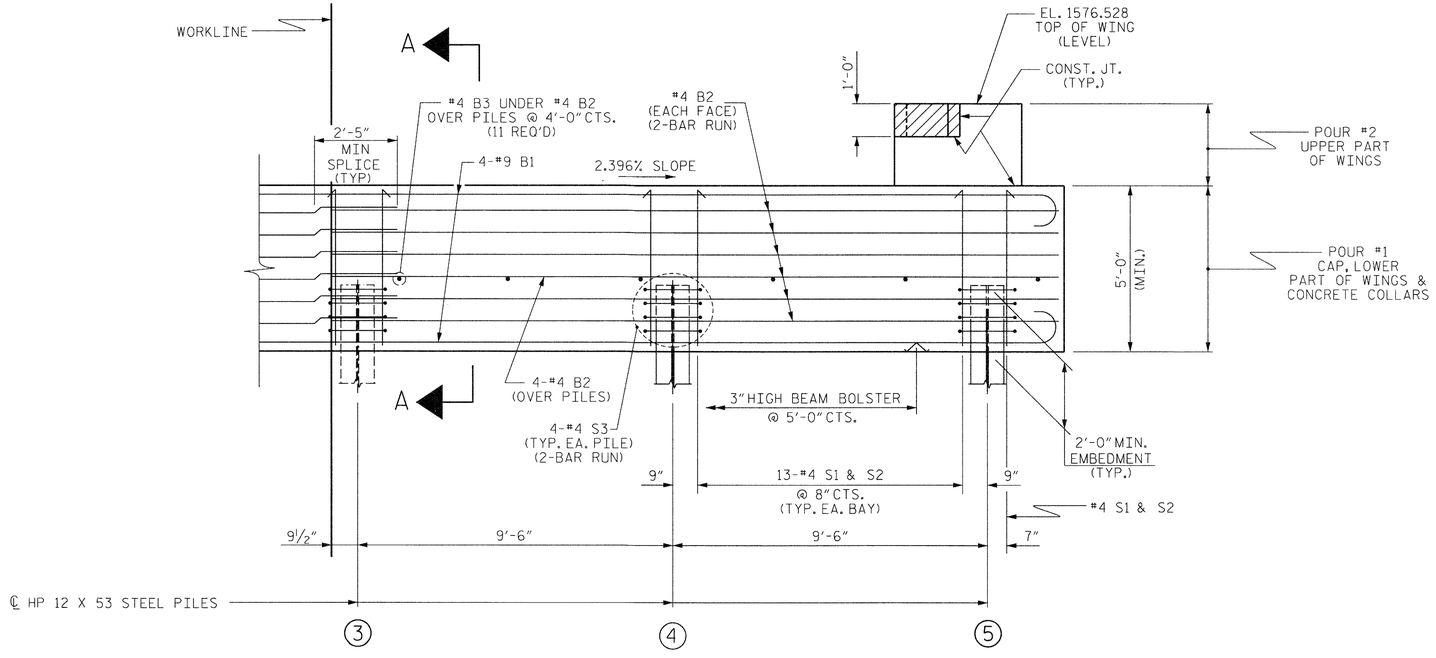

PARTIAL ELEVATION 1

WINGS NOT SHOWN FOR CLARITY.
FOR SECTION A-A, SEE SHEET 4 OF 4.
CONCRETE COLLARS FOR STEEL PILES NOT SHOWN IN PLAN AND ELEVATION VIEWS FOR CLARITY.
SEE "CORROSION PROTECTION FOR STEEL PILES DETAIL", SHEET 4 OF 4.

NOTES

STIRRUPS IN CAP MAY BE SHIFTED AS NECESSARY TO CLEAR DOWELS.

THE LATERAL GUIDES ARE NOT TO BE POURED UNTIL AFTER THE CORED SLAB UNITS ARE IN PLACE.

THE CONCRETE IN THE SHADED AREA OF THE WING SHALL BE POURED AFTER THE VERTICAL CONCRETE BARRIER RAIL IS CAST IF SLIP FORMING IS USED.

FOR PILE SPLICE DETAILS, SEE SHEET 4 OF 4.

FOR WING DETAILS, SEE SHEET 3 OF 4.

ELEVATIONS OF NOTED POINTS

	TOP OF CAP	BOTTOM OF CAP
POINT C	1574.487	1569.487
POINT D	1574.527	1569.527
POINT E	1573.988	1568.988
POINT F	1574.028	1569.028

TOP OF PILE ELEVATIONS

4	1571.192
5	1570.963

PROJECT NO. 17BP.13.R.1
McDOWELL COUNTY
STATION: 10+47.00

SHEET 2 OF 4

STATE OF NORTH CAROLINA
DEPARTMENT OF TRANSPORTATION
RALEIGH

SUBSTRUCTURE

END BENT No. 1

NORTH CAROLINA PROFESSIONAL SEAL 35842 ENGINEER HARDY L. WILLIS
6/12/14

REVISIONS								SHEET NO.
NO.	BY:	DATE:	NO.	BY:	DATE:			S-13
1	AW	03/2014	3					TOTAL SHEETS
2			4					22

ASSEMBLED BY :	MAF	DATE :	12/12
CHECKED BY :	HLW	DATE :	12/12
DRAWN BY :	DGE	02/10	
CHECKED BY :	MKT	02/10	

$$$$$$SYSTIME$$$$$
$$$$$$$$$$$$$$$$$$$$DGN$$$$$$$$$$$$$$$$$$$$$$$
$$$$USERNAME$$$$

STD. NO. EB_30_60S

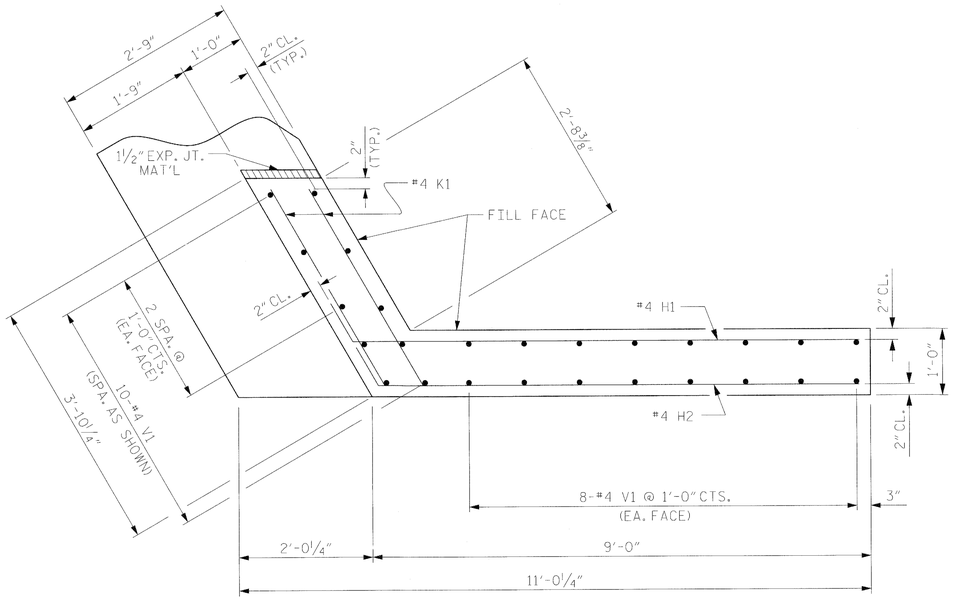

PLAN OF WING (W1)

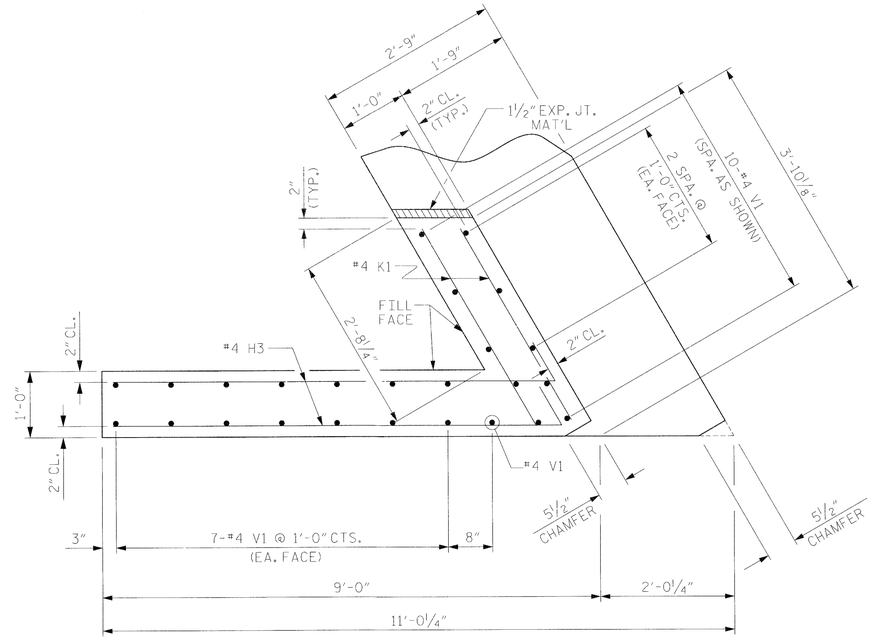

PLAN OF WING (W2)

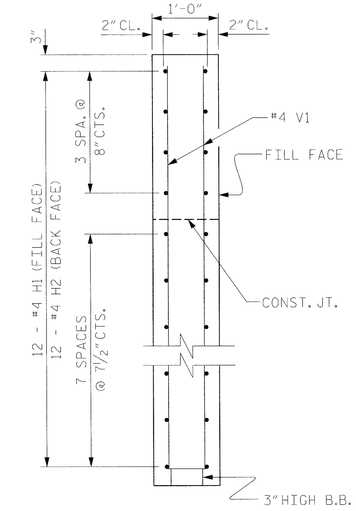

SECTION X-X

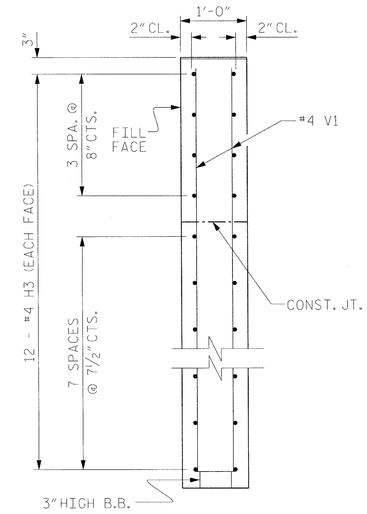

SECTION Y-Y

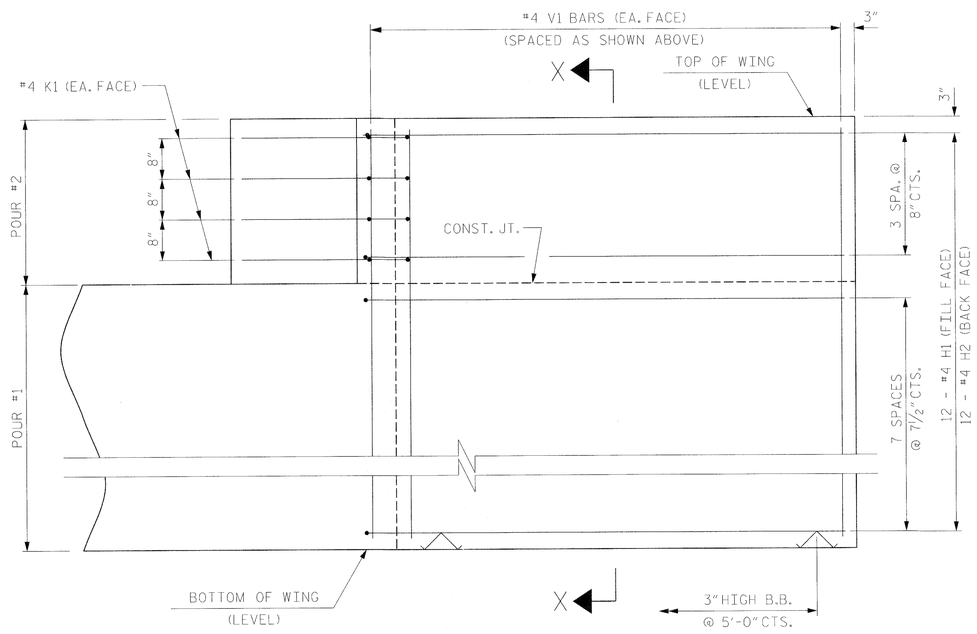

ELEVATION OF WING (W1)

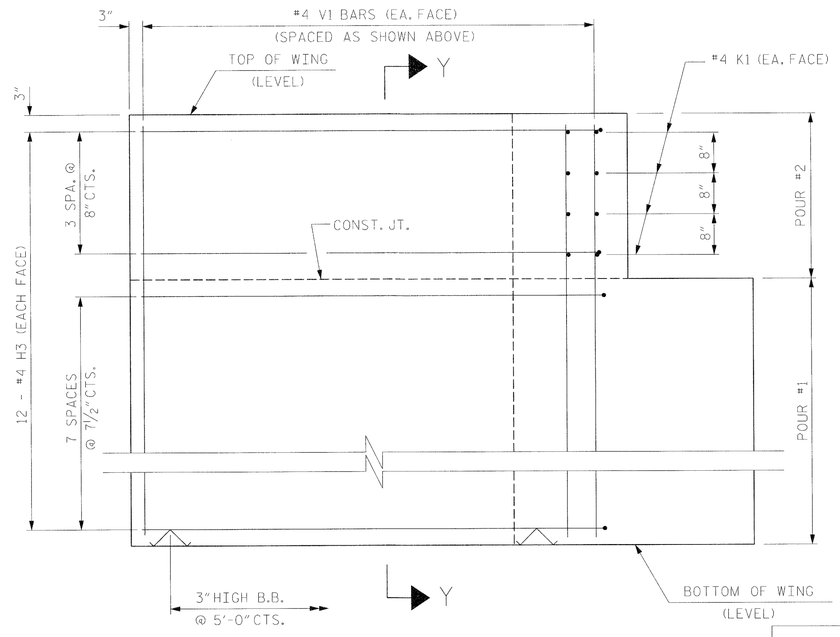

ELEVATION OF WING (W2)

WING DETAILS

PROJECT NO. 17BP.13.R.1

McDOWELL COUNTY

STATION: 10+47.00

SHEET 3 OF 4

STATE OF NORTH CAROLINA
DEPARTMENT OF TRANSPORTATION
RALEIGH

SUBSTRUCTURE
END BENT NO. 1
WING DETAILS

NORTH CAROLINA PROFESSIONAL SEAL 20771 ENGINEER HARDY L. WILLIS 6/12/14

REVISIONS						SHEET NO.
NO.	BY:	DATE:	NO.	BY:	DATE:	S-14
1			3			TOTAL SHEETS
2			4			22

ASSEMBLED BY :	MAF	DATE :	12/12
CHECKED BY :	HLW	DATE :	12/12
DRAWN BY :	WJH	12/11	
CHECKED BY :	AAC	12/11	

$$$$$$$SYSTIME$$$$$
$$$$$$$$$$$$$$$$$$$$$$$$DGN$$$$$$$$$$$$$$$$$$$$$$$
$$$$USERNAME$$$$

STD. NO. EB_30_60S4

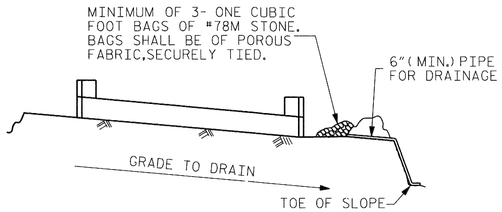

BAGGED STONE AND PIPE SHALL BE PLACED IMMEDIATELY AFTER COMPLETION OF END BENT EXCAVATION. PIPE MAY BE EITHER CONCRETE, CORRUGATED STEEL, CORRUGATED ALUMINUM ALLOY, OR CORRUGATED PLASTIC. PERFORATED PIPE WILL NOT BE ALLOWED.

BAGGED STONE SHALL REMAIN IN PLACE UNTIL THE ENGINEER DIRECTS THAT IT BE REMOVED. THE CONTRACTOR SHALL REMOVE AND DISPOSE OF SILT ACCUMULATIONS AT BAGGED STONE WHEN SO DIRECTED BY THE ENGINEER. BAGS SHALL BE REMOVED AND REPLACED WHENEVER THE ENGINEER DETERMINES THAT THEY HAVE DETERIORATED AND LOST THEIR EFFECTIVENESS.

NO SEPARATE PAYMENT WILL BE MADE FOR THIS WORK AND THE ENTIRE COST OF THIS WORK SHALL BE INCLUDED IN THE UNIT CONTRACT PRICE BID FOR THE SEVERAL PAY ITEMS.

TEMPORARY DRAINAGE AT END BENT

BAR TYPES

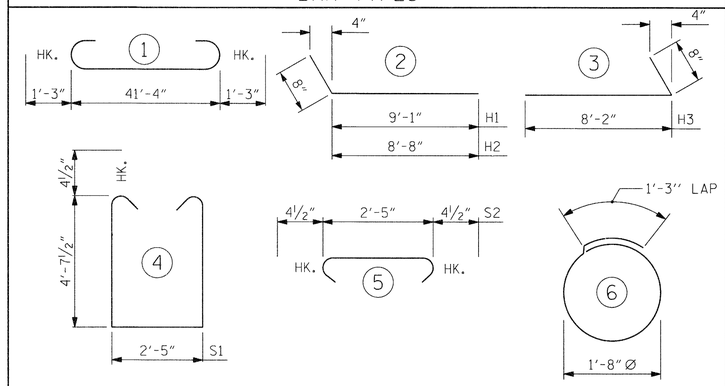

ALL BAR DIMENSIONS ARE OUT TO OUT.

BILL OF MATERIAL

END BENT NO. 1

BAR	NO.	SIZE	TYPE	LENGTH	WEIGHT
B1	8	#9	1	43'-10"	1192
B2	32	#4	STR	21'-11"	468
B3	11	#4	STR	2'-5"	18
D1	20	#6	STR	1'-6"	46
H1	12	#4	2	9'-9"	78
H2	12	#4	2	9'-4"	75
H3	24	#4	3	8'-10"	142
K1	16	#4	STR	3'-3"	34
S1	55	#4	4	12'-5"	456
S2	55	#4	5	3'-2"	116
S3	20	#4	6	6'-6"	87
V1	51	#4	STR	7'-2"	244

REINFORCING STEEL 2956 LBS.

END BENT No. 1

HP 12 X 53 STEEL PILES
NO: 5 LIN. FT.= 75

PILE EXCAVATION

IN SOIL	27 LIN. FT.
NOT IN SOIL	23 LIN. FT.

CLASS A CONCRETE BREAKDOWN

POUR #1	CAP, LOWER PART OF WINGS & COLLARS	25.4 C.Y.
POUR #2	UPPER PART OF WINGS	2.2 C.Y.
TOTAL CLASS A CONCRETE		27.6 C.Y.

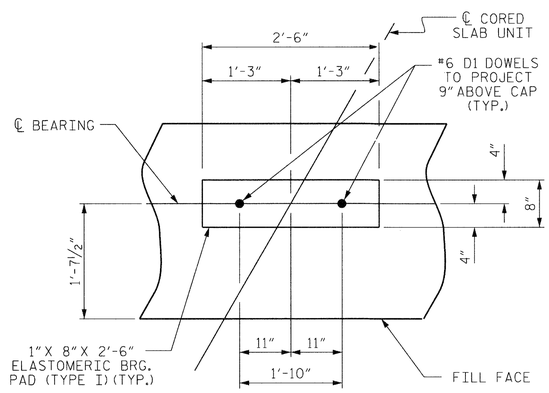

DETAIL "A"

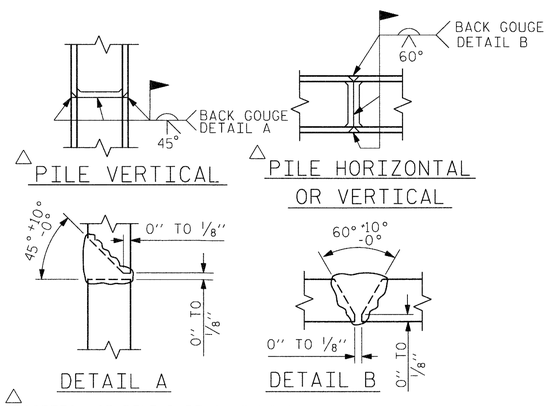

PILE SPLICE DETAILS

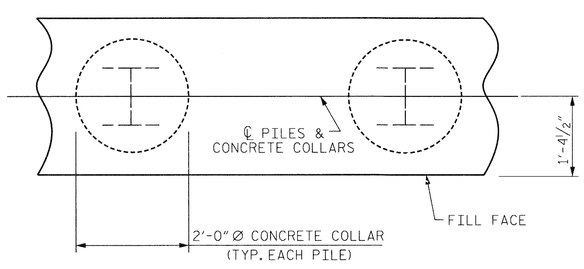

PLAN

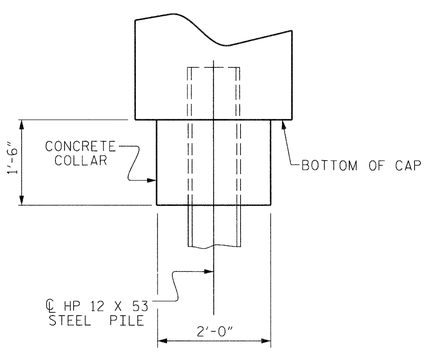

ELEVATION

CORROSION PROTECTION FOR STEEL PILES DETAIL

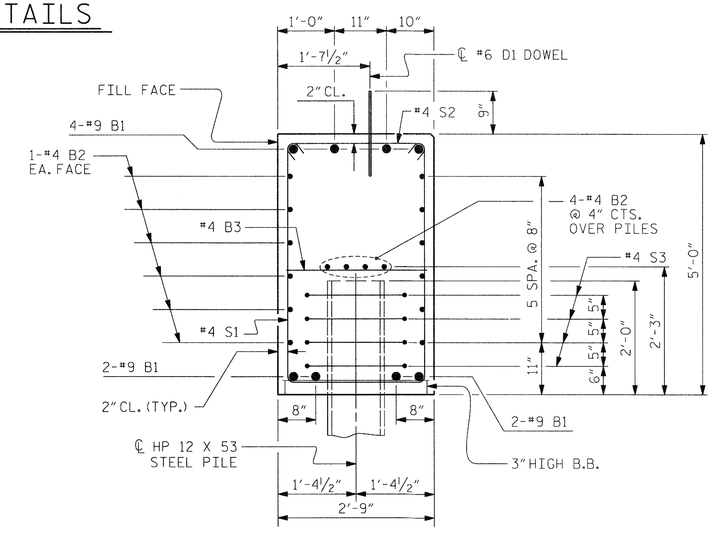

SECTION A-A

(CONCRETE COLLAR NOT SHOWN FOR CLARITY.
SEE "CORROSION PROTECTION FOR STEEL PILES DETAIL.")

PROJECT NO. 17BP.13.R.1
McDOWELL COUNTY
STATION: 10+47.00

SHEET 4 OF 4

STATE OF NORTH CAROLINA
DEPARTMENT OF TRANSPORTATION
RALEIGH

SUBSTRUCTURE

END BENT NO. 1 DETAILS

NORTH CAROLINA PROFESSIONAL SEAL 19774 ENGINEER HARDY L. WILLIS 6/12/14

REVISIONS								SHEET NO.
NO.	BY:	DATE:	NO.	BY:	DATE:			S-15
1	AW	03/2014	3					TOTAL SHEETS
2			4					22

ASSEMBLED BY :	MAF	DATE :	12/12
CHECKED BY :	HLW	DATE :	12/12
DRAWN BY : WJH	12/11		
CHECKED BY : AAC	12/11		

$$$$$$SYSTIME$$$$$
$$$$$$$$$$$$$$$$$$$$DGN$$$$$$$$$$$$$$$$$$$$$$$$
$$$$USERNAME$$$$

STD. NO. EB_30_60S4

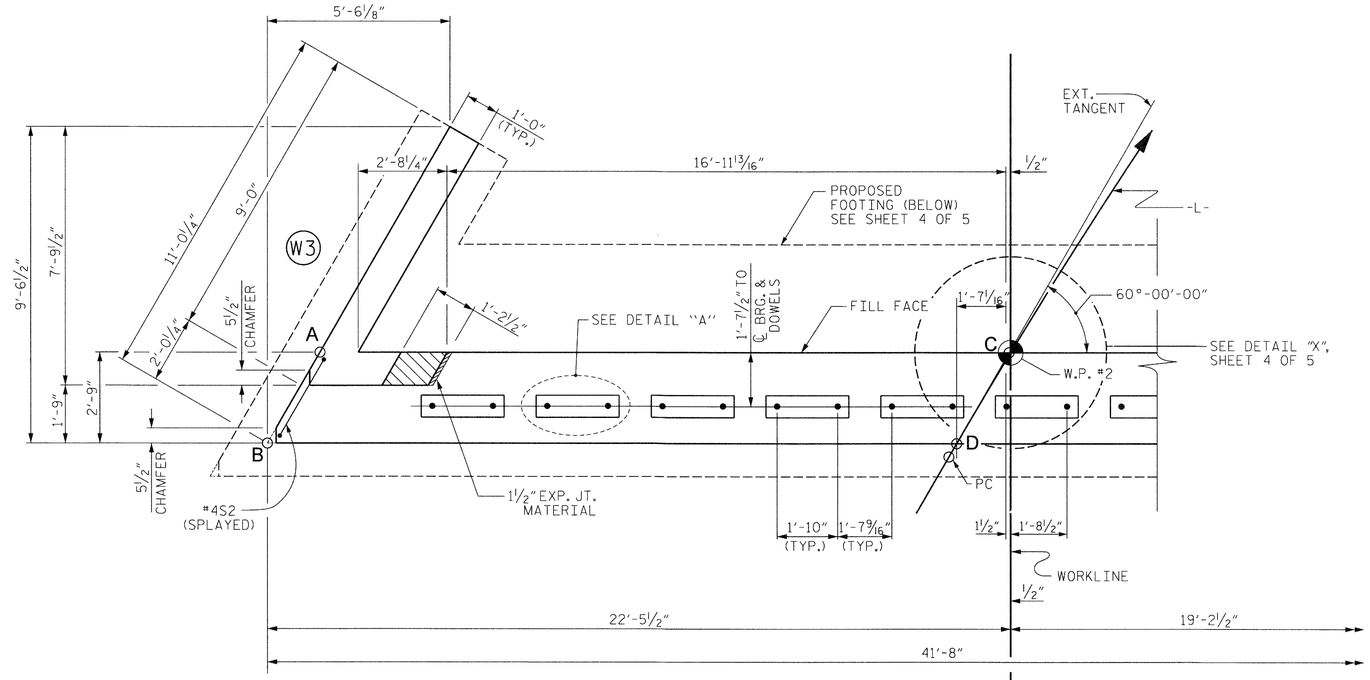

PARTIAL PLAN 1

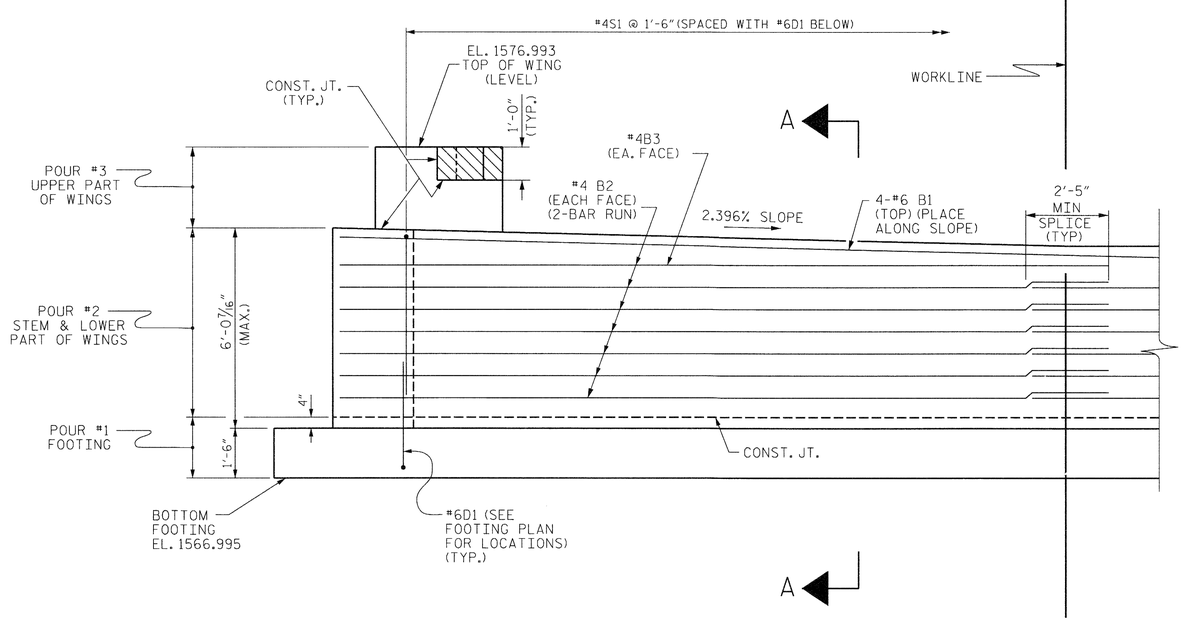

PARTIAL ELEVATION 1

WINGS NOT SHOWN FOR CLARITY.
FOR SECTION A-A, SEE SHEET 5 OF 5.

NOTES

STIRRUPS IN CAP MAY BE SHIFTED AS NECESSARY TO CLEAR DOWELS.

THE LATERAL GUIDES ARE NOT TO BE POURED UNTIL AFTER THE CORED SLAB UNITS ARE IN PLACE.

THE CONCRETE IN THE SHADED AREA OF THE WING SHALL BE POURED AFTER THE VERTICAL CONCRETE BARRIER RAIL IS CAST IF SLIP FORMING IS USED.

FOR WING DETAILS, SEE SHEET 3 OF 5.

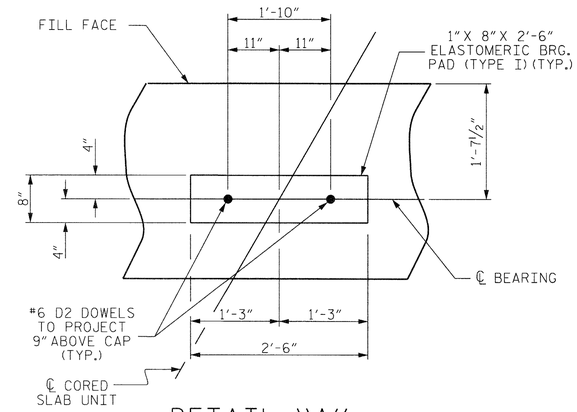

DETAIL "A"

ELEVATIONS OF NOTED POINTS	
	TOP OF CAP
POINT A	1574.493
POINT B	1574.533
POINT C	1573.994
POINT D	1574.034

PROJECT NO. 17BP.13.R.1
McDOWELL COUNTY
STATION: 10+47.00

SHEET 1 OF 5

STATE OF NORTH CAROLINA
DEPARTMENT OF TRANSPORTATION
RALEIGH

SUBSTRUCTURE

END BENT No. 2

NORTH CAROLINA PROFESSIONAL SEAL ENGINEER HARDY L. WILLIS 8/12/14

REVISIONS						SHEET NO.
NO.	BY:	DATE:	NO.	BY:	DATE:	S-16
1	AW	03/2014	3			TOTAL SHEETS
2			4			22

ASSEMBLED BY : MAF		DATE : 12/12
CHECKED BY : HLW		DATE : 12/12
DRAWN BY : WJH	12/11	
CHECKED BY : AAC	12/11	

$$$$$$SYSTIME$$$$$
$$$$$$$$$$$$$$$$$$$$$$DGN$$$$$$$$$$$$$$$$$$$$$$$
$$$$USERNAME$$$$

STD. NO. EB_30_60S4

NOTES

SEE SHEET 1 OF 5 FOR NOTES.

ELEVATIONS OF NOTED POINTS	
	TOP OF CAP
POINT C	1573.994
POINT D	1574.034
POINT E	1573.495
POINT F	1573.535

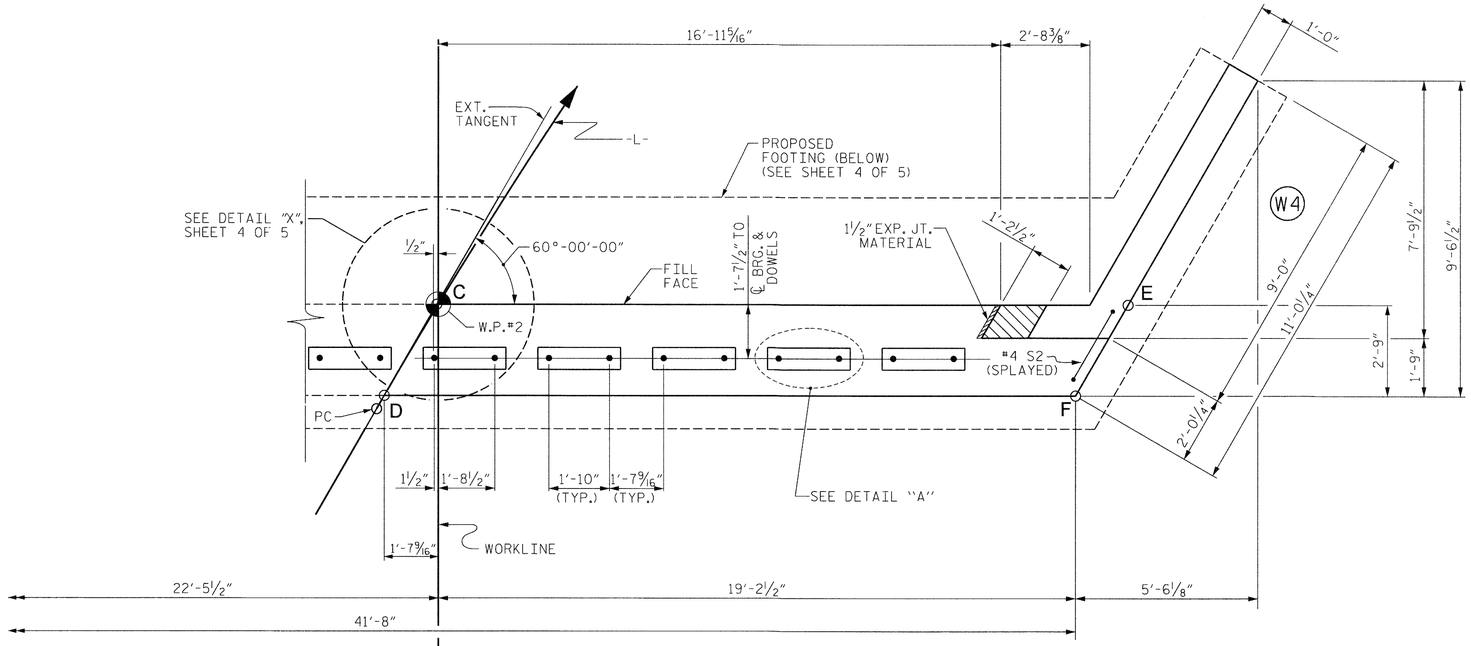

PARTIAL PLAN 1

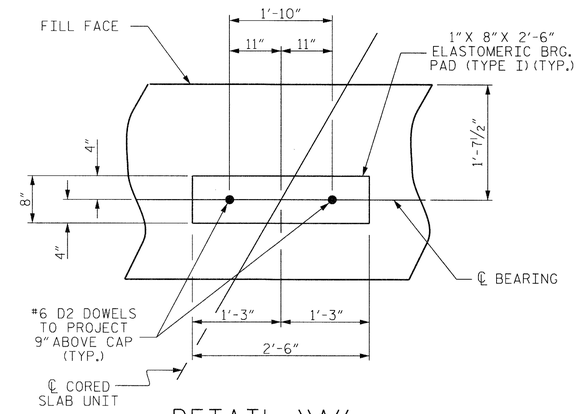

DETAIL "A"

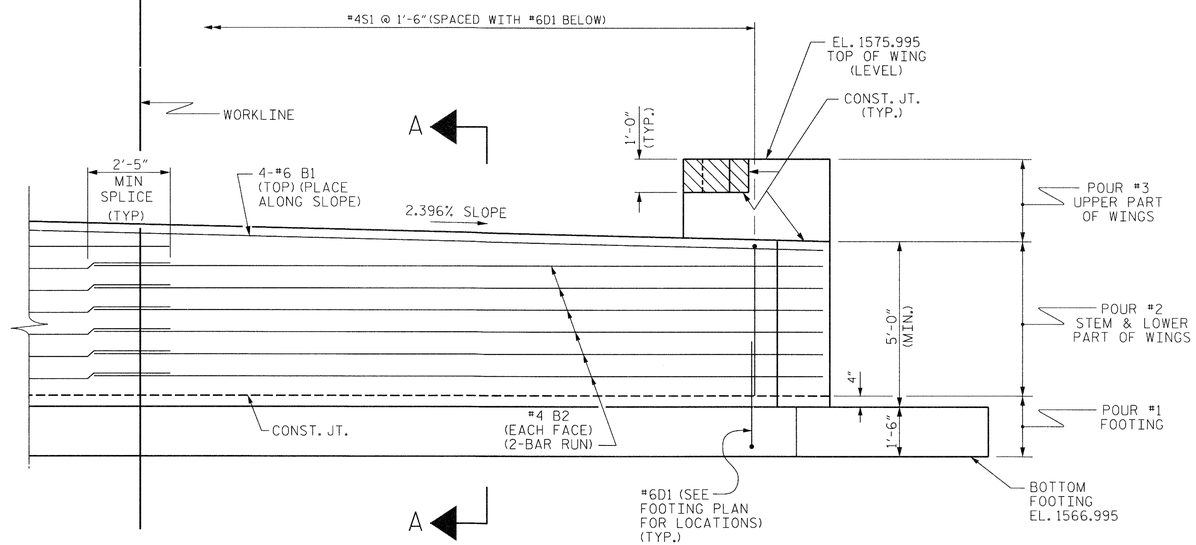

PARTIAL ELEVATION 1

WINGS NOT SHOWN FOR CLARITY.
FOR SECTION A-A, SEE SHEET 5 OF 5.

PROJECT NO. 17BP.13.R.1
McDOWELL COUNTY
STATION: 10+47.00

SHEET 2 OF 5

STATE OF NORTH CAROLINA
DEPARTMENT OF TRANSPORTATION
RALEIGH

SUBSTRUCTURE

END BENT No. 2

NORTH CAROLINA PROFESSIONAL SEAL 024777 ENGINEER HARDY L. WILLIS 6/12/14

REVISIONS						SHEET NO.
NO.	BY:	DATE:	NO.	BY:	DATE:	S-17
1	AW	03/2014	3			TOTAL SHEETS
2			4			22

ASSEMBLED BY : MAF	DATE : 12/12
CHECKED BY : HLW	DATE : 12/12
DRAWN BY : WJH 12/11	
CHECKED BY : AAC 12/11	

$$$$$$SYSTIME$$$$$
$$$$$$$$$$$$$$$$$$$$$$$$DGN$$$$$$$$$$$$$$$$$$$$$$$$
$$$$USERNAME$$$$

STD. NO. EB_30_60S4

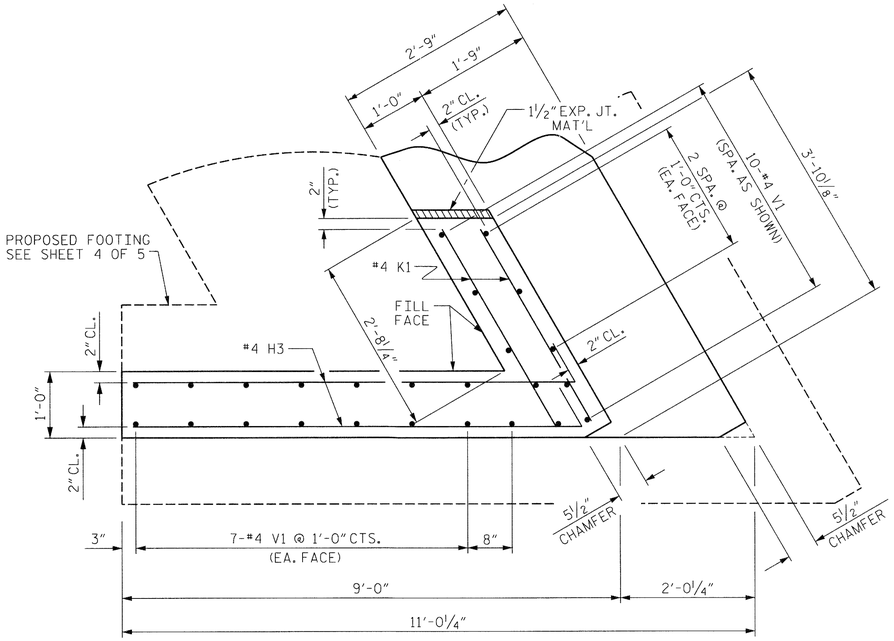

PLAN OF WING (W3)

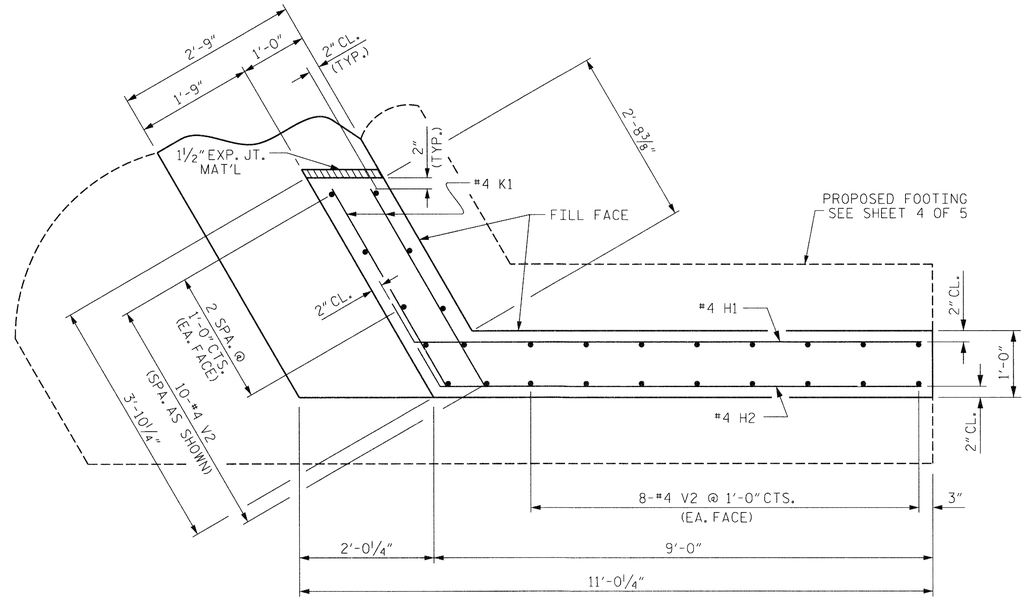

PLAN OF WING (W4)

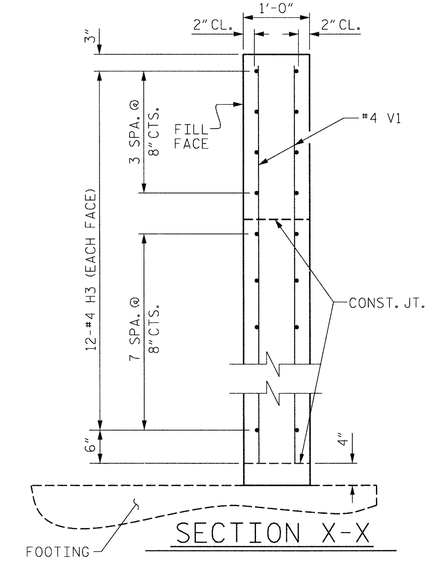

SECTION X-X

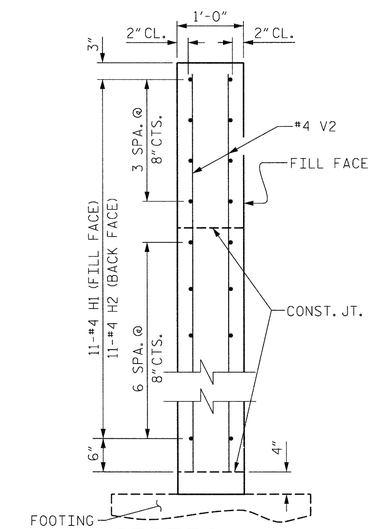

SECTION Y-Y

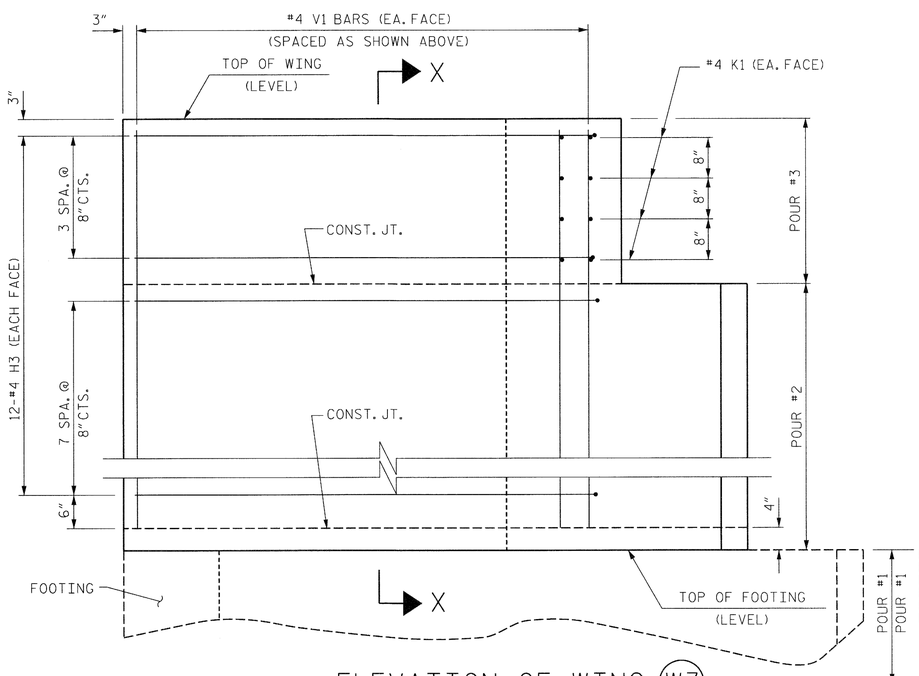

ELEVATION OF WING (W3)

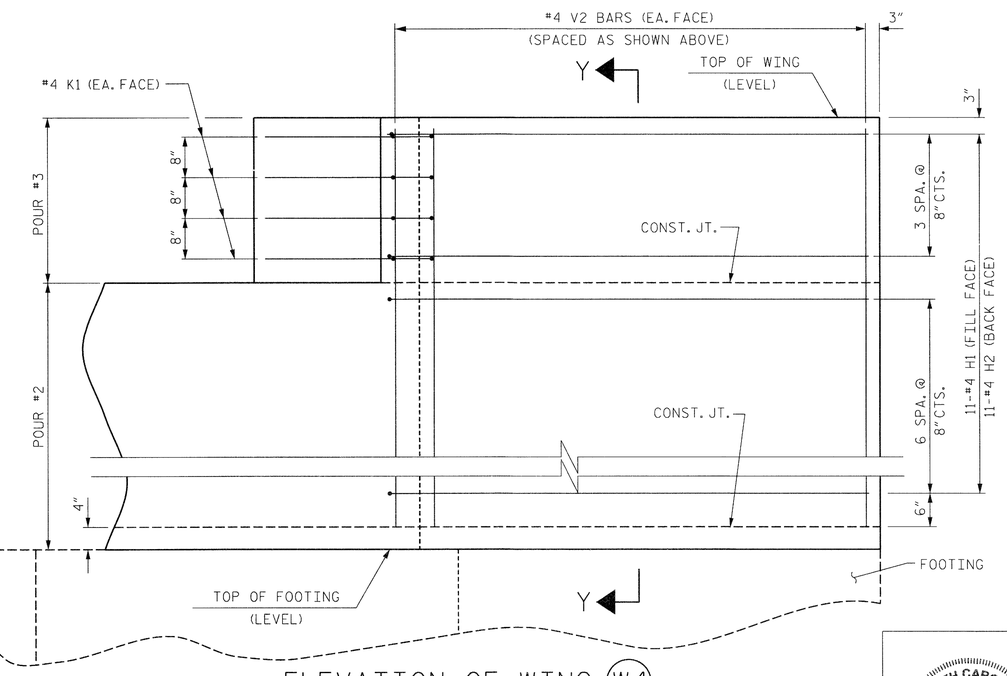

ELEVATION OF WING (W4)

WING DETAILS

FOOTING NOT SHOWN

PROJECT NO. 17BP.13.R.1

McDOWELL COUNTY

STATION: 10+47.00

SHEET 3 OF 5

STATE OF NORTH CAROLINA
DEPARTMENT OF TRANSPORTATION
RALEIGH

SUBSTRUCTURE
END BENT NO. 2
WING DETAILS

ASSEMBLED BY : MAF	DATE : 12/12		
CHECKED BY : HLW	DATE : 12/12		
DRAWN BY : WJH 12/11			
CHECKED BY : AAC 12/11			

REVISIONS						SHEET NO.
NO.	BY:	DATE:	NO.	BY:	DATE:	S-18
1			3			TOTAL SHEETS
2			4			22

NORTH CAROLINA PROFESSIONAL SEAL ENGINEER HARDY L. WILLIS 12/12/14

$$$$$$SYSTIME$$$$$
$$$$$$$$$$$$$$$$$$$$DGN$$$$$$$$$$$$$$$$$$$$$$
$$$$USERNAME$$$$

STD. NO. EB_30_60S4

NOTES

THE SPREAD FOOTING AT END BENT 2 IS DESIGNED FOR A FACTORED RESISTANCE OF 6 TSF. CHECK FIELD CONDITIONS FOR THE REQUIRED RESISTANCE OF 14 TSF JUST BEFORE PLACING CONCRETE.

KEY SPREAD FOOTING AT LEAST 12" INTO ROCK WITH MINIMUM THICKNESS AS SHOWN ON THE PLANS.

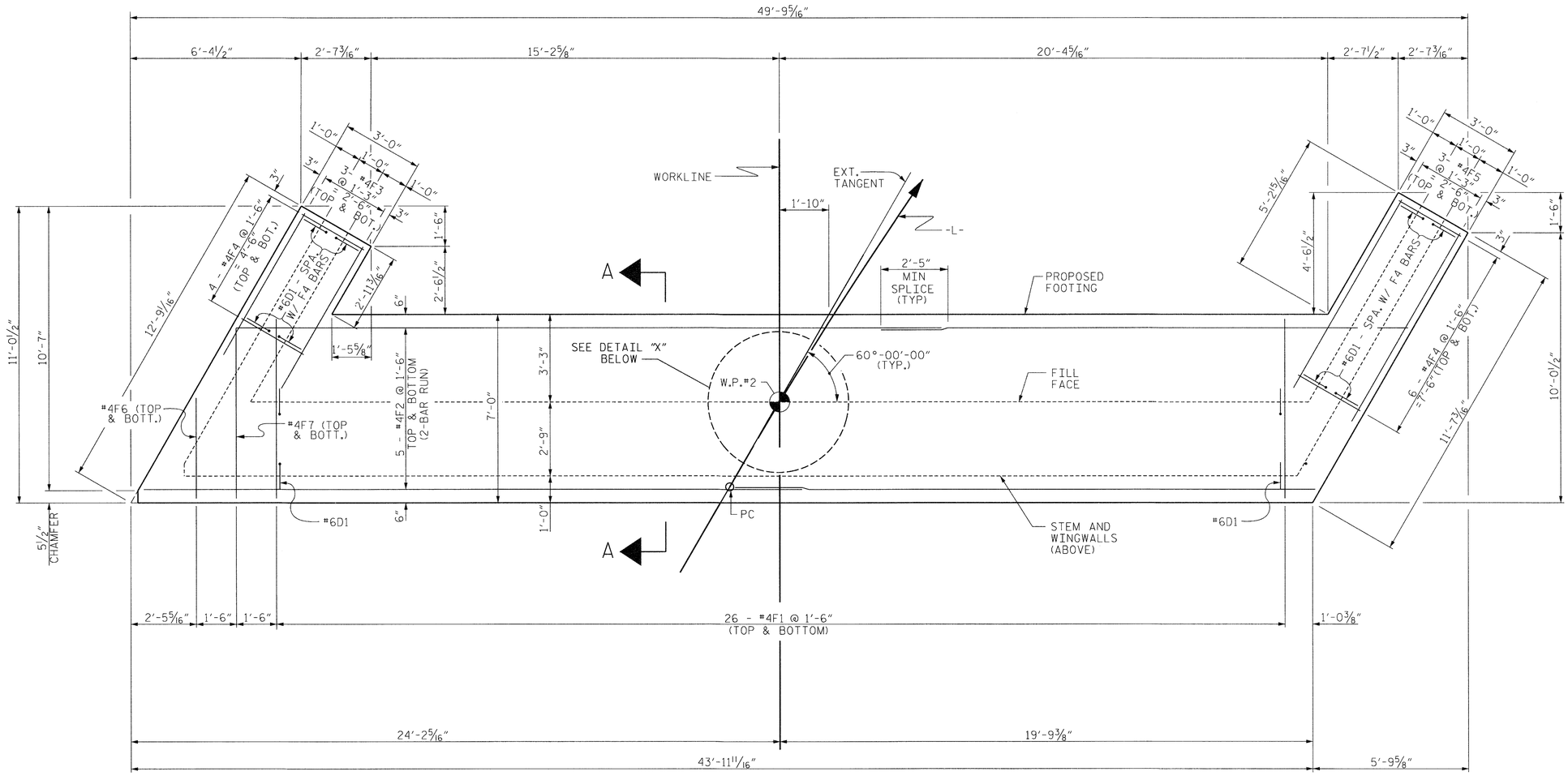

PLAN OF FOOTING

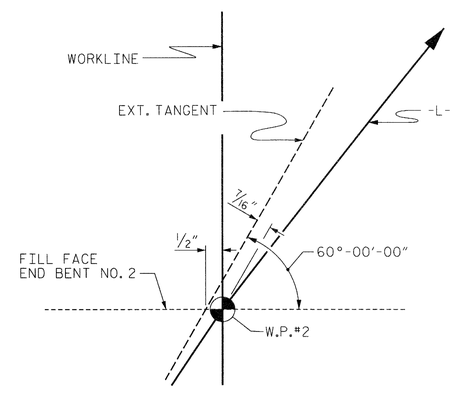

DETAIL "X"

PROJECT NO. 17BP.13.R.1

McDOWELL COUNTY

STATION: 10+47.00

SHEET 4 OF 5

STATE OF NORTH CAROLINA
DEPARTMENT OF TRANSPORTATION
RALEIGH

SUBSTRUCTURE

END BENT No. 2
FOOTING PLAN

NORTH CAROLINA PROFESSIONAL SEAL 20247 ENGINEER HARDY L. WILLIS 6/2/14

REVISIONS							SHEET NO.
NO.	BY:	DATE:	NO.	BY:	DATE:		S-19
1	AW	03/2014	3				TOTAL SHEETS
2			4				22

ASSEMBLED BY : MAF		DATE : 12/12	
CHECKED BY : HLW		DATE : 12/12	
DRAWN BY : WJH	12/11		
CHECKED BY : AAC	12/11		

$$$$$$SYSTIME$$$$$
$$$$$$$$$$$$$$$$$$$$$$DGN$$$$$$$$$$$$$$$$$$$$$$
$$$$USERNAME$$$$

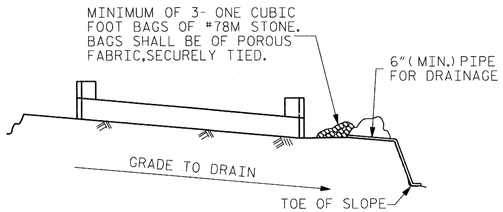

BAGGED STONE AND PIPE SHALL BE PLACED IMMEDIATELY AFTER COMPLETION OF END BENT EXCAVATION. PIPE MAY BE EITHER CONCRETE, CORRUGATED STEEL, CORRUGATED ALUMINUM ALLOY, OR CORRUGATED PLASTIC. PERFORATED PIPE WILL NOT BE ALLOWED.

BAGGED STONE SHALL REMAIN IN PLACE UNTIL THE ENGINEER DIRECTS THAT IT BE REMOVED. THE CONTRACTOR SHALL REMOVE AND DISPOSE OF SILT ACCUMULATIONS AT BAGGED STONE WHEN SO DIRECTED BY THE ENGINEER. BAGS SHALL BE REMOVED AND REPLACED WHENEVER THE ENGINEER DETERMINES THAT THEY HAVE DETERIORATED AND LOST THEIR EFFECTIVENESS.

NO SEPARATE PAYMENT WILL BE MADE FOR THIS WORK AND THE ENTIRE COST OF THIS WORK SHALL BE INCLUDED IN THE UNIT CONTRACT PRICE BID FOR THE SEVERAL PAY ITEMS.

TEMPORARY DRAINAGE AT END BENT

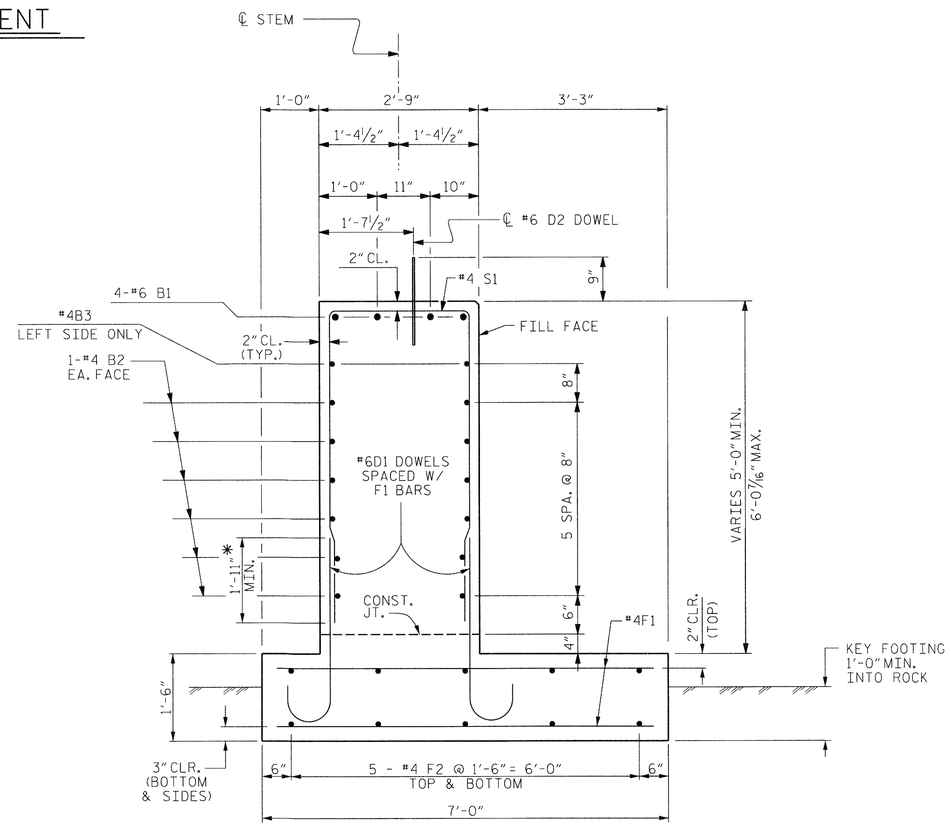

SECTION A-A

* NOTE: #6D1 BARS ARE DETAILED WITH AN EXTRA 1'-0" OF LENGTH TO ACCOUNT FOR THE POSSIBILITY OF LOWERED FOOTING (AS DIRECTED BY THE ENGINEER).

BAR TYPES

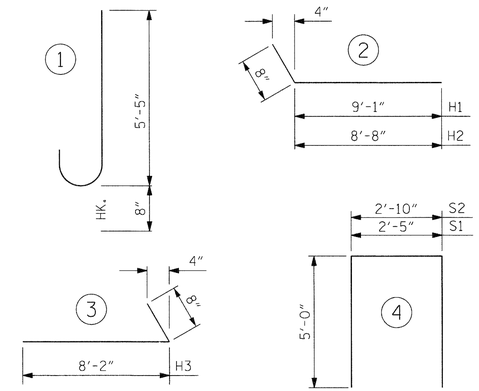

ALL BAR DIMENSIONS ARE OUT TO OUT.

BILL OF MATERIAL
END BENT NO. 2

BAR	NO.	SIZE	TYPE	LENGTH	WEIGHT
B1	4	#6	STR	41'-4"	248
B2	24	#4	STR	21'-11"	351
B3	2	#4	STR	23'-0"	31
D1	72	#6	1	6'-1"	658
D2	20	#6	STR	1'-6"	46
F1	52	#4	STR	6'-6"	226
F2	20	#4	STR	23'-0"	307
F3	6	#4	STR	6'-0"	24
F4	20	#4	STR	2'-6"	33
F5	6	#4	STR	8'-6"	34
F6	2	#4	STR	3'-5"	5
F7	2	#4	STR	6'-0"	8
H1	11	#4	2	9'-9"	72
H2	11	#4	2	9'-4"	69
H3	24	#4	3	8'-10"	142
K1	16	#4	STR	3'-3"	34
S1	26	#4	4	12'-5"	216
S2	2	#4	4	12'-10"	17
V1	25	#4	STR	8'-0"	134
V2	26	#4	STR	7'-0"	122
REINFORCING STEEL					2636 LBS.

CLASS A CONCRETE BREAKDOWN

POUR #1	FOOTING	18.5 C.Y.
POUR #2	STEM & LOWER PART OF WINGS	26.7 C.Y.
POUR #3	UPPER PART OF WINGS	2.2 C.Y.
TOTAL CLASS A CONCRETE		47.4 C.Y.

PROJECT NO. 17BP.13.R.1
McDOWELL COUNTY
STATION: 10+47.00

SHEET 5 OF 5

STATE OF NORTH CAROLINA
DEPARTMENT OF TRANSPORTATION
RALEIGH

SUBSTRUCTURE

END BENT NO. 2
DETAILS

NORTH CAROLINA PROFESSIONAL SEAL 20977 ENGINEER HARDY L. WILLIS 6/12/14

ASSEMBLED BY :	MAF	DATE :	12/12
CHECKED BY :	HLW	DATE :	12/12
DRAWN BY : WJH	12/11		
CHECKED BY : AAC	12/11		

REVISIONS

NO.	BY:	DATE:	NO.	BY:	DATE:
1	AW	03/2014	3		
2			4		

SHEET NO. S-20
TOTAL SHEETS 22

$$$$$$SYSTIME$$$$$
$$$$$$$$$$$$$$$$$$$$$$DGN$$$$$$$$$$$$$$$$$$$$$$
$$$$USERNAME$$$$

STD. NO. EB_30_60S4

NOTES :

NO RIP RAP IS REQUIRED AT END BENT NO. 2.

PLACE RIP RAP ON ALL EXCAVATED AREAS AT END BENT NO. 1.

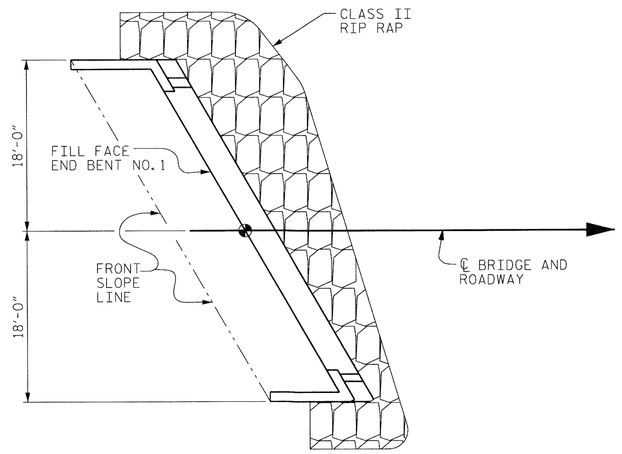

PLAN - END BENT NO. 1

ESTIMATED QUANTITIES		
BRIDGE @ STA. 10+47.00	RIP RAP CLASS II (2'-0" THICK)	GEOTEXTILE FOR DRAINAGE
	TONS	SQUARE YARDS
END BENT 1	44	49

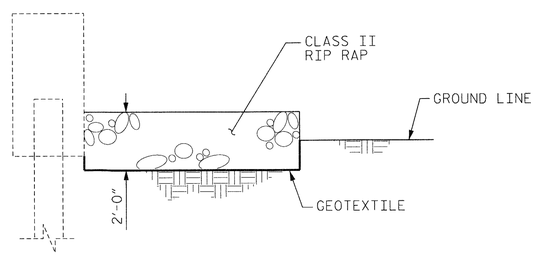

℄ SECTION

BERM RIP RAPPED

PROJECT NO. 17BP.13.R.1

McDOWELL COUNTY

STATION: 10+47.00

STATE OF NORTH CAROLINA
DEPARTMENT OF TRANSPORTATION
RALEIGH

STANDARD

RIP RAP DETAILS

NORTH CAROLINA PROFESSIONAL SEAL 10771 ENGINEER HARDY L. WILLIS 6/12/14

REVISIONS						SHEET NO.
NO.	BY:	DATE:	NO.	BY:	DATE:	S-21
1			3			TOTAL SHEETS
2			4			22

ASSEMBLED BY : MAF	DATE : 12/12	
CHECKED BY : HLW	DATE : 12/12	
DRAWN BY : REK 1/84	REV. 5/1/06R	TLA/GM
CHECKED BY : RDU 1/84	REV. 10/1/11	MAA/GM
	REV. 12/21/11	MAA/GM

$$$$$$$SYSTIME$$$$$
$$$$$$$$$$$$$$$$$$$$$$$$DGN$$$$$$$$$$$$$$$$$$$$$$$$
$$$$USERNAME$$$$

STD. NO. RR1 (Sht 1)

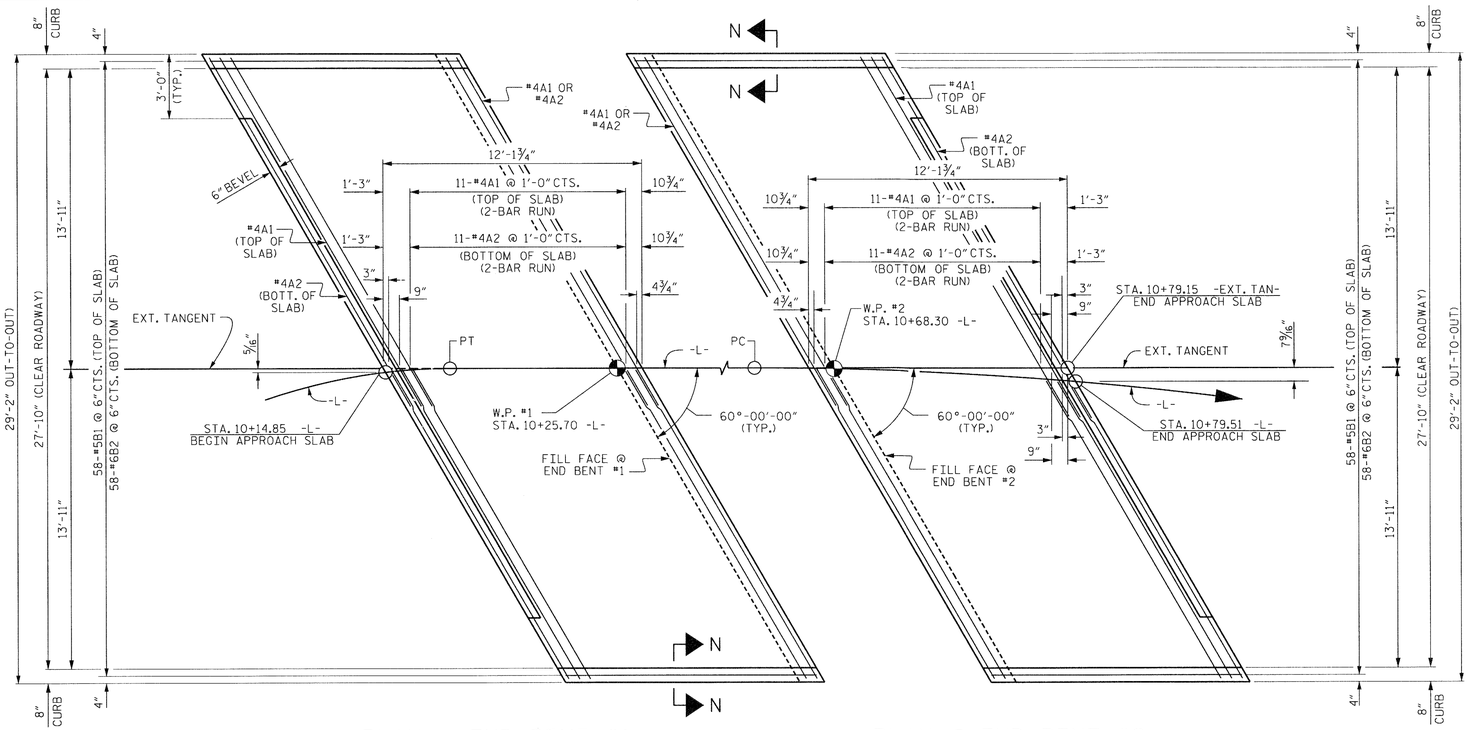

PLAN @ END BENT #1

PLAN @ END BENT #2

DIMENSIONS SHOWN ARE TYPICAL FOR BOTH APPROACH SLABS

BILL OF MATERIAL — APPROACH SLAB AT EB #1					
BAR	NO.	SIZE	TYPE	LENGTH	WEIGHT
* A1	26	#4	STR	17'-8"	307
A2	26	#4	STR	17'-7"	305
* B1	58	#5	STR	11'-1"	670
B2	58	#6	STR	11'-7"	1010
REINFORCING STEEL				LBS.	1315
* EPOXY COATED REINFORCING STEEL				LBS.	977
CLASS AA CONCRETE				C.Y.	17.2

BILL OF MATERIAL — APPROACH SLAB AT EB #2					
BAR	NO.	SIZE	TYPE	LENGTH	WEIGHT
* A1	26	#4	STR	17'-8"	307
A2	26	#4	STR	17'-7"	305
* B1	58	#5	STR	11'-1"	670
B2	58	#6	STR	11'-7"	1010
REINFORCING STEEL				LBS.	1315
* EPOXY COATED REINFORCING STEEL				LBS.	977
CLASS AA CONCRETE				C.Y.	17.2

* THESE BARS ARE EPOXY COATED.

SPLICE LENGTHS		
BAR SIZE	EPOXY COATED	UNCOATED
#4	2'-0"	1'-9"
#5	2'-6"	2'-2"
#6	3'-10"	2'-7"

NOTES

FOR BRIDGE APPROACH FILL INCLUDING GEOTEXTILE, 4" Ø DRAINAGE PIPE, AND #78M STONE BACKFILL, SEE ROADWAY PLANS.

GEOTEXTILE SHALL BE TYPE 1IN ACCORDANCE WITH THE STANDARD SPECIFICATIONS SECTION 1056.

#78M STONE BACKFILL (CLASS V SELECT MATERIAL) SHALL BE IN ACCORDANCE WITH STANDARD SPECIFICATIONS SECTION 1016.

#78M STONE BACKFILL IS TO BE CONTINUOUS ALONG FILL FACE OF BACKWALL FROM OUTSIDE EDGE TO OUTSIDE EDGE OF APPROACH SLAB.

FOR THE 4" Ø DRAINAGE PIPE OUTLET(S), SEE ROADWAY STANDARD DRAWINGS.

AREA BETWEEN THE WINGWALL AND APPROACH SLAB SHALL BE GRADED TO DRAIN THE WATER AWAY FROM THE FILL FACE OF THE BRIDGE AND SHALL BE PAVED. SEE ROADWAY PLANS.

APPROACH SLAB GROOVING IS NOT REQUIRED.

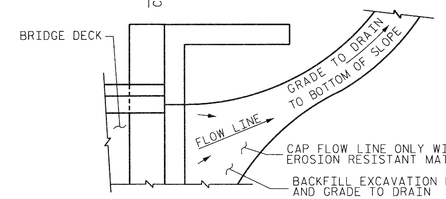

NOTE: IF THE APPROACH SLAB IS NOT CONSTRUCTED IMMEDIATELY AFTER THE BACKFILLING OF THE END BENT EXCAVATION, GRADE TO DRAIN TO THE BOTTOM OF THE SLOPE AND PROVIDE EROSION RESISTANT MATERIAL, SUCH AS FIBERGLASS ROVING OR AS DIRECTED BY THE ENGINEER TO PREVENT SOIL EROSION AND TO PROTECT THE AREA ADJACENT TO THE STRUCTURE. THE CONTRACTOR WILL BE REQUIRED TO REMOVE THESE MATERIALS PRIOR TO CONSTRUCTION OF THE APPROACH SLAB.

TEMPORARY DRAINAGE DETAIL

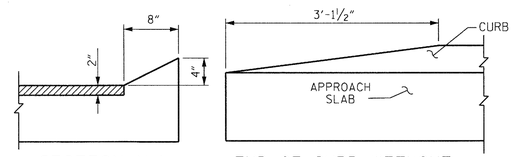

SECTION N-N

END OF CURB WITHOUT SHOULDER BERM GUTTER

CURB DETAILS

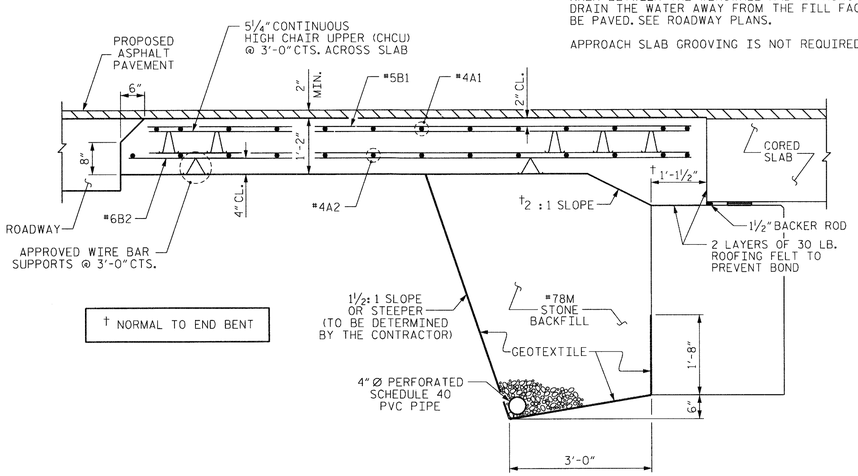

† NORMAL TO END BENT

SECTION THRU SLAB

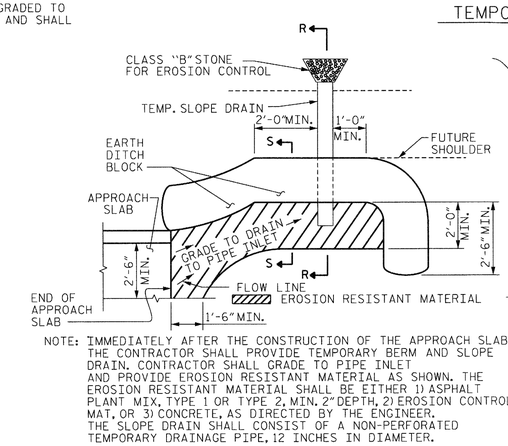

NOTE: IMMEDIATELY AFTER THE CONSTRUCTION OF THE APPROACH SLAB, THE CONTRACTOR SHALL PROVIDE TEMPORARY BERM AND SLOPE DRAIN. CONTRACTOR SHALL GRADE TO PIPE INLET AND PROVIDE EROSION RESISTANT MATERIAL AS SHOWN. THE EROSION RESISTANT MATERIAL SHALL BE EITHER 1) ASPHALT PLANT MIX, TYPE 1 OR TYPE 2, MIN. 2" DEPTH, 2) EROSION CONTROL MAT, OR 3) CONCRETE, AS DIRECTED BY THE ENGINEER. THE SLOPE DRAIN SHALL CONSIST OF A NON-PERFORATED TEMPORARY DRAINAGE PIPE, 12 INCHES IN DIAMETER.

PLAN VIEW

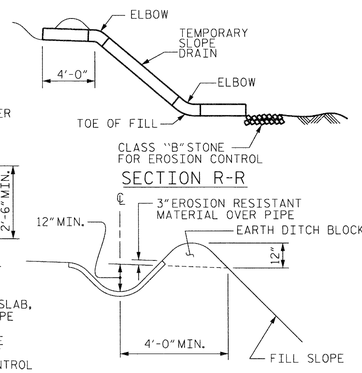

SECTION S-S

TEMPORARY BERM AND SLOPE DRAIN DETAILS

(TO BE USED WHEN SHOULDER BERM GUTTER IS REQUIRED)

PROJECT NO. 17BP.13.R.1

McDOWELL COUNTY

STATION: 10+47.00

STATE OF NORTH CAROLINA
DEPARTMENT OF TRANSPORTATION
RALEIGH

STANDARD
BRIDGE APPROACH SLAB
FOR PRESTRESSED CONCRETE
CORED SLAB UNIT
(SUB-REGIONAL TIER)
60° SKEW

NORTH CAROLINA PROFESSIONAL SEAL 20772 ENGINEER HARDY L. WILLIS 6/12/14

REVISIONS							
NO.	BY:	DATE:	NO.	BY:	DATE:	SHEET NO.	S-22
1	AW	03/2014	3			TOTAL SHEETS	22
2			4				

ASSEMBLED BY :	MAF	DATE :	12/12
CHECKED BY :	HLW	DATE :	12/12
DRAWN BY : SHS/MAA	5-09	REV. 12-11	MAA/AAC
CHECKED BY : BCH	5-09		

$$$$$$SYSTIME$$$$$
$$$$$$$$$$$$$$$$$$$$$$DGN$$$$$$$$$$$$$$$$$$$$$$
$$$$USERNAME$$$$

STD. NO. BAS_30_60S

STANDARD NOTES

DESIGN DATA:

SPECIFICATIONS	A.A.S.H.T.O. (CURRENT)
LIVE LOAD	SEE PLANS
IMPACT ALLOWANCE	SEE A.A.S.H.T.O.
STRESS IN EXTREME FIBER OF	
STRUCTURAL STEEL - AASHTO M270 GRADE 36	20,000 LBS. PER SQ. IN.
- AASHTO M270 GRADE 50W	27,000 LBS. PER SQ. IN.
- AASHTO M270 GRADE 50	27,000 LBS. PER SQ. IN.
REINFORCING STEEL IN TENSION	
GRADE 60	24,000 LBS. PER SQ. IN.
CONCRETE IN COMPRESSION	1,200 LBS. PER SQ. IN.
CONCRETE IN SHEAR	SEE A.A.S.H.T.O.
STRUCTURAL TIMBER - TREATED OR	
UNTREATED - EXTREME FIBER STRESS	1,800 LBS. PER SQ. IN.
COMPRESSION PERPENDICULAR TO GRAIN OF TIMBER	375 LBS. PER SQ. IN.
EQUIVALENT FLUID PRESSURE OF EARTH	30 LBS. PER CU. FT. (MINIMUM)

MATERIAL AND WORKMANSHIP:

EXCEPT AS MAY OTHERWISE BE SPECIFIED ON PLANS OR IN THE SPECIAL PROVISIONS, ALL MATERIAL AND WORKMANSHIP SHALL BE IN ACCORDANCE WITH THE 2012 "STANDARD SPECIFICATIONS FOR ROADS AND STRUCTURES" OF THE N. C. DEPARTMENT OF TRANSPORTATION.

STEEL SHEET PILING FOR PERMANENT OR TEMPORARY APPLICATIONS SHALL BE HOT ROLLED.

CONCRETE:

UNLESS OTHERWISE REQUIRED ON PLANS, CLASS A CONCRETE SHALL BE USED FOR ALL PORTIONS OF ALL STRUCTURES WITH THE EXCEPTION THAT: CLASS AA CONCRETE SHALL BE USED IN BRIDGE SUPERSTRUCTURES, ABUTMENT BACKWALLS, AND APPROACH SLABS; AND CLASS B CONCRETE SHALL BE USED FOR SLOPE PROTECTION AND RIP RAP.

CONCRETE CHAMFERS:

UNLESS OTHERWISE NOTED ON THE PLANS, ALL EXPOSED CORNERS ON STRUCTURES SHALL BE CHAMFERED 3/4" WITH THE FOLLOWING EXCEPTIONS: TOP CORNERS OF CURBS MAY BE ROUNDED TO 1-1/2" RADIUS WHICH IS BUILT INTO CURB FORMS; CORNERS OF TRANSVERSE FLOOR EXPANSION JOINTS SHALL BE ROUNDED WITH A 1/4" FINISHING TOOL UNLESS OTHERWISE REQUIRED ON PLANS; AND CORNERS OF EXPANSION JOINTS IN THE ROADWAY FACES AND TOPS OF CURBS AND SIDEWALKS SHALL BE ROUNDED TO A 1/4" RADIUS WITH A FINISHING STONE OR TOOL UNLESS OTHERWISE REQUIRED ON PLANS.

DOWELS:

DOWELS WHEN INDICATED ON PLANS AS FOR CULVERT EXTENSIONS, SHALL BE EMBEDDED AT LEAST 12" INTO THE OLD CONCRETE AND GROUTED INTO PLACE WITH 1:2 CEMENT MORTAR.

ALLOWANCE FOR DEAD LOAD DEFLECTION, SETTLEMENT, ETC. IN CASTING SUPERSTRUCTURES:

BRIDGES SHALL BE BUILT ON THE GRADE OR VERTICAL CURVE SHOWN ON PLANS. SLABS, CURBS AND PARAPETS SHALL CONFORM TO THE GRADE OR CURVE.

ALL DIMENSIONS WHICH ARE GIVEN IN SECTION AND ARE AFFECTED BY DEAD LOAD DEFLECTIONS ARE DIMENSIONS AT CENTER LINE OF BEARING UNLESS OTHERWISE NOTED ON PLANS. IN SETTING FORMS FOR STEEL BEAM BRIDGES AND PRESTRESSED CONCRETE GIRDER BRIDGES, ADJUSTMENTS SHALL BE MADE DUE TO THE DEAD LOAD DEFLECTIONS FOR THE ELEVATIONS SHOWN. WHERE BLOCKS ARE SHOWN OVER BEAMS FOR BUILDING UP TO THE SLAB, THE VERTICAL DIMENSIONS OF THE BLOCKS SHALL BE ADJUSTED BETWEEN BEARINGS TO COMPENSATE FOR DEAD LOAD DEFLECTIONS, VERTICAL CURVE ORDINATE, AND ACTUAL BEAM CAMBER. WHERE BOTTOM OF SLAB IS IN LINE WITH BOTTOM OF TOP FLANGES, DEPTH OF SLAB BETWEEN BEARINGS SHALL BE ADJUSTED TO COMPENSATE FOR DEAD LOAD DEFLECTION, VERTICAL CURVE ORDINATE, AND ACTUAL BEAM CAMBER.

IN SETTING FALSEWORK AND FORMS FOR REINFORCED CONCRETE SPANS, AN ALLOWANCE SHALL BE MADE FOR DEAD LOAD DEFLECTIONS, SETTLEMENT OF FALSEWORK, AND PERMANENT CAMBER WHICH SHALL BE PROVIDED FOR IN ADDITION TO THE ELEVATIONS SHOWN. AFTER REMOVAL OF THE FALSEWORK, THE FINISHED STRUCTURES SHALL CONFORM TO THE PROFILE AND ELEVATIONS SHOWN ON THE PLANS AND CONSTRUCTION ELEVATIONS FURNISHED BY THE ENGINEER.

DETAILED DRAWINGS FOR FALSEWORK OR FORMS FOR BRIDGE SUPERSTRUCTURE AND ANY STRUCTURE OR PARTS OF A STRUCTURE AS NOTED ON THE PLANS SHALL BE SUBMITTED TO THE ENGINEER FOR APPROVAL BEFORE CONSTRUCTION OF THE FALSEWORK OR FORMS IS STARTED.

REINFORCING STEEL:

ALL REINFORCING STEEL SHALL BE DEFORMED. DIMENSIONS RELATIVE TO PLACEMENT OF REINFORCING ARE TO CENTERS OF BARS UNLESS OTHERWISE INDICATED IN THE PLANS. DIMENSIONS ON BAR DETAILS ARE TO CENTERS OF BARS OR ARE OUT TO OUT AS INDICATED ON PLANS.

WIRE BAR SUPPORTS SHALL BE PROVIDED FOR REINFORCING STEEL WHERE INDICATED ON THE PLANS. WHEN BAR SUPPORT PIECES ARE PLACED IN CONTINUOUS LINES, THEY SHALL BE SO PLACED THAT THE ENDS OF THE SUPPORTING WIRES SHALL BE LAPPED TO LOCK LEGS ON ADJOINING PIECES.

STRUCTURAL STEEL:

AT THE CONTRACTOR'S OPTION, HE MAY SUBSTITUTE 7/8" Ø SHEAR STUDS FOR THE 3/4" Ø STUDS SPECIFIED ON THE PLANS. THIS SUBSTITUTION SHALL BE MADE AT THE RATE OF 3 - 7/8" Ø STUDS FOR 4 - 3/4" Ø STUDS, AND STUD SPACING CHANGES SHALL BE MADE AS NECESSARY TO PROVIDE THE SAME EQUIVALENT NUMBER OF 7/8" Ø STUDS ALONG THE BEAM AS SHOWN FOR 3/4" Ø STUDS BASED ON THE RATIO OF 3 - 7/8" Ø STUDS FOR 4 - 3/4" Ø STUDS. STUDS OF THE LENGTH SPECIFIED ON THE PLANS MUST BE PROVIDED. THE MAXIMUM SPACING SHALL BE 2'-0".

EXCEPT AT THE INTERIOR SUPPORTS OF CONTINUOUS BEAMS WHERE THE COVER PLATE IS IN CONTACT WITH BEARING PLATE, THE CONTRACTOR MAY, AT HIS OPTION, SUBSTITUTE FOR THE COVER PLATES DESIGNATED ON THE PLANS COVER PLATES OF THE EQUIVALENT AREA PROVIDED THESE PLATES ARE AT LEAST 5/16" IN THICKNESS AND DO NOT EXCEED A WIDTH EQUAL TO THE FLANGE WIDTH LESS 2" OR A THICKNESS EQUAL TO 2 TIMES THE FLANGE THICKNESS. THE SIZE OF FILLET WELDS SHALL CONFORM TO THE REQUIREMENTS OF THE CURRENT ANSI/AASHTO/AWS "BRIDGE WELDING CODE". ELECTROSLAG WELDING WILL NOT BE PERMITTED.

WITH THE SOLE EXCEPTION OF EDGES AT SURFACES WHICH BEAR ON OTHER SURFACES, ALL SHARP EDGES AND ENDS OF SHAPES AND PLATES SHALL BE SLIGHTLY ROUNDED BY SUITABLE MEANS TO A RADIUS OF APPROXIMATELY 1/16 INCH OR EQUIVALENT FLAT SURFACE AT A SUITABLE ANGLE PRIOR TO PAINTING, GALVANIZING, OR METALLIZING.

HANDRAILS AND POSTS:

METAL STANDARDS AND FACES OF THE CONCRETE END POSTS FOR THE METAL RAIL SHALL BE SET NORMAL TO THE GRADE OF THE CURB, UNLESS OTHERWISE SHOWN ON PLANS. THE METAL RAIL AND TOPS OF CONCRETE POSTS USED WITH THE ALUMINUM RAIL SHALL BE BUILT PARALLEL TO THE GRADE OF THE CURB.

METAL HANDRAILS SHALL BE IN ACCORDANCE WITH THE PLANS. RAILS SHALL BE AS MANUFACTURED FOR BRIDGE RAILING. CASTINGS SHALL BE OF A UNIFORM APPEARANCE. FINS AND OTHER DEFORMATIONS RESULTING FROM CASTING OR OTHERWISE SHALL BE REMOVED IN A MANNER SO THAT A UNIFORM COLORING OF THE COMPLETED CASTING SHALL BE OBTAINED. CASTINGS WITH DISCOLORATIONS OR OF NON-UNIFORM COLORING WILL NOT BE ACCEPTED. CERTIFIED MILL REPORTS ARE REQUIRED FOR METAL RAILS AND POSTS.

SPECIAL NOTES:

GENERALLY, IN CASE OF DISCREPANCY, THIS STANDARD SHEET OF NOTES SHALL GOVERN OVER THE SPECIFICATIONS, BUT THE REMAINDER OF THE PLANS SHALL GOVERN OVER NOTES HEREON, AND SPECIAL PROVISIONS SHALL GOVERN OVER ALL. SEE SPECIFICATIONS ARTICLE 105-4.

ENGLISH

JANUARY, 1990