STATE	STATE PROJECT REFERENCE NO.	SHEET NO.	TOTAL SHEETS
N.C.	SR5001CJ		

STATE PROJ. NO.	F.A. PROJ. NO.	DESCRIPTION

STATE OF NORTH CAROLINA
DIVISION OF HIGHWAYS

Deyton Elementary Sidewalk

LOCATION: Mitchell County

TYPE OF WORK: Sidewalk, Grading and Paving

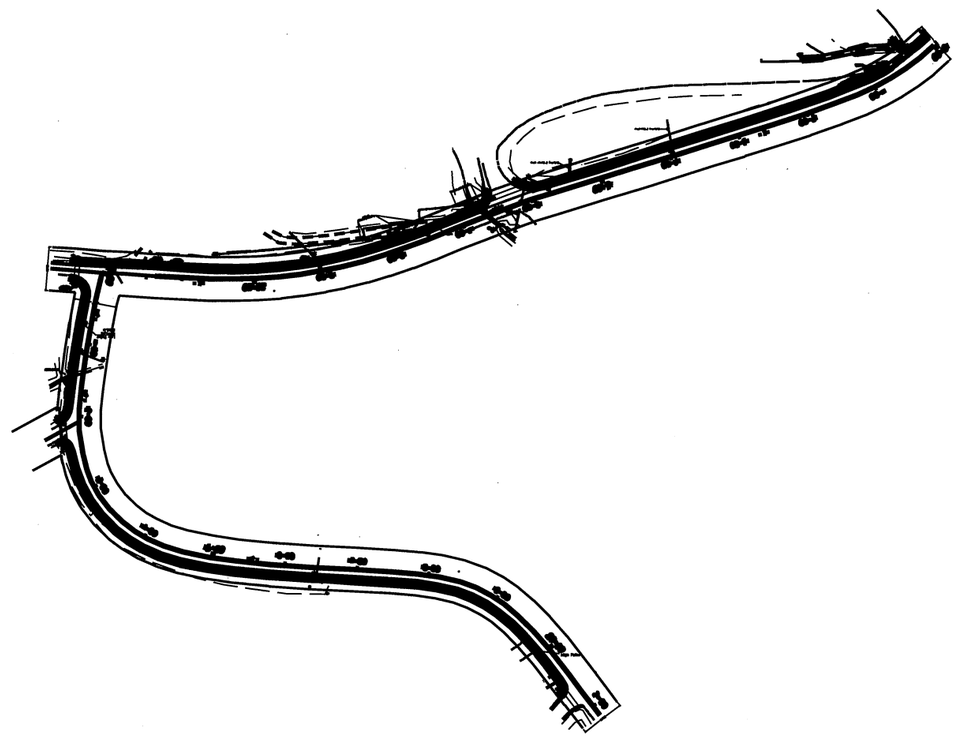

TIP PROJECT: SR5001CJ

CONTRACT: 40924.3.F86

09/08/99

$$$$$SYSTIME$$$$$
$$$$$$$$$$$$$$$$$DGN$$$$$$$$$$$$$$$$$
$$$$USERNAME$$$$

GRAPHIC SCALES

10 5 0 10 20
PLANS

0
PROFILE (HORIZONTAL)

0
PROFILE (VERTICAL)

DESIGN DATA

ADT ____ = _____
ADT ____ = _____
DHV = ___ %
D = ___ %
T = ___ % *
V = ___ MPH
* TTST = __ DUAL __
FUNC CLASS =
_____
_____ TIER

PROJECT LENGTH

Prepared in the Office of:
DIVISION OF HIGHWAYS
1000 Birch Ridge Dr., Raleigh NC, 27610

2012 STANDARD SPECIFICATIONS

RIGHT OF WAY DATE:

LETTING DATE:
Feburary 18, 2015

PROJECT ENGINEER

PROJECT DESIGN ENGINEER

HYDRAULICS ENGINEER

SIGNATURE: P.E.

ROADWAY DESIGN ENGINEER

SIGNATURE: P.E.

STATE OF NORTH CAROLINA DEPARTMENT OF TRANSPORTATION

D13CAD208484

COMPUTED BY: ______ DATE: ______

CHECKED BY: ______ DATE: ______

PROJECT NO.: SR-5001CJ | SHEET NO.:

STATE OF NORTH CAROLINA
DIVISION OF HIGHWAYS

LIST OF PIPES, ENDWALLS, ETC. (FOR PIPES 48" & UNDER)

Column headings: STATION / SIZE / THICKNESS OR GAUGE; LOCATION (LT, RT, OR CL); STRUCTURE NO. (FROM, TO); TOP ELEVATION; INVERT ELEVATION; INVERT ELEVATION; SLOPE CRITICAL; CLASS III R.C. PIPE (UNLESS NOTED OTHERWISE) 12" 15" 18" 24" 30" 36" 42" 48"; BITUMINOUS COATED C.S. PIPE TYPE B (UNLESS NOTED OTHERWISE) 12" .064, 15" .064, 18" .064, 24" .064, 30" .079, 36" .079, 42" .109, 48" .109; CLASS III R.C. PIPE OR ALUMINIZED C.S. PIPE, TYPE IR OR HDPE PIPE, TYPE S OR D 12" 15" 18" 24" 30" 36" 42" 48"; 15" SIDE DRAIN PIPE; 18" SIDE DRAIN PIPE; 24" SIDE DRAIN PIPE; ENDWALLS STD. 838.01 OR STD. 838.11 (UNLESS NOTED OTHERWISE) CU. YARDS R.C.P., C.S.P.; QUANTITIES FOR DRAINAGE STRUCTURES: PER EACH (0' THRU 5.0'); *TOTAL L.F. FOR PAY QUANTITY SHALL BE COL. 'A' + (1.3 X COL. B') LIN. FT. A 5.0' THRU 10.0', B 10.0' AND ABOVE; C.B. STD. 840.01 OR STD. 840.02; FRAME, GRATES, AND HOOD STANDARD 840.03 TYPE OF GRATE E F G; CONCRETE TRANSITIONAL SECTION: DROP INLET, CATCH BASIN; D.I. STD. 840.14 OR STD. 840.15; D.I. FRAME AND GRATE STD. 840.16; G.D.I. TYPE "A" STD. 840.17 OR 840.26; G.D.I. TYPE "B" STD. 840.18 OR 840.27; G.D.I. TYPE "D" STD. 840.19 OR 840.28; G.D.I. FRAME WITH GRATE STD. 840.20; G.D.I. FRAME WITH TWO GRATES STD. 840.22; G.D.I. (N.S.) FRAME WITH GRATE STD. 840.24; G.D.I. (N.S.) FRAME WITH TWO GRATES STD. 840.24; J.B. STD. 840.31 OR 840.32; MANHOLE STD. 840.51; M.H. STD. 840.51 OR 840.53; M.H. FRAME AND COVER STD. 840.54; CORR. STEEL ELBOWS NO. & SIZE; Conc. Collars CL "B" C.Y. STD. 840.72; FLOWABLE FILL C.Y.; PIPE REMOVAL LIN. FT.; REMARKS

ABBREVIATIONS
- C.B. CATCH BASIN
- N.D.I. NARROW DROP INLET
- D.I. DROP INLET
- G.D.I. GRATED DROP INLET
- G.D.I.(N.S.) GRATED DROP INLET (NARROW SLOT)
- J.B. JUNCTION BOX
- M.H. MANHOLE
- T.B.D.I. TRAFFIC BEARING DROP INLET
- T.B.J.B. TRAFFIC BEARING JUNCTION BOX

STATION	LOCATION	FROM	TO	CLASS III R.C. PIPE 18"	BIT. COATED C.S. PIPE 15" .064	CLASS III R.C. PIPE OR ALUM. C.S. PIPE OR HDPE 18"	PER EACH (0' THRU 5.0')	C.B. STD. 840.01 OR 840.02	GRATE E	GRATE F	GRATE G	CORR. STEEL ELBOWS	Conc. Collars C.Y.	FLOWABLE FILL C.Y.	REMARKS
14+00 -L-	RT	1					1	1		1					
15+76 -L-	RT	1	2			175									
15+76 -L-	RT	2					1	1		1					
15+96 -L-	RT	2	3			26									
15+96 -L-	RT	3													
16+71 -L-	RT	2	4			92									
16+71 -L-	RT	4					1	1		1					
17+51 -L-	RT	4	5			76									
17+51 -L-	RT	5					1	1	1						
16+54 -L-	RT	4	18												
16+54 -L-	RT	18													
16+77 -L-	RT	4	19												
16+77 -L-	RT	19													
19+07 -L-	RT	5	6			164									
19+07 -L-	RT	6					1	1			1				
19+18 -L-	RT	6	7		20							2			
19+18 -L-	RT	7													Tie to Existing 18" CSP
22+00 -L-	RT	8					1	1			1				
22+58 -L-	RT	8	9			57									
22+58 -L-	RT	9													Outlet of 18" Pipe
10+75 -Y-	RT	10					1	1	1						
11+13 -Y-	RT	10	11			36									
11+13 -Y-	RT	11					1	1			1				
11+21 -Y-	RT	11	12	37											
11+21 -Y-	LT	12													Outlet of 18" RCP
11+48 -Y-	RT	20													Headwall to be fitted onto Existing 60" CMP
11+90 -Y-	RT	13													Outlet of 18" Pipe
12+00 -Y-	RT	13	14			11									
12+00 -Y-		14											0.045		Collar to Existing 18" Pipe
12+30 -Y-	RT	15											0.045		Collar to Existing 18" Pipe
12+41 -Y-	RT	15	16			12									
		16													Outlet of 18" Pipe
16+44 -Y-	RT	17					1	1			1				Place Catch Basin in Existing Pipe
16+15 -L-	CL	20												45	Flowable Fill Existing 18" Cross Pipe
SHEET TOTALS				37	20	649	9					2	0.09	45	

PROJECT REFERENCE NO.	SHEET NO.
SR-5707H	L
Mitchell Co. - Dayton Elementary	
ROADWAY DESIGN ENGINEER	HYDRAULICS ENGINEER

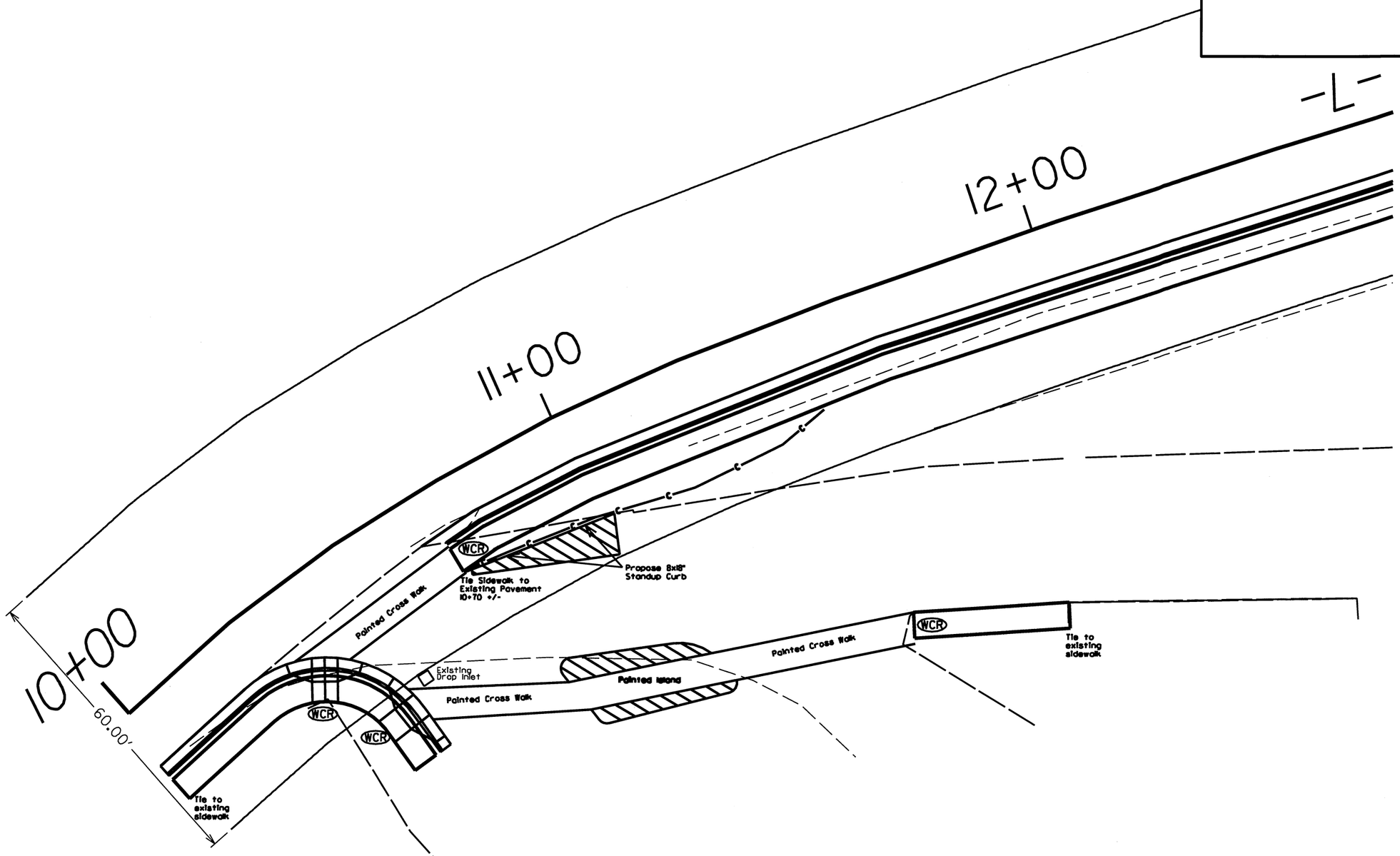

REVISIONS

1/12/15

$$$$$$$$SYSTIME$$$$$$$$
$$$$$$$$USER$$$$$$$$DGN$$$$$$$$

PROJECT REFERENCE NO.	SHEET NO.
SR-500ICI	2
Mitchell Co. – Deyton Elementary	
ROADWAY DESIGN ENGINEER	HYDRAULICS ENGINEER

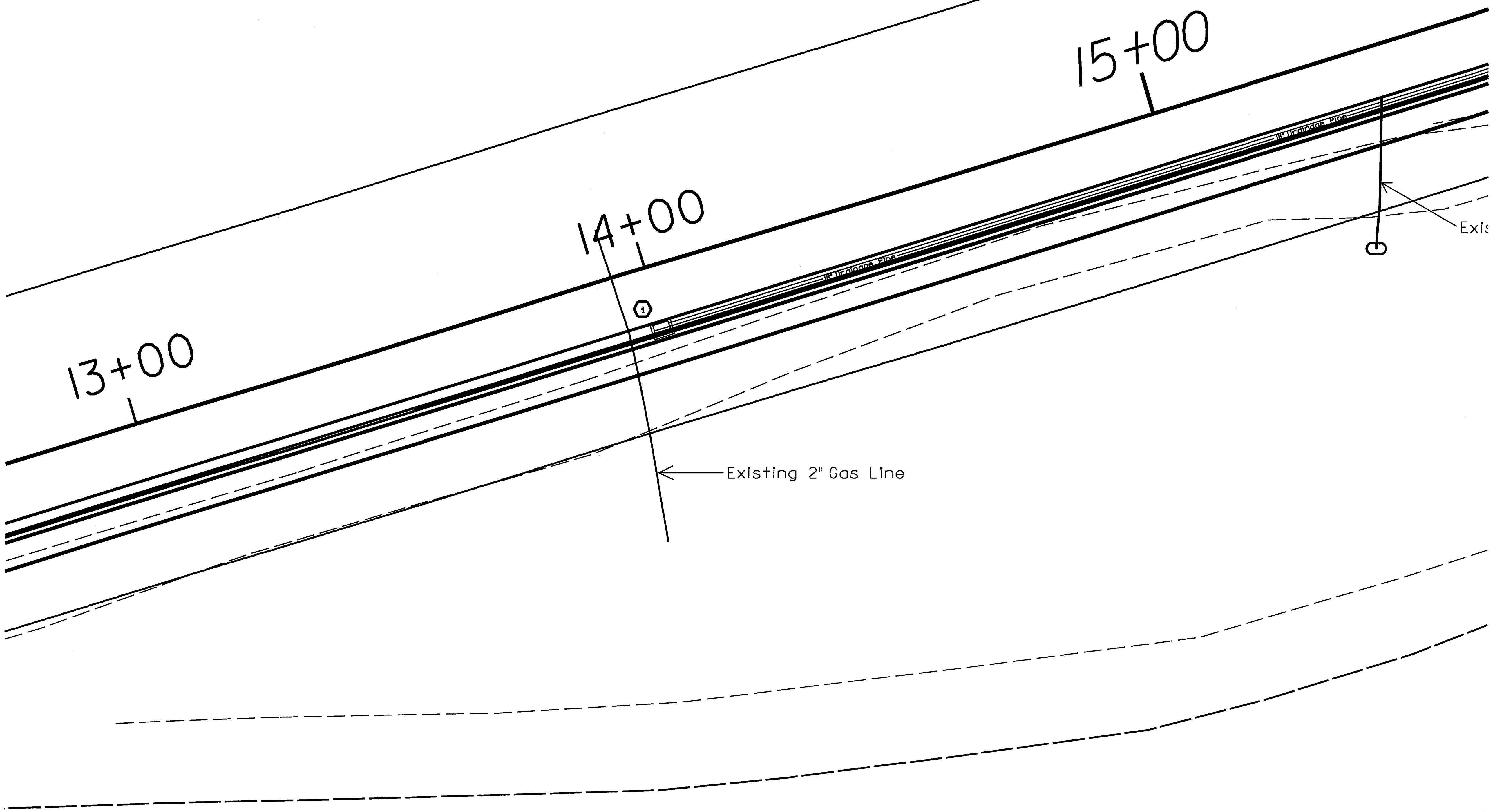

1/12/15

REVISIONS

$$$$$$SYSTIME$$$$$
$$$$$$$$$$$$$$$$DGN$$$$$$$$$$$$$$$$$$$$$$
$$$$USERNAME$$$$

PROJECT REFERENCE NO.	SHEET NO.
SR-500(C)	3
Mitchell Co. – Dayton Elementary	
ROADWAY DESIGN ENGINEER	HYDRAULICS ENGINEER

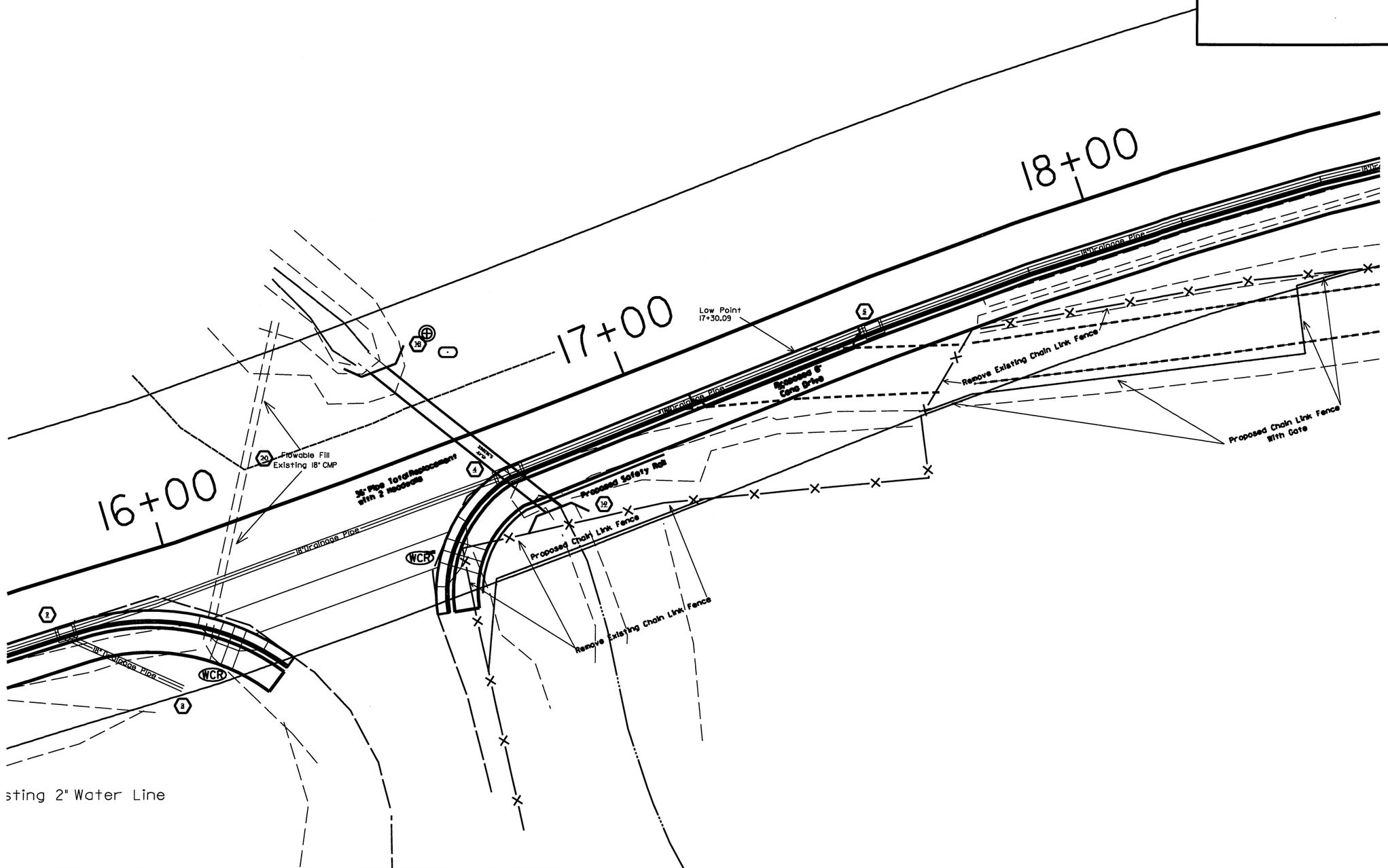

REVISIONS

1/12/15

PROJECT REFERENCE NO.	SHEET NO.
SR-500ICJ	4

Mitchell Co. – Deyton Elementary

ROADWAY DESIGN ENGINEER	HYDRAULICS ENGINEER

1/12/15

REVISIONS

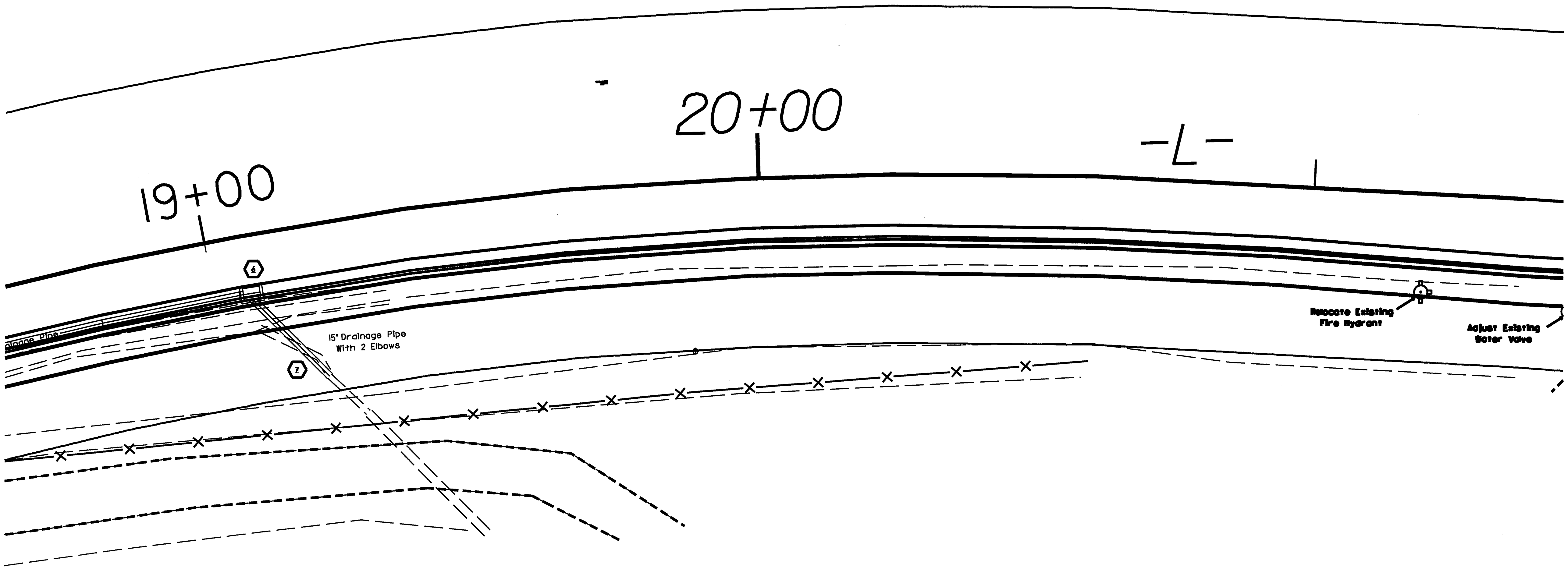

$$$$SYSTIME$$$$DGN$$$$USERNAME$$$$

PROJECT REFERENCE NO.	SHEET NO.
SR-5001CI	5
Mitchell Co. – Deyton Elementary	
ROADWAY DESIGN ENGINEER	HYDRAULICS ENGINEER

1/12/15

REVISIONS

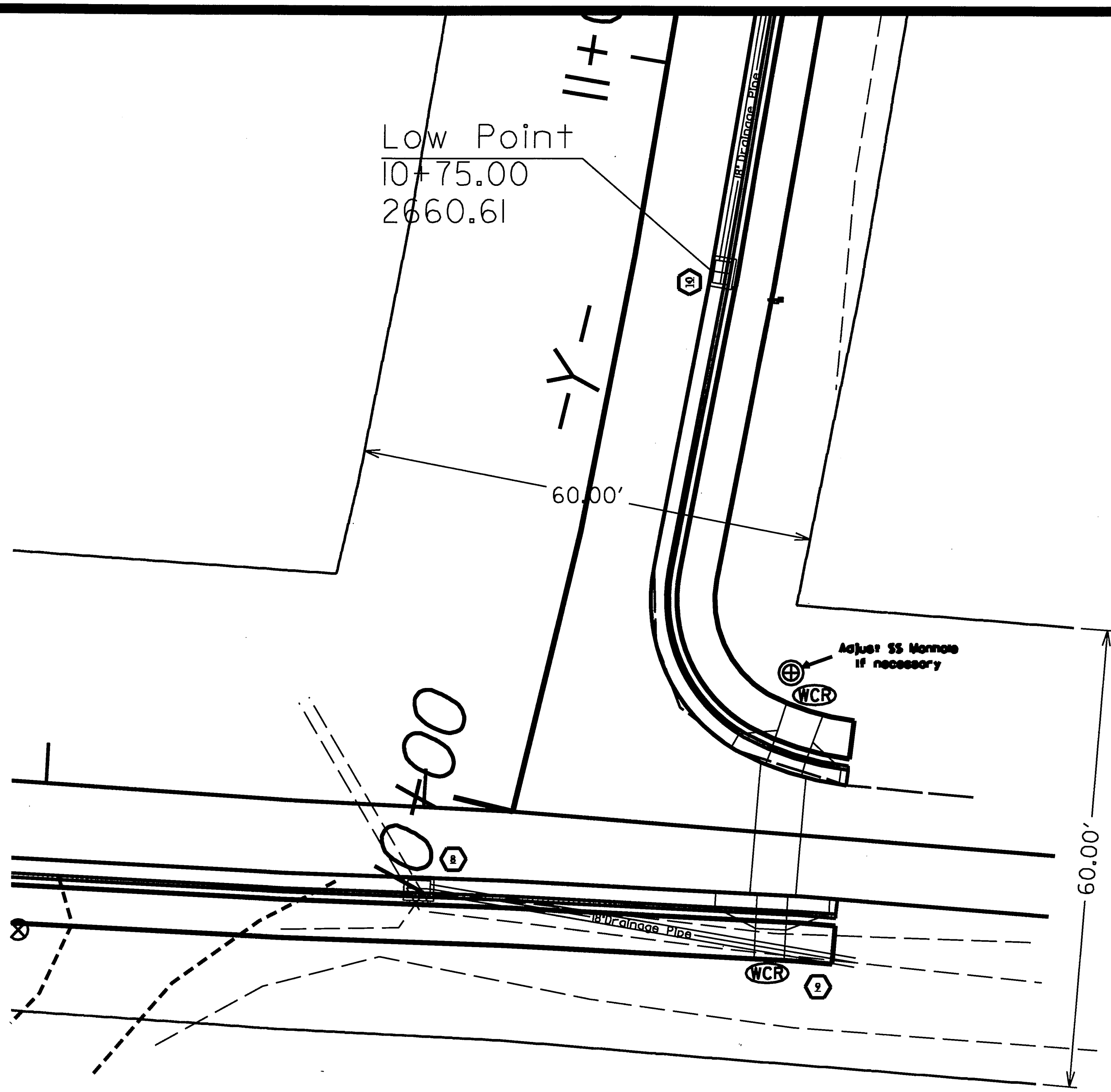

$$$$$SYSTIME$$$$$
$$$$$$$$$$$$$DGN$$$$$$$$$$$$$$$$$$$
$$$$USERNAME$$$$

PROJECT REFERENCE NO.	SHEET NO.
SR-500(C)	6
Mitchell Co. – Dayton Elementary	
ROADWAY DESIGN ENGINEER	HYDRAULICS ENGINEER

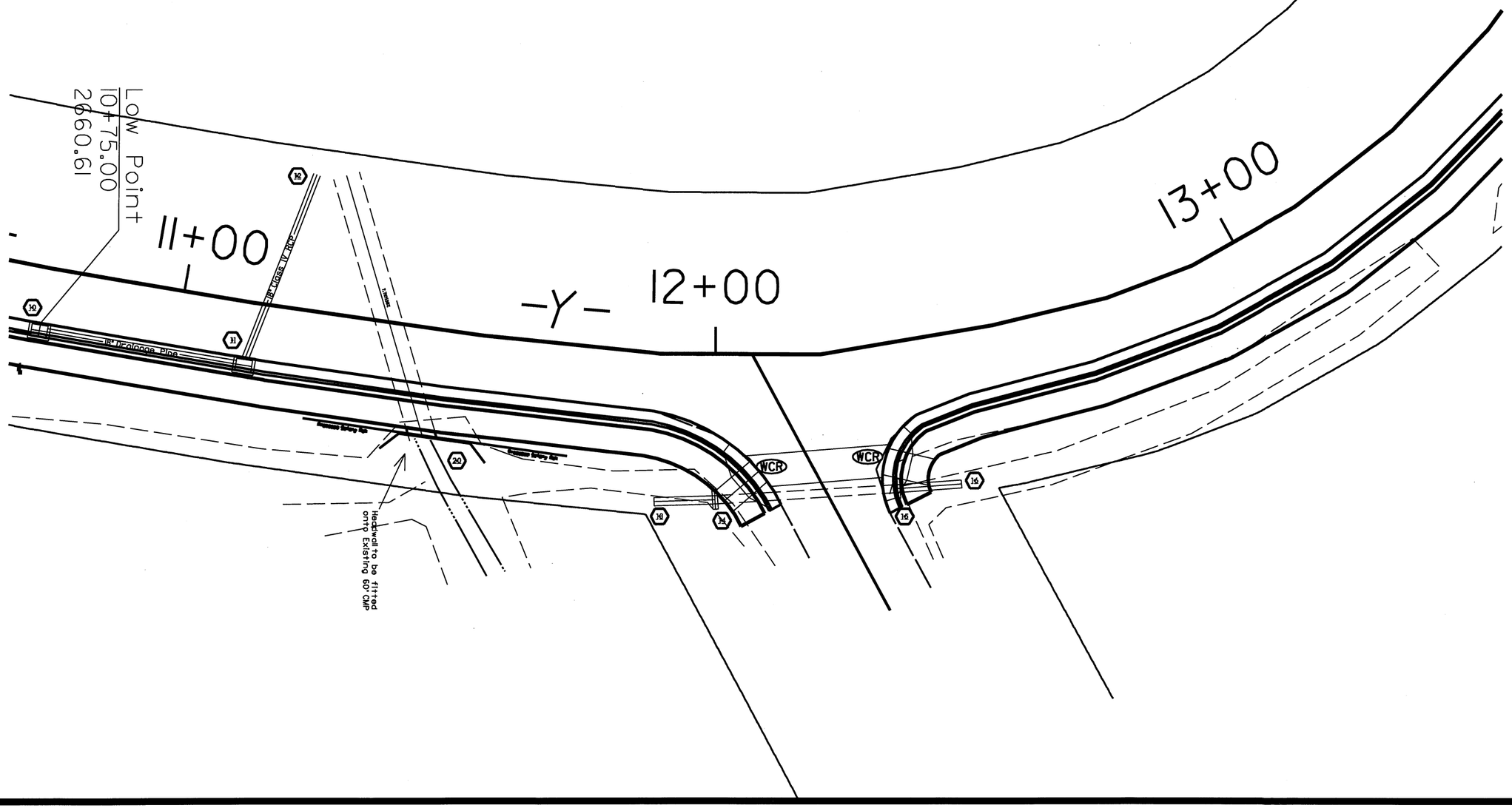

REVISIONS

1/12/15

PROJECT REFERENCE NO.	SHEET NO.
SR-500(C)J	7

Mitchell Co. – Deyton Elementary

ROADWAY DESIGN ENGINEER	HYDRAULICS ENGINEER

1/12/15

REVISIONS

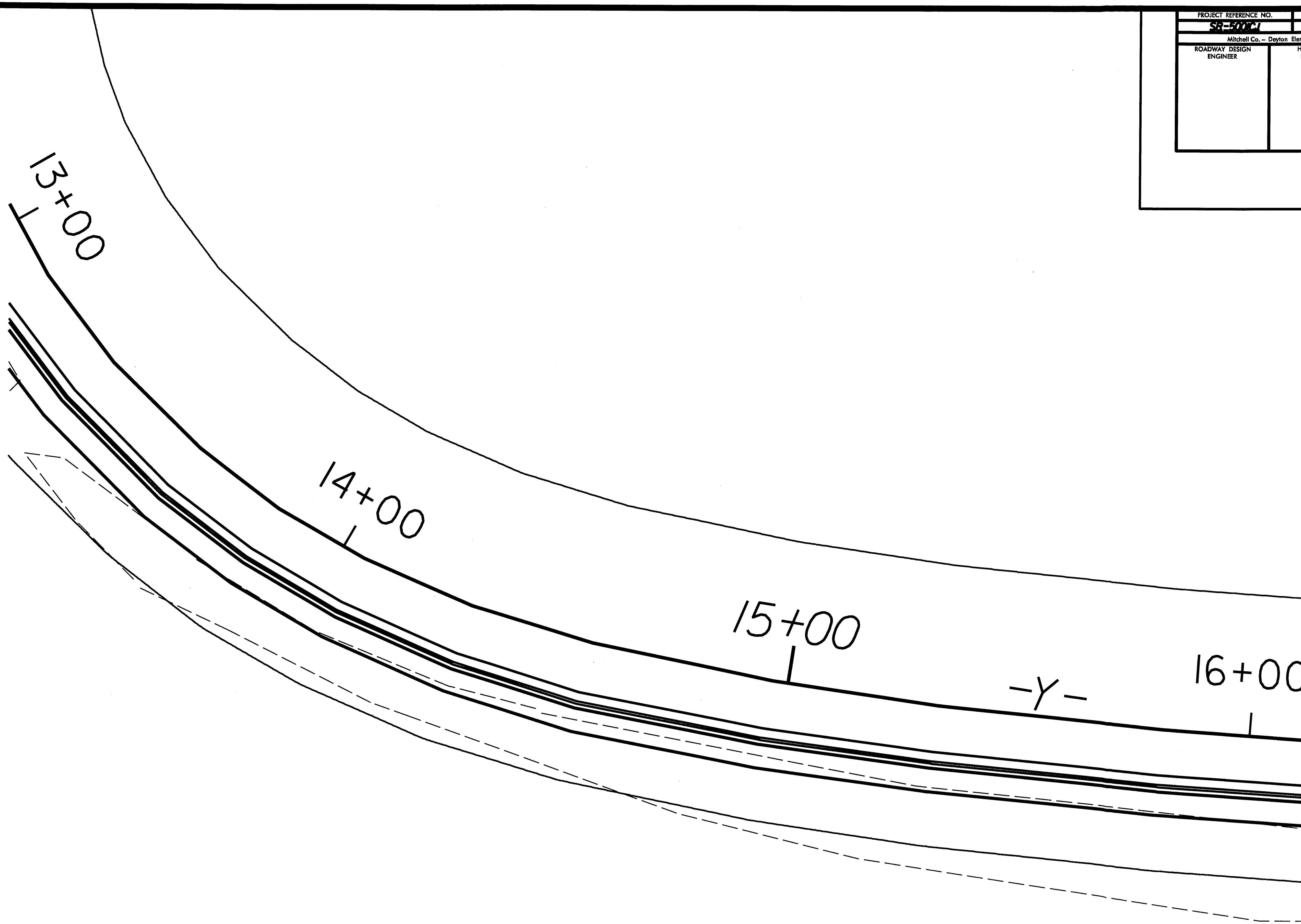

$$$$SYSTIME$$$$
$$$$$$$$$DGN$$$$$$$$$$$$$$$$$$$
$$$$USERNAME$$$$

PROJECT REFERENCE NO.	SHEET NO.
SR-500KCU	8
Mitchell Co. – Dayton Elementary	
ROADWAY DESIGN ENGINEER	HYDRAULICS ENGINEER

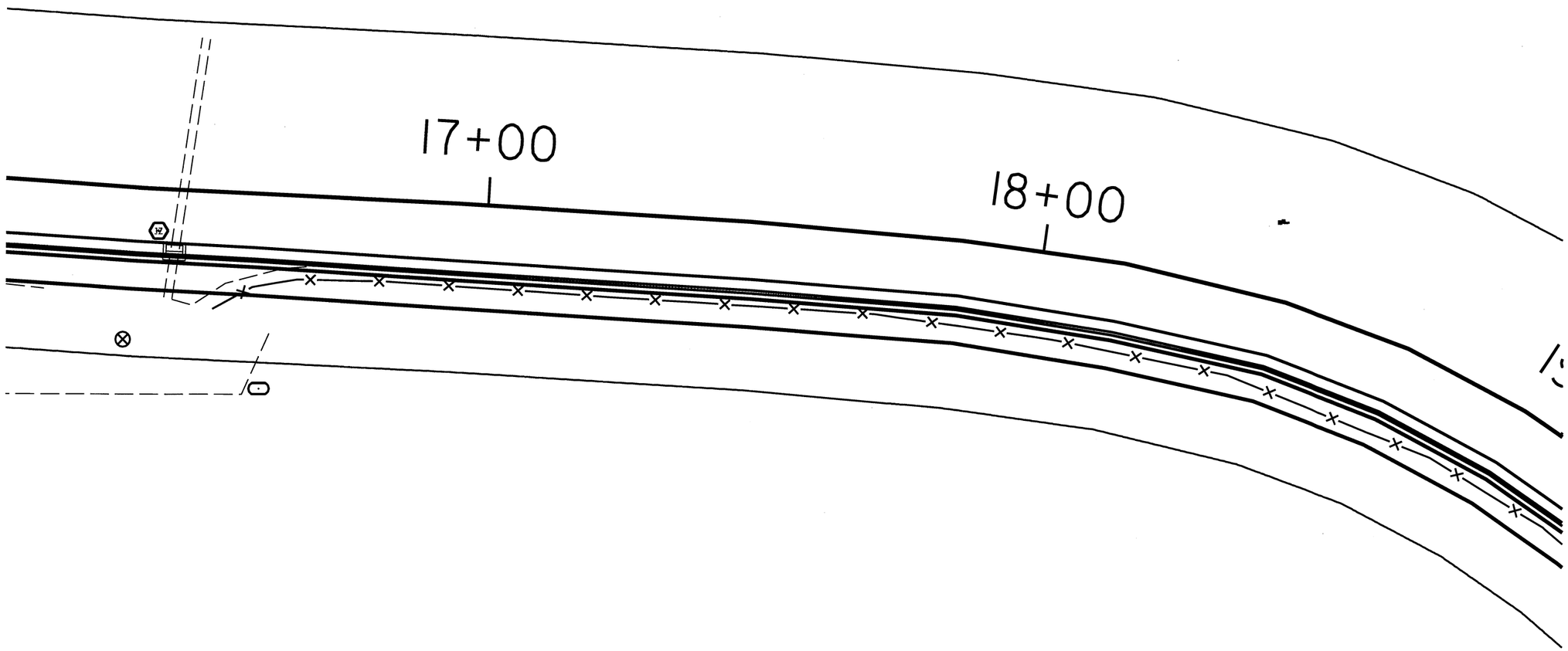

REVISIONS

1/12/15

$$$$$SYSTIME$$$$$
$$$$$USERNAME$$$$$
$$$$$DGN$$$$$

PROJECT REFERENCE NO.	SHEET NO.
SR-970C	9
Mitchell Co. – Dayton Elementary	
ROADWAY DESIGN ENGINEER	HYDRAULICS ENGINEER

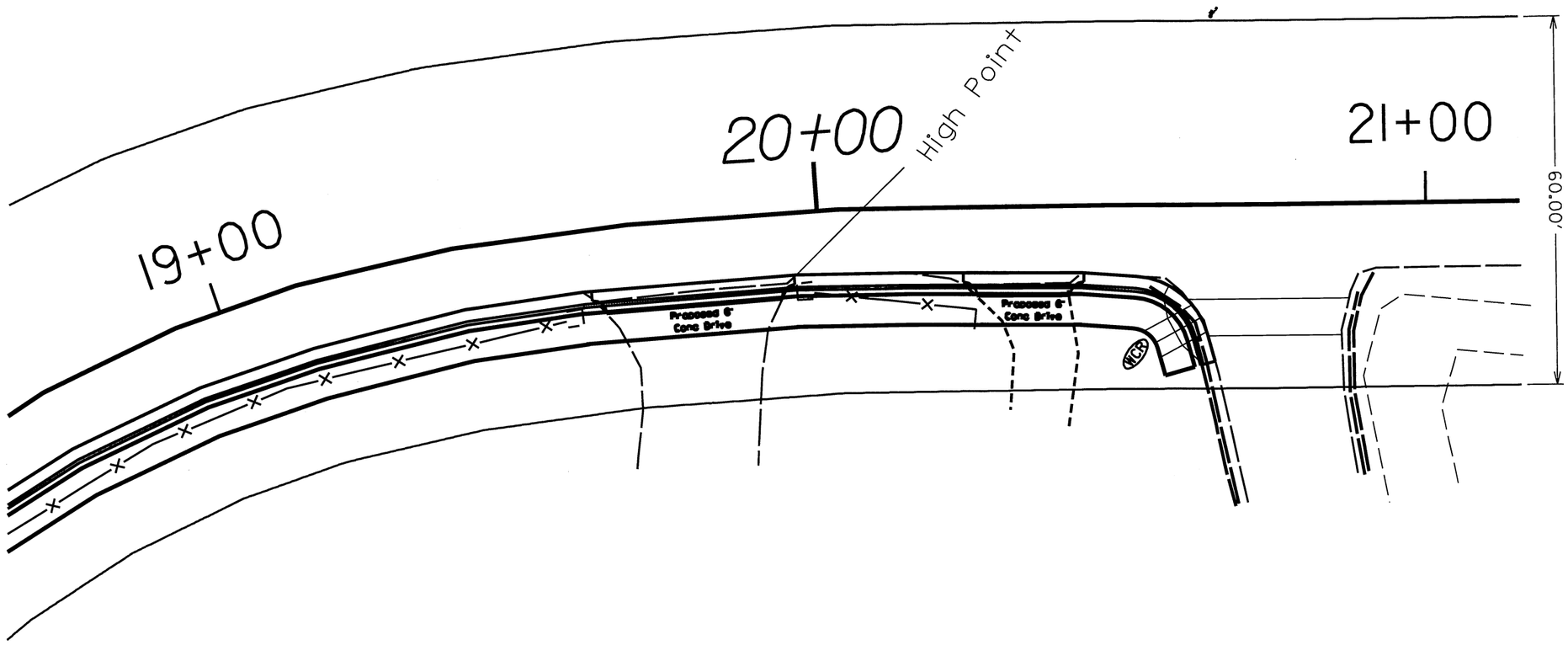

REVISIONS

1/12/15

$$$$$$SYSTIME$$$$$$
$$$$$$USERNAME$$$$$$DGN

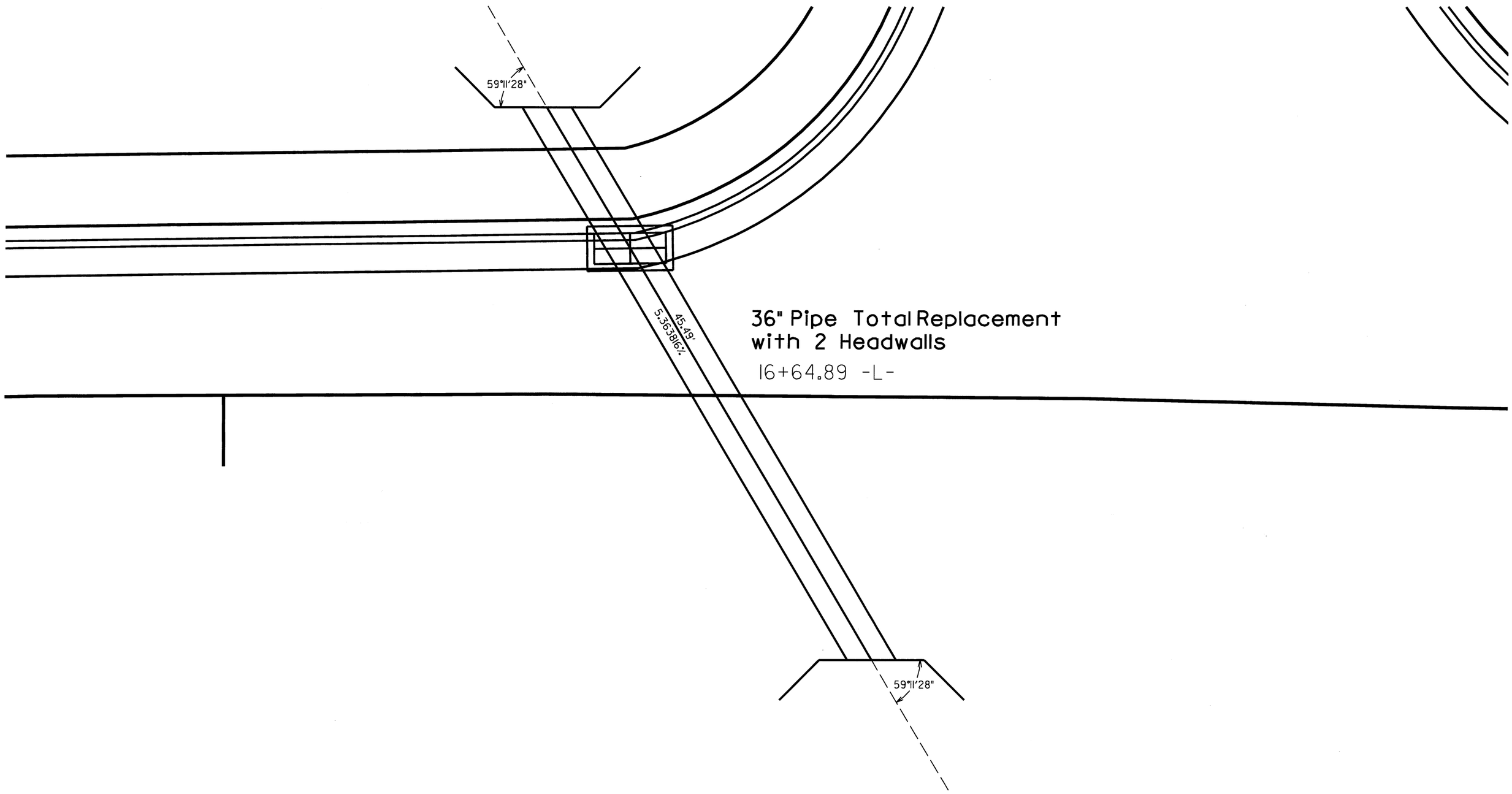
59°11'28"
45.49'
5.363816%
36" Pipe Total Replacement
with 2 Headwalls
16+64.89 -L-
59°11'28"

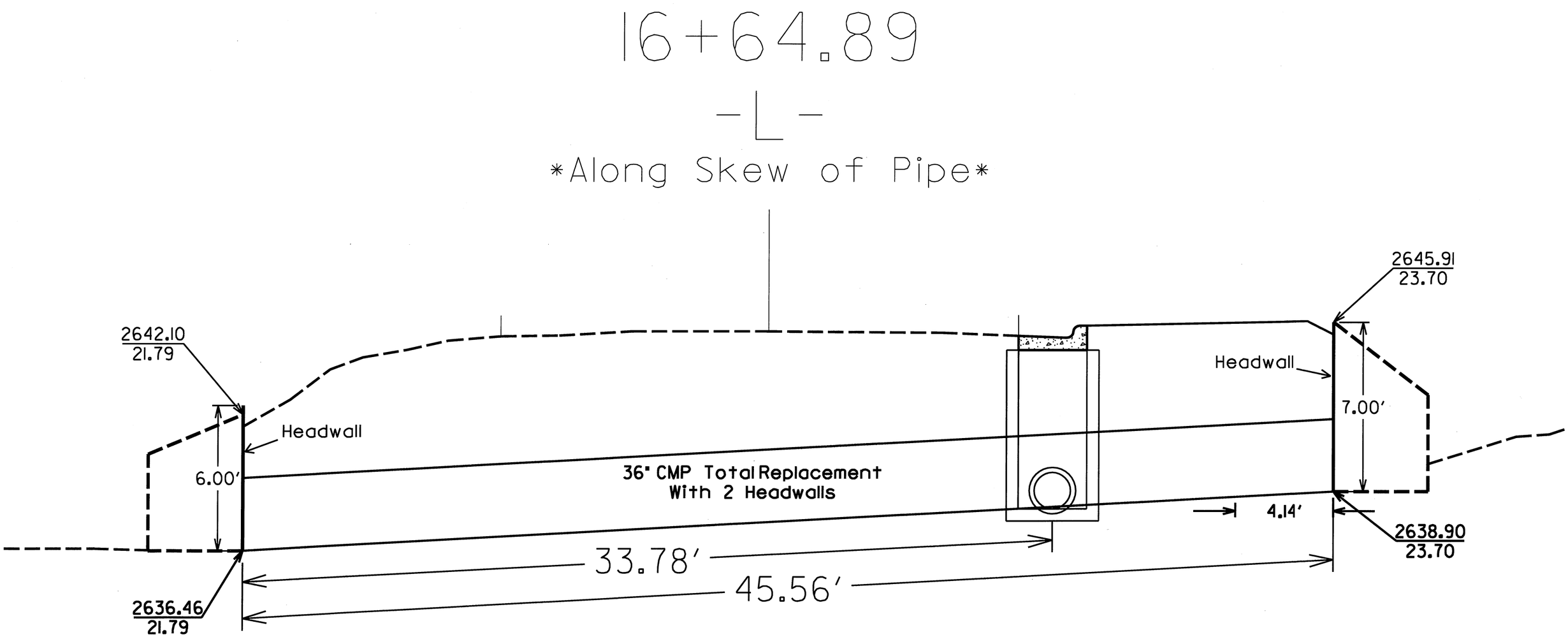
16+64.89
-L-
Along Skew of Pipe
2645.91
23.70
2642.10
21.79
Headwall
Headwall
7.00'
6.00'
36" CMP Total Replacement
With 2 Headwalls
4.14'
2638.90
23.70
33.78'
45.56'
2636.46
21.79

SR-5001CJ DET-3

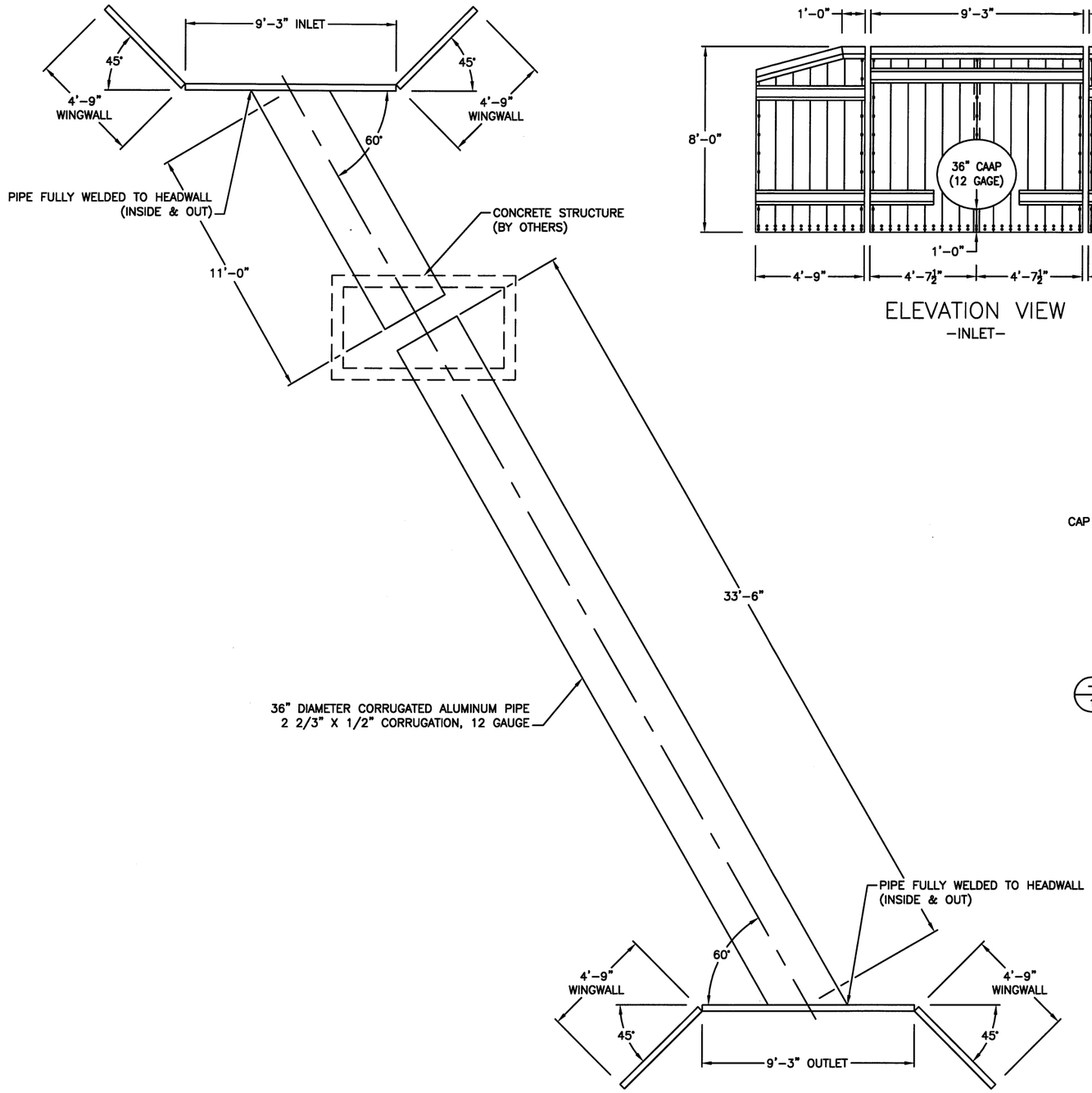

PLAN VIEW
-INLET & OUTLET-

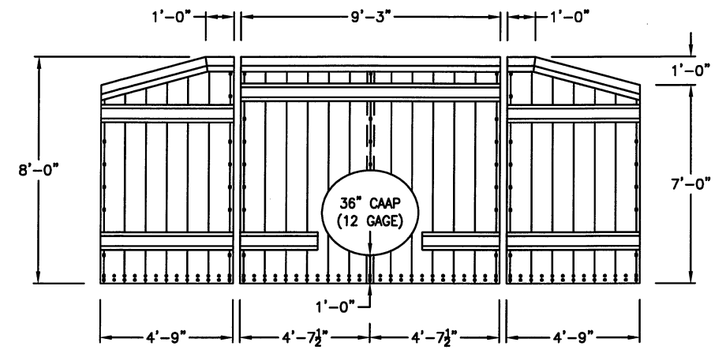

ELEVATION VIEW
-INLET-

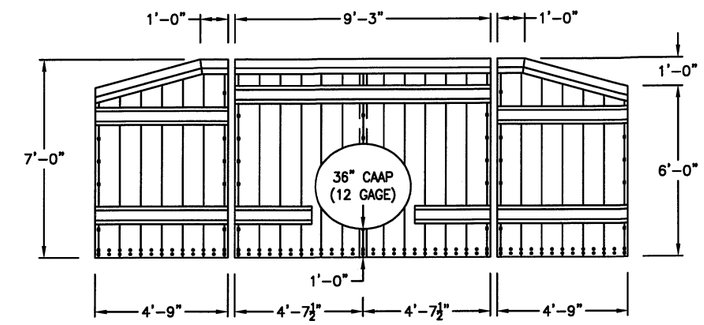

ELEVATION VIEW
-OUTLET-

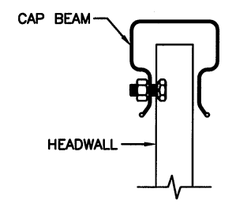

1/1 CAP BEAM DETAIL
-NOT TO SCALE-

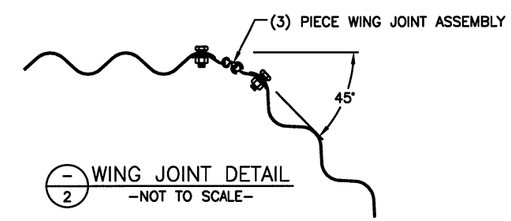

1/2 WING JOINT DETAIL
-NOT TO SCALE-

SHIPMENT SUMMARY:	
SPECIFICATIONS: AASHTO M219	GAGE:
APPROXIMATE SHIPPING WEIGHT:	TOP:
CUSTOMER:	SIDES: CORNER: BOTTOM:
PROJECT: NCDOT – DEYTON ELEMENTARY SIDEWALK HEADWALLS (0.150" THICKNESS) 36" PIPE (2 2/3" x 1/2" CORRUGATION, 12 GAUGE)	

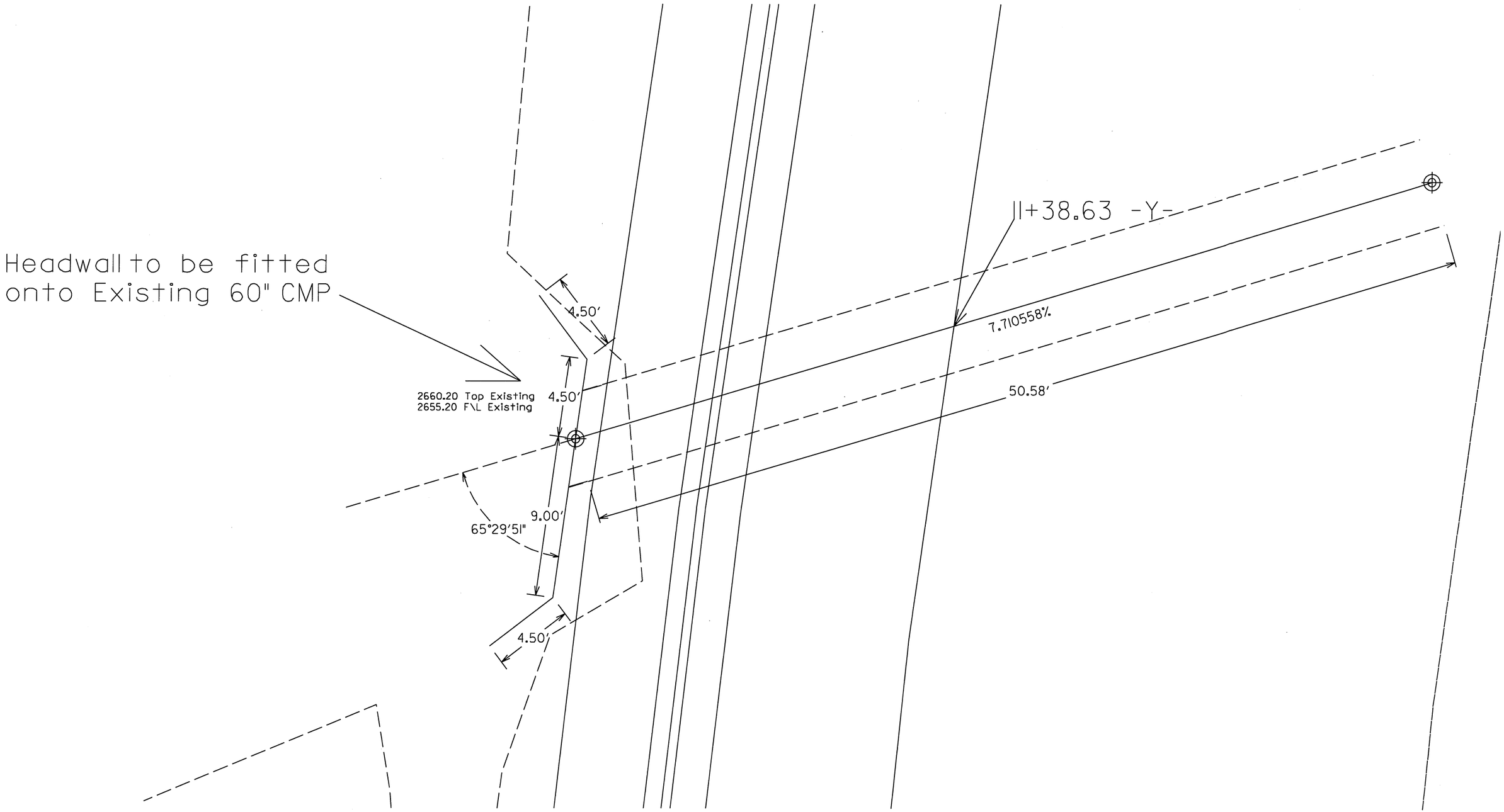
Headwall to be fitted
onto Existing 60" CMP
11+38.63 -Y-
7.710558%
50.58'
4.50'
4.50'
2660.20 Top Existing
2655.20 F\L Existing
9.00'
65°29'51"
4.50'

11+38.63
Y

Along Skew of Pipe

Line Ahead Wing Height = 7.0'
Line Back Wing Height =4.5'

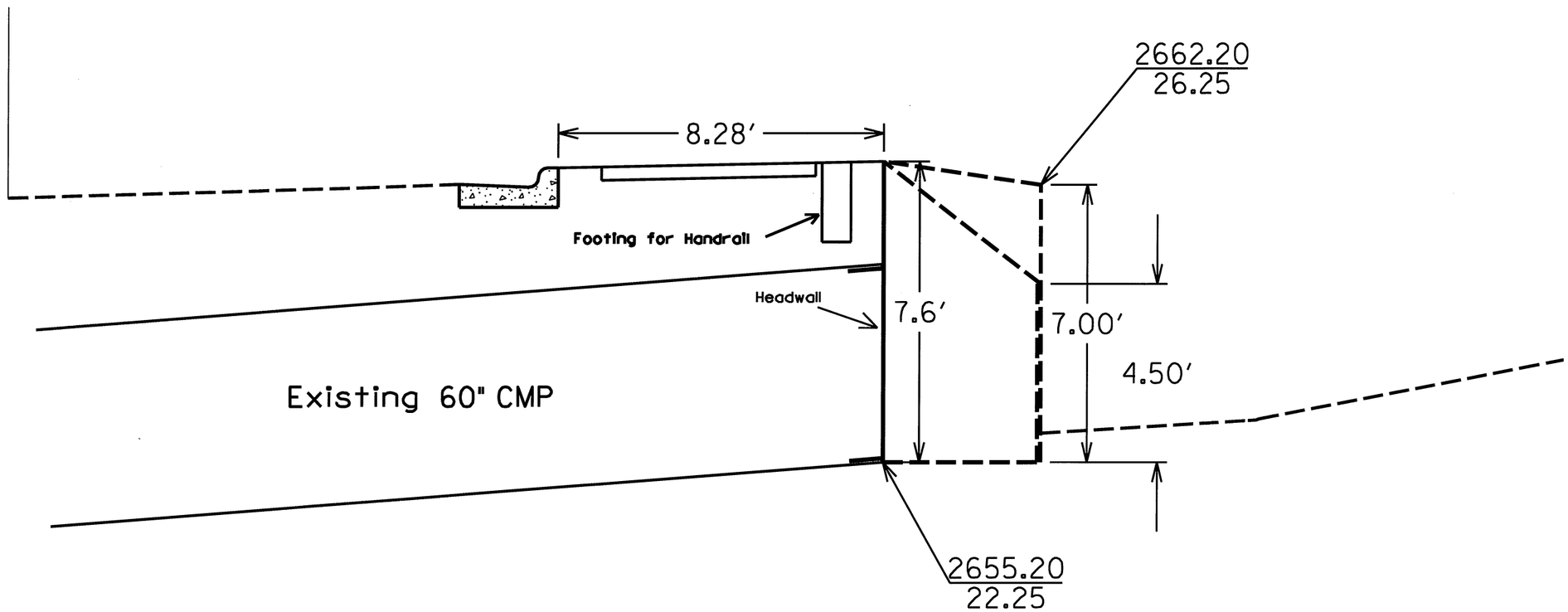

SR-5001CJ DET-6

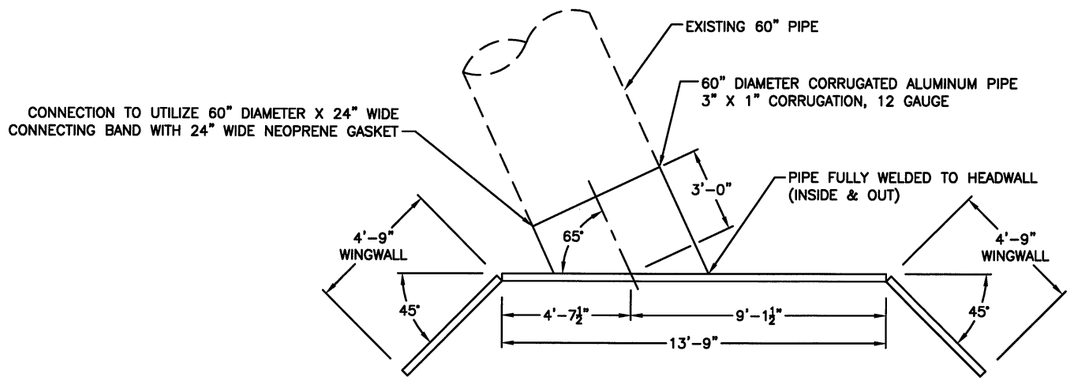

PLAN VIEW

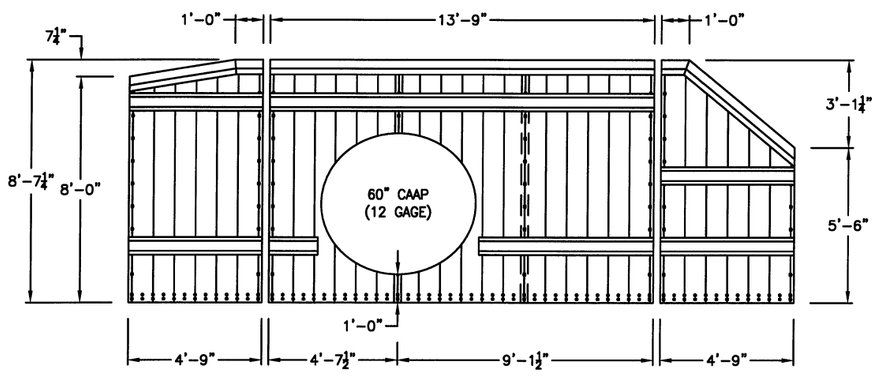

ELEVATION VIEW

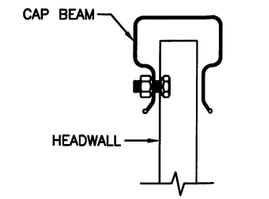

1 CAP BEAM DETAIL
-NOT TO SCALE-

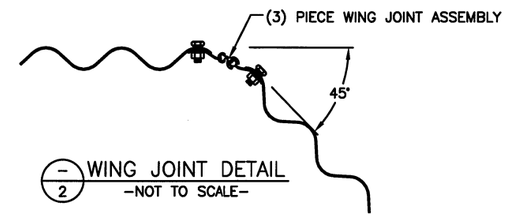

2 WING JOINT DETAIL
-NOT TO SCALE-

SHIPMENT SUMMARY:	
SPECIFICATIONS: AASHTO M219	GAGE:
APPROXIMATE SHIPPING WEIGHT:	TOP:
CUSTOMER:	SIDES: CORNER:
	BOTTOM:

PROJECT:
NCDOT – DEYTON ELEMENTARY SIDEWALK
HEADWALLS & WINGWALLS (0.150" THICKNESS)
60" PIPE (3" x 1" CORRUGATION, 12 GAUGE)

PROJECT REFERENCE NO.	SHEET NO.
SR-5001CJ	DET-7

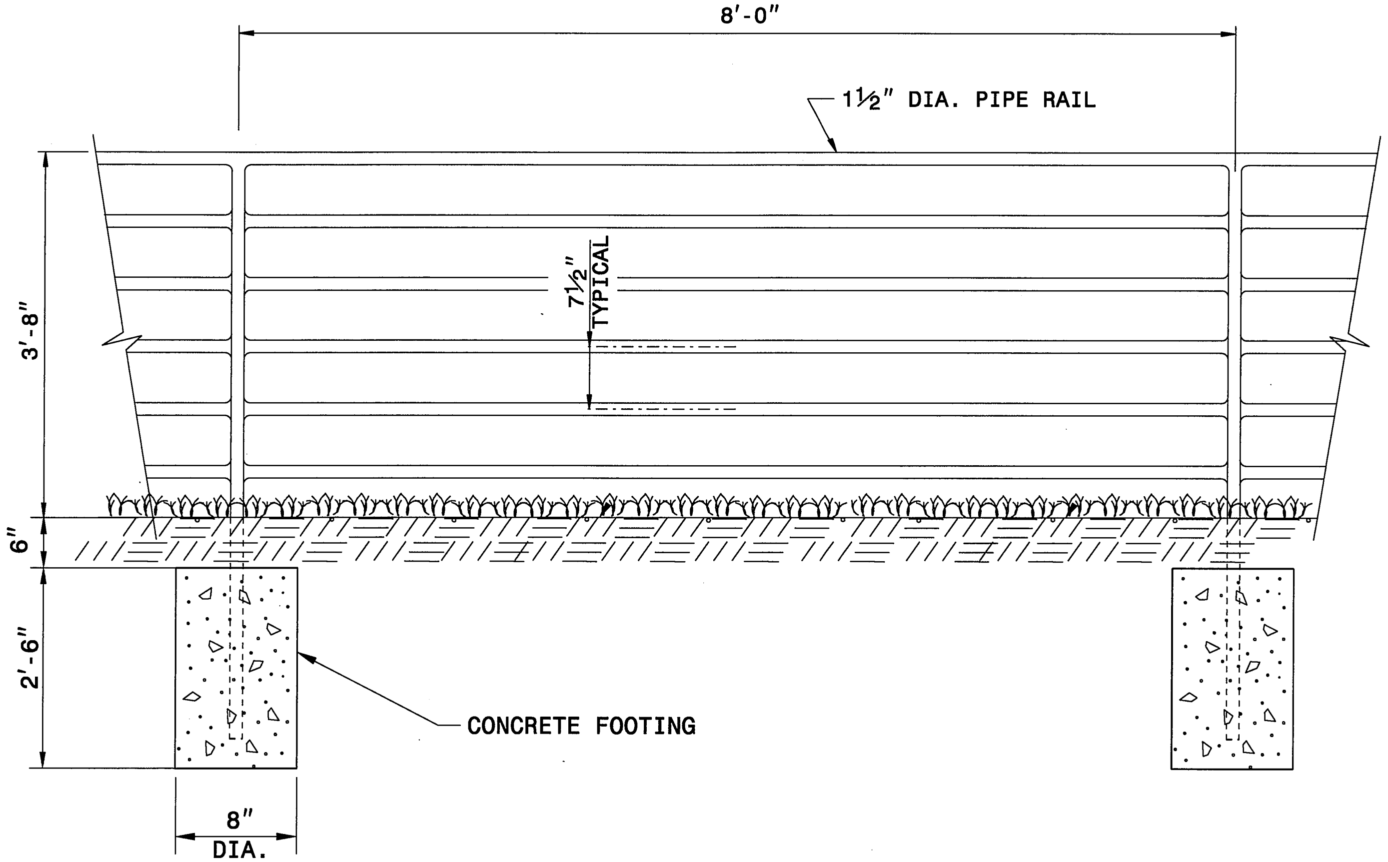

ELEVATION OF HANDRAIL

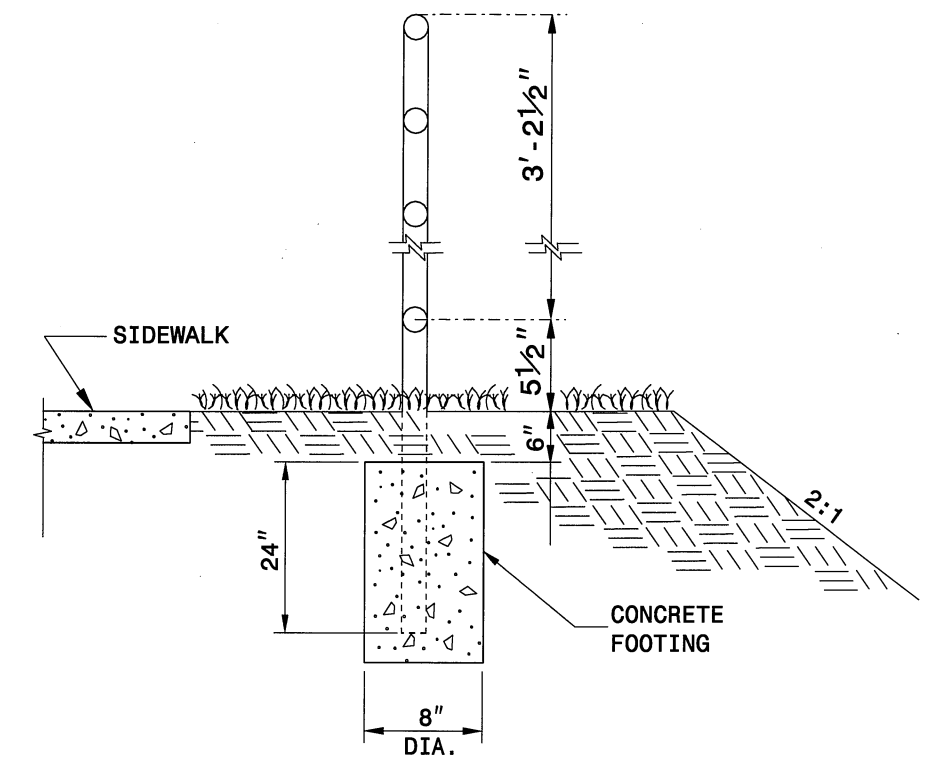

INSET 'A'

NOTES:

CONSTRUCT PROPOSED STEEL PIPE RAIL OF 1½" DIAMETER SCHEDULE 40 PLAIN END GALVANIZED STEEL PIPE MEETING THE REQUIREMENTS OF ASTM A53.

REPAIR GALVANIZING IN ACCORDANCE WITH SECTION 1076 OF THE NCDOT STANDARD SPECIFICATIONS.

PAINT, IF REQUIRED BY THE ENGINEER, IN ACCORDANCE WITH SECTION 1080 OF THE STANDARD SPECIFICATIONS.

WELD IN ACCORDANCE WITH ARTICLE 1072-18 OF THE STANDARD SPECIFICATIONS.

USE CLASS 'B' CONCRETE FOR HANDRAIL FOOTINGS.

PLACEMENT OF HANDRAIL IN RELATION TO SHOULDER BREAK POINT AND SIDEWALK MAY BE MODIFIED AS DIRECTED BY THE ENGINEER.

CONTRACT STANDARDS AND DEVELOPMENT UNIT
Office 919-707-6950 FAX 919-250-4119

PROPOSED PEDESTRIAN SAFETY RAIL

ORIGINAL BY: E.E. WARD DATE: 12-99
MODIFIED BY: DATE:
CHECKED BY: DATE:
FILE SPEC.: jhowerton/handrail on retaining wall.dgn

$$$$$SYSTIME$$$$$
$$$$$$$$$$$$DGN$$$$$$$$$$$$$$$$$
$$$$USERNAME$$$$

EROSION CONTROL

PROJECT REFERENCE NO.	SHEET NO.
SR-5071	EC1
Mitchell Co. – Dayton Elementary	
ROADWAY DESIGN ENGINEER	HYDRAULICS ENGINEER

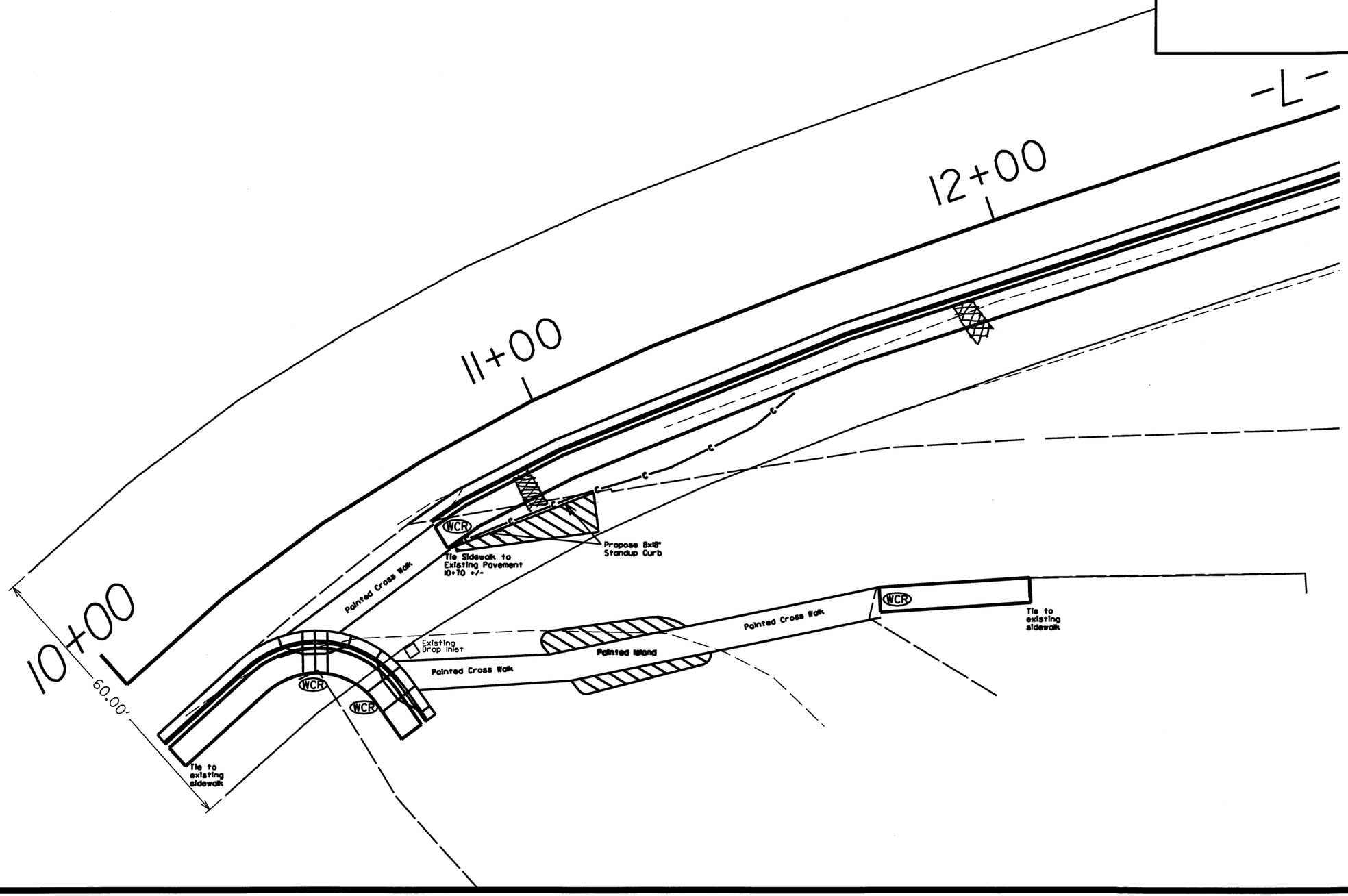

REVISIONS

1/12/15

$$$$$$$$SYSTIME$$$$$$
$$$$$$$$$$$$$$$$$$$$DGN$$$$$$$$$$$$$$$$$$$$
$$

PROJECT REFERENCE NO.	SHEET NO.
SR-5001CJ	EC 2

Mitchell Co. – Deyton Elementary

ROADWAY DESIGN ENGINEER	HYDRAULICS ENGINEER

EROSION CONTROL

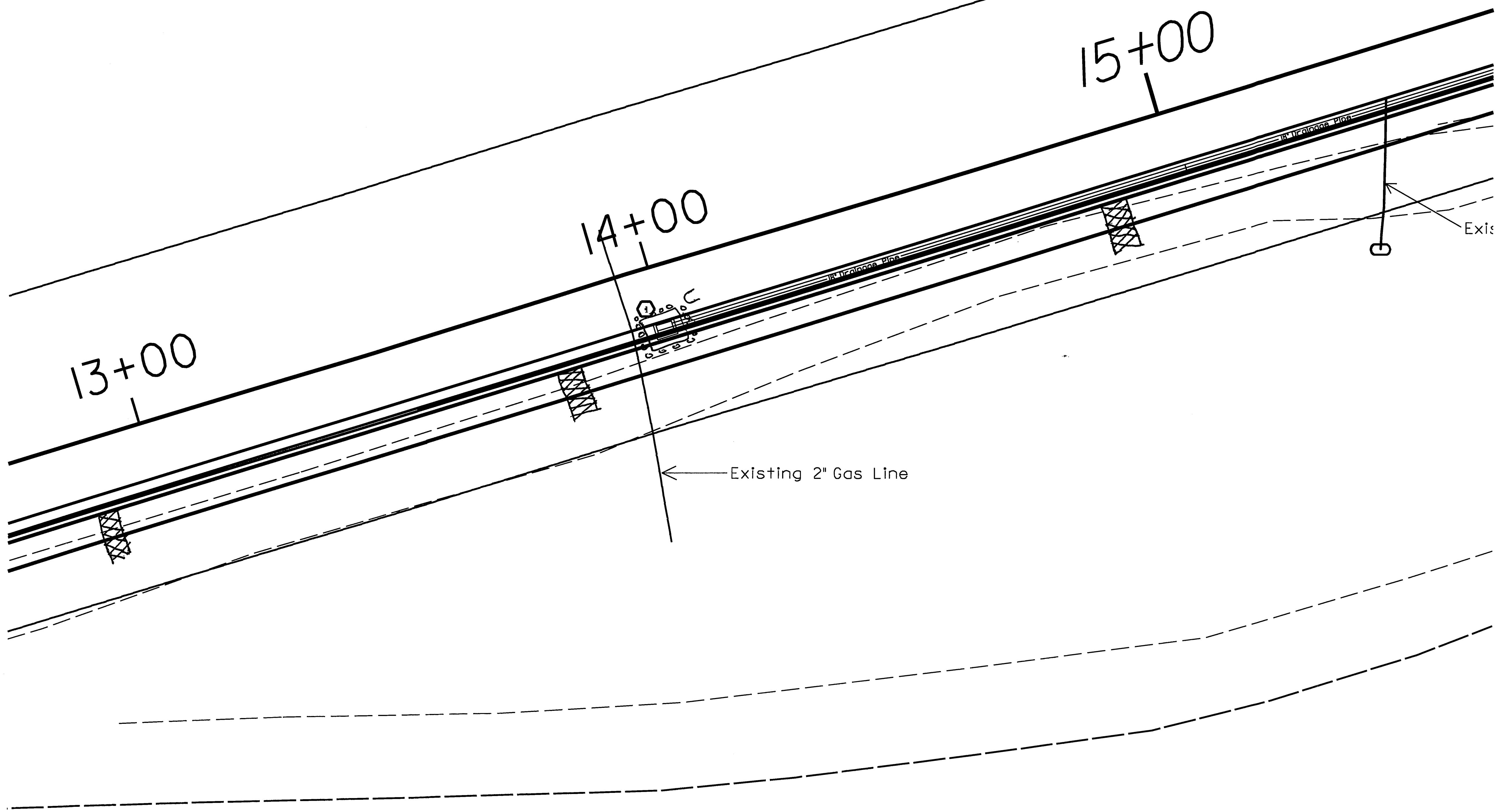

REVISIONS

1/12/15

$$$$$$SYSTIME$$$$
$$$$$$$$$$$$DGN$$$$$$$$$$$$$$$$$$
$$$$USERNAME$$$$

EROSION CONTROL

PROJECT REFERENCE NO.	SHEET NO.
SR-500(C)	EC 3
Mitchell Co. – Dayton Elementary	
ROADWAY DESIGN ENGINEER	HYDRAULICS ENGINEER

REVISIONS

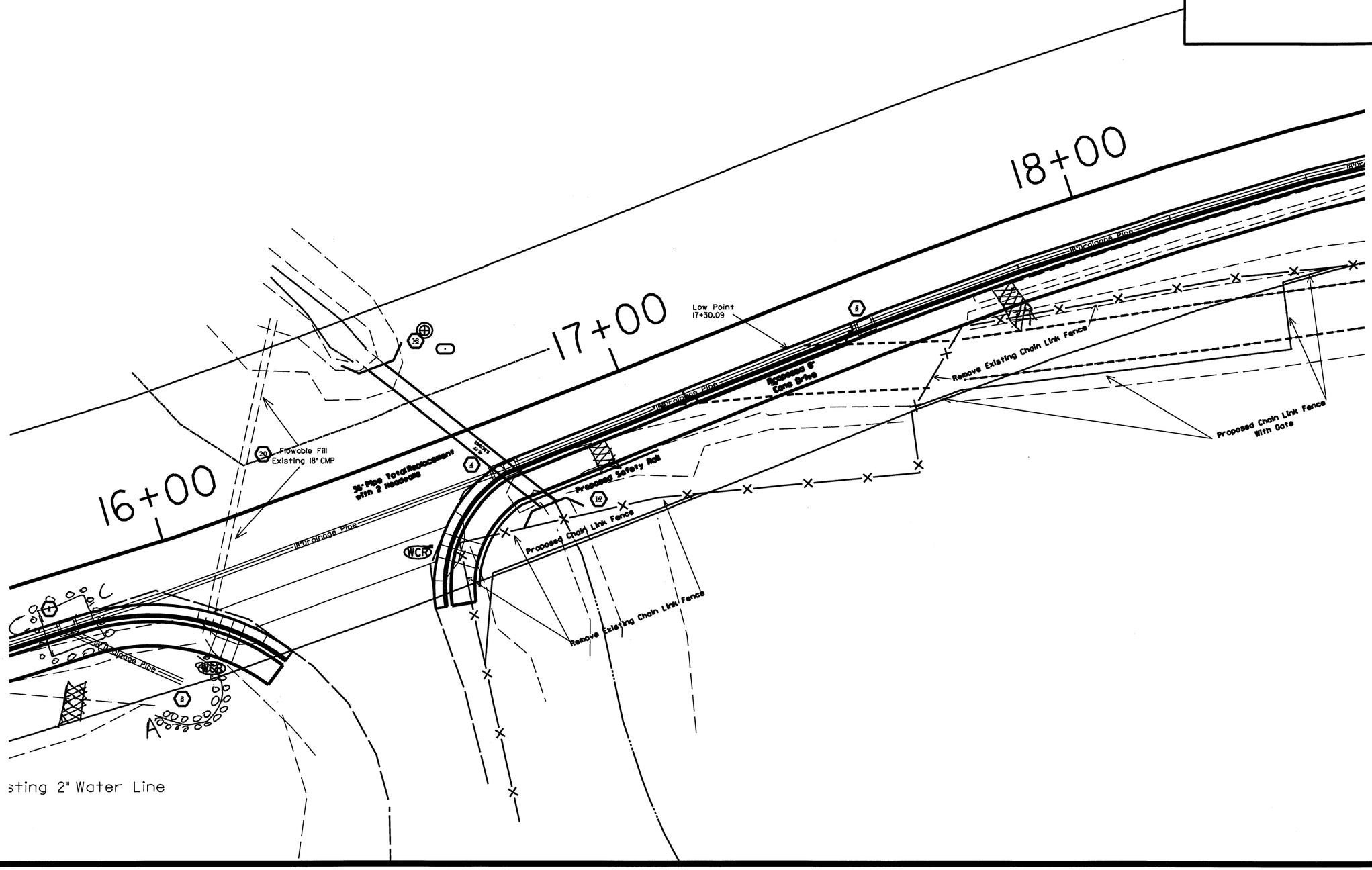

PROJECT REFERENCE NO.	SHEET NO.
SR-507 M	EC 4
Mitchell Co. – Dayton Elementary	
ROADWAY DESIGN ENGINEER	HYDRAULICS ENGINEER

EROSION CONTROL

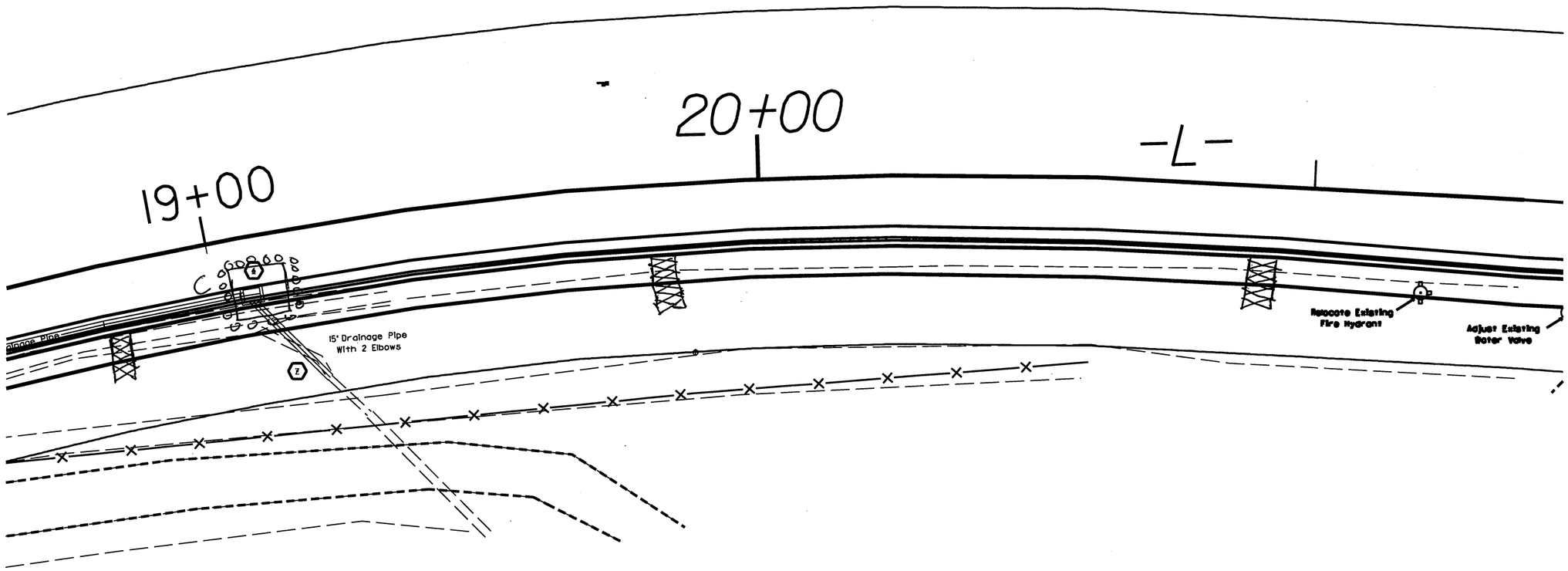

REVISIONS

1/12/15

EROSION CONTROL

PROJECT REFERENCE NO.	SHEET NO.
SR-500ICI	EC 5

Mitchell Co. – Deyton Elementary

ROADWAY DESIGN ENGINEER	HYDRAULICS ENGINEER

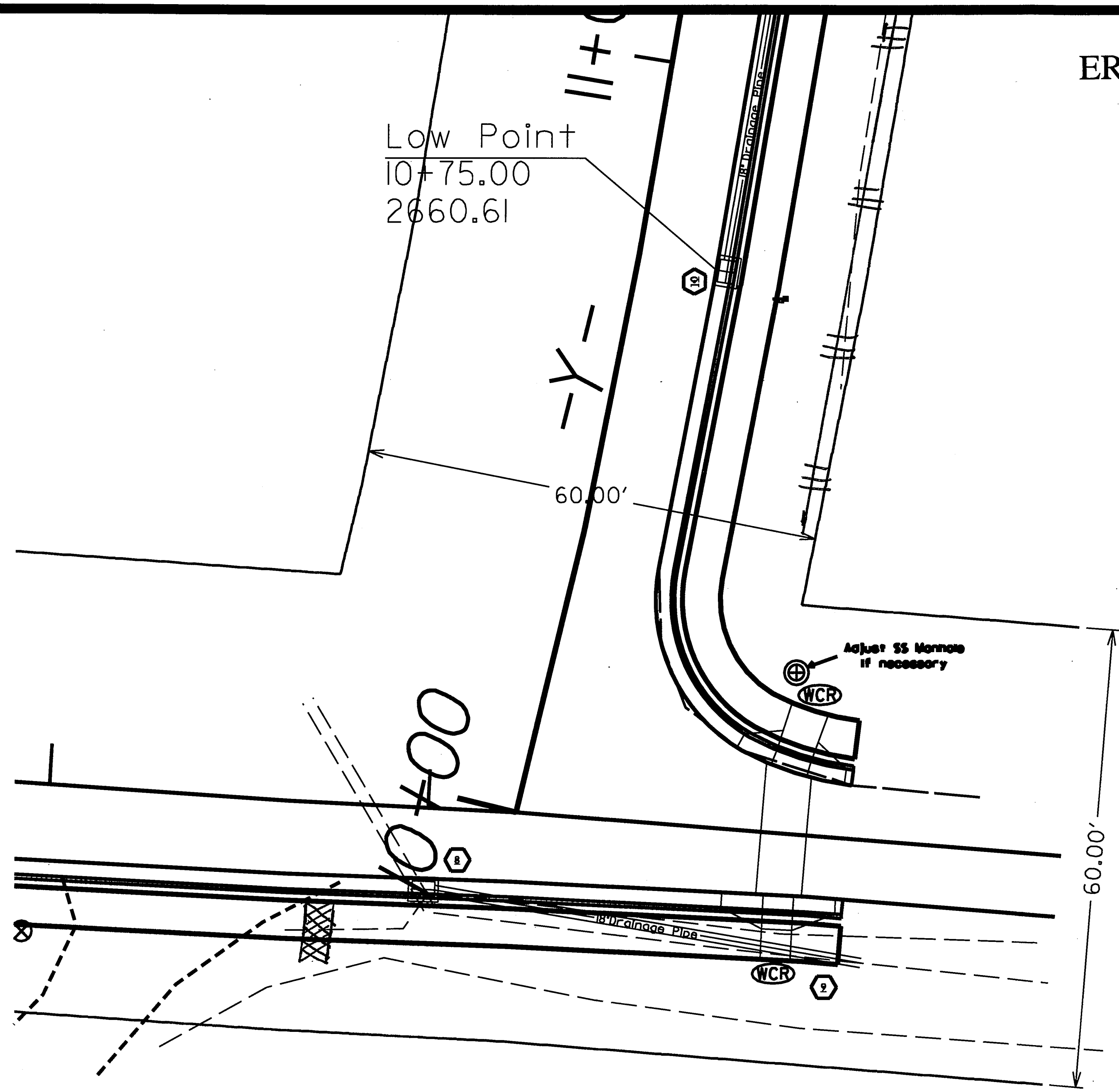

REVISIONS

1/12/15

$$$$$$SYSTIME$$$$$
$$$$$$$$$$$$DGN$$$$$$$$$$$$$$$$$$$$
$$$$USERNAME$$$$

EROSION CONTROL

PROJECT REFERENCE NO.	SHEET NO.
SR-500ICI	EC 6
Mitchell Co. – Deyton Elementary	
ROADWAY DESIGN ENGINEER	HYDRAULICS ENGINEER

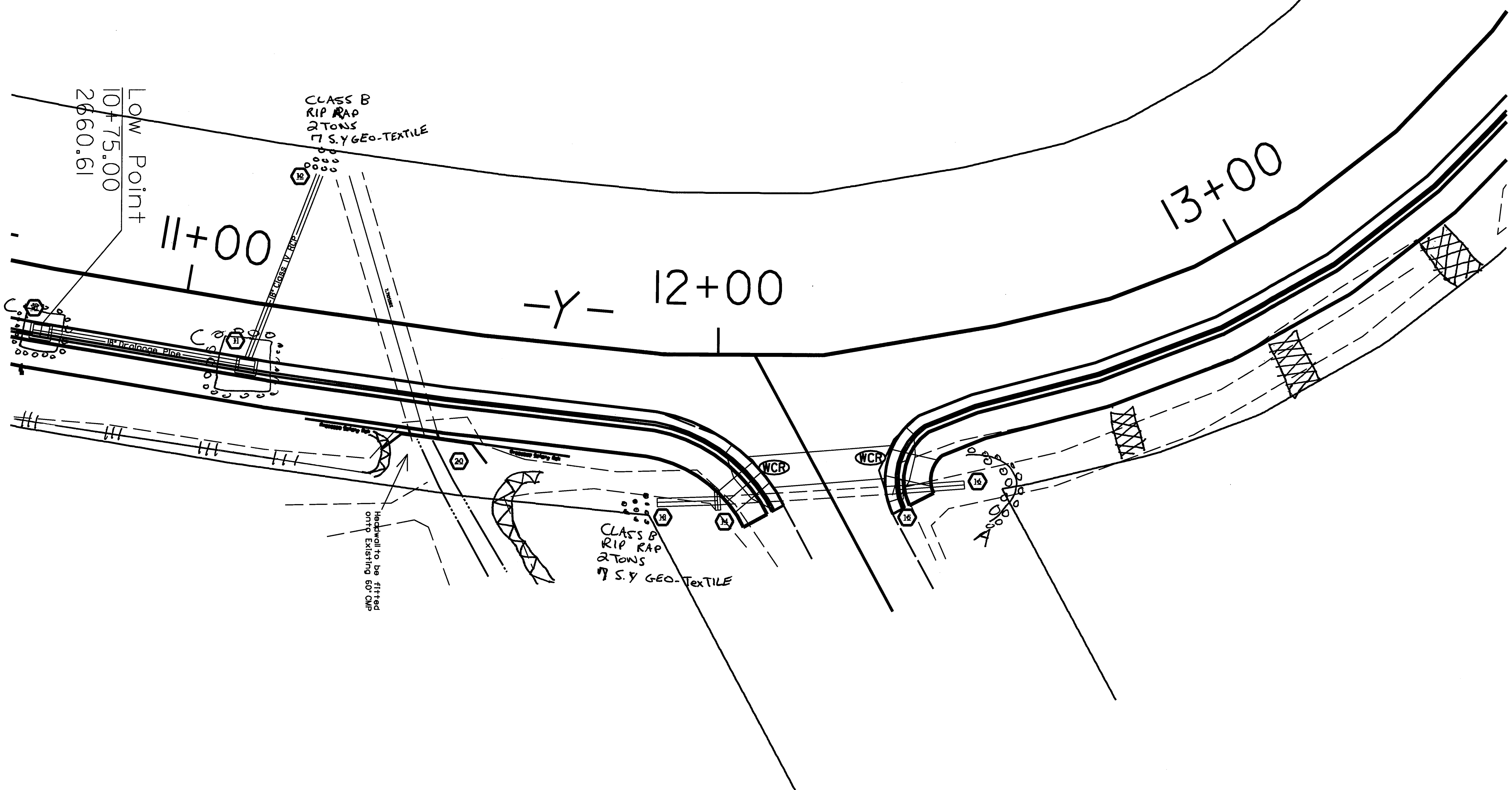

REVISIONS

1/12/15

$$$$$SYSTIME$$$$
$$$$$$$$$$$$$$DGN$$$$$$$$$$$$$$$$
$$$$$USERNAME$$$$

EROSION CONTROL

PROJECT REFERENCE NO.	SHEET NO.
SR-500ICI	EC 7

Mitchell Co. – Deyton Elementary

ROADWAY DESIGN ENGINEER	HYDRAULICS ENGINEER

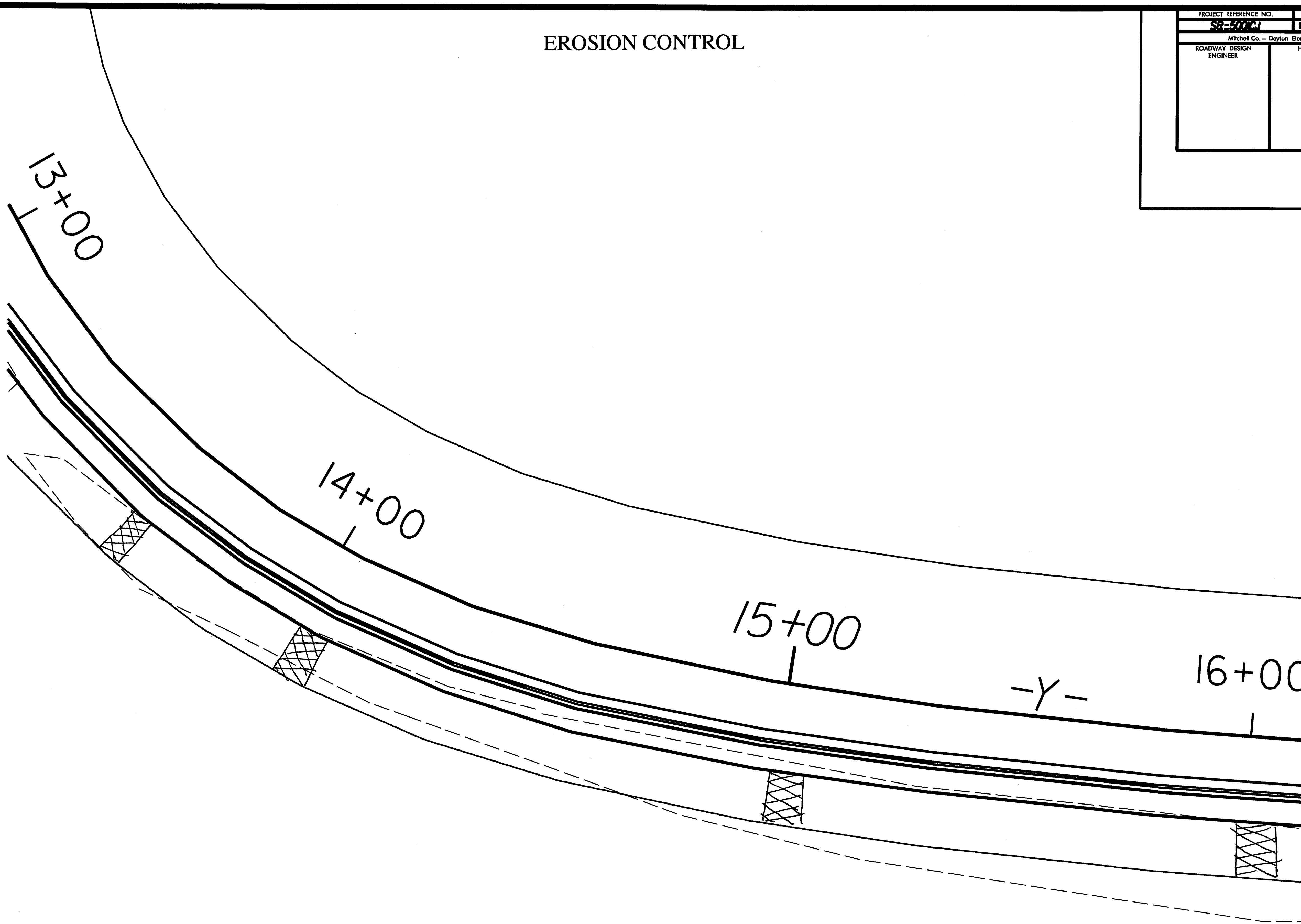

REVISIONS

1/12/15

$$$$$SYSTIME$$$$$
$$$$$$$$$$$$$DGN$$$$$$$$$$$$$$$$$$$$$
$$$$USERNAME$$$$

EROSION CONTROL

PROJECT REFERENCE NO.	SHEET NO.
SR-500ICI	EC 8
Mitchell Co. – Dayton Elementary	
ROADWAY DESIGN ENGINEER	HYDRAULICS ENGINEER

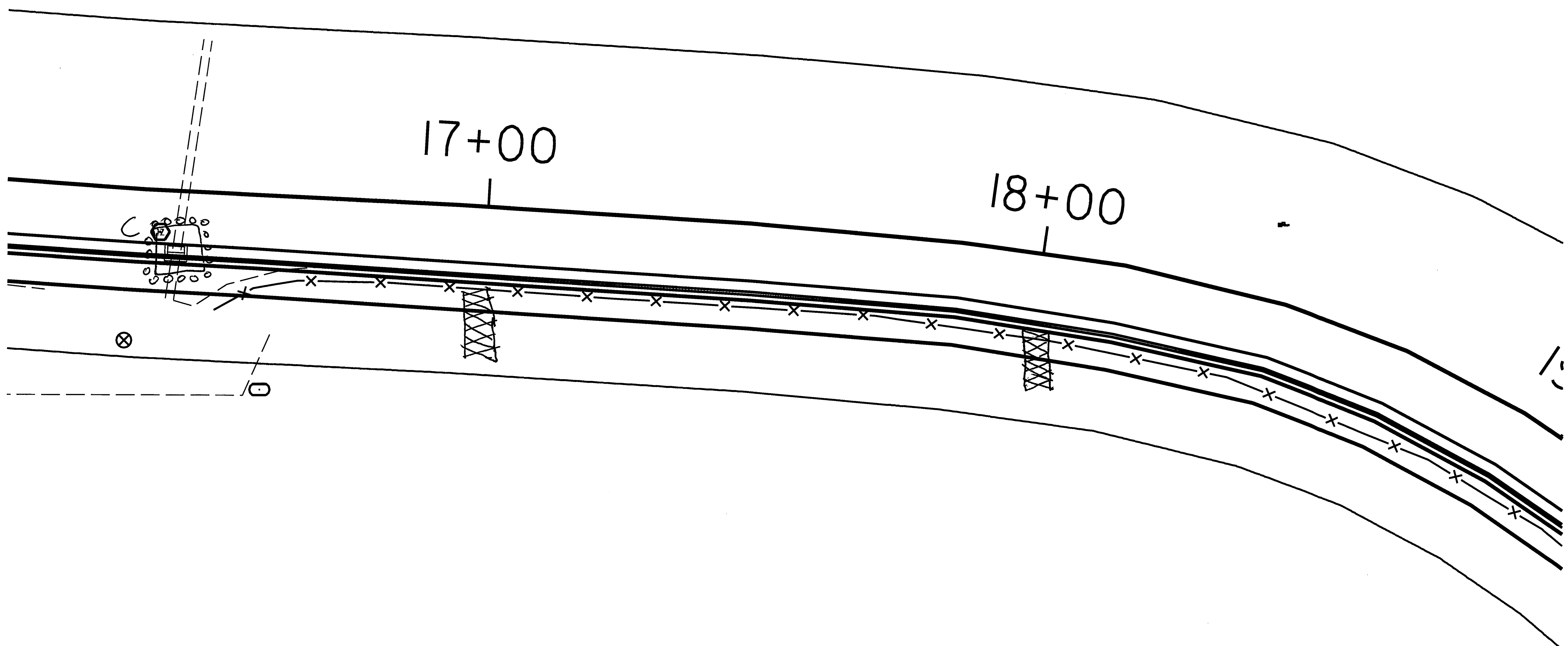

REVISIONS

1/12/15

$$$$$$SYSTIME$$$$$
$$$$$$$$$$$$$$DGN$$$$$$$$$$$$$$$$$$$
$$$$USERNAME$$$$

PROJECT REFERENCE NO.	SHEET NO.
SR-2400CH	EC 9
Mitchell Co. – Dayton Elementary	
ROADWAY DESIGN ENGINEER	HYDRAULICS ENGINEER

EROSION CONTROL

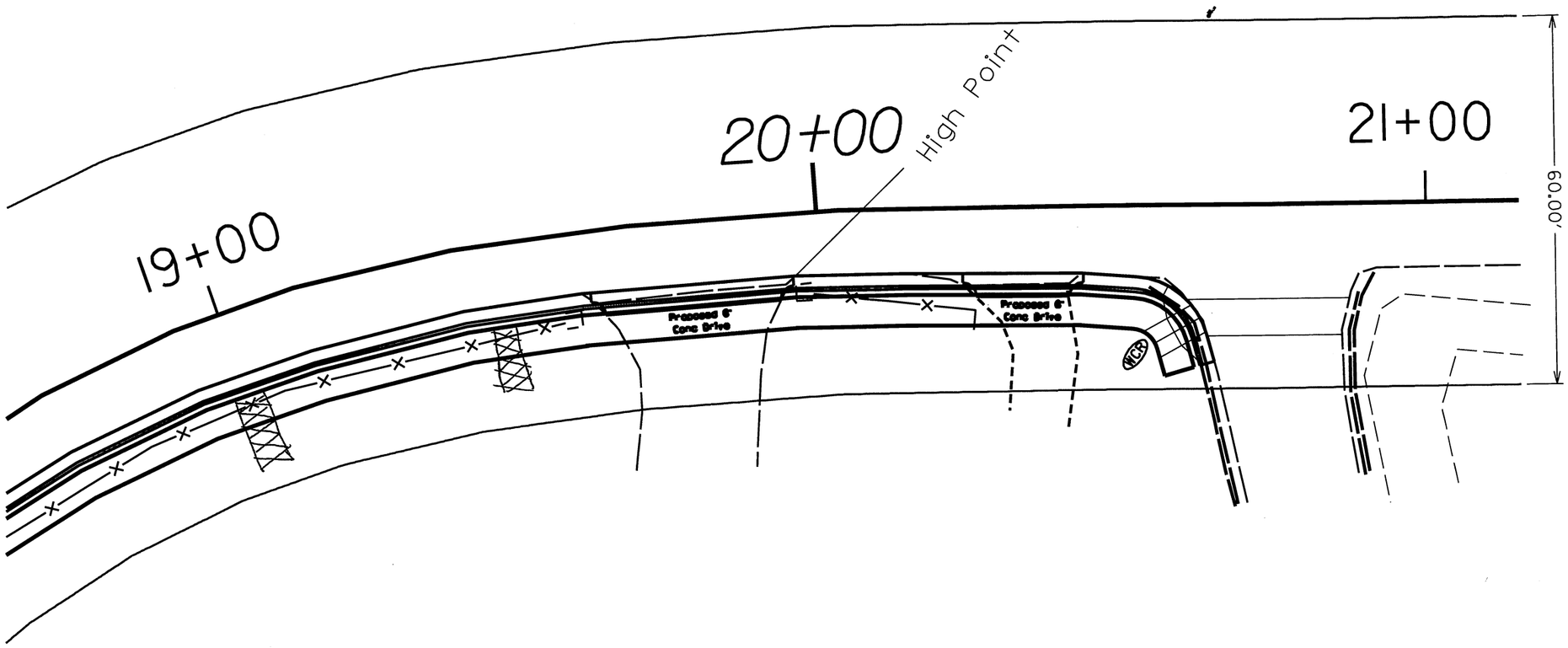

REVISIONS

1/12/15

$$$$$$SYSTIME$$$$$$
$$$$$$USERNAME$$$$$$DGN$$$$$$$$$$$$$$$$$$$$

PROJECT REFERENCE NO.	SHEET NO.
SR-5001(J)	EC-10
R/W SHEET NO.	
ROADWAY DESIGN ENGINEER	HYDRAULICS ENGINEER

WATTLE DETAIL

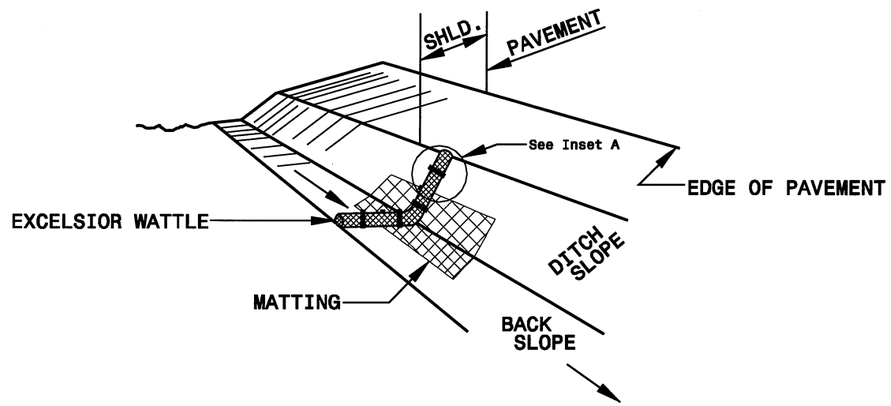

ISOMETRIC VIEW

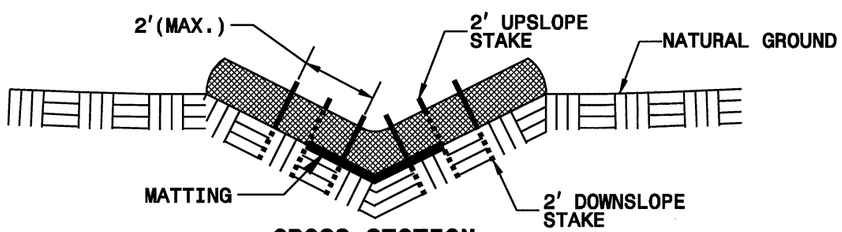

CROSS SECTION VEE DITCH

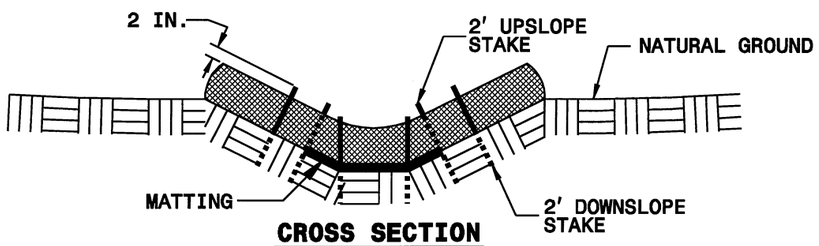

CROSS SECTION TRAPEZOIDAL DITCH

NOTES:

USE MINIMUM 12 IN. DIAMETER EXCELSIOR WATTLE.

USE 2 FT. WOODEN STAKES WITH A 2 IN. BY 2 IN. NOMINAL CROSS SECTION.

ONLY INSTALL WATTLE(S) TO A HEIGHT IN DITCH SO FLOW WILL NOT WASH AROUND WATTLE AND SCOUR DITCH SLOPES AND AS DIRECTED.

INSTALL A MINIMUM OF 2 UPSLOPE STAKES AND 4 DOWNSLOPE STAKES AT AN ANGLE TO WEDGE WATTLE TO BOTTOM OF DITCH.

PROVIDE STAPLES MADE OF 0.125 IN. DIAMETER STEEL WIRE FORMED INTO A U SHAPE NOT LESS THAN 12" IN LENGTH.

INSTALL STAPLES APPROXIMATELY EVERY 1 LINEAR FOOT ON BOTH SIDES OF WATTLE AND AT EACH END TO SECURE IT TO THE SOIL.

INSTALL MATTING IN ACCORDANCE WITH SECTION 1631 OF THE STANDARD SPECIFICATIONS.

INSET A

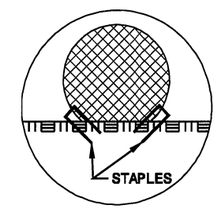

INSET B

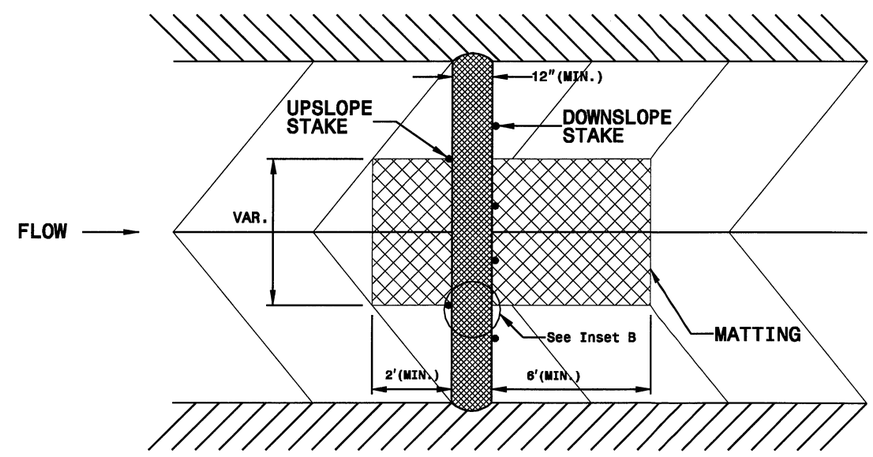

TOP VIEW

PROJECT REFERENCE NO.	SHEET NO.
SR-5001CJ	EC-11
ROADWAY DESIGN ENGINEER	HYDRAULICS ENGINEER

DIVISION OF HIGHWAYS
STATE OF NORTH CAROLINA

SOIL STABILIZATION TIMEFRAMES

SITE DESCRIPTION	STABILIZATION TIME	TIMEFRAME EXCEPTIONS
PERIMETER DIKES, SWALES, DITCHES AND SLOPES	7 DAYS	NONE
HIGH QUALITY WATER (HQW) ZONES	7 DAYS	NONE
SLOPES STEEPER THAN 3:1	7 DAYS	IF SLOPES ARE 10' OR LESS IN LENGTH AND ARE NOT STEEPER THAN 2:1, 14 DAYS ARE ALLOWED.
SLOPES 3:1 OR FLATTER	14 DAYS	7 DAYS FOR SLOPES GREATER THAN 50' IN LENGTH.
ALL OTHER AREAS WITH SLOPES FLATTER THAN 4:1	14 DAYS	NONE, EXCEPT FOR PERIMETERS AND HQW ZONES.

5/14/99

PROJECT REFERENCE NO.	SHEET NO.
SR-5001C.1	1
ROADWAY DESIGN ENGINEER	HYDRAULICS ENGINEER

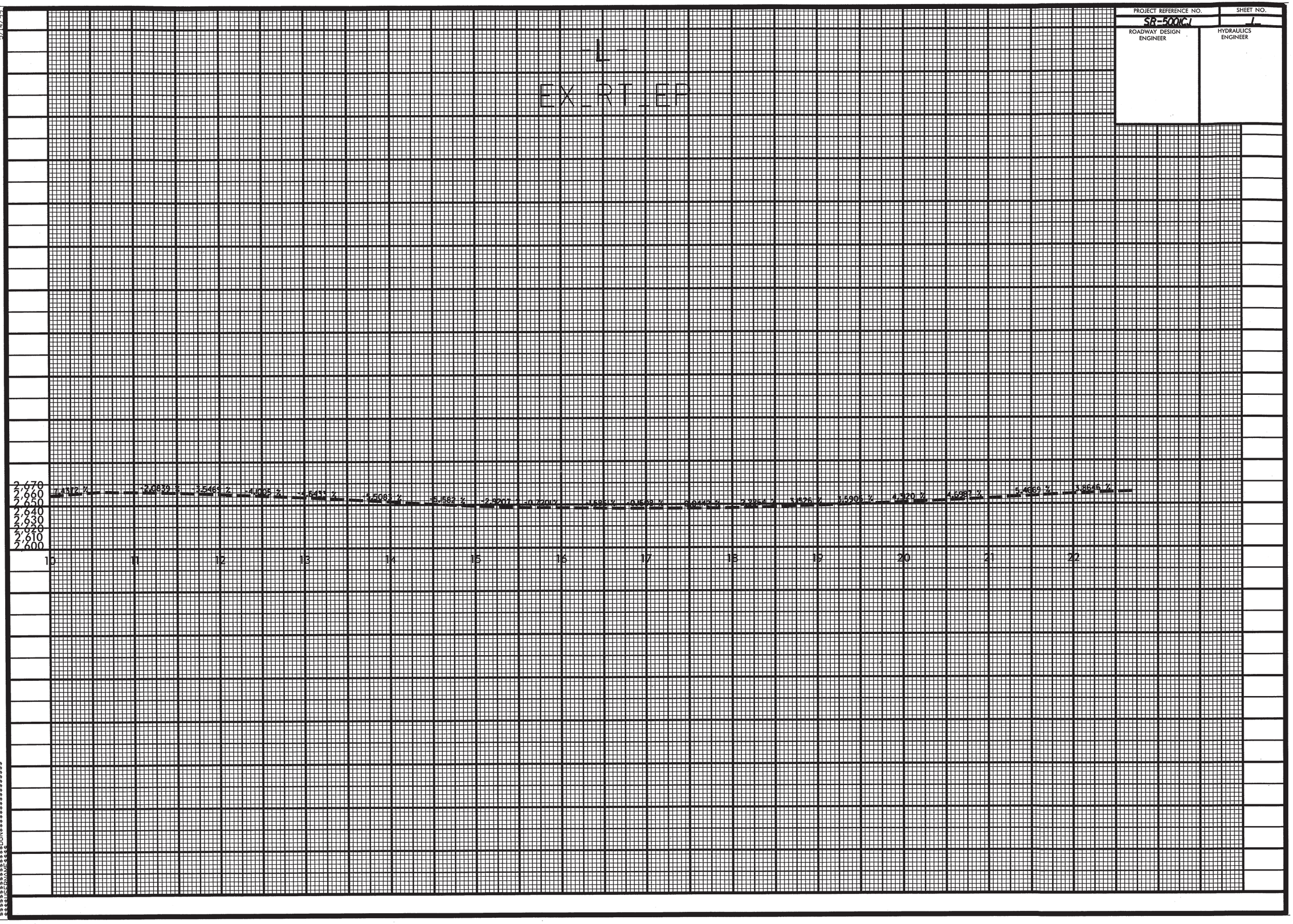

$$$$SYSTIME$$$$
$$$$DGN$$$$
$$$$FILENAME$$$$

PROJECT REFERENCE NO.	SHEET NO.
SR-500(C.)	1

ROADWAY DESIGN ENGINEER	HYDRAULICS ENGINEER

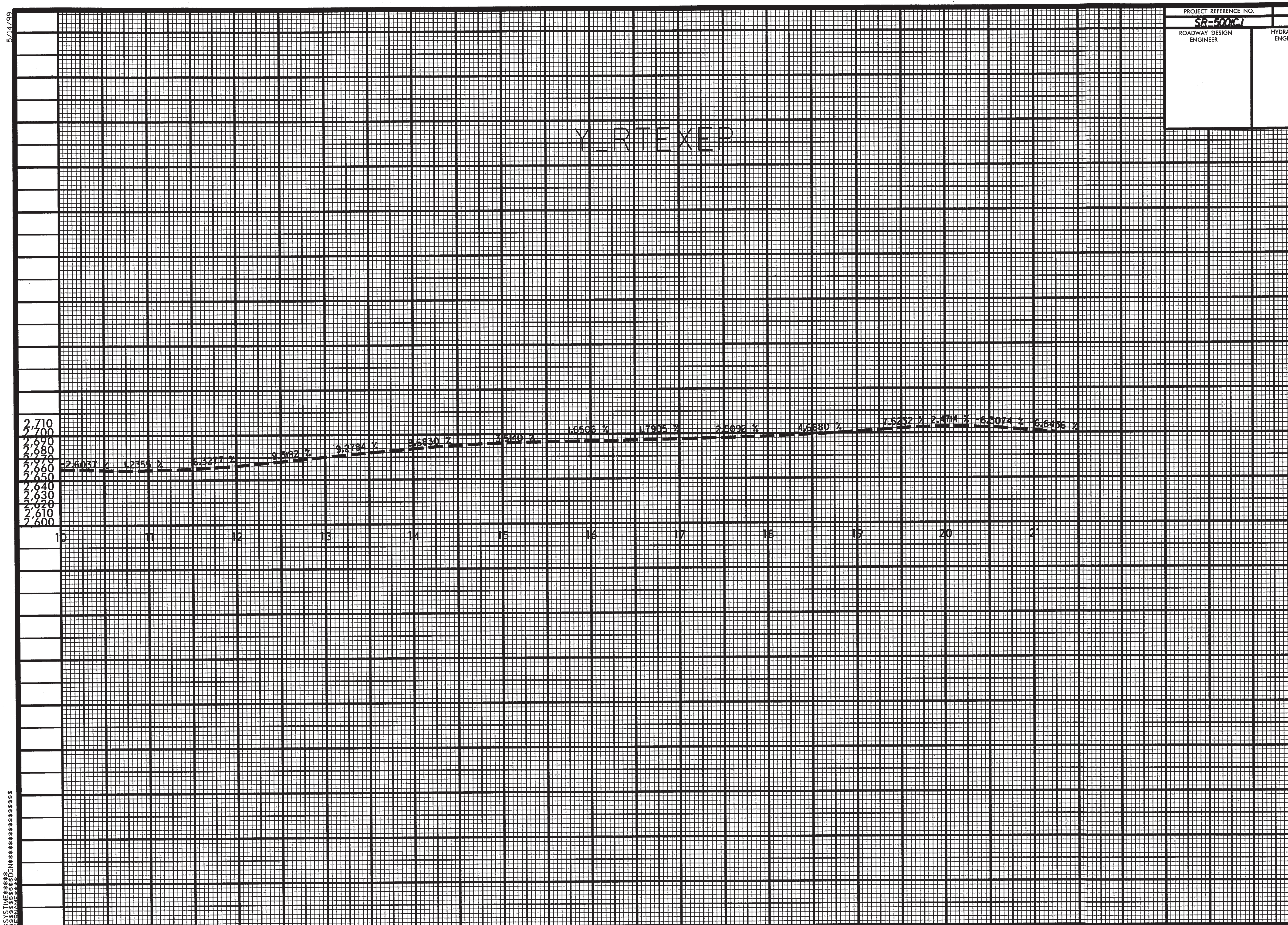

5/14/99

$$$$$SYSTIME$$$$$
$$$$$$$$$$DGN$$$$$$$$$$$$$$
$$$$USERNAME$$$$