PROPOSED HIGHWAY LANDSCAPE DEVELOPMENT PROJECT

T.I.P. #	STATE PROJECT W.B.S. #	SHEET #	SHEET # TOTAL
NA		1	5
FED. PROJ. #	DESCRIPTION		DIVISION
NA	I-40 BURKE COUNTY		13

PROJECT: LANDSCAPE PLANTING ON I-40 IN BURKE COUNTY

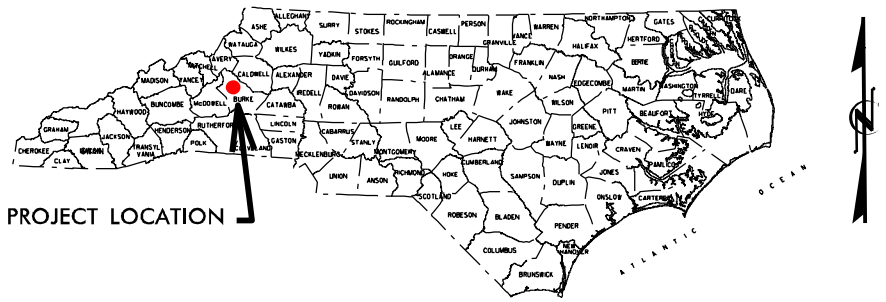

Vicinity Maps

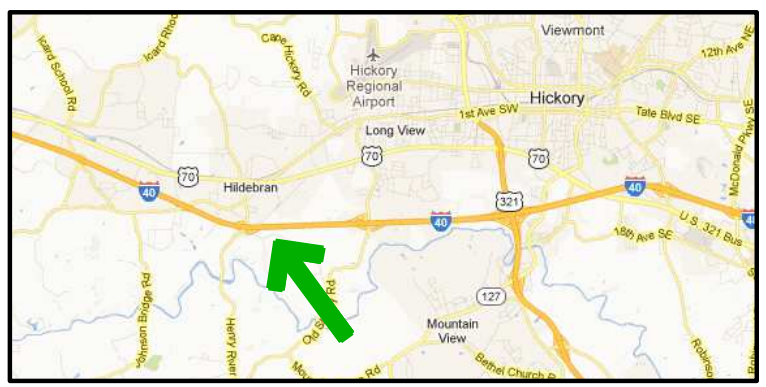

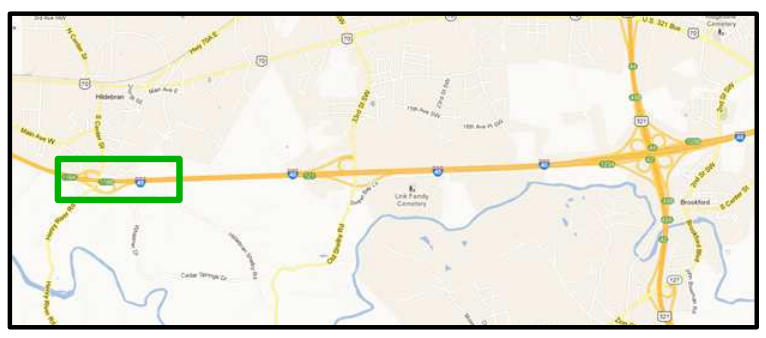

Summary of Quantities

Quantity	Unit	Key	Botanical Name	Common Name	Furnish	ASNS	Spacing
Plant Materials							
Ornamental Trees							
13	EA	CF	*Cornus florida 'Cherokee Princess'*	Cherokee Princess Flowering Dogwood	5-6', Single Straight Trunk, Well branched	1.2.4	To be field staked
14	EA	LB	*Lagerstroemia x 'Biloxi'*	Biloxi Crapemyrtle	9-10', 3 to 5 stems, min. caliper 1.25" each, stems must occur within 6" of ground; heavily branched	1.3.2.2	25' OC
Evergreen Trees/Shrubs							
9	EA	IL	*Ilex x 'Liberty' PP#12009*	Liberty Holly	6-7', B&B, Heavily branched to the ground	2.2.3	To be field staked
13	EA	EA	*Picea omorika*	Serbian Spruce	12-14', B&B, Full to ground, Matched specimens	3.2.4	To be field staked
Grasses							
3,458	EA	MC	*Muhlenbergia capillaris*	Pink Muhly Grass	3 1/2 to 4" Pot, Tray of 18, Must be fully rooted into this container with full top growth and weed free	12.2.5	3' OC
392	EA	PV	*Panicum virgatum 'Northwind'*	Northwind Switchgrass	3 1/2 to 4" Pot, Tray of 18, Must be fully rooted into this container with full top growth and weed free	12.2.5	5' OC
Replacement Plant Materials							
Replacement Ornamental Trees							
1	EA	CF	*Cornus florida 'Cherokee Princess'*	Cherokee Princess Flowering Dogwood	5-6', Single Straight Trunk, Well branched	1.2.4	To be field staked
1	EA	LB	*Lagerstroemia x 'Biloxi'*	Biloxi Crapemyrtle	9-10', 3 to 5 stems, min. caliper 1.25" each, stems must occur within 6" of ground; heavily branched	1.3.2.2	25' OC
Replacement Evergreen Trees/Shrubs							
1	EA	IL	*Ilex x 'Liberty' PP#12009*	Liberty Holly	6-7', B&B, Heavily branched to the ground	2.2.3	To be field staked
1	EA	EA	*Picea omorika*	Serbian Spruce	12-14', B&B, Full to ground, Matched specimens	3.2.4	To be field staked
Replacements - Grasses							
346	EA	MC	*Muhlenbergia capillaris*	Pink Muhly Grass	3 1/2 to 4" Pot, Tray of 18, Must be fully rooted into this container with full top growth and weed free	12.2.5	3' OC
39	EA	PV	*Panicum virgatum 'Northwind'*	Northwind Switchgrass	3 1/2 to 4" Pot, Tray of 18, Must be fully rooted into this container with full top growth and weed free	12.2.5	5' OC

Other Items		
Quantity	**Unit**	**Description**
1	LS	**Post-Emergence Herbicidal Treatment for Plant Beds (approx. 18,304 SY)**
1	LS	**Pre-Emergence Herbicidal Treatment for Plant Beds (approx. 18,304 SY)**
1,781	CY	**Mulch for Planting**
25	M/G	**Water for Planting**
0.35	Acre	**Seeding and Mulching**
1	LS	**Special Vegetation Removal with pruning (approximately .6 Acres)**
25	EA	**Selective Tree Removal, 6"**
15	EA	**Selective Tree Removal, 10"**
12	EA	**Selective Tree Removal, 15"**
10	EA	**Selective Tree Removal, 18"**
1	LS	**Selective Pruning**
1420	LF	**Split Rail Fence**
16	Each	**Monthly Establishment Work Cycle**

General Notes

- Perform Special Vegetation Cleanup in areas identified on the plans. Prune trees in these areas at the direction of the Engineer, to lift canopy to an approximate six to eight foot clearance, remove dead, damaged or broken limbs and correct structural defects.
- Special Vegetation Cleanup acreage is an estimate. Exact areas will be defined by the Engineer in the field. See special provision 'Special Vegetation Cleanup'.
- Selective Tree Removal shall consist of the removal of ALL Pear 'seedling' trees, as well as any other trees identified by the Enginner in the field. (Trees less than 4" shall be paid for under 'Special Vegetation Removal'. Trees 4" and above will be paid for under 'Selective Tree Removal' in the appropriate size category.)
- Split rail fence shall be worm style; see details. It shall be installed at locations shown on the plans and as directed by the Engineer in the field. Split rail fence quantity is a linear measurement from end to end, and is not measured along the surface of the angled sections.
- The 13 Picea omorika, Serbian Spruce, locations are to be staked in the field by the Engineer. - Not shown on plans

CONVENTIONAL SYMBOLS

County Line
City or Town Line
Exist. Right of Way Line Marker
Prop. Right of Way Line Marker (By Others)
Prop Right of Way Line Marker (By Contract)
Exist. Control of Access Line
Prop. Control of Access Line
Property Line
Easement Line
Slope Stake Line
Exist. Fence
Prop. Woven Wire Fence
Prop. Chain Link Fence
Exist. Road
Prop. Road
Guardrail
Survey Line
Denotes Line Equality
Bridge
Culvert
Railroad
Woods
Exist. Telephone Pole
Prop. Telephone Pole
Tower Pole and Line
Exist. Power Pole
Prop. Power Pole
Sanitary Sewer Line
Water Line
Gas Line
Picnic Shelter
Regeneration
Reforestation

INDEX OF L SHEETS:

1..... TITLE, DESCRIPTION, NOTES
2..... SUMMARY OF QUANTITIES
3..... PLANTING DETAILS
4-10... LANDSCAPE PLANS GATEWAY WEST
11-15... LANDSCAPE PLANS FEATURE BILTMORE
16-18.. LANDSCAPE PLANS GATEWAY EAST

PREPARED BY: CSM

PRELIMINARY DESIGN DATE: FEB. 11, 2013

REVISION DATE:

FINAL DESIGN DATE: FEB. 14, 2013

I-40 BURKE COUNTY
AT COUNTY LINE TO THE EAST AND
EXIT 119 AT HILDEBRAN INTERCHANGE

STATE OF
NORTH CAROLINA
DEPARTMENT OF TRANSPORTATION

LOCATION: I-40 AT THE BURKE COUNTY LINE TO THE EAST AND I-40 AT EXIT 119 AT HENRY RIVER ROAD/CENTER STREET AT HILDEBRAN

TYPE OF WORK: LANDSCAPE PLANTING

COUNTY: BURKE COUNTY

DIVISION: 13
55 ORANGE STREET, ASHEVILLE, NC 28801

DIV. ENG.: J. J. SWAIN, JR.,PE

DIV. ROADSIDE DEPT. ENG.: KEITH HILL

2004 American Standard for Nursery Stock
2012 NCDOT STANDARD SPECIFICATIONS

PREPARED IN THE OFFICE OF:
NCDOT- ROADSIDE ENVIRONMENTAL UNIT
LANDSCAPE DESIGN & DEVELOPMENT SECTION
1557 MAIL SERVICE CENTER
RALEIGH NC 27699 919-707-2920

PLANTING DETAILS

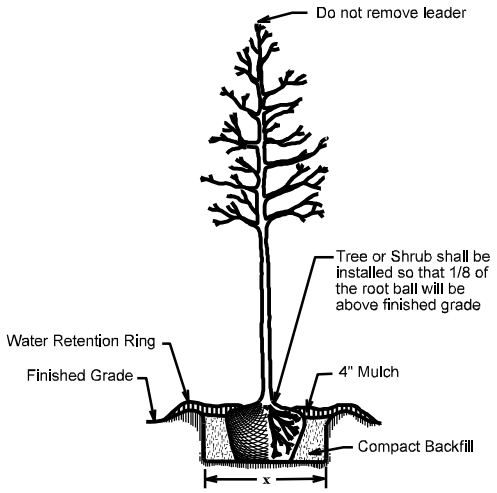

Tree or Shrub Planting Detail
(Level Ground)

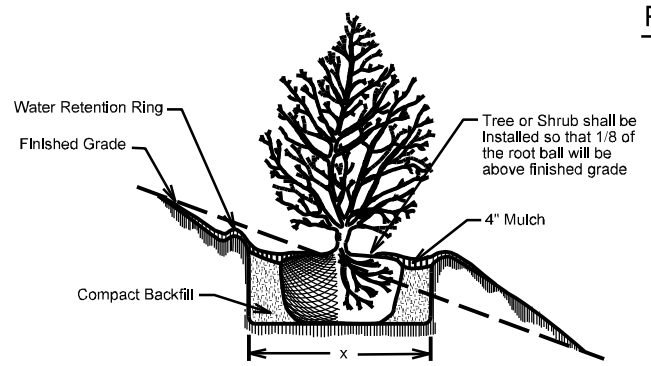

Tree or Shrub Planting Detail
(Sloping Ground)

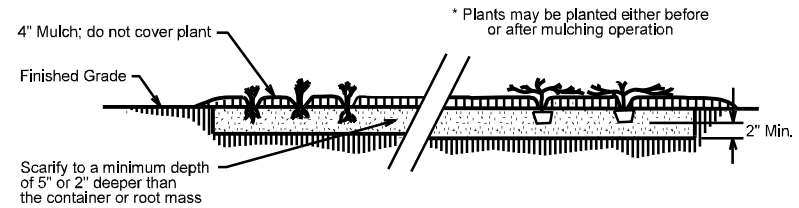

Ground Cover Planting Detail

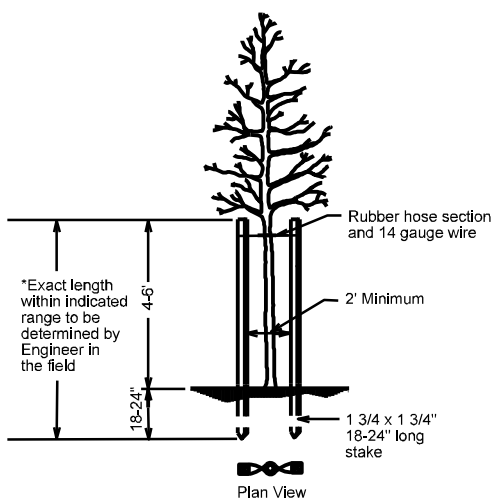

Staking Detail
(for trees 6' to 10')
* Utilize staking detail only if requested by the Engineer.

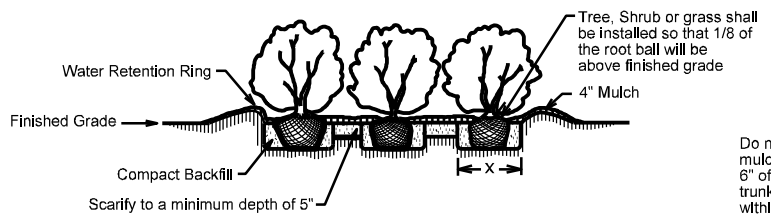

Bed Planting Detail

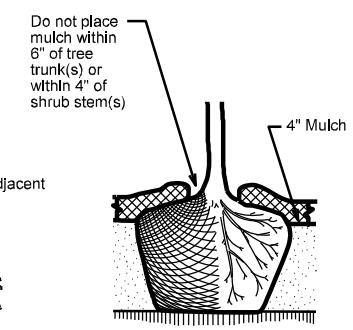

Mulch Detail

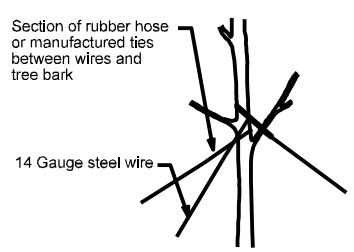

Guy Tying Detail

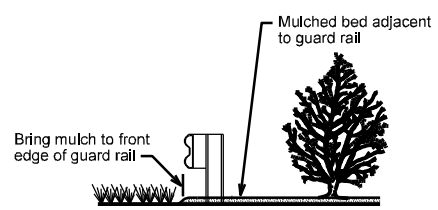

Bed / Guard Rail Detail

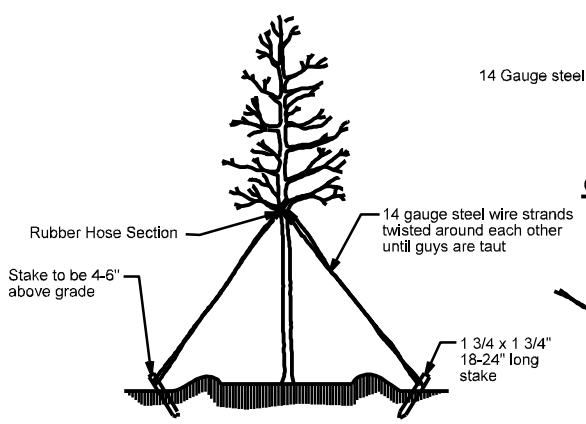

Tree Guying Detail
(for trees 10' or larger)
* Utilize guying detail only if requested by the Engineer.

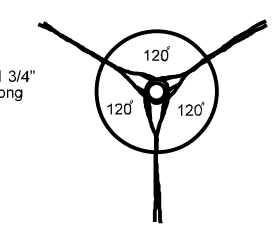

Guy Spacing Detail

Planting Detail Notes:

- Schedule for Plant Hole Size: X = 2 times the diameter of the container or the root ball diameter
- See Standard Specifications for Plant Bed preparation and herbicidal treatment
- Fertilizer shall be applied at time of planting. Fertilizer shall be a slow release pellet or tablet. Formulation shall be approved by engineer in field. Rates shall be per manufacturer's recommendations and approved by engineer in field. Thouroughly mix with topsoil, backfill or scarified soil.
- When mulched bed is adjacent to guard rail run mulch to front edge of guard rail - see detail
- Cut and remove wire basket and remove burlap around top of root ball to expose root collar before backfilling. Set root ball at grade or slightly above as directed by the Engineer depending on soil type at installation site. Do not place mulch within 6" of tree trunk or 4" of shrub trunk.
- Any pruning necessary shall follow current standard arboricultural practices and International Society of Arboriculture recommendations
- Do not attempt to straighten a tree that has been planted at an angle with the use of staking or guying. Dig tree and reset root ball to achieve an upright, plumb position.

'WORM STYLE' SPLIT RAIL FENCE DETAILS

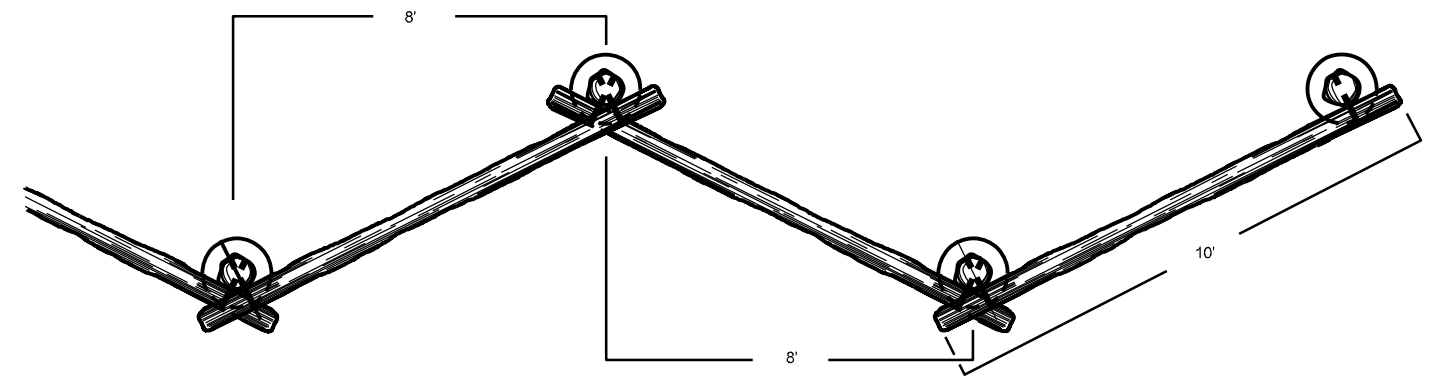

Plan View
SCALE: NTS

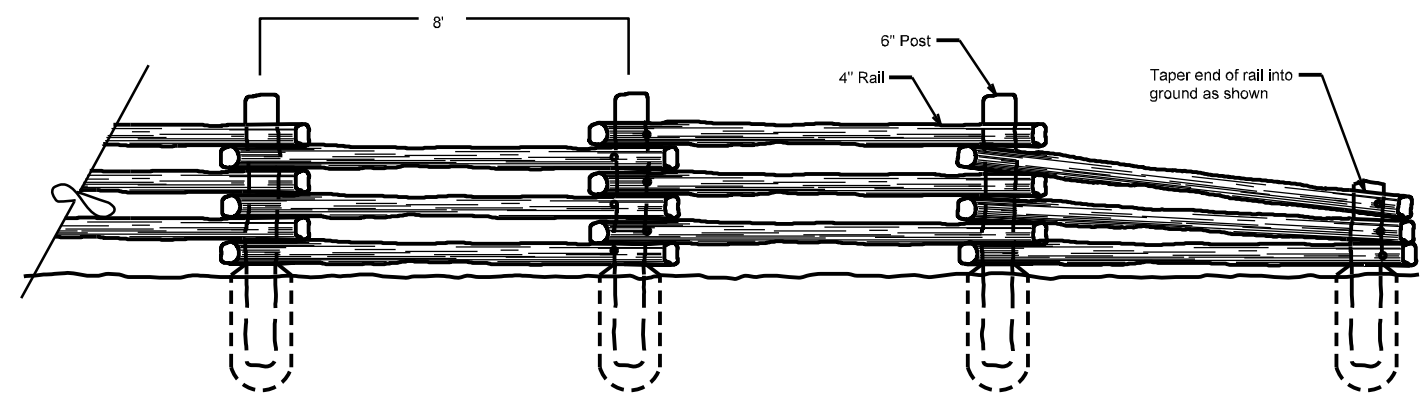

Elevation View
SCALE: NTS

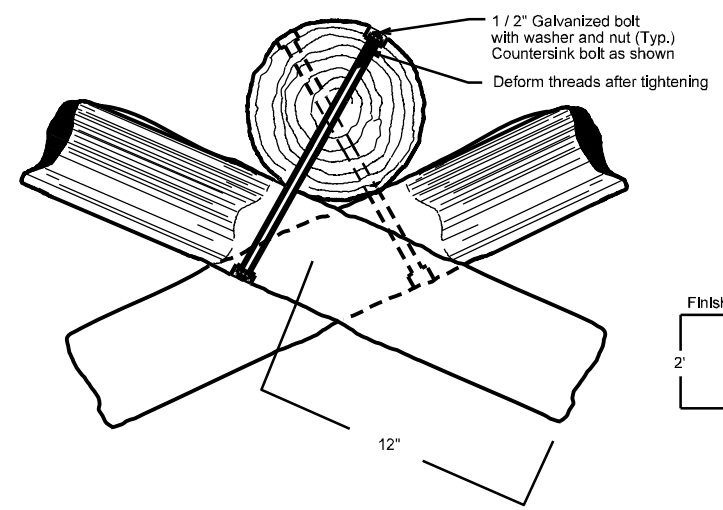

Connection Detail
SCALE: NTS

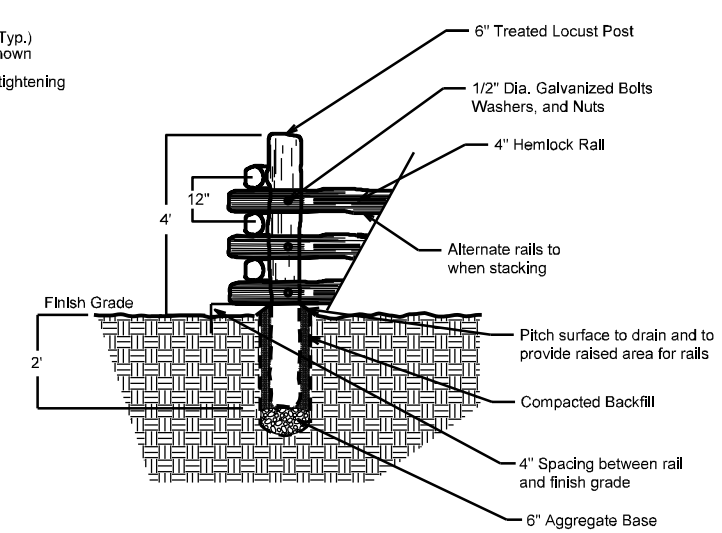

Cut-away End View
SCALE: NTS

NCDOT - ROADSIDE ENVIRONMENTAL UNIT
LANDSCAPE DESIGN & DEVELOPMENT
1557 MAIL SERVICE CENTER RALEIGH NC 27699-1557
PH: 919-707-2920 FAX: 919-715-2554
HTTP://WWW.NCDOT.ORG/DOH/OPERATIONS/DP_CHIEF_ENG/ROADSIDE/

I-40 MEDIAN & INTERCHANGE PLANTINGS AT BURKE COUNTY LINE AND EXIT 119, HENRY RIVER ROAD AND CENTER STREET AT HILDEBRAN

Connie Morgan
REU ENGINEER

SHEET DESCRIPTION:
LANDSCAPE DEVELOPMENT
DETAILS

PRELIMINARY DESIGN DATE : FEB. 11, 2013
FINAL DESIGN DATE :
PROJECT: I-40 MEDIAN AT BURKE & HILDEBRAN INTERCHANGE
DIVISION AND COUNTY: DIVISION 13 - BURKE COUNTY

SHEET NO : 2
TOTAL SHEET NO : 5

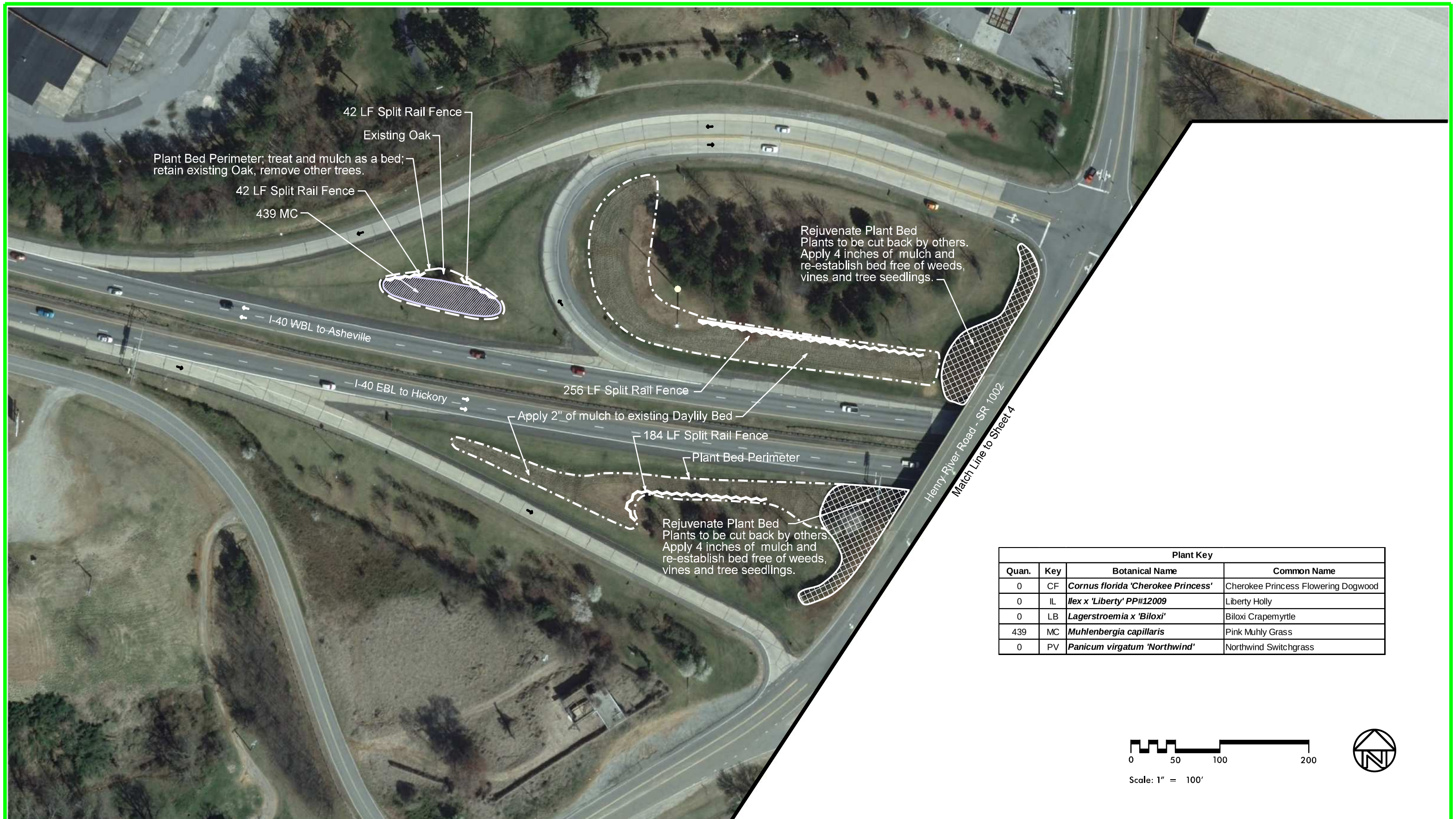

Plant Key			
Quan.	Key	Botanical Name	Common Name
0	CF	***Cornus florida 'Cherokee Princess'***	Cherokee Princess Flowering Dogwood
0	IL	***Ilex x 'Liberty' PP#12009***	Liberty Holly
0	LB	***Lagerstroemia x 'Biloxi'***	Biloxi Crapemyrtle
439	MC	***Muhlenbergia capillaris***	Pink Muhly Grass
0	PV	***Panicum virgatum 'Northwind'***	Northwind Switchgrass

NCDOT - ROADSIDE ENVIRONMENTAL UNIT
LANDSCAPE DESIGN & DEVELOPMENT
1557 MAIL SERVICE CENTER RALEIGH NC 27699-1557
PH: 919-707-2920 FAX: 919-715-2554
HTTP://WWW.NCDOT.ORG/DOH/OPERATIONS/DP_CHIEF_ENG/ROADSIDE/

I-40 Median & Interchange Plantings At Burke County Line and Exit 119, Henry River Road and Center Street at Hildebran

Connie Morgan
REU ENGINEER

SHEET DESCRIPTION:
LANDSCAPE DEVELOPMENT
PLANTING PLAN

PRELIMINARY DESIGN DATE : FINAL DESIGN DATE :
FEB. 11, 2013
PROJECT: I-40 MEDIAN AT BURKE & HILDEBRAN INTERCHANGE
DIVISION AND COUNTY:
DIVISION 13 - BURKE COUNTY

SHEET NO : 3
TOTAL SHEET NO : 6

Plant Key			
Quan.	Key	Botanical Name	Common Name
13	CF	*Cornus florida 'Cherokee Princess'*	Cherokee Princess Flowering Dogwood
9	IL	*Ilex x 'Liberty' PP#12009*	Liberty Holly
1	LB	*Lagerstroemia x 'Biloxi'*	Biloxi Crapemyrtle
832	MC	*Muhlenbergia capillaris*	Pink Muhly Grass
0	PV	*Panicum virgatum 'Northwind'*	Northwind Switchgrass

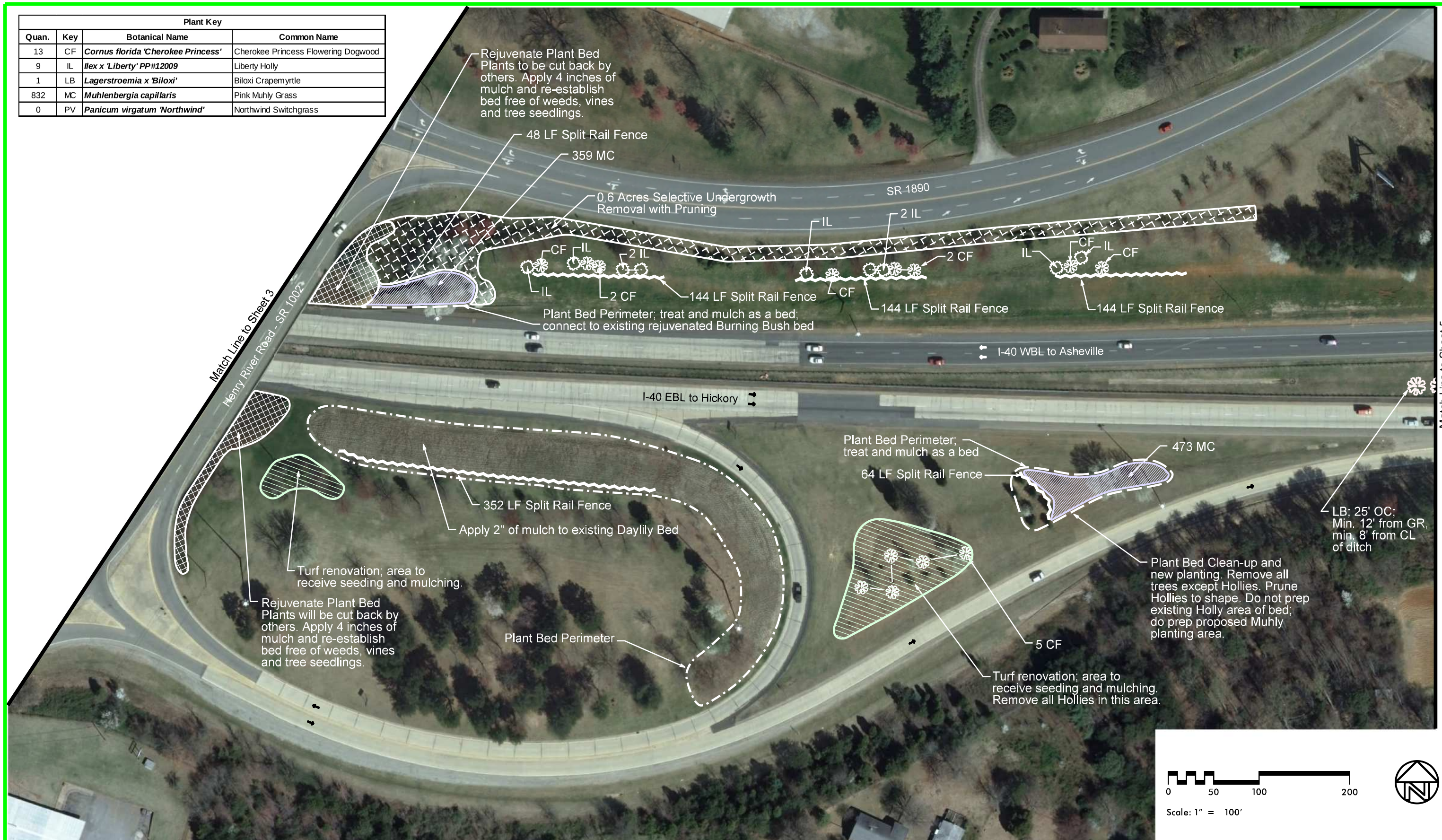

NCDOT - ROADSIDE ENVIRONMENTAL UNIT
LANDSCAPE DESIGN & DEVELOPMENT
1557 MAIL SERVICE CENTER RALEIGH NC 27699-1557
PH: 919-707-2920 FAX: 919-715-2554
HTTP://WWW.NCDOT.ORG/DOH/OPERATIONS/DP_CHIEF_ENG/ROADSIDE/

I-40 Median & Interchange Plantings At Burke County Line and Exit 119, Henry River Road and Center Street at Hildebran

Connie Morgan
REU ENGINEER

SHEET DESCRIPTION:
LANDSCAPE DEVELOPMENT
PLANTING PLAN

PRELIMINARY DESIGN DATE: FEB. 11, 2013
FINAL DESIGN DATE:
PROJECT: I-40 MEDIAN AT BURKE & HILDEBRAN INTERCHANGE
DIVISION AND COUNTY: DIVISION 13 - BURKE COUNTY

SHEET NO: 4
TOTAL SHEET NO: 6

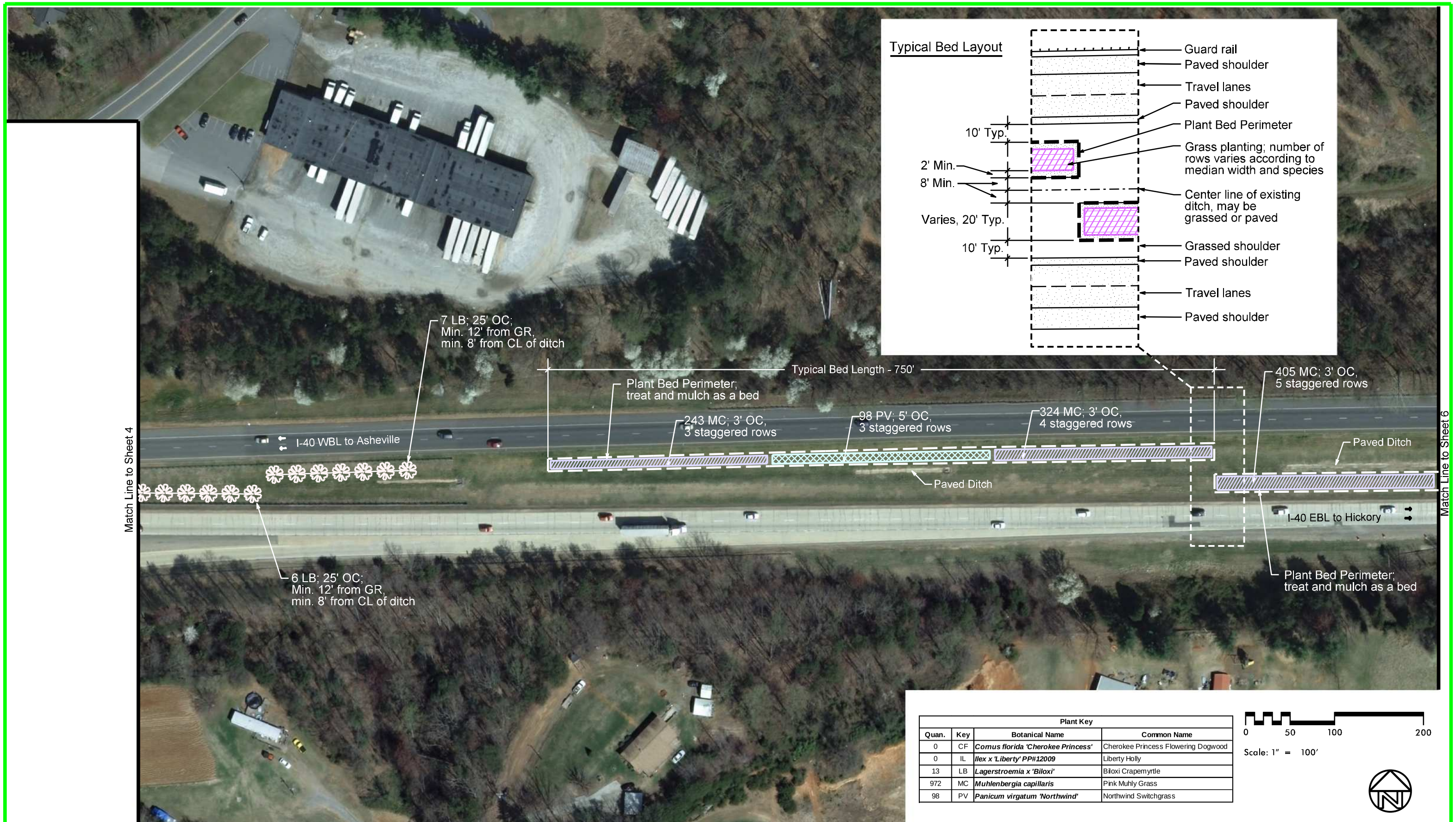

Plant Key			
Quan.	Key	Botanical Name	Common Name
0	CF	*Cornus florida 'Cherokee Princess'*	Cherokee Princess Flowering Dogwood
0	IL	*Ilex x 'Liberty' PP#12009*	Liberty Holly
13	LB	*Lagerstroemia x 'Biloxi'*	Biloxi Crapemyrtle
972	MC	*Muhlenbergia capillaris*	Pink Muhly Grass
98	PV	*Panicum virgatum 'Northwind'*	Northwind Switchgrass

0 50 100 200

Scale: 1" = 100'

NCDOT - ROADSIDE ENVIRONMENTAL UNIT
LANDSCAPE DESIGN & DEVELOPMENT
1557 MAIL SERVICE CENTER RALEIGH NC 27699-1557
PH: 919-707-2920 FAX: 919-715-2554
HTTP://WWW.NCDOT.ORG/DOH/OPERATIONS/DP_CHIEF_ENG/ROADSIDE/

I-40 Median & Interchange Plantings At Burke County Line and Exit 119, Henry River Road and Center Street at Hildebran

Connie Morgan
REU ENGINEER

SHEET DESCRIPTION:
LANDSCAPE DEVELOPMENT
PLANTING PLAN

PRELIMINARY DESIGN DATE: FEB. 11, 2013
FINAL DESIGN DATE:
PROJECT: I-40 MEDIAN AT BURKE & HILDEBRAN INTERCHANGE
DIVISION AND COUNTY: DIVISION 13 - BURKE COUNTY

SHEET NO: 5
TOTAL SHEET NO: 6

Plant Key			
Quan.	Key	Botanical Name	Common Name
0	CF	*Cornus florida 'Cherokee Princess'*	Cherokee Princess Flowering Dogwood
0	IL	*Ilex x 'Liberty' PP#12009*	Liberty Holly
0	LB	*Lagerstroemia x 'Biloxi'*	Biloxi Crapemyrtle
1,215	MC	*Muhlenbergia capillaris*	Pink Muhly Grass
294	PV	*Panicum virgatum 'Northwind'*	Northwind Switchgrass

0 50 100 200

Scale: 1" = 100'

NCDOT - ROADSIDE ENVIRONMENTAL UNIT
LANDSCAPE DESIGN & DEVELOPMENT
1557 MAIL SERVICE CENTER RALEIGH NC 27699-1557
PH: 919-707-2920 FAX: 919-715-2554
HTTP://WWW.NCDOT.ORG/DOH/OPERATIONS/DP_CHIEF_ENG/ROADSIDE/

I-40 Median & Interchange Plantings At Burke County Line and Exit 119, Henry River Road and Center Street at Hildebran

Connie Morgan
REU ENGINEER

SHEET DESCRIPTION:
LANDSCAPE DEVELOPMENT
PLANTING PLAN

PRELIMINARY DESIGN DATE : FINAL DESIGN DATE :
FEB. 11, 2013

PROJECT: I-40 MEDIAN AT BURKE & HILDEBRAN INTERCHANGE

DIVISION AND COUNTY:
DIVISION 13 - BURKE COUNTY

SHEET NO : 6

TOTAL SHEET NO : 6