DocuSign Envelope ID: 5F0DD3AF-3930-4194-9524-8F9362C614AF

STATE	PROJECT NO.	SHEET NO.	TOTAL SHTS.
N.C.	17BP.14.R.42	PMP-2	2

0′ 20′ 40′

APPROVED: _____

DATE: _____

SEAL

NORTH CAROLINA PROFESSIONAL SEAL 16003 ENGINEER DEAN D. HARTFIELD

Dean D. Hartfield by:

10/28/2014

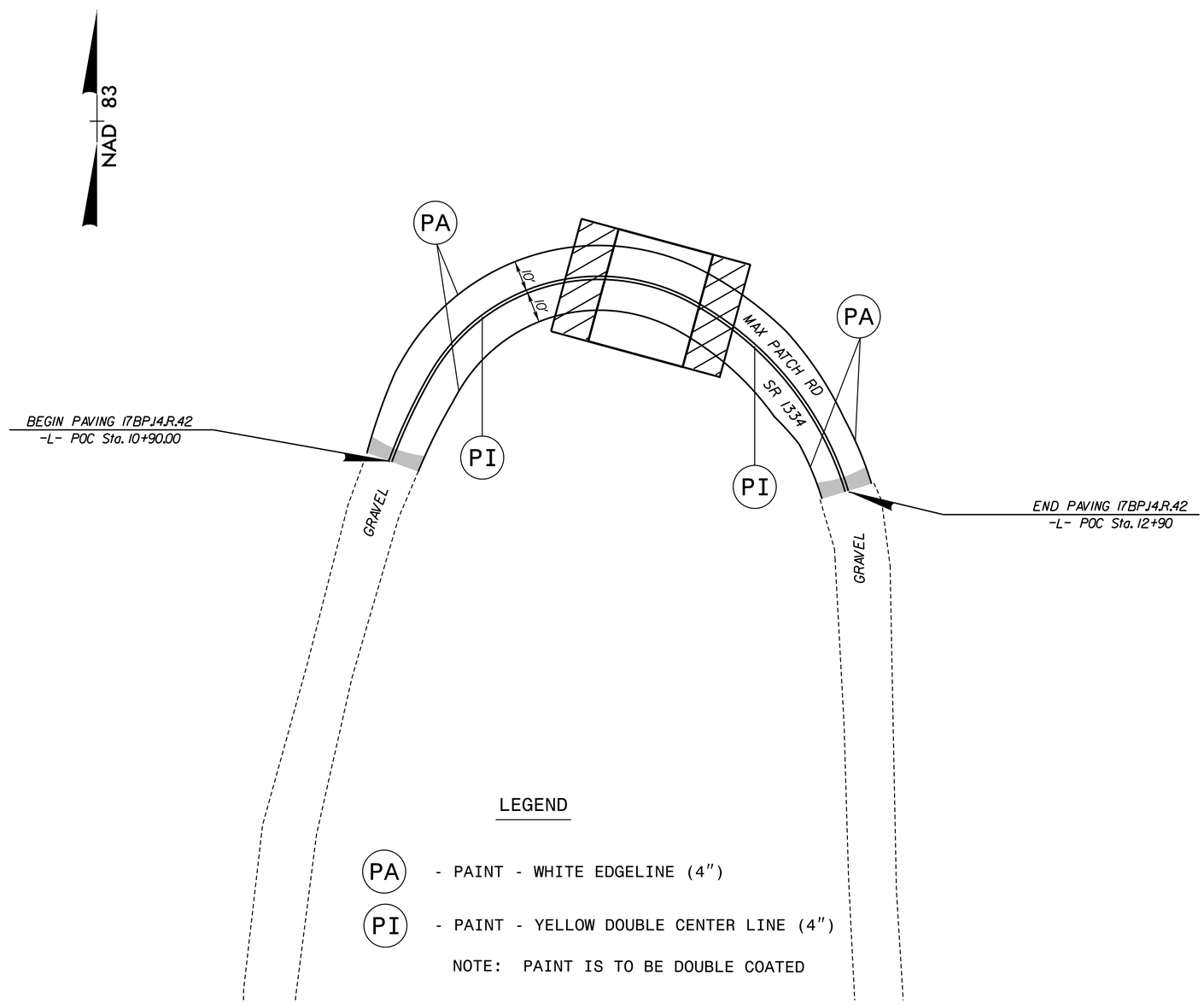

LEGEND

PA - PAINT - WHITE EDGELINE (4″)

PI - PAINT - YELLOW DOUBLE CENTER LINE (4″)

NOTE: PAINT IS TO BE DOUBLE COATED

PAVEMENT MARKING DETAIL
MAX PATCH RD.

THE LOUIS BERGER GROUP, Inc.
1001 Wade Avenue, Suite 400
Raleigh, NC 27605-3322

ROADWAY PLANS

10/28/2014 12:46:50 PM
G:\OR Projects\OR1100 - NCDOT Group W\430214\Roadway\Proj\430214_RDY_07_PMP_02.dgn
1100_rdy_pmp.tbl