DocuSign Envelope ID: A5CF63EA-A5C2-4AFD-9C68-A60A3BA06728

NOTES

STIRRUPS IN CAP MAY BE SHIFTED AS NECESSARY TO CLEAR DOWELS.

THE CONCRETE IN THE SHADED AREA OFTHE WING SHALL BE POURED AFTER THE VERTICAL CONCRETE BARRIER RAIL IS CAST IF SLIP FORMING IS USED.

FOR PILE SPLICE DETAILS, SEE SHEET 3 OF 3.

FOR WING DETAILS, SEE SHEET 2 OF 3.

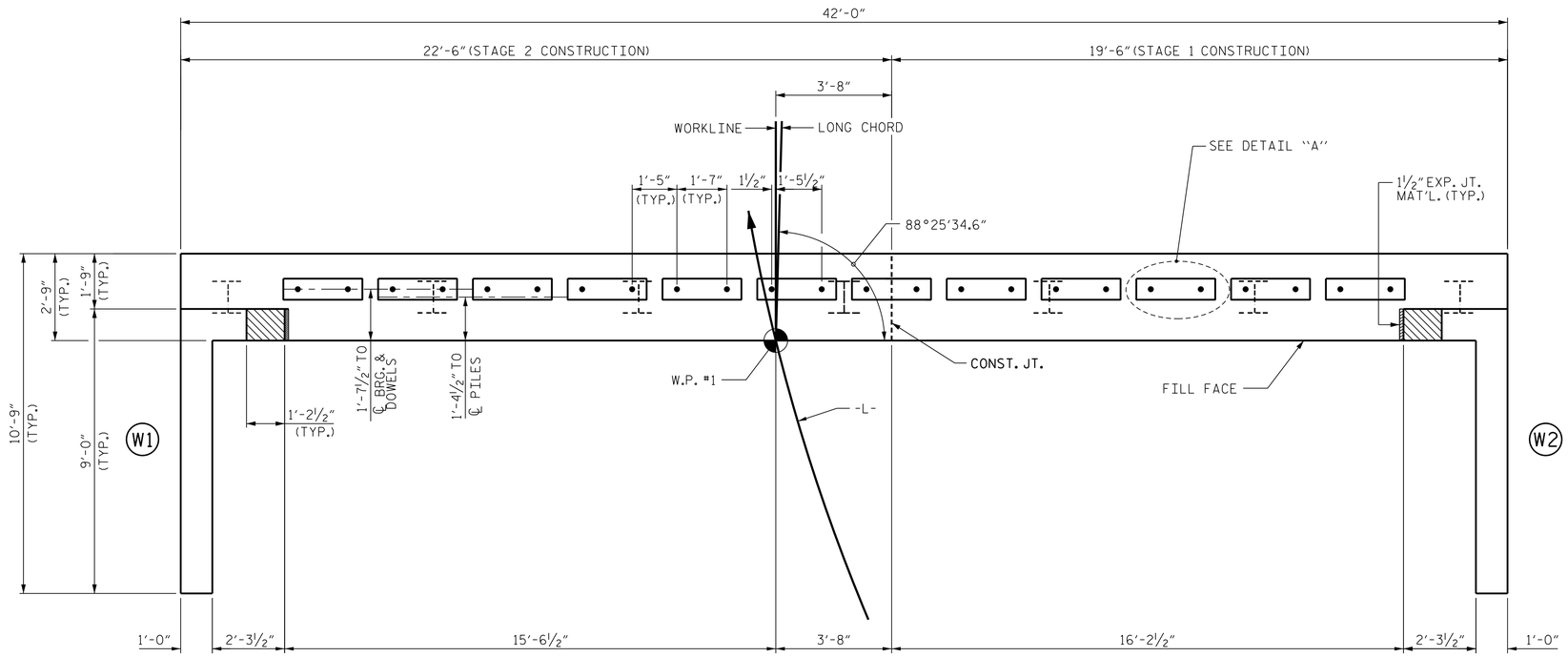

PLAN

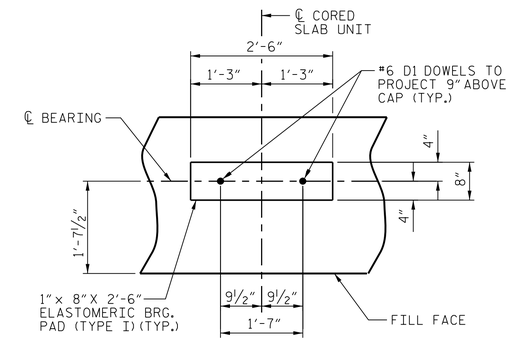

DETAIL "A"

TOP OF PILE ELEVATIONS	
1	3206.362
2	3206.013
3	3205.663
4	3205.314
5	3204.964
6	3204.614
7	3204.265

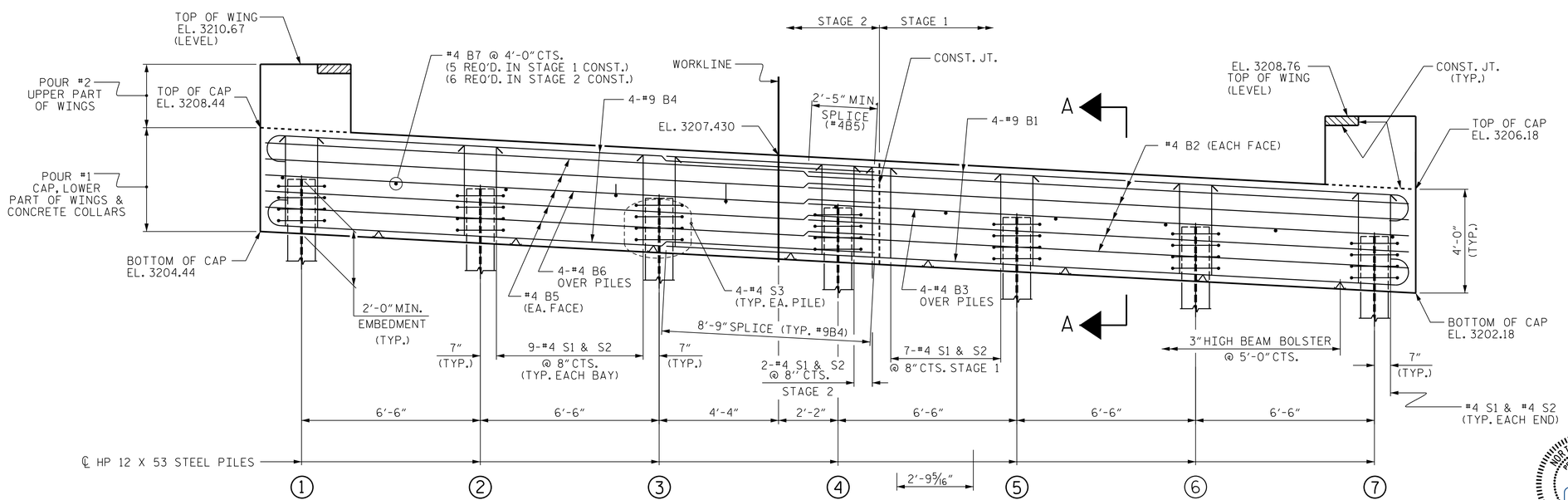

ELEVATION

WINGS NOT SHOWN FOR CLARITY.
FOR SECTION A-A, SEE SHEET 3 OF 3.
CONCRETE COLLARS FOR STEEL PILES NOT SHOWN IN PLAN AND ELEVATION VIEWS FOR CLARITY.
SEE "CORROSION PROTECTION FOR STEEL PILES DETAIL", SHEET 3 OF 3.

PROJECT NO. 17BP.14.R.42
HAYWOOD COUNTY
STATION: 12+00.00 -L-

SHEET 1 OF 3

STATE OF NORTH CAROLINA
DEPARTMENT OF TRANSPORTATION
RALEIGH

SUBSTRUCTURE
END BENT 1

NORTH CAROLINA PROFESSIONAL SEAL 14047 ENGINEER STEPHEN D. COOK
10/28/2014

THE LOUIS BERGER GROUP, Inc.
1001 Wade Avenue, Suite 400
Raleigh, NC 27605-3322
NC COA No. F-0840

REVISIONS								SHEET NO.
NO.	BY:	DATE:	NO.	BY:	DATE:			S-14
1			3					TOTAL SHEETS
2			4					21

ASSEMBLED BY :	J. MYA	DATE : JULY 2012
CHECKED BY :	M. PAYNE	DATE : JULY 2012
DRAWN BY :	WJH	12/11
CHECKED BY :	AAC	12/11

G:\OR Projects\OR1100 - NCDOT Group W\430214\Structures\430214_SD _EB101.dgn
10/28/2014 1100_PDF_full.pltcfg 1100_str.tbl

STD. NO. EB_36_90S4