DocuSign Envelope ID: A5CF63EA-A5C2-4AFD-9C68-A60A3BA06728

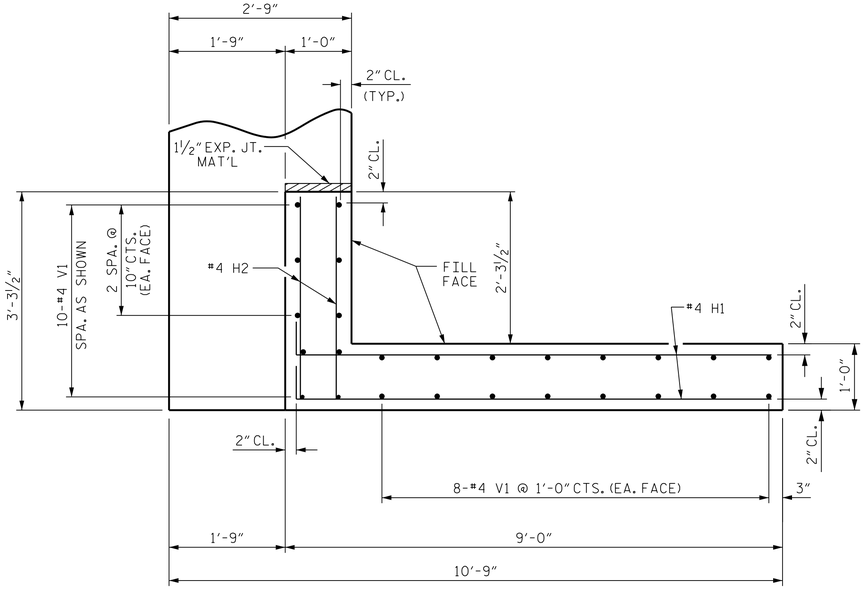

PLAN OF WING (W1)

(STAGE 2)

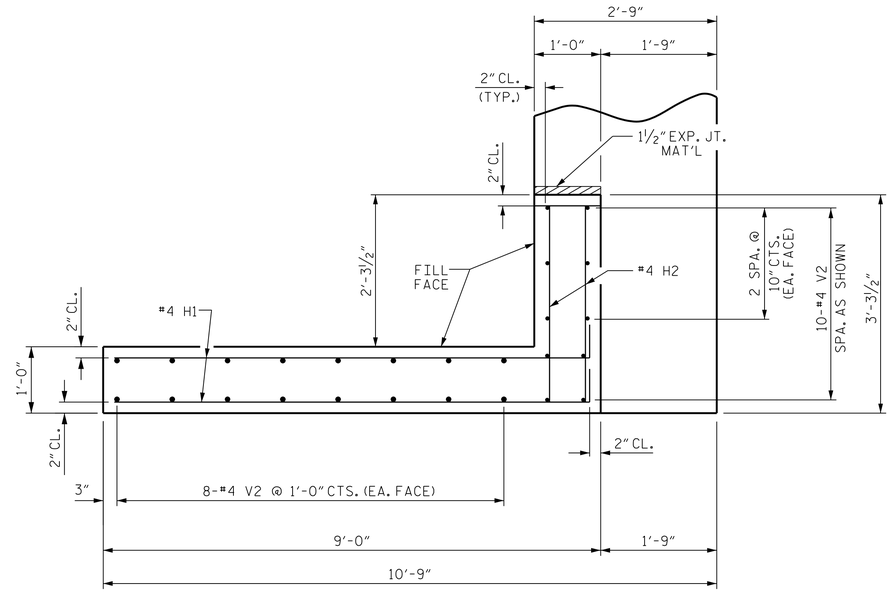

PLAN OF WING (W2)

(STAGE 1)

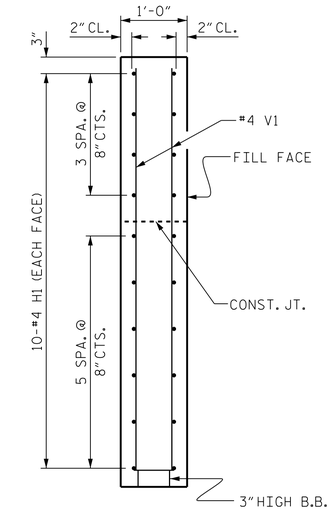

SECTION X-X

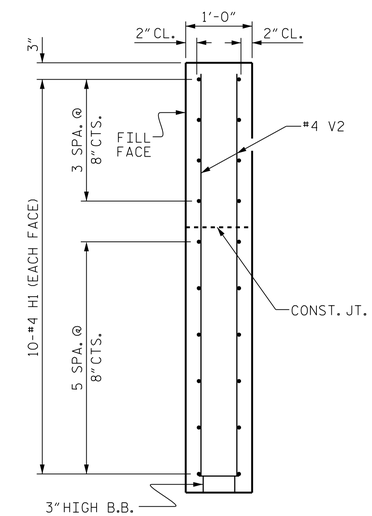

SECTION Y-Y

X

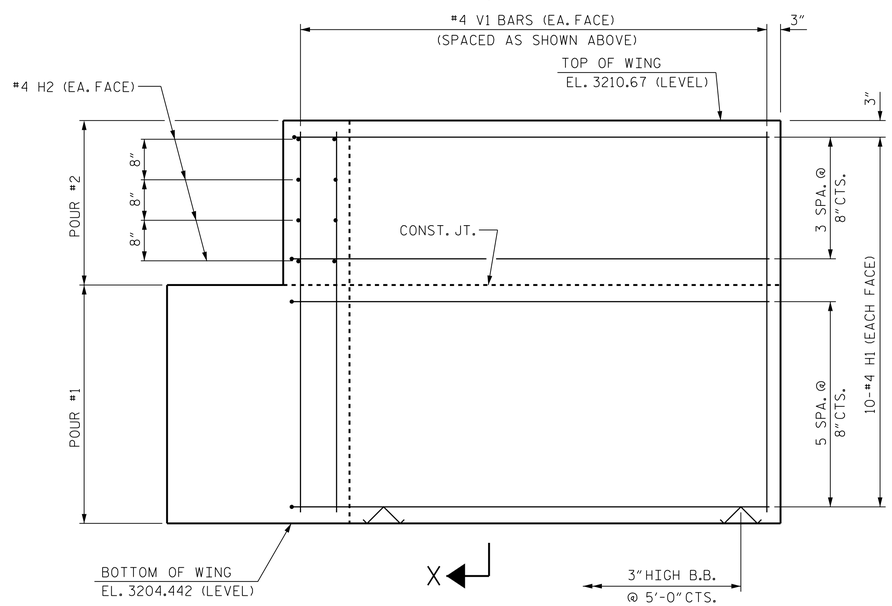

ELEVATION OF WING (W1)

(STAGE 2)

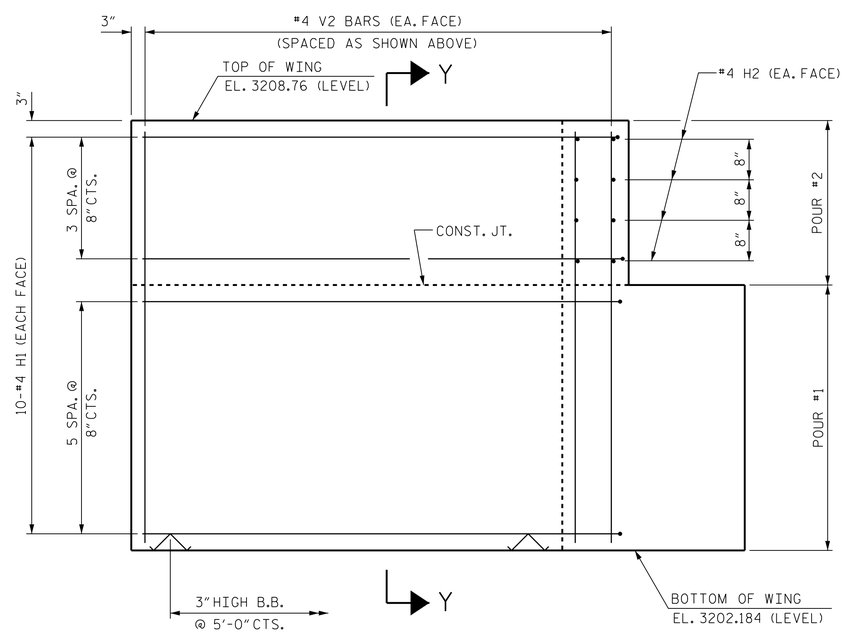

ELEVATION OF WING (W2)

(STAGE 1)

WING DETAILS

PROJECT NO. 17BP.14.R.42

HAYWOOD COUNTY

STATION: 12+00.00 -L-

SHEET 2 OF 3

STATE OF NORTH CAROLINA
DEPARTMENT OF TRANSPORTATION
RALEIGH

SUBSTRUCTURE
END BENT 1

NORTH CAROLINA PROFESSIONAL SEAL 14047 ENGINEER STEPHEN D. COOK
10/28/2014

THE LOUIS BERGER GROUP, Inc.
1001 Wade Avenue, Suite 400
Raleigh, NC 27605-3322
NC COA No. F-0840

REVISIONS							
NO.	BY:	DATE:	NO.	BY:	DATE:		
1			3				
2			4				

SHEET NO. S-15

TOTAL SHEETS 21

ASSEMBLED BY : J. MYA	DATE : 7-2012	
CHECKED BY : M. PAYNE	DATE : 8-2012	
DRAWN BY : WJH 12/11		
CHECKED BY : AAC 12/11		

G:\DR Projects\DR1100 - NCDOT Group W\430214\Structures\430214_SD _EB102.dgn
10/28/2014 1100_PDF_full.pltcfg 1100_str.tbl

STD. NO. EB_36_90S4