DocuSign Envelope ID: A5CF63EA-A5C2-4AFD-9C68-A60A3BA06728

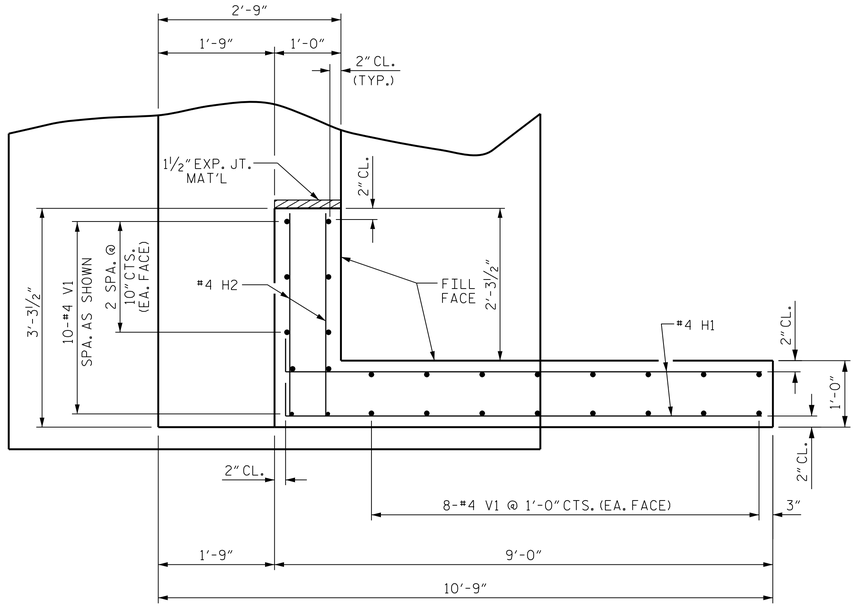

PLAN OF WING (W4)

(STAGE 1 CONSTRUCTION)

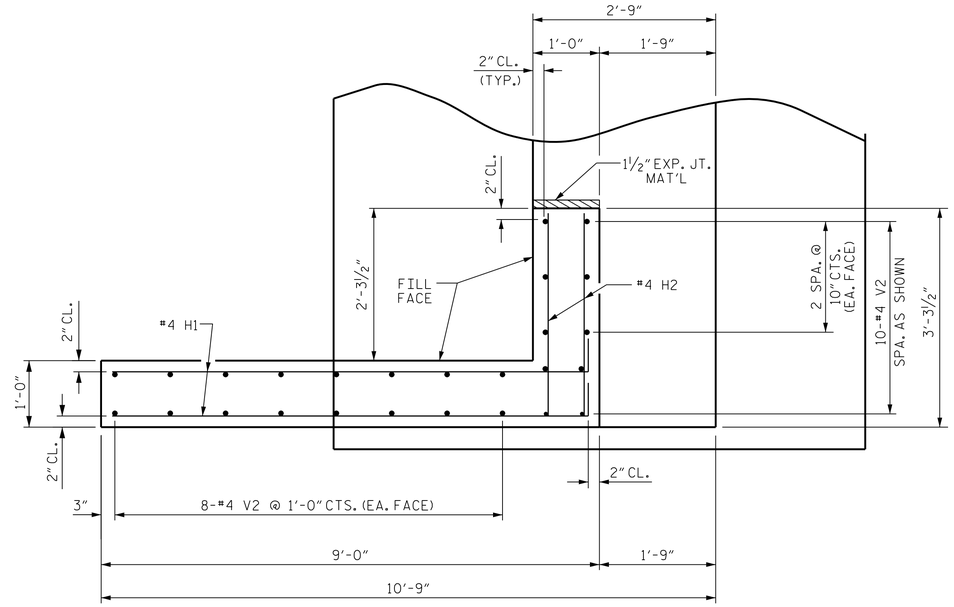

PLAN OF WING (W3)

(STAGE 2 CONSTRUCTION)

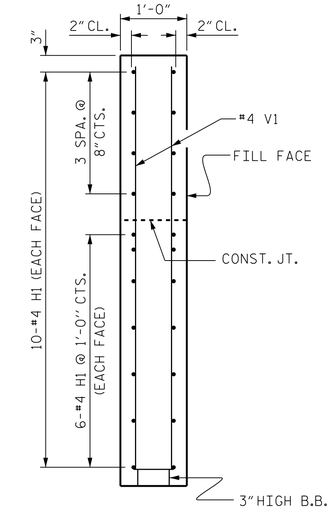

SECTION X-X

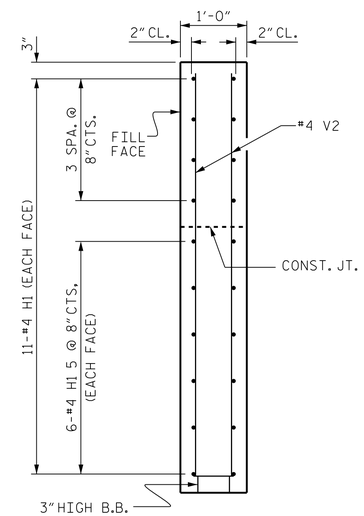

SECTION Y-Y

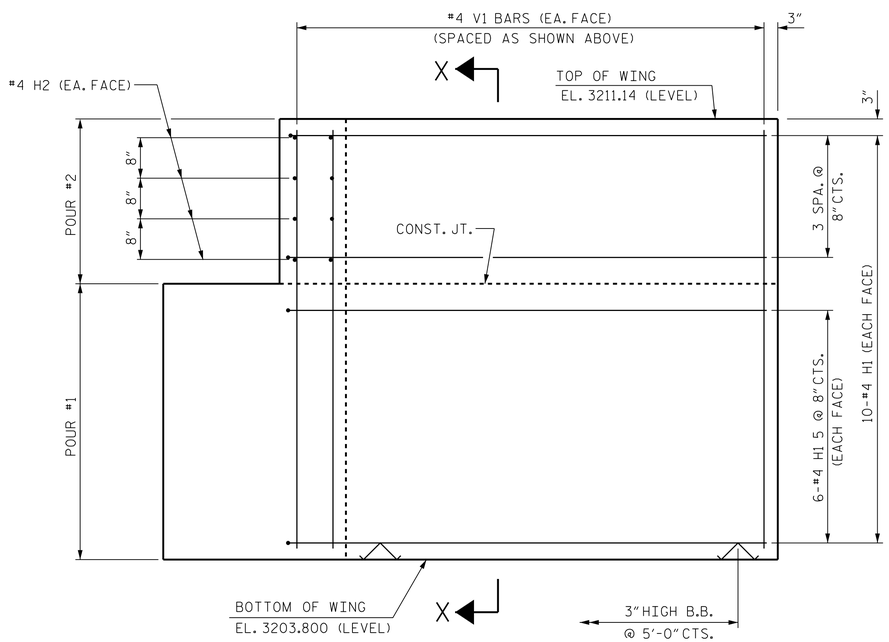

ELEVATION OF WING (W4)

(STAGE 1 CONSTRUCTION)

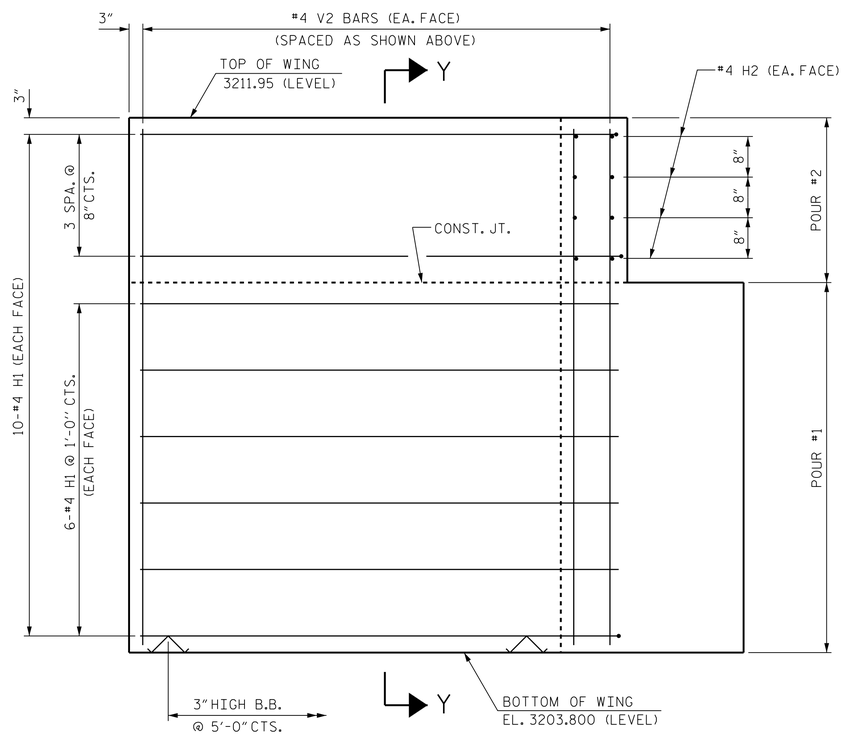

ELEVATION OF WING (W3)

(STAGE 2 CONSTRUCTION)

WING DETAILS

PROJECT NO. 17BP.14.R.42

HAYWOOD COUNTY

STATION: 12+00.00 -L-

SHEET 2 OF 3

STATE OF NORTH CAROLINA
DEPARTMENT OF TRANSPORTATION
RALEIGH

SUBSTRUCTURE
END BENT 2

NORTH CAROLINA PROFESSIONAL SEAL 14027 ENGINEER STEPHEN D. CRONE
10/28/2014

ASSEMBLED BY :	J. MYA	DATE : JULY 2012	
CHECKED BY :	M. PAYNE	DATE : AUG 2012	
DRAWN BY : WJH	12/11		
CHECKED BY : AAC	12/11		

THE LOUIS BERGER GROUP, Inc.
1001 Wade Avenue, Suite 400
Raleigh, NC 27605-3322
NC COA No. F-0840

REVISIONS							SHEET NO.
NO.	BY:	DATE:	NO.	BY:	DATE:		S-18
1			3				TOTAL SHEETS
2			4				21

STD. NO. EB_36_90S4

G:\OR Projects\OR1100 - NCDOT Group W\430214\Structures\430214_SD _EB202.dgn
10/28/2014 1100_PDF_full.pltcfg 1100_str.tbl