DocuSign Envelope ID: A5CF63EA-A5C2-4AFD-9C68-A60A3BA06728

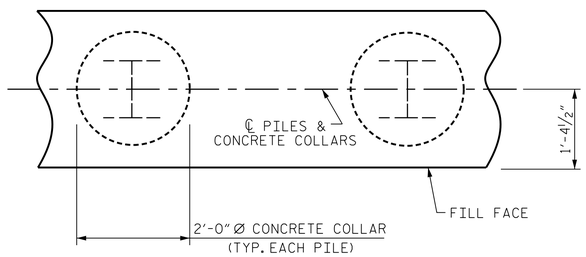

PLAN

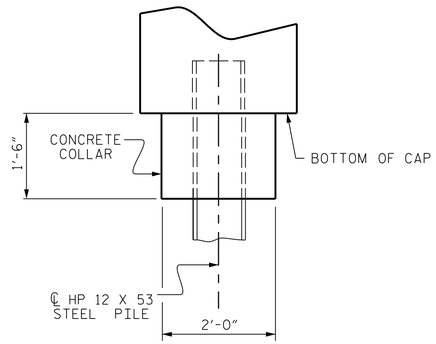

ELEVATION

CORROSION PROTECTION FOR STEEL PILES DETAIL

BAR TYPES

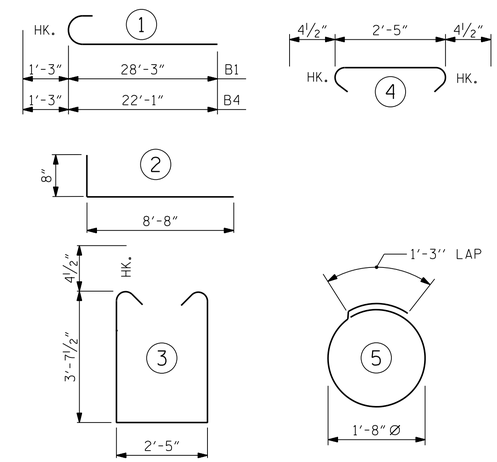

ALL BAR DIMENSIONS ARE OUT TO OUT.

END BENT No. 1 (STAGE 1)	
HP 12 X 53 STEEL PILES	
NO: 3	LIN. FT.= 45.0

END BENT No. 1 (STAGE 2)	
HP 12 X 53 STEEL PILES	
NO: 4	LIN. FT.= 60.0

BILL OF MATERIAL - END BENT 1

STAGE 1

BAR	NO.	SIZE	TYPE	LENGTH	WEIGHT
B1	8	9	1	29'-6"	802
B2	10	4	STR	25'-8"	171
B3	4	4	STR	25'-8"	69
B7	5	4	STR	2'-5"	8
D1	11	6	STR	1'-6"	25
H1	20	4	2	9'-4"	125
H2	8	4	STR	2'-11"	16
S1	26	4	3	10'-5"	181
S2	26	4	4	3'-2"	55
S3	12	4	5	6'-6"	52
V2	26	4	STR	6'-3"	109

REINFORCING STEEL 1613 LBS.

CLASS A CONCRETE BREAKDOWN

POUR #1	CAP, LOWER PART OF WINGS & COLLARS	9.7 C.Y.
POUR #2	UPPER PART OF WINGS	1.0 C.Y.
TOTAL CLASS A CONCRETE		10.7 C.Y.

STAGE 2

BAR	NO.	SIZE	TYPE	LENGTH	WEIGHT
B4	8	9	1	23'-4"	635
B5	10	4	STR	22'-1"	148
B6	4	4	STR	22'-1"	59
B7	6	4	STR	2'-5"	10
D1	13	6	STR	1'-6"	29
H1	20	4	2	9'-4"	125
H2	8	4	STR	2'-11"	16
S1	30	4	3	10'-5"	209
S2	30	4	4	3'-2"	63
S3	16	4	5	6'-6"	69
V1	26	4	STR	5'-10"	101

REINFORCING STEEL 1464 LBS.

CLASS A CONCRETE BREAKDOWN

POUR #1	CAP, LOWER PART OF WINGS & COLLARS	10.8 C.Y.
POUR #2	UPPER PART OF WINGS	1.0 C.Y.
TOTAL CLASS A CONCRETE		11.8 C.Y.

TOTAL BILL OF MATERIAL

REINFORCING STEEL	3077 LBS.
CLASS A CONCRETE TOTAL	21.4 C.Y.

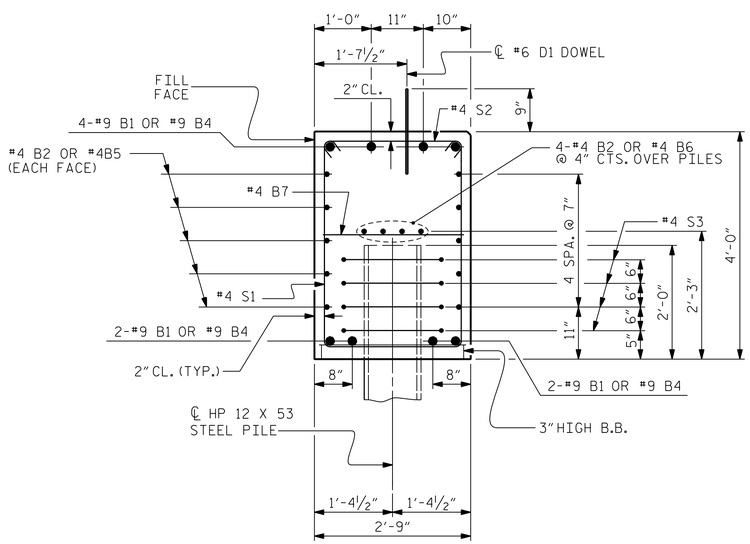

SECTION A-A

(CONCRETE COLLAR NOT SHOWN FOR CLARITY.
SEE "CORROSION PROTECTION FOR STEEL PILES DETAIL.")

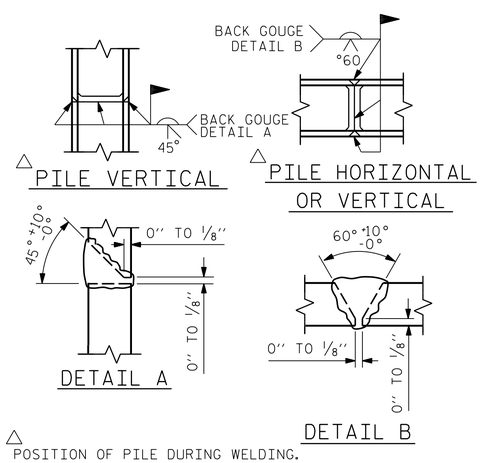

△ POSITION OF PILE DURING WELDING.

PILE SPLICE DETAILS

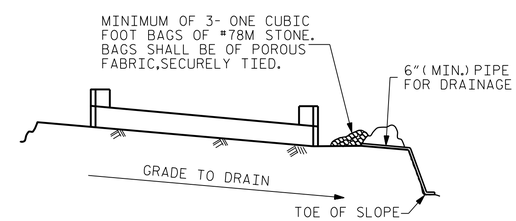

BAGGED STONE AND PIPE SHALL BE PLACED IMMEDIATELY AFTER COMPLETION OF END BENT EXCAVATION. PIPE MAY BE EITHER CONCRETE, CORRUGATED STEEL, CORRUGATED ALUMINUM ALLOY, OR CORRUGATED PLASTIC. PERFORATED PIPE WILL NOT BE ALLOWED.

BAGGED STONE SHALL REMAIN IN PLACE UNTIL THE ENGINEER DIRECTS THAT IT BE REMOVED. THE CONTRACTOR SHALL REMOVE AND DISPOSE OF SILT ACCUMULATIONS AT BAGGED STONE WHEN SO DIRECTED BY THE ENGINEER. BAGS SHALL BE REMOVED AND REPLACED WHENEVER THE ENGINEER DETERMINES THAT THEY HAVE DETERIORATED AND LOST THEIR EFFECTIVENESS.

NO SEPARATE PAYMENT WILL BE MADE FOR THIS WORK AND THE ENTIRE COST OF THIS WORK SHALL BE INCLUDED IN THE UNIT CONTRACT PRICE BID FOR THE SEVERAL PAY ITEMS.

TEMPORARY DRAINAGE AT END BENT

PROJECT NO. 17BP.14.R.42
HAYWOOD COUNTY
STATION: 12+00.00 -L-

SHEET 3 OF 3

STATE OF NORTH CAROLINA
DEPARTMENT OF TRANSPORTATION
RALEIGH

SUBSTRUCTURE
END BENT 1

NORTH CAROLINA PROFESSIONAL ENGINEER SEAL 14047 STEPHEN D. COOK
10/28/2014

THE LOUIS BERGER GROUP, Inc.
1001 Wade Avenue, Suite 400
Raleigh, NC 27605-3322
NC COA No. F-0840

REVISIONS								SHEET NO.
NO.	BY:	DATE:	NO.	BY:	DATE:			S-16
1			3					TOTAL SHEETS
2			4					21

ASSEMBLED BY :	J. MYA	DATE :	JULY 2012
CHECKED BY :	M. PAYNE	DATE :	AUG 2012
DRAWN BY :	WJH 12/11		
CHECKED BY :	AAC 12/11		

STD. NO. EB_36_90S4

G:\OR Projects\OR1100 - NCDOT Group W\430214\Structures\430214_SD _EB103.dgn
10/28/2014 1100_PDF_full.pltcfg 1100_str.tbl