DocuSign Envelope ID: 5F0DD3AF-3930-4194-9524-8F9362C614AF

PROJECT REFERENCE NO.	SHEET NO.
17BP.14.R.42	2
R/W SHEET NO.	
ROADWAY DESIGN ENGINEER	PAVEMENT DESIGN ENGINEER

NORTH CAROLINA PROFESSIONAL SEAL 16003 Digitally signed by Dean D. Hawkins DEAN D. HAWKINS
REGISTERED ENGINEER
10/28/2014

N.T.S

* VARIES 10' TO 8' FROM -L- STA. 12+40.00 TO 12+70.00 LT
8' FROM -L- STA. 12+70.00 TO 12+90.00 LT
VARIES 13.8' TO 8' FROM -L- STA. 12+34.55 TO 12+70.00 RT
8' FROM -L- STA. 12+70.00 TO 12+90.00 RT

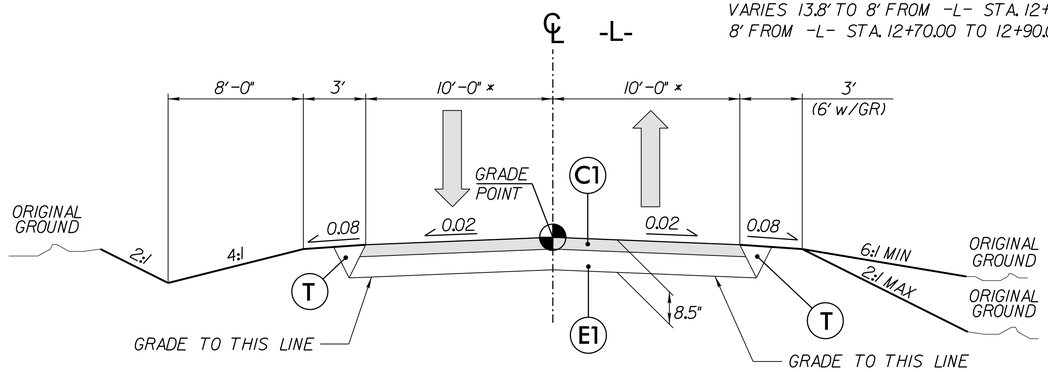

TYPICAL SECTION No. 1

-L- STA 10+90.00 TO -L- STA 11+84.37 (BEGIN BRIDGE)
-L- STA 12+14.95 (END BRIDGE) TO -L- STA 12+90.00

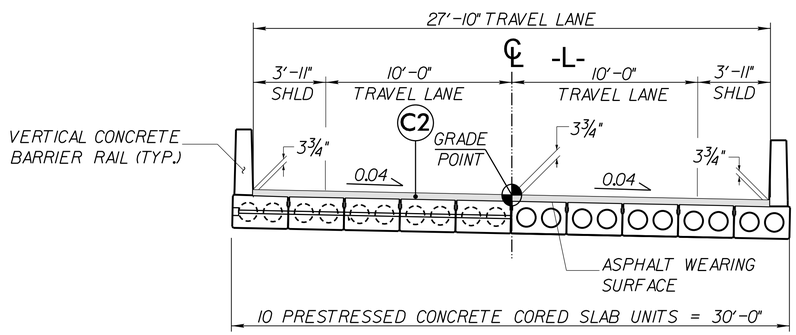

TYPICAL SECTION No. 2 ON STRUCTURE

-L- STA 11+84.37 (BEGIN BRIDGE) TO -L- STA 12+14.95 (END BRIDGE)

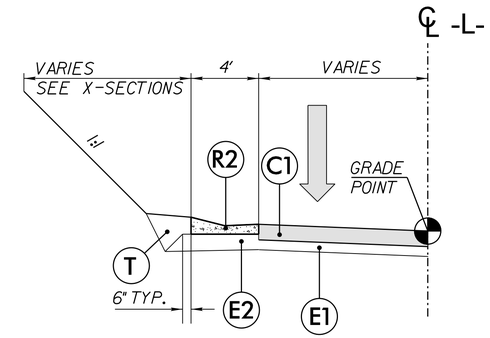

TYPICAL SECTION EXPRESSWAY GUTTER

-L- STA 10+90.00 TO -L- STA 11+48.54 (LEFT)
-L- STA 12+25.00 TO -DWY1- STA 10+26.00 (LEFT)

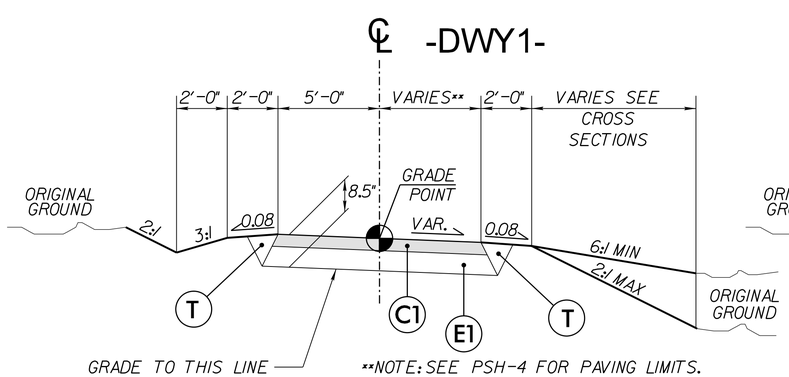

TYPICAL SECTION No. 3

-DWY1- STA 10+11.37 TO -DWY1- STA 10+80.00

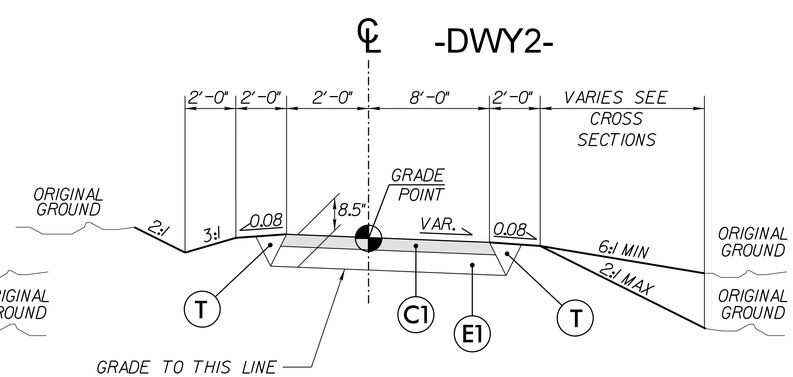

TYPICAL SECTION No. 4

-DWY2- STA 10+13.36 TO -DWY2- STA 10+50.00

Note: Pavement edge slopes are 1:1 unless shown otherwise.

PAVEMENT SCHEDULE	
ITEM	DESCRIPTION
C1	Prop. Approx 3.0" Asphalt Concrete Surface Course, Type S9.5B, at an Average Rate of 168 lbs. Per sq. yard in each of two layers.
C2	Prop. Var. Depth Asphalt Concrete Surface Course, Type S9.5B, at an Average Rate of 112 lbs. Per sq. yard Per 1" Depth, to be placed in layers not less than 1.5" or greater than 2" in depth.
E1	Prop. Approx 5.5" Asphalt Concrete Base Course, Type B25.0B, at an Average Rate of 627 lbs. Per sq. yard.
E2	Prop. Var. Depth Asphalt Concrete Base Course, Type B25.0B, at an Average Rate of 114 lbs. Per sq. yard Per 1" Depth, to be placed in layers not less than 4" or greater than 5.5" in depth.
R2	Expressway Gutter
T	Earth Material

REVISIONS

10/28/2014 12:45:53 PM
G:\GR Projects\GR1100 - NCDOT Group W\430214\Roadway\Proj\430214_RDY_02_TYP.dgn
G:\CADD\Plts\GR1100\1100_rdy.tbl