DocuSign Envelope ID: A5CF63EA-A5C2-4AFD-9C68-A60A3BA06728

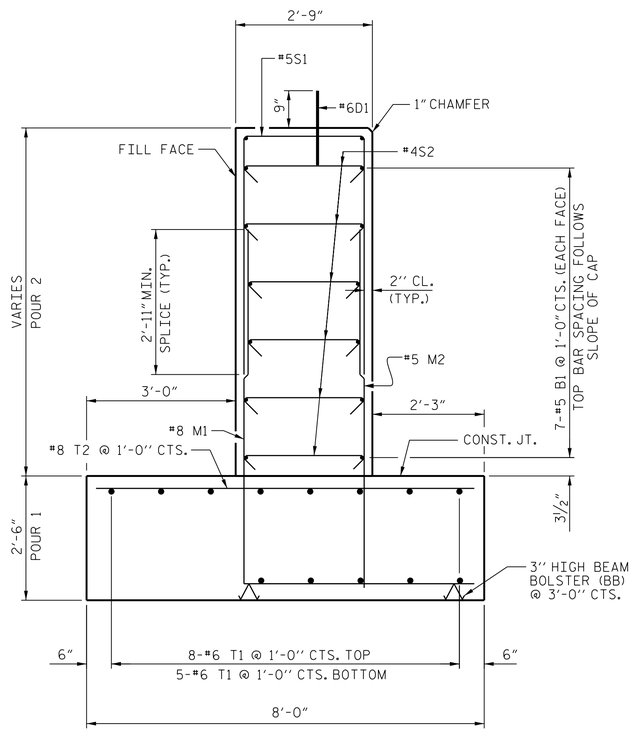

SECTION A-A

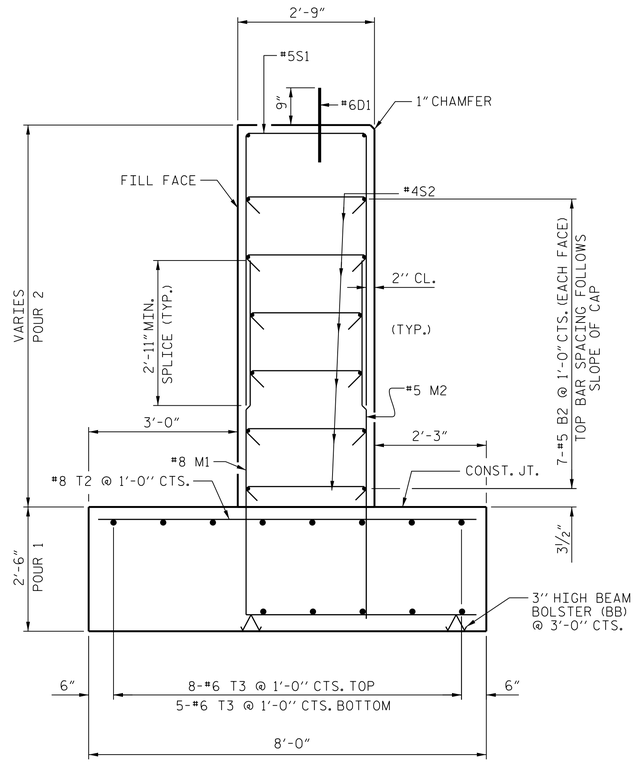

SECTION B-B

BAR TYPES

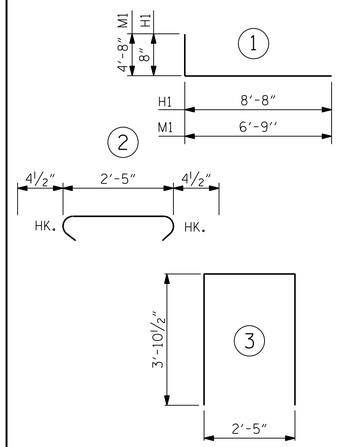

ALL BAR DIMENSIONS ARE OUT TO OUT.

BILL OF MATERIAL - END BENT 2

STAGE 1

BAR	NO.	SIZE	TYPE	LENGTH	WEIGHT
B1	14	5	STR	22'-6"	329
D1	11	6	STR	1'-6"	25
H1	20	4	1	9'-4"	125
H2	8	4	STR	2'-11"	16
M1	20	8	1	11'-5"	610
M2	20	5	STR	6'-10"	143
S1	20	5	3	10'-2"	212
S2	120	4	2	3'-2"	254
T1	13	8	STR	26'-9"	928
T2	20	8	STR	4'-3"	227
V1	26	4	STR	7'-0"	122

REINFORCING STEEL 2,991 LBS.

CLASS A CONCRETE BREAKDOWN

POUR #1 FOOTING	14.7 C.Y.
POUR #2 CAP & LOWER PART OF WING	11.7 C.Y.
POUR #3 UPPER PART OF WING	1.0 C.Y.
TOTAL CLASS A CONCRETE	27.4 C.Y.

STAGE 2

BAR	NO.	SIZE	TYPE	LENGTH	WEIGHT
B2	14	5	STR	22'-2"	324
D1	13	6	STR	1'-6"	29
H1	22	4	1	9'-4"	137
H2	8	4	STR	2'-11"	16
M1	22	8	1	11'-5"	671
M2	22	5	STR	6'-10"	157
S1	22	5	3	10'-2"	233
S2	132	4	2	3'-2"	279
T2	23	8	STR	4'-3"	261
T3	13	8	STR	22'-6"	781
V2	26	4	STR	7'-9"	135

REINFORCING STEEL 3,023 LBS.

CLASS A CONCRETE BREAKDOWN

POUR #1 FOOTINGS	16.9 C.Y.
POUR #2 STEM WALL & LOWER PART OF WING	14.7 C.Y.
POUR #3 UPPER PART OF WING	1.0 C.Y.
TOTAL CLASS A CONCRETE	32.6 C.Y.

TOTAL BILL OF MATERIAL

REINFORCING STEEL	6,014 LBS.
CLASS A CONCRETE TOTAL	60.0 C.Y.

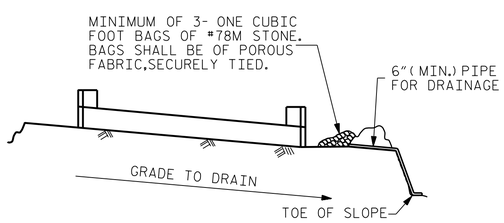

BAGGED STONE AND PIPE SHALL BE PLACED IMMEDIATELY AFTER COMPLETION OF END BENT EXCAVATION. PIPE MAY BE EITHER CONCRETE, CORRUGATED STEEL, CORRUGATED ALUMINUM ALLOY, OR CORRUGATED PLASTIC. PERFORATED PIPE WILL NOT BE ALLOWED.

BAGGED STONE SHALL REMAIN IN PLACE UNTIL THE ENGINEER DIRECTS THAT IT BE REMOVED. THE CONTRACTOR SHALL REMOVE AND DISPOSE OF SILT ACCUMULATIONS AT BAGGED STONE WHEN SO DIRECTED BY THE ENGINEER. BAGS SHALL BE REMOVED AND REPLACED WHENEVER THE ENGINEER DETERMINES THAT THEY HAVE DETERIORATED AND LOST THEIR EFFECTIVENESS.

NO SEPARATE PAYMENT WILL BE MADE FOR THIS WORK AND THE ENTIRE COST OF THIS WORK SHALL BE INCLUDED IN THE UNIT CONTRACT PRICE BID FOR THE SEVERAL PAY ITEMS.

TEMPORARY DRAINAGE AT END BENT

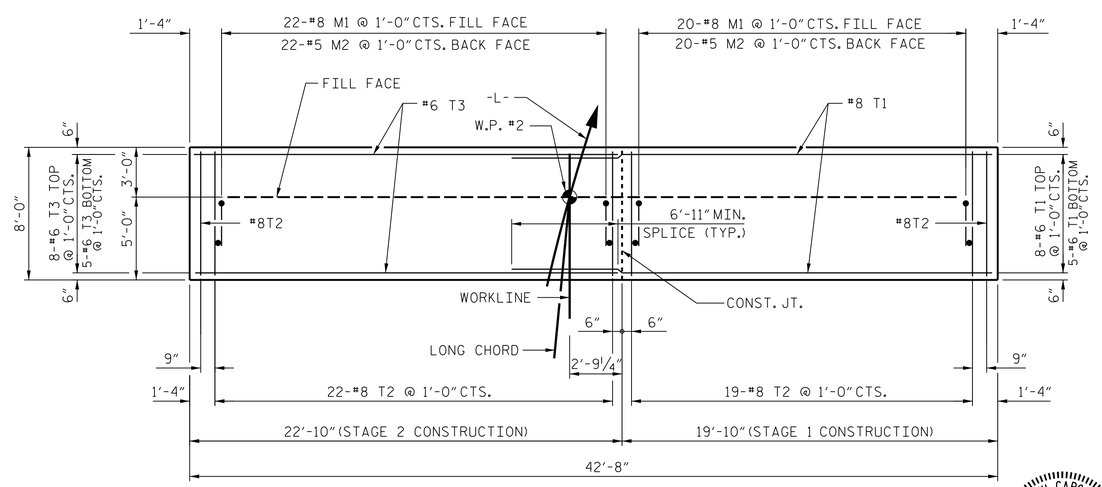

PLAN VIEW OF FOOTING LAYOUT

NORTH CAROLINA PROFESSIONAL SEAL 14024 ENGINEER STEPHEN D. CONE
10/28/2014

PROJECT NO. 17BP.14.R.42
HAYWOOD COUNTY
STATION: 12+00.00 -L-

SHEET 3 OF 3

STATE OF NORTH CAROLINA
DEPARTMENT OF TRANSPORTATION
RALEIGH

SUBSTRUCTURE
END BENT 2

ASSEMBLED BY : J. MYA	DATE : JULY 2012
CHECKED BY : M. PAYNE	DATE : JULY 2012
DRAWN BY : WJH 12/11	
CHECKED BY : AAC 12/11	

THE LOUIS BERGER GROUP, Inc.
1001 Wade Avenue, Suite 400
Raleigh, NC 27605-3322
NC COA No. F-0840

REVISIONS						
NO.	BY:	DATE:	NO.	BY:	DATE:	
1			3			
2			4			

SHEET NO. S-19
TOTAL SHEETS 21