DocuSign Envelope ID: A5CF63EA-A5C2-4AFD-9C68-A60A3BA06728

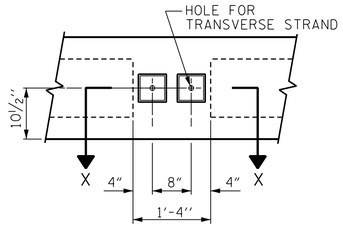

VIEW A-A

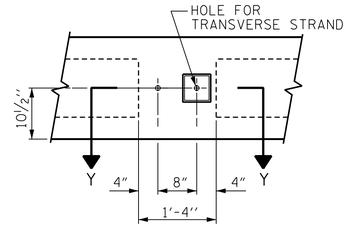

VIEW B-B

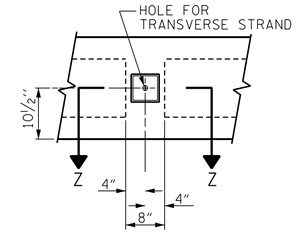

VIEW C-C

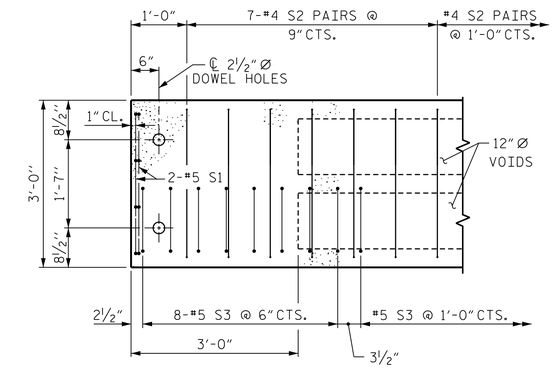

PART PLAN - EXTERIOR UNIT

NOTE: EXTERIOR UNIT SHOWN - INTERIOR UNIT SIMILAR EXCEPT OMIT #5 S3 BARS.

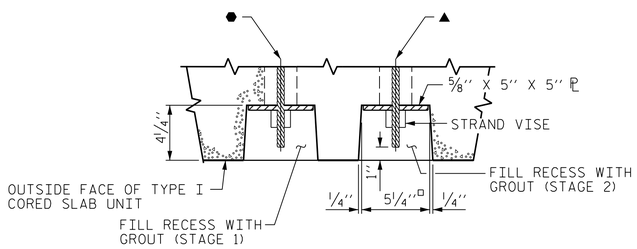

SECTION X-X

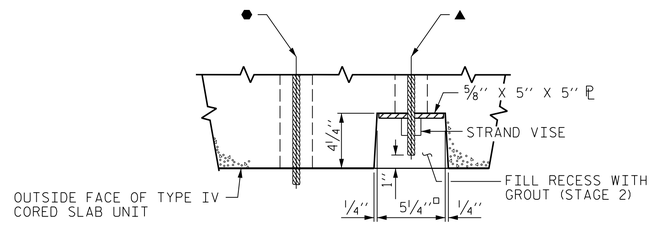

SECTION Y-Y

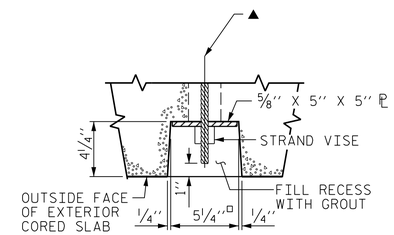

SECTION Z-Z

● ℄ 0.6'' Ø H.S. TRANSVERSE POST-TENSIONING STRAND SHEATHERD WITH A NON-CORROSIVE PIPE (TO BE TENSIONED DURING STAGE 1 CONST.)

▲ ℄ 0.6'' Ø H.S. TRANSVERSE POST-TENSIONING STRAND SHEATHERD WITH A NON-CORROSIVE PIPE (TO BE TENSIONED DURING STAGE 2 CONST.)

GROUTED RECESS AT END OF POST-TENSIONED STRAND OF CORED SLABS

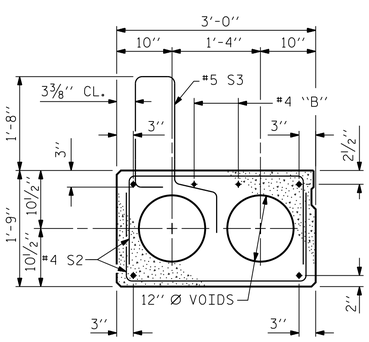

EXT. SLAB SECTION

(FOR PRESTRESSED STRAND LAYOUT, SEE INTERIOR SLAB SECTION.)

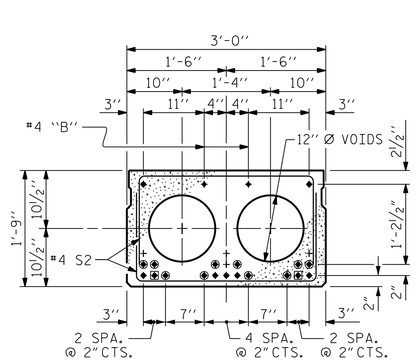

INTERIOR SLAB SECTION

(9 STRANDS REQUIRED)

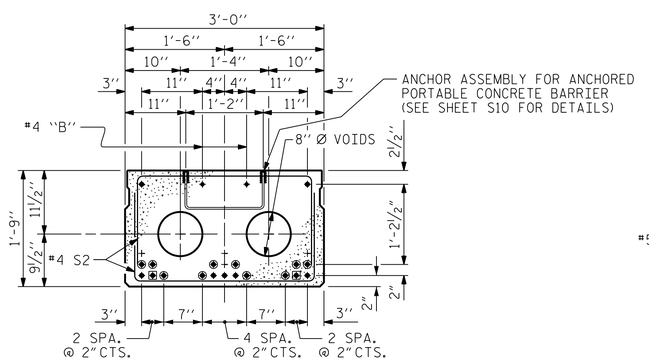

PORTABLE BARRIER SLAB SECTION

(9 STRANDS REQUIRED)

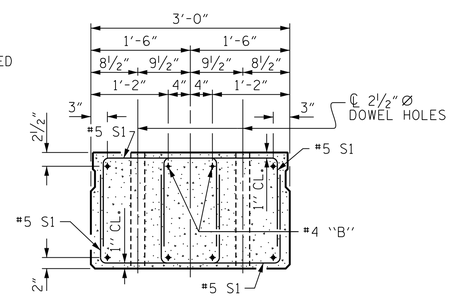

END ELEVATION

SHOWING PLACEMENT OF DOUBLE STIRRUPS AND LOCATION OF DOWEL HOLES. (STRAND LAYOUT NOT SHOWN.) INTERIOR SLAB UNIT SHOWN-EXTERIOR SLAB UNIT SIMILAR EXCEPT SHEAR KEY LOCATION.

◉ BOND SHALL BE BROKEN ON THESE STRANDS FOR A DISTANCE OF 2'-0" FROM END OF CORED SLAB UNIT. SEE STANDARD SPECIFICATIONS, ARTICLE 1078-7.

◉ OPTIONAL FULL LENGTH DEBONDED STRANDS. THESE STRANDS ARE NOT REQUIRED. IF THE FABRICATOR CHOOSES TO INCLUDE THESE STRANDS IN THE CORED SLAB UNIT, THE STRANDS SHALL BE DEBONDED FOR THE FULL LENGTH OF THE UNIT AT NO ADDITIONAL COST. SEE STANDARD SPECIFICATIONS, ARTICLE 1078-7.

DEBONDING LEGEND

PROJECT NO. 17BP.14.R.42

HAYWOOD COUNTY

STATION: 12+00.00 -L-

SHEET 2 OF 2

STATE OF NORTH CAROLINA
DEPARTMENT OF TRANSPORTATION
RALEIGH

SUPERSTRUCTURE
TYPICAL SECTION

NORTH CAROLINA PROFESSIONAL SEAL 14047 ENGINEER STEPHEN D. COOK
Digitally signed by Stephen D. Cook
10/28/2014

ASSEMBLED BY :	J. MYA	DATE :	7-2012
CHECKED BY :	M.PAYNE	DATE :	7-2012
ENGINEER OF RECORD :	S. COOK	DATE :	7-2012
DRAWN BY : DGE 5/09	REV. 12/11	MAA/AAC	
CHECKED BY : BCH 6/09			

THE LOUIS BERGER GROUP, Inc.
1001 Wade Avenue, Suite 400
Raleigh, NC 27605-3322
NC COA No. F-0840

REVISIONS						
NO.	BY:	DATE:	NO.	BY:	DATE:	
1			3			
2			4			

SHEET NO. S-7

TOTAL SHEETS 21

G:\OR Projects\OR1100 - NCDOT Group W\430214\Structures\430214_SD_TYPO2.dgn 1100_str.tbl
10/28/2014 1100_PDF_full.pltcfg