DocuSign Envelope ID: A5CF63EA-A5C2-4AFD-9C68-A60A3BA06728

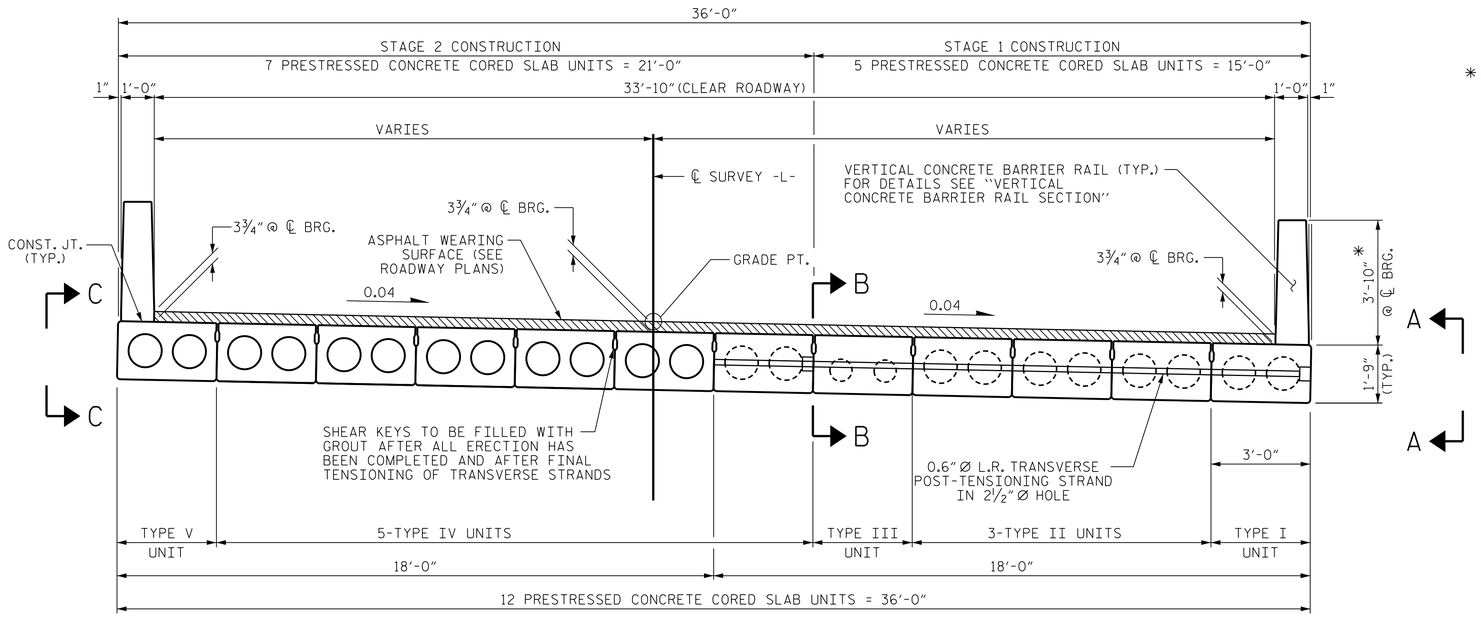

HALF SECTION
AT INTERMEDIATE DIAPHRAGMS

HALF SECTION
THROUGH VOIDS

TYPICAL SECTION

FINAL BRIDGE (STAGE 1 AND 2 COMPLETED)
(FOR VIEWS A-A, B-B & C-C, SEE SHEET 2 OF 2)

*-THE MAXIMUM BARRIER RAIL HEIGHT AND ASPHALT THICKNESS IS SHOWN. THE HEIGHT OF THE BARRIER RAIL AND ASPHALT THICKNESS VARIES WHILE THE TOP OF THE BARRIER RAIL FOLLOWS THE PROFILE OF THE GUTTERLINE. FOR RAIL HEIGHT DETAILS AND ASPHALT THICKNESS, SEE THE "VERTICAL CONCRETE BARRIER RAIL SECTION" DETAIL.

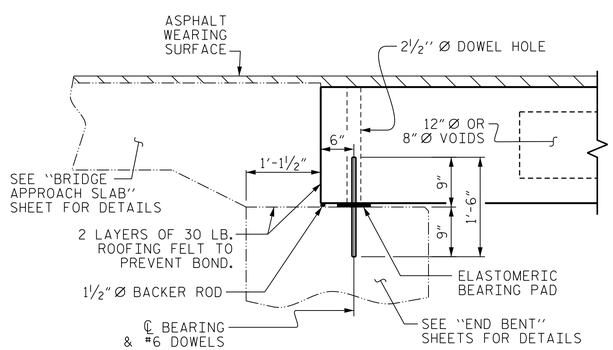

SECTION AT END BENT

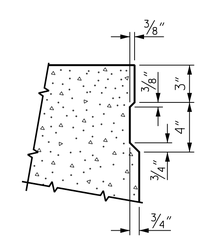

SHEAR KEY DETAIL

NOTE: OMIT SHEAR KEY ON OUTSIDE FACE OF EXTERIOR CORED SLABS.

PROJECT NO. 17BP.14.R.42
HAYWOOD COUNTY
STATION: 12+00.00 -L-

SHEET 1 OF 2

STATE OF NORTH CAROLINA
DEPARTMENT OF TRANSPORTATION
RALEIGH

SUPERSTRUCTURE
TYPICAL SECTION

NORTH CAROLINA PROFESSIONAL SEAL 14047 ENGINEER STEPHEN D. COOK
Digitally signed by Stephen Cook
10/28/2014

THE LOUIS BERGER GROUP, Inc.
1001 Wade Avenue, Suite 400
Raleigh, NC 27605-3322
NC COA No. F-0840

REVISIONS						SHEET NO.
NO.	BY:	DATE:	NO.	BY:	DATE:	S-6
1			3			TOTAL SHEETS
2			4			21

ASSEMBLED BY :	J. MYA	DATE :	7-2012
CHECKED BY :	M.PAYNE	DATE :	7-2012
ENGINEER OF RECORD:	S. COOK	DATE :	7-2012
DRAWN BY : DGE 5/09	REV. 12/11	MAA/AAC	
CHECKED BY : BCH 6/09			

G:\OR Projects\OR1100 - NCDOT Group W\430214\Structures\430214_SD_TYP01.dgn
10/28/2014 1100_PDF_full.pltcfg 1100_str.tbl