DocuSign Envelope ID: A5CF63EA-A5C2-4AFD-9C68-A60A3BA06728

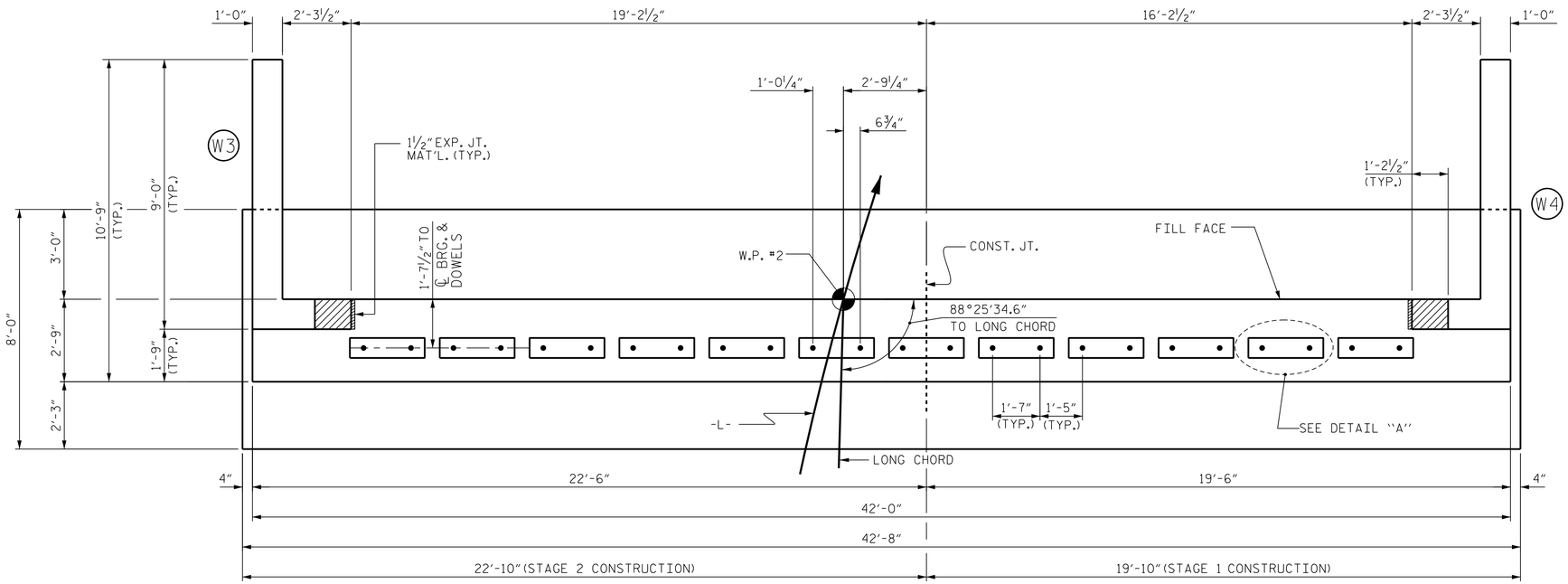

PLAN

NOTES

STIRRUPS IN CAP MAY BE SHIFTED AS NECESSARY TO CLEAR DOWELS.

THE CONCRETE IN THE SHADED AREA OF THE WING SHALL BE POURED AFTER THE VERTICAL CONCRETE BARRIER RAIL IS CAST IF SLIP FORMING IS USED.

FOR WING DETAILS, SEE SHEET 2 OF 3.

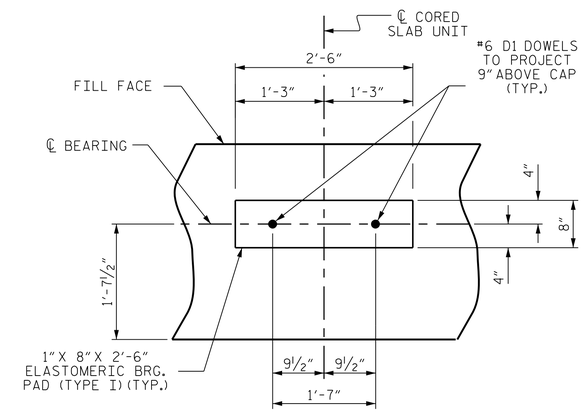

DETAIL "A"

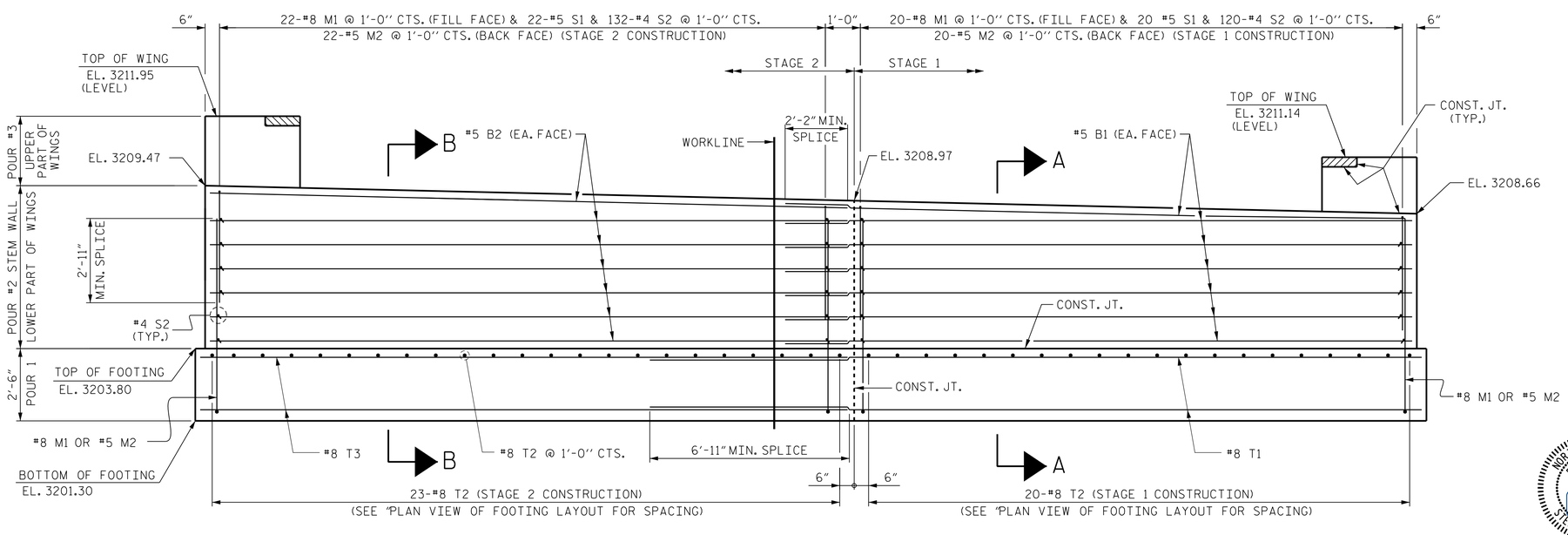

ELEVATION

PROJECT NO. 17BP.14.R.42

HAYWOOD COUNTY

STATION: 12+00.00 -L-

SHEET 1 OF 3

STATE OF NORTH CAROLINA
DEPARTMENT OF TRANSPORTATION
RALEIGH

SUBSTRUCTURE
END BENT 2

NORTH CAROLINA PROFESSIONAL SEAL 14047 ENGINEER STEPHEN D. COOK
10/28/2014

DRAWN BY : R. KNIGHT/J. MYA	DATE : JULY 2012
CHECKED BY : M. PAYNE	DATE : AUG 2012
DESIGN ENGINEER OF RECORD : S. COOK	DATE : MAY 2014

THE LOUIS BERGER GROUP, Inc.
1001 Wade Avenue, Suite 400
Raleigh, NC 27605-3322
NC COA No. F-0840

REVISIONS						SHEET NO.
NO.	BY:	DATE:	NO.	BY:	DATE:	S-17
1			3			TOTAL SHEETS
2			4			21

G:\OR Projects\OR1100 - NCDOT Group W\430214\Structures\430214_SD_EB201.dgn
10/28/2014 1100_PDF_full.pltcfg 1100_str.tbl