DocuSign Envelope ID: A5CF63EA-A5C2-4AFD-9C68-A60A3BA06728

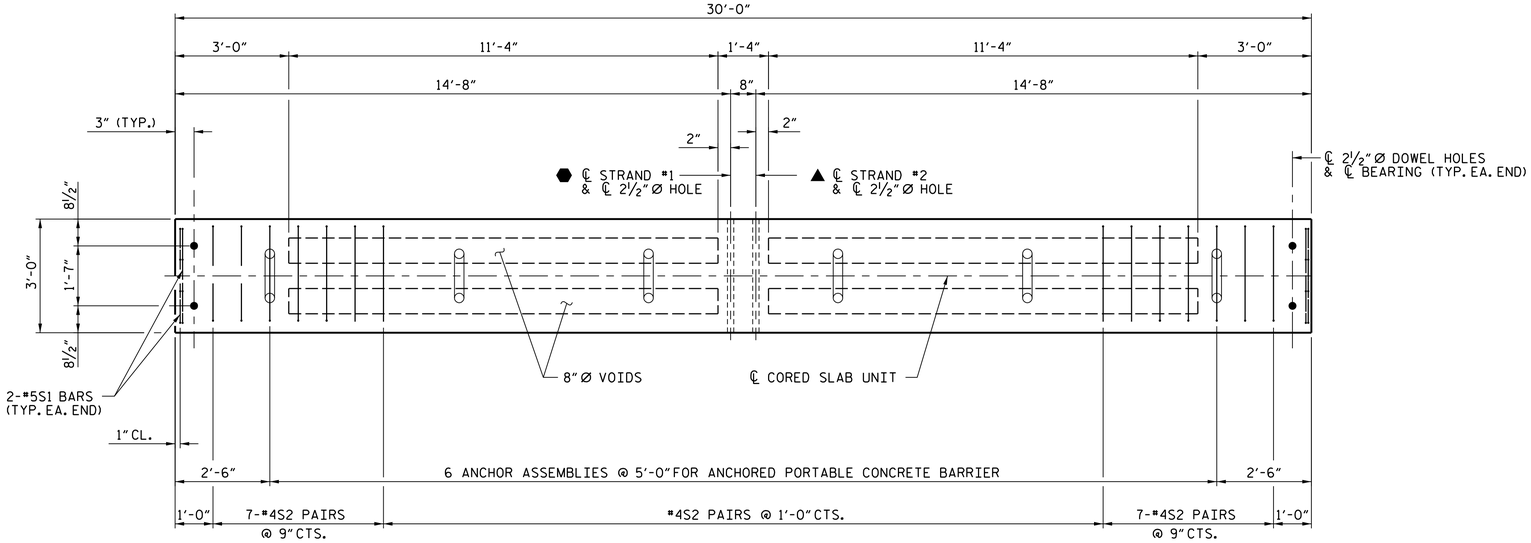

PLAN OF TYPE III CORED SLAB UNIT - STAGE 1

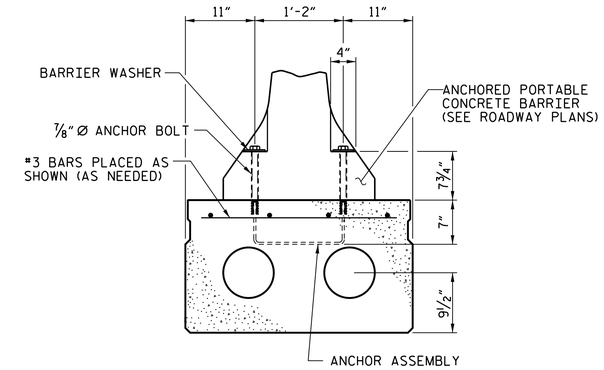

TYPE III CORED SLAB SECTION

(SHOWING PLACEMENT OF ANCHOR ASSEMBLY)

THE #3 BARS ARE INCIDENTAL AND THEIR COST SHALL BE INCLUDED IN THE PRICE BID FOR THE PRESTRESSED CONCRETE CORDED SLAB

NOTES:

⬢ STRAND #1 GOES THRU 5 CORED SLAB UNITS (TO BE TENSIONED DURING STAGE 1 CONSTRUCTION)

▲ STRAND #2 GOES THRU ALL 12 CORED SLAB UNITS (TO BE TENSIONED DURING STAGE 2 CONSTRUCTION)

STRAND #1 AND STRAND #2 ARE 0.6" Ø H.S. TRANSVERSE POST-TENSIONED STRANDS.

THE #4S2 AND #5S3 BARS MAY BE SHIFTED SLIGHTLY IN ORDER TO MAINTAIN A 2" MINIMUM CLEARANCE TO THE 2½" HOLES.

ANCHOR ASSEMBLY NOTES:

THE ANCHOR ASSEMBLY FOR PORTABLE CONCRETE BARRIER SHALL CONSIST OF THE FOLLOWING COMPONENTS:

A. FERRULES SHALL BE MADE FROM STEEL MEETING THE REQUIREMENTS OF AASHTO M169, GRADE 12L14 AND SHALL HAVE A MINIMUM LENGTH OF THREADS OIF 2½".

B. 2-⅞" Ø x 1'-0" ANCHOR BOLTS SHALL CONFORM TO THE REQUIREMENTSOF ASTM A307. ANCHOR BOLTS SHALL BE GALVANIZED. (AT THE OPTION OF THE CONTRACTOR'S OPTION STAINLESS STEEL BOLTS MAY BE USED AS AN ALTERNATE FOR THE ⅞" Ø x 1'-0" GALVANIZED BOLTS. THEY SHALL CONFORM TO OR EXCEED THE MECHANICAL REQUIREMENTS OF ASTM A307. THE USE OF THIS ALTERNATE SHALL BE APPROVED BY THE ENGINEER.

C. WIRE STRUTS SHOWN IN THE ANCHOR ASSEMBLY DETAIL ARE MINIMUM ALLOWABLE SIZE AND SHALL HAVE A MINIMUM TENSILE STRENGTH OF 100,000 P.S.I.

ANCHOR ASSEMBLY WITH BOLTS SHALL BE ASSEMBLED IN THE SHOP. BOLT THREADS MAY BE RECUT AS NECESSARY TO INSURE FIT.

THE COST OF THE ANCHOR ASSEMBLY COMPLETE IN PLACE, SHALL BE INCLUDED, AS APPLICABLE, IN THE UNIT CONTRACT PRICE BID FOR 3'-0" x 1'-9" PRESTRESSED CONCRETE CORED SLAB OR LUMP SUM FOR THE APPROACH SLABS.

FERRULES TO BE PLUGGED DURING CASTING OF THE CORED SLAB UNITS OR POURING OF THE APPROACH SLABS AS RECOMMENDED BY THE MANUFACTURER.

AT THE CONTRACTOR'S OPTION, FERRULES WITH OPEN OR CLOSED ENDS MAY BE USED.

FOR 4" x 3½" x ½" BARRIER WASHER TO BE USED WITH THE ANCHOR ASSEMBLY, SEE ROADWAY PLANS.

PAYMENT FOR THE ANCHORED PORTABLE CONCRETE BARRIER AND BARRIER WASHER ARE INCLUDED IN THE TRAFFIC CONTROL PLANS.

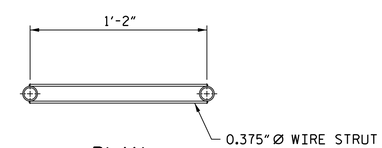

PLAN

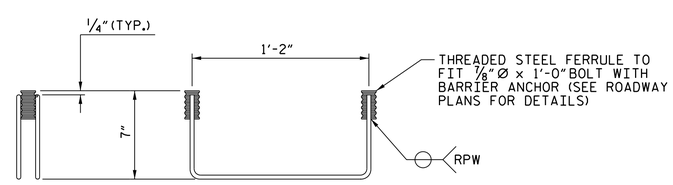

ELEVATION

ANCHOR ASSEMBLY FOR ANCHORED PORTABLE CONCRETE BARRIER

(6 ASSEMBLIES REQUIRED IN TYPE III CORED SLAB UNIT)
(4 ASSEMBLIES REQUIRED IN THE APPROACH SLABS)

NORTH CAROLINA PROFESSIONAL SEAL 14404 ENGINEER STEPHEN D. COOK
10/28/2014

PROJECT NO. 17BP.14.R.42
HAYWOOD COUNTY
STATION: 12+00.00 -L-

SHEET 2 OF 3

STATE OF NORTH CAROLINA
DEPARTMENT OF TRANSPORTATION
RALEIGH

3'-0" x 1'-9" PRESTRESSED CONCRETE CORED SLAB UNIT

REVISIONS						SHEET NO.
NO.	BY:	DATE:	NO.	BY:	DATE:	S-10
1			3			TOTAL SHEETS
2			4			21

THE LOUIS BERGER GROUP, Inc.
1001 Wade Avenue, Suite 400
Raleigh, NC 27605-3322
NC COA No. F-0840

DRAWN BY : R. KNIGHT DATE : JULY 2012
CHECKED BY : M. PAYNE DATE : AUG 2012
DESIGN ENGINEER OF RECORD : S. COOK DATE : MAY 2014

G:\OR Projects\OR1100 - NCDOT Group W\430214\Structures\430214_SD_PCS03.dgn 1100_str.tbl
10/28/2014 1:50:52 PM 1100_PDF_full.pltcfg