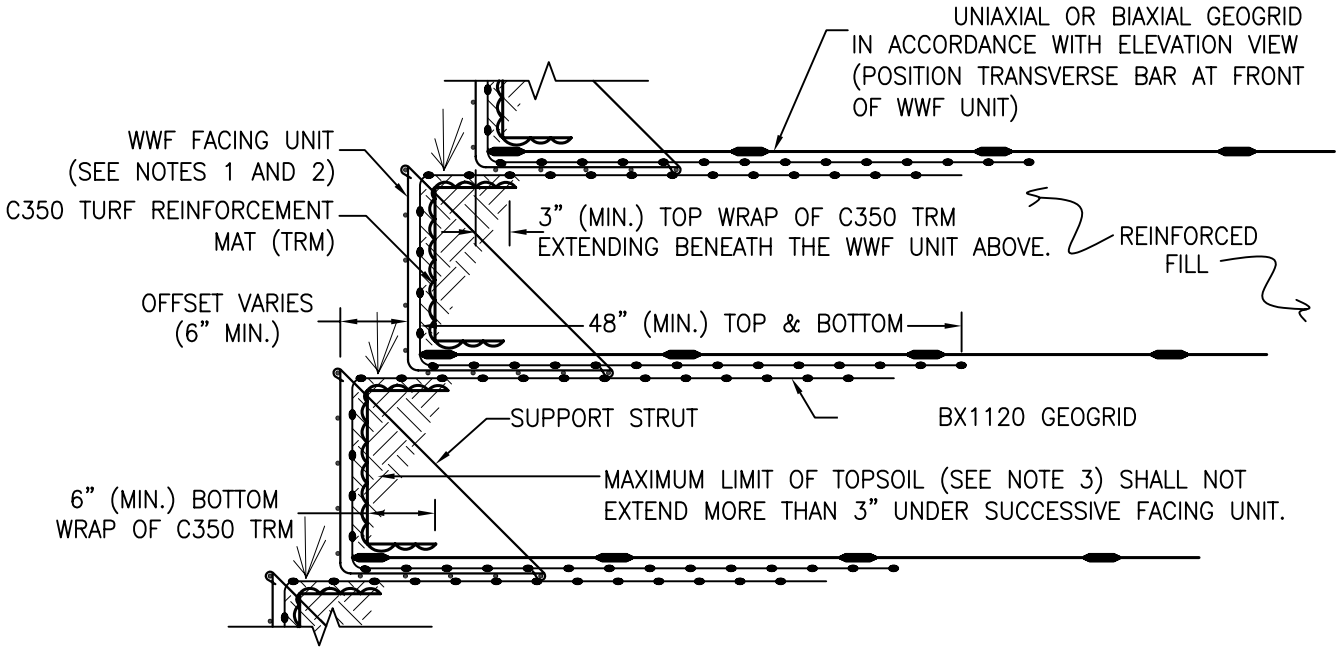

NOTES:

1. SEE WELDED WIRE FORM (WWF) FACING UNIT DETAIL FOR FACING MATERIAL AND DIMENSIONS.
2. ALL FACING UNITS SHALL BE FABRICATED FROM BLACK STEEL.
3. TOPSOIL SHALL BE LOAMY SAND OR FINER GRADATION WITH 10% – 15% ORGANIC CONTENT OR MATERIAL APPROVED BY A QUALIFIED LANDSCAPE ARCHITECT. VEGETATION TYPE SHALL BE SPECIFIED BY A QUALIFIED LANDSCAPE ARCHITECT.

WELDED WIRE FORM FACING DETAIL (PLANTABLE FACE FILL)

NOT TO SCALE