PROJECT REFERENCE NO.		SHEET NO.
14CR.10501.13		3
STATE PROJECT	F.A. PROJECT NO.	DESCRIPTION

TYPICAL 1

JACKSON

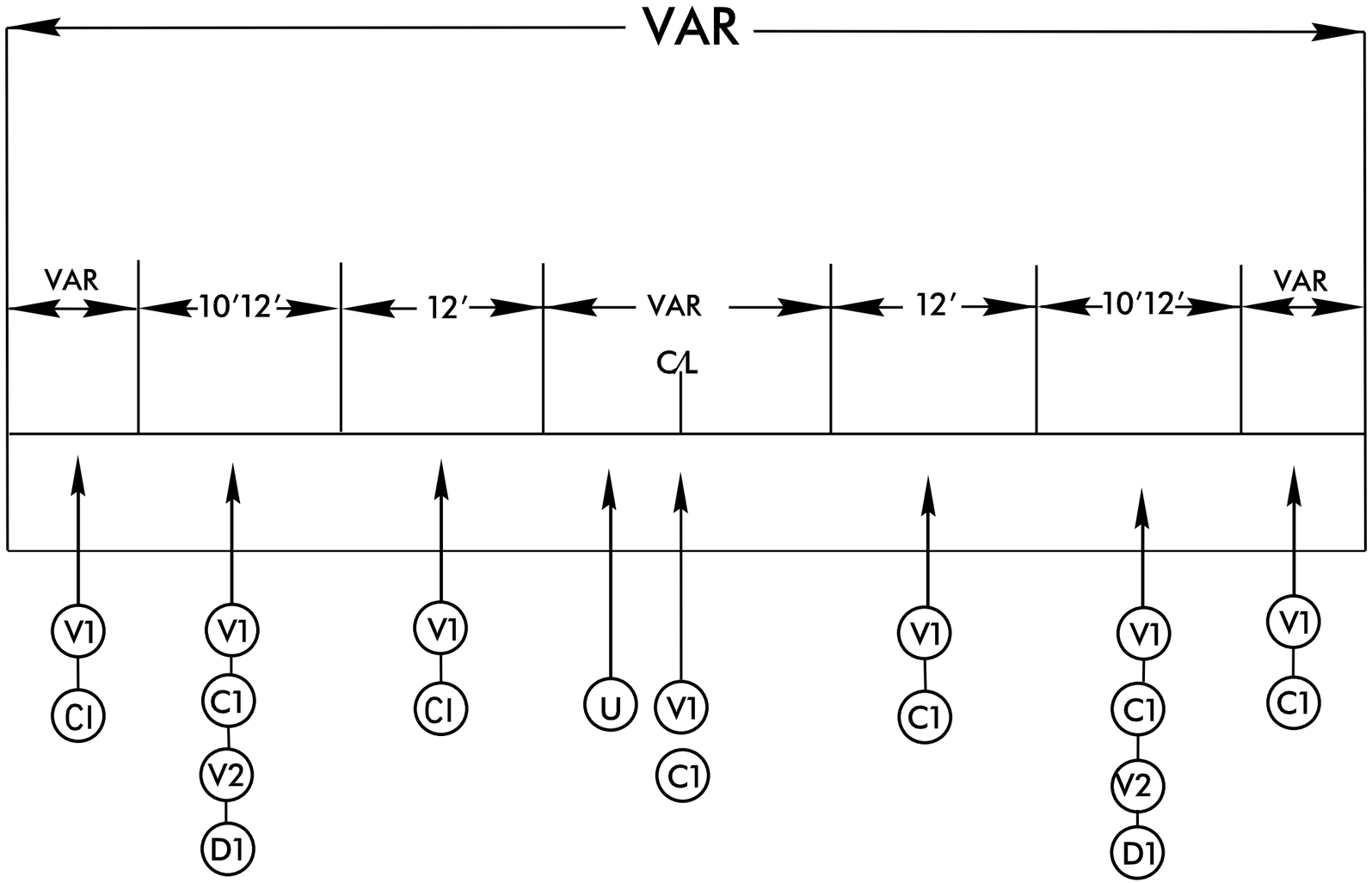

* NOTE * PAVEMENT WIDTH VARIES TO INCLUDE IRREGULAR AREAS AND INTERSECTIONS