PROJECT REFERENCE NO.	SHEET NO.
WBS#: 33935.2.FD9	2
ROADWAY DESIGN ENGINEER	

PAVEMENT SCHEDULE

(FINAL PAVEMENT DESIGN)

C1	4" CONCRETE SIDEWALK	C4	PROP. APPROX. 1.5" ASPHALT CONCRETE SURFCAE COURSE, TYPE S9.5B AT AN AVGERAGE RATE OF 168lbs/sy.	U	EXISTING PAVEMENT.
C2	2' 6" CONCRETE CURB AND GUTTER	C5	PROP. STEELBEAM GUARDRAIL	U1	EXISTING BRIDGE For reference only
C3	FG 300 INTERSTATE GRADE CURB SYSTEM	T	EARTH MATERIAL.		

NOTE: PAVEMENT EDGE SLOPES ARE 1:1 UNLESS SHOWN OTHERWISE

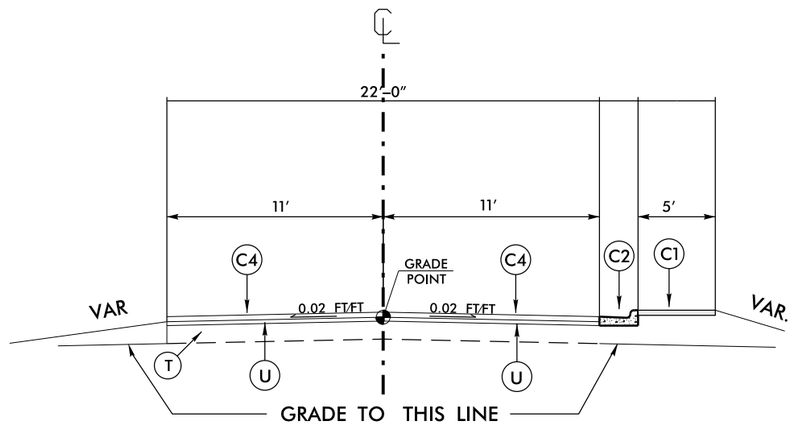

TYPICAL SECTION NO. 1

–L– Sta 1+30 to Sta. 2+15
Sta 3+65 to Sta 11+00

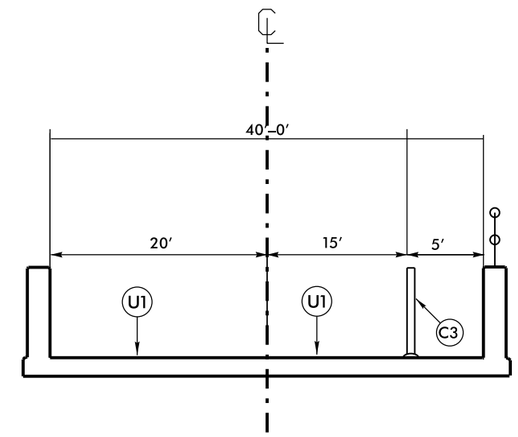

TYPICAL SECTION NO. 2

–L– Sta. 2+15 to Sta. 3+65
For reference only

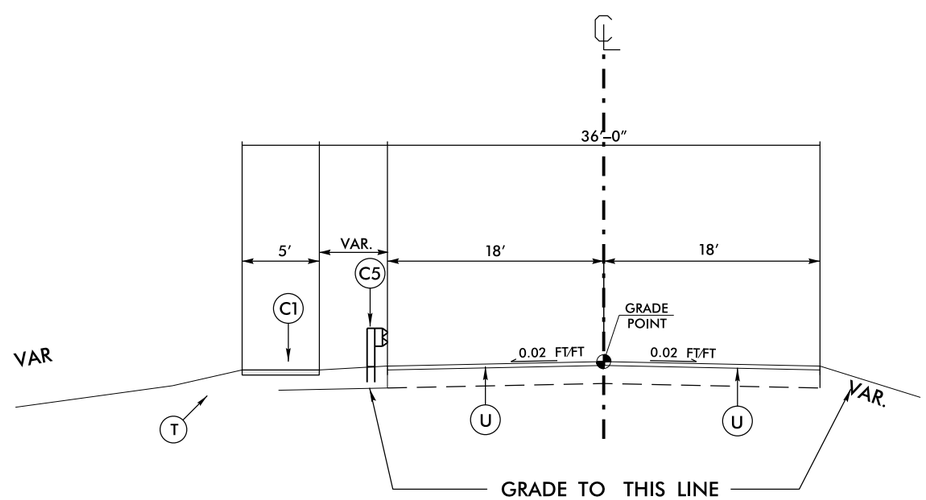

TYPICAL SECTION NO. 3

–Y1– Sta 0+00 to Sta. 2+72

NOTE: PAVEMENT EDGE SLOPES ARE 1:1 UNLESS SHOWN OTHERWISE

6/2/99
28-OCT-2014 10:57
S:\Dis-Const\Traffic\Locust Street SW\dgn\Title Sheets and other plans\LOCUST ST SW 33935.1.FD9 TYPICAL PAVEMENT SECTIONS.dgn
Schmidt, Brian