This electronic collection of documents is provided for the convenience of the user and is Not a Certified Document –

The documents contained herein were originally issued and sealed by the individuals whose names and license numbers appear on each page, on the dates appearing with their signature on that page.
This file or an individual page shall not be considered a certified document.

09/08/09

CONTRACT: DN00503 **PROJECT NUMBER: 40924.3.F72**

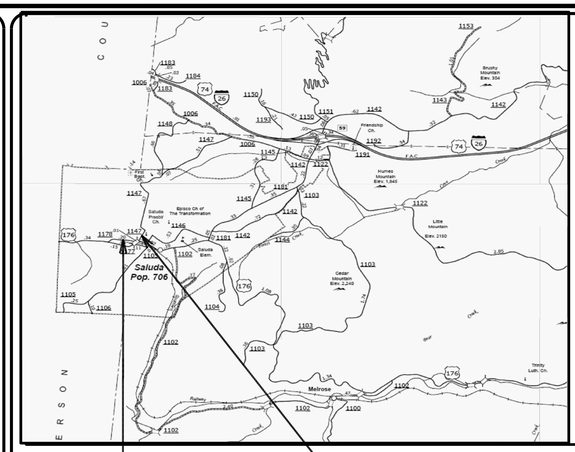

Vicinity Map

STATE OF NORTH CAROLINA
DIVISION OF HIGHWAYS

POLK COUNTY

STATE	STATE PROJECT REFERENCE NO.	SHEET NO.	TOTAL SHEETS
N.C.	Main Street Saluda	1	

STATE PROJ. NO.	F.A. PROJ. NO.	DESCRIPTION
40924.3.F72		CONSTRUCTION

LOCATION: SR 1147 – Carolina Avenue; SR 1178 – W Main Street; US 176
Beginning on SR 1178– W. Main Street
Ending on SR 1147– Carolina Ave.
TYPE OF WORK: Drainage, Curb & Gutter, Sidewalk, Erosion Control, and Traffic Control

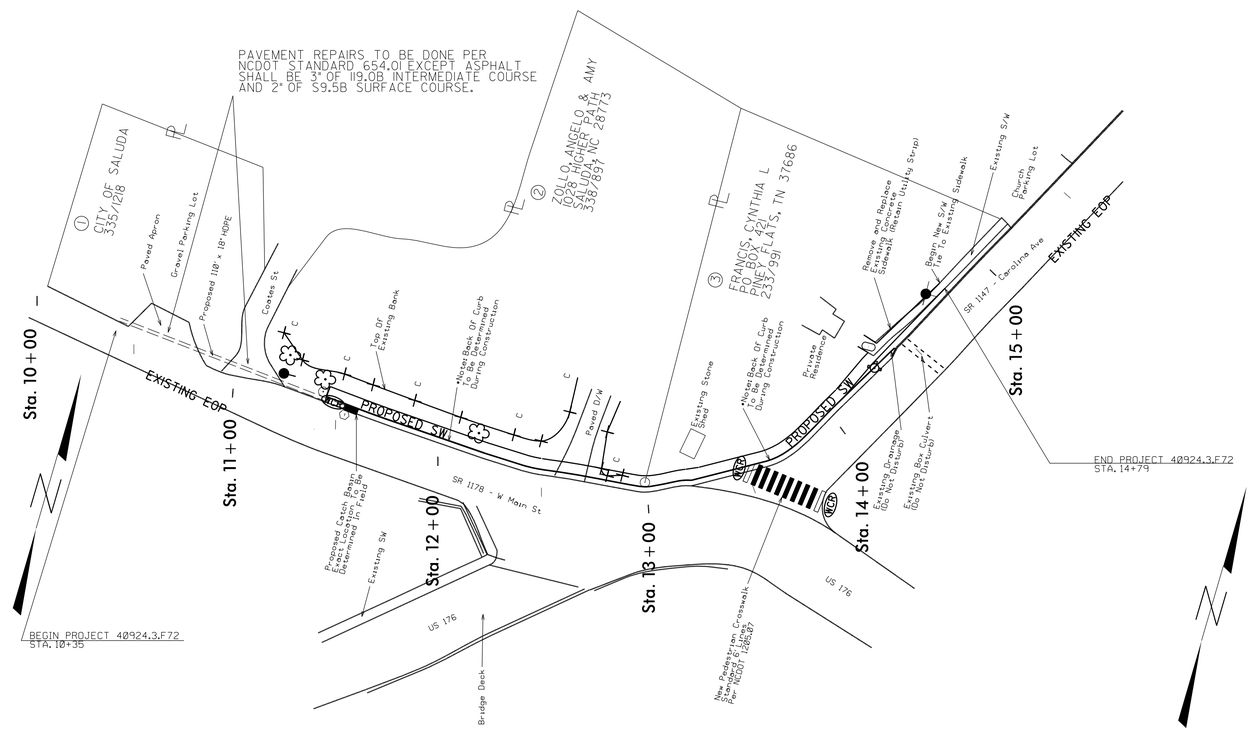

✳ *Note: Refer to Plat F-185 For R/W Easements*
See Sheet 1-A For Index of Sheets
See Sheet 1-B For Conventional Symbols

GRAPHIC SCALES

40 20 0 20 40
PLANS

0
PROFILE (HORIZONTAL)

0
PROFILE (VERTICAL)

DESIGN DATA

ADT 2013 = 2200

V = 20 MPH

CLASSIFICATION: LOCAL

SUB REGIONAL TIER DESIGN

PROJECT LENGTH

LENGTH OF ROADWAY PROJECT 483 = 0.09 MI
TOTAL LENGTH OF PROJECT = 0.09 MI

Prepared In the Office of:
DIVISION OF HIGHWAYS

2012 STANDARD SPECIFICATIONS

RIGHT OF WAY DATE: N/A

LETTING DATE:

STEVE CANNON, PE
PROJECT ENGINEER

JOSH LANNING
PROJECT DESIGN ENGINEER

HYDRAULICS ENGINEER

SIGNATURE: *P.E.*

ROADWAY DESIGN ENGINEER

SIGNATURE: *P.E.*

DIVISION OF HIGHWAYS STATE OF NORTH CAROLINA

P.E.
STATE HIGHWAY DESIGN ENGINEER

PROJECT REFERENCE NO.	SHEET NO.
40924.3.F72	1-A
R/W SHEET NO.	
ROADWAY DESIGN ENGINEER	HYDRAULICS ENGINEER

STATE OF NORTH CAROLINA
DIVISION OF HIGHWAYS

INDEX OF SHEETS

INDEX OF SHEETS

SHEET NUMBER	SHEET
1-A	INDEX OF SHEETS, GENERAL NOTES, & LIST OF STANDARD DRAWINGS
1-B	CONVENTIONAL SYMBOLS
2	TYPICAL SECTIONS
2-A	DETAIL DESIGN FOR PAVEMENT REPAIRS
3	SUMMARY OF DRAINAGE QUANTITIES, SUMMARY OF GUARDRAIL, EARTHWORK SUMMARY, & ASPHALT PAVEMENT REMOVAL SUMMARY
3-A	Parcel Index Sheet
3-B	Platted Right of Way
4-5	PLAN SHEETS
EC-1 TO EC-3	EROSION CONTROL PLANS

2012 ROADWAY STANDARD DRAWINGS
EFFECTIVE: 01-17-2012

The following Roadway Standards as appear in "Roadway Standard Drawings" Highway Design Branch -N.C. Department of Transportation - Raleigh, N.C. Dated January 17, 2012 are applicable to this project and by reference hereby are considered a part of these plans:

STD. NO	TITLE
DIVISION 2 - EARTHWORK	
200.02	Method of Clearing - Method 1
225.02	Guide for Grading Subgrade - Secondary and Local
225.06	Method of Grading Sight Distance at Intersections
DIVISION 3 - PIPE CULVERTS	
300.01	Method of Pipe Installation
310.10	Driveway Pipe Construction
DIVISION 5 - SUBGRADE, BASES AND SHOULDERS	
560.01	Method of Shoulder Construction - High Side of Superelevated Curve - Method 1
DIVISION 6 - ASPHALT BASES AND PAVEMENTS	
654.01	Pavement Repairs
DIVISION 8 - INCIDENTALS	
840.02	Concrete Catch Basin - 12" thru 54" Pipe
840.03	Frame, Grates and Hood - for Use on Standard Catch Basin
840.31	Concrete Junction Box - 12" thru 66" Pipe
846.01	Concrete Curb, Gutter and Curb & Gutter
848.02	Driveway Turnout - Radius Type
848.03	Driveway Turnout - Drop Curb Type
848.04	Street Turnout
848.05	Curb Ramp
876.02	Guide For Rip Rap At Pipe Outlets

GENERAL NOTES: 2012 SPECIFICATIONS
EFFECTIVE: 01-17-2012

GRADE LINE:
GRADING AND SURFACING:

THE GRADE LINES SHOWN DENOTE THE FINISHED ELEVATION OF THE PROPOSED SURFACING AT GRADE POINTS SHOWN ON THE TYPICAL SECTIONS. GRADE LINES MAY BE ADJUSTED AT THEIR BEGINNING AND ENDING AND AT STRUCTURES AS DIRECTED BY THE ENGINEER IN ORDER TO SECURE A PROPER TIE-IN.

CLEARING:

CLEARING ON THIS PROJECT SHALL BE PERFORMED TO THE LIMITS ESTABLISHED BY METHOD II.

SIDE ROADS:

THE CONTRACTOR WILL BE REQUIRED TO DO ALL NECESSARY WORK TO PROVIDE SUITABLE CONNECTIONS WITH ALL ROADS, STREETS, AND DRIVES ENTERING THIS PROJECT. THIS WORK WILL BE PAID FOR AT THE CONTRACT UNIT PRICE FOR THE PARTICULAR ITEMS INVOLVED.

SUBSURFACE PLANS:

NO SUBSURFACE PLANS ARE AVAILABLE ON THIS PROJECT. THE CONTRACTOR SHOULD MAKE HIS OWN INVESTIGATION AS TO THE SUBSURFACE CONDITIONS.

UTILITIES:

KNOWN UTILITY OWNERS ON THIS PROJECT ARE:

DUKE ENERGY

CITY OF SALUDA / PUBLIC WORKS

WILKES COMMUNICATIONS / FORMERLY TDS (Contact Name Clay Begley 270-576-4006)

REVISIONS

8/17/99

3/15/06

PROJECT REFERENCE NO.	SHEET NO.
409243.F72	1-B

Note: Not to Scale

S.U.E. = Subsurface Utility Engineering

STATE OF NORTH CAROLINA
DIVISION OF HIGHWAYS

CONVENTIONAL PLAN SHEET SYMBOLS

BOUNDARIES AND PROPERTY:

- State Line
- County Line
- Township Line
- City Line
- Reservation Line
- Property Line
- Existing Iron Pin — EIP
- Property Corner
- Property Monument — ECM
- Parcel/Sequence Number — 23
- Existing Fence Line
- Proposed Woven Wire Fence
- Proposed Chain Link Fence
- Proposed Barbed Wire Fence
- Existing Wetland Boundary — WLB
- Proposed Wetland Boundary — WLB
- Existing Endangered Animal Boundary — EAB
- Existing Endangered Plant Boundary — EPB

BUILDINGS AND OTHER CULTURE:

- Gas Pump Vent or U/G Tank Cap
- Sign — S
- Well — W
- Small Mine
- Foundation
- Area Outline
- Cemetery
- Building
- School
- Church
- Dam

HYDROLOGY:

- Stream or Body of Water
- Hydro, Pool or Reservoir
- Jurisdictional Stream — JS
- Buffer Zone 1 — BZ 1
- Buffer Zone 2 — BZ 2
- Flow Arrow
- Disappearing Stream
- Spring
- Wetland
- Proposed Lateral, Tail, Head Ditch — FLOW
- False Sump

RAILROADS:

- Standard Gauge — CSX TRANSPORTATION
- RR Signal Milepost — MILEPOST 35
- Switch — SWITCH
- RR Abandoned
- RR Dismantled

RIGHT OF WAY:

- Baseline Control Point
- Existing Right of Way Marker
- Existing Right of Way Line
- Proposed Right of Way Line — RW
- Proposed Right of Way Line with Iron Pin and Cap Marker — RW
- Proposed Right of Way Line with Concrete or Granite Marker — RW
- Existing Control of Access — CA
- Proposed Control of Access — CA
- Existing Easement Line — E
- Proposed Temporary Construction Easement — E
- Proposed Temporary Drainage Easement — TDE
- Proposed Permanent Drainage Easement — PDE
- Proposed Permanent Utility Easement — PUE

ROADS AND RELATED FEATURES:

- Existing Edge of Pavement
- Existing Curb
- Proposed Edge of Pavement
- Proposed Conc. 2ft. Valley Gutter
- Proposed Conc. 2ft.6in. Curb and Gutter
- Proposed Wheel Chair Ramp — WCR
- Existing Metal Guardrail
- Proposed Guardrail
- Existing Cable Guiderail
- Equality Symbol
- Pavement Removal

VEGETATION:

- Single Tree
- Single Shrub
- Hedge
- Woods Line
- Orchard
- Vineyard — Vineyard

EXISTING STRUCTURES:

MAJOR:

- Bridge, Tunnel or Box Culvert — CONC
- Bridge Wing Wall, Head Wall and End Wall — CONC WW

MINOR:

- Head and End Wall — CONC HW
- Pipe Culvert
- Footbridge
- Drainage Box: Catch Basin, DI or JB — CB
- Paved Ditch Gutter
- Storm Sewer Manhole — S
- Storm Sewer — S

UTILITIES:

POWER:

- Existing Power Pole
- Proposed Power Pole
- Existing Joint Use Pole
- Proposed Joint Use Pole
- Power Manhole — P
- Power Line Tower
- Power Transformer
- U/G Power Cable Hand Hole — HH
- H-Frame Pole
- Recorded U/G Power Line — P
- Designated U/G Power Line (S.U.E.*) — P

TELEPHONE:

- Existing Telephone Pole
- Proposed Telephone Pole
- Telephone Manhole — T
- Telephone Booth
- Telephone Pedestal — T
- Telephone Cell Tower
- U/G Telephone Cable Hand Hole — HH
- Recorded U/G Telephone Cable — T
- Designated U/G Telephone Cable (S.U.E.*) — T
- Recorded U/G Telephone Conduit — TC
- Designated U/G Telephone Conduit (S.U.E.*) — TC
- Recorded U/G Fiber Optics Cable — T FO
- Designated U/G Fiber Optics Cable (S.U.E.*) — T FO

WATER:

- Water Manhole — W
- Water Meter
- Water Valve
- Water Hydrant
- Recorded U/G Water Line — W
- Existing Minor Pipe
- Proposed Minor Pipe
- Proposed Catch Basin
- Proposed Junction Box

TV:

- TV Satellite Dish
- TV Pedestal — C
- TV Tower
- U/G TV Cable Hand Hole — HH
- Recorded U/G TV Cable — TV
- Designated U/G TV Cable (S.U.E.*) — TV
- Recorded U/G Fiber Optic Cable — TV FO

GAS:

- Gas Valve
- Gas Meter
- Recorded U/G Gas Line — G
- Designated U/G Gas Line (S.U.E.*) — G
- Above Ground Gas Line — A/G Gas

SANITARY SEWER:

- Sanitary Sewer Manhole
- Sanitary Sewer Cleanout
- U/G Sanitary Sewer Line — SS
- Above Ground Sanitary Sewer — A/G Sanitary Sewer
- Recorded SS Forced Main Line — FSS
- Designated SS Forced Main Line (S.U.E.*) — FSS

MISCELLANEOUS:

- Utility Pole
- Utility Pole with Base
- Utility Located Object
- Utility Traffic Signal Box — S
- Utility Unknown U/G Line — ?UTL
- U/G Tank; Water, Gas, Oil
- A/G Tank; Water, Gas, Oil
- U/G Test Hole (S.U.E.*)
- Abandoned According to Utility Records — AATUR
- End of Information — E.O.I.

PROJECT REFERENCE NO.	SHEET NO.
40924.3.F72	2
R/W SHEET NO.	
ROADWAY DESIGN ENGINEER	HYDRAULICS ENGINEER

TYPICAL 1

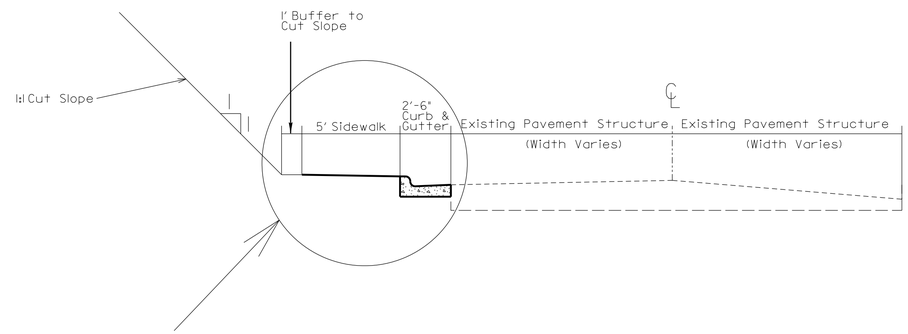

Note: To Be Constructed Per
NCDOT Standard #848.01(Sheet 1of 1)

REVISIONS

8/17/99

PROJECT REFERENCE NO.	SHEET NO.
40924.3.F72	2-A
R/W SHEET NO.	
ROADWAY DESIGN ENGINEER	HYDRAULICS ENGINEER

INCOMPLETE PLANS
DO NOT USE FOR R/W ACQUISITION

PRELIMINARY PLANS
DO NOT USE FOR CONSTRUCTION

PAVEMENT REPAIR DETAIL

STATE OF NORTH CAROLINA
DEPT. OF TRANSPORTATION
DIVISION OF HIGHWAYS
RALEIGH, N.C.

1-12

ENGLISH STANDARD DRAWING FOR
PAVEMENT REPAIRS
FOR SUPERPAVE MIX TYPES

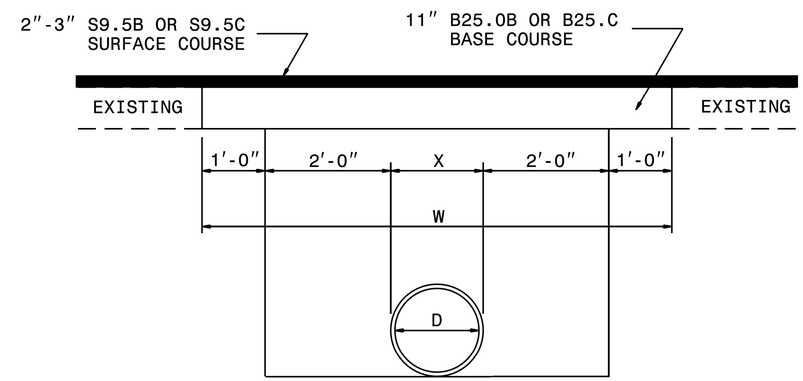

PAVEMENT REPAIRS ON ROADS TO BE RESURFACED
(PIPE IS PLACED UNDER EXISTING PAVEMENT)

D	X	W
12"	1'-4"	7'-4"
15"	1'-7"	7'-7"
18"	1'-10"	7'-10"
24"	2'-6"	8'-6"
30"	3'-1"	9'-1"
36"	3'-8"	9'-8"
42"	4'-5"	10'-5"
48"	5'-0"	11'-0"

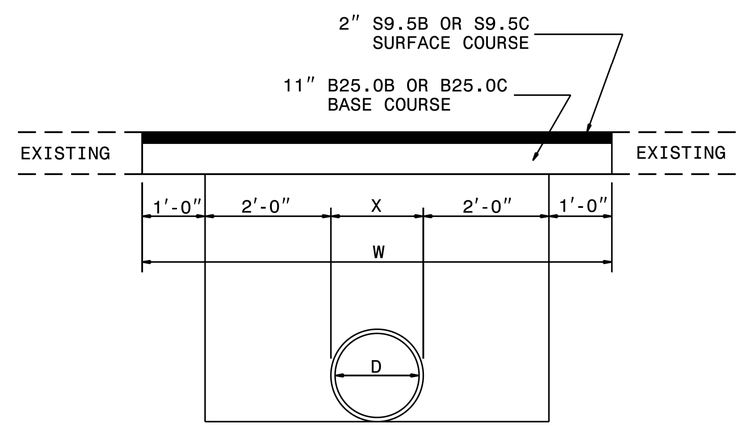

PAVEMENT REPAIRS ON ROADS NOT TO BE RESURFACED
(PIPE IS TO BE PLACED UNDER EXISTING PAVEMENT)

STATE OF NORTH CAROLINA
DEPT. OF TRANSPORTATION
DIVISION OF HIGHWAYS
RALEIGH, N.C.

1-12

ENGLISH STANDARD DRAWING FOR
PAVEMENT REPAIRS
FOR SUPERPAVE MIX TYPES

SHEET 1 OF 1
654.01

SHEET 1 OF 1
654.01

REVISIONS

8/17/99

$$$$SYSTIME$$$$
$$$$FILENAME$$$$DGN$$$$$$$$$$$$$$$$

4/04/06

COMPUTED BY:________________ DATE:________________

CHECKED BY:________________ DATE:________________

PROJECT REFERENCE NO.	SHEET NO.
40924.3.F72	3-A

STATE OF NORTH CAROLINA
DIVISION OF HIGHWAYS

LIST OF PIPES, ENDWALLS, ETC. (FOR PIPES 48" & UNDER)

STATION / SIZE / THICKNESS OR GAUGE	LOCATION (LT,RT, OR CL)	STRUCTURE NO. FROM	STRUCTURE NO. TO	TOP ELEVATION	INVERT ELEVATION	INVERT ELEVATION	SLOPE CRITICAL	CLASS IV R.C. PIPE (UNLESS NOTED OTHERWISE) 12"	15"	18"	24"	30"	36"	42"	48"	BITUMINOUS COATED C.S. PIPE TYPE B (UNLESS NOTED OTHERWISE) 12" .064	15" .064	18" .064	24" .064	24"	30" .079	30"	36" .079	36"	42" .109	42"	48" .109	48"	CLASS III R.C. PIPE OR ALUMINIZED C.S. PIPE, TYPE IR OR HDPE PIPE, TYPE S OR D 12"	15"	18"	24"	30"	36"	42"	48"	15" SIDE DRAIN PIPE	18" SIDE DRAIN PIPE	24" SIDE DRAIN PIPE	ENDWALLS STD. 838.01, STD. 838.11 OR STD. 838.80 (UNLESS NOTED OTHERWISE) CU. YDS. R.C.P.	C.S.P.	QUANTITIES FOR DRAINAGE STRUCTURES * TOTAL L.F. FOR PAY QUANTITY SHALL BE COL. 'A' + (1.3 X COL.'B') PER EACH (0' THRU 5.0')	LIN. *FT. A 5.0' THRU 10.0'	LIN. *FT. B 10.0' AND ABOVE	C.B. STD. 840.01 OR STD. 840.02	FRAME, GRATES AND HOOD STANDARD 840.03 TYPE OF GRATE E	F	G			D.I. STD. 840.14 OR STD. 840.15	D.I. FRAME & GRATE STD. 840.16	G.D.I. TYPE "A" STD. 840.17 OR 840.26	G.D.I. TYPE "B" STD. 840.18 OR 840.27	G.D.I. TYPE "D" STD. 840.19 OR 840.28	G.D.I. FRAME WITH GRATE STD. 840.22	G.D.I. FRAME WITH TWO GRATES STD. 840.22	G.D.I. (N.S.) FRAME WITH GRATE STD. 840.24	G.D.I. (N.S.) FRAME WITH TWO GRATES STD. 840.24	J.B. STD. 840.31 OR 840.32	T.B.D.I. FRAME WITH GRATE STD. 840.36 & STD. 840.37						CORR. STEEL ELBOWS NO. & SIZE	CONC. COLLARS CL. "B" C.Y. STD 840.72	CONC. & BRICK PIPE PLUG, C.Y. STD. 840.71	PIPE REMOVAL LIN.FT.	REMARKS
Sta. 11+55	RT	1	DITCH																											30														1		1																								
SHEET TOTALS																														30														1		1																								

ABBREVIATIONS

C.B.	CATCH BASIN
N.D.I.	NARROW DROP INLET
D.I.	DROP INLET
G.D.I.	GRATED DROP INLET
G.D.I. (N.S.)	GRATED DROP INLET (NARROW SLOT)
J.B.	JUNCTION BOX
M.H.	MANHOLE
T.B.D.I.	TRAFFIC BEARING DROP INLET
T.B.J.B.	TRAFFIC BEARING JUNCTION BOX

STATE OF NORTH CAROLINA
DIVISION OF HIGHWAYS

PARCEL INDEX SHEET

PARCEL No.	SHEET No.	PROPERTY OWNER NAME
1	4	CITY OF SALUDA
2	4,5	ZOLLO, ANGELO; ZOLLO, AMY
3	5	FRANCIS, CYNTHIA L

$$$$$SYSTIME$$$$$
$$$$$$$$$$$$DGN$$$$$$$$$$$$$$$$$
$$$$USERNAME$$$$

PROJECT REFERENCE NO.	SHEET NO.
40924.3.F72	3C

STATE OF NORTH CAROLINA
DIVISION OF HIGHWAYS

PLATTED RIGHT OF WAY SHEET

Page 1 of 1

TABLE OF NUMBERED CALLS ALONG PROPOSED SIDEWALK EASEMENT

COURSE	BEARING	DISTANCE
1	S 75°27'25"E	6.56'
2	S 29°36'29"W	157.15'
3	S 66°17'12"W	32.67'
4	S 69°28'42"W	25.94'
5	S 83°18'17"W	34.12'
6	S 86°33'52"W	43.78'
7	N 82°20'37"W	113.33'
8	S 85°21'58"E	24.46'
9	S 83°18'26"E	14.12'
10	S 83°55'47"E	17.71'
11	S 84°36'05"E	42.88'
12	S 86°47'14"E	22.12'
13	S 88°59'57"E	23.68'
14	N 87°34'39"E	20.64'
15	N 87°57'20"E	11.66'
16	N 77°37'01"E	9.24'
17	N 67°09'46"E	3.89'
18	N 06°17'16"W	1.36'
19	N 72°02'45"E	12.14'
20	N 66°09'06"E	13.54'
21	N 64°03'50"E	11.13'
22	N 61°00'26"E	6.25'
23	N 58°04'31"E	11.73'
24	N 38°35'46"E	15.43'
25	N 29°36'29"E	61.32'
26	N 28°48'47"E	76.28'
27	N 06°17'16"W	3.65'

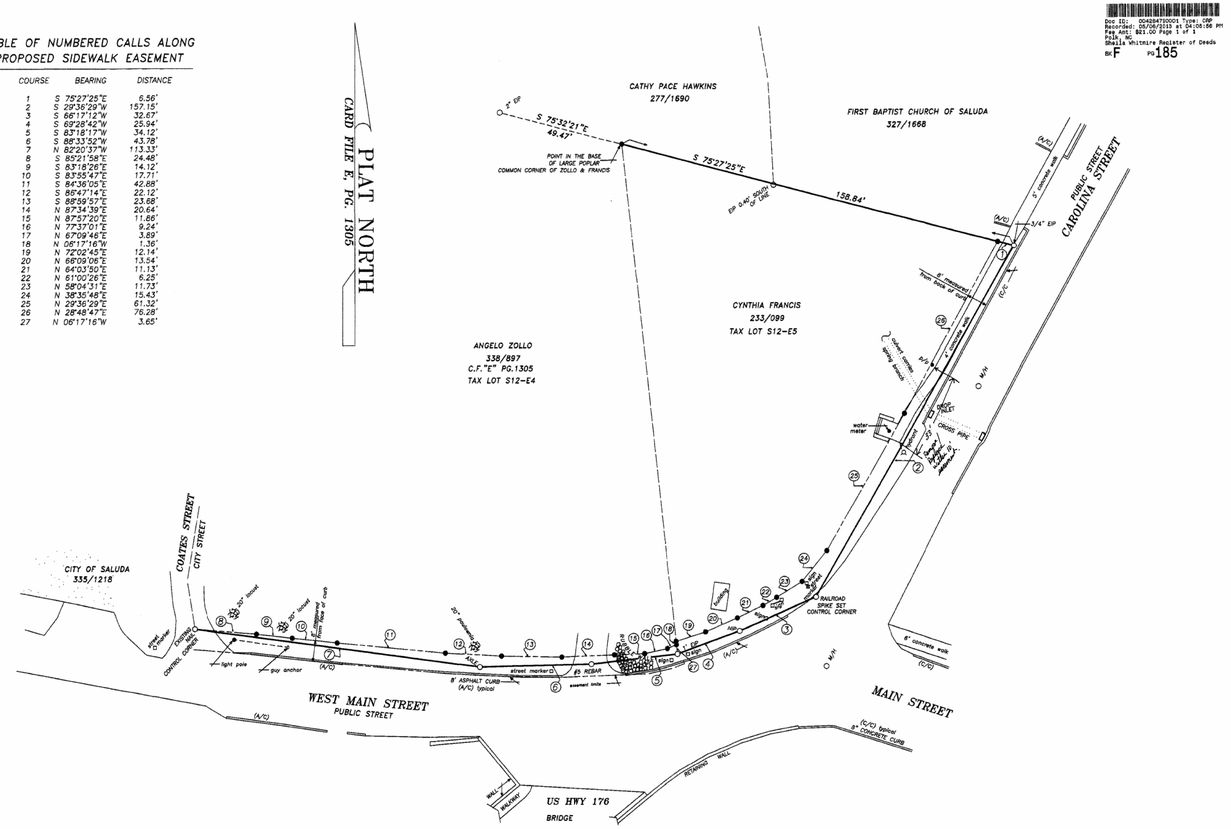

Doc ID: 004864790001 Type: CRP
Recorded: 05/06/2013 at 04:05:06 PM
Fee Amt: $21.00 Page 1 of 1
Polk County
Sheila Whitmire Register of Deeds
BK F PG 185

PLAT OF SURVEY FOR

CITY OF SALUDA

PLAT PREPARED TO SHOW PROPOSED EASEMENT TO BUILD SIDEWALK

CITY OF SALUDA
SALUDA TOWNSHIP
POLK COUNTY
NORTH CAROLINA

FEBRUARY 7th, 2013
SCALE 1" = 20'

I, Steven Lloyd Waggoner, a PROFESSIONAL LAND SURVEYOR, certify that this plat was drawn under my supervision from an actual survey made under my supervision (deed description recorded in Book A3, Page Sheow); that the boundaries not surveyed are clearly indicated drawn from information found in Book A3, Page Sheow; that the ratio of precision as calculated is 1/ 15,000+; that this plat was prepared in accordance with G.S. 47-30 as amended. Witness my original signature, registration number and seal.
this 13th day of February, A.D., 20 13.

Steven Lloyd Waggoner
PROFESSIONAL LAND SURVEYOR

I, Steven Lloyd Waggoner, PROFESSIONAL LAND SURVEYOR, certify that this survey is of a category which is an exception to the definition of a subdivision. G.S.47-30 (f)(11)(d).

Steven Lloyd Waggoner

State of North Carolina
County of Polk
I, Cathy Kuhn, Review Officer of Polk County, certify that the map or plat to which this certification is affixed meets all statutory requirements for recording.
Date 5/6/13 Cathy Kuhn
Review Officer

STATE OF NORTH CAROLINA
POLK COUNTY
OFFICE OF REGISTER OF DEEDS
FILED FOR RECORD THIS THE 6 DAY OF May 20 13 AT 4:05 O'CLOCK P M
AND DULY REGISTERED IN SAID OFFICE AT
CARD FILE F, PAGE 185
Sheila W. Whitmire
REGISTER OF DEEDS
By: Bari Champion, asst.

Drawing as plotted 20 scale = 1 mark = 1.15'

20 0 20 40 60
GRAPHIC SCALE – FEET

NOTES:
1) AREA DETERMINED BY COORDINATE COMPUTATION
2) AREA INCLUDES ANY AND ALL PORTIONS OF PROPERTY UNDER RIGHTS-OF-WAY AND/OR EASEMENTS, EITHER ACQUIRED OR CLAIMED.
3) CURRENT OWNERS ARE AS SHOWN ABOVE
4) AREA IN ZOLLO EASEMENT OFFERING IS 0.0113 ACRES
5) AREA IN FRANCIS EASEMENT OFFERING IS 0.0272 ACRES

LEGEND
- EXISTING CORNER MONUMENT AS NOTED
- NEW IRON PIPE SET OR AS NOTED
- COMPUTED POINT–NOT STAKED
- CONCRETE MONUMENT AS NOTED

LOCATION MAP (NTS)

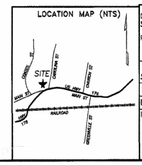

REFERENCES:
DEED: SEE REFERENCES ON PLAT
PLAT: CARDFILE E, PG.1305
TAX ID REFERENCE: SEE REFERENCES ON PLAT
SCRN FILE 13-010
DWG FILE:
REVISIONS:

NORTH CAROLINA PROFESSIONAL SEAL L-2874 LAND SURVEYOR STEVEN LLOYD WAGGONER

SURVEY BY
STEVEN LLOYD WAGGONER
NC PLS 2874

WAGGONER & RHODES
LAND SURVEYORS, PLLC.
545 SOUTH GROVE STREET
HENDERSONVILLE, NORTH CAROLINA 28792
PHONE: 828-693-1022
FAX: 828-693-4019

DATE: FEBRUARY 7th, 2013 | DRAWN BY: SLW/DKS | JOB NUMBER: 13-010

$$$$$$SYSTIME$$$$$
$$$$$$$$$$$$$$DGN$$$$$$$$$$$$$$$$
$$$$USERNAME$$$$

8/17/99

REVISIONS

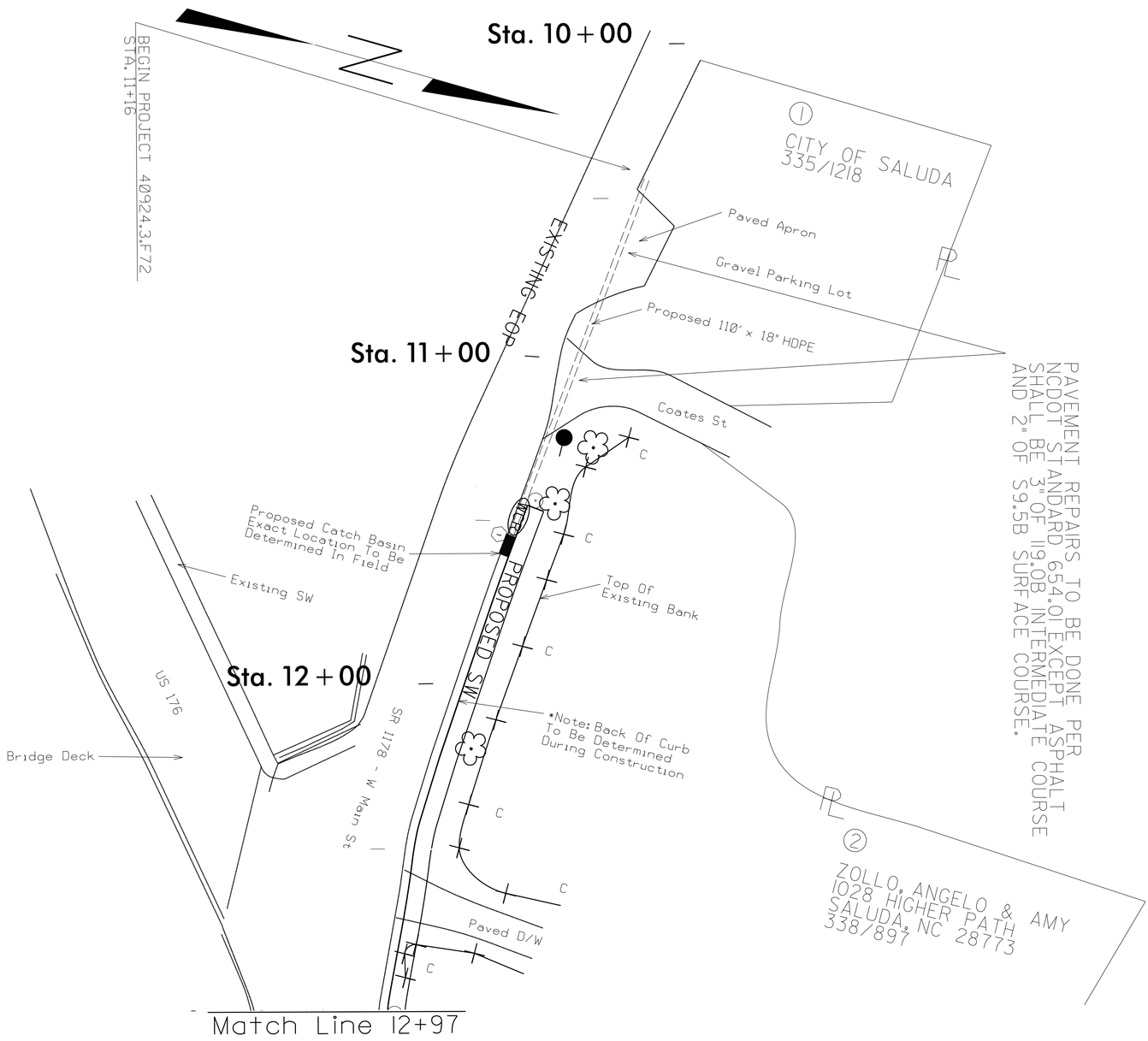

PROJECT REFERENCE NO. 40924.3.F72	SHEET NO. 4
R/W SHEET NO.	
ROADWAY DESIGN ENGINEER	HYDRAULICS ENGINEER

$$$$$$$SYSTIME$$$$$
$$$$$$$$$$$$$$$$$DGN$$$$$$$$$$$$$$$$$
$$$$USERNAME$$$$

REVISIONS

8/17/99

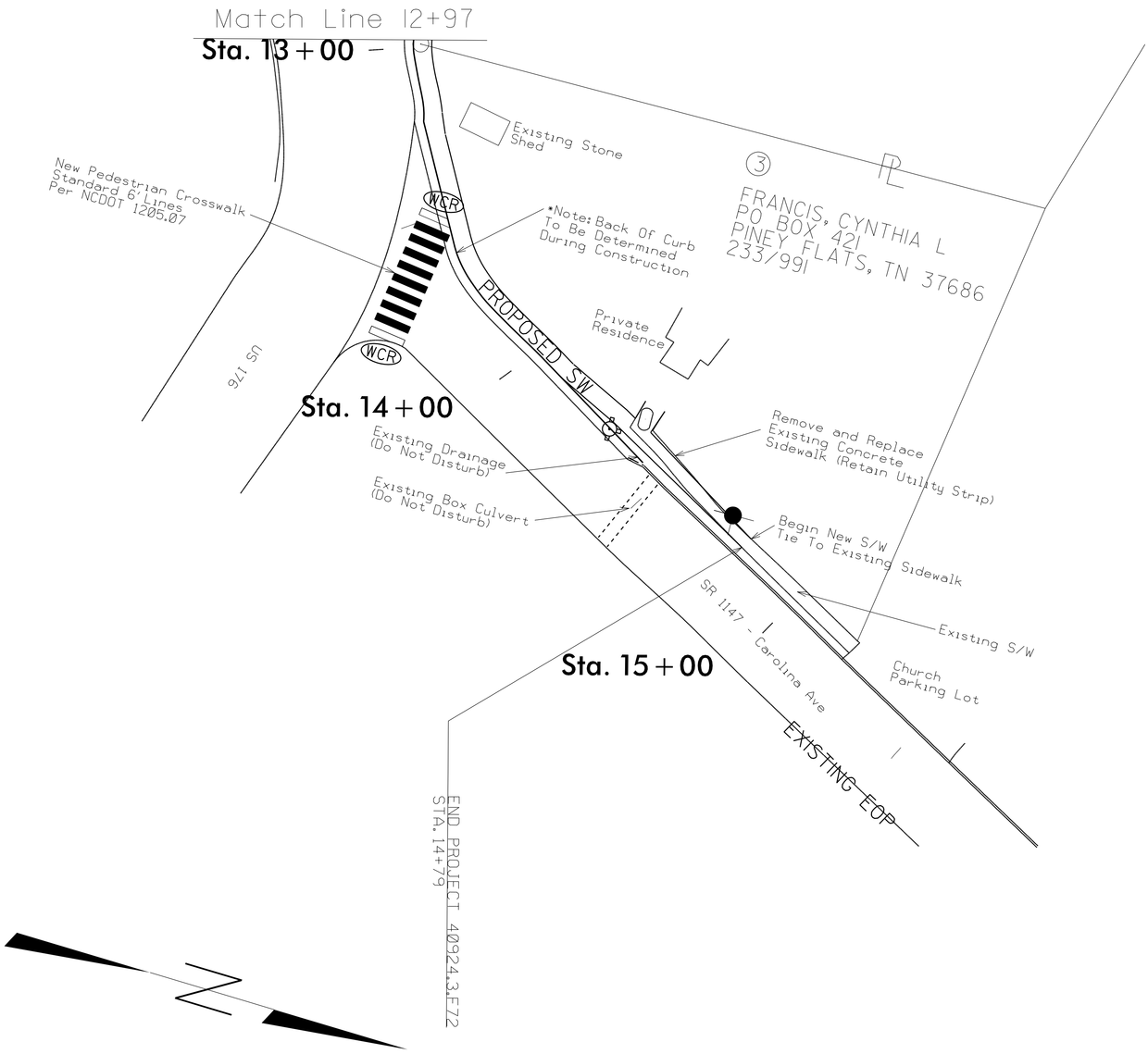

PROJECT REFERENCE NO.	40924.3.F72
RW SHEET NO.	
ROADWAY DESIGN ENGINEER	
HYDRAULICS ENGINEER	
SHEET NO.	5

PROJECT: 40924.3.F72

STATE	STATE PROJECT REFERENCE NO.	SHEET NO.	TOTAL SHEETS
N.C.	Main Street Saluda	EC-1	

STATE PROJ. NO.	F. A. PROJ. NO.	DESCRIPTION
40924.3.F72		

STATE OF NORTH CAROLINA
DIVISION OF HIGHWAYS

PLAN FOR PROPOSED
HIGHWAY EROSION CONTROL

POLK COUNTY

LOCATION: *SR 1147 –Carolina Avenue; SR 1178– W Main Street; US 176*
Beginning on SR 1178– W. Main Street
Ending on SR 1147– Carolina Ave.

TYPE OF WORK: *Drainage, Curb & Gutter, Sidewalk, Erosion Control and Traffic Control*

NCG–01 Permit Compliance Language for EC Plans

THESE EROSION AND SEDIMENT CONTROL PLANS COMPLY WITH THE REGULATIONS SET FORTH BY THE NCG–010000 GENERAL CONSTRUCTION PERMIT EFFECTIVE AUGUST 3, 2011 ISSUED BY THE NORTH CAROLINA DEPARTMENT OF ENVIRONMENT AND NATURAL RESOURCES DIVISION OF WATER QUALITY.

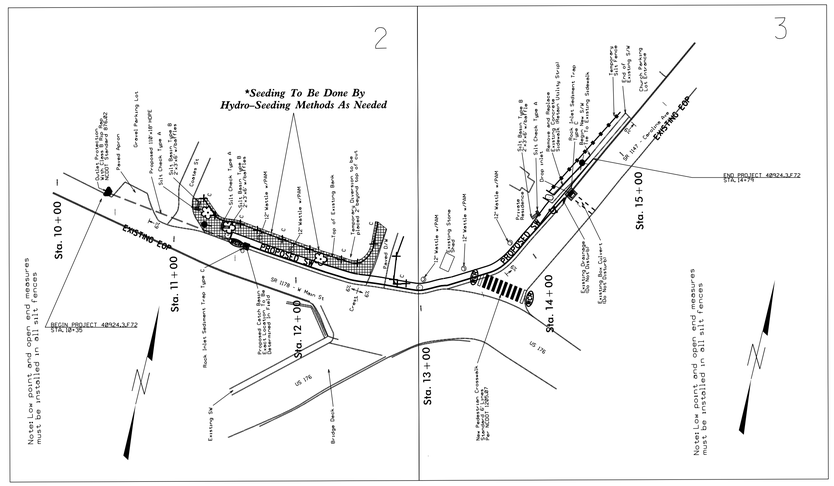

EROSION AND SEDIMENT CONTROL MEASURES

Std. #	Description	Symbol
1630.03	Temporary Silt Ditch	TSD
1630.05	Temporary Diversion	TD
1605.01	Temporary Silt Fence	
1606.01	Special Sediment Control Fence	
1622.01	Temporary Berms and Slope Drains	
1630.02	Silt Basin Type B	
1633.01	Temporary Rock Silt Check Type-A	
	Temporary Rock Silt Check Type-A with Matting and Polyacrylamide (PAM)	
1633.02	Temporary Rock Silt Check Type-B	
	Wattle / Coir Fiber Wattle	SW CFW
	Wattle / Coir Fiber Wattle with Polyacrylamide (PAM)	
1634.01	Temporary Rock Sediment Dam Type-A	
1634.02	Temporary Rock Sediment Dam Type-B	
1635.01	Rock Pipe Inlet Sediment Trap Type-A	
1635.02	Rock Pipe Inlet Sediment Trap Type-B	
1630.04	Stilling Basin	
1630.06	Special Stilling Basin	
	Rock Inlet Sediment Trap:	
1632.01	Type A	A
1632.02	Type B	B
1632.03	Type C	C
	Skimmer Basin	
	Tiered Skimmer Basin	
	Infiltration Basin	

THIS PROJECT CONTAINS EROSION CONTROL PLANS FOR CLEARING AND GRUBBING PHASE OF CONSTRUCTION.

GRAPHIC SCALE

0
PLANS

0
PROFILE (HORIZONTAL)

0
PROFILE (VERTICAL)

ROADSIDE ENVIRONMENTAL UNIT
DIVISION OF HIGHWAYS
STATE OF NORTH CAROLINA

THESE EROSION AND SEDIMENT CONTROL PLANS COMPLY WITH THE REGULATIONS SET FORTH BY THE NCG–010000 GENERAL CONSTRUCTION PERMIT EFFECTIVE AUGUST 3, 2011 ISSUED BY THE NORTH CAROLINA DEPARTMENT OF ENVIRONMENT AND NATURAL RESOURCES DIVISION OF WATER QUALITY.

Prepared In the Office of:

ROADSIDE ENVIRONMENTAL UNIT

4142 Haywood Rd.
Mills River, NC 28759

2012 STANDARD SPECIFICATIONS

Roadway Standard Drawings

The following roadway english standards as appear in "Roadway Standard Drawings"– Roadway Design Unit – N. C. Department of Transportation – Raleigh, N. C., dated January 2012 and the latest revison thereto are applicable to this project and by reference hereby are considered a part of these plans.

1604.01	Railroad Erosion Control Detail	1632.01	Rock Inlet Sediment Trap Type A
1605.01	Temporary Silt Fence	1632.02	Rock Inlet Sediment Trap Type B
1606.01	Special Sediment Control Fence	1632.03	Rock Inlet Sediment Trap Type C
1607.01	Gravel Construction Entrance	1633.01	Temporary Rock Silt Check Type A
1622.01	Temporary Berms and Slope Drains	1633.02	Temporary Rock Silt Check Type B
1630.01	Riser Basin	1634.01	Temporary Rock Sediment Dam Type A
1630.02	Silt Basin Type B	1634.02	Temporary Rock Sediment Dam Type B
1630.03	Temporary Silt Ditch	1635.01	Rock Pipe Inlet Sediment Trap Type A
1630.04	Stilling Basin	1635.02	Rock Pipe Inlet Sediment Trap Type B
1630.05	Temporary Diversion	1640.01	Coir Fiber Baffle
1630.06	Special Stilling Basin	1645.01	Temporary Stream Crossing
1631.01	Matting Installation		

REVISIONS

$$$$$$SYSTIME$$$$$
$$$$$$$$$$$$$$$$DGN$$$$$$$$$$$$$$$$
$$$$$USERNAME$$$$

8/17/99

Note: Low point and open end measures must be installed in all silt fences

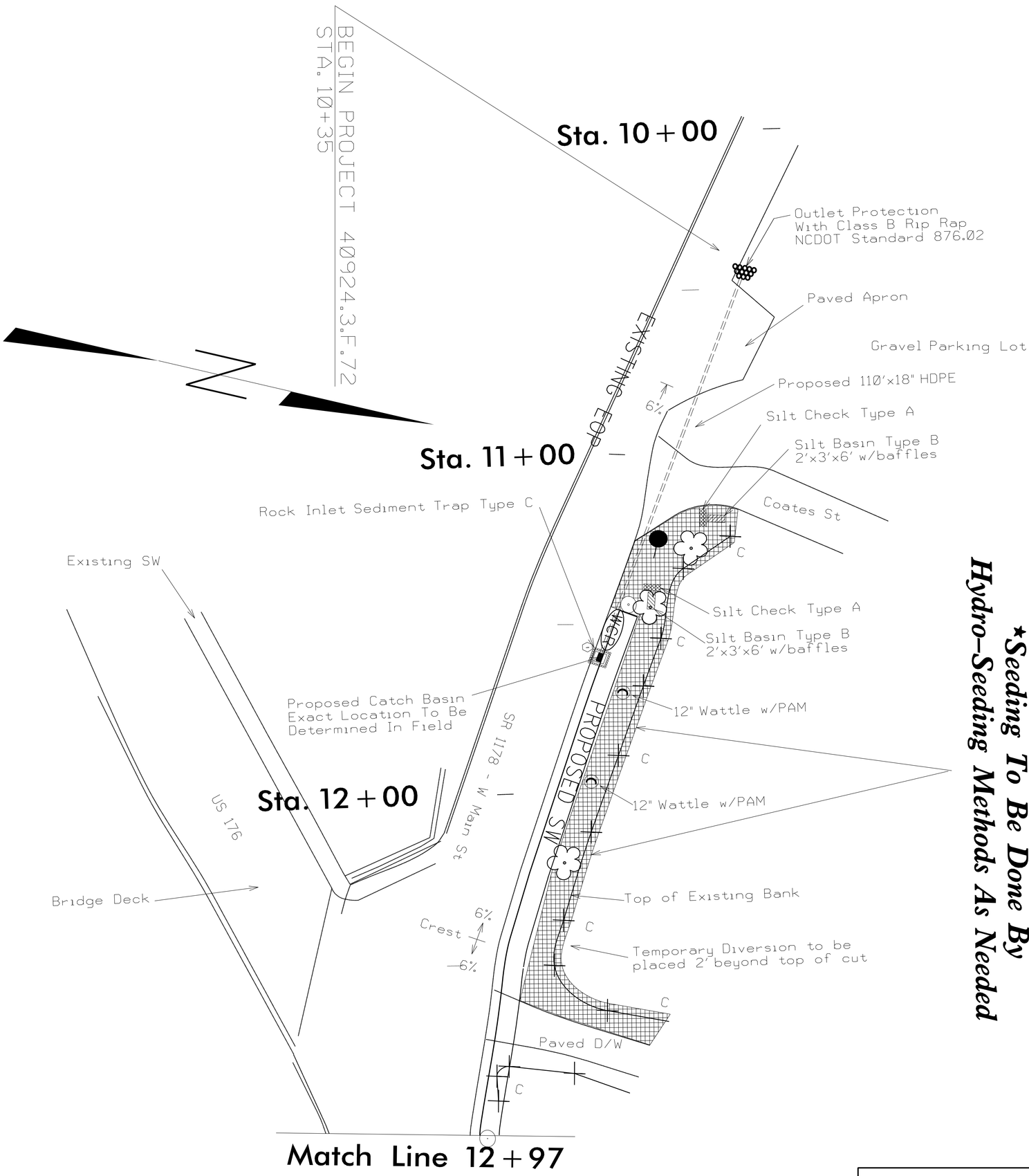

*Seeding To Be Done By Hydro-Seeding Methods As Needed

PROJECT REFERENCE NO.	40924.3.F.72
R/W SHEET NO.	
ROADWAY DESIGN ENGINEER	
HYDRAULICS ENGINEER	
SHEET NO.	EC-2

REVISIONS

$$$$$$SYSTIME$$$$$
$$$$$$$$$$$$$$$$DGN$$$$$$$$$$$$$$$$
$$$$USERNAME$$$$

8/17/99

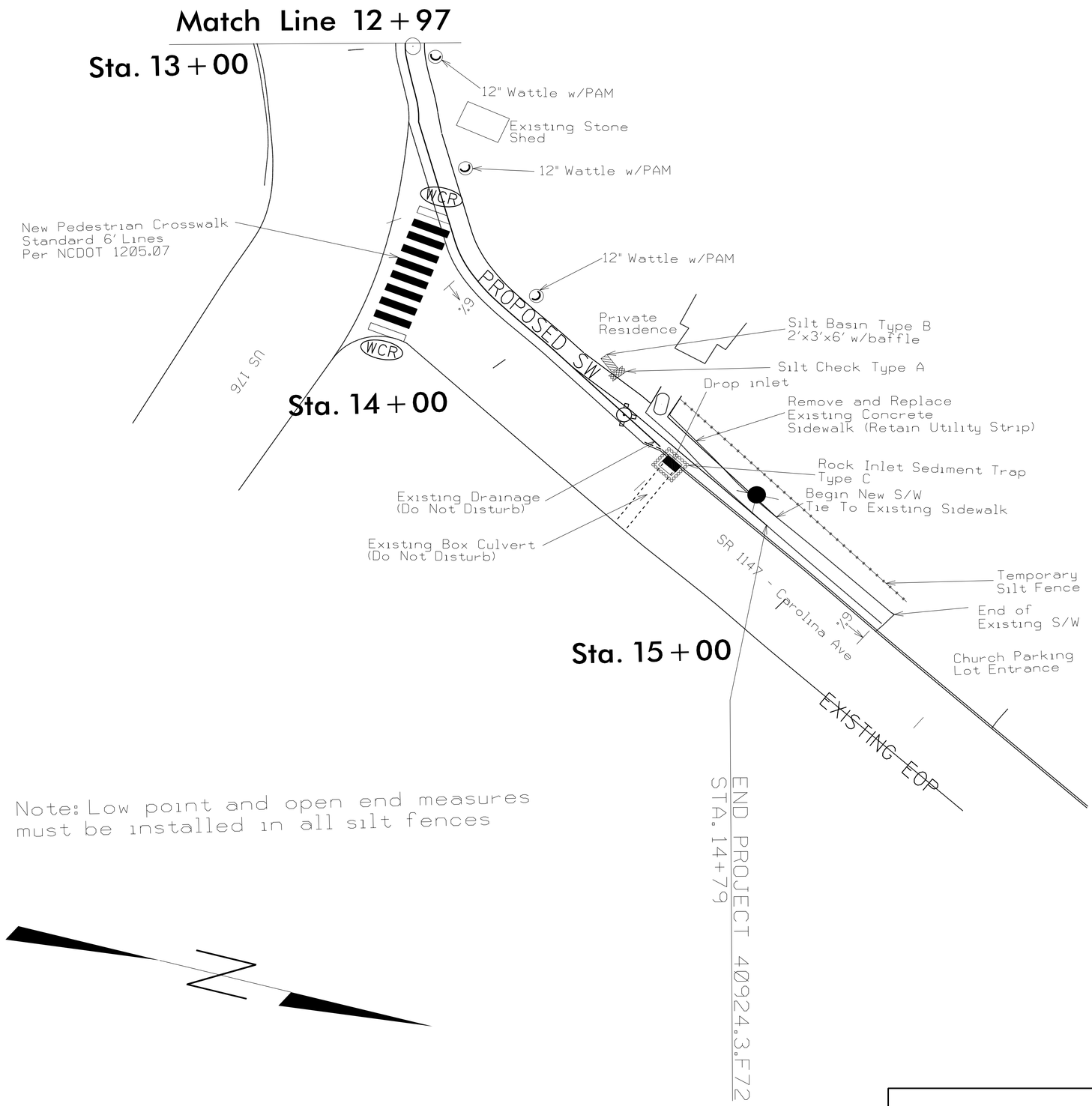

Note: Low point and open end measures must be installed in all silt fences

PROJECT REFERENCE NO.	40924.3.72
R/W SHEET NO.	
ROADWAY DESIGN ENGINEER	
HYDRAULICS ENGINEER	
SHEET NO.	EC-3