PROJECT: 17BP.14.R.53

CONTRACT: DN00179

See Sheet 1-A For Index of Sheets
See Sheet 1-B For Conventional Symbols

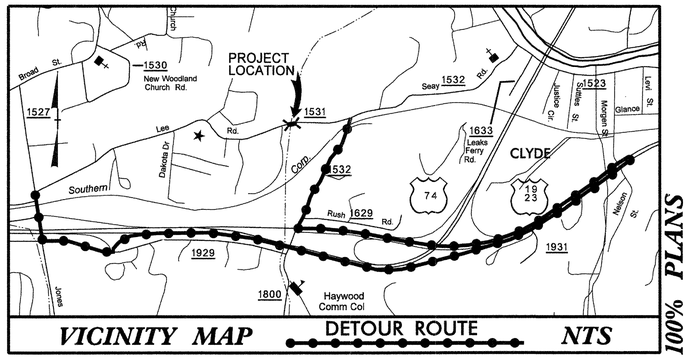

VICINITY MAP DETOUR ROUTE NTS

100% PLANS

STATE OF NORTH CAROLINA
DIVISION OF HIGHWAYS

HAYWOOD COUNTY

STATE	STATE PROJECT REFERENCE NO.	SHEET NO.	TOTAL SHEETS
N.C.	17BP.14.R.53	1	

STATE PROJ. NO.	F. A. PROJ. NO.	DESCRIPTION
17BP.14.R.53		PE
17BP.14.R.53		R/W
17BP.14.R.53		CONST.

LOCATION: BRIDGE NO. 359 ON SR 1531 OVER UNNAMED TRIBUTARY TO PIGEON RIVER

TYPE OF WORK: GRADING, PAVING, DRAINAGE, SIGNING, AND STRUCTURE

4

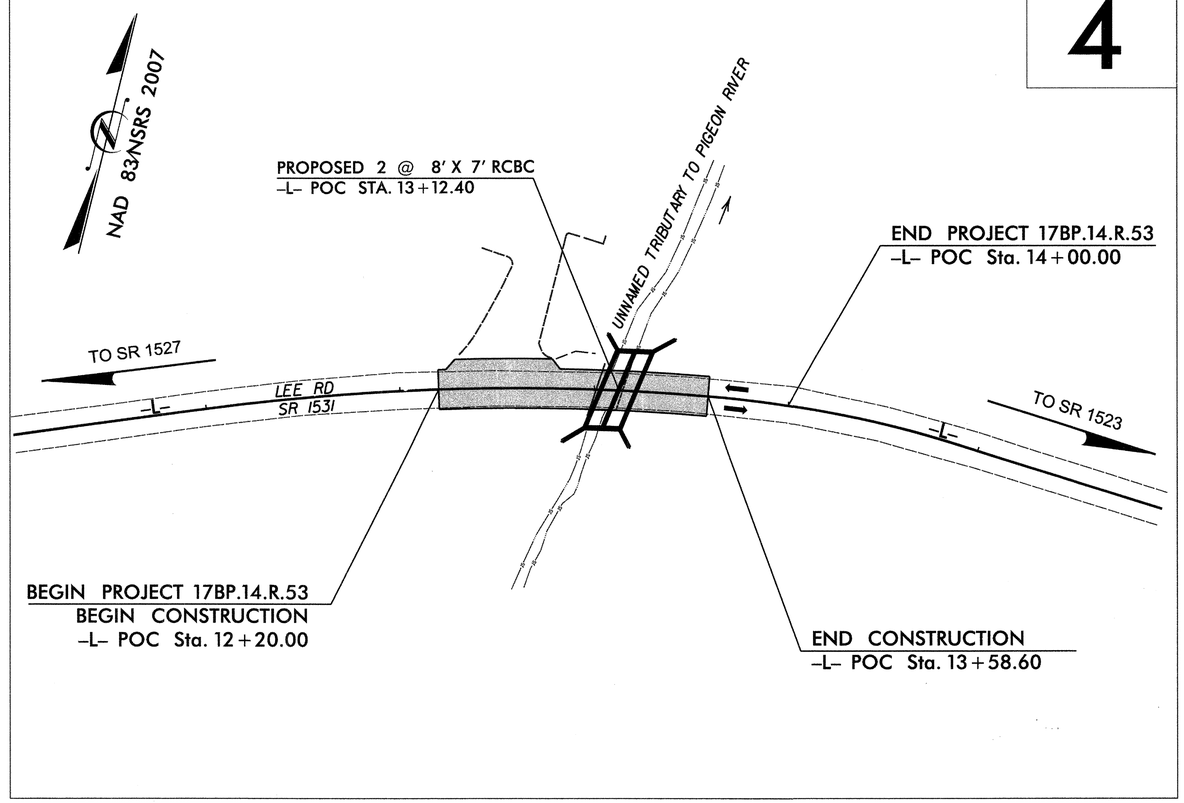

NCDOT CONTACT:
JOSH DEYTON, PE
HIGHWAY DIVISION 14
BRIDGE MANAGER

GRAPHIC SCALES

20 10 0 20 40
PLANS

20 10 0 20 40
PROFILE (HORIZONTAL)

4 2 0 4 8
PROFILE (VERTICAL)

DESIGN DATA

ADT 2008 = 1200
ADT =
DHV = %
D = %
T = % *
V = 35 MPH
(Vvertical = 20 MPH)
* TTST = DUAL
FUNC CLASS = LOCAL
SUB REGIONAL TIER

PROJECT LENGTH

LENGTH ROADWAY PROJECT	=	0.034 MILES
LENGTH STRUCTURES PROJECT	=	0.000 MILES
TOTAL LENGTH PROJECT	=	0.034 MILES

Prepared In the Office of:
THE LOUIS BERGER GROUP, Inc.
1001 Wade Avenue, Suite 400
Raleigh, North Carolina 27605
License No.: F-0840

2012 STANDARD SPECIFICATIONS

RIGHT OF WAY DATE:
JUNE 3, 2014

LETTING DATE:

DEAN D. HATFIELD, PE
PROJECT ENGINEER

WILLIAM E. TILLITT, PE
PROJECT DESIGN ENGINEER

HYDRAULICS ENGINEER
NORTH CAROLINA PROFESSIONAL SEAL 12786 ENGINEER STEVEN M. BONDOR
SIGNATURE: 7-9-14 P.E.

ROADWAY DESIGN ENGINEER
NORTH CAROLINA PROFESSIONAL SEAL 16003 ENGINEER DEAN D. HATFIELD
SIGNATURE: 7-21-14 P.E.

DIVISION OF HIGHWAYS
STATE OF NORTH CAROLINA
STATE OF NORTH CAROLINA DEPARTMENT OF TRANSPORTATION
P.E.
STATE HIGHWAY DESIGN ENGINEER

7/9/2014 11:46:47 AM
G:\DR Projects\DR1100 - NCDOT Group W\430359\Roadway\Proj\430359_RDY_00_TSH.dgn
G:\CADD\Plot\DR1100\1100_rdy.tbl

PROJECT REFERENCE NO.	SHEET NO.
17BP.14.R.53	1-A

ROADWAY DESIGN ENGINEER

NORTH CAROLINA PROFESSIONAL SEAL 15000 ENGINEER DEAN D. HARFIELD

7/21/14

STATE OF NORTH CAROLINA
DIVISION OF HIGHWAYS

INDEX OF SHEETS

INDEX OF SHEETS

SHEET NUMBER	SHEET
1	TITLE SHEET
1-A	INDEX OF SHEETS, GENERAL NOTES, AND LIST OF STANDARD DRAWINGS
1-B	CONVENTIONAL SYMBOLS
1-C	SURVEY CONTROL
2	PAVEMENT SCHEDULE, TYPICAL SECTIONS, AND WEDGING DETAILS
3	SUMMARY OF QUANTITIES
3A	SUMMARIES OF EARTHWORK, GUARDRAIL & SUMMARY OF DRAINAGE QUANTITIES
4	PLAN SHEET
5	PROFILE SHEET
TMP-1 THRU TMP-2	TRAFFIC CONTROL PLANS
PMP-1 THRU PMP-2	PAVEMENT MARKING PLANS
EC-1 THRU EC-3	EROSION CONTROL PLANS
UO-1 THRU UO-2	UTLITIES BY OTHERS PLANS
UC-1 THRU UC-3	UTLITY CONSTRUCTION PLANS
X-1 THRU X-4	CROSS-SECTIONS
C-1 THRU C-6	CULVERT PLANS

GENERAL NOTES

GENERAL NOTES:

2012 SPECIFICATIONS
EFFECTIVE: 01-17-12
REVISED: 11/01/11

GRADING AND SURFACING OR RESURFACING AND WIDENING:

THE GRADE LINES SHOWN DENOTE THE FINISHED ELEVATION OF THE PROPOSED SURFACING AT GRADE POINTS SHOWN ON THE TYPICAL SECTIONS. WHERE NO GRADE LINES ARE SHOWN, THE PROFILES SHOWN DENOTE THE TOP ELEVATION OF THE EXISTING PAVEMENT ALONG THE CENTER LINE OF SURVEY ON WHICH THE PROPOSED RESURFACING WILL BE PLACED. GRADE LINES MAY BE ADJUSTED BY THE ENGINEER IN ORDER TO SECURE A PROPER TIE-IN.

CLEARING:

CLEARING ON THIS PROJECT SHALL BE PERFORMED TO THE LIMITS ESTABLISHED BY METHOD II.

SUPERELEVATION:

ALL CURVES ON THIS PROJECT SHALL BE SUPERELEVATED IN ACCORDANCE WITH STD. NO. 225.04 USING THE RATE OF SUPERELEVATION AND RUNOFF SHOWN ON THE PLANS. SUPERELEVATION IS TO BE REVOLVED ABOUT THE GRADE POINTS SHOWN ON THE TYPICAL SECTIONS.

SHOULDER CONSTRUCTION:

ASPHALT, EARTH, AND CONCRETE SHOULDER CONSTRUCTION ON THE HIGH SIDE OF SUPERELEVATED CURVES SHALL BE IN ACCORDANCE WITH STD. NO. 560.01.

SIDE ROADS:

THE CONTRACTOR WILL BE REQUIRED TO DO ALL NECESSARY WORK TO PROVIDE SUITABLE CONNECTIONS WITH ALL ROADS, STREETS, AND DRIVES ENTERING THIS PROJECT. THIS WORK WILL BE PAID FOR AT THE CONTRACT UNIT PRICE FOR THE PARTICULAR ITEMS INVOLVED.

GUARDRAIL:

THE GUARDRAIL LOCATIONS SHOWN ON THE PLANS MAY BE ADJUSTED DURING CONSTRUCTION AS DIRECTED BY THE ENGINEER. THE CONTRACTOR SHOULD CONSULT WITH THE ENGINEER PRIOR TO ORDERING GUARDRAIL MATERIAL.

UTILITIES:

UTILITY OWNERS ON THIS PROJECT ARE

PROGRESS ENERGY, AT&T & TOWN OF WAYNESVILLE

ANY RELOCATION OF EXISTING UTILITIES WILL BE ACCOMPLISHED BY OTHERS.

ANY RELOCATION OF EXISTING UTILITIES WILL BE ACCOMPLISHED BY OTHERS, EXCEPT AS SHOWN ON THE PLANS.

RIGHT-OF-WAY MARKERS:

ALL RIGHT-OF-WAY MARKERS ON THIS PROJECT SHALL BE PLACED BY CONTRACT IN ACCORDANCE WITH SECTION 801 OF THE 2012 NORTH CAROLINA STANDARD SPECIFICATIONS FOR ROADS AND STRUCTURES

ROADWAY ENGLISH STANDARD DRAWINGS

2012 ROADWAY ENGLISH STANDARD DRAWINGS

The following Roadway Standards as appear in "Roadway Standard Drawings" Highway Design Branch - N. C. Department of Transportation - Raleigh N. C., Dated January, 2012 are applicable to this project and by reference hereby are considered a part of these plans:

STD.NO.	TITLE
DIVISION 2 - EARTHWORK	
200.02	Method of Clearing - Method II
225.02	Guide for Grading Subgrade - Secondary and Local
225.04	Method of Obtaining Superelevation - Two Lane Pavement
225.06	Method of Grading Sight Distance at Intersections
DIVISION 3 - PIPE CULVERTS	
300.01	Method of Pipe Installation
DIVISION 5 - SUBGRADE, BASES AND SHOULDERS	
560.01	Method of Shoulder Construction - High Side of Superelevated Curve - Method I
DIVISION 8 - INCIDENTALS	
840.52	Precast Manhole - 4', 5' and 6' Diameter
840.54	Manhole Frame and Cover
862.01	Guardrail Placement
862.02	Guardrail Installation
866.01	Chain Link Fence - 4', 5' and 6' High Fence
866.02	Woven Wire Fence - with Wood Post
866.04	Barbed Wire Fence with Wood Posts (2 - 7 Strands)
876.02	Guide for Rip Rap at Pipe Outlets

7/9/2014 11:10:36 AM
G:\DR Projects\DR1100 - NCDOT Group W\430359\Roadway\Proj\430359_RDY_01_1A.dgn
G:\CADD\Plot\DR1100\1100_rdy.tbl

PROJECT REFERENCE NO.	SHEET NO.
17BPJ4.R.53	1B

Note: Not to Scale

**S.U.E. = Subsurface Utility Engineering*

STATE OF NORTH CAROLINA
DIVISION OF HIGHWAYS

CONVENTIONAL PLAN SHEET SYMBOLS

BOUNDARIES AND PROPERTY:

- State Line
- County Line
- Township Line
- City Line
- Reservation Line
- Property Line
- Existing Iron Pin — EIP
- Property Corner
- Property Monument — ECM
- Parcel/Sequence Number — 123
- Existing Fence Line
- Proposed Woven Wire Fence
- Proposed Chain Link Fence
- Proposed Barbed Wire Fence
- Existing Wetland Boundary — WLB
- Proposed Wetland Boundary — WLB
- Existing Endangered Animal Boundary — EAB
- Existing Endangered Plant Boundary — EPB
- Known Soil Contamination: Area or Site
- Potential Soil Contamination: Area or Site

BUILDINGS AND OTHER CULTURE:

- Gas Pump Vent or U/G Tank Cap
- Sign — S
- Well — W
- Small Mine
- Foundation
- Area Outline
- Cemetery
- Building
- School
- Church
- Dam

HYDROLOGY:

- Stream or Body of Water
- Hydro, Pool or Reservoir
- Jurisdictional Stream — JS
- Buffer Zone 1 — BZ 1
- Buffer Zone 2 — BZ 2
- Flow Arrow
- Disappearing Stream
- Spring
- Wetland
- Proposed Lateral, Tail, Head Ditch — FLOW
- False Sump

RAILROADS:

- Standard Gauge — CSX TRANSPORTATION
- RR Signal Milepost — MILEPOST 35
- Switch — SWITCH
- RR Abandoned
- RR Dismantled

RIGHT OF WAY:

- Baseline Control Point
- Existing Right of Way Marker
- Existing Right of Way Line
- Proposed Right of Way Line — RW
- Proposed Right of Way Line with Iron Pin and Cap Marker — RW
- Proposed Right of Way Line with Concrete or Granite Marker — RW
- Existing Control of Access — CA
- Proposed Control of Access — CA
- Existing Easement Line — E
- Proposed Temporary Construction Easement — E
- Proposed Temporary Drainage Easement — TDE
- Proposed Permanent Drainage Easement — PDE
- Proposed Permanent Drainage / Utility Easement — DUE
- Proposed Permanent Utility Easement — PUE
- Proposed Temporary Utility Easement — TUE
- Proposed Aerial Utility Easement — AUE
- Proposed Permanent Easement with Iron Pin and Cap Marker

ROADS AND RELATED FEATURES:

- Existing Edge of Pavement
- Existing Curb
- Proposed Slope Stakes Cut — C
- Proposed Slope Stakes Fill — F
- Proposed Curb Ramp — CR
- Existing Metal Guardrail
- Proposed Guardrail
- Existing Cable Guiderail
- Proposed Cable Guiderail
- Equality Symbol
- Pavement Removal

VEGETATION:

- Single Tree
- Single Shrub
- Hedge
- Woods Line
- Orchard
- Vineyard — Vineyard

EXISTING STRUCTURES:

MAJOR:

- Bridge, Tunnel or Box Culvert — CONC
- Bridge Wing Wall, Head Wall and End Wall — CONC WW

MINOR:

- Head and End Wall — CONC HW
- Pipe Culvert
- Footbridge
- Drainage Box: Catch Basin, DI or JB — CB
- Paved Ditch Gutter
- Storm Sewer Manhole — S
- Storm Sewer — S

UTILITIES:

POWER:

- Existing Power Pole
- Proposed Power Pole
- Existing Joint Use Pole
- Proposed Joint Use Pole
- Power Manhole — P
- Power Line Tower
- Power Transformer
- U/G Power Cable Hand Hole
- H-Frame Pole
- Recorded U/G Power Line — P
- Designated U/G Power Line (S.U.E.*) — P

TELEPHONE:

- Existing Telephone Pole
- Proposed Telephone Pole
- Telephone Manhole — T
- Telephone Booth
- Telephone Pedestal — T
- Telephone Cell Tower
- U/G Telephone Cable Hand Hole — HH
- Recorded U/G Telephone Cable — T
- Designated U/G Telephone Cable (S.U.E.*) — T
- Recorded U/G Telephone Conduit — TC
- Designated U/G Telephone Conduit (S.U.E.*) — TC
- Recorded U/G Fiber Optics Cable — T FO
- Designated U/G Fiber Optics Cable (S.U.E.*) — T FO

WATER:

- Water Manhole — W
- Water Meter
- Water Valve
- Water Hydrant
- Recorded U/G Water Line — W
- Designated U/G Water Line (S.U.E.*) — W
- Above Ground Water Line — A/G Water

TV:

- TV Satellite Dish
- TV Pedestal — C
- TV Tower
- U/G TV Cable Hand Hole — HH
- Recorded U/G TV Cable — TV
- Designated U/G TV Cable (S.U.E.*) — TV
- Recorded U/G Fiber Optic Cable — TV FO
- Designated U/G Fiber Optic Cable (S.U.E.*) — TV FO

GAS:

- Gas Valve
- Gas Meter
- Recorded U/G Gas Line — G
- Designated U/G Gas Line (S.U.E.*) — G
- Above Ground Gas Line — A/G Gas

SANITARY SEWER:

- Sanitary Sewer Manhole
- Sanitary Sewer Cleanout
- U/G Sanitary Sewer Line — SS
- Above Ground Sanitary Sewer — A/G Sanitary Sewer
- Recorded SS Forced Main Line — FSS
- Designated SS Forced Main Line (S.U.E.*) — FSS

MISCELLANEOUS:

- Utility Pole
- Utility Pole with Base
- Utility Located Object
- Utility Traffic Signal Box — S
- Utility Unknown U/G Line — ?UTL
- U/G Tank; Water, Gas, Oil
- Underground Storage Tank, Approx. Loc. — UST
- A/G Tank; Water, Gas, Oil
- Geoenvironmental Boring
- U/G Test Hole (S.U.E.*)
- Abandoned According to Utility Records — AATUR
- End of Information — E.O.I.

04/16/11
7/9/2014 8:58:54 AM
G:\OR Projects\OR1100 - NCDOT Group W\430359\Roadway\Proj\430359_RDY_01_1B.dgn
G:\CADD\Plot\OR1100\1100_rdy.tbl

PROJECT REFERENCE NO.	SHEET NO.
17BP.14.R.53	1C
Location and Surveys	

SURVEY CONTROL SHEET 43-0359
-FINAL-

BL

POINT	DESC.	NORTH	EAST	ELEVATION	L STATION	OFFSET
1	BL-1	671708.2740	830625.9960	2585.59	2+95.12	11.68 RT
2	BL-2	671826.3870	830883.2810	2564.95	12+86.75	18.62 LT
3	BL-3	671814.3591	831151.8887	2573.49	15+53.84	11.56 RT

****
BM1 ELEVATION = 2563.56
N 671834 E 830935
L STATION 13+39.00 15 LEFT
RR SPIKE SET IN BASE TEL POLE
****

-FINAL- PDE MARKER IRON PIN AND CAP-E

ALIGN	STATION	OFFSET	NORTH	EAST
L	12+90.00	-30.00	671838.2161	830884.0355
L	13+18.00	-50.00	671863.7381	830908.2304
L	13+38.00	-50.00	671867.6168	830928.6949
L	13+50.00	-30.00	671850.0660	830944.3687
L	13+24.00	30.00	671786.3864	830929.5206
L	13+00.00	45.00	671767.0551	830909.7216
L	12+80.00	45.00	671762.8757	830890.9271
L	12+76.00	30.00	671776.6069	830883.7545

-FINAL- PUE MARKER IRON PIN AND CAP-E

ALIGN	STATION	OFFSET	NORTH	EAST
L	12+51.39	30.00	671770.8883	830860.4486
L	12+70.32	49.76	671756.1119	830882.9690
L	13+26.63	49.69	671767.5296	830935.7267
L	13+46.02	30.00	671790.2626	830950.6427

-FINAL- ROW MARKER IRON PIN AND CAP-E

ALIGN	STATION	OFFSET	NORTH	EAST
L	12+75.00	-10.00	671815.3182	830873.6339
L	12+75.00	-30.00	671834.7858	830869.0501
L	13+58.60	-30.00	671851.5183	830953.0634
L	14+00.00	-30.00	671857.1121	830996.0429
L	14+00.00	-10.00	671837.2060	830997.9781
L	14+00.00	10.00	671817.2998	830999.9132
L	14+00.00	30.00	671797.3937	831001.8484
L	13+58.60	30.00	671792.3033	830962.7372
L	12+20.00	30.00	671762.9053	830830.8954
L	12+20.00	10.00	671782.1437	830825.4290

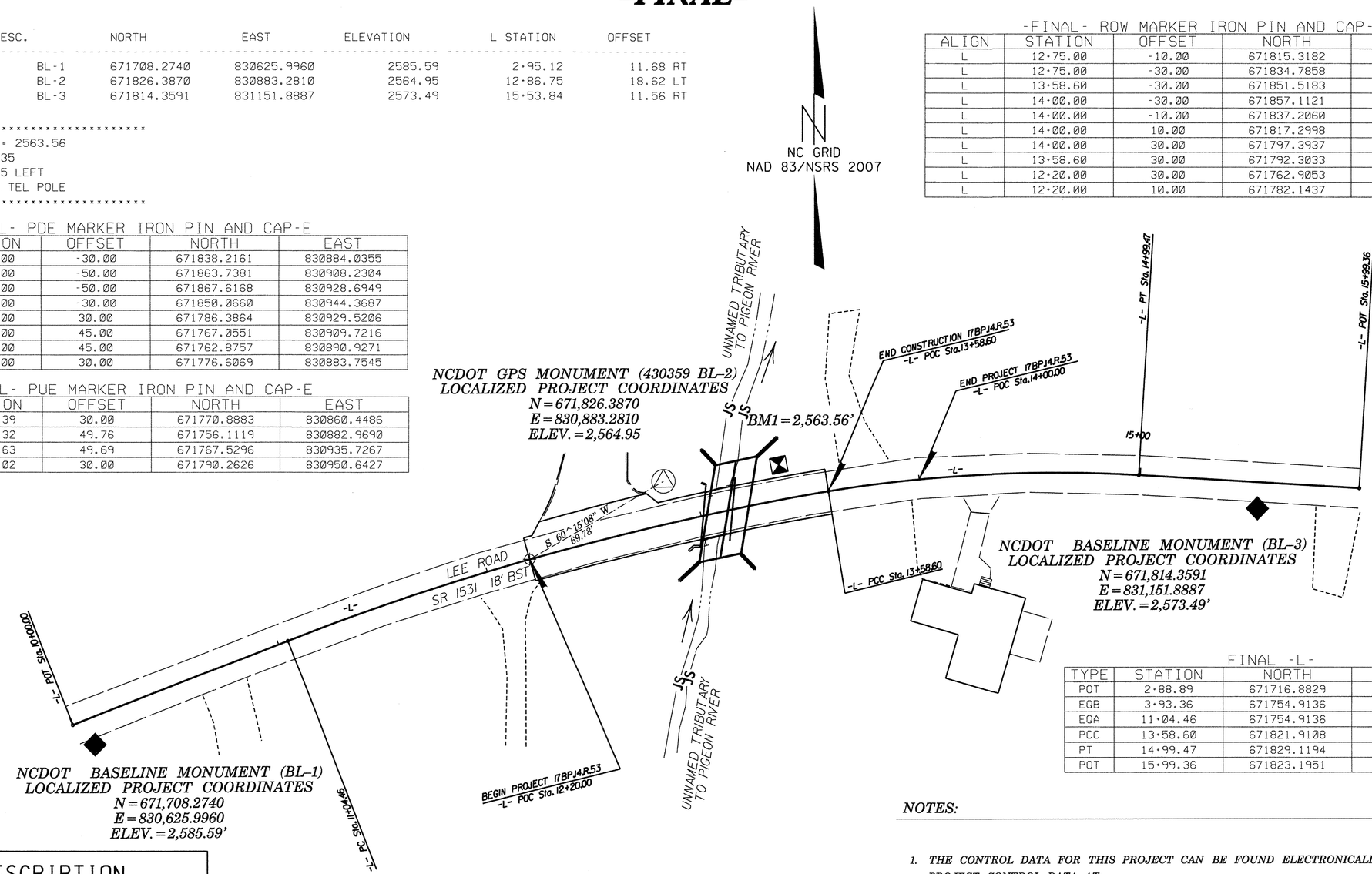

FINAL -L-

TYPE	STATION	NORTH	EAST
POT	2+88.89	671716.8829	830615.9450
EQB	3+93.36	671754.9136	830713.2380
EQA	11+04.46	671754.9136	830713.2380
PCC	13+58.60	671821.9108	830957.9003
PT	14+99.47	671829.1194	831098.2990
POT	15+99.36	671823.1951	831198.0160

DATUM DESCRIPTION

THE LOCALIZED COORDINATE SYSTEM DEVELOPED FOR THIS PROJECT IS BASED ON THE STATE PLANE COORDINATES ESTABLISHED BY NCDOT FOR MONUMENT "430359 (BL-2)"
WITH NAD 83/NSRS 2007 STATE PLANE GRID COORDINATES OF
NORTHING: 671826.3870(ft) EASTING: 830883.2810(ft)
ELEVATION: 2564.95(ft)
THE AVERAGE COMBINED GRID FACTOR USED ON THIS PROJECT (GROUND TO GRID) IS: 0.999765883
THE N.C. LAMBERT GRID BEARING AND LOCALIZED HORIZONTAL GROUND DISTANCE FROM "430359 (BL-2)" TO -L- STATION 12+20.00 IS S 60°15'08" W 69.78'
ALL LINEAR DIMENSIONS ARE LOCALIZED HORIZONTAL DISTANCES
VERTICAL DATUM USED IS NAVD 88

GEOID MODEL - G09NC
NOTE: DRAWING NOT TO SCALE

NOTES:

1. *THE CONTROL DATA FOR THIS PROJECT CAN BE FOUND ELECTRONICALLY BY SELECTING PROJECT CONTROL DATA AT:*
HTTPS://CONNECT.NCDOT.GOV/RESOURCES/LOCATION/

THE FILES TO BE FOUND ARE AS FOLLOWS:
430359_LS_CONTROL.TXT

SITE CALIBRATION INFORMATION HAS NOT BEEN PROVIDED FOR THIS PROJECT. IF FURTHER INFORMATION IS NEEDED, PLEASE CONTACT THE LOCATION AND SURVEYS UNIT.

INDICATES GEODETIC CONTROL MONUMENTS USED OR SET FOR HORIZONTAL PROJECT CONTROL BY THE NCDOT LOCATION AND SURVEYS UNIT.
PROJECT CONTROL ESTABLISHED USING GLOBAL POSITIONING SYSTEM.

$$$$$$SYSTIME$$$$$$
$$$$$$FILENAME$$$$$$

PROJECT REFERENCE NO.	SHEET NO.
17BP.14.R.53	2
R/W SHEET NO.	
ROADWAY DESIGN ENGINEER	PAVEMENT DESIGN ENGINEER
NORTH CAROLINA PROFESSIONAL SEAL 16003 ENGINEER DEAN D. HATFIELD	NORTH CAROLINA PROFESSIONAL SEAL 16003 ENGINEER DEAN D. HATFIELD
REGISTERED ENGINEER 7/9/2014	REGISTERED ENGINEER 7/9/2014

N.T.S

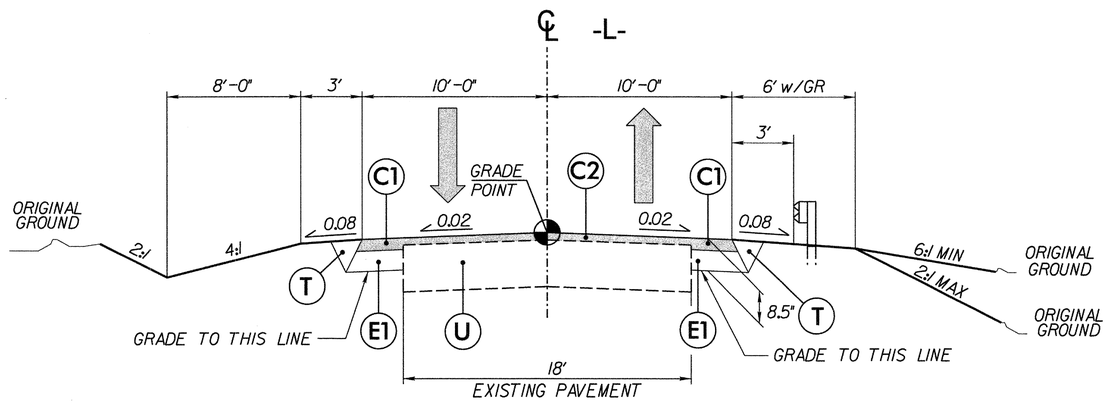

TYPICAL SECTION No. 1

-L- STA 12+20.00 TO -L- STA 13+58.60

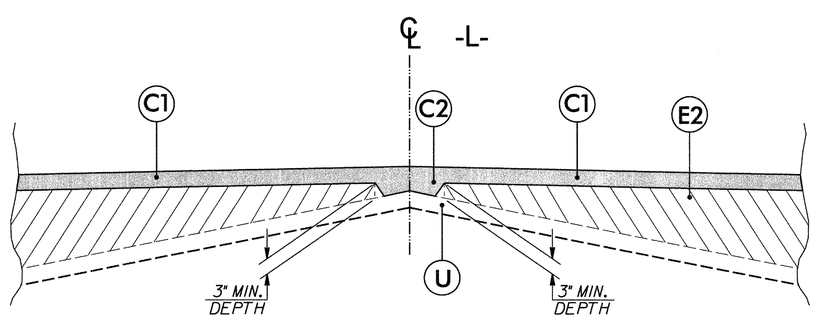

DETAIL SHOWING METHOD OF WEDGING

Note: Pavement edge slopes are 1:1 unless shown otherwise.

PAVEMENT SCHEDULE	
ITEM	DESCRIPTION
C1	Prop. Approx 3.0" Asphalt Concrete Surface Course, Type S9.5B, at an Average Rate of 168 lbs. Per sq. yard in each of two layers.
C2	Prop. Var. Depth Asphalt Concrete Surface Course, Type S9.5B, at an Average Rate of 112 lbs. Per sq. yard Per 1" Depth, to be placed in layers not less than 1.5" or greater than 2" in depth.
E1	Prop. Approx 5.5" Asphalt Concrete Base Course, Type B25.0B, at an Average Rate of 627 lbs. Per sq. yard.
E2	Prop. Var. Depth Asphalt Concrete Base Course, Type B25.0B, at an Average Rate of 114 lbs. Per sq. yard Per 1" Depth, to be placed in layers not less than 4" or greater than 5.5" in depth.
T	Earth Material
U	Existing Pavement
W	Var. Depth Asphalt Pavement

REVISIONS

7/9/2014 8:58:58 AM
G:\OR Projects\OR1100 - NCDOT Group W\430359\Roadway\Proj\430359_RDY_02_TYP.dgn
G:\CADD\Plot\OR1100\1100_rdy.tbl

STATE OF NORTH CAROLINA
DIVISION OF HIGHWAYS

SUMMARY OF QUANTITIES

Line Item	Des	Sec No.	Description	Quantity	Unit
1	0000100000-N	800	MOBILIZATION	1	LS
2	0000400000-N	801	CONSTRUCTION SURVEYING	1	LS
3	0036000000-E	225	UNDERCUT EXCAVATION	50	CY
4	0043000000-N	226	GRADING	1	LS
-	0001000000-E	200	CLEARING & GRUBBING (0.20 Acres)	1	LS
-	0022000000-E	225	UNCLASSIFIED EXCAVATION	5	CY
-	0106000000-E	230	BORROW EXCAVATION	300	CY
-	1011000000-N	500	FINE GRADING (130 SY)	1	LS
5	0050000000-E	226	SUPPLEMENTARY CLEARING & GRUBBING	0.20	ACR
6	0195000000-E	265	SELECT GRANULAR MATERIAL	50	CY
7	0196000000-E	270	GEOTEXTILE FOR SOIL STABILIZATION	50	SY
8	0318000000-E	300	FOUNDATION CONDITIONING MATERIAL MINOR STRUCTURES	10	TON
9	0320000000-E	300	FOUNDATION CONDITIONING FABRIC	10	SY
10	0335400000-E	305	24" DRAINAGE PIPE	120	LF
11	0588000000-E	310	18" CS PIPE CULVERTS, 0.064" THICK	18	LF
12	0600000000-E	310	30" CS PIPE CULVERTS, 0.079" THICK	12	LF
13	1220000000-E	545	INCIDENTAL STONE BASE	50	TON
14	1489000000-E	610	ASPHALT CONC BASE COURSE, TYPE B25.0B	60	TON
15	1519000000-E	610	ASPHALT CONC SURFACE COURSE, TYPE S9.5B	60	TON
16	1575000000-E	620	ASPHALT BINDER FOR PLANT MIX	10	TON
17	2286000000-N	840	MASONRY DRAINAGE STRUCTURES	2	EA
18	2396000000-N	840	FRAME WITH COVER, STD 840.54	2	EA
19	3030000000-E	862	STEEL BM GUARDRAIL	200	LF
20	3045000000-E	862	STEEL BM GUARDRAIL, SHOP CURVED	50	LF
21	3150000000-N	862	ADDITIONAL GUARDRAIL POSTS	4	EA
22	3165000000-N	SP	GUARDRAIL ANCHOR UNITS, TYPE 350 TL-2	2	EA
23	3195000000-N	862	GUARDRAIL ANCHOR UNITS, TYPE AT-1	2	EA
24	3569000000-E	867	BARBED WIRE FENCE RESET	75	LF
25	3566000000-E	867	WOVEN WIRE FENCE RESET	25	LF
26	3572000000-E	867	CHAIN LINK FENCE RESET	25	LF
27	3628000000-E	876	RIP RAP, CLASS I	10	TON
28	3649000000-E	876	RIP RAP, CLASS B	5	TON
29	3656000000-E	876	GEOTEXTILE FOR DRAINAGE	30	SY
30	4400000000-E	1110	WORK ZONE SIGNS (STATIONARY)	437	SF
31	4410000000-E	1110	WORK ZONE SIGNS (BARRICADE MOUNTED)	94	SF
32	4445000000-E	1145	BARRICADES (TYPE III)	64	LF
33	4810000000-E	1205	PAINT PAVEMENT MARKING LINES (4")	1,120	LF
34	5325600000-E	1510	6" WATER LINE	118	LF
35	5540000000-E	1515	6" VALVE	2	EA
36	5800000000-E	1530	ABANDON 6" UTILITY PIPE	97	LF
37	5691200000-E	1520	6" SANITARY GRAVITY SEWER	57	LF
38	5775000000-E	1525	4' DIA UTILITY MANHOLE	1	EA
39	5800000000-E	1530	ABANDON 6" UTILITY PIPE	97	LF
40	6000000000-E	1605	TEMPORARY SILT FENCE	850	LF
41	6012000000-E	1610	SEDIMENT CONTROL STONE	6	TON
42	6015000000-E	1615	TEMPORARY MULCHING	0.20	ACR
43	6030000000-E	1630	SILT EXCAVATION	15	CY
44	6036000000-E	1631	MATTING FOR EROSION CONTROL	1,500	SY
45	6042000000-E	1632	1/4" HARDWARE CLOTH	16	LF
46	6070000000-N	1639	SPECIAL STILLING BASIN	1	EA
47	6084000000-E	1660	SEEDING & MULCHING	0.20	ACR
48	6090000000-E	1661	SEED FOR REPAIR SEEDING	50	LB
49	6093000000-E	1661	FERTILIZER FOR REPAIR SEEDING	0.05	TON
50	6096000000-E	1662	SEED FOR SUPPLEMENTAL SEEDING	50	LB
51	6108000000-E	1665	FERTILIZER TOPDRESSING	0.05	TON
52	6111000000-E	SP	IMPERVIOUS DIKE	250	LF
53	6117000000-N	SP	RESPONSE FOR EROSION CONTROL	12	EA
			STRUCTURES		
54	8035000000-N	402	REMOVAL OF EXISTING STRUCTURE AT STATION -L- 13+12.40	1	LS
55	8126000000-N	414	CULVERT EXCAVATION, STATION -L- 13+12.40	1	LS
56	8133000000-E	414	FOUNDATION CONDITIONING MATER-IAL, BOX CULVERT	74	TON
57	8196000000-E	420	CLASS A CONCRETE (CULVERT)	111.1	CY
58	8245000000-E	425	REINFORCING STEEL (CULVERT)	16,080	LB
59	8594000000-E	876	RIP RAP, CLASS B	31.5	TON
60	8804000000-N	SP	PRECAST REINFORCED BOX CULVERT (OPTION)	1	LS

REVISIONS

8/4/2014 9:42:12 AM
G:\DR Projects\DR1100 - NCDOT Group W\430359\Roadway\Proj\430359_RDY_03_SOQ.dgn
G:\CADD\Plot\DR1100\1100_rdy.tbl

PROJECT REFERENCE NO.	SHEET NO.
17BP.14.R.53	3-A

STATE OF NORTH CAROLINA
DIVISION OF HIGHWAYS

"N" = DISTANCE FROM EDGE OF LANE TO FACE OF GUARDRAIL.
TOTAL SHOULDER WIDTH = DISTANCE FROM EDGE OF TRAVEL LANE TO SHOULDER BREAK POINT.
FLARE LENGTH = DISTANCE FROM LAST SECTION OF PARALLEL GUARDRAIL TO END OF GUARDRAIL.
W = TOTAL WIDTH OF FLARE FROM BEGINNING OF TAPER TO END OF GUARDRAIL.
G = GATING IMPACT ATTENUATOR TYPE 350
NG = NON-GATING IMPACT ATTENUATOR TYPE 350

GUARDRAIL SUMMARY

SURVEY LINE	BEG. STA.	END STA.	LOCATION	LENGTH			WARRANT POINT		"N" DIST. FROM E.O.L.	TOTAL SHOUL. WIDTH	FLARE LENGTH		W		ANCHORS									IMPACT ATTENUATOR TYPE 350			SINGLE FACED GUARDRAIL	REMOVE EXISTING GUARDRAIL	REMOVE AND STOCKPILE EXISTING GUARDRAIL	REMARKS
				STRAIGHT	SHOP CURVED	DOUBLE FACED	APPROACH END	TRAILING END			APPROACH END	TRAILING END	APPROACH END	TRAILING END	XI MOD	XI	GRAU 350 TL-2	M-350	TYPE-III	CAT-1	VI MOD	B-77	AT-1	EA	G	NG				
-L-	12+75.00	13+62.50	LT	87.5'	25'	-	-	-	3'	6'	-	-	-	-	-	-	-	-	-	-	-	-	2	-	-	-	-	-	-	-
-L-	12+28.00	13+90.50	RT	162.5'	25'	-	-	-	3'	6'	-	-	-	-	-	-	2	-	-	-	-	-	-	-	-	-	-	-	-	-
-	-	-	-	-	-	-	-	-	-	-	-	-	-	-	-	-	-	-	-	-	-	-	-	-	-	-	-	-	-	-
-	-	-	-	-	-	-	-	-	-	-	-	-	-	-	-	-	-	-	-	-	-	-	-	-	-	-	-	-	-	-
-	-	-	-	-	-	-	-	-	-	-	-	-	-	-	-	-	-	-	-	-	-	-	-	-	-	-	-	-	-	-
-	-	-	-	-	-	-	-	-	-	-	-	-	-	-	-	-	-	-	-	-	-	-	-	-	-	-	-	-	-	-
			SUB-TOTAL	250'											DEDUCTIONS FOR GUARDRAIL ANCHOR UNITS															
	DEDUCTIONS FOR GUARDRAIL ANCHOR UNITS			62.5'											TYPE AT-1			2 @ 6.25' =		12.5'										
			TOTAL	187.5'											GRAU-350 TL-2			2 @ 25' =		50'										
			SAY	200'														TOTAL =		62.5'										

NOTE: INVERT ELEVATIONS INDICATED ARE FOR BID PURPOSES ONLY AND SHALL NOT BE USED FOR PROJECT CONSTRUCTION STAKEOUT. SEE "STANDARDS SPECIFICATIONS FOR ROADS AND STRUCTURES, SECTION 300-5".

LIST OF PIPES, ENDWALLS, ETC. (FOR PIPES 48" & UNDER)

STATION	LOCATION (L.T.,RT., OR CL)	STRUCTURE NO. FROM	STRUCTURE NO. TO	TOP ELEVATION	INVERT ELEVATION	INVERT ELEVATION	SLOPE CRITICAL	DRAINAGE PIPE (RCP, CSP, CAAP, HDPE, or PVC) SIZE	DO NOT USE RCP	DO NOT USE CSP	DO NOT USE CAAP	DO NOT USE HDPE	C.S. PIPE THICKNESS OR GAUGE	R.C. PIPE CLASS III	R.C. PIPE CLASS IV	** R.C. PIPE (CLASS V)	*** R.C. PIPE CULVERTS, CONTRACTOR DESIGN	**** R.C. PIPE CULVERTS, CONTRACTOR DESIGN	18" SIDE DRAIN PIPE	ENDWALLS STD. 838.01, STD. 838.11 OR STD. 838.80 (UNLESS NOTED OTHERWISE) CU. YDS. R.C.P.	C.S.P.	QUANTITIES FOR DRAINAGE STRUCTURES * TOTAL LF FOR PAY QUANTITY SHALL BE COL. "A" + (1.3 X COL. "B") LIN. FT. PER EACH (0' THRU 5.0')	A 5.0' THRU 10.0'	B 10.0' AND ABOVE	C.B. STD. 840.01 OR STD. 840.02	FRAME, GRATES AND HOOD STANDARD 840.03 TYPE OF GRATE E	F	G	CONCRETE TRASITIONAL SECTION DROP INLET	CATCH BASIN	D.I. STD. 840.14 OR STD. 840.15	D.I. FRAME & GRATE STD. 840.16	G.D.I. TYPE "A" STD. 840.17 OR 840.26	G.D.I. TYPE "B" STD. 840.18 OR 840.27	G.D.I. TYPE "D" STD. 840.19 OR 840.28	G.D.I. FRAME WITH GRATE STD. 840.20	G.D.I. FRAME WITH TWO GRATE STD. 840.22	G.D.I. (N.S.) FRAME WITH GRATE STD. 840.24	G.D.I. (N.S.) FRAME WITH TWO GRATES STD. 840.29	J.B. STD. 840.31 OR 840.32	TB G.D.I. STD. 840.35	F.E.S. FLARED END SECTION STD	FRAME WITH COVER, STD. 840.54	DRAINAGE PIPE ELBOWS NO. & SIZE	DRAINAGE PIPE ELBOWS NO. & SIZE	CONC. & BRICK PIPE PLUG, C.Y. STD. 840.71	CONC. COLLARS CL. "B" C.Y. STD 840.72	PIPE REMOVAL LIN. FT.	REMARKS
L 13+00	LT	0401		2562.00																		1										1			1									JBOX WITH MH COVER
L 13+00	LT	0401	0402		2557.10	2556.50							12																																				
L 13+56	LT	0403		2562.00																		1										1			1									JBOX WITH MH COVER
L 13+56	LT	0403	0404		2559.00	2558.50								18																																			
SHEET TOTALS														18	12							2										2			2								

ABBREVIATIONS

C.B.	CATCH BASIN
N.D.I.	NARROW DROP INLET
D.I.	DROP INLET
G.D.I.	GRATED DROP INLET
G.D.I. (N.S.)	GRATED DROP INLET (NARROW SLOT)
J.B.	JUNCTION BOX
M.H.	MANHOLE
T.B.D.I.	TRAFFIC BEARING DROP INLET
T.B.J.B.	TRAFFIC BEARING JUNCTION BOX

SUMMARY OF EARTHWORK (IN CUBIC YARDS)

STATION	STATION	UNCL. EXCAV.	EMBANK. +%	BORROW	WASTE
-L- 12+20.00	13+10.00	2	168	166	-
-L- 13+10.00	13+50.00	1	112	111	-
-	-	-	-	-	-
-	-	-	-	-	-
-	-	-	-	-	-
-	-	-	-	-	-
PROJECT TOTALS:		3	280	277	-
		-	-	-	-
-		-	-	-	-
-		-	-	-	-
-		-	-	-	-
LOSS DUE TO CLEARING & GRUBBING		-1	-	-	-
-		-	-	-	-
GRAND TOTALS:		2	280	277	-
-		-	-	-	-
SAY:		5	-	300	-

CONTINGENCY ITEMS
UNDERCUT EXCAVATION 50 CY
SELECT GRANULAR MATERIAL 50 CY
GEOTEXTILE FOR SOIL STABILIZATION 50 SY
INCIDENTAL STONE BASE 50 TON

Note: Approximate quantities only. Unclassified Excavation, Fine Grading, Borrow Excavation and Clearing and Grubbing will be paid for at the contract lump sum price for "Grading."

REVISIONS

7/9/2014 8:59:00 AM
G:\OR Projects\OR11100 - NCDOT Group W\430359\Roadway\Proj\430359_RDY_03A_SUMMARY.dgn
G:\CADD\Plot\OR11100\1100_rdy.tbl

THE LOUIS BERGER GROUP, Inc.
1001 Wade Avenue, Suite 400
Raleigh, NC 27605-3322

ROADWAY PLANS

PROJECT REFERENCE NO.	SHEET NO.
17BPJ4.R.53	4
R/W SHEET NO.	

ROADWAY DESIGN ENGINEER — NORTH CAROLINA PROFESSIONAL SEAL 16003 ENGINEER DAVID D. HATFIELD — REGISTERED ENGINEER 7-21-14

HYDRAULICS ENGINEER — NORTH CAROLINA PROFESSIONAL SEAL 12786 ENGINEER STEVEN H. BONDOR — REGISTERED ENGINEER 7-21-14

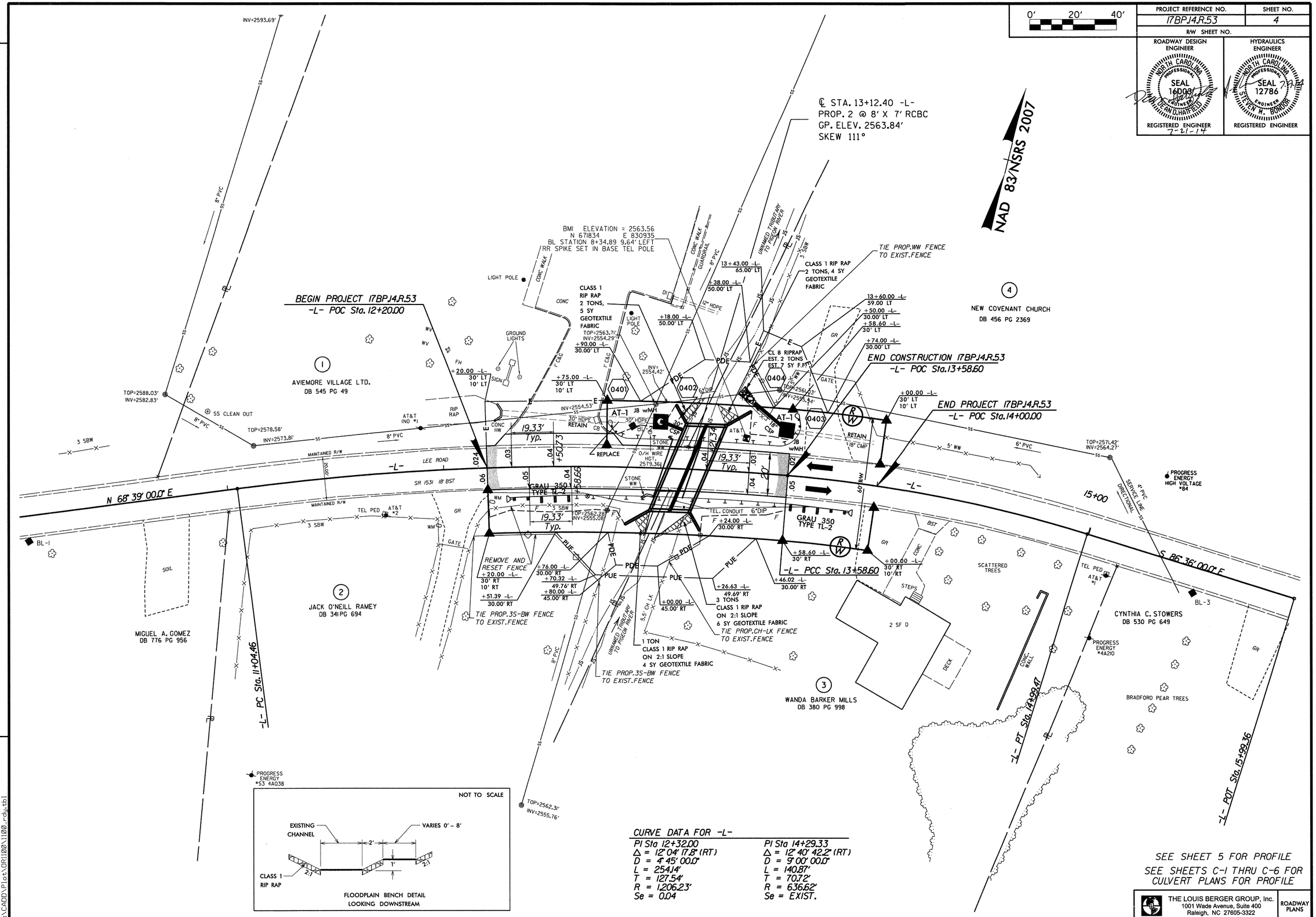

CURVE DATA FOR -L-

PI Sta 12+32.00	PI Sta 14+29.33
Δ = 12° 04' 17.8" (RT)	Δ = 12° 40' 42.2" (RT)
D = 4° 45' 00.0"	D = 9° 00' 00.0"
L = 254.14'	L = 140.87'
T = 127.54'	T = 70.72'
R = 1,206.23'	R = 636.62'
Se = 0.04	Se = EXIST.

SEE SHEET 5 FOR PROFILE

SEE SHEETS C-1 THRU C-6 FOR CULVERT PLANS FOR PROFILE

THE LOUIS BERGER GROUP, Inc.
1001 Wade Avenue, Suite 400
Raleigh, NC 27605-3322

ROADWAY PLANS

REVISIONS

7/9/2014 10:38:14 AM
G:\OR Projects\OR1100 - NCDOT Group W\430359\Roadway\Proj\430359_RDY_04_PSH.dgn
G:\CADD\Plot\OR1100\1100_rdy.tbl

THE LOUIS BERGER GROUP, Inc.
1001 Wade Avenue, Suite 400
Raleigh, North Carolina 27605

PROJECT REFERENCE NO.	SHEET NO.
17BP.14.R.53	5

ROADWAY DESIGN ENGINEER
NORTH CAROLINA PROFESSIONAL SEAL 16003 ENGINEER MICHAEL D. HATFIELD
REGISTERED ENGINEER
7-21-14

HYDRAULICS ENGINEER
NORTH CAROLINA PROFESSIONAL SEAL 12786 ENGINEER STEVEN M. BONDURANT
REGISTERED ENGINEER

HORIZONTAL 0 20 40
VERTICAL 0 4 8

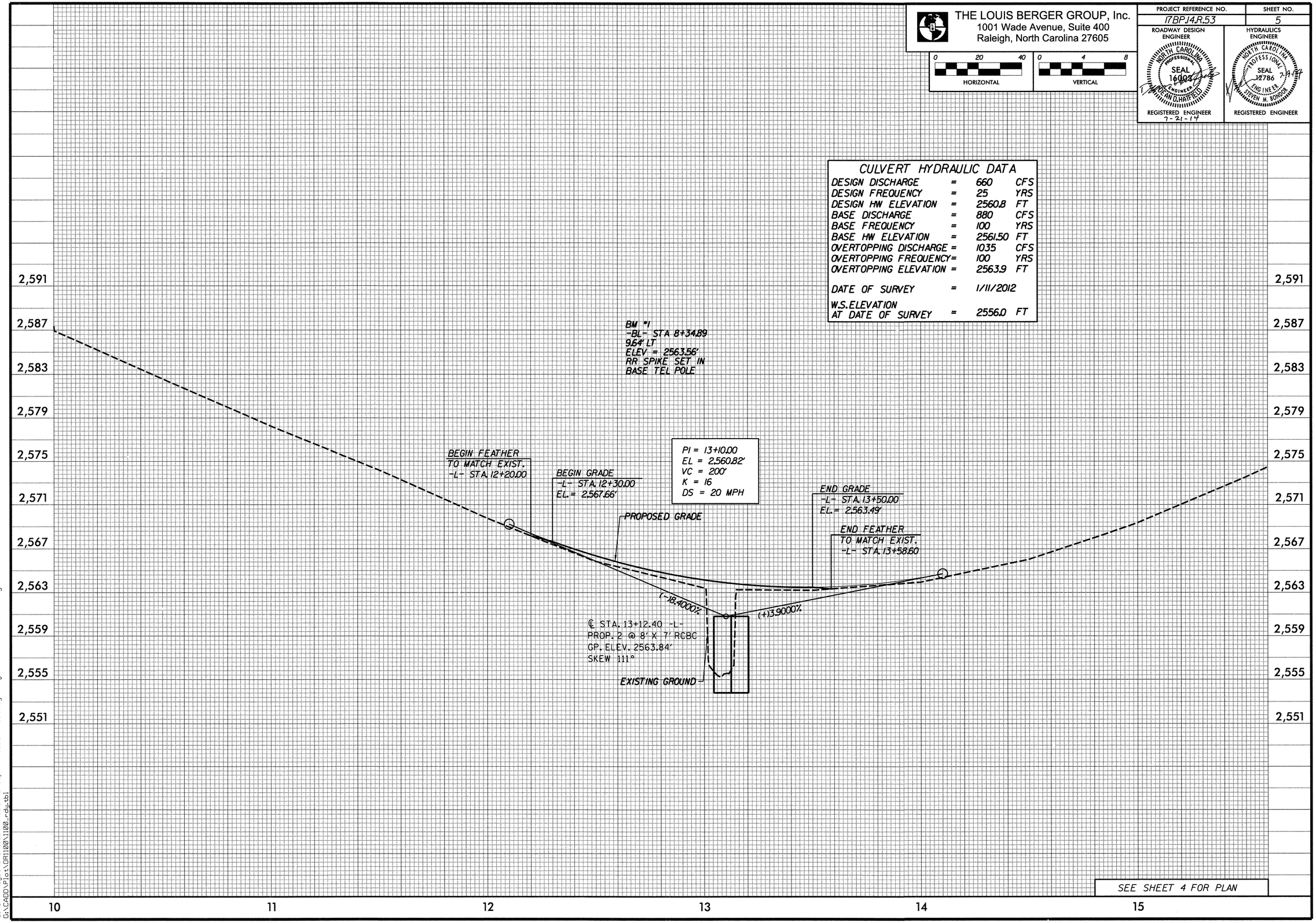

CULVERT HYDRAULIC DATA			
DESIGN DISCHARGE	=	660	CFS
DESIGN FREQUENCY	=	25	YRS
DESIGN HW ELEVATION	=	2560.8	FT
BASE DISCHARGE	=	880	CFS
BASE FREQUENCY	=	100	YRS
BASE HW ELEVATION	=	2561.50	FT
OVERTOPPING DISCHARGE	=	1035	CFS
OVERTOPPING FREQUENCY	=	100	YRS
OVERTOPPING ELEVATION	=	2563.9	FT
DATE OF SURVEY	=	1/11/2012	
W.S. ELEVATION AT DATE OF SURVEY	=	2556.0	FT

SEE SHEET 4 FOR PLAN

7/9/2014 8:59:03 AM
G:\DR_Projects\DR1100 - NCDOT_Group W\430359\Roadway\Proj\430359_RDY_05_PFL.dgn
G:\CADD\Plots\DR1100\1100_rdy.tbl

STATE OF NORTH CAROLINA
DIVISION OF HIGHWAYS

TRANSPORTATION MANAGEMENT PLAN

HAYWOOD COUNTY

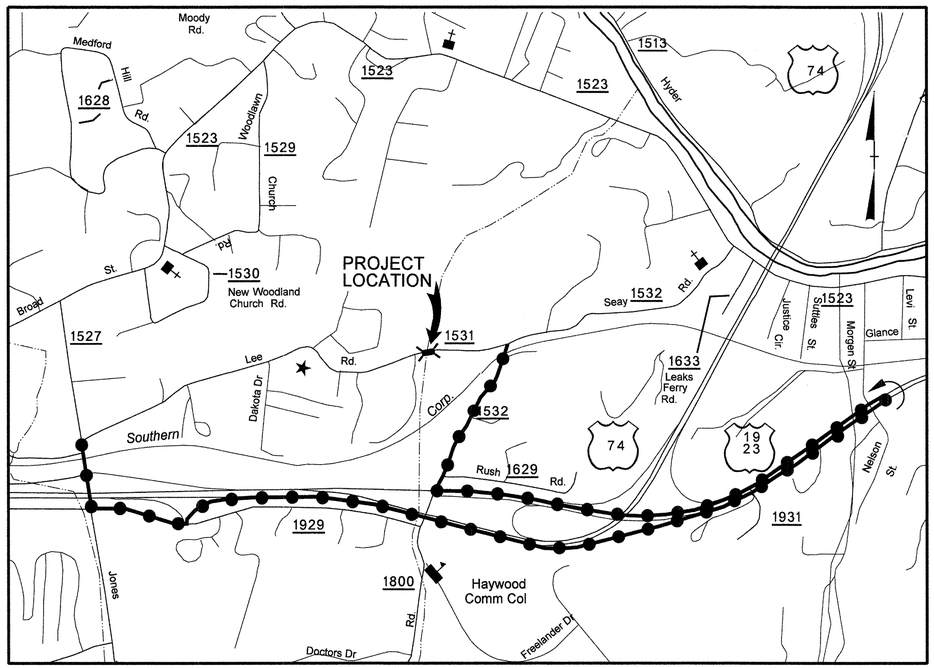

VICINITY MAP *NTS*

OFF-SITE DETOUR

LOCATION: BRIDGE NO. 359 ON SR 1531 OVER UNNAMED TRIBUTARY TO PIGEON RIVER

WORK ZONE SAFETY & MOBILITY
"from the MOUNTAINS to the COAST"

N.C.D.O.T. WORK ZONE TRAFFIC CONTROL
1561 MAIL SERVICE CENTER (MSC) RALEIGH, NC 27699-1561
750 N. GREENFIELD PARKWAY, GARNER, NC 27529 (DELIVERY)
PHONE: (919) 773-2800 FAX: (919) 771-2745

J. S. BOURNE, P.E. — *STATE TRAFFIC MANAGEMENT ENGINEER*
D. HATFIELD, P.E. — *TRAFFIC CONTROL PROJECT ENGINEER*
C. WHITE, P. E. — *TRAFFIC CONTROL PROJECT DESIGN ENGINEER*
J. O. MORRISON, P.E. — *TRAFFIC CONTROL DESIGN ENGINEER*

DIVISION OF HIGHWAYS * STATE OF NORTH CAROLINA * DEPARTMENT OF TRANSPORTATION * WORK ZONE TRAFFIC CONTROL

INDEX OF SHEETS

SHEET NO.	TITLE
TMP-1	TITLE SHEET, AND INDEX OF SHEETS
TMP-1A	LIST OF APPLICABLE ROADWAY STANDARD DRAWINGS, LEGEND, AND TEMPORARY PAVEMENT MARKING
TMP-1B	TRANSPORTATION OPERATIONS PLAN: (MANAGEMENT STRATEGIES AND GENERAL NOTES) AND SPECIAL SIGN DETAIL
TMP-2	TEMPORARY TRAFFIC CONTROL PHASING

THE LOUIS BERGER GROUP, Inc.
1001 Wade Avenue, Suite 400
Raleigh, North Carolina 27605

APPROVED: Dean Hatfield
DATE: 7-21-14

SEAL

SHEET NO.
TMP-1

PROJECT: 17BP.14.R.53

7/9/2014 8:59:05 AM
G:\DR Projects\DR1100 - NCDOT Group W\430359\Roadway\Proj\430359_RDY_06_TMP1.dgn
G:\CADD\Plot\DR1100\1100_rdy.tbl

PROJ. REFERENCE NO.	SHEET NO.
17BP.14.R.53	TMP-1A

ROADWAY STANDARD DRAWINGS

THE FOLLOWING ROADWAY STANDARDS AS SHOWN IN "ROADWAY STANDARD DRAWINGS" - PROJECT SERVICES UNIT - N.C. DEPARTMENT OF TRANSPORTATION - RALEIGH, N.C., DATED JULY 2006 ARE APPLICABLE TO THIS PROJECT AND BY REFERENCE HEREBY ARE CONSIDERED A PART OF THESE PLANS:

STD. NO.	TITLE
1101.01	WORK ZONE WARNING SIGNS
1101.02	TEMPORARY LANE CLOSURES
1101.03	TEMPORARY ROAD CLOSURES
1101.05	WORK ZONE VEHICLE ACCESSES
1101.11	TRAFFIC CONTROL DESIGN TABLES
1110.01	STATIONARY WORK ZONE SIGNS
1130.01	DRUMS
1145.01	BARRICADES
1150.01	FLAGGING DEVICES

LEGEND

GENERAL

DIRECTION OF TRAFFIC FLOW

NORTH ARROW

TRAFFIC CONTROL DEVICES

BARRICADE (TYPE III)

TEMPORARY SIGNING

STATIONARY SIGN

TEMPORARY PAVEMENT MARKING

N/A

APPROVED: DATE: 7/21/14

SEAL

NORTH CAROLINA PROFESSIONAL SEAL 16003 ENGINEER DEAN D. HATFIELD

DIVISION OF HIGHWAYS STATE OF NORTH CAROLINA DEPARTMENT OF TRANSPORTATION WORK ZONE TRAFFIC CONTROL SEAL

ROADWAY STANDARD DRAWINGS & LEGEND

7/9/2014 8:59:06 AM
G:\DR Projects\DR1100 - NCDOT Group W\430359\Roadway\Proj\430359_RDY_06_TMP1A.dgn
G:\CADD\Plot\DR1100\1100_rdy.tbl

PROJ. REFERENCE NO.	SHEET NO.
17BP.14.R.53	TMP-1B

MANAGEMENT STRATEGIES

TRAFFIC WILL BE DETOURED OFFSITE DURING CONSTRUCTION ALONG A ROUTE DETERMINED BY NCDOT.

THE OFFSITE DETOUR WILL INCLUDE SR 1527 (JONES COVE RD.) AND SR 1523 (BROAD ST.)(SEE SHEET TMP-2).

TRAFFIC SHALL BE MAINTAINED TO JAMES LOOP RD. AND THE EXISTING DRIVEWAY WITHIN THE PROJECT LIMITS.

SPECIAL SIGN DETAIL

BORDER
R=3"
TH=0.75"
IN=0.75"

LETTER POSITIONS

6.6	L 4.8	E 5.1	E 3.7	6.0	R 5.4	D 3.7	6.7

NOTE:

1. LETTER SPACINGS ARE TO START OF NEXT LETTER.
2. LEGEND AND BORDER SHALL BE DIRECT APPLIED BLACK NON-REFLECTIVE SHEETING.
3. BACKGROUND SHALL BE TYPE VII, VIII, OR IX (PRISMATIC) FLOURESCENT ORANGE RETROREFLECTIVE SHEETING.

GENERAL NOTES / LOCAL NOTES

CHANGES MAY BE REQUIRED WHEN PHYSICAL DIMENSIONS IN THE DETAIL DRAWINGS, STANDARD DETAILS, AND ROADWAY DETAILS ARE NOT ATTAINABLE TO MEET FIELD CONDITIONS OR RESULT IN DUPLICATE OR UNDESIRED OVERLAPPING OF DEVICES. MODIFICATION MAY INCLUDE: MOVING, SUPPLEMENTING, COVERING, OR REMOVAL OF DEVICES AS DIRECTED BY THE ENGINEER.

THE FOLLOWING GENERAL NOTES APPLY AT ALL TIMES FOR THE DURATION OF THE CONSTRUCTION PROJECT EXCEPT WHEN OTHERWISE NOTED IN THE PLAN OR DIRECTED BY THE ENGINEER.

PAVEMENT EDGE DROP OFF REQUIREMENTS

A) BACKFILL AT A 6:1 SLOPE UP TO THE EDGE AND ELEVATION OF EXISTING PAVEMENT IN AREAS ADJACENT TO AN OPENED TRAVEL LANE THAT HAS AN EDGE OF PAVEMENT DROP-OFF AS FOLLOWS:

BACKFILL DROP-OFFS THAT EXCEED 2 INCHES ON ROADWAYS WITH POSTED SPEED LIMITS OF 45 MPH OR GREATER.

BACKFILL DROP-OFFS THAT EXCEED 3 INCHES ON ROADWAYS WITH POSTED SPEED LIMITS LESS THAN 45 MPH.

BACKFILL WITH SUITABLE COMPACTED MATERIAL, AS APPROVED BY THE ENGINEER, AT NO EXPENSE TO THE DEPARTMENT.

TRAFFIC PATTERN ALTERATIONS

B) NOTIFY THE ENGINEER TWENTY ONE (21) CALENDAR DAYS PRIOR TO ANY TRAFFIC PATTERN ALTERATION.

SIGNING

C) PROVIDE SIGNING AND DEVICES REQUIRED TO CLOSE THE ROAD ACCORDING TO THE ROADWAY STANDARD DRAWINGS AND TRAFFIC CONTROL PLANS.

PROVIDE SIGNING REQUIRED FOR THE OFF-SITE DETOUR ROUTE AS SHOWN IN THE TRAFFIC CONTROL PLANS.

D) COVER OR REMOVE ALL SIGNS AND DEVICES REQUIRED TO CLOSE THE ROAD WHEN ROAD CLOSURE IS NOT IN OPERATION.

COVER OR REMOVE ALL SIGNS REQUIRED FOR THE OFF-SITE DETOUR WHEN THE DETOUR IS NOT IN OPERATION.

E) ENSURE ALL NECESSARY SIGNING IS IN PLACE PRIOR TO ALTERING ANY TRAFFIC PATTERN.

TRAFFIC CONTROL DEVICES

F) PLACE TYPE III BARRICADES, WITH "ROAD CLOSED" SIGN R11-2 ATTACHED, OF SUFFICIENT LENGTH TO CLOSE ENTIRE ROADWAY.

G) TIE PROPOSED PAVEMENT MARKING LINES TO EXISTING PAVEMENT MARKING LINES.

APPROVED: DATE: 7/21/14

SEAL

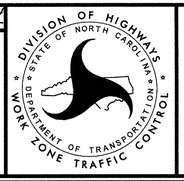

TRANSPORTATION OPERATIONS PLAN

7/9/2014 8:59:07 AM
G:\DR Projects\DR1100 - NCDOT Group W\430359\Roadway\Proj\430359_RDY_06_TMP1B.dgn
G:\CADD\Plot\DR1100\1100_rdy.tbl

PROJ. REFERENCE NO.	SHEET NO.
17BP.14.R.53	TMP-2

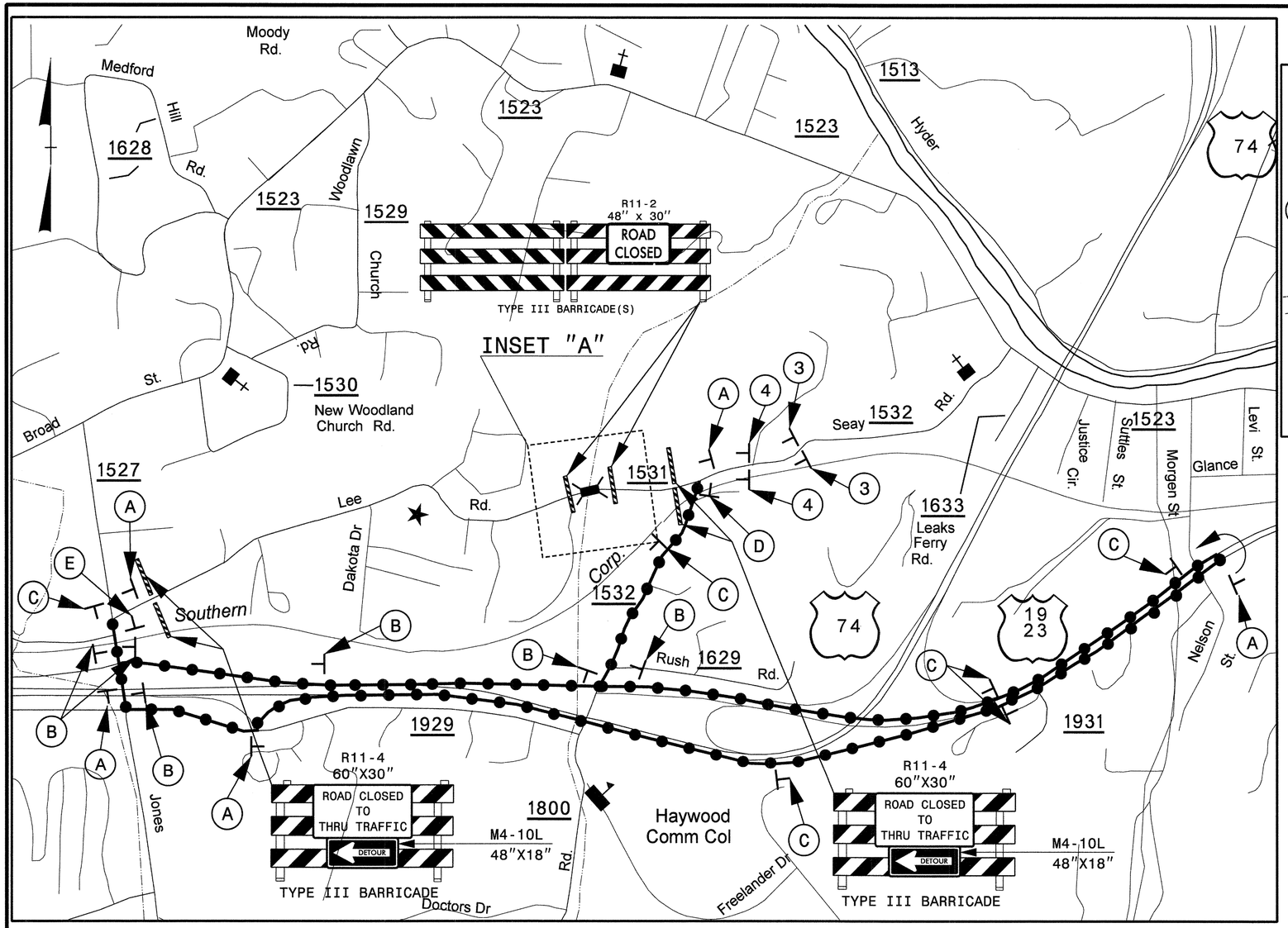

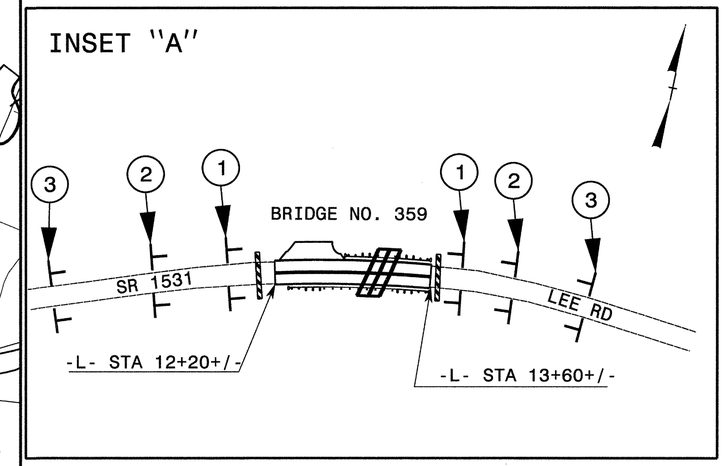

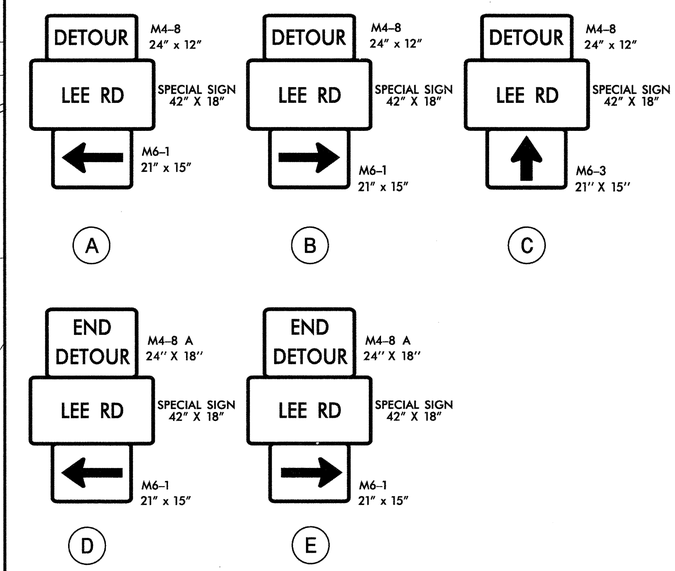

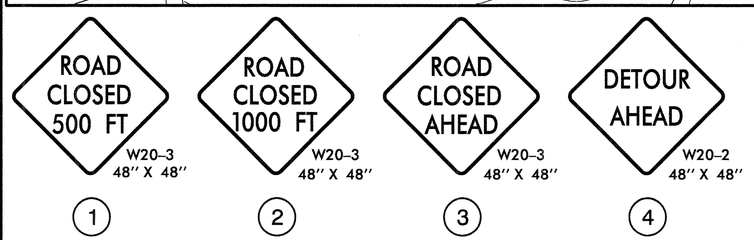

NOTES:

- ALL DETOUR SIGN LOCATIONS ARE APPROXIMATE.
- ALL DETOUR SIGNS ARE BLACK ON ORANGE UNLESS OTHERWISE NOTED.

* SEE ROADWAY STANDARD DRAWING NO. 1101.03, SHEET 1 OF 9 FOR ADDITIONAL WORK ZONE SIGNS AND APPLICABLE NOTES.

- CONTRACTOR SHALL ENSURE BARRICADES ARE IN PLACE AT STA. 12+90+/- AT ALL TIMES AS SHOWN ON SHEET TMP-2 INSET A.

PROJECT PHASING

STEP 1:
- INSTALL OFF SITE DETOUR AND ROAD CLOSURE SIGNING (PROVIDED BY CONTRACTOR).

- USING RDWY STD 1101.03, SHEET 1 OF 9, CLOSE SR 1531 (LEE RD.) TO THRU TRAFFIC FROM -L- STA. 12+90+/- TO -L- STA. 14+00+/- AND PLACE TRAFFIC ONTO OFF SITE DETOUR AS SHOWN ABOVE.

STEP 2:
- REMOVE EXISTING BRIDGE No. 359 AND APPROACHES AND CONSTRUCT THE PROPOSED CULVERT AND ROADWAY UP TO BUT NOT INCLUDING THE FINAL LAYER OF SURFACE COURSE FROM -L- STA. 12+90+/- TO -L- STA. 14+00+/-. CONSTRUCT PROPOSED -Y1- UP TO, BUT NOT INCLUDING THE FINAL LAYER OF SURFACE COURSE.

- USING FLAGGERS (RDWY STD 1101.02, SHEET 1 OF 15), PLACE FINAL LAYER OF SURFACE COURSE AND FINAL PAVEMENT MARKINGS FROM -L- STA 12+05+/- TO -L- STA 14+00+/- AND -Y1- STA 10+10+/- TO -Y1- 10+90+/-. (SEE CONSTRUCTION AND PAVEMENT MARKING PLANS)

STEP 3:
- REMOVE ALL TRAFFIC CONTROL DEVICES, SIGNING AND DETOUR ROUTE SIGNING.

- OPEN TO FINAL TRAFFIC PATTERN.

APPROVED: DATE: 7/21/14

SEAL

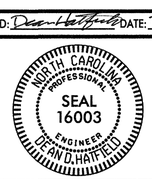

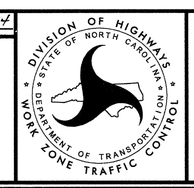

THE LOUIS BERGER GROUP, Inc.
1001 Wade Avenue, Suite 400
Raleigh, North Carolina 27605

TEMPORARY TRAFFIC CONTROL PHASING

7/9/2014 8:59:12 AM
G:\DR Projects\DR1100 - NCDOT Group W\430359\Roadway\Proj\430359_RDY_06_TMP2.dgn
1100_rdy_pmp.tbl

STATE	PROJECT NO.	SHEET NO.	TOTAL SHTS.
N.C.	17BP.14.R.53	PMP-1	2

APPROVED: Dean Hatfield
DATE: 7/21/14
SEAL

NORTH CAROLINA PROFESSIONAL SEAL 16003 ENGINEER DEAN D. HATFIELD

STATE OF NORTH CAROLINA
DEPARTMENT OF TRANSPORTATION

PAVEMENT MARKING PLANS

LOCATION: BRIDGE NO. 359 ON SR 1531 OVER UNNAMED TRIBUTARY TO PIGEON RIVER

ROADWAY STANDARD DRAWINGS

THE FOLLOWING ROADWAY STANDARDS AS APPEAR IN "ROADWAY STANDARD DRAWINGS"-ROADWAY DESIGN UNIT-N.C. DEPARTMENT OF TRANSPORTATION-RALEIGH, N.C., DATED JANUARY 2012 ARE APPLICABLE TO THIS PROJECT AND BY REFERENCE HEREBY ARE CONSIDERED A PART OF THESE PLANS:

STD. NO.	TITLE
1205.01	PAVEMENT MARKINGS - LINE TYPES & OFFSETS
1205.02	PAVEMENT MARKINGS - 2 LANE & MULTILANE ROADWAYS
1205.12	PAVEMENT MARKINGS - BRIDGES
1261.01	GUARDRAIL AND BARRIER DELINATION SPACING
1261.02	GUARDRAIL AND BARRIER DELINATION TYPES
1262.02	GUARDRAIL END DELINATION

PAVEMENT MARKING SCHEDULE

ASPHALT PAVEMENT DESIGN
(AS SHOWN)

PAVEMENT MARKING LINES

PA - PAINT - WHITE EDGELINE (4")
PI - PAINT - YELLOW DOUBLE CENTER LINE (4")

GENERAL NOTES

THE FOLLOWING NOTES APPLY AT ALL TIMES FOR THE DURATION OF THE CONSTRUCTION PROJECT, EXCEPT WHEN NOTED IN THE PLAN, OR DIRECTED BY THE ENGINEER.

A) INSTALL PAVEMENT MARKINGS AND PAVEMENT MARKERS ON THE FINAL SURFACE AS FOLLOWS:

ASPHALT PAVEMENT DESIGN:

ROAD NAME	MARKING	MARKER
ALL	PAINT	NONE
BRIDGE	PAINT	NONE

B) TIE PROPOSED PAVEMENT MARKING LINES TO EXISTING PAVEMENT MARKING LINES.

C) REMOVE/ REPLACE ANY CONFLICTING/ DAMAGED PAVEMENT MARKINGS AND MARKERS.

D) PASSING ZONES WILL BE DETERMINED IN THE FIELD AND MUST BE APPROVED BY THE ENGINEER.

INDEX

SHEET NO.	DESCRIPTION
PMP-1	PAVEMENT MARKING PLAN COVER SHEET
PMP-2	PAVEMENT MARKING DETAIL

THE LOUIS BERGER GROUP, Inc.
1001 Wade Avenue, Suite 400
Raleigh, NC 27605-3322

ROADWAY PLANS

7/9/2014 8:59:47 AM
G:\OR Projects\OR1100 - NCDOT Group W\430359\Roadway\Proj\430359_RDY_07_PMP_01.dgn
1100_rdy_pmp.tbl

STATE	PROJECT NO.	SHEET NO.	TOTAL SHTS.
N.C.	17BP.14.R.53	PMP-2	2

APPROVED: Dean Hatfield

DATE: 7/21/14

SEAL

NORTH CAROLINA PROFESSIONAL SEAL 16003 ENGINEER DEAN D. HATFIELD

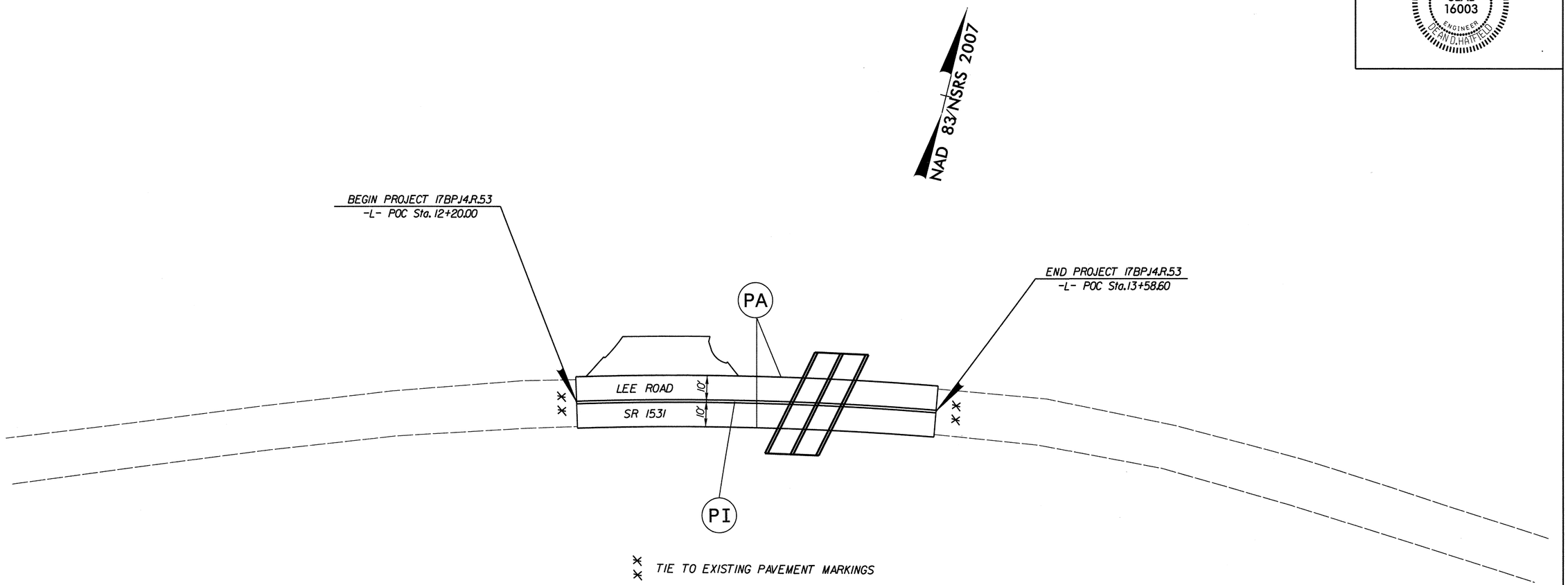

LEGEND

PA - PAINT - WHITE EDGELINE (4")

PI - PAINT - YELLOW DOUBLE CENTER LINE (4")

NOTE: PAINT IS TO BE DOUBLE COATED

PAVEMENT MARKING DETAIL
LEE RD

THE LOUIS BERGER GROUP, Inc.
1001 Wade Avenue, Suite 400
Raleigh, NC 27605-3322

ROADWAY PLANS

7/9/2014 8:59:21 AM
G:\DR Projects\DR1100 - NCDOT Group W\430359\Roadway\Proj\430359_RDY_07_PMP_02.dgn
1100_rdy_pmp.tbl

0' 20' 40'	PROJECT REFERENCE NO.	SHEET NO.
	17BP.14.R.53	EC-01/CONST.04
	R/W SHEET NO.	

EROSION CONTROL PLANS

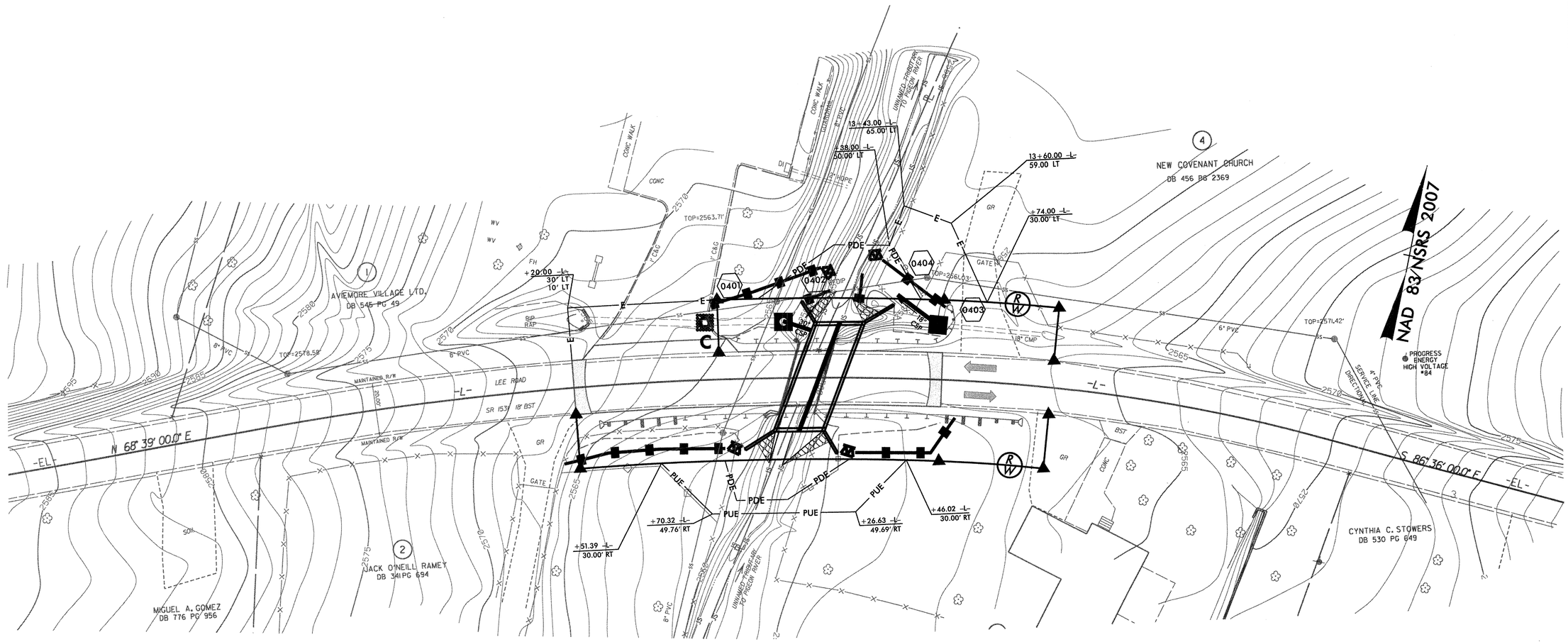

Std. #	Description	Symbol
1605.01	Temporary Silt Fence	
1606.01	Special Sediment Control Fence	
1632.03	Rock Inlet Sediment Trap Type C	
1635.01	Rock Pipe Inlet Sediment Trap Type-A	

ROADSIDE ENVIRONMENTAL UNIT
DEPARTMENT OF TRANSPORTATION
DIVISION OF HIGHWAYS
RALEIGH, N.C.

2012 STANDARD SPECIFICATIONS

NOTE: ANY DEVIATION FROM OPTIONS GIVEN WILL REQUIRE PRIOR APPROVAL BY ENGINEER.

ADDITIONAL EROSION CONTROL DEVICES MAY NEED TO BE INSTALLED AS DIRECTED BY THE ENGINEER.

Steven Bondor, PE
LEVEL III : Designer of Erosion and Sediment Control Plans
Certification Number: 3077

GREENHORNE & O'MARA
CONSULTING ENGINEERS
5565 CENTERVIEW DRIVE, SUITE 107
RALEIGH, NC 27606
(919) 851-1919 FAX (919) 851-8393
LICENSE #: F-0148

SEE SHEET 5 FOR PROFILE

THE LOUIS BERGER GROUP, Inc.
1001 Wade Avenue, Suite 400
Raleigh, NC 27605-3322

ROADWAY PLANS

REVISIONS

7/9/2014 8:59:25 AM
G:\DR Projects\DR1100 - NCDOT Group W\430359\Roadway\Proj\430359_RDY_08_EC_01.dgn
G:\CADD\Plot\DR1100\1100_rdy_EC.tbl

STATE OF NORTH CAROLINA
DIVISION OF HIGHWAYS

SOIL STABILIZATION TIMEFRAMES

SITE DESCRIPTION	STABILIZATION TIME	TIMEFRAME EXCEPTIONS
PERIMETER DIKES, SWALES, DITCHES AND SLOPES	7 DAYS	NONE
HIGH QUALITY WATER (HQW) ZONES	7 DAYS	NONE
SLOPES STEEPER THAN 3:1	7 DAYS	IF SLOPES ARE 10' OR LESS IN LENGTH AND ARE NOT STEEPER THAN 2:1, 14 DAYS ARE ALLOWED.
SLOPES 3:1 OR FLATTER	14 DAYS	7 DAYS FOR SLOPES GREATER THAN 50' IN LENGTH.
ALL OTHER AREAS WITH SLOPES FLATTER THAN 4:1	14 DAYS	NONE, EXCEPT FOR PERIMETERS AND HQW ZONES.

REVISIONS

7/9/2014 8:59:26 AM
G:\OR Projects\OR1100 - NCDOT Group W\430359\Roadway\Proj\430359_RDY_08_EC_02.dgn
G:\CADD\Plot\OR1100\1100_rdy_EC.tbl

THE LOUIS BERGER GROUP, Inc.
1001 Wade Avenue, Suite 400
Raleigh, NC 27605-3322

ROADWAY PLANS

0' 20' 40'	PROJECT REFERENCE NO.	SHEET NO.
	17BP.14.R.53	EC-03/CONST.04

CULVERT CONSTRUCTION SEQUENCE –L– STA. 13+12.4

1. REMOVE EXISTING BRIDGE
2. INSTALL SPECIAL STILLING BASIN
3. INSTALL IMPERVIOUS DIKES WITH 24" CSP TO ALLOW CONSTRUCTION OF RIGHT BARREL
4. CONSTRUCT RIGHT BARREL AND INLET/OUTLET CHANNEL
5. RELOCATE IMPERVIOUS DIKES WITH 24" CSP ON LEFT SIDE TO ALLOW CONSTRUCTION OF LEFT BARREL
6. CONSTRUCT LEFT BARREL
7. REMOVE SPECIAL STILLING BASIN

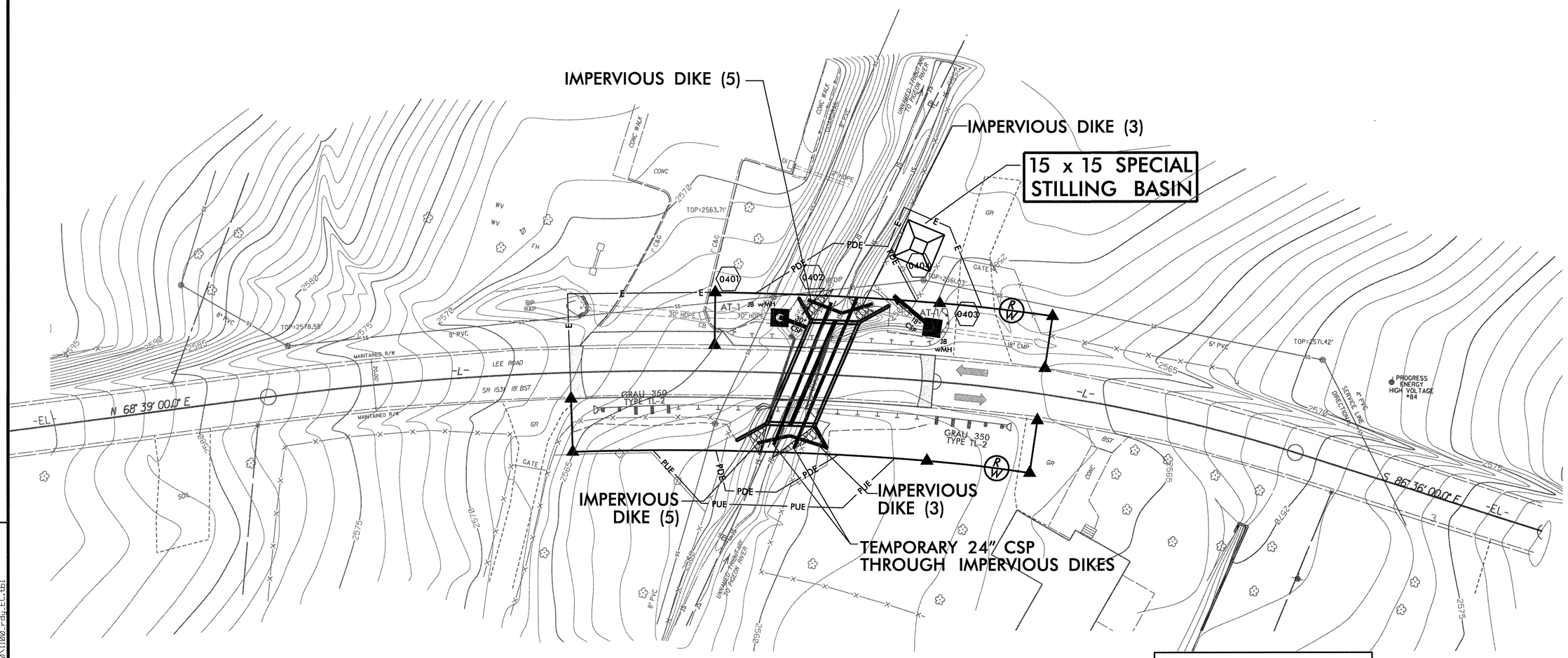

Steven Bondor, PE
LEVEL III : Designer of Erosion and Sediment Control Plans
Certification Number: 3077

GREENHORNE & O'MARA
CONSULTING ENGINEERS
5565 CENTERVIEW DRIVE, SUITE 107
RALEIGH, NC 27606
(919) 851-1919 FAX (919) 851-8393
LICENSE #: F-0148

THE LOUIS BERGER GROUP, Inc.
1001 Wade Avenue, Suite 400
Raleigh, NC 27605-3322

ROADWAY PLANS

REVISIONS

7/9/2014 8:59:30 AM
G:\OR Projects\OR1100 - NCDOT Group W\430359\Roadway\Proj\430359_RDY_08_EC_03.dgn
G:\CADD\Plot\OR1100\1100_rdy_EC.tbl

TIP PROJECT: 17BP.14.R.53

T.I.P. NO.	SHEET NO.
17BP.14.R.53	UO-1

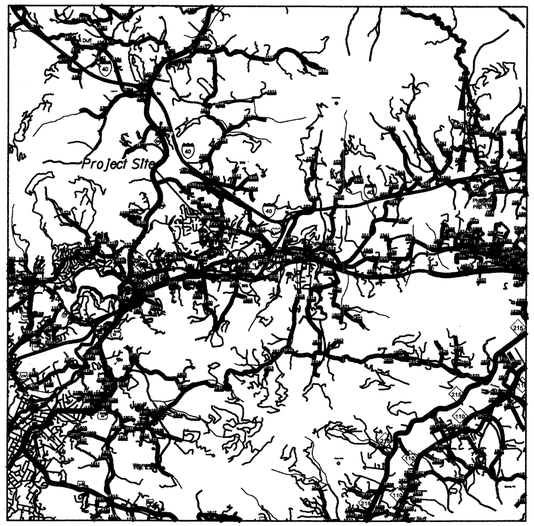

Vicinity Map

STATE OF NORTH CAROLINA
DIVISION OF HIGHWAYS

UTILITIES BY OTHERS PLANS
HAYWOOD COUNTY

LOCATION: CULVERT NO. 430359 ON SR 1531 LEE ROAD OVER JONES COVE CREEK

TYPE OF WORK: AERIAL POWER AND TELEPHONE UTILITES

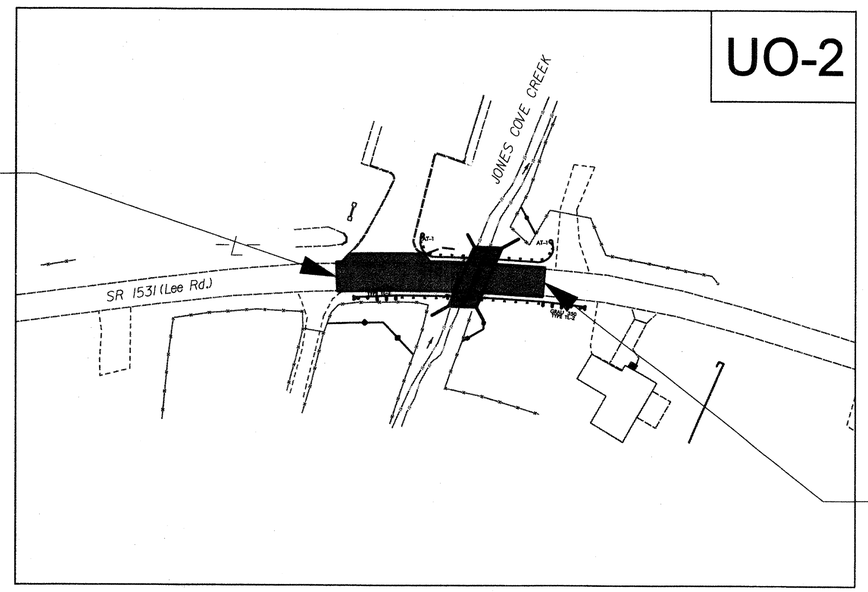

BEGIN PROJECT 17BP.14.R.53
-L- POC Sta. 12+20.00

END PROJECT 17BP.14.R.53
-L- POC Sta. 13+60.00

NAD 83

GRAPHIC SCALES

50 25 0 50 100
PLANS

20 10 0 20 40
PROFILE (HORIZONTAL)

4 2 0 4 8
PROFILE (VERTICAL)

INDEX OF SHEETS

SHEET NO.	DESCRIPTION
UO-1	TITLE SHEET
UO-2	UTILITY BY OTHERS PLAN SHEETS

UTILITY OWNERS ON PROJECT

(1) PROGRESS ENERGY - POWER DISTRIBUTION
(2) AT&T - TELEPHONE

PREPARED IN THE OFFICE OF:
DIVISION OF HIGHWAYS
UTILITIES UNIT
UTILITIES ENGINEERING
1591 MAIL SERVICES CENTER
RALEIGH NC 27699-1591
PHONE (919) 707-6690
FAX (919) 250-4151

Roger Worthington, P.E. — UTILITIES SECTION ENGINEER
Carl A. Barclay, P.E. — UTILITIES SQUAD LEADER PROJECT ENGINEER
James E. Swinson — UTILITIES PROJECT DESIGNER

PROJECT REFERENCE NO.	SHEET NO.
17BP.14.R.53	UO-2

UTILITIES BY OTHERS

NOTE:
ALL PROPOSED UTILITY WORK SHOWN ON THIS SHEET WILL BE DONE BY OTHERS

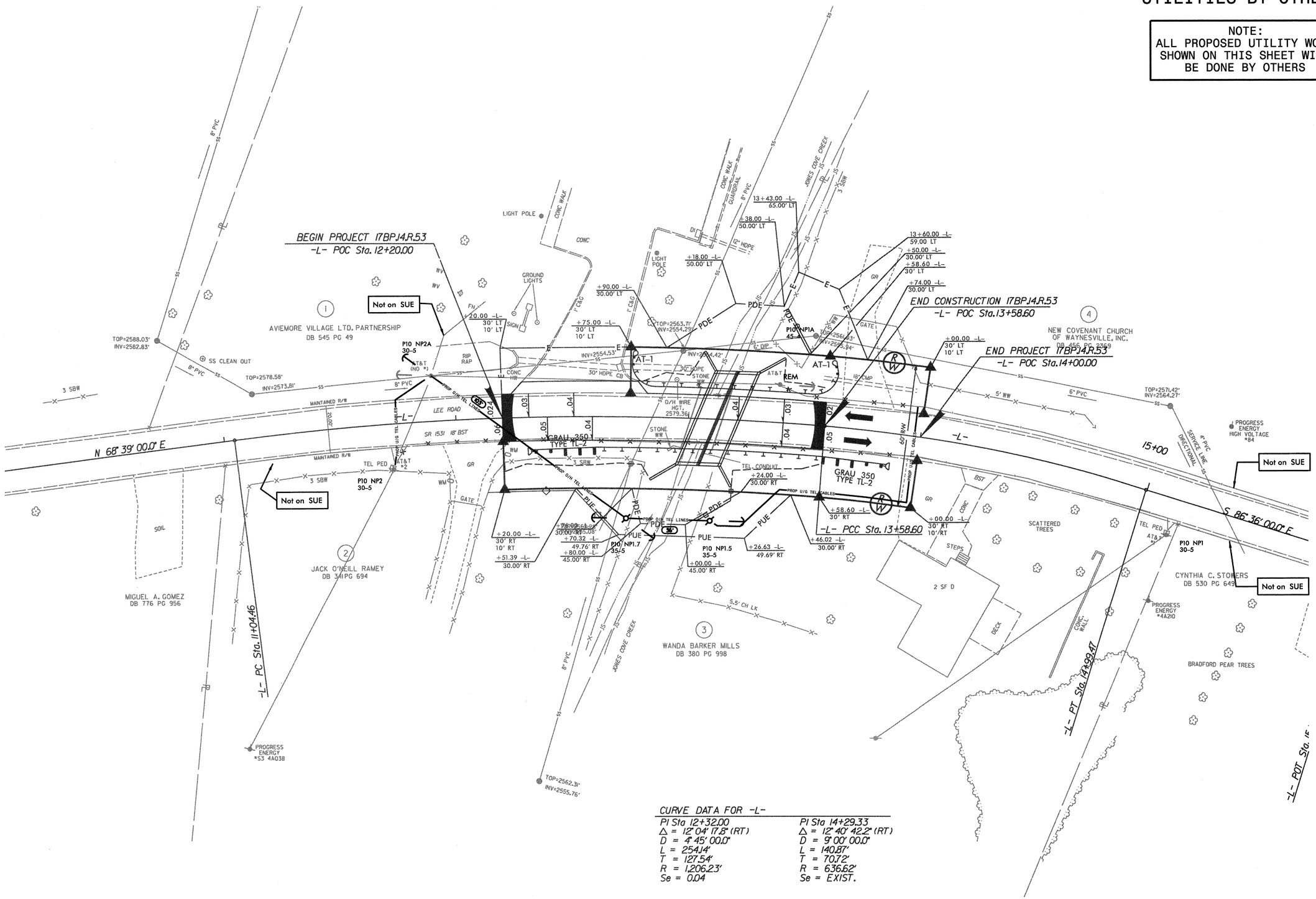

CURVE DATA FOR -L-

PI Sta 12+32.00	PI Sta 14+29.33
Δ = 12° 04' 17.8" (RT)	Δ = 12° 40' 42.2" (RT)
D = 4° 45' 00.0"	D = 9° 00' 00.0"
L = 254.14'	L = 140.87'
T = 127.54'	T = 70.72'
R = 1,206.23'	R = 636.62'
Se = 0.04	Se = EXIST.

TIP PROJECT: 17BP.14.R.53

T.I.P. NO.	SHEET NO.
17BP.14.R.53	UC-1

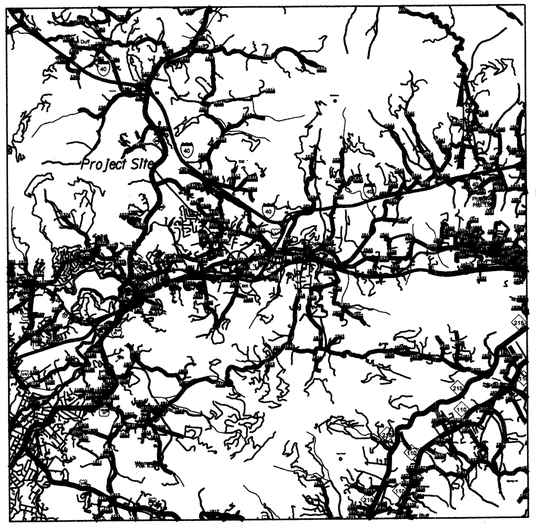

Vicinity Map

STATE OF NORTH CAROLINA
DIVISION OF HIGHWAYS

UTILITY CONSTRUCTION PLANS
HAYWOOD COUNTY

LOCATION: CULVERT NO. 430359 ON SR 1531 LEE ROAD OVER JONES COVE CREEK

TYPE OF WORK: GRADING, DRAINAGE, PAVING, STRUCTURE, & UTILITIES

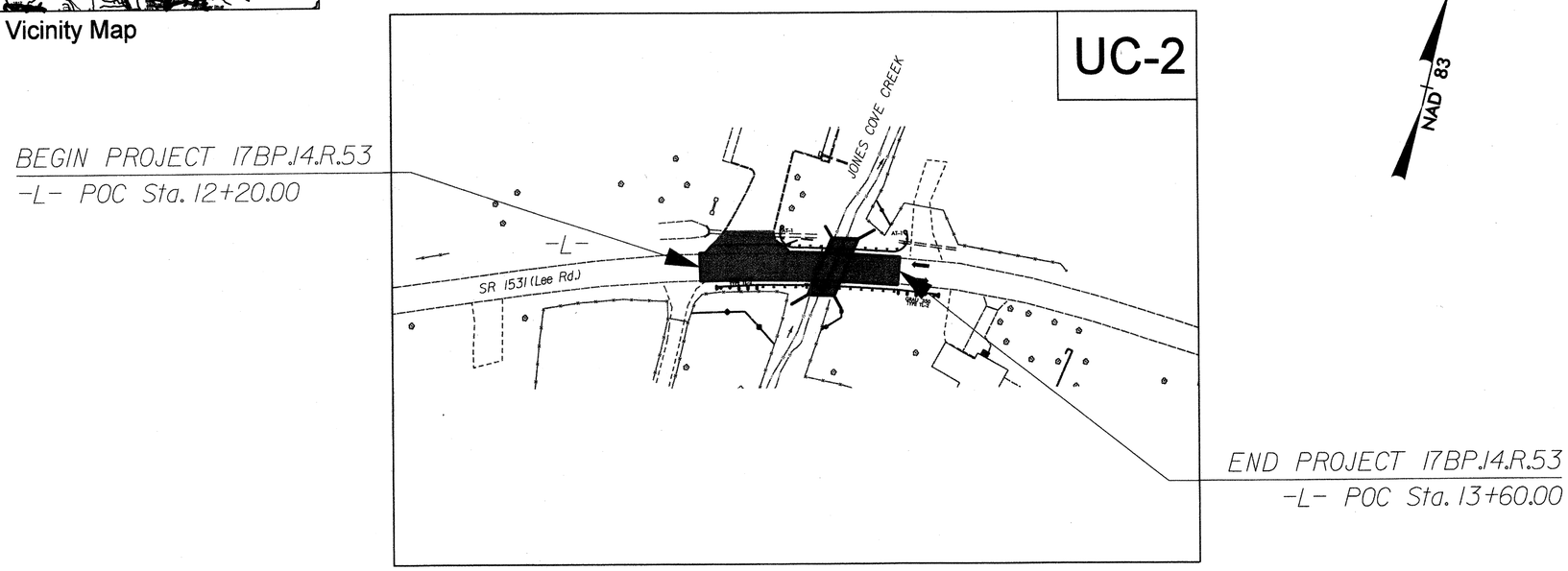

GRAPHIC SCALES

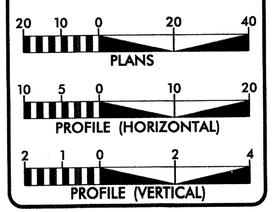

INDEX OF SHEETS

SHEET NO.	DESCRIPTION
UC-1	TITLE SHEET
UO-2	UTILITY CONSTRUCTION PLAN & PROFILE SHEET
UC-3	DETAIL SHEET

UTILITY OWNERS ON PROJECT

(1) PROGRESS ENERGY - POWER DISTRIBUTION
(2) AT&T - TELEPHONE
(3) JUNALUSKA SANITARY DISTRICT - WATER & SEWER

SEAL

Prepared In the Office of:
DAVENPORT
TRANSPORTATION CONSULTING

2012 STANDARD SPECIFICATIONS

RIGHT OF WAY DATE:
N/A

LETTING DATE:
N/A

Prepared for:
North Carolina
DIVISION OF HIGHWAYS
1000 Birch Ridge Dr., NC, 27610

JOHN G. TOWNSEND, PE
PROJECT ENGINEER

NOTE:
THRUST COLLARS SHALL BE ON THE SAME JOINT OF PIPE AS THE NEW RJ BEND OR THE BEND SHALL BE ROADDED TO THE CONCRETE COLLAR.

ALL STREAM CROSSINGS 401-404 PERMITS ARE COVERED UNDER BRIDGE RELOCATION.

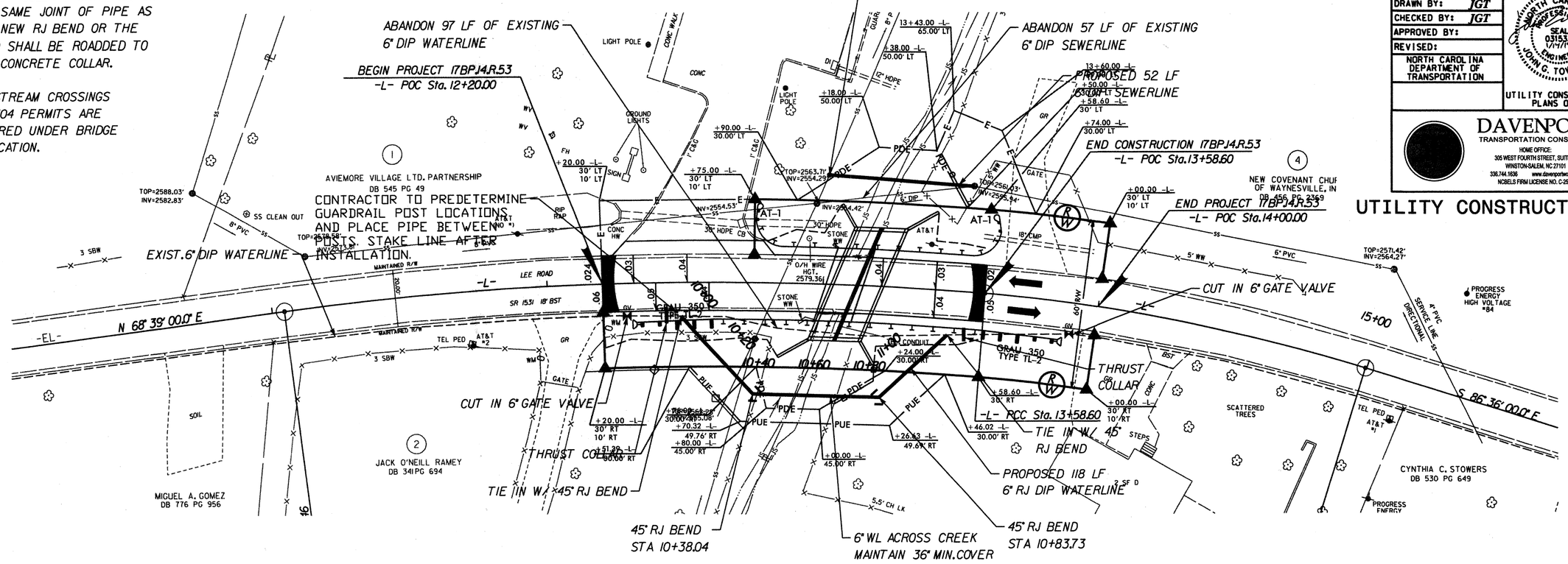

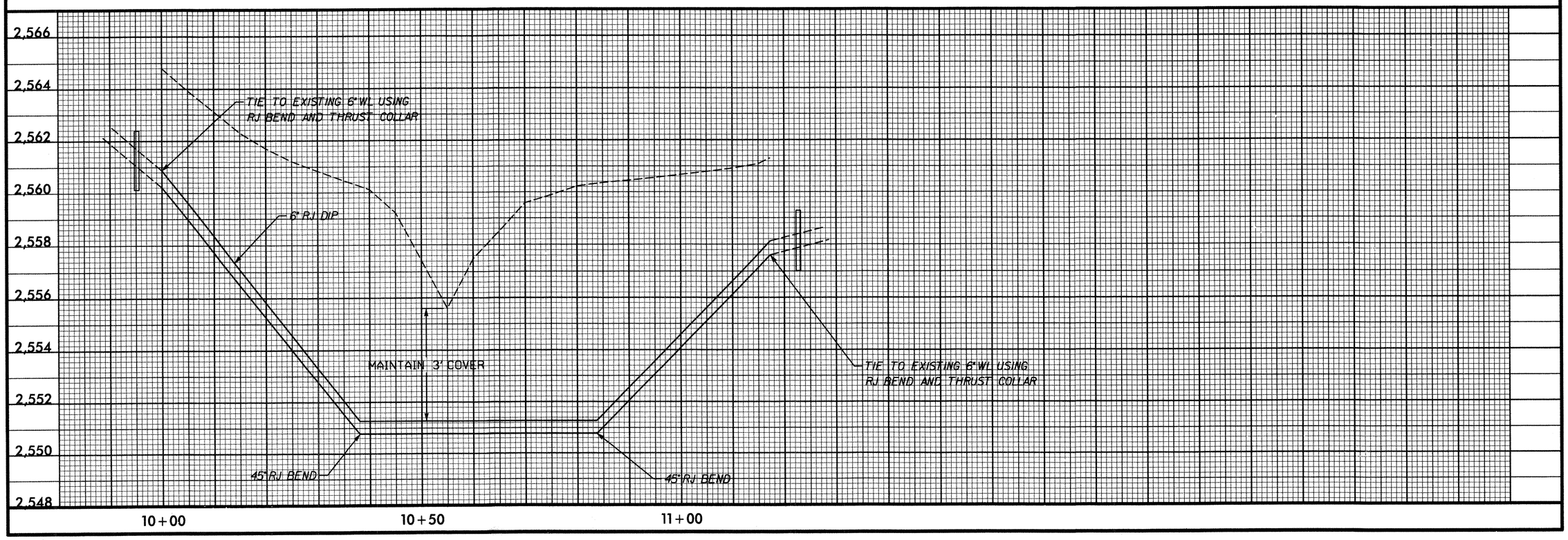

PROJECT REFERENCE NO.	SHEET NO.
17BP.14.R.53	UC-2
DESIGNED BY: JGT	
DRAWN BY: JGT	
CHECKED BY: JGT	
APPROVED BY:	
REVISED:	
NORTH CAROLINA DEPARTMENT OF TRANSPORTATION	

NORTH CAROLINA PROFESSIONAL ENGINEER SEAL 031533 1/7/11 JOHN G. TOWNSEND

UTILITY CONSTRUCTION PLANS ONLY

DAVENPORT
TRANSPORTATION CONSULTING
HOME OFFICE:
305 WEST FOURTH STREET, SUITE 2A
WINSTON-SALEM, NC 27101
336.744.1636 www.davenportworld.com
NCBELS FIRM LICENSE NO. C-2822

UTILITY CONSTRUCTION

PROJECT TYPICAL DETAILS

PROJECT REFERENCE NO.	SHEET NO.
17BP.14.R.53	UC-3

DESIGNED BY: JGT
DRAWN BY: JGT
CHECKED BY: JGT
APPROVED BY:
REVISED:

NORTH CAROLINA DEPARTMENT OF TRANSPORTATION

NORTH CAROLINA PROFESSIONAL SEAL 031533 ENGINEER JOHN C. TOWNSEND 1/17/17

UTILITY CONSTRUCTION PLANS ONLY

DAVENPORT
TRANSPORTATION CONSULTING
HOME OFFICE:
305 WEST FOURTH STREET, SUITE 2A
WINSTON-SALEM, NC 27101
336.744.1636 www.davenportworld.com
NCBELS FIRM LICENSE NO. C-2822

UTILITY CONSTRUCTION

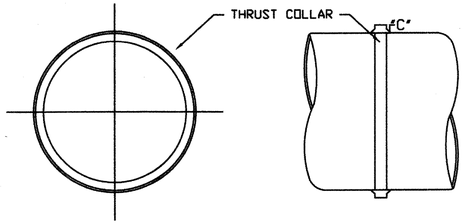

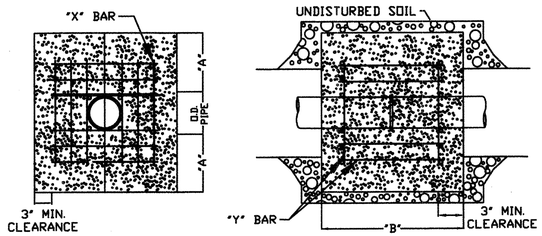

REINFORCING REQUIREMENTS

I.D. PIPE	REBAR SIZE	"X" BAR LENGTH	"X" BAR WEIGHT	"Y" BAR LENGTH	"Y" BAR WEIGHT	NO. REQUIRED
6" - 36"	#5	2'-2"+ O.D. PIPE	1.043 LBS/FT	1'-1"	11 LBS. EACH	X-24, Y-12
48" & greater	#6	3'-0"+ O.D. PIPE	1.502 LBS/FT	1'-3"	19 LBS. EACH	X-24, Y-12

THRUST COLLAR, AND THRUST SCHEDULE

I.D. PIPE	"A"	"B"	"C"-6"-16", 20"-24", 30"-36", 48"
6" - 36"	1'-4"	1'-7"	2" 3" 4"
48" & greater	1'-8"	1'-9"	6"

NOTES:
1. CONCRETE SHALL BE 3000 P.S.I AND TRANSIT MIXED.
2. REINFORCING BARS SHALL BE DEFORMED AND TIED TOGETHER.
3. TRENCH BOTTOM WIDTH IN VICINITY OF THRUST BLOCK INSTALLATION SHALL BE THE MINIMUM WIDTH
4. THRUST COLLAR MAY BE RJ COLLAR

THRUST BLOCKING DESIGN DATA FOR WATER MAINS
NOT TO SCALE

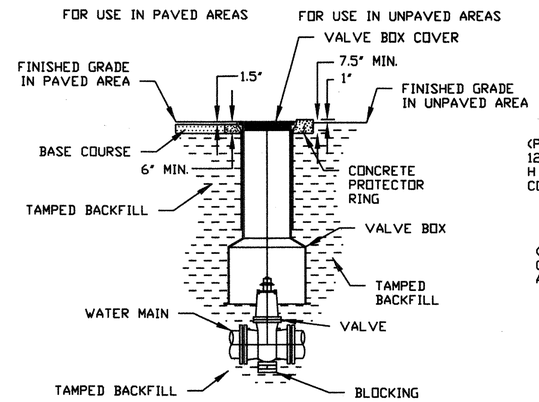

SECTION

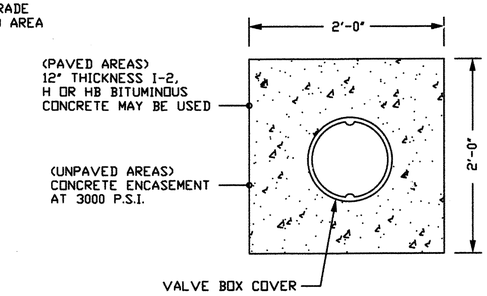

PLAN

NOTES:
1. D.I.P. MAY BE USED FOR VALVE BOX EXTENSIONS.
2. VALVE BOX SHOULD NOT CONTACT WATER MAIN OR VALVE.
3. CONCRETE PROTECTOR RING SHALL BE USED IN ALL UNPAVED AREAS.

VALVE AND VALVE BOX INSTALLATION
NOT TO SCALE

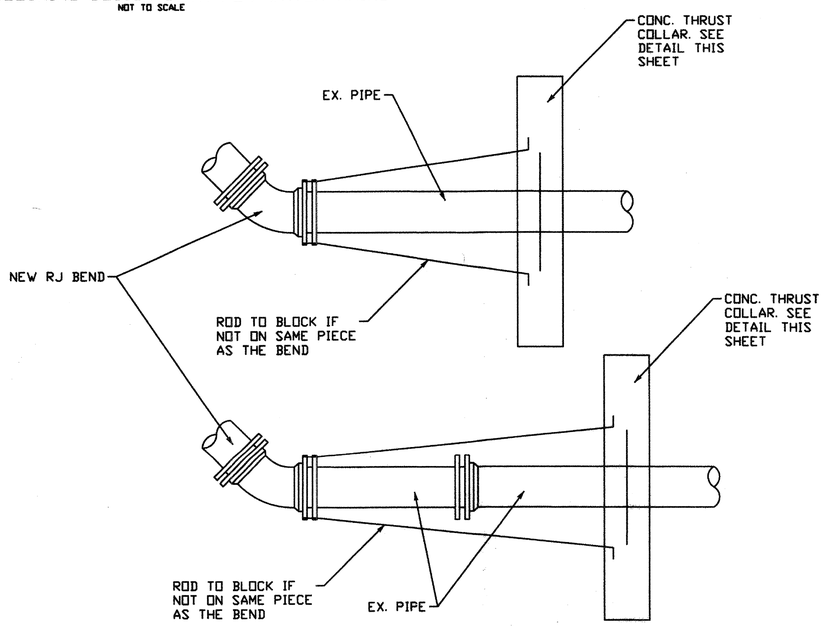

RODS SHALL BE SAME ø AS BOLTS SUPPLIED WITH THE BEND.

PIPE CONNECTION DETAIL
NOT TO SCALE

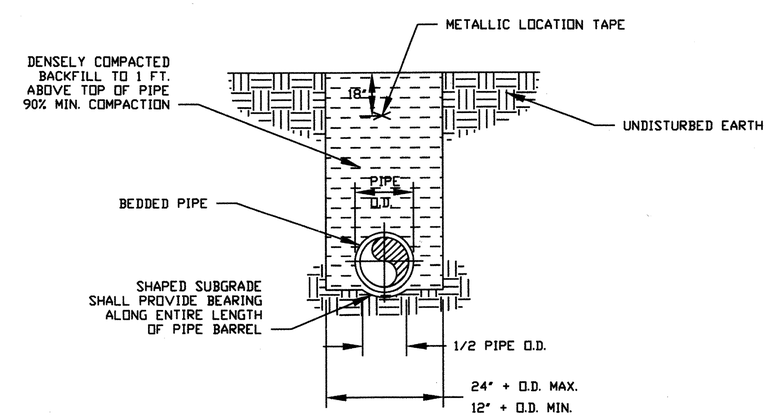

NOTE:
WATER MAINS 8"ø AND SMALLER SHALL HAVE MINIMUM OF 3' COVER.

PIPE LAYING CONDITION
NOT TO SCALE

PROJ. REFERENCE NO.	SHEET NO.
17BP.14.R.53	X-1

17BP.14.R.53
CROSS SECTIONS

INDEX OF SHEETS

TITLE	STATION	SHEET NO.
CROSS-SECTION INDEX		X-1
CROSS-SECTION SUMMARY		X-1A
-L- CROSS-SECTIONS	12+20 - 13+60	X-2 THROUGH X-4

NOTE: Approximate quantities only. Unclassified Excavation, Fine Grading, and Clearing and Grubbing will be paid for at the contract lump sum price for "Grading".

PROJ. REFERENCE NO.	SHEET NO.
17BP.14.R.53	X-1A

STATE OF NORTH CAROLINA
DIVISION OF HIGHWAYS

NOTE: EMBANKMENT COLUMN INCLUDES BACKFILL FOR UNDERCUT

CROSS-SECTION SUMMARY

Station L	Uncl. Exc. (cu. yd.)	Embt (cu. yd.)
12+20.00	0	0
12+30.00	1	3
12+40.00	0	5
12+50.00	0	7
12+60.00	0	8
12+70.00	0	7
12+80.00	0	7
12+90.00	1	9
13+00.00	0	29
13+10.00	0	71
13+20.00	0	60
13+30.00	0	19
13+40.00	0	11
13+50.00	1	7

8/23/99

0 2.5 5	PROJ. REFERENCE NO.	SHEET NO.
	17BP.14.R.53	X-2

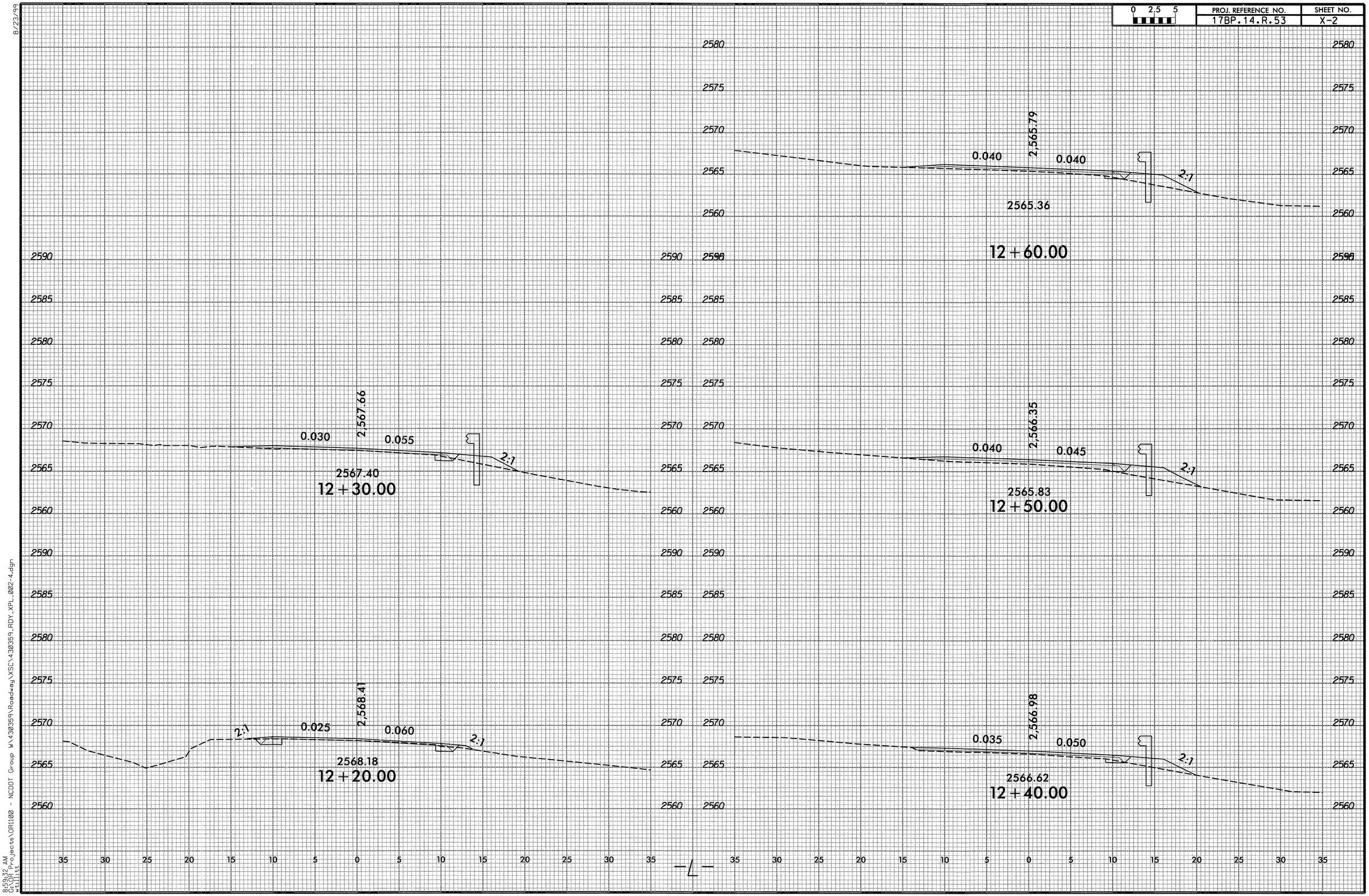

8:59:32 AM
G:\DR Projects\DR1100 - NCDOT Group W\430359\Roadway\XSC\430359_RDY_XPL_002-4.dgn

0 2.5 5	PROJ. REFERENCE NO.	SHEET NO.
	17BP.14.R.53	X-3

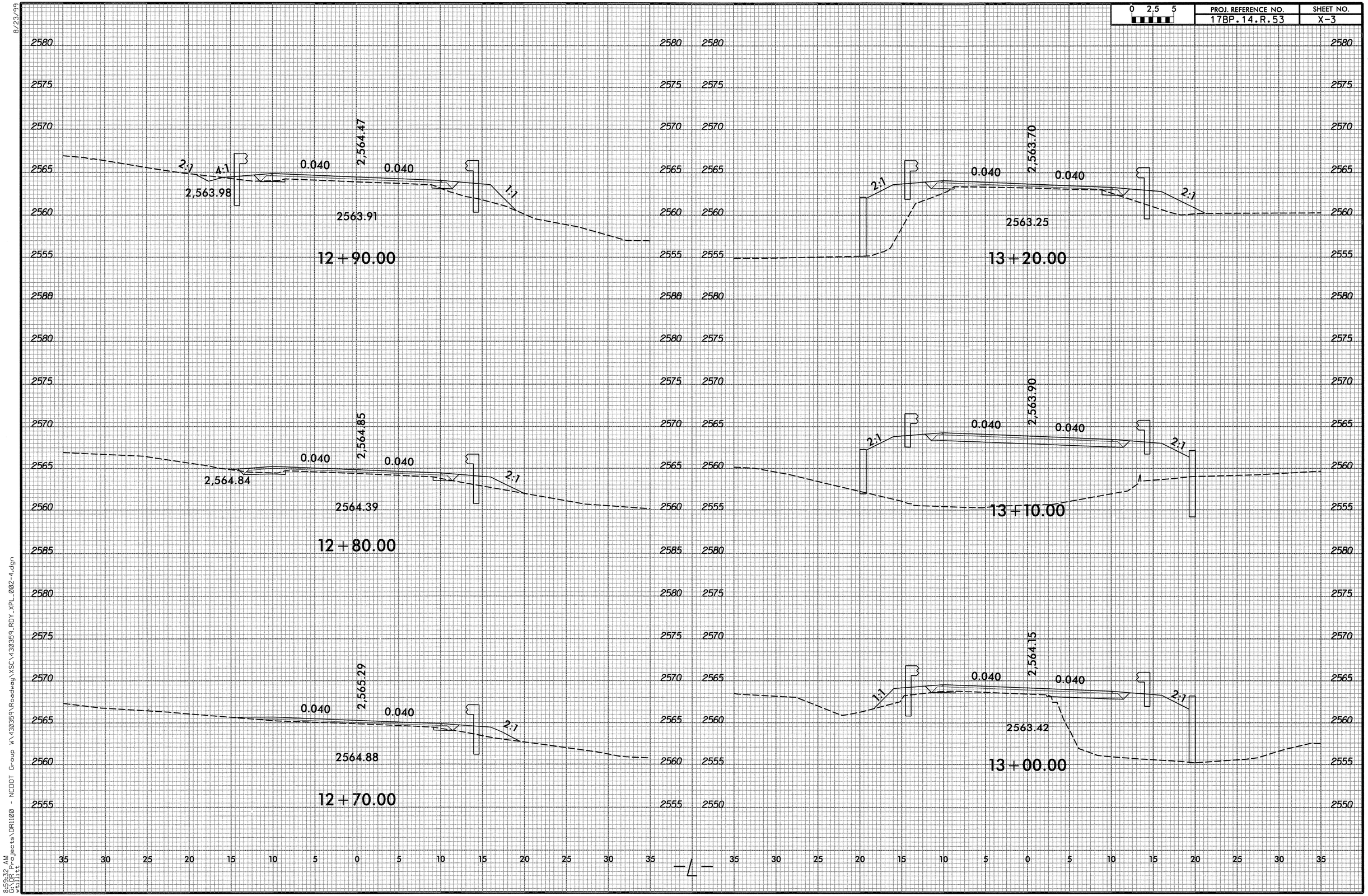

8/23/99

8:59:32 AM
G:\OR Projects\OR1100 - NCDOT Group W\430359\Roadway\XSC\430359_RDY_XPL_002-4.dgn
wtillet

0 2.5 5	PROJ. REFERENCE NO.	SHEET NO.
	17BP.14.R.53	X-4

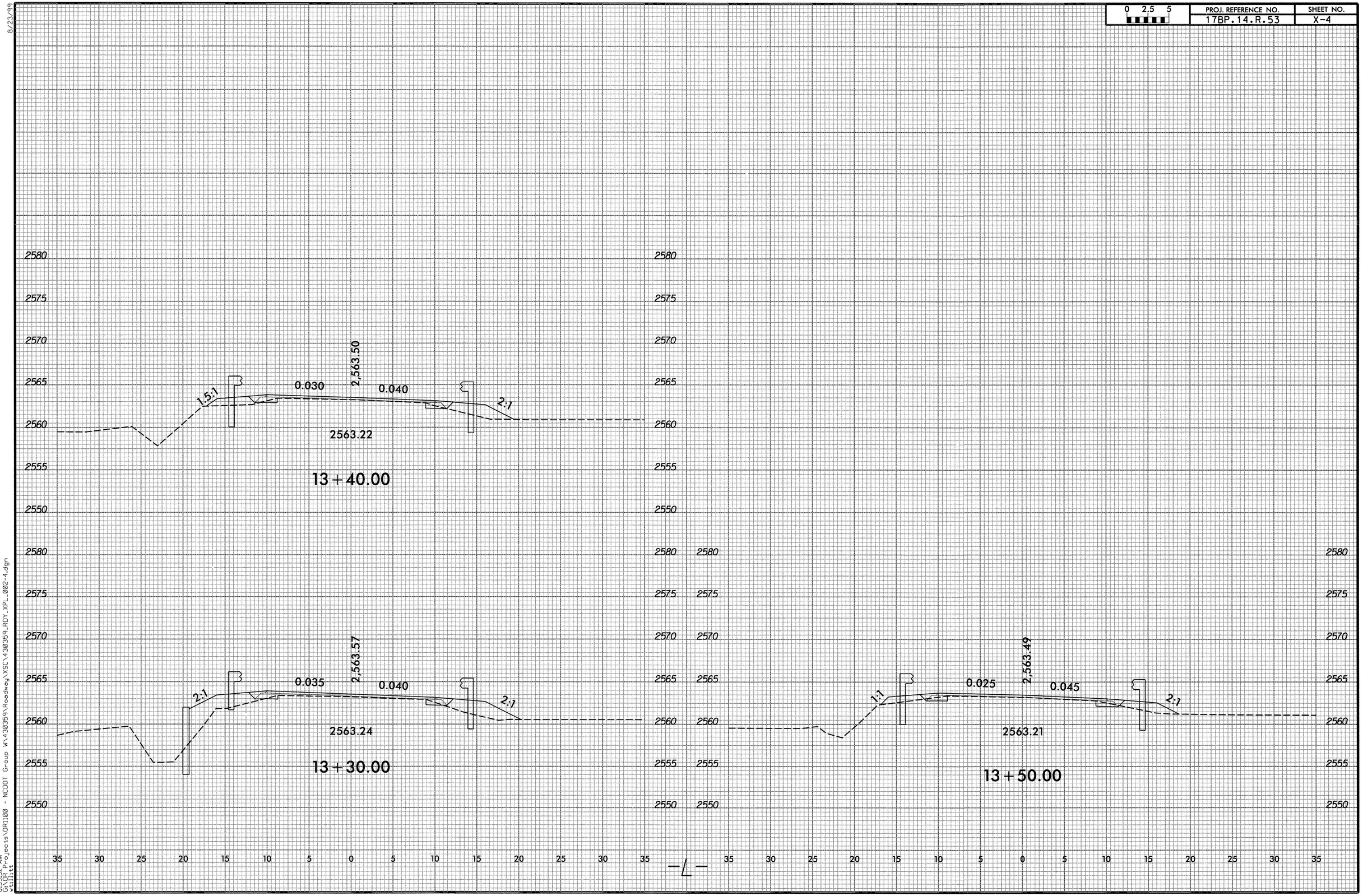

8/23/99

8:59:32 AM
G:\OR Projects\OR1100 - NCDOT Group W\430359\Roadway\XSC\430359_RDY_XPL_002-4.dgn
wetlitt

BM #1 -BL- STA 8+34.89 9.64' LT ELEV = 2563.56' (R.R. SPIKE IN BASE OF TELEPHONE POLE)

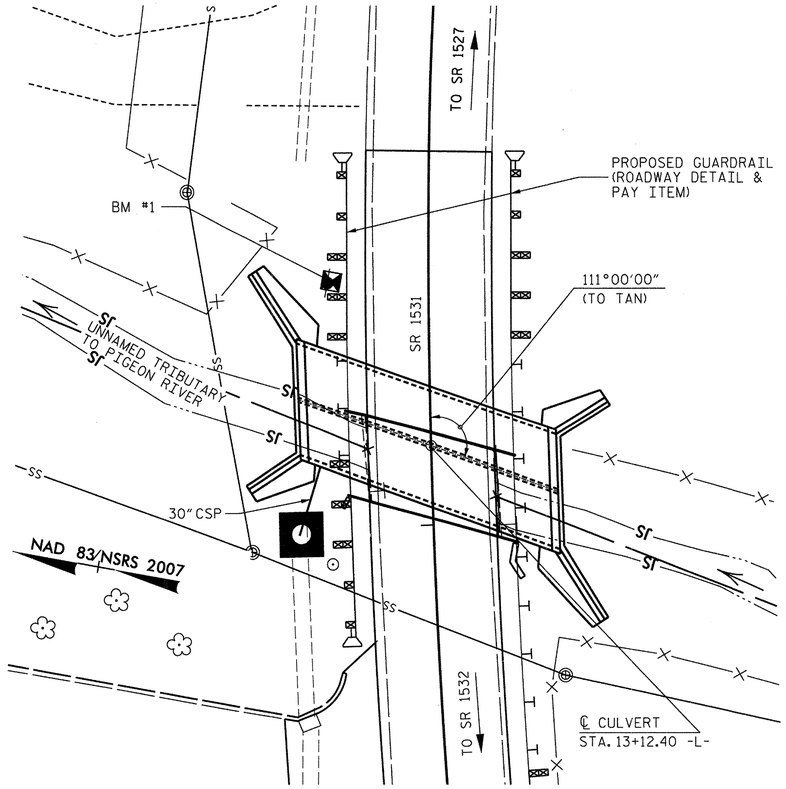

LOCATION SKETCH

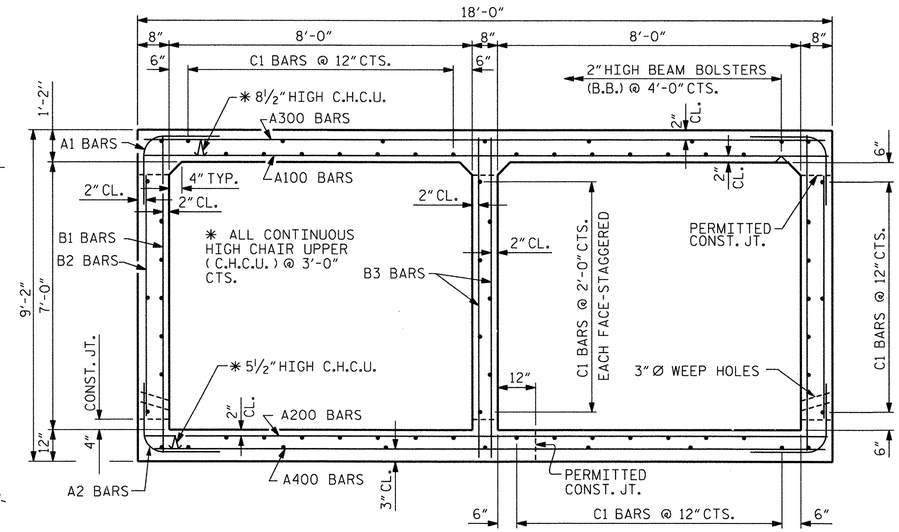

RIGHT ANGLE SECTION OF BARREL

THERE ARE 69 "C" BARS IN SECTION OF BARREL.

HYDRAULIC DATA

DESIGN DISCHARGE	= 660 C.F.S.
FREQUENCY OF DESIGN FLOOD	= 25 YEARS
DESIGN HIGH WATER ELEVATION	= 2560.8'
DRAINAGE AREA	= 0.82 SQ. MI.
BASE DISCHARGE (Q100)	= 880 C.F.S.
BASE HIGH WATER ELEVATION	= 2561.5'

OVERTOPPING FLOOD DATA

OVERTOPPING DISCHARGE	= 1035 C.F.S.
FREQUENCY OF OVERTOPPING FLOOD	= 100 YEARS +
OVERTOPPING FLOOD ELEVATION	= 2563.9'

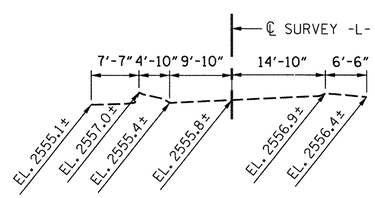

PROFILE ALONG ℄ CULVERT

TOTAL STRUCTURE QUANTITIES

CLASS A CONCRETE				
BARREL @	2.0	CY/FT	87.0	C.Y.
WING ETC.			23.1	C.Y.
SILLS & BAFFLES			1.0	
TOTAL			111.1	C.Y.
REINFORCING STEEL				
BARREL			14,743	LBS.
WING ETC.			1,277	LBS.
SILLS & BAFFLES			60	LBS.
TOTAL			16,080	LBS.
FOUNDATION COND. MAT'L.			74	TONS
CULVERT EXCAVATION			LUMP SUM	
REMOVAL OF EXISTING STRUCTURE			LUMP SUM	
RIP RAP, CLASS B			31.5	TONS

NOTES:

ASSUMED LIVE LOAD ----------HL-93 OR ALTERNATE LOADING.

DESIGN FILL---------- 1.8'.

FOR OTHER DESIGN DATA AND NOTES SEE STANDARD NOTES SHEET.

3" Ø WEEP HOLES INDICATED TO BE IN ACCORDANCE WITH THE SPECIFICATIONS.

CONCRETE IN CULVERTS TO BE POURED IN THE FOLLOWING ORDER:

1. WING FOOTINGS AND FLOOR SLAB INCLUDING 4" OF ALL VERTICAL WALLS.
2. THE REMAINING PORTIONS OF THE WALLS AND WINGS FULL HEIGHT FOLLOWED BY ROOF SLAB AND HEADWALLS.

THE RESIDENT ENGINEER SHALL CHECK THE LENGTH OF CULVERT BEFORE STAKING IT OUT TO MAKE CERTAIN THAT IT WILL PROPERLY TAKE CARE OF THE FILL.

THIS BARREL STANDARD TO BE USED ONLY ON CULVERT ON 105° SKEW AND TO BE USED WITH STANDARD WING SHEET WITH THE SAME SKEW AND VERTICAL CLEARANCE.

DIMENSIONS FOR WING LAYOUT AS WELL AS ADDITIONAL REINFORCING STEEL EMBEDDED IN BARREL ARE SHOWN ON WING SHEET.

STEEL IN THE BOTTOM SLAB MAY BE SPLICED AT THE PERMITTED CONSTRUCTION JOINT AT THE CONTRACTOR'S OPTION. EXTRA WEIGHT OF STEEL DUE TO THE SPLICES SHALL BE PAID FOR BY CONTRACTOR.

AT THE CONTRACTOR'S OPTION, HE MAY SPLICE THE VERTICAL REINFORCING STEEL IN THE INTERIOR FACE OF EXTERIOR WALL AND BOTH FACES OF INTERIOR WALLS ABOVE LOWER WALL CONSTRUCTION JOINT. THE SPLICE LENGTH SHALL BE AS PROVIDED IN THE SPLICE LENGTH CHART SHOWN ON THE PLANS. EXTRA WEIGHT OF STEEL DUE TO THE SPLICES SHALL BE PAID FOR BY THE CONTRACTOR.

A 3 FOOT STRIP OF FILTER FABRIC SHALL BE ATTACHED TO THE FILL FACE OF THE WING COVERING THE ENTIRE LENGTH OF THE EXPANSION JOINT.

AT THE CONTRACTOR'S OPTION, HE MAY SUBMIT, TO THE ENGINEER FOR APPROVAL, DESIGN AND DETAIL DRAWINGS FOR A PRECAST REINFORCED CONCRETE BOX CULVERT IN LIEU OF THE CAST-IN-PLACE CULVERT SHOWN ON THE PLANS. THE DESIGN SHALL PROVIDE THE SAME SIZE AND NUMBER OF BARRELS AS USED IN THE CAST-IN-PLACE DESIGN. FOR OPTIONAL PRECAST REINFORCED CONCRETE BOX CULVERT, SEE SPECIAL PROVISIONS.

FOR CULVERT DIVERSION DETAILS AND PAY ITEM, SEE EROSION CONTROL PLANS.

REMOVAL OF THE EXISTING BRIDGE SHALL BE PERFORMED SO AS NOT TO ALLOW DEBRIS TO FALL INTO THE WATER. THE CONTRACTOR SHALL REMOVE THE BRIDGE AND SUBMIT PLANS FOR DEMOLITION IN ACCORDANCE WITH ARTICLE 402-2 OF THE STANDARD SPECIFICATIONS.

THE EXISTING STRUCTURE CONSISTING OF 1 SPAN OF 14'-6" CONSISTING OF TIMBER DECK ON TIMBER JOISTS ON TIMBER CAPS AND PILES AND LOCATED AT THE SITE OF THE PROPOSED STRUCTURE SHALL BE REMOVED. THE EXISTING BRIDGE IS PRESENTLY POSTED BELOW THE LEGAL LOAD LIMIT. SHOULD THE STRUCTURAL INTEGRITY OF THE BRIDGE FURTHER DETERIORATE, THIS LOAD LIMITATION MAY BE REDUCED AS FOUND NECESSARY DURING THE LIFE OF THE PROJECT.

FOR UTILITY INFORMATION, SEE UTILITY PLANS.

FOR SUBMITTAL OF WORKING DRAWINGS, SEE SPECIAL PROVISIONS.

FOR FALSEWORK AND FORMWORK, SEE SPECIAL PROVISIONS.

FOR CRANE SAFETY, SEE SPECIAL PROVISIONS.

FOR GROUT FOR STRUCTURES, SEE SPECIAL PROVISIONS.

BILL OF MATERIAL

BAR	NO	SIZE	TYPE	LENGTH	WEIGHT
A1	174	#5	1	7'-0"	1270
A2	174	#5	1	6'-10"	1240
A100	73	#5	STR	17'-7"	1,339
A101	2	#5	STR	15'-9"	33
A102	2	#5	STR	13'-10"	29
A103	2	#5	STR	12'-0"	25
A104	2	#5	STR	10'-2"	21
A105	2	#5	STR	8'-3"	17
A106	2	#5	STR	6'-5"	13
A107	2	#5	STR	4'-6"	9
A108	2	#5	STR	2'-9"	6
A200	73	#5	STR	17'-7"	1,339
A201	2	#5	STR	15'-9"	33
A202	2	#5	STR	13'-10"	29
A203	2	#5	STR	12'-0"	25
A204	2	#5	STR	10'-2"	21
A205	2	#5	STR	8'-3"	17
A206	2	#5	STR	6'-5"	13
A207	2	#5	STR	4'-6"	9
A208	2	#5	STR	2'-9"	6
A300	73	#5	STR	17'-7"	1,339
A301	2	#5	STR	15'-9"	33
A302	2	#5	STR	13'-10"	29
A303	2	#5	STR	12'-0"	25
A304	2	#5	STR	10'-2"	21
A305	2	#5	STR	8'-3"	17
A306	2	#5	STR	6'-5"	13
A307	2	#5	STR	4'-6"	9
A308	2	#5	STR	2'-9"	6

BAR	NO	SIZE	TYPE	LENGTH	WEIGHT
A400	73	#5	STR	17'-7"	1,339
A401	2	#5	STR	15'-9"	33
A402	2	#5	STR	13'-10"	29
A403	2	#5	STR	12'-0"	25
A404	2	#5	STR	10'-2"	21
A405	2	#5	STR	8'-3"	17
A406	2	#5	STR	6'-5"	13
A407	2	#5	STR	4'-6"	9
A408	2	#5	STR	2'-9"	6
B1	178	#4	STR	8'-7"	1021
B2	178	#4	STR	6'-2"	733
B3	178	#5	STR	8'-7"	1594
C1	138	#4	STR	22'-9"	2097
F1	16	#5	STR	5'-0"	83
G1	8	#5	STR	18'-3"	152
S2	12	#8	STR	18'-3"	585

SPLICE CHART	
#4C1	1'-11"
#5B3	1'-9"

BAR TYPES

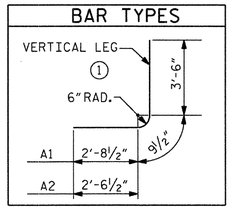

FOUNDATION NOTES

EXCAVATE AT LEAST 1 FOOT BELOW CULVERTS AND FOOTINGS AND REPLACE WITH COMPACTED FOUNDATION CONDITIONING MATERIAL IN ACCORDANCE WITH ARTICLE 414 OF THE STANDARD SPECIFICATIONS.

PROJECT NO. 17BP.14.R.53

HAYWOOD COUNTY

STATION: 13+12.40 -L-

SHEET 1 OF 6 REPLACES BRIDGE #430359

STATE OF NORTH CAROLINA
DEPARTMENT OF TRANSPORTATION
RALEIGH

BARREL STANDARD DOUBLE 8 FT. X 7 FT. CONCRETE BOX CULVERT 111° SKEW

AUGUST 1989

NORTH CAROLINA PROFESSIONAL SEAL 29112 ENGINEER RICHARD L. COFFMAN
7/30/14

LOUIS BERGER
1001 Wade Avenue, Suite 400
Raleigh, NC 27605-3322
NC COA No. F-0840

REVISIONS						SHEET NO.
NO.	BY:	DATE:	NO.	BY:	DATE:	C-1
1			3			TOTAL SHEETS
2			4			6

ASSEMBLED BY : J. DAWKINS DATE : JULY 2012
CHECKED BY : S. COOK DATE : JULY 2012
DRAWN BY : B.M. MEYERS DATE : AUG. 1989
CHECKED BY : A.R. BISSETTE DATE : AUG. 1989

SPECIAL
STANDARD

G:\OR Projects\OR1100 - NCDOT Group W\430359\Structures\430359_RCBC_01.dgn
7/30/2014 8:13:19 AM 1100_PDF_full.pltcfg 1100_str.tbl

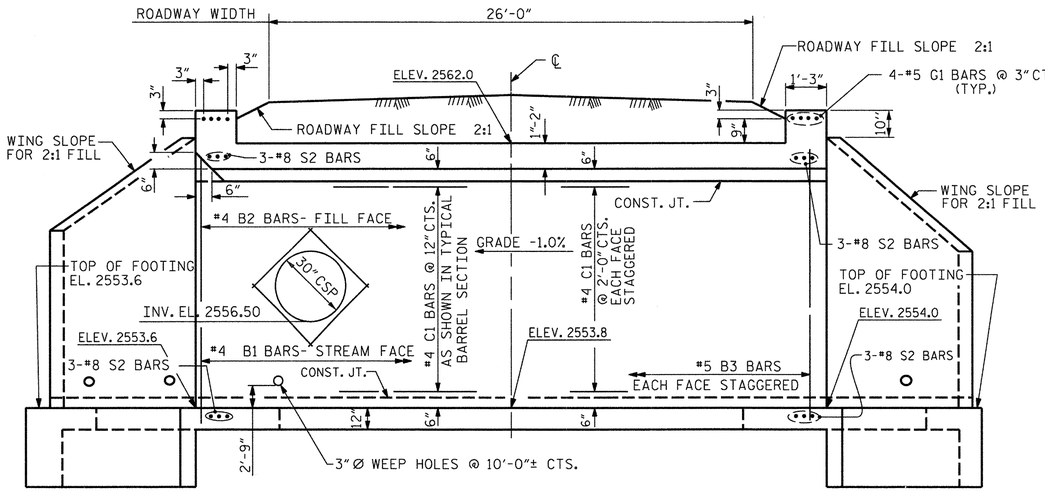

EXTERIOR WALL INTERIOR WALL

CULVERT SECTION NORMAL TO ROADWAY

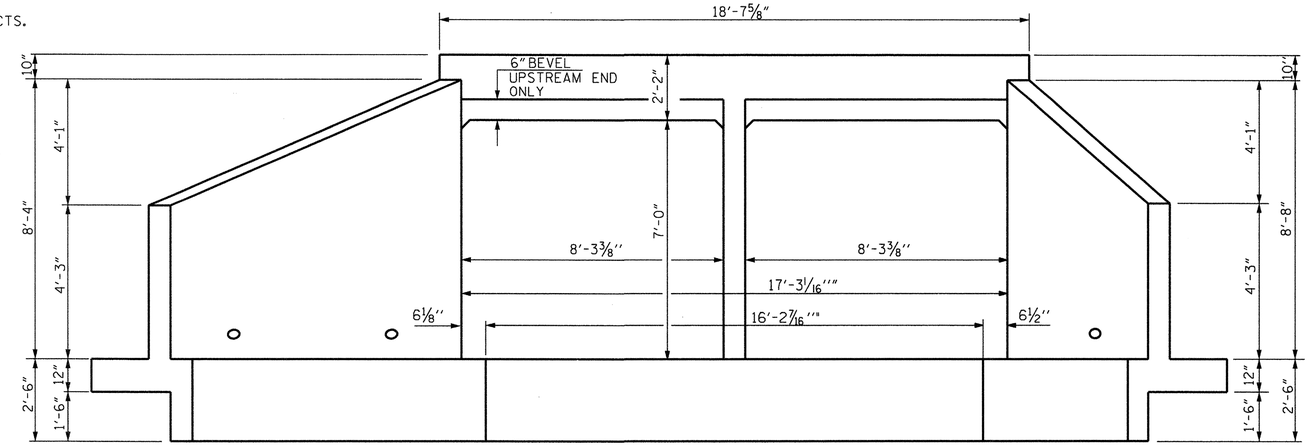

END ELEVATION NORMAL TO SKEW

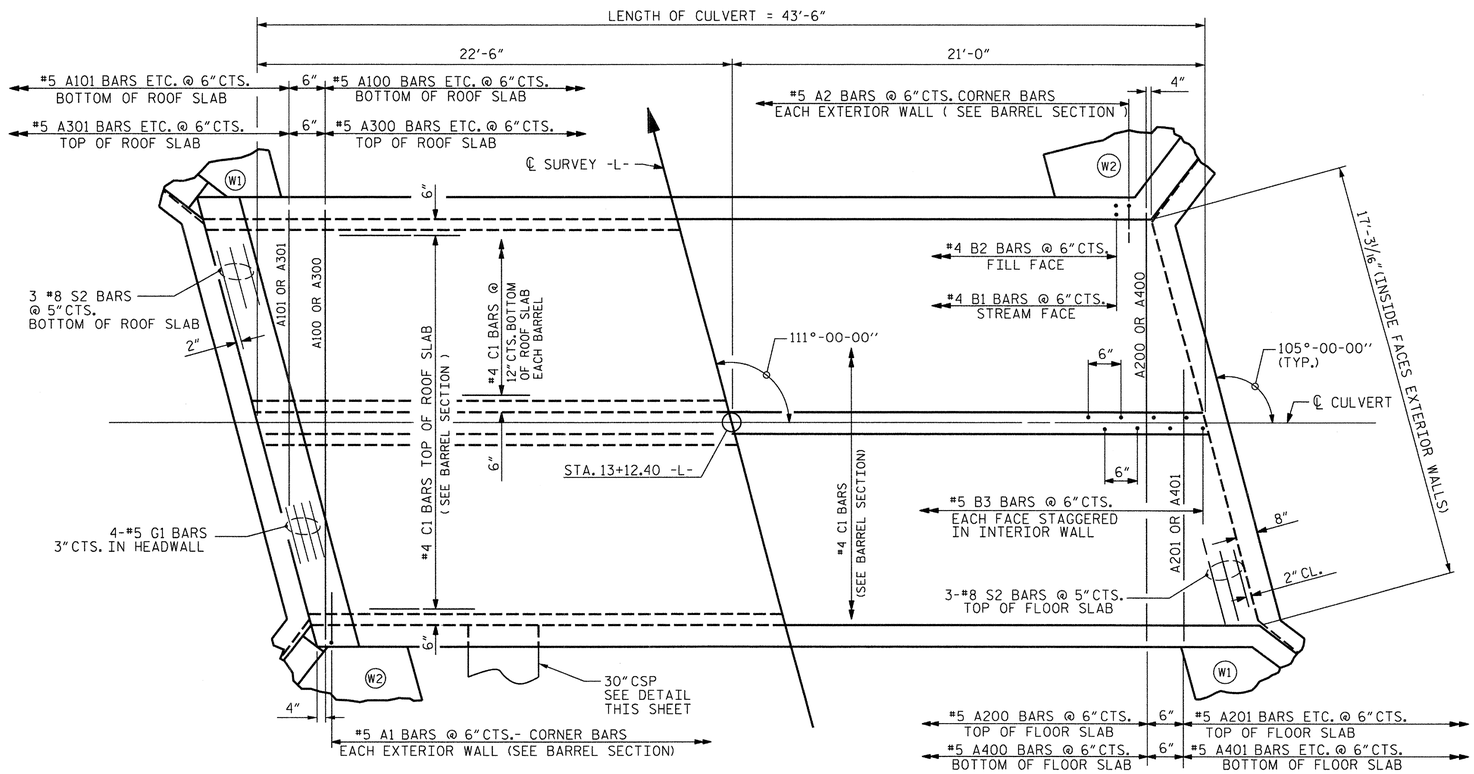

PART PLAN - ROOF SLAB PART PLAN - FLOOR SLAB

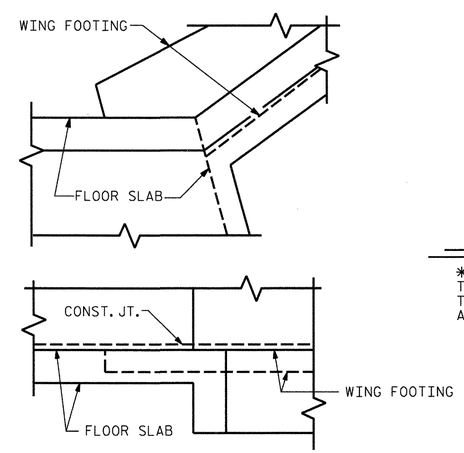

DETAIL

CONNECTION OF WING FOOTING AND FLOOR SLAB WHEN SLAB IS THICKER THAN FOOTING

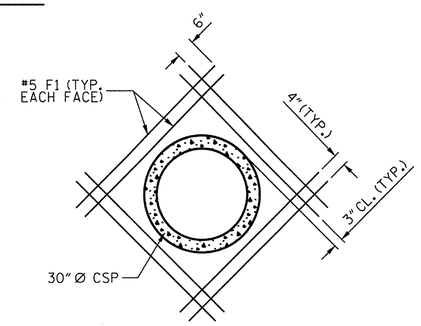

DETAIL OF REINFORCING AROUND 30" Ø PIPE

* THE 30" Ø CSP THROUGH THE SIDEWALL OF THE CULVERT WILL BE LOCATED BY THE ENGINEER. THE REINFORCING STEEL WILL BE FIELD BENT AND/OR CUT AS NECESSARY TO CLEAR PIPE.

PROJECT NO. 17BP.14.R.53

HAYWOOD COUNTY

STATION: 13+12.40 -L-

SHEET 2 OF 6

STATE OF NORTH CAROLINA
DEPARTMENT OF TRANSPORTATION
RALEIGH

BARREL STANDARD

DOUBLE 8 FT. X 7 FT. CONCRETE BOX CULVERT 111° SKEW

1971

NORTH CAROLINA PROFESSIONAL SEAL 29112 ENGINEER RICHARD L. COFFMAN

7/30/14

LOUIS BERGER
1001 Wade Avenue, Suite 400
Raleigh, NC 27605-3322
NC COA No. F-0840

REVISIONS							SHEET NO.
NO.	BY:	DATE:	NO.	BY:	DATE:		C-2
1			3				TOTAL SHEETS
2			4				6

STD. NO. CB222

ASSEMBLED BY : M. HOGAN	DATE : 8/12	SPECIAL	
CHECKED BY : S. COOK	DATE : 8/12		
DRAWN BY : W. BRYAN STANLEY II	DATE : NOV.1971	STANDARD	
CHECKED BY : JOEL A. JOHNSON	DATE : DEC.1971		

G:\OR Projects\OR100 - NCDOT Group W\430359\Structures\430359_RCBC_02.dgn
7/30/2014 8:13:22 AM 1100_PDF_full.pltcfg 1100_str.tbl

NOTES:

PLACE SILLS AT INLET AND OUTLET OF CULVERT ONLY.

STOCKPILE EXCAVATED NATURAL BED MATERIAL AND USE IT TO BACKFILL INSIDE BOTTOM OF RCBC CELLS.

NATIVE STONE SIMILAR IN SIZE TO CLASS B RIP-RAP MAY BE USED TO SUPPLEMENT NATURAL BED MATERIAL.

SILLS SHALL BE 1.0 FT. WIDE, CAST SEPARATELY AND ATTACHED WITH DOWELS.

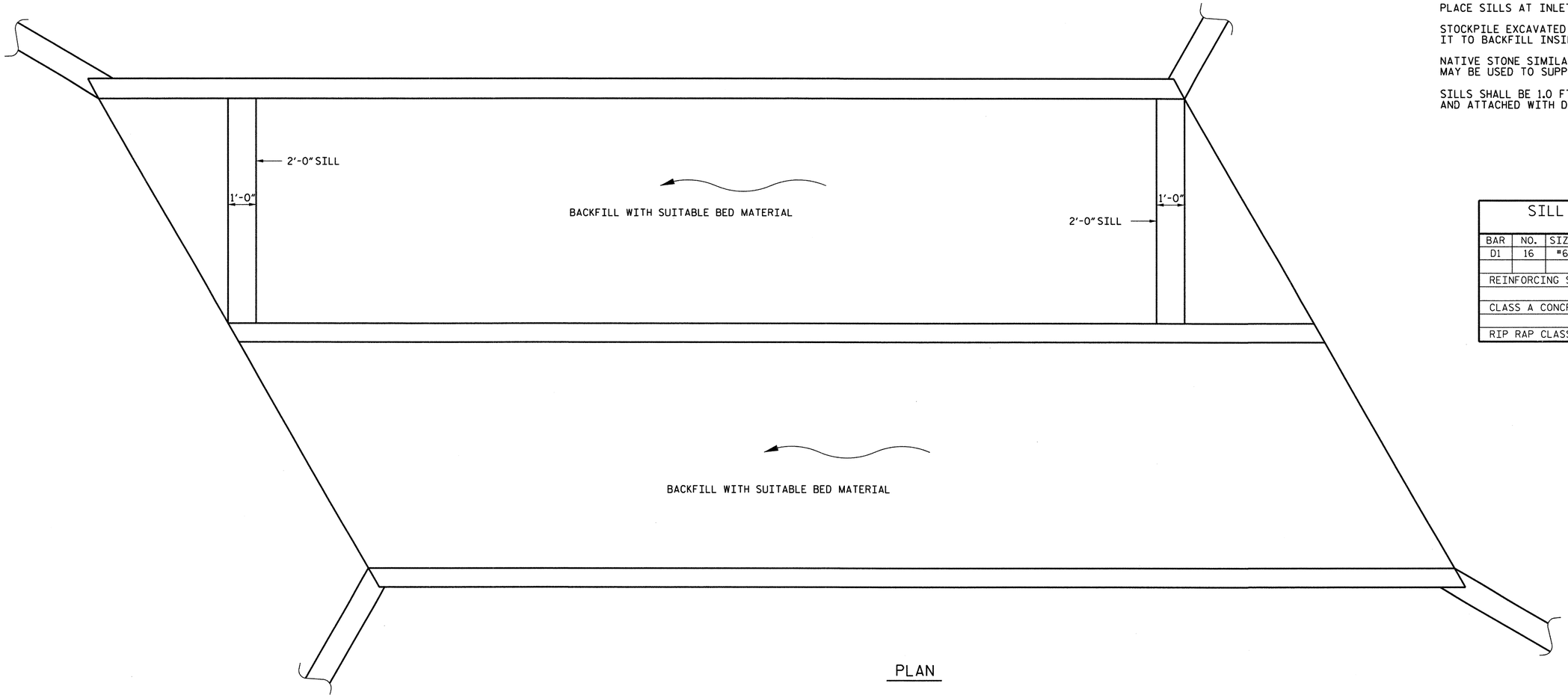

PLAN

SILL QUANTITIES					
BAR	NO.	SIZE	TYPE	LENGTH	WEIGHT
D1	16	#6	STR	2'-6"	60
REINFORCING STEEL					60 LBS
CLASS A CONCRETE					1.0 CY
RIP RAP CLASS B					31.5 TONS

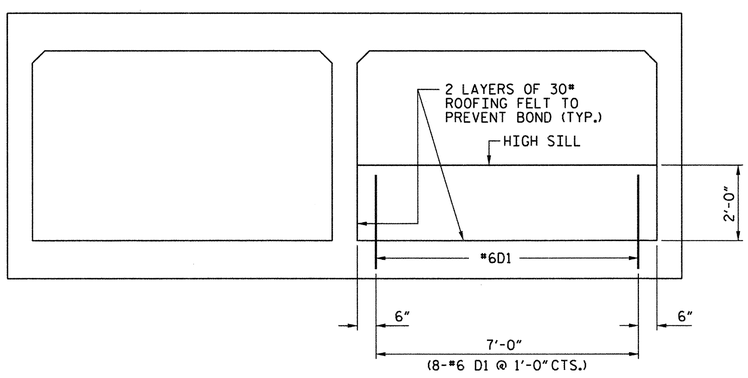

ELEVATION VIEW - INLET

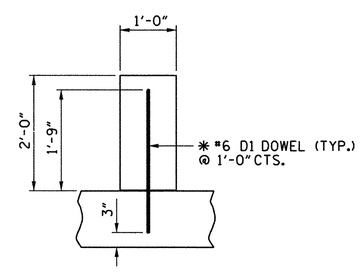

* DOWELS MAY BE PUSHED INTO GREEN CONCRETE AFTER SLAB HAS BEEN FLOAT FINISHED

SECTION THRU 2'-0" SILL

PROJECT NO. 17BP.14.R.53

HAYWOOD COUNTY

STATION: 13+12.40 -L-

SHEET 3 OF 6

STATE OF NORTH CAROLINA
DEPARTMENT OF TRANSPORTATION
RALEIGH

CONCRETE SILL DETAILS

NORTH CAROLINA PROFESSIONAL SEAL 29112 ENGINEER RICHARD I. COFFMAN

7/30/14

LOUIS BERGER
1001 Wade Avenue, Suite 400
Raleigh, NC 27605-3322
NC COA No. F-0840

REVISIONS							SHEET NO.
NO.	BY:	DATE:	NO.	BY:	DATE:		C-3
1			3				TOTAL SHEETS
2			4				6

DRAWN BY : R. KNIGHT DATE : JUNE 2012
CHECKED BY : S. COOK DATE : JUNE 2012

G:\OR Projects\OR1100 - NCDOT Group W\430359\Structures\430359_RCBC_03.dgn
7/30/2014 8:13:26 AM 1100_PDF_full.pltcfg 1100_str.tbl

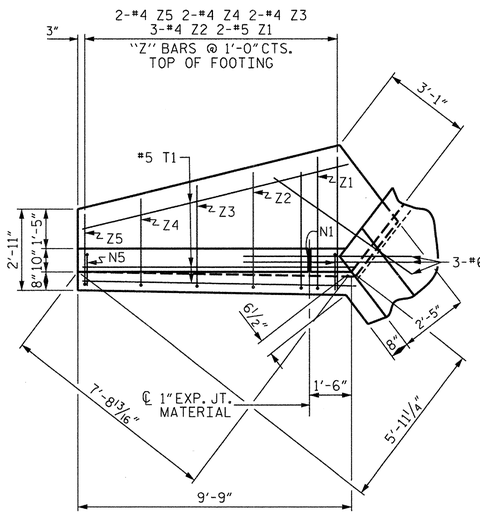

PLAN W2

S1 @ BOTTOM OF FLOOR SLAB & FOOTING

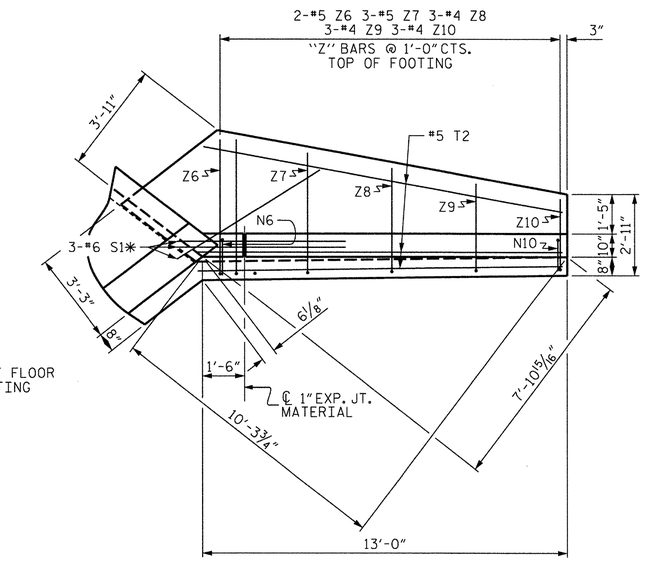

PLAN W1

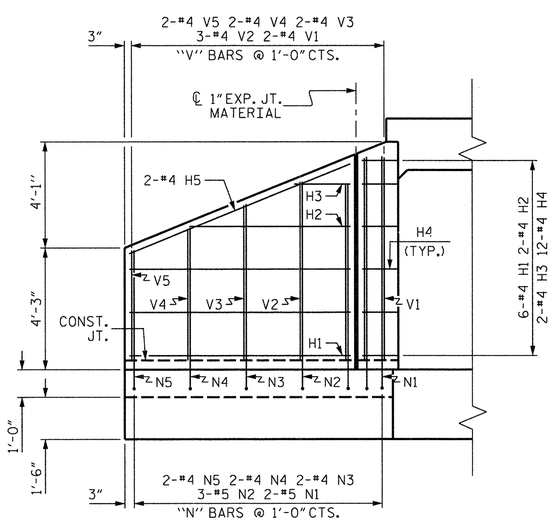

ELEVATION W2

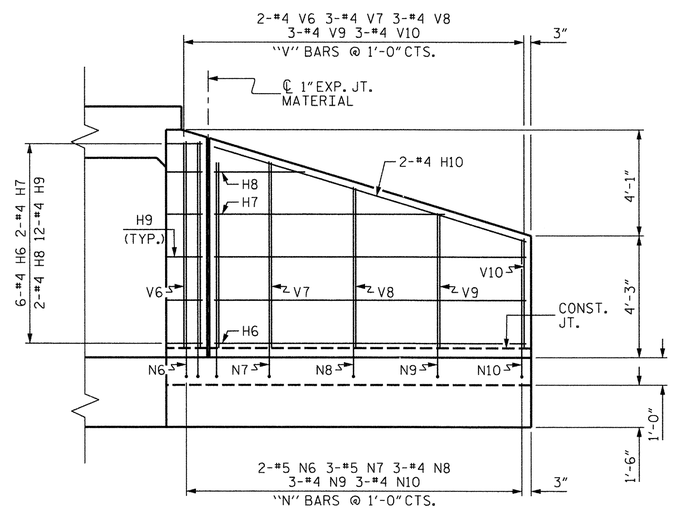

ELEVATION W1

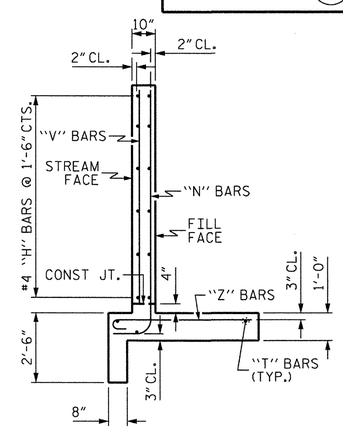

TYPICAL WING SECTION

BAR TYPES

ALL BAR DIMENSIONS ARE OUT TO OUT.

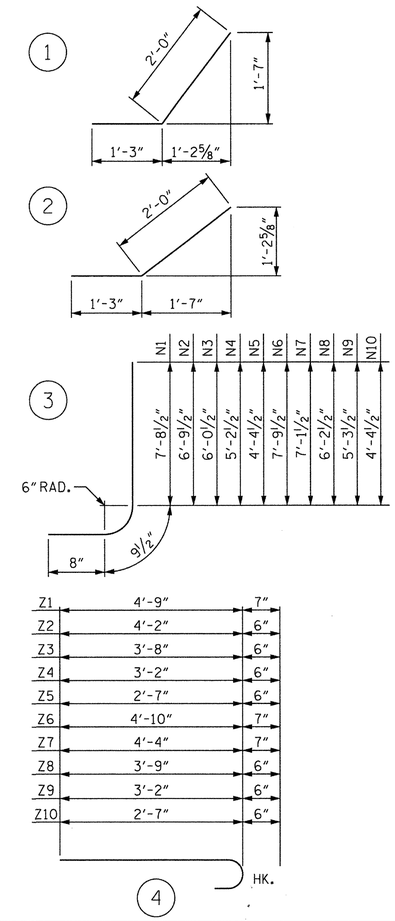

BILL OF MATERIAL

BAR	NO.	SIZE	TYPE	LENGTH	WEIGHT
H1	12	#4	STR	7'-10"	63
H2	4	#4	STR	5'-8"	15
H3	4	#4	STR	2'-0"	5
H4	24	#4	1	3'-3"	52
H5	4	#4	STR	8'-5"	22
H6	12	#4	STR	11'-1"	89
H7	4	#4	STR	8'-2"	22
H8	4	#4	STR	3'-3"	9
H9	24	#4	2	3'-3"	52
H10	4	#4	STR	11'-7"	31
N1	4	#5	3	9'-2"	38
N2	6	#5	3	8'-3"	52
N3	4	#4	3	7'-6"	20
N4	4	#4	3	6'-8"	18
N5	4	#4	3	5'-10"	16
N6	4	#5	3	9'-3"	39
N7	6	#5	3	8'-7"	54
N8	6	#4	3	7'-8"	31
N9	6	#4	3	6'-9"	27
N10	6	#4	3	5'-10"	23
S1	12	#6	STR	6'-0"	108
T1	6	#5	STR	9'-9"	61
T2	6	#5	STR	13'-0"	81
V1	4	#4	STR	7'-1"	19
V2	6	#4	STR	6'-3"	25
V3	4	#4	STR	5'-5"	14
V4	4	#4	STR	4'-7"	12
V5	4	#4	STR	3'-10"	10
V6	4	#4	STR	7'-3"	19
V7	6	#4	STR	6'-6"	26
V8	6	#4	STR	5'-7"	22
V9	6	#4	STR	4'-8"	19
V10	6	#4	STR	3'-10"	15
Z1	4	#5	4	5'-4"	22
Z2	6	#4	4	4'-8"	19
Z3	4	#4	4	4'-2"	11
Z4	4	#4	4	3'-8"	10
Z5	4	#4	4	3'-1"	8
Z6	4	#5	4	5'-5"	23
Z7	6	#5	4	4'-11"	31
Z8	6	#4	4	4'-3"	17
Z9	6	#4	4	3'-8"	15
Z10	6	#4	4	3'-1"	12

REINFORCING STEEL FOR 4 WINGS	1277	LBS
CLASS A CONCRETE		
4 WINGS	18.2	CY
2 HEADWALLS	1.7	CY
2 END CURTAIN WALLS	3.2	CY
TOTAL	23.1	CY

PROJECT NO. 17BP.14.R.53

HAYWOOD COUNTY

STATION: 13+12.40 -L-

SHEET 4 OF 6

STATE OF NORTH CAROLINA
DEPARTMENT OF TRANSPORTATION
RALEIGH

STANDARD WINGS FOR CONCRETE BOX CULVERT

H = 7'-0" SLOPE = 2:1
75° OR 105° SKEW

SEAL 29112 — NORTH CAROLINA PROFESSIONAL ENGINEER SEAL — RICHARD L. COPPMAN — 7/30/14

LOUIS BERGER
1001 Wade Avenue, Suite 400
Raleigh, NC 27605-3322
NC COA No. F-0840

REVISIONS						
NO.	BY:	DATE:	NO.	BY:	DATE:	
1			3			
2			4			

SHEET NO. C-4

TOTAL SHEETS 6

STD. NO. CW7507

ASSEMBLED BY : M. HOGAN		DATE : AUG. 2012	
CHECKED BY : S. COOK		DATE : AUG. 2012	
DRAWN BY : CCJ	12/99		
CHECKED BY : RWW	03/00		

G:\OR Projects\OR1100 - NCDOT Group W\430359\Structures\430359_RCBC_04.dgn
7/30/2014 8:13:28 AM 1100_PDF_full.pltcfg 1100_str.tbl

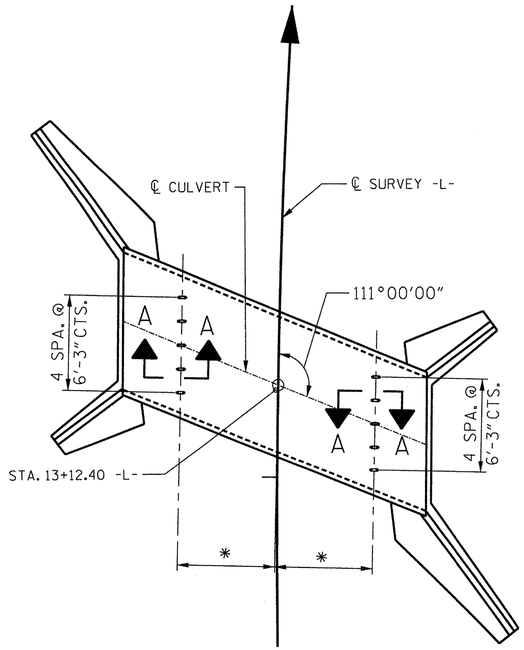

PLAN

SHOWING : GUARDRAIL ANCHOR ASSEMBLY SPACING.

* DIMENSION TO BE FURNISHED BY THE ENGINEER.

NOTES

THE GUARDRAIL ANCHOR ASSEMBLY FOR CULVERTS SHALL CONSIST OF THE FOLLOWING COMPONENTS :

A. FERRULES SHALL BE MADE FROM STEEL MEETING THE REQUIREMENTS OF AASHTO M169, GRADE 12L14 AND SHALL HAVE A MINIMUM LENGTH OF THREADS OF 2½".

B. 4 - 1" Ø X 2 ¼" BOLTS WITH WASHERS, BOLTS SHALL CONFORM TO THE REQUIREMENTS OF ASTM A307. BOLTS AND WASHERS SHALL BE GALVANIZED. (AT THE CONTRACTOR'S OPTION, STAINLESS STEEL BOLTS AND WASHERS MAY BE USED AS AN ALTERNATE FOR THE 1" Ø X 2¼" GALVANIZED BOLTS AND WASHERS. THEY SHALL CONFORM TO OR EXCEED THE MECHANICAL REQUIREMENTS OF ASTM A307. THE USE OF THIS ALTERNATE SHALL BE APPROVED BY THE ENGINEER.)

C. WIRE STRUTS SHOWN IN THE GUARDRAIL ANCHOR ASSEMBLY FOR CULVERTS DETAIL ARE MINIMUM ALLOWABLE SIZE AND SHALL HAVE A MINIMUM TENSILE STRENGTH OF 100,000 P.S.I. AS AN OPTION, A 7/16" Ø WIRE STRUT WITH A MINIMUM TENSILE STRENGTH OF 90,000 PSI IS ACCEPTABLE.

GUARDRAIL ANCHOR ASSEMBLY WITH BOLTS SHALL BE ASSEMBLED IN THE SHOP. BOLT THREADS MAY BE RECUT AS NECESSARY TO INSURE FIT.

THE COST OF THE GUARDRAIL ANCHOR ASSEMBLY FOR CULVERTS COMPLETE IN PLACE, SHALL BE INCLUDED IN THE UNIT CONTRACT PRICE BID FOR CLASS "A" CONCRETE.

FERRULES TO BE PLUGGED DURING POURING OF SLAB AS RECOMMENDED BY THE MANUFACTURER.

AT THE CONTRACTOR'S OPTION, FERRULES WITH OPEN OR CLOSED ENDS MAY BE USED.

PAYMENT FOR GUARDRAIL, POSTS, AND POST BASE PLATES IS INCLUDED IN ROADWAY PAY ITEMS.

SLAB REINFORCING STEEL MAY BE SHIFTED AS NECESSARY TO CLEAR GUARDRAIL ANCHOR ASSEMBLY. CARE SHOULD BE TAKEN TO KEEP THE SHIFTING OF REINFORCING STEEL TO A MINIMUM.

THE CONTRACTOR MAY USE ADHESIVELY ANCHORED ANCHOR BOLTS IN PLACE OF GUARDRAIL ANCHOR ASSEMBLY. LEVEL TWO FIELD TESTING IS REQUIRED, AND THE YIELD LOAD OF THE 1"Ø BOLT IS 21.8 KIPS. FOR ADHESIVELY ANCHORED ANCHOR BOLTS OR DOWELS, SEE STANDARD SPECIFICATIONS.

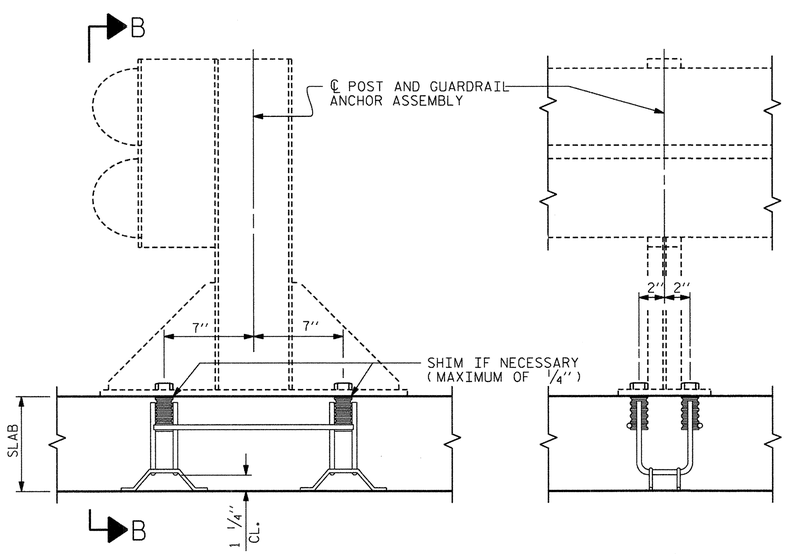

SECTION A-A

SECTION B-B

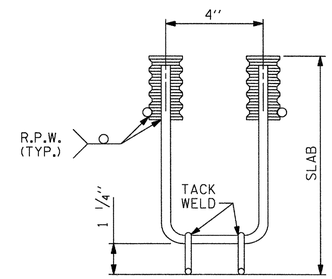

ELEVATION

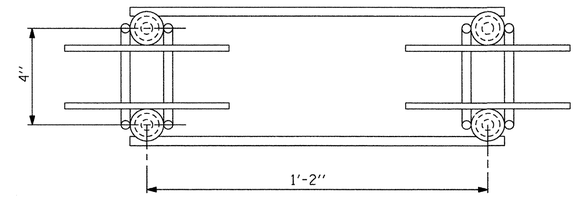

PLAN

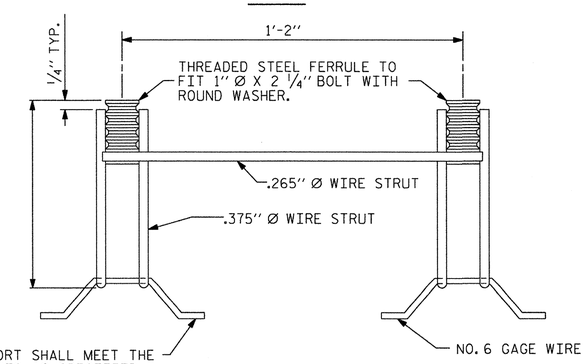

SIDE VIEW

GUARDRAIL ANCHOR ASSEMBLY FOR CULVERTS

NORTH CAROLINA PROFESSIONAL SEAL 29112 ENGINEER RICHARD L. COTEMAN

7/30/14

PROJECT NO. 17BP.14.R.53

HAYWOOD COUNTY

STATION: 13+12.40 -L-

SHEET 5 OF 6

STATE OF NORTH CAROLINA
DEPARTMENT OF TRANSPORTATION
RALEIGH

STANDARD

ANCHORAGE DETAILS FOR GUARDRAIL ANCHOR ASSEMBLY FOR CULVERTS

ASSEMBLED BY : M. HOGAN	DATE : AUG. 2012
CHECKED BY : S. COOK	DATE : AUG. 2012

DRAWN BY : FCJ	6/88	REV. 7/10/01	LES/RDR
CHECKED BY : ARB	6/88	REV. 5/7/03	RWW/JTE
		REV. 5/1/06R	KMM/GM

LOUIS BERGER
1001 Wade Avenue, Suite 400
Raleigh, NC 27605-3322
NC COA No. F-0840

REVISIONS							SHEET NO.
NO.	BY:	DATE:	NO.	BY:	DATE:		C-5
1			3				TOTAL SHEETS
2			4				6

STD. NO. GRA1

G:\OR Projects\OR1100 - NCDOT Group W\430359\Structures\430359_RCBC_05.dgn
7/30/2014 8:13:31 AM 1100_PDF_full.pltcfg 1100_str.tbl

LOAD AND RESISTANCE FACTOR RATING (LRFR) SUMMARY FOR REINFORCED CONCRETE BOX CULVERTS

LEVEL		VEHICLE	WEIGHT (W) (TONS)	CONTROLLING LOAD RATING (#)	MINIMUM RATING FACTORS (RF)	TONS = W × RF	STRENGTH I LIMIT STATE									COMMENT NUMBER
							LIVE-LOAD FACTORS (γ_{LL})	MOMENT				SHEAR				
								RATING FACTOR	BOX NO.	ELEMENT TYPE	DISTANCE FROM LEFT END OF ELEMENT (ft)	RATING FACTOR	BOX NO.	ELEMENT TYPE	DISTANCE FROM LEFT END OF ELEMENT (ft)	
DESIGN LOAD RATING		HL-93 (INVENTORY)	N/A	1	1.09	-	1.75	1.40	2	Bottom Slab	18.00	1.09	2	Bottom Slab	18.00	
		HL-93 (OPERATING)	N/A		1.41	-	1.35	1.81	2	Bottom Slab	18.00	1.41	2	Bottom Slab	18.00	
		HS-20 (INVENTORY)	36.000	2	1.28	46.08	1.75	1.63	2	Bottom Slab	18.00	1.28	2	Bottom Slab	18.00	
		HS-20 (OPERATING)	36.000		1.66	59.76	1.35	2.12	2	Bottom Slab	18.00	1.66	2	Bottom Slab	18.00	
LEGAL LOAD RATING	SINGLE VEHICLE (SV)	SNSH	13.500		2.75	37.13	1.40	5.95	2	Top Slab	18.00	2.75	2	Top Slab	18.00	
		SNGARBS2	20.000		2.58	51.60	1.40	5.57	2	Top Slab	18.00	2.58	2	Top Slab	18.00	
		SNAGRIS2	22.000		2.36	51.92	1.40	2.97	2	Bottom Slab	18.00	2.36	2	Bottom Slab	18.00	
		SNCOTTS3	27.250	3	1.63	44.42	1.40	3.39	2	Top Slab	18.00	1.63	2	Top Slab	18.00	
		SNAGGRS4	34.925		1.74	60.77	1.40	2.20	2	Bottom Slab	18.00	1.74	2	Bottom Slab	18.00	
		SNS5A	35.550		1.75	62.21	1.40	2.22	2	Bottom Slab	18.00	1.75	2	Bottom Slab	18.00	
		SNS6A	39.950		1.59	63.52	1.40	2.01	2	Bottom Slab	18.00	1.59	2	Bottom Slab	18.00	
		SNS7B	42.000		1.59	66.78	1.40	2.01	2	Bottom Slab	18.00	1.59	2	Bottom Slab	18.00	
	TRUCK TRACTOR SEMI-TRAILER (TTST)	TNAGRIT3	33.000		2.35	77.55	1.40	2.96	2	Bottom Slab	18.00	2.35	2	Bottom Slab	18.00	
		TNT4A	33.075		1.90	62.84	1.40	2.37	2	Bottom Slab	18.00	1.90	2	Bottom Slab	18.00	
		TNT6A	41.600		1.84	76.54	1.40	2.31	2	Bottom Slab	18.00	1.84	2	Bottom Slab	18.00	
		TNT7A	42.000		1.80	75.60	1.40	2.27	2	Bottom Slab	18.00	1.80	2	Bottom Slab	18.00	
		TNT7B	42.000		1.74	73.08	1.40	2.19	2	Bottom Slab	18.00	1.74	2	Bottom Slab	18.00	
		TNAGRIT4	43.000		1.60	68.80	1.40	2.02	2	Bottom Slab	18.00	1.60	2	Bottom Slab	18.00	
		TNAGRT5A	45.000		1.60	72.00	1.40	2.02	2	Bottom Slab	18.00	1.60	2	Bottom Slab	18.00	
		TNAGRT5B	45.000		1.47	66.15	1.40	1.86	2	Bottom Slab	18.00	1.47	2	Bottom Slab	18.00	

LOAD FACTORS:

DESIGN LOAD RATING FACTORS

LOAD TYPE	MAX FACTOR	MIN FACTOR
DC	1.25	0.90
DW	1.50	0.65
EV	1.30	0.90
EH	1.35	0.90
ES	1.35	0.90
	1.75	--
WA	1.00	--

NOTE:

RATING FACTORS ARE BASED ON THE STRENGTH I LIMIT STATE.

COMMENTS:

1.
2.
3.
4.

(#) CONTROLLING LOAD RATING

(1) DESIGN LOAD RATING (HL-93)

(2) DESIGN LOAD RATING (HS-20)

(3) LEGAL LOAD RATING **

** SEE CHART FOR VEHICLE TYPE

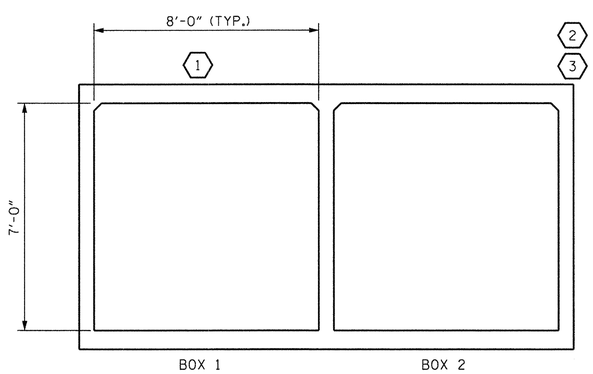

LRFR SUMMARY

(LOOKING DOWNSTREAM)

PROJECT NO. 17BP.14.R.53

HAYWOOD COUNTY

STATION: 13+12.40 -L-

SHEET 6 OF 6

STATE OF NORTH CAROLINA
DEPARTMENT OF TRANSPORTATION
RALEIGH

STANDARD

LRFR SUMMARY FOR REINFORCED CONCRETE BOX CULVERTS
(NON-INTERSTATE TRAFFIC)

NORTH CAROLINA PROFESSIONAL SEAL 29112 ENGINEER RICHARD L. COFFMAN

7/30/14

LOUIS BERGER
1001 Wade Avenue, Suite 400
Raleigh, NC 27605-3322
NC COA No. F-0840

REVISIONS						SHEET NO.
NO.	BY:	DATE:	NO.	BY:	DATE:	C-6
1			3			TOTAL SHEETS
2			4			6

STD. NO. LRFR5

ASSEMBLED BY : M. HOGAN	DATE : AUG. 2012
CHECKED BY : S. COOK	DATE : AUG 2012
DRAWN BY : WMC 7/11	REV. 10/1/11 MAA/GM
CHECKED BY : GM 7/11	

G:\OR Projects\OR1100 - NCDOT Group W\430359\Structures\430359_RCBC_06.dgn
7/30/2014 8:13:34 AM 1100_PDF_full.pltcfg 1100_str.tbl