PROJECT: 17BP.14.R.40

CONTRACT: DN00173

See Sheet 1-A For Index of Sheets
See Sheet 1-B For Symbol Sheet

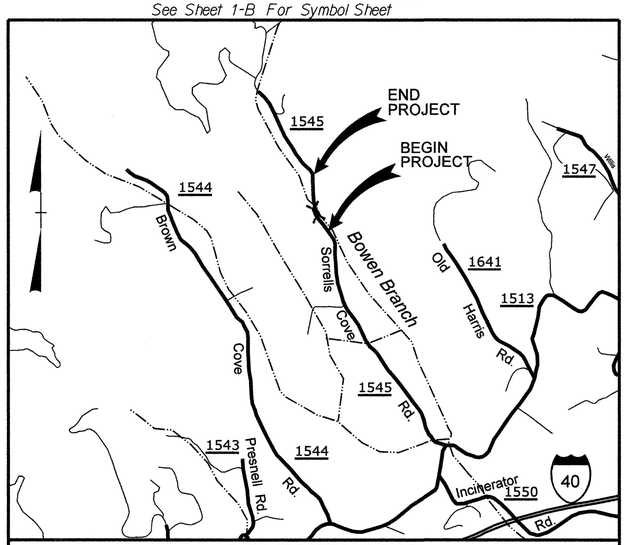

VICINITY MAP NTS

STATE OF NORTH CAROLINA
DIVISION OF HIGHWAYS

HAYWOOD COUNTY

STATE	STATE PROJECT REFERENCE NO.	SHEET NO.	TOTAL SHEETS
N.C.	17BP.14.R.40	1	

STATE PROJ. NO.	F. A. PROJ. NO.	DESCRIPTION
17BP.14.R.40		PE

LOCATION: BRIDGE NO. 356 ON SR 1545 (SORRELLS COVE RD.) OVER BOWEN BRANCH NEAR PHILLPSVILLE

TYPE OF WORK: GRADING, DRAINAGE, CULVERT, GUARDRAIL, WIDENING, AND RESURFACING

4

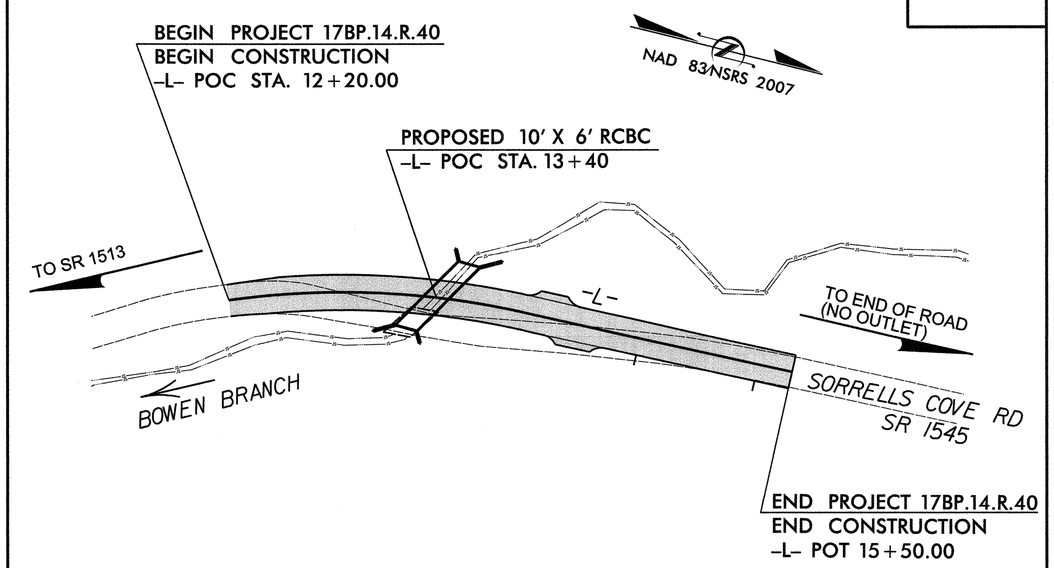

NCDOT CONTACT:
JOSH DEYTON, PE
HIGHWAY DIVISION 14
BRIDGE MANAGER
828-488-0902

GRAPHIC SCALES

20 10 0 20 40
PLANS

20 10 0 20 40
PROFILE (HORIZONTAL)

4 2 0 4 8
PROFILE (VERTICAL)

DESIGN DATA

ADT 2008 = 240
ADT =
DHV =
D = 35 MPH
T =
V =
* TTST % + DUAL %
FUNC CLASS = RURAL LOCAL
SUB REGIONAL TIER

PROJECT LENGTH

LENGTH ROADWAY PROJECT	=	0.063 MILES
LENGTH STRUCTURES PROJECT	=	0.000 MILES
TOTAL LENGTH PROJECT	=	0.063 MILES

Prepared in the Office of:
THE LOUIS BERGER GROUP, Inc.
1001 Wade Avenue, Suite 400
Raleigh, North Carolina 27605
License No.: F-0840

2012 STANDARD SPECIFICATIONS

RIGHT OF WAY DATE:
OCTOBER 1, 2013

LETTING DATE:
FEBRUARY 11, 2014

DEAN D. HATFIELD, PE
PROJECT ENGINEER

WILLIAM E. TILLITT, PE
PROJECT DESIGN ENGINEER

HYDRAULICS ENGINEER
NORTH CAROLINA PROFESSIONAL SEAL 032134 ENGINEER WALTER ROBERTS
SIGNATURE: P.E.

ROADWAY DESIGN ENGINEER
NORTH CAROLINA PROFESSIONAL SEAL 16003 ENGINEER DEAN D. HATFIELD
SIGNATURE: P.E.

DIVISION OF HIGHWAYS
STATE OF NORTH CAROLINA

STATE HIGHWAY DESIGN ENGINEER P.E.

1/9/2014 7:27:58 AM
G:\OR Projects\OR1100 - NCDOT Group W\430356\Roadway\Proj\430356_Rdy_00_TSH.dgn
G:\CADD\Plot\OR1100\1100_rdy.tbl

PROJECT REFERENCE NO.	SHEET NO.
17BPJ4.R.40	1-A

ROADWAY DESIGN ENGINEER

NORTH CAROLINA PROFESSIONAL SEAL 16003 ENGINEER

REGISTERED ENGINEER

STATE OF NORTH CAROLINA
DIVISION OF HIGHWAYS

INDEX OF SHEETS

INDEX OF SHEETS

SHEET NUMBER	SHEET
1	TITLE SHEET
1-A	INDEX OF SHEETS, GENERAL NOTES, AND LIST OF STANDARD DRAWINGS
1-B	CONVENTIONAL SYMBOLS
1-C	SURVEY CONTROL
2	PAVEMENT SCHEDULE, TYPICAL SECTIONS, AND WEDGING DETAILS
3	SUMMARY OF QUANTITIES
3-A	SUMMARIES OF EARTHWORK, GUARDRAIL & SUMMARY OF DRAINAGE QUANTITIES
4	PLAN SHEET
5	PROFILE SHEET
TMP-1 THRU TMP-4	TRAFFIC MANAGEMENT PLANS
PMP-1 THRU PMP-2	PAVEMENT MARKING PLANS
EC-1 THRU EC-4	EROSION CONTROL PLANS
X-1 THRU X-7	CROSS-SECTIONS
C-1 THRU C-8	CULVERT PLANS

GENERAL NOTES

GENERAL NOTES: 2012 SPECIFICATIONS
EFFECTIVE: 01-17-12
REVISED: 11/01/11

GRADING AND SURFACING OR RESURFACING AND WIDENING:

THE GRADE LINES SHOWN DENOTE THE FINISHED ELEVATION OF THE PROPOSED SURFACING AT GRADE POINTS SHOWN ON THE TYPICAL SECTIONS. WHERE NO GRADE LINES ARE SHOWN, THE PROFILES SHOWN DENOTE THE TOP ELEVATION OF THE EXISTING PAVEMENT ALONG THE CENTER LINE OF SURVEY ON WHICH THE PROPOSED RESURFACING WILL BE PLACED. GRADE LINES MAY BE ADJUSTED BY THE ENGINEER IN ORDER TO SECURE A PROPER TIE-IN.

CLEARING:

CLEARING ON THIS PROJECT SHALL BE PERFORMED TO THE LIMITS ESTABLISHED BY METHOD III.

SUPERELEVATION:

ALL CURVES ON THIS PROJECT SHALL BE SUPERELEVATED IN ACCORDANCE WITH STD. NO. 225.04 USING THE RATE OF SUPERELEVATION AND RUNOFF SHOWN ON THE PLANS. SUPERELEVATION IS TO BE REVOLVED ABOUT THE GRADE POINTS SHOWN ON THE TYPICAL SECTIONS.

SHOULDER CONSTRUCTION:

ASPHALT, EARTH, AND CONCRETE SHOULDER CONSTRUCTION ON THE HIGH SIDE OF SUPERELEVATED CURVES SHALL BE IN ACCORDANCE WITH STD. NO. 560.01.

SIDE ROADS:

THE CONTRACTOR WILL BE REQUIRED TO DO ALL NECESSARY WORK TO PROVIDE SUITABLE CONNECTIONS WITH ALL ROADS, STREETS, AND DRIVES ENTERING THIS PROJECT. THIS WORK WILL BE PAID FOR AT THE CONTRACT UNIT PRICE FOR THE PARTICULAR ITEMS INVOLVED.

UNDERDRAINS:

UNDERDRAINS SHALL BE CONSTRUCTED IN ACCORDANCE WITH STD. NO. 815.03 AT LOCATIONS DIRECTED BY THE ENGINEER.

GUARDRAIL:

THE GUARDRAIL LOCATIONS SHOWN ON THE PLANS MAY BE ADJUSTED DURING CONSTRUCTION AS DIRECTED BY THE ENGINEER. THE CONTRACTOR SHOULD CONSULT WITH THE ENGINEER PRIOR TO ORDERING GUARDRAIL MATERIAL.

RIGHT-OF-WAY MARKERS:

ALL RIGHT-OF-WAY MARKERS ON THIS PROJECT SHALL BE PLACED BY CONTRACT IN ACCORDANCE WITH SECTION 801 OF THE 2012 NORTH CAROLINA STANDARD SPECIFICATIONS FOR ROADS AND STRUCTURES.

ROADWAY ENGLISH STANDARD DRAWINGS

2012 ROADWAY ENGLISH STANDARD DRAWINGS

The following Roadway Standards as appear in "Roadway Standard Drawings" Highway Design Branch - N. C. Department of Transportation - Raleigh, N. C., Dated January, 2012 are applicable to this project and by reference hereby are considered a part of these plans:

STD.NO.	TITLE
DIVISION 2 - EARTHWORK	
200.03	Method of Clearing - Method III
225.02	Guide for Grading Subgrade - Secondary and Local
225.04	Method of Obtaining Superelevation - Two Lane Pavement
225.06	Method of Grading Sight Distance at Intersections
DIVISION 3 - PIPE CULVERTS	
300.01	Method of Pipe Installation
310.10	Driveway Pipe Construction
DIVISION 5 - SUBGRADE, BASES AND SHOULDERS	
560.01	Method of Shoulder Construction - High Side of Superelevated Curve - Method I
DIVISION 8 - INCIDENTALS	
815.03	Pipe Underdrain and Blind Drain
840.35	Traffic Bearing Grated Drop Inlet - for Cast Iron Double Frame and Grates
862.01	Guardrail Placement
862.02	Guardrail Installation
866.04	Barbed Wire Fence with Wood Posts (2 - 7 Strands)

1/9/2014 7:28:00 AM
G:\OR Projects\OR1100 - NCDOT Group W\430356\Roadway\Proj\430356_RDY_01_1A.dgn
G:\CADD\Plot\OR1100\1100_rdy.tbl

04/16/11

PROJECT REFERENCE NO.	SHEET NO.
17BP.14.R.40	1-B

Note: Not to Scale

****S.U.E. = Subsurface Utility Engineering***

STATE OF NORTH CAROLINA
DIVISION OF HIGHWAYS

CONVENTIONAL PLAN SHEET SYMBOLS

BOUNDARIES AND PROPERTY:

- State Line
- County Line
- Township Line
- City Line
- Reservation Line
- Property Line
- Existing Iron Pin — EIP
- Property Corner
- Property Monument — ECM
- Parcel/Sequence Number — 123
- Existing Fence Line
- Proposed Woven Wire Fence
- Proposed Chain Link Fence
- Proposed Barbed Wire Fence
- Existing Wetland Boundary — WLB
- Proposed Wetland Boundary — WLB
- Existing Endangered Animal Boundary — EAB
- Existing Endangered Plant Boundary — EPB
- Known Soil Contamination: Area or Site
- Potential Soil Contamination: Area or Site

BUILDINGS AND OTHER CULTURE:

- Gas Pump Vent or U/G Tank Cap
- Sign — S
- Well — W
- Small Mine
- Foundation
- Area Outline
- Cemetery
- Building
- School
- Church
- Dam

HYDROLOGY:

- Stream or Body of Water
- Hydro, Pool or Reservoir
- Jurisdictional Stream — JS
- Buffer Zone 1 — BZ 1
- Buffer Zone 2 — BZ 2
- Flow Arrow
- Disappearing Stream
- Spring
- Wetland
- Proposed Lateral, Tail, Head Ditch — FLOW
- False Sump

RAILROADS:

- Standard Gauge — CSX TRANSPORTATION
- RR Signal Milepost — MILEPOST 35
- Switch — SWITCH
- RR Abandoned
- RR Dismantled

RIGHT OF WAY:

- Baseline Control Point
- Existing Right of Way Marker
- Existing Right of Way Line
- Proposed Right of Way Line — RW
- Proposed Right of Way Line with Iron Pin and Cap Marker — RW
- Proposed Right of Way Line with Concrete or Granite R/W Marker — RW
- Proposed Control of Access Line with Concrete C/A Marker — CA
- Existing Control of Access — CA
- Proposed Control of Access — CA
- Existing Easement Line — E
- Proposed Temporary Construction Easement — E
- Proposed Temporary Drainage Easement — TDE
- Proposed Permanent Drainage Easement — PDE
- Proposed Permanent Drainage / Utility Easement — DUE
- Proposed Permanent Utility Easement — PUE
- Proposed Temporary Utility Easement — TUE
- Proposed Aerial Utility Easement — AUE
- Proposed Permanent Easement with Iron Pin and Cap Marker

ROADS AND RELATED FEATURES:

- Existing Edge of Pavement
- Existing Curb
- Proposed Slope Stakes Cut — C
- Proposed Slope Stakes Fill — F
- Proposed Curb Ramp — CR
- Existing Metal Guardrail
- Proposed Guardrail
- Existing Cable Guiderail
- Proposed Cable Guiderail
- Equality Symbol
- Pavement Removal

VEGETATION:

- Single Tree
- Single Shrub
- Hedge
- Woods Line
- Orchard
- Vineyard — Vineyard

EXISTING STRUCTURES:

MAJOR:

- Bridge, Tunnel or Box Culvert — CONC
- Bridge Wing Wall, Head Wall and End Wall — CONC WW

MINOR:

- Head and End Wall — CONC HW
- Pipe Culvert
- Footbridge
- Drainage Box: Catch Basin, DI or JB — CB
- Paved Ditch Gutter
- Storm Sewer Manhole — S
- Storm Sewer — S

UTILITIES:

POWER:

- Existing Power Pole
- Proposed Power Pole
- Existing Joint Use Pole
- Proposed Joint Use Pole
- Power Manhole — P
- Power Line Tower
- Power Transformer
- U/G Power Cable Hand Hole
- H-Frame Pole
- Recorded U/G Power Line — P
- Designated U/G Power Line (S.U.E.*) — P

TELEPHONE:

- Existing Telephone Pole
- Proposed Telephone Pole
- Telephone Manhole — T
- Telephone Booth
- Telephone Pedestal — T
- Telephone Cell Tower
- U/G Telephone Cable Hand Hole — HH
- Recorded U/G Telephone Cable — T
- Designated U/G Telephone Cable (S.U.E.*) — T
- Recorded U/G Telephone Conduit — TC
- Designated U/G Telephone Conduit (S.U.E.*) — TC
- Recorded U/G Fiber Optics Cable — T FO
- Designated U/G Fiber Optics Cable (S.U.E.*) — T FO

WATER:

- Water Manhole — W
- Water Meter
- Water Valve
- Water Hydrant
- Recorded U/G Water Line — W
- Designated U/G Water Line (S.U.E.*) — W
- Above Ground Water Line — A/G Water

TV:

- TV Satellite Dish
- TV Pedestal — C
- TV Tower
- U/G TV Cable Hand Hole — HH
- Recorded U/G TV Cable — TV
- Designated U/G TV Cable (S.U.E.*) — TV
- Recorded U/G Fiber Optic Cable — TV FO
- Designated U/G Fiber Optic Cable (S.U.E.*) — TV FO

GAS:

- Gas Valve
- Gas Meter
- Recorded U/G Gas Line — G
- Designated U/G Gas Line (S.U.E.*) — G
- Above Ground Gas Line — A/G Gas

SANITARY SEWER:

- Sanitary Sewer Manhole
- Sanitary Sewer Cleanout
- U/G Sanitary Sewer Line — SS
- Above Ground Sanitary Sewer — A/G Sanitary Sewer
- Recorded SS Forced Main Line — FSS
- Designated SS Forced Main Line (S.U.E.*) — FSS

MISCELLANEOUS:

- Utility Pole
- Utility Pole with Base
- Utility Located Object
- Utility Traffic Signal Box — S
- Utility Unknown U/G Line — ?UTL
- U/G Tank; Water, Gas, Oil
- Underground Storage Tank, Approx. Loc. — UST
- A/G Tank; Water, Gas, Oil
- Geoenvironmental Boring
- U/G Test Hole (S.U.E.*)
- Abandoned According to Utility Records — AATUR
- End of Information — E.O.I.

PROJECT REFERENCE NO.	SHEET NO.
17BP.14.R.40	1-C
Location and Surveys	

SURVEY CONTROL SHEET 43-0356
-FINAL-

NAD 83/NSRS 2007 NC GRID

-FINAL- ROW MARKER IRON PIN AND CAP-E

ALIGN	STATION	OFFSET	NORTH	EAST
L	12+34.94	-30.00	682385.0265	845731.8676
L	13+93.40	-30.00	682549.5659	845700.8917
L	15+50.00	-30.00	682706.1193	845697.0722

FINAL -L-

TYPE	STATION	NORTH	EAST
POT	9+90.00	682185.8783	845885.5110
POT	10+00.00	682194.0931	845879.8086
PC	11+08.02	682282.8301	845818.2113
PT	13+93.40	682550.2947	845730.8828
POT	16+50.00	682806.8166	845724.6245
POT	16+60.00	682816.8136	845724.3806

BL

POINT	DESC.	NORTH	EAST	ELEVATION	L STATION	OFFSET
1	BL-1	682263.1200	845817.9940	2761.29	10+91.95	11.42 LT
2	BL-2	682478.7550	845741.9080	2774.61	13+20.76	3.95 RT
3	BL-3	682788.7325	845713.8209	2810.19	16+32.18	11.24 LT

****
BM1 ELEVATION = 2774.23
N 682460 E 845788
L STATION 12+92.00 46 RIGHT
RR SPIKE SET IN BASE 18" OAK
****

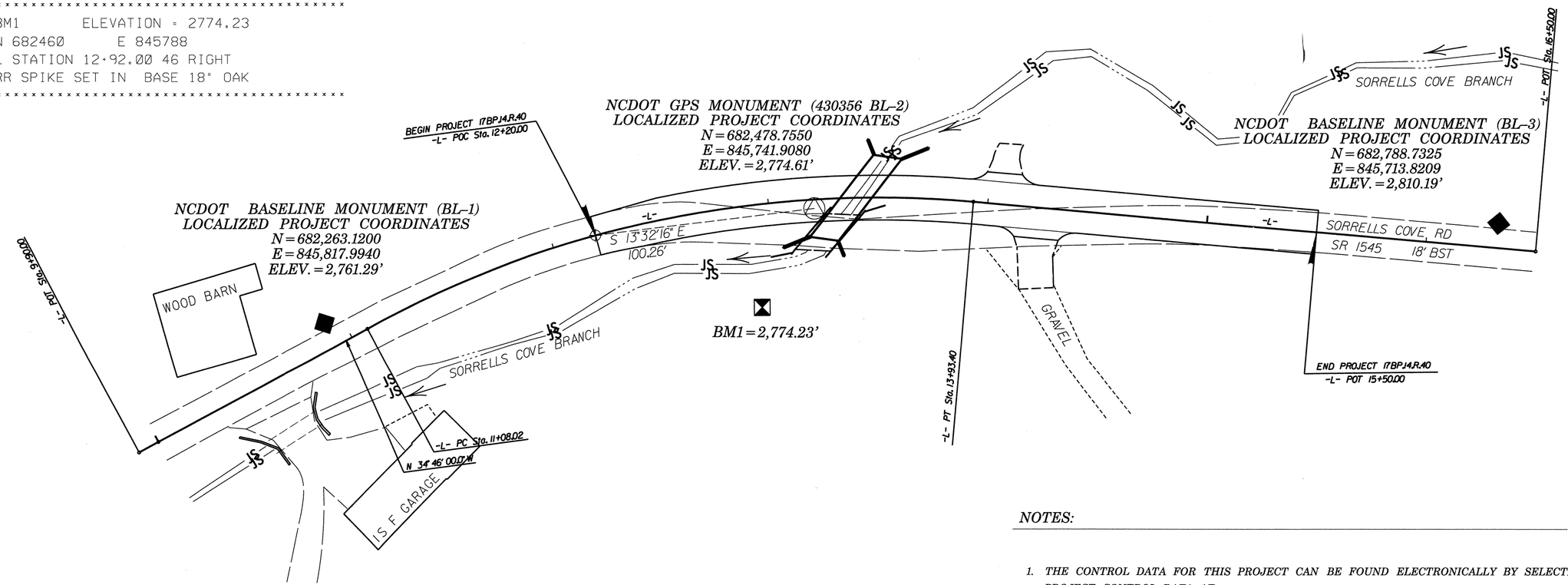

DATUM DESCRIPTION

THE LOCALIZED COORDINATE SYSTEM DEVELOPED FOR THIS PROJECT IS BASED ON THE STATE PLANE COORDINATES ESTABLISHED BY NCDOT FOR MONUMENT "430356 (BL-2)"
WITH NAD 83/NSRS 2007 STATE PLANE GRID COORDINATES OF
NORTHING: 682478.7550(ft) EASTING: 845741.9080(ft)
ELEVATION: 2774.61(ft)
THE AVERAGE COMBINED GRID FACTOR USED ON THIS PROJECT (GROUND TO GRID) IS: 0.999759447
THE N.C. LAMBERT GRID BEARING AND LOCALIZED HORIZONTAL GROUND DISTANCE FROM "430356 (BL-2)" TO -L- STATION 12+20.00 IS
S 13°32'16" E 100.26'
ALL LINEAR DIMENSIONS ARE LOCALIZED HORIZONTAL DISTANCES
VERTICAL DATUM USED IS NAVD 88

GEOID MODEL - G09NC
NOTE: DRAWING NOT TO SCALE

NOTES:

1. *THE CONTROL DATA FOR THIS PROJECT CAN BE FOUND ELECTRONICALLY BY SELECTING PROJECT CONTROL DATA AT:*
   HTTPS://CONNECT.NCDOT.GOV/RESOURCES/LOCATION/

   THE FILES TO BE FOUND ARE AS FOLLOWS:
   430356_LS_CONTROL.TXT

   SITE CALIBRATION INFORMATION HAS NOT BEEN PROVIDED FOR THIS PROJECT. IF FURTHER INFORMATION IS NEEDED, PLEASE CONTACT THE LOCATION AND SURVEYS UNIT.

△ *INDICATES GEODETIC CONTROL MONUMENTS USED OR SET FOR HORIZONTAL PROJECT CONTROL BY THE NCDOT LOCATION AND SURVEYS UNIT.*
PROJECT CONTROL ESTABLISHED USING GLOBAL POSITIONING SYSTEM.

6/2/99

N.T.S

PROJECT REFERENCE NO.	SHEET NO.
17BP.14.R.40	2
R/W SHEET NO.	
ROADWAY DESIGN ENGINEER	PAVEMENT DESIGN ENGINEER

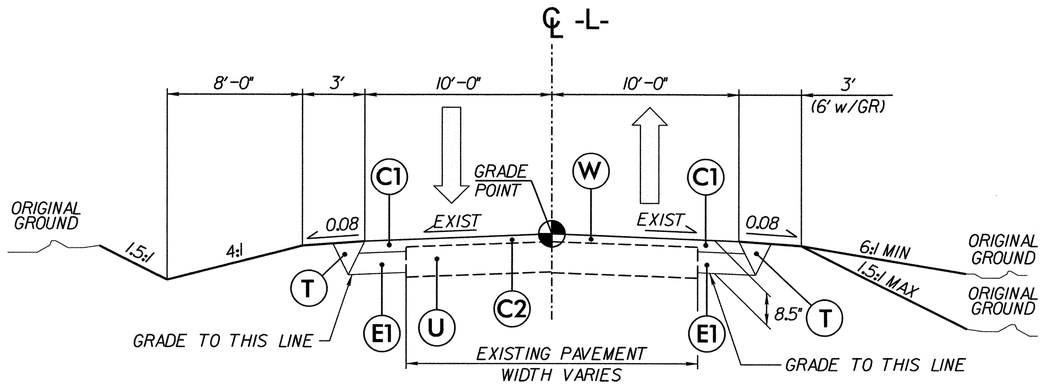

TYPICAL SECTION NO. 1

–L– STA 12+20.00 TO –L– STA 12+70.00
–L– STA 14+70.00 TO –L– STA 15+50.00

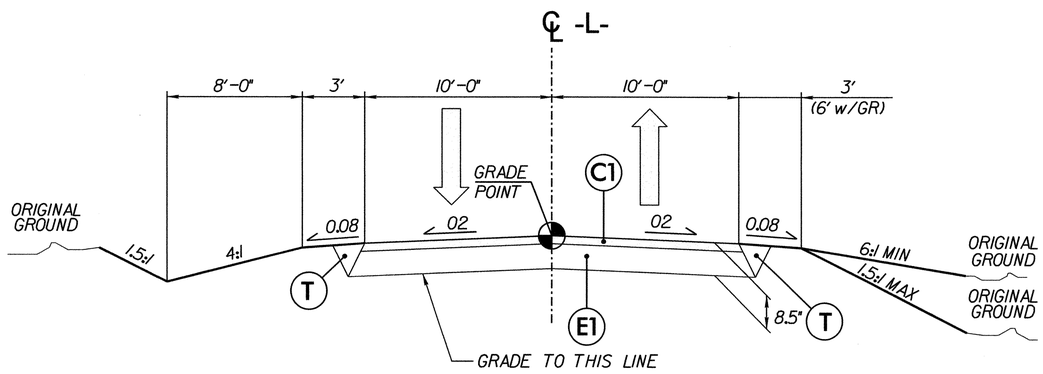

TYPICAL SECTION NO. 2

–L– STA 12+70.00 TO –L– STA 14+70.00

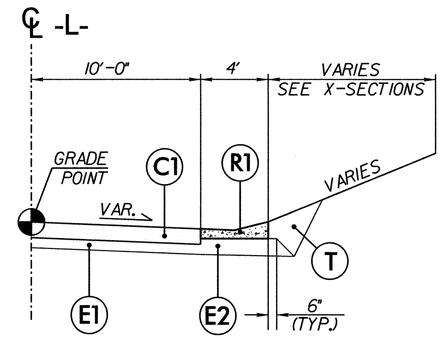

TYPICAL SECTION EXPRESSWAY GUTTER

–L– STA 14+60.00 TO –L– STA 15+30.00 RT

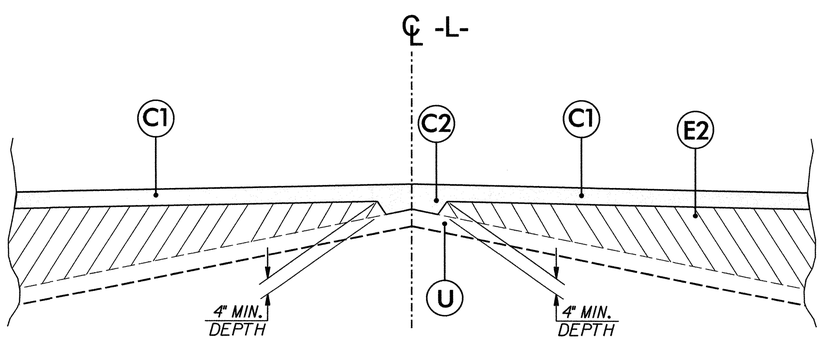

DETAIL SHOWING METHOD OF WEDGING

Note: Pavement edge slopes are 1:1 unless shown otherwise.

PAVEMENT SCHEDULE	
TYPE	DESCRIPTION
C1	Prop. Approx 3.0" Asphalt Concrete Surface Course, Type S9.5B, at an Average Rate of 168 lbs. Per sq. yard in each of two layers.
C2	Prop. Var. Depth Asphalt Concrete Surface Course, Type S9.5B, at an Average Rate of 112 lbs. Per sq. yard Per 1" Depth, to be placed in layers not less than 1" or greater than 1.5" in depth.
E1	Prop. Approx 5.5" Asphalt Concrete Base Course, Type B25.0B, at an Average Rate of 627 lbs. Per sq. yard.
E2	Prop. Var. Depth Asphalt Concrete Base Course, Type B25.0B, at an Average Rate of 114 lbs. Per sq. yard Per 1" Depth, to be placed in layers not less than 3" or greater than 5.5" in depth. For B25.0B placed on unstabilized subgrade, minimum lift thickness is 4.0"
R1	Concrete Expressway Gutter
T	Earth Material
U	Existing Pavement
W	Var. Depth Asphalt Pavement

REVISIONS

1/9/2014 9:04:19 AM
G:\OR Projects\OR1100 - NCDOT Group W\430356\Roadway\Proj\430356_RDY_02_TYP.dgn
G:\CADD\Plot\OR1100\1100-rdy.tbl

STATE OF NORTH CAROLINA
DIVISION OF HIGHWAYS

SUMMARY OF QUANTITIES

Line Item	Des	Sec No.	Description	Quantity	Unit
1	0000100000-N	800	MOBILIZATION	1	LS
2	0000400000-N	801	CONSTRUCTION SURVEYING	1	LS
3	0043000000-N	226	GRADING	1	LS
-	-	200	CLEARING & GRUBBING (1.0 Acres)	1	LS
-	-	225	UNCLASSIFIED EXCAVATION	20	CY
-	-	230	BORROW EXCAVATION	900	CY
-	-	500	FINE GRADING (330 SY)	1	LS
-	-	250	REMOVAL OF EXISTING ASPHALT PAVEMENT	20	SY
9	0050000000-E	226	SUPPLEMENTARY CLEARING & GRUB-BING	1	ACR
10	0057000000-E	226	UNDERCUT EXCAVATION	50	CY
11	0195000000-E	265	SELECT GRANULAR MATERIAL	50	CY
12	0196000000-E	270	GEOTEXTILE FOR SOIL STABILIZA-TION	50	CY
13	0318000000-E	300	FOUNDATION CONDITIONING MATE- RIAL, MINOR STRUCTURES	20	TON
14	0320000000-E	300	FOUNDATION CONDITIONING GEO- TEXTILE	60	SY
15	0335300000-E	305	18" DRAINAGE PIPE	120	LF
16	0335400000-E	305	24" DRAINAGE PIPE	40	LF
17	0995000000-E	340	PIPE REMOVAL	43	LF
18	1220000000-E	545	INCIDENTAL STONE BASE	50	TON
19	1489000000-E	610	ASPHALT CONC BASE COURSE, TYPE B25.0B	230	TON
20	1519000000-E	610	ASPHALT CONC SURFACE COURSE, TYPE S9.5B	120	TON
21	1575000000-E	620	ASPHALT BINDER FOR PLANT MIX	20	TON
22	2022000000-E	815	SUBDRAIN EXCAVATION	10	CY
23	2026000000-E	815	GEOTEXTILE FOR SUBSURFACE DRAINS	20	SY
24	2033000000-E	815	SUBDRAIN FINE AGGREGATE	5	CY
25	2044000000-E	815	6" PERFORATED SUBDRAIN PIPE	60	LF
26	2070000000-N	815	SUBDRAIN PIPE OUTLET	1	EA
27	2077000000-E	815	6" OUTLET PIPE	20	LF
28	2286000000-N	840	MASONRY DRAINAGE STRUCTURES	2	EA
29	2365000000-N	840	FRAME WITH TWO GRATES, STD 840.22	1	EA
30	2367000000-N	840	FRAME WITH TWO GRATES, STD 840.29	1	EA
31	2577000000-E	846	CONCRETE EXPRESSWAY GUTTER	70	LF
32	3030000000-E	862	STEEL BM GUARDRAIL	200	LF
33	3045000000-E	862	STEEL BM GUARDRAIL, SHOP CURVED	25	LF
34	3150000000-N	862	ADDITIONAL GUARDRAIL POSTS	4	EA
35	3165000000-N	SP	GUARDRAIL ANCHOR UNITS, TYPE 350 TL-2	2	EA
36	3195000000-N	862	GUARDRAIL ANCHOR UNITS, TYPE AT-1	2	EA
37	3569000000-E	867	BARBED WIRE FENCE RESET	610	LF
38	3628000000-E	876	RIP RAP, CLASS I	15	TON
39	3649000000-E	876	RIP RAP, CLASS B	15	TON
40	3656000000-E	876	GEOTEXTILE FOR DRAINAGE	65	SY
41	4400000000-E	1110	WORK ZONE SIGNS (STATIONARY)	156	SF
42	4410000000-E	1110	WORK ZONE SIGNS (BARRICADE MOUNTED)	20	SF
43	4430000000-N	1130	DRUMS	25	EA
44	4445000000-E	1145	BARRICADES (TYPE III)	32	LF
45	4450000000-E	1150	FLAGGER	64	HR
46	4465000000-N	1160	TEMPORARY CRASH CUSHIONS	2	EA
47	4485000000-E	1170	PORTABLE CONCRETE BARRIER	60	LF
48	4490000000-E	1170	PORTABLE CONCRETE BARRIER (ANCHORED)	25	LF
49	4600000000-N	SP	GENERIC TRAFFIC CONTROL ITEM - TEMP. TRAFFIC SIGNAL SYSTEM	1	EA
50	4810000000-E	1205	PAINT PAVEMENT MARKING LINES (4")	2,640	LF
51	4835000000-E	1205	PAINT PAVEMENT MARKING LINES (24")	20	LF
52	4850000000-E	1205	REMOVAL OF PAVEMENT MARKING LINES (4")	200	LF
53	6000000000-E	1605	TEMPORARY SILT FENCE	550	LF
54	6009000000-E	1610	EROSION CONTROL STONE, CLASS B	45	TON
55	6012000000-E	1610	SEDIMENT CONTROL STONE	40	TON
56	6015000000-E	1615	TEMPORARY MULCHIMG	1	ACR
57	6018000000-E	1620	SEED FOR TEMPORARY SEEDING	50	LB
58	6021000000-E	1620	FERTILIZER FOR TEMPORARY SEEDING	0.25	TON
59	6030000000-E	1630	SILT EXCAVATION	40	CY
60	6036000000-E	1631	MATTING FOR EROSION CONTROL	2,500	SY
61	6038000000-E	SP	PERMANENT SOIL REINFORCEMENT MAT	40	SY
62	6042000000-E	1632	1/4" HARDWARE CLOTH	65	LF
63	6046000000-E	1636	30" TEMPORARY PIPE FOR STREAM CROSSING	100	LF
64	6070000000-N	1639	SPECIAL STILLING BASIN	1	EA
65	6071010000-E	SP	WATTLE	30	LF
66	6071020000-E	SP	POLYACRYLAMIDE (PAM)	5	LB
67	6084000000-E	1660	SEEDING & MULCHING	0.6	ACR
68	6090000000-E	1661	SEED FOR REPAIR SEEDING	50	LB
69	6093000000-E	1661	FERTILIZER FOR REPAIR SEEDING	0.25	TON
70	6096000000-E	1662	SEED FOR SUPPLEMENTAL SEEDING	50	LB
71	6108000000-E	1665	FERTILIZER TOPDRESSING	0.50	TON
72	6111000000-E	SP	IMPERVIOUS DIKE	66	LF
73	6117000000-N	SP	RESPONSE FOR EROSION CONTROL	9	EA
			STRUCTURES		
74	8021000000-N	SP	REMOVAL OF EXISTING STRUCTURE AT STATION -L- 13+40.00	1	LS
75	8126000000-N	414	CULVERT EXCAVATION, STATION -L- 13+40.00	1	LS
76	8133000000-E	414	FOUNDATION CONDITIONING MATER-IAL, BOX CULVERT	55	TON
77	8196000000-E	420	CLASS A CONCRETE (CULVERT)	82.9	CY
78	8245000000-E	425	REINFORCING STEEL (CULVERT)	18,183	LB
79	8594000000-E	876	RIP RAP, CLASS B	25.0	TON

REVISIONS

1/8/2014 2:10:45 PM
G:\OR Projects\OR1100 - NCDOT Group W\430356\Roadway\Proj\430356_RDY_03_SOQ.dgn
G:\CADD\Plot\OR1100\1100_rdy.tbl

THE LOUIS BERGER GROUP, Inc.
1001 Wade Avenue, Suite 400
Raleigh, NC 27605-3322

ROADWAY PLANS

STATE OF NORTH CAROLINA
DIVISION OF HIGHWAYS

"N" = DISTANCE FROM EDGE OF LANE TO FACE OF GUARDRAIL.
TOTAL SHOULDER WIDTH = DISTANCE FROM EDGE OF TRAVEL LANE TO SHOULDER BREAK POINT.
FLARE LENGTH = DISTANCE FROM LAST SECTION OF PARALLEL GUARDRAIL TO END OF GUARDRAIL.
W = TOTAL WIDTH OF FLARE FROM BEGINNING OF TAPER TO END OF GUARDRAIL.
G = GATING IMPACT ATTENUATOR TYPE 350
NG = NON-GATING IMPACT ATTENUATOR TYPE 350

GUARDRAIL SUMMARY

SURVEY LINE	BEG. STA.	END STA.	LOCATION	LENGTH			WARRANT POINT		"N" DIST. FROM E.O.L.	TOTAL SHOUL. WIDTH	FLARE LENGTH		W		ANCHORS									IMPACT ATTENUATOR TYPE 350			SINGLE FACED GUARDRAIL	REMOVE EXISTING GUARDRAIL	REMOVE AND STOCKPILE EXISTING GUARDRAIL	REMARKS
				STRAIGHT	SHOP CURVED	DOUBLE FACED	APPROACH END	TRAILING END			APPROACH END	TRAILING END	APPROACH END	TRAILING END	XI MOD	XI	GRAU 350 TL-2	M-350	TYPE-III	CAT-1	VI MOD	B-77	AT-1	EA	G	NG				
-L-	12+60.00	14+10.00	RT	150'	12.5'	–	–	–	3'	6'	–	–	–	–	–	–	1	–	–	–	–	–	1	–	–	–	–	–	–	–
-L-	12+90.00	14+02.50	LT	112.5'	12.5'	–	–	–	3'	6'	–	–	–	–	–	–	1	–	–	–	–	–	1	–	–	–	–	–	–	–
–	–	–	–	–	–	–	–	–	–	–	–	–	–	–	–	–	–	–	–	–	–	–	–	–	–	–	–	–	–	–
–	–	–	–	–	–	–	–	–	–	–	–	–	–	–	–	–	–	–	–	–	–	–	–	–	–	–	–	–	–	–
–	–	–	–	–	–	–	–	–	–	–	–	–	–	–	–	–	–	–	–	–	–	–	–	–	–	–	–			–
–	–	–	–	–	–	–	–	–	–	–	–	–	–	–	–	–	–	–	–	–	–	–	–	–	–	–	–	–	–	–
			SUB-TOTAL	262.5'																										
	DEDUCTIONS FOR GUARDRAIL ANCHOR UNITS			62.5'																										
			TOTAL	200'																										
			SAY	200'																										

DEDUCTIONS FOR GUARDRAIL ANCHOR UNITS		
TYPE TL-2	2 @ 25.00' =	50'
TYPE AT-1	2 @ 6.25' =	12.5'
	TOTAL =	62.5'

ADDITIONAL GUARDRAIL POSTS = 4 EA.

NOTE: INVERT ELEVATIONS INDICATED ARE FOR BID PURPOSES ONLY AND SHALL NOT BE USED FOR PROJECT CONSTRUCTION STAKEOUT.
SEE "STANDARDS SPECIFICATIONS FOR ROADS AND STRUCTURES, SECTION 300-5".

LIST OF PIPES, ENDWALLS, ETC. (FOR PIPES 48" & UNDER)

STATION / SIZE / THICKNESS OR GAUGE	LOCATION (LT,RT, OR CL)	STRUCTURE NO. FROM	STRUCTURE NO. TO	TOP ELEVATION	INVERT ELEVATION	INVERT ELEVATION	SLOPE CRITICAL	DRAINAGE PIPE (RCP, CSP, CAAP, HDPE, or PVC) 12"	15"	18"	24"	30"	36"	42"	48"	DO NOT USE RCP	DO NOT USE CSP	DO NOT USE CAAP	DO NOT USE HDPE
L 15+40	RT	404		2797.20															
L 15+40	RT	404	403		2795.20	2786.70				74							x		
L 14+84	RT	403		2789.90															
L 14+84	RT	403	402		2786.50	2784.20				12									
L 14+20	RT	0401	OUT		2782.40	2777.90					40								
L 12+36	RT	0405	OUT		2769.31	2765.64				34									
L 13+70	RT																		
SHEET TOTALS										120	40								

STATION	C.S. PIPE 12" (.064)	15" (.064)	18" (.064)	24" (.064)	30" (.079)	36" (.079)	42" (.109)	48" (.109)	R.C. PIPE CLASS III 12"	15"	18"	24"	30"	36"	42"	48"	R.C. PIPE CLASS IV 12"	15"	18"	24"	30"	36"	42"	48"
L 15+40																								
L 15+40																								
L 14+84																								
L 14+84																								
L 14+20																								
L 12+36																								
L 13+70																								
SHEET TOTALS																								

STATION	** " R.C. PIPE (CLASS V)	***" R.C. PIPE CULVERTS, CONTRACTOR DESIGN	***" R.C. PIPE CULVERTS, CONTRACTOR DESIGN	18" SIDE DRAIN PIPE	ENDWALLS STD. 838.01, STD. 838.11 OR STD. 838.80 (UNLESS NOTED OTHERWISE) CU. YDS. R.C.P.	C.S.P.	QUANTITIES FOR DRAINAGE STRUCTURES PER EACH (0' THRU 5.0')	* TOTAL L.F. FOR PAY QUANTITY SHALL BE COL. 'A' + (1.3 X COL.'B') LIN. *FT. A 5.0' THRU 10.0'	B 10.0' AND ABOVE	C.B. STD. 840.01 OR STD. 840.02	FRAME, GRATES AND HOOD STANDARD 840.03 TYPE OF GRATE E	F	G	
L 15+40														
L 15+40							1							
L 14+84														
L 14+84							1							
L 14+20														
L 12+36														
L 13+70														
SHEET TOTALS							2							

STATION	CONCRETE TRASITIONAL SECTION DROP INLET	CATCH BASIN	D.I. STD. 840.14 OR STD. 840.15	D.I. FRAME & GRATE STD. 840.16	G.D.I. TYPE "A" STD. 840.17 OR 840.26	G.D.I. TYPE "B" STD. 840.18 OR 840.27	G.D.I. TYPE "D" STD. 840.19 OR 840.28	G.D.I. FRAME WITH GRATE STD. 840.20	G.D.I. FRAME WITH TWO GRATE STD. 840.22	G.D.I. (N.S.) FRAME WITH GRATE STD. 840.24	G.D.I. (N.S.) FRAME WITH TWO GRATES STD. 840.29	J.B. STD. 840.31 OR 840.32	TB G.D.I STD. 840.35	F.E.S. FLARED END SECTION STD	CONVERT TO MH	DRAINAGE PIPE ELBOWS NO. & SIZE	DRAINAGE PIPE ELBOWS NO. & SIZE	CONC. & BRICK PIPE PLUG, C.Y. STD. 840.71	CONC. COLLARS CL. "B" C.Y. STD 840.72	PIPE REMOVAL LIN. FT.	REMARKS
L 15+40																					
L 15+40						1			1												
L 14+84																					
L 14+84											1		1								
L 14+20																					REMOVE 30 LF 24" CMP
L 12+36																					REMOVE 34 LF 18" CMP
L 13+70																				43	REMOVE 43 LF 2-8" CMP
SHEET TOTALS						1			1		1		1							43	

ABBREVIATIONS

C.B.	CATCH BASIN
N.D.I.	NARROW DROP INLET
D.I.	DROP INLET
G.D.I.	GRATED DROP INLET
G.D.I. (N.S.)	GRATED DROP INLET (NARROW SLOT)
J.B.	JUNCTION BOX
M.H.	MANHOLE
T.B.D.I.	TRAFFIC BEARING DROP INLET
T.B.J.B.	TRAFFIC BEARING JUNCTION BOX

SUMMARY OF EARTHWORK (IN CUBIC YARDS)

STATION	STATION	UNCL. EXCAV.	EMBANK. +%	BORROW	WASTE
-L- 12+20.00	13+40.00	19	155	136	–
-L- 13+40.00	15+50.00	6	729	723	–
–	–	–	–	–	–
–	–	–	–	–	–
–	–	–	–	–	–
–	–	–	–	–	–
PROJECT TOTALS:		25	884	859	–
		–	–	–	–
–		–	–	–	–
–		–	–	–	–
–		–	–	–	–
LOSS DUE TO CLEARING & GRUBBING		-5	–	–	–
–		–	–	–	–
GRAND TOTALS:		20	884	859	–
–		–	–	–	–
SAY:		20	–	900	–

CONTINGENCY ITEMS
SELECT GRANULAR MATERIAL 50 CY
UNDERCUT EXCAVATION 50 CY
GEOTEXTILE FOR SOIL STABILIZATION 50 SY
INCIDENTAL STONE BASE 50 TON

Note: Approximate quantities only. Unclassified Excavation, Borrow Excavation, Fine Grading, Removal of Existing Asphalt Pavement and Clearing and Grubbing will be paid for at the contract lump sum price for "Grading."

EXPRESSWAY GUTTER SUMMARY

SURVEY LINE	STATION	STATION	LOCATION	LENGTH
-L-	14+60	15+30	RT	70
–	–	–	–	–
–	–	–	–	–
–	–	–	–	–
			TOTAL:	70
			SAY:	70

PAVEMENT REMOVAL SUMMARY

SURVEY LINE	STATION	STATION	LOCATION LT/RT/CL	YD^2
-L-	13+40	13+95	RT	19
–	–	–	–	–
–	–	–	–	–
–	–	–	–	–
			TOTAL:	19
				–
			SAY:	20

REVISIONS

1/8/2014 2:10:46 PM
G:\OR Projects\OR1100 - NCDOT Group W\430356\Roadway\Proj\430356_RDY_03A_SUMMARY.dgn
G:\CADD\Plot\OR1100\1100_rdy.tbl

THE LOUIS BERGER GROUP, Inc.
1001 Wade Avenue, Suite 400
Raleigh, NC 27605-3322

ROADWAY PLANS

PROJECT REFERENCE NO.	SHEET NO.
17BP.14.R.40	4
R/W SHEET NO.	

ROADWAY DESIGN ENGINEER: NORTH CAROLINA PROFESSIONAL SEAL 16003 ENGINEER — 1/9/2014 — REGISTERED ENGINEER

HYDRAULICS ENGINEER: NORTH CAROLINA PROFESSIONAL SEAL 032134 ENGINEER — 1-9-2014 — REGISTERED ENGINEER

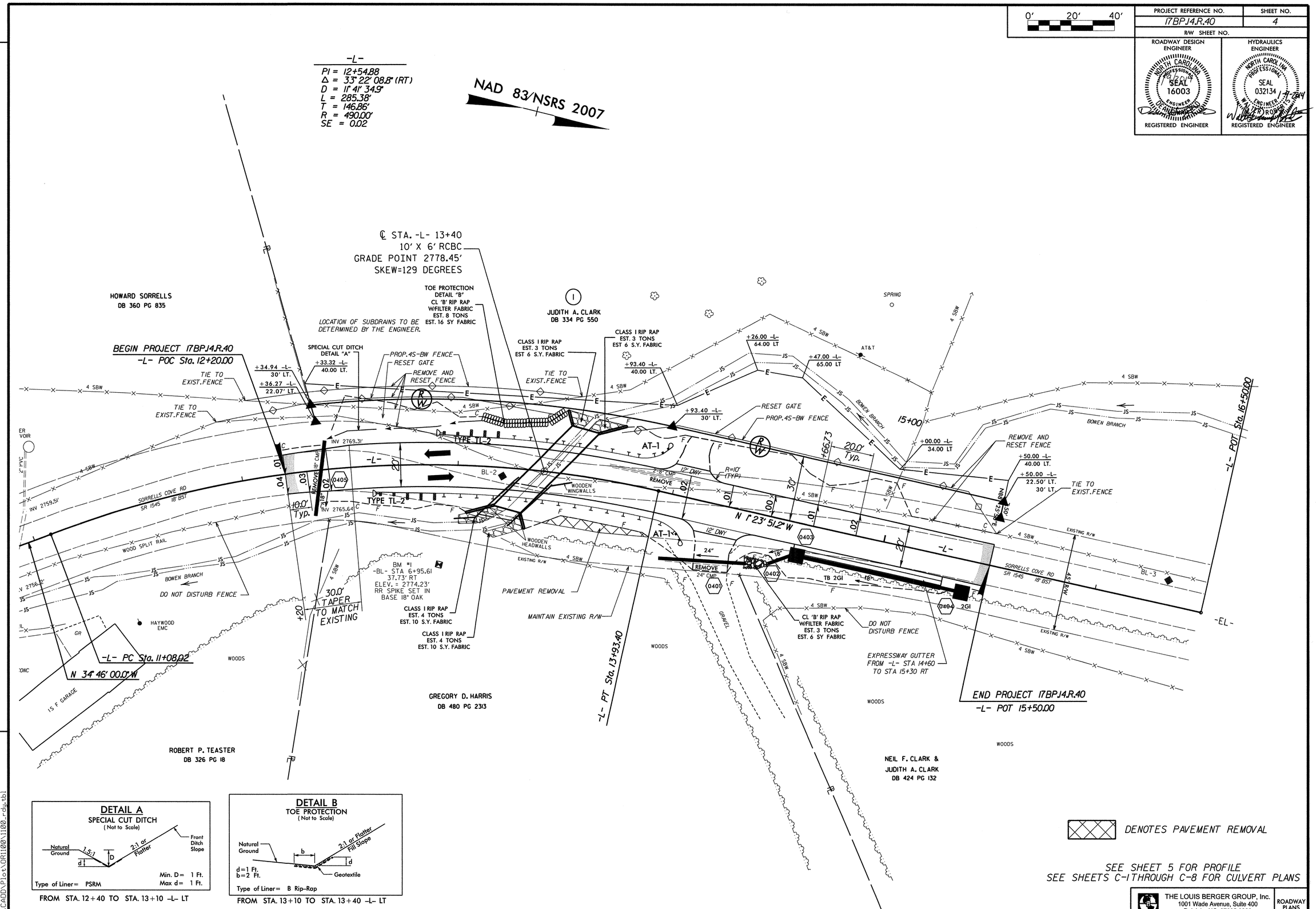

SEE SHEET 5 FOR PROFILE
SEE SHEETS C-1 THROUGH C-8 FOR CULVERT PLANS

THE LOUIS BERGER GROUP, Inc.
1001 Wade Avenue, Suite 400
Raleigh, NC 27605-3322

ROADWAY PLANS

REVISIONS

1/9/2014 7:28:12 AM
G:\CADD\Plot\OR1100\1100_rdy.tbl
G:\OR Projects\OR1100 - NCDOT Group W\430356\Roadway\Proj\430356_RDY_04_PSH.dgn

THE LOUIS BERGER GROUP, Inc.
1001 Wade Avenue, Suite 400
Raleigh, North Carolina 27605

PROJECT REFERENCE NO.	SHEET NO.
17BP.14.R.40	5

ROADWAY DESIGN ENGINEER — NORTH CAROLINA PROFESSIONAL SEAL 16003 ENGINEER DEAN D. HAIFIELD

HYDRAULICS ENGINEER — NORTH CAROLINA PROFESSIONAL SEAL 032134 ENGINEER WALTER ROBERTS — 1-9-2014

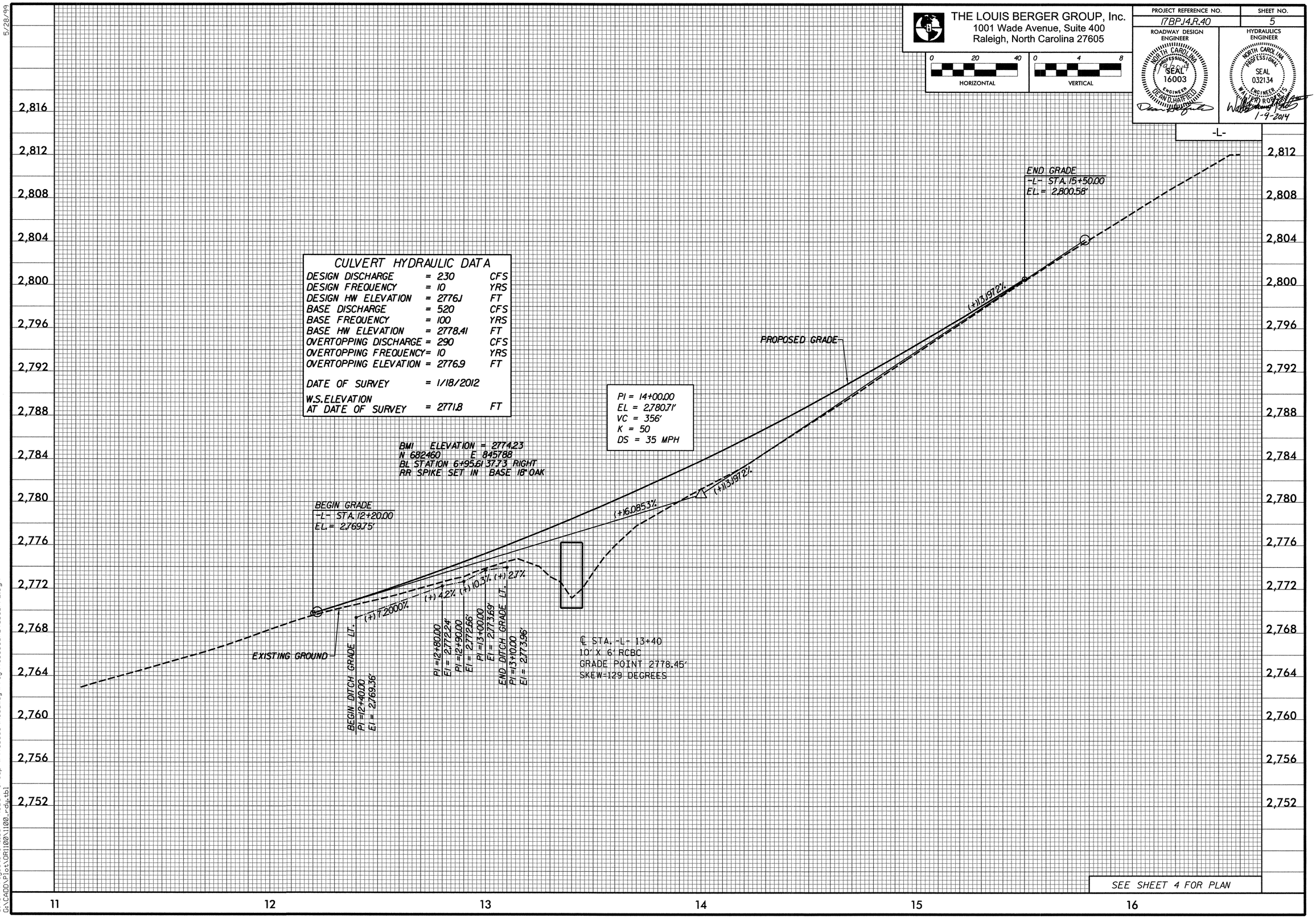

CULVERT HYDRAULIC DATA

DESIGN DISCHARGE	= 230	CFS
DESIGN FREQUENCY	= 10	YRS
DESIGN HW ELEVATION	= 2776.1	FT
BASE DISCHARGE	= 520	CFS
BASE FREQUENCY	= 100	YRS
BASE HW ELEVATION	= 2778.41	FT
OVERTOPPING DISCHARGE	= 290	CFS
OVERTOPPING FREQUENCY	= 10	YRS
OVERTOPPING ELEVATION	= 2776.9	FT
DATE OF SURVEY	= 1/18/2012	
W.S. ELEVATION AT DATE OF SURVEY	= 2771.8	FT

5/28/99

1/9/2014 7:28:14 AM
G:\OR Projects\OR1100 - NCDOT Group W\430356\Roadway\Proj\430356_RDY_05_PFL.dgn
G:\CADD\Plot\OR1100\1100_rdy.tbl

STATE OF NORTH CAROLINA
DIVISION OF HIGHWAYS

TRANSPORTATION MANAGEMENT PLAN

HAYWOOD COUNTY

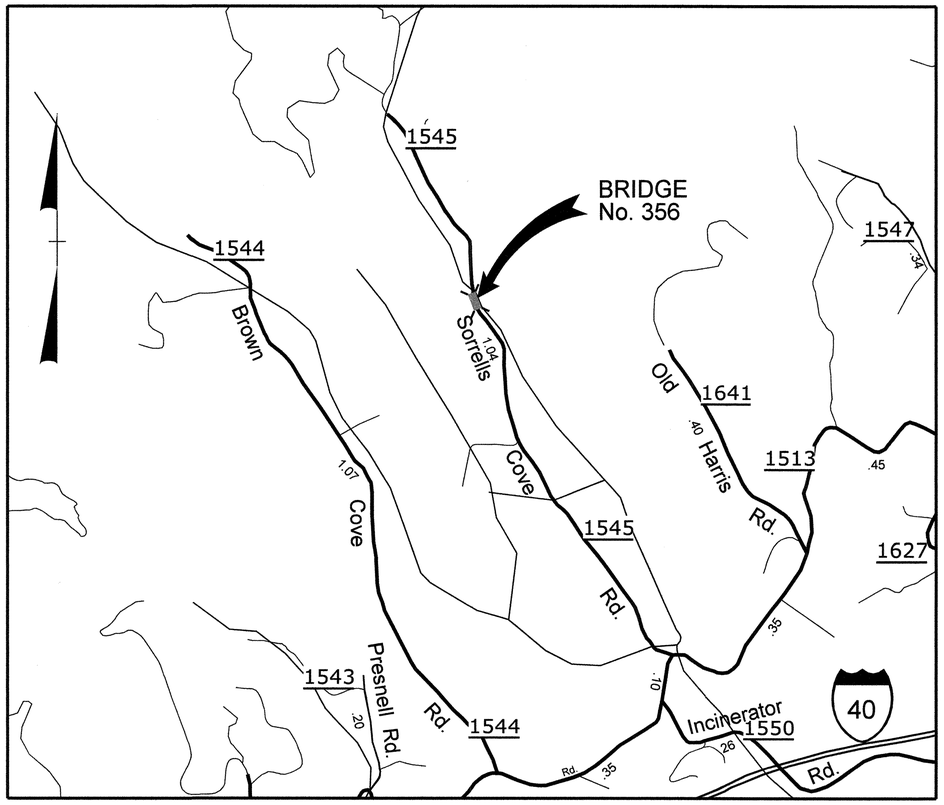

VICINITY MAP NTS

LOCATION: BRIDGE NO. 356 ON SR 1545 (SORRELLS COVE RD) OVER BOWEN BRANCH

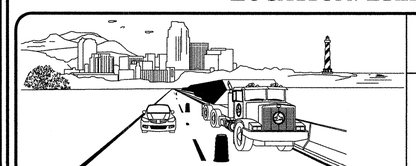

WORK ZONE SAFETY & MOBILITY
"from the MOUNTAINS to the COAST"

N.C.D.O.T. WORK ZONE TRAFFIC CONTROL
1561 MAIL SERVICE CENTER (MSC) RALEIGH, NC 27699-1561
750 N. GREENFIELD PARKWAY, GARNER, NC 27529 (DELIVERY)
PHONE: (919) 773-2800 FAX: (919) 771-2745

J. S. BOURNE, P.E. — *STATE TRAFFIC MANAGEMENT ENGINEER*
D. HATFIELD, P.E. — *TRAFFIC CONTROL PROJECT ENGINEER*
C. WHITE, P.E. — *TRAFFIC CONTROL PROJECT DESIGN ENGINEER*
_____ — *TRAFFIC CONTROL DESIGN ENGINEER*

DIVISION OF HIGHWAYS · STATE OF NORTH CAROLINA · DEPARTMENT OF TRANSPORTATION · WORK ZONE TRAFFIC CONTROL

INDEX OF SHEETS

SHEET NO.	TITLE
TMP-1	TITLE SHEET, AND INDEX OF SHEETS
TMP-1A	ROADWAY STANDARD DRAWINGS & LEGEND
TMP-1B	TRANSPORTATION OPERATIONS PLAN: (MANAGEMENT STRATEGIES, GENERAL NOTES AND LOCAL NOTES)
TMP-2	TEMPORARY TRAFFIC CONTROL PHASING
TMP-3	TEMPORARY TRAFFIC CONTROL PHASE I
TMP-4	TEMPORARY TRAFFIC CONTROL PHASE II

THE LOUIS BERGER GROUP, Inc.
1001 Wade Avenue, Suite 400
Raleigh, North Carolina 27605

*APPROVED:*_____
*DATE:*_____

SEAL

SHEET NO.
TMP-1

PROJECT: 17BP.14.R.40

1/9/2014 7:28:22 AM
G:\OR Projects\OR1100 - NCDOT Group W\430356\Roadway\Proj\430356_RDY_06_TMP1.dgn
1100_rdy_pmp.tbl

PROJ. REFERENCE NO.	SHEET NO.
17BP.14.R.40	TMP-1A

ROADWAY STANDARD DRAWINGS

THE FOLLOWING ROADWAY STANDARDS AS SHOWN IN "ROADWAY STANDARD DRAWINGS" - PROJECT SERVICES UNIT - N.C. DEPARTMENT OF TRANSPORTATION - RALEIGH, N.C., DATED JANUARY 2012 ARE APPLICABLE TO THIS PROJECT AND BY REFERENCE HEREBY ARE CONSIDERED A PART OF THESE PLANS:

STD. NO.	TITLE
1101.01	WORK ZONE ADVANCE WARNING SIGNS
1101.02	TEMPORARY LANE CLOSURES
1101.05	WORK ZONE VEHICLE ACCESSES
1101.11	TRAFFIC CONTROL DESIGN TABLES
1110.01	STATIONARY WORK ZONE SIGNS
1130.01	DRUMS
1145.01	BARRICADES
1150.01	FLAGGING DEVICES
1160.01	TEMPORARY CRASH CUSHION
1170.01	PORTABLE CONCRETE BARRIER
1205.01	PAVEMENT MARKINGS - LINE TYPES & OFFSETS
1205.02	PAVEMENT MARKINGS - 2 LANE & MULTILANE ROADWAYS

LEGEND

GENERAL

DIRECTION OF TRAFFIC FLOW

NORTH ARROW

REMOVAL

TRAFFIC CONTROL DEVICES

BARRICADE (TYPE III)

DRUM

TEMPORARY CRASH CUSHION

TEMPORARY SIGNING

STATIONARY SIGN

SIGNALS

TEMP TEMPORARY

TEMPORARY PAVEMENT MARKING

STOPBAR

P4 24" WHITE STOPBAR

APPROVED:_____ DATE:_____

SEAL

NORTH CAROLINA PROFESSIONAL SEAL 16003 ENGINEER

DIVISION OF HIGHWAYS STATE OF NORTH CAROLINA DEPARTMENT OF TRANSPORTATION WORK ZONE TRAFFIC CONTROL

ROADWAY STANDARD DRAWINGS & LEGEND

1/9/2014 7:28:30 AM
G:\DR Projects\DR1100 - NCDOT Group W\430356\Roadway\Proj\430356_RDY_06_TMP1A.dgn
1100_rdy_pmp.tbl

PROJ. REFERENCE NO.	SHEET NO.
17BP.14.R.40	TMP-1B

MANAGEMENT STRATEGIES

-PER NCDOT, DURING CONSTRUCTION, SR 1545 (SORRELLS COVE RD) TRAFFIC WILL BE PLACED IN A ONE-LANE, TWO-WAY PATTERN.

-TEMPORARY SIGNALS AT THE BEGINNING AND END OF AN ONSITE DETOUR WILL MANAGE SR 1545 TRAFFIC.

-THE CONSTRUCTION OF THE TIE INS, TRAFFIC SHIFTS, PLACEMENT OF FINAL SURFACE COURSE AND PAVEMENT MARKINGS WILL BE PERFORMED USING FLAGGER OPERATIONS ON A ONE-LANE, TWO-WAY TRAFFIC PATTERN.

GENERAL NOTES / LOCAL NOTES

CHANGES MAY BE REQUIRED WHEN PHYSICAL DIMENSIONS IN THE DETAIL DRAWINGS, STANDARD DETAILS, AND ROADWAY DETAILS ARE NOT ATTAINABLE TO MEET FIELD CONDITIONS OR RESULT IN DUPLICATE OR UNDESIRED OVERLAPPING OF DEVICES. MODIFICATION MAY INCLUDE: MOVING, SUPPLEMENTING, COVERING, OR REMOVAL OF DEVICES AS DIRECTED BY THE ENGINEER.

THE FOLLOWING GENERAL NOTES APPLY AT ALL TIMES FOR THE DURATION OF THE CONSTRUCTION PROJECT EXCEPT WHEN OTHERWISE NOTED IN THE PLAN OR DIRECTED BY THE ENGINEER.

LANE AND SHOULDER CLOSURE REQUIREMENTS

A) REMOVE LANE CLOSURE DEVICES FROM THE LANE WHEN WORK IS NOT BEING PERFORMED BEHIND THE LANE CLOSURE OR WHEN A LANE CLOSURE IS NO LONGER NEEDED OR AS DIRECTED BY THE ENGINEER.

B) WHEN PERSONNEL AND/OR EQUIPMENT ARE WORKING WITHIN A LANE OF TRAVEL OF AN UNDIVIDED OR DIVIDED FACILITY, CLOSE THE LANE ACCORDING TO THE TRAFFIC CONTROL PLANS, ROADWAY STANDARD DRAWINGS, OR AS DIRECTED BY THE ENGINEER. CONDUCT THE WORK SO THAT ALL PERSONNEL AND/OR EQUIPMENT REMAIN WITHIN THE CLOSED TRAVEL LANE.

C) DO NOT WORK SIMULTANEOUSLY WITHIN 15 FT ON BOTH SIDES OF AN OPEN TRAVELWAY, RAMP, OR LOOP WITHIN THE SAME LOCATION UNLESS PROTECTED WITH GUARDRAIL OR BARRIER.

PAVEMENT EDGE DROP OFF REQUIREMENTS

D) BACKFILL AT A 6:1 SLOPE UP TO THE EDGE AND ELEVATION OF EXISTING PAVEMENT IN AREAS ADJACENT TO AN OPENED TRAVEL LANE THAT HAS AN EDGE OF PAVEMENT DROP-OFF AS FOLLOWS:

BACKFILL DROP-OFFS THAT EXCEED 2 INCHES ON ROADWAYS WITH POSTED SPEED LIMITS OF 45 MPH OR GREATER.

BACKFILL DROP-OFFS THAT EXCEED 3 INCHES ON ROADWAYS WITH POSTED SPEED LIMITS LESS THAN 45 MPH.

BACKFILL WITH SUITABLE COMPACTED MATERIAL, AS APPROVED BY THE ENGINEER, AT NO EXPENSE TO THE DEPARTMENT.

E) DO NOT EXCEED A DIFFERENCE OF 2 INCHES IN ELEVATION BETWEEN OPEN LANES OF TRAFFIC FOR NOMINAL LIFTS OF 1.5 INCHES. INSTALL ADVANCE WARNING "UNEVEN LANES" SIGNS (W8-11) 200 ft IN ADVANCE AND A MINIMUM OF EVERY HALF MILE THROUGHOUT THE UNEVEN AREA.

TRAFFIC PATTERN ALTERATIONS

F) NOTIFY THE ENGINEER TWENTY ONE (21) CALENDAR DAYS PRIOR TO ANY TRAFFIC PATTERN ALTERATION.

SIGNING

G) INSTALL ADVANCE WORK ZONE WARNING SIGNS WHEN WORK IS WITHIN 40 FT FROM THE EDGE OF TRAVEL LANE AND NO MORE THAN THREE (3) DAYS PRIOR TO THE BEGINNING OF CONSTRUCTION.

H) ENSURE ALL NECESSARY SIGNING IS IN PLACE PRIOR TO ALTERING ANY TRAFFIC PATTERN.

TRAFFIC BARRIER

I) INSTALL TEMPORARY BARRIER ACCORDING TO THE TRAFFIC CONTROL PLANS A MAXIMUM OF TWO (2) WEEKS PRIOR TO BEGINNING WORK IN ANY LOCATION. ONCE TEMPORARY BARRIER IS INSTALLED AT ANY LOCATION PROCEED IN A CONTINUOUS MANNER TO COMPLETE THE PROPOSED WORK IN THAT LOCATION UNLESS OTHERWISE STATED IN THE TRAFFIC CONTROL PLANS OR AS DIRECTED BY THE ENGINEER.

DO NOT PLACE BARRIER DIRECTLY ON ANY SURFACE OTHER THAN ASPHALT OR CONCRETE.

ONCE TEMPORARY BARRIER IS INSTALLED AT ANY LOCATION AND NO WORK IS PERFORMED BEHIND THE TEMPORARY BARRIER FOR A PERIOD LONGER THAN TWO (2) MONTHS, REMOVE/RESET TEMPORARY BARRIER AT NO COST TO THE DEPARTMENT UNLESS OTHERWISE STATED IN THE TRAFFIC CONTROL PLANS. TEMPORARY BARRIER IS PROTECTING A HAZARD, OR AS DIRECTED BY THE ENGINEER.

INSTALL TEMPORARY BARRIER WITH THE TRAFFIC FLOW BEGINNING WITH THE UPSTREAM SIDE OF TRAFFIC. REMOVE TEMPORARY BARRIER AGAINST THE TRAFFIC FLOW BEGINNING WITH THE DOWNSTREAM SIDE OF TRAFFIC.

INSTALL AND SPACE DRUMS NO GREATER THAN TWICE THE POSTED SPEED LIMIT (MPH) TO CLOSE OR KEEP THE SECTION OF THE ROADWAY CLOSED UNTIL THE TEMPORARY BARRIER CAN BE PLACED OR AFTER THE TEMPORARY BARRIER IS REMOVED.

J) PROTECT THE APPROACH END OF MOVABLE/PORTABLE CONCRETE BARRIER AT ALL TIMES DURING THE INSTALLATION AND REMOVAL OF THE BARRIER BY EITHER A TRUCK MOUNTED IMPACT ATTENUATOR (MAXIMUM 72 HOURS) OR A TEMPORARY CRASH CUSHION.

PROTECT THE APPROACH END OF MOVABLE/PORTABLE CONCRETE BARRIER FROM ONCOMING TRAFFIC AT ALL TIMES BY A TEMPORARY CRASH CUSHION UNLESS THE APPROACH END OF MOVABLE/PORTABLE CONCRETE BARRIER IS OFFSET FROM ONCOMING TRAFFIC AS FOLLOWS OR AS SHOWN IN THE PLANS:

POSTED SPEED LIMIT	MINIMUM OFFSET
40 OR LESS	15 FT
45 - 50	20 FT
55	25 FT
60 MPH or HIGHER	30 FT

TRAFFIC CONTROL DEVICES

K) WHEN LANE CLOSURES ARE NOT IN EFFECT SPACE CHANNELIZING DEVICES IN WORK AREAS NO GREATER IN FEET THAN TWICE THE POSTED SPEED LIMIT (MPH) EXCEPT, 10 FT ON-CENTER IN RADII, AND 3 FT OFF THE EDGE OF AN OPEN TRAVELWAY. REFER TO STANDARD SPECIFICATIONS FOR ROADS AND STRUCTURES SECTIONS 1130 (DRUMS), 1135 (CONES) AND 1180 (SKINNY DRUMS) FOR ADDITIONAL REQUIREMENTS.

L) PLACE TYPE III BARRICADES, WITH "ROAD CLOSED" SIGN R11-2 ATTACHED, OF SUFFICIENT LENGTH TO CLOSE ENTIRE ROADWAY.

M) INSTALL TEMPORARY PAVEMENT MARKINGS AND TEMPORARY PAVEMENT MARKERS ON INTERIM LAYERS OF PAVEMENT AS FOLLOWS:

ROAD NAME	MARKING	MARKER
-L- (SORRELLS COVE RD)	PAINT	NONE

N) PLACE ONE APPLICATION OF PAINT FOR TEMPORARY TRAFFIC PATTERNS. PLACE A SECOND APPLICATION OF PAINT SIX (6) MONTHS AFTER THE INITIAL APPLICATION AND EVERY SIX MONTHS AS DIRECTED BY THE ENGINEER.

O) TIE PROPOSED PAVEMENT MARKING LINES TO EXISTING PAVEMENT MARKING LINES.

P) REMOVE/REPLACE ANY CONFLICTING/DAMAGED PAVEMENT MARKINGS AND MARKERS BY THE END OF EACH DAY'S OPERATION.

MISCELLANEOUS

Q) IN THE EVENT A TIE-IN CANNOT BE MADE IN ONE DAY'S TIME, BRING THE TIE-IN AREA TO AN APPROPRIATE ROADWAY ELEVATION AS DETERMINED BY THE ENGINEER. PLACE BLACK ON ORANGE "LOOSE GRAVEL" SIGNS (W8-7) AND BLACK ON ORANGE "PAVEMENT ENDS" SIGNS (W8-3) 200 ft AND 400 ft RESPECTIVELY IN ADVANCE OF THE UNEVEN AREAS. USE DRUMS TO DELINEATE THE EDGE OF ROADWAY ALONG UNPAVED AREAS.

APPROVED:_____ DATE:_____

SEAL

NORTH CAROLINA PROFESSIONAL SEAL 16003 ENGINEER

DIVISION OF HIGHWAYS STATE OF NORTH CAROLINA DEPARTMENT OF TRANSPORTATION WORK ZONE TRAFFIC CONTROL

TRANSPORTATION OPERATIONS PLAN

1/9/2014 7:28:37 AM
G:\DR Projects\DR1100 - NCDOT Group W\430356\Roadway\Proj\430356_RDY_06_TMP1B.dgn
1100_rdy-pmp.tbl

PROJ. REFERENCE NO.	SHEET NO.
17BP.14.R.40	TMP-2

PROJECT PHASING

MAINTAIN ACCESS TO ALL RESIDENCES WITHIN THE PROJECT LIMITS.

PHASE I

STEP 1:
INSTALL ADVANCE WORK ZONE WARNING SIGNS USING RDWY STD 1101.01, SHEET 3 OF 3.

STEP 2:
USING RDWY STD 1101.02, SHEET 1 OF 15, COMPLETE THE FOLLOWING ON SR 1545 IN ONE WORK PERIOD:

- CONSTRUCT/INSTALL TEMPORARY TRAFFIC SIGNAL AND PLACE TEMPORARY PAVEMENT MARKINGS (PAINT) FOR A TEMPORARY ONE LANE, TWO WAY TRAFFIC PATTERN. REMOVE OR COVER EXISING DOUBLE YELLOW CENTER LINE IN LANE SHIFT AT THE BEGINNGING AND END OF PROJECT. (SEE SHEET TMP-3).
- INSTALL ADDITIONAL SIGNS FOR TEMPORARY TRAFFIC SIGNAL AND TRAFFIC CONTROL DEVICES, ACTIVATE THE SIGNAL AND SHIFT TRAFFIC TO THE TEMPORARY ONE-LANE, TWO-WAY PATTERN AS SHOWN ON SHEET TMP-3.

STEP 3:
USING RDWY STD 1101.02, SHEET 1 OF 15, PERFORM THE FOLLOWING WORK ON SR 1545:

- CONSTRUCT PHASE I OF PROPOSED CULVERT. (SEE STRUCTURES PLANS)
- CONSTRUCT PHASE I OF PROPOSED ROADWAY UP TO, BUT NOT INCLUDING THE FINAL LAYER OF SURFACE COURSE FROM -L- STA 13+00+/- TO -L- STA 14+00+/-. (SEE SHEET TMP-3)

STEP 4:
IN ONE WORK PERIOD, PERFORM THE FOLLOWING WORK ON SR 1545:

- USING FLAGGERS, RDWY STD 1101.02, SHEET 1 OF 15, CONSTRUCT TIE INS FROM -L- STA 12+20+/- TO -L- STA 13+00+/- AND FROM -L- STA 14+00+/- TO -L- STA 15+50+/-.
- INSTALL PORTABLE CONCRETE BARRIER AND CRASH CUSHIONS FROM -L- STA 13+00+/- TO -L- STA 13+85+/-. (SEE SHEET TMP-4)
- RETAIN ADVANCE WORK ZONE SIGNS AND TEMPORARY TRAFFIC SIGNAL FROM PHASE I AND SWITCH TRAFFIC ONTO THE NEWLY CONSTRUCTED SECTION OF SR 1545 AT THE END OF THE WORK PERIOD.

PHASE II

STEP 1:
USING RDWY STD 1101.02, SHEET 1 OF 15, PERFORM THE FOLLOWING WORK ON SR 1545:

- REMOVE THE EXISTING BRIDGE IN ACCORDANCE WITH ROADWAY AND STRUCTURE PLANS.
- CONSTRUCT PHASE II OF PROPOSED CULVERT. (SEE STRUCTURE PLANS)
- CONSTRUCT PHASE II OF PROPOSED ROADWAY FROM -L- STA 12+20+/- TO -L- STA 15+50+/-, UP TO BUT NOT INCLUDING THE FINAL LAYER OF SURFACE COURSE. (SEE SHEET TMP-4)

STEP 2:
USING FLAGGERS, RDWY STD 1101.02, SHEET 1 OF 15, IN ONE WORK PERIOD, REMOVE PORTABLE CONCRETE BARRIER AND CRASH CUSHIONS AND PLACE THE FINAL LAYER OF SURFACE COURSE AND FINAL PAVEMENT MARKINGS ON PROPOSED -L- FROM STA 12+20+/- TO STA 15+50+/-. SHIFT TRAFFIC ONTO NEWLY CONSTRUCTED ROADWAY AND CULVERT IN A TWO LANE, TWO WAY PATTERN AT THE END OF THAT WORK PERIOD.

STEP 3:
USING FLAGGERS AS NECESSARY, COMPLETE REMOVAL OF ANY REMAINING ROADWAY AND STUCTURE. REMOVE ALL TEMPORARY TRAFFIC CONTROL DEVICES AND OPEN -L- TO THE FINAL TRAFFIC PATTERN.

APPROVED:_____ DATE:_____

SEAL

NORTH CAROLINA PROFESSIONAL SEAL 16003 ENGINEER

DIVISION OF HIGHWAYS · STATE OF NORTH CAROLINA · DEPARTMENT OF TRANSPORTATION · WORK ZONE TRAFFIC CONTROL

TEMPORARY TRAFFIC CONTROL PHASING

1/9/2014 7:28:45 AM
G:\OR Projects\OR1100 - NCDOT Group W\430356\Roadway\Proj\430356_RDY_06_TMP2.dgn
1100_rdy_pmp.tbl

PROJ. REFERENCE NO.	SHEET NO.
17BP.14.R.40	TMP-3

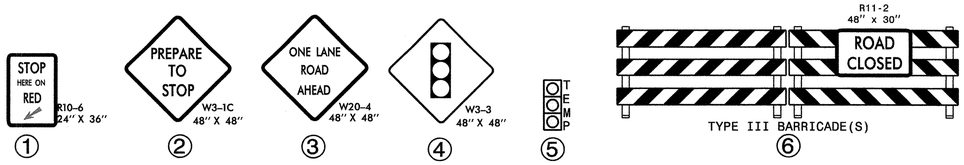

NOTES:
1. FOR CONSTRUCTION PHASING NOTES, SEE SHEET TMP-2
2. ALL SIGN LOCATIONS ARE APPROXIMATE.
3. SEE ROADWAY STANDARD DRAWING NO. 1101.01, SHEET 3 OF 3 FOR ADDITIONAL WORK ZONE SIGNS AND APPLICABLE NOTES.

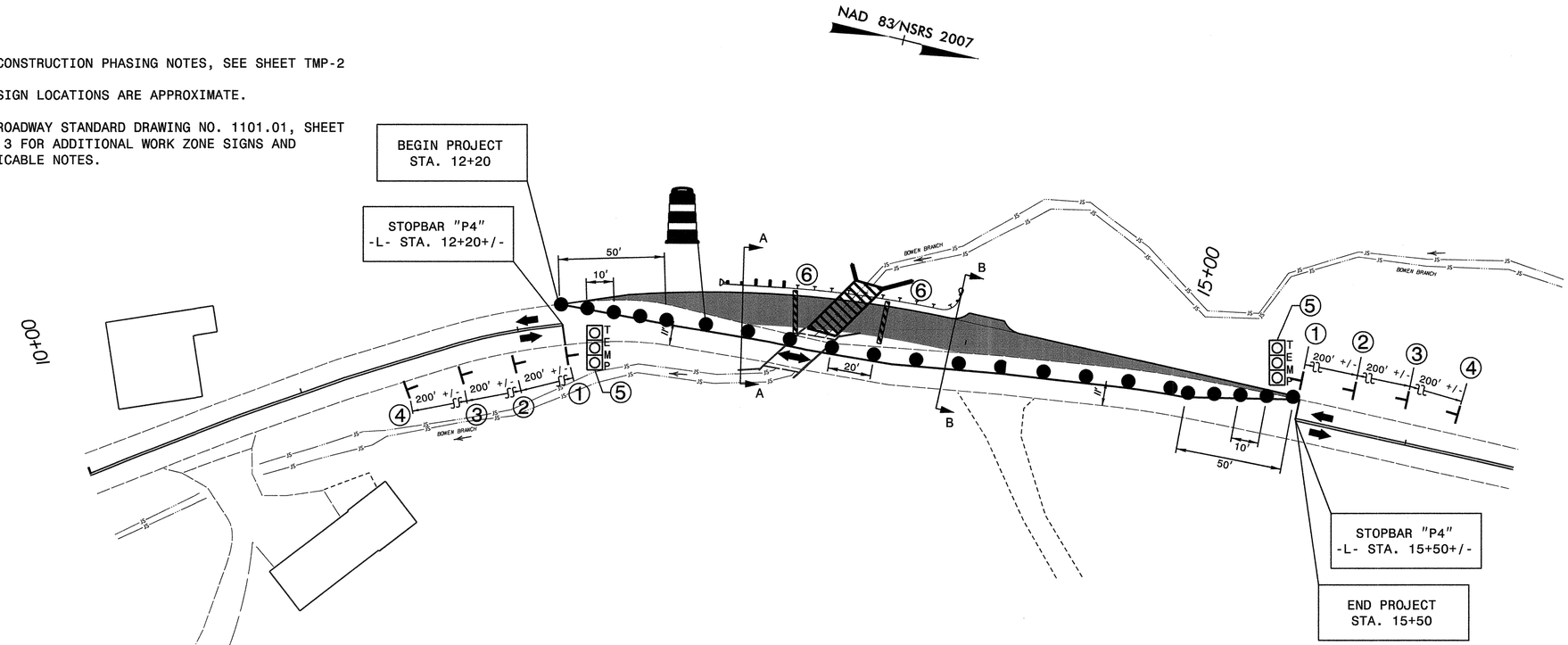

A-A

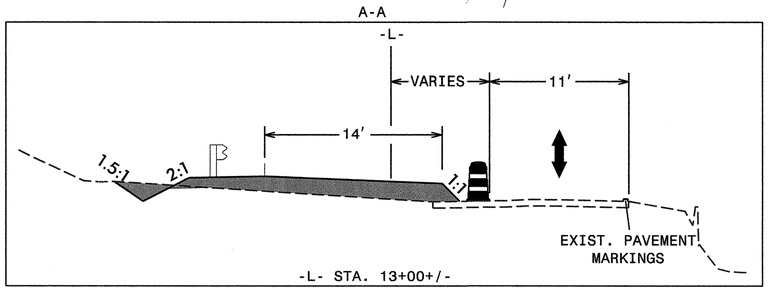

B-B

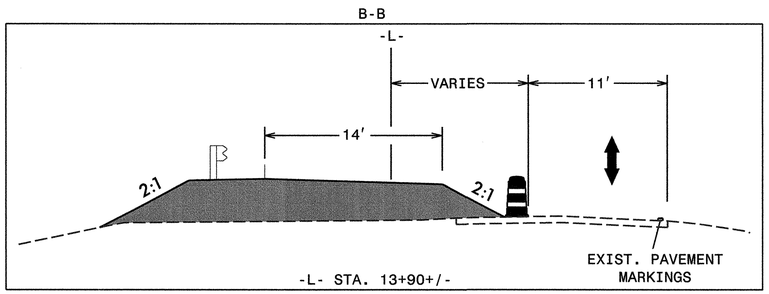

THE LOUIS BERGER GROUP, Inc.
1001 Wade Avenue, Suite 400
Raleigh, North Carolina 27605

APPROVED:_____ DATE:_____

SEAL

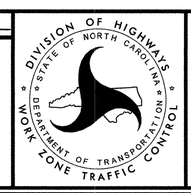

TEMPORARY TRAFFIC CONTROL PHASE I

$$$$$$SYSTIME$$$$$
$$$$$$$$$$$$$$$$$DGN$$$$$$$$$$$$$$$$$
$$$$$$USERNAME$$$$

PROJ. REFERENCE NO.	SHEET NO.
17BP.14.R.40	TMP-4

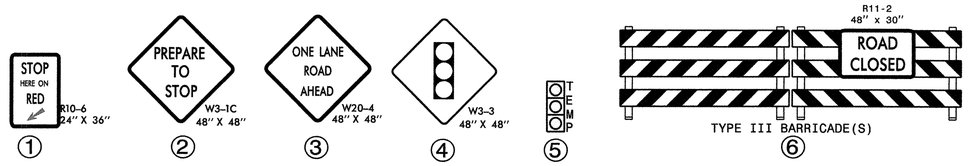

NOTES:
1. FOR CONSTRUCTION PHASING NOTES, SEE SHEET TMP-2
2. ALL SIGN LOCATIONS ARE APPROXIMATE.
3. SEE ROADWAY STANDARD DRAWING NO. 1101.01, SHEET 3 OF 3 FOR ADDITIONAL WORK ZONE SIGNS AND APPLICABLE NOTES.

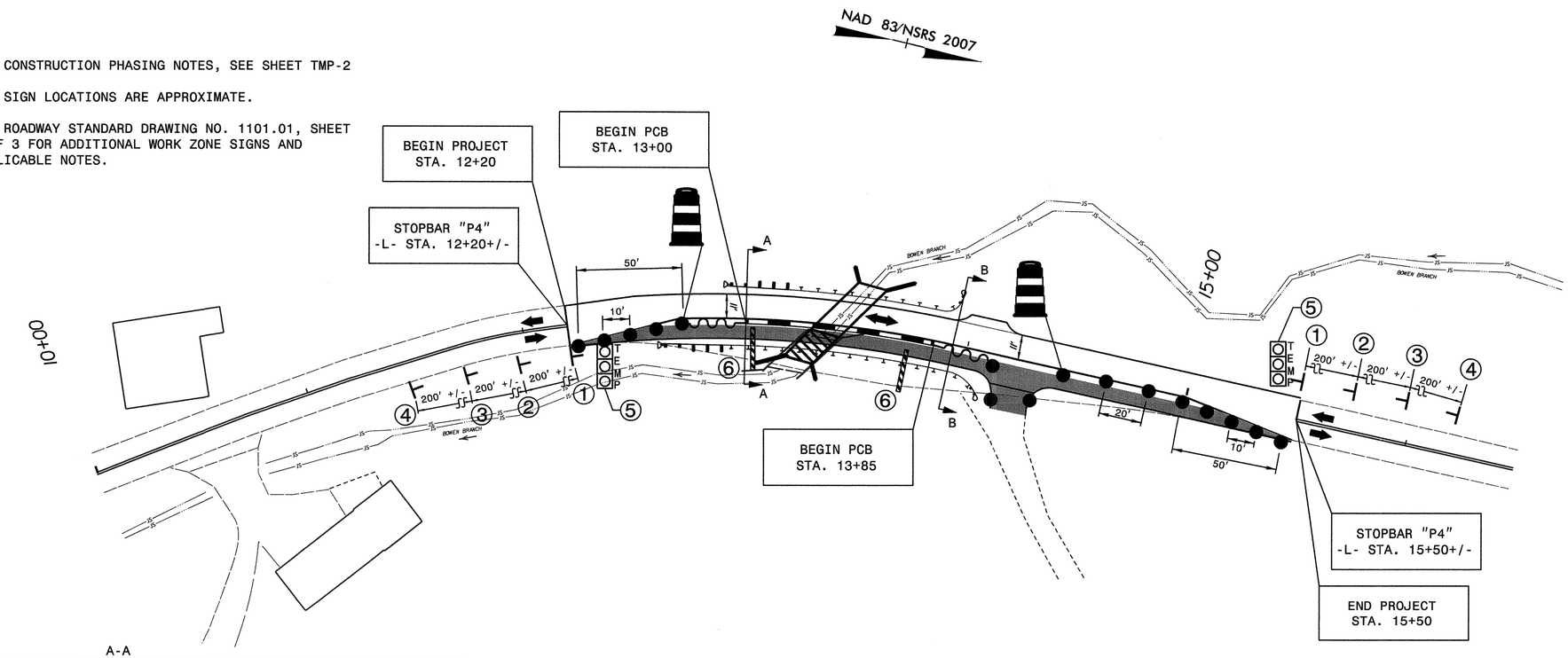

A-A

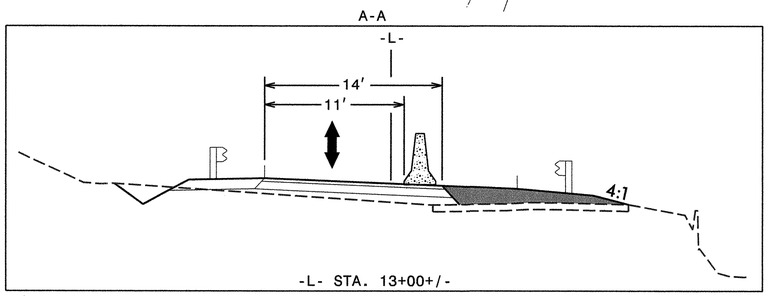

B-B

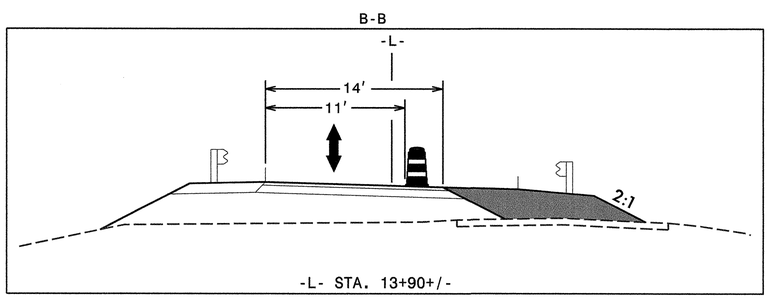

THE LOUIS BERGER GROUP, Inc.
1001 Wade Avenue, Suite 400
Raleigh, North Carolina 27605

APPROVED:_____ DATE:_____

SEAL

NORTH CAROLINA PROFESSIONAL SEAL 16003 ENGINEER

DIVISION OF HIGHWAYS · STATE OF NORTH CAROLINA · DEPARTMENT OF TRANSPORTATION · WORK ZONE TRAFFIC CONTROL

TEMPORARY TRAFFIC CONTROL PHASE II

$$$$$$$SYSTIME$$$$$
$$$$$$$$$$$$$$$$$$DGN$$$$$$$$$$$$$$$$$$
$$$$$$$USERNAME$$$

STATE	PROJECT NO.	SHEET NO.	TOTAL SHTS.
N.C.	17BP.14.R.40	PMP-1	2

APPROVED: _____

DATE: _____

SEAL

NORTH CAROLINA PROFESSIONAL SEAL 16003 ENGINEER DEAN D. MARSHALL

STATE OF NORTH CAROLINA
DEPARTMENT OF TRANSPORTATION

PAVEMENT MARKING PLANS

LOCATION: BRIDGE NO. 356 ON SR 1545 (SORRELLS COVE RD.) OVER BOWEN BRANCH NEAR PHILLPSVILLE

ROADWAY STANDARD DRAWINGS

THE FOLLOWING ROADWAY STANDARDS AS APPEAR IN "ROADWAY STANDARD DRAWINGS"-ROADWAY DESIGN UNIT-N.C. DEPARTMENT OF TRANSPORTATION-RALEIGH, N.C., DATED JULY 2012 ARE APPLICABLE TO THIS PROJECT AND BY REFERENCE HEREBY ARE CONSIDERED A PART OF THESE PLANS:

STD. NO.	TITLE
1205.01	PAVEMENT MARKINGS - LINE TYPES & OFFSETS
1205.02	PAVEMENT MARKINGS - 2 LANE & MULTILANE ROADWAYS

PAVEMENT MARKING SCHEDULE

ASPHALT PAVEMENT DESIGN
(AS SHOWN)

PAVEMENT MARKING LINES

PA - PAINT - WHITE EDGELINE (4")
PI - PAINT - YELLOW DOUBLE CENTER LINE (4")

GENERAL NOTES

THE FOLLOWING NOTES APPLY AT ALL TIMES FOR THE DURATION OF THE CONSTRUCTION PROJECT, EXCEPT WHEN NOTED IN THE PLAN, OR DIRECTED BY THE ENGINEER.

A) INSTALL PAVEMENT MARKINGS AND PAVEMENT MARKERS ON THE FINAL SURFACE AS FOLLOWS:

ASPHALT PAVEMENT DESIGN:

ROAD NAME	MARKING	MARKER
ALL	PAINT	NONE

B) TIE PROPOSED PAVEMENT MARKING LINES TO EXISTING PAVEMENT MARKING LINES.

C) REMOVE/ REPLACE ANY CONFLICTING/ DAMAGED PAVEMENT MARKINGS AND MARKERS.

D) PASSING ZONES WILL BE DETERMINED IN THE FIELD AND MUST BE APPROVED BY THE ENGINEER.

INDEX

SHEET NO.	DESCRIPTION
PMP-1	PAVEMENT MARKING PLAN COVER SHEET
PMP-2	PAVEMENT MARKING DETAIL

THE LOUIS BERGER GROUP, Inc.
1001 Wade Avenue, Suite 400
Raleigh, NC 27605-3322

ROADWAY PLANS

1/9/2014 7:29:08 AM
G:\DR Projects\DR1100 - NCDOT Group W\430356\Roadway\Proj\430356_RDY_07_PMP_01.dgn
1100_rdy-pmp.tbl

STATE	PROJECT NO.	SHEET NO.	TOTAL SHTS.
N.C.	17BP.14.R.40	PMP-2	2

APPROVED: _____

DATE: _____

SEAL

NORTH CAROLINA PROFESSIONAL ENGINEER SEAL 16003 DEAN D. HATFIELD

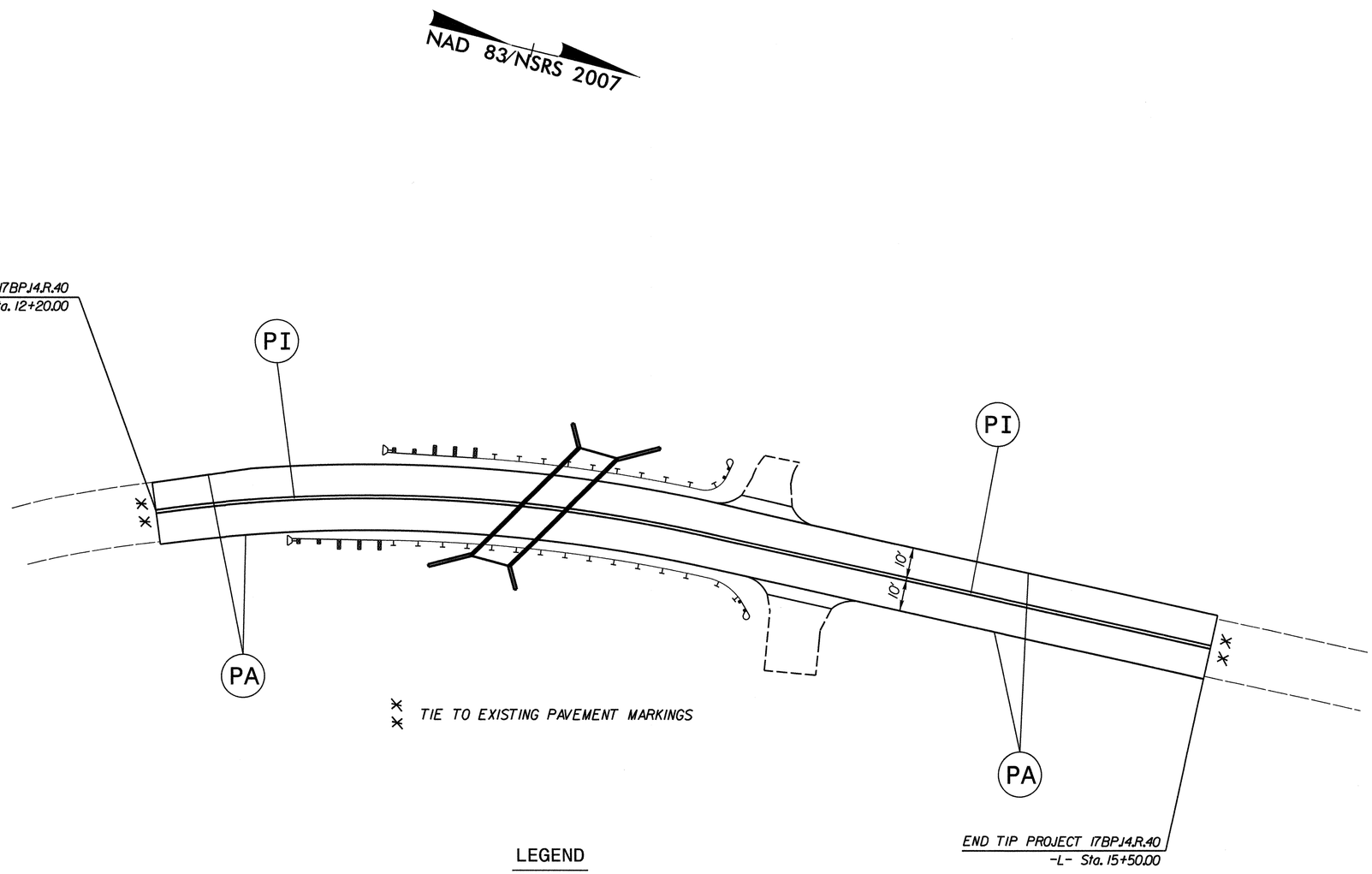

LEGEND

PA - PAINT - WHITE EDGELINE (4")

PI - PAINT - YELLOW DOUBLE CENTER LINE (4")

NOTE: FINAL PAVEMENT MARKINGS HAVE A DOUBLE COAT OF PAINT.

PAVEMENT MARKING DETAIL
SORRELLS COVE RD.

THE LOUIS BERGER GROUP, Inc.
1001 Wade Avenue, Suite 400
Raleigh, NC 27605-3322

ROADWAY PLANS

1/9/2014 7:29:15 AM
G:\OR Projects\OR1100 - NCDOT Group W\430356\Roadway\Proj\430356_RDY_07_PMP_02.dgn
1100_rdy_pmp.tbl

0' 20' 40'	PROJECT REFERENCE NO.	SHEET NO.
	17BP.14.R.40	EC-01/CONST.04
	R/W SHEET NO.	

EROSION CONTROL PLANS

NAD 83/NSRS 2007

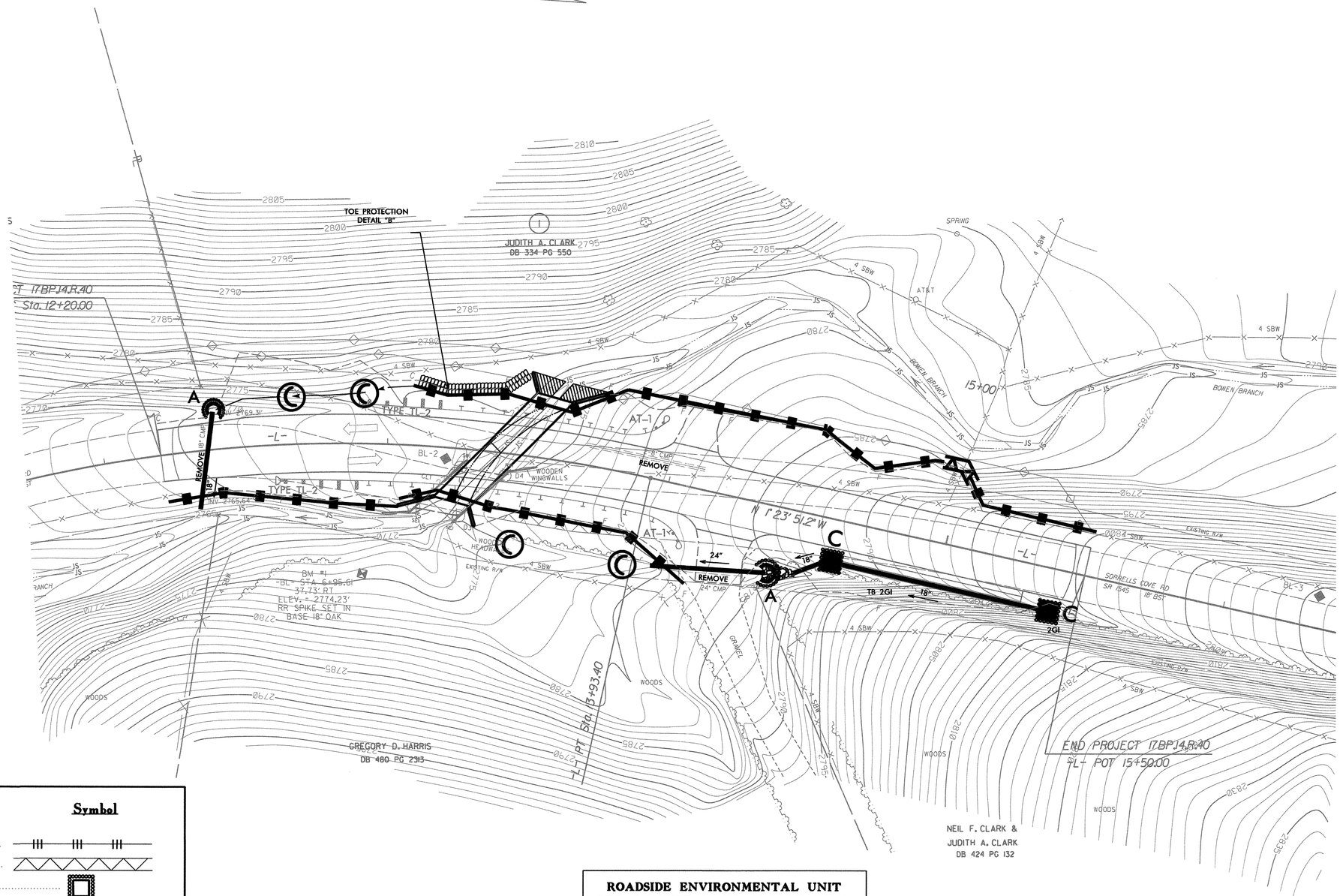

Std. #	Description	Symbol
1605.01	Temporary Silt Fence	
1606.01	Special Sediment Control Fence	
1632.03	Rock Inlet Sediment Trap Type C	
1635.01	Rock Pipe Inlet Sediment Trap Type-A	
	Wattle / Coir Fiber Wattle with Polyacrylamide (PAM)	

NOTE: ANY DEVIATION FROM OPTIONS GIVEN WILL REQUIRE PRIOR APPROVAL BY ENGINEER.

ADDITIONAL EROSION CONTROL DEVICES MAY NEED TO BE INSTALLED AS DIRECTED BY THE ENGINEER.

ROADSIDE ENVIRONMENTAL UNIT
DEPARTMENT OF TRANSPORTATION
DIVISION OF HIGHWAYS
RALEIGH, N.C.

2012 STANDARD SPECIFICATIONS

Rana Stansell, PE
LEVEL III A: Designer of Erosion and Sediment Control Plans
Certification Number: 635

SEE SHEET 5 FOR PROFILE

THE LOUIS BERGER GROUP, Inc.
1001 Wade Avenue, Suite 400
Raleigh, NC 27605-3322

ROADWAY PLANS

REVISIONS

1/9/2014 8:33:12 AM
G:\OR Projects\DR1100 - NCDOT Group W\430356\Roadway\Proj\430356_RDY_08_EC_01.dgn
G:\CADD\Plot\DR1100\1100_rdy_EC.tbl

CULVERT CONSTRUCTION SEQUENCE STA. 13 + 40 –L–

0′ 20′ 40′

PROJECT REFERENCE NO.	SHEET NO.
17BP.14.R.40	EC-02
R/W SHEET NO.	

PHASE I

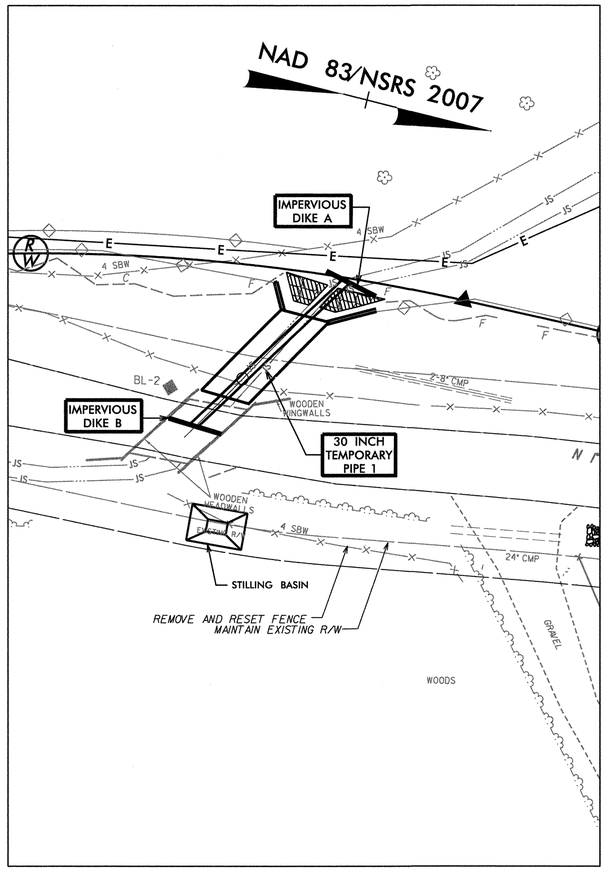

1. UTILIZE STILLING BASINS AS NEEDED THROUGHOUT CULVERT CONSTRUCTION.
2. CONSTRUCT IMPERVIOUS DIKES A AND B, AND INSTALL 30" TEMPORARY PIPE 1, DIVERTING FLOW.
3. CONSTRUCT 30 FEET +/– OF INLET END OF PROPOSED CULVERT, INCLUDING WINGWALLS AND INLET CHANNEL IMPROVEMENTS.

PHASE II

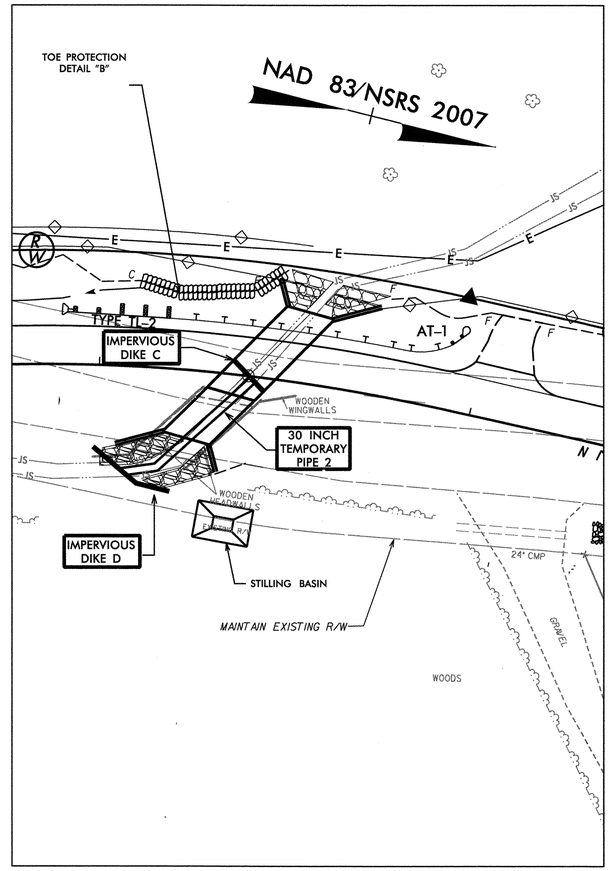

4. CONSTRUCT PROPOSED ROADWAY OVER COMPLETED CULVERT SECTION, AND SHIFT TRAFFIC
5. CONSTRUCT IMPERVIOUS DIKE C, REMOVE IMPERVIOUS DIKE B AND PORTION OF 30" TEMPORARY PIPE 1.
6. REMOVE EXISTING BRIDGE.
7. CONSTRUCT IMPERVIOUS DIKE D AND INSTALL 30" TEMPORARY PIPE 2, DIVERTING FLOW.
8. CONSTRUCT REMAINDER OF PROPOSED CULVERT, INCLUDING WINGWALLS AND OUTLET CHANNEL IMPROVEMENTS.

PHASE III

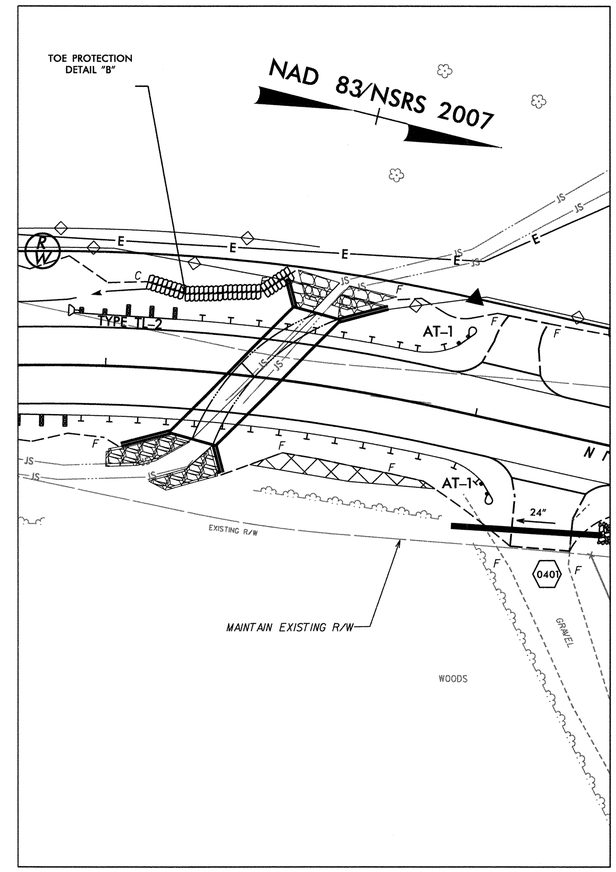

9. REMOVE IMPERVIOUS DIKES C AND D, AND 30" TEMPORARY PIPE 2.
10. REMOVE ANY REMAINING STILLLING BASINS.
11. COMPLETE ROADWAY AND OPEN TO TRAFFIC.

REVISIONS

1/8/2014 2:11:36 PM
G:\OR Projects\OR1100 - NCDOT Group W\430356\Roadway\Proj\430356_RDY_08_EC_02.dgn
G:\CADD\Plot\OR1100\1100_rdy_EC.tbl

THE LOUIS BERGER GROUP, Inc.
1001 Wade Avenue, Suite 400
Raleigh, NC 27605-3322

ROADWAY PLANS

PROJECT REFERENCE NO.	SHEET NO.
17BP.14.R.40	EC-03
R/W SHEET NO.	

WATTLE WITH POLYACRYLAMIDE (PAM) DETAIL

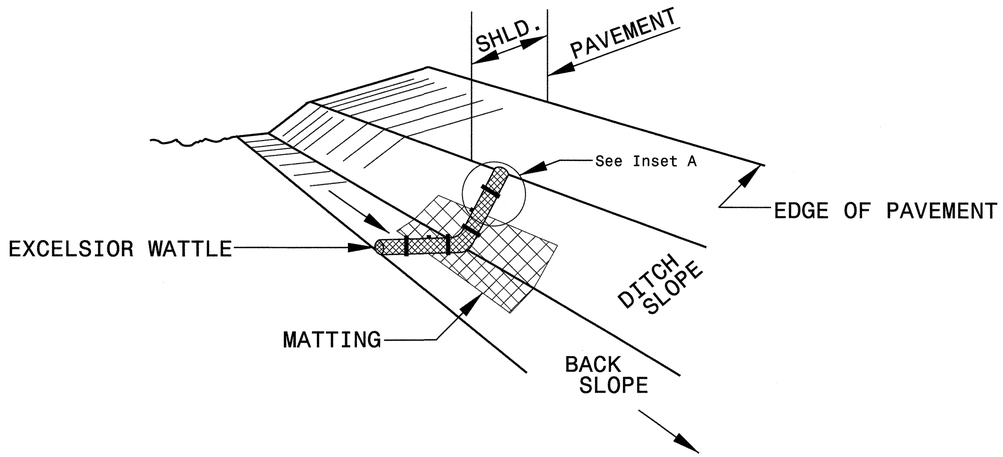

ISOMETRIC VIEW

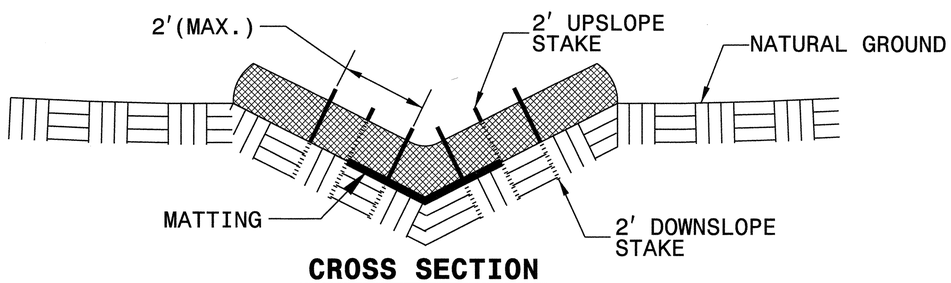

CROSS SECTION VEE DITCH

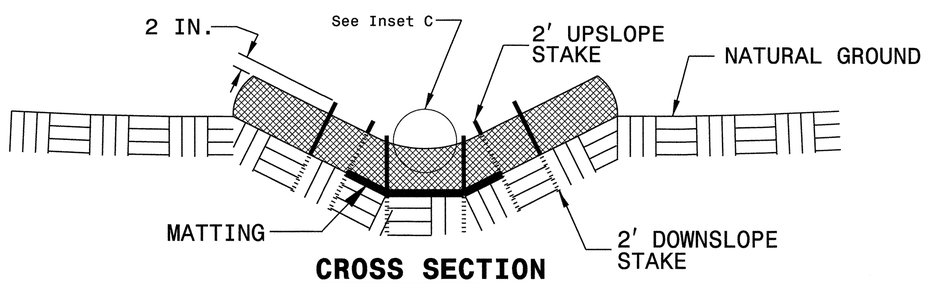

CROSS SECTION TRAPEZOIDAL DITCH

NOTES:

USE MINIMUM 12 IN. DIAMETER EXCELSIOR WATTLE.

USE 2 FT. WOODEN STAKES WITH A 2 IN. BY 2 IN. NOMINAL CROSS SECTION.

ONLY INSTALL WATTLE(S) TO A HEIGHT IN DITCH SO FLOW WILL NOT WASH AROUND WATTLE AND SCOUR DITCH SLOPES AND AS DIRECTED.

INSTALL A MINIMUM OF 2 UPSLOPE STAKES AND 4 DOWNSLOPE STAKES AT AN ANGLE TO WEDGE WATTLE TO BOTTOM OF DITCH.

PROVIDE STAPLES MADE OF 0.125 IN. DIAMETER STEEL WIRE FORMED INTO A U SHAPE NOT LESS THAN 12" IN LENGTH.

INSTALL STAPLES APPROXIMATELY EVERY 1 LINEAR FOOT ON BOTH SIDES OF WATTLE AND AT EACH END TO SECURE IT TO THE SOIL.

INSTALL MATTING IN ACCORDANCE WITH SECTION 1631 OF THE STANDARD SPECIFICATIONS.

PRIOR TO POLYACRYLAMIDE (PAM) APPLICATION, OBTAIN A SOIL SAMPLE FROM PROJECT LOCATION, AND FROM OFFSITE MATERIAL, AND ANALYZE FOR APPROPRIATE PAM FLOCCULANT TO BE APPLIED TO EACH WATTLE.

INITIALLY APPLY 2 OUNCES OF ANIONIC OR NEUTRALLY CHARGED PAM OVER WATTLE WHERE WATER WILL FLOW AND 1 OUNCE OF PAM ON MATTING ON EACH SIDE OF WATTLE. REAPPLY PAM AFTER EVERY RAINFALL EVENT THAT IS EQUAL TO OR EXCEEDS 0.50 IN.

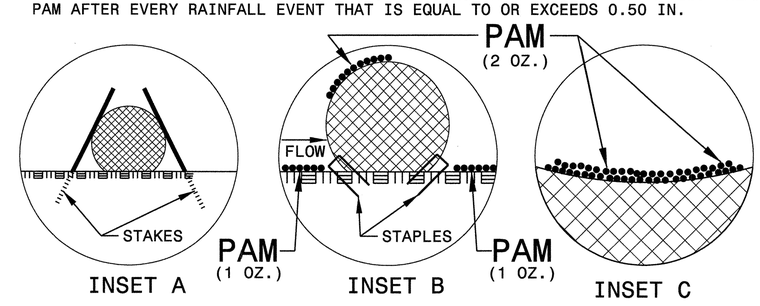

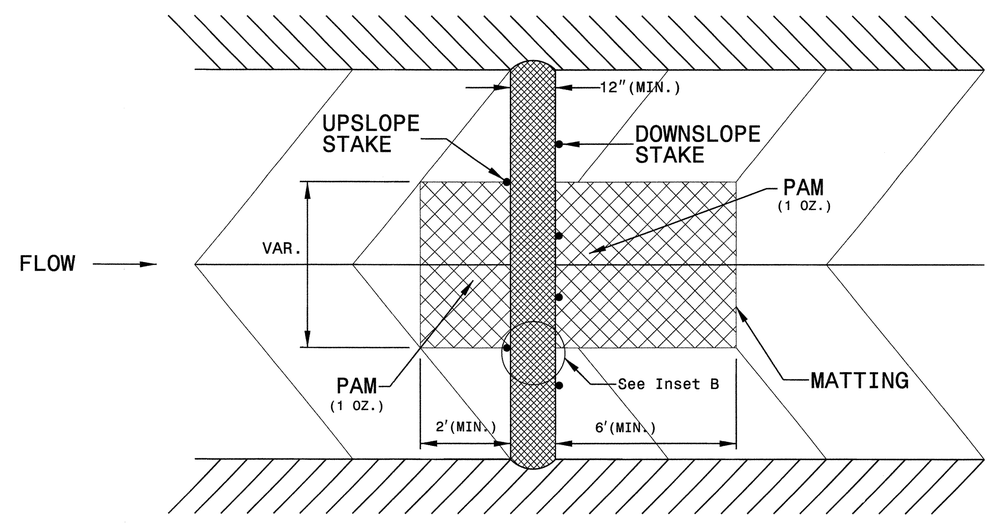

TOP VIEW

REVISIONS

1/8/2014 2:11:38 PM
G:\DR Projects\DR1100 - NCDOT Group W\430356\Roadway\Proj\430356_RDY_08_EC_03.dgn
G:\CADD\Plot\DR1100\1100_rdy_EC.tbl

THE LOUIS BERGER GROUP, Inc.
1001 Wade Avenue, Suite 400
Raleigh, NC 27605-3322

ROADWAY PLANS

STATE OF NORTH CAROLINA
DIVISION OF HIGHWAYS

SOIL STABILIZATION TIMEFRAMES

SITE DESCRIPTION	STABILIZATION TIME	TIMEFRAME EXCEPTIONS
PERIMETER DIKES, SWALES, DITCHES AND SLOPES	7 DAYS	NONE
HIGH QUALITY WATER (HQW) ZONES	7 DAYS	NONE
SLOPES STEEPER THAN 3:1	7 DAYS	IF SLOPES ARE 10' OR LESS IN LENGTH AND ARE NOT STEEPER THAN 2:1, 14 DAYS ARE ALLOWED.
SLOPES 3:1 OR FLATTER	14 DAYS	7 DAYS FOR SLOPES GREATER THAN 50' IN LENGTH.
ALL OTHER AREAS WITH SLOPES FLATTER THAN 4:1	14 DAYS	NONE, EXCEPT FOR PERIMETERS AND HQW ZONES.

REVISIONS

1/8/2014 2:11:39 PM
G:\OR Projects\OR1100 - NCDOT Group W\430356\Roadway\Proj\430356_RDY_08_EC_04.dgn
G:\CADD\Plot\OR1100\1100_rdy_EC.tbl

17BP.14.R.40
CROSS SECTIONS

INDEX OF SHEETS

TITLE	STATION	SHEET NO.
CROSS-SECTION INDEX		X-1
CROSS-SECTION SUMMARY		X-1A
-L- CROSS-SECTIONS	12+20 - 15+50	X-2 THROUGH X-7

Note: Approximate quantities only. Unclassified Excavation, Borrow Excavation, Fine Grading, Removal of Existing Asphalt Pavement and Clearing and Grubbing will be paid for at the contract lump sum price for "Grading."

8/23/99

$DATE$
$$TIME$$
$FILE$

PROJ. REFERENCE NO.	SHEET NO.
17BP.14.R.40	X-1A

STATE OF NORTH CAROLINA
DIVISION OF HIGHWAYS

NOTE: EMBANKMENT COLUMN INCLUDES BACKFILL FOR UNDERCUT

CROSS-SECTION SUMMARY

Station L	Uncl. Exc. (cu. yd.)	Embt (cu. yd.)
12+20.00	0	0
12+30.00	2	0
12+40.00	1	3
12+50.00	1	7
12+60.00	1	8
12+70.00	1	8
12+80.00	1	9
12+90.00	1	12
13+00.00	4	10
13+10.00	5	8
13+20.00	2	23
13+30.00	0	47
13+40.00	0	56
13+50.00	0	59
13+60.00	0	63
13+70.00	0	58
13+80.00	0	45
13+90.00	0	34
14+00.00	0	31
14+10.00	0	31
14+20.00	0	32
14+30.00	0	30
14+40.00	0	30
14+50.00	0	28
14+60.00	0	22
14+70.00	0	19
14+80.00	0	21
14+90.00	0	21
15+00.00	0	22
15+10.00	0	17
15+20.00	1	7
15+30.00	1	4
15+40.00	2	3
15+50.00	2	1

8/23/99

0 2.5 5	PROJ. REFERENCE NO.	SHEET NO.
	17BP.14.R.40	X-2

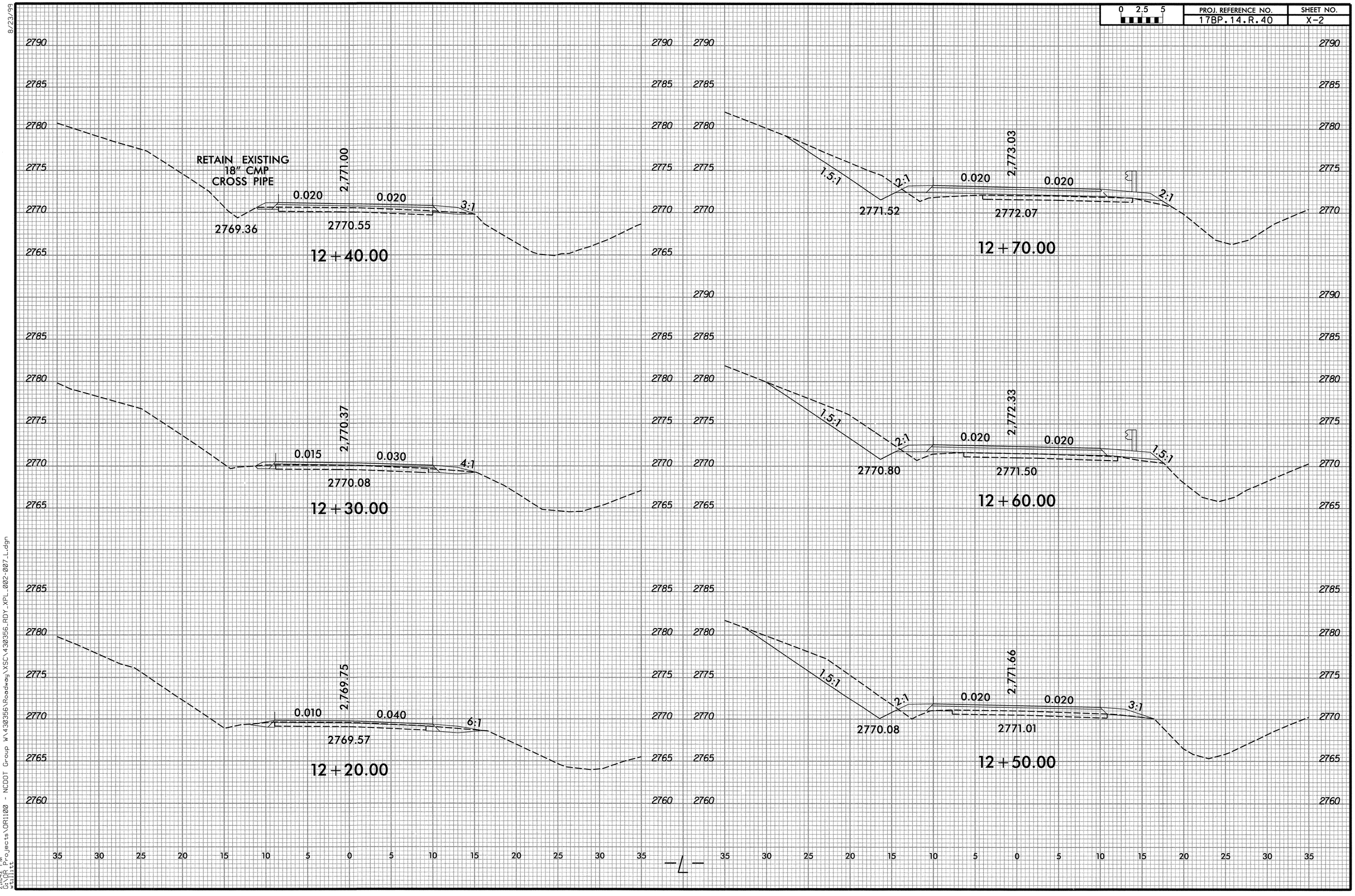

2:14:42 PM
G:\DR Projects\DR1100 - NCDOT Group WX430356\Roadway\XSC\430356_RDY_XPL_002-007_L.dgn
wallisc

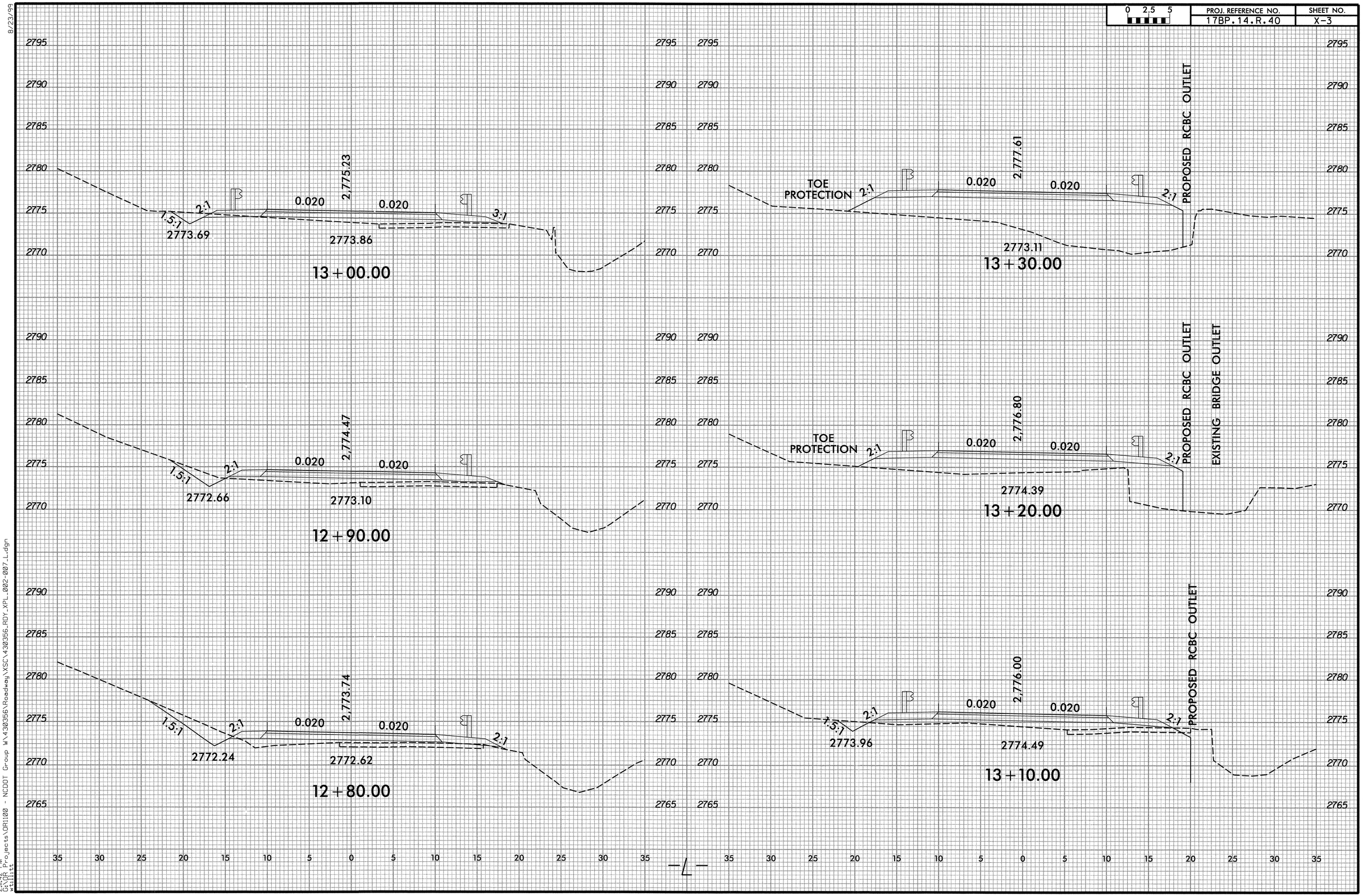

8/23/99
2:14:42 PM
U:\DR Projects\DR1100 - NCDOT Group W\430356\Roadway\XSC\430356_RDY_XPL_002-007_L.dgn
Architects

8/23/99

0 2.5 5	PROJ. REFERENCE NO.	SHEET NO.
	17BP.14.R.40	X-4

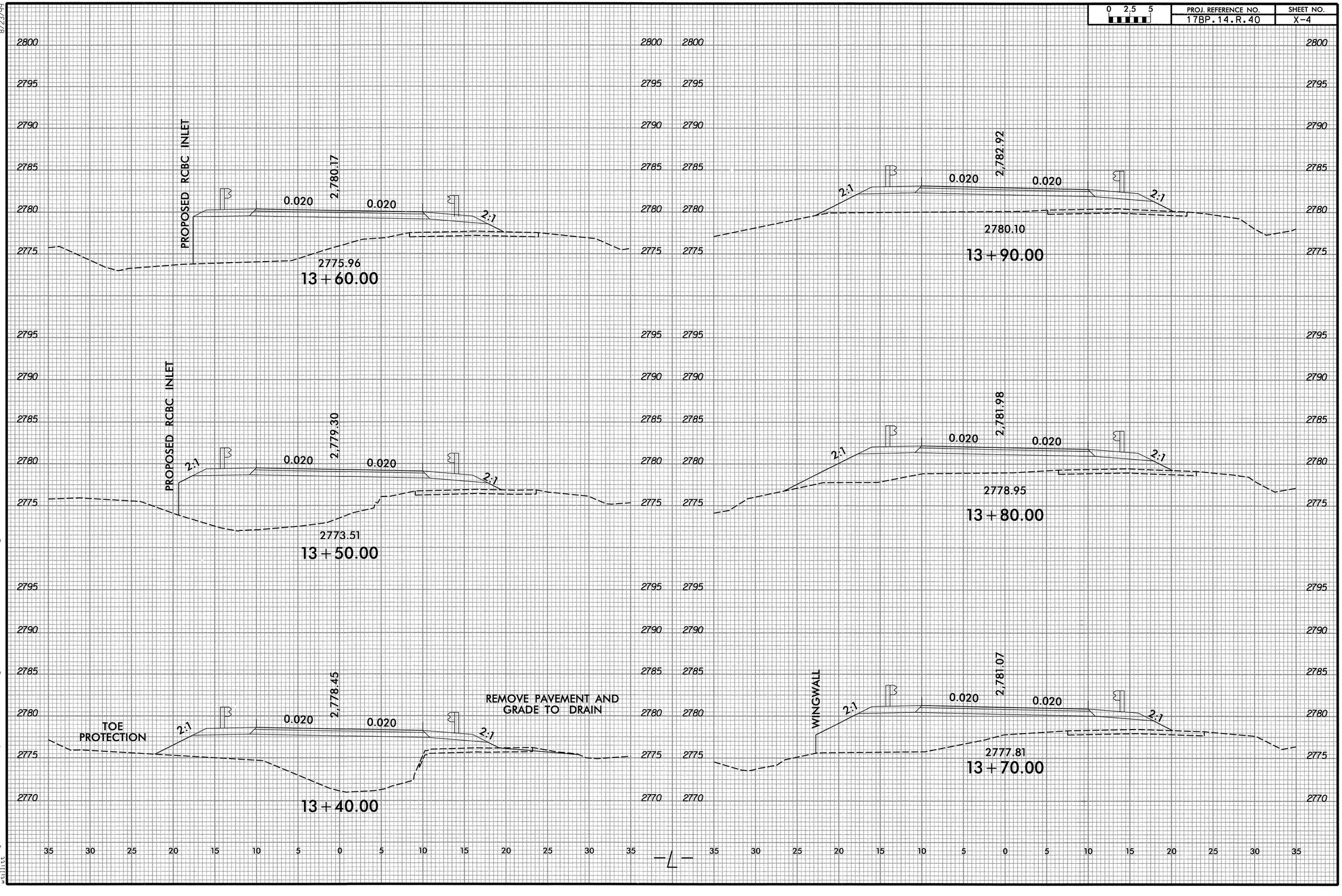

-L-

2:11:43 PM
G:\DR Projects\DR1100 - NCDOT Group WV430356\Roadway\XSC\430356_RDY_XPL_002-007_L.dgn
v8.11.3

PROJ. REFERENCE NO.	SHEET NO.
17BP.14.R.40	X-5

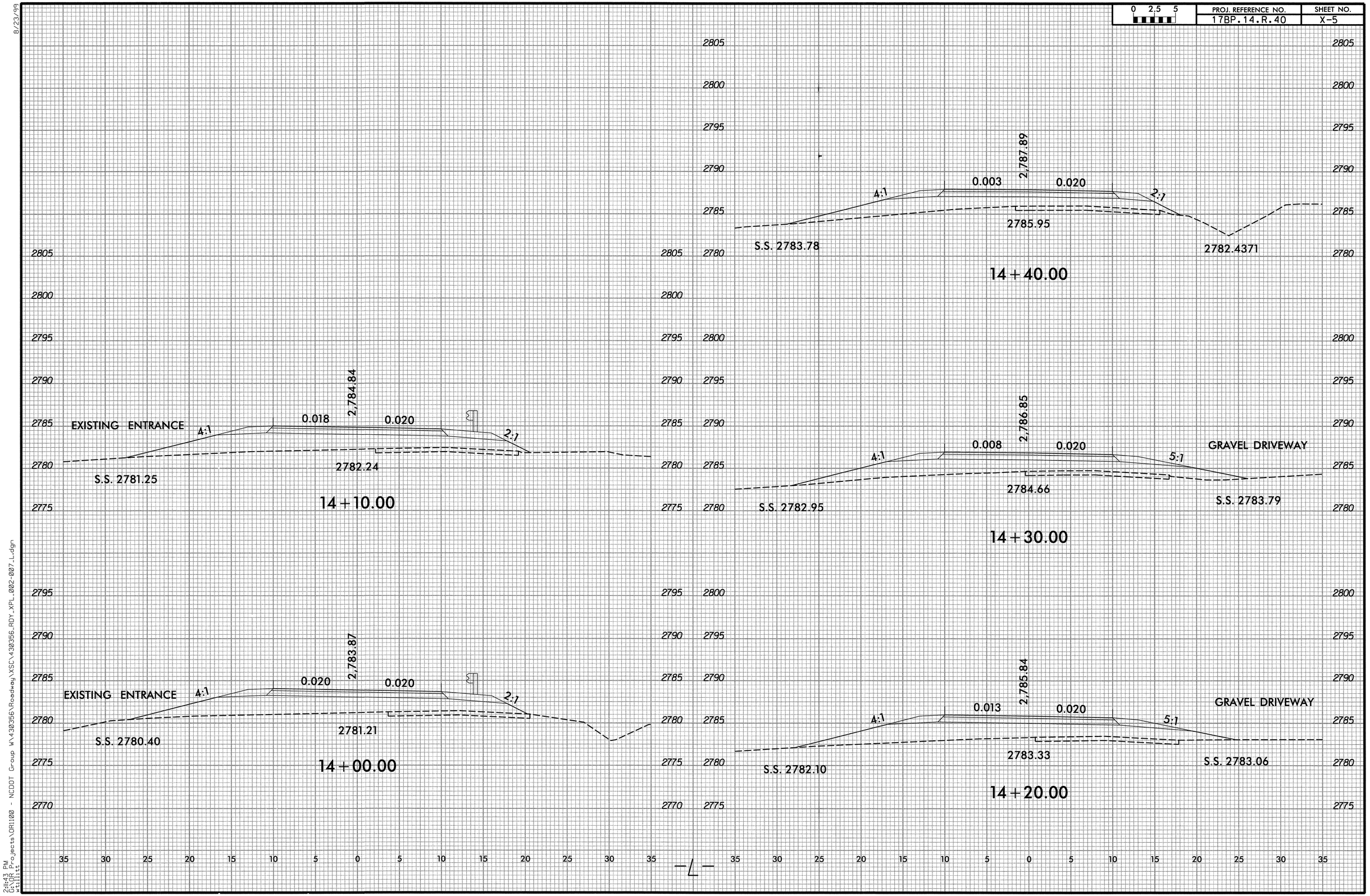

8/23/99

2:11:43 PM
G:\OR Projects\OR1100 - NCDOT Group W\430356\Roadway\XSC\430356_RDY_XPL_002-007_L.dgn
wtillitt

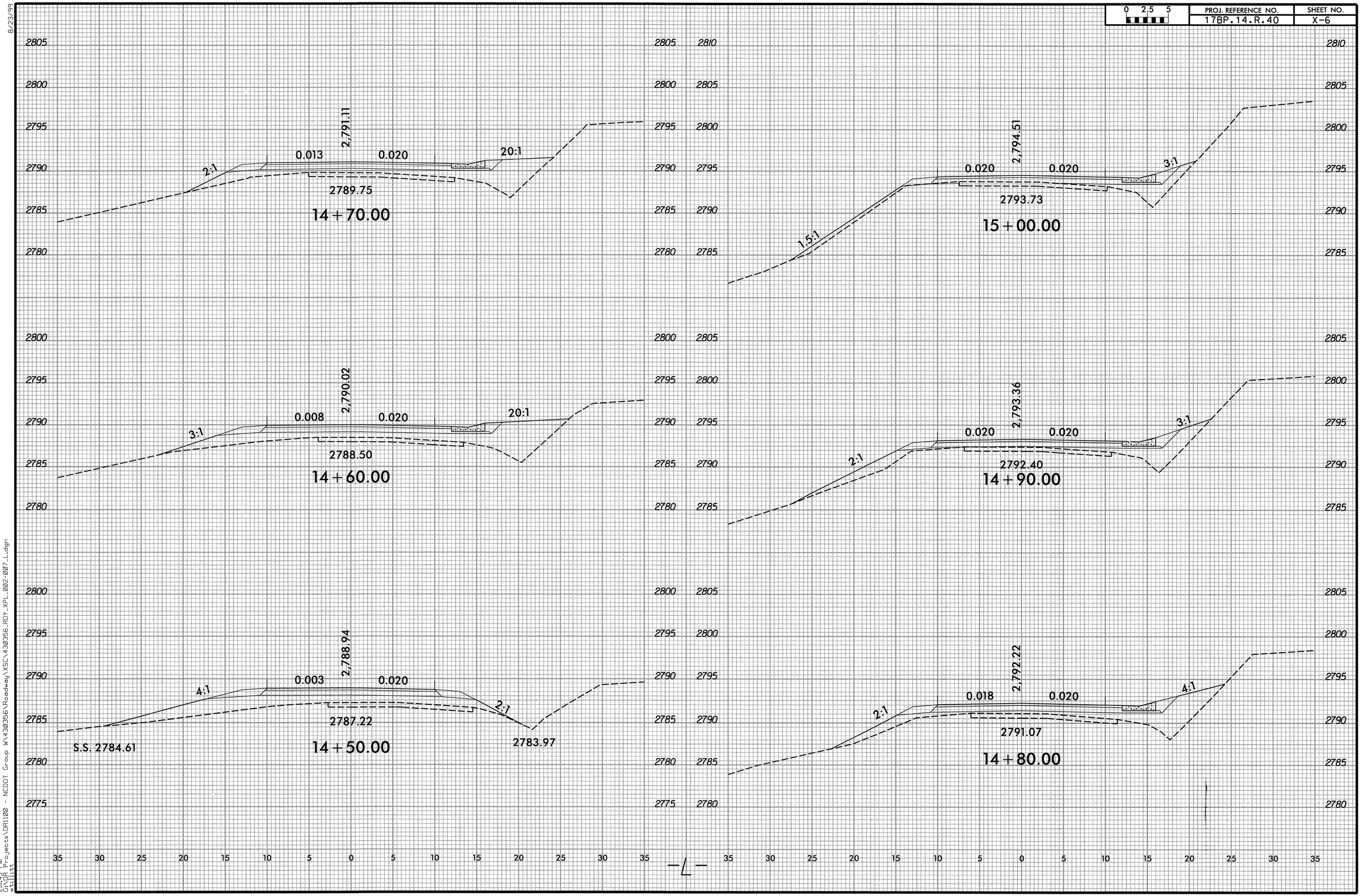

8/23/99

2:11:43 PM
G:\OR Projects\OR1100 - NCDOT Group W\430356\Roadway\XSC\430356_RDY_XPL_002-007_L.dgn
wtillitt

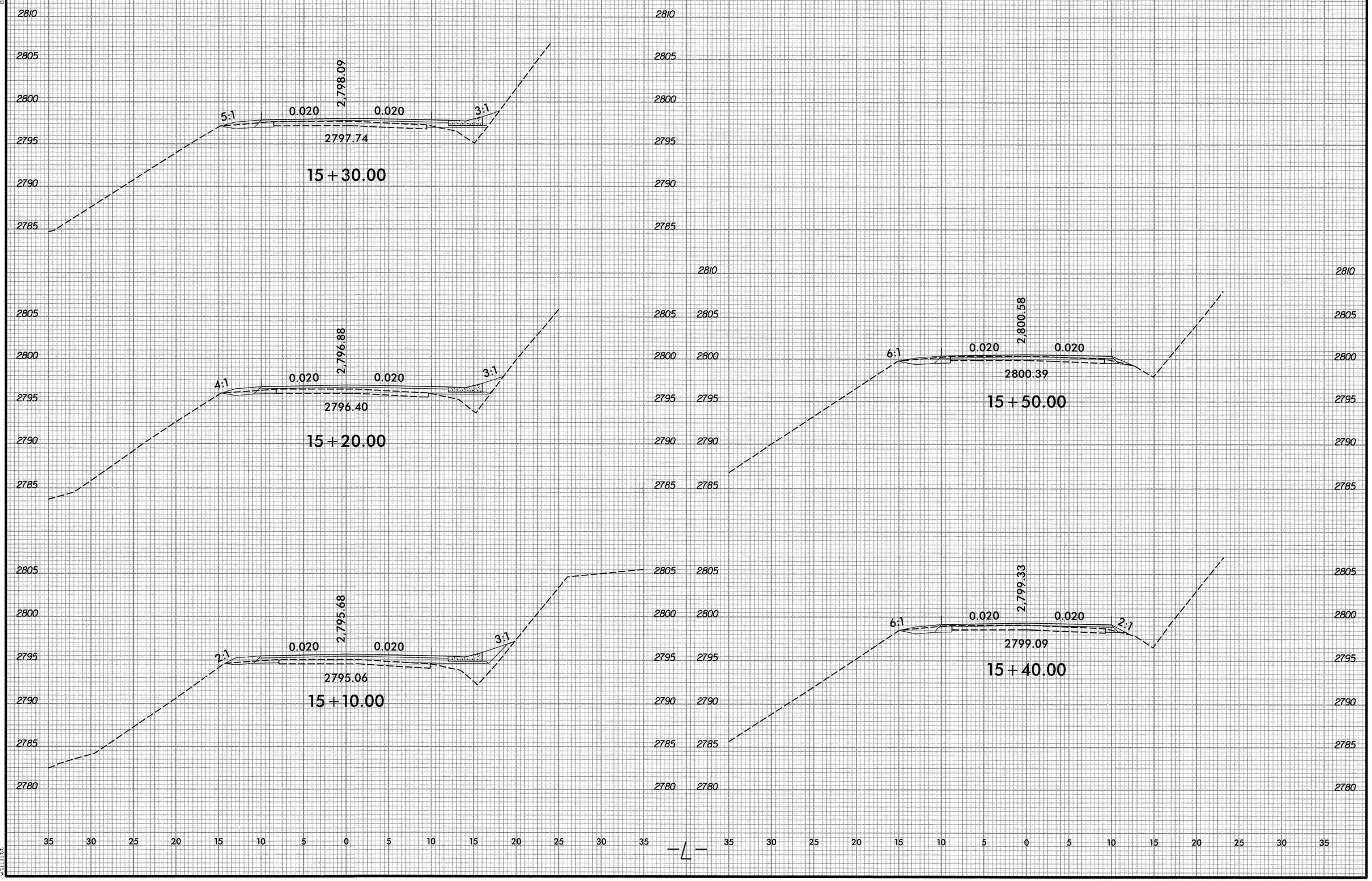

0 2.5 5
PROJ. REFERENCE NO.
17BP.14.R.40
SHEET NO.
X-7
15+30.00
5:1
0.020
2,798.09
0.020
3:1
2797.74
15+20.00
4:1
0.020
2,796.88
0.020
3:1
2796.40
15+10.00
2:1
0.020
2,795.68
0.020
3:1
2795.06
15+50.00
6:1
0.020
2,800.58
0.020
2800.39
15+40.00
6:1
0.020
2,799.33
0.020
2:1
2799.09
2810
2805
2800
2795
2790
2785
2780
35 30 25 20 15 10 5 0 5 10 15 20 25 30 35
-L-
8/23/99
2:11:44 PM
G:\OR Projects\OR1100 - NCDOT Group W\430356\Roadway\XSC\430356_RDY_XPL_002-007_L.dgn

BM #1 -BL- STA 6+95.61 37.73' RT ELEV. = 2774.23' (NAIL IN BASE 18" OAK)

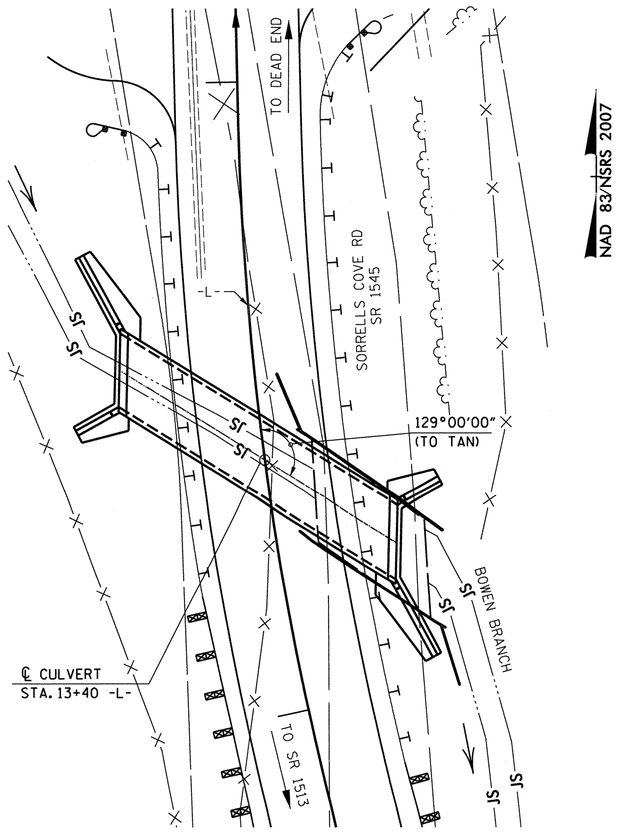

LOCATION SKETCH

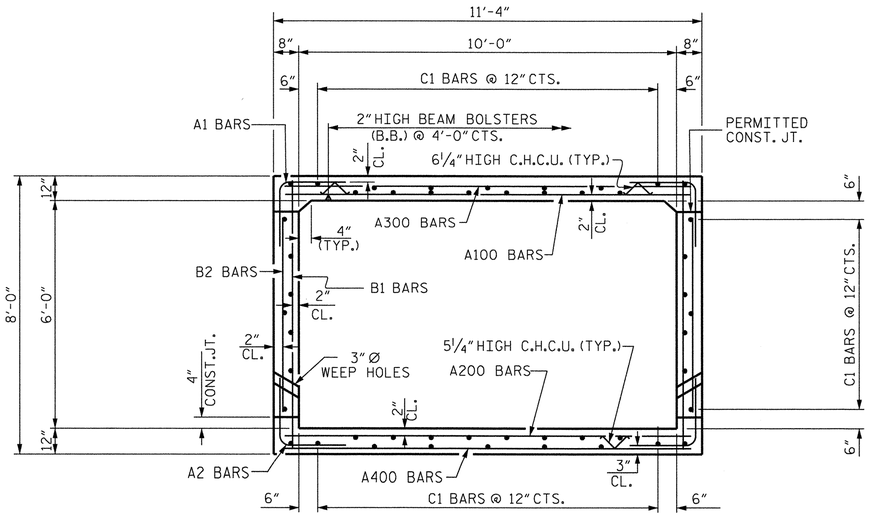

RIGHT ANGLE SECTION OF BARREL

THERE ARE 48 "C" BARS IN SECTION OF BARREL

HYDRAULIC DATA

DESIGN DISCHARGE	= 230 C.F.S.
FREQUENCY OF DESIGN FLOOD	= 10 YEARS
DESIGN HIGH WATER ELEVATION	= 2776.1'
DRAINAGE AREA	= 0.65 SQ. MI.
BASE DISCHARGE (Q100)	= 520 C.F.S.
BASE HIGH WATER ELEVATION	= 2778.41'

OVERTOPPING FLOOD DATA

OVERTOPPING DISCHARGE	= 290 C.F.S.
FREQUENCY OF OVERTOPPING FLOOD	= 10 YEARS+
OVERTOPPING FLOOD ELEVATION	= 2776.9'

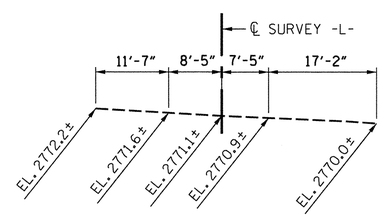

PROFILE ALONG ℄ CULVERT

NOTES

ASSUMED LIVE LOAD ----------HL-93 OR ALTERNATE LOADING.

DESIGN FILL----------1.2'.

FOR OTHER DESIGN DATA AND NOTES SEE STANDARD NOTE SHEET.

3" Ø WEEP HOLES INDICATED TO BE IN ACCORDANCE WITH THE SPECIFICATIONS.

CONCRETE IN CULVERTS TO BE POURED IN THE FOLLOWING ORDER:

1. WING FOOTINGS AND FLOOR SLAB INCLUDING 4" OF ALL VERTICAL WALLS.
2. THE REMAINING PORTIONS OF THE WALLS AND WINGS FULL HEIGHT FOLLOWED BY ROOF SLAB AND HEADWALLS.

THE RESIDENT ENGINEER SHALL CHECK THE LENGTH OF CULVERT BEFORE STAKING IT OUT TO MAKE CERTAIN THAT IT WILL PROPERLY TAKE CARE OF THE FILL.

THIS BARREL STANDARD TO BE USED ONLY ON CULVERT ON 135° SKEW AND TO BE USED WITH STANDARD WING SHEET WITH THE SAME SKEW AND VERTICAL CLEARANCE.

DIMENSIONS FOR WING LAYOUT AS WELL AS ADDITIONAL REINFORCING STEEL EMBEDDED IN BARREL ARE SHOWN ON WING SHEET.

A 3 FOOT STRIP OF FILTER FABRIC SHALL BE ATTACHED TO THE FILL FACE OF THE WING COVERING THE ENTIRE LENGTH OF THE EXPANSION JOINT.

AT THE CONTRACTOR'S OPTION, HE MAY SPLICE THE VERTICAL REINFORCING STEEL IN THE INTERIOR FACE OF EXTERIOR WALL AND BOTH FACES OF INTERIOR WALLS ABOVE LOWER WALL CONSTRUCTION JOINT. THE SPLICE LENGTH SHALL BE AS PROVIDED IN THE SPLICE LENGTH CHART SHOWN ON THE PLANS. EXTRA WEIGHT OF STEEL DUE TO THE SPLICES SHALL BE PAID FOR BY THE CONTRACTOR.

AT THE CONTRACTOR'S OPTION HE MAY SUBMIT, TO THE ENGINEER FOR APPROVAL, DESIGN AND DETAIL DRAWINGS FOR A PRECAST REINFORCED CONCRETE BOX CULVERT IN LIEU OF THE CAST-IN-PLACE CULVERT SHOWN ON THE PLANS. THE DESIGN SHALL PROVIDE THE SAME SIZE AND NUMBER OF BARRELS AS USED ON THE CAST-IN-PLACE DESIGN. FOR PRECAST REINFORCED CONCRETE BOX CULVERT, SEE SPECIAL PROVISIONS.

FOR CULVERT DIVERSION DETAILS AND PAY ITEM, SEE EROSION CONTROL PLANS.

REMOVAL OF THE EXISTING BRIDGE SHALL BE PERFORMED SO AS NOT TO ALLOW DEBRIS TO FALL INTO THE WATER. THE CONTRACTOR SHALL REMOVE THE BRIDGE AND SUBMIT PLANS FOR DEMOLITION IN ACCORDANCE WITH ARTICLE 402-2 OF THE STANDARD SPECIFICATIONS.

AFTER SERVING AS A TEMPORARY STRUCTURE THE EXISTING STRUCTURE CONSISTING OF 1 SPAN OF 16'-6" CONSISTING OF TIMBER DECK ON TIMBER JOISTS ON TIMBER CAPS AND PILES AND LOCATED AT THE SITE OF THE PROPOSED STRUCTURE SHALL BE REMOVED. THE EXISTING BRIDGE IS PRESENTLY POSTED BELOW THE LEGAL LOAD LIMIT. SHOULD THE STRUCTURAL INTEGRITY OF THE BRIDGE FURTHER DETERIORATE, THIS LOAD LIMITATION MAY BE REDUCED AS FOUND NECESSARY DURING THE LIFE OF THE PROJECT.

FOR UTILITY INFORMATION, SEE UTILITY PLANS.

FOR SUBMITTAL OF WORKING DRAWINGS, SEE SPECIAL PROVISIONS.

FOR FALSEWORK AND FORMWORK, SEE SPECIAL PROVISIONS.

FOR CRANE SAFETY, SEE SPECIAL PROVISIONS.

FOR GROUT FOR STRUCTURES, SEE SPECIAL PROVISIONS.

TOTAL STRUCTURE QUANTITIES

CLASS A CONCRETE			REINFORCING STEEL		
STAGE I	48.8	C.Y	STAGE I	11269	LBS.
STAGE II	34.1	C.Y	STAGE II	6914	LBS.
TOTAL	82.9	C.Y	TOTAL	18183	LBS.
FOUNDATION COND. MAT.'L			RIP RAP CLASS B		
STAGE I	34	TONS	STAGE I	15	TONS
STAGE II	21	TONS	STAGE II	10	TONS
TOTAL	55	TONS	TOTAL	25	TONS
CULVERT EXCAVATION -- LUMP SUM					
REMOVAL OF EXIST. STRUCTURE -- LUMP SUM					

FOUNDATION NOTES

EXCAVATE AT LEAST 1 FOOT BELOW CULVERTS AND FOOTINGS AND REPLACE WITH COMPACTED FOUNDATION CONDITIONING MATERIAL IN ACCORDANCE WITH ARTICLE 414 OF THE STANDARD SPECIFICATIONS.

PROJECT NO. 17BP.14.R.40

HAYWOOD COUNTY

STATION: 13+40.00 -L-

SHEET 1 OF 8 REPLACES BRIDGE #430356

NORTH CAROLINA PROFESSIONAL SEAL 14047 ENGINEER STEPHEN D. COOK

1/8/14

STATE OF NORTH CAROLINA
DEPARTMENT OF TRANSPORTATION
RALEIGH

BARREL STANDARD

SINGLE 10 FT. x 6 FT. CONCRETE BOX CULVERT 129° SKEW

AUGUST 1989

THE LOUIS BERGER GROUP, Inc.
1001 Wade Avenue, Suite 400
Raleigh, NC 27605-3322

REVISIONS						SHEET NO.
NO.	BY:	DATE:	NO.	BY:	DATE:	C-1
1			3			TOTAL SHEETS
2			4			8

ASSEMBLED BY : J. DAWKINS DATE : JULY 2012	CHECKED BY : S. COOK DATE : JULY 2012	SPECIAL
DRAWN BY : B.M. MEYERS DATE : AUG. 1989	CHECKED BY : A.R. BISSETTE DATE : AUG. 1989	STANDARD

G:\OR Projects\ORI100 - NCDOT Group W\430356\Structures\430356_RCBC_01.dgn 1/8/2014 1100_PDF_half_pltcfg 1100_str.tbl

ADDED 11-90

BILL OF MATERIAL
(STAGE 1)

BAR	NO.	SIZE	TYPE	LENGTH	WEIGHT	BAR	NO.	SIZE	TYPE	LENGTH	WEIGHT	BAR	NO.	SIZE	TYPE	LENGTH	WEIGHT	BAR	NO.	SIZE	TYPE	LENGTH	WEIGHT	BAR	NO.	SIZE	TYPE	LENGTH	WEIGHT	BAR	NO.	SIZE	TYPE	LENGTH	WEIGHT
A1	256	6	1	8'-9"	3364	A201	1	6	STR	10'-2"	15	A304	1	6	STR	8'-5"	13	A407	1	6	STR	5'-10"	9												
						A202	1	6	STR	9'-3"	14	A305	1	6	STR	7'-7"	11	A408	1	6	STR	4'-11"	7												
A100	52	6	STR	11'-0"	859	A203	1	6	STR	9'-6	14	A306	1	6	STR	6'-8"	10	A409	1	6	STR	4'-1"	6												
A101	1	6	STR	10'-2"	15	A204	1	6	STR	8'-5"	13	A307	1	6	STR	5'-10"	9	A410	1	6	STR	3'-3"	5												
A102	1	6	STR	9'-3"	14	A205	1	6	STR	7'-7"	11	A308	1	6	STR	4'-11"	7	A411	1	6	STR	2'-4"	4												
A103	1	6	STR	9'-6"	14	A206	1	6	STR	6'-8"	10	A309	1	6	STR	4'-1"	6	A412	1	6	STR	1'-6"	2												
A104	1	6	STR	8'-5"	13	A207	1	6	STR	5'-10"	9	A310	1	6	STR	3'-3"	5	A413	1	6	STR	11'-0"	17												
A105	1	6	STR	7'-7"	11	A208	1	6	STR	4'-11"	7	A311	1	6	STR	2'-4"	4	A414	1	6	STR	11'-0"	17												
A106	1	6	STR	6'-8"	10	A209	1	6	STR	4'-1"	6	A312	1	6	STR	1'-6"	2	A415	1	6	STR	11'-0"	17												
A107	1	6	STR	5'-10"	9	A210	1	6	STR	3'-3"	5	A313	1	6	STR	11'-0"	17	A416	1	6	STR	10'-0"	15												
A108	1	6	STR	4'-11"	7	A211	1	6	STR	2'-4"	4	A314	1	6	STR	11'-0"	17	A417	1	6	STR	9'-3"	14												
A109	1	6	STR	4'-1"	6	A212	1	6	STR	1'-6"	2	A315	1	6	STR	11'-0"	17	A418	1	6	STR	8'-3"	12												
A110	1	6	STR	3'-3"	5	A213	1	6	STR	11'-0"	17	A316	1	6	STR	10'-0"	15	A419	1	6	STR	7'-5"	11												
A111	1	6	STR	2'-4"	4	A214	1	6	STR	11'-0"	17	A317	1	6	STR	9'-3"	14	A420	1	6	STR	6'-6"	10												
A112	1	6	STR	1'-6"	2	A215	1	6	STR	11'-0"	17	A318	1	6	STR	8'-3"	12	A421	1	6	STR	6'-0"	9												
A113	1	6	STR	11'-0"	17	A216	1	6	STR	10'-0"	15	A319	1	6	STR	7'-5"	11	A422	1	6	STR	4'-9"	7												
A114	1	6	STR	11'-0"	17	A217	1	6	STR	9'-3"	14	A320	1	6	STR	6'-6"	10	A423	1	6	STR	3'-11"	6												
A115	1	6	STR	11'-0"	17	A218	1	6	STR	8'-3"	12	A321	1	6	STR	6'-0"	9	A424	1	6	STR	3'-0"	5												
A116	1	6	STR	10'-0"	15	A219	1	6	STR	7'-5"	11	A322	1	6	STR	4'-9"	7																		
A117	1	6	STR	9'-3"	14	A220	1	6	STR	6'-6"	10	A323	1	6	STR	3'-11"	6	B1	64	5	STR	7'-7"	506												
A118	1	6	STR	8'-3"	12	A221	1	6	STR	6'-0"	9	A324	1	6	STR	3'-0"	5	B2	128	6	STR	5'-0"	961												
A119	1	6	STR	7'-5"	11	A222	1	6	STR	4'-9"	7																								
A120	1	6	STR	6'-6"	10	A223	1	6	STR	3'-11"	6	A400	52	6	STR	11'-0"	859	C1	96	4	STR	18'-0"	1154												
A121	1	6	STR	6'-0"	9	A224	1	6	STR	3'-0"	5	A401	1	6	STR	10'-2"	15																		
A122	1	6	STR	4'-9"	7							A402	1	6	STR	9'-3"	14	G1	2	5	STR	12'-8"	26												
A123	1	6	STR	3'-11"	6	A300	52	6	STR	11'-0"	859	A403	1	6	STR	9'-6"	14																		
A124	1	6	STR	3'-0"	5	A301	1	6	STR	10'-2"	15	A404	1	6	STR	8'-5"	13	S2	9	8	STR	12'-8"	304												
						A302	1	6	STR	9'-3"	14	A405	1	6	STR	7'-7"	11																		
A200	52	6	STR	11'-0"	859	A303	1	6	STR	9'-6"	14	A406	1	6	STR	6'-8"	10																		

BILL OF MATERIAL
(STAGE 2)

BAR	NO.	SIZE	TYPE	LENGTH	WEIGHT	BAR	NO.	SIZE	TYPE	LENGTH	WEIGHT	BAR	NO.	SIZE	TYPE	LENGTH	WEIGHT	BAR	NO.	SIZE	TYPE	LENGTH	WEIGHT	BAR	NO.	SIZE	TYPE	LENGTH	WEIGHT	BAR	NO.	SIZE	TYPE	LENGTH	WEIGHT
A1	156	6	1	8'-9"	2050	A200	26	6	STR	11'-0"	430	A302	2	6	STR	9'-3"	28	A404	2	6	STR	8'-5"	25	B1	40	5	STR	7'-7"	316						
						A201	2	6	STR	10'-2"	31	A303	2	6	STR	9'-6"	29	A405	2	6	STR	7'-7"	23	B2	80	6	STR	5'-0"	601						
A100	26	6	STR	11'-0"	430	A202	2	6	STR	9'-3"	28	A304	2	6	STR	8'-5"	25	A406	2	6	STR	6'-8"	20												
A101	2	6	STR	10'-2"	31	A203	2	6	STR	9'-6"	29	A305	2	6	STR	7'-7"	23	A407	2	6	STR	5'-10"	18	C1	48	4	STR	19'-2"	615						
A102	2	6	STR	9'-3"	28	A204	2	6	STR	8'-5"	25	A306	2	6	STR	6'-8"	20	A408	2	6	STR	4'-11"	15												
A103	2	6	STR	9'-6"	29	A205	2	6	STR	7'-7"	23	A307	2	6	STR	5'-10"	18	A409	2	6	STR	4'-1"	12	G1	2	5	STR	12'-8"	26						
A104	2	6	STR	8'-5"	25	A206	2	6	STR	6'-8"	20	A308	2	6	STR	4'-11"	15	A410	2	6	STR	3'-3"	10												
A105	2	6	STR	7'-7"	23	A207	2	6	STR	5'-10"	18	A309	2	6	STR	4'-1"	12	A411	2	6	STR	2'-4"	7	S2	6	8	STR	12'-8"	203						
A106	2	6	STR	6'-8"	20	A208	2	6	STR	4'-11"	15	A310	2	6	STR	3'-3"	10	A412	2	6	STR	1'-6"	5												
A107	2	6	STR	5'-10"	18	A209	2	6	STR	4'-1"	12	A311	2	6	STR	2'-4"	7																		
A108	2	6	STR	4'11"	15	A210	2	6	STR	3'-3"	10	A312	2	6	STR	1'-6"	5																		
A109	2	6	STR	4'-1"	12	A211	2	6	STR	2'-4"	7																								
A110	2	6	STR	3'-3"	10	A212	2	6	STR	1'-6"	5	A400	16	6	STR	11'-0"	430																		
A111	2	6	STR	2'-4"	7							A401	2	6	STR	10'-2"	31																		
A112	2	6	STR	1'-6"	5	A300	16	6	STR	11'-0"	430	A402	2	6	STR	9'-3"	28																		
						A301	2	6	STR	10'-2"	31	A403	2	6	STR	9'-6"	29																		

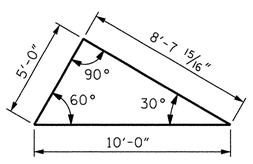

SKEW TRIANGLE

TOTAL STRUCTURE QUANTITIES (STAGE 1)

CLASS A CONCRETE

BARREL @	1.14	CY/FT	36.5	C.Y.
WING ETC.			11.4	C.Y.
SILLS			0.9	C.Y.
TOTAL			48.8	C.Y.

REINFORCING STEEL

BARREL	10751	LBS.
WINGS ETC.	465	LBS.
SILLS	53	LBS.
TOTAL	11269	LBS.

FOUNDATION COND. MAT.'L	34	TONS
CLASS "B" RIP RAP	15	TONS
CULVERT EXCAVATION	LUMP SUM	

TOTAL STRUCTURE QUANTITIES (STAGE 2)

CLASS A CONCRETE

BARREL @	1.14	CY/FT	22.2	C.Y.
WING ETC.			11.4	C.Y.
SILLS			0.5	C.Y.
TOTAL			34.1	C.Y.

REINFORCING STEEL

BARREL	6423	LBS.
WINGS ETC.	465	LBS.
SILLS	26	LBS.
TOTAL	6914	LBS.

FOUNDATION COND. MAT.'L	21	TONS
CLASS "B" RIP RAP	10	TONS
CULVERT EXCAVATION	LUMP SUM	
REMOVAL OF EXIST. STRUTURE	LUMP SUM	

BAR TYPES

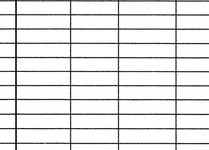

SPLICE CHART

#4C1	1'-9"
#5B1	2'-0"

PROJECT NO. 17BP.14.R.40

HAYWOOD COUNTY

STATION: 13+40.00 -L-

SHEET 2 OF 8

STATE OF NORTH CAROLINA
DEPARTMENT OF TRANSPORTATION
RALEIGH

BILL OF MATERIAL SINGLE 10 FT. X 6 FT. CONCRETE BOX CULVERT

NORTH CAROLINA PROFESSIONAL SEAL 14047 ENGINEER STEPHEN D. COOK

1/8/14

THE LOUIS BERGER GROUP, Inc.
1001 Wade Avenue, Suite 400
Raleigh, NC 27605-3322

REVISIONS								SHEET NO.
NO.	BY:	DATE:	NO.	BY:	DATE:			C-2
1			3					TOTAL SHEETS
2			4					8

DRAWN BY : J. MYA DATE : AUG. 2012
CHECKED BY : S. COOK DATE : AUG. 2012

G:\OR Projects\OR1100 - NCDOT Group W\430356\Structures\430356_RCBC_02.dgn 1/8/2014 1100_PDF_half_pitcfg 1100_str.tbl

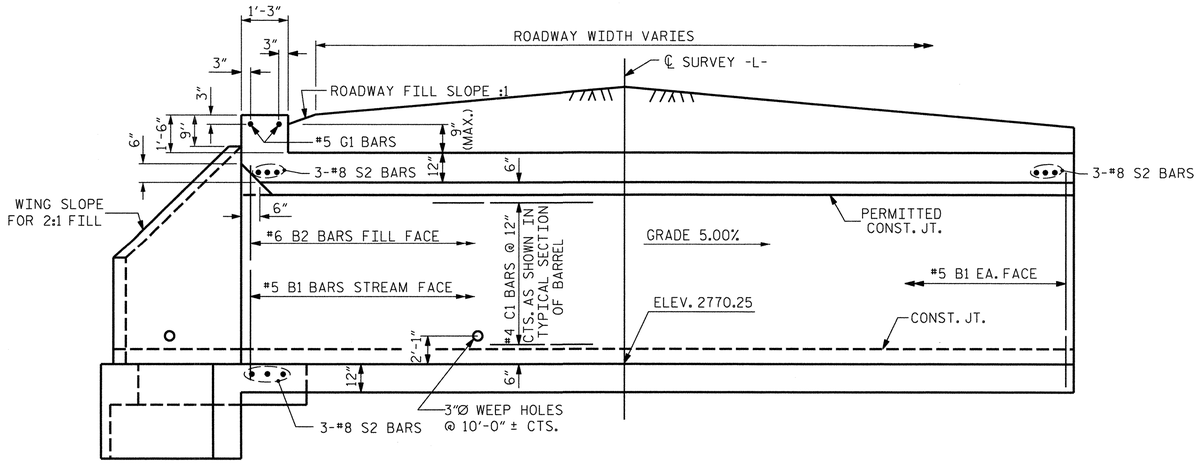

CULVERT SECTION NORMAL TO ROADWAY

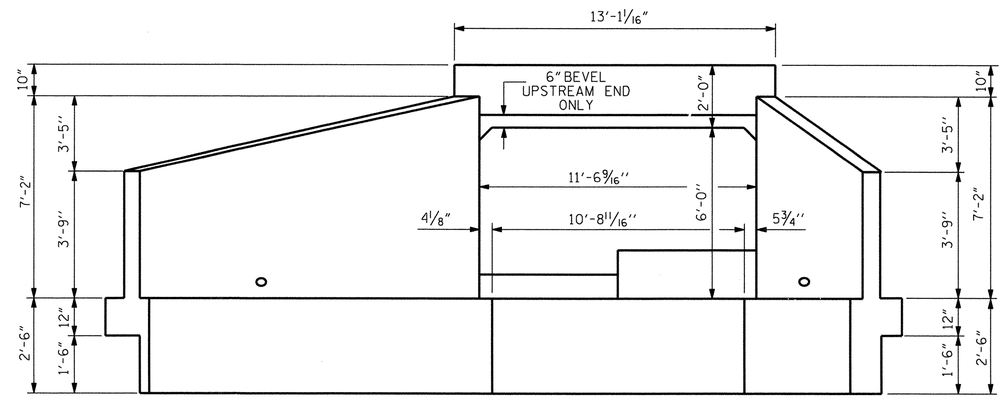

END ELEVATION NORMAL TO SKEW

FOR SILL DETAILS, SEE SHEEET 6 OF 8.
(LOOKING DOWNSTREAM)

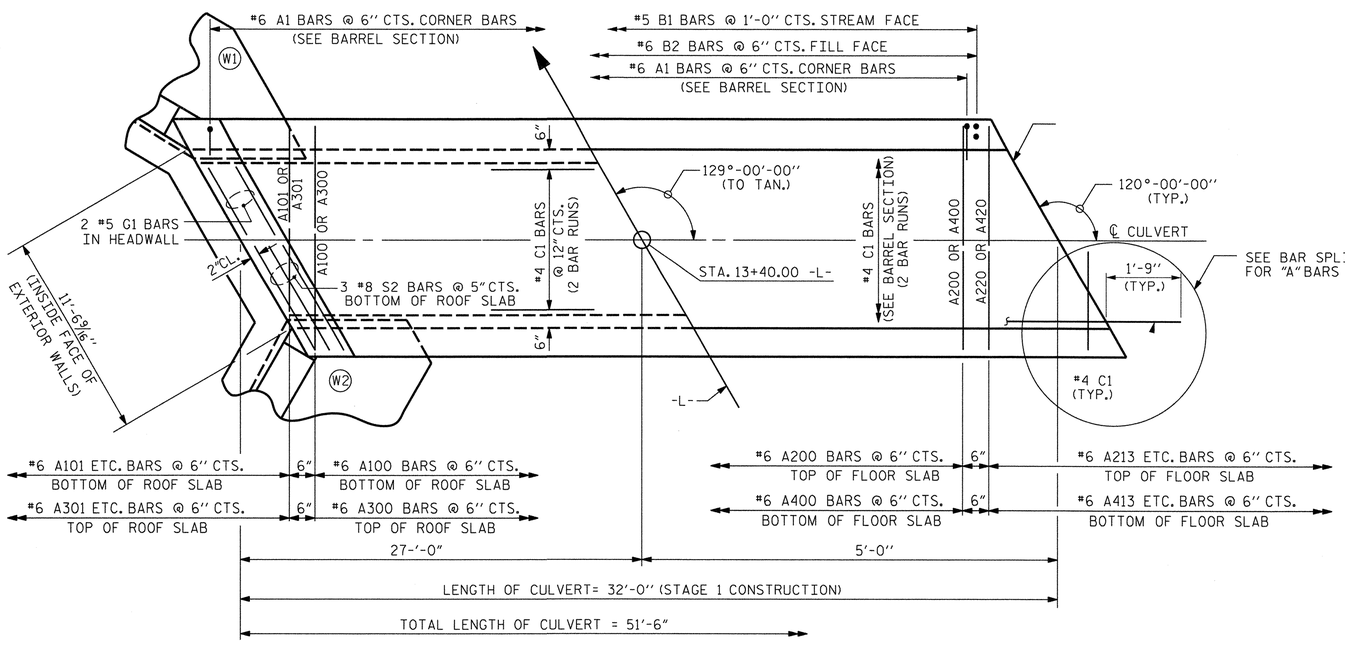

PART PLAN - ROOF SLAB

(STAGE 1)

PART PLAN - FLOOR SLAB

(STAGE 1)

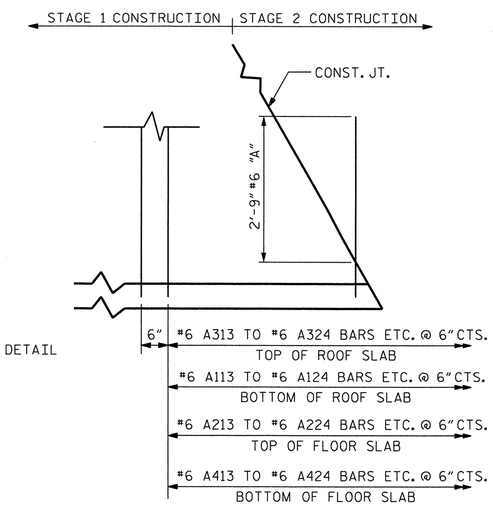

BAR SPLICE DETAIL AT STAGE 1 CONSTRUCTION JOINT

SHOWING PROJECTION OF "A" BARS

PROJECT NO. 17BP.14.R.40

HAYWOOD COUNTY

STATION: 13+40.00 -L-

SHEET 3 OF 8

STATE OF NORTH CAROLINA
DEPARTMENT OF TRANSPORTATION
RALEIGH

BARREL STANDARD

SINGLE 10 FT.X 6 FT. CONCRETE BOX CULVERT 120° SKEW

1971

NORTH CAROLINA PROFESSIONAL SEAL 14047 ENGINEER STEPHEN D. CROSS
1/8/14

THE LOUIS BERGER GROUP, Inc.
1001 Wade Avenue, Suite 400

REVISIONS						SHEET NO.
NO.	BY:	DATE:	NO.	BY:	DATE:	C-3
1			3			TOTAL SHEETS
2			4			8

ASSEMBLED BY : J. MYA	DATE : AUG. 2012	SPECIAL	
CHECKED BY : S.COOK	DATE : AUG. 2012		
DRAWN BY : J.W. ROUSE	DATE : SEPT. 1989	STANDARD	
CHECKED BY : A.R. BISSETTE	DATE : AUG. 1989		

STD. NO. CB331

G:\OR Projects\OR1100 - NCDOT Group W\430356\Structures\430356_RCBC_03.dgn
1/8/2014 1100_PDF_half_pltcfg 1100_str_tbl

REVISED 8-28-92 BY E.L.R. CHECKED BY G.R.P.
REVISED 8-22-89 BY A.R.B. CHECKED BY C.R.K.
REDRAWN 8-22-89

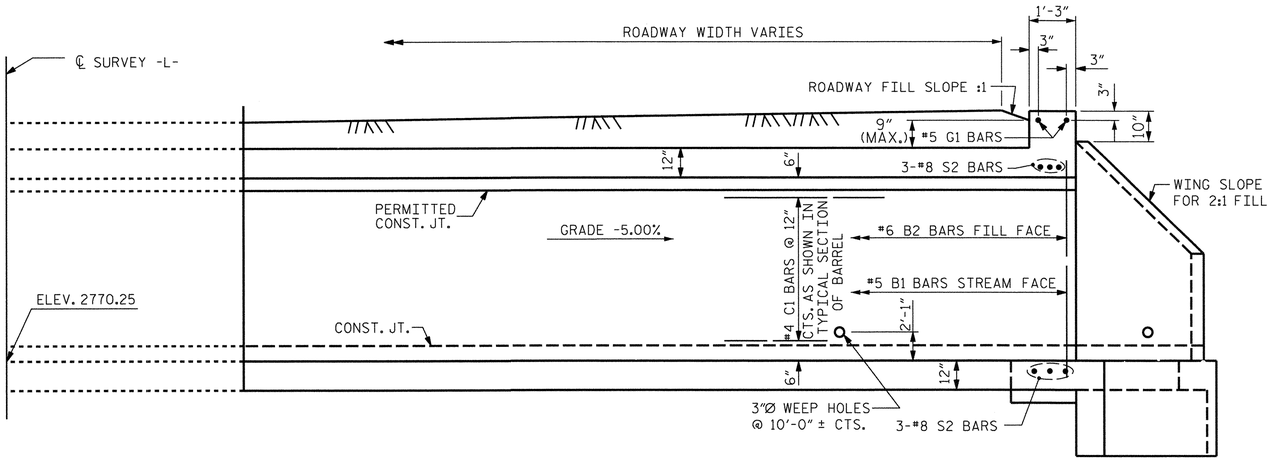

CULVERT SECTION NORMAL TO ROADWAY

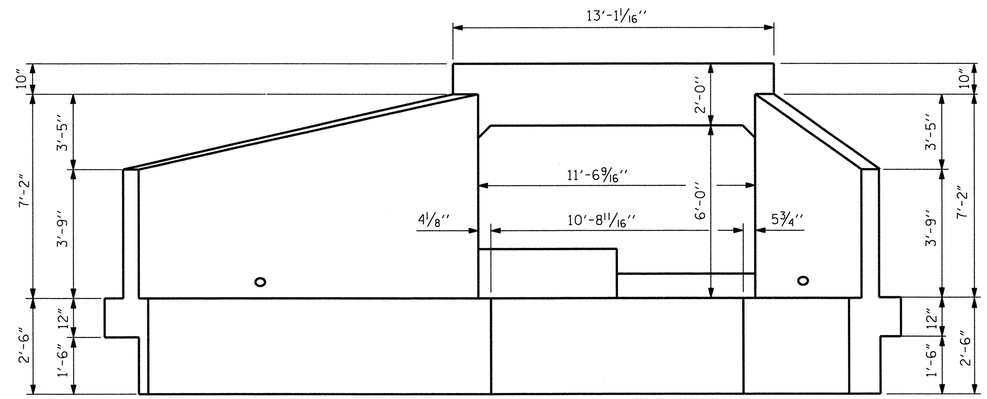

END ELEVATION NORMAL TO SKEW

FOR SILL DETAILS, SEE SHEEET 6 OF 8.
(LOOKING UPSTREAM)

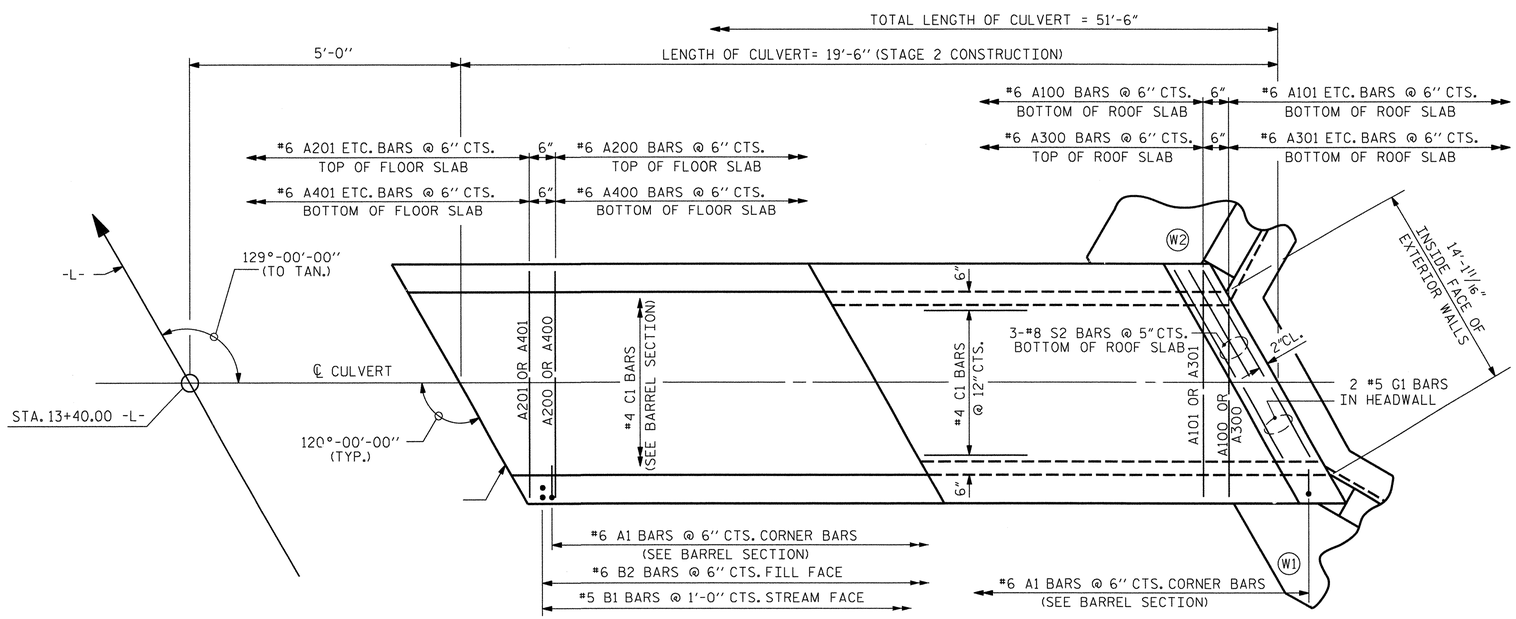

PART PLAN - FLOOR SLAB

(STAGE 2)

PART PLAN - ROOF SLAB

(STAGE 2)

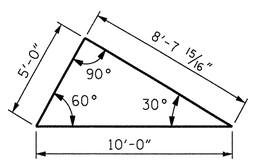

SKEW TRIANGLE

PROJECT NO. 17BP.14.R.40

HAYWOOD COUNTY

STATION: 13+40.00 -L-

SHEET 4 OF 8

STATE OF NORTH CAROLINA
DEPARTMENT OF TRANSPORTATION
RALEIGH

BARREL STANDARD

SINGLE 10 FT.X 6 FT. CONCRETE BOX CULVERT 120° SKEW

1971

NORTH CAROLINA PROFESSIONAL SEAL 14047 ENGINEER S. STEPHEN D. COOK
1/9/14

THE LOUIS BERGER GROUP, Inc.
1001 Wade Avenue, Suite 400
Raleigh, NC 27605-3322

REVISIONS						
NO.	BY:	DATE:	NO.	BY:	DATE:	
1			3			
2			4			

SHEET NO. C-4

TOTAL SHEETS 8

STD. NO. CB331

ASSEMBLED BY : J. MYA	DATE : AUG. 2012	SPECIAL	
CHECKED BY : S.COOK	DATE : AUG. 2012		
DRAWN BY : J.W. ROUSE	DATE : SEPT. 1989	STANDARD	
CHECKED BY : A.R. BISSETTE	DATE : AUG. 1989		

REVISED 8-28-92 BY E.L.R. CHECKED BY G.R.P.
REVISED 8-22-89 BY A.R.B. CHECKED BY C.R.K.
REDRAWN 8-22-89

G:\OR Projects\OR1100 - NCDOT Group W\430356\Structures\430356_RCBC_04.dgn
1/8/2014 1100_PDF_half_pltcfg 1100_str.tbl

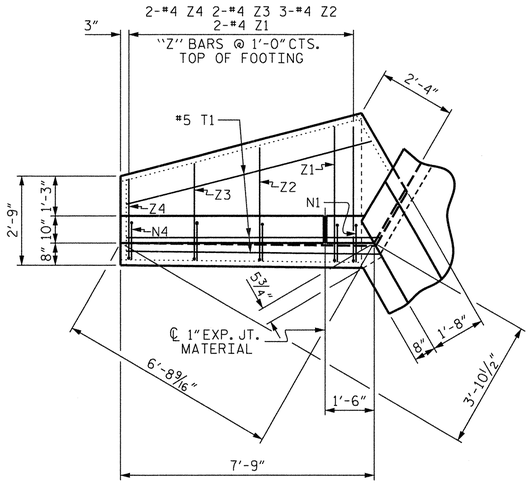

PLAN W2

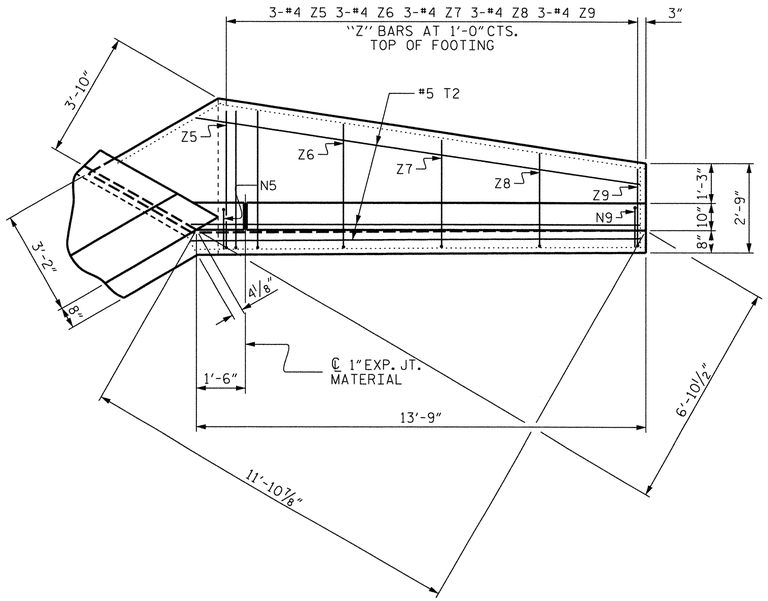

PLAN W1

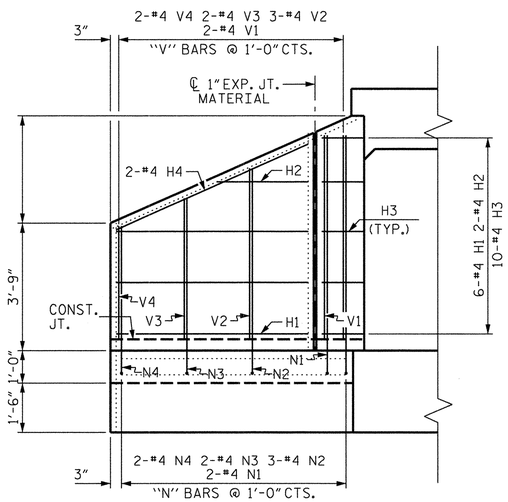

ELEVATION W2

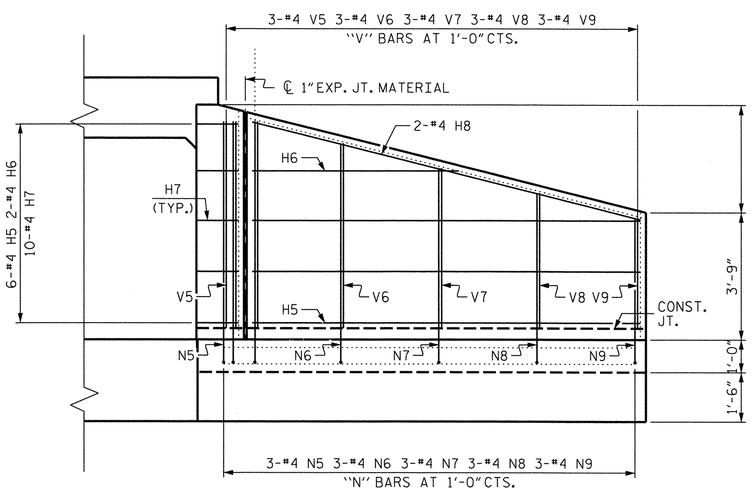

ELEVATION W1

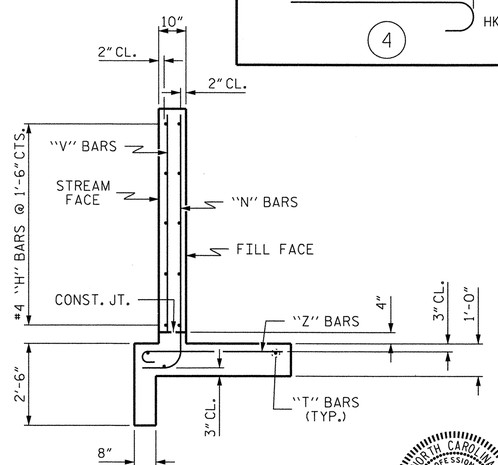

TYPICAL WING SECTION

BAR TYPES

ALL BAR DIMENSIONS ARE OUT TO OUT.

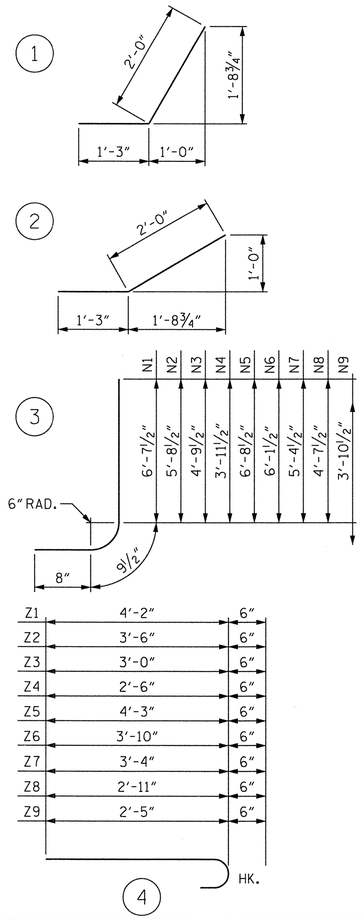

BILL OF MATERIAL

(STAGE 1 SHOWN STAGE 2 SIMILAR)

BAR	NO.	SIZE	TYPE	LENGTH	WEIGHT
H1	6	#4	STR	5'-10"	23
H2	2	#4	STR	2'-9"	4
H3	10	#4	1	3'-3"	22
H4	2	#4	STR	6'-5"	9
H5	6	#4	STR	11'-10"	47
H6	2	#4	STR	6'-3"	8
H7	10	#4	2	3'-3"	22
H8	2	#4	STR	12'-2"	16
N1	2	#4	3	8'-1"	11
N2	3	#4	3	7'-2"	14
N3	2	#4	3	6'-3"	8
N4	2	#4	3	5'-5"	7
N5	3	#4	3	8'-2"	16
N6	3	#4	3	7'-7"	15
N7	3	#4	3	6'-10"	14
N8	3	#4	3	6'-1"	12
N9	3	#4	3	5'-4"	11
T1	3	#5	STR	7'-9"	24
T2	3	#5	STR	13'-9"	43
V1	2	#4	STR	6'-1"	8
V2	3	#4	STR	5'-1"	10
V3	2	#4	STR	4'-2"	6
V4	2	#4	STR	3'-4"	4
V5	3	#4	STR	6'-2"	12
V6	3	#4	STR	5'-6"	11
V7	3	#4	STR	4'-9"	10
V8	3	#4	STR	4'-0"	8
V9	3	#4	STR	3'-3"	7
Z1	2	#4	4	4'-8"	6
Z2	3	#4	4	4'-0"	8
Z3	2	#4	4	3'-6"	5
Z4	2	#4	4	3'-0"	4
Z5	3	#4	4	4'-9"	10
Z6	3	#4	4	4'-4"	9
Z7	3	#4	4	3'-10"	8
Z8	3	#4	4	3'-5"	7
Z9	3	#4	4	2'-11"	6

REINFORCING STEEL FOR 2 WINGS 465 LBS

CLASS A CONCRETE

2 WINGS	7.2	CY
1 HEADWALLS	0.7	CY
1 END CURTAIN WALLS	1.4	CY
TOTAL	9.3	CY

PROJECT NO. 17BP.14.R.40

HAYWOOD COUNTY

STATION: 13+40.00 -L-

SHEET 5 OF 8

STATE OF NORTH CAROLINA
DEPARTMENT OF TRANSPORTATION
RALEIGH

STANDARD WINGS FOR CONCRETE BOX CULVERT

H = 6'-0" SLOPE = 2:1

60° OR 120° SKEW

NORTH CAROLINA PROFESSIONAL SEAL 14047 ENGINEER STEPHEN D. COOK

1/8/14

ASSEMBLED BY : J. MYA	DATE : AUG. 2012
CHECKED BY : S.COOK	DATE : AUG. 2012
DRAWN BY : CCJ 01/00	
CHECKED BY : RWW 03/00	

THE LOUIS BERGER GROUP, Inc.
1001 Wade Avenue, Suite 400
Raleigh, NC 27605-3322

REVISIONS

NO.	BY:	DATE:	NO.	BY:	DATE:
1			3		
2			4		

SHEET NO. C-5

TOTAL SHEETS 8

STD. NO. CW6006

G:\OR Projects\OR1100 - NCDOT Group W\430356\Structures\430356_RCBC_05.dgn
1/8/2014 1100_PDF_half_pltcfg 1100_str.tbl

NOTES:

SILLS/BAFFLES ARE TO BE 1.0 FT. WIDE, CAST SEPARATELY AND ATTACHED BY DOWELS.

TOP OF LOW FLOW SILLS/BAFFLES SHOULD MATCH STREAM BED ELEVATION IN LOW FLOW CHANNEL OF STREAM.

CLASS B RIP RAP MAY BE USED TO SUPPLEMENT NATURAL BED MATERIAL.

DO NOT SET ELEVATION OF HIGH SILL/BAFFLES ABOVE BANK FULL.

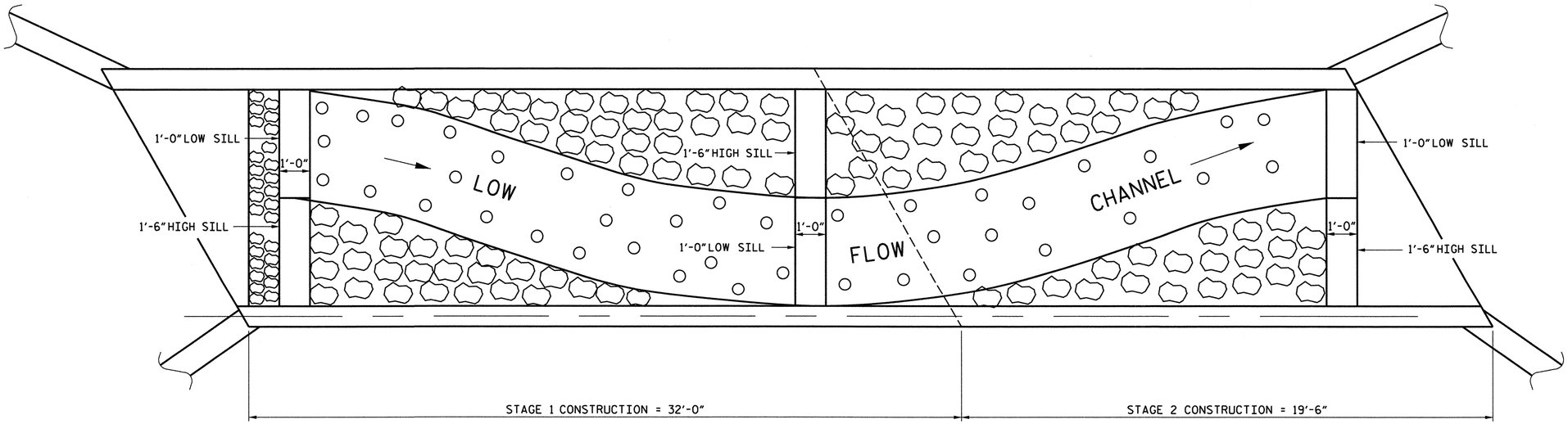

PLAN

SILL QUANTITIES STAGE 1					
BAR	NO.	SIZE	TYPE	LENGTH	WEIGHT
D1	10	#6	STR	2'-0"	30
D2	10	#6	STR	1'-6"	23
REINFORCING STEEL					53 LBS
CLASS A CONCRETE					0.9 CY
RIP RAP CLASS B					15 TONS

SILL QUANTITIES STAGE 2					
BAR	NO.	SIZE	TYPE	LENGTH	WEIGHT
D1	5	#6	STR	2'-0"	15
D2	5	#6	STR	1'-6"	11
REINFORCING STEEL					26 LBS
CLASS A CONCRETE					0.5 CY
RIP RAP CLASS B					10 TONS

TOTAL QUANTITIES	
REINFORCING STEEL	79 LBS
CLASS A CONCRETE	1.4 CY
RIP RAP CLASS B	25 TONS

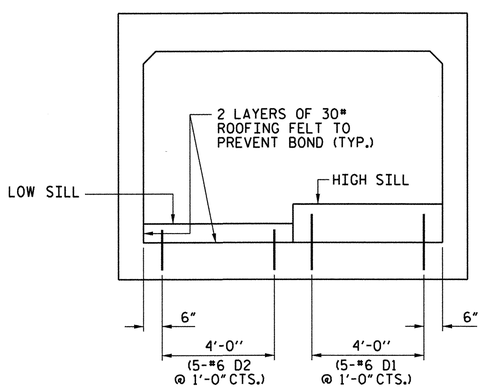

ELEVATION VIEW - INLET

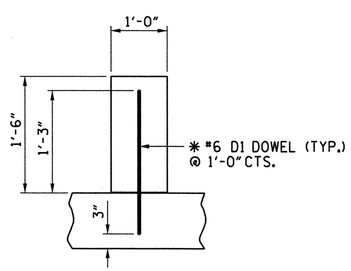

* DOWELS MAY BE PUSHED INTO GREEN CONCRETE AFTER SLAB HAS BEEN FLOAT FINISHED

SECTION THRU 1'-6" SILL

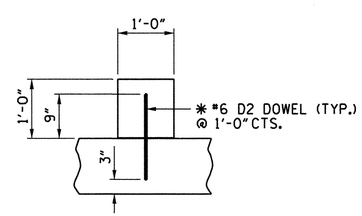

* DOWELS MAY BE PUSHED INTO GREEN CONCRETE AFTER SLAB HAS BEEN FLOAT FINISHED

SECTION THRU 1'-0" SILL

NORTH CAROLINA PROFESSIONAL SEAL 14047 ENGINEER STEPHEN D. COOK
1/8/14

PROJECT NO. 17BP.14.R.40
HAYWOOD COUNTY
STATION: 13+40.00 -L-

SHEET 6 OF 8

STATE OF NORTH CAROLINA
DEPARTMENT OF TRANSPORTATION
RALEIGH

CONCRETE SILL DETAILS

THE LOUIS BERGER GROUP, Inc.
1001 Wade Avenue, Suite 400
Raleigh, NC 27605-3322

REVISIONS						
NO.	BY:	DATE:	NO.	BY:	DATE:	SHEET NO. C-6
1	JAD	8/3/2012	3			TOTAL SHEETS 8
2			4			

DRAWN BY : J. MYA DATE : AUG. 2012
CHECKED BY : S. COOK DATE : AUG. 2012

G:\OR Projects\ORI100 - NCDOT Group W\430356\Structures\430356_RCBC_06.dgn
1/8/2014 1100_PDF_half.pltcfg 1100_str.tbl

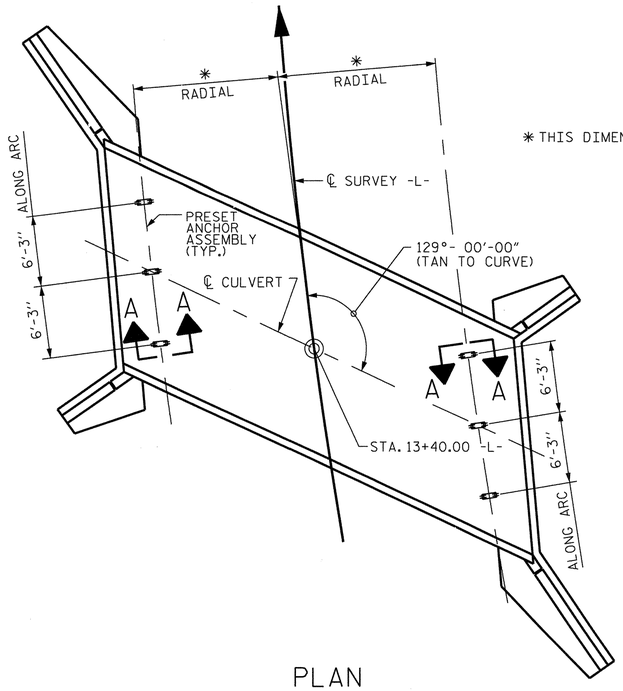

* THIS DIMENSION TO BE FURNISHED BY THE ENGINEER.

PLAN

SHOWING : GUARDRAIL ANCHOR ASSEMBLY SPACING.

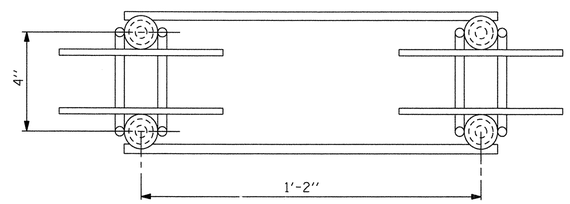

PLAN

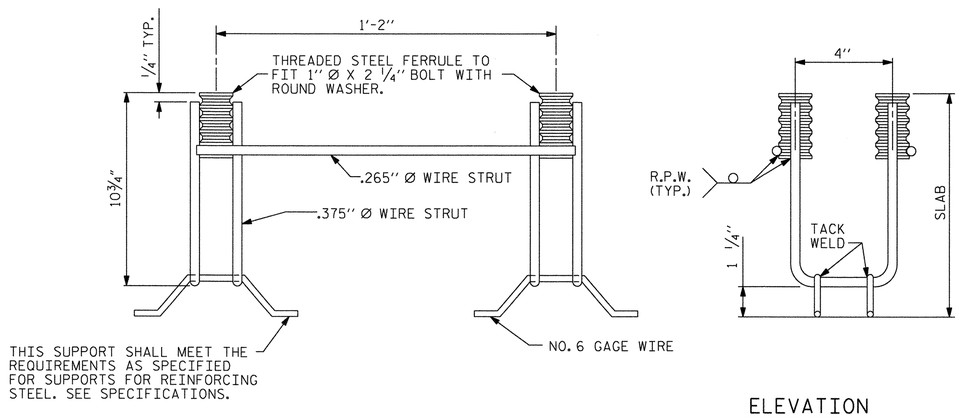

ELEVATION

GUARDRAIL ANCHOR ASSEMBLY FOR CULVERTS

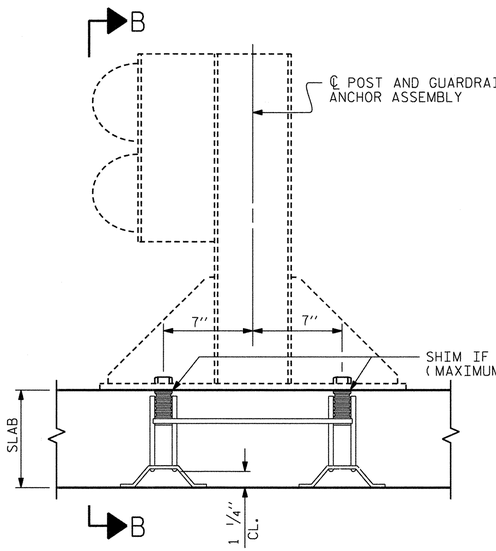

SECTION A-A

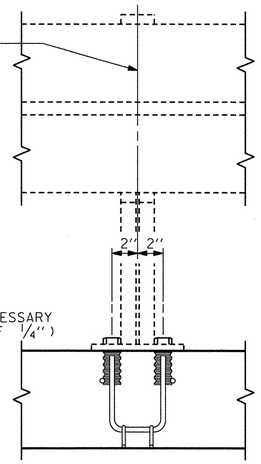

SECTION B-B

NOTES

THE GUARDRAIL ANCHOR ASSEMBLY FOR CULVERTS SHALL CONSIST OF THE FOLLOWING COMPONENTS :

A. FERRULES SHALL BE MADE FROM STEEL MEETING THE REQUIREMENTS OF AASHTO M169, GRADE 12L14 AND SHALL HAVE A MINIMUM LENGTH OF THREADS OF 2 1/2".

B. 4 - 1" Ø X 2 1/4" BOLTS WITH WASHERS, BOLTS SHALL CONFORM TO THE REQUIREMENTS OF ASTM A307. BOLTS AND WASHERS SHALL BE GALVANIZED. (AT THE CONTRACTOR'S OPTION, STAINLESS STEEL BOLTS AND WASHERS MAY BE USED AS AN ALTERNATE FOR THE 1" Ø X 2 1/4" GALVANIZED BOLTS AND WASHERS. THEY SHALL CONFORM TO OR EXCEED THE MECHANICAL REQUIREMENTS OF ASTM A307. THE USE OF THIS ALTERNATE SHALL BE APPROVED BY THE ENGINEER.)

C. WIRE STRUTS SHOWN IN THE GUARDRAIL ANCHOR ASSEMBLY FOR CULVERTS DETAIL ARE MINIMUM ALLOWABLE SIZE AND SHALL HAVE A MINIMUM TENSILE STRENGTH OF 100,000 P.S.I. AS AN OPTION, A 7/16" Ø WIRE STRUT WITH A MINIMUM TENSILE STRENGTH OF 90,000 PSI IS ACCEPTABLE.

GUARDRAIL ANCHOR ASSEMBLY WITH BOLTS SHALL BE ASSEMBLED IN THE SHOP. BOLT THREADS MAY BE RECUT AS NECESSARY TO INSURE FIT.

THE COST OF THE GUARDRAIL ANCHOR ASSEMBLY FOR CULVERTS COMPLETE IN PLACE, SHALL BE INCLUDED IN THE UNIT CONTRACT PRICE BID FOR CLASS "A" CONCRETE.

FERRULES TO BE PLUGGED DURING POURING OF SLAB AS RECOMMENDED BY THE MANUFACTURER.

AT THE CONTRACTOR'S OPTION, FERRULES WITH OPEN OR CLOSED ENDS MAY BE USED.

PAYMENT FOR GUARDRAIL, POSTS, AND POST BASE PLATES IS INCLUDED IN ROADWAY PAY ITEMS.

SLAB REINFORCING STEEL MAY BE SHIFTED AS NECESSARY TO CLEAR GUARDRAIL ANCHOR ASSEMBLY. CARE SHOULD BE TAKEN TO KEEP THE SHIFTING OF REINFORCING STEEL TO A MINIMUM.

THE CONTRACTOR MAY USE ADHESIVELY ANCHORED ANCHOR BOLTS IN PLACE OF GUARDRAIL ANCHOR ASSEMBLY. LEVEL TWO FIELD TESTING IS REQUIRED, AND THE YIELD LOAD OF THE 1" Ø BOLT IS 21.8 KIPS. FOR ADHESIVELY ANCHORED ANCHOR BOLTS OR DOWELS, SEE STANDARD SPECIFICATIONS.

PROJECT NO. 17BP.14.R.40
HAYWOOD COUNTY
STATION: 13+40.00 -L-

SHEET 7 OF 8

STATE OF NORTH CAROLINA
DEPARTMENT OF TRANSPORTATION
RALEIGH

STANDARD

ANCHORAGE DETAILS FOR GUARDRAIL ANCHOR ASSEMBLY FOR CULVERTS

ASSEMBLED BY : J. MYA	DATE : AUG. 2012
CHECKED BY : S. COOK	DATE : AUG. 2012

DRAWN BY : FCJ 6/88	REV. 7/10/01 LES/RDR
CHECKED BY : ARB 6/88	REV. 5/7/03 RWW/JTE
	REV. 5/1/06R KMM/GM

THE LOUIS BERGER GROUP, Inc.
1001 Wade Avenue, Suite 400
Raleigh, NC 27605-3322

REVISIONS						
NO.	BY:	DATE:	NO.	BY:	DATE:
1			3		
2			4		

SHEET NO. C-7
TOTAL SHEETS 8

STD. NO. GRA1

G:\OR Projects\OR1100 - NCDOT Group W\430356\Structures\430356_RCBC_07.dgn 1100_str.tbl
1/8/2014 1:21:47 PM 1100_PDF_half.pltcfg

LOAD AND RESISTANCE FACTOR RATING (LRFR) SUMMARY FOR REINFORCED CONCRETE BOX CULVERTS

LEVEL		VEHICLE	WEIGHT (W) (TONS)	CONTROLLING LOAD RATING (#)	MINIMUM RATING FACTORS (RF)	TONS = W × RF	STRENGTH I LIMIT STATE									COMMENT NUMBER
							LIVE-LOAD FACTORS (γ_{LL})	MOMENT				SHEAR				
								RATING FACTOR	BOX NO.	ELEMENT TYPE	DISTANCE FROM LEFT END OF ELEMENT (ft)	RATING FACTOR	BOX NO.	ELEMENT TYPE	DISTANCE FROM LEFT END OF ELEMENT (ft)	
DESIGN LOAD RATING		HL-93 (INVENTORY)	N/A	1	1.12	--	1.75	3.52	1	TOP SLAB	11.33	1.12	1	TOP SLAB	11.33	
		HL-93 (OPERATING)	N/A		1.46	--	1.35	4.56	1	TOP SLAB	11.33	1.46	1	TOP SLAB	11.33	
		HS-20 (INVENTORY)	36.000	2	1.49	53.64	1.75	4.62	1	TOP SLAB	11.33	1.49	1	TOP SLAB	11.33	
		HS-20 (OPERATING)	36.000		1.93	69.48	1.35	5.99	1	TOP SLAB	11.33	1.93	1	TOP SLAB	11.33	
LEGAL LOAD RATING	SINGLE VEHICLE (SV)	SNSH	13.500		2.71	36.59	1.40	8.10	1	TOP SLAB	11.33	2.71	1	TOP SLAB	11.33	
		SNGARBS2	20.000		2.53	50.60	1.40	7.64	1	TOP SLAB	11.33	2.53	1	TOP SLAB	11.33	
		SNAGRIS2	22.000		2.71	59.62	1.40	8.10	1	TOP SLAB	11.33	2.71	1	TOP SLAB	11.33	
		SNCOTTS3	27.250	3	1.50	40.88	1.40	4.81	1	TOP SLAB	11.33	1.50	1	TOP SLAB	11.33	
		SNAGGRS4	34.925		1.64	57.28	1.40	7.58	1	BOTTOM SLAB	11.33	1.64	1	BOTTOM SLAB	11.33	
		SNS5A	35.550		1.74	61.86	1.40	7.97	1	BOTTOM SLAB	11.33	1.74	1	BOTTOM SLAB	11.33	
		SNS6A	39.950		1.74	69.51	1.40	7.96	1	BOTTOM SLAB	11.33	1.74	1	BOTTOM SLAB	11.33	
		SNS7B	42.000		1.74	73.08	1.40	7.96	1	BOTTOM SLAB	11.33	1.74	1	BOTTOM SLAB	11.33	
	TRUCK TRACTOR SEMI-TRAILER (TTST)	TNAGRIT3	33.000		2.39	78.87	1.40	8.54	1	BOTTOM SLAB	11.33	2.39	1	BOTTOM SLAB	11.33	
		TNT4A	33.075		1.80	59.54	1.40	5.65	1	TOP SLAB	11.33	1.80	1	TOP SLAB	11.33	
		TNT6A	41.600		1.75	72.80	1.40	8.03	1	BOTTOM SLAB	11.33	1.75	1	BOTTOM SLAB	11.33	
		TNT7A	42.000		1.79	75.18	1.40	5.66	1	TOP SLAB	11.33	1.79	1	TOP SLAB	11.33	
		TNT7B	42.000		1.74	73.08	1.40	7.93	1	BOTTOM SLAB	11.33	1.74	1	BOTTOM SLAB	11.33	
		TNAGRIT4	43.000		1.80	77.40	1.40	5.65	1	TOP SLAB	11.33	1.80	1	TOP SLAB	11.33	
		TNAGT5A	45.000		1.82	81.90	1.40	5.66	1	TOP SLAB	11.33	1.82	1	TOP SLAB	11.33	
		TNAGT5B	45.000		1.80	81.00	1.40	5.65	1	TOP SLAB	11.33	1.80	1	TOP SLAB	11.33	

LOAD FACTORS:

DESIGN LOAD RATING FACTORS

LOAD TYPE	MAX FACTOR	MIN FACTOR
DC	1.25	0.90
DW	1.50	0.65
EV	1.30	0.90
EH	1.35	0.90
ES	1.35	0.90
LS	1.75	--
WA	1.00	--

NOTE:

RATING FACTORS ARE BASED ON THE STRENGTH I LIMIT STATE.

COMMENTS:

1.
2.
3.
4.

(#) CONTROLLING LOAD RATING

(1) DESIGN LOAD RATING (HL-93)

(2) DESIGN LOAD RATING (HS-20)

(3) LEGAL LOAD RATING **

** SEE CHART FOR VEHICLE TYPE

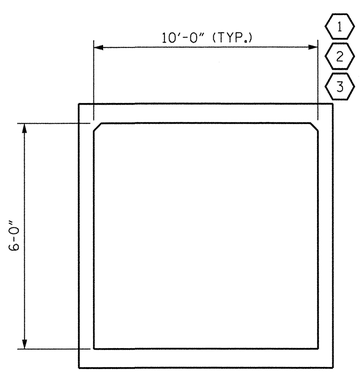

BOX 1

LRFR SUMMARY

(LOOKING DOWNSTREAM)

PROJECT NO. 17BP.14.R.40

HAYWOOD COUNTY

STATION: 13+40.00 -L-

SHEET 8 OF 8

STATE OF NORTH CAROLINA
DEPARTMENT OF TRANSPORTATION
RALEIGH

STANDARD

LRFR SUMMARY FOR REINFORCED CONCRETE BOX CULVERTS (NON-INTERSTATE TRAFFIC)

NORTH CAROLINA PROFESSIONAL SEAL 14047 ENGINEER STEPHEN D. COOK
1/8/14

THE LOUIS BERGER GROUP, Inc.
1001 Wade Avenue, Suite 400
Raleigh, NC 27605-3322

REVISIONS								SHEET NO.
NO.	BY:	DATE:		NO.	BY:	DATE:		C-8
1				3				TOTAL SHEETS
2				4				8

STD. NO. LRFR5

ASSEMBLED BY : J. MYA		DATE : AUG. 2012	
CHECKED BY : S. COOK		DATE : AUG. 2012	
DRAWN BY : WMC 7/11	REV. 10/1/11	MAA/GM	
CHECKED BY : GM 7/11			

G:\OR Projects\OR1100 - NCDOT Group W\430356\Structures\430356_RCBC_08.dgn
1/8/2014 1:21:49 PM 1100_PDF_half.pltcfg 1100_str.tbl