CONTRACT: DN00217

TIP PROJECT: BD-5114S

STATE OF NORTH CAROLINA
DIVISION OF HIGHWAYS

JACKSON COUNTY

STATE	STATE PROJECT REFERENCE NO.	SHEET NO.	TOTAL SHEETS
N.C.	BD-5114S	1	

STATE PROJ. NO.	F.A. PROJ. NO.	DESCRIPTION
45360.1.19	BRZ-1001(53)	P.E.
45360.2.19	BRZ-1001(53)	R/W
45360.3.FD19	BRZ-1001(53)	CONST.

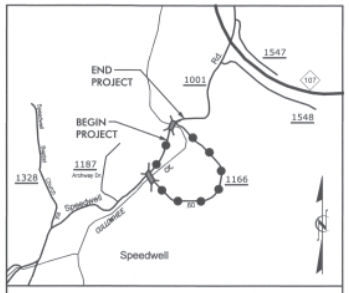

VICINITY MAP

DETOUR ROUTE

LOCATION: BRIDGE NO. 53 OVER CULLOWHEE CREEK ON SR 1001 (SPEEDWELL RD.)

TYPE OF WORK: GRADING, DRAINAGE, PAVING, AND STRUCTURE

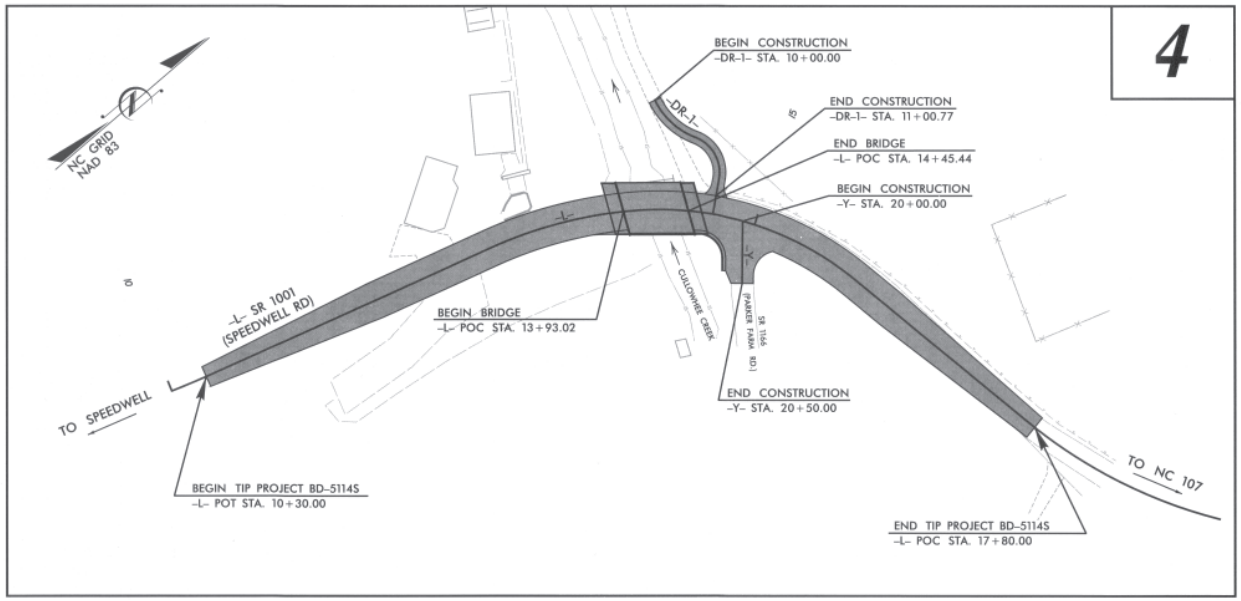

V&M
Vaughn & Melton
Consulting Engineers
Asheville, North Carolina 828-253-0796
Charlotte, North Carolina 704-357-0488
Tri-Cities, Tennessee 423-467-9411
Knoxville, Tennessee 865-546-5800
Middlesboro, Kentucky 606-248-6600
Spartanburg, South Carolina 864-574-4775

Copyright © 2006 Vaughn & Melton, Inc. All Rights Reserved

GRAPHIC SCALES

PLANS: 30 15 0 30 60

PROFILE (HORIZONTAL): 30 15 0 30 60

PROFILE (VERTICAL): 6 3 0 6 12

DESIGN DATA

ADT 2008 = 4300
ADT 2025 = 8600

T = 6 %
V = 40 MPH

FUNC CLASS = MINOR COLLECTOR

PROJECT LENGTH

LENGTH ROADWAY TIP PROJECT BD-5114S = 0.132 MI
LENGTH STRUCTURE TIP PROJECT BD-5114S = 0.010 MI
TOTAL LENGTH OF TIP PROJECT BD-5114S = 0.142 MI

Prepared In the Office of:
VAUGHN & MELTON
1318-F PATTON AVE.
ASHEVILLE NC, 28806
FOR THE NORTH CAROLINA DIVISION OF HIGHWAYS

2012 STANDARD SPECIFICATIONS

RIGHT OF WAY DATE:
OCTOBER 21, 2011

LETTING DATE:

HARDY WILLIS, PE
PROJECT ENGINEER

AARON CARVER, PE
PROJECT DESIGN ENGINEER

NCDOT CONTACT:
JOSH DEYTON, PE
DIVISION 14 BRIDGE PROJECT MANAGER

HYDRAULICS ENGINEER

Bradley S Ridnour, PE 1/31/14
SIGNATURE: P.E.

NORTH CAROLINA PROFESSIONAL SEAL 033023 ENGINEER BRADLEY S. RIDNOUR

ROADWAY DESIGN ENGINEER

1/31/14
SIGNATURE: P.E.

NORTH CAROLINA PROFESSIONAL SEAL 030453 ENGINEER AARON C. CARVER

DIVISION OF HIGHWAYS
STATE OF NORTH CAROLINA

STATE OF NORTH CAROLINA DEPARTMENT OF TRANSPORTATION

$$$$$SYSTIME$$$$
$$$$$$$$$$$$$$$$DGN$$$$$$$$$$$$$$$$$$$$
$$$$USERNAME$$$$

PROJECT REFERENCE NO.	SHEET NO.
BD-5145	1-A

ROADWAY DESIGN ENGINEER

NORTH CAROLINA PROFESSIONAL ENGINEER SEAL 030453 JAMES C. CARVER

7/10/14

INDEX OF SHEETS

SHEET NUMBER	SHEET
1	TITLE SHEET
1-A	INDEX OF SHEETS, GENERAL NOTES, AND LIST OF STANDARD DRAWINGS
1-B	CONVENTIONAL SYMBOLS
1-C	SURVEY CONTROL SHEET
2	PAVEMENT SCHEDULE, TYPICAL SECTIONS, AND WEDGING DETAILS
2A	MODIFIED CONCRETE FLUME DETAIL
3	SUMMARY OF QUANTITIES
3A	SUMMARY OF DRAINAGE QUANTITIES, SUMMARY OF GUARDRAIL, AND ASPHALT PAVEMENT REMOVAL SUMMARY
3B	EARTHWORK SUMMARY
4	PLAN AND PROFILE SHEET
5	RIGHT OF WAY PLAN SHEET
TMP-1 THRU TMP-4	TRAFFIC MANAGEMENT PLANS
SD-1	SPECIAL SIGN DESIGN
SD-2	SPECIAL SIGN DESIGN
EC-1 THRU EC-3	EROSION CONTROL PLANS
UC-1 THRU UC-5	UTILITIES BY CONSTRUCTION PLANS
UO-1 THRU UO-2	UTILITIES BY OTHERS PLANS
X-0	CROSS-SECTION SUMMARY
X-1 THRU X-9	CROSS-SECTIONS
S-1 THRU S-21	STRUCTURE PLANS

GENERAL NOTES:

2012 SPECIFICATIONS
EFFECTIVE: 01-17-12

GRADE LINE:
GRADING AND SURFACING OR RESURFACING AND WIDENING:

THE GRADE LINES SHOWN DENOTE THE FINISHED ELEVATION OF THE PROPOSED SURFACING AT GRADE POINTS SHOWN ON THE TYPICAL SECTIONS. WHERE NO GRADE LINES ARE SHOWN, THE PROFILES SHOWN DENOTE THE TOP ELEVATION OF THE EXISTING PAVEMENT ALONG THE CENTER LINE OF SURVEY ON WHICH THE PROPOSED RESURFACING WILL BE PLACED. GRADE LINES MAY BE ADJUSTED BY THE ENGINEER IN ORDER TO SECURE A PROPER TIE-IN.

CLEARING:

CLEARING ON THIS PROJECT SHALL BE PERFORMED TO THE LIMITS ESTABLISHED BY METHOD II.

SUPERELEVATION:

ALL CURVES ON THIS PROJECT SHALL BE SUPERELEVATED IN ACCORDANCE WITH STD. NO. 225.04 USING THE RATE OF SUPERELEVATION AND RUNOFF SHOWN ON THE PLANS. SUPERELEVATION IS TO BE REVOLVED ABOUT THE GRADE POINTS SHOWN ON THE TYPICAL SECTIONS.

SHOULDER CONSTRUCTION:

ASPHALT, EARTH, AND CONCRETE SHOULDER CONSTRUCTION ON THE HIGH SIDE OF SUPERELEVATED CURVES SHALL BE IN ACCORDANCE WITH STD. NO. 560.01.

UNDERDRAINS:

UNDERDRAINS SHALL BE CONSTRUCTED IN ACCORDANCE WITH STD. NO. 815.03 AT LOCATIONS DIRECTED BY THE ENGINEER.

GUARDRAIL:

THE GUARDRAIL LOCATIONS SHOWN ON THE PLANS MAY BE ADJUSTED DURING CONSTRUCTION AS DIRECTED BY THE ENGINEER. THE CONTRACTOR SHOULD CONSULT WITH THE ENGINEER PRIOR TO ORDERING GUARDRAIL MATERIAL.

SUBSURFACE PLANS:

NO SUBSURFACE PLANS ARE AVAILABLE ON THIS PROJECT. THE CONTRACTOR SHOULD MAKE HIS OWN INVESTIGATION AS TO THE SUBSURFACE CONDITIONS.

END BENTS:

THE ENGINEER SHALL CHECK THE STRUCTURE END BENT PLANS, DETAILS, AND CROSS-SECTION PRIOR TO SETTING OF THE SLOPE STAKES FOR THE EMBANKMENT OR EXCAVATION APPROACHING A BRIDGE.

UTILITIES:

UTILITY OWNERS ON THIS PROJECT ARE: WESTERN CAROLINA UNIVERSITY, FRONTIER COMMUNICATIONS, AND TUCKASEEGEE WATER AND SEWER AUTHORITY

RIGHT-OF-WAY MARKERS:

ALL RIGHT-OF-WAY MARKERS ON THIS PROJECT SHALL BE PLACED BY CONTRACT IN ACCORDANCE WITH SECTION 801 OF THE 2012 NORTH CAROLINA STANDARD SPECIFICATIONS FOR ROADS AND STRUCTURES.

2012 ROADWAY ENGLISH STANDARD DRAWINGS

The following Roadway Standards as appear in "Roadway Standard Drawings" Highway Design Branch - N. C. Department of Transportation - Raleigh, N. C., Dated January 17, 2012 are applicable to this project and by reference hereby are considered a part of these plans:

STD.NO.	TITLE
DIVISION 2 - EARTHWORK	
200.02	Method of Clearing - Method II
225.02	Guide for Grading Subgrade - Secondary and Local
225.04	Method of Obtaining Superelevation - Two Lane Pavement
DIVISION 3 - PIPE CULVERTS	
300.01	Method of Pipe Installation - Method 'A'
DIVISION 4 - MAJOR STRUCTURES	
422.11	Bridge Approach Fills
DIVISION 5 - SUBGRADE, BASES AND SHOULDERS	
560.01	Method of Shoulder Construction - High Side of Superelevated Curve - Method I
DIVISION 6 - ASPHALT BASES AND PAVEMENTS	
654.01	Pavement Repair
DIVISION 8 - INCIDENTALS	
815.03	Pipe Underdrain and Blind Drain
840.01	Brick Catch Basin - 12" thru 54" Pipe
840.02	Concrete Catch Basin - 12" thru 54" Pipe
840.03	Frames, Grates, and Hood - for Use on Standard Catch Basin
840.14	Concrete Drop Inlet
840.15	Brick Drop Inlet
840.16	Drop Inlet Frame and Grates
840.18	Concrete Grated Drop Inlet Type "B"
840.24	Frames and Narrow Slot Sag Grates
840.25	Anchorage for Frames - Brick or Concrete or Precast
840.27	Brick Grated Drop Inlet Type "B"
840.66	Drainage Structure Steps
846.01	Concrete Curb, Gutter and Curb & Gutter
846.04	Drop Inlet Installation in Shoulder Berm Gutter
848.01	Concrete Sidewalk
848.02	Driveway Turnout - Radius Type
862.01	Guardrail Placement
862.02	Guardrail Installation
862.03	Structure Anchor Units
876.02	Guide for Rip Rap at Pipe Outlets

SYSTEM=BDP DGN=BD5145_01A.DGN

3/15/06

PROJECT REFERENCE NO.	SHEET NO.
BD-5114S	1-B

Note: Not to Scale

**S.U.E. = Subsurface Utility Engineering*

STATE OF NORTH CAROLINA
DIVISION OF HIGHWAYS

CONVENTIONAL PLAN SHEET SYMBOLS

BOUNDARIES AND PROPERTY:

- State Line
- County Line
- Township Line
- City Line
- Reservation Line
- Property Line
- Existing Iron Pin — EIP
- Property Corner
- Property Monument — EPM
- Parcel/Sequence Number — 123
- Existing Fence Line
- Proposed Woven Wire Fence
- Proposed Chain Link Fence
- Proposed Barbed Wire Fence
- Existing Wetland Boundary — WLB
- Proposed Wetland Boundary — WLB
- Existing Endangered Animal Boundary — EAB
- Existing Endangered Plant Boundary — EPB

BUILDINGS AND OTHER CULTURE:

- Gas Pump Vent or U/G Tank Cap
- Sign — S
- Well — W
- Small Mine
- Foundation
- Area Outline
- Cemetery
- Building
- School
- Church
- Dam

HYDROLOGY:

- Stream or Body of Water
- Hydro, Pool or Reservoir
- Jurisdictional Stream — JS
- Buffer Zone 1 — BZ 1
- Buffer Zone 2 — BZ 2
- Flow Arrow
- Disappearing Stream
- Spring
- Swamp Marsh
- Proposed Lateral, Tail, Head Ditch — FLOW
- False Sump

RAILROADS:

- Standard Gauge — CSX TRANSPORTATION
- RR Signal Milepost — MILEPOST 35
- Switch — SWITCH
- RR Abandoned
- RR Dismantled

RIGHT OF WAY:

- Baseline Control Point
- Existing Right of Way Marker
- Existing Right of Way Line
- Proposed Right of Way Line — RW
- Proposed Right of Way Line with Iron Pin and Cap Marker — RW
- Proposed Right of Way Line with Concrete or Granite Marker — RW
- Existing Control of Access — CA
- Proposed Control of Access — CA
- Existing Easement Line — E
- Proposed Temporary Construction Easement — E
- Proposed Temporary Drainage Easement — TDE
- Proposed Permanent Drainage Easement — PDE
- Proposed Permanent Utility Easement — PUE

ROADS AND RELATED FEATURES:

- Existing Edge of Pavement
- Existing Curb
- Proposed Slope Stakes Cut — C
- Proposed Slope Stakes Fill — F
- Proposed Wheel Chair Ramp — WCR
- Proposed Wheel Chair Ramp Curb Cut — WCC
- Curb Cut for Future Wheel Chair Ramp — CCFR
- Existing Metal Guardrail
- Proposed Guardrail
- Existing Cable Guiderail
- Proposed Cable Guiderail
- Equality Symbol
- Pavement Removal

VEGETATION:

- Single Tree
- Single Shrub
- Hedge
- Woods Line
- Orchard
- Vineyard — Vineyard

EXISTING STRUCTURES:

MAJOR:

- Bridge, Tunnel or Box Culvert — CONC
- Bridge Wing Wall, Head Wall and End Wall — CONC WW

MINOR:

- Head and End Wall — CONC HW
- Pipe Culvert
- Footbridge
- Drainage Box: Catch Basin, DI or JB — CB
- Paved Ditch Gutter
- Storm Sewer Manhole — S
- Storm Sewer — S

UTILITIES:

POWER:

- Existing Power Pole
- Proposed Power Pole
- Existing Joint Use Pole
- Proposed Joint Use Pole
- Power Manhole — P
- Power Line Tower
- Power Transformer
- U/G Power Cable Hand Hole — HH
- H-Frame Pole
- Recorded U/G Power Line — P
- Designated U/G Power Line (S.U.E.*) — P

TELEPHONE:

- Existing Telephone Pole
- Proposed Telephone Pole
- Telephone Manhole — T
- Telephone Booth
- Telephone Pedestal — T
- Telephone Cell Tower
- U/G Telephone Cable Hand Hole — HH
- Recorded U/G Telephone Cable — T
- Designated U/G Telephone Cable (S.U.E.*) — T
- Recorded U/G Telephone Conduit — TC
- Designated U/G Telephone Conduit (S.U.E.*) — TC
- Recorded U/G Fiber Optics Cable — T FO
- Designated U/G Fiber Optics Cable (S.U.E.*) — T FO

WATER:

- Water Manhole — W
- Water Meter
- Water Valve
- Water Hydrant
- Recorded U/G Water Line — W
- Designated U/G Water Line (S.U.E.*) — W
- Above Ground Water Line — A/G Water

TV:

- TV Satellite Dish
- TV Pedestal — C
- TV Tower
- U/G TV Cable Hand Hole — HH
- Recorded U/G TV Cable — TV
- Designated U/G TV Cable (S.U.E.*) — TV
- Recorded U/G Fiber Optic Cable — TV FO
- Designated U/G Fiber Optic Cable (S.U.E.*) — TV FO

GAS:

- Gas Valve
- Gas Meter
- Recorded U/G Gas Line — G
- Designated U/G Gas Line (S.U.E.*) — G
- Above Ground Gas Line — A/G Gas

SANITARY SEWER:

- Sanitary Sewer Manhole
- Sanitary Sewer Cleanout
- U/G Sanitary Sewer Line — SS
- Above Ground Sanitary Sewer — A/G Sanitary Sewer
- Recorded SS Forced Main Line — FSS
- Designated SS Forced Main Line (S.U.E.*) — FSS

MISCELLANEOUS:

- Utility Pole
- Utility Pole with Base
- Utility Located Object
- Utility Traffic Signal Box — S
- Utility Unknown U/G Line — ?UTL
- U/G Tank; Water, Gas, Oil
- A/G Tank; Water, Gas, Oil
- U/G Test Hole (S.U.E.*)
- Abandoned According to Utility Records — AATUR
- End of Information — E.O.I.

PROJECT REFERENCE NO.	SHEET NO.
BD-5114S	1-C
Location and Surveys	

SURVEY CONTROL SHEET BD-5114S

BL

POINT	DESC.	NORTH	EAST	ELEVATION	L STATION	OFFSET
10	BL-10	585942.4502	752519.7217	2136.21	10+53.21	18.24 RT
11	BL-11	586301.7846	752670.8668	2133.39	14+59.95	20.21 RT
12	BL-12	586556.6930	753221.6587	2137.71	OUTSIDE PROJECT LIMITS	

****
BM1 ELEVATION - 2130.49
N 586372 E 752511
-L- STATION 14+11.98 143.95' LEFT
12" SPIKE IN BASE PP
****

FINAL PROPOSED RIGHT OF WAY MONUMENT PSD

ALIGN	STATION	OFFSET	NORTH	EAST
L	10+01.19	-9.52	585928.0111	752486.5726
L	10+30.00	-20.00	585931.0293	752476.5401
L	10+01.67	9.48	585922.5357	752504.7728
L	10+30.00	40.00	585913.7441	752533.9963
L	12+80.00	-30.00	586173.6894	752536.7331
L	12+81.89	40.00	586155.9566	752604.4762
L	13+65.43	-45.00	586266.2389	752559.6903
L	14+01.12	40.00	586250.4346	752650.5057
L	14+71.70	40.00	586293.0674	752691.4208
L	14+82.44	-45.00	586367.5674	752649.1236
L	15+28.77	-21.22	586373.5762	752706.3018
L	15+34.67	40.00	586320.1389	752736.7003
L	15+93.51	40.00	586334.4875	752783.8817
L	17+80.00	40.00	586367.6539	752968.2161
L	17+80.00	11.26	586395.8337	752962.5693

FINAL PROPOSED PERMANENT UTILITY EASEMENT

ALIGN	STATION	OFFSET	NORTH	EAST
L	12+67.81	-138.46	586192.2720	752429.1838
L	12+84.10	-195.85	586225.1264	752378.9822
L	14+04.36	-113.73	586344.0249	752528.4951
L	14+18.72	-175.93	586400.2467	752493.5817
L	14+67.52	-45.00	586356.8909	752635.1280
L	14+96.76	95.93	586257.9508	752738.5358
L	15+57.61	66.66	586301.7545	752763.0957
L	15+50.92	150.20	586221.6089	752786.9438
L	16+08.99	112.27	586266.0867	752811.8779
L	16+39.75	74.89	586308.3116	752835.5527
L	16+18.04	-58.81	586436.0758	752790.5714
L	16+31.70	-22.58	586402.8278	752810.4152
L	19+09.04	94.62	586369.9277	753127.6898
L	19+34.87	12.99	586454.7501	753109.7974

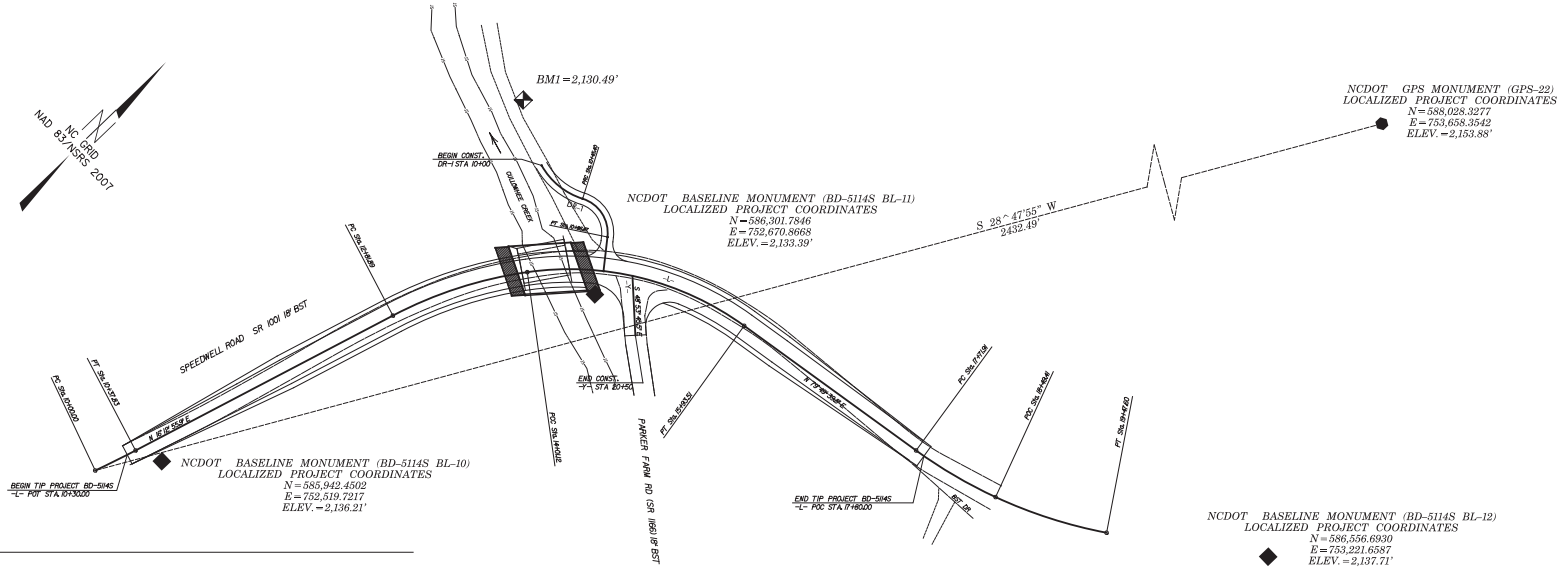

NOTES:

1. THE CONTROL DATA FOR THIS PROJECT CAN BE FOUND ELECTRONICALLY BY SELECTING PROJECT CONTROL DATA AT:
HTTP://WWW.NCDOT.ORG/DOH/PRECONSTRUCT/HIGHWAY/LOCATION/PROJECT/

THE FILES TO BE FOUND ARE AS FOLLOWS:
BD-5114S_LS_CONTROL_120509.TXT

SITE CALIBRATION INFORMATION HAS NOT BEEN PROVIDED FOR THIS PROJECT. IF FURTHER INFORMATION IS NEEDED, PLEASE CONTACT THE LOCATION AND SURVEYS UNIT.

● INDICATES GEODETIC CONTROL MONUMENTS USED OR SET FOR HORIZONTAL PROJECT CONTROL BY THE NCDOT LOCATION AND SURVEYS UNIT.
PROJECT CONTROL ESTABLISHED USING GLOBAL POSITIONING SYSTEM.
NETWORK ESTABLISHED FROM NGS ONLINE POSITIONING SERVICE (OPUS)

FINAL -L-

TYPE	STATION	NORTH	EAST
PC	10+00.00	585896.6979	752486.5444
PT	10+37.83	585932.7787	752497.9141
PC	12+81.89	586167.1235	752566.0665
PCC	14+01.12	586273.7958	752618.0364
PT	15+93.51	586373.8587	752776.8174
PC	17+71.91	586405.3658	752952.4098
PCC	18+49.41	586426.3322	753026.8895
PT	19+47.60	586472.7758	753113.1230

NOTE: DRAWING NOT TO SCALE

DATUM DESCRIPTION

THE LOCALIZED COORDINATE SYSTEM DEVELOPED FOR THIS PROJECT IS BASED ON THE STATE PLANE COORDINATES ESTABLISHED BY NCDOT FOR MONUMENT "GPS-22"
WITH NAD 83/NSRS 2007 STATE PLANE GRID COORDINATES OF NORTHING: 588028.3277(ft) EASTING: 753658.3542(ft)
ELEVATION: 2153.88(ft)
THE AVERAGE COMBINED GRID FACTOR USED ON THIS PROJECT (GROUND TO GRID) IS: 0.99977423257
THE N.C. LAMBERT GRID BEARING AND LOCALIZED HORIZONTAL GROUND DISTANCE FROM "GPS-22" TO -L- STATION 10+00.00 IS
S 28°47'55" W 2432.49'
ALL LINEAR DIMENSIONS ARE LOCALIZED HORIZONTAL DISTANCES
VERTICAL DATUM USED IS NAVD 88

6/2/99

PROJECT REFERENCE NO.	SHEET NO.
BD-5114S	2
RW SHEET NO.	
ROADWAY DESIGN ENGINEER	PAVEMENT DESIGN ENGINEER

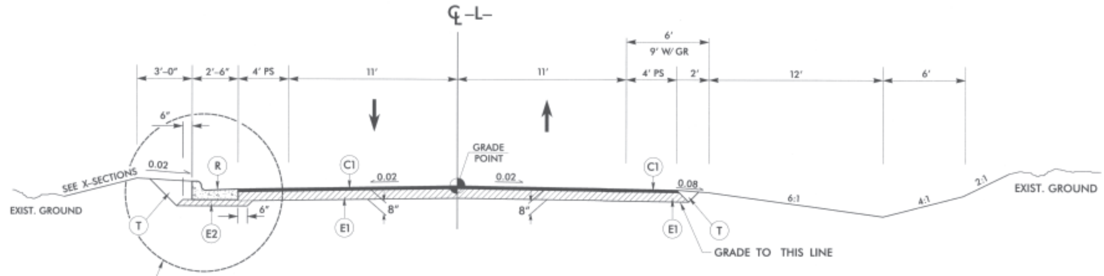

TYPICAL SECTION NO. 1

USE TYPICAL SECTION NO. 1

-L- STA. 10+30.00 TO STA. 13+93.02 (BEGIN BRIDGE)
-L- STA. 14+45.44 (END BRIDGE) TO STA. 17+80.00

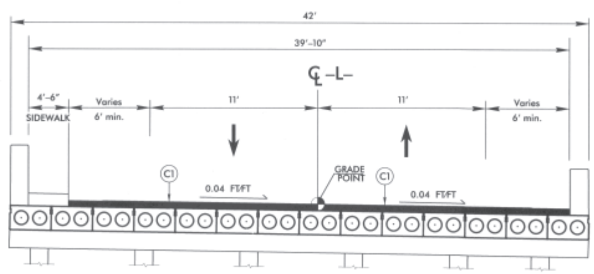

TYPICAL SECTION NO. 2

USE TYPICAL SECTION NO. 2

-L- STA. 13+93.02 (BEGIN BRIDGE) TO
-L- STA. 14+45.44 (END BRIDGE)

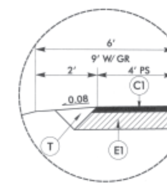

USE DETAIL A

-L- STA. 14+45.44 (END BRIDGE) TO STA. 17+80.00

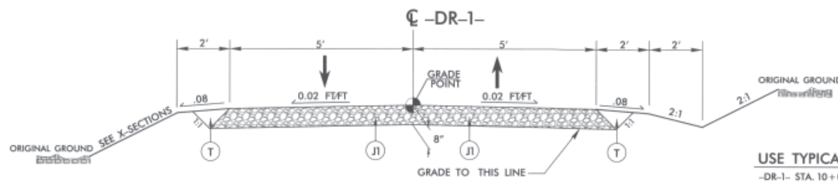

TYPICAL SECTION NO. 3

USE TYPICAL SECTION NO. 3

-DR-1- STA. 10+00.00 TO STA. 11+00.77

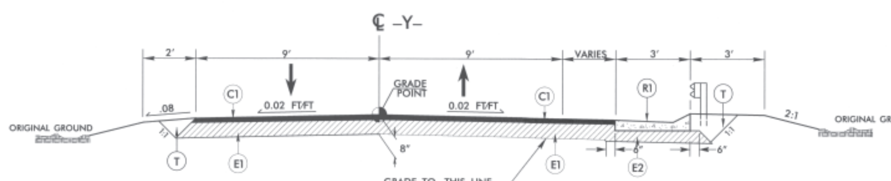

TYPICAL SECTION NO. 4

USE TYPICAL SECTION NO. 4

-Y- STA. 20+00.00 TO STA. 20+50.00

PAVEMENT SCHEDULE	
C1	PROP. APPROX. 3" ASPHALT CONCRETE SURFACE COURSE, TYPE S9.5B, AT AN AVERAGE RATE OF 168 LBS. PER SQ. YD. IN EACH OF TWO LAYERS.
C2	PROP. VAR. DEPTH ASPHALT CONCRETE SURFACE COURSE, TYPE S9.5B, AT AN AVERAGE RATE OF 112 LBS. PER SQ.YD. PER 1" DEPTH. TO BE PLACED IN LAYERS NOT TO EXCEED 2" IN DEPTH.
E1	PROP. APPROX. 5" ASPHALT CONCRETE BASE COURSE, TYPE B25.0B, AT AN AVERAGE RATE OF 570 LBS. PER SQ. YD.
E2	PROP. APPROX. 4" ASPHALT CONCRETE INTERMEDIATE COURSE, TYPE B25.0B, AT AN AVERAGE RATE OF 456 LBS. PER SQ. YD.
E3	PROP. VAR. DEPTH ASPHALT CONCRETE BASE COURSE, TYPE B25.0B, AT AN AVERAGE RATE OF 114 LBS. PER SQ.YD. PER 1" DEPTH. TO BE PLACED IN LAYERS NOT LESS THAN 3" IN DEPTH OR GREATER THAN 5½" IN DEPTH.
J1	8" AGGREGATE BASE COURSE
R	2'-6" CONCRETE CURB AND GUTTER.
R1	SHOULDER BERM GUTTER
T	EARTH MATERIAL
U	EXISTING PAVEMENT
W	PROPOSED WEDGING (SEE APPROPRIATE DETAILS)

NOTE: PAVEMENT EDGE SLOPES ARE 1:1 UNLESS SHOWN OTHERWISE.

PROJECT REFERENCE NO.	SHEET NO.
BD-5114S	2-A

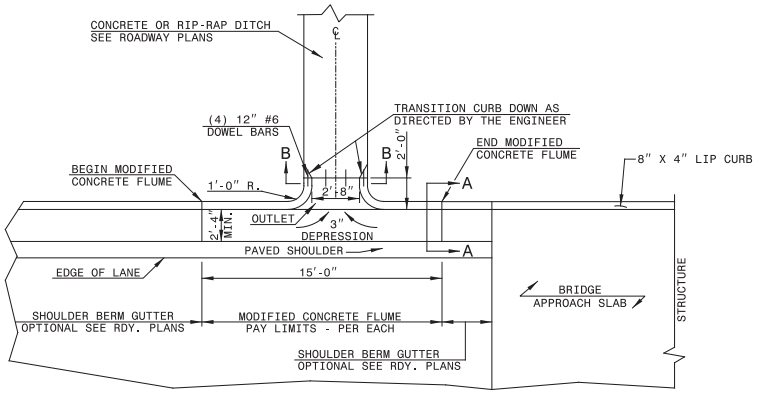

PLAN VIEW

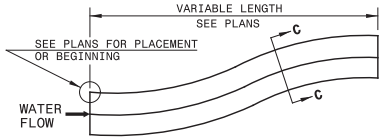

DOWNGRADE OR SAG

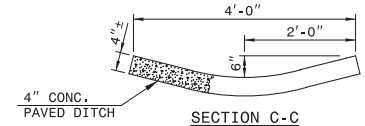

SECTION C-C

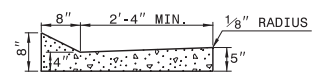

SECTION A-A

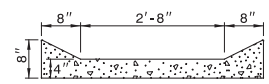

SECTION B-B

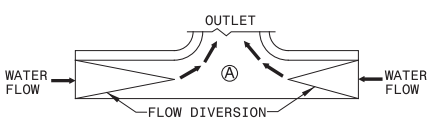

SAG

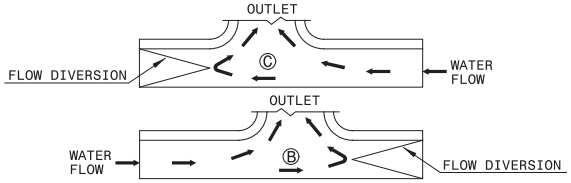

DOWN GRADE

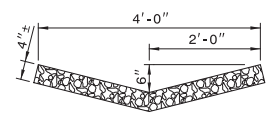

RIP-RAP LINED DITCH

FLOW DIVERSION EXAMPLES

NOTES:

- CONSTRUCT MODIFIED CONCRETE FLUME IN ACCORDANCE WITH THIS DETAIL.
- CONSTRUCT CONCRETE DITCH IN ACCORDANCE WITH STD. DWG. NO. 850.01.
- CONSTRUCT RIP RAP LINED DITCH IN ACCORDANCE WITH THIS DETAIL, IF CALLED FOR IN PLANS.
- CONCRETE OR RIP RAP LINED DITCH SHALL BE THE TYPE AND LENGTH SPECIFIED BY THE ROADWAY PLANS. THE DITCH SHALL TERMINATE AS SHOWN ON THE PLANS. IF NO TERMINATION IS INDICATED PLACE RIP-RAP AT THE END OF THE DITCH AS INDICATED BY STD. DWG. 876.02 FOR AN 18" PIPE. TRANSITIONS FROM THE DITCH TO TERMINATION SHALL BE AS DIRECTED BY THE ENGINEER.
- MODIFICATIONS SHALL BE AS DICTATED BY SITE CONDITIONS AND DIRECTED BY THE ENGINEER.

MODIFIED CONCRETE FLUME

8/17/99

$$$$$SYSTIME$$$$$
$$$$$DGN$$$$$
$$$$$USERNAME$$$$$

PROJECT REFERENCE NO.	SHEET NO.
BD-5114S	3

STATE OF NORTH CAROLINA
DIVISION OF HIGHWAYS

SUMMARY OF QUANTITIES

Line Item	Sec No.	Quantity	Unit	Description
0000100000-N	800	1	LS	Mobilization
0000400000-N	801	1	LS	Construction Surveying
0030000000-N	SP	1	LS	Bridge Approach Fill - Sub Regional Tier (Station 14+19.23)
0043000000-N	226	1	LS	Grading
0057000000-E	226	50	CY	Undercut Excavation
0134000000-E	240	4	CY	Drainage Ditch Excavation
0195000000-E	265	50	CY	Select Granular Material
0196000000-E	270	50	SY	Geotextile for Soil Stabilization
0318000000-E	300	46	Tons	Foundation Conditioning Material, Minor Strs
0335300000-E	305	432	LF	18" Drainage Pipe
0995000000-E	340	77	LF	Pipe Removal
1121000000-E	520	55	Tons	Aggregate Base Course
1220000000-E	545	50	Tons	Incidental Stone Base
1489000000-E	610	680	Tons	Asphalt Conc Base Course Type B25.0B
1519000000-E	610	420	Tons	Asphalt Conc Surface Course Type SF9.5B
1575000000-E	620	55	Tons	Asphalt Binder for Plant Mix
1693000000-E	654	70	Tons	Asphalt Plant Mix, Pavement Repair
2022000000-E	815	83.3	CY	Subdrain Excavation
2033000000-E	815	62.4	CY	Subdrain Fine Aggregate
2044000000-E	815	372	LF	6" Perforated Subdrain Pipe
2070000000-E	815	1	EA	Subdrain Pipe Outlet
2077000000-E	815	6	LF	6" Outlet Pipe (Subdrains)
2286000000-N	840	3	EA	Masonry Drainage Structures
2352000000-N	840	1	EA	Grated Drop Inlet (N.S. Flat) Frame w/ Grates Std. 840.16
2366000000-N	840	1	EA	Grated Drop Inlet (N.S. Sag) Frame w/ 2 Grates Std. 840.24
2374000000-N	840	1	EA	Frame W/ Grate & Hood, STD 840.03 Type 'G'
2549000000-E	846	310	LF	2'-6" Conc Curb & Gutter
2556000000-E	846	50	LF	Shoulder Berm Gutter
2570000000-N	SP	1	EA	Modified Concrete Flume
2612000000-E	848	40	SY	6" Concrete Driveway
3045000000-E	862	37.5	LF	Steel Beam Guardrail, Shop Curved
3150000000-N	862	5	EA	Additional Guardrail Posts
3180000000-N	862	4	EA	Guardrail Anchor Units, TYPE III(Shop Curved)
3195000000-N	862	4	EA	Guardrail Anchor Units, AT-1
3270000000-N	SP	1	EA	Guardrail Anchor Units, Type 350
3360000000-E	863	30.8	LF	Remove Existing Guardrail
3635000000-E	876	8	Tons	Rip Rap, Class II
3649000000-E	876	5	Tons	Rip Rap, Class B
3656000000-E	876	8	SY	Geotextile for Drainage
4400000000-E	1110	515	SF	Work Zone Signs (Stationary)
4405000000-E	1110	96	SF	Work Zone Signs (Portable)
4410000000-E	1110	89	SF	Work Zone Signs (Barricade Mounted)
4430000000-E	1130	30	EA	Drums
4445000000-E	1145	48	LF	Barricades (Type III)
4450000000-E	1150	100	HR	Flagger
4810000000-E	1205	6,000	LF	Paint Pavement Marking Lines (4")
4835000000-E	1205	36	LF	Paint Pavement Marking Lines (24")
5536000000-E	1515	2	EA	2" Valve
5571000000-E	1515	1	EA	2" Tapping Valve
5589200000-E	1515	1	EA	2" Air Release Valve
5709100000-E	1520	325.5	LF	2" Force Main Sewer
5800000000-E	1530	75	LF	Abandon 6" Utility Pipe
5835000000-E	1540	141	LF	6" Encasement Pipe
5871100000-E	1550	33	LF	Trenchless Installation of 2" Sewer Line in Soil
5871110000-E	1550	33	LF	Trenchless Installation of 2" Sewer Line Not in Soil
5877000000-N	SP	1	LS	Pump Station
6000000000-E	1605	1,075	LF	Temporary Silt Fence
6009000000-E	1610	35	Tons	Erosion Control Stone, Class B
6012000000-E	1610	45	Tons	Sediment Control Stone
6015000000-E	1615	1	Acres	Temporary Mulching
6018000000-E	1620	50	Lbs	Seed for Temporary Seeding
6021000000-E	1620	0.25	Tons	Fertilizer for Temporary Seeding
6030000000-E	1630	50	CY	Silt Excavation
6036000000-E	1631	820	SY	Matting for Erosion Control
6042000000-E	1632	175	LF	1/4" Hardware Cloth
6071010000-E	SP	205	LF	Wattle
6071020000-E	SP	15	Lbs	Polyacrylamide (PAM)
6084000000-E	1660	0.5	Acre	Seeding and Mulching
6090000000-E	1661	50	Lbs	Seed for Repair Seeding
6093000000-E	1661	0.25	Tons	Fertilizer for Repair Seeding
6096000000-E	1662	50	Lbs	Seed for Supplemental Seeding
6108000000-E	1665	0.75	Tons	Fertilizer Topdressing
6117000000-N	SP	7	EA	Response for Erosion Control
				STRUCTURAL ITEMS
8035000000-N	402	1	LS	Removal of Existing Structure
8121000000-N	412	1	LF	Unclassified Structure Excavation
8175000000-E	420	9.9	CY	Class AA Concrete (Bridge)
8182000000-E	420	51.6	CY	Class A Concrete (Bridge)
8210000000-N	422	1	LS	Bridge Approach Slabs
8217000000-E	425	6,012	Lbs	Reinforcing Steel (Bridge)
8224000000-E	425	610	Lbs	Epoxy Coated Reinforcing Steel (Bridge)
8364000000-E	450	620	LF	HP 12X53 Steel Piles
8430000000-E	452	1,823	SF	Sheet Pile Retaining Wall
8482000000-E	460	42.25	LF	Three Bar Metal Rail
8505000000-E	460	50.13	LF	Vertical Concrete Barrier Rail
8608000000-E	876	225	Tons	Rip Rap Class II (2'-0" Thick)
8622000000-E	876	250	SY	Geotextile for Drainage
8657000000-N	430	1	LS	Elastomeric Bearings
8762000000-E	430	700	LF	3'-0" X 1'-9" Prestressed Concrete Cored Slabs

5/28/99
$$$$$$SYSTIME$$$$
$$$$$$$$$$$$DGN$$$$$$$$$$$$$$$$$$$$
$$$$USERNAME$$$$

COMPUTED BY: CBC	DATE: 02-06-12
CHECKED BY: RMS	DATE: 02-06-12

PROJECT REFERENCE NO.	SHEET NO.
BD-5114S	3-A

STATE OF NORTH CAROLINA
DIVISION OF HIGHWAYS

RIGHT OF WAY AREA DATA

PARCEL NO.	PROPERTY OWNERS NAMES	TOTAL ACREAGE	AREA TAKEN (sf)	AREA REMAINING RT. (Acre)	AREA REMAINING LT. (Acre)	TEMP. CONST. EASE. (sf)	PERM. DRAIN. EASE. (sf)	PERM. UTIL. EASE. (sf)
1	CARL R. & ANNETTE M. SHELTON	36.890	9,105	36.731	.159	5,053	38	21,181
2	GRADY C. & GRADY D. PARKER	1.270	1,626	1.233		501		2,425
3	JACKSON COUNTY	30.170	712		30.154	647		14,863
4	DAVID J. & KIMBERLY HUDSON	3.812	1,547		3.776	1,930		
5	CHARLES STALLINGS, JR., ET AL.	1.301	4,202		1.205	634	912	6,172
6	CHARLES DAVID & ELOISE DOCKERY STALLINGS	2.610			2.610			3,032
7	CHARLES D. & ELOISE STALLINGS	3.589	12,625	3.299				40,974
8	GRADY C. & HARRIET PARKER	20.550	1,293		20.520			11,125
9	GENERATIONS LAND COMPANY, LLC.	1.860	721	1.843				3,844
10	JONITA S. FLOYD	1.170	1,246	1.141				6,209

PAVEMENT REMOVAL SUMMARY

IN SQUARE YARDS

LINE	LOCATION	ASPHALT REMOVAL	ASPHALT BREAK-UP	CONCRETE REMOVAL	CONCRETE REMOVAL
-L-	10+30 TO 13+97 (BEGIN EXIST. BRIDGE)	722			
-L-	14+36 (END EXIST. BRIDGE) TO 17+80	738			
-Y-	20+11 TO 20+50	76			
	TOTAL	1536			
	SAY	1540			

Approximate quantities only. Unclassified excavation, borrow excavation, fine grading, clearing and grubbing, and removal of existing pavement will be paid for at the contract lump sum price for "grading".

NOTE: Invert Elevations are for Bid Purposes only and shall not be used for project construction stakeout. See "Standard Specifications For Roads and Structures, Section 300-5".

SUB-REGIONAL & REGIONAL
LIST OF PIPES, ENDWALLS, ETC. (FOR PIPES 48" & UNDER)

STATION	LOCATION (LT,RT, OR CL)	STRUCTURE NO. FROM	STRUCTURE NO. TO	TOP ELEVATION	INVERT ELEVATION	INVERT ELEVATION	SLOPE CRITICAL	DRAINAGE PIPE (RCP, CSP, CAAP, HDPE, or PVC) 12"	15"	18"	24"	30"	36"	42"	48"	DO NOT USE RCP	DO NOT USE CSP	DO NOT USE CAAP	DO NOT USE HDPE
-L- 10+36	LT	4-1		2137.78															
		4-1	4-2	2134.12	2130.93					160									
-L- 11+90	LT	4-2		2134.18															
		4-2	4-3	2130.93	2130.31					124									
-L- 13+10	LT	4-3		2134.19															
		4-3	OUT	2130.29	2128.55					88									
-L- 14+68	RT	4-4																	
-Y- 20+32	CL	4-5																	
		4-5	OUT	2129.5	2129.0					60									
TOTAL										432									

STATION	C.S. PIPE 12" (.064)	15" (.064)	18" (.064)	24" (.064)	36" (.079)	42" (.109)	48" (.109)	R.C. PIPE (CLASS III) 15"	18"	24"	30"	36"	42"	48"	R.C. PIPE (CLASS IV) 12"	15"	18"	24"	30"	36"	42"	48"
-L- 10+36																						
-L- 11+90																						
-L- 13+10																						
-L- 14+68																						
-Y- 20+32																						
TOTAL																						

STATION	**" R. C. PIPE (CLASS V)	**" R. C. PIPE CULVERTS, CONTRACTOR DESIGN PIPE	**" R. C. PIPE CULVERTS, CONTRACTOR DESIGN PIPE	15" SIDE DRAIN PIPE	18" SIDE DRAIN PIPE	ENDWALLS STD. 838.01, STD. 838.11 OR STD. 838.80 (UNLESS NOTED OTHERWISE) CU. YDS. R.C.P.	C.S.P.	QUANTITIES FOR DRAINAGE STRUCTURES PER EACH (0' THRU 5.0')	LIN. *FT. A 5.0' THRU 10.0'	B 10.0' AND ABOVE	C.B. STD. 840.01 OR STD. 840.02	FRAME, GRATES AND HOOD STANDARD 840.03 TYPE OF GRATE E	F	G		CONCRETE TRANSITIONAL SECTION CATCH BASIN	DROP INLET		D.I. STD. 840.14 OR STD. 840.15	D.I. FRAME AND GRATES STD. 840.16	G.D.I. TYPE "B" STD. 840.18 OR 840.27	G.D.I. (N.S. SAG) FRAME W/2 GRATES STD. 840.24	MODIFIED CONCRETE FLUME	CORR. STEEL ELBOWS NO. & SIZE	CONC. COLLARS CL. "B" C.Y. STD 840.72	CONC. & BRICK PIPE PLUG, C.Y. STD. 840.71	PIPE REMOVAL LIN.FT.	REMARKS
-L- 10+36								1													1	1						
-L- 11+90								1			1			1														
-L- 13+10								1											1	1							32	
-L- 14+68																							1					
-Y- 20+32																												
																											45	
TOTAL								3			1			1					1	1	1	1	1				77	

ABBREVIATIONS

C.B. CATCH BASIN
N.D.I. NARROW DROP INLET
D.I. DROP INLET
G.D.I. GRATED DROP INLET
G.D.I. (N.S.) GRATED DROP INLET (NARROW SLOT)
J.B. JUNCTION BOX
M.H. MANHOLE
T.B.D.I. TRAFFIC BEARING DROP INLET
T.B.J.B. TRAFFIC BEARING JUNCTION BOX

"N" = DISTANCE FROM EDGE OF LANE TO FACE OF GUARDRAIL.
TOTAL SHOULDER WIDTH = DISTANCE FROM EDGE OF TRAVEL LANE TO SHOULDER BREAK POINT.

"N" = DISTANCE FROM EDGE OF LANE TO FACE OF GUARDRAIL.
TOTAL SHOULDER WIDTH = DISTANCE FROM EDGE OF TRAVEL LANE TO SHOULDER BREAK POINT.
FLARE LENGTH = DISTANCE FROM LAST SECTION OF PARALLEL GUARDRAIL TO END OF GUARDRAIL.
W = TOTAL WIDTH OF FLARE FROM BEGINNING OF TAPER TO END OF GUARDRAIL.
G = GATING IMPACT ATTENUATOR TYPE 350
NG = NON-GATING IMPACT ATTENUATOR TYPE 350

GUARDRAIL SUMMARY

SURVEY LINE	BEG. STA.	END STA.	LOCATION	LENGTH STRAIGHT	LENGTH SHOP CURVED	LENGTH DOUBLE FACED	WARRANT POINT APPROACH END	WARRANT POINT TRAILING END	"N" DIST. FROM E.O.L.	TOTAL SHOUL. WIDTH	FLARE LENGTH APPROACH END	FLARE LENGTH TRAILING END	W APPROACH END	W TRAILING END	ANCHORS XI MOD	XI	GRAU 350	M-350	TYPE III	TYPE III SHOP CURVED	B-77	BIC	AT-1	IMPACT ATTENUATOR TYPE 350 EA	G	NG	SINGLE FACED GUARDRAIL	REMOVE EXISTING GUARDRAIL	REMOVE AND STOCKPILE EXISTING GUARDRAIL	REMARKS
-L-	13+10.38	13+96.19	RT	50	31.25		13+96.19		4	6	50		2.5				1			1										
-L-	13+72.31	13+89.45	LT	6.25	18.75			13+89.45	10	13										1			1							
-L-	14+52.59	14+82.60	RT	6.25	31.25		14+37.95		8	11										1			1							
-L-	14+37.95	14+55.20	LT	6.25	18.75			14+52.59	5	8										1			1							
-L-	14+77.42	14+93.46	LT	6.25	12.5																		1					30.8		
			SUBTOTAL	75	112.5												1			4			4					30.8		
		LESS DEDUCTIONS FOR ANCHORS																												
		GRAU-350 1 @ 50' =		-50																										
		TYPE III 4 @ 18.75' =			-75																									
		AT-1 4 @ 6.25' =		-25																										
		PROJECT TOTALS:		0	37.5																									

ADDITIONAL GUARDRAIL POSTS=5 EA.

6/21/00
$$$$$$SYSTIME$$$$$$
$$$$$$DGN$$$$$$
$$$$$$USERNAME$$$$$$

COMPUTED BY: CBC	DATE: 02-06-12
CHECKED BY: RMS	DATE: 02-06-12

PROJECT REFERENCE NO.	SHEET NO.
BD-5114S	3-B

DIVISION OF HIGHWAYS
STATE OF NORTH CAROLINA

SUMMARY OF EARTHWORK

IN CUBIC YARDS

LOCATION	UNCLASSIFIED EXCAVATION	UNDERCUT	EMBT + %	BORROW	WASTE
SUMMARY NO.1					
-L- STA. 10+30.00 TO STA. 13+93.02 (BEG. BRIDGE)	643		84		559
SUBTOTAL SUMMARY NO.1	643		84		559
SUMMARY NO.2					
-L- STA. 14+45.44 (END BRIDGE) TO STA. 17+80.00	310		78		232
SUBTOTAL SUMMARY NO.2	310		78		232
SUMMARY NO.3					
-DR-1- STA. 10+00.00 TO STA. 11+04.77	21		46	25	
SUBTOTAL SUMMARY NO.3	21		46	25	
PROJECT SUBTOTAL	974		208	25	791
BORROW IN LIEU OF WASTE				-25	-25
GRAND TOTAL	974		208		766
SAY	980				770

CONTINGENCY ITEMS:

INCIDENTAL STONE = 50 TONS

UNDERCUT EXCAVATION = 50 CY

SELECT GRANULAR MATERIAL = 50 CY

GEOTEXTILE FOR SOIL STABILIZATION = 50 SY

DDE = 1 CY

Approximate quantities only. Unclassified excavation, borrow excavation, fine grading, clearing and grubbing, and removal of existing pavement will be paid for at the contract lump sum price for "grading".

PROJECT REFERENCE NO.	SHEET NO.
BD-5114S	4
R/W SHEET NO.	
ROADWAY DESIGN ENGINEER	HYDRAULICS ENGINEER

NORTH CAROLINA PROFESSIONAL SEAL 030463 ENGINEER C. CARVER — 7/10/14

NORTH CAROLINA PROFESSIONAL SEAL 033023 ENGINEER BRADLEY S. ROBINSON — 7/10/14

Bradley S. Robinson, PE

V&M Vaughn & Melton Consulting Engineers — Asheville, North Carolina 828-253-0796; Charlotte, North Carolina 704-597-0380; Tri-Cities, Tennessee 423-467-940; Knoxville, Tennessee 865-546-0802; Middlesboro, Kentucky 606-248-6606; Spartanburg, South Carolina 864-574-4775

Copyright © 2006 Vaughn & Melton, Inc. All Rights Reserved

REVISIONS

1. Reduced PUE on Parcel 1, 3, 5 & 6. (6-18-2012) - RMS
2. Revised back property line on Parcel 5 and therefore no claim on Parcel 6. (7-26-2013) - RMS

-L- CURVE DATA

PI Sta 10+18.92
Δ = 2° 33' 00.7" (LT)
D = 6° 44' 26.4"
L = 37.83'
T = 18.92'
R = 850.00'

PI Sta 13+42.09
Δ = 19° 31' 08.1" (RT)
D = 16° 22' 12.8"
L = 119.23'
T = 60.20'
**R = 350.00'
SE = 0.04
RO = 80

PI Sta 18+10.78
Δ = 11° 06' 02.1" (LT)
D = 14° 19' 26.2"
L = 77.50'
T = 38.81'
R = 400.00'

PI Sta 15+02.36
Δ = 44° 05' 35.7" (RT)
D = 22° 55' 05.9"
L = 192.39'
T = 101.24'
**R = 250.00'
SE = 0.04
RO = 80

** MEETS R-R-R DESIGN CRITERIA

DETAIL 'B' — DETAIL FOR TRANSITION AT END OF 2'-6" CONCRETE CURB & GUTTER

DETAIL 1 — RIP RAP AT EMBANKMENT (Not to Scale)

DETAIL 2 — STANDARD 'V' DITCH (Not to Scale)

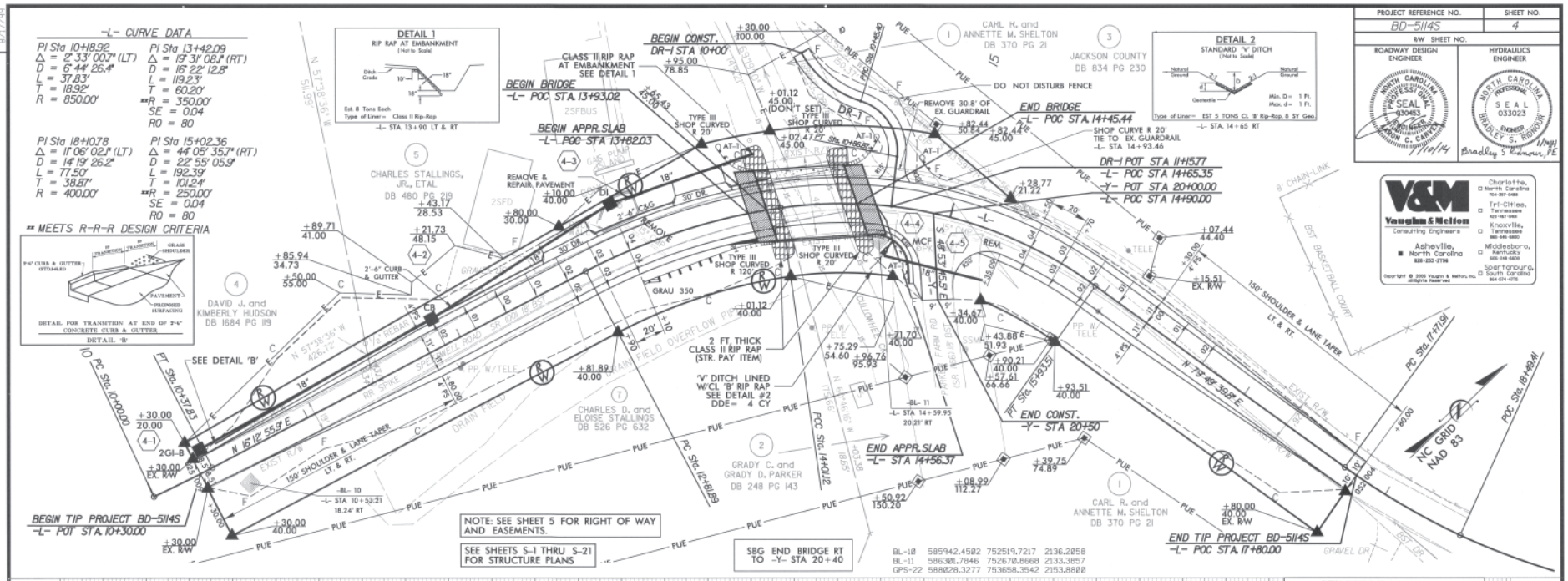

NOTE: SEE SHEET 5 FOR RIGHT OF WAY AND EASEMENTS.

SEE SHEETS S-1 THRU S-21 FOR STRUCTURE PLANS

SBG END BRIDGE RT TO -Y- STA 20+40

BL-10	585942.4502	752519.7217	2136.2058
BL-11	586301.7846	752670.8668	2133.3857
GPS-22	588028.3277	753658.3542	2153.8800

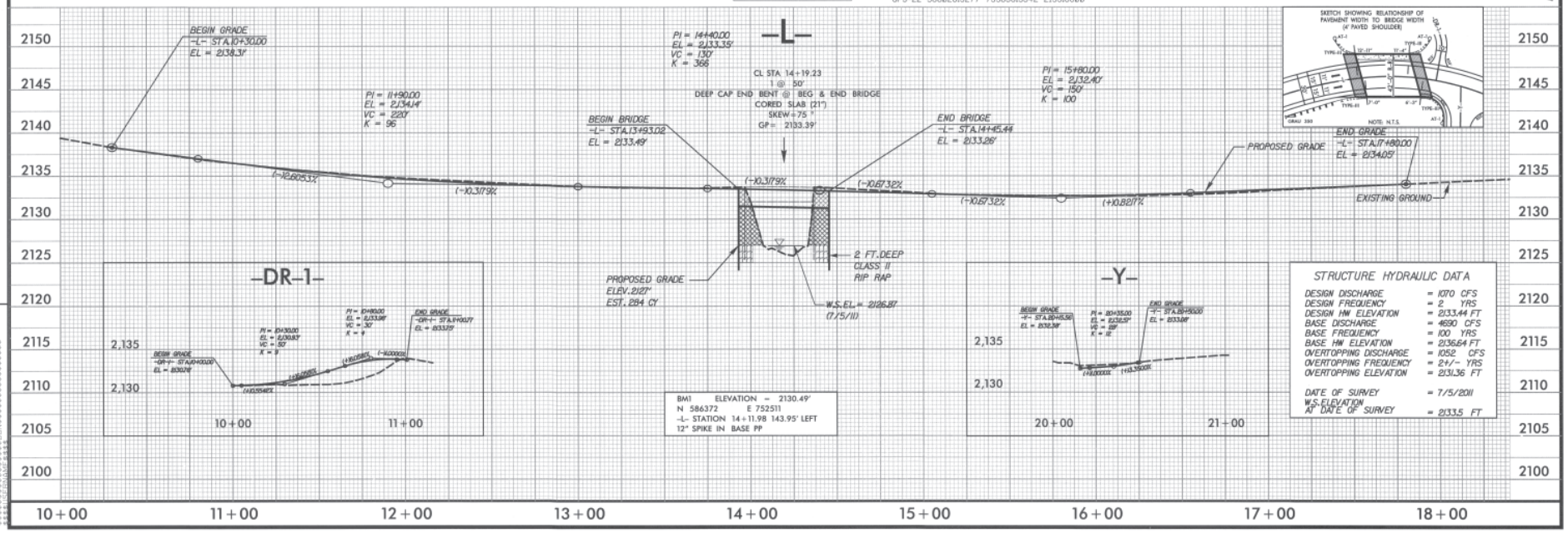

BM1 ELEVATION = 2130.49'
N 586372 E 752511
-L- STATION 14+11.98 143.95' LEFT
12" SPIKE IN BASE PP

STRUCTURE HYDRAULIC DATA

DESIGN DISCHARGE	= 1070 CFS
DESIGN FREQUENCY	= 2 YRS
DESIGN HW ELEVATION	= 2133.44 FT
BASE DISCHARGE	= 4690 CFS
BASE FREQUENCY	= 100 YRS
BASE HW ELEVATION	= 2136.64 FT
OVERTOPPING DISCHARGE	= 1052 CFS
OVERTOPPING FREQUENCY	= 2+/- YRS
OVERTOPPING ELEVATION	= 2131.36 FT
DATE OF SURVEY	= 7/5/2011
W.S. ELEVATION AT DATE OF SURVEY	= 2133.5 FT

PROJECT REFERENCE NO.	SHEET NO.
BD-5114S	5
R/W SHEET NO.	
ROADWAY DESIGN ENGINEER	HYDRAULICS ENGINEER

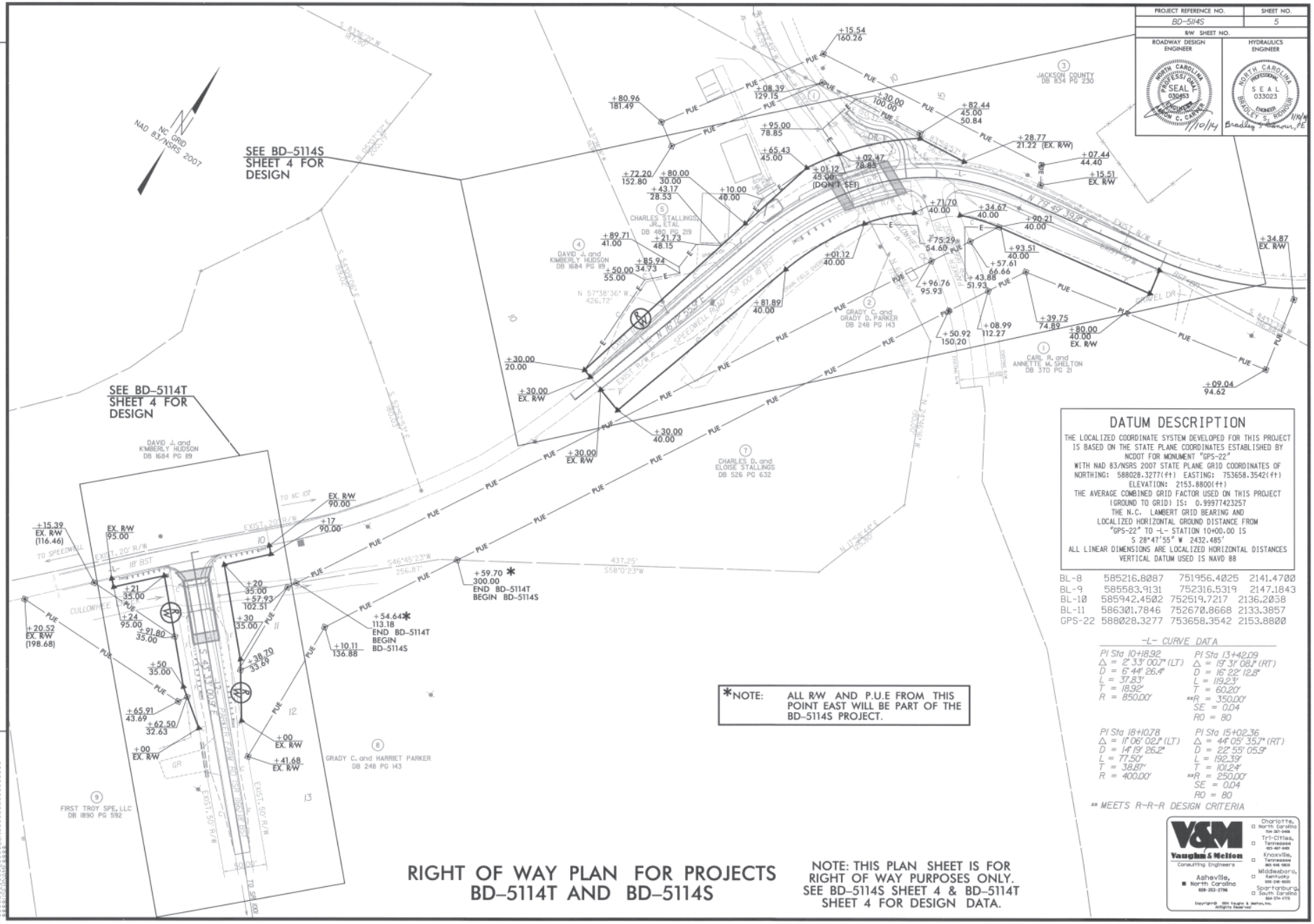

DATUM DESCRIPTION

THE LOCALIZED COORDINATE SYSTEM DEVELOPED FOR THIS PROJECT IS BASED ON THE STATE PLANE COORDINATES ESTABLISHED BY NCDOT FOR MONUMENT "GPS-22" WITH NAD 83/NSRS 2007 STATE PLANE GRID COORDINATES OF NORTHING: 588028.3277(ft) EASTING: 753658.3542(ft) ELEVATION: 2153.8800(ft)
THE AVERAGE COMBINED GRID FACTOR USED ON THIS PROJECT (GROUND TO GRID) IS: 0.99977423257
THE N.C. LAMBERT GRID BEARING AND LOCALIZED HORIZONTAL GROUND DISTANCE FROM "GPS-22" TO -L- STATION 10+00.00 IS S 28°47'55" W 2432.485'
ALL LINEAR DIMENSIONS ARE LOCALIZED HORIZONTAL DISTANCES
VERTICAL DATUM USED IS NAVD 88

BL-8	585216.8087	751956.4025	2141.4700
BL-9	585583.9131	752316.5319	2147.1843
BL-10	585942.4502	752519.7217	2136.2058
BL-11	586301.7846	752670.8668	2133.3857
GPS-22	588028.3277	753658.3542	2153.8800

-L- CURVE DATA

PI Sta 10+18.92	PI Sta 13+42.09
Δ = 2° 33' 00.7" (LT)	Δ = 19° 31' 08.1" (RT)
D = 6° 44' 26.4"	D = 16° 22' 12.8"
L = 37.83'	L = 119.23'
T = 18.92'	T = 60.20'
R = 850.00'	**R = 350.00'
	SE = 0.04
	RO = 80

PI Sta 18+10.78	PI Sta 15+02.36
Δ = 11° 06' 02.1" (LT)	Δ = 44° 05' 35.7" (RT)
D = 14° 19' 26.2"	D = 22° 55' 05.9"
L = 77.50'	L = 192.39'
T = 38.87'	T = 101.24'
R = 400.00'	**R = 250.00'
	SE = 0.04
	RO = 80

** MEETS R-R-R DESIGN CRITERIA

*NOTE: ALL R/W AND P.U.E FROM THIS POINT EAST WILL BE PART OF THE BD-5114S PROJECT.

RIGHT OF WAY PLAN FOR PROJECTS BD-5114T AND BD-5114S

NOTE: THIS PLAN SHEET IS FOR RIGHT OF WAY PURPOSES ONLY. SEE BD-5114S SHEET 4 & BD-5114T SHEET 4 FOR DESIGN DATA.

REVISIONS

1. Reduced PUE on Parcel 1, 3, 5, & 6. (6-18-2012) - RMS
2. Combined Parcels 9 & 10 into Parcel 9 and Changed Owner to First Troy SPE, LLC (4-23-2013) - JCG
3. Modified PUE on Parcel 8. Revised back property line on Parcel 5 and therefore no claim on Parcel 6. (7-26-2013) - RMS

Vaughn & Melton Consulting Engineers
Asheville, North Carolina 828-253-2796
Charlotte, North Carolina 704-351-0440
Tri-Cities, Tennessee 423-467-6400
Knoxville, Tennessee 865-646-6800
Middlesboro, Kentucky 606-248-5800
Spartanburg, South Carolina 864-574-4175

Copyright © 1994 Vaughn & Melton, Inc. All Rights Reserved

SHEET NO. TMP-1

STATE OF NORTH CAROLINA
DIVISION OF HIGHWAYS

TRANSPORTATION MANAGEMENT PLAN

JACKSON COUNTY
DIVISION 14

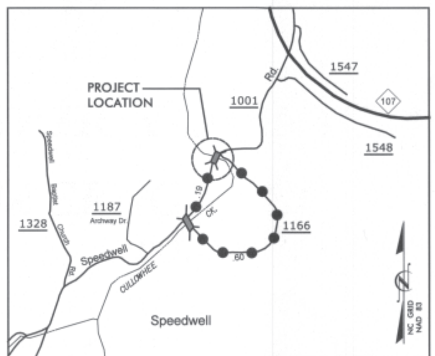

VICINITY MAP

OFF-SITE DETOUR ROUTE

LOCATION: BRIDGE NO. 53 OVER CULLOWHEE CREEK – 50 FT. SOUTH OF JCT. SR 1166 ON SR 1001 (SPEEDWELL RD.)

INDEX OF SHEETS

SHEET NO.	TITLE
TMP-1	TITLE SHEET, LEGEND, AND INDEX OF SHEETS
TMP-1A	LIST OF APPLICABLE ROADWAY STANDARD DRAWINGS, GENERAL NOTES, AND TRANSPORTATION OPERATIONS
TMP-2	TEMPORARY TRAFFIC CONTROL DETAIL AND PHASING
TMP-3	TEMPORARY TRAFFIC CONTROL DETAIL AND PHASING
TMP-4	PAVEMENT MARKING PLAN
SD-1	SPECIAL SIGN DESIGN
SD-2	SPECIAL SIGN DESIGN

LEGEND

GENERAL

NORTH ARROW

TRAFFIC CONTROL DEVICES

BARRICADE (TYPE III)

TEMPORARY SIGNING

STATIONARY SIGN

PORTABLE SIGN

WORK ZONE SAFETY & MOBILITY
"from the MOUNTAINS to the COAST"

N.C.D.O.T. WORK ZONE TRAFFIC CONTROL
1580 MAIL SERVICE CENTER (MSC) RALEIGH, NC 27699-1580
1020 BIRCH RIDGE DRIVE, RALEIGH, NC 27610 (DELIVERY)
PHONE: (919) 250-4094 FAX: (919) 250-4098

J. S. BOURNE, P.E. STATE TRAFFIC MANAGEMENT ENGINEER
LLOYD D. BROWN, P.E. TRAFFIC CONTROL PROJECT ENGINEER
AARON CARVER, P.E. TRAFFIC CONTROL PROJECT DESIGN ENGINEER
AARON CARVER, P.E. TRAFFIC CONTROL DESIGN ENGINEER

DIVISION OF HIGHWAYS · STATE OF NORTH CAROLINA · DEPARTMENT OF TRANSPORTATION · WORK ZONE TRAFFIC CONTROL

V&M Vaughn & Melton Consulting Engineers
■ Asheville, North Carolina 828-253-2796
□ Charlotte, North Carolina 704-357-0488

Copyright © 2006 Vaughn & Melton, Inc. All Rights Reserved

PROJECT ENGINEER AARON C. CARVER, P.E.
DESIGN ENGINEER WILLIAM C. CARVER, E.I.

APPROVED:
DATE: 1/20/14

SEAL

NORTH CAROLINA PROFESSIONAL ENGINEER SEAL 030453 AARON C. CARVER

TIP PROJECT: BD-5114S

PROJ. REFERENCE NO.	SHEET NO.
BD-5114S	TMP-1A

ROADWAY STANDARD DRAWINGS

THE FOLLOWING ROADWAY STANDARDS AS SHOWN IN "ROADWAY STANDARD DRAWINGS" - PROJECT SERVICES UNIT - N.C. DEPARTMENT OF TRANSPORTATION - RALEIGH, N.C., DATED JANUARY 2012 ARE APPLICABLE TO THIS PROJECT AND BY REFERENCE HEREBY ARE CONSIDERED A PART OF THESE PLANS:

STD. NO.	TITLE
1101.02	TEMPORARY LANE CLOSURES
1101.03	TEMPORARY ROAD CLOSURES
1101.05	WORK ZONE VEHICLE ACCESSES
1101.11	TRAFFIC CONTROL DESIGN TABLES
1110.01	STATIONARY WORK ZONE SIGNS
1130.01	DRUMS
1145.01	BARRICADES
1205.01	PAVEMENT MARKINGS - LINE TYPES & OFFSETS
1205.04	PAVEMENT MARKINGS - INTERSECTIONS
1205.08	PAVEMENT MARKINGS - SYMBOLS & WORD MESSAGES
1205.12	PAVEMENT MARKINGS - BRIDGES

TRANSPORTATION OPERATIONS

CONSTRUCTION

REMOVE AND REPLACE EXISTING STRUCTURE AND APPROACHES ALONG THE EXISTING ROADWAY ALIGNMENT AS SHOWN IN THE CONSTRUCTION PLANS.

TMP DESIGN PARAMETERS

TRAFFIC WILL BE DETOURED OFF-SITE DURING THE CONSTRUCTION PERIOD. THE OFF-SITE DETOUR WILL INCLUDE SR 1116 (SEE SHEET TMP-2).

GENERAL NOTES

CHANGES MAY BE REQUIRED WHEN PHYSICAL DIMENSIONS IN THE DETAIL DRAWINGS, STANDARD DETAILS AND ROADWAY DETAILS ARE NOT ATTAINABLE TO MEET FIELD CONDITIONS, OR RESULT IN DUPLICATE, OR UNDESIRED OVERLAPPING OF DEVICES. MODIFICATION MAY INCLUDE: MOVING, SUPPLEMENTING, COVERING OR REMOVAL OF DEVICES, AS DIRECTED BY THE ENGINEER.

THE FOLLOWING GENERAL NOTES APPLY AT ALL TIMES FOR THE DURATION OF THE CONSTRUCTION PROJECT, EXCEPT WHEN OTHERWISE NOTED IN THE PLAN, OR DIRECTED BY THE ENGINEER.

TRAFFIC PATTERN ALTERATIONS

A) NOTIFY THE ENGINEER TWENTY ONE (21) CALENDAR DAYS PRIOR TO ANY TRAFFIC PATTERN ALTERATION.

SIGNING

B) PROVIDE PERMANENT SIGNING.

C) PROVIDE SIGNING AND DEVICES REQUIRED TO CLOSE THE ROAD ACCORDING TO THE ROADWAY STANDARD DRAWINGS AND TRAFFIC CONTROL PLANS.

PROVIDE SIGNING REQUIRED FOR THE OFF-SITE DETOUR ROUTE AS SHOWN IN THE TRAFFIC CONTROL PLANS.

D) COVER OR REMOVE ALL SIGNS AND DEVICES REQUIRED TO CLOSE THE ROAD WHEN ROAD CLOSURE IS NOT IN OPERATION.

COVER OR REMOVE ALL SIGNS REQUIRED FOR THE OFF-SITE DETOUR WHEN THE DETOUR IS NOT IN OPERATION.

E) ENSURE ALL NECESSARY SIGNING IS IN PLACE PRIOR TO ALTERING ANY TRAFFIC PATTERN.

TRAFFIC CONTROL DEVICES

F) PLACE TYPE III BARRICADES WITH "ROAD CLOSED" SIGN R-11-2 ATTACHED OF SUFFICIENT LENGTH TO CLOSE ENTIRE ROADWAY.

PAVEMENT MARKINGS

G) INSTALL PAVEMENT MARKINGS (PAINT) ON THE FINAL SURFACE OF THE ENTIRE PROJECT.

H) TIE PROPOSED PAVEMENT MARKING LINES TO EXISTING PAVEMENT MARKING LINES.

LOCAL NOTES

1. NOTIFY JACKSON COUNTY EMERGENCY SERVICES AND PUBLIC SCHOOLS AT LEAST ONE MONTH PRIOR TO ROAD CLOSURE.

V&M
Vaughn & Melton
Consulting Engineers
Asheville, North Carolina 828-253-2796
Charlotte, North Carolina 704-357-0488
Tri-Cities, Tennessee 423-467-9403
Knoxville, Tennessee 865-546-0600
Middlesboro, Kentucky 606-248-6600
Spartanburg, South Carolina 864-574-4715

Copyright © 2006 Vaughn & Melton, Inc. All Rights Reserved

APPROVED: DATE: 1/10/14

SEAL

NORTH CAROLINA PROFESSIONAL SEAL 030453 ENGINEER AARON C. CARVER

DIVISION OF HIGHWAYS · STATE OF NORTH CAROLINA · DEPARTMENT OF TRANSPORTATION · WORK ZONE TRAFFIC CONTROL

ROADWAY STANDARD DRAWINGS
GENERAL NOTES &
TRANSPORTATION OPERATIONS

PROJ. REFERENCE NO.	SHEET NO.
BD-5114S	TMP-2

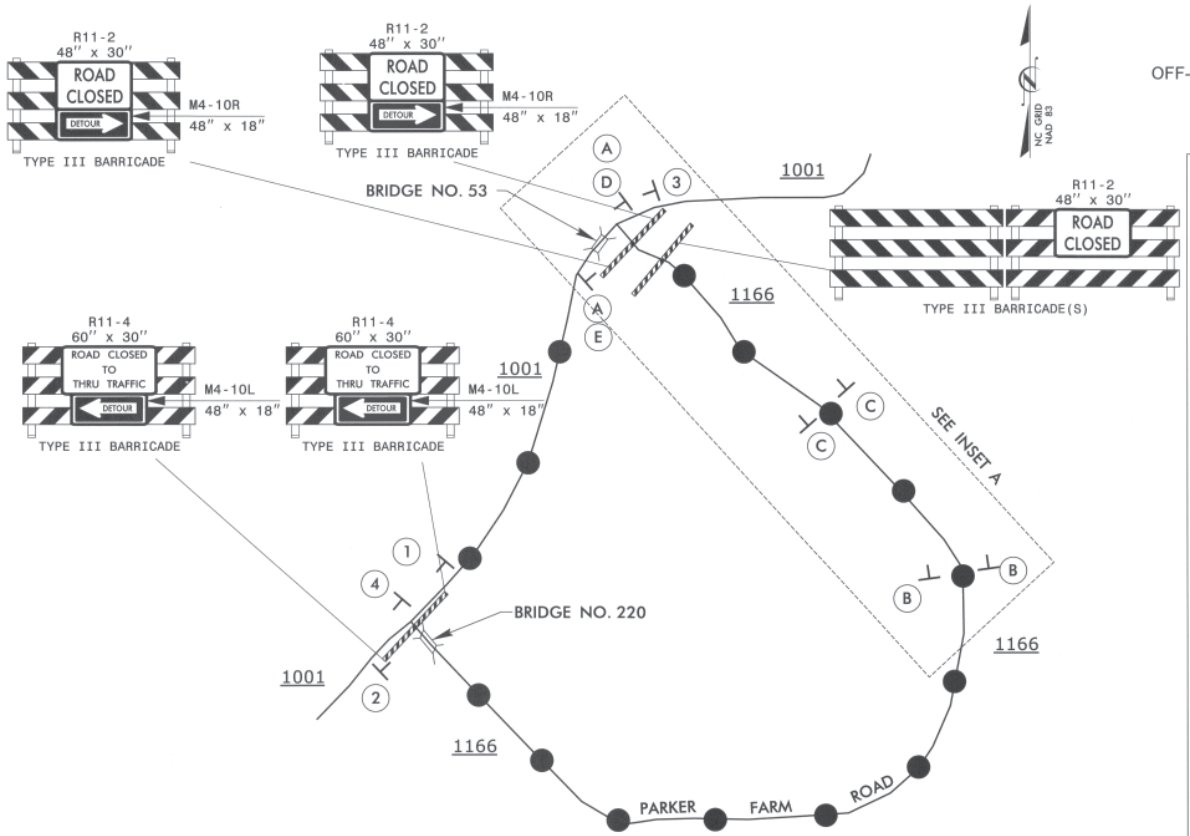

OFF-SITE DETOUR

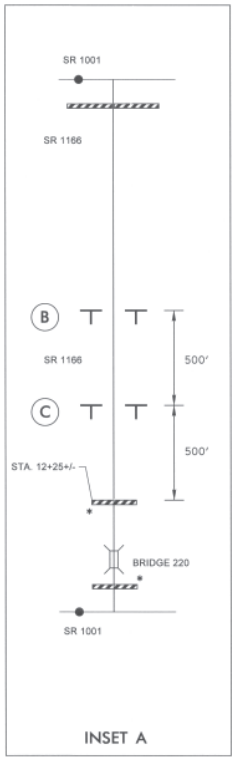

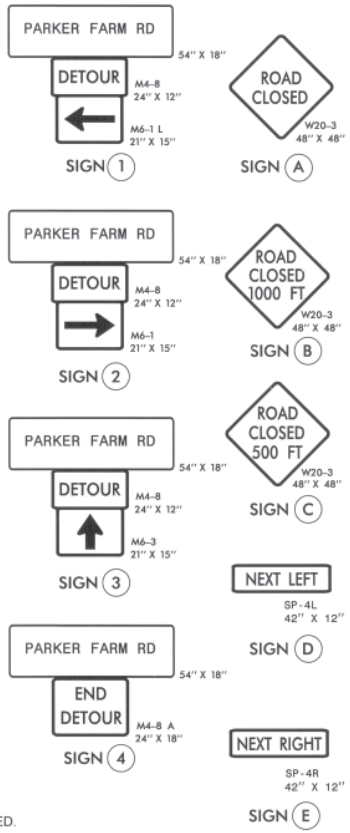

NOTES:

- ALL DETOUR SIGN LOCATIONS ARE APPROXIMATE.
- ALL DETOUR SIGNS ARE BLACK ON ORANGE UNLESS OTHERWISE NOTED.
- TRAFFIC CONTROL DEVICES (A) THROUGH (E) SHALL BE INSTALLED ACCORDING TO ROADWAY STANDARD DRAWING 1101.03, SHEET 1 OF 9.
- TRAFFIC CONTROL DEVICES (1) THROUGH (4) SHALL BE INSTALLED AS PER ENGINEER'S INSTRUCTIONS, AND AS SHOWN HEREON.

* SEE ROADWAY STANDARD DRAWING NO. 1101.03, SHEET 1 OF 9 AND 2 OF 9, FOR ADDITIONAL WORK ZONE SIGNS.

PHASING

PHASE I

STEP 1: - INSTALL OFF-SITE DETOUR ROUTE SIGN ASSEMBLIES FOR THE CLOSING OF SR 1166 (PARKER FARM ROAD, -L-).

- USING ROADWAY STANDARD DRAWING NO. 1101.03, SHEETS 1 OF 9 AND 2 OF 9, CLOSE SR 1166 (PARKER FARM ROAD, -L-) TO THRU TRAFFIC.

STEP 2: - CONSTRUCT THE PROPOSED 2" FORCEMAIN SANITARY SEWER FROM FSS STATION 11+20 TO TIE-IN WITH THE EXISTING 6" DIP PRESSURE SEWER MAIN AT FSS STATION 13+50 (SEE UTILITY PLANS-SHEET UC-3)

STEP 3: - REMOVE / RESET ALL TRAFFIC CONTROL DEVICES, SIGNING AND DETOUR ROUTE SIGNING PER PHASE II

V&M
Vaughn & Melton
Consulting Engineers
Asheville, North Carolina 828-253-2796
Charlotte, North Carolina 704-357-8488
Tri-Cities, Tennessee 423-467-8493
Knoxville, Tennessee 865-546-5800
Middlesboro, Kentucky 606-248-6600
Spartanburg, South Carolina 864-574-4775

Copyright © 2006 Vaughn & Melton, Inc. All Rights Reserved

APPROVED DATE 11/14/14

SEAL

NORTH CAROLINA PROFESSIONAL ENGINEER SEAL 030453 HARON C. CARVER

DIVISION OF HIGHWAYS STATE OF NORTH CAROLINA DEPARTMENT OF TRANSPORTATION WORK ZONE TRAFFIC CONTROL

TEMPORARY TRAFFIC CONTROL DETAIL, PHASING NOTES, OFF-SITE DETOUR SIGNING AND ROAD CLOSURE

PROJ. REFERENCE NO.	SHEET NO.
BD-5114S	TMP-3

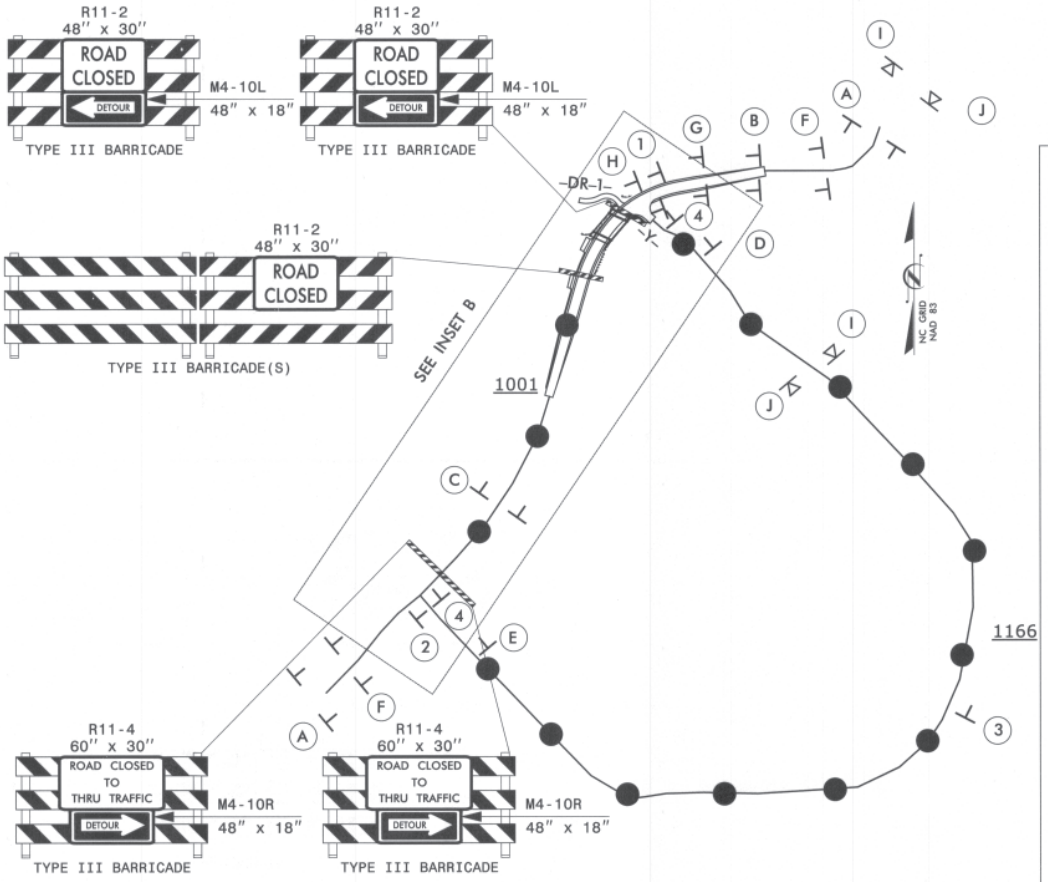

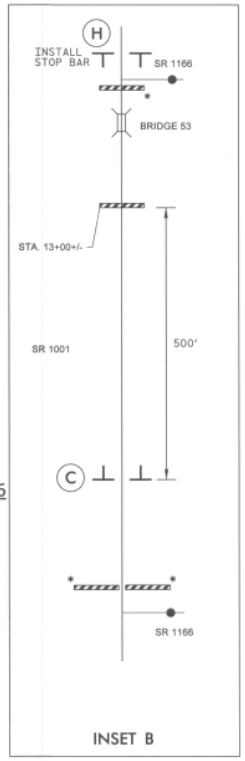

OFF-SITE DETOUR

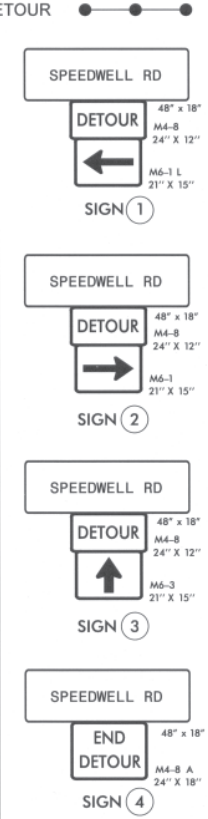

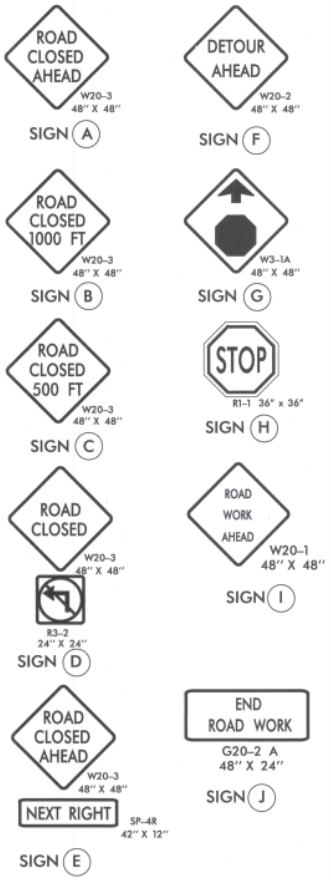

PHASING

PHASE II

STEP 1: - INSTALL OFF-SITE DETOUR ROUTE SIGN ASSEMBLIES FOR THE CLOSING OF SR 1001 (SPEEDWELL ROAD, -L-).

- USING ROADWAY STANDARD DRAWING NO. 1101.03, SHEETS 1 OF 9 AND 2 OF 9, CLOSE SR 1001 (SPEEDWELL ROAD, -L-) TO THRU TRAFFIC.

STEP 2: CONSTRUCT -DR-1- AND MAINTAIN ACCESS THROUGHOUT CONSTRUCTION.

STEP 3: - REMOVE THE EXISTING STRUCTURE AND CONSTRUCT THE PROPOSED STRUCTURE, FORCEMAIN SANITARY SEWER AND ROADWAY UP TO, BUT NOT INCLUDING THE FINAL LAYER OF SURFACE COURSE ON SR 1001 (SPEEDWELL ROAD, -L-) FROM STATION 10+30 +/- -L- TO STATION 14+65 +/- -L-. (SEE CONSTRUCTION PLANS).

STEP 4 USING RDWY STD 1101.02 SHEET 1 OF 15, AND FLAGGERS, CONSTRUCT -L- FROM STATION 14+65 +/- TO STATION 17+80 +-.-L- UP TO, BUT NOT INCLUDING INCLUDING THE FINAL LAYER OF SURFACE COURSE.

STEP 5 STEP 4 USING RDWY STD 1101.02 SHEET 1 OF 15, AND FLAGGERS, CONSTRUCT THE FINAL LAYER OF SURFACE COURSE ON SR 1001 (SPEEDWELL ROAD, -L-) AND PLACE FINAL PAVEMENT MARKINGS.

STEP 6: - REMOVE ALL TRAFFIC CONTROL DEVICES, SIGNING AND DETOUR ROUTE SIGNING.

- OPEN TO FINAL TRAFFIC PATTERN.

NOTES:

- ALL DETOUR SIGN LOCATIONS ARE APPROXIMATE.
- ALL DETOUR SIGNS ARE BLACK ON ORANGE UNLESS OTHERWISE NOTED.
- TRAFFIC CONTROL DEVICES (A) THROUGH (H) SHALL BE INSTALLED ACCORDING TO ROADWAY STANDARD DRAWING 1101.03, SHEET 1 OF 9.
- TRAFFIC CONTROL DEVICES (1) THROUGH (4) SHALL BE INSTALLED AS PER ENGINEER'S INSTRUCTIONS, AND AS SHOWN HEREON.
- * SEE ROADWAY STANDARD DRAWING NO. 1101.03, SHEET 1 OF 9 AND 2 OF 9, FOR ADDITIONAL WORK ZONE SIGNS.

V&M
Vaughn & Melton
Consulting Engineers
Asheville, North Carolina 828-253-2796
Charlotte, North Carolina 704-357-0488
Tri-Cities, Tennessee 423-467-8410
Knoxville, Tennessee 865-546-5800
Middlesboro, Kentucky 606-248-6600
Spartanburg, South Carolina 864-574-4775

Copyright © 2006 Vaughn & Melton, Inc. All Rights Reserved

APPROVED: DATE: 1/10/14

SEAL

NORTH CAROLINA PROFESSIONAL SEAL 030453 ENGINEER AARON C. CARVER

DIVISION OF HIGHWAYS STATE OF NORTH CAROLINA DEPARTMENT OF TRANSPORTATION WORK ZONE TRAFFIC CONTROL

TEMPORARY TRAFFIC CONTROL DETAIL, PHASING NOTES, OFF SITE DETOUR SIGNING AND ROAD CLOSURE

SYSTIME$$$$$$$$
SYSDOCNAME$$$$$$$$

PROJ. REFERENCE NO.	SHEET NO.
BD-5114S	TMP-4

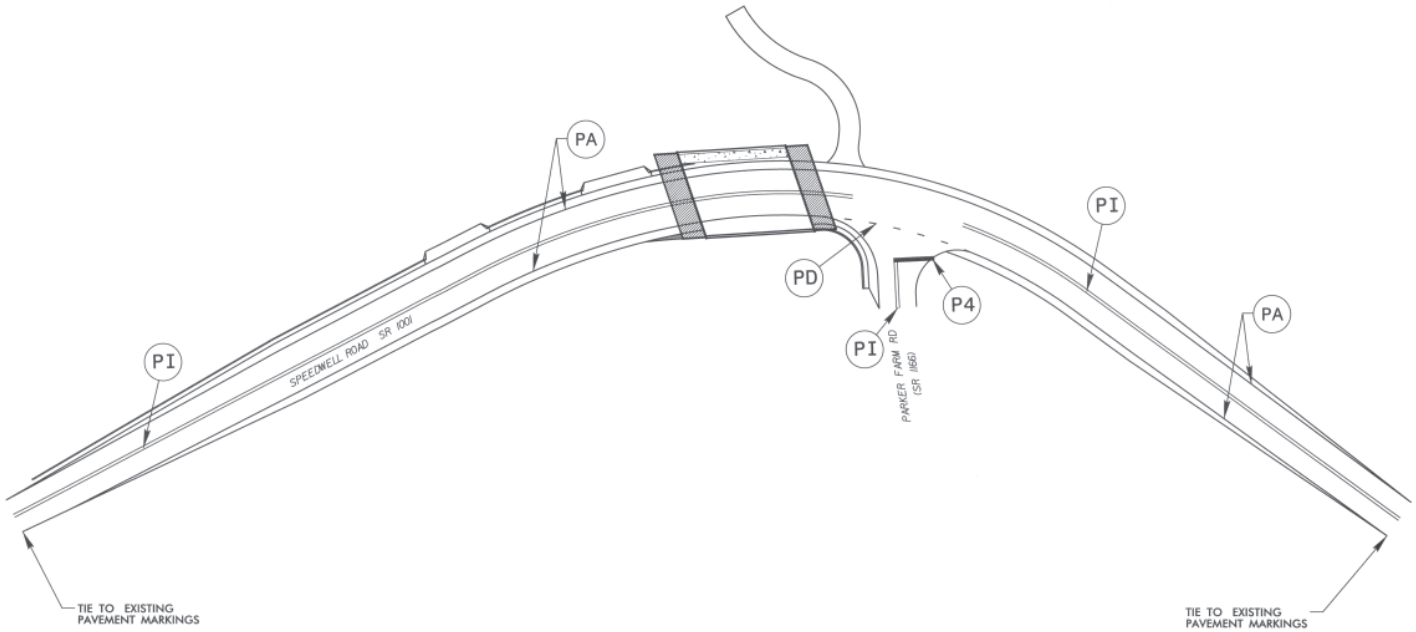

FINAL PAVEMENT MARKING SCHEDULE

SYMBOL	DESCRIPTION	QUANTITY BREAKDOWN	PAY ITEM	TOTAL QUANTITY
		PAVEMENT MARKING LINES		
PA	WHITE SOLID EDGE LINE	1530 FT	PAINT (4")	3060 FT
PD	2' WHITE MINISKIP	14 FT	PAINT (4")	28 FT
PI	YELLOW DOUBLE CENTER LINE	1436 FT	PAINT (4")	2872 FT
P4	WHITE STOP BAR	18 FT	PAINT (24")	36 FT

SCALE: 1" = 30'

V&M
Vaughn & Melton
Consulting Engineers
Asheville, North Carolina 828-253-2796
Charlotte, North Carolina 704-357-8488
Tri-Cities, Tennessee 423-467-8403
Knoxville, Tennessee 865-546-5800
Middlesboro, Kentucky 606-248-6600
Spartanburg, South Carolina 864-574-4775

Copyright © 2006 Vaughn & Melton, Inc. All Rights Reserved

APPROVED: DATE: 1/10/14

SEAL

NORTH CAROLINA PROFESSIONAL SEAL 030453 ENGINEER AARON C. CARVER

DIVISION OF HIGHWAYS · STATE OF NORTH CAROLINA · DEPARTMENT OF TRANSPORTATION · WORK ZONE TRAFFIC CONTROL

TRAFFIC CONTROL
PAVEMENT MARKING
& SIGNING PLAN

$$$$$$SYSTIME$$$$$$
$$$$$$$$$$$$$$$$$$DGN$$$$$$$$$$$$$$$$$$
$$
$$$$$$SCRNAME$$$$$$

PROJ. REFERENCE NO.	SHEET NO.
BD-5114S	SD-1

SIGN NUMR: SPEEDWELL RD
TYPE: D Ground
QUANTITY: 1

BACKG. COLOR: Orange
COPY COLOR: Black

DESIGN BY: ACC
PROJECT ID: BD-5114S

CHK BY:
DIV: 14

STD #:
DATE: FEB 5,2013

SIGN WIDTH: 4'-0"
HEIGHT: 1'-6"
TOTAL AREA: 6.0 Sq.Ft.

MAT'L: 0.063 in.(1.6 mm) ALUMINUM

BORDER TYPE: FLUSH
RECESS: 0.47"
WIDTH: 0.63"
RADII: 1.5"

NO. Z BARS:
LENGTH: in.

SYMBOL	X	Y	WID	HT

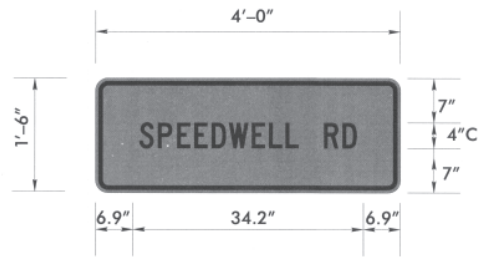

BORDER
R=1.5"
TH=0.63"
IN=0.47"

Panel Style: construction_guide.ssi
M.U.T.C.D.: 2009 Edition

USE NOTES: 1,3,4,6

1. Legend and border shall be direct applied encapsulated lens reflective sheeting.
2. Legend and border shall be direct applied enclosed lens reflective sheeting.
3. Shields shall be encapsulated lens reflective sheeting on 0.8mm aluminum and demountable.
4. Background shall be encapsulated lens reflective sheeting.
5. Background shall be enclosed lens reflective sheeting.
6. Center arrows vertically on sign.

Letter spacings are to start of next letter

															Series/Size Text Length
		S	P	E	E	D	W	E	L	L		R	D		C 2000/4
	6.9	2.9	3	2.7	2.7	2.7	3.6	2.7	2.6	2	4	2.9	2.2	6.9	34.2

Spacing Factor is 1 unless specified otherwise

FILENAME: BD-5114S_TMP_SD-1.DGN

APPROVED: DATE: 1/10/14

SEAL

NORTH CAROLINA PROFESSIONAL SEAL 030453 ENGINEER AARON C. CARYER

DIVISION OF HIGHWAYS STATE OF NORTH CAROLINA DEPARTMENT OF TRANSPORTATION WORK ZONE TRAFFIC CONTROL

SPECIAL SIGN DESIGN

$$$$$SYSTIME$$$$
$$$$$SYSTIME$$$$
$$$$$DGN$$$$$$$$$$$$$$$$$$$$$$$$$$$$$$$$
$$$$USERNAME$$$$

SIGN NUMR: PARKER FARM RD
TYPE: D Ground
QUANTITY: 1

BACKG. COLOR: Orange
COPY COLOR: Black

DESIGN BY: ACC
PROJECT ID: BD-5114T

CHK BY:
DIV: 14

STD #:
DATE: DEC. 20,2012

SIGN WIDTH: 4'-6"
HEIGHT: 1'-6"
TOTAL AREA: 6.8 Sq.Ft.

MAT'L: 0.063 in.(1.6 mm) ALUMINUM

BORDER TYPE: FLUSH
RECESS: 0.47"
WIDTH: 0.63"
RADII: 1.5"

NO. Z BARS:
LENGTH: in.

SYMBOL	X	Y	WID	HT

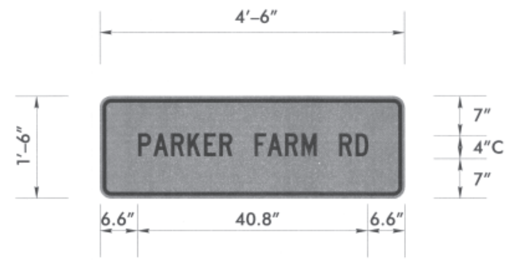

BORDER
R=1.5"
TH=0.63"
IN=0.47"

Panel Style: construction_guide.ssi
M.U.T.C.D.: 2009 Edition

USE NOTES: 1,3,4,6

1. Legend and border shall be direct applied encapsulated lens reflective sheeting.
2. Legend and border shall be direct applied enclosed lens reflective sheeting.
3. Shields shall be encapsulated lens reflective sheeting on 0.8mm aluminum and demountable.
4. Background shall be encapsulated lens reflective sheeting.
5. Background shall be enclosed lens reflective sheeting.
6. Center arrows vertically on sign.

Letter spacings are to start of next letter

		P	A	R	K	E	R		F	A	R	M		R	D		Series/Size Text Length
	6.6	2.7	3.1	2.9	2.9	2.7	2.2	4	2.3	3.1	2.9	2.6	4	2.9	2.2	6.6	C 2000/4 40.8

Spacing Factor is 1 unless specified otherwise

FILENAME: BD-5114S_TM_SD-2.DGN

APPROVED: [signature] DATE: 1/10/14

SEAL
NORTH CAROLINA PROFESSIONAL SEAL 030453 ENGINEER AARON C. CARVER

DIVISION OF HIGHWAYS STATE OF NORTH CAROLINA DEPARTMENT OF TRANSPORTATION WORK ZONE TRAFFIC CONTROL

SPECIAL SIGN DESIGN

$$$$$$SYSTIME$$$$
$$$$$$$$$$$$$$$$$$DGN$$$$$$$$$$$$$$$$
$$$$USERNAME$$$$

PROJECT REFERENCE NO.	SHEET NO.
BD-5114S	EC-1
R/W SHEET NO.	

ROADSIDE ENVIRONMENTAL UNIT
DEPARTMENT OF TRANSPORTATION
DIVISION OF HIGHWAYS
RALEIGH, N.C.

2012 STANDARD SPECIFICATIONS

EROSION CONTROL PLAN

ENVIRONMENTALLY SENSITIVE AREA
SEE PROJECT SPECIAL PROVISIONS.

THESE EROSION AND SEDIMENT CONTROL PLANS COMPLY WITH THE REGULATIONS SET FORTH BY THE NCG-010000 GENERAL CONSTRUCTION PERMIT EFFECTIVE AUGUST 3, 2011 ISSUED BY THE NORTH CAROLINA DEPARTMENT OF ENVIRONMENT AND NATURAL RESOURCES DIVISION OF WATER QUALITY.

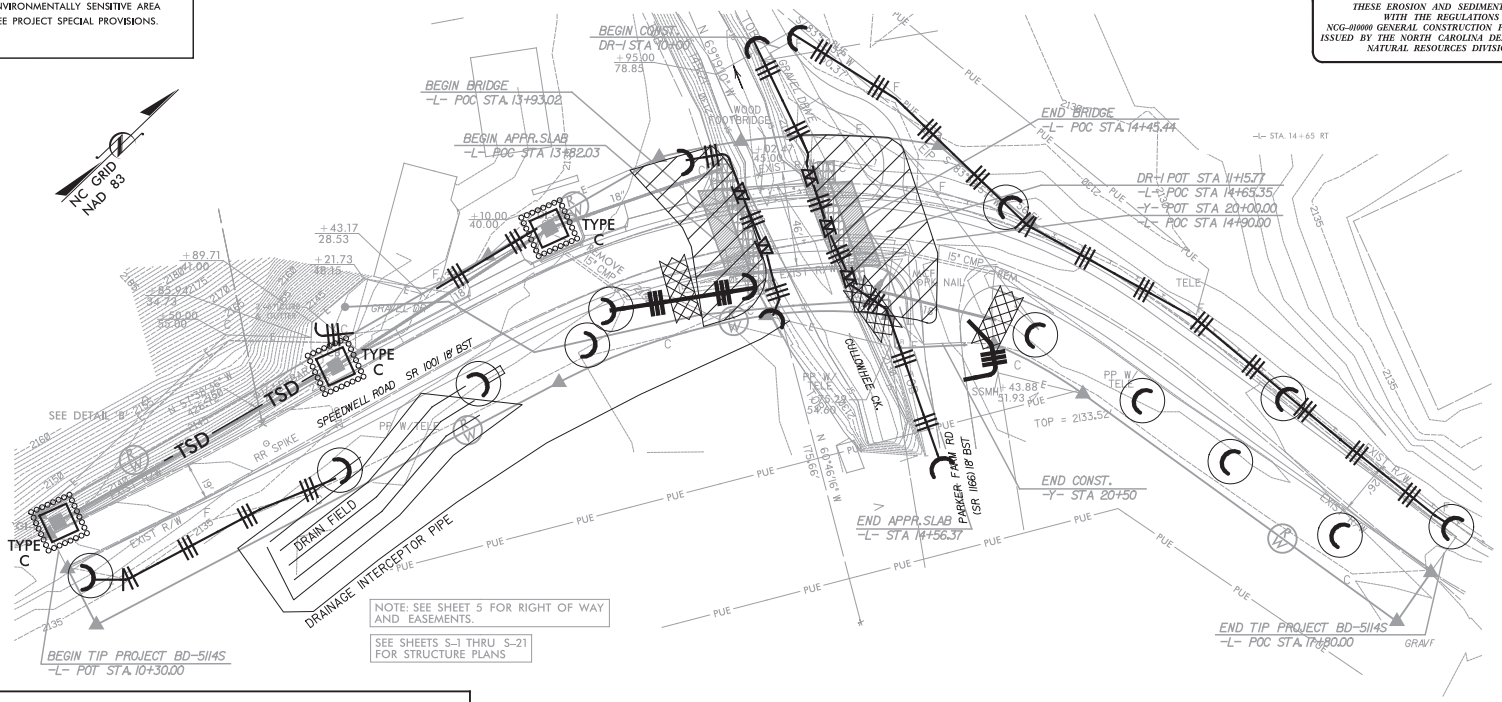

Std. #	Description	Symbol
1605.01	Temporary Silt Fence	
1606.01	Special Sediment Control Fence	
1630.03	Temporary Silt Ditch	TSD
1632.03	Rock Inlet Sediment Trap Type C	or
	Wattle	
	Wattle with Polyacrylamide (PAM)	
1633.01	Temporary Rock Silt Check Type-A	

Level III-A: Designer of Erosion and Sediment Control Plans

Aaron C. Carver, P.E.
Date Issued: May 2, 2007
Date Expires: December 31, 2013
Certification Number: 302

NOTES: ANY DEVIATION FROM OPTIONS GIVEN WILL REQUIRE PRIOR APPROVAL BY ENGINEER.

ADDITIONAL EROSION CONTROL DEVICES MAY NEED TO BE INSTALLED AS DIRECTED BY THE ENGINEER.

PROJECT NO. BD-5114S
COUNTY JACKSON
STATION: 13+93
REPLACES BRIDGE NO. 53

STATE OF NORTH CAROLINA
DEPARTMENT OF TRANSPORTATION
RALEIGH

BRIDGE #53 ON SR 1001
OVER CULLOWHEE CREEK

REVISIONS								
NO.	BY	DATE	NO.	BY	DATE	SHEET NO. EC-1
1			3			TOTAL SHEETS 1
2			4			

PROJECT REFERENCE NO.	SHEET NO.
BD-5114S	EC-1A
R/W SHEET NO.	
ROADWAY DESIGN ENGINEER	HYDRAULICS ENGINEER

WATTLE WITH POLYACRYLAMIDE DETAIL

WATTLES WITH POLYACRYLAMIDE (PAM):

Description

Wattles are tubular products consisting of excelsior fibers encased in synthetic netting. Wattles are used on slopes or channels to intercept runoff and act as a velocity break. Wattles are to be placed at locations shown on the plans or as directed. Installation shall follow the detail provided in the plans and as directed. Work includes furnishing materials, installation of wattles, matting installation, PAM application, and removing wattles.

Materials

Wattle shall meet the following specifications:

100% Curled Wood(Excelsior) Fibers
Minimum Diameter – 12 in.
Minimum Density – 2.6 lb/ft3 +/- 10%
Net Material – Synthetic
Net Openings – 1 in. x 1 in.
Net Configuration – Totally Encased
Minimum Weight – 20 lb. +/- 10% per 10 ft. length

Anchors: Stakes shall be used as anchors.

Wooden Stakes:

Provide hardwood stakes a minimum of 2-ft. long with a 2 in. x 2 in. nominal square cross section. One end of the stake must be sharpened or beveled to facilitate driving down into the underlying soil.

Matting shall meet the requirements of section 1060-8 of the Standard Specifications, or shall meet specifications provided elsewhere in this contract.

Provide staples made of 0.125" diameter new steel wire formed into a u shape not less than 12" in length with a throat of 1" in width.

Polyacrylamide (PAM) shall be applied in powder form and shall be anionic or neutrally charged. Soil samples shall be obtained in areas where the wattles will be placed, and from offsite material used to construct roadway, and analyzed for the appropriate PAM flocculant to be utilized with each wattle.

Construction Methods

Wattles shall be secured to the soil by wire staples approximately every 1 linear foot and at the end of each section of wattle. A minimum of 4 stakes shall be installed on the downstream side of the wattle with a maximum spacing of 2 linear feet along the wattle, and according to the detail. Install a minimum of 2 stakes on the upstream side of the wattle according to the detail provided in the plans. Stakes shall be driven into the ground a minimum of 10 in. with no more than 2 in. projecting from the top of the wattle. Drive stakes at an angle according to the detail provided in the plans.

Install wattles to the top of the ditch according to the detail provided in the plans. Overlap adjoining sections of wattles a minimum of 6 in.

Installation of matting shall be in accordance with the detail provided in the plans, and in accordance with section 1631-3(B) of the Standard Specifications, or in accordance with specifications provided elsewhere in this contract.

Apply PAM over the lower center portion of the wattle where the water is going to flow over at a rate of 3.5 ounces per wattle. PAM applications shall be done during construction activities after every rainfall event that is equal to or exceeds 0.50 in.

The Contractor shall maintain the wattles until the project is accepted or until the wattles are removed, and shall remove and dispose of silt accumulations at the wattles when so directed in accordance with the requirements of Section 1630 of the Standard Specifications.

The quantity of wattle(s), wooden stakes, staples, matting and PAM as measured above will be paid for at contract price for "Lump Sum for Erosion Control". Such price and payment will be full compensation for all work covered by this provision, including but not limited to, furnishing all materials, placing and maintaining the wattle(s), and removal and disposal of silt accumulations and wattle.

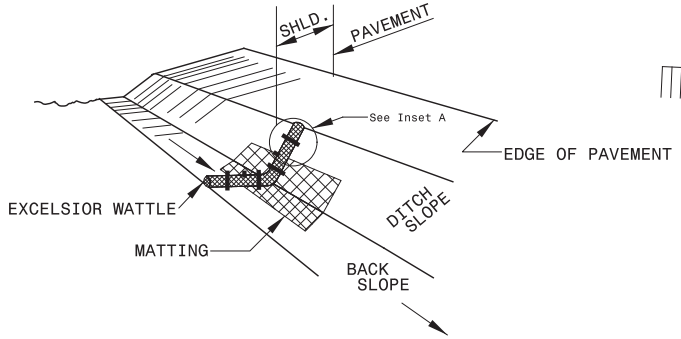

ISOMETRIC VIEW

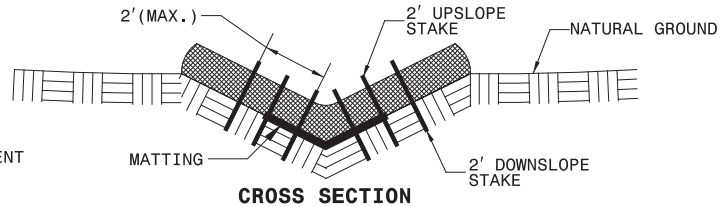

CROSS SECTION VEE DITCH

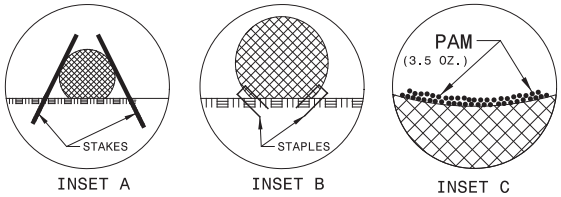

NOTES:

USE MINIMUM 12 IN. DIAMETER EXCELSIOR WATTLE.

USE 2 FT. WOODEN STAKES WITH A 2 IN. BY 2 IN. CROSS SECTION.

ONLY INSTALL WATTLE(S) TO A HEIGHT IN DITCH SO FLOW WILL NOT WASH AROUND WATTLE AND SCOUR DITCH SLOPES AND AS DIRECTED.

INSTALL A MINIMUM OF 2 UPSLOPE STAKES AND 4 DOWNSLOPE STAKES AT AN ANGLE TO WEDGE WATTLE TO BOTTOM OF DITCH.

PROVIDE STAPLES MADE OF 0.125 IN. DIAMETER STEEL WIRE FORMED INTO A U SHAPE NOT LESS THAN 12" IN LENGTH.

INSTALL STAPLES APPROXIMATELY EVERY 1 LINEAR FOOT ON BOTH SIDES OF WATTLE AND AT EACH END TO SECURE IT TO THE SOIL.

INSTALL MATTING IN ACCORDANCE WITH SECTION 1631 OF THE STANDARD SPECIFICATIONS.

PRIOR TO POLYACRYLAMIDE (PAM) APPLICATION, OBTAIN A SOIL SAMPLE FROM PROJECT LOCATION, AND FROM OFFSITE MATERIAL, AND ANALYZE FOR APPROPRIATE PAM FLOCCULANT TO BE APPLIED TO EACH WATTLE.

INITIALLY APPLY 3.5 OUNCES OF ANIONIC OR NEUTRALLY CHARGED POLYACRYLAMIDE (PAM) OVER WATTLE WHERE WATER WILL FLOW AND AFTER EVERY RAINFALL EVENT THAT IS EQUAL TO OR EXCEEDS 0.50 IN.

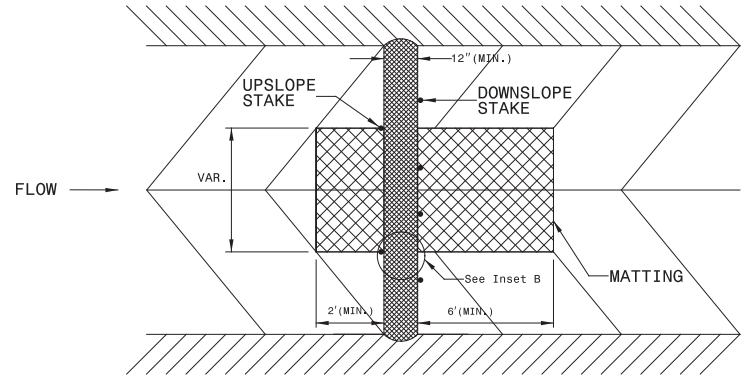

TOP VIEW

PROJECT REFERENCE NO.	SHEET NO.
BD-5114S	EC-2
R/W SHEET NO.	
ROADWAY DESIGN ENGINEER	HYDRAULICS ENGINEER

STATE OF NORTH CAROLINA
DIVISION OF HIGHWAYS

SOIL STABILIZATION TIMEFRAMES

SITE DESCRIPTION	STABILIZATION TIME	TIMEFRAME EXCEPTIONS
PERIMETER DIKES, SWALES, DITCHES, AND SLOPES	7 DAYS	NONE
HIGH QUALITY WATER (HQW) ZONES	7 DAYS	NONE
SLOPES STEEPER THAN 3:1	7 DAYS	IF SLOPES ARE 10' OR LESS IN LENGTH AND ARE NOT STEEPER THAN 2:1, 14 DAYS ARE ALLOWED.
SLOPES 3:1 OR FLATTER	14 DAYS	7 DAYS FOR SLOPES GREATER THAN 50' IN LENGTH.
ALL OTHER AREAS WITH SLOPES FLATTER THAN 4:1	14 DAYS	NONE, EXCEPT FOR PERIMETERS AND HQW ZONES.

PROJECT REFERENCE NO.	SHEET NO.
BD-5114S	EC-3

DIVISION OF HIGHWAYS
STATE OF NORTH CAROLINA

SOIL STABILIZATION SUMMARY SHEET

MATTING FOR EROSION CONTROL

CONST SHEET NO.	LINE	FROM STATION	TO STATION	SIDE	ESTIMATE (SY)
4	-L-	11+50	14+00	RT	355
4	-L-	15+10	18+00	RT	460
				SUBTOTAL	815
MISCELLANEOUS MATTING TO BE INSTALLED AS DIRECTED BY THE ENGINEER					
				TOTAL	815
				SAY	820

PERMANENT SOIL REINFORCEMENT MAT

CONST SHEET NO.	LINE	FROM STATION	TO STATION	SIDE	ESTIMATE (SY)
				SUBTOTAL	
		ADDITIONAL PSRM TO BE INSTALLED			
				TOTAL	
				SAY	

TIP PROJECT: BD-5114S

T.I.P. NO.	SHEET NO.
BD-5114S	UC-1

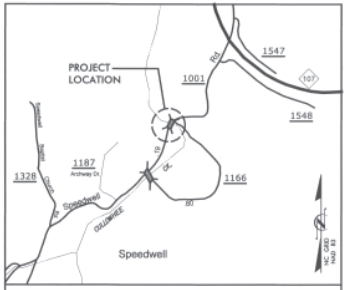

VICINITY MAP N.T.S.

STATE OF NORTH CAROLINA
DIVISION OF HIGHWAYS

UTILITIES BY CONSTRUCTION PLANS
JACKSON COUNTY

LOCATION: BRIDGE #053 OVER CULLOWHEE CREEK ON SR 1001 (SPEEDWELL ROAD)

TYPE OF WORK: GRINDER PUMP STATION AND FORCEMAIN CONSTRUCTION

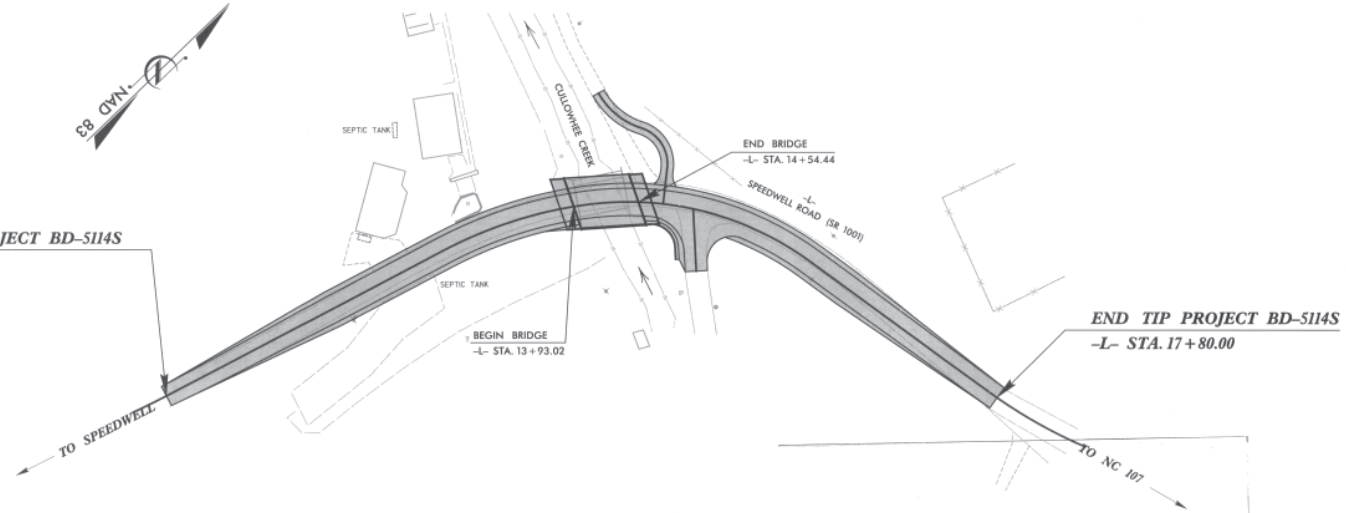

GRAPHIC SCALES

30 15 0 30 60
PLANS

INDEX OF SHEETS

SHEET NO.	DESCRIPTION
UC-1	TITLE SHEET
UC-2	SYMBOLOGY SHEET
UC-3	UTILITY PLAN & PROFILE SHEET
UC-4	DETAIL SHEET
UC-5	DETAIL SHEET

UTILITY OWNERS ON PROJECT

(1) SEWER - TUCKASEIGEE WATER & SEWER AUTHORITY
(2) TELEPHONE - FRONTIER COMMUNICATIONS

SEAL
NORTH CAROLINA PROFESSIONAL SEAL 028946 ENGINEER MARIOS S. GEORGIOU
1/10/14

V&M
Vaughn & Melton
Consulting Engineers
138-F Patton Ave.
Asheville, NC 28806
828-253-2796

STATE OF NORTH CAROLINA DEPARTMENT OF TRANSPORTATION

PREPARED IN THE OFFICE OF:
DIVISION OF HIGHWAYS
UTILITIES ENGINEERING SECTION
1591 MAIL SERVICES CENTER
RALEIGH NC 27699-1591
PHONE (919) 250-4128
FAX (919) 250-4119

Roger Worthington, P.E.	UTILITIES SECTION ENGINEER
Xxxxx Xxxxx, P.E.	UTILITIES SQUAD LEADER PROJECT ENGINEER
Marios Georgiou, PE	UTILITIES PROJECT DESIGNER

$$$$SYSTIME$$$$
$$$$DGN$$$$
$$$$USERNAME$$$$

PROJECT REFERENCE NO.	SHEET NO.
BD-5114S	UC-2

STATE OF NORTH CAROLINA
DIVISION OF HIGHWAYS

UTILITIES PLAN SHEET SYMBOLS

PROPOSED SEWER SYMBOLS

Force Main Sewer Line (Sized as Shown)

Sewer Pump Station

Air Release Valve — AR

Force Main Sewer Line (Sized as Shown) (Trenchless Installation)

Encasement by Open Cut

PROPOSED MISCELLANEOUS UTILITIES SYMBOLS

Thrust Block

Plan Note — NOTE

Pay Item Note — PAY ITEM

EXISTING UTILITIES SYMBOLS

Power Pole

Telephone Pole

Joint Use Pole

Utility Pole

Utility Pole with Base

H-Frame Pole

Power Transmission Line Tower

Water Manhole

Power Manhole

Telephone Manhole

Sanitary Sewer Manhole

Hand Hole for Cable

Power Transformer

Telephone Pedestal

CATV Pedestal

Gas Valve

Gas Meter

Located Miscellaneous Utility Object

Abandoned According to Utility Records — AATUR

End of Information — E.O.I.

Underground Power Line — P

Underground Telephone Cable — T

Underground Telephone Conduit — TC

Underground Fiber Optics Telephone Cable — T FO

Underground TV Cable — TV

Underground Fiber Optics TV Cable — TV FO

Underground Gas Pipeline — G

Aboveground Gas Pipeline — A/G Gas

Underground Water Line — W

Aboveground Water Line — A/G Water

Underground Gravity Sanitary Sewer Line — SS

Aboveground Gravity Sanitary Sewer Line — A/G Sanitary Sewer

Underground SS Forced Main Line — FSS

Underground Unknown Utility Line — UUL

SUE Test Hole

Water Meter

Water Valve

Fire Hydrant

Sanitary Sewer Cleanout

REV: 2/11/2012

PROJECT REFERENCE NO.	SHEET NO.
BD-5114S	UC-3
DESIGNED BY: MSG	
DRAWN BY: LAM	
CHECKED BY: RMS	
APPROVED BY:	
REVISED:	
NORTH CAROLINA DEPARTMENT OF TRANSPORTATION	
UTILITIES ENGINEERING SEC. PHONE: (919)250-4128 FAX: (919)250-4119	UTILITY CONSTRUCTION PLANS ONLY

1/10/14

NORTH CAROLINA PROFESSIONAL SEAL 026848 ENGINEER RAMON S. GEORGIEV

UTILITY CONSTRUCTION

CONSTRUCTION NOTES:

1. HOME OWNER IS RESPONSIBLE FOR DRAIN LINE CONNECTIONS TO DUPLEX PUMP STATION. COORDINATE LOCATIONS AND INVERT ELEVATIONS OF INCOMING SEWER LINES WITH HOME OWNER PRIOR TO ORDERING PUMP STATION.

2. HOME OWNER IS RESPONSIBLE FOR EXTENDING POWER TO THE CONTROL PANEL. A TEMPORARY CONTROL PANEL INSTALLATION IS PROVIDED FOR QUALITY CONTROL PURPOSES.

3. INSTALL PUMP STATION AND LAY NEW 2" FORCEMAIN TO CONNECT TO EXISTING 8" FORCEMAIN. DO NOT DISTURB EXISTING SEPTIC TANK OR DRAINFIELD LINES. THESE ARE TO BE KEPT IN SERVICE UNTIL NEW PUMP STATION AND FORCEMAIN ARE APPROVED.

4. INSTALL NEW ISOLATION VALVE WHERE NEW 2" FORCEMAIN CONNECTS TO EXISTING FORCEMAIN. SHUT VALVE OFF TEMPORARILY.

5. INSTALL JUNCTION BOX AND ELECTRICAL WIRING TO CONTROL PANEL. COORDINATE LOCATION OF CONTROL PANEL WITH PROPERTY OWNER. (CONTROL PANEL MUST BE WITHIN SIGHT OF PUMP STATION). TESTING OF NEW SYSTEM WILL BE PERFORMED UTILIZING A PORTABLE STANDBY GENERATOR (FURNISHED BY THE CONTRACTOR).

6. TEST PUMP STATION AND NEW 2" FORCEMAIN WITH CLEAN WATER.

7. ABANDON UTILITY PIPE PER SECTION 1530-3 (A). ABANDON SEPTIC TANKS PER 15A NCAC 18A 1900. PERFORMED BY OTHERS.

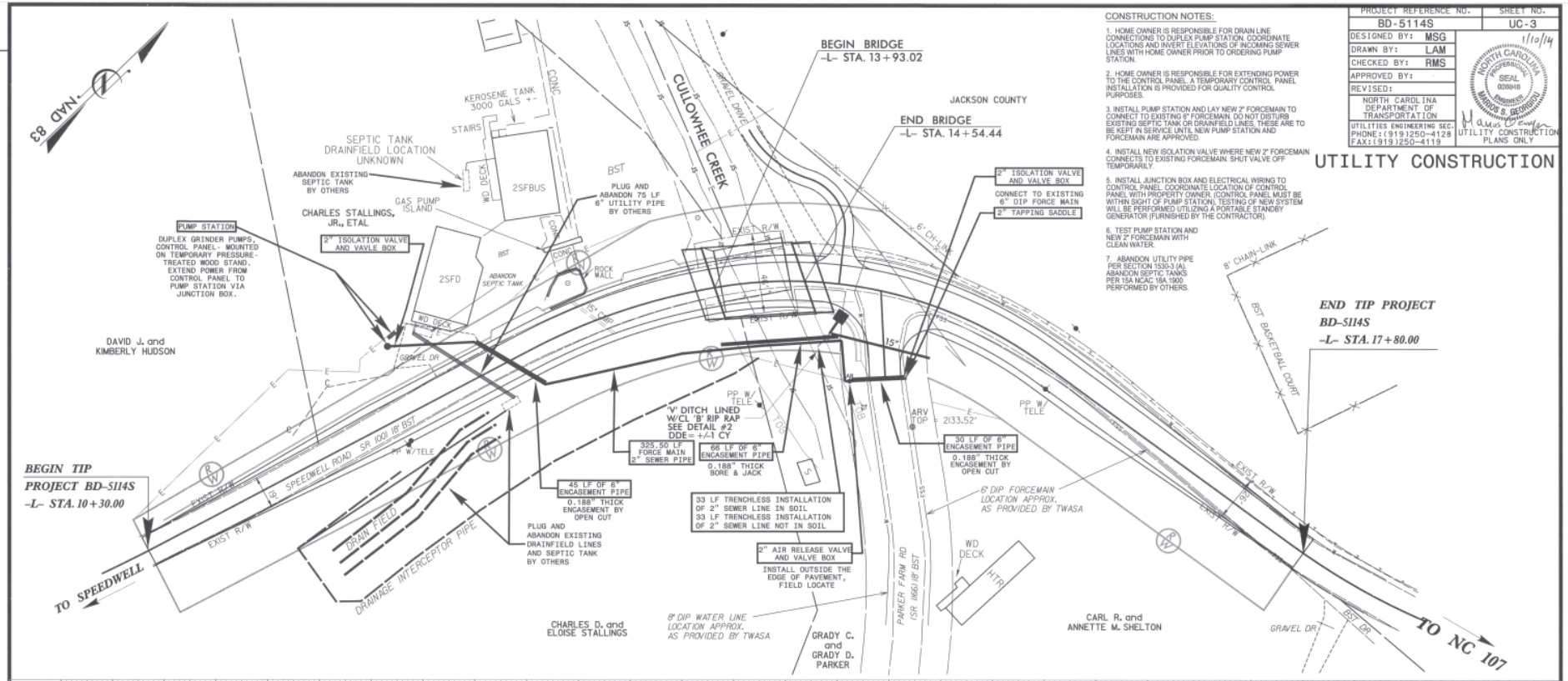

SEWER LINE PROFILE
(2" FSS)

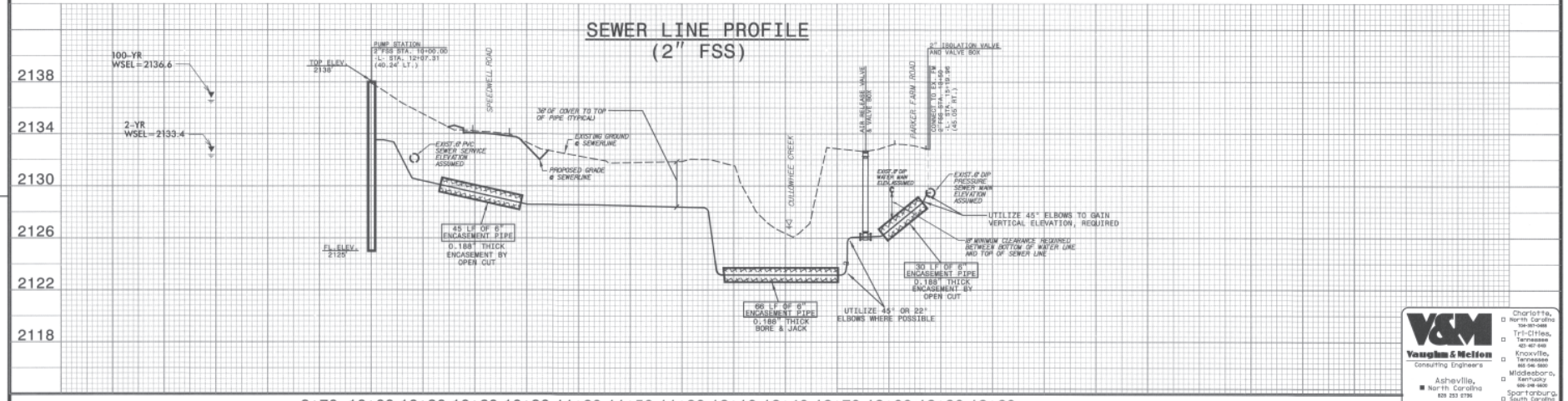

REVISIONS

V&M
Vaughn & Melton
Consulting Engineers
Asheville, North Carolina 828 253 8796
Charlotte, North Carolina 704-357-0488
Tri-Cities, Tennessee 423-467-9418
Knoxville, Tennessee 865-546-5880
Middlesboro, Kentucky 606-248-1600
Spartanburg, South Carolina 864-574-4775

Copyright © 2006 Vaughn & Melton, Inc. All Rights Reserved

PROJECT REFERENCE NO. BD-5114S | SHEET NO. UC-4
DESIGNED BY: MSG
DRAWN BY: LAM
CHECKED BY: RMS
APPROVED BY:
REVISED:
NORTH CAROLINA DEPARTMENT OF TRANSPORTATION
UTILITIES ENGINEERING SEC.
PHONE:(919)250-4128
FAX:(919)250-4119
UTILITY CONSTRUCTION PLANS ONLY

Vaughn & Melton Consulting Engineers
Asheville, North Carolina 828-253-2796
Charlotte, North Carolina
Tri-Cities, Tennessee
Knoxville, Tennessee
Middlesboro, Kentucky
Spartanburg, South Carolina

Copyright © 2006 Vaughn & Melton, Inc. All Rights Reserved

UTILITY CONSTRUCTION

STATE OF NORTH CAROLINA
DIVISION OF HIGHWAYS

UTILITIES NOTES AND DETAILS SHEET

GENERAL NOTES:

1. THE PROPOSED UTILITY CONSTRUCTION SHALL MEET THE APPLICABLE REQUIREMENTS OF THE NC DEPARTMENT OF TRANSPORTATION'S "STANDARD SPECIFICATIONS FOR ROADS AND STRUCTURES" DATED JANUARY 2012, THE STANDARD DETAILS AS SHOWN ON THE PLANS AND THE PROJECT SPECIAL PROVISIONS FOR UTILITY CONSTRUCTION.

2. TUCKASEIGEE WATER & SEWER AUTHORITY OWNS THE EXISTING UTILITIES.

3. ALL SEWER LINES TO BE INSTALLED WITHIN COMPLIANCE OF THE RULES AND REGULATIONS OF THE NORTH CAROLINA DEPARTMENT OF ENVIRONMENT AND NATURAL RESOURCES, DIVISION OF WATER QUALITY. PERFORM ALL WORK IN ACCORDANCE WITH THE APPLICABLE PLUMBING CODES.

4. THE DEPARTMENT OWNS THE CONSTRUCTION CONTRACT AND HAS ADMINISTRATIVE AUTHORITY. COMMUNICATIONS AND DECISIONS BETWEEN THE CONTRACTOR AND UTILITY OWNER ARE NOT BINDING UPON THE DEPARTMENT OR THIS CONTRACT UNLESS AUTHORIZED BY THE ENGINEER. AGREEMENTS BETWEEN THE UTILITY OWNER AND CONTRACTOR FOR THE WORK THAT IS NOT PART OF THIS CONTRACT OR IS SECONDARY TO THIS CONTRACT ARE ALLOWED, BUT ARE NOT BINDING UPON THE DEPARTMENT.

5. THE DEPARTMENT WILL OWN THE NEW FACILITIES UNTIL ACCEPTANCE OF THE WORK BY THE ENGINEER, NCDENR, TWASA AND THE DEPARTMENT. THE DEPARTMENT WILL RELINQUISH THE OWNERSHIP AND MAINTENANCE OF THE NEW FACILITIES TO THE PROPERTY OWNER PER THE RIGHT OF WAY AGREEMENT.

6. PROVIDE ACCESS FOR THE DEPARTMENT PERSONNEL AND THE OWNER'S REPRESENTATIVES TO ALL PHASES OF CONSTRUCTION. NOTIFY DEPARTMENT PERSONNEL AND THE UTILITY OWNER TWO WEEKS PRIOR TO COMMENCEMENT OF ANY WORK AND ONE WEEK PRIOR TO SERVICE INTERRUPTION. KEEP UTILITY OWNERS' REPRESENTATIVES INFORMED OF WORK PROGRESS AND PROVIDE OPPORTUNITY FOR INSPECTION OF CONSTRUCTION AND TESTING.

7. THE PLANS DEPICT THE BEST AVAILABLE INFORMATION FOR THE LOCATION, SIZE, AND TYPE OF MATERIAL FOR ALL EXISTING UTILITIES. MAKE INVESTIGATIONS FOR DETERMINING THE EXACT LOCATION, SIZE, AND TYPE MATERIAL OF THE EXISTING FACILITIES AS NECESSARY FOR THE CONSTRUCTION OF THE PROPOSED UTILITIES AND FOR AVOIDING DAMAGE TO EXISTING FACILITIES. REPAIR ANY DAMAGE INCURRED TO EXISTING FACILITIES TO THE ORIGINAL OR BETTER CONDITION AT NO ADDITIONAL COST TO THE DEPARTMENT.

8. MAKE FINAL CONNECTIONS OF THE NEW WORK TO THE EXISTING SYSTEM WHERE INDICATED ON THE PLANS, AS REQUIRED TO FIT THE ACTUAL CONDITIONS, OR AS DIRECTED.

9. MAKE CONNECTIONS BETWEEN EXISTING AND PROPOSED UTILITIES AT TIMES MOST CONVENIENT TO THE PUBLIC, WITHOUT ENDANGERING THE UTILITY SERVICE, AND IN ACCORDANCE WITH THE UTILITY OWNER'S REQUIREMENTS. MAKE CONNECTIONS USING 2 LINE STOPS AND /OR ON WEEKENDS, AT NIGHT, AND ON HOLIDAYS IF NECESSARY.

10. ALL UTILITY MATERIALS SHALL BE APPROVED PRIOR TO DELIVERY TO THE PROJECT. SEE 1500-7, " SUBMITTALS AND RECORDS" IN SECTION 1500 OF THE STANDARD SPECIFICATIONS.

11. CONTRACTOR TO PROVIDE AS-BUILT DRAWINGS UPON COMPLETION AND ACCEPTANCE OF THE PROJECT.

PROJECT SPECIFIC NOTES:

1. PROPOSED SEWER LINE SHALL BE PER NCDOT STANDARD SPECIFICATION 1034-2 (B) OR (C).

2. CONTRACTOR'S ATTENTION IS DIRECTED TO SECTIONS 102, 107, AND 1550 OF THE STANDARD SPECIFICATIONS CONCERNING TRENCHLESS INSTALLATION. IT IS THE CONTRACTOR'S RESPONSIBILITY TO HAVE BORE PATH DESIGNED AND SEALED BY A LICENSED NORTH CAROLINA PROFESSIONAL ENGINEER. NO DAMAGE IS ALLOWED TO RIVER, WETLANDS, OR BUFFER ZONES.

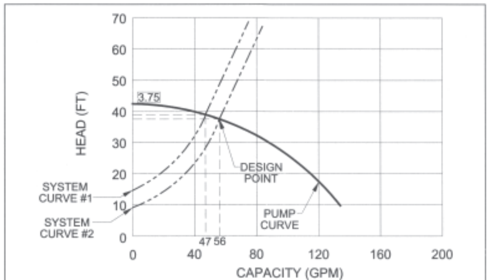

SYSTEM CURVE #1- SPEEDWELL PUMP RUNNING WITH FLAT GAP PUMP RUNNING AT SAME TIME.

SYSTEM CURVE #2- SPEEDWELL PUMP (ONE) RUNNING WITH APPROX. 1942 LF OF NEW 2" PVC AND 6" DIP (EXIST.) PIPE. C=140 FOR NEW 2" PVC AND C=100 FOR EXIST. 6" DIP.

SYSTEM AND PUMP CURVES
NOT TO SCALE

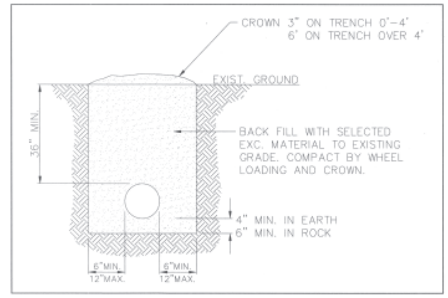

TYPICAL FORCE MAIN PIPE TRENCH
NOT TO SCALE

CONCRETE THRUST BLOCK DIMENSIONS					
X	A	B	C	D	D_1
11 1/4° BENDS					
*4"	4"	1'-0"	1'-0"	1'-0"	1'-0"
6"	6"	1'-0"	1'-0"	1'-0"	1'-0"
8"	6"	1'-0"	1'-0"	1'-0"	1'-0"
10"	6"	1'-4"	1'-4"	1'-4"	1'-0"
12"	8"	1'-4"	1'-4"	1'-4"	1'-0"
16"	10"	1'-6"	1'-6"	1'-6"	1'-4"
18"	12"	2'-8"	3'-0"	2'-10"	1'-10"
20"	14"	3'-0"	3'-6"	3'-0"	2'-0"
24"	16"	4'-6"	5'-0"	3'-6"	2'-4"
30"	20"	5'-6"	6'-0"	4'-4"	3'-0"
36"	24"	6'-0"	7'-0"	5'-0"	3'-9"
22 1/2° BENDS					
*4"	4"	1'-0"	1'-0"	1'-0"	1'-0"
6"	6"	1'-0"	1'-0"	1'-0"	1'-0"
8"	6"	1'-0"	1'-0"	1'-0"	1'-0"
10"	6"	1'-4"	1'-0"	1'-0"	1'-4"
12"	8"	1'-4"	1'-4"	1'-0"	1'-4"
16"	10"	1'-6"	1'-10"	1'-4"	1'-6"
18"	12"	3'-6"	4'-0"	2'-0"	1'-10"
20"	14"	4'-0"	4'-6"	3'-0"	2'-0"
24"	16"	5'-0"	5'-8"	3'-6"	2'-4"
30"	20"	6'-0"	7'-0"	4'-4"	3'-0"
36"	24"	7'-0"	8'-0"	5'-0"	3'-9"

CONCRETE THRUST BLOCK DIMENSIONS					
X	A	B	C	D	D_1
45° BENDS					
*4"	4"	1'-4"	1'-4"	1'-0"	1'-0"
6"	6"	1'-4"	1'-4"	1'-0"	1'-0"
8"	6"	1'-6"	1'-6"	1'-8"	1'-0"
10"	6"	1'-8"	2'-0"	1'-10"	1'-10"
12"	8"	1'-10"	2'-6"	2'-0"	2'-0"
16"	10"	2'-6"	3'-4"	2'-4"	2'-4"
18"	14"	4'-0"	5'-0"	3'-9"	2'-0"
20"	16"	5'-0"	6'-0"	4'-0"	2'-6"
24"	18"	6'-0"	7'-6"	4'-8"	3'-0"
30"	24"	7'-0"	10'-0"	6'-0"	3'-8"
36"	28"	8'-0"	11'-0"	8'-0"	4'-6"
90° BENDS & HYDRANTS					
*4"	6"	1'-4"	2'-0"	1'-0"	1'-0"
6"	8"	1'-4"	2'-0"	1'-0"	1'-0"
8"	10"	1'-6"	2'-4"	1'-8"	1'-8"
10"	12"	2'-0"	3'-0"	2'-0"	1'-10"
12"	14"	2'-2"	3'-4"	2'-6"	2'-0"
16"	18"	2'-10"	4'-4"	3'-6"	2'-4"
18"	18"	4'-0"	6'-0"	4'-0"	2'-6"
20"	24"	5'-0"	7'-6"	4'-6"	2'-10"
24"	28"	8'-0"	10'-0"	5'-0"	3'-3"
30"	36"	9'-0"	12'-0"	7'-0"	4'-0"
36"	40"	12'-0"	15'-0"	9'-0"	5'-6"

* = 4" OR SMALLER

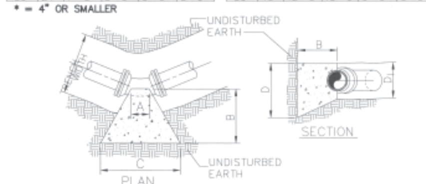

1. PROVIDE THRUST BLOCKS WHERE NOTED ON THE PLANS OR AT EVERY LOCATION (IF NOT SHOWN) WHERE PIPE LINE CHANGES DIRECTION OR SIZE. RESTRAINED JOINTS MAY BE USED IN LIEU OF THRUST BLOCKING. PROVIDE BOTH ANCHORING MECHANISMS (RESTRAINED FITTINGS AND ANCHOR BLOCKING WHERE SPECIFICALLY NOTED ON THE PLANS).

2. TABLE BASED ON 100 PSI & 2000 PSF ALLOWABLE SOIL BEARING PRESSURE. SPECIAL THRUST & REACTION BLOCKS WILL BE REQUIRED IN SOFT SAND, SOFT CLAY OR RECENTLY PLACED FILL.

3. CONSULT WITH ENGINEER IF DIFFERENT PRESSURE OR BEARING CAPACITY IS USED.

4. BLOCK HEIGHT SHALL BE EQUAL TO OR LESS THAN 1/2 THE TOTAL DEPTH TO THE BOTTOM OF THE BLOCK, BUT NOT LESS THAN THE PIPE DIAMETER.

THRUST BLOCK
NOT TO SCALE

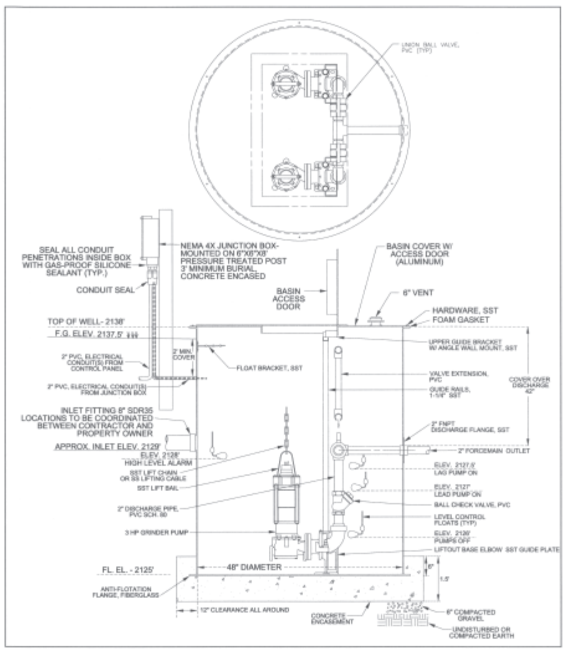

DUPLEX GRINDER PUMP STATION
NOT TO SCALE

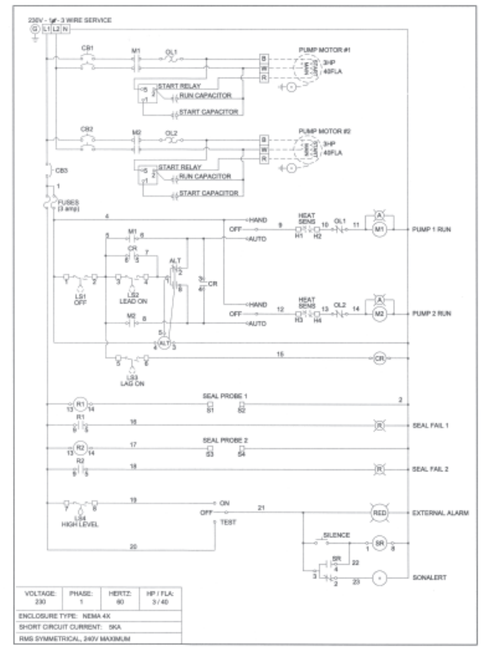

CONTROL PANEL WIRING DIAGRAM
NOT TO SCALE

STATE OF NORTH CAROLINA
DIVISION OF HIGHWAYS

UTILITIES DETAILS SHEET

V&M
Vaughn & Melton
Consulting Engineers
Asheville
North Carolina
828-253-2796
Charlotte
North Carolina
704-301-0480
Tri-Cities,
Tennessee
423-467-8403
Knoxville,
Tennessee
865-546-9500
Middlesboro,
Kentucky
606-248-5000
Spartanburg,
South Carolina
864-574-4775

Copyright © 2006 Vaughn & Melton, Inc.
All Rights Reserved

PROJECT REFERENCE NO.	SHEET NO.
BD-5114S	UC-5
DESIGNED BY: MSG	
DRAWN BY: LAM	
CHECKED BY: RMS	
APPROVED BY:	
REVISED:	
NORTH CAROLINA DEPARTMENT OF TRANSPORTATION	
UTILITIES ENGINEERING SEC. PHONE:(919)250-4128 FAX:(919)250-4119	UTILITY CONSTRUCTION PLANS ONLY

NORTH CAROLINA PROFESSIONAL SEAL 035848 ENGINEER RAMON S. DELGADO
1/10/14

UTILITY CONSTRUCTION

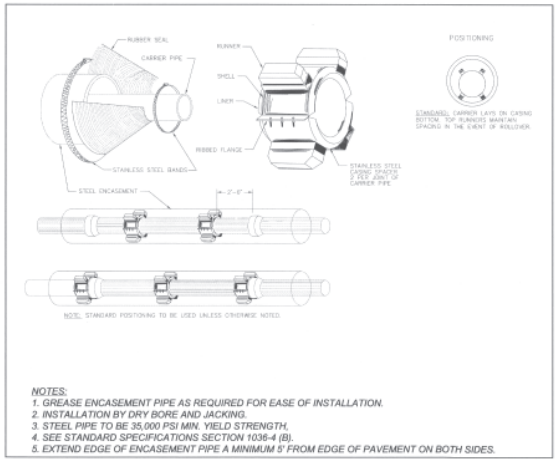

NOTES:
1. GREASE ENCASEMENT PIPE AS REQUIRED FOR EASE OF INSTALLATION.
2. INSTALLATION BY DRY BORE AND JACKING.
3. STEEL PIPE TO BE 35,000 PSI MIN. YIELD STRENGTH.
4. SEE STANDARD SPECIFICATIONS SECTION 1036-4 (B).
5. EXTEND EDGE OF ENCASEMENT PIPE A MINIMUM 5' FROM EDGE OF PAVEMENT ON BOTH SIDES.

PIPE ENCASEMENT

NOT TO SCALE

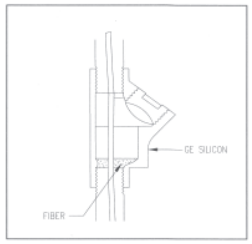

ELECTRICAL CONDUIT SEAL

NOT TO SCALE

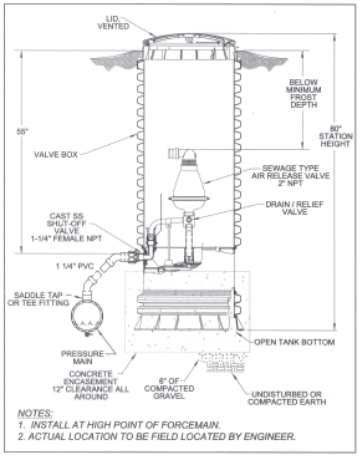

NOTES:
1. INSTALL AT HIGH POINT OF FORCEMAIN.
2. ACTUAL LOCATION TO BE FIELD LOCATED BY ENGINEER.

AIR RELEASE STATION

NOT TO SCALE

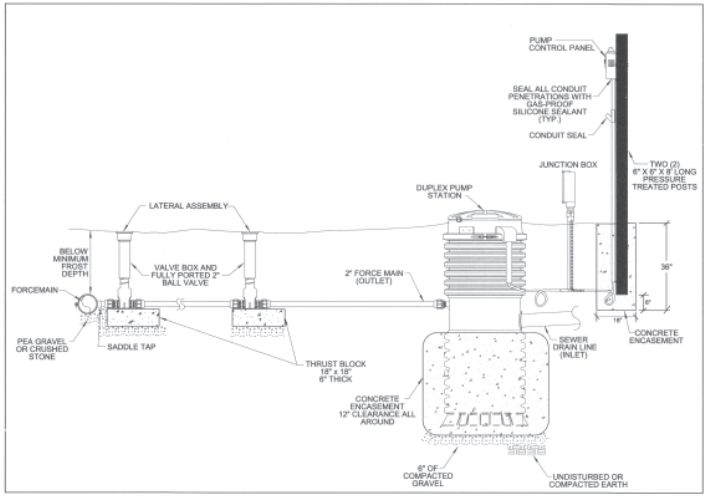

TYPICAL LATERAL INSTALLATION DETAIL

NOT TO SCALE

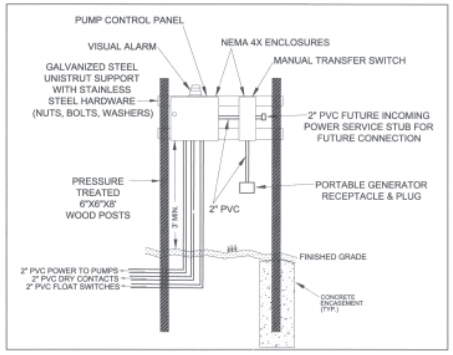

CONTROL PANEL MOUNTING STRUCTURE

NOT TO SCALE

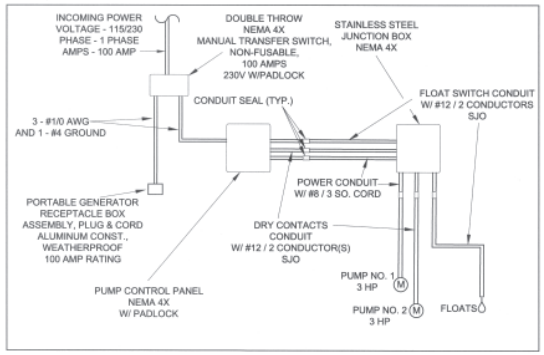

SINGLE LINE DIAGRAM– ELECTRICAL

NOT TO SCALE

TIP PROJECT: BD-5114S

See Sheet 1A For Index of Sheets
See Sheet 1B For Standard Symbology Sheet

T.I.P. NO.	SHEET NO.
BD-5114S	UO-1

STATE OF NORTH CAROLINA
DIVISION OF HIGHWAYS

UTILITIES BY OTHERS PLANS
JACKSON COUNTY

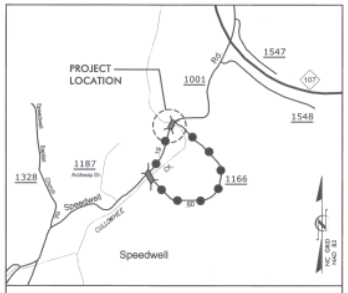

VICINITY MAP N.T.S.

LOCATION: BRIDGE #053 OVER CULLOWHEE CREEK ON SR 1001 (SPEEDWELL ROAD)

TYPE OF WORK: AERIAL POWER & TELEPHONE

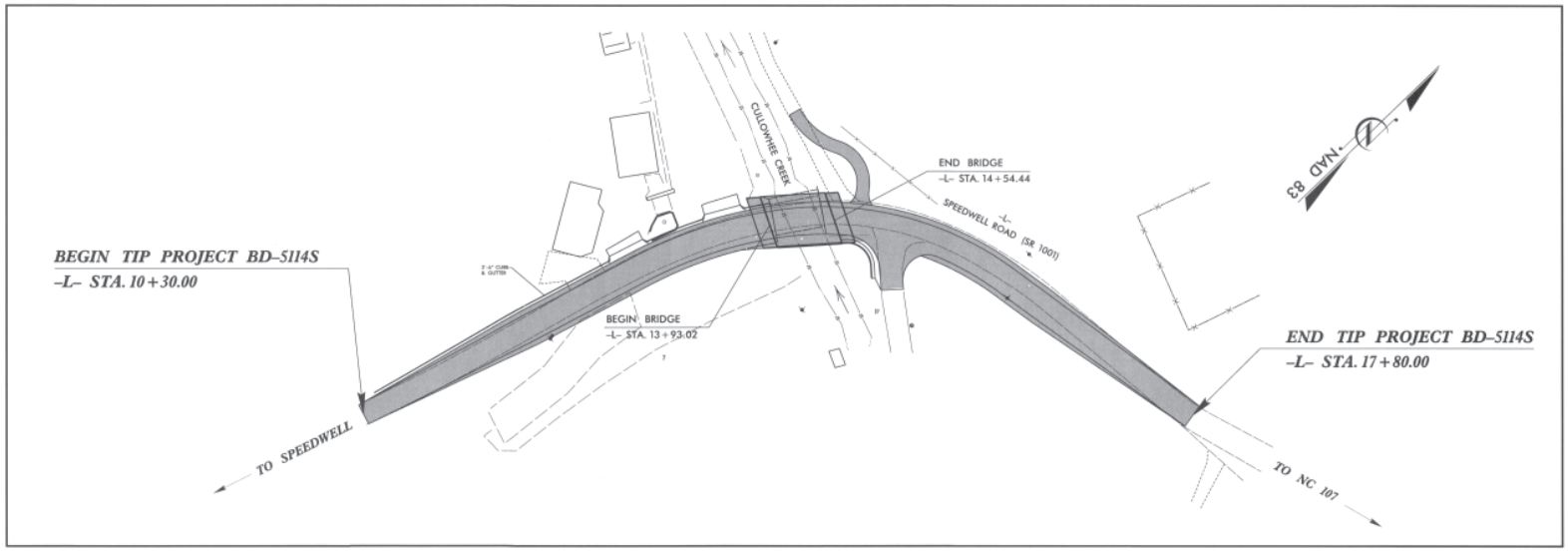

GRAPHIC SCALES

50 25 0 50 100
PLANS

INDEX OF SHEETS

SHEET NO.	DESCRIPTION
UO-1	TITLE SHEET
UO-2	UTILITY BY OTHERS PLAN SHEETS

UTILITY OWNERS ON PROJECT

(1) POWER - WESTERN CAROLINA UNIVERSITY
(2) TELEPHONE - FRONTIER COMMUNICATIONS

SEAL
NORTH CAROLINA PROFESSIONAL SEAL ENGINEER REECE M. SCHULER
1/10/14

Vaughn & Melton
Consulting Engineers
3089-L Beam Road
Charlotte, NC 28217
704-357-0488

STATE OF NORTH CAROLINA DEPARTMENT OF TRANSPORTATION

PREPARED IN THE OFFICE OF:
DIVISION OF HIGHWAYS
UTILITIES ENGINEERING SECTION
1590 MAIL SERVICES CENTER
RALEIGH NC 27699-1590
PHONE (919) 250-4128
FAX (919) 250-4119

Roger Worthington, P.E.	UTILITIES SECTION ENGINEER
Xxxxx Xxxxx, P.E.	UTILITIES SQUAD LEADER PROJECT ENGINEER
Reece Schuler, PE	UTILITIES PROJECT DESIGNER

09/28/99
$$$$$SYSTIME$$$$$
$$$$$$$$$$$$$$$$$$$$$$$$$$$$$$$$$$$$$
$$$$$USERNAME$$$$

PROJECT REFERENCE NO.	SHEET NO.
BD-5114S	U0-2

UTILITIES BY OTHERS

NOTE:
ALL PROPOSED UTILITY WORK SHOWN ON THIS SHEET WILL BE DONE BY OTHERS

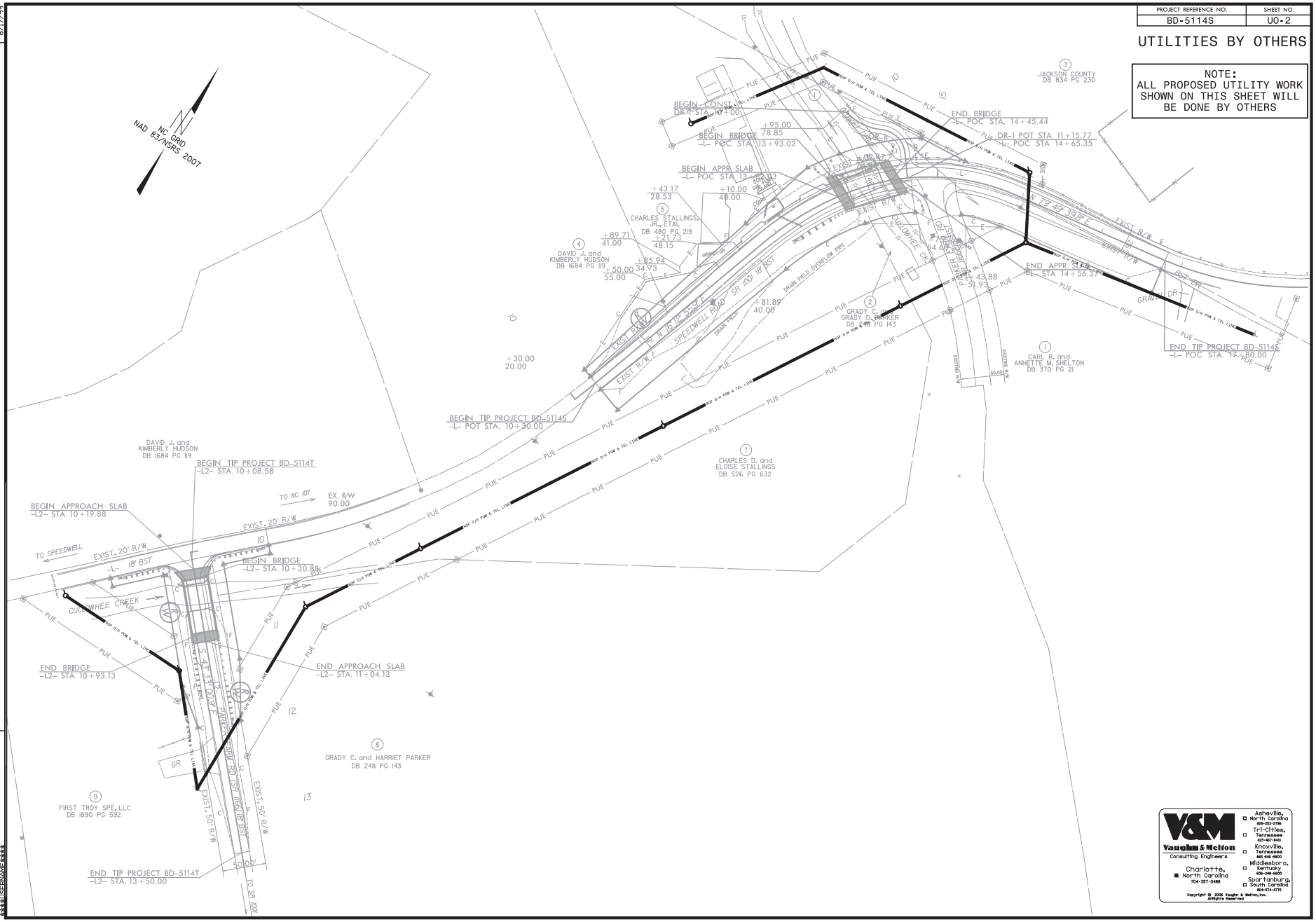

V&M
Vaughn & Melton
Consulting Engineers
Charlotte, North Carolina 704-357-0488
Asheville, North Carolina 828-253-2796
Tri-Cities, Tennessee 423-467-8402
Knoxville, Tennessee 865-246-6600
Middlesboro, Kentucky 606-248-6600
Spartanburg, South Carolina 864-574-4775

Copyright © 2006 Vaughn & Melton, Inc. All Rights Reserved

REVISIONS

8/17/99

SYSTIME
USERNAME

COMPUTED BY: CBC DATE: 02-06-12
CHECKED BY: RMS DATE: 02-06-12

PROJECT REFERENCE NO.	SHEET NO.
BD-5114S	X-0

NORTH CAROLINA PROFESSIONAL SEAL 050453 ENGINEER AARON C. CARVER 1/10/14

DIVISION OF HIGHWAYS
STATE OF NORTH CAROLINA

CROSS SECTION SUMMARY

IN CUBIC YARDS

-L- LOCATION	UNCLASSIFIED EXCAVATION	EMBT
10+30	0	0
10+50	6	2
11+00	81	5
11+50	182	1
12+00	157	0
12+50	72	6
13+00	59	7
13+50	49	22
13+93.02 BEGIN BRIDGE	37	30
14+45.44 END BRIDGE	4	4
14+50	4	3
15+00	42	19
15+50	51	6
16+00	55	8
16+50	53	5
17+00	46	10
17+50	41	11
17+80	14	2

NOTE: EMBANKMENT COLUMN DOES NOT INCLUDE BACKFILL FOR UNDERCUT.

-DR-1- LOCATION	UNCLASSIFIED EXCAVATION	EMBT
10+00	0	0
10+20	6	0
10+40	4	2
10+60	1	11
10+80	0	18
11+00	7	9
11+04.77	3	0

Approximate quantities only. Unclassified excavation, borrow excavation, fine grading, clearing and grubbing, and removal of existing pavement will be paid for at the contract lump sum price for "grading".

PROJ. REFERENCE NO.	SHEET NO.
BD-5114S	X-1

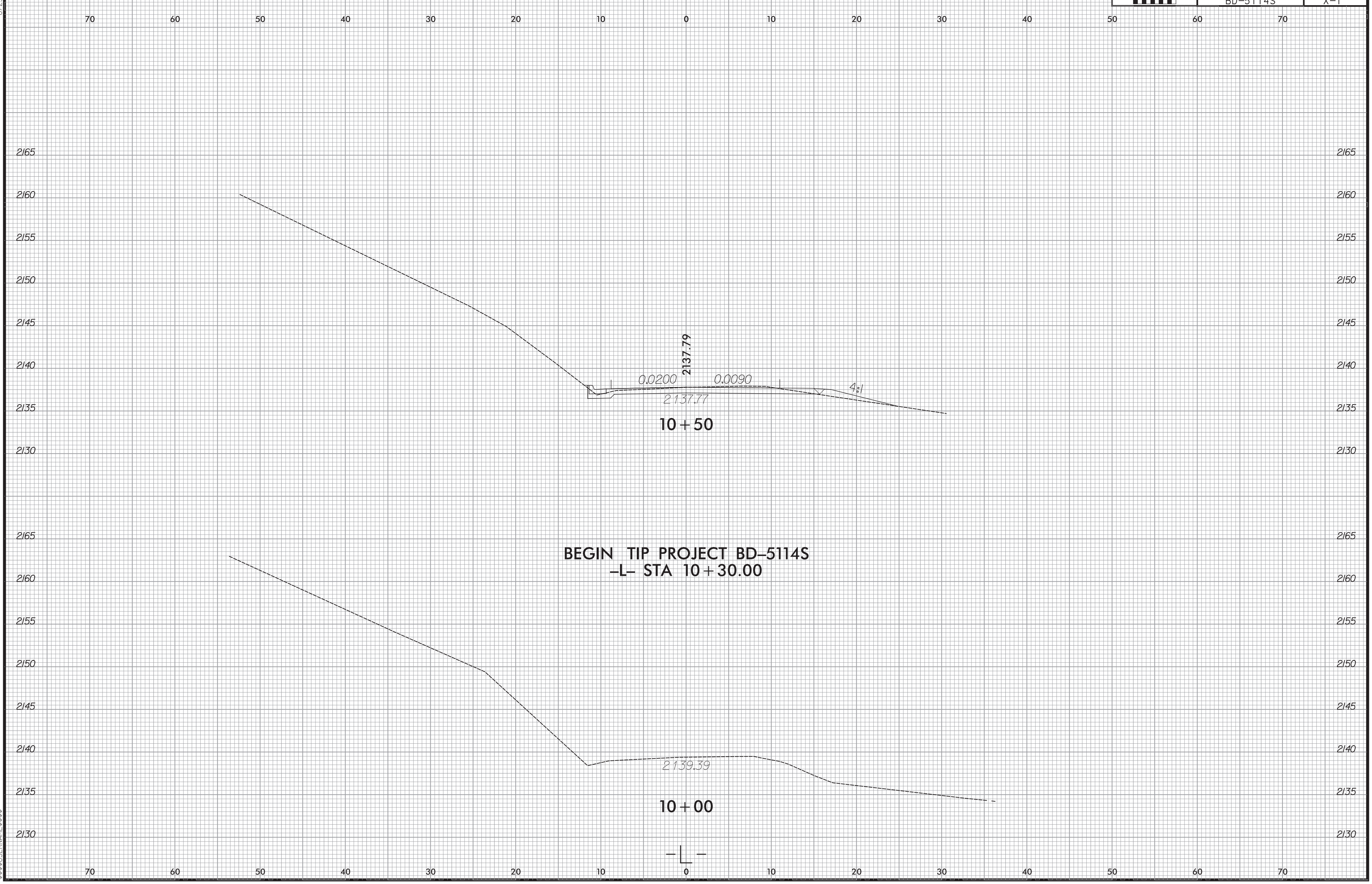

PROJ. REFERENCE NO.	SHEET NO.
BD-5114S	X-2

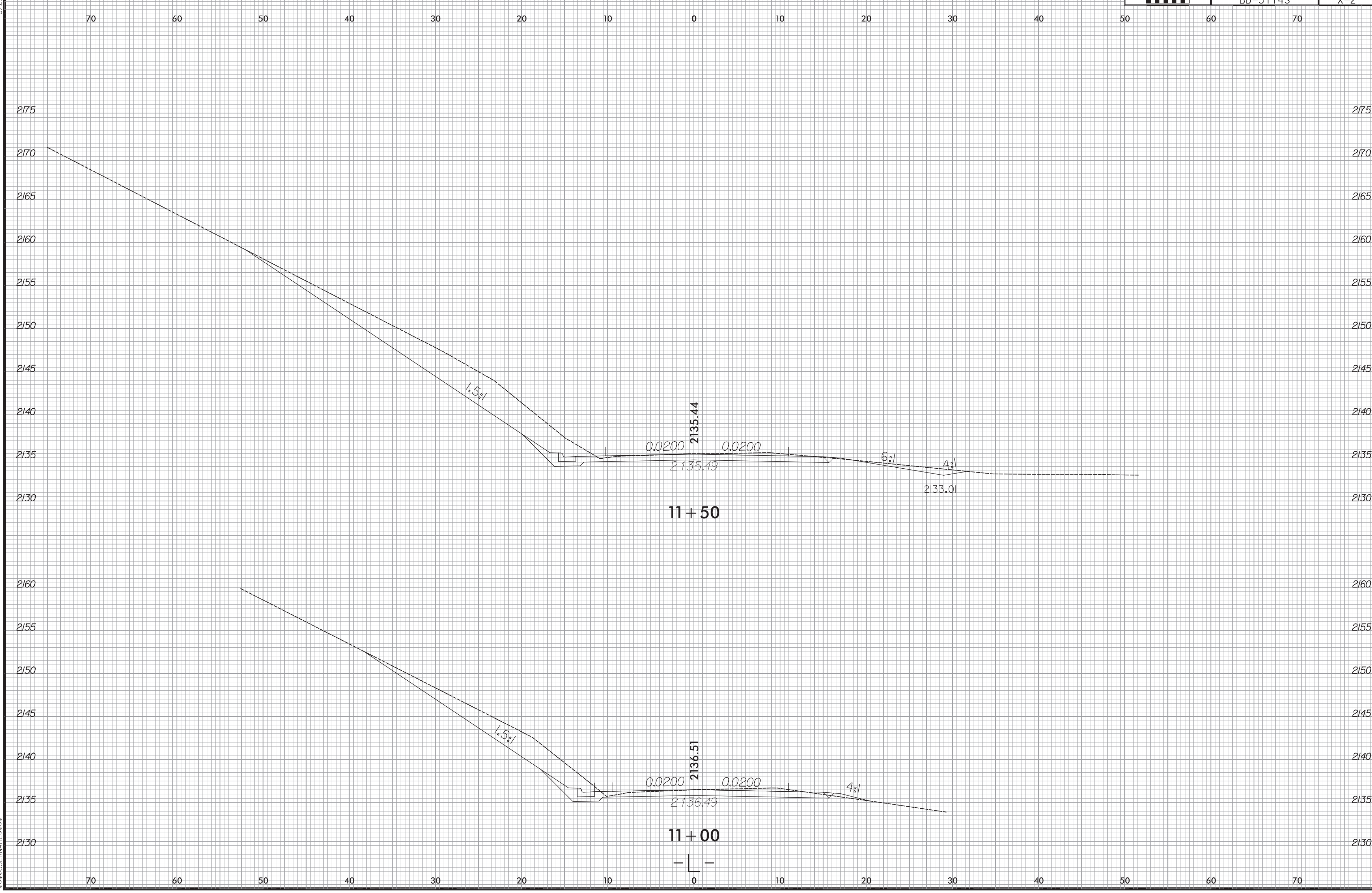

8/23/99

$$$$$$SYSTIME$$$$
$$$$$$$$$$$$$$DGN$$$$$$$$$$$$$$$$
$$$$USERNAME$$$$

0 2.5 5	PROJ. REFERENCE NO.	SHEET NO.
	BD-5114S	X-3

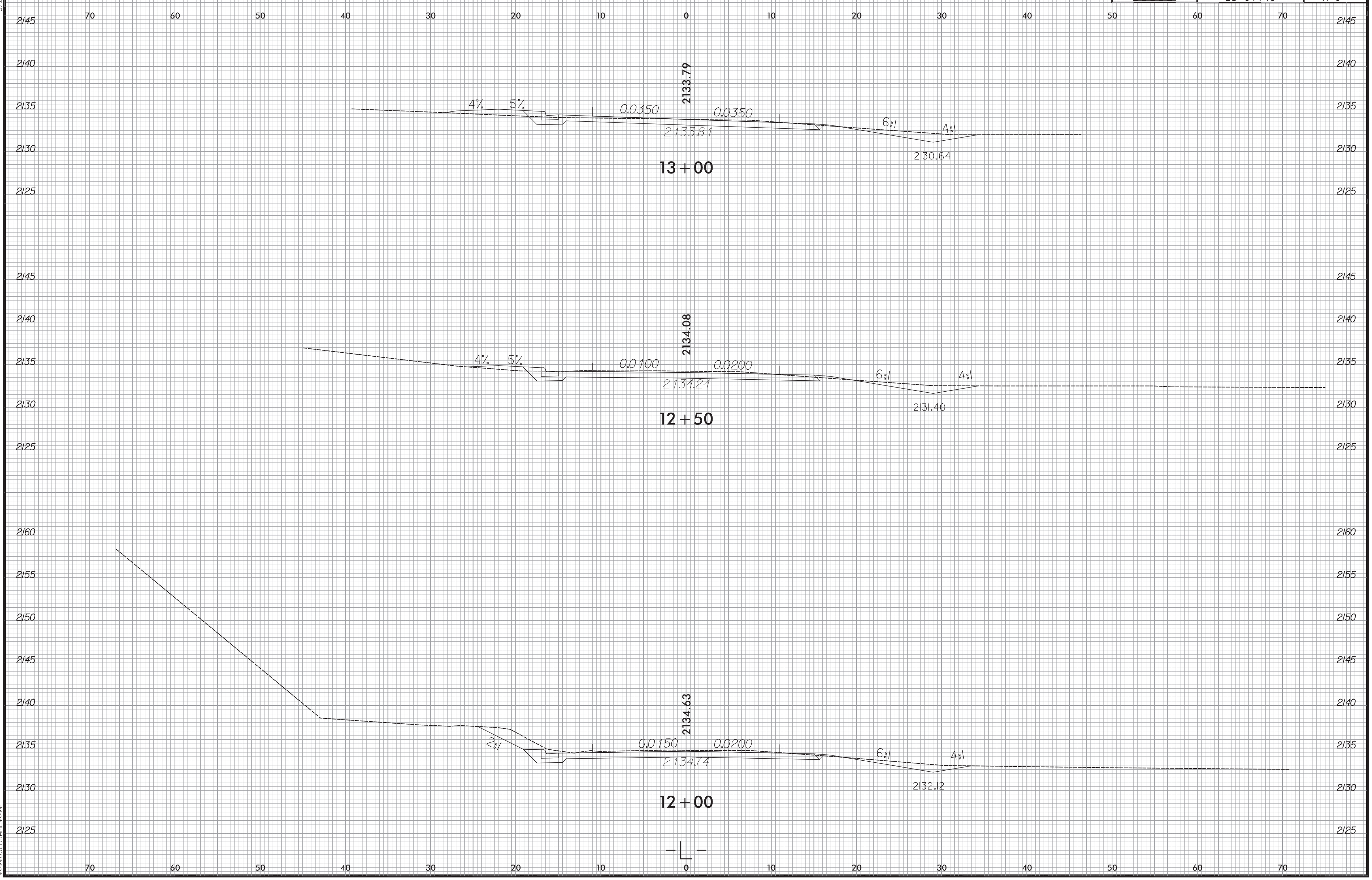

8/23/99

PROJ. REFERENCE NO.	SHEET NO.
BD-5114S	X-4

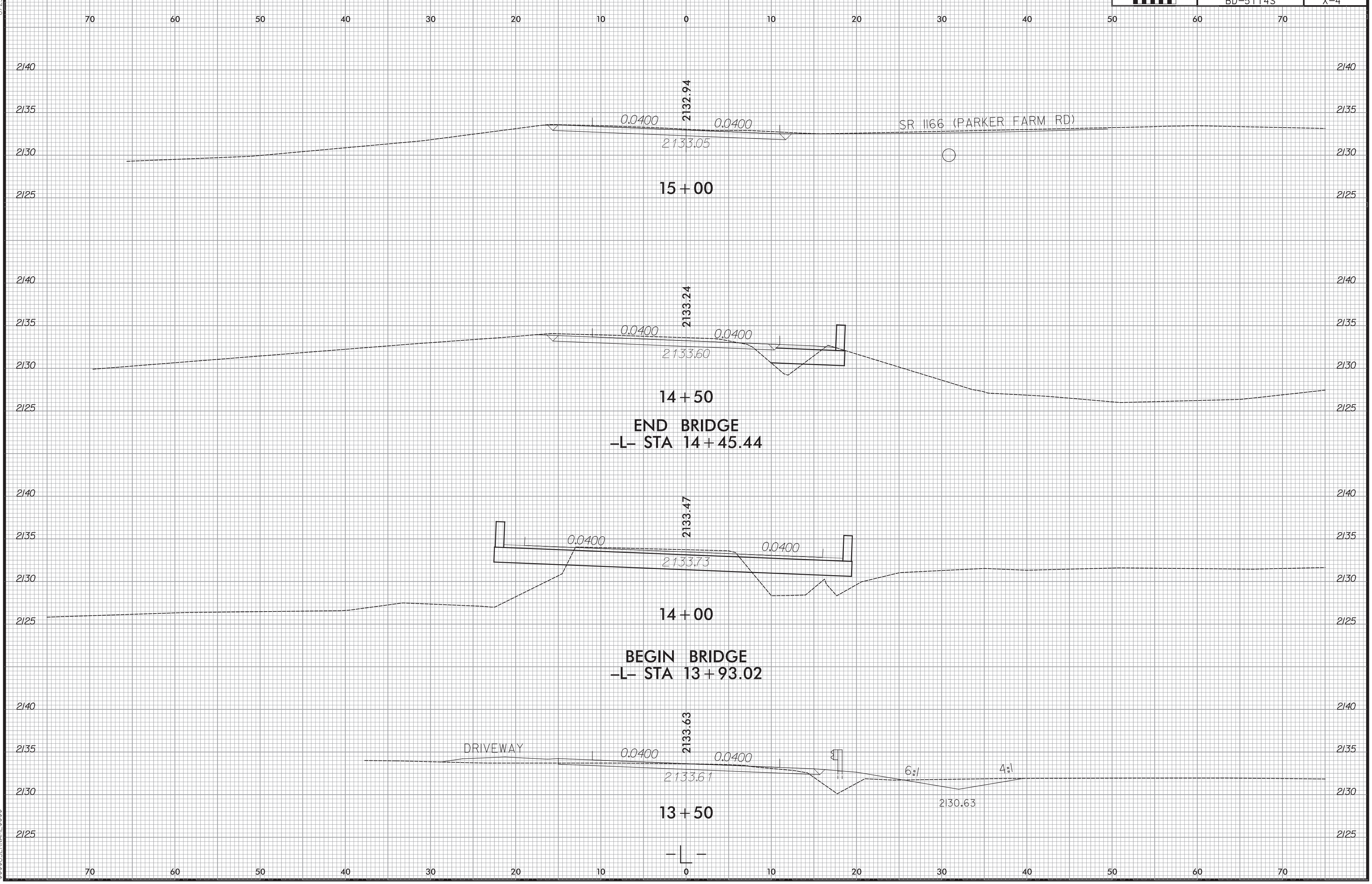

8/23/99

0 2.5 5	PROJ. REFERENCE NO.	SHEET NO.
	BD-5114S	X-5

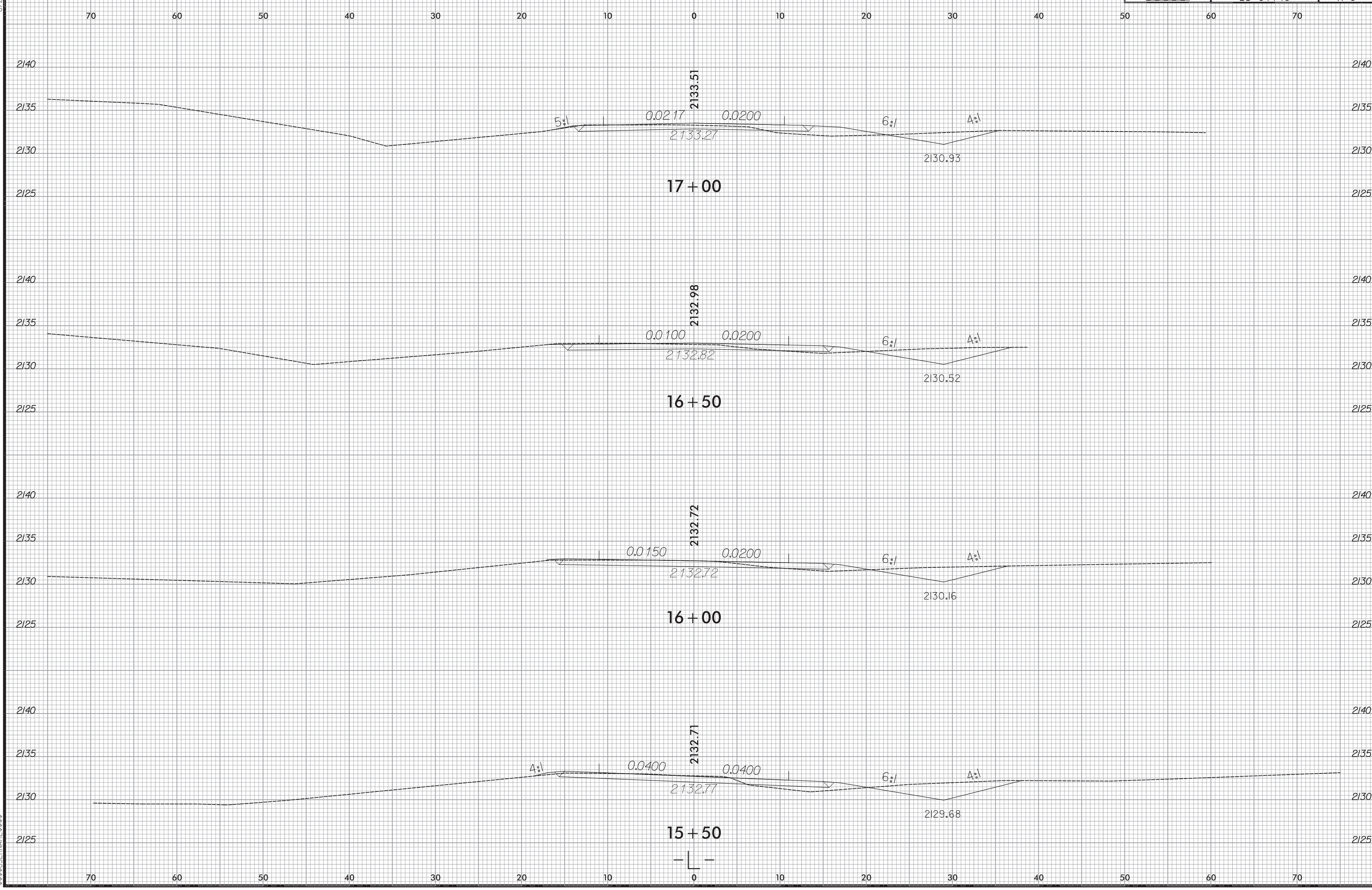

8/23/99

$$$$$$SYSTIME$$$$
$$$$$$$$$$$$DGN$$$$$$$$$$$$$$$$
$$$$USERNAME$$$$

PROJ. REFERENCE NO.	SHEET NO.
BD-5114S	X-6

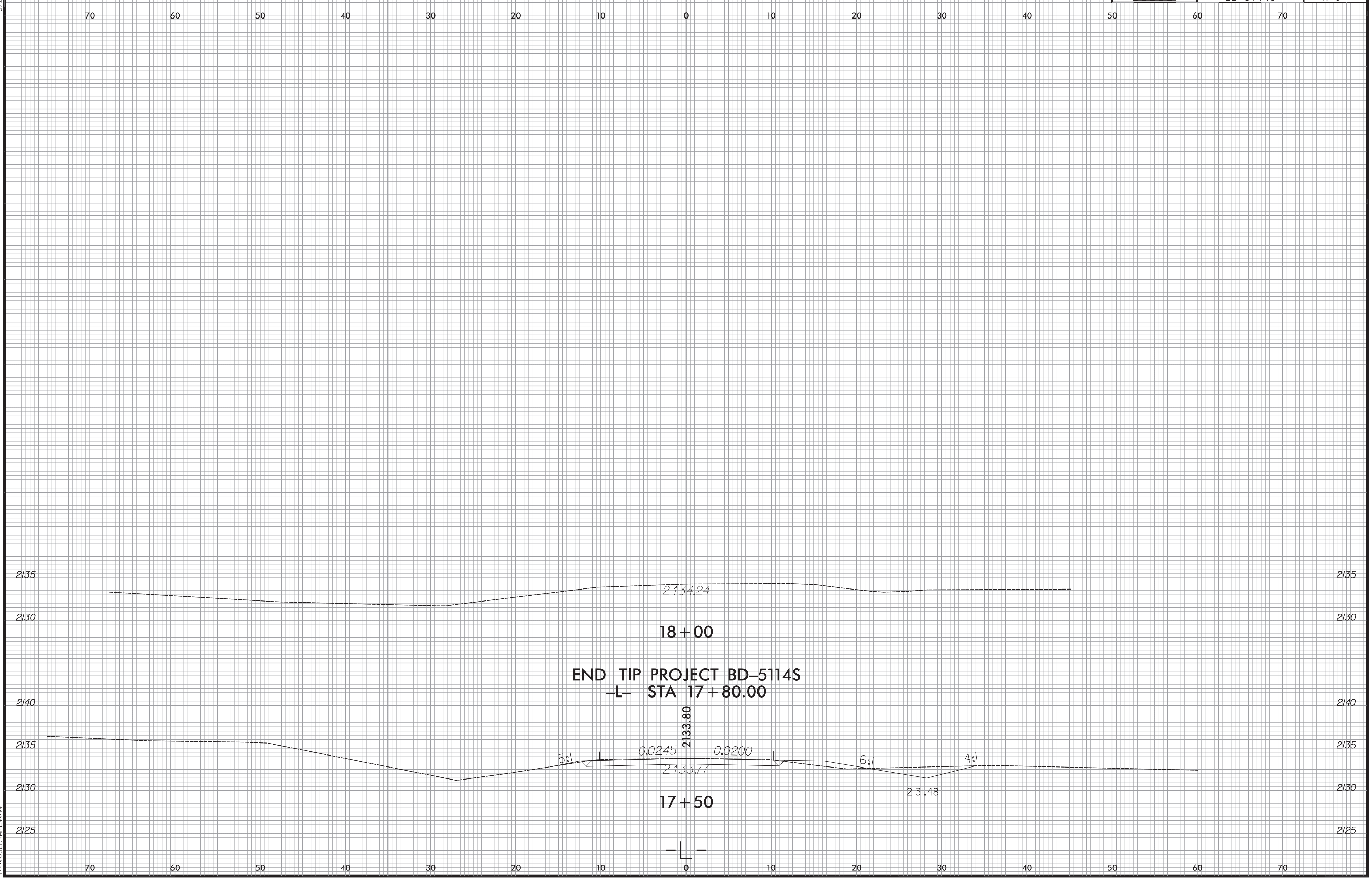

8/23/99
$$$$$$SYSTIME$$$$
$$$$$$$$$$$$$$DGN$$$$$$$$$$$$$$$$$$
$$$$USERNAME$$$$

PROJ. REFERENCE NO.	SHEET NO.
BD-5114S	X-7

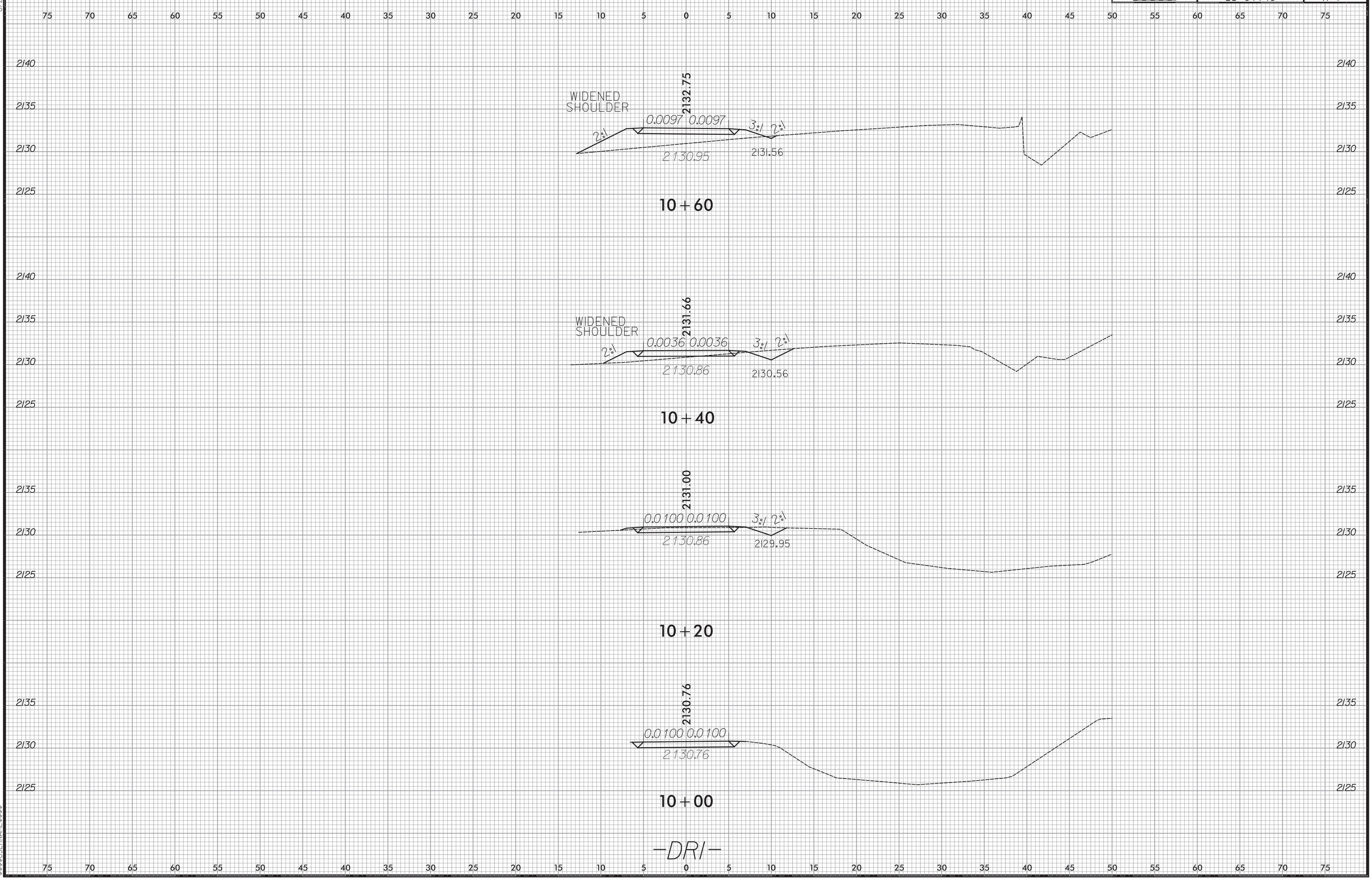

8/23/99

PROJ. REFERENCE NO.	SHEET NO.
BD-5114S	X-8

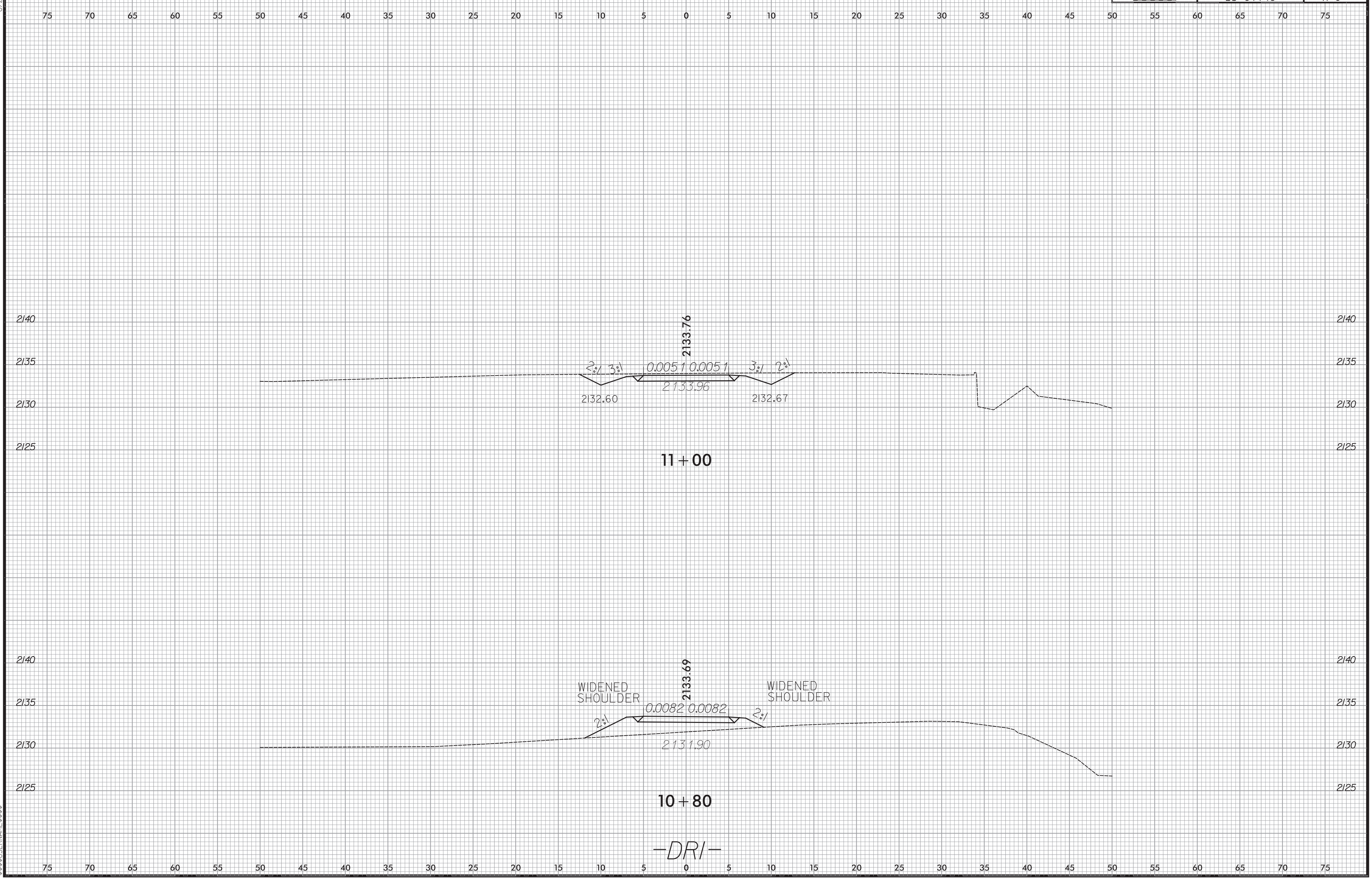

8/23/99

$$$$$$SYSTIME$$$$
$$$$$$$$$$$$$$DGN$$$$$$$$$$$$$$$$$
$$$$USERNAME$$$$

0 2.5 5	PROJ. REFERENCE NO.	SHEET NO.
	BD-5114S	X-9

8/23/99

END CONSTRUCTION
-Y- STA 20+50

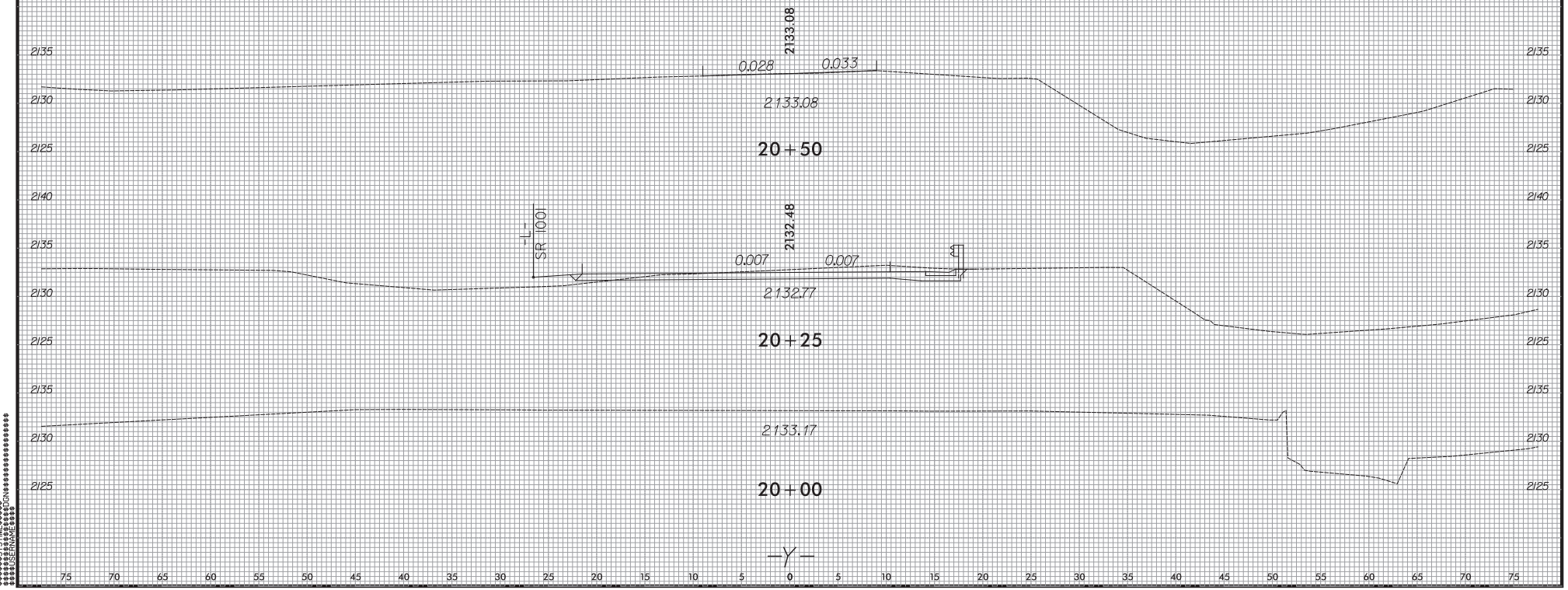

$$SYSTIME$$
$$USERNAME$$
$$DGN$$

STATE OF NORTH CAROLINA
DIVISION OF HIGHWAYS

JACKSON COUNTY

STATE	STATE PROJECT REFERENCE NO.	SHEET NO.	TOTAL SHEETS
N.C.	BD-5114S	1	

STATE PROJ. NO.	F.A. PROJ. NO.	DESCRIPTION
45360.1.19	BRZ-1001(53)	P.E.
45360.2.19	BRZ-1001(53)	R/W
45360.3.19	BRZ-1001(53)	CONST.

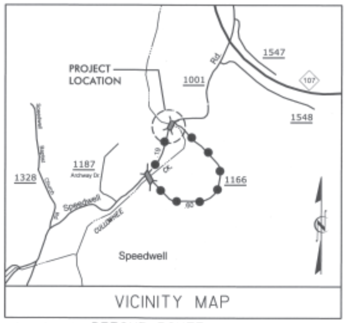

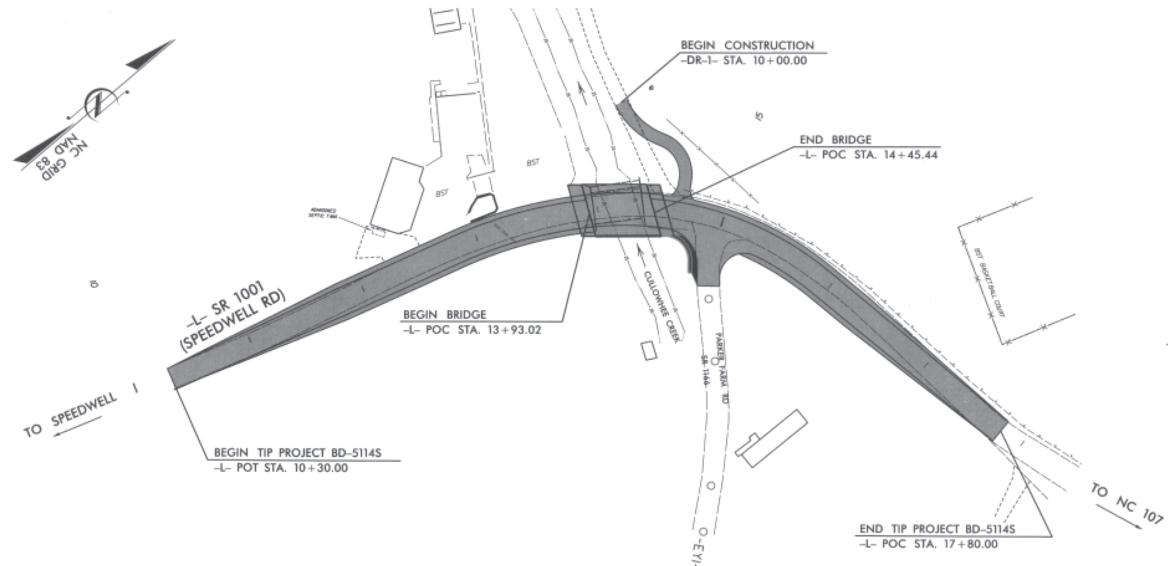

NORTH CAROLINA PROFESSIONAL SEAL 20777 ENGINEER HARDY L. WILLIS 2/13/13

Vaughn & Melton Consulting Engineers
Asheville, North Carolina 828-253-2796
Charlotte, North Carolina
Tri-Cities, Tennessee
Knoxville, Tennessee
Middlesboro, Kentucky
Spartanburg, South Carolina

STRUCTURE

GRAPHIC SCALES

PLANS: 30 15 0 30 60
PROFILE (HORIZONTAL): 30 15 0 30 60
PROFILE (VERTICAL): 6 3 0 6 12

DESIGN DATA

ADT 2008 = 4300
ADT 2025 = 8600

T = 6 %
V = 40 MPH

FUNC CLASS = MINOR COLLECTOR

PROJECT LENGTH

LENGTH ROADWAY TIP PROJECT BD-5114S = 0.132 MI
LENGTH STRUCTURE TIP PROJECT BD-5114S = 0.010 MI
TOTAL LENGTH OF TIP PROJECT BD-5114S = 0.142 MI

Prepared In the Office of:
VAUGHN & MELTON
1318-F PATTON AVE.
ASHEVILLE NC, 28806
FOR THE NORTH CAROLINA DIVISION OF HIGHWAYS

2012 STANDARD SPECIFICATIONS

LETTING DATE:
APRIL 23, 2013

REECE SCHULER, PE
PROJECT ENGINEER

HARDY WILLIS, PE
PROJECT DESIGN ENGINEER

STRUCTURES MANAGEMENT UNIT
1000 BIRCH RIDGE DR.
RALEIGH, N.C. 27610

DIVISION OF HIGHWAYS
STATE OF NORTH CAROLINA

JOSH DEYTON P.E.
STATE DESIGN ENGINEER

DEPARTMENT OF TRANSPORTATION
FEDERAL HIGHWAY ADMINISTRATION

APPROVED DIVISION ADMINISTRATOR DATE

TIP PROJECT: BD-5114S

CONTRACT: DN00217

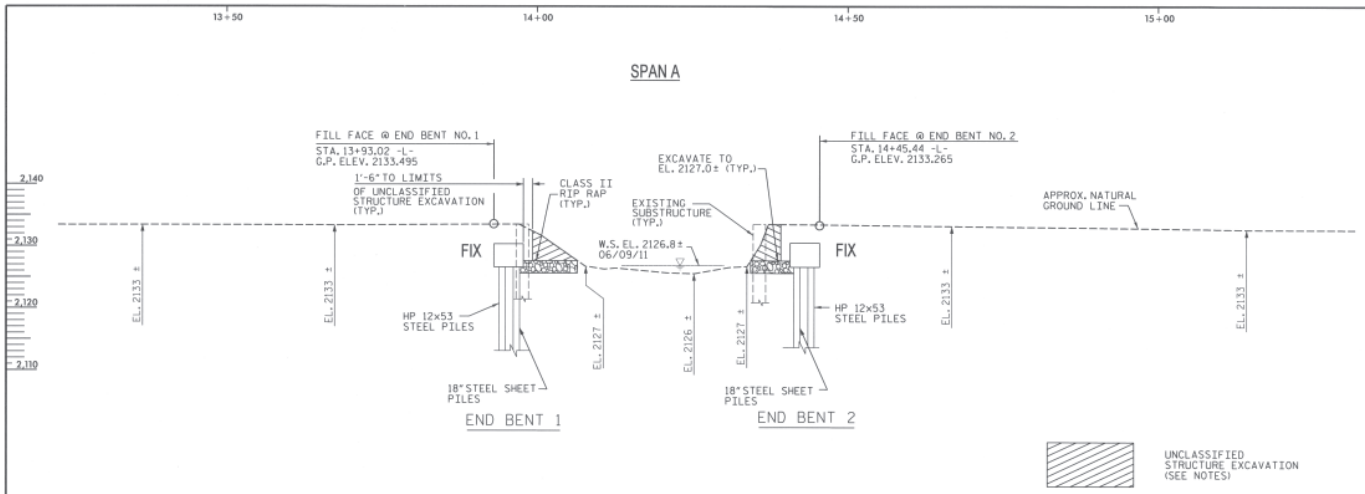

SECTION ALONG ℄ SURVEY -L-

SECTIONS AT END BENTS ARE AT RIGHT ANGLES.
(GROUND LINE ELEVATIONS ARE ALONG THE EDGE
OF BRIDGE ON THE UPSTREAM SIDE)

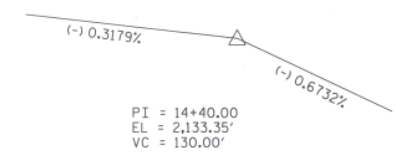

GRADE DATA -L-

PI STA 13+42.09	PI STA 15+02.36
Δ= 19° 31' 08.1"(RT)	Δ= 44° 05' 35.7"(RT)
D = 16° 22' 12.8"	D = 22° 55' 05.9"
L = 119.23'	L = 192.39'
T = 60.20'	T = 101.24'
R = 350.00'	R = 250.00'

HORIZONTAL CURVE DATA -L-

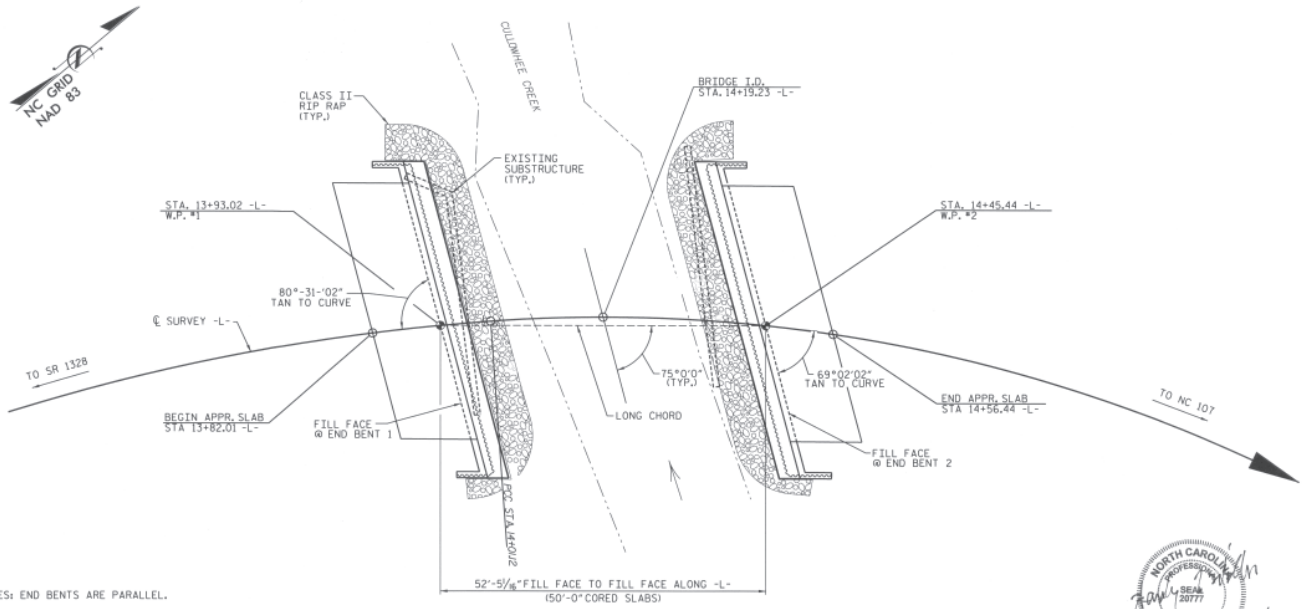

PLAN ALONG ℄ SURVEY -L-

NOTES: END BENTS ARE PARALLEL.
CORED SLABS ARE PARALLEL TO LONG CHORD.
PILES ARE NOT SHOWN IN PLAN VIEW FOR CLARITY.

I HEREBY CERTIFY THAT THESE PLANS ARE THE AS-BUILT PLANS.

NORTH CAROLINA PROFESSIONAL SEAL 20777 ENGINEER HARDY L. WILLIS
2/13/13

PROJECT NO. BD-5114S
JACKSON COUNTY
STATION: 14+19.23 -L-

SHEET 1 OF 3 REPLACES BRIDGE NO. 53

STATE OF NORTH CAROLINA
DEPARTMENT OF TRANSPORTATION
RALEIGH

GENERAL DRAWING
FOR BRIDGE on SR 1001
(SPEEDWELL RD.) over CULLOWHEE CREEK
BETWEEN SR 1328 AND NC 107

JAN. 2013

V&M Vaughn & Melton Consulting Engineers
Middlesboro, Kentucky 606-248-6600
Knoxville, Tennessee 865-546-1860
Asheville, North Carolina 828-253-2796
Copyright © 2006 Vaughn & Melton, Inc. Unlimited Reserved

DRAWN BY: MAF DATE: JAN. 2013
CHECKED BY: HLW DATE: JAN. 2013

REVISIONS						SHEET NO.
NO.	BY:	DATE:	NO.	BY:	DATE:	S-1
1			3			TOTAL SHEETS
2			4			21

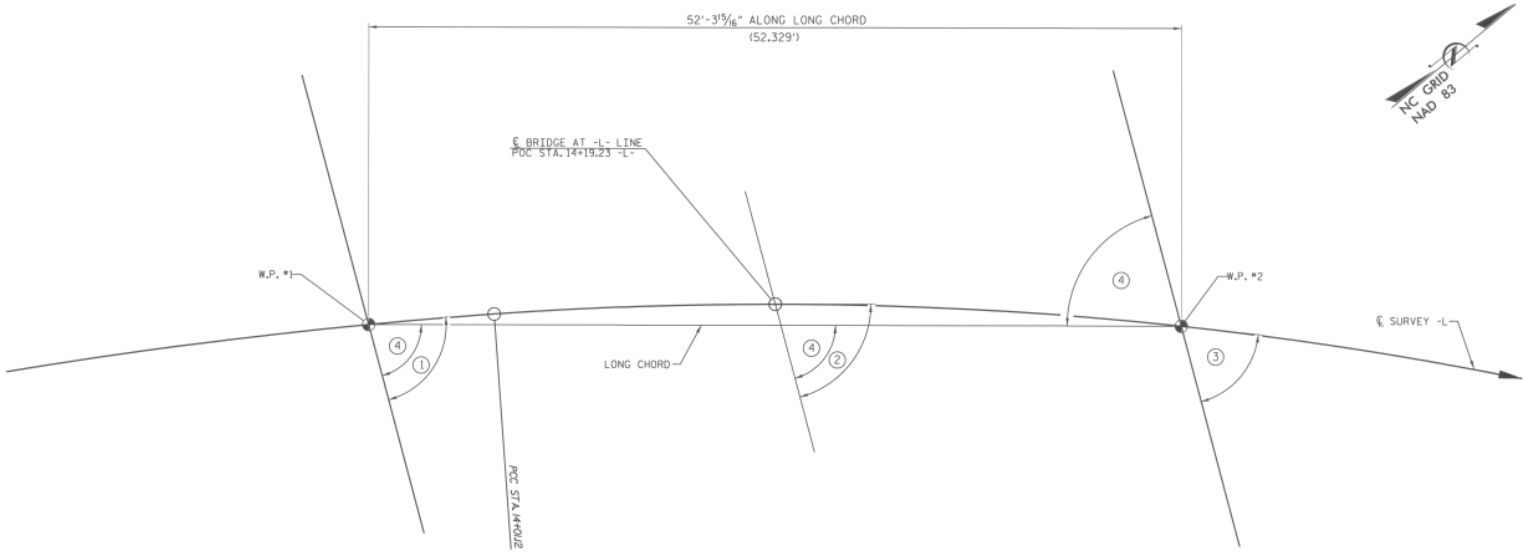

① 80°31'02" TAN TO CURVE, ℄ SURVEY -L-

② 75°02'27" TAN TO CURVE, ℄ SURVEY -L-

③ 69°02'02" TAN TO CURVE, ℄ SURVEY -L-

④ 75°00'00" TO LONG CHORD

LONG CHORD LAYOUT
END BENTS ARE PARALLEL.

PI Sta 13+42.09	PI Sta 15+02.36
Δ = 19° 31' 08.1" (RT)	Δ = 44° 05' 35.7" (RT)
D = 16° 22' 12.8"	D = 22° 55' 05.9"
L = 119.23'	L = 192.39'
T = 60.20'	T = 101.24'
R = 350.00'	R = 250.00'

HORIZONTAL CURVE DATA -L-

PROJECT NO. BD-5114S

JACKSON COUNTY

STATION: 14+19.23 -L-

SHEET 2 OF 3

NORTH CAROLINA PROFESSIONAL SEAL 20777 ENGINEER HARDY L. WILLIS 2/3/13

STATE OF NORTH CAROLINA
DEPARTMENT OF TRANSPORTATION
RALEIGH

GENERAL DRAWING
FOR BRIDGE on SR 1001
(SPEEDWELL RD.) over CULLOWHEE CREEK
BETWEEN SR 1328 AND NC 107

JAN. 2013

V&M Vaughn & Melton Consulting Engineers
Middlesboro, Kentucky
Knoxville, Tennessee
Asheville, North Carolina

DRAWN BY: MAF DATE: JAN. 2013
CHECKED BY: HLW DATE: JAN. 2013

REVISIONS						SHEET NO.
NO.	BY:	DATE:	NO.	BY:	DATE:	S-2
1			3			TOTAL SHEETS
2			4			21

BM: BL-11 N 586301.7846 E 752670.8668 ELEVATION = 2133.39' -L- STATION 14+59.95 20.21' RT

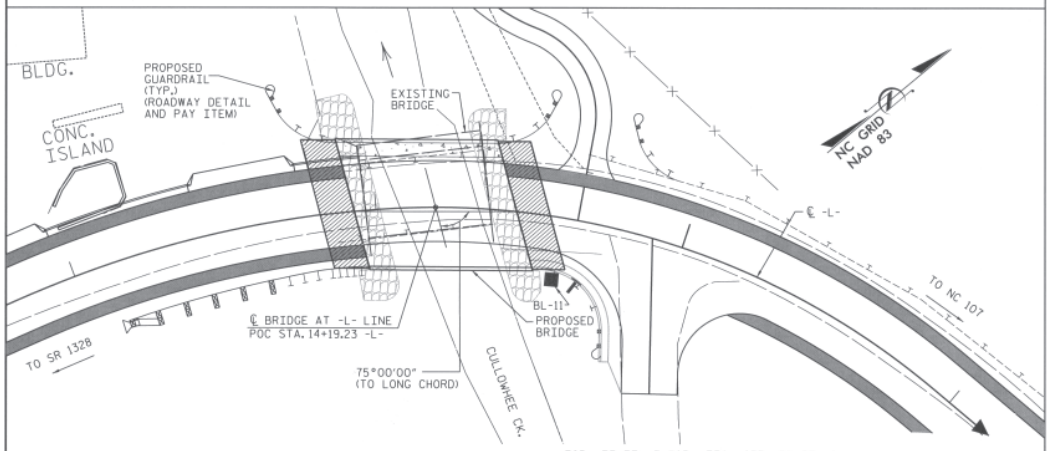

FOR UTILITY INFORMATION, SEE UTILITY PLANS AND SPECIAL PROVISIONS.

LOCATION SKETCH

GENERAL NOTES:

ASSUMED LIVE LOAD = HL-93 OR ALTERNATE LOADING.

THIS BRIDGE HAS BEEN DESIGNED IN ACCORDANCE WITH THE REQUIREMENTS OF THE AASHTO LRFD BRIDGE DESIGN SPECIFICATIONS.

THIS BRIDGE IS LOCATED IN SEISMIC ZONE 1.

FOR OTHER DESIGN DATA AND GENERAL NOTES, SEE SHEET SN.

FOR EROSION CONTROL MEASURES, SEE EROSION CONTROL PLANS.

THE EXISTING STRUCTURE, CONSISTING OF A SINGLE SPAN, 40 FOOT LONG STEEL DECK ON STEEL I-BEAMS, 30-FEET WIDE, ON TIMBER PILE VERTICAL ABUTMENTS, AS WELL AS THE ADJACENT WALK BRIDGE, LOCATED AT THE PROPOSED STRUCTURE, SHALL BE REMOVED.

REMOVAL OF THE EXISTING BRIDGE SHALL BE PERFORMED SO AS NOT TO ALLOW DEBRIS TO FALL INTO THE WATER. THE CONTRACTOR SHALL REMOVE THE BRIDGE AND SUBMIT PLANS FOR DEMOLITION IN ACCORDANCE WITH ARTICLE 402-2 OF THE STANDARD SPECIFICATIONS.

THE SUBSTRUCTURE OF THE EXISTING BRIDGE INDICATED ON THE PLANS IS FROM THE BEST INFORMATION AVAILABLE. SINCE THIS INFORMATION IS SHOWN FOR THE CONVENIENCE OF THE CONTRACTOR, THE CONTRACTOR SHALL HAVE NO CLAIM WHATSOEVER AGAINST THE DEPARTMENT OF TRANSPORTATION FOR ANY DELAYS OR ADDITIONAL COST INCURRED BASED ON DIFFERENCES BETWEEN THE EXISTING BRIDGE SUBSTRUCTURE SHOWN ON THE PLANS AND THE ACTUAL CONDITIONS AT THE PROJECT SITE.

THIS STRUCTURE HAS BEEN DESIGNED IN ACCORDANCE WITH "HEC 18, EVALUATING SCOUR AT BRIDGES".

FOR SUBMITTAL OF WORKING DRAWINGS, SEE SPECIAL PROVISIONS.

FOR FALSEWORK AND FORMWORK, SEE SPECIAL PROVISIONS.

FOR CRANE SAFETY, SEE SPECIAL PROVISIONS.

FOR GROUT FOR STRUCTURES, SEE SPECIAL PROVISIONS.

THE MATERIAL SHOWN IN THE CROSS-HATCHED AREA SHALL BE EXCAVATED FOR A DISTANCE OF 25 FT. EACH SIDE OF CENTERLINE ROADWAY AS DIRECTED BY THE ENGINEER. THIS WORK WILL BE PAID FOR AT THE CONTRACT LUMP SUM PRICE FOR UNCLASSIFIED STRUCTURE EXCAVATION. SEE SECTION 412 OF THE STANDARD SPECIFICATIONS.

ASPHALT WEARING SURFACE IS INCLUDED IN ROADWAY QUANTITY ON ROADWAY PLANS.

THE CONTRACTOR SHALL PROVIDE INDEPENDENT ASSURANCE SAMPLES OF REINFORCING STEEL AS FOLLOWS: FOR PROJECTS REQUIRING UP TO 400 TONS OF REINFORCING STEEL, ONE 30 INCH SAMPLE OF EACH SIZE BAR USED, AND FOR PROJECTS REQUIRING OVER 400 TONS OF REINFORCING STEEL, TWO 30 INCH SAMPLES OF EACH SIZE BAR USED. THE BARS FROM WHICH THE SAMPLES ARE TAKEN MUST THEN BE SPLICED WITH REPLACEMENT BARS OF THE SIZE AND LENGTH OF THE SAMPLE, PLUS A MINIMUM LAP SPLICE OF THIRTY BAR DIAMETERS. PAYMENT FOR THE SAMPLES OF REINFORCING STEEL SHALL BE CONSIDERED INCIDENTAL TO VARIOUS PAY ITEMS.

INASMUCH AS THE PAINT SYSTEM ON THE EXISTING STRUCTURAL STEEL CONTAINS LEAD, THE CONTRACTOR'S ATTENTION IS DIRECTED TO ARTICLE 107-1 OF THE STANDARD SPECIFICATIONS. ANY COSTS RESULTING FROM COMPLIANCE WITH APPLICABLE STATE OR FEDERAL REGULATIONS PERTAINING TO HANDLING OF MATERIALS CONTAINING LEAD BASED PAINT SHALL BE INCLUDED IN THE BID PRICE FOR "REMOVAL OF EXISTING STRUCTURE AT STATION 14+19.23 -L-."

FOR PILES, SEE SECTION 450 OF THE STANDARD SPECIFICATIONS.

PILES AT END BENT NO. 1 ARE DESIGNED FOR A FACTORED RESISTANCE OF 80 TONS PER PILE.

DRIVE PILES AT END BENT NO. 1 TO A REQUIRED DRIVING RESISTANCE OF 133 TONS PER PILE.

PILES AT END BENT NO. 2 ARE DESIGNED FOR A FACTORED RESISTANCE OF 80 TONS PER PILE.

DRIVE PILES AT END BENT NO. 2 TO A REQUIRED DRIVING RESISTANCE OF 133 TONS PER PILE.

PZ-27 SHEET PILES ARE TO BE PLACED IN FRONT OF 12X53 HP PILES AT END BENT NO. 1.

SHEET PILES SHALL BE INSTALLED TO AN ELEVATION OF 2115.0 FT AT END BENT NO. 1 TO ACCOUNT FOR SCOUR IMPACT AT END BENT NO. 1.

PZ-27 SHEET PILES ARE TO BE PLACED IN FRONT OF 12X53 HP PILES AT END BENT NO. 2.

SHEET PILES SHALL BE INSTALLED TO AN ELEVATION OF 2120.0 FT AT END BENT NO. 2 TO ACCOUNT FOR SCOUR IMPACT AT END BENT NO. 2.

FOR 18" STEEL SHEET PILES, SEE SPECIAL PROVISIONS.

HYDRAULIC DATA

DESIGN DISCHARGE	= 1070	CFS
DESIGN FREQUENCY	= 2	YRS
DESIGN HW ELEVATION	= 2133.44	FT
BASE DISCHARGE	= 4690	CFS
BASE FREQUENCY	= 100	YRS
BASE HW ELEVATION	= 2136.64	FT

OVERTOPPING FLOOD DATA

OVERTOPPING DISCHARGE	= 1052	CFS
OVERTOPPING FREQUENCY	= 2	YRS±
OVERTOPPING ELEVATION	= 2131.36	FT
DRAINAGE AREA	= 19.0	SQ. MI.

TOTAL BILL OF MATERIAL

	REMOVAL OF EXISTING STRUCTURE	UNCLASSIFIED STRUCTURE EXCAVATION	CLASS AA CONCRETE	CLASS A CONCRETE	BRIDGE APPROACH SLABS	REINFORCING STEEL	EPOXY COATED REINFORCING STEEL	HP 12 X 53 STEEL PILES		THREE BAR METAL RAIL	VERTICAL CONCRETE BARRIER RAIL	RIP RAP CLASS II (2'-0" THICK)	GEOTEXTILE FOR DRAINAGE	ELASTOMERIC BEARINGS	3'-0" x 1'-9" PRESTRESSED CONCRETE CORED SLAB UNIT		18" STEEL SHEET PILES
	LUMP SUM	LUMP SUM	CU. YARDS	CU. YARDS	LUMP SUM	LBS.	LBS.	NO.	LIN. FT.	LIN. FT.	LIN. FT.	TONS	SQ. YARDS	LUMP SUM	NO.	LIN. FT.	SQ. FT.
SUPERSTRUCTURE			9.9		LUMP SUM		610			42.25	50.13			LUMP SUM	14	700.0	
END BENT 1		LUMP SUM		25.8		3,006		7	285			120	135				1165
END BENT 2		LUMP SUM		25.8		3,006		7	335			105	115				658
TOTAL	LUMP SUM	LUMP SUM	9.9	51.6	LUMP SUM	6,012	610	14	620	42.25	50.13	225	250	LUMP SUM	14	700.0	1823

NORTH CAROLINA PROFESSIONAL SEAL 20277 ENGINEER HARDY L. WILLIS 2/13/13

PROJECT NO. BD-5114S

JACKSON COUNTY

STATION: 14+19.23 -L-

SHEET 3 OF 3

V&M Vaughn & Melton Consulting Engineers
Middlesboro, Kentucky 606-248-5800
Knoxville, Tennessee 865-246-5800
Asheville, North Carolina 828-252-2796
Copyright © 2006 Vaughn & Melton, Inc. All Rights Reserved

DRAWN BY: MAF DATE: JAN. 2013
CHECKED BY: HLW DATE: JAN. 2013

STATE OF NORTH CAROLINA
DEPARTMENT OF TRANSPORTATION
RALEIGH

GENERAL DRAWING
FOR BRIDGE on SR 1001
(SPEEDWELL RD.) over CULLOWHEE CREEK
BETWEEN SR 1328 AND NC 107

JAN. 2013

REVISIONS						SHEET NO.
NO.	BY:	DATE:	NO.	BY:	DATE:	S-3
1			3			TOTAL SHEETS
2			4			21

LOAD AND RESISTANCE FACTOR RATING (LRFD) SUMMARY FOR PRESTRESSED CONCRETE GIRDERS

LEVEL		VEHICLE	WEIGHT (W) (TONS)	CONTROLLING LOAD RATING (#)	MINIMUM RATING FACTORS (RF)	TONS = W X RF	STRENGTH I LIMIT STATE											SERVICE III LIMIT STATE						COMMENT NUMBER
								MOMENT					SHEAR						MOMENT					
							LIVELOAD FACTORS	DISTRIBUTION FACTORS (DF)	RATING FACTOR	SPAN	GIRDER LOCATION	DISTANCE FROM LEFT END OF SPAN (ft)	DISTRIBUTION FACTORS (DF)	RATING FACTOR	SPAN	GIRDER LOCATION	DISTANCE FROM LEFT END OF SPAN (ft)	LIVELOAD FACTORS	DISTRIBUTION FACTORS (DF)	RATING FACTOR	SPAN	GIRDER LOCATION	DISTANCE FROM LEFT END OF SPAN (ft)	
DESIGN LOAD RATING		HL-93(Inv)	N/A	1	1.193	--	1.75	0.272	1.49	A	EL	24.529	0.607	**1.19**	A	EL	4.906	0.80	0.272	1.39	A	EL	24.529	
		HL-93(Opr)	N/A	--	1.547	--	1.35	0.272	1.93	A	EL	24.529	0.607	1.55	A	EL	4.906	N/A	--	--	--	--	--	
		HS-20(Inv)	36.000	2	1.451	52.236	1.75	0.276	1.98	A	ER	24.529	0.618	**1.45**	A	ER	4.906	0.80	0.276	1.84	A	ER	24.529	
		HS-20(Opr)	36.000	--	1.881	67.713	1.35	0.276	2.56	A	ER	24.529	0.618	1.88	A	ER	4.906	N/A	--	--	--	--	--	
LEGAL LOAD RATING	SV	SNSH	13.500	--	3.749	50.606	1.4	0.276	5.03	A	ER	24.529	0.618	4.05	A	ER	4.906	0.80	0.276	3.75	A	ER	24.529	
		SNGARBS2	20.000	--	2.96	59.194	1.4	0.276	3.97	A	ER	24.529	0.618	2.96	A	ER	4.906	0.80	0.276	2.96	A	ER	24.529	
		SNAGRIS2	22.000	--	2.782	61.194	1.4	0.276	3.84	A	ER	19.623	0.618	2.78	A	ER	4.906	0.80	0.276	2.86	A	ER	24.529	
		SNCOTTS3	27.250	--	1.87	50.956	1.4	0.276	2.51	A	ER	24.529	0.618	2.03	A	ER	4.906	0.80	0.276	1.87	A	ER	24.529	
		SNAGGRS4	34.925	--	1.625	56.768	1.4	0.276	2.18	A	ER	24.529	0.618	1.74	A	ER	4.906	0.80	0.276	1.63	A	ER	24.529	
		SNS5A	35.550	--	1.585	56.35	1.4	0.276	2.13	A	ER	24.529	0.618	1.8	A	ER	4.906	0.80	0.276	1.59	A	ER	24.529	
		SNS6A	39.950	--	1.482	59.205	1.4	0.276	1.99	A	ER	24.529	0.618	1.66	A	ER	4.906	0.80	0.276	1.48	A	ER	24.529	
		SNS7B	42.000	--	1.412	59.318	1.4	0.276	1.9	A	ER	24.529	0.618	1.67	A	ER	4.906	0.80	0.276	1.41	A	ER	24.529	
	TTST	TNAGRIT3	33.000	--	1.816	59.913	1.4	0.276	2.44	A	ER	24.529	0.618	1.96	A	ER	4.906	0.80	0.276	1.82	A	ER	24.529	
		TNT4A	33.075	--	1.831	60.572	1.4	0.276	2.46	A	ER	24.529	0.618	1.88	A	ER	4.906	0.80	0.276	1.83	A	ER	24.529	
		TNT6A	41.600	--	1.525	63.453	1.4	0.276	2.05	A	ER	24.529	0.618	1.83	A	ER	4.906	0.80	0.276	1.53	A	ER	24.529	
		TNT7A	42.000	--	1.548	65.026	1.4	0.276	2.08	A	ER	24.529	0.618	1.69	A	ER	4.906	0.80	0.276	1.55	A	ER	24.529	
		TNT7B	42.000	--	1.605	67.401	1.4	0.276	2.17	A	ER	24.529	0.618	1.6	A	ER	4.906	0.80	0.276	1.61	A	ER	24.529	
		TNAGRIT4	43.000	--	1.532	65.865	1.4	0.276	2.06	A	ER	24.529	0.618	1.54	A	ER	4.906	0.80	0.276	1.53	A	ER	24.529	
		TNAGT5A	45.000	--	1.431	64.392	1.4	0.276	1.92	A	ER	24.529	0.618	1.57	A	ER	4.906	0.80	0.276	1.43	A	ER	24.529	
		TNAGT5B	45.000	3	1.402	63.091	1.4	0.276	1.88	A	ER	24.529	0.618	1.47	A	ER	4.906	0.80	0.276	**1.40**	A	ER	24.529	

LOAD FACTORS:

DESIGN LOAD RATING FACTORS	LIMIT STATE	γ_{DC}	γ_{DW}
	STRENGTH I	1.25	1.50
	SERVICE III	1.00	1.00

NOTES:

MINIMUM RATING FACTORS ARE BASED ON THE STRENGTH I AND SERVICE III LIMIT STATES.

ALLOWABLE STRESSES FOR SERVICE III LIMIT STATE ARE AS REQUIRED FOR DESIGN.

COMMENTS:

1.
2.
3.
4.

(#) CONTROLLING LOAD RATING

(1) DESIGN LOAD RATING (HL-93)

(2) DESIGN LOAD RATING (HS-20)

(3) LEGAL LOAD RATING **

** SEE CHART FOR VEHICLE TYPE

GIRDER LOCATION

I - INTERIOR GIRDER
EL - EXTERIOR LEFT GIRDER
ER - EXTERIOR RIGHT GIRDER

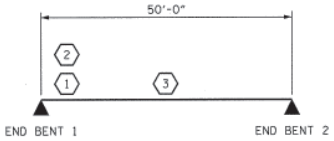

LRFR SUMMARY

FOR SPAN "A"

PROJECT NO. BD-5114S

JACKSON COUNTY

STATION: 14+19.23 -L-

STATE OF NORTH CAROLINA
DEPARTMENT OF TRANSPORTATION
RALEIGH

STANDARD

LRFR SUMMARY FOR PRESTRESSED CONCRETE GIRDERS (NON-INTERSTATE TRAFFIC)

NORTH CAROLINA PROFESSIONAL SEAL 15779 ENGINEER JOHN R. DUGGINS

1/16/13

REVISIONS								SHEET NO.
NO.	BY:	DATE:	NO.	BY:	DATE:			S-4
1			3					TOTAL SHEETS
2			4					21

ASSEMBLED BY :	H.P. KIM	DATE : 01/2012
CHECKED BY :	B. MATHEW	DATE : 02/2012
DRAWN BY : MAA 1/08	REV. 1/12/08R	MAA/GM
CHECKED BY : GM/DI 2/08		

16-JAN-2013 14:40
S:\DPG4\John\LIBR_Files\BD-5114S\Final Plans\BD-5114_SD_LRFR.dgn
jduggins

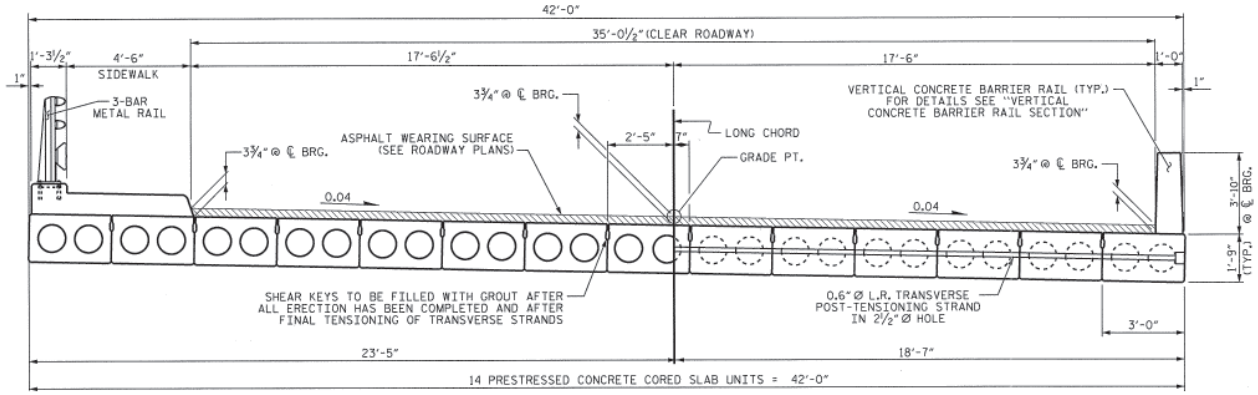

HALF SECTION
THROUGH VOIDS

TYPICAL SECTION

HALF SECTION
AT INTERMEDIATE DIAPHRAGMS

* - THE MAXIMUM BARRIER RAIL HEIGHT AND ASPHALT THICKNESS IS SHOWN. THE HEIGHT OF THE BARRIER RAIL AND ASPHALT THICKNESS VARIES WHILE THE TOP OF THE BARRIER RAIL FOLLOWS THE PROFILE OF THE GUTTERLINE. FOR RAIL HEIGHT DETAILS AND ASPHALT THICKNESS SEE THE "VERTICAL CONCRETE BARRIER RAIL SECTION" DETAIL.

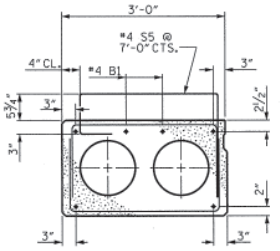

EXTERIOR SLAB SIDEWALK SECTION

(FOR PRESTRESSED STRAND LAYOUT. SEE INTERIOR SLAB SECTION.)

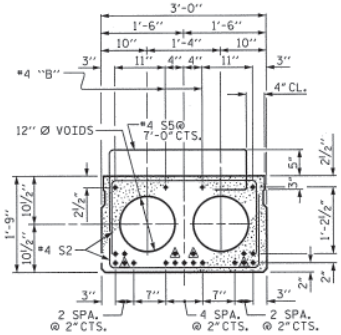

INTERIOR SLAB SIDEWALK SECTION

FIXED END

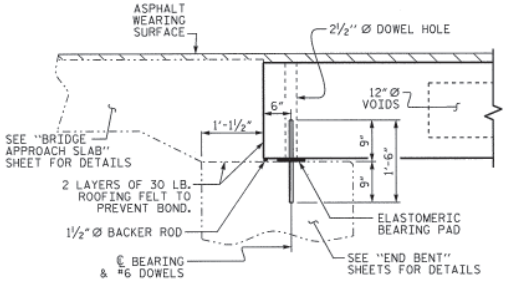

SECTION AT END BENT

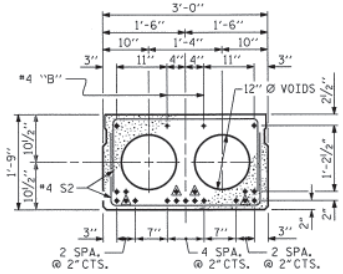

INTERIOR SLAB SECTION (50' UNIT)

(19 STRANDS REQUIRED)

BOND SHALL BE BROKEN ON THESE STRANDS FOR A DISTANCE OF 6'-0" FROM END OF CORED SLAB UNIT. SEE STANDARD SPECIFICATIONS, ARTICLE 1078-7.

0.6" Ø LOW RELAXATION STRAND LAYOUT

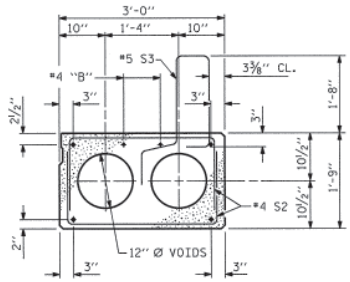

EXTERIOR SLAB VERTICAL BARRIER RAIL SECTION

(FOR PRESTRESSED STRAND LAYOUT. SEE INTERIOR SLAB SECTION.)

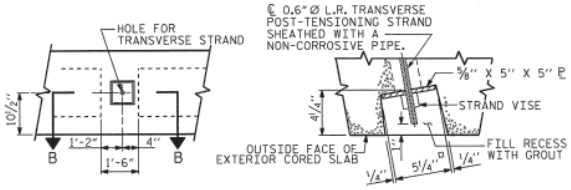

ELEVATION VIEW

SECTION B-B

GROUTED RECESS AT END OF POST-TENSIONED STRAND OF CORED SLABS

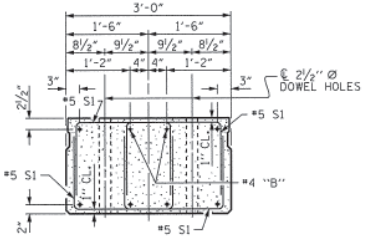

END ELEVATION

SHOWING PLACEMENT OF DOUBLE STIRRUPS AND LOCATION OF DOWEL HOLES. (STRAND LAYOUT NOT SHOWN.) INTERIOR SLAB UNIT SHOWN-EXTERIOR SLAB UNIT SIMILAR EXCEPT SHEAR KEY LOCATION.

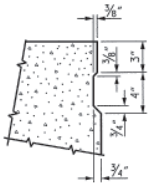

SHEAR KEY DETAIL

NOTE: OMIT SHEAR KEY ON OUTSIDE FACE OF EXTERIOR CORED SLABS.

PROJECT NO. BD-5114S
JACKSON COUNTY
STATION: 14+19.23 -L-

SHEET 1 OF 3

STATE OF NORTH CAROLINA
DEPARTMENT OF TRANSPORTATION
RALEIGH

3'-0" X 1'-9"
PRESTRESSED CONCRETE
CORED SLAB UNIT
75° SKEW

NORTH CAROLINA PROFESSIONAL SEAL 15779 ENGINEER JOHN R. DUGGINS
1/16/13

REVISIONS								SHEET NO.
NO.	BY:	DATE:	NO.	BY:	DATE:			S-5
1			3					TOTAL SHEETS
2			4					21

ASSEMBLED BY :	H.P. KIM	DATE : 01-2012	
CHECKED BY :	B. MATHEW	DATE : 02-2012	
DRAWN BY :	DGE	6/09	
CHECKED BY:	BCH	6/09	

16-JAN-2013 14:39
S:\OPGI4\John\L.TBR_Files\BD-5114S\FinalPlans\BD-5114S_SD_CS.dgn
jduggins

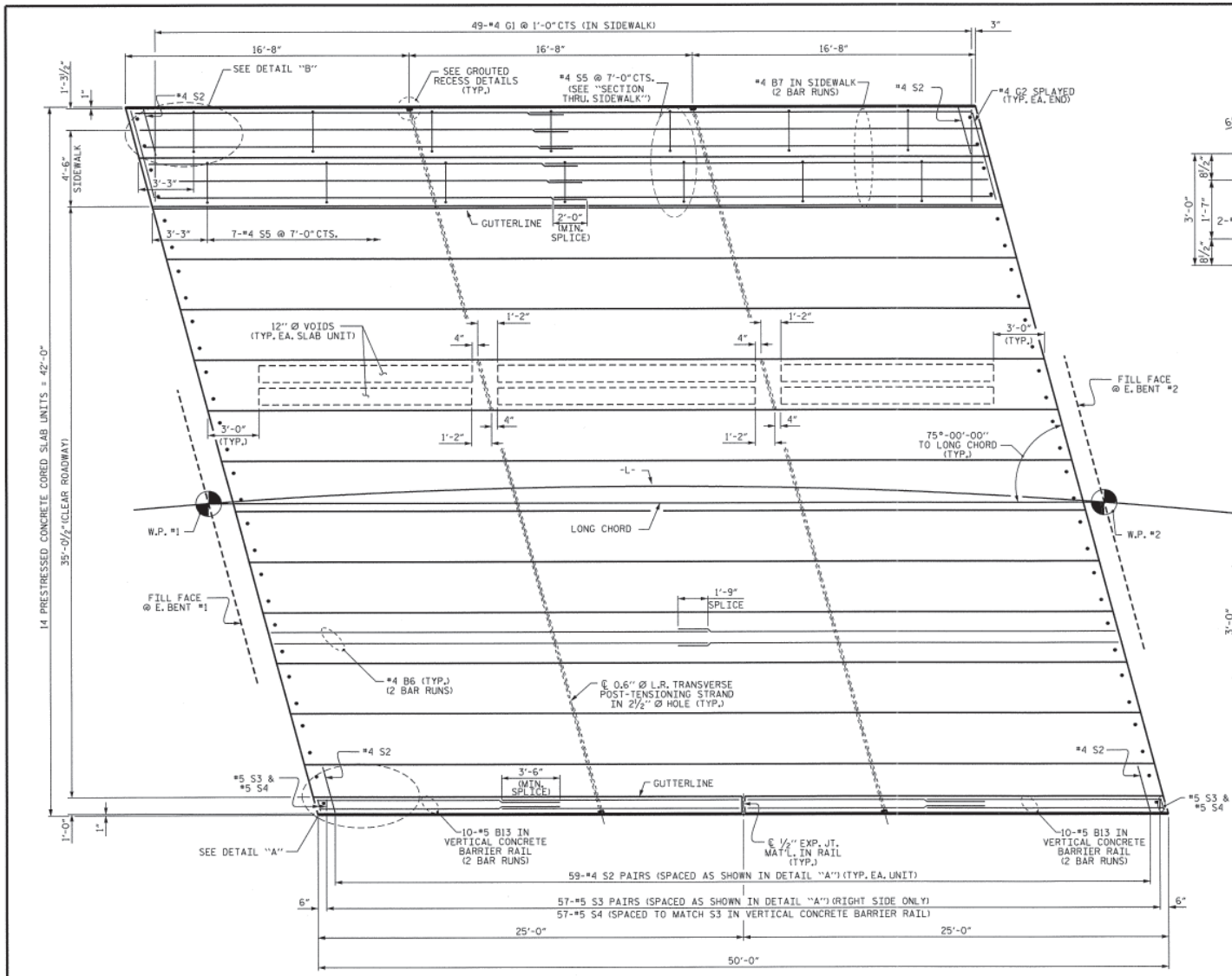

PLAN OF UNIT

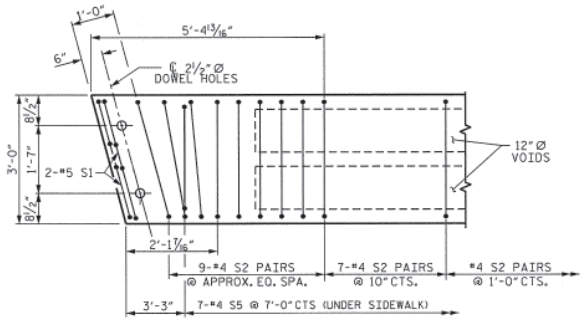

DETAIL "B"

NOTE: LEFT SIDE EXTERIOR UNIT SHOWN - INTERIOR UNIT UNDER SIDEWALK SIMILAR

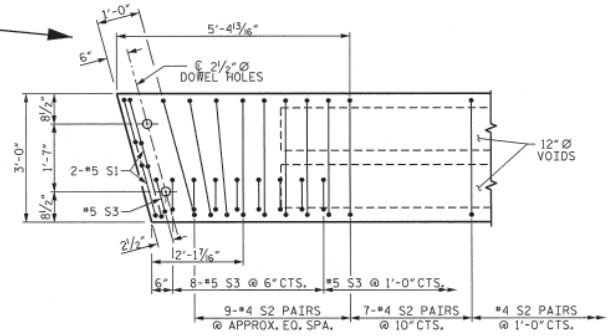

DETAIL "A"

NOTE: RIGHT SIDE EXTERIOR UNIT SHOWN - INTERIOR UNIT SIMILAR EXCEPT OMIT #5 S3 BARS.

PROJECT NO. BD-5114S

JACKSON COUNTY

STATION: 14+19.23 -L-

SHEET 2 OF 3

STATE OF NORTH CAROLINA
DEPARTMENT OF TRANSPORTATION
RALEIGH

PLAN OF 50' UNIT
35'-0½" CLEAR ROADWAY
75° SKEW

NORTH CAROLINA PROFESSIONAL SEAL 15779 ENGINEER JOHN R. DUGGINS, JR.
1/16/13

ASSEMBLED BY :	H.P. KIM	DATE :	01-2012
CHECKED BY :	B. MATHEW	DATE :	02-2012
DRAWN BY :	DGE	5/09	
CHECKED BY :	BCH	6/09	

REVISIONS								SHEET NO.
NO.	BY:	DATE:	NO.	BY:	DATE:			S-6
1			3					TOTAL SHEETS
2			4					21

16-JAN-2013 14:38
S:\DPG4\John\LIBR_Files\BD-5114S\Final Plans\BD-5114S_SD_CS.dgn
jdugginS

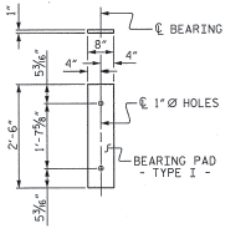

FIXED END
(TYPE I - 28 REQ'D)

ELASTOMERIC BEARING DETAILS

ELASTOMER IN ALL BEARINGS SHALL BE 50 DUROMETER HARDNESS.

GRADE 270 STRANDS	
	0.6" Ø L.R.
AREA (SQUARE INCHES)	0.217
ULTIMATE STRENGTH (LBS. PER STRAND)	58,600
APPLIED PRESTRESS (LBS. PER STRAND)	43,950

CORED SLABS REQUIRED			
	NUMBER	LENGTH	TOTAL LENGTH
50' UNIT			
EXTERIOR C.S.	2	50'-0"	100'-0"
INTERIOR C.S.	12	50'-0"	600'-0"
TOTAL	14		700'-0"

BILL OF MATERIAL FOR SIDEWALK AND 2 END POSTS

BAR	NUMBER	SIZE	TYPE	LENGTH	WEIGHT
* B7	12	#4	STR	25'-10"	207
* G1	49	#4	STR	5'-3"	172
* G2	2	#4	STR	5'-6"	7
* E1	4	#7	5	3'-5"	28
* E2	4	#7	5	4'-0"	33
* E3	4	#7	5	4'-7"	37
* E4	4	#7	5	5'-1"	42
* F1	2	#6	STR	2'-10"	9
* F2	4	#6	STR	3'-5"	21
* F3	2	#6	STR	3'-7"	11
* F4	2	#6	STR	2'-10"	9
* F5	4	#6	STR	3'-8"	22
* F6	2	#6	STR	3'-11"	12
* EPOXY COATED REINFORCING STEEL				LBS.	610
CLASS AA CONCRETE				CU. YDS.	9.9

BAR TYPES

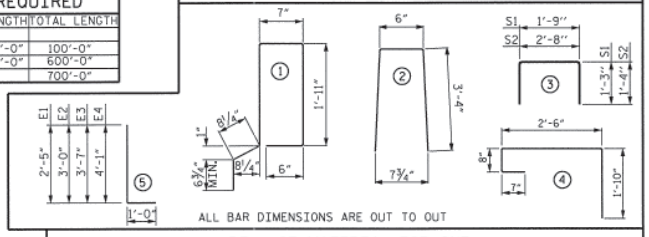

BILL OF MATERIAL FOR ONE 50' CORED SLAB UNIT

				EXTERIOR UNIT (LEFT SIDE) & INTERIOR UNIT (UNDER SIDEWALK)		INTERIOR UNIT		EXTERIOR UNIT (RIGHT SIDE)	
BAR	NUMBER	SIZE	TYPE	LENGTH	WEIGHT	LENGTH	WEIGHT	LENGTH	WEIGHT
B6	4	#4	STR	25'-9"	69	25'-9"	69	25'-9"	69
S1	8	#5	3	4'-3"	35	4'-3"	35	4'-3"	35
S2	118	#4	3	5'-4"	420	5'-4"	420	5'-4"	420
* S3	59	#5	1					6'-2"	379
* S5	7	#4	4	5'-7"	26				
REINFORCING STEEL			LBS.		524		524		524
* EPOXY COATED REINFORCING STEEL			LBS.		26				379
6500 P.S.I. CONCRETE			CU. YDS.		7.3		7.3		7.3
0.6" Ø L.R. STRANDS			No.		19		19		19

NOTES

ALL PRESTRESSING STRANDS SHALL BE 7-WIRE LOW RELAXATION GRADE 270 STRANDS AND SHALL CONFORM TO AASHTO M203 EXCEPT FOR SAMPLING REQUIREMENTS WHICH SHALL BE IN ACCORDANCE WITH THE STANDARD SPECIFICATIONS.

ALL REINFORCING STEEL CAST WITH THE CORED SLAB SECTIONS SHALL BE GRADE 60 AND SHALL BE INCLUDED IN THE UNIT PRICE BID FOR PRESTRESSED CONCRETE CORED SLABS.

RECESSES FOR TRANSVERSE STRANDS SHALL BE GROUTED AFTER THE TENSIONING OF THE STRANDS.

THE 2 1/2" Ø DOWEL HOLES AT FIXED ENDS OF SLAB SECTIONS SHALL BE FILLED WITH NON-SHRINK GROUT.

THE BACKER RODS SHALL CONFORM TO THE REQUIREMENTS OF TYPE M BOND BREAKER. SEE SECTION 1028 OF THE STANDARD SPECIFICATIONS.

WHEN CORED SLABS ARE CAST, AN INTERNAL HOLD-DOWN SYSTEM SHALL BE EMPLOYED TO PREVENT VOIDS FROM RISING OR MOVING SIDEWAYS. AT LEAST SIX WEEKS PRIOR TO CASTING CORED SLABS, THE CONTRACTOR SHALL SUBMIT TO THE ENGINEER FOR REVIEW AND COMMENT, DETAILED DRAWINGS OF THE PROPOSED HOLD-DOWN SYSTEM. IN ADDITION TO STRUCTURAL DETAILS, LOCATION AND SPACING OF THE HOLD-DOWNS SHALL BE INDICATED.

ALL REINFORCING STEEL IN THE VERTICAL CONCRETE BARRIER RAIL AND SIDEWALK SHALL BE EPOXY COATED.

PRESTRESSING STRANDS SHALL BE CUT FLUSH WITH THE CORED SLAB UNIT ENDS.

APPLY EPOXY PROTECTIVE COATING TO CORED SLAB UNIT ENDS.

GROOVED CONTRACTION JOINTS, 1/2" IN DEPTH, SHALL BE TOOLED IN ALL EXPOSED FACES OF THE BARRIER RAIL AND SIDEWALK AND IN ACCORDANCE WITH ARTICLE 825-10(B) OF THE STANDARD SPECIFICATIONS. A CONTRACTION JOINT SHALL BE LOCATED AT EACH THIRD POINT BETWEEN BARRIER RAIL AND SIDEWALK EXPANSION JOINTS. ONLY ONE CONTRACTION JOINT IS REQUIRED AT MIDPOINT OF BARRIER RAIL SEGMENTS LESS THAN 20 FEET IN LENGTH NO CONTRACTION JOINTS ARE REQUIRED FOR THOSE SEGMENTS LESS THAN 10 FEET IN LENGTH.

TRANSVERSE POST TENSIONING OF THE CORED SLAB UNITS SHALL BE DONE IN ACCORDANCE WITH THE STANDARD SPECIFICATIONS.

THE TRANSFER OF LOAD FROM THE ANCHORAGES TO THE CORED SLAB UNIT SHALL BE DONE WHEN THE CONCRETE HAS REACHED A COMPRESSIVE STRENGTH OF NOT LESS THAN THE REQUIRED STRENGTH SHOWN IN THE "CONCRETE RELEASE STRENGTH" TABLE.

FOR GROUT FOR STRUCTURES, SEE SPECIAL PROVISIONS.

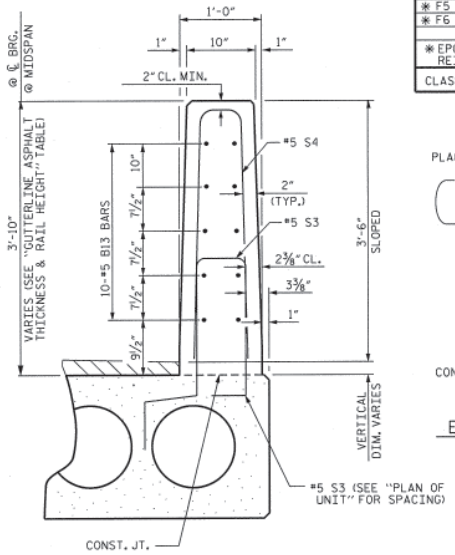

VERTICAL CONCRETE BARRIER RAIL SECTION

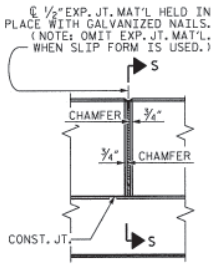

ELEVATION AT EXPANSION JOINTS

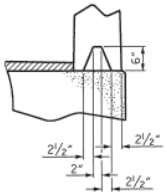

SECTION S-S
AT DAM IN OPEN JOINT
(THIS IS TO BE USED ONLY WHEN SLIP FORM IS USED)

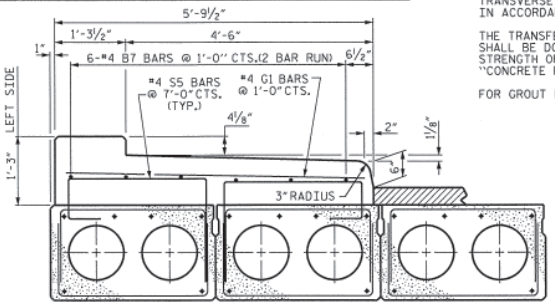

SECTION THROUGH SIDEWALK

CONCRETE RELEASE STRENGTH	
UNIT	PSI
50' UNITS	4900

DEAD LOAD DEFLECTION AND CAMBER	
	3'-0" x 1'-9"
50' CORED SLAB UNIT	0.6" Ø L.R. STRAND
CAMBER (SLAB ALONE IN PLACE)	2 1/2" ↑
DEFLECTION DUE TO SUPERIMPOSED DEAD LOAD**	1/4" ↓
FINAL CAMBER	2 1/4" ↑

** INCLUDES FUTURE WEARING SURFACE

BILL OF MATERIAL FOR VERTICAL CONCRETE BARRIER RAIL

BAR	BARS OF EXTERIOR UNIT (RIGHT SIDE)	TOTAL NO.	SIZE	TYPE	LENGTH	WEIGHT
	50' UNIT					
* B13	40	40	#5	STR	14'-2"	591
* S4	59	59	#5	2	7'-2"	441
* EPOXY COATED REINFORCING STEEL				LBS.		1032
CLASS AA CONCRETE				CU.YDS.		6.6
TOTAL VERTICAL CONCRETE BARRIER RAIL				LN. FT.		50.13

GUTTERLINE ASPHALT THICKNESS & RAIL HEIGHT		
35'-0 1/2" (CLEAR ROADWAY)	ASPHALT OVERLAY THICKNESS	RAIL HEIGHT
	@ MID-SPAN	@ MID-SPAN
	SUPERED SECTION	
50' UNITS	1 1/2"	3'-7 3/4"

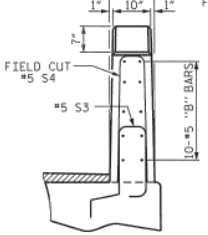

END VIEW

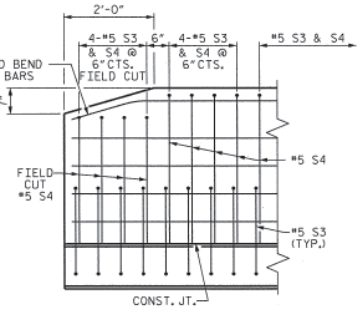

SIDE VIEW

END OF RAIL DETAILS

PROJECT NO. BD-5114S
JACKSON COUNTY
STATION: 14+19.23 -L-

SHEET 3 OF 3

STATE OF NORTH CAROLINA
DEPARTMENT OF TRANSPORTATION
RALEIGH

3'-0" X 1'-9"
PRESTRESSED CONCRETE
CORED SLAB UNIT
75° SKEW

NORTH CAROLINA PROFESSIONAL SEAL 15779 ENGINEER JOHN R. DUCONGE, JR.
1/16/13

REVISIONS								SHEET NO.
NO.	BY:	DATE:	NO.	BY:	DATE:			S-7
1			3					TOTAL SHEETS
2			4					21

ASSEMBLED BY :	H.P. KIM	DATE : 01-2012	
CHECKED BY :	B. MATHEW	DATE : 02-2012	
DRAWN BY :	DGE 5/09		
CHECKED BY :	BCH 6/09		

16-JAN-2013 14:38
S:\DPG4\John\LIBR_Files\BD-5114S\Final Plans\BD-5114S_SD_CS.dgn
jduggins

06-FEB-2013 11:18
S:\OPG4\John\LIBR_Files\BD-5114S\Final Plans\BD-5114S_SD_CS.dgn
jduggins

NOTES

FOR DETAILS OF CONCRETE INSERTS, SEE "3 BAR METAL RAIL" SHEET 3 OF 3.

FOR DETAILS OF GUARDRAIL ANCHOR ASSEMBLIES, SEE "GUARDRAIL ANCHORAGE FOR VERTICAL CONCRETE BARRIER RAIL AND 3 BAR METAL RAIL END POSTS" SHEET.

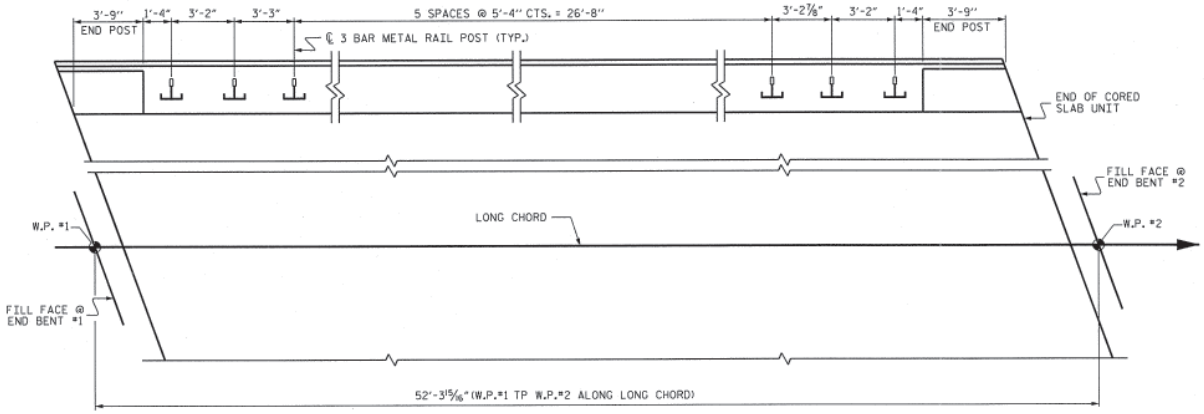

PLAN OF RAIL POST SPACINGS

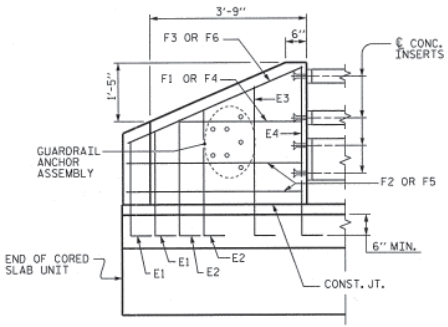

ELEVATION

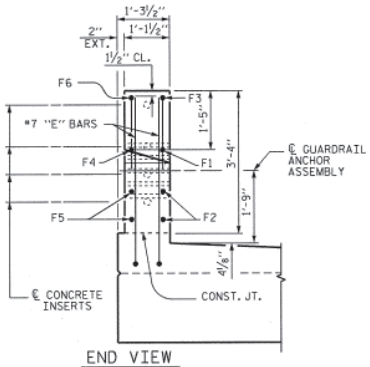

END VIEW

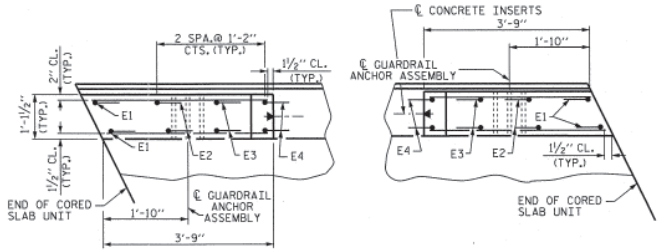

PLAN

END POST DETAILS

PROJECT NO. BD-5114S
JACKSON COUNTY
STATION: 14+19.23 -L-

STATE OF NORTH CAROLINA
DEPARTMENT OF TRANSPORTATION
RALEIGH

RAIL POST SPACINGS AND END OF RAIL DETAILS

NORTH CAROLINA PROFESSIONAL SEAL 15779 ENGINEER JOHN R. DUGGINS, JR.
2/6/13

REVISIONS								SHEET NO.
NO.	BY:	DATE:	NO.	BY:	DATE:			S-8
1			3					TOTAL SHEETS
2			4					21

DRAWN BY : V.X. NGUYEN DATE : 01-2013
CHECKED BY : D. HODGE DATE : 1/13

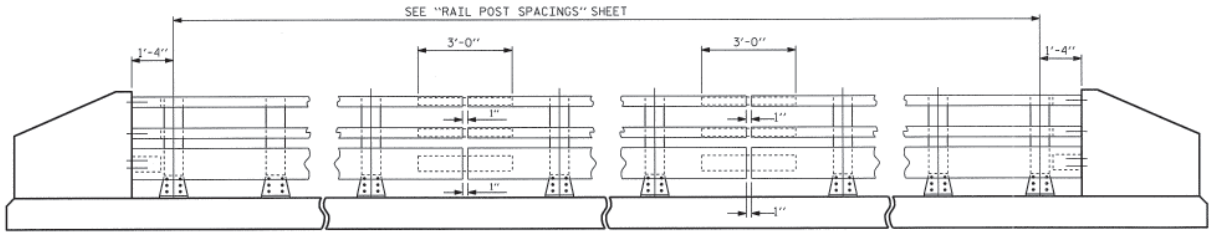

ELEVATION

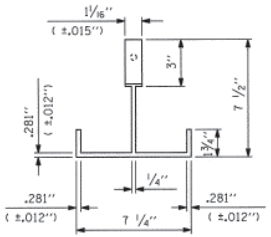

PLAN

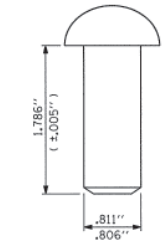

RIVET DETAIL

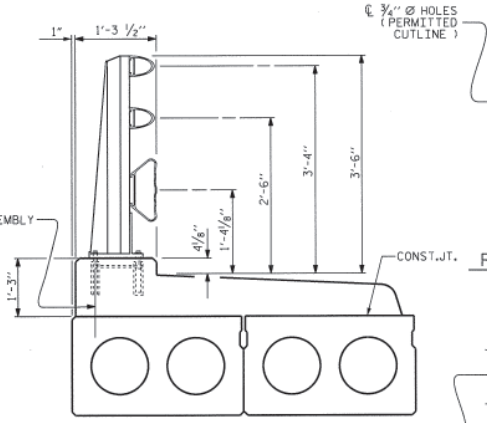

SECTION THRU RAIL

FOR ANCHOR ASSEMBLY, SEE "3 BAR METAL RAIL" STD.No.BMR6

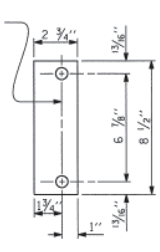

REAR PLATE

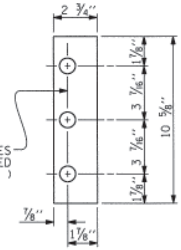

FRONT PLATE

SHIM DETAILS

NOTE :
SHIMS MAY BE CUT ALONG PERMITTED CUTLINE OR SLOTTED TO EDGE OF PLATE TO FACILITATE PLACEMENT.

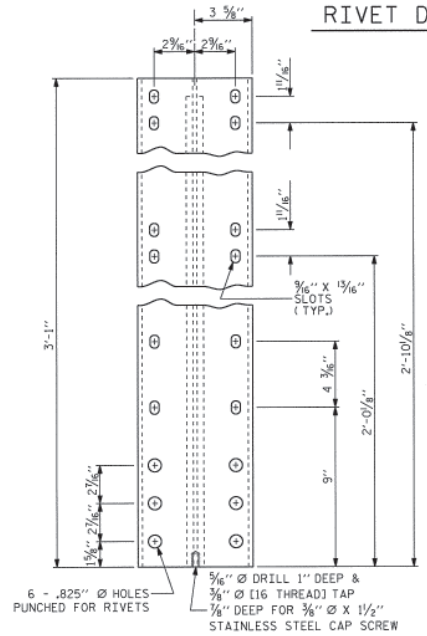

FRONT ELEVATION

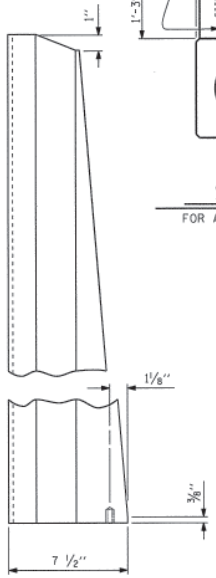

SIDE ELEVATION

DETAILS OF POST

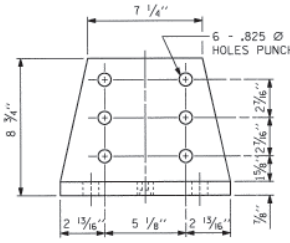

FRONT ELEVATION

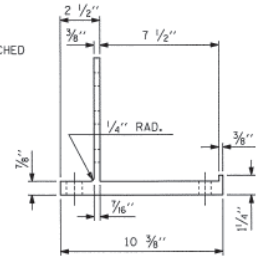

SIDE ELEVATION

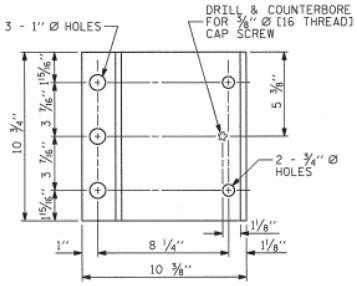

PLAN

POST BASE DETAILS

NOTES

AT THE CONTRACTOR'S OPTION, METAL RAIL MAY BE EITHER ALUMINUM OR GALVANIZED STEEL IN ACCORDANCE WITH THE REQUIREMENTS OF THE GENERAL NOTES AND THE FOLLOWING SPECIFICATIONS FOR THE ALTERNATE MATERIALS; HOWEVER, THE CONTRACTOR WILL BE REQUIRED TO USE THE SAME RAIL MATERIAL ON ALL STRUCTURES ON THE PROJECT FOR WHICH METAL RAIL IS DESIGNATED.

ALUMINUM RAILS

MATERIAL FOR POSTS, BASES AND RAILS, EXPANSION BARS AND CLAMP BARS SHALL BE ASTM B221 ALLOY 6061-T6.

MATERIAL FOR RIVETS SHALL BE ASTM B316 ALLOY 6061-T6. RIVETS SHALL BE STANDARD BUTTON HEAD AND CONE POINT COLD DRIVEN AS PER DRAWING.

THE BASE OF RAIL POSTS, OR ANY OTHER ALUMINUM SURFACE IN CONTACT WITH CONCRETE SHALL BE THOROUGHLY COATED WITH AN ALUMINUM IMPREGNATED CAULKING COMPOUND OF APPROVED QUALITY.

MATERIAL FOR SHIMS TO BE ASTM B209 ALLOY 6061-T6.

GALVANIZED STEEL RAILS

MATERIAL AND GALVANIZING ARE TO CONFORM TO THE FOLLOWING SPECIFICATIONS:

POST, POST BASES, RAILS, EXPANSION BARS AND CLAMP BARS : AASHTO M270 GRADE 36 STRUCTURAL STEEL - GALVANIZED TO AASHTO M111.

RIVETS: RIVETS SHALL MEET THE REQUIREMENTS OF ASTM A502 FOR GRADE 1 RIVETS.

THE CUT ENDS OF GALVANIZED STEEL RAILING, AFTER GRINDING SMOOTH SHALL BE GIVEN TWO COATS OF ZINC RICH PAINT MEETING THE REQUIREMENTS OF FEDERAL SPECIFICATION MIL-P-26915 USAF TYPE 1, OR OF FEDERAL SPECIFICATIONS TT-P-641.

SHIMS: SHIMS SHALL MEET THE REQUIREMENTS OF ASTM A570 FOR GRADE 33 OR A611 FOR GRADE C AND SHALL BE GALVANIZED IN ACCORDANCE WITH AASHTO M111.

RAIL CAPS: RAIL CAPS SHALL MEET THE REQUIREMENTS OF ASTM A570 FOR GRADE 33 OR A611 FOR GRADE C AND SHALL BE GALVANIZED IN ACCORDANCE WITH AASHTO M111.

GENERAL NOTES

RAILING SHALL BE CONTINUOUS FROM END POST TO END POST OF BRIDGE. EACH JOINT IN RAIL LENGTH SHALL BE SPLICED AS DETAILED. PANEL LENGTHS OF RAIL SHALL BE ATTACHED TO A MINIMUM OF THREE POSTS. PLACE ONE JOINT SPLICE JUST BEYOND THE 3RD RAIL POST FROM EACH END, TYPICALLY 14' FROM THE END. PLACE OTHER JOINTS AS NEEDED.

FOR END OF RAIL TO CLEAR FACE OF CONCRETE END POST DIMENSION, SEE STANDARD NO. BMR7.

CAP SCREWS SHALL BE ASTM F593 ALLOY 305 STAINLESS STEEL. WASHERS FOR RAIL ATTACHMENT SHALL MEET THE REQUIREMENTS OF ASTM F844 EXCEPT THEY SHALL BE MADE FROM ALLOY 304 STAINLESS STEEL.

CERTIFIED MILL REPORTS ARE REQUIRED FOR RAILS AND POSTS. SHOP INSPECTION IS NOT REQUIRED.

METAL RAIL POSTS SHALL BE SET NORMAL TO CURB GRADE.

METHOD OF MEASUREMENT FOR METAL RAILS: FOR LENGTH OF METAL RAILS TO BE PAID FOR, SEE THE STANDARD SPECIFICATIONS.

CURVED RAIL USAGE: WHERE RAILS ARE TO BE USED ON BRIDGES ON HORIZONTAL AND/OR VERTICAL CURVATURE THE CONTRACTOR MAY, AT HIS OPTION, HAVE THE REQUIRED CURVATURE IN THE RAIL FORMED IN THE SHOP OR IN THE FIELD. IN EITHER EVENT, THE RAIL SHALL CONFORM WITHOUT BUCKLING OR KINKING TO THE REQUIRED CURVATURE IN A UNIFORM MANNER ACCEPTABLE TO THE ENGINEER.

TO INSURE FUTURE IDENTIFICATION OF THE FABRICATOR, A PERMANENT IDENTIFYING MARK SHALL BE PLACED ON EACH POST. THE METHOD OF MARKING AND LOCATION SHALL BE SUCH THAT IT DOES NOT DETRACT FROM THE APPEARANCE OF THE POST, BUT REMAIN VISIBLE AFTER RAIL PLACEMENT.

SHIMS SHALL BE USED AS NECESSARY FOR POST ALIGNMENT.

ALLOY 6351-T5 MAY BE SUBSTITUTED FOR ALLOY 6061-T6 WHERE APPLICABLE.

MINOR VARIATIONS IN DETAILS OF METAL RAIL WILL BE CONSIDERED. DETAILS OF SUCH VARIATIONS, IF DESIRED, SHALL BE SUBMITTED FOR APPROVAL.

PAY LENGTH = 42.25 LIN.FT.

NORTH CAROLINA PROFESSIONAL SEAL 15779 ENGINEER JOHN R. DUGGINS

1/16/13

PROJECT NO. BD-5114S

JACKSON COUNTY

STATION: 14+19.23 -L-

SHEET 1 OF 3

STATE OF NORTH CAROLINA
DEPARTMENT OF TRANSPORTATION
RALEIGH

STANDARD

3 BAR METAL RAIL

ASSEMBLED BY : H.P. KIM	DATE : 01-2012
CHECKED BY : B. MATHEW	DATE : 02-2012
DRAWN BY : JMB 1/88	REV. 5/7/03 RWW/JTE
CHECKED BY : GGH 1/88	REV. 5/1/06 TLA/GM
	REV. 10/1/11 MAA/GM

REVISIONS								SHEET NO.
NO.	BY:	DATE:	NO.	BY:	DATE:			S-9
1			3					TOTAL SHEETS
2			4					21

STD. NO. BMR5

16-JAN-2013 14:36
S:\BPG4\John\LIBR. Files\BD-5114S\Final Plans\BD-5114S_SD_CS.dgn
jduggins

NOTES

STRUCTURAL CONCRETE ANCHOR ASSEMBLY

THE STRUCTURAL CONCRETE ANCHOR ASSEMBLY SHALL CONSIST OF THE FOLLOWING COMPONENTS:

A. FERRULES SHALL BE MADE FROM STEEL MEETING THE REQUIREMENTS OF AASHTO M169, GRADE 12L14 AND SHALL HAVE A MINIMUM LENGTH OF THREADS OF 2" FOR 3/4" FERRULES AND 1 3/4" FOR 5/8" FERRULES.

B. 3 - 3/4" Ø X 2 1/2" BOLTS WITH WASHERS. BOLTS SHALL CONFORM TO THE REQUIREMENTS OF ASTM A307. BOLTS AND WASHERS SHALL BE GALVANIZED. AT THE CONTRACTOR'S OPTION, STAINLESS STEEL BOLTS AND WASHERS MAY BE USED AS AN ALTERNATE FOR THE 3/4" Ø X 2 1/2" GALVANIZED BOLTS AND WASHERS. THEY SHALL CONFORM TO OR EXCEED THE MECHANICAL REQUIREMENTS OF ASTM A307. THE USE OF THIS ALTERNATE SHALL BE APPROVED BY THE ENGINEER.

C. 2 - 5/8" Ø X 2 1/4" BOLTS WITH WASHERS. BOLTS SHALL CONFORM TO THE REQUIREMENTS OF ASTM A307. BOLTS AND WASHERS SHALL BE GALVANIZED. AT THE CONTRACTOR'S OPTION, STAINLESS STEEL BOLTS AND WASHERS MAY BE USED AS AN ALTERNATE FOR THE 5/8" Ø X 2 1/4" GALVANIZED BOLTS AND WASHERS. THEY SHALL CONFORM TO OR EXCEED THE MECHANICAL REQUIREMENTS OF ASTM A307. THE USE OF THIS ALTERNATE SHALL BE APPROVED BY THE ENGINEER.

D. WIRE STRUT SHOWN IN THE CONCRETE ANCHOR ASSEMBLY DETAIL IS THE MINIMUM ALLOWABLE SIZE AND SHALL HAVE A MINIMUM TENSILE STRENGTH OF 100,000 PSI. AS AN OPTION, A 7/16" Ø WIRE STRUT WITH A MINIMUM TENSILE STRENGTH OF 90,000 PSI IS ACCEPTABLE.

E. THE METAL RAIL ANCHOR ASSEMBLIES TO BE HOT DIPPED GALVANIZED TO CONFORM TO REQUIREMENTS OF AASHTO M111.

F. THE COST OF THE METAL RAIL ANCHOR ASSEMBLY WITH BOLTS AND WASHERS COMPLETE IN PLACE SHALL BE INCLUDED IN THE PRICE BID FOR LINEAR FEET OF METAL RAIL.

G. BOLTS TO BE TIGHTENED ONE-HALF TURN WITH A WRENCH FROM A FINGER-TIGHT POSITION.

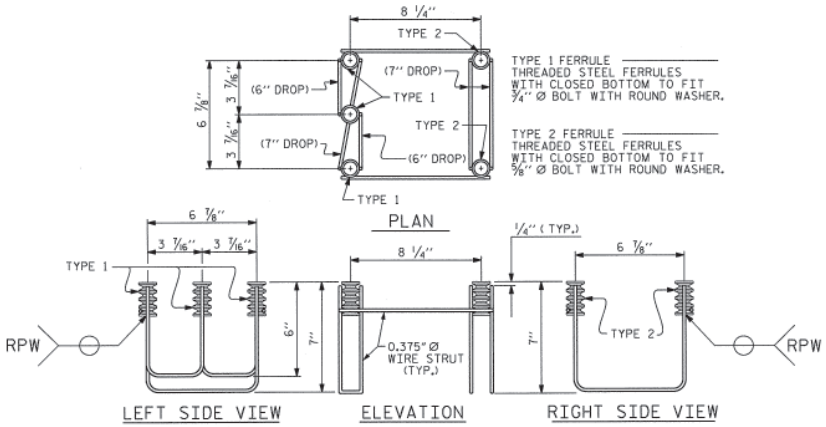

5-BOLT METAL RAIL ANCHOR ASSEMBLY

(10 ASSEMBLIES REQUIRED)

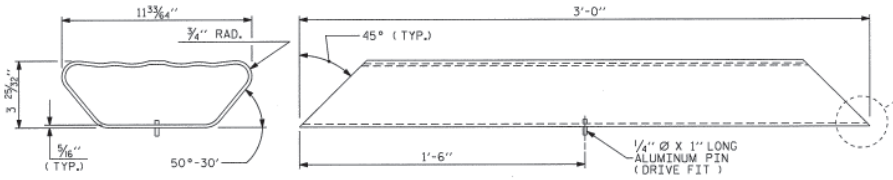

BOTTOM RAIL EXPANSION BAR

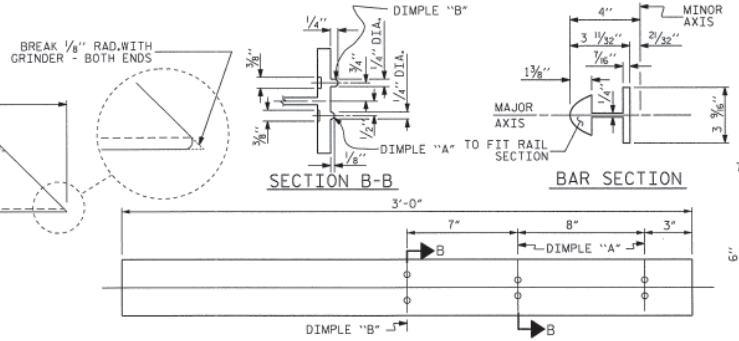

TOP & MIDDLE RAIL EXPANSION BAR

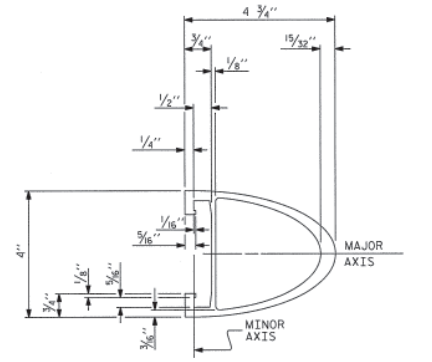

TOP & MIDDLE RAIL SECTION

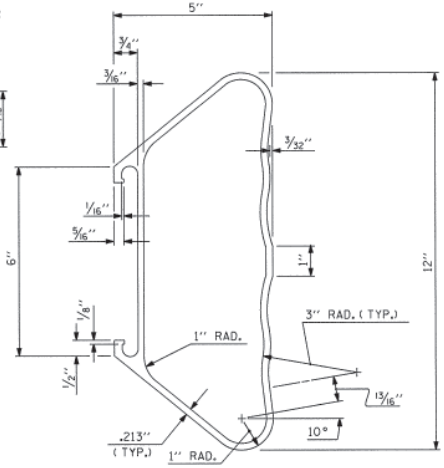

BOTTOM RAIL SECTION

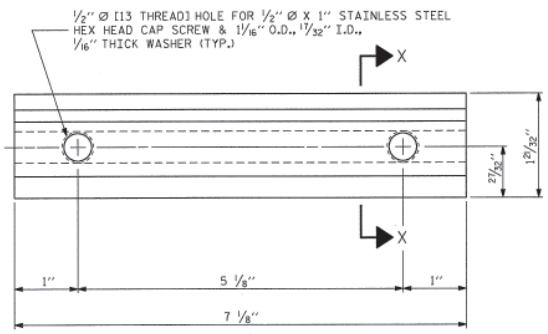

ELEVATION

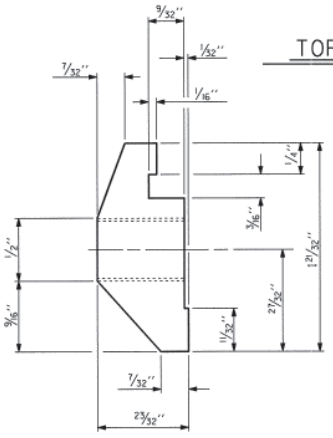

SECTION X-X

CLAMP BAR DETAIL

(6 REQUIRED PER POST)

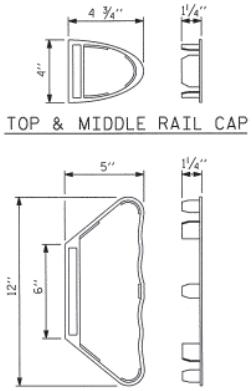

TOP & MIDDLE RAIL CAP

BOTTOM RAIL CAP

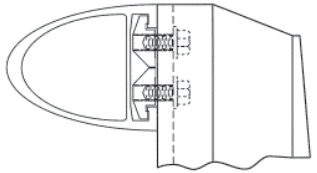

CLAMP ASSEMBLY

TOP RAIL SHOWN
(MIDDLE & BOTTOM RAIL ARE SIMILAR)

PROJECT NO. BD-5114S

JACKSON COUNTY

STATION: 14+19.23 -L-

SHEET 2 OF 3

STATE OF NORTH CAROLINA
DEPARTMENT OF TRANSPORTATION
RALEIGH

STANDARD

3 BAR METAL RAIL

NORTH CAROLINA PROFESSIONAL SEAL 15779 ENGINEER JOHN R. DUGGINS

1/16/13

ASSEMBLED BY :	H.P. KIM	DATE : 01-2012			
CHECKED BY :	B. MATHEW	DATE : 02-2012			
DRAWN BY : JMB	1/88	REV. 5/7/03	RWW/JTE		
CHECKED BY : GGH	1/88	REV. 5/1/06	TLA/GM		
		REV. 10/1/11	MAA/GM		

REVISIONS								SHEET NO.
NO.	BY:	DATE:	NO.	BY:	DATE:			S-10
1			3					TOTAL SHEETS
2			4					21

STD. NO. BMR6

16-JAN-2013 14:36
S:\DPG4\John\LIBR_Files\BD-5114S\Final Plans\BD-5114S_S0_CS.dgn
jdugginis

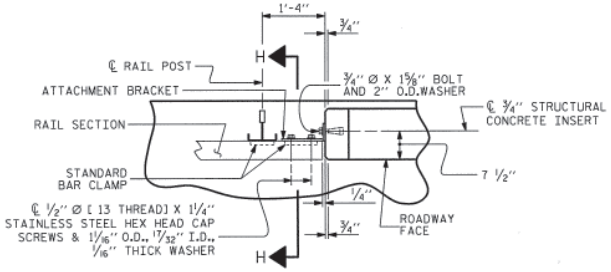

PLAN OF RAIL AND END POST

(STIFFENER ON 1/2" ℙ NOT SHOWN FOR CLARITY)

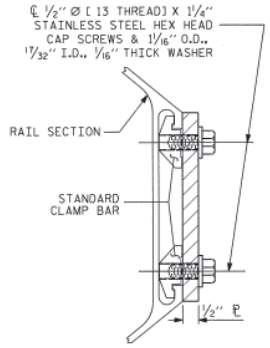

SECTION H-H

(FOR BOTTOM RAIL)

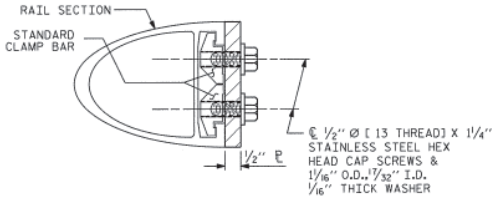

SECTION H-H

(FOR TOP & MIDDLE RAIL)

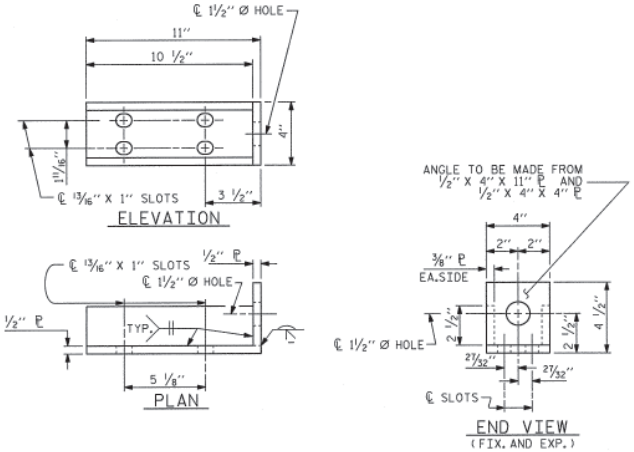

DETAILS FOR ATTACHMENT BRACKET

(TOP & MIDDLE RAIL ONLY)

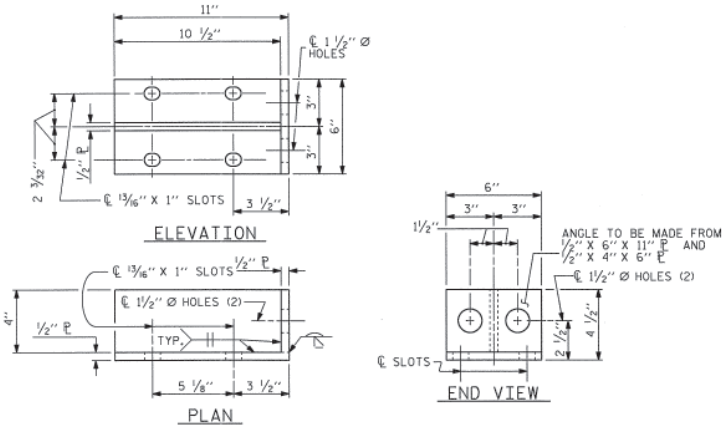

DETAILS FOR ATTACHMENT BRACKET

(BOTTOM RAIL ONLY)

NOTES

METAL RAIL TO END POST CONNECTION

THE METAL RAIL TO END POST CONNECTION SHALL CONSIST OF THE FOLLOWING COMPONENTS:

A. 1/2" PLATES SHALL CONFORM TO AASHTO M270 GRADE 36 AND SHALL BE GALVANIZED AFTER FABRICATION.

B. 3/4" STRUCTURAL CONCRETE INSERT SHALL HAVE A WORKING LOAD SHEAR CAPACITY OF 4800 LBS. THE FERRULES SHALL ENGAGE A 3/4" Ø X 1 5/8" BOLT WITH 2" O.D. WASHER IN PLACE. THE 3/4" Ø X 1 5/8" BOLT SHALL HAVE N. C. THREADS.

C. CAP SCREWS FOR RAIL ATTACHMENT TO ANGLE SHALL CONFORM TO THE REQUIREMENTS OF ASTM F593 ALLOY 305 STAINLESS STEEL. CAP SCREWS TO BE CENTERED IN SLOTS AT 60°F. WASHERS FOR RAIL ATTACHMENT SHALL MEET THE REQUIREMENTS OF ASTM F844 EXCEPT THEY SHALL BE MADE FROM ALLOY 304 STAINLESS STEEL.

D. STANDARD CLAMP BARS (STD. No. BMR6).

THE COST OF THE STANDARD CLAMP BARS AND CAP SCREWS USED IN THE METAL RAIL TO END POST CONNECTION SHALL BE INCLUDED IN THE UNIT CONTRACT PRICE BID FOR LINEAR FEET OF 3 BAR METAL RAIL.

THE 3/4" STRUCTURAL CONCRETE INSERT WITH BOLT SHALL BE ASSEMBLED IN THE SHOP.

THE COST OF THE 3/4" STRUCTURAL CONCRETE INSERT ASSEMBLY, AND THE 1/2" PLATES COMPLETE IN PLACE SHALL BE INCLUDED IN THE VARIOUS PAY ITEMS.

THE CONTRACTOR, AT HIS OPTION, MAY USE AN ADHESIVE BONDING SYSTEM IN LIEU OF THE STRUCTURAL CONCRETE INSERT EMBEDDED IN THE END POST. IF THE ADHESIVE BONDING SYSTEM IS USED, THE 3/4" Ø X 1 5/8" BOLT WITH WASHER SHALL BE REPLACED WITH A 3/4" Ø X 6 1/2" BOLT AND 2" O.D.WASHER. ALL SPECIFICATIONS THAT APPLY TO THE 3/4" Ø X 1 5/8" BOLT SHALL APPLY TO THE 3/4" Ø X 6 1/2" BOLT. FIELD TESTING OF THE ADHESIVE BONDING SYSTEM IS NOT REQUIRED.

NOTES

STRUCTURAL CONCRETE INSERT

THE STRUCTURAL CONCRETE INSERT ASSEMBLY SHALL CONSIST OF THE FOLLOWING COMPONENTS:

A. FERRULES SHALL BE MADE FROM STEEL MEETING THE REQUIREMENTS OF AASHTO M169, GRADE 12L14 AND SHALL HAVE A MINIMUM LENGTH OF THREADS OF 1 1/2".

B. 1 - 3/4" Ø X 1 5/8" BOLT WITH WASHER. BOLT SHALL CONFORM TO THE REQUIREMENTS OF ASTM A307. BOLT AND WASHER SHALL BE GALVANIZED. AT THE CONTRACTORS OPTION, STAINLESS STEEL BOLT AND WASHER MAY BE USED AS AN ALTERNATE FOR THE 3/4" Ø X 1 5/8" GALVANIZED BOLT AND WASHER. THEY SHALL CONFORM TO OR EXCEED THE MECHANICAL REQUIREMENTS OF ASTM A307. THE USE OF THIS ALTERNATE SHALL BE APPROVED BY THE ENGINEER.

C. WIRE STRUT SHOWN IN THE CONCRETE INSERT ASSEMBLY DETAIL IS THE MINIMUM ALLOWABLE SIZE AND SHALL HAVE A MINIMUM TENSILE STRENGTH OF 100,000 PSI. AS AN OPTION, A 1/16" Ø WIRE STRUT WITH A MINIMUM TENSILE STRENGTH OF 90,000 PSI IS ACCEPTABLE.

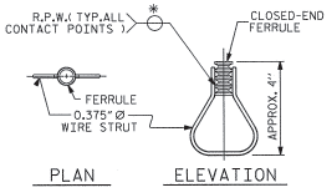

STRUCTURAL CONCRETE INSERT

* EACH WELDED ATTACHMENT OF WIRE TO FERRULE SHALL DEVELOP THE TENSILE STRENGTH OF THE WIRE.

PROJECT NO. BD-5114S

JACKSON COUNTY

STATION: 14+19.23 -L-

SHEET 3 OF 3

STATE OF NORTH CAROLINA
DEPARTMENT OF TRANSPORTATION
RALEIGH

STANDARD

3 BAR METAL RAIL

ASSEMBLED BY : H.P. KIM	DATE : 01-2012		
CHECKED BY : B. MATHEW	DATE : 02-2012		
DRAWN BY : JMB 1/88	REV. 5/7/03	RWW/JTE	
CHECKED BY : GGH 1/88	REV. 5/1/06	TLA/GM	
	REV. 10/1/11	MAA/GM	

NORTH CAROLINA PROFESSIONAL SEAL 15779 ENGINEER JOHN E. DUGGINS, JR.
1/16/13

REVISIONS								SHEET NO.
NO.	BY:	DATE:	NO.	BY:	DATE:			S-11
1			3					TOTAL SHEETS
2			4					21

STD. NO. BMR7

16-JAN-2013 14:36
S:\DPG4\John\LIBR_Files\BD-5114S\Final Plans\BD-5114S_SD_CS.dgn
jduggins

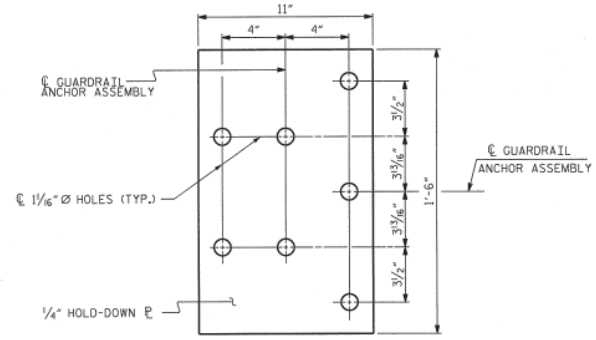

PLAN

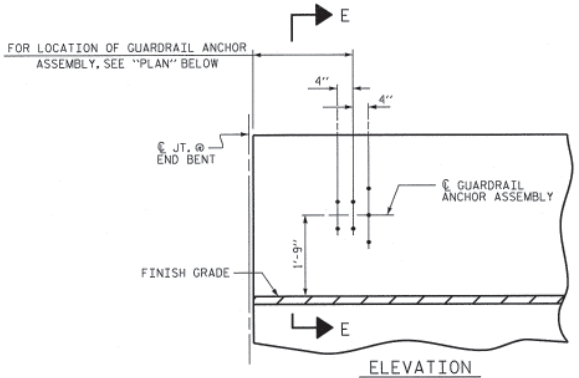

ELEVATION

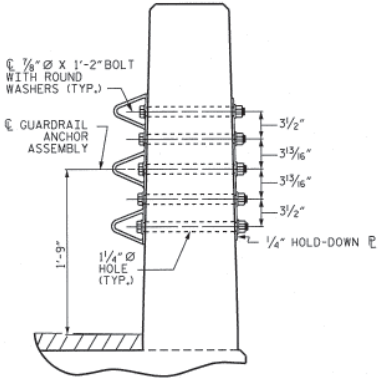

SECTION E-E

GUARDRAIL ANCHOR ASSEMBLY DETAILS

(RIGHT SIDE)

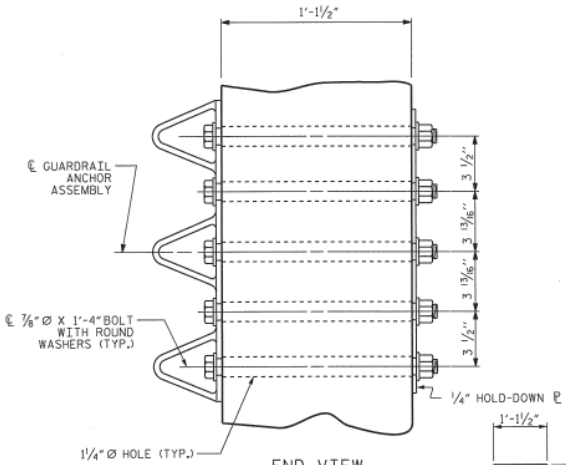

END VIEW

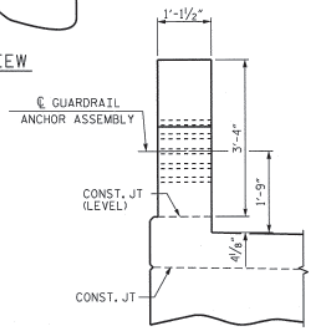

END VIEW

(THREE BAR METAL RAIL)

GUARDRAIL ANCHOR ASSEMBLY DETAILS

(LEFT SIDE)

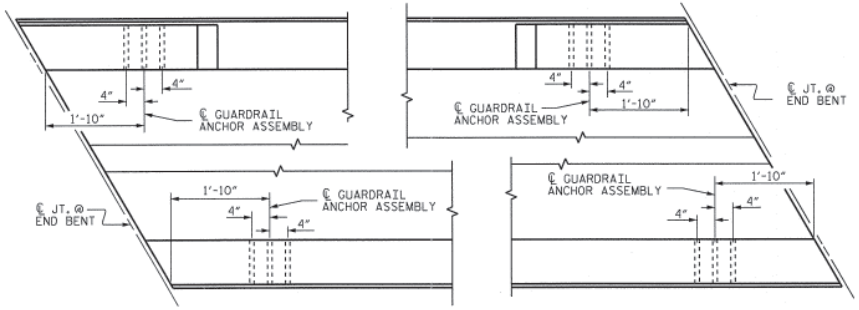

PLAN

LOCATION OF ANCHORS FOR GUARDRAIL

NOTES

THE GUARDRAIL ANCHOR ASSEMBLY SHALL CONSIST OF A 1/4" HOLD DOWN PLATE AND 7 - 7/8" Ø BOLTS WITH NUTS AND WASHERS.

THE HOLD-DOWN PLATE SHALL CONFORM TO AASHTO M270 GRADE 36. AFTER FABRICATION, THE HOLD-DOWN PLATE SHALL BE HOT-DIP GALVANIZED IN ACCORDANCE WITH AASHTO M111.

BOLTS SHALL CONFORM TO THE REQUIREMENTS OF ASTM A307 AND NUTS SHALL CONFORM TO THE REQUIREMENTS OF AASHTO M291. BOLTS, NUTS AND WASHERS SHALL BE GALVANIZED. (AT THE CONTRACTOR'S OPTION, STAINLESS STEEL BOLTS, NUTS AND WASHERS MAY BE USED AS AN ALTERNATE FOR THE 7/8" Ø GALVANIZED BOLTS, NUTS AND WASHERS. THEY SHALL CONFORM TO OR EXCEED THE MECHANICAL REQUIREMENTS OF ASTM A307. THE USE OF THIS ALTERNATE SHALL BE APPROVED BY THE ENGINEER.)

THE GUARDRAIL ANCHOR ASSEMBLY IS REQUIRED AT ALL POINTS WHERE APPROACH GUARDRAIL IS TO BE ATTACHED TO THE END OF BARRIER RAIL. FOR POINTS OF ATTACHMENT, SEE SKETCH.

AFTER INSTALLATION, THE EXPOSED THREAD OF THE BOLT SHALL BE BURRED WITH A SHARP POINTED TOOL.

THE COST OF THE GUARDRAIL ANCHOR ASSEMBLY SHALL BE INCLUDED IN THE UNIT CONTRACT PRICE BID FOR VERTICAL CONCRETE BARRIER RAIL OR THREE BAR METAL RAIL.

THE VERTICAL REINFORCING BARS MAY BE SHIFTED SLIGHTLY IN THE VERTICAL CONCRETE BARRIER RAIL TO CLEAR ASSEMBLY BOLTS.

THE 1 1/4" Ø HOLES SHALL BE FORMED OR DRILLED WITH A CORE BIT. IMPACT TOOLS WILL NOT BE PERMITTED. ANY CONCRETE DAMAGED BY THIS WORK SHALL BE REPAIRED TO THE SATISFACTION OF THE ENGINEER.

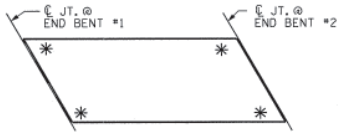

SKETCH SHOWING POINTS OF ATTACHMENT

✳ DENOTES GUARDRAIL ANCHOR ASSEMBLY

PROJECT NO. BD-5114S
JACKSON COUNTY
STATION: 14+19.23 -L-

STATE OF NORTH CAROLINA
DEPARTMENT OF TRANSPORTATION
RALEIGH

GUARDRAIL ANCHORAGE FOR VERTICAL CONCRETE BARRIER RAIL AND 3 BAR METAL RAIL END POSTS

REVISIONS								SHEET NO.
NO.	BY:	DATE:	NO.	BY:	DATE:			S-12
1			3					TOTAL SHEETS
2			4					21

NORTH CAROLINA PROFESSIONAL SEAL 15779 ENGINEER JOHN R. DUGGINS, JR.
6/6/13

DRAWN BY : D. HODGE DATE : 1/13
CHECKED BY : J.R. DUGGINS DATE : 1/13

06-FEB-2013 11:18
S:\DPG4\Jdmy\LIBR_Files\BD-5114S\Final Plans\BD-5114S_SD_CS.dgn
jduggins

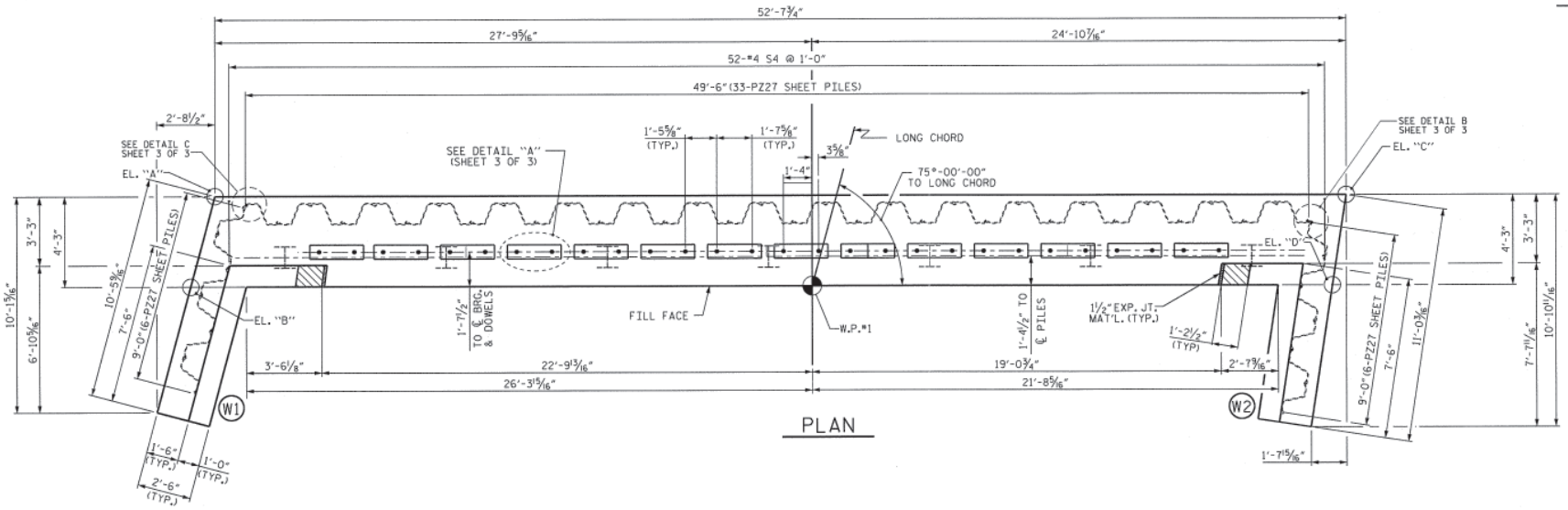

PLAN

NOTES

STIRRUPS IN CAP MAY BE SHIFTED AS NECESSARY TO CLEAR DOWELS.

THE CONCRETE IN THE SHADED AREA OF THE WING SHALL BE POURED AFTER THE VERTICAL CONCRETE BARRIER RAIL IS CAST IF SLIP FORMING IS USED.

FOR PILE SPLICE DETAILS, SEE SHEET 3 OF 3.

FOR WING DETAILS, SEE SHEET 2 OF 3.

TOP OF PILE ELEVATIONS	
1	2130.84
2	2130.55
3	2130.25
4	2129.96
5	2129.66
6	2129.37
7	2129.07

	T.O.C EL	B.O.C EL
A	2132.45	2129.95
B	2132.50	2130.00
C	2130.38	2127.88
D	2130.41	2127.91

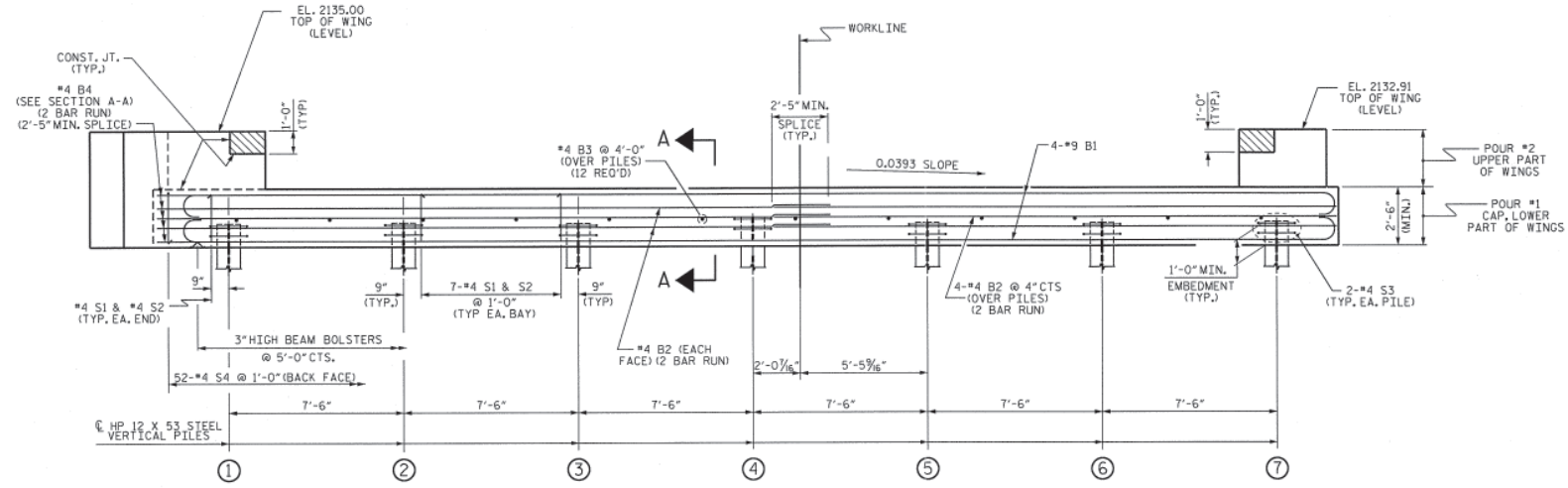

ELEVATION

WINGS NOT SHOWN FOR CLARITY.

FOR SECTION A-A, SEE SHEET 3 OF 3.

SHEET PILES NOT SHOWN FOR CLARITY

PROJECT NO. BD-5114S

JACKSON COUNTY

STATION: 14+19.23 -L-

SHEET 1 OF 3

STATE OF NORTH CAROLINA
DEPARTMENT OF TRANSPORTATION
RALEIGH

SUBSTRUCTURE

END BENT No. 1

NORTH CAROLINA PROFESSIONAL SEAL 15779 ENGINEER JOHN R. DUGGINS, JR.
1/16/13

REVISIONS								SHEET NO.
NO.	BY:	DATE:	NO.	BY:	DATE:			S-13
1			3					TOTAL SHEETS
2			4					21

ASSEMBLED BY : H. T. BARBOUR	DATE : 4-02-12	
CHECKED BY : J. R. DUGGINS	DATE : 12-12	
DRAWN BY : DGE	03/10	
CHECKED BY : MKT	03/10	

14-JAN-2013 14:29
S:\DPG4\John\L_IBR_Files\BD-5114S\FinalPlans\BD-5114S_SD_E*.dgn
jdugginS

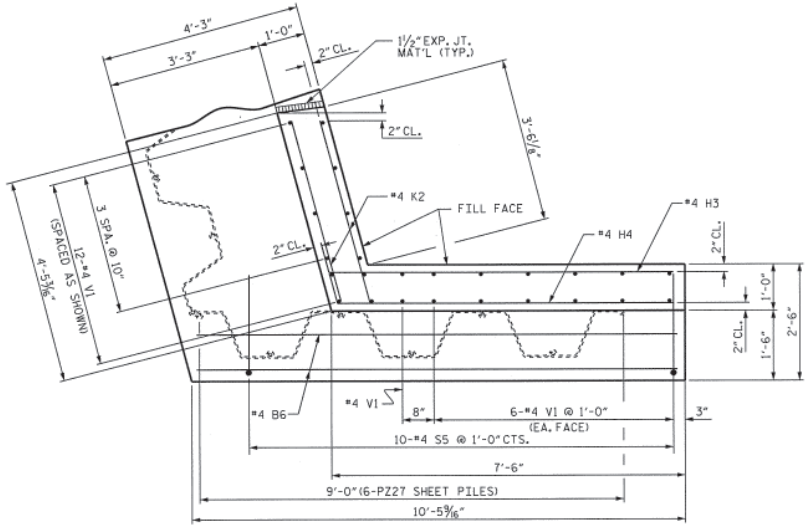

PLAN OF WING (W1)

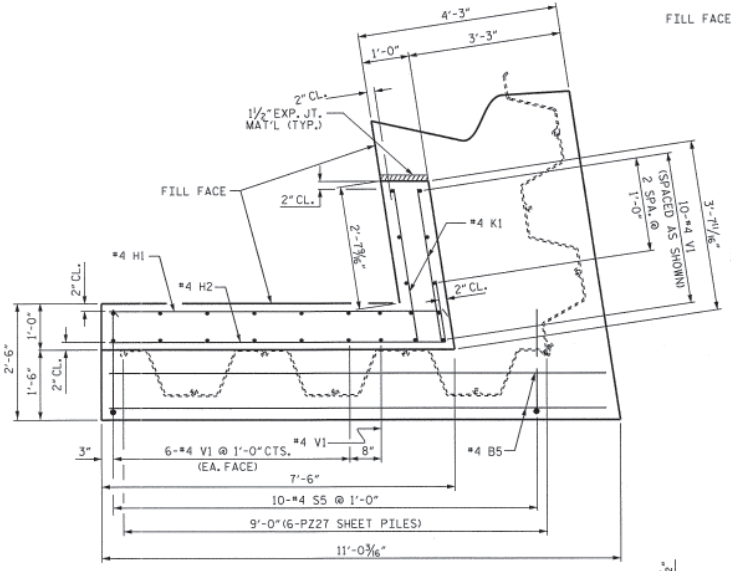

PLAN OF WING (W2)

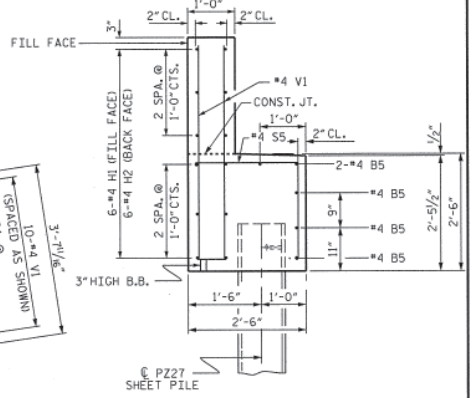

SECTION X-X

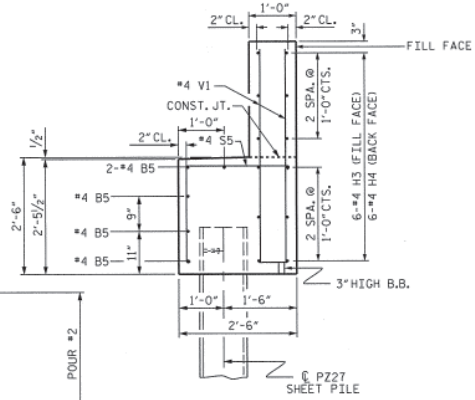

SECTION Y-Y

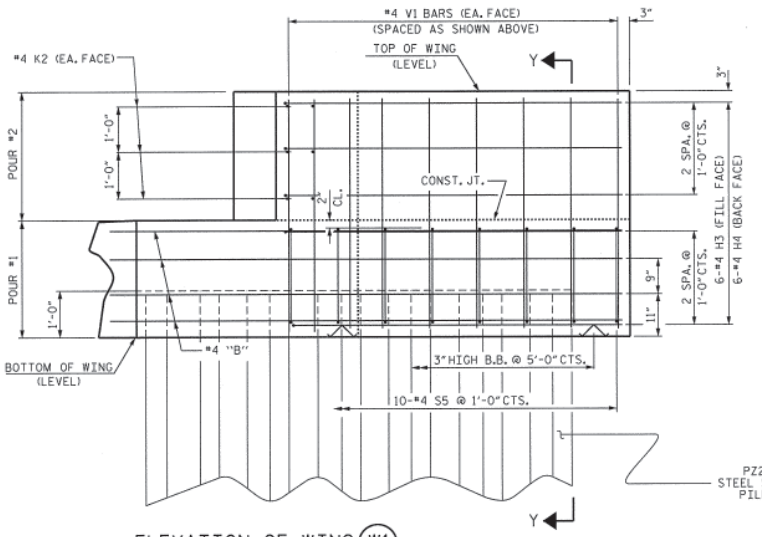

ELEVATION OF WING (W1)

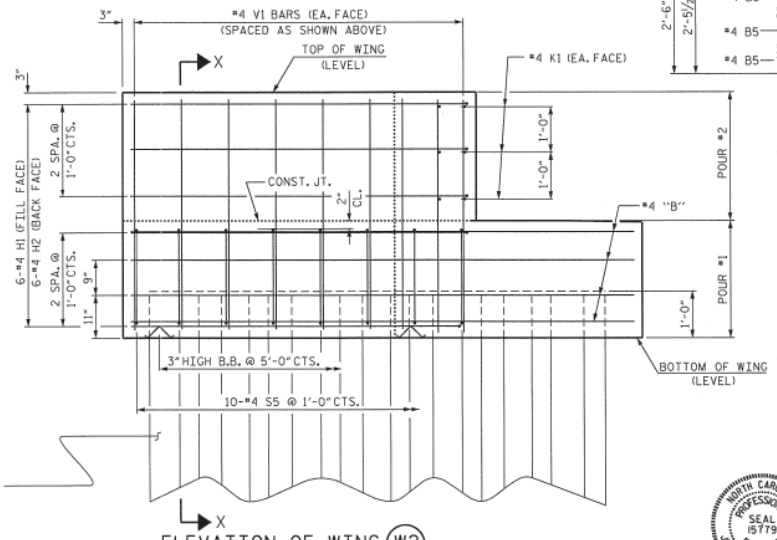

ELEVATION OF WING (W2)

PZ27 STEEL SHEET PILES

PROJECT NO. BD-5114S

JACKSON COUNTY

STATION: 14+19.23 -L-

SHEET 2 OF 3

STATE OF NORTH CAROLINA
DEPARTMENT OF TRANSPORTATION
RALEIGH

SUBSTRUCTURE
END BENT No. 1

NORTH CAROLINA PROFESSIONAL SEAL 15779 ENGINEER JOHN R. DUGGINS, JR.
1/16/13

REVISIONS						SHEET NO.
NO.	BY:	DATE:	NO.	BY:	DATE:	3-14
1			3			TOTAL SHEETS
2			4			21

DRAWN BY : H. T. BARBOUR DATE : 3-29-12
CHECKED BY : J. R. DUGGINS DATE : 12-12

14-JAN-2013 14:29
S:\DPG4\John\LIBR_Files\BD-5114S\FinalPlans\BD-5114S_SD_E*.dgn
jdugglns

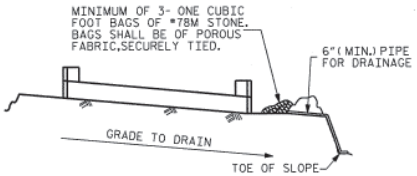

BAGGED STONE AND PIPE SHALL BE PLACED IMMEDIATELY AFTER COMPLETION OF END BENT EXCAVATION. PIPE MAY BE EITHER CONCRETE, CORRUGATED STEEL, CORRUGATED ALUMINUM ALLOY, OR CORRUGATED PLASTIC. PERFORATED PIPE WILL NOT BE ALLOWED.

BAGGED STONE SHALL REMAIN IN PLACE UNTIL THE ENGINEER DIRECTS THAT IT BE REMOVED. THE CONTRACTOR SHALL REMOVE AND DISPOSE OF SILT ACCUMULATIONS AT BAGGED STONE WHEN SO DIRECTED BY THE ENGINEER. BAGS SHALL BE REMOVED AND REPLACED WHENEVER THE ENGINEER DETERMINES THAT THEY HAVE DETERIORATED AND LOST THEIR EFFECTIVENESS.

NO SEPARATE PAYMENT WILL BE MADE FOR THIS WORK AND THE ENTIRE COST OF THIS WORK SHALL BE INCLUDED IN THE UNIT CONTRACT PRICE BID FOR THE SEVERAL PAY ITEMS.

TEMPORARY DRAINAGE AT END BENT

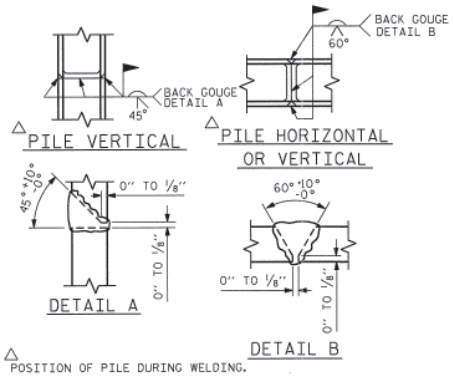

△ POSITION OF PILE DURING WELDING.

PILE SPLICE DETAILS

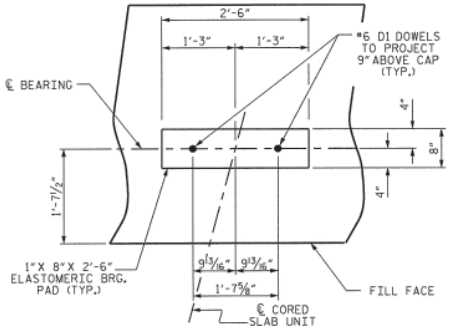

DETAIL "A"

DETAIL "B"

DETAIL "C"

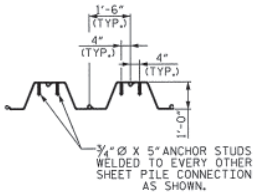

ANCHOR STUD DETAIL

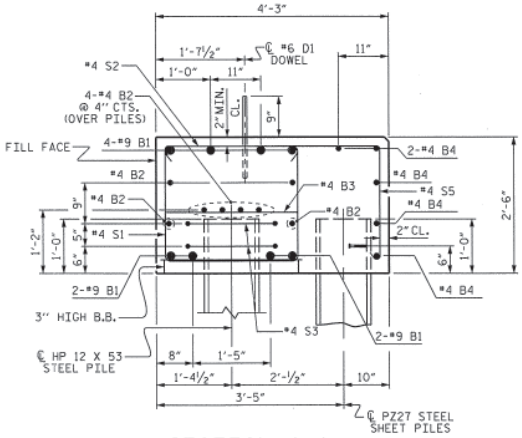

SECTION A-A

BAR TYPES

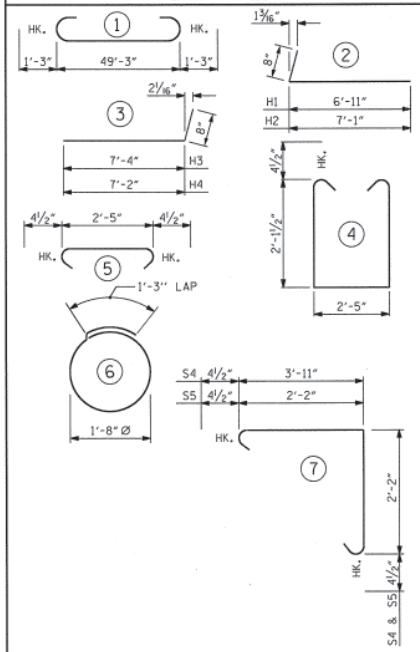

ALL BAR DIMENSIONS ARE OUT TO OUT.

BILL OF MATERIAL

END BENT No. 1

BAR	NO.	SIZE	TYPE	LENGTH	WEIGHT
B1	8	#9	1	51'-9"	1408
B2	16	#4	STR	26'-0"	278
B3	12	#4	STR	2'-5"	19
B4	10	#4	STR	27'-5"	183
B5	5	#4	STR	10'-6"	35
B6	5	#4	STR	10'-2"	34
D1	28	#6	STR	1'-6"	63
H1	6	#4	2	7'-7"	30
H2	6	#4	2	7'-9"	31
H3	6	#4	3	8'-0"	32
H4	6	#4	3	7'-10"	31
K1	6	#4	STR	3'-3"	13
K2	6	#4	STR	4'-0"	16
S1	44	#4	4	7'-5"	218
S2	44	#4	5	3'-2"	93
S3	14	#4	6	6'-6"	61
S4	52	#4	7	6'-10"	237
S5	20	#4	7	5'-1"	68
V1	50	#4	STR	4'-8"	156

REINFORCING STEEL (FOR END BENT No. 1) 3006 LBS.

END BENT #1

CLASS A CONCRETE BREAKDOWN (FOR END BENT No. 1)

POUR #1	CAP, LOWER PART OF WINGS	23.8 C.Y.
POUR #2	UPPER PART OF WINGS	2.0 C.Y.
TOTAL CLASS A CONCRETE		25.8 C.Y.

END BENT No. 1
HP 12 X 53 STEEL PILES
NO: 7 LIN. FT.= 285

18" STEEL SHEET PILES
No. PZ27 = 45
No. PZ90 = 2
TOTAL = 47 SQ. FT.= 1165

PROJECT NO. BD-5114E
CLAY COUNTY
STATION: 13+13.84 -L-

SHEET 3 OF 3

STATE OF NORTH CAROLINA
DEPARTMENT OF TRANSPORTATION
RALEIGH

SUBSTRUCTURE

END BENT No. 1 DETAILS

NORTH CAROLINA PROFESSIONAL SEAL 15779 ENGINEER JOHN R. DUGGINS
1/16/13

REVISIONS								SHEET NO.
NO.	BY:	DATE:	NO.	BY:	DATE:			S-15
1			3					TOTAL SHEETS
2			4					21

ASSEMBLED BY :	H. T. BARBOUR	DATE : 4-02-12
CHECKED BY :	J. R. DUGGINS	DATE : 12-12
DRAWN BY :	DGE	03/10
CHECKED BY :	MKT	03/10

14-JAN-2013 14:28
S:\DPG4\John\LIBR_Files\BD-5114S\FinalPlans\BD-5114S_SD_E*.dgn
jdugginS

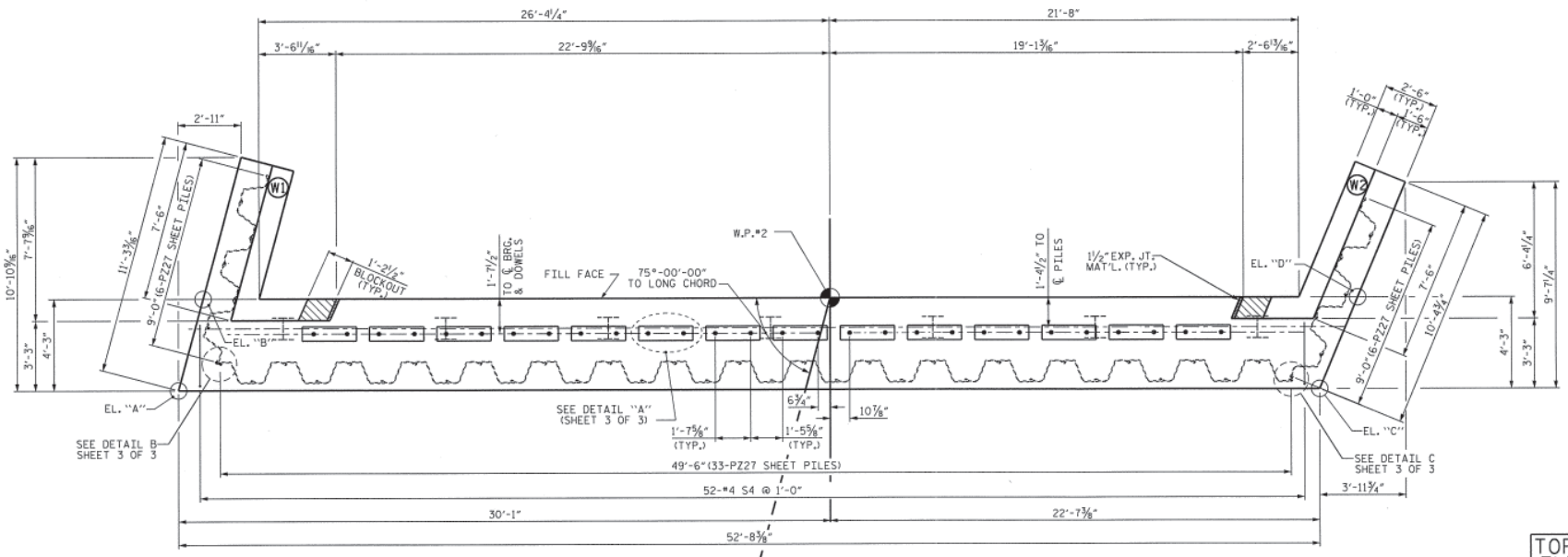

PLAN

NOTES

STIRRUPS IN CAP MAY BE SHIFTED AS NECESSARY TO CLEAR DOWELS.

THE CONCRETE IN THE SHADED AREA OF THE WING SHALL BE POURED AFTER THE VERTICAL CONCRETE BARRIER RAIL IS CAST IF SLIP FORMING IS USED.

FOR PILE SPLICE DETAILS, SEE SHEET 3 OF 3.

FOR WING DETAILS, SEE SHEET 2 OF 3.

	T.O.C EL.	B.O.C EL.
A	2132.32	2129.82
B	2132.28	2129.78
C	2130.19	2127.69
D	2130.12	2127.62

TOP OF PILE ELEVATIONS	
1	2130.65
2	2130.35
3	2130.04
4	2129.74
5	2129.44
6	2129.13
7	2128.83

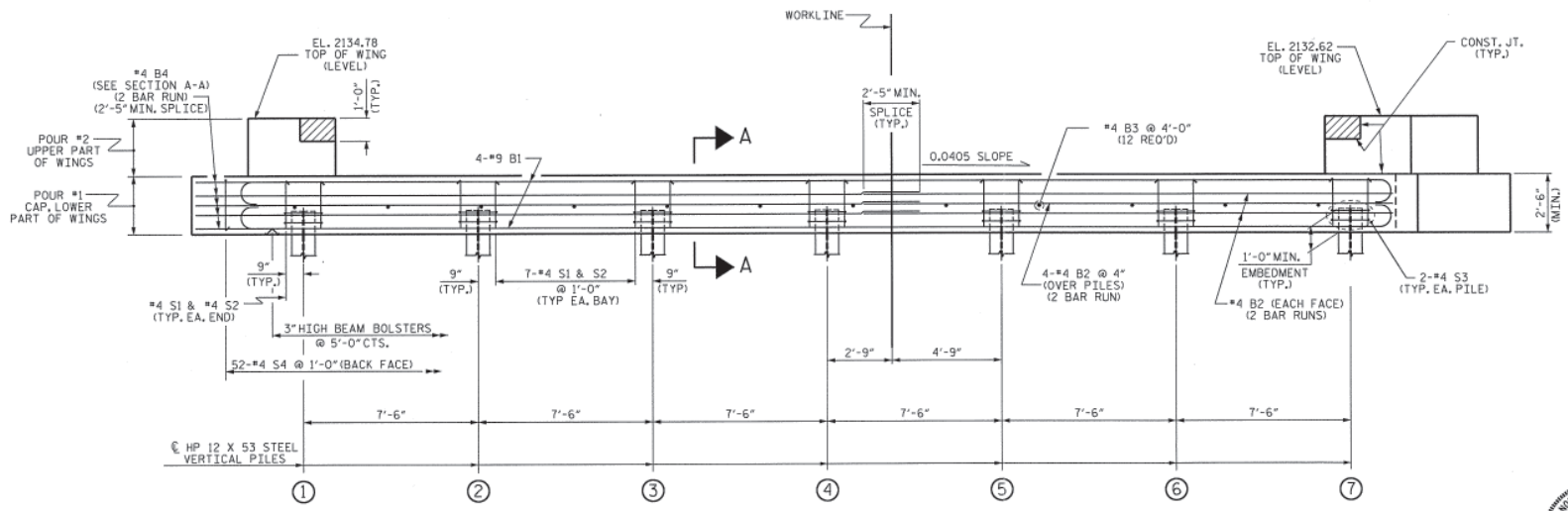

ELEVATION

WINGS NOT SHOWN FOR CLARITY.

FOR SECTION A-A, SEE SHEET 3 OF 3.

SHEET PILES NOT SHOWN FOR CLARITY

PROJECT NO. BD-5114S

JACKSON COUNTY

STATION: 14+19.23 -L-

SHEET 1 OF 3

STATE OF NORTH CAROLINA
DEPARTMENT OF TRANSPORTATION
RALEIGH

SUBSTRUCTURE

END BENT No. 2

NORTH CAROLINA PROFESSIONAL SEAL 15779 ENGINEER JOHN R. DUGGINS, JR.
1/16/13

ASSEMBLED BY : H. T. BARBOUR	DATE : 4-11-12
CHECKED BY : J. R. DUGGINS	DATE : 12-12
DRAWN BY : DGE 03/10	
CHECKED BY : MKT 03/10	

REVISIONS								SHEET NO.
NO.	BY:	DATE:	NO.	BY:	DATE:			S-16
1			3					TOTAL SHEETS
2			4					21

14-JAN-2013 14:27
S:\DPG4\John\L IBR_Files\BD-5114S\FinalPlans\BD-5114S_SD_E*.dgn
jdugglns

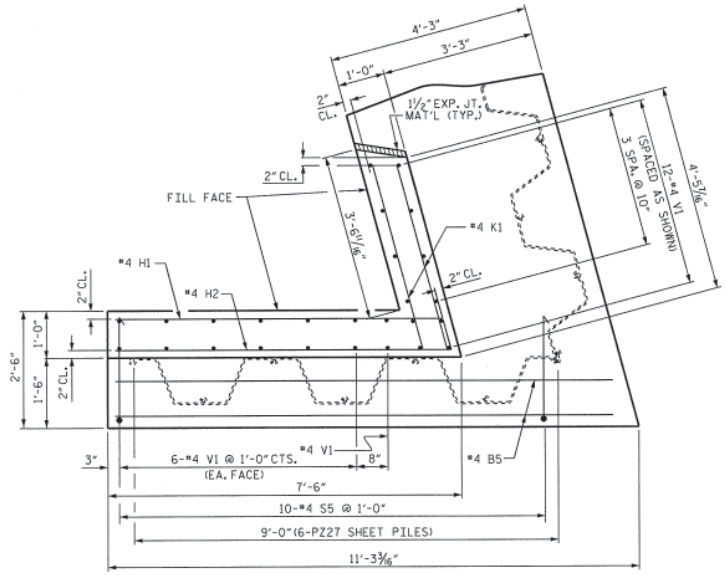

PLAN OF WING (W1)

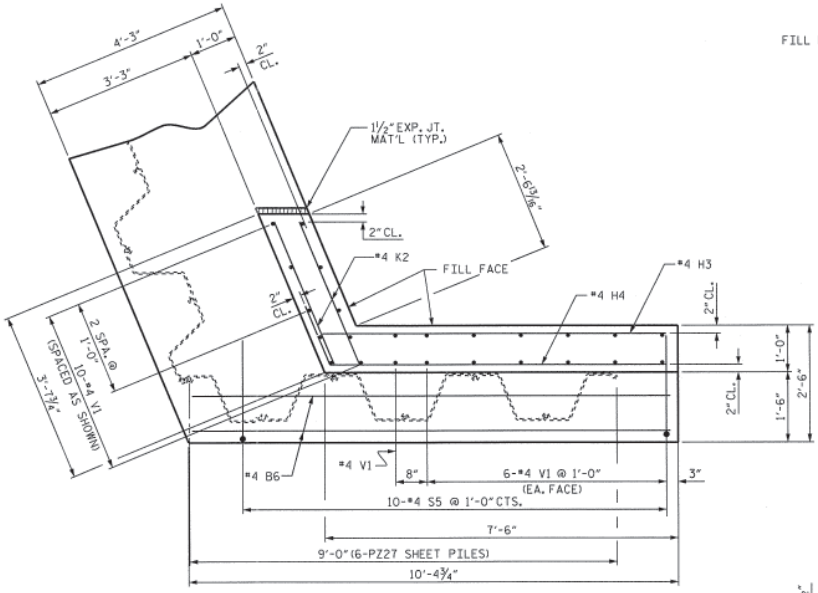

PLAN OF WING (W2)

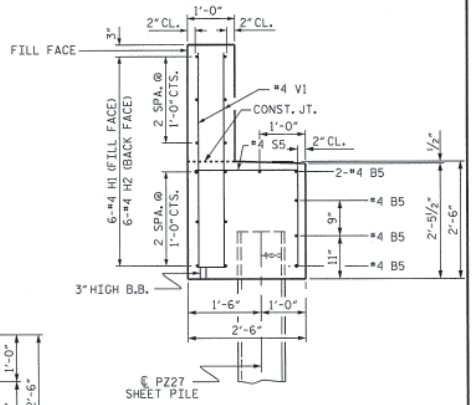

SECTION X-X

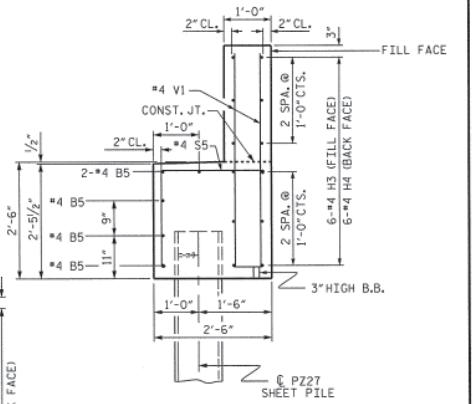

SECTION Y-Y

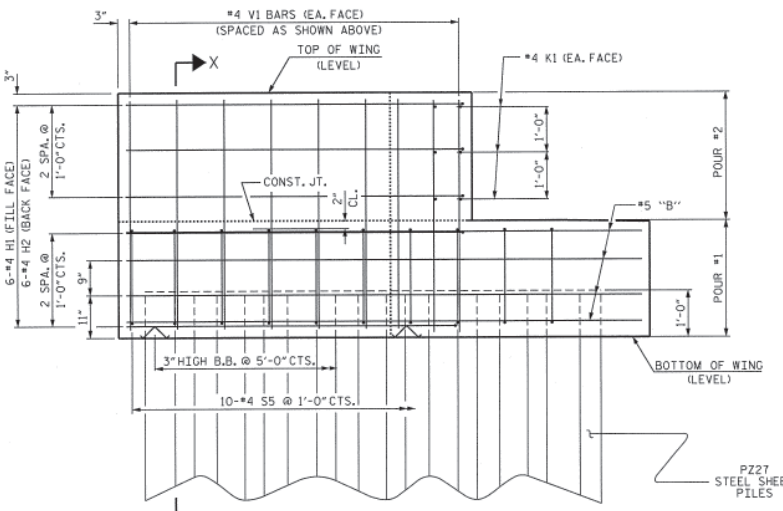

ELEVATION OF WING (W1)

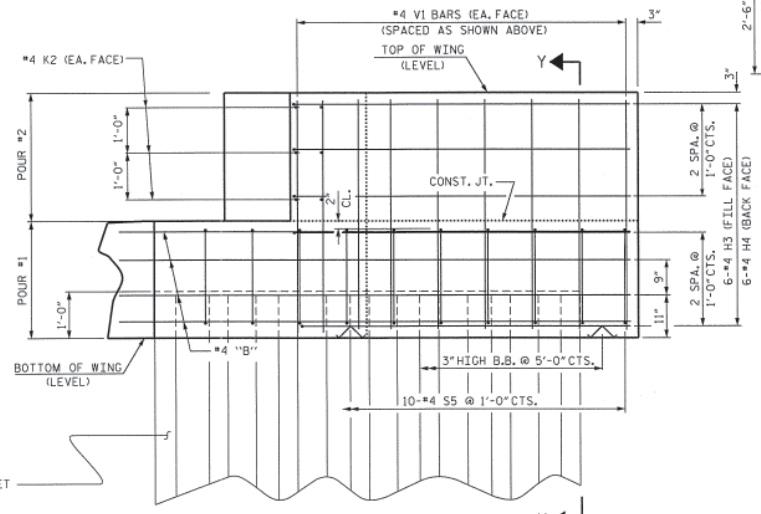

ELEVATION OF WING (W2)

PROJECT NO. BD-5114S

JACKSON COUNTY

STATION: 14+19.23 -L-

SHEET 2 OF 3

STATE OF NORTH CAROLINA
DEPARTMENT OF TRANSPORTATION
RALEIGH

SUBSTRUCTURE
END BENT No. 2

NORTH CAROLINA PROFESSIONAL SEAL 15779 ENGINEER JOHN R. DUGGINS, JR.

1/16/13

REVISIONS								SHEET NO.
NO.	BY:	DATE:	NO.	BY:	DATE:			S-17
1			3					TOTAL SHEETS
2			4					21

DRAWN BY : H. T. BARBOUR DATE : 3-29-12
CHECKED BY : J. R. DUGGINS DATE : 12-12

14-JAN-2013 14:27
S:\DPG4\John\LIBR_Files\BD-5114S\FinalPlans\BD-5114S_SD_E*.dgn
jduggins

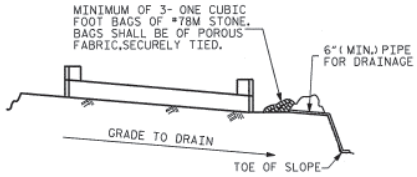

BAGGED STONE AND PIPE SHALL BE PLACED IMMEDIATELY AFTER COMPLETION OF END BENT EXCAVATION. PIPE MAY BE EITHER CONCRETE, CORRUGATED STEEL, CORRUGATED ALUMINUM ALLOY, OR CORRUGATED PLASTIC. PERFORATED PIPE WILL NOT BE ALLOWED.

BAGGED STONE SHALL REMAIN IN PLACE UNTIL THE ENGINEER DIRECTS THAT IT BE REMOVED. THE CONTRACTOR SHALL REMOVE AND DISPOSE OF SILT ACCUMULATIONS AT BAGGED STONE WHEN SO DIRECTED BY THE ENGINEER. BAGS SHALL BE REMOVED AND REPLACED WHENEVER THE ENGINEER DETERMINES THAT THEY HAVE DETERIORATED AND LOST THEIR EFFECTIVENESS.

NO SEPARATE PAYMENT WILL BE MADE FOR THIS WORK AND THE ENTIRE COST OF THIS WORK SHALL BE INCLUDED IN THE UNIT CONTRACT PRICE BID FOR THE SEVERAL PAY ITEMS.

TEMPORARY DRAINAGE AT END BENT

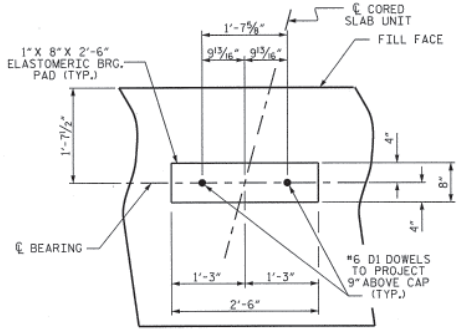

DETAIL "A"

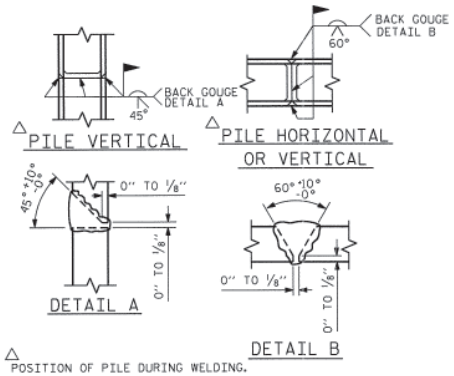

△ POSITION OF PILE DURING WELDING.

PILE SPLICE DETAILS

BAR TYPES

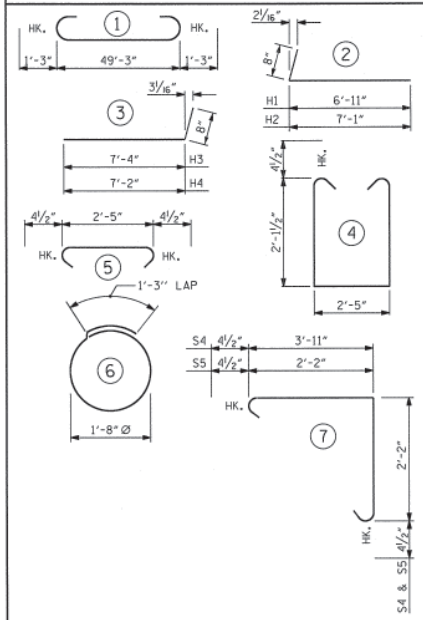

ALL BAR DIMENSIONS ARE OUT TO OUT.

BILL OF MATERIAL
END BENT No. 2

BAR	NO.	SIZE	TYPE	LENGTH	WEIGHT
B1	8	#9	1	51'-9"	1408
B2	16	#4	STR	26'-0"	278
B3	12	#4	STR	2'-5"	19
B4	10	#4	STR	27'-5"	183
B5	5	#4	STR	10'-6"	35
B6	5	#4	STR	10'-1"	34
D1	28	#6	STR	1'-6"	63
H1	6	#4	2	7'-7"	30
H2	6	#4	2	7'-9"	31
H3	6	#4	3	8'-0"	32
H4	6	#4	3	7'-10"	31
K1	6	#4	STR	4'-0"	16
K2	6	#4	STR	3'-3"	13
S1	44	#4	4	7'-5"	218
S2	44	#4	5	3'-2"	93
S3	14	#4	6	6'-6"	61
S4	52	#4	7	6'-10"	237
S5	20	#4	7	5'-1"	68
V1	50	#4	STR	4'-8"	156

REINFORCING STEEL (FOR END BENT No. 2) 3006 LBS.

END BENT No. 2

CLASS A CONCRETE BREAKDOWN (FOR END BENT No. 2)

POUR #1 CAP, LOWER PART OF WINGS 23.8 C.Y.

POUR #2 UPPER PART OF WINGS 2.0 C.Y.

TOTAL CLASS A CONCRETE 25.8 C.Y.

END BENT No. 2
HP 12 X 53 STEEL PILES
NO: 7 LIN. FT.= 335

18" STEEL SHEET PILES
No. PZ27 = 45
No. PZ90 = 2
TOTAL = 47 SQ. FT.= 658

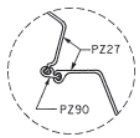

DETAIL "B"

DETAIL "C"

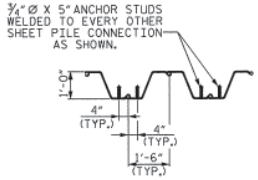

ANCHOR STUD DETAIL

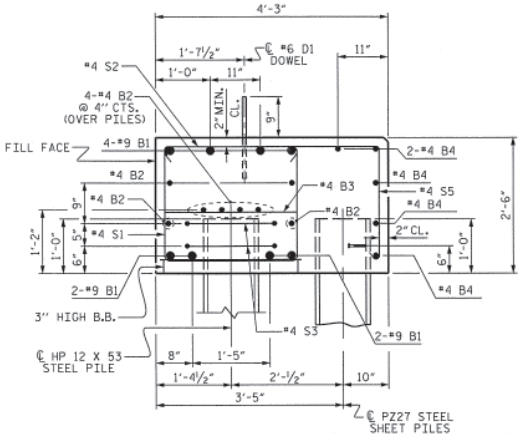

SECTION A-A

PROJECT NO. BD-5114S
JACKSON COUNTY
STATION: 14+19.23 -L-

SHEET 3 OF 3

STATE OF NORTH CAROLINA
DEPARTMENT OF TRANSPORTATION
RALEIGH

SUBSTRUCTURE

END BENT No. 2
DETAILS

NORTH CAROLINA PROFESSIONAL SEAL 15779 ENGINEER JOHN R. DUGGINS
1/16/13

ASSEMBLED BY :	H. T. BARBOUR	DATE :	3-30-12
CHECKED BY :	J. R. DUGGINS	DATE :	12-12
DRAWN BY :	DGE	03/10	
CHECKED BY :	MKT	03/10	

REVISIONS								SHEET NO.
NO.	BY:	DATE:	NO.	BY:	DATE:			S-18
1			3					TOTAL SHEETS
2			4					21

14-JAN-2013 14:26
S:\DPG4\John\LIBR_Files\BD-5114S\FinalPlans\BD-5114S_SD_E*.dgn
jduggins

NOTES :

PLACE RIP RAP ALONG STREAM BANKS AS SHOWN.

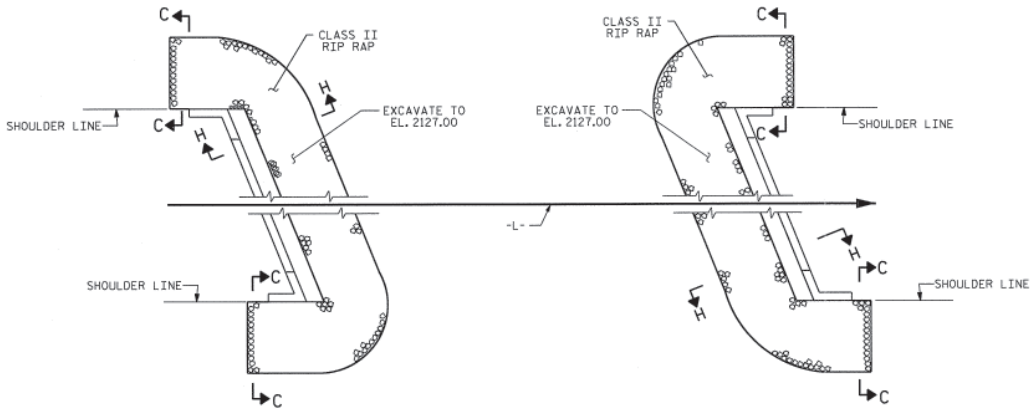

PLAN

ESTIMATED QUANTITIES		
BRIDGE @ STA. 14+19.23 -L-	RIP RAP CLASS II (2'-0" THICK)	GEOTEXTILE FOR DRAINAGE
	TONS	SQUARE YARDS
END BENT 1	120	135
END BENT 2	105	115
TOTAL	225	250

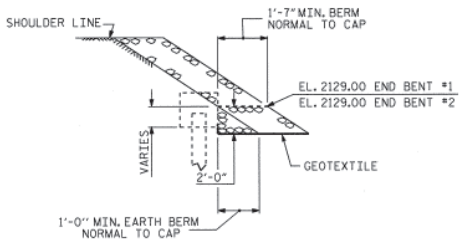

SECTION H-H

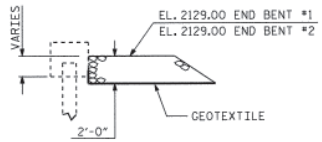

℄ SECTION
BERM RIP RAPPED

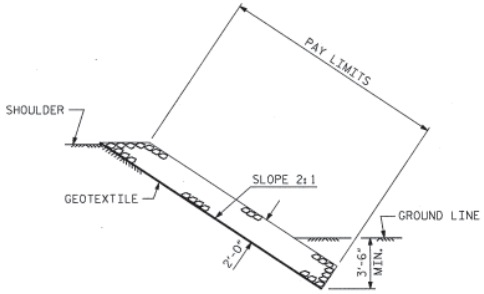

SECTION C-C

PROJECT NO. BD-5114S

JACKSON COUNTY

STATION: 14+19.23 -L-

STATE OF NORTH CAROLINA
DEPARTMENT OF TRANSPORTATION
RALEIGH

RIP RAP DETAILS

REVISIONS								SHEET NO.
NO.	BY:	DATE:	NO.	BY:	DATE:			S-19
1			3					TOTAL SHEETS
2			4					21

NORTH CAROLINA PROFESSIONAL SEAL 15779 ENGINEER JOHN R. DUGGINS, JR.
1/16/13

ASSEMBLED BY : V.X. NGUYEN		DATE :	01-8-13
CHECKED BY : J.R. DUGGINS		DATE :	01-13
DRAWN BY : REK 1/84	REV. 5/1/06R		TLA/GM
CHECKED BY : RDU 1/84	REV. 10/1/11		MAA/GM
	REV. 12/21/11		MAA/GM

14-JAN-2013 16:00
S:\DPG4\John\LIBR_Files\BD-5114S\FinalPlans\BD-5114_SD_RR.dgn
jdugglns

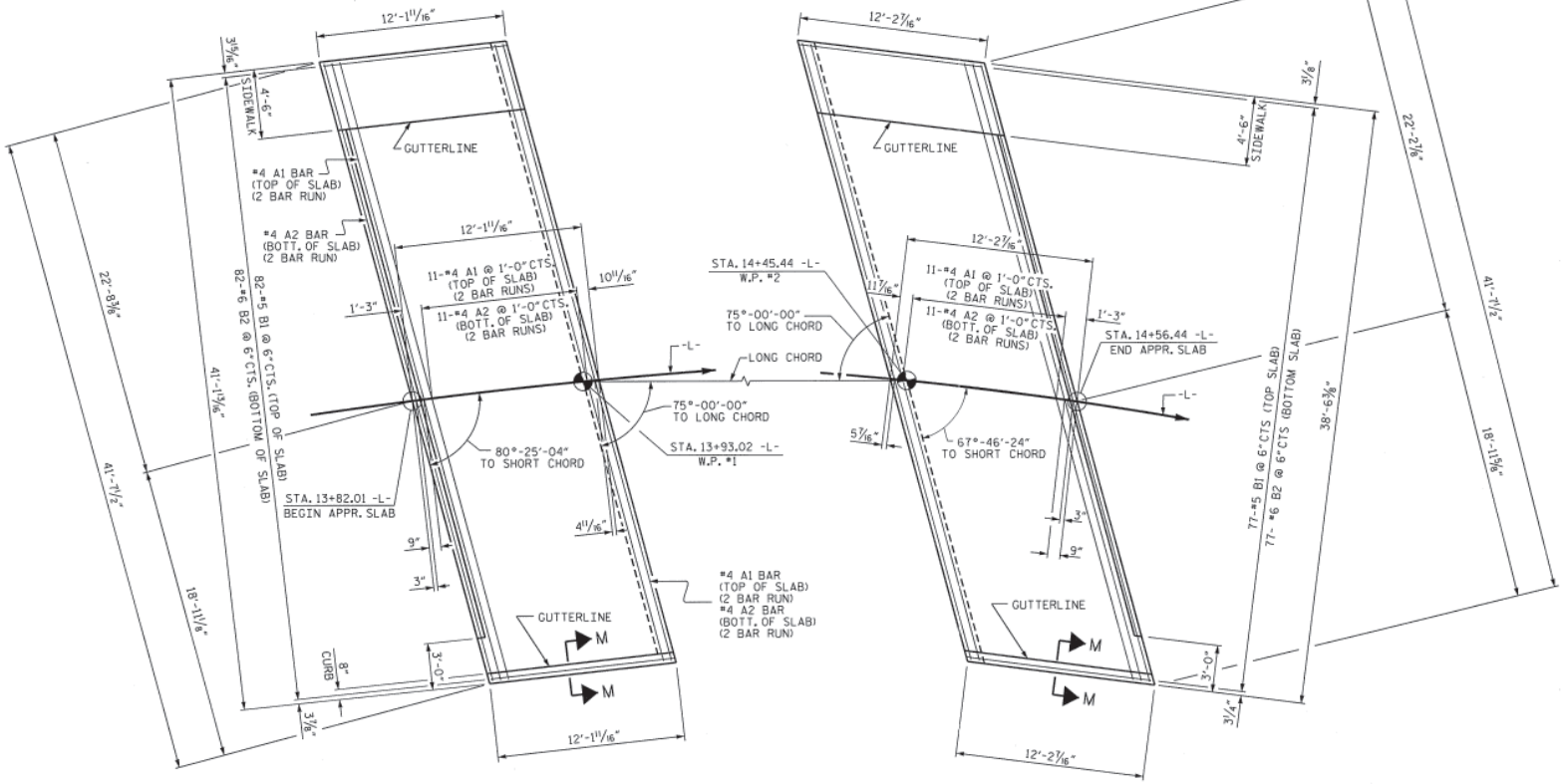

PLAN @ END BENT #1

PLAN @ END BENT #2

BILL OF MATERIAL

APPROACH SLAB AT EB #1

BAR	NO.	SIZE	TYPE	LENGTH	WEIGHT
* A1	26	#4	STR	21'-8"	376
A2	26	#4	STR	21'-6"	373
* B1	82	#5	STR	11'-2"	955
B2	82	#6	STR	11'-8"	1437
* B3	5	#4	STR	11'-7"	39
* D1	20	#4	STR	1'-0"	13
* G1	12	#4	STR	4'-3"	34
REINFORCING STEEL				LBS.	1810
* EPOXY COATED REINFORCING STEEL				LBS.	1417

CLASS AA CONCRETE
POUR 1 (SLAB & CURB) 23.5 C.Y.
POUR 2 (SIDEWALK) 1.4 C.Y.
TOTAL 24.9 C.Y.

APPROACH SLAB AT EB #2

BAR	NO.	SIZE	TYPE	LENGTH	WEIGHT
* A1	26	#4	STR	21'-8"	376
A2	26	#4	STR	21'-6"	373
* B1	77	#5	STR	11'-3"	903
B2	77	#6	STR	11'-9"	1359
* B3	5	#4	STR	11'-7"	39
* D1	20	#4	STR	1'-0"	13
* G1	12	#4	STR	4'-3"	34
REINFORCING STEEL				LBS.	1732
* EPOXY COATED REINFORCING STEEL				LBS.	1365

CLASS AA CONCRETE
POUR 1 (SLAB & CURB) 23.5 C.Y.
POUR 2 (SIDEWALK) 1.4 C.Y.
TOTAL 24.9 C.Y.

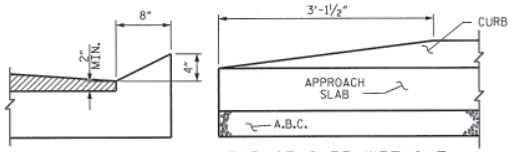

SECTION M-M

END OF CURB WITHOUT SHOULDER BERM GUTTER

CURB DETAILS

SPLICE LENGTHS		
BAR SIZE	EPOXY COATED	UNCOATED
#4	2'-0"	1'-9"
#5	2'-6"	2'-2"
#6	3'-10"	2'-7"

PROJECT NO. BD-5114S
JACKSON COUNTY
STATION: 14+19.23 -L-

SHEET 1 OF 2

STATE OF NORTH CAROLINA
DEPARTMENT OF TRANSPORTATION
RALEIGH

BRIDGE APPROACH SLAB FOR PRESTRESSED CONCRETE CORED SLAB UNIT (SUB-REGIONAL TIER)

NORTH CAROLINA PROFESSIONAL SEAL 15779 ENGINEER JOHN R. DUGGINS, JR.
1/16/13

REVISIONS								SHEET NO.
NO.	BY:	DATE:	NO.	BY:	DATE:			S-20
1			3					TOTAL SHEETS
2			4					21

DRAWN BY : H.P. KIM DATE : 1/12
CHECKED BY : J.R. DUGGINS DATE : 12/12

14-JAN-2013 16:02
S:\DPG4\John\LIBR_Files\BD-5114S\Final Plans\BD-5114_S0_A5.dgn
jdugglns

NC005

NOTES

FOR BRIDGE APPROACH FILL INCLUDING GEOTEXTILE, 4"Ø DRAINAGE PIPE, AND #78M STONE BACKFILL, SEE ROADWAY PLANS.

GEOTEXTILE SHALL BE TYPE 1 IN ACCORDANCE WITH THE STANDARD SPECIFICATIONS SECTION 1056.

#78M STONE BACKFILL (CLASS V SELECT MATERIAL) SHALL BE IN ACCORDANCE WITH STANDARD SPECIFICATIONS SECTION 1016.

#78M STONE BACKFILL IS TO BE CONTINUOUS ALONG FILL FACE OF BACKWALL FROM OUTSIDE EDGE TO OUTSIDE EDGE OF APPROACH SLAB.

FOR THE 4"Ø DRAINAGE PIPE OUTLET(S), SEE ROADWAY STANDARD DRAWINGS.

AREA BETWEEN THE WINGWALL AND APPROACH SLAB SHALL BE GRADED TO DRAIN THE WATER AWAY FROM THE FILL FACE OF THE BRIDGE AND SHALL BE PAVED. SEE ROADWAY PLANS.

APPROACH SLAB GROOVING IS NOT REQUIRED.

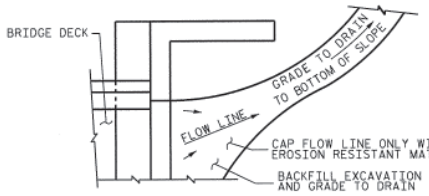

NOTE: IF THE APPROACH SLAB IS NOT CONSTRUCTED IMMEDIATELY AFTER THE BACKFILLING OF THE END BENT EXCAVATION, GRADE TO DRAIN TO THE BOTTOM OF THE SLOPE AND PROVIDE EROSION RESISTANT MATERIAL, SUCH AS FIBERGLASS ROVING OR AS DIRECTED BY THE ENGINEER TO PREVENT SOIL EROSION AND TO PROTECT THE AREA ADJACENT TO THE STRUCTURE. THE CONTRACTOR WILL BE REQUIRED TO REMOVE THESE MATERIALS PRIOR TO CONSTRUCTION OF THE APPROACH SLAB.

TEMPORARY DRAINAGE DETAIL

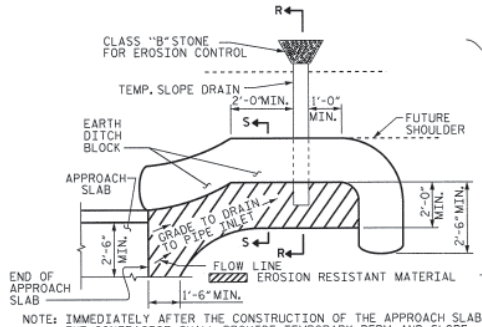

NOTE: IMMEDIATELY AFTER THE CONSTRUCTION OF THE APPROACH SLAB, THE CONTRACTOR SHALL PROVIDE TEMPORARY BERM AND SLOPE DRAIN. CONTRACTOR SHALL GRADE TO PIPE INLET AND PROVIDE EROSION RESISTANT MATERIAL AS SHOWN. THE EROSION RESISTANT MATERIAL SHALL BE EITHER 1) ASPHALT PLANT MIX, TYPE 1 OR TYPE 2, MIN. 2" DEPTH, 2) EROSION CONTROL MAT, OR 3) CONCRETE, AS DIRECTED BY THE ENGINEER. THE SLOPE DRAIN SHALL CONSIST OF A NON-PERFORATED TEMPORARY DRAINAGE PIPE, 12 INCHES IN DIAMETER.

PLAN VIEW

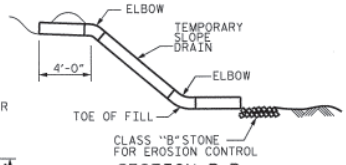

SECTION R-R

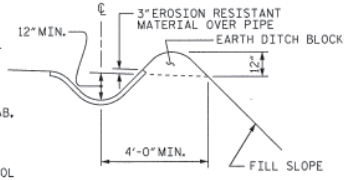

SECTION S-S

TEMPORARY BERM AND SLOPE DRAIN DETAILS

(TO BE USED WHEN SHOULDER BERM GUTTER IS REQUIRED)

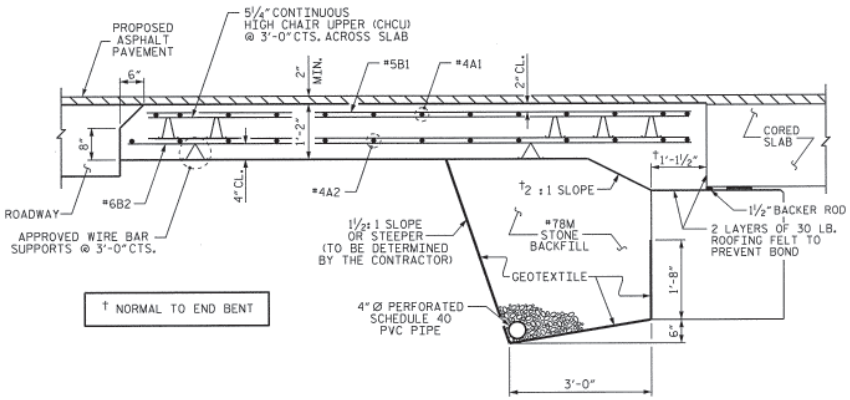

† NORMAL TO END BENT

SECTION THRU SLAB

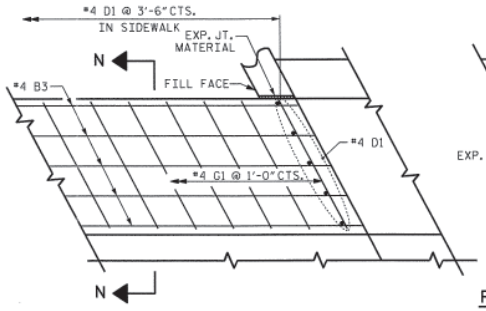

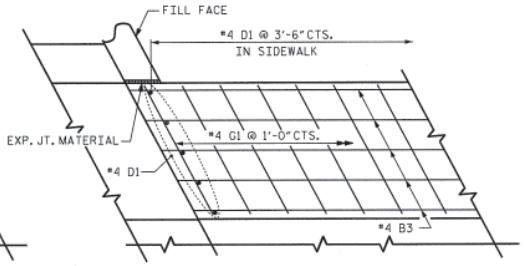

PLAN

DETAILS OF SIDEWALK ON APPROACH SLAB

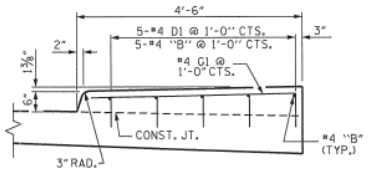

SECTION N-N

SIDEWALK DETAILS

PROJECT NO. BD-5114S

JACKSON COUNTY

STATION: 14+19.23 -L-

SHEET 2 OF 2

STATE OF NORTH CAROLINA
DEPARTMENT OF TRANSPORTATION
RALEIGH

BRIDGE APPROACH SLAB FOR PRESTRESSED CONCRETE CORED SLAB UNIT (SUB-REGIONAL TIER)

NORTH CAROLINA PROFESSIONAL SEAL 15779 ENGINEER JOHN R. DUGGINS, JR.
1/16/13

REVISIONS								SHEET NO.
NO.	BY:	DATE:	NO.	BY:	DATE:			S-21
1			3					TOTAL SHEETS
2			4					21

ASSEMBLED BY : H.P. KIM		DATE : 01/12	
CHECKED BY : J.R. DUGGINS		DATE : 12/12	
DRAWN BY : KMM	3-08	REV. 9/27/11	MAA/GM
CHECKED BY : GM	3-08	REV. 10/1/11	MAA/GM
		REV. 12/21/11	MAA/GM

14-JAN-2013 16:02
S:\DPG4\John\LIBR_Files\BD-5114S\Final Plans\BD-5114_SD_AS.dgn
jdugglns

STANDARD NOTES

DESIGN DATA:

SPECIFICATIONS	A.A.S.H.T.O. (CURRENT)
LIVE LOAD	SEE PLANS
IMPACT ALLOWANCE	SEE A.A.S.H.T.O.
STRESS IN EXTREME FIBER OF	
STRUCTURAL STEEL - AASHTO M270 GRADE 36	20,000 LBS. PER SQ. IN.
- AASHTO M270 GRADE 50W	27,000 LBS. PER SQ. IN.
- AASHTO M270 GRADE 50	27,000 LBS. PER SQ. IN.
REINFORCING STEEL IN TENSION	
GRADE 60	24,000 LBS. PER SQ. IN.
CONCRETE IN COMPRESSION	1,200 LBS. PER SQ. IN.
CONCRETE IN SHEAR	SEE A.A.S.H.T.O.
STRUCTURAL TIMBER - TREATED OR	
UNTREATED - EXTREME FIBER STRESS	1,800 LBS. PER SQ. IN.
COMPRESSION PERPENDICULAR TO GRAIN OF TIMBER	375 LBS. PER SQ. IN.
EQUIVALENT FLUID PRESSURE OF EARTH	30 LBS. PER CU. FT. (MINIMUM)

MATERIAL AND WORKMANSHIP:

EXCEPT AS MAY OTHERWISE BE SPECIFIED ON PLANS OR IN THE SPECIAL PROVISIONS, ALL MATERIAL AND WORKMANSHIP SHALL BE IN ACCORDANCE WITH THE 2012 "STANDARD SPECIFICATIONS FOR ROADS AND STRUCTURES" OF THE N. C. DEPARTMENT OF TRANSPORTATION.

STEEL SHEET PILING FOR PERMANENT OR TEMPORARY APPLICATIONS SHALL BE HOT ROLLED.

CONCRETE:

UNLESS OTHERWISE REQUIRED ON PLANS, CLASS A CONCRETE SHALL BE USED FOR ALL PORTIONS OF ALL STRUCTURES WITH THE EXCEPTION THAT: CLASS AA CONCRETE SHALL BE USED IN BRIDGE SUPERSTRUCTURES, ABUTMENT BACKWALLS, AND APPROACH SLABS; AND CLASS B CONCRETE SHALL BE USED FOR SLOPE PROTECTION AND RIP RAP.

CONCRETE CHAMFERS:

UNLESS OTHERWISE NOTED ON THE PLANS, ALL EXPOSED CORNERS ON STRUCTURES SHALL BE CHAMFERED 3/4" WITH THE FOLLOWING EXCEPTIONS: TOP CORNERS OF CURBS MAY BE ROUNDED TO 1-1/2" RADIUS WHICH IS BUILT INTO CURB FORMS; CORNERS OF TRANSVERSE FLOOR EXPANSION JOINTS SHALL BE ROUNDED WITH A 1/4" FINISHING TOOL UNLESS OTHERWISE REQUIRED ON PLANS; AND CORNERS OF EXPANSION JOINTS IN THE ROADWAY FACES AND TOPS OF CURBS AND SIDEWALKS SHALL BE ROUNDED TO A 1/4" RADIUS WITH A FINISHING STONE OR TOOL UNLESS OTHERWISE REQUIRED ON PLANS.

DOWELS:

DOWELS WHEN INDICATED ON PLANS AS FOR CULVERT EXTENSIONS, SHALL BE EMBEDDED AT LEAST 12" INTO THE OLD CONCRETE AND GROUTED INTO PLACE WITH 1:2 CEMENT MORTAR.

ALLOWANCE FOR DEAD LOAD DEFLECTION, SETTLEMENT, ETC. IN CASTING SUPERSTRUCTURES:

BRIDGES SHALL BE BUILT ON THE GRADE OR VERTICAL CURVE SHOWN ON PLANS. SLABS, CURBS AND PARAPETS SHALL CONFORM TO THE GRADE OR CURVE.

ALL DIMENSIONS WHICH ARE GIVEN IN SECTION AND ARE AFFECTED BY DEAD LOAD DEFLECTIONS ARE DIMENSIONS AT CENTER LINE OF BEARING UNLESS OTHERWISE NOTED ON PLANS. IN SETTING FORMS FOR STEEL BEAM BRIDGES AND PRESTRESSED CONCRETE GIRDER BRIDGES, ADJUSTMENTS SHALL BE MADE DUE TO THE DEAD LOAD DEFLECTIONS FOR THE ELEVATIONS SHOWN. WHERE BLOCKS ARE SHOWN OVER BEAMS FOR BUILDING UP TO THE SLAB, THE VERTICAL DIMENSIONS OF THE BLOCKS SHALL BE ADJUSTED BETWEEN BEARINGS TO COMPENSATE FOR DEAD LOAD DEFLECTIONS, VERTICAL CURVE ORDINATE, AND ACTUAL BEAM CAMBER. WHERE BOTTOM OF SLAB IS IN LINE WITH BOTTOM OF TOP FLANGES, DEPTH OF SLAB BETWEEN BEARINGS SHALL BE ADJUSTED TO COMPENSATE FOR DEAD LOAD DEFLECTION, VERTICAL CURVE ORDINATE, AND ACTUAL BEAM CAMBER.

IN SETTING FALSEWORK AND FORMS FOR REINFORCED CONCRETE SPANS, AN ALLOWANCE SHALL BE MADE FOR DEAD LOAD DEFLECTIONS, SETTLEMENT OF FALSEWORK, AND PERMANENT CAMBER WHICH SHALL BE PROVIDED FOR IN ADDITION TO THE ELEVATIONS SHOWN. AFTER REMOVAL OF THE FALSEWORK, THE FINISHED STRUCTURES SHALL CONFORM TO THE PROFILE AND ELEVATIONS SHOWN ON THE PLANS AND CONSTRUCTION ELEVATIONS FURNISHED BY THE ENGINEER.

DETAILED DRAWINGS FOR FALSEWORK OR FORMS FOR BRIDGE SUPERSTRUCTURE AND ANY STRUCTURE OR PARTS OF A STRUCTURE AS NOTED ON THE PLANS SHALL BE SUBMITTED TO THE ENGINEER FOR APPROVAL BEFORE CONSTRUCTION OF THE FALSEWORK OR FORMS IS STARTED.

REINFORCING STEEL:

ALL REINFORCING STEEL SHALL BE DEFORMED. DIMENSIONS RELATIVE TO PLACEMENT OF REINFORCING ARE TO CENTERS OF BARS UNLESS OTHERWISE INDICATED IN THE PLANS. DIMENSIONS ON BAR DETAILS ARE TO CENTERS OF BARS OR ARE OUT TO OUT AS INDICATED ON PLANS.

WIRE BAR SUPPORTS SHALL BE PROVIDED FOR REINFORCING STEEL WHERE INDICATED ON THE PLANS. WHEN BAR SUPPORT PIECES ARE PLACED IN CONTINUOUS LINES, THEY SHALL BE SO PLACED THAT THE ENDS OF THE SUPPORTING WIRES SHALL BE LAPPED TO LOCK LEGS ON ADJOINING PIECES.

STRUCTURAL STEEL:

AT THE CONTRACTOR'S OPTION, HE MAY SUBSTITUTE 7/8" Ø SHEAR STUDS FOR THE 3/4" Ø STUDS SPECIFIED ON THE PLANS. THIS SUBSTITUTION SHALL BE MADE AT THE RATE OF 3 - 7/8" Ø STUDS FOR 4 - 3/4" Ø STUDS, AND STUD SPACING CHANGES SHALL BE MADE AS NECESSARY TO PROVIDE THE SAME EQUIVALENT NUMBER OF 7/8" Ø STUDS ALONG THE BEAM AS SHOWN FOR 3/4" Ø STUDS BASED ON THE RATIO OF 3 - 7/8" Ø STUDS FOR 4 - 3/4" Ø STUDS. STUDS OF THE LENGTH SPECIFIED ON THE PLANS MUST BE PROVIDED. THE MAXIMUM SPACING SHALL BE 2'-0".

EXCEPT AT THE INTERIOR SUPPORTS OF CONTINUOUS BEAMS WHERE THE COVER PLATE IS IN CONTACT WITH BEARING PLATE, THE CONTRACTOR MAY, AT HIS OPTION, SUBSTITUTE FOR THE COVER PLATES DESIGNATED ON THE PLANS COVER PLATES OF THE EQUIVALENT AREA PROVIDED THESE PLATES ARE AT LEAST 5/16" IN THICKNESS AND DO NOT EXCEED A WIDTH EQUAL TO THE FLANGE WIDTH LESS 2" OR A THICKNESS EQUAL TO 2 TIMES THE FLANGE THICKNESS. THE SIZE OF FILLET WELDS SHALL CONFORM TO THE REQUIREMENTS OF THE CURRENT ANSI/AASHTO/AWS "BRIDGE WELDING CODE". ELECTROSLAG WELDING WILL NOT BE PERMITTED.

WITH THE SOLE EXCEPTION OF EDGES AT SURFACES WHICH BEAR ON OTHER SURFACES, ALL SHARP EDGES AND ENDS OF SHAPES AND PLATES SHALL BE SLIGHTLY ROUNDED BY SUITABLE MEANS TO A RADIUS OF APPROXIMATELY 1/16 INCH OR EQUIVALENT FLAT SURFACE AT A SUITABLE ANGLE PRIOR TO PAINTING, GALVANIZING, OR METALLIZING.

HANDRAILS AND POSTS:

METAL STANDARDS AND FACES OF THE CONCRETE END POSTS FOR THE METAL RAIL SHALL BE SET NORMAL TO THE GRADE OF THE CURB, UNLESS OTHERWISE SHOWN ON PLANS. THE METAL RAIL AND TOPS OF CONCRETE POSTS USED WITH THE ALUMINUM RAIL SHALL BE BUILT PARALLEL TO THE GRADE OF THE CURB.

METAL HANDRAILS SHALL BE IN ACCORDANCE WITH THE PLANS. RAILS SHALL BE AS MANUFACTURED FOR BRIDGE RAILING. CASTINGS SHALL BE OF A UNIFORM APPEARANCE. FINS AND OTHER DEFORMATIONS RESULTING FROM CASTING OR OTHERWISE SHALL BE REMOVED IN A MANNER SO THAT A UNIFORM COLORING OF THE COMPLETED CASTING SHALL BE OBTAINED. CASTINGS WITH DISCOLORATIONS OR OF NON-UNIFORM COLORING WILL NOT BE ACCEPTED. CERTIFIED MILL REPORTS ARE REQUIRED FOR METAL RAILS AND POSTS.

SPECIAL NOTES:

GENERALLY, IN CASE OF DISCREPANCY, THIS STANDARD SHEET OF NOTES SHALL GOVERN OVER THE SPECIFICATIONS, BUT THE REMAINDER OF THE PLANS SHALL GOVERN OVER NOTES HEREON, AND SPECIAL PROVISIONS SHALL GOVERN OVER ALL. SEE SPECIFICATIONS ARTICLE 105-4.

ENGLISH

JANUARY, 1990