This electronic collection of documents is provided for the convenience of the user and is Not a Certified Document –

The documents contained herein were originally issued and sealed by the individuals whose names and license numbers appear on each page, on the dates appearing with their signature on that page.
This file or an individual page shall not be considered a certified document.

DocuSign Envelope ID: D29822FC-6CDB-4412-8081-C81836485785

STATE	STATE PROJECT REFERENCE NO.	SHEET NO.	TOTAL SHEETS
N.C.	17BP.14.R.113	1	

STATE PROJ. NO.	F.A. PROJ. NO.	DESCRIPTION
17BP.14.R.113		PE
17BP.14.R.113		R/W
17BP.14.R.113		UTILITY
17BP.14.R.113		CONST.

STATE OF NORTH CAROLINA
DIVISION OF HIGHWAYS

MACON COUNTY

LOCATION: BRIDGE NO. 120 ON SR 1337 OVER ROCKY BRANCH

TYPE OF WORK: GRADING, PAVING, DRAINAGE, AND STRUCTURE

See Sheet 1-A For Index of Sheets

See Sheet 1-B For Conventional Symbols

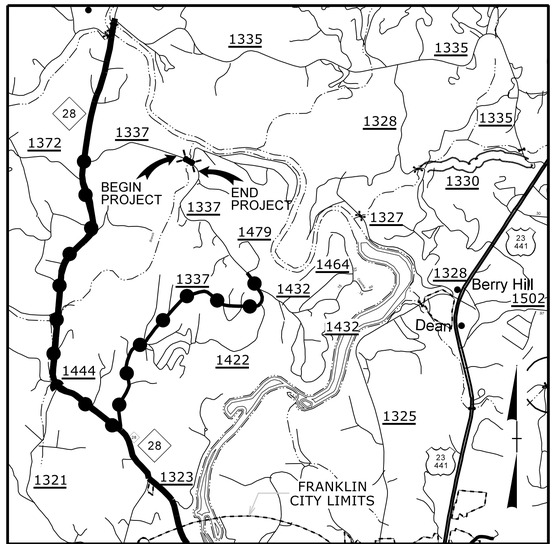

VICINITY MAP ***NTS***

OFF–SITE DETOUR

FINAL PLANS

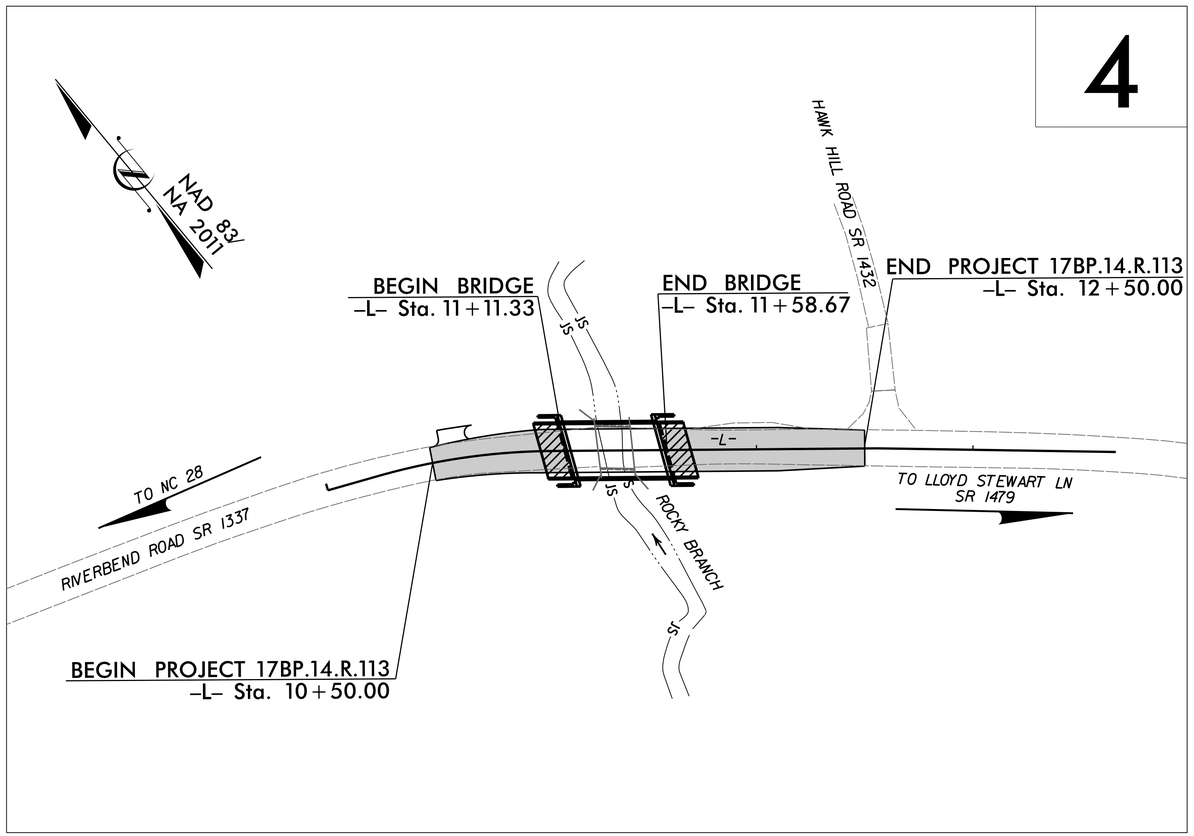

NCDOT CONTACT:
JOSH DEYTON, PE
HIGHWAY DIVISION 14
BRIDGE MANAGER
828–488–0902

THERE IS NO CONTROL OF ACCESS FOR THIS PROJECT

DOCUMENT NOT CONSIDERED FINAL UNLESS ALL SIGNATURES COMPLETED

PROJECT: 17BP.14.R.113

CONTRACT: DN00279

GRAPHIC SCALES

20 10 0 20 40
PLANS

20 10 0 20 40
PROFILE (HORIZONTAL)

4 2 0 4 8
PROFILE (VERTICAL)

DESIGN DATA

ADT 2011 = 300
ADT =
K = %
D = %
T = % *
V = 30 MPH
* TTST = DUAL
FUNC CLASS = LOCAL

SUBREGIONAL TIER

PROJECT LENGTH

LENGTH ROADWAY PROJECT	=	0.029 MILES
LENGTH STRUCTURES PROJECT	=	0.009 MILES
TOTAL LENGTH PROJECT	=	0.038 MILES

Prepared In the Office of:
THE LOUIS BERGER GROUP, Inc.
1001 Wade Avenue, Suite 400
Raleigh, North Carolina 27605
License No.: F-0840

2018 STANDARD SPECIFICATIONS

RIGHT OF WAY DATE:
MARCH 19, 2015

LETTING DATE:
MARCH 26, 2019

DEAN HATFIELD, PE
PROJECT ENGINEER

RD ODELL, PE
PROJECT DESIGN ENGINEER

HYDRAULICS ENGINEER
DocuSigned by: Dean Hatfield
SEAL 16003
P.E. 1/7/2019
SIGNATURE:

ROADWAY DESIGN ENGINEER
DocuSigned by: RD Odell
SEAL 27933
P.E. 1/7/2019
SIGNATURE:

DIVISION OF HIGHWAYS STATE OF NORTH CAROLINA

P.E.
STATE HIGHWAY DESIGN ENGINEER

1/4/2019 2:41:36 PM
G:\CKE Projects\CKE21004 Limited Services Division Offices\Group 3\550120\Roadway\Proj\550120_RDY_00_TSH.dgn
G:\CADD\Plot\CKE21004\CKE21004_rdy.tbl

DocuSign Envelope ID: D29822FC-6CDB-4412-8081-C81836485785

LOUIS BERGER
1001 Wade Avenue, Suite 400
Raleigh, NC 27605-3322
License No.: F-0840

PROJECT REFERENCE NO.	SHEET NO.
17BP.14.R.113	1A

ROADWAY DESIGN ENGINEER

DocuSigned by:
RD Odell
7816A0A0A0A0A0A...

NORTH CAROLINA PROFESSIONAL SEAL 27933 ENGINEER R. D. ODELL
1/7/2019

DOCUMENT NOT CONSIDERED FINAL UNLESS ALL SIGNATURES COMPLETED

STATE OF NORTH CAROLINA
DIVISION OF HIGHWAYS

INDEX OF SHEETS

INDEX OF SHEETS

SHEET NUMBER	SHEET
1	TITLE SHEET
1A	INDEX OF SHEETS, GENERAL NOTES, AND LIST OF STANDARD DRAWINGS
1B	CONVENTIONAL SYMBOLS
1C	SURVEY CONTROL
2A	PAVEMENT SCHEDULE, TYPICAL SECTIONS, AND WEDGING DETAILS
2C-1	AT-1 SYSTEM DETAIL
2C-2	GUARDRAIL INSTALLATION DETAIL
2C-3	GUARDRAIL ANCHOR UNIT, TYPE III, DETAIL
3B	SUMMARIES OF EARTHWORK, GUARDRAIL AND PAVEMENT REMOVAL
4	PLAN SHEET
5	PROFILE SHEET
TMP-1 THRU TMP-3	TRAFFIC CONTROL PLANS
PMP-1	PAVEMENT MARKING PLANS
EC-1 THRU EC-3	EROSION CONTROL PLANS
UO-1 THRU UO-2	UTLITIES BY OTHERS PLANS
X-1	CROSS SECTION INDEX OF SHEETS
X-1A	CROSS SECTION SUMMARY
X-2 THRU X-6	CROSS SECTIONS
S-1 THRU S-14	STRUCTURE PLANS

GENERAL NOTES

GENERAL NOTES: 2018 SPECIFICATIONS
EFFECTIVE: 01-16-18
REVISED: --/--/--

GRADING AND SURFACING OR RESURFACING AND WIDENING:

THE GRADE LINES SHOWN DENOTE THE FINISHED ELEVATION OF THE PROPOSED SURFACING AT GRADE POINTS SHOWN ON THE TYPICAL SECTIONS. WHERE NO GRADE LINES ARE SHOWN, THE PROFILES SHOWN DENOTE THE TOP ELEVATION OF THE EXISTING PAVEMENT ALONG THE CENTER LINE OF SURVEY ON WHICH THE PROPOSED RESURFACING WILL BE PLACED. GRADE LINES MAY BE ADJUSTED BY THE ENGINEER IN ORDER TO SECURE A PROPER TIE-IN.

CLEARING:

CLEARING ON THIS PROJECT SHALL BE PERFORMED TO THE LIMITS ESTABLISHED BY METHOD II.

SUPERELEVATION:

ALL CURVES ON THIS PROJECT SHALL BE SUPERELEVATED IN ACCORDANCE WITH STD. NO. 225.04 USING THE RATE OF SUPERELEVATION AND RUNOFF SHOWN ON THE PLANS. SUPERELEVATION IS TO BE REVOLVED ABOUT THE GRADE POINTS SHOWN ON THE TYPICAL SECTIONS.

SHOULDER CONSTRUCTION:

ASPHALT, EARTH, AND CONCRETE SHOULDER CONSTRUCTION ON THE HIGH SIDE OF SUPERELEVATED CURVES SHALL BE IN ACCORDANCE WITH STD. NO. 560.01.

SIDE ROADS:

THE CONTRACTOR WILL BE REQUIRED TO DO ALL NECESSARY WORK TO PROVIDE SUITABLE CONNECTIONS WITH ALL ROADS, STREETS, AND DRIVES ENTERING THIS PROJECT. THIS WORK WILL BE PAID FOR AT THE CONTRACT UNIT PRICE FOR THE PARTICULAR ITEMS INVOLVED.

GUARDRAIL:

THE GUARDRAIL LOCATIONS SHOWN ON THE PLANS MAY BE ADJUSTED DURING CONSTRUCTION AS DIRECTED BY THE ENGINEER. THE CONTRACTOR SHOULD CONSULT WITH THE ENGINEER PRIOR TO ORDERING GUARDRAIL MATERIAL.

TEMPORARY SHORING:

SHORING REQUIRED FOR THE MAINTENANCE OF TRAFFIC WILL BE PAID FOR AS "EXTRA WORK" IN ACCORDANCE WITH SECTION 104-7.

SUBSURFACE PLANS:

SUBSURFACE PLANS ARE AVAILABLE ON THIS PROJECT.

END BENTS:

THE ENGINEER SHALL CHECK THE STRUCTURE END BENT PLANS, DETAILS, AND CROSS-SECTION PRIOR TO SETTING OF THE SLOPE STAKES FOR THE EMBANKMENT OR EXCAVATION APPROACHING A BRIDGE.

UTILITIES:

UTILITY OWNERS ON THIS PROJECT ARE

DUKE ENERGY, FRONTIER COMMUNICATION

ANY RELOCATION OF EXISTING UTILITIES WILL BE ACCOMPLISHED BY OTHERS.

RIGHT-OF-WAY MARKERS:

ALL RIGHT-OF-WAY MARKERS ON THIS PROJECT SHALL BE PLACED BY CONTRACT IN ACCORDANCE WITH SECTION 801 OF THE 2018 NORTH CAROLINA STANDARD SPECIFICATIONS FOR ROADS AND STRUCTURES

ROADWAY ENGLISH STANDARD DRAWINGS

2018 ROADWAY ENGLISH STANDARD DRAWINGS

The following Roadway Standards as appear in "Roadway Standard Drawings" Highway Design Branch - N. C. Department of Transportation - Raleigh, N. C., Dated January, 2012 are applicable to this project and by reference hereby are considered a part of these plans:

STD.NO.	TITLE
DIVISION 2 - EARTHWORK	
200.02	Method of Clearing - Method II
225.02	Guide for Grading Subgrade - Secondary and Local
225.04	Method of Obtaining Superelevation - Two Lane Pavement
DIVISION 4 - MAJOR STRUCTURES	
422.01	Bridge Approach Fills
422.02	Bridge Approach Fills
DIVISION 5 - SUBGRADE, BASES AND SHOULDERS	
560.01	Method of Shoulder Construction - High Side of Superelevated Curve - Method I
DIVISION 8 - INCIDENTALS	
862.01	Guardrail Placement
862.02	Guardrail Installation
862.03	Structure Anchor Units

1/4/2019 2:41:37 PM
G:\CADD\Plats\CKE21004\CKE21004_rdy.tbl
G:\CKE Projects\CKE21004 Limited Services Division Offices\Group 3\550120\Roadway\Proj\550120_RDY_01_1A.dgn

DocuSign Envelope ID: 744C7BFE-0DF1-4403-ABC6-6E201F948B09

12/2/2016

PROJECT REFERENCE NO.	SHEET NO.
17BP.14.R.113	1B

STATE OF NORTH CAROLINA, DIVISION OF HIGHWAYS

CONVENTIONAL PLAN SHEET SYMBOLS

Note: Not to Scale

**S.U.E. = Subsurface Utility Engineering*

BOUNDARIES AND PROPERTY:

- State Line
- County Line
- Township Line
- City Line
- Reservation Line
- Property Line
- Existing Iron Pin — EIP
- Computed Property Corner
- Property Monument — ECM
- Parcel/Sequence Number — 123
- Existing Fence Line
- Proposed Woven Wire Fence
- Proposed Chain Link Fence
- Proposed Barbed Wire Fence
- Existing Wetland Boundary — WLB
- Proposed Wetland Boundary — WLB
- Existing Endangered Animal Boundary — EAB
- Existing Endangered Plant Boundary — EPB
- Existing Historic Property Boundary — HPB
- Known Contamination Area: Soil — S
- Potential Contamination Area: Soil — S
- Known Contamination Area: Water — W
- Potential Contamination Area: Water — W
- Contaminated Site: Known or Potential

BUILDINGS AND OTHER CULTURE:

- Gas Pump Vent or U/G Tank Cap
- Sign — S
- Well — W
- Small Mine
- Foundation
- Area Outline
- Cemetery
- Building
- School
- Church
- Dam

HYDROLOGY:

- Stream or Body of Water
- Hydro, Pool or Reservoir
- Jurisdictional Stream — JS
- Buffer Zone 1 — BZ 1
- Buffer Zone 2 — BZ 2
- Flow Arrow
- Disappearing Stream
- Spring
- Wetland
- Proposed Lateral, Tail, Head Ditch — FLOW
- False Sump

RAILROADS:

- Standard Gauge — CSX TRANSPORTATION
- RR Signal Milepost — MILEPOST 35
- Switch — SWITCH
- RR Abandoned
- RR Dismantled

RIGHT OF WAY & PROJECT CONTROL:

- Secondary Horiz and Vert Control Point
- Primary Horiz Control Point
- Primary Horiz and Vert Control Point
- Exist Permanent Easment Pin and Cap
- New Permanent Easement Pin and Cap
- Vertical Benchmark
- Existing Right of Way Marker
- Existing Right of Way Line
- New Right of Way Line — RW
- New Right of Way Line with Pin and Cap — RW
- New Right of Way Line with Concrete or Granite R/W Marker — RW
- New Control of Access Line with Concrete C/A Marker — CA
- Existing Control of Access — CA
- New Control of Access — CA
- Existing Easement Line — E
- New Temporary Construction Easement — E
- New Temporary Drainage Easement — TDE
- New Permanent Drainage Easement — PDE
- New Permanent Drainage / Utility Easement — DUE
- New Permanent Utility Easement — PUE
- New Temporary Utility Easement — TUE
- New Aerial Utility Easement — AUE

ROADS AND RELATED FEATURES:

- Existing Edge of Pavement
- Existing Curb
- Proposed Slope Stakes Cut — C
- Proposed Slope Stakes Fill — F
- Proposed Curb Ramp — CR
- Existing Metal Guardrail
- Proposed Guardrail
- Existing Cable Guiderail
- Proposed Cable Guiderail
- Equality Symbol
- Pavement Removal

VEGETATION:

- Single Tree
- Single Shrub
- Hedge
- Woods Line
- Orchard
- Vineyard — Vineyard

EXISTING STRUCTURES:

MAJOR:

- Bridge, Tunnel or Box Culvert — CONC
- Bridge Wing Wall, Head Wall and End Wall — CONC WW

MINOR:

- Head and End Wall — CONC HW
- Pipe Culvert
- Footbridge
- Drainage Box: Catch Basin, DI or JB — CB
- Paved Ditch Gutter
- Storm Sewer Manhole — S
- Storm Sewer — S

UTILITIES:

POWER:

- Existing Power Pole
- Proposed Power Pole
- Existing Joint Use Pole
- Proposed Joint Use Pole
- Power Manhole — P
- Power Line Tower
- Power Transformer
- U/G Power Cable Hand Hole
- H-Frame Pole
- U/G Power Line LOS B (S.U.E.*) — P
- U/G Power Line LOS C (S.U.E.*) — P
- U/G Power Line LOS D (S.U.E.*) — P

TELEPHONE:

- Existing Telephone Pole
- Proposed Telephone Pole
- Telephone Manhole — T
- Telephone Pedestal — T
- Telephone Cell Tower
- U/G Telephone Cable Hand Hole
- U/G Telephone Cable LOS B (S.U.E.*) — T
- U/G Telephone Cable LOS C (S.U.E.*) — T
- U/G Telephone Cable LOS D (S.U.E.*) — T
- U/G Telephone Conduit LOS B (S.U.E.*) — TC
- U/G Telephone Conduit LOS C (S.U.E.*) — TC
- U/G Telephone Conduit LOS D (S.U.E.*) — TC
- U/G Fiber Optics Cable LOS B (S.U.E.*) — T FO
- U/G Fiber Optics Cable LOS C (S.U.E.*) — T FO
- U/G Fiber Optics Cable LOS D (S.U.E.*) — T FO

WATER:

- Water Manhole — W
- Water Meter
- Water Valve
- Water Hydrant
- U/G Water Line LOS B (S.U.E*) — W
- U/G Water Line LOS C (S.U.E*) — W
- U/G Water Line LOS D (S.U.E*) — W
- Above Ground Water Line — A/G Water

TV:

- TV Pedestal — C
- TV Tower
- U/G TV Cable Hand Hole — HH
- U/G TV Cable LOS B (S.U.E.*) — TV
- U/G TV Cable LOS C (S.U.E.*) — TV
- U/G TV Cable LOS D (S.U.E.*) — TV
- U/G Fiber Optic Cable LOS B (S.U.E.*) — TV FO
- U/G Fiber Optic Cable LOS C (S.U.E.*) — TV FO
- U/G Fiber Optic Cable LOS D (S.U.E.*) — TV FO

GAS:

- Gas Valve
- Gas Meter
- U/G Gas Line LOS B (S.U.E.*) — G
- U/G Gas Line LOS C (S.U.E.*) — G
- U/G Gas Line LOS D (S.U.E.*) — G
- Above Ground Gas Line — A/G Gas

SANITARY SEWER:

- Sanitary Sewer Manhole
- Sanitary Sewer Cleanout
- U/G Sanitary Sewer Line — SS
- Above Ground Sanitary Sewer — A/G Sanitary Sewer
- SS Forced Main Line LOS B (S.U.E.*) — FSS
- SS Forced Main Line LOS C (S.U.E.*) — FSS
- SS Forced Main Line LOS D (S.U.E.*) — FSS

MISCELLANEOUS:

- Utility Pole
- Utility Pole with Base
- Utility Located Object
- Utility Traffic Signal Box — S
- Utility Unknown U/G Line LOS B (S.U.E.*) — ?UTL
- U/G Tank; Water, Gas, Oil
- Underground Storage Tank, Approx. Loc. — UST
- A/G Tank; Water, Gas, Oil
- Geoenvironmental Boring
- U/G Test Hole LOS A (S.U.E.*)
- Abandoned According to Utility Records — AATUR
- End of Information — E.O.I.

SURVEY CONTROL SHEET 55–0120

–FINAL–

BL

POINT	DESC.	NORTH	EAST	ELEVATION	L STATION	OFFSET
1	BL-1	565870.0410	689647.2040	1984.82	OUTSIDE PROJECT LIMITS	
2	BL-2	565700.7270	690026.5860	1971.27	11+50.08	10.48 RT
3	BL-3	565419.1460	690282.5710	1985.10	OUTSIDE PROJECT LIMITS	

****

BM1 ELEVATION = 2003.36
N 566011 E 689342
L STATION 10+00.00
N 68°38'59.63" W DIST 607.13'
8" SPIKE IN ROOT OF A 36" MAPLE TREE

****

BM2 ELEVATION = 1969.52
N 565724 E 690052
L STATION 11+54.69 23.97 LEFT
8" SPIKE IN ROOT OF A 14" WALNUT TREE

****

BM3 ELEVATION = 1984.00
N 565270 E 690296
L STATION 13+66.00
S 18°00'30.38" E DIST 315.34
8" SPIKE IN ROOT OF A 10" WILD CHERRY TREE

****

-FINAL- ROW MARKER PERMANENT EASEMENT-E

ALIGN	STATION	OFFSET	NORTH	EAST
L	10+50.00	30.64	565741.5517	689938.2176
L	10+50.00	40.00	565733.3612	689933.6871
L	11+05.26	40.00	565706.4605	689973.2324
L	12+30.00	40.00	565627.1137	690069.4781
L	12+30.00	29.41	565635.2858	690076.2153

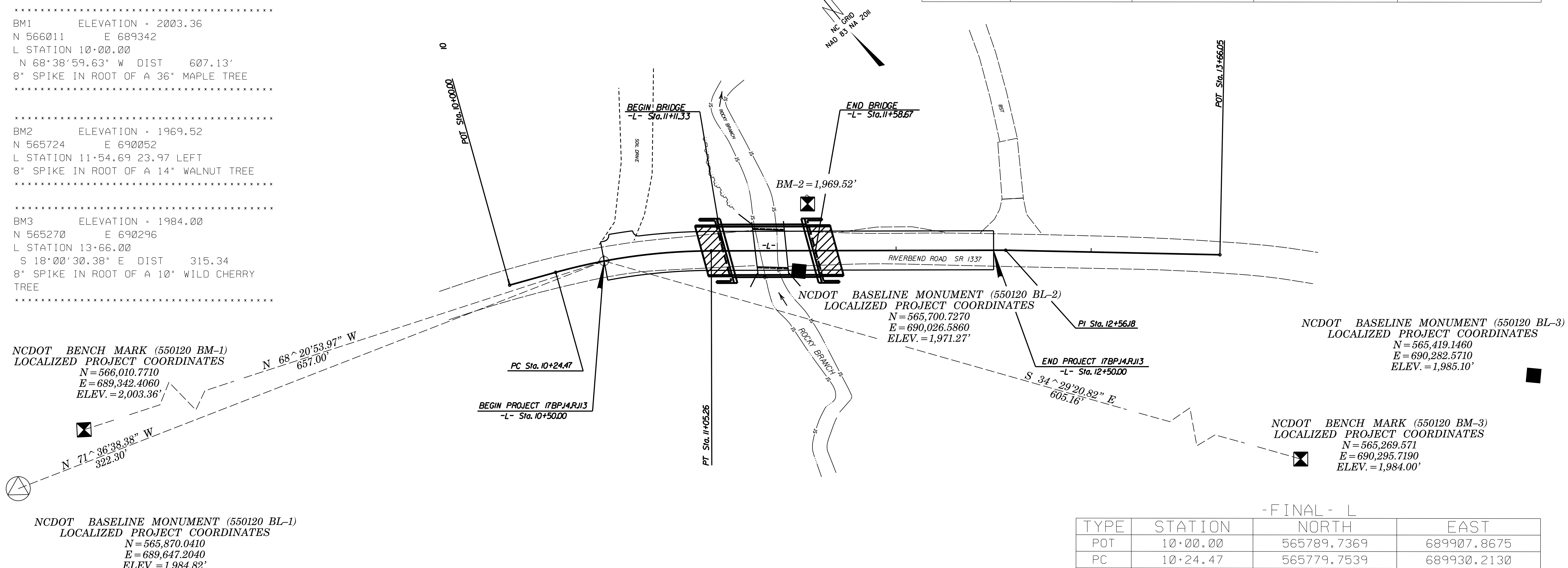

-FINAL- L

TYPE	STATION	NORTH	EAST
POT	10+00.00	565789.7369	689907.8675
PC	10+24.47	565779.7539	689930.2130
PT	11+05.26	565737.3242	689998.6770
POT	12+56.18	565641.3231	690115.1239
POT	13+66.05	565569.4630	690198.2294

DATUM DESCRIPTION

THE LOCALIZED COORDINATE SYSTEM DEVELOPED FOR THIS PROJECT IS BASED ON THE STATE PLANE COORDINATES ESTABLISHED BY NCDOT FOR MONUMENT "550120 (BL-1)" WITH NAD 83/NA 2011 STATE PLANE GRID COORDINATES OF NORTHING: 565870.0410(ft) EASTING: 689647.2040(ft) ELEVATION: 1984.82(ft)
THE AVERAGE COMBINED GRID FACTOR USED ON THIS PROJECT (GROUND TO GRID) IS: 0.9997824179
THE N.C. LAMBERT GRID BEARING AND LOCALIZED HORIZONTAL GROUND DISTANCE FROM "550120 (BL-1)" TO -L- STATION 10+50.00 IS N 71°36'38.38 W 322.30'
ALL LINEAR DIMENSIONS ARE LOCALIZED HORIZONTAL DISTANCES
VERTICAL DATUM USED IS NAVD 88

GEOID MODEL: G12NC
NOTE: DRAWING NOT TO SCALE

NOTES:

1. *THE CONTROL DATA FOR THIS PROJECT CAN BE FOUND ELECTRONICALLY BY SELECTING PROJECT CONTROL DATA AT:*
   HTTPS://CONNECT.NCDOT.GOV/RESOURCES/LOCATION/

   THE FILES TO BE FOUND ARE AS FOLLOWS:
   55-0120_LS_CONTROL.TXT

   SITE CALIBRATION INFORMATION HAS NOT BEEN PROVIDED FOR THIS PROJECT. IF FURTHER INFORMATION IS NEEDED, PLEASE CONTACT THE LOCATION AND SURVEYS UNIT.

◎ *INDICATES GEODETIC CONTROL MONUMENTS USED OR SET FOR HORIZONTAL PROJECT CONTROL BY THE NCDOT LOCATION AND SURVEYS UNIT.*
PROJECT CONTROL ESTABLISHED USING GLOBAL POSITIONING SYSTEM.

6/2/99

$$$$$$SYSTIME$$$$$
$$$$$$USERNAME$$$$$$$DGN$$$$$$$$$$$$$$$$$$$$$$$$$

DocuSign Envelope ID: D29822FC-6CDB-4412-8081-C81836485785

LOUIS BERGER
1001 Wade Avenue, Suite 400
Raleigh, NC 27605-3322
License No.: F-0840

PROJECT REFERENCE NO.	SHEET NO.
17BP.14.R.113	2A
R/W SHEET NO.	

ROADWAY DESIGN ENGINEER
DocuSigned by: RD Odell
7814D...
NORTH CAROLINA PROFESSIONAL SEAL 27933 ENGINEER R. D. ODELL
1/7/2019

PAVEMENT DESIGN ENGINEER
DocuSigned by: Dean D. Hatfield
820B...
NORTH CAROLINA PROFESSIONAL SEAL 16003 ENGINEER DEAN D. HATFIELD
1/7/2019

DOCUMENT NOT CONSIDERED FINAL UNLESS ALL SIGNATURES COMPLETED

N.T.S.

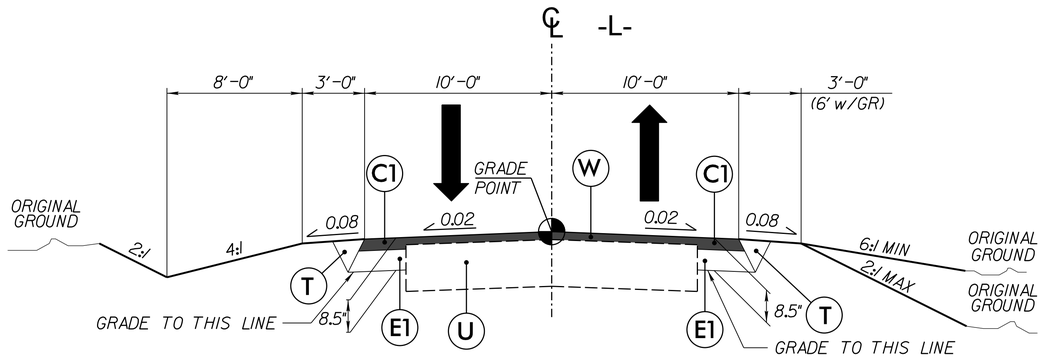

TYPICAL SECTION NO. 1

–L– STA 10+50.00 TO –L– STA 11+11.33 (BEGIN BRIDGE)
–L– STA 11+58.67 (END BRIDGE) TO –L– STA 12+50.00

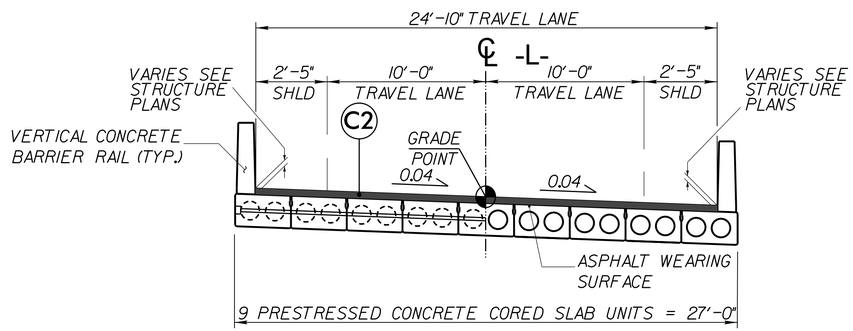

TYPICAL SECTION ON STRUCTURE

–L– STA 11+11.33 (BEGIN BRIDGE) TO –L– STA 11+58.67 (END BRIDGE)

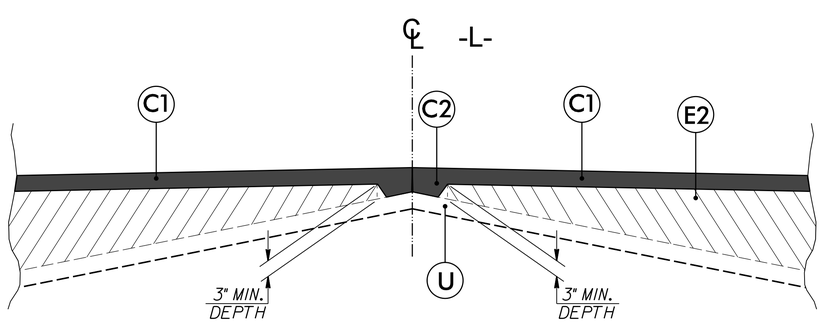

DETAIL SHOWING METHOD OF WEDGING

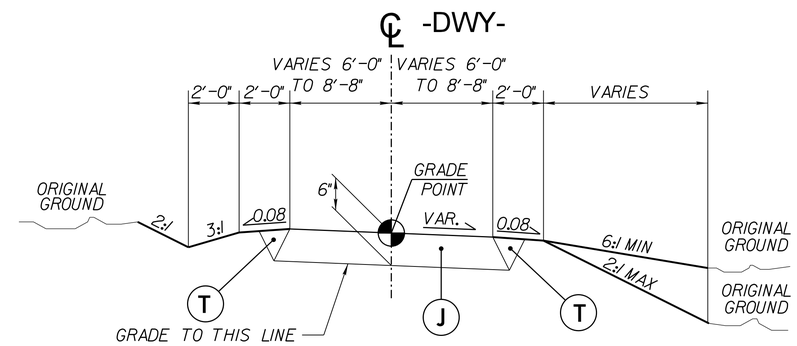

DRIVEWAY DETAIL

(SEE PLANS FOR DWY LOCATION)

Note: Pavement edge slopes are 1:1 unless shown otherwise.

PAVEMENT SCHEDULE	
ITEM	DESCRIPTION
C1	Prop. Approx 3.0" Asphalt Concrete Surface Course, Type SF9.5A, at an Average Rate of 165 lbs. Per sq. yard in each of two layers.
C2	Prop. Var. Depth Asphalt Concrete Surface Course, Type SF9.5A, at an Average Rate of 110 lbs. Per sq. yard Per 1" Depth, to be placed in layers not less than 1.0" or greater than 1.5" in depth.
E1	Prop. Approx 5.5" Asphalt Concrete Base Course, Type B25.0B, at an Average Rate of 627 lbs. Per sq. yard.
E2	Prop. Var. Depth Asphalt Concrete Base Course, Type B25.0B, at an Average Rate of 114 lbs. Per sq. yard Per 1" Depth, to be placed in layers not less than 4" or greater than 5.5" in depth.
J	6" ABC
T	Earth Material
U	Existing Pavement
W	Var. Depth Asphalt Pavement

REVISIONS

1/4/2019 2:41:41PM
G:\CKE Projects\CKE21004 Limited Services Division Offices\Group 3\550120\Roadway\Proj\550120_RDY_02A_TYP.dgn
CKE21004_str.tbl

DocuSign Envelope ID: 744C7BFE-0DF1-4403-ABC6-6E201F948B09

PROJECT REFERENCE NO.	SHEET NO.
17BP.14.R.113	2C-1

STATE OF
NORTH CAROLINA
DEPT. OF TRANSPORTATION
DIVISION OF HIGHWAYS
RALEIGH, N.C.

ROADWAY DETAIL DRAWING FOR
GUARDRAIL INSTALLATION

SHEET OF

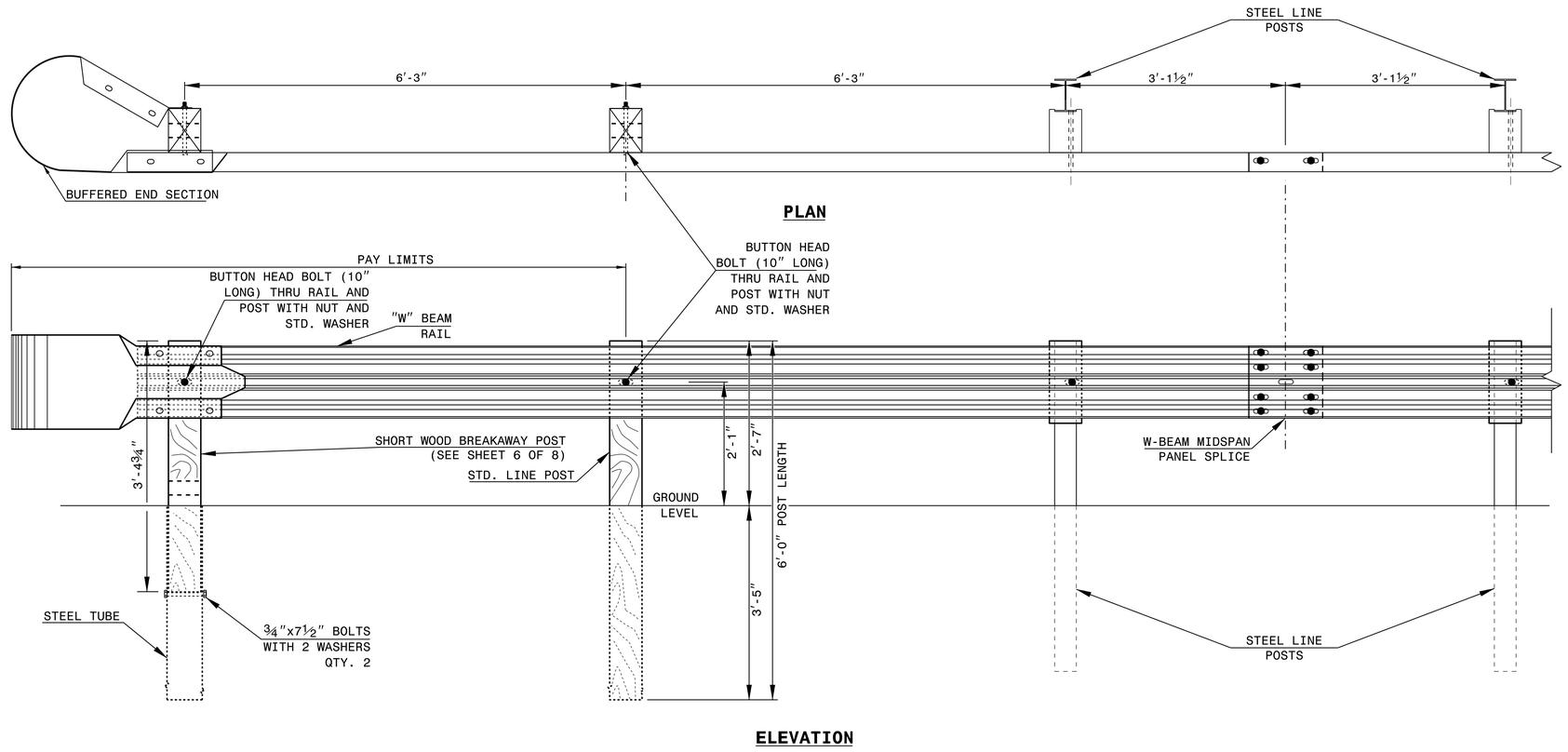

TRAILING END UNIT ASSEMBLY

A.T.-1 SYSTEM

STATE OF
NORTH CAROLINA
DEPT. OF TRANSPORTATION
DIVISION OF HIGHWAYS
RALEIGH, N.C.

ROADWAY DETAIL DRAWING FOR
GUARDRAIL INSTALLATION

SHEET OF

NORTH CAROLINA PROFESSIONAL SEAL 022966 ENGINEER JOHN S. HOWERTON

DOCUMENT NOT CONSIDERED FINAL UNLESS ALL SIGNATURES COMPLETED

CONTRACTS STANDARDS AND DEVELOPMENT UNIT
Office 919-707-6950 FAX 919-250-4119

A.T.-1 SYSTEM

ORIGINAL BY: _____ DATE: _____
MODIFIED BY: _____ DATE: _____
CHECKED BY: _____ DATE: _____
FILE SPEC.: _____

DocuSign Envelope ID: 744C7BFE-0DF1-4403-ABC6-6E201F948B09

PROJECT REFERENCE NO.	SHEET NO.
17BP.14.R.113	2C-2

DOCUMENT NOT CONSIDERED FINAL UNLESS ALL SIGNATURES COMPLETED

STATE OF NORTH CAROLINA
DEPT. OF TRANSPORTATION
DIVISION OF HIGHWAYS
RALEIGH, N.C.

ROADWAY DETAIL DRAWING FOR
GUARDRAIL INSTALLATION

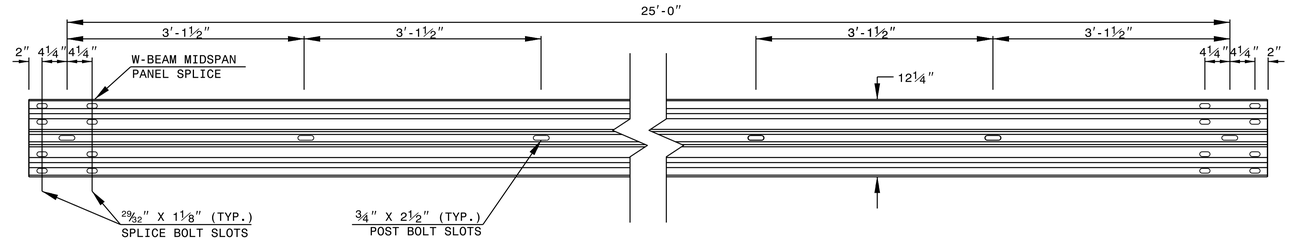

STANDARD W-BEAM GUARDRAIL

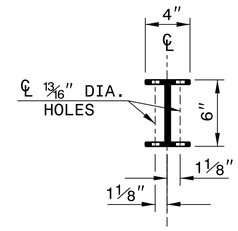

PLAN

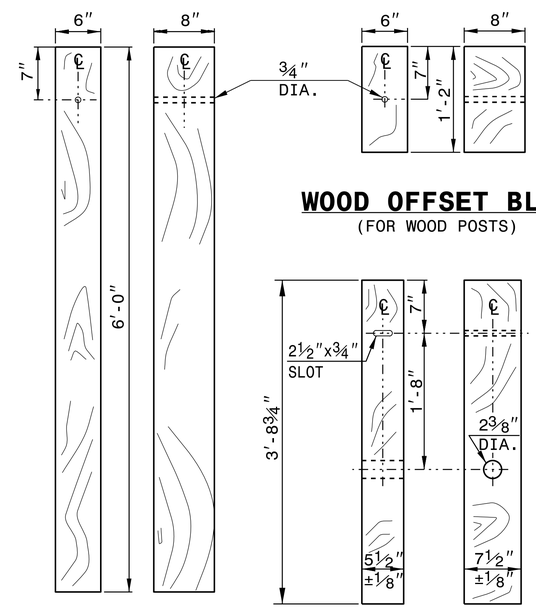

STANDARD LINE POST

WOOD OFFSET BLOCK
(FOR WOOD POSTS)

SHORT WOOD BREAKAWAY POST

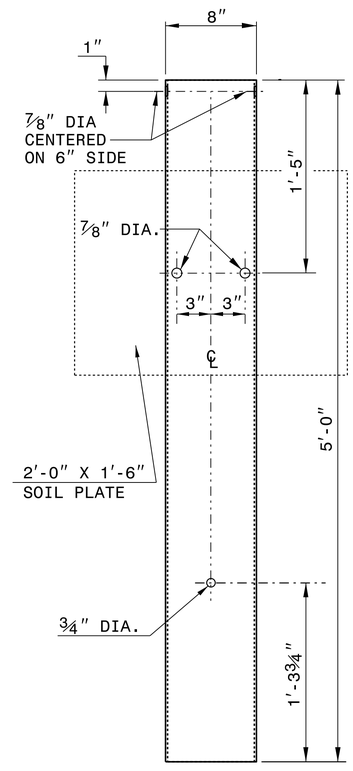

STEEL TUBE
TS 6"x8"x0.1875"

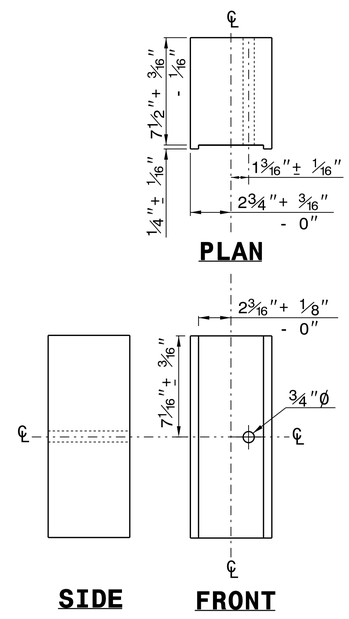

PLAN

SIDE FRONT

ROUTED OFFSET BLOCK

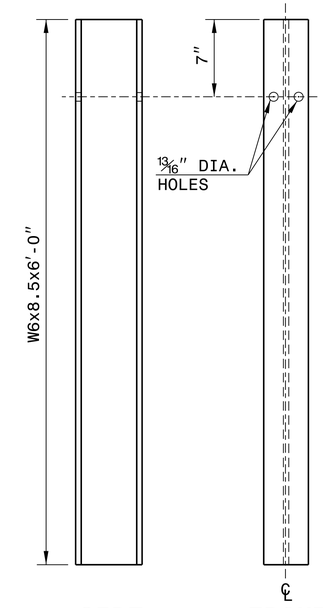

SIDE FRONT

"W6" STEEL POST

SYSTEM PARTS

SHEET 6 OF 8
862D02

STATE OF NORTH CAROLINA
DEPT. OF TRANSPORTATION
DIVISION OF HIGHWAYS
RALEIGH, N.C.

ROADWAY DETAIL DRAWING FOR
GUARDRAIL INSTALLATION

SHEET 6 OF 8
862D02

NORTH CAROLINA PROFESSIONAL SEAL 022966 ENGINEER JOEL S. HOWERTON

CONTRACTS STANDARDS AND DEVELOPMENT UNIT
Office 919-707-6950 FAX 919-250-4119

SEE TITLE BLOCK

ORIGINAL BY: J.HOWERTON DATE: 3-7-2018
MODIFIED BY: DATE:
CHECKED BY: DATE:
FILE SPEC.:

DocuSign Envelope ID: 74ACTBFE-00F1-4403-ABC6-6E201F948B09

STATE OF NORTH CAROLINA
DEPT. OF TRANSPORTATION
DIVISION OF HIGHWAYS
RALEIGH, N.C.

ROADWAY DETAIL DRAWING FOR
STRUCTURE ANCHOR UNITS
GUARDRAIL ANCHOR UNIT, TYPE III
FOR ATTACHMENT TO RAIL ON BRIDGE

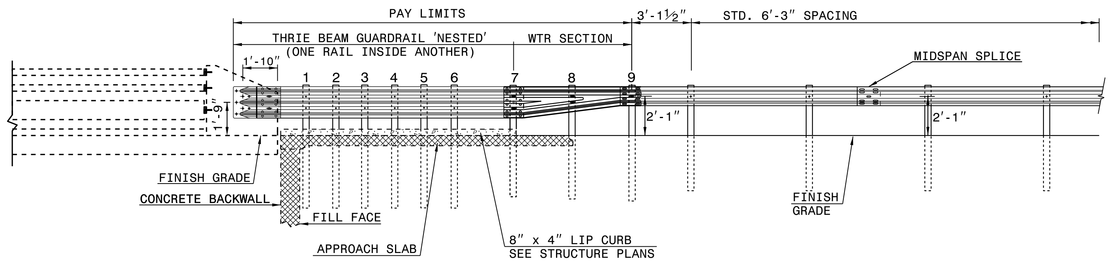

ELEVATION

NOTE:
**POST NOT REQUIRED FOR SKEW ANGLES GREATER THAN 150° OR LESS THAN 30° UNLESS OTHERWISE DIRECTED BY THE ENGINEER.
*THE DISTANCE FROM END OF BRIDGE RAIL TO CENTER LINE OF THE FIRST POST SHOULD BE 11½" IF CONCRETE BACKWALL IS NOT PRESENT.
-SHOULDER BERM GUTTER MUST BE INSTALLED TO THE LIMITS 8" x 4" LIP CURB IS SHOWN IF ANCHOR UNIT IS NOT ADJACENT TO AN APPROACH SLAB.
-MEASURE GUARDRAIL HEIGHT FROM THE TOP OF ADJACENT SURFACE (SHOULDER, BERM, OR GUTTER).
-LAP JOINTS IN THE DIRECTION OF TRAFFIC FLOW.
-SEE SHEET 3 FOR POST SECTIONS 1 THRU 9.

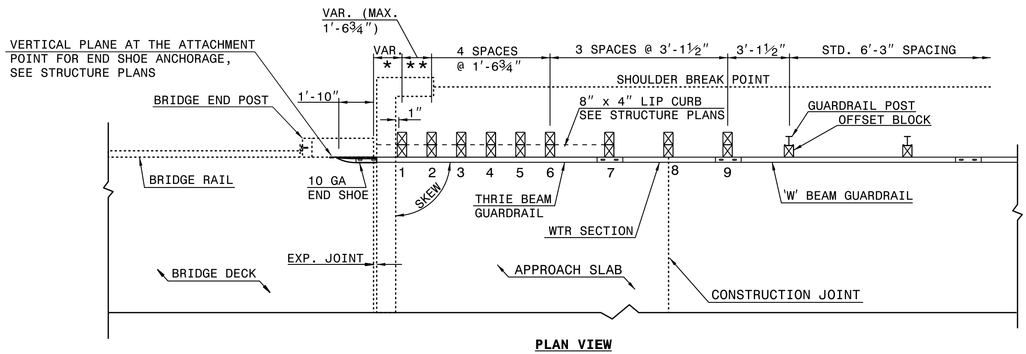

PLAN VIEW

GUARDRAIL ANCHOR UNIT, TYPE III FOR ATTACHMENT TO RAIL ON BRIDGE

SHEET 1 OF 7
862D03

STATE OF NORTH CAROLINA
DEPT. OF TRANSPORTATION
DIVISION OF HIGHWAYS
RALEIGH, N.C.

ROADWAY DETAIL DRAWING FOR
STRUCTURE ANCHOR UNITS
GUARDRAIL ANCHOR UNIT, TYPE III
FOR ATTACHMENT TO RAIL ON BRIDGE

SHEET 1 OF 7
862D03

STATE OF NORTH CAROLINA
DEPT. OF TRANSPORTATION
DIVISION OF HIGHWAYS
RALEIGH, N.C.

ROADWAY DETAIL DRAWING FOR
STRUCTURE ANCHOR UNITS
GUARDRAIL ANCHOR UNIT, TYPE III FOR ATTACHMENT TO
RAIL ON BRIDGE - SUB REGIONAL TIER

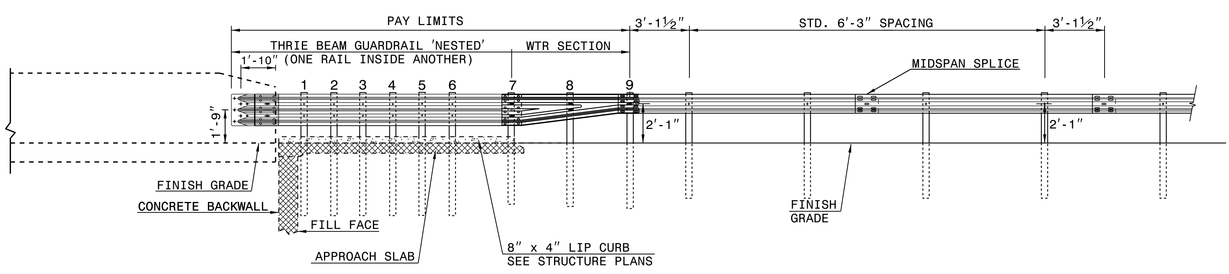

ELEVATION

NOTE:
**POST NOT REQUIRED FOR SKEW ANGLES GREATER THAN 150° OR LESS THAN 30° UNLESS OTHERWISE DIRECTED BY THE ENGINEER.
*THE DISTANCE FROM END OF BRIDGE RAIL TO CENTER LINE OF THE FIRST POST SHOULD BE 11½" IF CONCRETE BACKWALL IS NOT PRESENT.
-SHOULDER BERM GUTTER MUST BE INSTALLED TO THE LIMITS 8" x 4" LIP CURB IS SHOWN IF ANCHOR UNIT IS NOT ADJACENT TO AN APPROACH SLAB.
-MEASURE GUARDRAIL HEIGHT FROM THE TOP OF ADJACENT SURFACE (SHOULDER, BERM, OR GUTTER).
-LAP JOINTS IN THE DIRECTION OF TRAFFIC FLOW.
-SEE SHEET 3 FOR POST SECTIONS 1 THRU 9.

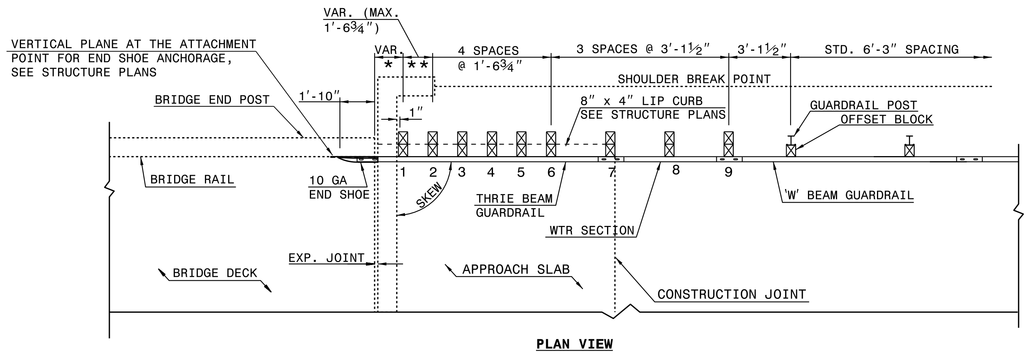

PLAN VIEW

GUARDRAIL ANCHOR UNIT, TYPE III FOR ATTACHMENT TO RAIL ON BRIDGE - SUB REGIONAL TIER

SHEET 2 OF 7
862D03

STATE OF NORTH CAROLINA
DEPT. OF TRANSPORTATION
DIVISION OF HIGHWAYS
RALEIGH, N.C.

ROADWAY DETAIL DRAWING FOR
STRUCTURE ANCHOR UNITS
GUARDRAIL ANCHOR UNIT, TYPE III FOR ATTACHMENT TO
RAIL ON BRIDGE - SUB REGIONAL TIER

SHEET 2 OF 7
862D03

SEE TITLE BLOCK

ORIGINAL BY: J. HOWERTON DATE: 06-22-12
MODIFIED BY: DATE:
CHECKED BY: DATE:
FILE SPEC.:

CONTRACT STANDARDS AND DEVELOPMENT UNIT
Office 919-707-6950 FAX 919-250-4119

DOCUMENT NOT CONSIDERED FINAL UNLESS ALL SIGNATURES COMPLETED

NORTH CAROLINA PROFESSIONAL ENGINEER SEAL 022966 JAMES S. HOWERTON

PROJECT REFERENCE NO. 17BP.14.R.113
SHEET NO. 2C-3

DocuSign Envelope ID: 744C7BFE-0DF1-4403-ABC6-6E201F948B09

PROJECT REFERENCE NO.	SHEET NO.
I7BPJ4.RJI3	3B

STATE OF NORTH CAROLINA
DIVISION OF HIGHWAYS

"N" = DISTANCE FROM EDGE OF LANE TO FACE OF GUARDRAIL.
TOTAL SHOULDER WIDTH = DISTANCE FROM EDGE OF TRAVEL LANE TO SHOULDER BREAK POINT.
FLARE LENGTH = DISTANCE FROM LAST SECTION OF PARALLEL GUARDRAIL TO END OF GUARDRAIL.
W = TOTAL WIDTH OF FLARE FROM BEGINNING OF TAPER TO END OF GUARDRAIL.
G = GATING IMPACT ATTENUATOR TYPE 350
NG = NON-GATING IMPACT ATTENUATOR TYPE 350

GUARDRAIL SUMMARY

SURVEY LINE	BEG. STA.	END STA.	LOCATION	LENGTH			WARRANT POINT		"N" DIST. FROM E.O.L.	TOTAL SHOUL. WIDTH	FLARE LENGTH		W		ANCHORS								IMPACT ATTENUATOR TYPE 350			SINGLE FACED GUARDRAIL	REMOVE EXISTING GUARDRAIL	REMOVE AND STOCKPILE EXISTING GUARDRAIL	REMARKS
				STRAIGHT	SHOP CURVED	DOUBLE FACED	APPROACH END	TRAILING END			APPROACH END	TRAILING END	APPROACH END	TRAILING END	XI MOD	XI	GRAU 350 TL-2	M-350	TYPE-III	CAT-1	VI MOD	B-77	AT-1	EA	G	NG				
L	10+59.17	11+09.17	LT	31.25	18.75	–	–	–	3'	4.45'	–	–	–	–	–	–	–	–	1	–	–	–	1	–	–	–	–	–	–	–
L	10+72.08	11+15.83	RT	43.75	–	–	–	–	3'	4.45'	–	–	–	–	–	–	1	–	1	–	–	–	–	–	–	–	–	–	–	–
L	11+54.17	11+97.92	LT	43.75	–	–	–	–	–	–	–	–	–	–	–	–	1	–	1	–	–	–	–	–	–	–	–	–	–	–
L	11+60.83	12+04.58	RT	43.75	–	–	–	–	–	–	–	–	–	–	–	–	1	–	1	–	–	–	–	–	–	–	–	–	–	–
–	–	–	–	–	–	–	–	–	–	–	–	–	–	–	–	–	–	–	–	–	–	–	–	–	–	–	–			–
–	–	–	–	–	–	–	–	–	–	–	–	–	–	–	–	–	–	–	–	–	–	–	–	–	–	–	–	–	–	–
			SUB-TOTAL	162.50'	18.75										DEDUCTIONS FOR GUARDRAIL ANCHOR UNITS														
	DEDUCTIONS FOR GUARDRAIL ANCHOR UNITS			150.00'	6.25'										TYPE TL-2			3 @ 25.00' =		75'									
			TOTAL	12.5'	12.5'										TYPE III			4 @ 18.75' =		75'									
															AT-1			1 @ 6.25' =		6.25'									
			SAY	12.5'	12.5'														TOTAL =	156.25'									

SUMMARY OF EARTHWORK (IN CUBIC YARDS)

STATION	STATION	UNCL. EXCAV.	EMBANK. +%	BORROW	WASTE
-L- 10+50.00	11+11.33 (BEGIN BRIDGE)	5	25	20	–
-L- 11+58.67 (END BRIDGE)	12+50.00	12	12	0	–
–	–	–	–	–	–
–	–	–	–	–	–
–	–	–	–	–	–
–	–	–	–	–	–
PROJECT TOTALS:		17	37	20	–
		–	–	–	–
–		–	–	–	–
–		–	–	–	–
–		–	–	–	–
LOSS DUE TO CLEARING & GRUBBING		-5	–	–	–
–		–	–	–	–
PROJECT TOTALS:		12	37	20	–
ESTIMATE 5% TO REPLACE TOPSOIL ON BORROW PIT		–	–	1	–
GRAND TOTAL:		12		21	
SAY:		15	–	25	–

CONTINGENCY ITEMS
UNDERCUT EXCAVATION 50 CY
SELECT GRANULAR MATERIAL 50 CY
GEOTEXTILE FOR SOIL STABILIZATION 50 CY
CLASS IV SUBGRADE STABILIZATION 50 TON
INCIDENTAL STONE BASE 10 TON

PAVEMENT REMOVAL SUMMARY

SURVEY LINE	STATION	STATION	LOCATION LT/RT/CL	YD^2
L	11+00	11+70	CL	34
–	–	–	–	–
–	–	–	–	–
–	–	–	–	–
			TOTAL:	34
				–
			SAY:	35

Note: Approximate quantities only. Unclassified Excavation, Borrow Excavation, Fine Grading, and Clearing and Grubbing will be paid for at the contract lump sum price for "Grading."

REVISIONS

1/4/2019 2:41:42 PM
G:\CKE Projects\CKE21004 Limited Services Division Offices\Group 3\550120\Roadway\Proj\550120_RDY_03B_SUMMARY.dgn
CKE21004_sr.tbl

LOUIS BERGER
1001 Wade Avenue, Suite 400
Raleigh, NC 27605-3322
License No.: F-0840

ROADWAY PLANS

DocuSign Envelope ID: D29822FC-6CDB-4412-8081-C81836485785

PROJECT REFERENCE NO.	SHEET NO.
17BP.14.R.113	4
R/W SHEET NO.	

ROADWAY DESIGN ENGINEER
DocuSigned by: RD Odell
NORTH CAROLINA PROFESSIONAL SEAL 27933 ENGINEER R. D. ODELL
1/7/2019

HYDRAULICS ENGINEER
DocuSigned by: Dean Hatfield
NORTH CAROLINA PROFESSIONAL SEAL 16003 ENGINEER DEAN D. HATFIELD
1/7/2019

DOCUMENT NOT CONSIDERED FINAL UNLESS ALL SIGNATURES COMPLETED

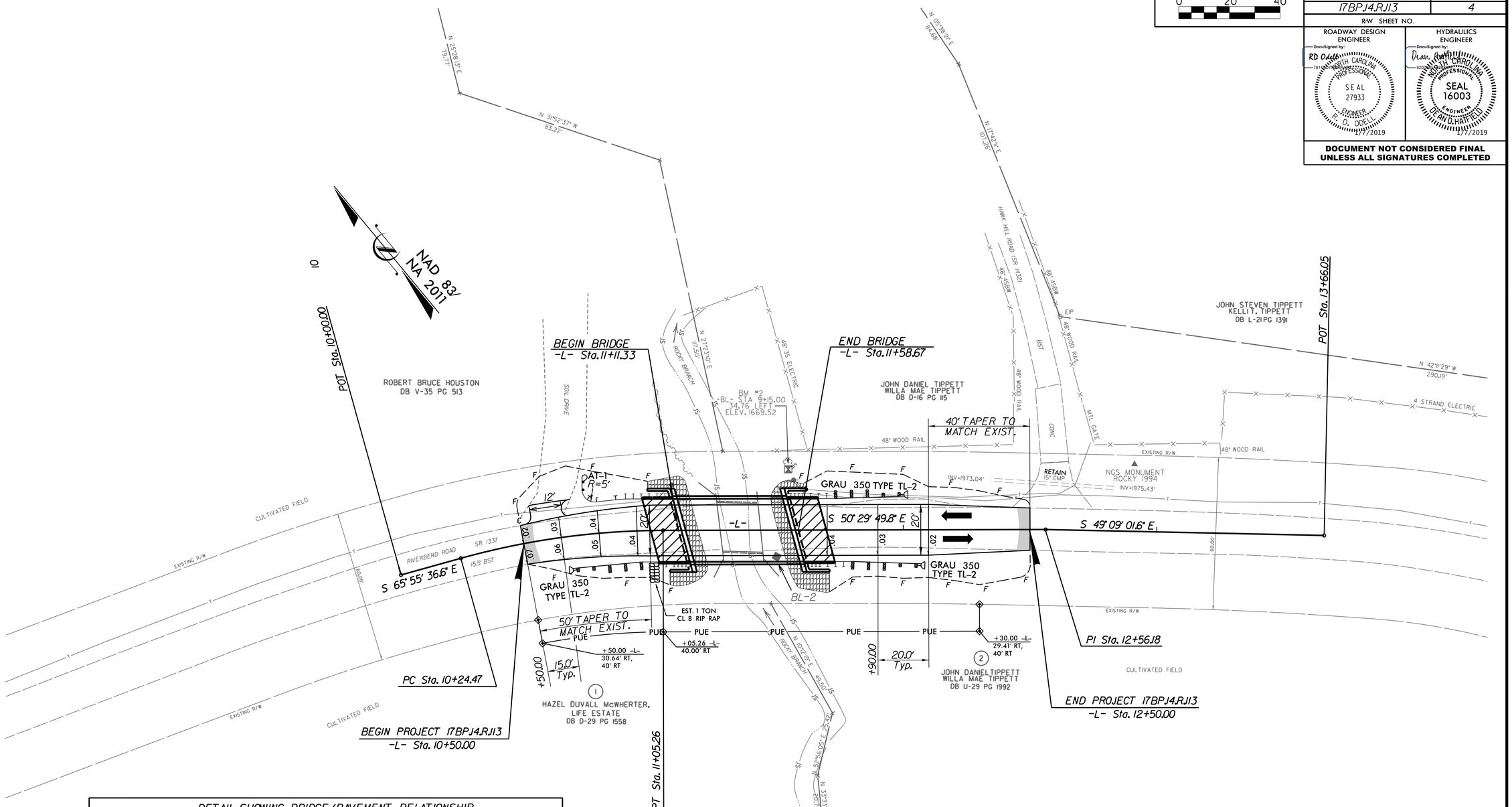

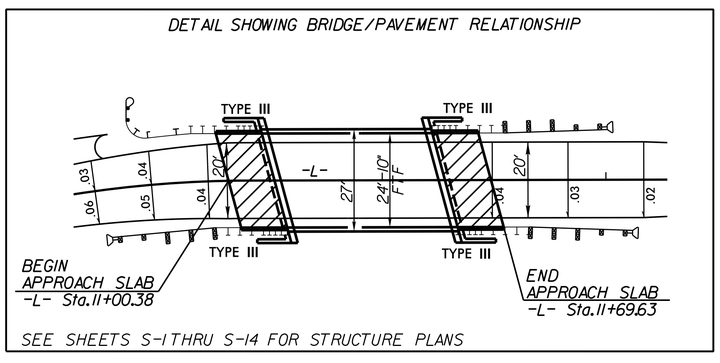

CURVE DATA FOR -L-
PI Sta 10+65.11
Δ = 15° 25' 46.8" (RT)
D = 19° 05' 54.9"
L = 80.79'
T = 40.64'
R = 300.00'
Se = EXIST.
RO = SEE PLANS

SEE SHEET 5 FOR PROFILE

LOUIS BERGER
1001 Wade Avenue, Suite 400
Raleigh, NC 27605-3322
License No.: F-0840

ROADWAY PLANS

REVISIONS

1/4/2019 2:41:44 PM
G:\CKE Projects\CKE21004 Limited Services Division Offices\Group 3\550120\Roadway\Proj\550120_RDY_04_PSH.dgn
G:\CADD\Plot\CKE21004\CKE21004_rdy.tbl

DocuSign Envelope ID: D29822FC-6CDB-4412-8081-C81836485785

LOUIS BERGER
1001 Wade Avenue, Suite 400
Raleigh, North Carolina 27605
License No.: F-0840

PROJECT REFERENCE NO.	SHEET NO.
17BP.14.R.113	5

ROADWAY DESIGN ENGINEER
DocuSigned by: RD Odell
NORTH CAROLINA PROFESSIONAL SEAL 27933 ENGINEER R. D. ODELL
1/7/2019

HYDRAULICS ENGINEER
DocuSigned by: Dean Hatfield
NORTH CAROLINA PROFESSIONAL SEAL 16003 ENGINEER DEAN D. HATFIELD
1/7/2019

DOCUMENT NOT CONSIDERED FINAL UNLESS ALL SIGNATURES COMPLETED

-L-

0 20 40 HORIZONTAL
0 4 8 VERTICAL

HYDRAULIC DATA

DESIGN DISCHARGE	= 900	CFS
DESIGN FREQUENCY	= 25	YRS
DESIGN HW ELEVATION	= 1971.6	FT
BASE DISCHARGE	= 1300	CFS
BASE FREQUENCY	= 100	YRS
BASE HW ELEVATION	= 1973.28	FT
OVERTOPPING DISCHARGE	= 1180	CFS
OVERTOPPING FREQUENCY	= 50+	YRS
OVERTOPPING ELEVATION	= 1972.9	FT
DATE OF SURVEY	= JUNE 2013	
W.S. ELEVATION AT DATE OF SURVEY	= 1965.7	FT

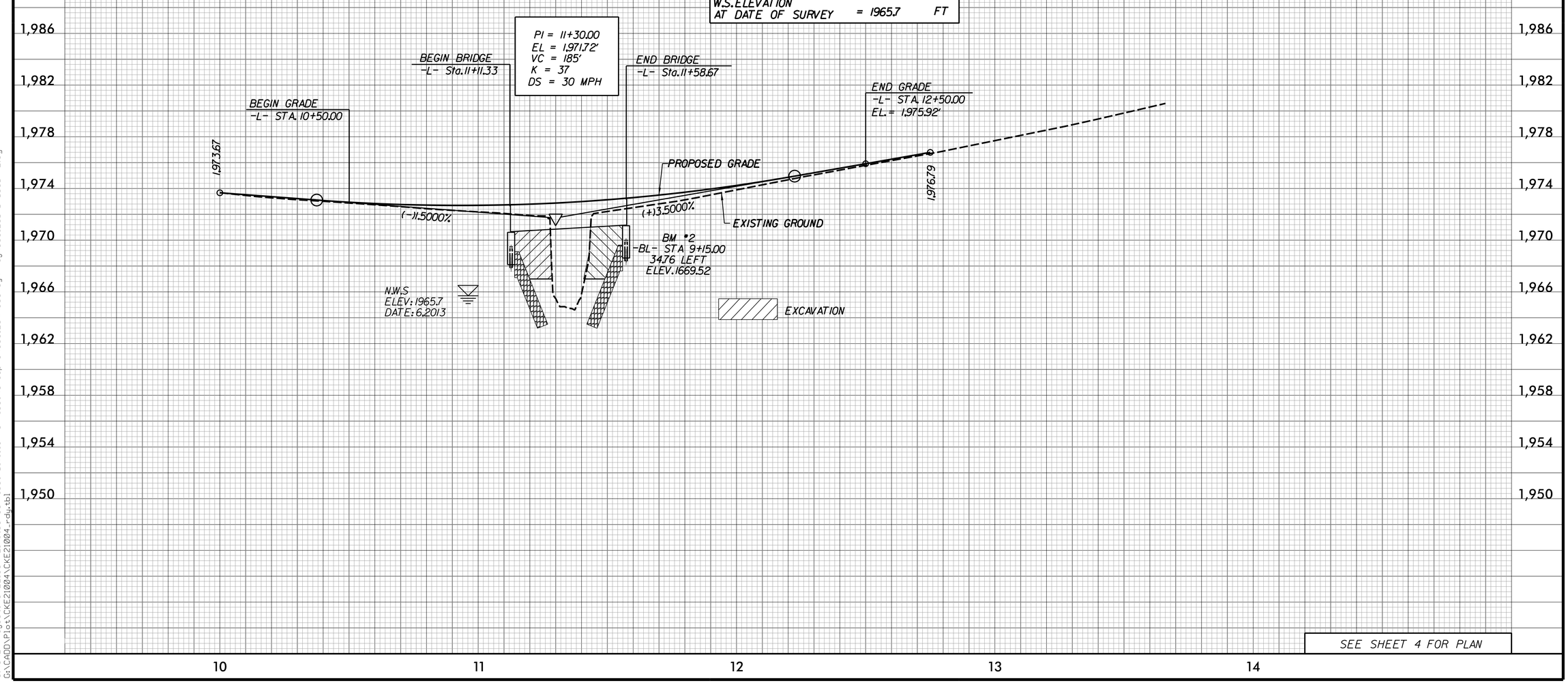

SEE SHEET 4 FOR PLAN

1/4/2019 2:41:45 PM
G:\CKE Projects\CKE21004 Limited Services Division Offices\Group 3\550120\Roadway\Proj\550120_RDY_05_PFL.dgn
G:\CADD\Plot\CKE21004\CKE21004.rdy.tbl

DocuSign Envelope ID: D29822FC-6CDB-4412-8081-C81836485785

STATE OF NORTH CAROLINA
DIVISION OF HIGHWAYS

TRANSPORTATION MANAGEMENT PLAN

MACON COUNTY

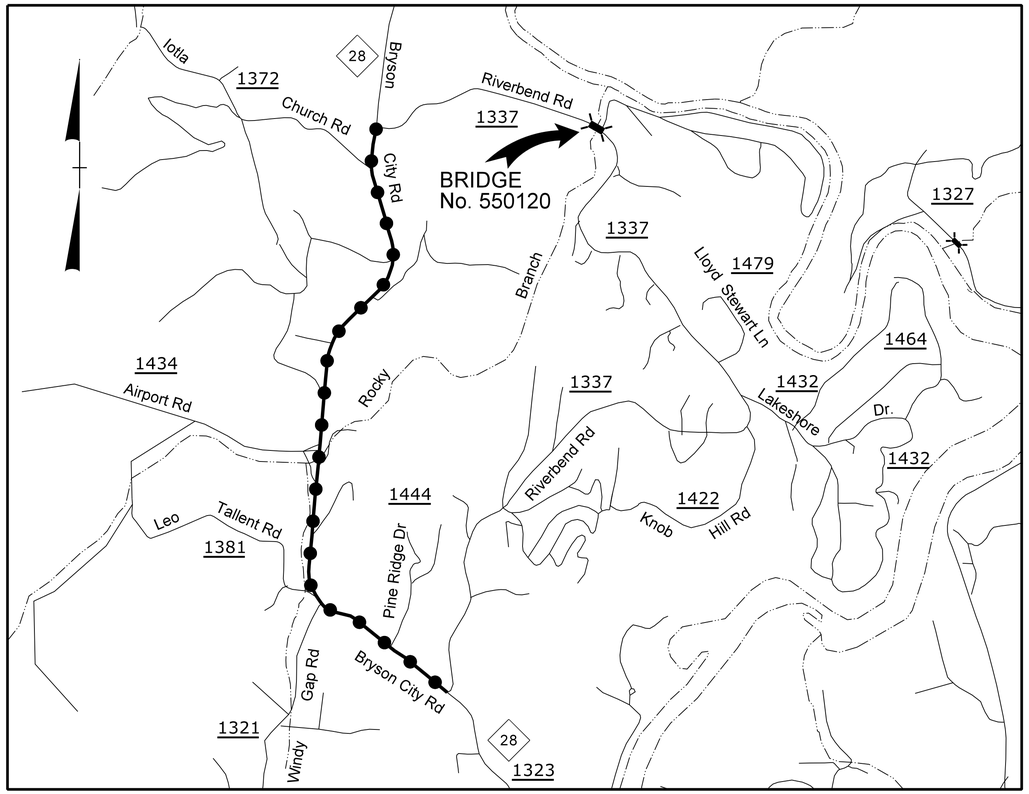

VICINITY MAP NTS

OFF–SITE DETOUR

LOCATION: BRIDGE NO. 550120 ON SR 1337 OVER ROCKY BRANCH

INDEX OF SHEETS

SHEET NO.	TITLE
TMP-1	TITLE SHEET, VICINITY MAP, AND INDEX OF SHEETS
TMP-1A	LIST OF APPLICABLE ROADWAY STANDARD DRAWINGS, GENERAL NOTES, LOCAL NOTES, TRANSPORTATION OPERATIONS AND LEGEND
TMP-2	SPECIAL SIGN DESIGN
TMP-3	TEMPORARY TRAFFIC CONTROL DETAIL, PHASING NOTES, OFFSITE DETOUR SIGNING AND ROAD CLOSURE

SHEET NO.
TMP–1

TIP PROJECT: 17BP.14.R.113

DOCUMENT NOT CONSIDERED FINAL UNLESS ALL SIGNATURES COMPLETED

APPROVED:

DATE:

DocuSigned by: RD Odell 7814DF1...

SEAL

NORTH CAROLINA PROFESSIONAL SEAL 27933 ENGINEER R. D. ODELL 6/4/2019

WORK ZONE SAFETY & MOBILITY
"from the MOUNTAINS to the COAST"

THE LOUIS BERGER GROUP, Inc.
1001 Wade Avenue, Suite 400
Raleigh, North Carolina 27605
License No.: F-0840

JOSEPH E. HUMMER

DIVISION OF HIGHWAYS · STATE OF NORTH CAROLINA · DEPARTMENT OF TRANSPORTATION · WORK ZONE TRAFFIC CONTROL

$$$$$SYSTIME$$$$$
$$$$$$$$$$$$$$$$DGN$$$$$$$$$$$$$$$$$$$$
$$$$USERNAME$$$$

DocuSign Envelope ID: D29822FC-6CDB-4412-8081-C81836485785

PROJ. REFERENCE NO.	SHEET NO.
17BP.14.R.113	TMP-1A

ROADWAY STANDARD DRAWINGS

THE FOLLOWING ROADWAY STANDARDS AS APPEAR IN "ROADWAY STANDARD DRAWINGS" - PROJECT SERVICES UNIT - N.C. DEPARTMENT OF TRANSPORTATION - RALEIGH, N.C., DATED JANUARY 2018 ARE APPLICABLE TO THIS PROJECT AND BY REFERENCE HEREBY ARE CONSIDERED A PART OF THESE PLANS:

STD. NO.	TITLE
1101.01	WORK ZONE ADVANCE WARNING SIGNS
1101.03	TEMPORARY ROAD CLOSURES
1101.05	WORK ZONE VEHICLE ACCESSES
1101.11	TRAFFIC CONTROL DESIGN TABLES
1110.01	STATIONARY WORK ZONE SIGNS
1130.01	DRUMS
1145.01	BARRICADES
1150.01	FLAGGERS

LEGEND

GENERAL

NORTH ARROW

TRAFFIC CONTROL DEVICES

BARRICADE (TYPE III)

TEMPORARY SIGNING

STATIONARY SIGN

TRANSPORTATION OPERATIONS

CONSTRUCTION
REMOVE AND REPLACE EXISTING STRUCTURE AND APPROACHES ALONG THE EXISTING ROADWAY ALIGNMENT AS SHOWN IN THE CONSTRUCTION PLANS.

TMP PARAMETERS
TRAFFIC WILL BE DETOURED OFF-SITE DURING THE CONSTRUCTION PERIOD ALONG A ROUTE DETERMINED BY NCDOT.

THE OFF-SITE DETOUR WILL INCLUDE NC 28 (BRYSON CITY ROAD).

GENERAL NOTES

CHANGES MAY BE REQUIRED WHEN PHYSICAL DIMENSIONS IN THE DETAIL DRAWINGS, STANDARD DETAILS, AND ROADWAY DETAILS ARE NOT ATTAINABLE TO MEET FIELD CONDITIONS OR RESULT IN DUPLICATE OR UNDESIRED OVERLAPPING OF DEVICES. MODIFICATION MAY INCLUDE: MOVING, SUPPLEMENTING, COVERING, OR REMOVAL OF DEVICES AS DIRECTED BY THE ENGINEER.

THE FOLLOWING GENERAL NOTES APPLY AT ALL TIMES FOR THE DURATION OF THE CONSTRUCTION PROJECT EXCEPT WHEN OTHERWISE NOTED IN THE PLAN OR DIRECTED BY THE ENGINEER.

TRAFFIC PATTERN ALTERATIONS

A) NOTIFY THE ENGINEER THIRTY (30) CALENDAR DAYS PRIOR TO ANY TRAFFIC PATTERN ALTERATION.

SIGNING

B) PROVIDE SIGNING AND DEVICES REQUIRED TO CLOSE THE ROAD ACCORDING TO THE ROADWAY STANDARD DRAWINGS AND TRAFFIC CONTROL PLANS.

PROVIDE SIGNING REQUIRED FOR THE OFF-SITE DETOUR ROUTE AS SHOWN IN THE TRAFFIC CONTROL PLANS.

C) COVER OR REMOVE ALL SIGNS AND DEVICES REQUIRED TO CLOSE THE ROAD WHEN ROAD CLOSURE IS NOT IN OPERATION.

COVER OR REMOVE ALL SIGNS REQUIRED FOR THE OFF-SITE DETOUR WHEN THE DETOUR IS NOT IN OPERATION.

D) ENSURE ALL NECESSARY SIGNING IS IN PLACE PRIOR TO ALTERING ANY TRAFFIC PATTERN.

TRAFFIC CONTROL DEVICES

E) PLACE TYPE III BARRICADES, WITH "ROAD CLOSED" SIGN R11-2 ATTACHED, OF SUFFICIENT LENGTH TO CLOSE ENTIRE ROADWAY.

PAVEMENT MARKINGS AND MARKERS

F) TIE PROPOSED PAVEMENT MARKING LINES TO EXISTING PAVEMENT MARKING LINES.

LOCAL NOTES

G) NOTIFY MACON COUNTY EMERGENCY SERVICES AND SCHOOL BOARD AT LEAST THIRTY (30) DAYS PRIOR TO ROAD CLOSURE.

DOCUMENT NOT CONSIDERED FINAL UNLESS ALL SIGNATURES COMPLETED

APPROVED:_____ DATE:_____

SEAL

DocuSigned by: R.D. Odell 7814D9A2C02D4...

NORTH CAROLINA PROFESSIONAL SEAL 27933 ENGINEER R. D. ODELL 1/7/2019

DIVISION OF HIGHWAYS STATE OF NORTH CAROLINA DEPARTMENT OF TRANSPORTATION WORK ZONE TRAFFIC CONTROL

LOUIS BERGER
1001 Wade Avenue, Suite 400
Raleigh, NC 27605-3322
License No.: F-0840

LIST OF APPLICABLE ROADWAY STANDARD DRAWINGS, LEGEND, GENERAL NOTES, AND TRANSPORTATION OPERATIONS

1/4/2019 2:41:52 PM
$PENTBL$
G:\CKE Projects\CKE21004 Limited Services Division Offices\Group 3\550120\Roadway\Proj\550120_RDY_06_TMP1A.dgn

DocuSign Envelope ID: D29822FC-6CDB-4412-8081-C81836485785

PROJ. REFERENCE NO.	SHEET NO.
17BP.14.R.113	TMP-2

SPECIAL SIGN DETAIL

SIGN NUMBER: -
TYPE: D Ground
QUANTITY: SEE PLANS

SIGN WIDTH: 6'-0"
HEIGHT: 1'-6"
TOTAL AREA: 9.0 Sq.Ft.

BORDER TYPE: INSET
RECESS: 0.38"
WIDTH: 0.63"
RADII: 1.5""

NO. Z BARS: -
LENGTH: -

BACKG COLOR: Orange
COPY COLOR: Black

SYMBOL	X	Y	WID	HT

MAT'L: 0.080" (2 MM) ALUMINUM

DESIGN BY: NLG **CHECKED BY:** GLG **DATE:** JAN 04, 2019

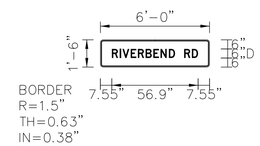

NOTES

1. Letter spacings are to start on next letter.
2. Legend and border shall be direct applied black non-reflective sheeting.
3. Background shall be Type VII, VIII, or IX (Prismatic) fluorescent orange retroreflective sheeting.
4. Spacing factor is 1 unless specified otherwise.

LETTER POSITIONS

Letter spacings are to start of next letter

		R	I	V	E	R	B	E	N	D		R	D														Series/Size Text Length
	7.55	5.1	1.9	5.5	4.7	5.1	5.1	4.7	5.5	4.1	6.0	5.1	4.1	7.55													D 2000
																											56.9

FILENAME:

NORTH CAROLINA D.O.T. SIGN DETAIL

DOCUMENT NOT CONSIDERED FINAL UNLESS ALL SIGNATURES COMPLETED

APPROVED:_____ DATE:_____

SEAL

DocuSigned by: RD Odell 7814A0A77D28A4...

NORTH CAROLINA PROFESSIONAL SEAL 27933 ENGINEER R. D. ODELL 1/7/2019

DIVISION OF HIGHWAYS STATE OF NORTH CAROLINA DEPARTMENT OF TRANSPORTATION WORK ZONE TRAFFIC CONTROL

LOUIS BERGER
1001 Wade Avenue, Suite 400
Raleigh, NC 27605-3322
License No.: F-0840

SPECIAL SIGN DESIGN

1/4/2019 3:00:53 PM
$PENTBL1$
G:\CKE Projects\CKE21004 Limited Services Division Offices\Group 3\550120\Roadway\Proj\550120_RDY_06_TMP2.dgn

DocuSign Envelope ID: D29822FC-6CDB-4412-8081-C81836485785

PROJ. REFERENCE NO.	SHEET NO.
17BP.14.R.113	TMP-3

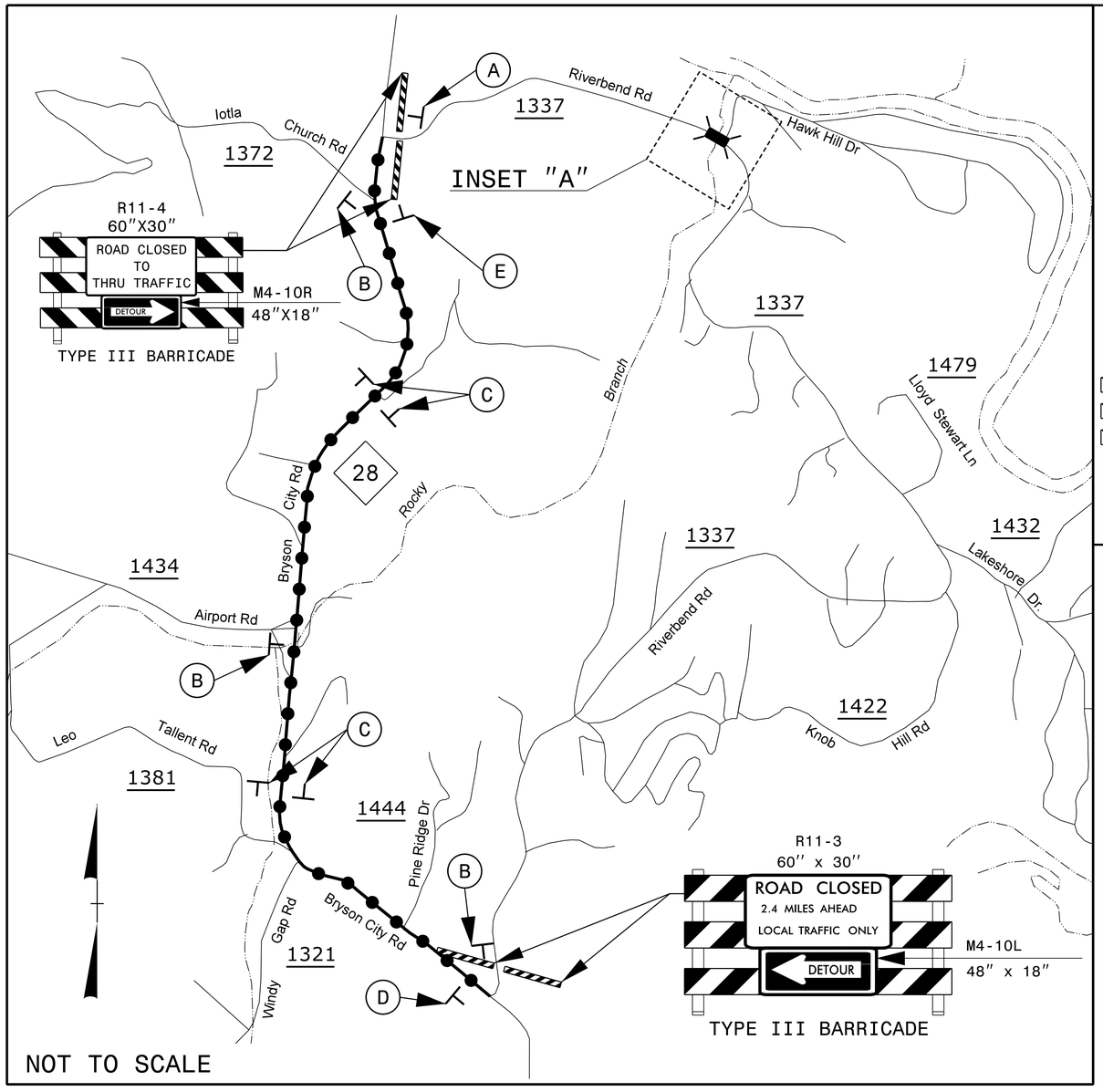

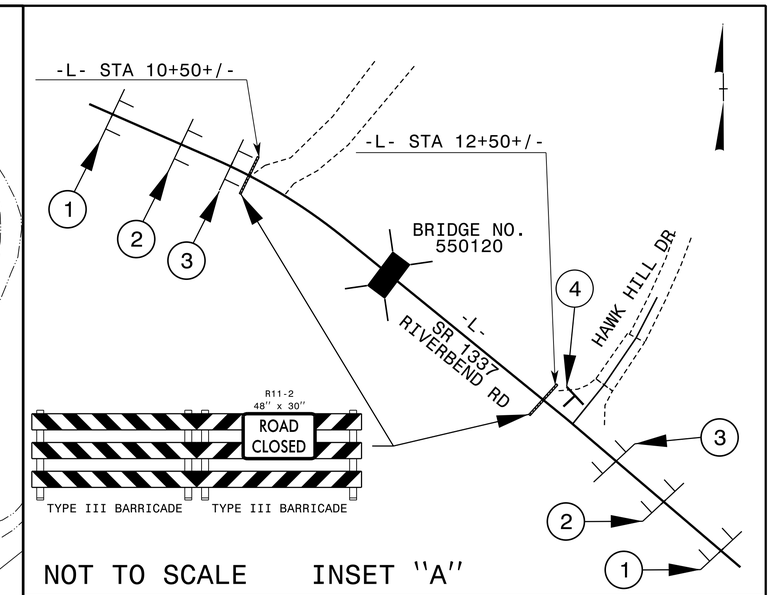

PROJECT PHASING

STEP 1:
- INSTALL OFF-SITE DETOUR AND ROAD CLOSURE SIGNING (PROVIDED BY CONTRACTOR).

- USING RDWY STD 1101.03, SHEET 1 OF 9, CLOSE SR 1337 (RIVERBEND RD.) TO THRU TRAFFIC FROM -L- STA. 10+50+/- TO -L- STA. 12+50+/- AND PLACE TRAFFIC ONTO OFF SITE DETOUR AS SHOWN.

STEP 2:
- REMOVE EXISTING BRIDGE No. 550120 AND APPROACHES AND CONSTRUCT THE PROPOSED BRIDGE AND ROADWAY UP TO AND INCLUDING THE FINAL LAYER OF SURFACE COURSE FROM -L- STA. 10+50+/- TO -L- STA. 12+50+/-. PLACE FINAL PAVEMENT MARKINGS ON -L- (SEE CONSTRUCTION PLANS).

STEP 3:
- REMOVE ALL TRAFFIC CONTROL DEVICES, SIGNING, AND DETOUR ROUTE SIGNING.
- OPEN TRAFFIC TO FINAL TRAFFIC PATTERN.

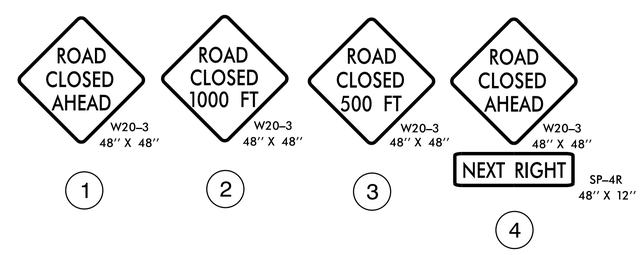

NOTES:

- ALL DETOUR SIGN LOCATIONS ARE APPROXIMATE. FOR SIGNS 1-4, SEE ROADWAY STANDARD DRAWING NO. 1101.03, SHEET 1 OF 9 FOR SIGN PLACEMENT AND APPLICABLE NOTES.

- ALL DETOUR SIGNS ARE BLACK ON ORANGE UNLESS OTHERWISE NOTED.

- MAINTAIN ACCESS TO ADJACENT DRIVEWAYS AT ALL TIMES.

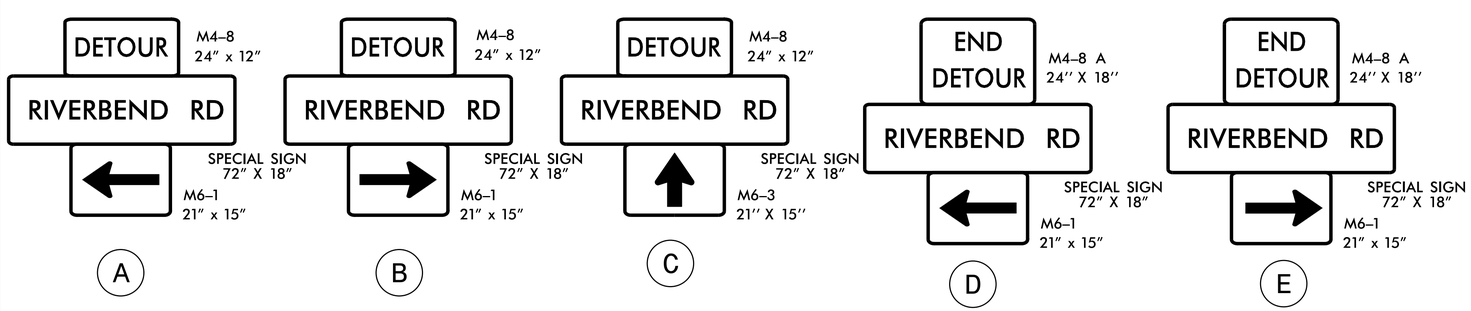

DOCUMENT NOT CONSIDERED FINAL UNLESS ALL SIGNATURES COMPLETED

APPROVED:_____ DATE:_____

SEAL

DocuSigned by: RD Odell 7B1C5D7D0D0D4A1... NORTH CAROLINA PROFESSIONAL SEAL 27933 ENGINEER R. D. ODELL 1/7/2019

DIVISION OF HIGHWAYS STATE OF NORTH CAROLINA DEPARTMENT OF TRANSPORTATION WORK ZONE TRAFFIC CONTROL

LOUIS BERGER
1001 Wade Avenue, Suite 400
Raleigh, NC 27605-3322
License No.: F-0840

TEMPORARY TRAFFIC CONTROL PHASING

1/4/2019 2:41:55 PM
$PENTBL$
G:\CKE Projects\CKE2004 Limited Services Division Offices\Group 3\550120\Roadway\Proj\550120_RDY_06_TMP3.dgn

DocuSign Envelope ID: D29822FC-6CDB-4412-8081-C81836485785

PROJECT REFERENCE NO.	SHEET NO.
17BPJ4.RJ13	PMP-1

DocuSigned by: RD Odell 7814D07E8B4B4D1...

NORTH CAROLINA PROFESSIONAL SEAL 27933 ENGINEER R. D. ODELL

1/7/2019

DOCUMENT NOT CONSIDERED FINAL UNLESS ALL SIGNATURES COMPLETED

STATE OF NORTH CAROLINA
DEPARTMENT OF TRANSPORTATION

PAVEMENT MARKING PLANS
MACON COUNTY

LOCATION: BRIDGE NO. 550120 ON SR 1337 OVER ROCKY BRANCH

ROADWAY STANDARD DRAWINGS

THE FOLLOWING ROADWAY STANDARDS AS APPEAR IN "ROADWAY STANDARD DRAWINGS"-ROADWAY DESIGN UNIT-N.C. DEPARTMENT OF TRANSPORTATION-RALEIGH, N.C., DATED JANUARY 2018 ARE APPLICABLE TO THIS PROJECT AND BY REFERENCE HEREBY ARE CONSIDERED A PART OF THESE PLANS:

STD. NO.	TITLE
1205.01	PAVEMENT MARKINGS - LINE TYPES AND OFFSETS
1205.02	PAVEMENT MARKINGS - TWO-LANE AND MULTI-LANE ROADWAYS
1205.12	PAVEMENT MARKINGS - BRIDGES
1261.01	GUARDRAIL AND BARRIER DELINEATOR INSTALLATION
1261.02	GUARDRAIL AND BARRIER DELINEATOR TYPES AND MOUNTING
1262.01	GUARDRAIL END DELINEATION

PAVEMENT MARKING SCHEDULE

ASPHALT PAVEMENT DESIGN
(AS SHOWN)

PAVEMENT MARKING LINES

PA - PAINT - WHITE EDGELINE (4")
PI - PAINT - YELLOW DOUBLE CENTER (4")

GENERAL NOTES

THE FOLLOWING NOTES APPLY AT ALL TIMES FOR THE DURATION OF THE CONSTRUCTION PROJECT, EXCEPT WHEN NOTED IN THE PLAN, OR DIRECTED BY THE ENGINEER.

A) INSTALL PAVEMENT MARKINGS AND PAVEMENT MARKERS ON THE FINAL SURFACE AS FOLLOWS:

ROAD NAME	MARKING	MARKER
SR 1337 (RIVERBEND RD)	PAINT	NONE

B) PLACE TWO APPLICATIONS OF PAINT PAVEMENT MARKINGS ON THE FINAL WEARING SURFACE, PLACE THE SECOND APPLICATION OF PAINT UPON SUFFICIENT DRYING TIME OF THE FIRST.

C) TIE PROPOSED PAVEMENT MARKING LINES TO EXISTING PAVEMENT MARKING LINES.

D) REMOVE/REPLACE ANY CONFLICTING/DAMAGED PAVEMENT MARKINGS AND MARKERS.

PAVEMENT MARKING DETAIL

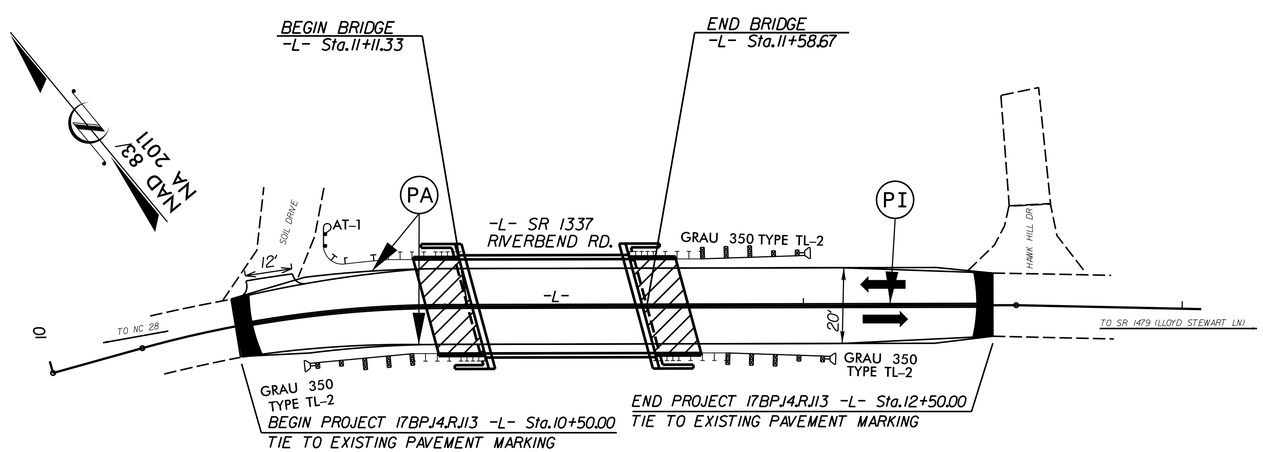

NOTE: PAINT IS TO BE DOUBLE COATED

INDEX

SHEET NO.	DESCRIPTION
PMP-1	PAVEMENT MARKING PLAN TITLE, SCHEDULE, AND PAVEMENT MARKING DETAIL

LOUIS BERGER
1001 Wade Avenue, Suite 400
Raleigh, NC 27605-3322
License No.: F-0840

REVISIONS

1/4/2019 2:41:57 PM
G:\CKE Projects\CKE21004 Limited Services Division Offices\Group 3\550120\Roadway\Proj\550120_RDY_07_PMP_01.dgn
CKE21004_rdy_pmp.tbl

DocuSign Envelope ID: 744C7BFE-0DF1-4403-ABC6-6E201F948B09

0' 20' 40'	PROJECT REFERENCE NO.	SHEET NO.
	17BP.14.R.113	EC-1
	R/W SHEET NO.	

EROSION CONTROL

NAD 83/ NA 2011

NOTES: ANY DEVIATION FROM OPTIONS GIVEN WILL REQUIRE PRIOR APPROVAL BY ENGINEER.

ADDITIONAL EROSION CONTROL DEVICES MAY NEED TO BE INSTALLED AS DIRECTED BY THE ENGINEER.

CONSTRUCTION SEQUENCE

1. INSTALL IMPERVIOUS DIKES AS SHOWN ON PLANS.
2. UTILIZE SPECIAL STILLING BASIN TO DEWATER WORK AREA. CONTRACTOR TO DETERMINE OPTIMAL LOCATION OF SPECIAL STILLING BASIN.
3. REMOVE EXISTING BRIDGE AND INSTALL PROPOSED BRIDGE AND ASSOCIATED APPURTENANCES.
4. REMOVE IMPERVIOUS DIKES AND DISPOSE OF SPECIAL STILLING BASIN.
5. STABILIZE ANY REMAINING DISTURBED AREAS.

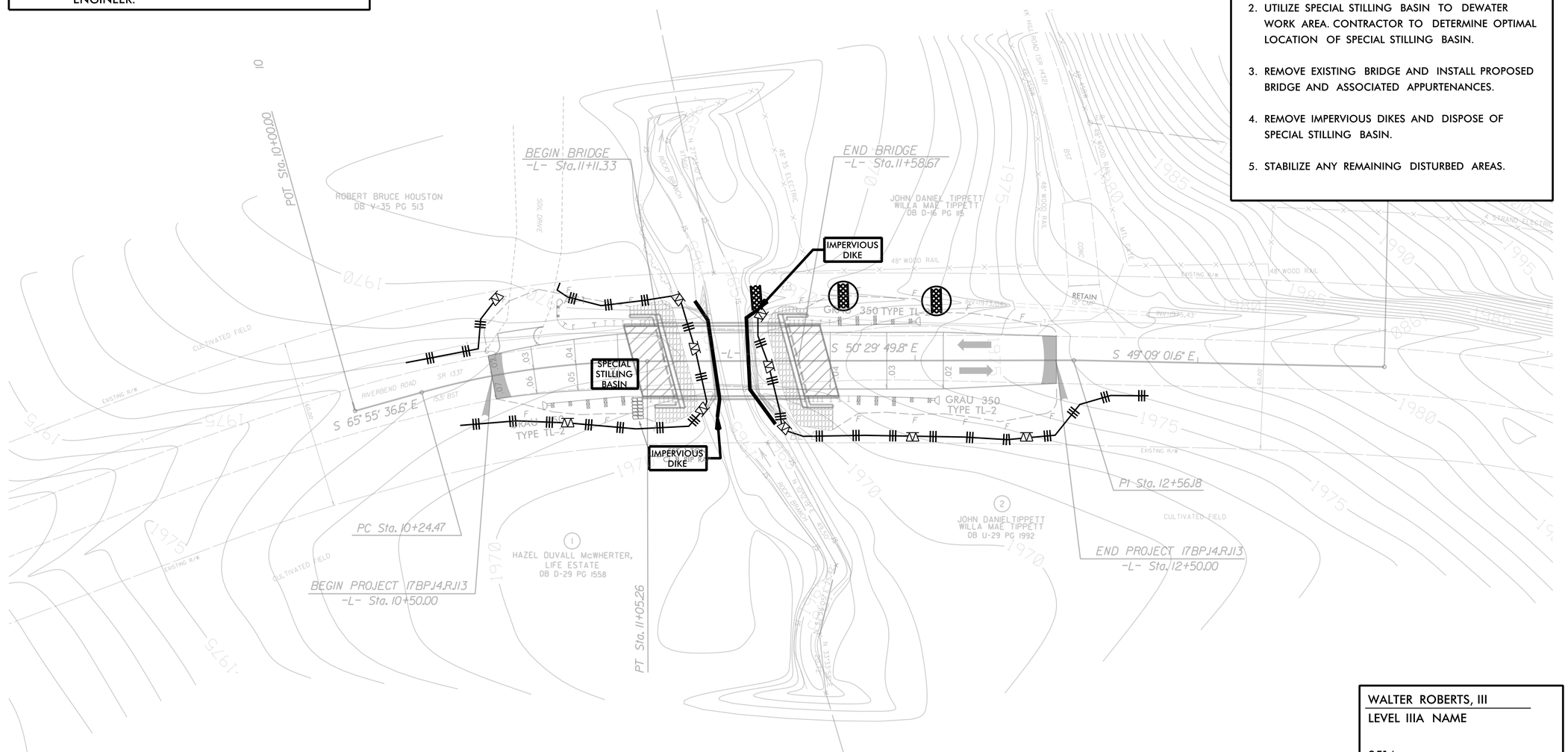

WALTER ROBERTS, III
LEVEL IIIA NAME

3514
LEVEL IIIA CERTIFICATION NO.

ENVIRONMENTALLY SENSITIVE AREA(S) EXIST ON THIS PROJECT

Refer To E. C. Special Provisions for Special Considerations.

Roadway Standard Drawings

The following roadway english standards as appear in "Roadway Standard Drawings"– Roadway Design Unit – N. C. Department of Transportation – Raleigh, N. C., dated January 2012 and the latest revison thereto are applicable to this project and by reference hereby are considered a part of these plans.

1604.01	Railroad Erosion Control Detail	1632.01	Rock Inlet Sediment Trap Type A
1605.01	Temporary Silt Fence	1632.02	Rock Inlet Sediment Trap Type B
1606.01	Special Sediment Control Fence	1632.03	Rock Inlet Sediment Trap Type C
1607.01	Gravel Construction Entrance	1633.01	Temporary Rock Silt Check Type A
1622.01	Temporary Berms and Slope Drains	1633.02	Temporary Rock Silt Check Type B
1630.01	Riser Basin	1634.01	Temporary Rock Sediment Dam Type A
1630.02	Silt Basin Type B	1634.02	Temporary Rock Sediment Dam Type B
1630.03	Temporary Silt Ditch	1635.01	Rock Pipe Inlet Sediment Trap Type A
1630.04	Stilling Basin	1635.02	Rock Pipe Inlet Sediment Trap Type B
1630.05	Temporary Diversion	1640.01	Coir Fiber Baffle
1630.06	Special Stilling Basin	1645.01	Temporary Stream Crossing
1631.01	Matting Installation		

ROADSIDE ENVIRONMENTAL UNIT
DEPARTMENT OF TRANSPORTATION
DIVISION OF HIGHWAYS
RALEIGH, N.C.

2012 STANDARD SPECIFICATIONS

THESE EROSION AND SEDIMENT CONTROL PLANS COMPLY WITH THE REGULATIONS SET FORTH BY THE NCG-010000 GENERAL CONSTRUCTION PERMIT EFFECTIVE AUGUST 3, 2011 ISSUED BY THE NORTH CAROLINA DEPARTMENT OF ENVIRONMENT AND NATURAL RESOURCES DIVISION OF WATER QUALITY.

EROSION AND SEDIMENT CONTROL MEASURES

Std. #	Description	Symbol
1605.01	Temporary Silt Fence	
1606.01	Special Sediment Control Fence	
1633.01	Temporary Rock Silt Check Type-A	
	Temporary Rock Silt Check Type-A with Matting and Polyacrylamide (PAM)	
1630.06	Special Stilling Basin	

TROUT STREAM BUFFER ZONE

LOUIS BERGER
1001 Wade Avenue, Suite 400
Raleigh, NC 27605-3322
License No.: F-0840

ROADWAY PLANS

REVISIONS

1/4/2019 2:41:59 PM
G:\CKE Projects\CKE21004 Limited Services Division Offices\Group 3\550120\Roadway\Proj\550120_RDY_08_EC_01.dgn
G:\CADD\Plot\CKE21004\Group 3\CKE21004_Group3-rdy_EC.tbl

DocuSign Envelope ID: 744C7BFE-0DF1-4403-ABC6-6E201F948B09

PROJECT REFERENCE NO.	SHEET NO.
I7BPJ4.RJI3	EC-2
R/W SHEET NO.	

STATE OF NORTH CAROLINA
DIVISION OF HIGHWAYS

SOIL STABILIZATION TIMEFRAMES

SITE DESCRIPTION	STABILIZATION TIME	TIMEFRAME EXCEPTIONS
PERIMETER DIKES, SWALES, DITCHES AND SLOPES	7 DAYS	NONE
HIGH QUALITY WATER (HQW) ZONES	7 DAYS	NONE
SLOPES STEEPER THAN 3:1	7 DAYS	IF SLOPES ARE 10' OR LESS IN LENGTH AND ARE NOT STEEPER THAN 2:1, 14 DAYS ARE ALLOWED.
SLOPES 3:1 OR FLATTER	14 DAYS	7 DAYS FOR SLOPES GREATER THAN 50' IN LENGTH.
ALL OTHER AREAS WITH SLOPES FLATTER THAN 4:1	14 DAYS	NONE, EXCEPT FOR PERIMETERS AND HQW ZONES.

REVISIONS

1/4/2019 2:42:02 PM
G:\CKE Projects\CKE21004 Limited Services Division Offices\Group 3\550120\Roadway\Proj\550120_RDY_08_EC_02.dgn
G:\CADD\Plots\CKE21004\Group 3\CKE21004_Group3_rdy_EC.tbl

LOUIS BERGER
1001 Wade Avenue, Suite 400
Raleigh, NC 27605-3322
License No.: F-0840

ROADWAY PLANS

DocuSign Envelope ID: 744C7BFE-0DF1-4403-ABC6-6E201F948B09

PROJECT REFERENCE NO.	SHEET NO.
17BP.14.R.11.3	EC-3
R/W SHEET NO.	

TEMPORARY ROCK SILT CHECK TYPE 'A' WITH EXCELSIOR MATTING AND POLYACRYLAMIDE (PAM)

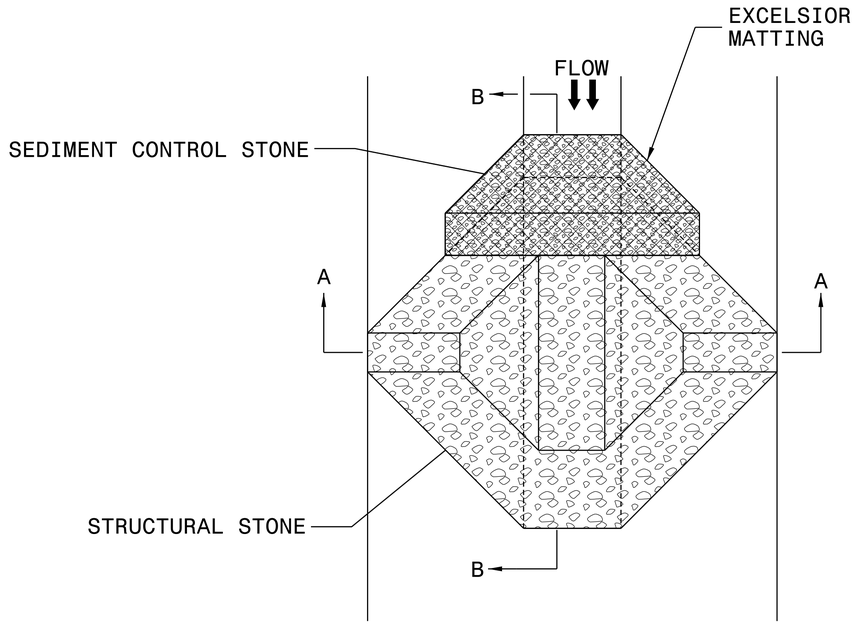

PLAN

NOTES:

INSTALL TEMPORARY ROCK SILT CHECK TYPE A IN ACCORDANCE WITH ROADWAY STANDARD DRAWING NO. 1633.01.

USE EXCELSIOR FOR MATTING MATERIAL AND ANCHOR MATTING SECTION AT TOP AND BOTTOM WITH CLASS B STONE.

PRIOR TO POLYACRYLAMIDE (PAM) APPLICATION, OBTAIN A SOIL SAMPLE FROM PROJECT LOCATION, AND FROM OFFSITE MATERIAL, AND ANALYZE FOR APPROPRIATE PAM FLOCCULANT TO BE APPLIED TO EACH ROCK SILT CHECK.

INITIALLY APPLY 4 OUNCES OF POLYACRYLAMIDE (PAM) TO TOP OF MATTING SECTION AND AFTER EVERY RAINFALL EVENT THAT EQUALS OR EXCEEDS 0.50 INCHES.

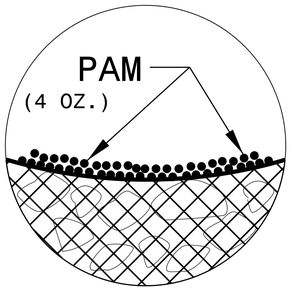

INSET A

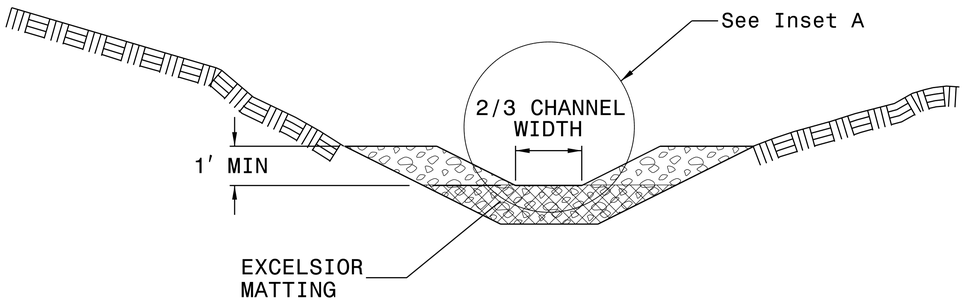

SECTION A-A

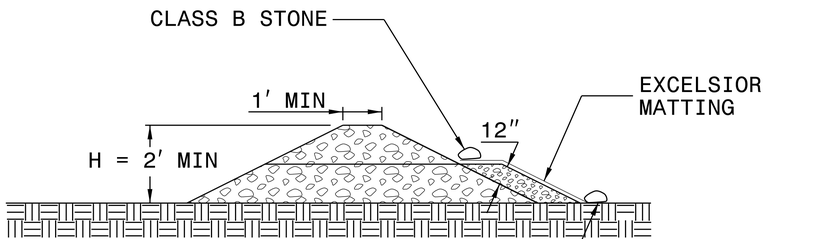

SECTION B-B

NOT TO SCALE

LOUIS BERGER
1001 Wade Avenue, Suite 400
Raleigh, NC 27605-3322
License No.: F-0840

ROADWAY PLANS

REVISIONS

1/4/2019 2:42:03 PM
G:\CKE Projects\CKE21004 Limited Services Division Offices\Group 3\550120\Roadway\Proj\550120_RDY_08_EC_03.dgn
G:\CADD\Plot\CKE21004\Group 3\CKE21004_Group3_rdy_EC.tbl

DocuSign Envelope ID: DEF7D17D-D3BA-424F-BD5B-1F6D7F3A412F

TIP PROJECT: 17BP.14.R.113

CONTRACT: DN00274

STATE OF NORTH CAROLINA
DIVISION OF HIGHWAYS

T.I.P. NO.	SHEET NO.
17BP.14.R.113	UO–1

UTILITIES BY OTHERS PLANS
MACON COUNTY

NOTE:
ALL UTILITY WORK SHOWN ON THIS SHEET IS DONE BY OTHERS.
NO PAYMENT WILL BE MADE TO THE CONTRACTOR FOR UTILITY WORK SHOWN ON THIS SHEET.

LOCATION: BRIDGE NO. 120 ON SR 1337 OVER ROCKY BRANCH

TYPE OF WORK: UTILITIES BY OTHERS

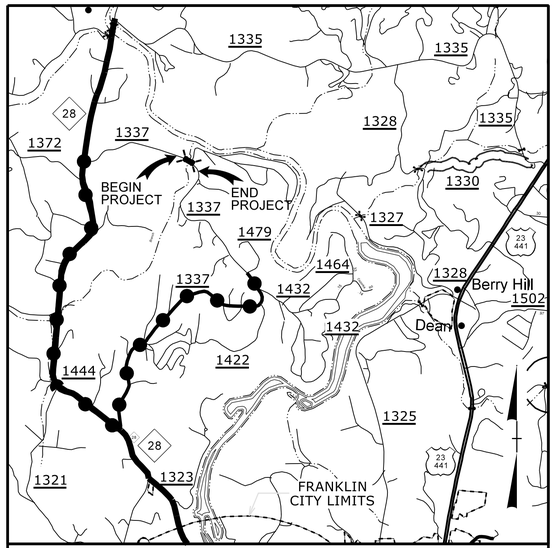

VICINITY MAP NTS

OFF–SITE DETOUR

100% PLANS

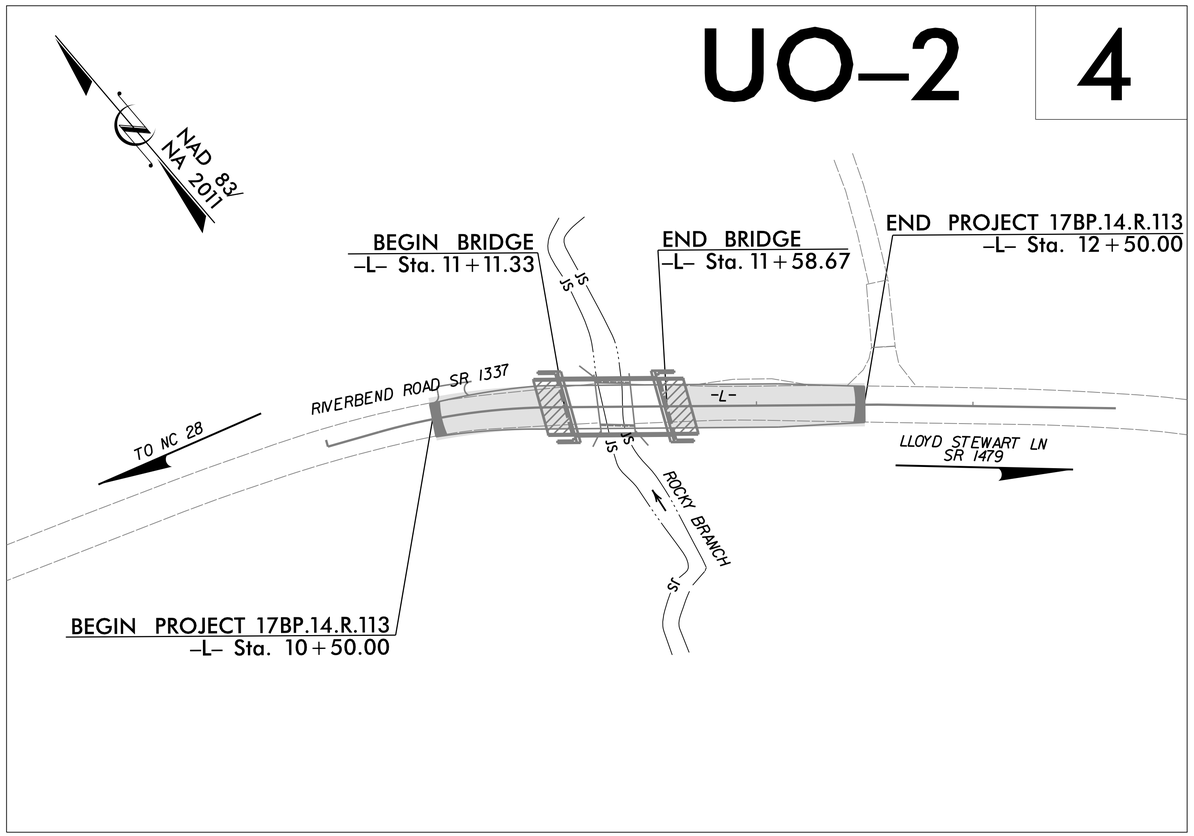

NCDOT CONTACT:
ADAM DOCKERY
HIGHWAY DIVISION 14
BRIDGE PROGRAM MANAGER
828–488–0902

GRAPHIC SCALE

20 10 0 20 40
PLANS

INDEX OF SHEETS

SHEET NO.:	DESCRIPTION:
UO–1	TITLE SHEET
UO–2	UBO PLAN SHEET

UTILITY OWNERS WITH CONFLICTS

(A) TELEPHONE – FRONTIER COMMUNICATIONS

PREPARED IN THE OFFICE OF:
DAVIS • MARTIN • POWELL
ENGINEERS & SURVEYORS
6415 OLD PLANK RD. HIGH POINT, NC 27265
PHONE: (336)886-4821 FAX: (336)886-4458
WWW.DMP-INC.COM LICENSE: F-0245

Randy McNeill, P.E. CONSULTANT CONTACT #1
Andy Larrick, P.E. CONSULTANT CONTACT #2

DIVISION OF HIGHWAYS
DIVISION 14
253 Webster Road
Sylva, NC 28779
PHONE (828) 524–1964
FAX (828) 586–4043

Bob Golding DIVISION UTILITY ENGINEER
Bill Green DIVISION UTILITY COORDINATOR

$$$$SYSTIME$$$$
$$$$USERNAME$$$$
$$$$DGN$$$$

DocuSign Envelope ID: DEF7D17D-D3BA-424F-BD5B-1F6D7F3A412F

PROJECT REFERENCE NO.	SHEET NO.
17BP.14.R.113	UO-2

UTILITIES BY OTHERS

ALL PROPOSED UTILITY WORK SHOWN ON THIS SHEET WILL BE DONE BY OTHERS. NO PAYMENT WILL BE MADE TO THE CONTRACTOR FOR PROPOSED UTILITY WORK SHOWN ON THIS SHEET.

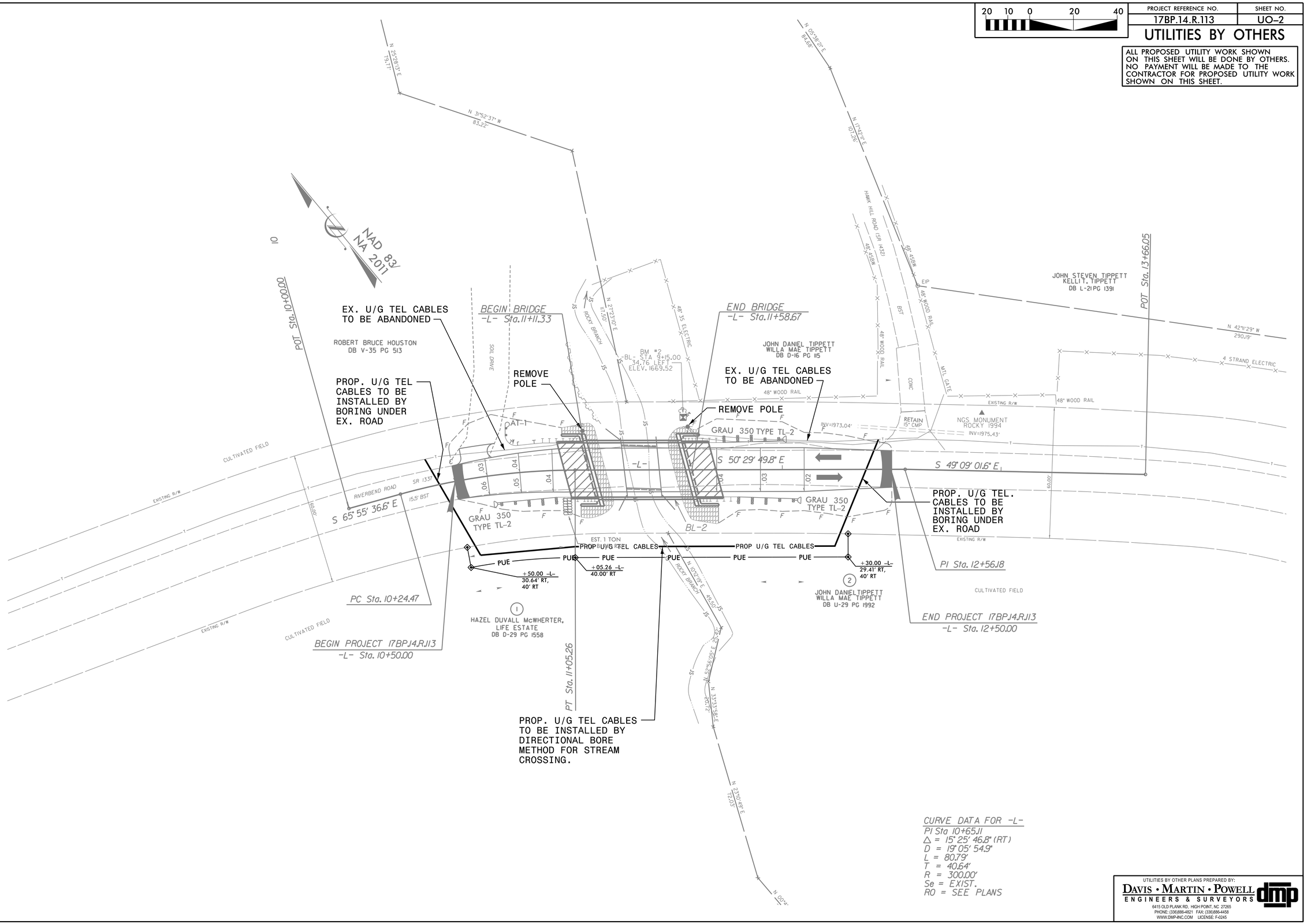

CURVE DATA FOR -L-
PI Sta 10+65.11
Δ = 15° 25' 46.8" (RT)
D = 19° 05' 54.9"
L = 80.79'
T = 40.64'
R = 300.00'
Se = EXIST.
RO = SEE PLANS

UTILITIES BY OTHER PLANS PREPARED BY:
DAVIS • MARTIN • POWELL
ENGINEERS & SURVEYORS
6415 OLD PLANK RD. HIGH POINT, NC 27265
PHONE: (336)886-6521 FAX: (336)886-4458
WWW.DMPINC.COM LICENSE: F-0245

$$$$SYSTIME$$$$
$$$$USERNAME$$$$