09/08/99

TIP PROJECT: 17BP.14.R.66

CONTRACT: DN00188

See Sheet 1-A For Index of Sheets
See Sheet 1-B For Conventional Symbols

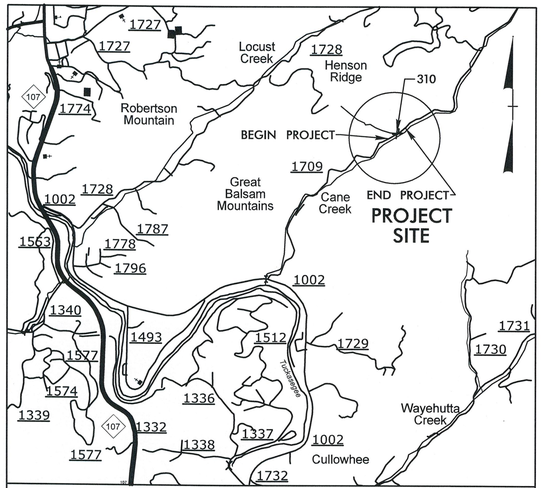

VICINITY MAP

STATE OF NORTH CAROLINA
DIVISION OF HIGHWAYS

JACKSON COUNTY

STATE	STATE PROJECT REFERENCE NO.	SHEET NO.	TOTAL SHEETS
N.C.	17BP.14.R.66	1	

STATE PROJ. NO.	F. A. PROJ. NO.	DESCRIPTION
17BP.14.R.66		PE, R/W, UTIL
17BP.14.R.66		CONST

LOCATION: BRIDGE NO. 310 OVER CANE CREEK ON SR 1709 (CANE CREEK RD)

TYPE OF WORK: GRADING, DRAINAGE, PAVING AND STRUCTURE

TO NC 107

TO US 74 /US 23

NAD 83/
NSRS 2007

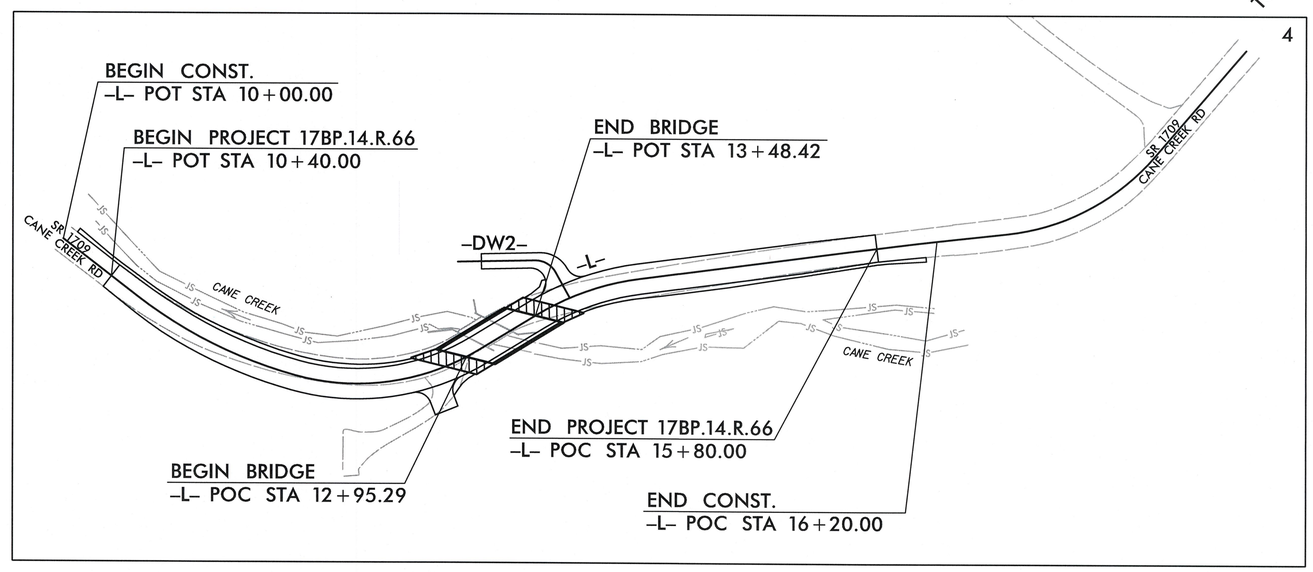

GRAPHIC SCALES

50 25 0 50 100
PLANS

50 25 0 50 100
PROFILE (HORIZONTAL)

10 5 0 10 20
PROFILE (VERTICAL)

DESIGN DATA

ADT 2008 = 500
V = 25 MPH
FUNC CLASS = LOCAL
SUB-REGIONAL TIER

PROJECT LENGTH

LENGTH ROADWAY STATE PROJECT 17BP.14.R.66 = 0.092 MILES
LENGTH STRUCTURES STATE PROJECT 17BP.14.R.66 = 0.010 MILES
TOTAL LENGTH STATE PROJECT 17BP.14.R.66 = 0.102 MILES

NCDOT CONTACT: JOSHUA DEYTON, PE
PROJECT ENGINEER

Prepared In the Office of:

AECOM
NC FIRM LICENSE No: F-0342
701 Corporate Center Drive, Suite 475
Raleigh, NC 27607
(919) 854-6200 - (919) 854-6259(FAX)

2012 STANDARD SPECIFICATIONS

RIGHT OF WAY DATE:
APRIL 17, 2013

LETTING DATE:

LEN HILL, PE
PROJECT ENGINEER

CLAUDETTE M.K. ROQUE, PE
PROJECT DESIGN ENGINEER

HYDRAULICS ENGINEER

NORTH CAROLINA PROFESSIONAL SEAL 14101 ENGINEER JOHN M. KAMPMANN

SIGNATURE: John M. Kampmann P.E. 7/10/14

ROADWAY DESIGN ENGINEER

NORTH CAROLINA PROFESSIONAL SEAL 17306 ENGINEER CLAUDETTE M.K. ROQUE

SIGNATURE: Claudette M.K. Roque P.E. 7/10/14

DIVISION OF HIGHWAYS STATE OF NORTH CAROLINA

STATE OF NORTH CAROLINA DEPARTMENT OF TRANSPORTATION

P.E.
STATE HIGHWAY DESIGN ENGINEER

10:59:19 AM
r:\roadway\Proj\49-0310_rdy_tsh.dgn
RoqueC

PROJECT REFERENCE NO.	SHEET NO.
17BP.14.R.66	1-A

ROADWAY DESIGN ENGINEER

NORTH CAROLINA PROFESSIONAL SEAL 038501 ENGINEER JAMES E. HUGHBANKS

INDEX OF SHEETS, LIST OF STANDARD DRAWINGS & GENERAL NOTES

INDEX OF SHEETS

SHEET NUMBER	SHEET
1	TITLE SHEET
1-A	INDEX OF SHEETS, GENERAL NOTES, AND LIST OF STANDARDS
1-B	CONVENTIONAL SYMBOLS
1-C	SURVEY CONTROL SHEET
1-D	CENTERLINE COORDINATE LIST
2 THRU 2-A	TYPICAL SECTIONS, PAVEMENT SCHEDULE, AND WEDGING DETAIL
2-B	STRUCTURE ANCHOR UNITS TYPE III DETAIL (TO BE USED IN LIEU OF STD)
2-C	TEMPORARY SHORING DETAIL
3	SUMMARY OF QUANTITIES
3-A	SUMMARY OF DRAINAGE QUANTITIES, SUMMARY OF GUARDRAIL, SUMMARY OF PAVEMENT REMOVAL, AND EARTHWORK SUMMARY
4	PLAN AND PROFILE SHEET
TMP-1 THRU TMP-4	TRANSPORTATION MANAGEMENT PLANS
PMP-1	PAVEMENT MARKING PLANS AND SIGNING PLANS
SIG-1 THRU SIG-2	TEMPORARY SIGNAL PLANS
EC-1 THRU EC-3	EROSION CONTROL PLANS & REFORESTATION DETAIL
UO-1	UTILITIES BY OTHERS PLANS
X-1A	CROSS-SECTION SUMMARY SHEET
X-1 THRU X-12	CROSS-SECTIONS
TS-01	STRUCTURE PLANS TITLE SHEET
S-01 THRU S-27	STRUCTURE PLANS
SN	STRUCTURE PLANS - STANDARD NOTES SHEET

GENERAL NOTES:

2012 SPECIFICATIONS
EFFECTIVE: 01-17-12
REVISED: 07/30/12

GRADE LINE:
GRADING AND SURFACING:

THE GRADE LINES SHOWN DENOTE THE FINISHED ELEVATION OF THE PROPOSED SURFACING AT GRADE POINTS SHOWN ON THE TYPICAL SECTIONS. GRADE LINES MAY BE ADJUSTED AT THEIR BEGINNING AND ENDING AND AT STRUCTURES AS DIRECTED BY THE ENGINEER IN ORDER TO SECURE A PROPER TIE-IN.

CLEARING:

CLEARING ON THIS PROJECT SHALL BE PERFORMED TO THE LIMITS ESTABLISHED BY METHOD II.

THE REMOVAL OF THE DWELLING ON PARCEL NO. 3 WILL BE DONE IN ACCORDANCE WITH SEC. 200 OF THE 2012 NORTH CAROLINA DEPARTMENT OF TRANSPORTATION STANDARD SPECIFICATIONS FOR ROADS AND STRUCTURES AND WILL BE PAID AS PART OF COMPREHENSIVE GRADING (LUMP SUM).

SUPERELEVATION:

ALL CURVES ON THIS PROJECT SHALL BE SUPERELEVATED IN ACCORDANCE WITH STD. NO. 225.04 USING THE RATE OF SUPERELEVATION AND RUNOFF SHOWN ON THE PLANS. SUPERELEVATION IS TO BE REVOLVED ABOUT THE GRADE POINTS SHOWN ON THE TYPICAL SECTIONS.

SHOULDER CONSTRUCTION:

ASPHALT, EARTH, AND CONCRETE SHOULDER CONSTRUCTION ON THE HIGH SIDE OF SUPERELEVATED CURVES SHALL BE IN ACCORDANCE WITH STD. NO. 560.01.

SIDE ROADS:

THE CONTRACTOR WILL BE REQUIRED TO DO ALL NECESSARY WORK TO PROVIDE SUITABLE CONNECTIONS WITH ALL ROADS, STREETS, AND DRIVES ENTERING THIS PROJECT. THIS WORK WILL BE PAID FOR AT THE CONTRACT UNIT PRICE FOR THE PARTICULAR ITEMS INVOLVED.

GUARDRAIL:

THE GUARDRAIL LOCATIONS SHOWN ON THE PLANS MAY BE ADJUSTED DURING CONSTRUCTION AS DIRECTED BY THE ENGINEER. THE CONTRACTOR SHOULD CONSULT WITH THE ENGINEER PRIOR TO ORDERING GUARDRAIL MATERIAL.

TEMPORARY SHORING:

SHORING REQUIRED FOR THE MAINTENANCE OF TRAFFIC NOT SHOWN ON THE PLANS WILL BE PAID FOR AT THE CONTRACT PRICE FOR "TEMPORARY SHORING".

END BENTS:

THE ENGINEER SHALL CHECK THE STRUCTURE END BENT PLANS, DETAILS, AND CROSS-SECTION PRIOR TO SETTING OF THE SLOPE STAKES FOR THE EMBANKMENT OR EXCAVATION APPROACHING A BRIDGE.

UTILITIES:

UTILITY OWNERS ON THIS PROJECT ARE WESTERN CAROLINA UNIVERSITY AND FRONTIER COMMUNICATIONS.
ANY RELOCATION OF EXISTING UTILITIES WILL BE ACCOMPLISHED BY OTHERS.

RIGHT-OF-WAY MARKERS:

ALL RIGHT-OF-WAY MARKERS ON THIS PROJECT SHALL BE PLACED BY CONTRACT IN ACCORDANCE WITH SECTION 801 OF THE 2012 NORTH CAROLINA STANDARD SPECIFICATIONS FOR ROADS AND STRUCTURES.

2012 ROADWAY ENGLISH STANDARD DRAWINGS

The following Roadway Standards as appear in "Roadway Standard Drawings" Highway Design Branch - N. C. Department of Transportation - Raleigh, N. C., Dated January, 2012 are applicable to this project and by reference hereby are considered a part of these plans:

STD.NO.	TITLE
DIVISION 2 - EARTHWORK	
200.02	Method of Clearing - Method II
225.02	Guide for Grading Subgrade - Secondary and Local
225.04	Method of Obtaining Superelevation - Two Lane Pavement
DIVISION 3 - PIPE CULVERTS	
300.01	Method of Pipe Installation
310.10	Driveway Pipe Construction
DIVISION 4 - MAJOR STRUCTURES	
422.10	Reinforced Bridge Approach Fills
DIVISION 5 - SUBGRADE, BASES AND SHOULDERS	
560.01	Method of Shoulder Construction - High Side of Superelevated Curve - Method I
DIVISION 8 - INCIDENTALS	
862.01	Guardrail Placement
862.02	Guardrail Installation
876.02	Guide for Rip Rap at Pipe Outlets
876.04	Drainage Ditches with Class 'B' Rip Rap

PROJECT REFERENCE NO.	SHEET NO.
17BP.14.R.66	1-B

Note: Not to Scale

****S.U.E. = Subsurface Utility Engineering***

STATE OF NORTH CAROLINA
DIVISION OF HIGHWAYS

CONVENTIONAL PLAN SHEET SYMBOLS

BOUNDARIES AND PROPERTY:

- State Line
- County Line
- Township Line
- City Line
- Reservation Line
- Property Line
- Existing Iron Pin — EIP
- Property Corner
- Property Monument — ECM
- Parcel/Sequence Number — 123
- Existing Fence Line
- Proposed Woven Wire Fence
- Proposed Chain Link Fence
- Proposed Barbed Wire Fence
- Existing Wetland Boundary — WLB
- Proposed Wetland Boundary — WLB
- Existing Endangered Animal Boundary — EAB
- Existing Endangered Plant Boundary — EPB
- Known Soil Contamination: Boundary or Site
- Potential Soil Contamination: Boundary or Site

BUILDINGS AND OTHER CULTURE:

- Gas Pump Vent or U/G Tank Cap
- Sign — S
- Well — W
- Small Mine
- Foundation
- Area Outline
- Cemetery
- Building
- School
- Church
- Dam

HYDROLOGY:

- Stream or Body of Water
- Hydro, Pool or Reservoir
- Jurisdictional Stream — JS
- Buffer Zone 1 — BZ 1
- Buffer Zone 2 — BZ 2
- Flow Arrow
- Disappearing Stream
- Spring
- Wetland
- Proposed Lateral, Tail, Head Ditch — FLOW
- False Sump

RAILROADS:

- Standard Gauge — CSX TRANSPORTATION
- RR Signal Milepost — MILEPOST 35
- Switch — SWITCH
- RR Abandoned
- RR Dismantled

RIGHT OF WAY:

- Baseline Control Point
- Existing Right of Way Marker
- Existing Right of Way Line
- Proposed Right of Way Line — RW
- Proposed Right of Way Line with Iron Pin and Cap Marker — RW
- Proposed Right of Way Line with Concrete or Granite Marker — RW
- Existing Control of Access — CA
- Proposed Control of Access — CA
- Existing Easement Line — E
- Proposed Temporary Construction Easement — E
- Proposed Temporary Drainage Easement — TDE
- Proposed Permanent Drainage Easement — PDE
- Proposed Permanent Drainage / Utility Easement — DUE
- Proposed Permanent Utility Easement — PUE
- Proposed Temporary Utility Easement — TUE
- Proposed Aerial Utility Easement — AUE
- Proposed Permanent Easement with Iron Pin and Cap Marker

ROADS AND RELATED FEATURES:

- Existing Edge of Pavement
- Existing Curb
- Proposed Slope Stakes Cut — C
- Proposed Slope Stakes Fill — F
- Proposed Curb Ramp — CR
- Curb Cut Future Ramp — CCFR
- Existing Metal Guardrail
- Proposed Guardrail
- Existing Cable Guiderail
- Proposed Cable Guiderail
- Equality Symbol
- Pavement Removal

VEGETATION:

- Single Tree
- Single Shrub
- Hedge
- Woods Line
- Orchard
- Vineyard — Vineyard

EXISTING STRUCTURES:

MAJOR:

- Bridge, Tunnel or Box Culvert — CONC
- Bridge Wing Wall, Head Wall and End Wall — CONC WW

MINOR:

- Head and End Wall — CONC HW
- Pipe Culvert
- Footbridge
- Drainage Box: Catch Basin, DI or JB — CB
- Paved Ditch Gutter
- Storm Sewer Manhole — S
- Storm Sewer — S

UTILITIES:

POWER:

- Existing Power Pole
- Proposed Power Pole
- Existing Joint Use Pole
- Proposed Joint Use Pole
- Power Manhole — P
- Power Line Tower
- Power Transformer
- U/G Power Cable Hand Hole
- H-Frame Pole
- Recorded U/G Power Line — P
- Designated U/G Power Line (S.U.E.*) — P

TELEPHONE:

- Existing Telephone Pole
- Proposed Telephone Pole
- Telephone Manhole — T
- Telephone Booth
- Telephone Pedestal — T
- Telephone Cell Tower
- U/G Telephone Cable Hand Hole — HH
- Recorded U/G Telephone Cable — T
- Designated U/G Telephone Cable (S.U.E.*) — T
- Recorded U/G Telephone Conduit — TC
- Designated U/G Telephone Conduit (S.U.E.*) — TC
- Recorded U/G Fiber Optics Cable — T FO
- Designated U/G Fiber Optics Cable (S.U.E.*) — T FO

WATER:

- Water Manhole — W
- Water Meter
- Water Valve
- Water Hydrant
- Recorded U/G Water Line — W
- Designated U/G Water Line (S.U.E.*) — W
- Above Ground Water Line — A/G Water

TV:

- TV Satellite Dish
- TV Pedestal — C
- TV Tower
- U/G TV Cable Hand Hole — HH
- Recorded U/G TV Cable — TV
- Designated U/G TV Cable (S.U.E.*) — TV
- Recorded U/G Fiber Optic Cable — TV FO
- Designated U/G Fiber Optic Cable (S.U.E.*) — TV FO

GAS:

- Gas Valve
- Gas Meter
- Recorded U/G Gas Line — G
- Designated U/G Gas Line (S.U.E.*) — G
- Above Ground Gas Line — A/G Gas

SANITARY SEWER:

- Sanitary Sewer Manhole
- Sanitary Sewer Cleanout
- U/G Sanitary Sewer Line — SS
- Above Ground Sanitary Sewer — A/G Sanitary Sewer
- Recorded SS Forced Main Line — FSS
- Designated SS Forced Main Line (S.U.E.*) — FSS

MISCELLANEOUS:

- Utility Pole
- Utility Pole with Base
- Utility Located Object
- Utility Traffic Signal Box — S
- Utility Unknown U/G Line — ?UTL
- U/G Tank; Water, Gas, Oil
- Underground Storage Tank, Approx. Loc. — UST
- A/G Tank; Water, Gas, Oil
- Geoenvironmental Boring
- U/G Test Hole (S.U.E.*)
- Abandoned According to Utility Records — AATUR
- End of Information — E.O.I.

PROJECT REFERENCE NO.	SHEET NO.
17BP.14.R.66	1C-1
Location and Surveys	

SURVEY CONTROL SHEET 49-0310
-FINAL-

BL

POINT	DESC.	NORTH	EAST	ELEVATION	L STATION	OFFSET
1	BL-1	604753.7334	755978.2699	2185.52	11+20.57	7.43 RT
2	BL-2	604859.8990	756135.6900	2199.24	13+08.64	14.34 RT
3	BL-3	605065.2172	756266.6870	2220.77	15+56.48	13.53 LT

****
BM1 ELEVATION = 2202.74
N 604819 E 756142
L STATION 12+79.42 38.20' RIGHT
RR SPIKE IN 17" WALNUT TREE
****

-FINAL- ROW MARKER IRON PIN AND CAP-E

ALIGN	STATION	OFFSET	NORTH	EAST
L	13+14.00	-30.92	604882.2140	756095.9494
L	14+15.00	-70.00	605006.2135	756123.5748
L	15+45.00	-50.00	605083.6378	756233.1779
L	15+60.00	-22.50	605074.1345	756263.0265
L	14+10.05	26.15	604936.3036	756189.8062
L	13+04.75	35.00	604848.3851	756153.2780
L	11+79.02	35.00	604743.8513	756045.7951
L	10+61.97	35.00	604721.7737	755917.8050
L	10+41.66	22.50	604734.7629	755897.8064

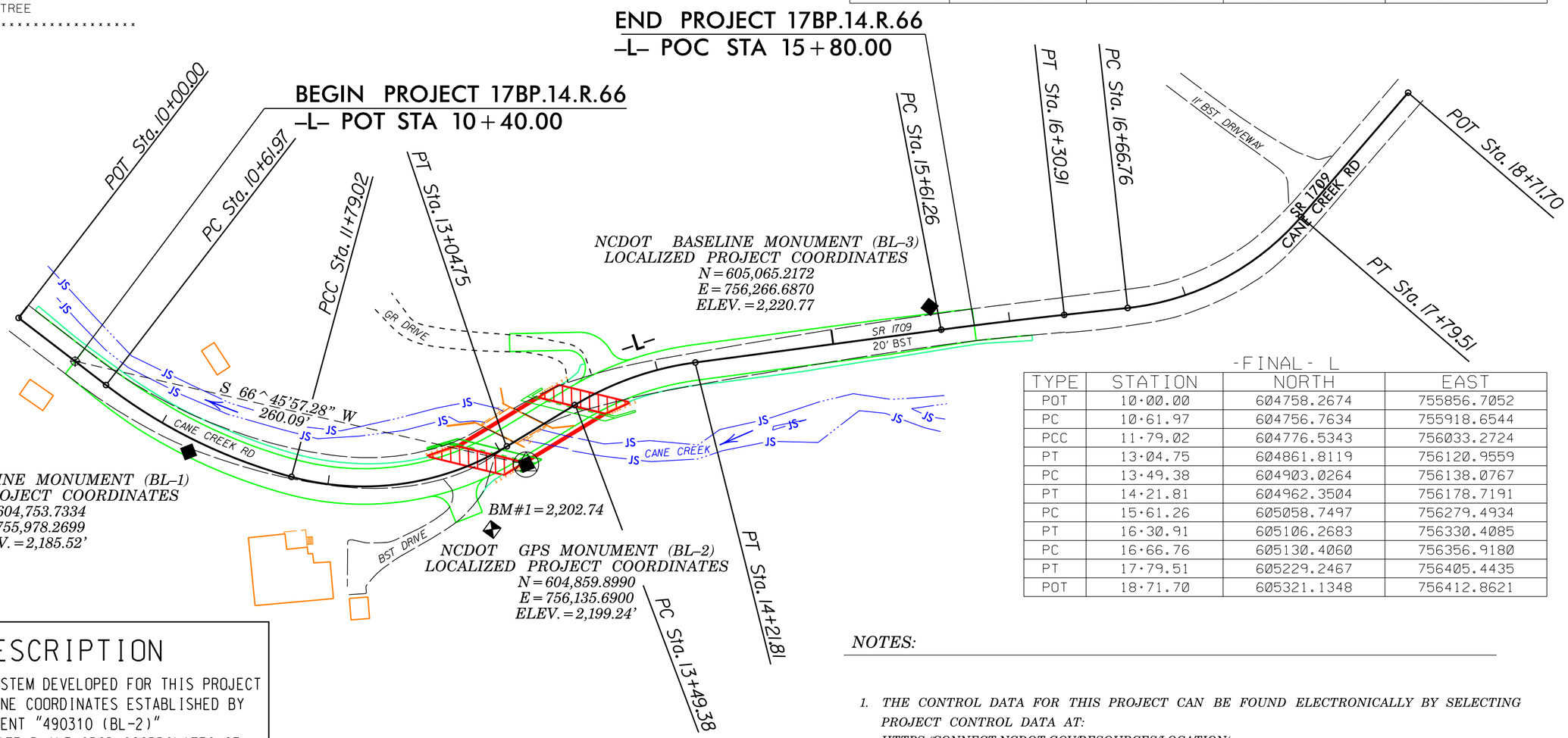

-FINAL- L

TYPE	STATION	NORTH	EAST
POT	10+00.00	604758.2674	755856.7052
PC	10+61.97	604756.7634	755918.6544
PCC	11+79.02	604776.5343	756033.2724
PT	13+04.75	604861.8119	756120.9559
PC	13+49.38	604903.0264	756138.0767
PT	14+21.81	604962.3504	756178.7191
PC	15+61.26	605058.7497	756279.4934
PT	16+30.91	605106.2683	756330.4085
PC	16+66.76	605130.4060	756356.9180
PT	17+79.51	605229.2467	756405.4435
POT	18+71.70	605321.1348	756412.8621

DATUM DESCRIPTION

THE LOCALIZED COORDINATE SYSTEM DEVELOPED FOR THIS PROJECT IS BASED ON THE STATE PLANE COORDINATES ESTABLISHED BY NCDOT FOR MONUMENT "490310 (BL-2)"
WITH NAD 83/NSRS 2007 STATE PLANE GRID COORDINATES OF
NORTHING: 604859.8990(ft) EASTING: 756135.6900(ft)
ELEVATION: 2199.24(ft)
THE AVERAGE COMBINED GRID FACTOR USED ON THIS PROJECT (GROUND TO GRID) IS: 0.999773383
THE N.C. LAMBERT GRID BEARING AND LOCALIZED HORIZONTAL GROUND DISTANCE FROM "490310 (BL-2)" TO -L- STATION 10+40.00 IS
S 66°45'57.28"W 260.09'
ALL LINEAR DIMENSIONS ARE LOCALIZED HORIZONTAL DISTANCES
VERTICAL DATUM USED IS NAVD 88

GEOIDAL MODEL: G09NC
NOTE: DRAWING NOT TO SCALE

NOTES:

1. *THE CONTROL DATA FOR THIS PROJECT CAN BE FOUND ELECTRONICALLY BY SELECTING PROJECT CONTROL DATA AT:*
HTTPS://CONNECT.NCDOT.GOV/RESOURCES/LOCATION/

THE FILES TO BE FOUND ARE AS FOLLOWS:
490310_LS_CONTROL.TXT

SITE CALIBRATION INFORMATION HAS NOT BEEN PROVIDED FOR THIS PROJECT. IF FURTHER INFORMATION IS NEEDED, PLEASE CONTACT THE LOCATION AND SURVEYS UNIT.

△ *INDICATES GEODETIC CONTROL MONUMENTS USED OR SET FOR HORIZONTAL PROJECT CONTROL BY THE NCDOT LOCATION AND SURVEYS UNIT.*
PROJECT CONTROL ESTABLISHED USING GLOBAL POSITIONING SYSTEM.

6/2/99
01-DEC-2014 08:20
C:\Sylva\Current_Jobs\sylva\bridge\sps6\survey_control_090414\barry\sent\490310_ls_lc-1.dgn
bhamrick

PROJECT REFERENCE NO.	SHEET NO.
17BP.14.R.66	1–D

CENTERLINE COORDINATE LIST

Point #	Chain	Station	Northing (Y)	Easting (X)
1	L	10+00.00	604758.2674	755856.7052
2	L	11+00.00	604758.2497	755956.6324
3	L	12+00.00	604785.3421	756052.2973
4	L	13+00.00	604857.4521	756119.0660
5	L	14+00.00	604946.3344	756163.9394
6	L	15+00.00	605016.4007	756235.2225
7	L	16+00.00	605085.3330	756307.6667
8	L	17+00.00	605155.3117	756378.8241
9	L	18+00.00	605249.6718	756407.0925
10	L	18+71.70	605321.1348	756412.8621
11	DW2	10+00.00	604925.0004	756149.0729
12	DW2	10+86.69	604900.3801	756075.4971

8/17/99

USER: RoguC
DATE: 7/10/2014
TIME: 10:53:24 AM
DGN: I:\roadway\Proj\49-0330_rdy_pat30D.dgn

8/17/99

PROJECT REFERENCE NO.	SHEET NO.
17BP.14.R.66	2
R/W SHEET NO.	
ROADWAY DESIGN ENGINEER	PAVEMENT DESIGN ENGINEER

NORTH CAROLINA PROFESSIONAL SEAL 17306 ENGINEER CLAIRETTE M. K. JOHN 7/10/14

Prepared in the Office of: AECOM NC FIRM LICENSE No: F-0342 701 Corporate Center Drive, Suite 475 RALEIGH, NC 27610 (919) 854-6200 (919) 854-6259 FAX

PAVEMENT SCHEDULE

C1	PROP. APPROX. 3" ASPHALT CONCRETE SURFACE COURSE, TYPE S9.5B, AT AN AVERAGE RATE OF 168 LBS. PER SQ. YD. IN EACH OF TWO LAYERS.
C2	PROP. VAR. DEPTH ASPHALT CONCRETE SURFACE COURSE, TYPE S9.5B, AT AN AVERAGE RATE OF 112 LBS. PER SQ. YD. PER 1" DEPTH TO BE PLACED IN LAYERS NOT TO EXCEED 2" IN DEPTH.
E1	PROP. APPROX. 5" ASPHALT CONCRETE BASE COURSE, TYPE B25.0B, AT AN AVERAGE RATE OF 570 LBS. PER SQ. YD.
E2	PROP. VAR. DEPTH ASPHALT CONCRETE BASE COURSE, TYPE B25.0B, AT AN AVERAGE RATE OF 114 LBS. PER SQ. YD. PER 1" DEPTH TO BE PLACED IN LAYERS NOT LESS THAN 3" IN DEPTH OR GREATER THAN 5½" IN DEPTH.
T	EARTH MATERIAL.
U	EXISTING PAVEMENT.
W	VARIABLE DEPTH ASPHALT PAVEMENT (SEE STANDARD WEDGING DETAIL ON THIS SHEET)

NOTE: PAVEMENT EDGE SLOPES ARE 1:1 UNLESS SHOWN OTHERWISE.

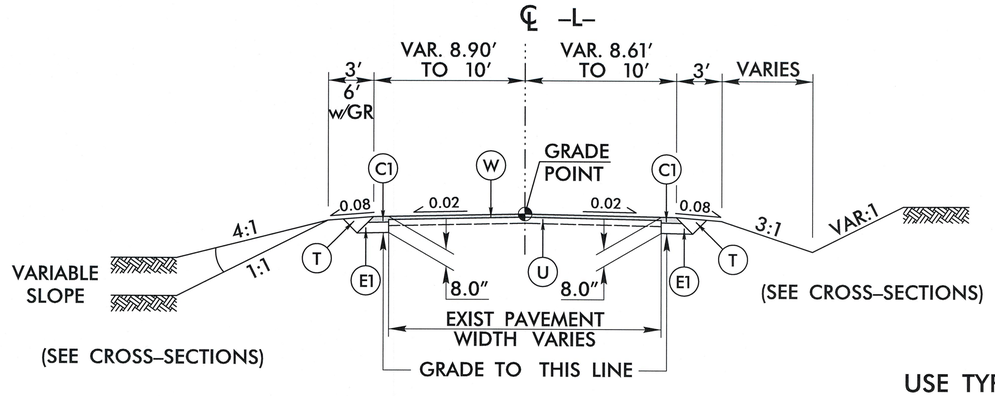

TYPICAL SECTION NO. 1

-L- (CANE CREEK RD)

USE TYPICAL SECTION NO. 1

-L- STA 10+40.00 TO STA 11+50.00
-L- STA 15+30.00 TO STA 15+80.00

NOTE: SHOULDER WORK REQUIRED
FROM -L- STA 10+00.00 TO STA 10+40.00 LT
FROM -L- STA 15+80.00 TO STA 16+20.00 RT

NOTE: EXTRA LENGTH GUARDRAIL POSTS WILL BE NEEDED WHEN STANDARD 3' SHOULDER BEHIND GUARDRAIL (MEASURED FROM FACE) CANNOT BE PROVIDED.

NOTE: PAVE TO FACE OF GUARDRAIL.

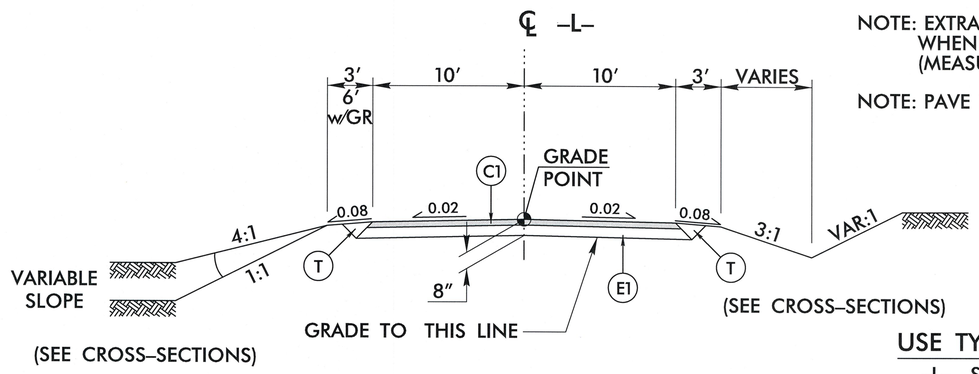

TYPICAL SECTION NO. 2

-L- (CANE CREEK RD)

USE TYPICAL SECTION NO. 2

-L- STA 11+50.00 TO STA 12+95.29 (BEG BRIDGE)
-L- STA 13+48.42 (END BRIDGE) TO STA 15+30.00

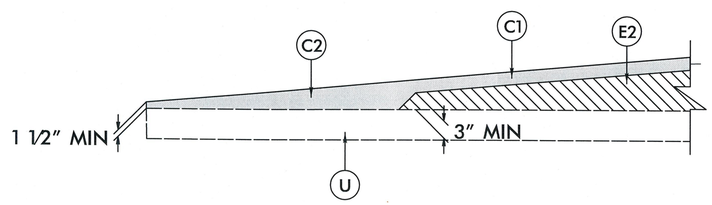

WEDGING DETAIL FOR RESURFACING

USE IN CONJUNCTION WITH TYPICAL SECTION NO. 1

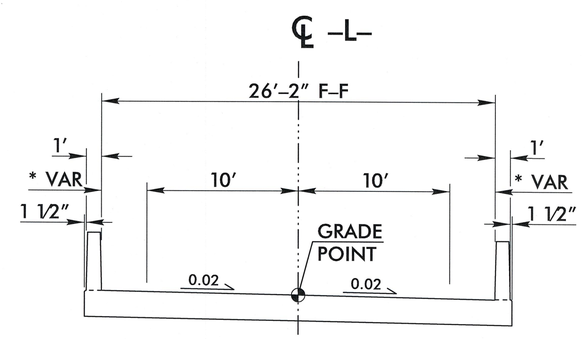

BRIDGE TYPICAL SECTION

FOR BR 310 OVER CANE CREEK

USE BRIDGE TYPICAL SECTION

-L- STA 12+95.29 (BEG BRIDGE) TO STA 13+48.42 (END BRIDGE)

* NOTE: SEE STRUCTURE PLANS

USER: RoyaC
DATE: 7/10/2014
TIME: 10:59:55 AM
DGN: r:\roadway\Proj\r66-0310_rdy_typ.dgn

PROJECT REFERENCE NO.	SHEET NO.
17BP.14.R.66	2-A
R/W SHEET NO.	
ROADWAY DESIGN ENGINEER	PAVEMENT DESIGN ENGINEER

NORTH CAROLINA PROFESSIONAL ENGINEER SEAL 17306 CHARLOTTE M.E. ASSOCIATES

Prepared in the Office of: AECOM 701 Corporate Center Drive, Suite 475 Raleigh, NC 27610 (919) 854-6200 - (919) 854-6259 FAX NC FIRM LICENSE Nos F-0342

PAVEMENT SCHEDULE	
C1	3" S9.5B
C2	VAR. S9.5B
E1	5" B25.0B
E2	VAR. B25.0B
T	EARTH MATERIAL
U	EXIST. PAVEMENT
W	WEDGING

NOTE: PAVEMENT EDGE SLOPES ARE 1:1 UNLESS SHOWN OTHERWISE.

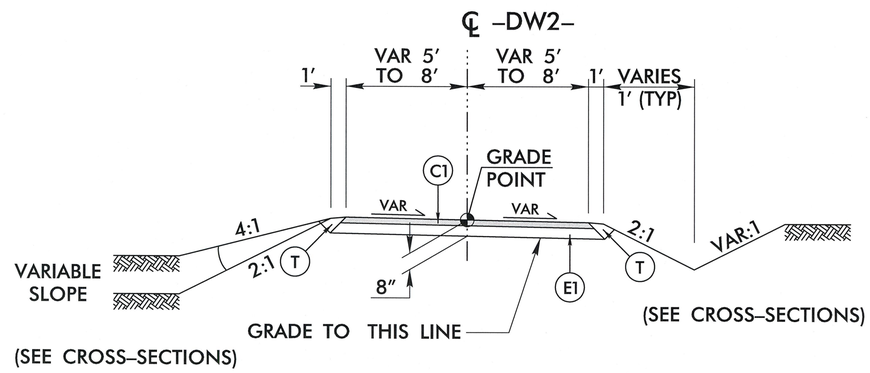

TYPICAL SECTION NO. 3

DRIVEWAYS

USE TYPICAL SECTION NO. 3

-DW2- STA 10+17.65 TO STA 10+71.21

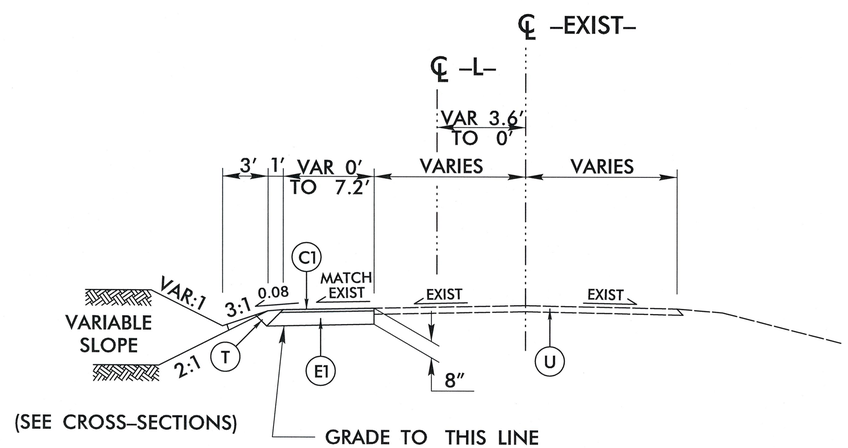

TYPICAL SECTION NO. 4

PHASE 1 TEMP WIDENING
(SEE TM PLANS FOR PHASING)

USE TYPICAL SECTION NO. 4

-L- STA 13+41.32 TO STA 16+00.00 LT

8/17/99

USER: Propuc
DATE: 7/20/2014
TIME: 10:59:27 AM
DGN: n:\roadway\Proj\p49-0310_rdy_typ.dgn

$$$$$$SYSTIME$$$$$
$$$$$$$$$$$$$$$$$$DGN$$$$$$$$$$$$$$$$
$$$USERNAME$$$$

STATE OF NORTH CAROLINA
DEPT. OF TRANSPORTATION
DIVISION OF HIGHWAYS
RALEIGH, N.C.

ENGLISH DETAIL DRAWING FOR
STRUCTURE ANCHOR UNITS
GUARDRAIL ANCHOR UNIT, TYPE III FOR ATTACHMENT TO
RAIL ON BRIDGE - SUB REGIONAL TIER

SHEET 2 OF 7
862d03

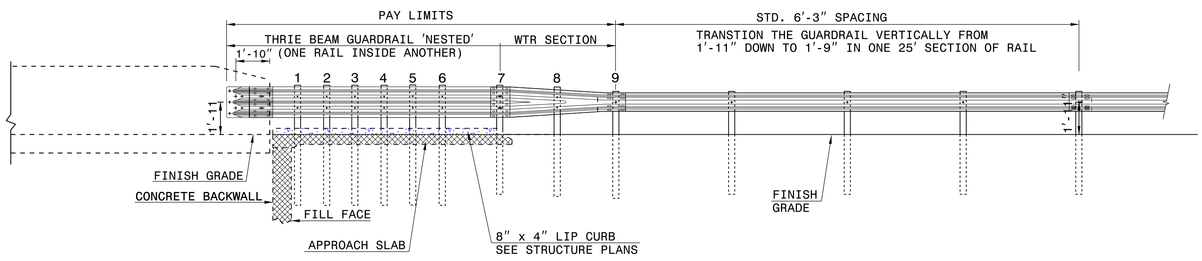

ELEVATION

NOTE:
**POST NOT REQUIRED FOR SKEW ANGLES GREATER THAN 150° OR LESS THAN 30° UNLESS OTHERWISE DIRECTED BY THE ENGINEER.
*THE DISTANCE FROM END OF BRIDGE RAIL TO CENTER LINE OF THE FIRST POST SHOULD BE 11½" IF CONCRETE BACKWALL IS NOT PRESENT.
-SHOULDER BERM GUTTER MUST BE INSTALLED TO THE LIMITS 8" x 4" LIP CURB IS SHOWN IF ANCHOR UNIT IS NOT ADJACENT TO AN APPROACH SLAB.
-MEASURE GUARDRAIL HEIGHT FROM THE TOP OF ADJACENT SURFACE (SHOULDER, BERM, OR GUTTER).
-LAP JOINTS IN THE DIRECTION OF TRAFFIC FLOW.
-SEE SHEET 5 FOR POST SECTIONS 1 THRU 9.

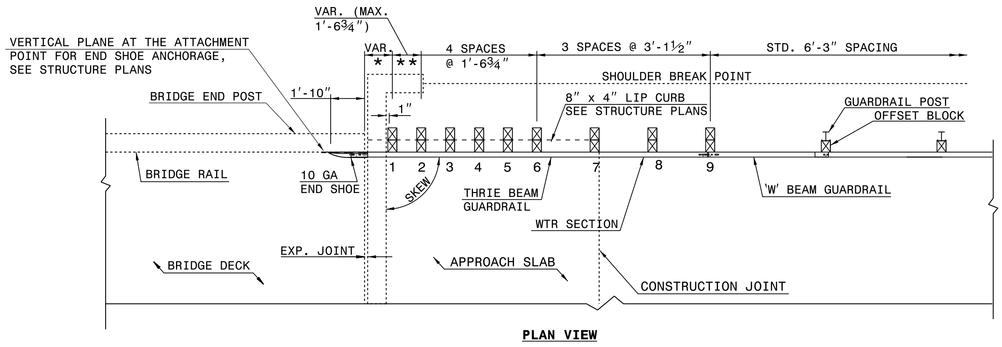

PLAN VIEW

GUARDRAIL ANCHOR UNIT, TYPE III FOR ATTACHMENT TO RAIL ON BRIDGE - SUB REGIONAL TIER

STATE OF NORTH CAROLINA
DEPT. OF TRANSPORTATION
DIVISION OF HIGHWAYS
RALEIGH, N.C.

ENGLISH DETAIL DRAWING FOR
STRUCTURE ANCHOR UNITS
GUARDRAIL ANCHOR UNIT, TYPE III FOR ATTACHMENT TO
RAIL ON BRIDGE - SUB REGIONAL TIER

SHEET 2 OF 7
862d03

STATE OF NORTH CAROLINA
DEPT. OF TRANSPORTATION
DIVISION OF HIGHWAYS
RALEIGH, N.C.

ENGLISH DETAIL DRAWING FOR
STRUCTURE ANCHOR UNITS
GUARDRAIL ANCHOR UNIT, TYPE III

SHEET 3 OF 7
862d03

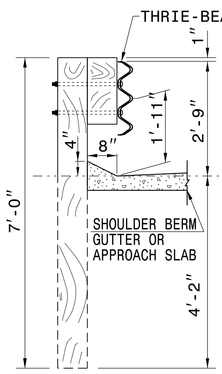

SECTION OF THRIE BEAM POSTS 1 THRU 6

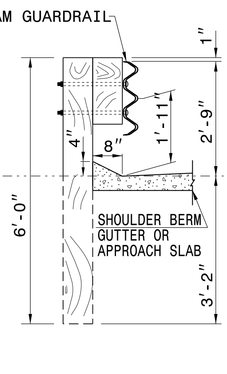

SECTION OF THRIE BEAM POST 7

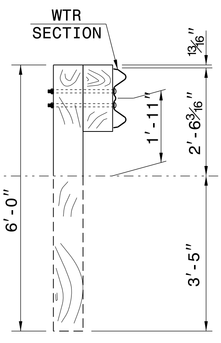

SECTION OF WTR BEAM POST 8

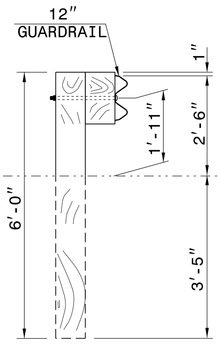

SECTION OF 'W' BEAM POST 9

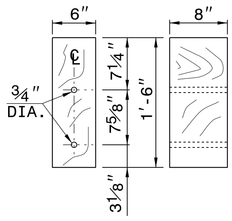

THRIE BEAM OFFSET BLOCK

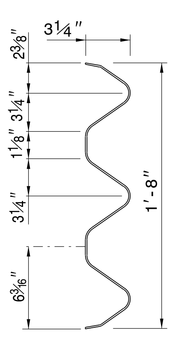

THRIE-BEAM SECTION

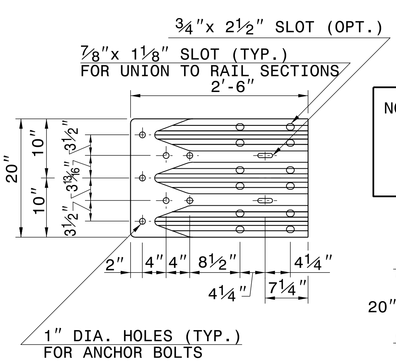

END SHOE

NOTE: THE MID POST AND OFFSET BLOCK OF THE WTR SECTION WILL REQUIRE SPECIAL BOLT HOLE DRILLING IN THE THRIE BEAM OFFSET BLOCK AND LINE POST.

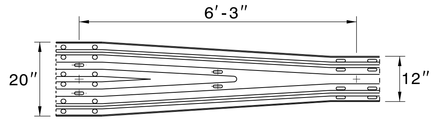

WTR SECTION
ELEVATION VIEW

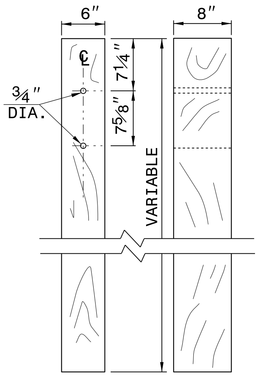

THRIE BEAM LINE POST

STATE OF NORTH CAROLINA
DEPT. OF TRANSPORTATION
DIVISION OF HIGHWAYS
RALEIGH, N.C.

ENGLISH DETAIL DRAWING FOR
STRUCTURE ANCHOR UNITS
GUARDRAIL ANCHOR UNIT, TYPE III

SHEET 3 OF 7
862d03

CONTRACT STANDARDS AND DEVELOPMENT UNIT
Office 919-707-6950 FAX 919-250-4119

SEE TITLE BLOCK

ORIGINAL BY: J. HOWERTON DATE: 06-22-12
MODIFIED BY: DATE:
CHECKED BY: DATE:
FILE SPEC.:

PROJECT REFERENCE NO. 17BP.14.R.66
SHEET NO. 2B

PROJECT REFERENCE NO.	SHEET
17BP.14.R.66	2-C

GEOTECHNICAL ENGINEER

SIGNATURE DATE

NORTH CAROLINA PROFESSIONAL SEAL 09551 ENGINEER HAROLD D. PRUITT

July 17, 2014

GROUNDWATER CONDITION (SEE NOTE 6)	H SHORING HEIGHT (FT)	SLOPE OR SURCHARGE CASE WITH NO TRAFFIC IMPACT					SURCHARGE CASE WITH TRAFFIC IMPACT				
		SHEET PILES		H-PILES WITH TIMBER LAGGING			SHEET PILES		H-PILES WITH TIMBER LAGGING		
		MINIMUM REQUIRED EMBEDMENT (FT)	MINIMUM REQUIRED SECTION MODULUS (IN^3/FT)	MINIMUM REQUIRED EMBEDMENT* (FT) (SEE NOTE 10)			MINIMUM REQUIRED EMBEDMENT (FT)	MINIMUM REQUIRED SECTION MODULUS (IN^3/FT)	MINIMUM REQUIRED EMBEDMENT* (FT) (SEE NOTE 10)		
				HP 10x42	HP 12x53	HP 14x73			HP 10x42	HP 12x53	HP 14x73
GROUNDWATER ELEVATION BEWTEEN BOTTOM OF SHORING AND PILE TIP	< 6	11.5	4.5	11.5	11.5	11.5	16.0	12.0	13.0	13.0	13.0
	7	13.0	7.0	13.0	13.0	13.0	17.0	14.5	14.5	14.5	14.5
	8	15.0	10.0	--	15.0	15.0	18.0	17.0	--	15.5	15.5
	9	17.0	14.0	--	17.0	17.0	19.0	20.0	--	17.0	17.0
	10	18.5	19.5	--	--	18.5	20.0	23.5	--	--	18.5
	11	20.5	26.0	--	--	--	21.0	28.0	--	--	20.0
	12	22.5	33.0	--	--	--	22.0	33.0	--	--	21.5
GROUNDWATER ELEVATION BELOW PILE TIP	< 6	7.5	3.0	8.0	8.0	8.0	11.0	10.0	9.5	9.5	9.5
	7	8.5	4.5	9.5	9.5	9.5	12.0	12.0	10.5	10.5	10.5
	8	10.0	6.5	10.5	10.5	10.5	12.5	14.0	11.5	11.5	11.5
	9	11.0	9.5	--	12.0	12.0	13.5	16.5	--	12.5	12.5
	10	12.5	13.0	--	--	13.5	14.0	19.5	--	13.5	13.5
	11	13.5	17.0	--	--	14.5	15.0	22.5	--	--	14.5
	12	15.0	21.5	--	--	16.0	16.0	25.5	--	--	15.5

MINIMUM REQUIRED EMBEDMENT AND SECTION MODULUS

*DO NOT USE H-PILES WITH TIMBER LAGGING FOR GROUNDWATER CONDITION, SHORING HEIGHT AND H-PILE SIZE SHOWN IF MINIMUM REQUIRED EMBEDMENT IS "--".

NOTES:

1.
2. AT THE CONTRACTOR'S OPTION, USE STANDARD TEMPORARY SHORING AS NOTED IN THE PLANS.
3. FOR STANDARD TEMPORARY SHORING, SEE STANDARD SHORING PROVISION.
4. STANDARD TEMPORARY SHORING IS BASED ON THE FOLLOWING IN-SITU ASSUMED SOIL PARAMETERS:
   UNIT WEIGHT, γ = 120 LB/CF
   FRICTION ANGLE, ϕ = 30 DEGREES
   COHESION, c = 0 LB/SF

   DO NOT USE STANDARD TEMPORARY SHORING IF ASSUMED SOIL PARAMETERS ARE NOT APPLICABLE.
5. DO NOT USE STANDARD TEMPORARY SHORING WHEN VERY LOOSE OR SOFT SOIL OR MUCK IS WITHIN THE EMBEDMENT DEPTH.
6. USE GROUNDWATER ELEVATION NOTED IN THE PLANS. IF NO GROUNDWATER ELEVATION IS SHOWN IN THE PLANS, USE "GROUNDWATER ELEVATION BETWEEN BOTTOM OF SHORING AND PILE TIP" FOR GROUNDWATER CONDITION. DO NOT USE STANDARD TEMPORARY SHORING IF GROUNDWATER IS ABOVE BOTTOM OF SHORING.
7. AT THE CONTRACTOR'S OPTION OR IF AVAILABLE CLEAR DISTANCE IS LESS THAN THE MINIMUM REQUIRED FOR CONCRETE BARRIER, SET BARRIER NEXT TO AND UP AGAINST TRAFFIC SIDE OF PILES AND USE "SURCHARGE CASE WITH TRAFFIC IMPACT".
8. AT THE CONTRACTOR'S OPTION OR IF AVAILABLE CLEAR DISTANCE IS LESS THAN 4' FOR TEMPORARY GUARDRAIL, ATTACH GUARDRAIL TO TRAFFIC SIDE OF PILES AS SHOWN IN THE PLANS AND USE "SURCHARGE CASE WITH TRAFFIC IMPACT".
9. MINIMUM REQUIRED EXTENSION IS 6" FOR "SLOPE OR SURCHARGE CASE WITH NO TRAFFIC IMPACT" AND 32" FOR "SURCHARGE CASE WITH TRAFFIC IMPACT".
10. MINIMUM REQUIRED EMBEDMENT FOR H-PILES WITH TIMBER LAGGING IS BASED ON DRIVEN H-PILES AT MAXIMUM 6' SPACING. AT THE CONTRACTOR'S OPTION, EMBEDMENT DEPTHS MAY BE REDUCED BY 25% FOR DRILLED-IN H-PILES.
11. SUBMIT A "STANDARD TEMPORARY SHORING SELECTION FORM" AT LEAST 7 DAYS BEFORE STARTING TEMPORARY SHORING CONSTRUCTION. UP TO 3 SHORING LOCATIONS MAY BE INCLUDED ON EACH FORM. STANDARD SHORING SELECTION FORMS ARE AVAILABLE FROM: connect.ncdot.gov/resources/Geological/Pages/Geotech_Forms_Details.aspx

    CONTACT THE ENGINEER IF PILES DO NOT ATTAIN THE MINIMUM REQUIRED EMBEDMENT.
12.

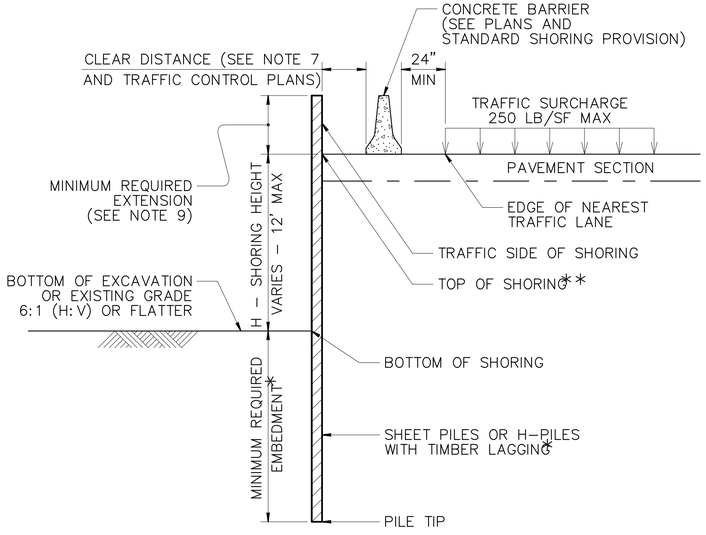

CONCRETE BARRIER

**TOP OF SHORING = EDGE OF PAVEMENT

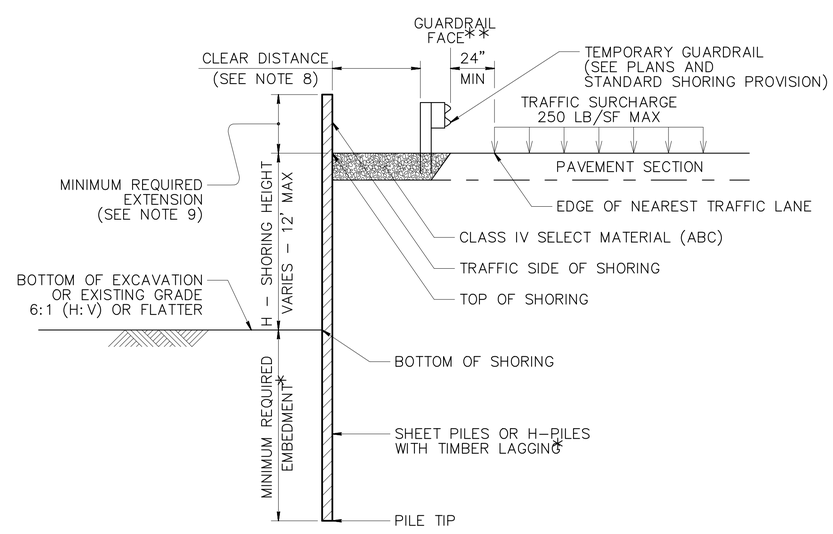

TEMPORARY GUARDRAIL

**GUARDRAIL FACE = EDGE OF PAVEMENT

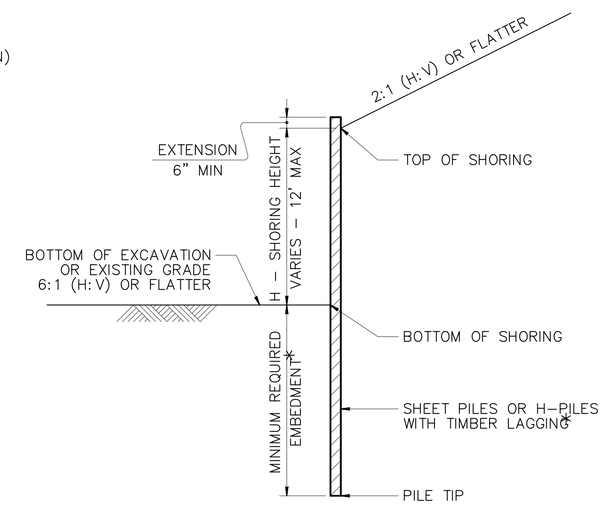

STANDARD TEMPORARY SHORING

(SLOPE CASE)
*SEE TABLE ABOVE.

STANDARD TEMPORARY SHORING

(SURCHARGE CASE)
*SEE TABLE ABOVE.

GEOTECHNICAL ENGINEERING UNIT

STATE OF NORTH CAROLINA DEPARTMENT OF TRANSPORTATION RALEIGH

STANDARD DRAWING NO. 1801.01

STANDARD TEMPORARY SHORING

DATE: 11-19-1

PROJECT REFERENCE NO.	SHEET NO.
17BP.14.R.66	3

STATE OF NORTH CAROLINA
DIVISION OF HIGHWAYS

SUMMARY OF QUANTITIES

STATE OF NORTH CAROLINA
DIVISION OF HIGHWAYS
ROADWAY SUMMARY OF QUANTITIES FOR CONTRACT – DN00188

ITEM NUMBER	SEC #	QUANTITY	UNIT	DESCRIPTION
0000100000-N	800	1	LS	MOBILIZATION
0000400000-N	801	1	LS	CONSTRUCTION SURVEYING
0080000000-E	200	1	ACR	SUPPLEMENTARY CLEARING & GRUBBING
0029000000-N	SP	1	LS	BRIDGE APPROACH FILL - AT STATION 13+19.60
0043000000-N	226	1	LS	GRADING
		2100.00	CY	UNCLASSIFIED EXCAVATION
		810.00	SY	REMOVAL OF EXISTING ASPHALT PAVEMENT
		1150.00	SY	FINE GRADING
		0.30	ACR	CLEARING AND GRUBBING
0057000000-E	226	50.00	CY	UNDERCUT EXCAVATION
0134000000-E	240	25.00	CY	DRAINAGE DITCH EXCAVATION
0195000000-E	265	50.00	CY	SELECT GRANULAR MATERIAL
0196000000-E	270	50.00	SY	GEOTEXTILE FOR SOIL STABILIZATION
0199000000-E	SP	1230.00	SF	TEMPORARY SHORING
0344000000-E	310	44.00	LF	18" SIDE DRAIN PIPE
0995000000-E	340	32.00	LF	PIPE REMOVAL
1099700000-E	505	50.00	TON	CLASS IV SUBGRADE STABILIZATION
1220000000-E	545	50.00	TON	INCIDENTAL STONE BASE
1489000000-E	610	330.00	TON	ASPHALT CONC BASE COURSE, TYPE B25.0B
1519000000-E	610	210.00	TON	ASPHALT CONC SURFACE COURSE, TYPE S9.5B
1575000000-E	620	30.00	TON	ASPHALT BINDER FOR PLANT MIX
3030000000-E	862	500.00	LF	STEEL BM GUARDRAIL
3150000000-N	862	10	EA	ADDITIONAL GUARDRAIL POSTS
3165000000-N	SP	2	EA	GUARDRAIL ANCHOR UNITS, TYPE 350 (TL-2)
3195000000-N	862	2	EA	GUARDRAIL ANCHOR UNITS, TYPE AT-1
3215000000-N	862	4	EA	GUARDRAIL ANCHOR UNITS, TYPE III
3435000000-N	SP	50	EA	EXTRA LENGTH GUARDRAIL POSTS
3649000000-E	876	103.00	TON	RIP RAP, CLASS B
6038000000-E	SP	20.00	SY	PERMANENT SOIL REINFORCEMENT MAT
4400000000-E	1110	204.00	SF	WORK ZONE SIGNS (STATIONARY)
4430000000-N	1130	100	EA	DRUMS
4465000000-N	1160	2	EA	TEMPORARY CRASH CUSHIONS
4470000000-N	1160	2	EA	RESET TEMPORARY CRASH CUSHION
4490000000-E	1170	60.00	LF	PORTABLE CONCRETE BARRIER (ANCHORED)
4505000000-E	1170	20.00	LF	RESET PORTABLE CONCRETE BARRIER (ANCHORED)
4810000000-E	1205	4560.00	LF	PAINT PAVEMENT MARKING LINES (4")
4835000000-E	1205	20.00	LF	PAINT PAVEMENT MARKING LINES (24")
4870000000-E	1205	20.00	LF	REMOVAL OF PAVEMENT MARKING LINES (24")
7980000000-N	SP	1	EA	PORTABLE TRAFFIC SIGNAL SYSTEM (ACTUATED)

ITEM NUMBER	SEC #	QUANTITY	UNIT	DESCRIPTION
3656000000-E	876	531.00	SY	GEOTEXTILE FOR DRAINAGE
6000000000-E	1605	870.00	LF	TEMPORARY SILT FENCE
6006000000-E	1610	180.00	TON	EROSION CONTROL STONE, CLASS A
6009000000-E	1610	50.00	TON	EROSION CONTROL STONE, CLASS B
6012000000-E	1610	35.00	TON	SEDIMENT CONTROL STONE
6015000000-E	1615	1.00	ACR	TEMPORARY MULCHING
6018000000-E	1620	50.00	LB	SEED FOR TEMPORARY SEEDING
6021000000-E	1620	0.25	TON	FERTILIZER FOR TEMPORARY SEEDING
6024000000-E	1622	200.00	LF	TEMPORARY SLOPE DRAINS
6029000000-E	SP	800.00	LF	SAFETY FENCE
6030000000-E	1630	120.00	CY	SILT EXCAVATION
6036000000-E	1631	3700.00	SY	MATTING FOR EROSION CONTROL
6071010000-E	SP	135.00	LF	WATTLE
6071030000-E	1640	15.00	LF	COIR FIBER BAFFLE
6084000000-E	1660	0.50	ACR	SEEDING AND MULCHING
6090000000-E	1661	50.00	LB	SEED FOR REPAIR SEEDING
6093000000-E	1661	0.25	TON	FERTILIZER FOR REPAIR SEEDING
6096000000-E	1662	50.00	LB	SEED FOR SUPPLEMENTAL SEEDING
6108000000-E	1665	0.75	TON	FERTILIZER TOPDRESSING
6117000000-N	SP	25	EA	RESPONSE FOR EROSION CONTROL
6123000000-E	1670	0.10	ACR	REFORESTATION
8035000000-N	402	1	LS	REMOVAL OF EXISTING STRUCTURE AT STATION 13+19.60
8112730000-N	450	1	EA	PDA TESTING
8121000000-N	412	1	LS	UNCLASSIFIED STRUCTURE EXCAVATION AT STATION 13+19.60
8147000000-E	420	1414.00	SF	REINFORCED CONCRETE DECK SLAB
8161000000-E	420	1908.00	SF	GROOVING BRIDGE FLOORS
8182000000-E	420	94.90	CY	CL A CONC (BRG)
8210000000-N	422	1	LS	BRIDGE APPROACH SLABS, STATION 13+19.60
8217000000-E	425	10358.00	LBS	REINFORCING STEEL (BRIDGE)
8259000000-E	430	188.30	LF	36" PRESTRESSED CONCRETE GIRDERS
8364000000-E	450	560.00	LF	HP12X53 STL PILES
8391000000-N	450	16	EA	STL PILE POINTS
8505000000-E	460	102.00	LF	VERTICAL CONCRETE BARRIER RAIL
8608000000-E	876	89.60	TONS	RIP RAP CLASS II (2'-0" THICK)
8622000000-E	876	99.50	SY	GEOTEXTILE FOR DRAINAGE
8657000000-N	430	1	LS	ELASTOMERIC BEARINGS
8692000000-N	SP	1	LS	FOAM JOINT SEALS

USER: RoguC
DATE: 7/10/2014
TIME: 10:55:31 AM
DGN: r:\roadway\Proj\k9-0310_rdy_psh03.dgn

8/17/99

PROJECT REFERENCE NO.	SHEET NO.
17BP.14.R.66	3-A

SUMMARY OF EARTHWORK

LINE	Station	Station	Uncl. Excav.	Embank. +%	Borrow	Waste
L Phase 1	13+41.32	16+00.00	1017	10	0	1007
L Phase 2	10+00.00	16+20.00	778	49	0	729
L Phase 3	10+00.00	16+20.00	241	121	0	120
TOTAL			2036	180	0	1856
ADJUSTMENTS DUE TO						
Est. Loss Due To Clearing And Grubbing			0			0
Shoulder Material						
Rock Waste To Replace Borrow						
Adjust For Rock Swell That Replaces Borrow						
Eliminate Shrinkage For Mat'l That Is Now Rock						
Earth Waste to Replace Borrow					0	0
PROJECT TOTAL			2036	180	0	1856
Est. 5% to Replace Topsoil in Borrow Pits					0	
GRAND TOTAL			2036		0	1856
SAY			2100		0	
Est. Drainage Ditch Excav.		25 CY				
Est. Undercut Excav.		50 CY				
Select Granular Material		50 CY				
Geotextile For Soil Stab.		50 SY				
Class IV Subgrade Stab.		50 TONS				
Incidental Stone		50 TONS				

Approximate quantities only. Unclassified excavation, fine grading, clearing and grubbing, removal of existing pavement and removal of existing dwelling on Parcel No. 3 will be conducted as part of Clearing and Grubbing and will be paid for at the lump sum price for "Grading".

SUMMARY OF EXISTING ASPHALT PAVEMENT REMOVAL

LINE	Station	Station	LOC LT/RT/CL	YD^2
-L-	11+50.00	13+09.40	LT	283
-L-	13+19.09	15+30.00	CL	409
-L-Temp	13+41.32	16+00.00	LT	118
			TOTAL:	810
			SAY:	810

NORTH CAROLINA DEPARTMENT OF TRANSPORTATION
DIVISION OF HIGHWAYS

Note: Invert Elevations indicated are for Bid Purposes only and shall not be used for project construction stakeout. See "Standard Specifications For Roads and Structures, Section 300-5".

LIST OF PIPES, ENDWALLS, ETC. (FOR PIPES 48 INCHES & UNDER)

| STATION | LOCATION (LT, RT, OR CL) | STRUCTURE NO. FROM | STRUCTURE NO. TO | TOP ELEVATION | INVERT ELEVATION | INVERT ELEVATION | SLOPE CRITICAL | DRAINAGE PIPE (RCP, CSP, CAAP, HDPE, or PVC) SIZE 12" | 15" | 18" | 24" | 30" | 36" | 42" | 48" | DO NOT USE RCP | DO NOT USE CSP | DO NOT USE CAAP | DO NOT USE HDPE | C.S. PIPE SIZE 12" | 15" | 18" | 24" | 30" | 36" | 42" | 48" | R.C. PIPE CLASS III SIZE 12" | 15" | 18" | 24" | 30" | 36" | 42" | 48" | R.C. PIPE CLASS IV SIZE 12" | 15" | 18" | 24" | 30" | 36" | 42" | 48" | ** R.C. PIPE (CLASS V) | *** RC PIPE CULVERTS, CONTRACTOR DESIGN | **** RC PIPE CULVERTS, CONTRACTOR DESIGN | 15" SIDE DRAIN PIPE | 18" SIDE DRAIN PIPE | ENDWALLS STD. 838.01 838.11 OR STD. 838.80 (UNLESS NOTED OTHERWISE) | CU. YARDS | QUANTITIES FOR DRAINAGE STRUCTURES PER EACH (0' THRU 5.0') | LIN. FT. A 5.0' THRU 10.0' | LIN. FT. B 10.0' AND ABOVE | *TOTAL L.F. FOR PAY QUANTITY SHALL BE COL. 'A' + (1.3 X COL.'B') | C.B. STD. 840.01 OR STD. 840.02 | FRAME, GRATES, AND HOOD STANDARD 840.03 | TYPE OF GRATE E | F | G | CONCRETE TRANSITIONAL SECTION DROP INLET | CATCH BASIN | D.I. STD. 840.14 OR STD. 840.15 | D.I. FRAME AND GRATE STD. 840.16 | G.D.I. TYPE "A" STD. 840.17 OR 840.26 | G.D.I. TYPE "B" STD. 840.18 OR 840.27 | G.D.I. TYPE "D" STD. 840.19 OR 840.28 | G.D.I. FRAME WITH GRATE STD. 840.20 | G.D.I. FRAME WITH TWO GRATES STD. 840.22 | G.D.I. (N.S.) FRAME WITH GRATE STD. 840.24 | G.D.I. (N.S.) FRAME WITH TWO GRATES STD. 840.24 | J.B. STD. 840.31 OR 840.32 | DRAINAGE PIPE ELBOWS NO. & SIZE | CONC. & BRICK PIPE PLUG, C.Y. STD. 840.71 | CONC. COLLARS CL. "B" C.Y. STD. 840.72 | PIPE REMOVAL LIN. FT. | REMARKS |
|---|---|---|---|---|---|---

PROJECT REFERENCE NO.	SHEET NO.
17BP.14.R.66	4
R/W SHEET NO.	

ROADWAY DESIGN ENGINEER — SEAL 038501 — ENGINEER

HYDRAULICS ENGINEER — SEAL 14101 — ENGINEER — 1/23/15

Prepared in the Office of: AECOM — NC FIRM LICENSE: Nos F-0342 701 Corporate Center Drive, Suite 475 Raleigh, NC 27610 (919) 854-6200 - (919) 854-6259 FAX

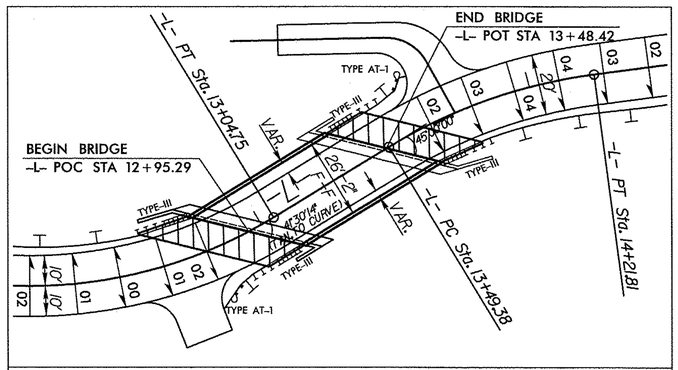

SKETCH SHOWING THE RELATIONSHIP OF THE BRIDGE TO THE PAVEMENT

25 0 25 50

BEGIN CONST. 17BP.14.R.66
-L- POT STA 10+00.00

BEGIN PROJECT 17BP.14.R.66
-L- POT STA 10+40.00

-DW2-
PI Sta 10+28.47
Δ = 61° 56' 19.8" (LT)
D = 38° 58' 18.7"
L = 16.22'
T = 9.00'
R = 15.00'

END BRIDGE
-L- POT STA 13+48.42

END APPROACH SLAB
-L- POC STA 13+62.51

END PROJECT 17BP.14.R.66
-L- POC STA 15+80.00

END CONST. 17BP.14.R.66
-L- POC STA 16+20.00

-L-

PI Sta 11+21.25
Δ = 22° 21' 18.8" (LT)
D = 19° 05' 54.9"
L = 117.05'
T = 59.28'
R = 300.00'
e = 0.04 ft/ft
Runoff = 60'

PI Sta 12+45.58
Δ = 46° 28' 37.7" (LT)
D = 36° 57' 54.1"
L = 125.73'
T = 66.56'
R = 155.00'
e = 0.04 ft/ft
Runoff = 60'

PI Sta 13+86.12
Δ = 23° 42' 45.8" (RT)
D = 32° 44' 25.6"
L = 72.43'
T = 36.74'
R = 175.00'
e = 0.04 ft/ft
Runoff = 60'

PI Sta 15+96.09
Δ = 1° 24' 36.8" (RT)
D = 2° 01' 29.4"
L = 69.65'
T = 34.82'
R = 2,829.66'
e = exist

PI Sta 17+25.95
Δ = 43° 03' 55.9" (LT)
D = 38° 11' 49.9"
L = 112.75'
T = 59.19'
R = 150.00'
e = exist

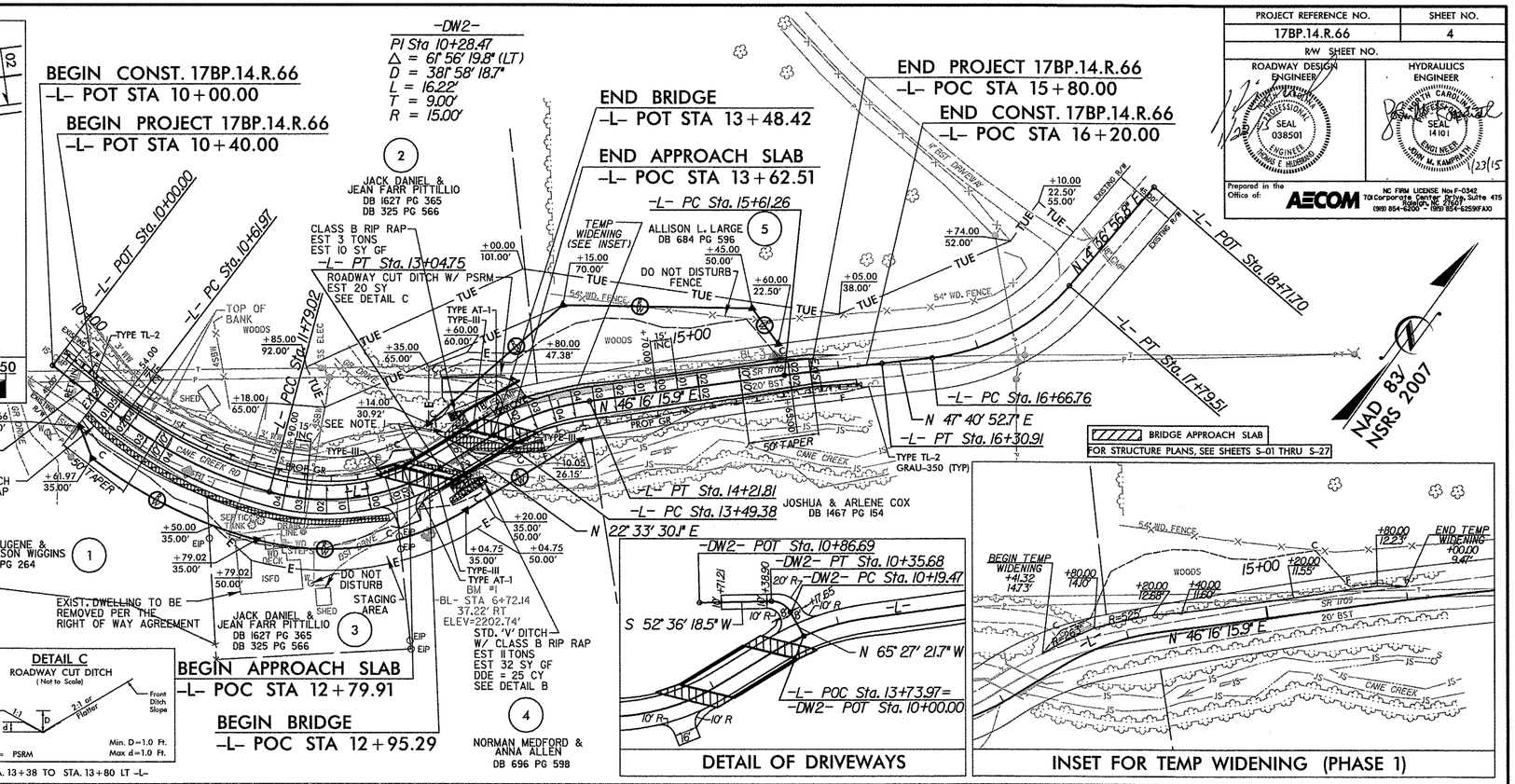

DETAIL OF DRIVEWAYS

INSET FOR TEMP WIDENING (PHASE 1)

DETAIL A
ROADWAY CUT DITCH
(Not to Scale)
Natural Ground — 1.5:1 or Flatter — 3:1 or Flatter — Front Ditch Slope — Geotextile
Type of Liner= CLASS B Rip-Rap — Min. D=1.0 Ft. Max. d=1.0 Ft.
FROM STA. 10+40 TO STA. 12+60 RT -L-
TRANSITION BACK SLOPE FROM 2:1 TO 1.5:1 BETWEEN STA. 11+20 RT. AND STA. 11+40 RT.

DETAIL B
STANDARD 'V' DITCH
(Not to Scale)
Natural Ground — 2:1 — Geotextile
Type of Liner= CLASS B Rip-Rap — Min. D=1.0 Ft. Max. d=1.0 Ft.
FROM STA. 13+00 TO STA. 13+30 RT -L-

DETAIL C
ROADWAY CUT DITCH
(Not to Scale)
Natural Ground — 1:1 — 2:1 or Flatter — Front Ditch Slope
Type of Liner= PSRM — Min. D=1.0 Ft. Max. d=1.0 Ft.
FROM STA. 13+38 TO STA. 13+80 LT -L-

BRIDGE HYDRAULIC DATA

DESIGN DISCHARGE	=	800	CFS
DESIGN FREQUENCY	=	25	YRS
DESIGN HW ELEVATION	=	2197.0	FT
BASE DISCHARGE	=	1100	CFS
BASE FREQUENCY	=	100	YRS
BASE HW ELEVATION	=	2199.7	FT
OVERTOPPING DISCHARGE	=	810	CFS
OVERTOPPING FREQUENCY	=	25 +/-	YRS
OVERTOPPING ELEVATION	=	2198.8	FT
	=	_____	FT
DATE OF SURVEY	=	01/17/2012	
W.S. ELEVATION AT DATE OF SURVEY	=	2191.20'	FT

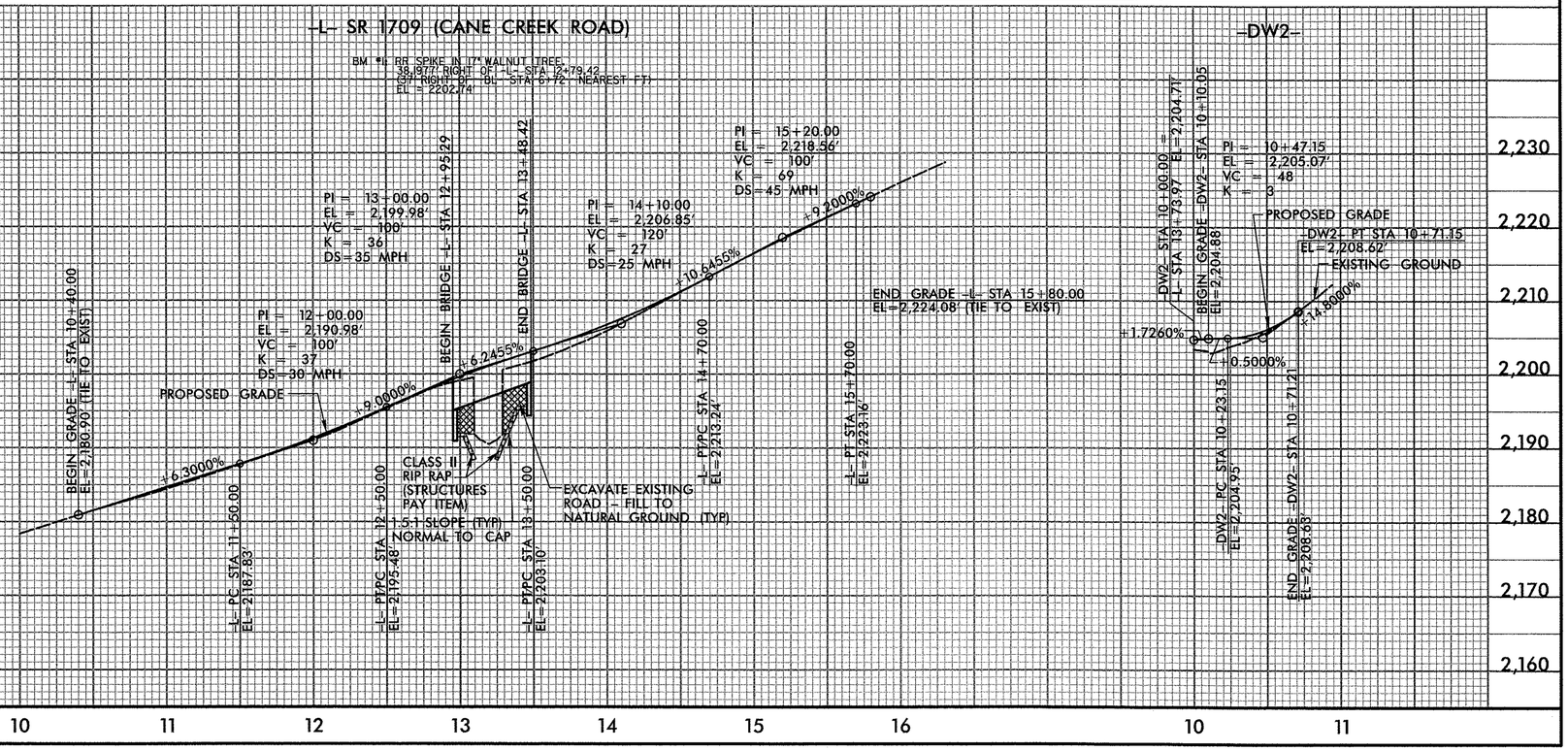

REVISIONS

8/17/99

USER: Wilsekrandt
DATE: 1/22/2015
TIME: 7:58:01 AM
DGN: Q:\60238172\400_Tech_Info_Disc_Files\450_NCDOT SHT Tech Des Files\DRG_SUV\Roadway\Proj\B-0310_rdy_psh04.dgn

STATE OF NORTH CAROLINA
DIVISION OF HIGHWAYS

TRANSPORTATION MANAGEMENT PLAN

JACKSON COUNTY

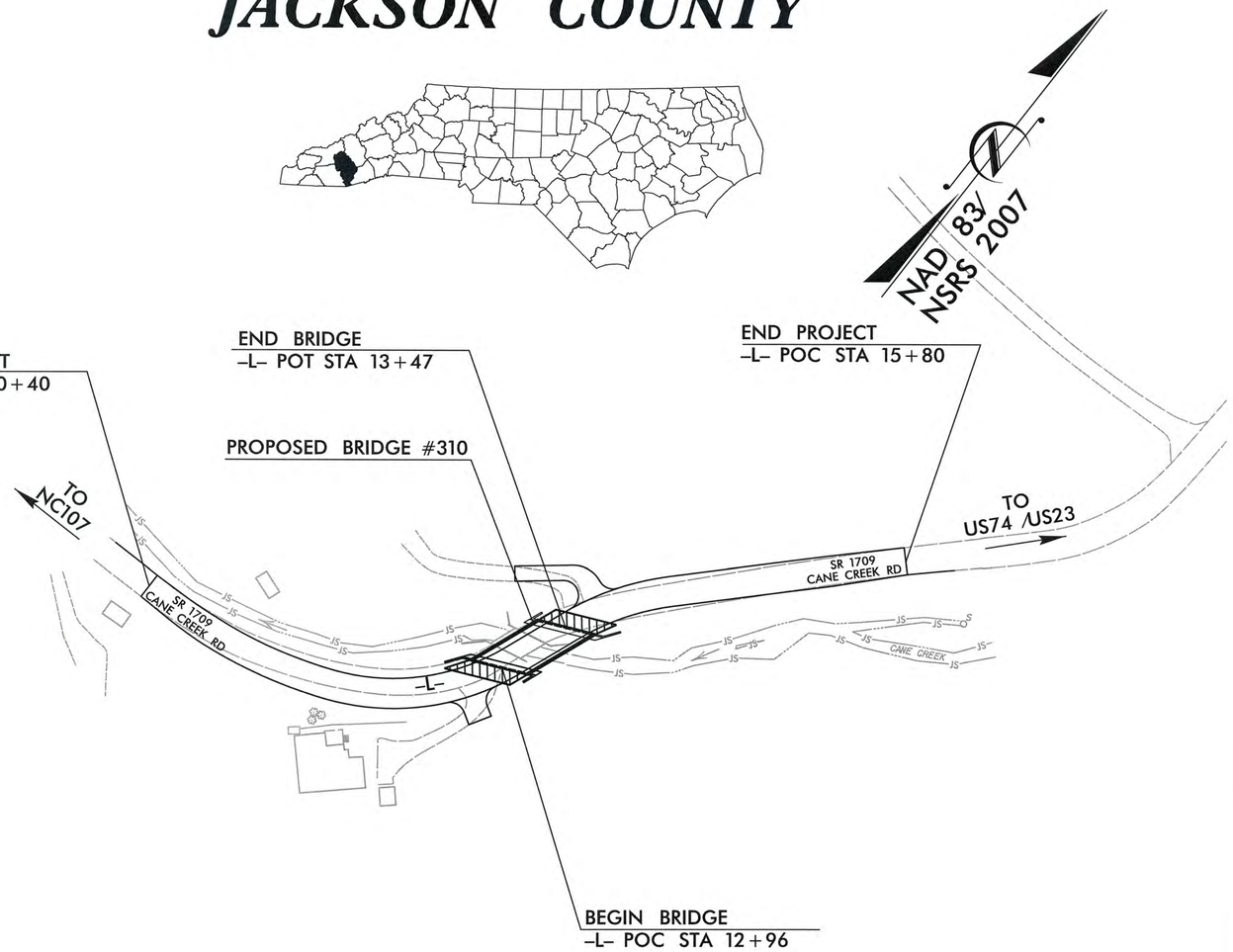

INDEX OF SHEETS

SHEET NO.	TITLE
TMP-1	TITLE SHEET, AND INDEX OF SHEETS
TMP-1A	GENERAL NOTES
TMP-2	TEMPORARY TRAFFIC CONTROL PHASE I DETAIL
TMP-3	TEMPORARY TRAFFIC CONTROL PHASE II DETAIL
TMP-4	TEMPORARY TRAFFIC CONTROL PHASE III DETAIL
PMP-1	PAVEMENT MARKING PLAN

ROADWAY STANDARD DRAWINGS

THE FOLLOWING ROADWAY STANDARDS AS APPEAR IN "ROADWAY STANDARD DRAWINGS" - PROJECT SERVICES UNIT - N.C. DEPARTMENT OF TRANSPORTATION - RALEIGH, N.C., DATED JANUARY 2012 ARE APPLICABLE TO THIS PROJECT AND BY REFERENCE HEREBY ARE CONSIDERED A PART OF THESE PLANS:

STD.NO.	TITLE
1101.01	WORK ZONE WARNING SIGNS
1101.02	TEMPORARY LANE CLOSURES
1101.04	TEMPORARY SHOULDER CLOSURES
1101.05	WORK ZONE VEHICLE ACCESSES
1101.11	TRAFFIC CONTROL DESIGN TABLES
1110.01	STATIONARY WORK ZONE SIGNS
1110.02	PORTABLE WORK ZONE SIGNS
1130.01	DRUMS
1160.01	TEMPORARY CRASH CUSHION
1170.01	PORTABLE CONCRETE BARRIER
1205.01	PAVEMENT MARKINGS - LINE TYPES AND OFFSETS
1205.02	PAVEMENT MARKINGS - TWO LANE AND MULTILANE ROADWAYS
1205.12	PAVEMENT MARKINGS - BRIDGES

SHEET NO.
TMP-1

17BP.14.R.66

TIP PROJECT:

WORK ZONE SAFETY & MOBILITY
"from the MOUNTAINS to the COAST"

N.C.D.O.T. WORK ZONE TRAFFIC CONTROL
1561 MAIL SERVICE CENTER (MSC) RALEIGH, NC 27699-1561
750 N. GREENFIELD PARKWAY, GARNER, NC 27529 (DELIVERY)
PHONE: (919) 773-2800 FAX: (919) 771-2745

J.S. BOURNE, P.E. STATE TRAFFIC MANAGEMENT ENGINEER

TRAFFIC CONTROL PROJECT ENGINEER

TRAFFIC CONTROL PROJECT DESIGN ENGINEER

TRAFFIC CONTROL DESIGN ENGINEER

DIVISION OF HIGHWAYS * STATE OF NORTH CAROLINA * DEPARTMENT OF TRANSPORTATION * WORK ZONE TRAFFIC CONTROL

AECOM
NC Firm License No.: F-0342
701 Corporate Center Drive
Suite 475 Raleigh, NC 27607
Phone: 919-854-6200

K.J. VAN METRE, PE
PROJECT ENGINEER

B.R. CRAWFORD, PE
PROJECT DESIGN ENGINEER

APPROVED: Kevin J. VanMetre
DATE: 5/10/14

SEAL

NORTH CAROLINA PROFESSIONAL SEAL 18187 ENGINEER KEVIN J. VAN METRE

2:19:51 PM
G:\60238772\400_Tech_Info_Disc_Files\450_NCDOTStdTechDesFiles\BRG_310\Traffic\TrafficControl\TCP\49-0310_tcp_tsh.dgn
crcwford

PROJ. REFERENCE NO.	SHEET NO.
17BP.14.R.66	TMP-1A

CHANGES MAY BE REQUIRED WHEN PHYSICAL DIMENSIONS IN THE DETAIL DRAWINGS, STANDARD DETAILS, AND ROADWAY DETAILS ARE NOT ATTAINABLE TO MEET FIELD CONDITIONS OR RESULT IN DUPLICATE OR UNDESIRED OVERLAPPING OF DEVICES. MODIFICATION MAY INCLUDE: MOVING, SUPPLEMENTING, COVERING, OR REMOVAL OF DEVICES AS DIRECTED BY THE ENGINEER.

THE FOLLOWING GENERAL NOTES APPLY AT ALL TIMES FOR THE DURATION OF THE CONSTRUCTION PROJECT EXCEPT WHEN OTHERWISE NOTED IN THE PLAN OR DIRECTED BY THE ENGINEER.

GENERAL NOTES

TIME RESTRICTIONS

A) DO NOT CLOSE OR NARROW TRAVEL LANES AS FOLLOWS:

ROAD NAME	DAY AND TIME RESTRICTIONS
CANE CREEK RD	7:00AM - 9:00AM AND 4:00PM - 6:00PM, MONDAY THRU FRIDAY.

B) DO NOT CLOSE OR NARROW TRAVEL LANES DURING HOLIDAYS AND SPECIAL EVENTS AS FOLLOWS:

CANE CREEK RD

TO BE DETERMINED BY DIVISION PERSONNEL.

LANE AND SHOULDER CLOSURE REQUIREMENTS

C) REMOVE LANE CLOSURE DEVICES FROM THE LANE WHEN WORK IS NOT BEING PERFORMED BEHIND THE LANE CLOSURE OR WHEN A LANE CLOSURE IS NO LONGER NEEDED OR AS DIRECTED BY THE ENGINEER.

D) WHEN PERSONNEL AND/OR EQUIPMENT ARE WORKING ON THE SHOULDER ADJACENT TO AN UNDIVIDED FACILITY AND WITHIN 5 FT OF AN OPEN TRAVEL LANE, CLOSE THE NEAREST OPEN TRAVEL LANE USING ROADWAY STANDARD DRAWING NO. 1101.02 UNLESS THE WORK AREA IS PROTECTED BY BARRIER OR GUARDRAIL.

WHEN PERSONNEL AND/OR EQUIPMENT ARE WORKING ON THE SHOULDER ADJACENT TO A DIVIDED FACILITY AND WITHIN 10 FT OF AN OPEN TRAVEL LANE, CLOSE THE NEAREST OPEN TRAVEL LANE USING ROADWAY STANDARD DRAWING NO. 1101.02 UNLESS THE WORK AREA IS PROTECTED BY BARRIER OR GUARDRAIL.

E) WHEN PERSONNEL AND/OR EQUIPMENT ARE WORKING WITHIN A LANE OF TRAVEL OF AN UNDIVIDED OR DIVIDED FACILITY, CLOSE THE LANE ACCORDING TO THE TRAFFIC CONTROL PLANS, ROADWAY STANDARD DRAWINGS, OR AS DIRECTED BY THE ENGINEER. CONDUCT THE WORK SO THAT ALL PERSONNEL AND/OR EQUIPMENT REMAIN WITHIN THE CLOSED TRAVEL LANE.

F) DO NOT WORK SIMULTANEOUSLY WITHIN 15 FT ON BOTH SIDES OF AN OPEN TRAVELWAY, RAMP, OR LOOP WITHIN THE SAME LOCATION UNLESS PROTECTED WITH GUARDRAIL OR BARRIER.

G) PROVIDE TRAFFIC CONTROL FOR APPROPRIATE LANE CLOSURES FOR SURVEYING DONE BY THE DEPARTMENT.

PAVEMENT EDGE DROP OFF REQUIREMENTS

H) BACKFILL AT A 6:1 SLOPE UP TO THE EDGE AND ELEVATION OF EXISTING PAVEMENT IN AREAS ADJACENT TO AN OPENED TRAVEL LANE THAT HAS AN EDGE OF PAVEMENT DROP-OFF AS FOLLOWS:

BACKFILL DROP-OFFS THAT EXCEED 2 INCHES ON ROADWAYS WITH POSTED SPEED LIMITS OF 45 MPH OR GREATER.

BACKFILL DROP-OFFS THAT EXCEED 3 INCHES ON ROADWAYS WITH POSTED SPEED LIMITS LESS THAN 45 MPH.

BACKFILL WITH SUITABLE COMPACTED MATERIAL, AS APPROVED BY THE ENGINEER, AT NO EXPENSE TO THE DEPARTMENT.

I) DO NOT EXCEED A DIFFERENCE OF 2 INCHES IN ELEVATION BETWEEN OPEN LANES OF TRAFFIC FOR NOMINAL LIFTS OF 1.5 INCHES. INSTALL ADVANCE WARNING "UNEVEN LANES" SIGNS (W8-11) 100 FT IN ADVANCE AND A MINIMUM OF EVERY HALF MILE THROUGHOUT THE UNEVEN AREA.

TRAFFIC PATTERN ALTERATIONS

J) NOTIFY THE ENGINEER TWENTY ONE (21) CALENDAR DAYS PRIOR TO ANY TRAFFIC PATTERN ALTERATION.

SIGNING

K) INSTALL ADVANCE WORK ZONE WARNING SIGNS WHEN WORK IS WITHIN 40 FT FROM THE EDGE OF TRAVEL LANE AND NO MORE THAN THREE (3) DAYS PRIOR TO THE BEGINNING OF CONSTRUCTION.

L) PROVIDE SIGNING AND DEVICES REQUIRED TO CLOSE THE ROAD ACCORDING TO THE ROADWAY STANDARD DRAWINGS AND TRAFFIC CONTROL PLANS.

M) COVER OR REMOVE ALL SIGNS AND DEVICES REQUIRED TO CLOSE THE ROAD WHEN ROAD CLOSURE IS NOT IN OPERATION.

COVER OR REMOVE ALL SIGNS REQUIRED FOR THE OFF-SITE DETOUR WHEN THE DETOUR IS NOT IN OPERATION.

N) ENSURE ALL NECESSARY SIGNING IS IN PLACE PRIOR TO ALTERING ANY TRAFFIC PATTERN.

O) INSTALL BLACK ON ORANGE "DIP" SIGNS (W8-2) AND/OR "BUMP" SIGNS (W8-1) IN ADVANCE OF THE UNEVEN AREA, OR AS DIRECTED BY THE ENGINEER.

TRAFFIC BARRIER

P) INSTALL TEMPORARY BARRIER ACCORDING TO THE TRANSPORTATION MANAGEMENT PLANS A MAXIMUM OF TWO (2) WEEKS PRIOR TO BEGINNING WORK IN ANY LOCATION. ONCE TEMPORARY BARRIER IS INSTALLED AT ANY LOCATION PROCEED IN A CONTINUOUS MANNER TO COMPLETE THE PROPOSED WORK IN THAT LOCATION UNLESS OTHERWISE STATED IN THE TRANSPORTATION MANAGEMENT PLANS OR AS DIRECTED BY THE ENGINEER.

DO NOT PLACE BARRIER DIRECTLY ON ANY SURFACE OTHER THAN ASPHALT OR CONCRETE.

ONCE TEMPORARY BARRIER IS INSTALLED AT ANY LOCATION AND NO WORK IS PERFORMED BEHIND THE TEMPORARY BARRIER FOR A PERIOD LONGER THAN TWO (2) MONTHS, REMOVE / RESET TEMPORARY BARRIER AT NO COST TO THE DEPARTMENT UNLESS OTHERWISE STATED IN THE TRANSPORTATION MANAGEMENT PLANS, TEMPORARY BARRIER IS PROTECTING A HAZARD, OR AS DIRECTED BY THE ENGINEER.

INSTALL TEMPORARY BARRIER WITH THE TRAFFIC FLOW BEGINNING WITH THE UPSTREAM SIDE OF TRAFFIC. REMOVE TEMPORARY BARRIER AGAINST THE TRAFFIC FLOW BEGINNING WITH THE DOWNSTREAM SIDE OF TRAFFIC.

INSTALL AND SPACE DRUMS NO GREATER THAN TWICE THE POSTED SPEED LIMIT (MPH) TO CLOSE OR KEEP THE SECTION OF THE ROADWAY CLOSED UNTIL THE TEMPORARY BARRIER CAN BE PLACED OR AFTER THE TEMPORARY BARRIER IS REMOVED.

Q) PROTECT THE APPROACH END OF MOVABLE/PORTABLE CONCRETE BARRIER AT ALL TIMES DURING THE INSTALLATION AND REMOVAL OF THE BARRIER BY EITHER A TRUCK MOUNTED ATTENUATOR (MAXIMUM 72 HOURS) OR A TEMPORARY CRASH CUSHION.

PROTECT THE APPROACH END OF MOVABLE/PORTABLE CONCRETE BARRIER FROM ONCOMING TRAFFIC AT ALL TIMES BY A TEMPORARY CRASH CUSHION UNLESS THE APPROACH END OF MOVABLE/PORTABLE CONCRETE BARRIER IS OFFSET FROM ONCOMING TRAFFIC AS FOLLOWS OR AS SHOWN IN THE PLANS: (SEE ALSO 1101.05)

POSTED SPEED LIMIT	MINIMUM OFFSET
40 OR LESS	15 FT
45 - 50	20 FT
55	25 FT
60 MPH or HIGHER	30 FT

TRAFFIC CONTROL DEVICES

R) WHEN LANE CLOSURES ARE NOT IN EFFECT SPACE CHANNELIZING DEVICES IN WORK AREAS NO GREATER IN FEET THAN TWICE THE POSTED SPEED LIMIT (MPH) EXCEPT, 10 FT ON-CENTER IN RADII, AND 3 FT OFF THE EDGE OF AN OPEN TRAVELWAY. REFER TO STANDARD SPECIFICATIONS FOR ROADS AND STRUCTURES SECTIONS 1130 (DRUMS), 1135 (CONES) AND 1180 (SKINNY DRUMS) FOR ADDITIONAL REQUIREMENTS.

S) PLACE TYPE III BARRICADES, WITH "ROAD CLOSED" SIGN R11-2 ATTACHED, OF SUFFICIENT LENGTH TO CLOSE ENTIRE ROADWAY.

T) PLACE ADDITIONAL SETS OF THREE CHANNELIZING DEVICES PERPENDICULAR TO THE EDGE OF TRAVELWAY ON 500 FT CENTERS WHEN UNOPENED LANES ARE CLOSED TO TRAFFIC.

U) TIE PROPOSED PAVEMENT MARKING LINES TO EXISTING PAVEMENT MARKING LINES.

MISCELLANEOUS

V) IN THE EVENT A TIE-IN CANNOT BE MADE IN ONE DAY'S TIME, BRING THE TIE-IN AREA TO AN APPROPRIATE ROADWAY ELEVATION AS DETERMINED BY THE ENGINEER. PLACE BLACK ON ORANGE "LOOSE GRAVEL" SIGNS (W8-7) AND BLACK ON ORANGE "PAVEMENT ENDS" SIGNS (W8-3) 50 FT AND 100 FT RESPECTIVELY IN ADVANCE OF THE UNEVEN AREAS. USE DRUMS TO DELINEATE THE EDGE OF ROADWAY ALONG UNPAVED AREAS.

LEGEND

GENERAL

- DIRECTION OF TRAFFIC FLOW
- DIRECTION OF PEDESTRIAN TRAFFIC FLOW
- EXIST. PVMT.
- NORTH ARROW
- PROPOSED PVMT.
- TEMP. SHORING (LOCATION PURPOSES ONLY)
- WORK AREA
- REMOVAL

TRAFFIC CONTROL DEVICES

- BARRICADE (TYPE III)
- CONE
- DRUM — SKINNY DRUM — TUBULAR MARKER
- TEMPORARY CRASH CUSHION
- FLASHING ARROW BOARD
- FLAGGER
- LAW ENFORCEMENT
- TRUCK MOUNTED ATTENUATOR (TMA)
- CHANGEABLE MESSAGE SIGN

SIGNALS

- EXISTING
- PROPOSED
- TEMPORARY

PAVEMENT MARKINGS

- EXISTING LINES
- TEMPORARY LINES

TEMPORARY SIGNING

- PORTABLE SIGN
- STATIONARY SIGN
- STATIONARY OR PORTABLE SIGN

AECOM
NC Firm License No.: F-0342
701 Corporate Center Drive
Suite 475 Raleigh, NC 27607
Phone: 919-854-6200

APPROVED: DATE: 7/10/14

NORTH CAROLINA PROFESSIONAL SEAL 18187 ENGINEER KEVIN J. VAN METRE

DIVISION OF HIGHWAYS STATE OF NORTH CAROLINA DEPARTMENT OF TRANSPORTATION WORK ZONE TRAFFIC CONTROL

GENERAL NOTES

SCALE:	
DATE:	7/10/2014
DWG. BY:	TEH
DESIGN BY:	KJV
REVIEWED BY:	

REVISIONS

CADD FILE

2:19:53 PM
G:\60236172\400_Tech_Info_Disc_Files\450_NCDOT Std Tech Des Files\BRG_310\Traffic\TrafficControl\TCP\49-0310_tcp_psh02_Notes_General.dgn
crowford

PROJ. REFERENCE NO.	SHEET NO.
17BP.14.R.66	TMP-2

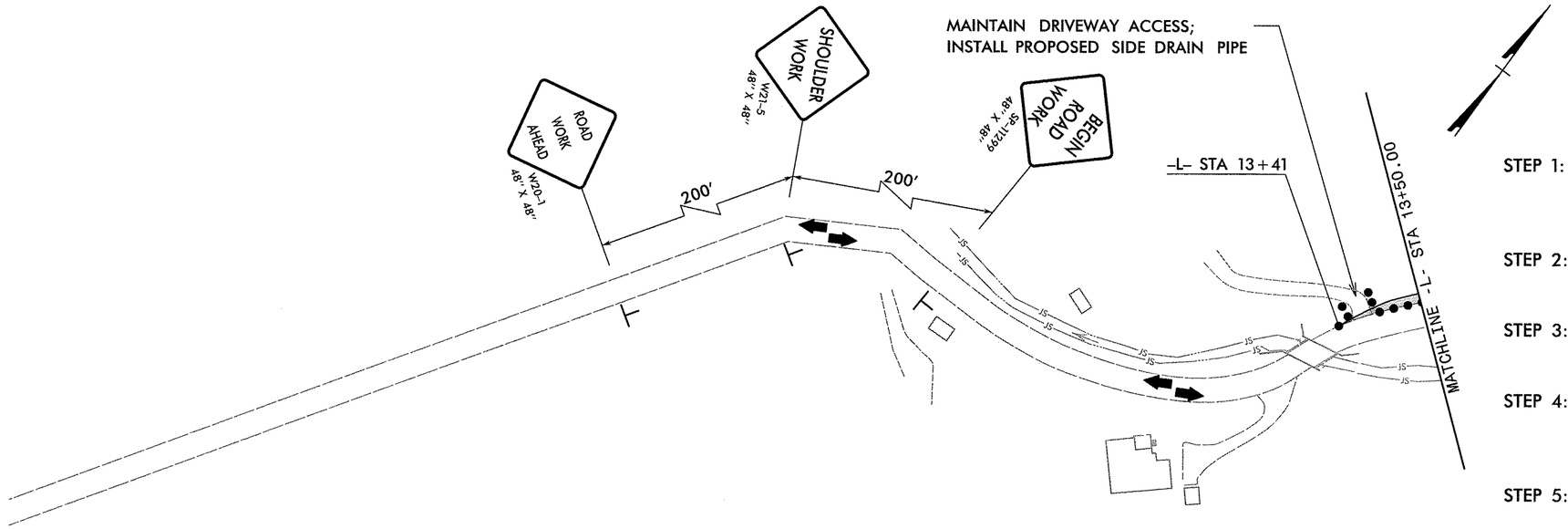

PHASING NOTES

STEP 1: MAINTAIN TRAFFIC ON EXSTING ROAD. MAINTAIN DRIVEWAY ACCESS DURING THIS PHASE.

STEP 2: INSTALL ADVANCED WARNING SIGNS AND TRAFFIC CONTROL DEVICES.

STEP 3: INSTALL SIDE DRAIN PIPE. (SEE ROADWAY PLANS)

STEP 4: CONSTRUCT TEMP. PAVEMENT WIDENING USING RSD 1101.02, SHEET 1 OF 15, AS NEEDED.

STEP 5: REMOVE EXISTING DWELLING ON PARCEL NO. 3.

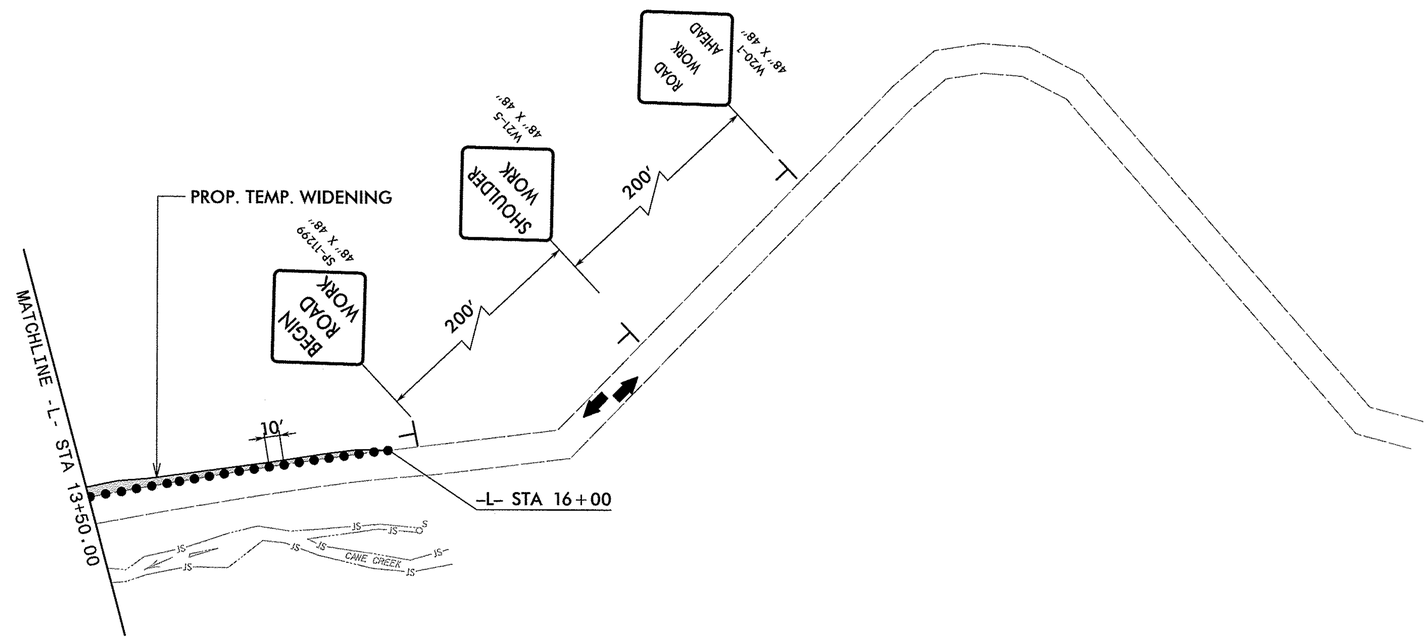

LEGEND

EXISTING ROADWAY

PROPOSED CONSTRUCTION

COMPLETED ROADWAY

AECOM
NC Firm License No.: F-0342
701 Corporate Center Drive
Suite 475 Raleigh, NC 27607
Phone: 919-854-6200

APPROVED: DATE:

NORTH CAROLINA PROFESSIONAL SEAL 18187 ENGINEER KEVIN J. VAN METRE

DIVISION OF HIGHWAYS STATE OF NORTH CAROLINA DEPARTMENT OF TRANSPORTATION WORK ZONE TRAFFIC CONTROL

PHASE I DETAIL

SCALE:	
DATE:	1/22/2015
DWG. BY:	TEH
DESIGN BY:	KJV
REVIEWED BY:	

REVISIONS

CADD FILE

R:\03236_NW
P:\50236972\400_Tech_Info_Disc_Files\450_NCDOTStdTechDesFiles\BRG_310\Traffic\TrafficControl\TCP\49-0310_tcp_phase1_psh.dgn

PROJ. REFERENCE NO.	SHEET NO.
17BP.14.R.66	TMP-3

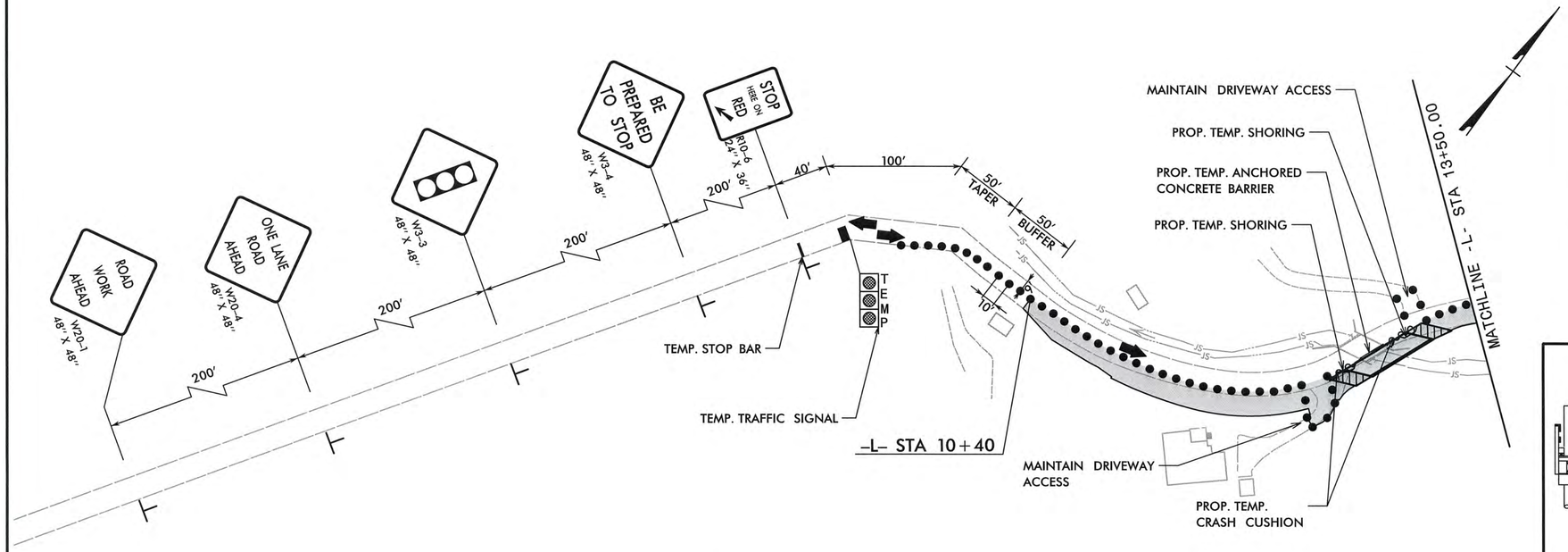

TYPICAL SECTION VIEW

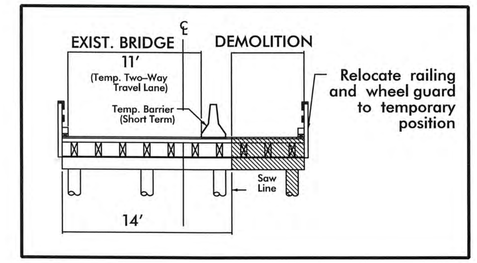

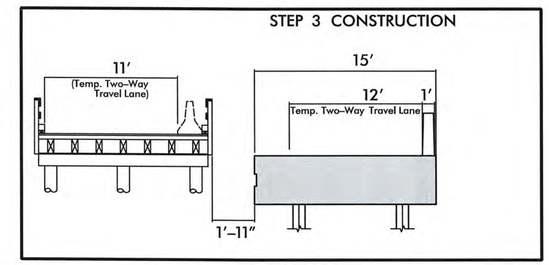

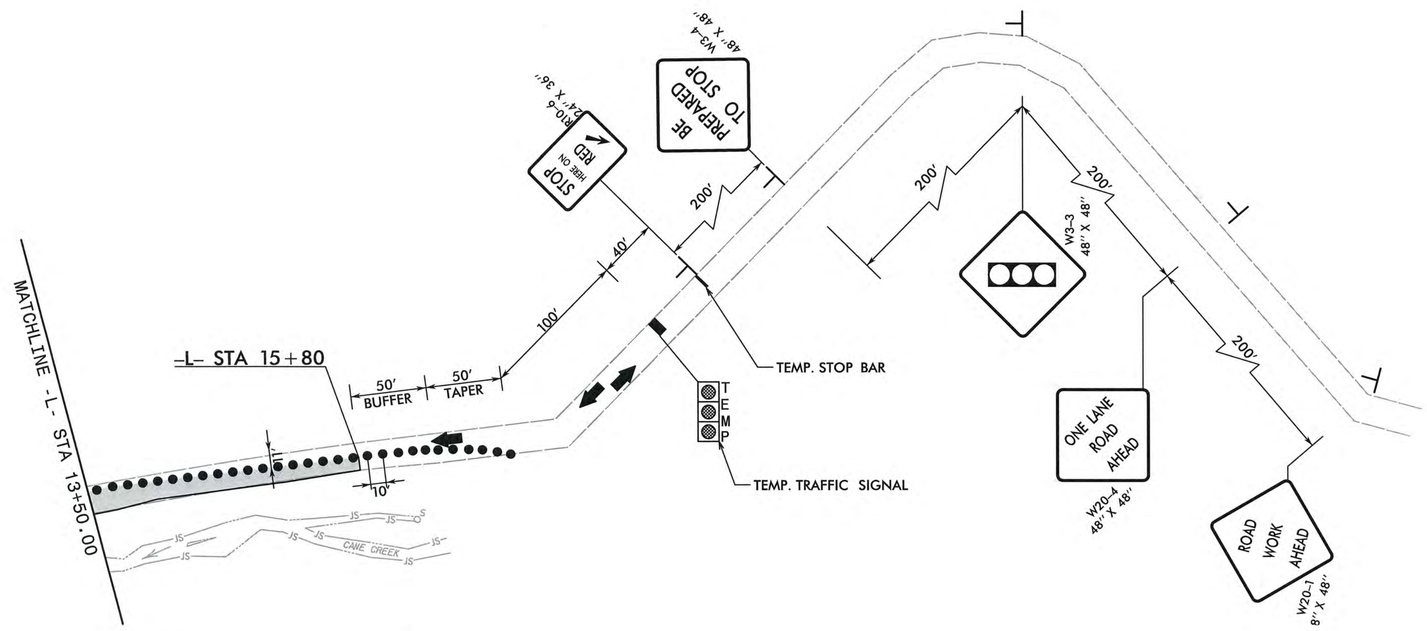

PHASING NOTES

STEP 1: INSTALL TEMP. SIGNALS, TEMP. STOP BARS, ADVANCED WARNING SIGNS AND TRAFFIC CONTROL DEVICES.

STEP 2: PLACE TEMP. BARRIER, REMOVE PART OF EXISTING BRIDGE, AND RELOCATE RAILING.

STEP 3: CONSTRUCT PART OF PROPOSED BRIDGE AND ROADWAY.

LEGEND

- EXISTING ROADWAY
- PROPOSED CONSTRUCTION
- COMPLETED ROADWAY

AECOM
NC Firm License No.: F-0342
701 Corporate Center Drive
Suite 475 Raleigh, NC 27607
Phone: 919-854-6200

APPROVED: DATE: 7/10/14

NORTH CAROLINA PROFESSIONAL SEAL 18187 ENGINEER KEVIN J. VAN METER

DIVISION OF HIGHWAYS STATE OF NORTH CAROLINA DEPARTMENT OF TRANSPORTATION WORK ZONE TRAFFIC CONTROL

PHASE II DETAIL

SCALE:
DATE: 7/10/2014
DWG. BY: TEH
DESIGN BY: KJV
REVIEWED BY:

REVISIONS

CADD FILE

2:19:56 PM
C:\Users\ctrl\AppData\Local\Bentley\Microsoft\Office\Temp\ctrl\172\400_Tech_Info_Disc_Files\450_NCDOTStdTechDesFiles\BRG_310\Traffic\TrafficControl\TCP\49-0310_tcp_phase2_psh.dgn

PROJ. REFERENCE NO.	SHEET NO.
17BP.14.R.66	TMP-4

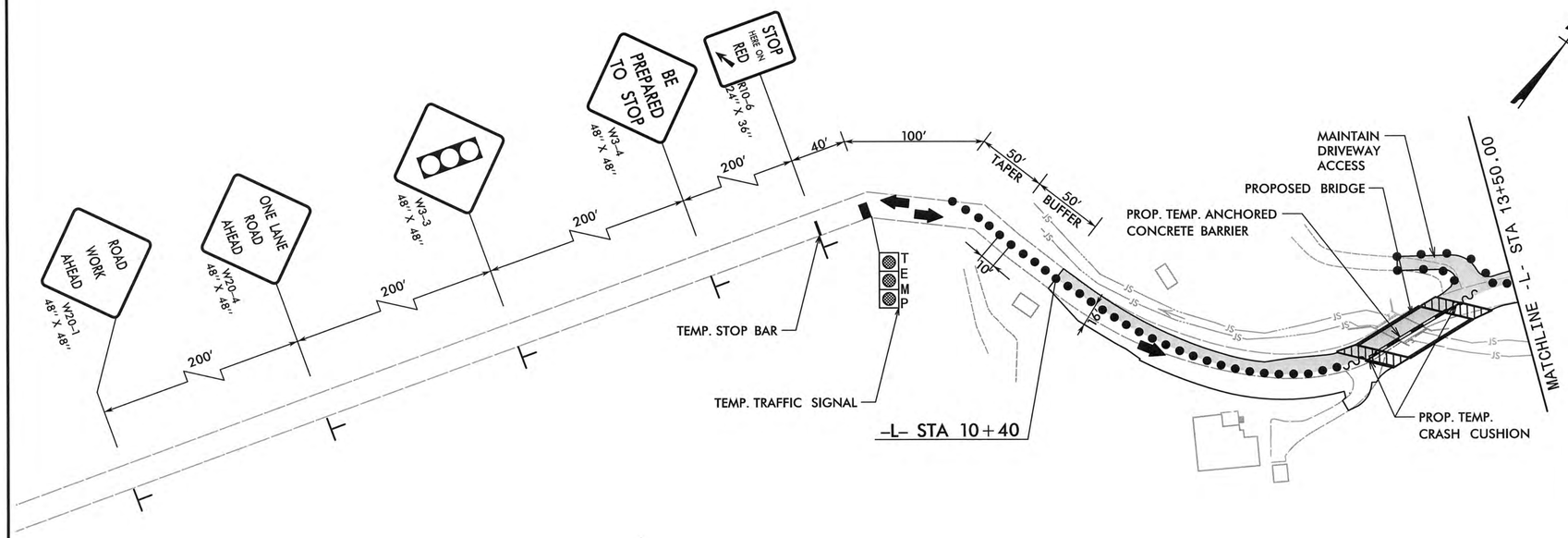

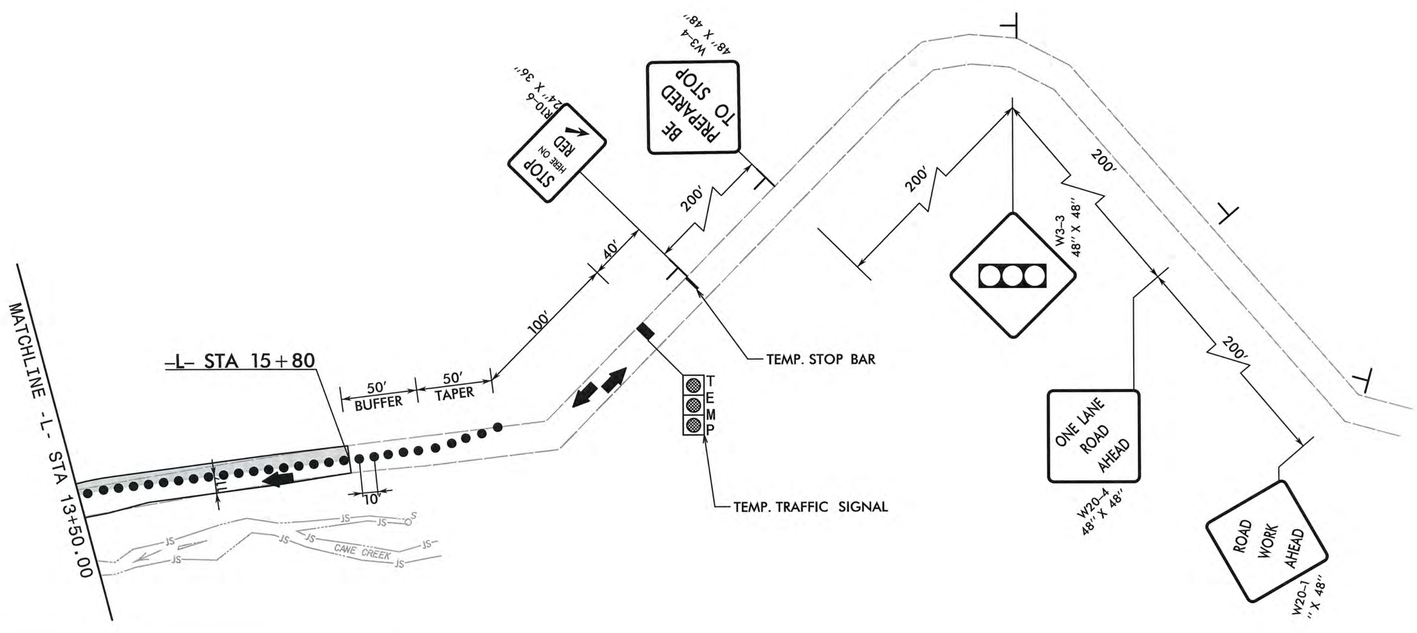

TYPICAL SECTION VIEW

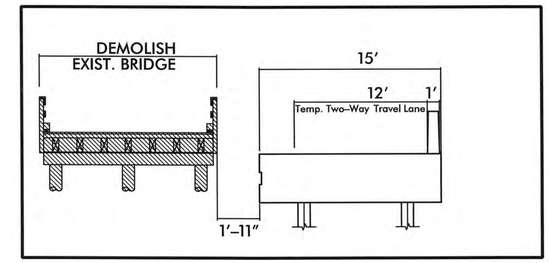

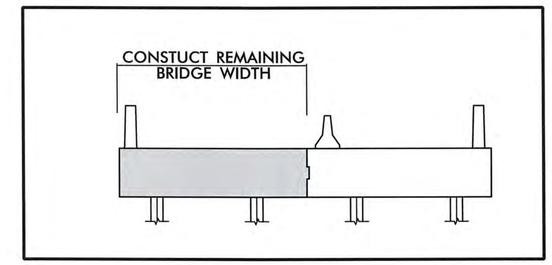

PHASING NOTES

STEP 1: SHIFT TRAFFIC TO ROADWAY AND BRIDGE CONSTRUCTED DURING PHASE II.

STEP 2: REMOVE REMAINING EXISTING BRIDGE.

STEP 3: CONSTRUCT REMAINING PORTION OF PROPOSED BRIDGE AND ROADWAY.

STEP 4: REMOVE TEMP. SIGNALS, TEMP. STOP BARS, ADVANCED WARNING SIGNS AND TRAFFIC CONTROL DEVICES.

STEP 5: OPEN PROJECT TO FINAL TRAFFIC PATTERN.

LEGEND

EXISTING ROADWAY

PROPOSED CONSTRUCTION

COMPLETED ROADWAY

AECOM
NC Firm License No.: F-0342
701 Corporate Center Drive
Suite 475 Raleigh, NC 27607
Phone: 919-854-6200

APPROVED: DATE: 7/10/14

NORTH CAROLINA PROFESSIONAL SEAL 18187 ENGINEER KEVIN J. VAN METRE

DIVISION OF HIGHWAYS STATE OF NORTH CAROLINA DEPARTMENT OF TRANSPORTATION WORK ZONE TRAFFIC CONTROL

PHASE III DETAIL

SCALE:	
DATE:	7/10/2014
DWG. BY:	TEH
DESIGN BY:	KJV
REVIEWED BY:	

REVISIONS

CADD FILE

21957 PM
G:\60238772\400_Tech_Info_Disc_Files\450_NCDOTStdTechDesFiles\BRG_310\Traffic\TrafficControl\TCP\49-0310_tcp_phase3.psh.dgn

PROJ. REFERENCE NO.	SHEET NO.
17BP.14.R.66	PMP-1

PROJECT MARKING SCHEDULE

BRIDGE 310

SYMBOL	DESCRIPTION	PAY ITEM	PAY ITEM QUANTITY
		PAINT(4", 2 APPLICATIONS)	
PI	YELLOW DOUBLE CENTER		2200 LF
		PAINT(4", 2 APPLICATIONS)	
PA	WHITE EDGELINE		2360 LF

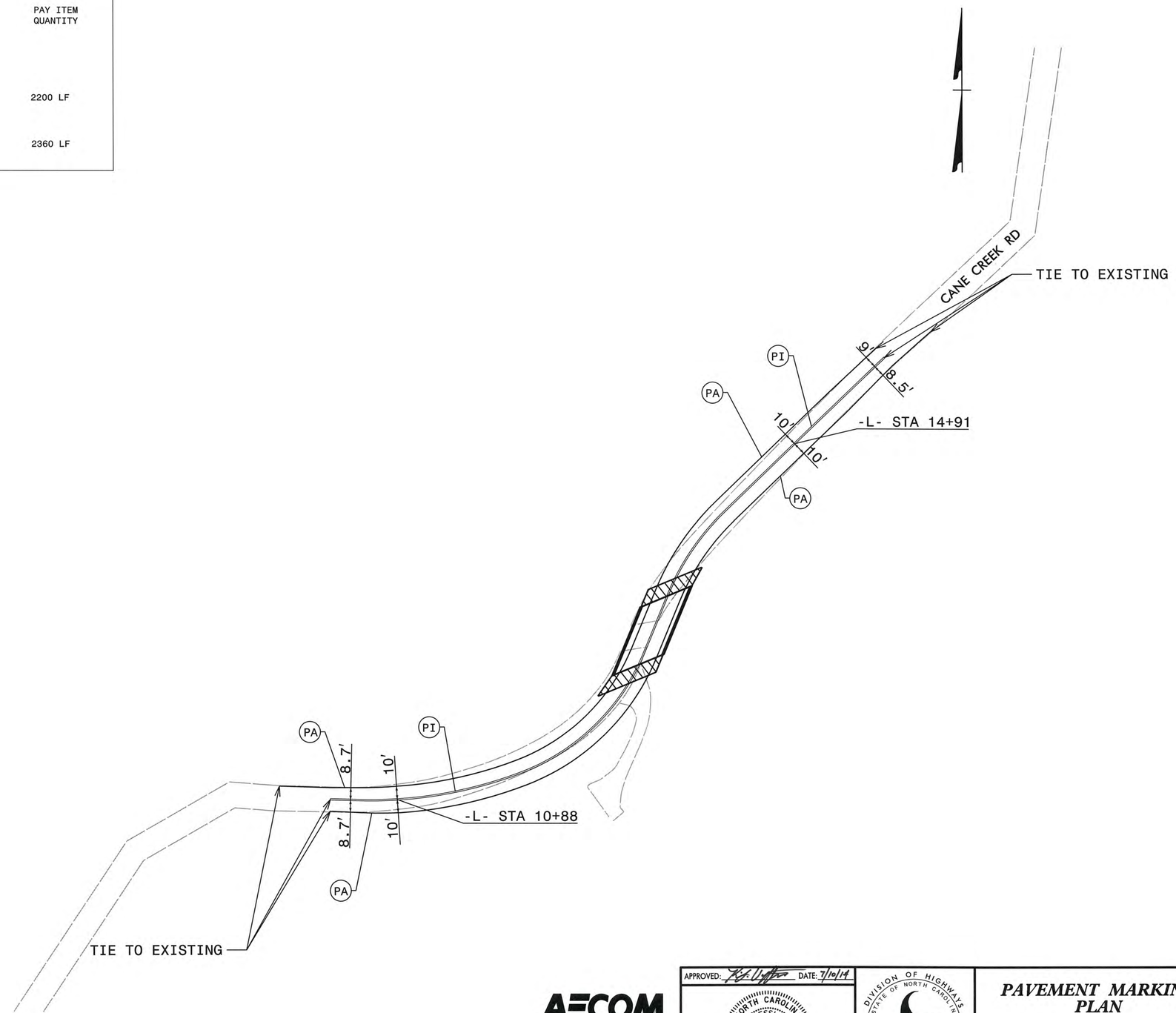

LEGEND

PA WHITE EDGELINE
PI YELLOW DOUBLE CENTER

GRAPHIC SCALE
40 20 0 40 80
PLANS

AECOM
NC Firm License No.: F-0342
701 Corporate Center Drive
Suite 475 Raleigh, NC 27607
Phone: 919-854-6200

APPROVED: DATE: 7/10/14

NORTH CAROLINA PROFESSIONAL SEAL 18187 ENGINEER KEVIN J. VAN METRE

DIVISION OF HIGHWAYS STATE OF NORTH CAROLINA DEPARTMENT OF TRANSPORTATION WORK ZONE TRAFFIC CONTROL

PAVEMENT MARKING PLAN

SCALE:	
DATE:	7/10/2014
DWG. BY:	TEH
DESIGN BY:	KJV
REVIEWED BY:	

REVISIONS

CADD FILE

2:19:58 PM
Q:\60238772\400_Tech_Info_Disc_Files\450_NCDOTStdTechDesFiles\BRG_310\Traffic\TrafficControl\PMP\49-0310_pmp_psh.dgn
crawfordb

PROJECT REFERENCE NO.	SHEET NO.
17BP.14.R.66	SIG-1

PHASING DIAGRAM

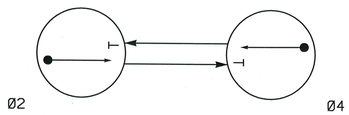

PHASING DIAGRAM DETECTION LEGEND

DETECTED MOVEMENT

UNDETECTED MOVEMENT (OVERLAP)

TABLE OF OPERATION

SIGNAL FACE	PHASE Ø2	PHASE Ø4	FLASH
21, 22	G	R	R
41, 42	R	G	R

SIGNAL FACE I.D.

All Heads L.E.D.

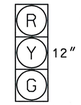

21, 22
41, 42

LOOP & DETECTOR INSTALLATION CHART

INDUCTIVE LOOPS					DETECTOR PROGRAMMING		
LOOP	SIZE (FT)	DISTANCE FROM STOPBAR (FT)	TURNS	NEW LOOP	PHASE	CALLING	EXTENSION
2A	6X40	+5	2-4-2	X	2	X	X
4A	6X40	+5	2-4-2	X	4	X	X

2 Phase
Actuated
Temporary Signal

NOTES

1. SEE SPECIAL PROVISION FOR DETAILS ON PORTABLE TRAFFIC SIGNAL SYSTEM.
2. MICROWAVE DETECTION OR VIDEO DETECTION MAY BE USED IN LIEU OF LOOP DETECTION AS SHOWN ON THE PLAN.
3. TEMPORARY WOOD POLES WITH SPAN WIRE AND SIGNAL HEADS MAY BE USED IN LIEU OF THE TRAILER MOUNTED SIGNAL AS SHOWN ON THE PLAN.

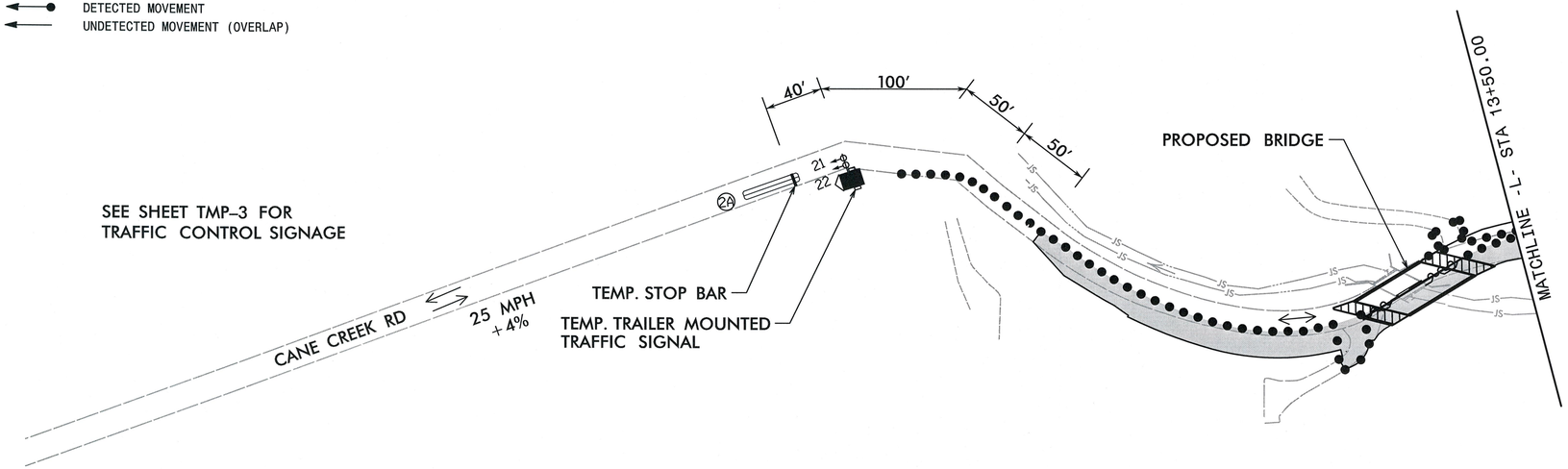

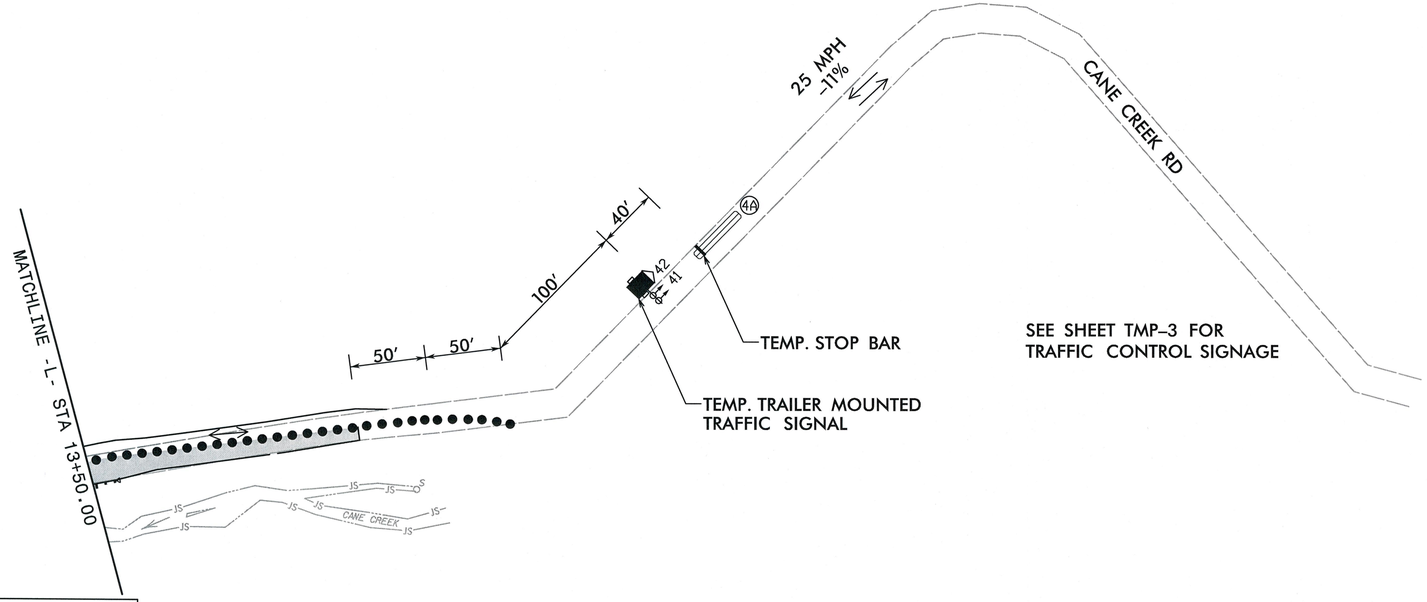

TIMING CHART

PHASE	Ø2	Ø4
MINIMUM GREEN*	15 SEC.	15 SEC.
VEHICLE EXTENSION *	5 SEC.	5 SEC.
YELLOW CHANGE INT.	3.0 SEC.	3.9 SEC.
RED CLEARANCE	27.9 SEC.	27.9 SEC.
MAXIMUM GREEN*	30 SEC.	30 SEC.
RECALL POSITION	NONE	RECALL

* These values may be field adjusted. Do not adjust Min Green and Extension times for phases 2 and 4 lower than what is shown.

LEGEND

PROPOSED		EXISTING
	Traffic Signal Head	
	Directional Arrow	
	Inductive Loop Detector	
	Trailer Mounted Signal	N/A

AECOM
NC Firm License No.: F-0342
701 Corporate Center Drive
Suite 475 Raleigh, NC 27607
Phone: 919-854-6200

TEMPORARY SIGNAL

Prepared in the Offices of:
Transportation Mobility and Safety Division
STATE OF NORTH CAROLINA DEPARTMENT OF TRANSPORTATION
Signal Design Section
750 N.Greenfield Pkwy,Garner,NC 27529

TEMPORARY SIGNAL
BRIDGE 310
PHASE 2 CONSTRUCTION

JACKSON COUNTY DIVISION 14

PLAN DATE:	APRIL 2013	REVIEWED BY:	S. NANDAGIRI
PREPARED BY:	S. W. COX	REVIEWED BY:	

SCALE 0 50' 1" = 50'

REVISIONS	INIT.	DATE

SEAL
NORTH CAROLINA PROFESSIONAL SEAL 37856 ENGINEER STEVEN W. COX

SIGNATURE 7-10-14 DATE

SIG. INVENTORY NO. N/A

1:07:26 PM
Q:\60238772\400_Tech_Info_Disc_Files\450_NCDOT\TechDesFiles\BRG_310\Traffic\TrafficControl\TCP\49-0310_sig_phase2_psh.dgn
coxst

PROJECT REFERENCE NO.	SHEET NO.
17BP.14.R.66	SIG-2

PHASING DIAGRAM

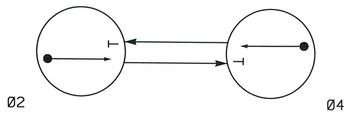

PHASING DIAGRAM DETECTION LEGEND

DETECTED MOVEMENT

UNDETECTED MOVEMENT (OVERLAP)

TABLE OF OPERATION

SIGNAL FACE	PHASE Ø2	PHASE Ø4	FLASH
21, 22	G	R	R
41, 42	R	G	R

SIGNAL FACE I.D.

All Heads L.E.D.

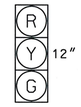

21, 22
41, 42

LOOP & DETECTOR INSTALLATION CHART

INDUCTIVE LOOPS					DETECTOR PROGRAMMING		
LOOP	SIZE (FT)	DISTANCE FROM STOPBAR (FT)	TURNS	NEW LOOP	PHASE	CALLING	EXTENSION
2A	6X40	+5	2-4-2	X	2	X	X
4A	6X40	+5	2-4-2	X	4	X	X

2 Phase
Actuated
Temporary Signal

NOTES

1. SEE SPECIAL PROVISION FOR DETAILS ON PORTABLE TRAFFIC SIGNAL SYSTEM.
2. MICROWAVE DETECTION OR VIDEO DETECTION MAY BE USED IN LIEU OF LOOP DETECTION AS SHOWN ON THE PLAN.
3. TEMPORARY WOOD POLES WITH SPAN WIRE AND SIGNAL HEADS MAY BE USED IN LIEU OF THE TRAILER MOUNTED SIGNAL AS SHOWN ON THE PLAN.

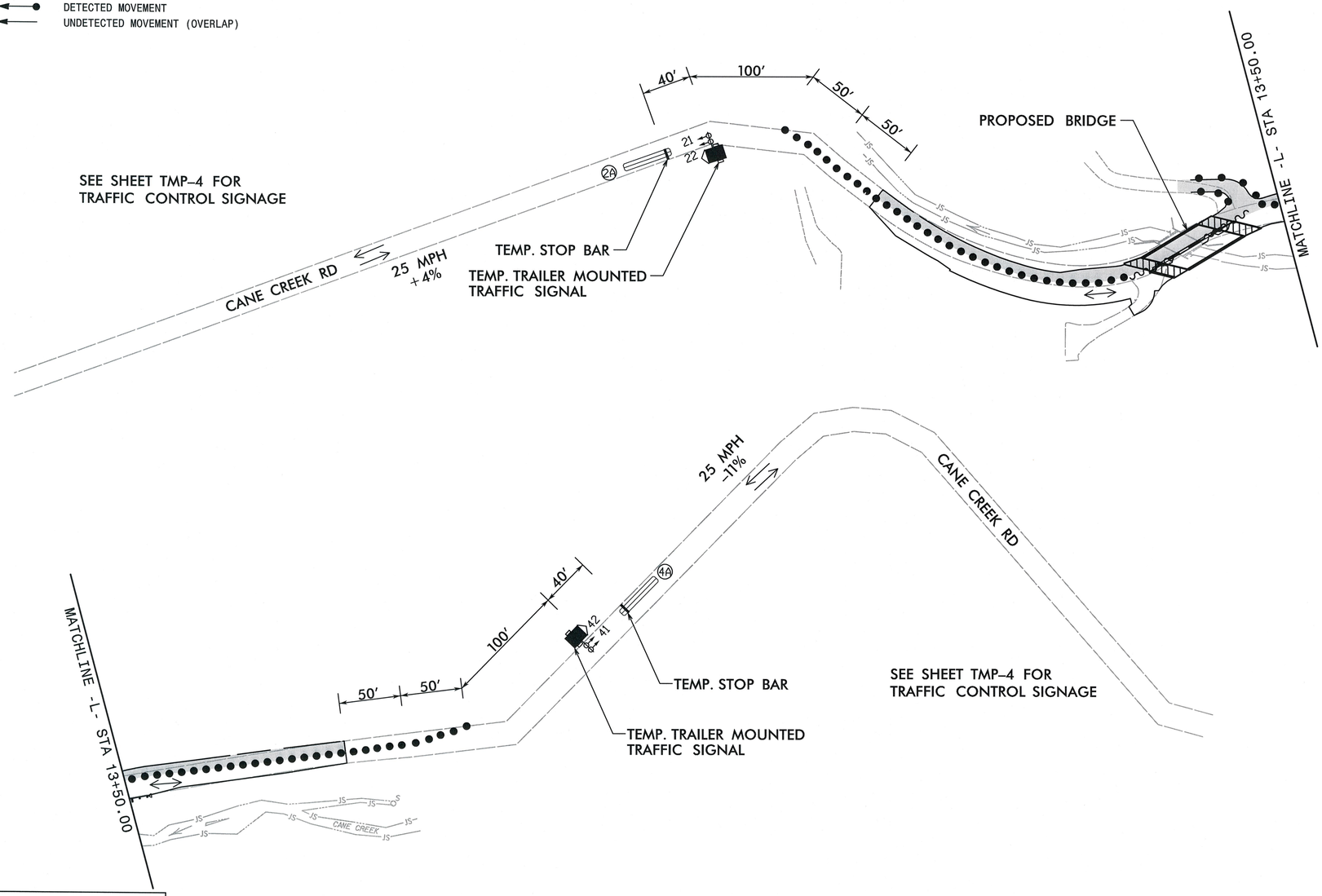

TIMING CHART

PHASE	Ø2	Ø4
MINIMUM GREEN*	15 SEC.	15 SEC.
VEHICLE EXTENSION *	5 SEC.	5 SEC.
YELLOW CHANGE INT.	3.0 SEC.	3.9 SEC.
RED CLEARANCE	27.9 SEC.	27.9 SEC.
MAXIMUM GREEN*	30 SEC.	30 SEC.
RECALL POSITION	NONE	RECALL

* These values may be field adjusted. Do not adjust Min Green and Extension times for phases 2 and 4 lower than what is shown.

LEGEND

PROPOSED		EXISTING
	Traffic Signal Head	
	Directional Arrow	
	Inductive Loop Detector	
	Trailer Mounted Signal	N/A

AECOM
NC Firm License No.: F-0342
701 Corporate Center Drive
Suite 475 Raleigh, NC 27607
Phone: 919-854-6200

TEMPORARY SIGNAL

Prepared In the Offices of:
Transportation Mobility and Safety Division
STATE OF NORTH CAROLINA DEPARTMENT OF TRANSPORTATION
Signal Design Section
750 N.Greenfield Pkwy,Garner,NC 27529

TEMPORARY SIGNAL
BRIDGE 310
PHASE 3 CONSTRUCTION

JACKSON COUNTY DIVISION 14

PLAN DATE:	APRIL 2013	REVIEWED BY:	S. NANDAGIRI
PREPARED BY:	S. W. COX	REVIEWED BY:	

SCALE 0 50' 1" = 50'

REVISIONS	INIT.	DATE

SEAL
NORTH CAROLINA PROFESSIONAL SEAL 37856 ENGINEER STEVEN W. COX

SIGNATURE 7-10-14 DATE

SIG. INVENTORY NO. N/A

1:09:10 PM
Q:\#60238772\#400_Tech_Info_Disc_Files\#450_NCDOTStdTechDesFiles\BRG_310\Traffic\TrafficControl\TCP\#3-0310_sig_phase3_psh.dgn
cox61

EROSION CONTROL PLAN

PROJECT REFERENCE NO.	SHEET NO.
17BP.14.R.66	EC-1

Prepared in the Office of: AECOM
NC FIRM LICENSE No: F-0342
701 Corporate Center Drive, Suite 475
Raleigh, NC 27607
(919) 854-6200 (919) 854-6259(FAX)

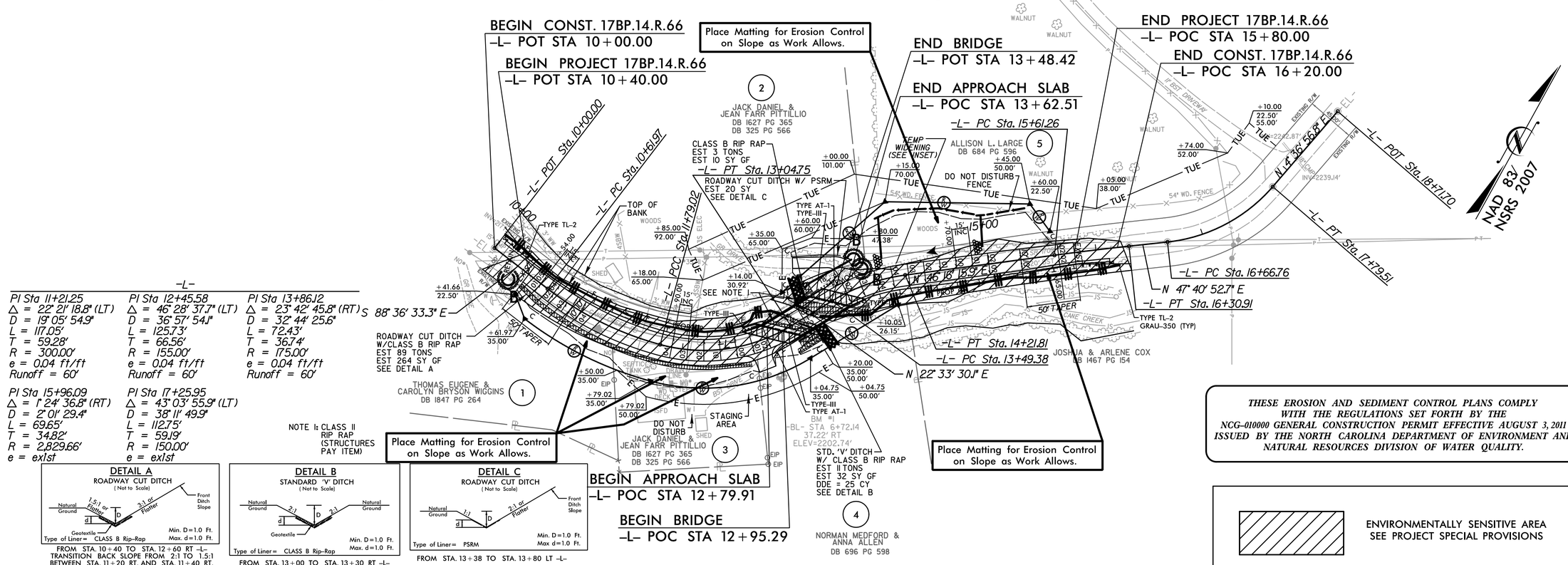

-L-

PI Sta 11+21.25	PI Sta 12+45.58	PI Sta 13+86.12
Δ = 22° 21' 18.8" (LT)	Δ = 46° 28' 37.7" (LT)	Δ = 23° 42' 45.8" (RT)
D = 19° 05' 54.9"	D = 36° 57' 54.1"	D = 32° 44' 25.6"
L = 117.05'	L = 125.73'	L = 72.43'
T = 59.28'	T = 66.56'	T = 36.74'
R = 300.00'	R = 155.00'	R = 175.00'
e = 0.04 ft/ft	e = 0.04 ft/ft	e = 0.04 ft/ft
Runoff = 60'	Runoff = 60'	Runoff = 60'

PI Sta 15+96.09	PI Sta 17+25.95
Δ = 1° 24' 36.8" (RT)	Δ = 43° 03' 55.9" (LT)
D = 2° 01' 29.4"	D = 38° 11' 49.9"
L = 69.65'	L = 112.75'
T = 34.82'	T = 59.19'
R = 2,829.66'	R = 150.00'
e = ex1st	e = ex1st

NOTE 1: CLASS II RIP RAP (STRUCTURES PAY ITEM)

THESE EROSION AND SEDIMENT CONTROL PLANS COMPLY WITH THE REGULATIONS SET FORTH BY THE NCG-010000 GENERAL CONSTRUCTION PERMIT EFFECTIVE AUGUST 3, 2011 ISSUED BY THE NORTH CAROLINA DEPARTMENT OF ENVIRONMENT AND NATURAL RESOURCES DIVISION OF WATER QUALITY.

ENVIRONMENTALLY SENSITIVE AREA
SEE PROJECT SPECIAL PROVISIONS

Std. #	Description	Symbol
1605.01	Temporary Silt Fence	
1606.01	Special Sediment Control Fence	
1622.01	Temporary Berms and Slope Drains	
1630.02	Silt Basin Type B	
1630.03	Temporary Silt Ditch	TSD
1630.05	Temporary Diversion	TD
1630.06	Special Stilling Basin	
1632.03	Rock Inlet Sediment Trap Type C	
1633.01	Temporary Rock Silt Check Type-A	
	Temporary Rock Silt Check Type-A with Matting and Polyacrylamide (PAM)	
1633.02	Temporary Rock Silt Check Type-B	
	Excelsior Wattles	EW

ROADSIDE ENVIRONMENTAL UNIT
DEPARTMENT OF TRANSPORTATION
DIVISION OF HIGHWAYS
RALEIGH, N.C.

2012 STANDARD SPECIFICATIONS

NOTES: ANY DEVIATION FROM OPTIONS GIVEN WILL REQUIRE PRIOR APPROVAL BY ENGINEER.

ADDITIONAL EROSION CONTROL DEVICES MAY NEED TO BE INSTALLED AS DIRECTED BY THE ENGINEER.

Rene Remy
LEVEL III NAME

3135
LEVEL III CERTIFICATION NO.

GRAPHIC SCALE

25 0 50

PLANS

2012 STANDARD DRAWINGS

1604.01	Railroad Erosion Control Detail	1632.01	Rock Inlet Sediment Trap Type A
1605.01	Temporary Silt Fence	1632.02	Rock Inlet Sediment Trap Type B
1606.01	Special Sediment Control Fence	1632.03	Rock Inlet Sediment Trap Type C
1607.01	Gravel Construction Entrance	1633.01	Temporary Rock Silt Check Type A
1622.01	Temporary Berms and Slope Drains	1633.02	Temporary Rock Silt Check Type B
1630.01	Riser Basin	1634.01	Temporary Rock Sediment Dam Type A
1630.02	Silt Basin Type B	1634.02	Temporary Rock Sediment Dam Type B
1630.03	Temporary Silt Ditch	1635.01	Rock Pipe Inlet Sediment Trap Type A
1630.04	Stilling Basin	1635.02	Rock Pipe Inlet Sediment Trap Type B
1630.05	Temporary Diversion	1640.01	Coir Fiber Baffle
1630.06	Special Stilling Basin	1645.01	Temporary Stream Crossing
1631.01	Matting Installation		

REVISIONS

8/17/99

USER: remyr
DATE: 7/10/2014
TIME: 10:42:18 AM
DGN: R:\Environmental\Design\R-0310_rev_ec01.dgn

PROJECT REFERENCE NO.	SHEET NO.
17BP.14.R.66	RF-1

Prepared in the Office of: AECOM
NC FIRM LICENSE No: F-0342
701 Corporate Center Drive, Suite 475
Raleigh, NC 27607
(919) 854-6200 - (919) 854-6259(FAX)

PLANTING DETAILS

SEEDLING / LINER BAREROOT PLANTING DETAIL

HEALING IN

1. Locate a healing-in site in a shady, well protected area.
2. Excavate a flat bottom trench 12 inches deep and provide drainage.

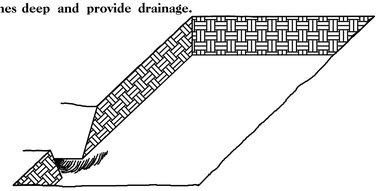

3. Backfill the trench with 2 inches well rotted sawdust. Place a 2 inch layer of well rotted sawdust at a sloping angle at one end of the trench.

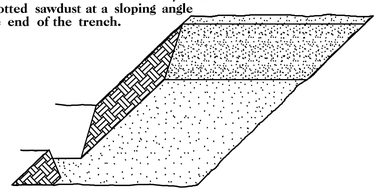

4. Place a single layer of plants against the sloping end so that the root collar is at ground level.

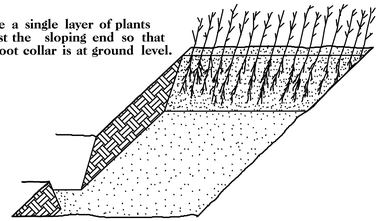

5. Place a 2 inch layer of well rotted sawdust over the roots maintaining a sloping angle.

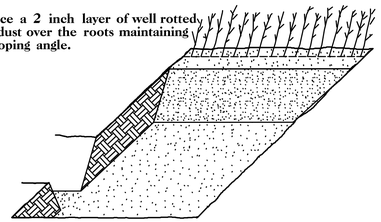

6. Repeat layers of plants and sawdust as necessary and water thoroughly.

DIBBLE PLANTING METHOD
USING THE KBC PLANTING BAR

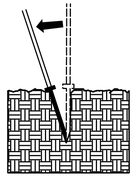

1. Insert planting bar as shown and pull handle toward planter.

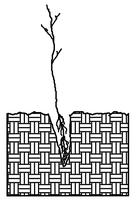

2. Remove planting bar and place seedling at correct depth.

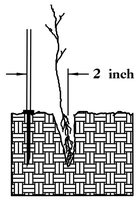

3. Insert planting bar 2 inches toward planter from seedling.

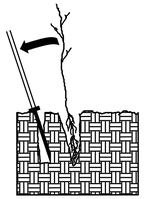

4. Pull handle of bar toward planter, firming soil at bottom.

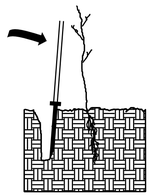

5. Push handle forward firming soil at top.

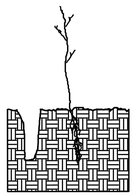

6. Leave compaction hole open. Water thoroughly.

PLANTING NOTES:

PLANTING BAG
During planting, seedlings shall be kept in a moist canvas bag or similar container to prevent the root systems from drying.

KBC PLANTING BAR
Planting bar shall have a blade with a triangular cross section, and shall be 12 inches long, 4 inches wide and 1 inch thick at center.

ROOT PRUNING
All seedlings shall be root pruned, if necessary, so that no roots extend more than 10 inches below the root collar.

REFORESTATION

☐ TREE REFORESTATION SHALL BE PLANTED 6 FT. TO 10 FT. ON CENTER, RANDOM SPACING, AVERAGING 8 FT. ON CENTER, APPROXIMATELY 680 PLANTS PER ACRE.

REFORESTATION

MIXTURE, TYPE, SIZE, AND FURNISH SHALL CONFORM TO THE FOLLOWING:

25%	LIRIODENDRON TULIPIFERA	TULIP POPLAR	12 in – 18 in BR
25%	PLATANUS OCCIDENTALIS	SYCAMORE	12 in – 18 in BR
25%	FRAXINUS PENNSYLVANICA	GREEN ASH	12 in – 18 in BR
25%	BETULA NIGRA	RIVER BIRCH	12 in – 18 in BR

REFORESTATION DETAIL SHEET

N.C.D.O.T. - ROADSIDE ENVIRONMENTAL UNIT

8/17/99

REVISIONS

USER: nenr
DATE: 7/10/2014
TIME: 10:43:44 AM
DGN: R:\Environmental\Design\R-0310_rev_EC_RF1.dgn

Prepared in the Office of: AECOM
NC FIRM LICENSE No: F-0342
701 Corporate Center Drive, Suite 475
Raleigh, NC 27607
(919) 854-6200 (919) 854-6259(FAX)

DIVISION OF HIGHWAYS
STATE OF NORTH CAROLINA

SOIL STABILIZATION TIMEFRAMES

SITE DESCRIPTION	STABILIZATION TIME	TIMEFRAME EXCEPTIONS
PERIMETER DIKES, SWALES, DITCHES AND SLOPES	7 DAYS	NONE
HIGH QUALITY WATER (HQW) ZONES	7 DAYS	NONE
SLOPES STEEPER THAN 3:1	7 DAYS	IF SLOPES ARE 10' OR LESS IN LENGTH AND ARE NOT STEEPER THAN 2:1, 14 DAYS ARE ALLOWED.
SLOPES 3:1 OR FLATTER	14 DAYS	7 DAYS FOR SLOPES GREATER THAN 50' IN LENGTH.
ALL OTHER AREAS WITH SLOPES FLATTER THAN 4:1	14 DAYS	NONE, EXCEPT FOR PERIMETERS AND HQW ZONES.

REVISIONS

8/17/99

USER: rmyr
DATE: 7/10/2014
TIME: 10:42:54 AM
DGN: R:\Environmental\Design\d9-0310_rev_sc02.dgn

PROJECT REFERENCE NO.	SHEET NO.
17BP.14.R.66	EC-3

Prepared in the Office of: AECOM
NC FIRM LICENSE No: F-0342
701 Corporate Center Drive, Suite 475
Raleigh, NC 27607
(919) 854-6200 (919) 854-6259(FAX)

WATTLE BARRIER DETAIL

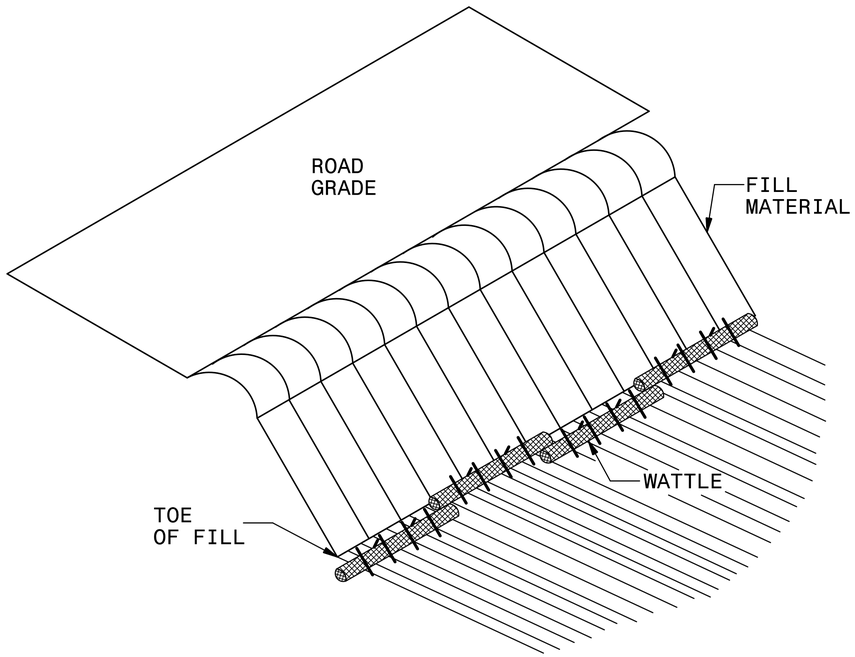

ISOMETRIC VIEW

NOTES:

USE MINIMUM 12 IN. DIAMETER EXCELSIOR WATTLE AND LENGTH OF 10 FT.

EXCAVATE A 1 TO 2 INCH TRENCH FOR WATTLE TO BE PLACED.

DO NOT PLACE WATTLES ON TOE OF SLOPE.

USE 2 FT. WOODEN STAKES WITH A 2 IN. BY 2 IN. NOMINAL CROSS SECTION.

INSTALL A MINIMUM OF 2 UPSLOPE STAKES AND 4 DOWNSLOPE STAKES AT AN ANGLE TO WEDGE WATTLE TO GROUND.

PROVIDE STAPLES MADE OF 0.125 IN. DIAMETER STEEL WIRE FORMED INTO A U SHAPE NOT LESS THAN 12″ IN LENGTH.

INSTALL STAPLES APPROXIMATELY EVERY 1 LINEAR FOOT ON BOTH SIDES OF WATTLE AND AT EACH END TO SECURE IT TO THE SOIL.

FOR BREAKS ALONG LARGE SLOPES, USE MAXIMUM SPACING OF 20 FT.

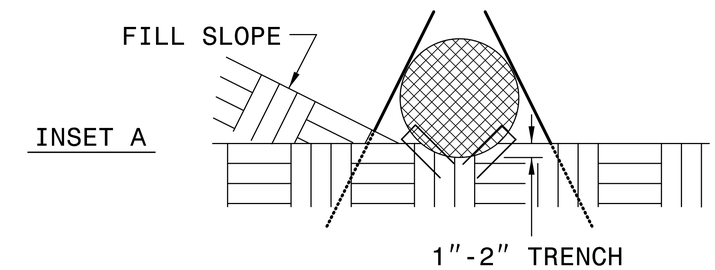

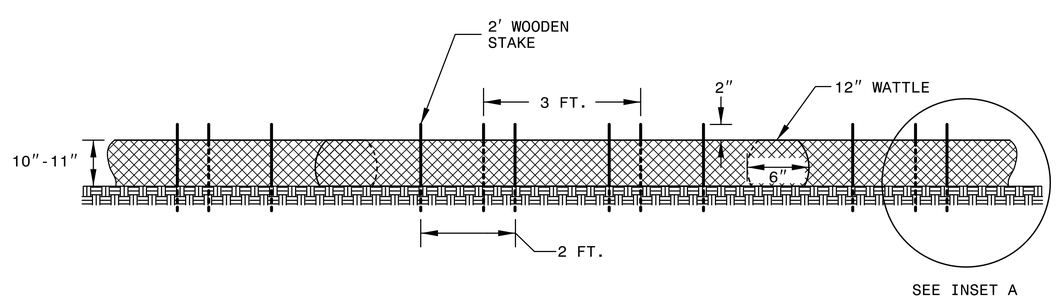

FRONT VIEW

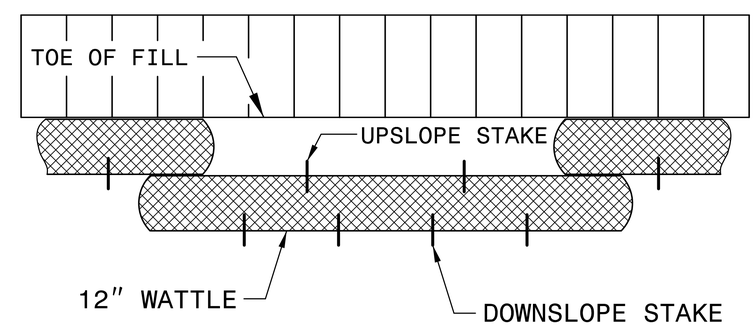

TOP VIEW

REVISIONS

8/17/99

USER: remyr
DATE: 7/10/2014
TIME: 10:43:39 AM
DGN: R:\Environmental\Design\49-030_rev_sc03.dgn

PROJECT REFERENCE NO.	SHEET NO.
17BP.14.R.66	UO-1
R/W SHEET NO.	
ROADWAY DESIGN ENGINEER	HYDRAULICS ENGINEER

Prepared in the Office of: AECOM
NC FIRM LICENSE No: F-0342
701 Corporate Center Drive, Suite 475
Raleigh, NC 27607
(919) 854-6200 - (919) 854-6259(FAX)

UTILITIES BY OTHERS
BRIDGE #310

NAD 83/
NSRS 2007

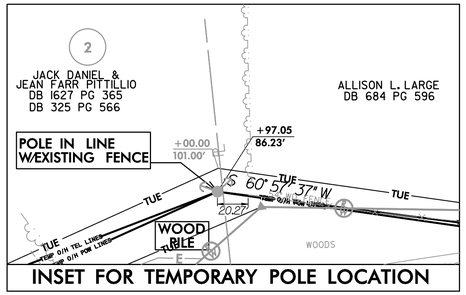

INSET FOR TEMPORARY POLE LOCATION

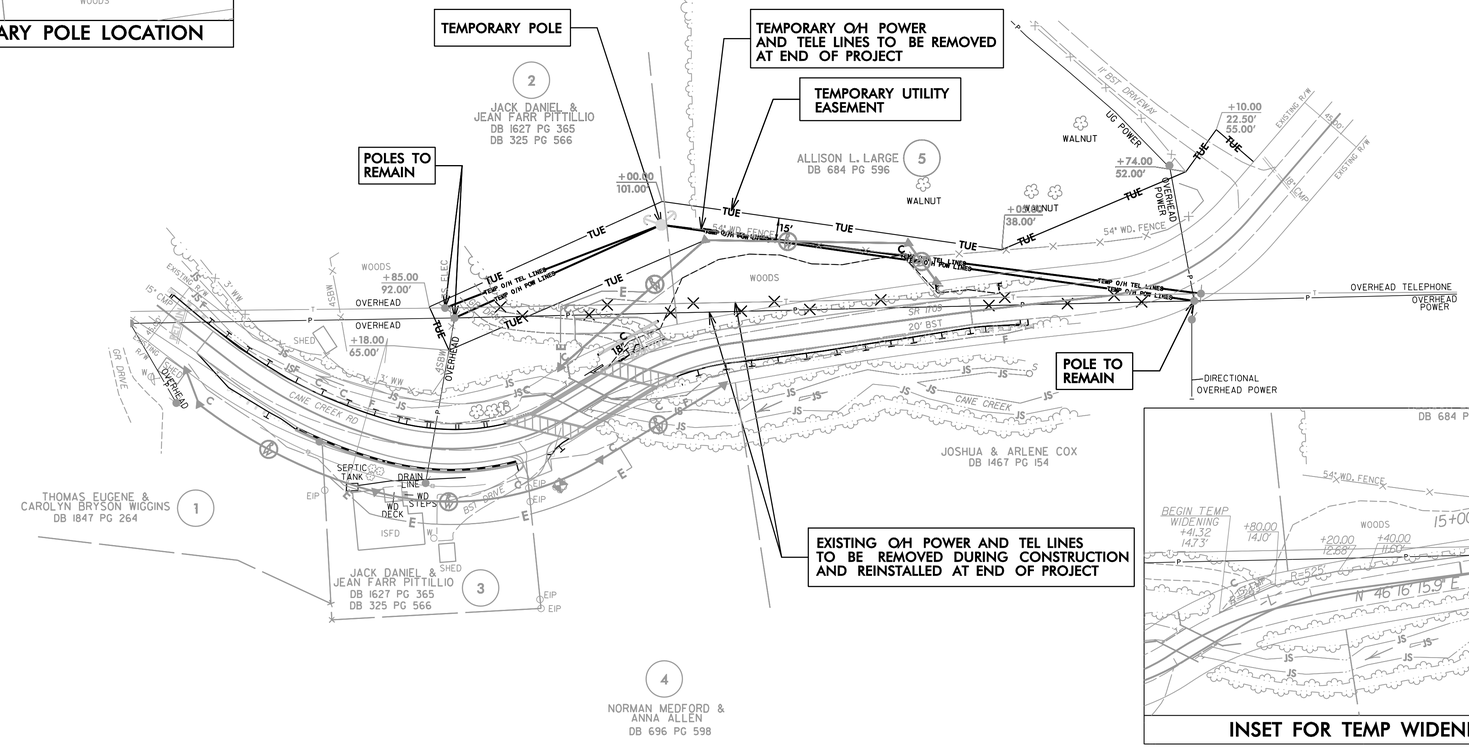

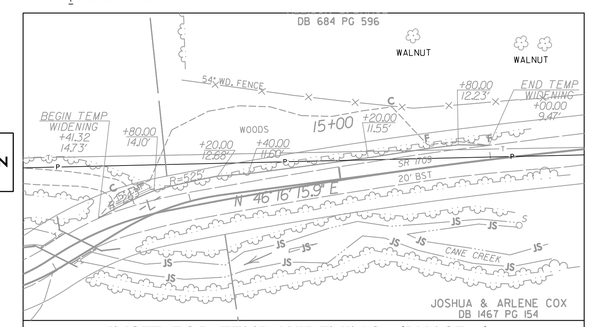

INSET FOR TEMP WIDENING (PHASE 1)

Frontier Communications has a joint use agreement with Western Carolina University Power Utility to share pole line and easement.
Contact : Tina Rutherford at 828-631-4058 or
Billy Green at 828-631-4001

Western Carolina University Power Utility
Contact: Andy DeGrove Project Manager
Western Carolina University
Facilities Management
828-227-3124

REVISIONS

8/17/99

USER: steffensb
DATE: 6/20/2014
TIME: 10:09:06 AM
DGN: 49-0310_uo_pat014.dgn

PROJ. REFERENCE NO.	SHEET NO.
17BP.14.R.66	X-1A

STATE OF NORTH CAROLINA
DIVISION OF HIGHWAYS

NOTE: EMBANKMENT COLUMN DOES NOT INCLUDE BACKFILL FOR UNDERCUT

CROSS-SECTION SUMMARY

Station PHASE 1 L-Temp Widen.	Uncl. Exc. (cu. yd.)	Embt (cu. yd.)
13+41.32		
13+60.00	3	0
13+80.00	4	3
14+00.00	35	3
14+20.00	107	1
14+40.00	174	0
14+60.00	194	0
14+80.00	138	0
15+00.00	104	0
15+20.00	114	0
15+40.00	99	0
15+60.00	43	1
15+80.00	1	0
16+00.00	1	0

Station PHASE 2 L	Uncl. Exc. (cu. yd.)	Embt (cu. yd.)
10+00.00		
10+20.00	0	0
10+40.00	0	0
10+60.00	8	0
10+80.00	17	1
11+00.00	18	0
11+20.00	27	0
11+40.00	42	0
11+60.00	91	0
11+80.00	141	0
12+00.00	138	0
12+20.00	116	0
12+40.00	74	0
12+60.00	34	0
12+80.00	15	0
13+00.00	7	2
13+10.00	2	1
13+40.00		
13+48.42	1	2
13+60.00	2	4
13+80.00	2	10
14+00.00	0	7
14+20.00	2	2
14+40.00	5	1
14+60.00	7	1
14+80.00	8	0
15+00.00	8	0
15+20.00	7	0
15+40.00	3	1
15+60.00	1	3
15+80.00	1	3
16+00.00	1	2
16+20.00	0	1

Station PHASE 3 L	Uncl. Exc. (cu. yd.)	Embt (cu. yd.)
10+00.00		
10+20.00	0	0
10+40.00	1	1
10+60.00	1	0
10+80.00	1	0
11+00.00	1	0
11+20.00	2	0
11+40.00	2	0
11+60.00	5	0
11+80.00	7	0
12+00.00	6	0
12+20.00	5	0
12+40.00	5	1
12+60.00	4	1
12+80.00	24	1
12+95.29	33	0
13+00.00	5	0
13+20.00		
13+40.00	32	8
13+60.00	17	20
13+80.00	28	23
14+00.00	22	17
14+20.00	4	11
14+40.00	5	6
14+60.00	5	4
14+80.00	5	2
15+00.00	6	1
15+20.00	6	1
15+40.00	4	1
15+60.00	2	1
15+80.00	2	1
16+00.00	1	1
16+20.00	0	0

Approximate quantities only. Unclassified excavation, fine grading, clearing and grubbing, and removal of existing pavement will be paid for at the lump sum price for "Grading".

11:03:48 AM
R:\Roadway\Xsc\49-0310_rdy_xpl_1.dgn
Roquet

10/26/98

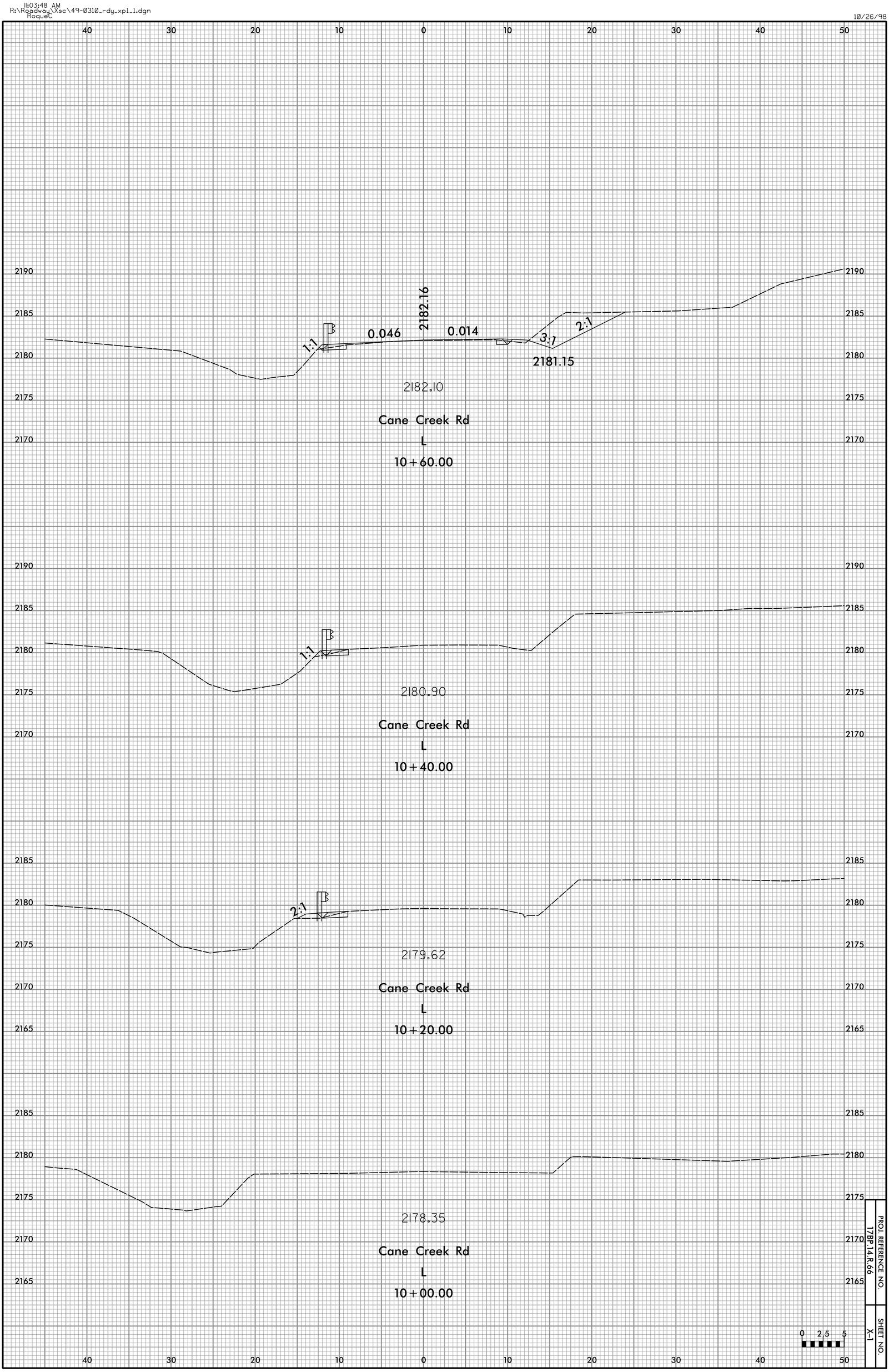

11:03:48 AM
R:\Roadway\Xsc\49-0310_rdy_xpl_1.dgn
Roquet

10/26/98

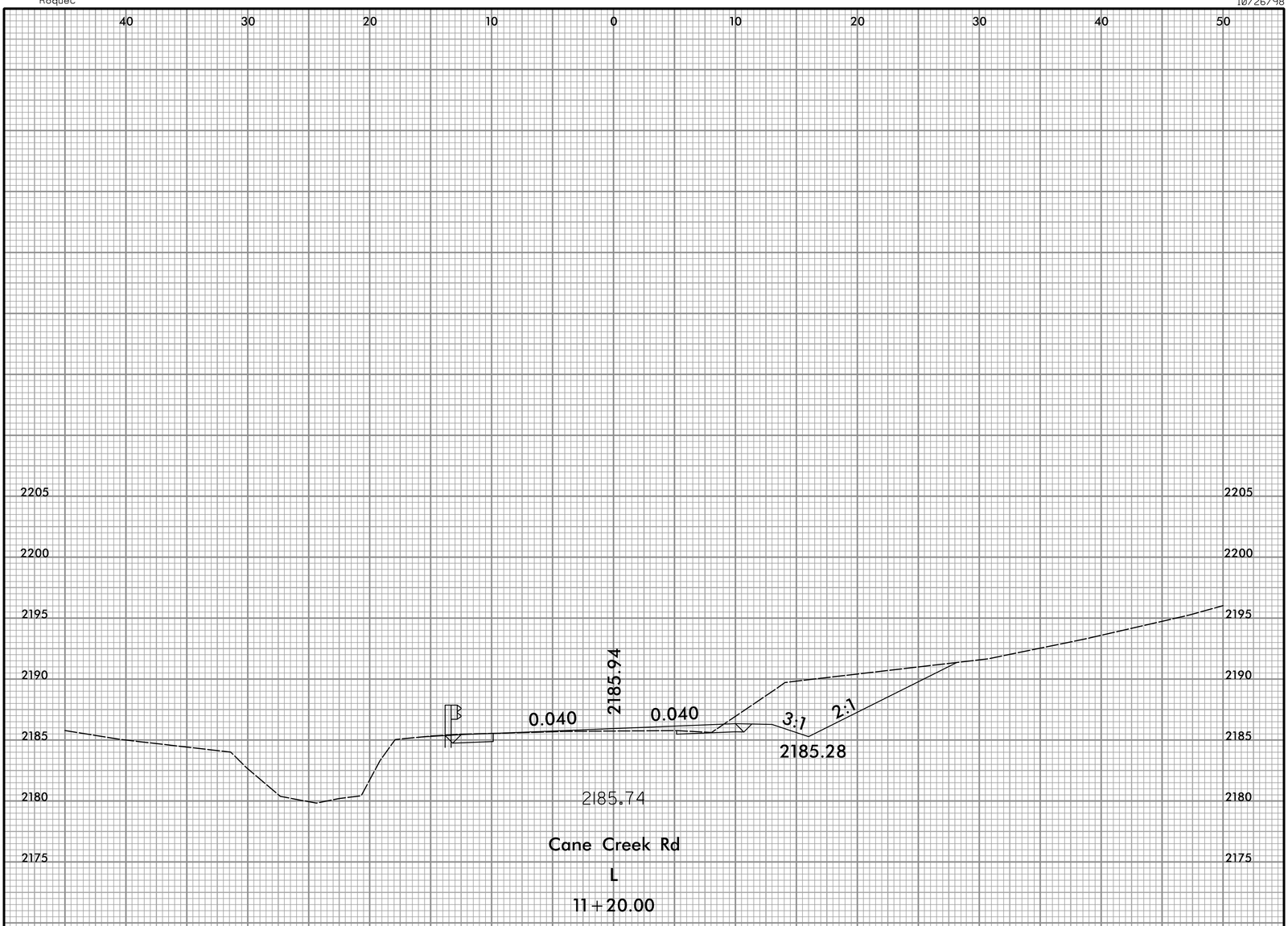

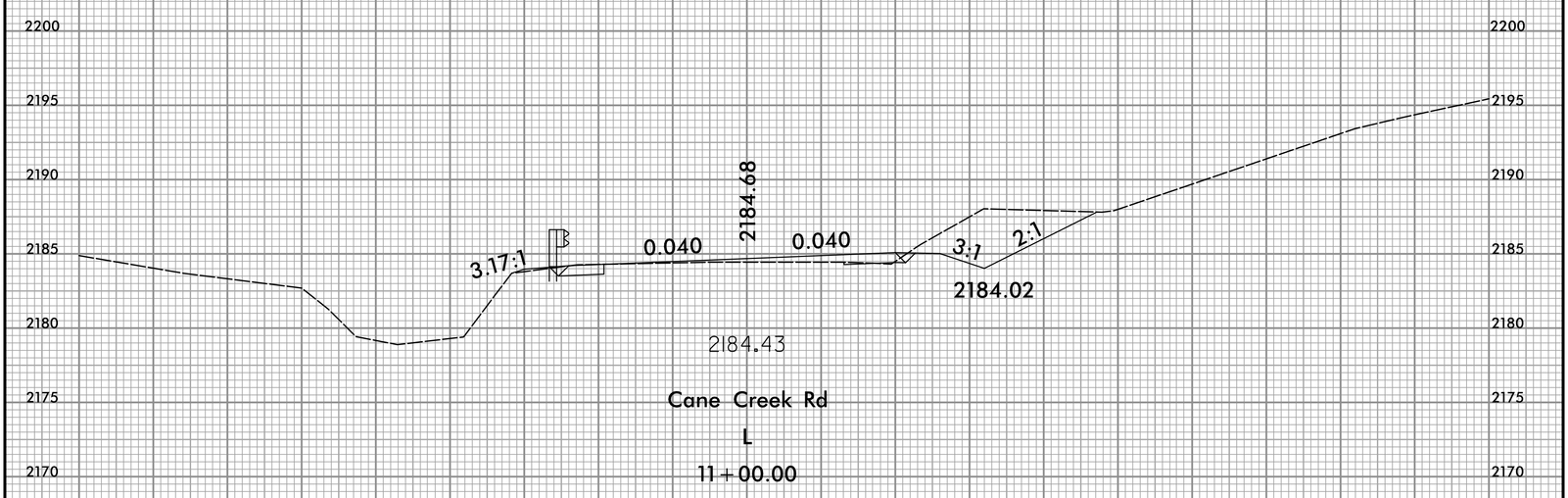

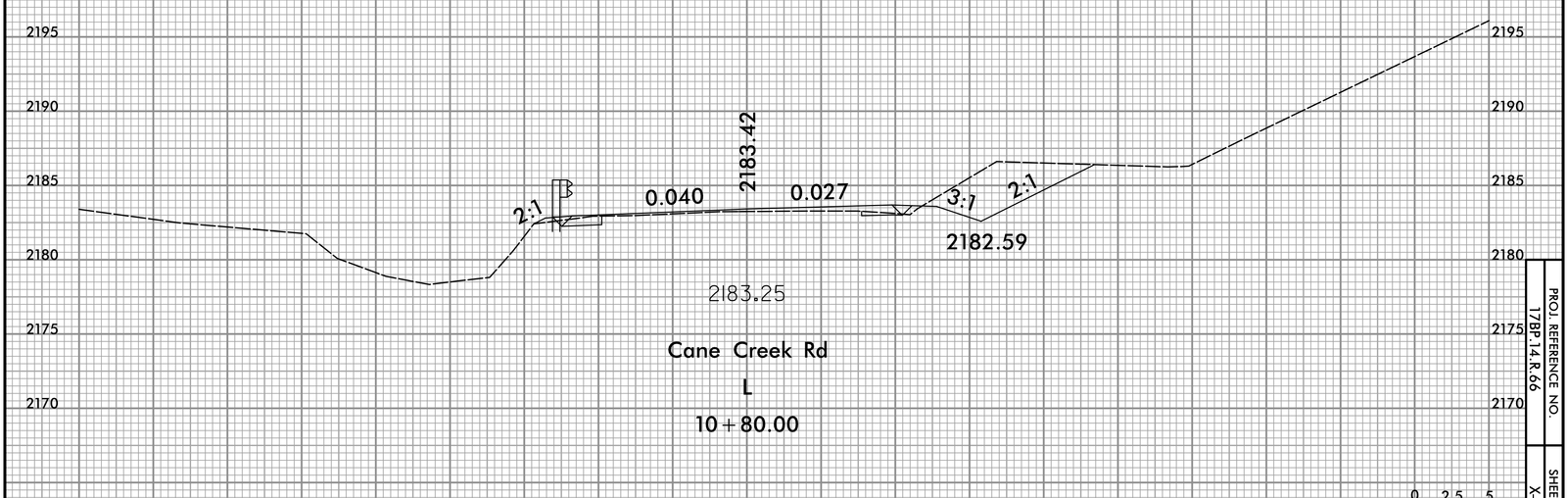

0 2.5 5

PROJ. REFERENCE NO.
17BP.14.R.66

SHEET NO.
X-2

11:03:48 AM
R:\Roadway\Xsc\49-0310_rdy_xpl_1.dgn
Roquet

10/26/98

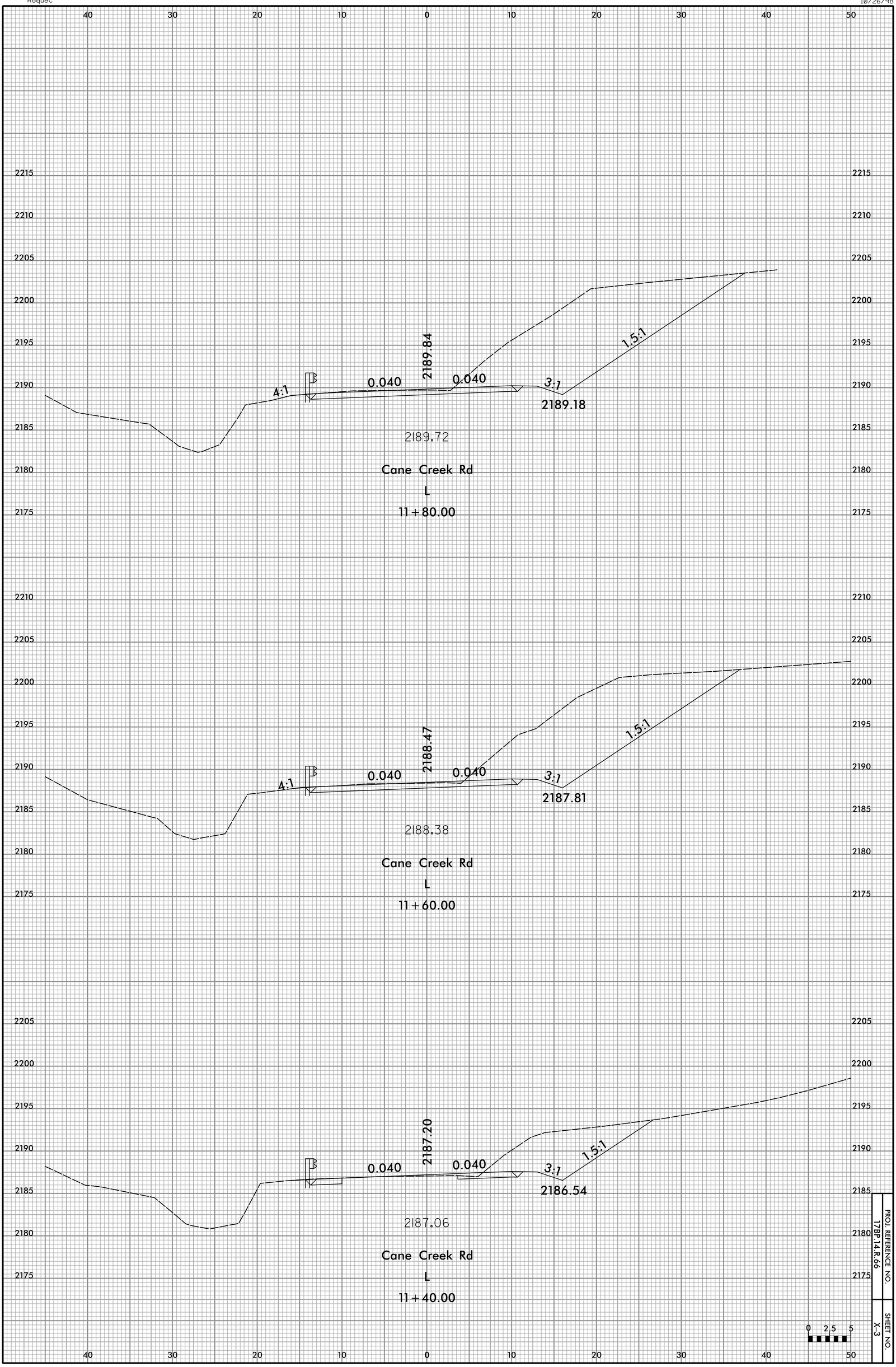

PROJ. REFERENCE NO.
17BP.14.R.66

SHEET NO.
X-3

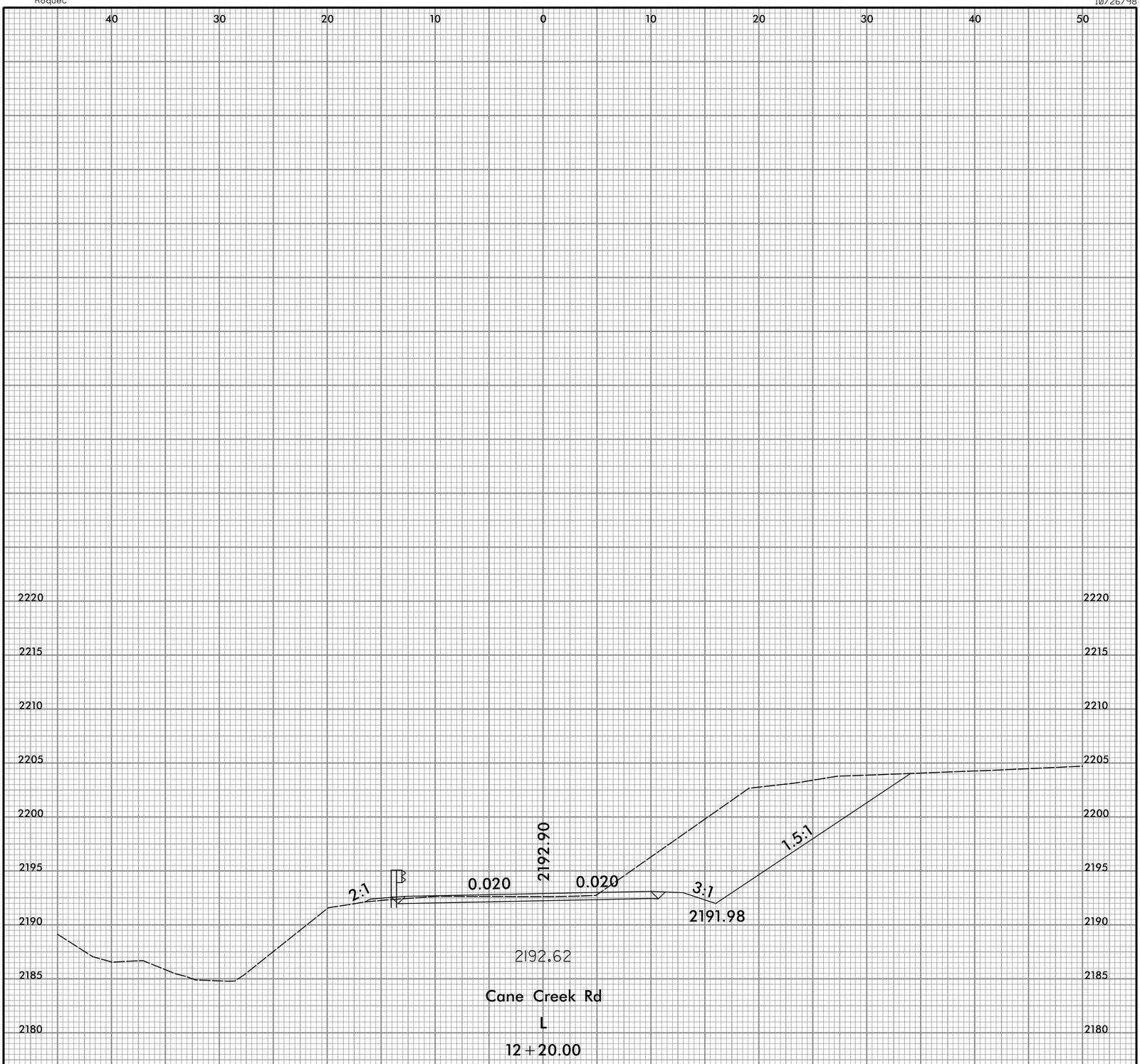

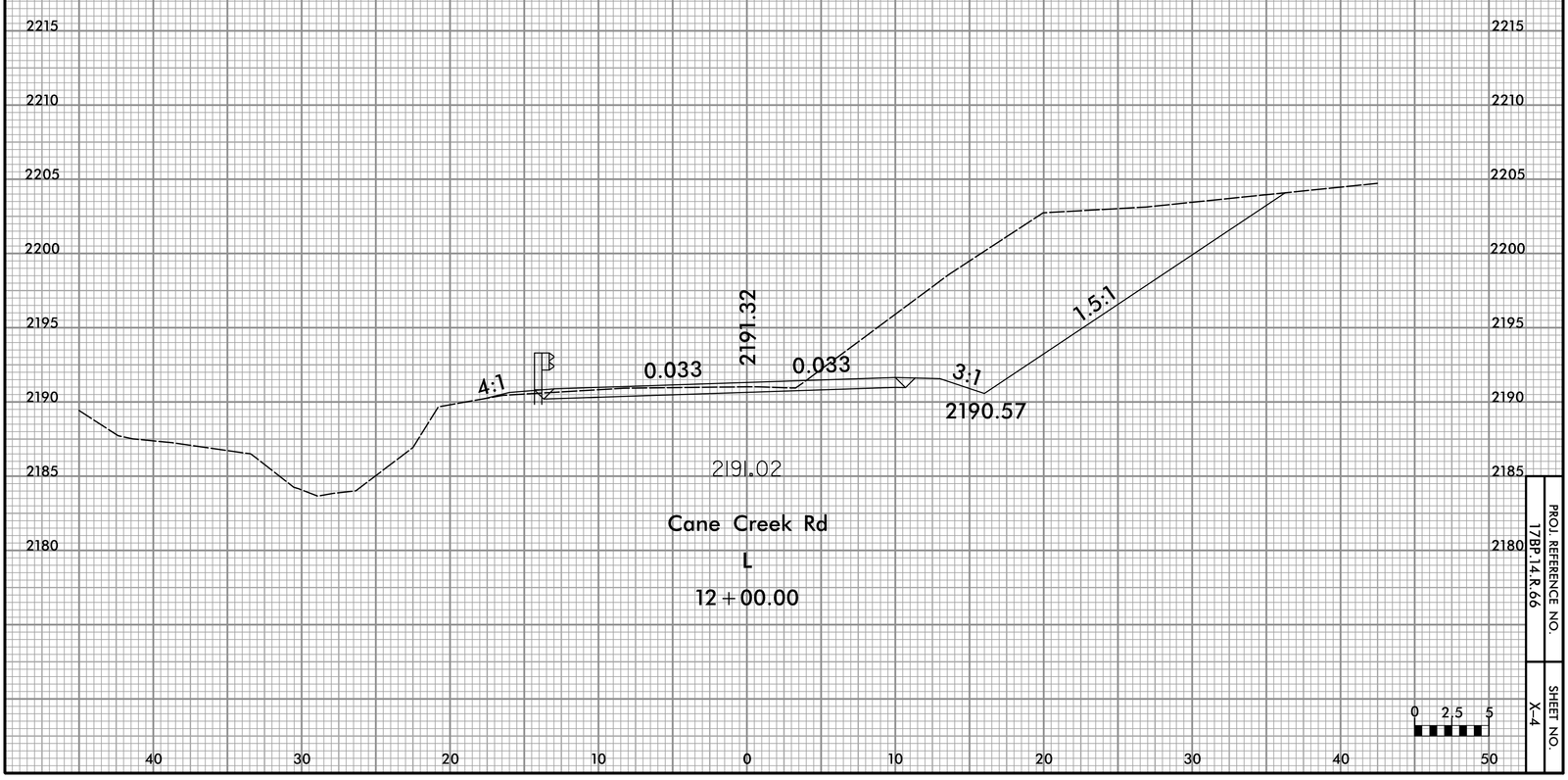

0 2.5 5

PROJ. REFERENCE NO. 17BP.14.R.66

SHEET NO. X-4

11:03:49 AM
R:\Roadway\Xsc\49-0310_rdy_xpl_1.dgn
Roquet

10/26/98

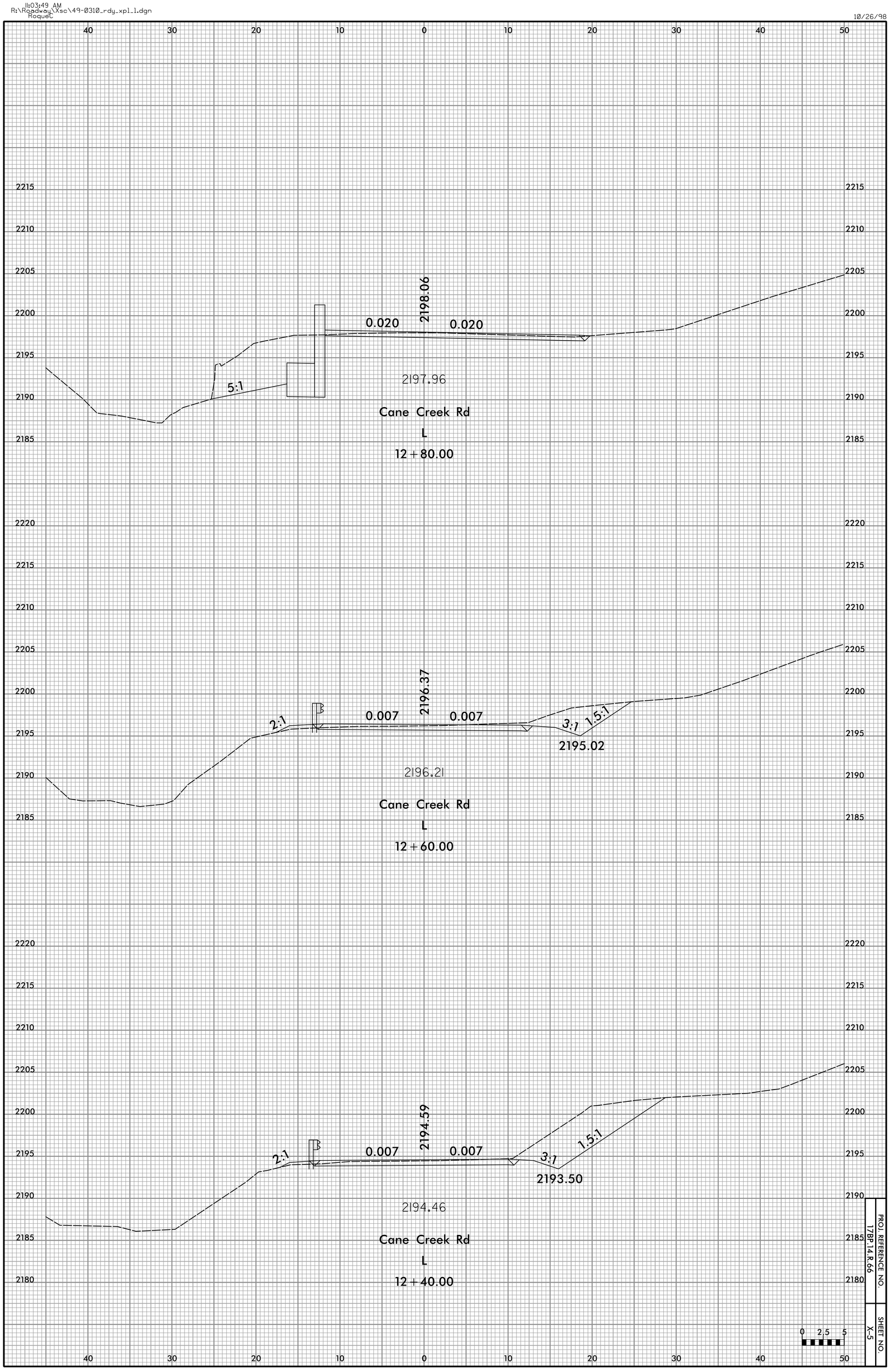

PROJ. REFERENCE NO.
17BP.14.R.66

SHEET NO.
X-5

11:03:49 AM
R:\Roadway\Xsc\49-0310_rdy_xpl_1.dgn
Roquet

10/26/98

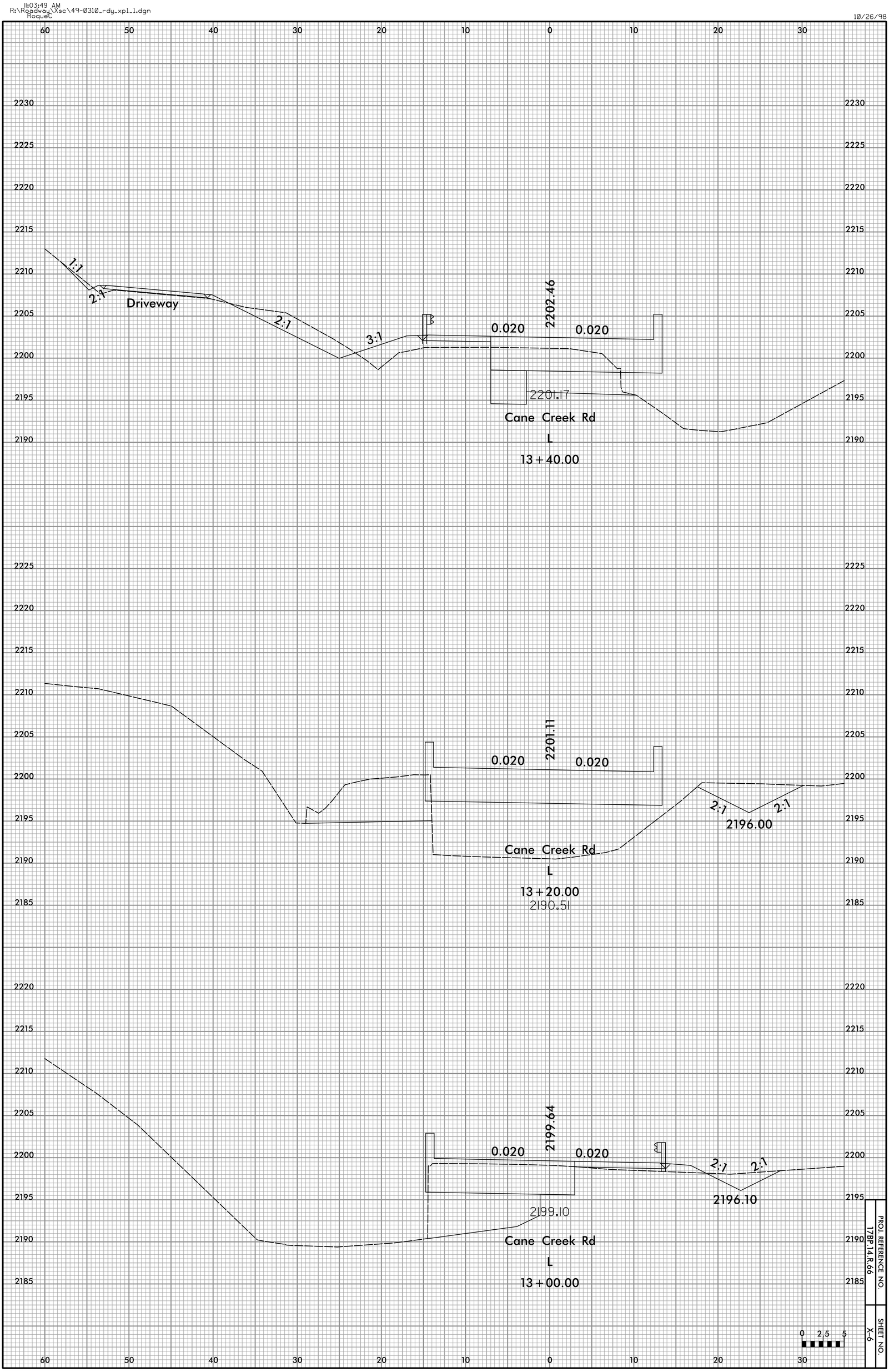

PROJ. REFERENCE NO.
17BP.14.R.66

SHEET NO.
X-6

11:03:49 AM
R:\Roadway\Xsc\49-0310_rdy_xpl_1.dgn
Roquet

10/26/98

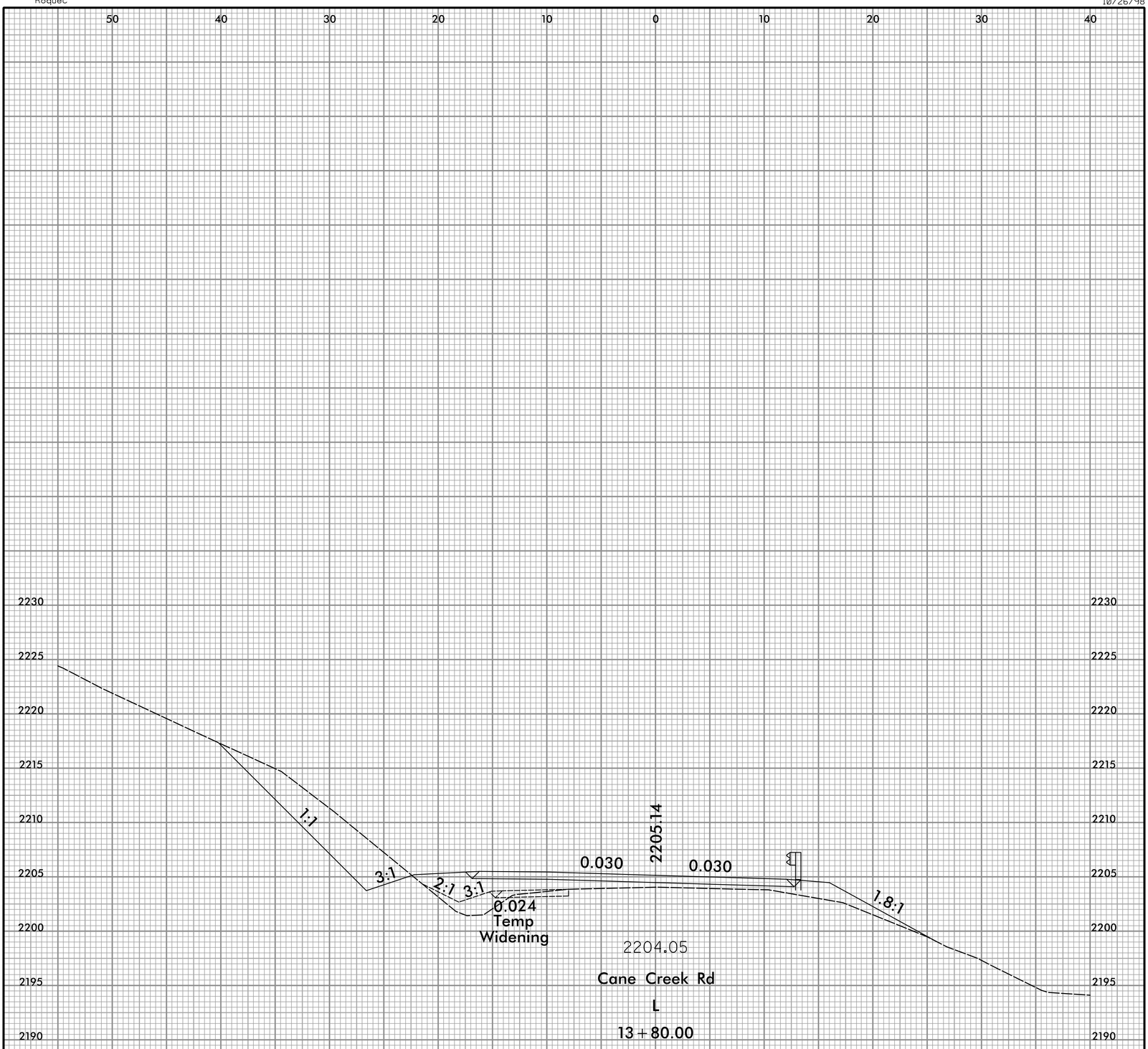

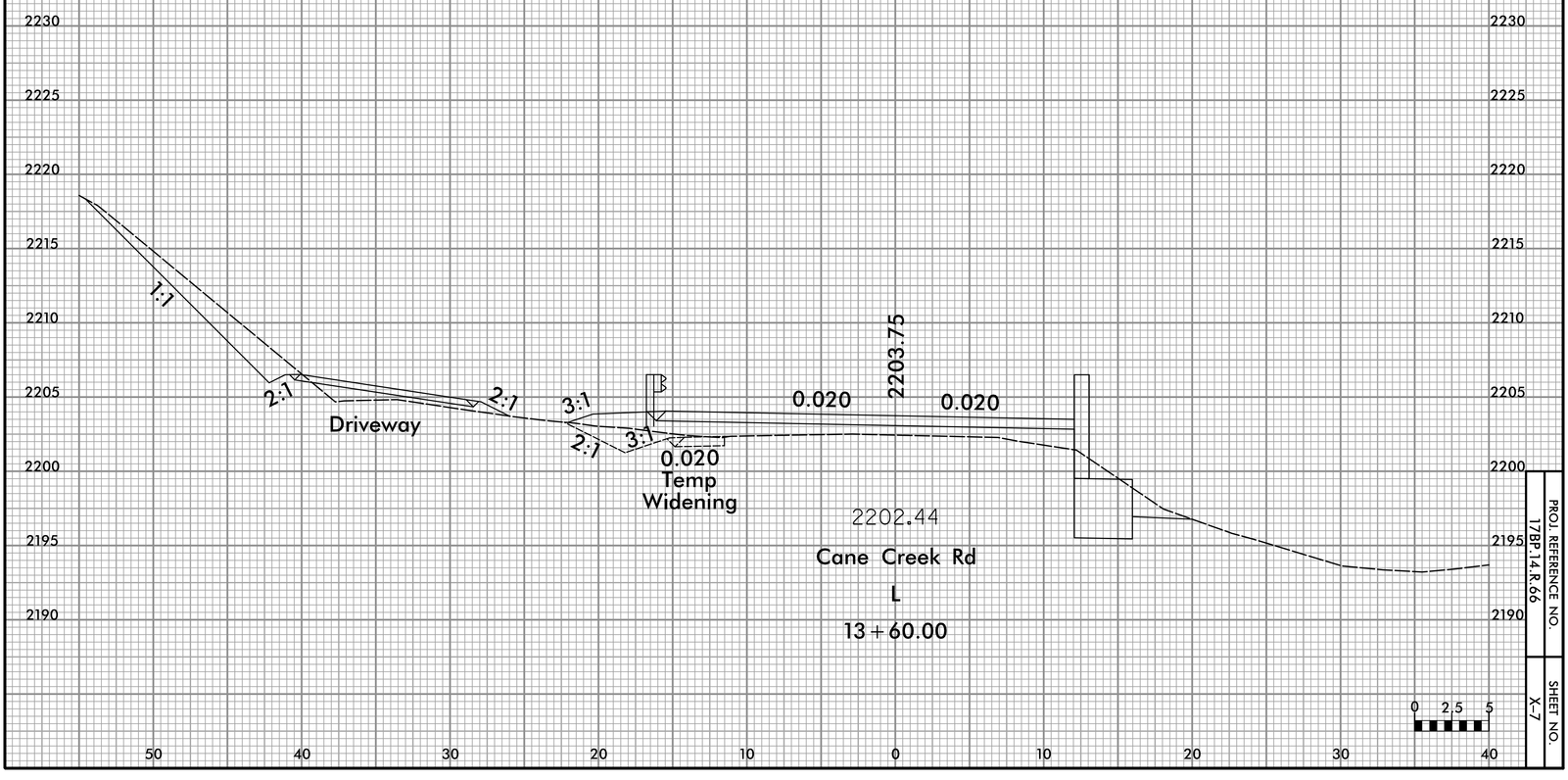

0 2.5 5

PROJ. REFERENCE NO.
17BP.14.R.66

SHEET NO.
X-7

11:03:50 AM
R:\Roadway\Xsc\49-0310_rdy_xpl_1.dgn
Roquet

10/26/98

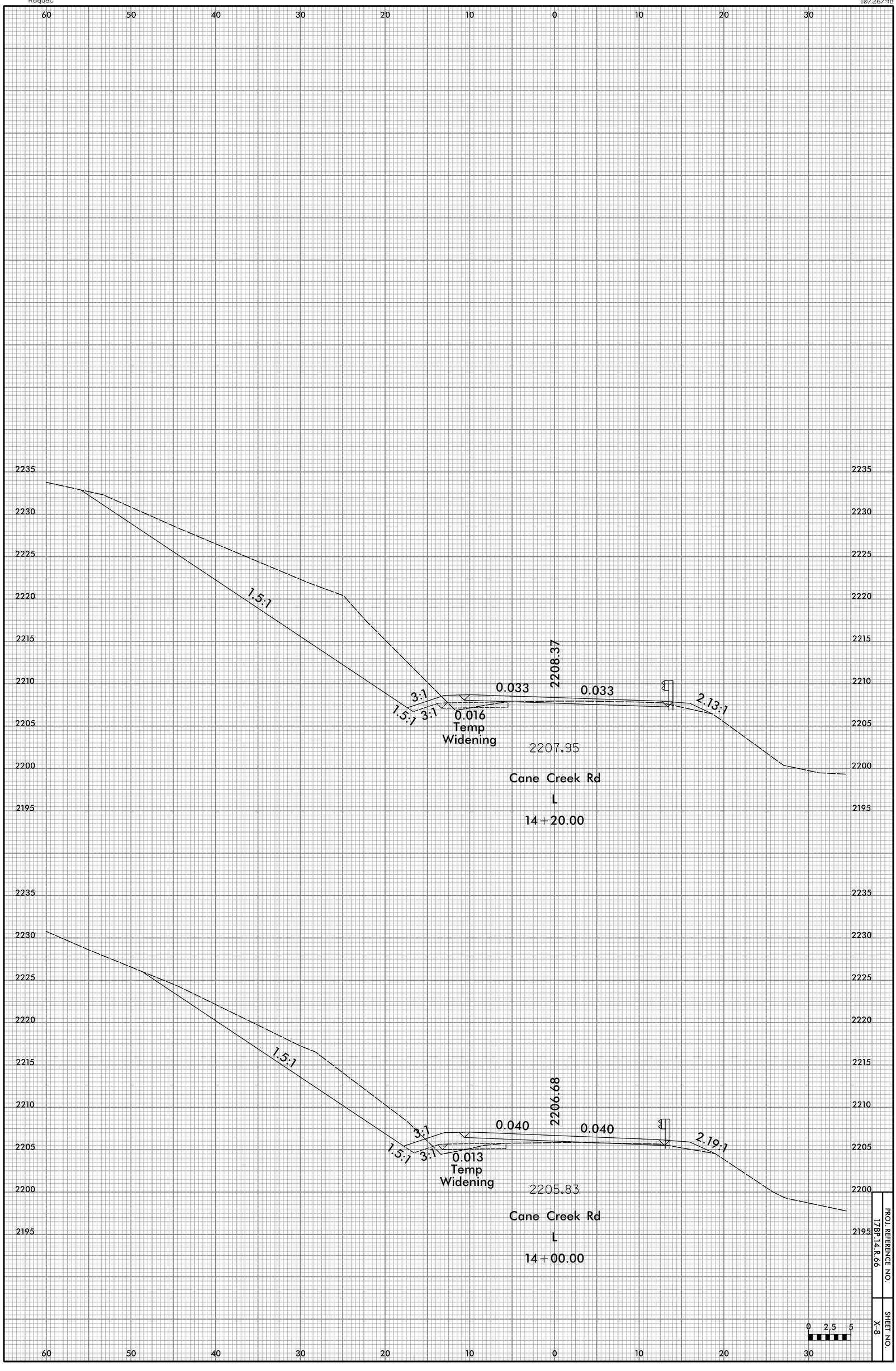

PROJ. REFERENCE NO.
17BP.14.R.66

SHEET NO.
X-8

11:03:50 AM
R:\Roadway\Xsc\49-0310_rdy_xpl_1.dgn
Roquet

10/26/98

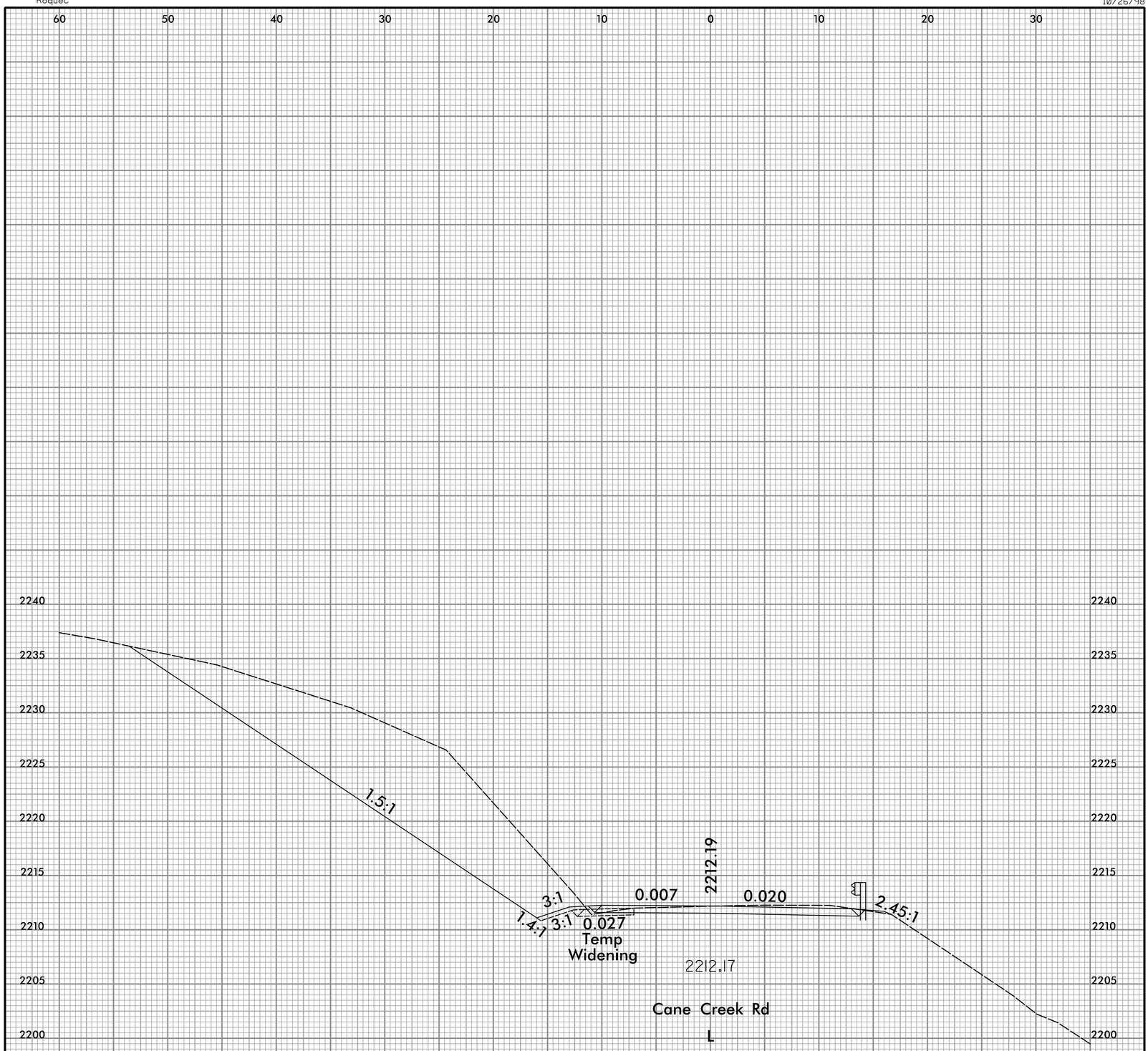

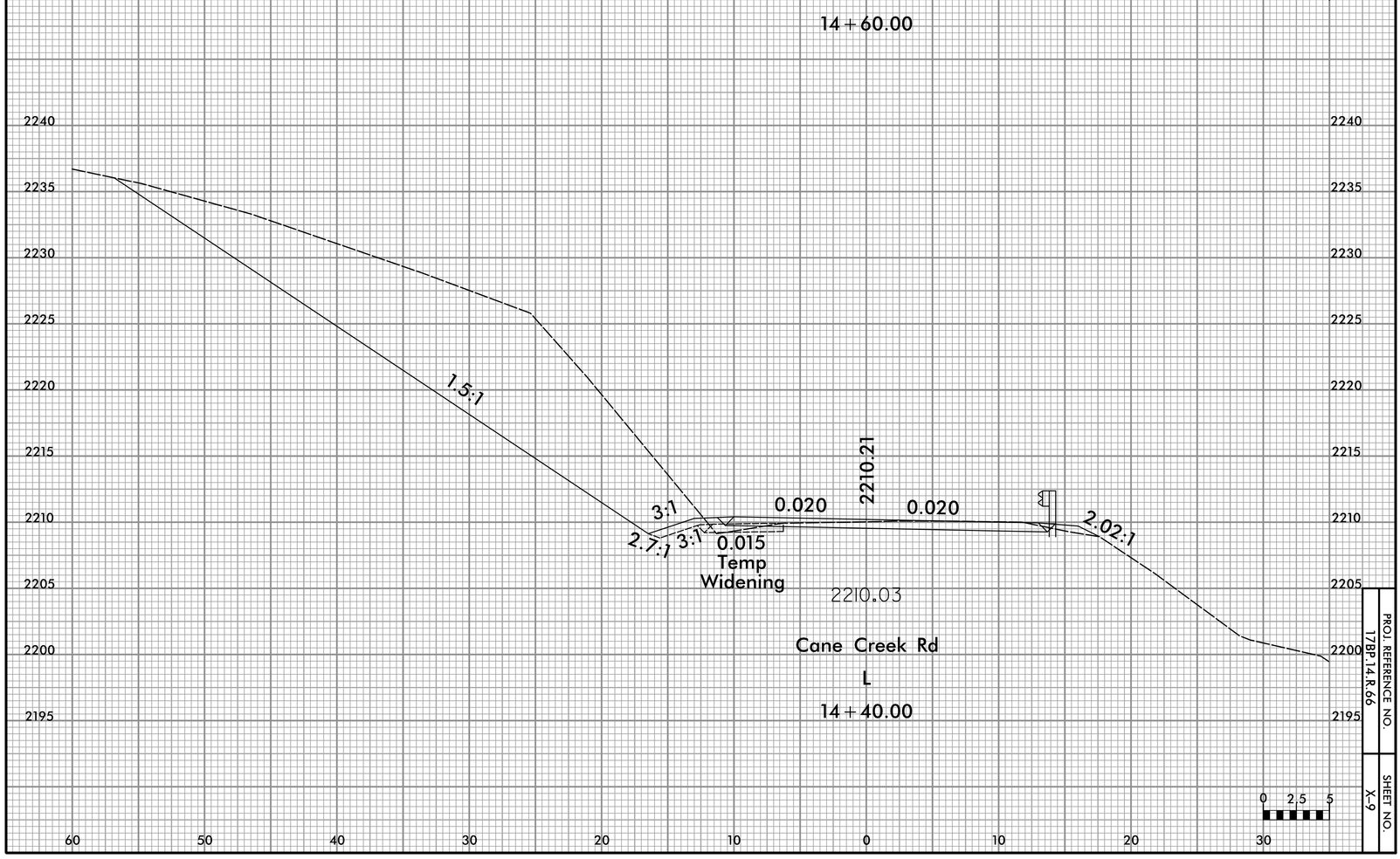

0 2.5 5

PROJ. REFERENCE NO.
17BP.14.R.66

SHEET NO.
X-9

11:03:51 AM
R:\Roadway\Xsc\49-0310_rdy_xpl_1.dgn
Roquet

10/26/98

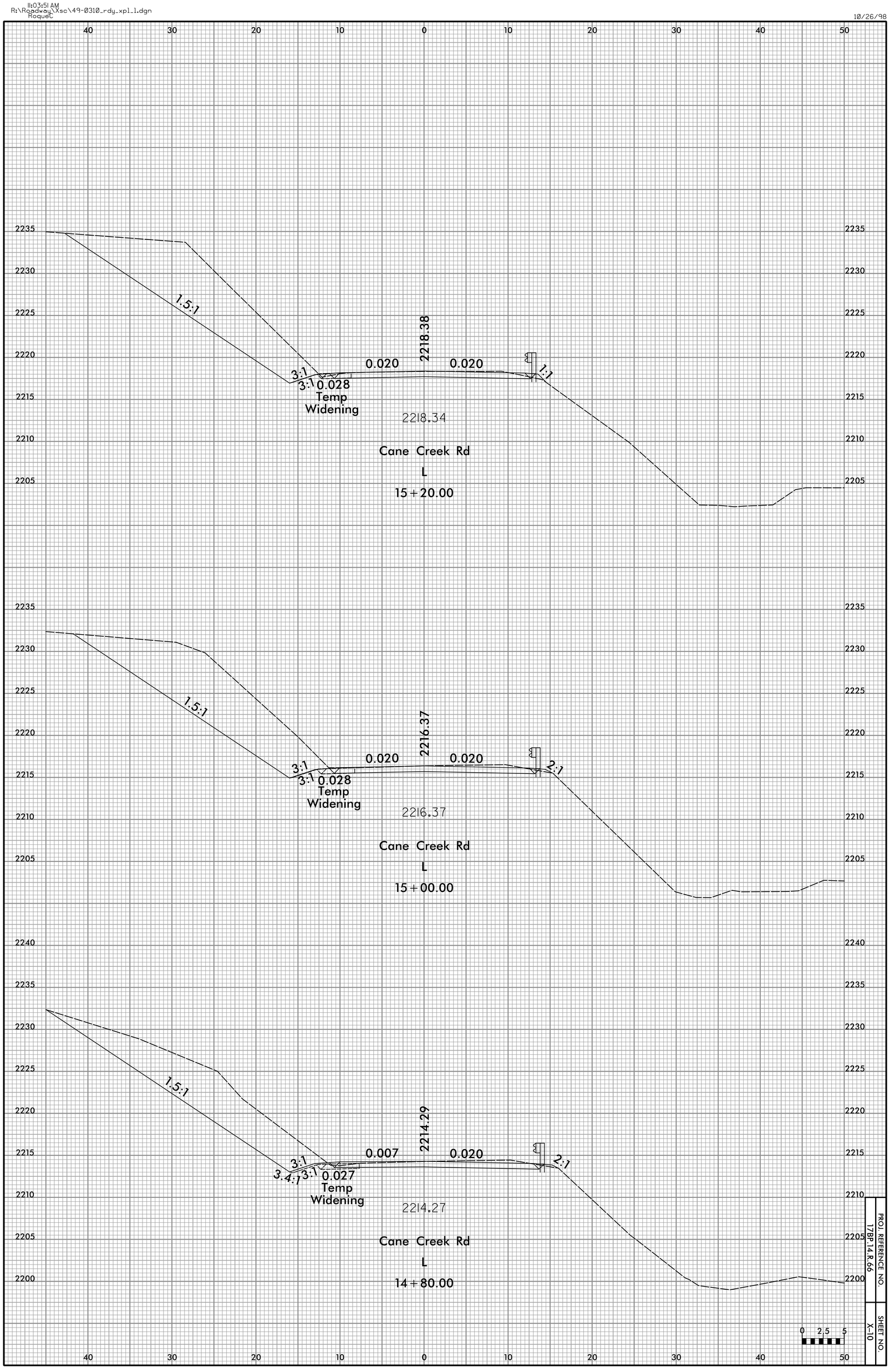

PROJ. REFERENCE NO.
17BP.14.R.66

SHEET NO.
X-10

11:03:51 AM
R:\Roadway\Xsc\49-0310_rdy_xpl_1.dgn
Roquet

10/26/98

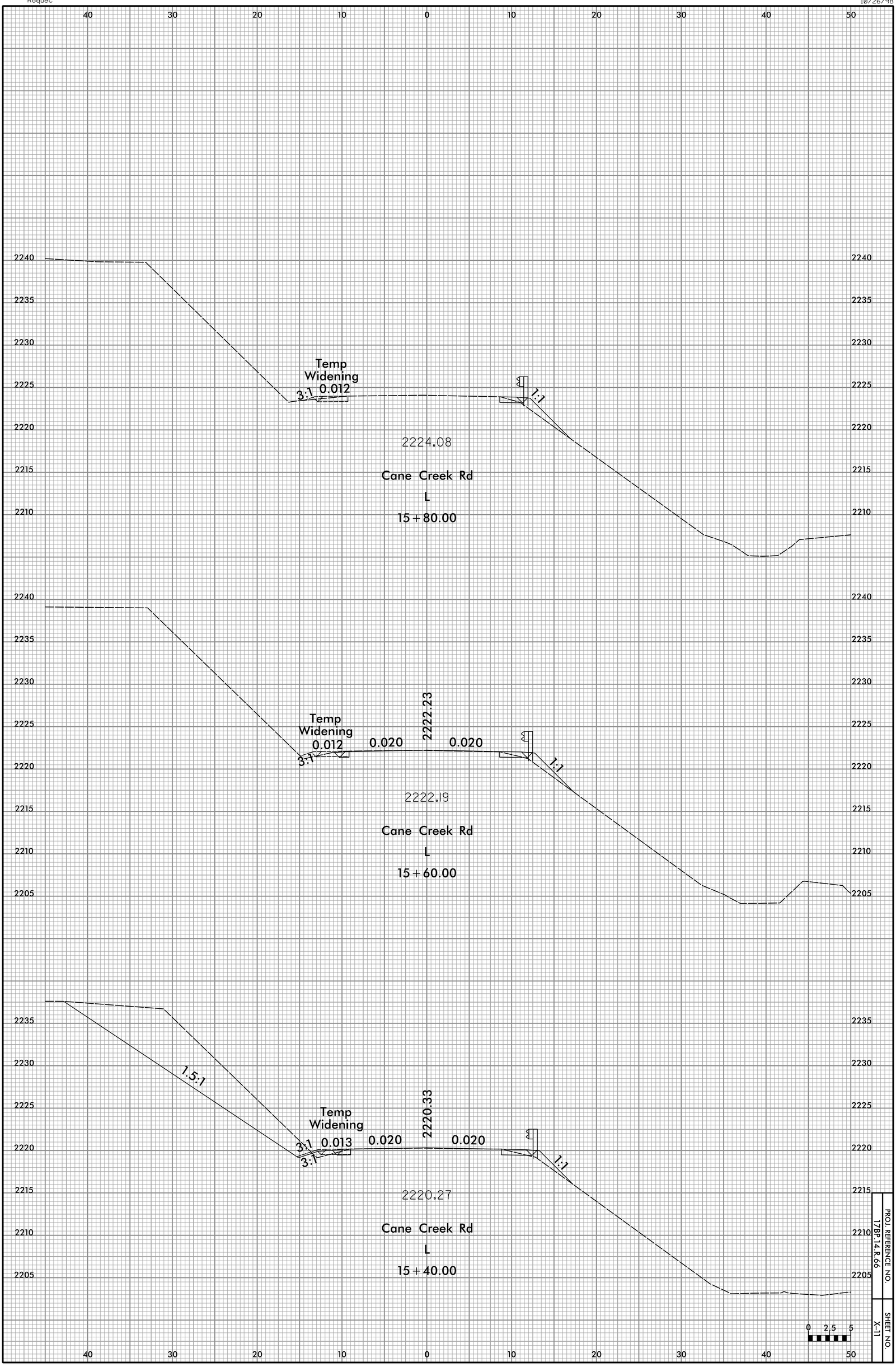

PROJ. REFERENCE NO.
17BP.14.R.66

SHEET NO.
X-11

11:03:51 AM
R:\Roadway\Xsc\49-0310_rdy_xpl_1.dgn
Roquet

10/26/98

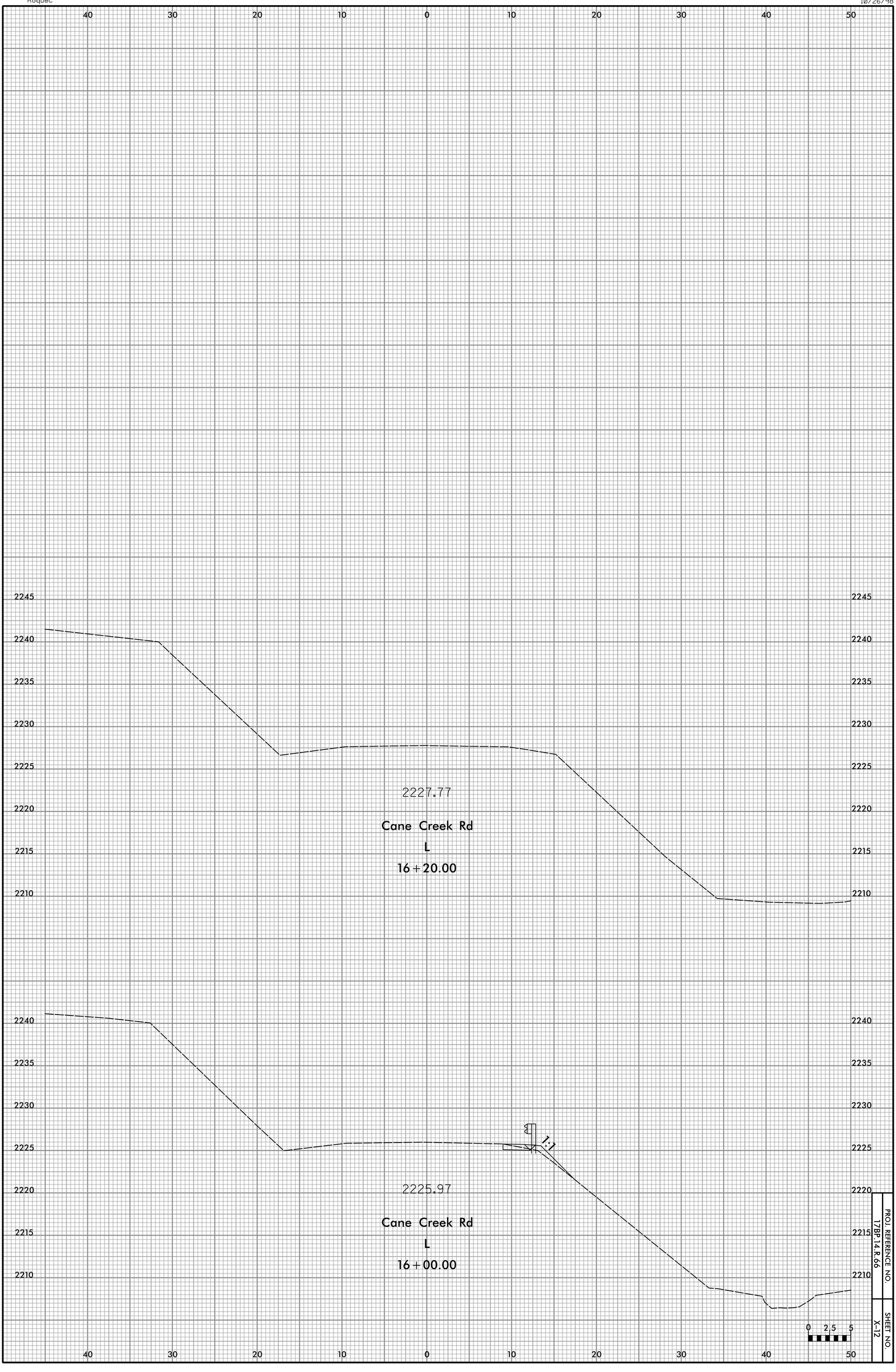

PROJ. REFERENCE NO.
17BP.14.R.66

SHEET NO.
X-12

STATE	STATE PROJECT REFERENCE NO.	SHEET NO.	TOTAL SHEETS
N.C.	17BP.14.R.66	TS-01	

STATE PROJ. NO.	F. A. PROJ. NO.	DESCRIPTION
17BP.14.R.66		PE, R/W, UTIL

STATE OF NORTH CAROLINA
DIVISION OF HIGHWAYS

JACKSON COUNTY

LOCATION: BRIDGE NO. 310 OVER CANE CREEK ON SR 1709 (CANE CREEK RD)

TYPE OF WORK: GRADING, DRAINAGE, PAVING AND STRUCTURE

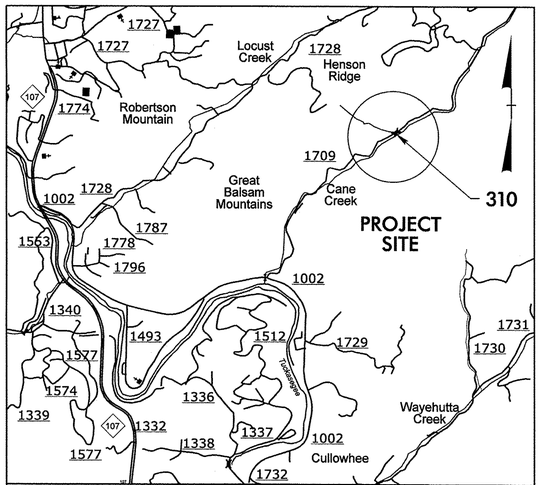

VICINITY MAP

NAD 83/ NSRS 2007

STRUCTURE

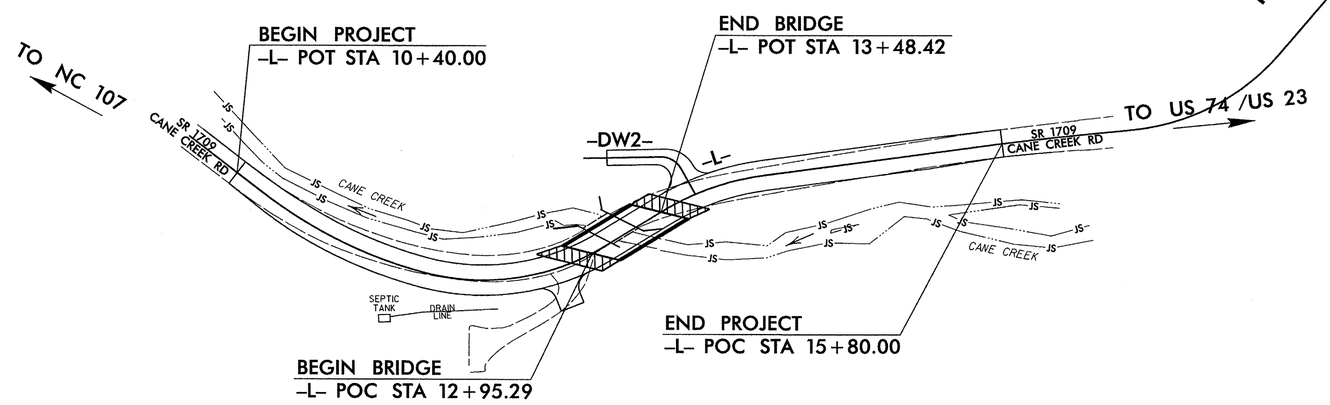

CONTRACT:

GRAPHIC SCALES	DESIGN DATA	PROJECT LENGTH
	ADT 2008 = 500 V = 25 MPH FUNC CLASS = LOCAL SUB-REGIONAL TIER	LENGTH ROADWAY STATE PROJECT 17BP.14.R.66 = 0.092 MILES LENGTH STRUCTURES STATE PROJECT 17BP.14.R.66 = 0.010 MILES TOTAL LENGTH STATE PROJECT 17BP.14.R.66 = 0.102 MILES NCDOT CONTACT: JOSHUA DEYTON, PE PROJECT ENGINEER

Prepared in the Office of:
AECOM
NC FIRM LICENSE No: F-0342
701 Corporate Center Drive, Suite 475
Raleigh, NC 27607
(919) 854-6200 - (919) 854-6259(FAX)

2012 STANDARD SPECIFICATIONS

RIGHT OF WAY DATE: JULY 27, 2012

LETTING DATE: FY 2014

LEN HILL, PE
PROJECT ENGINEER

CLAUDETTE M.K. ROQUE, PE
PROJECT DESIGN ENGINEER

BRIDGE ENGINEER
NORTH CAROLINA PROFESSIONAL SEAL 030414 ENGINEER JOHN C. MORRISON
SIGNATURE: John C. Morrison P.E.

DIVISION OF HIGHWAYS
STATE OF NORTH CAROLINA
STATE OF NORTH CAROLINA DEPARTMENT OF TRANSPORTATION
P.E.
STATE HIGHWAY DESIGN ENGINEER

09/08/99
12:03:41 PM
Q:\60238772\400_Tech_Info_Disc_Files\450_NCDOTStdTechDesFiles\BRG_310\Structures\B310_Str_TitleSht.dgn
lowery d

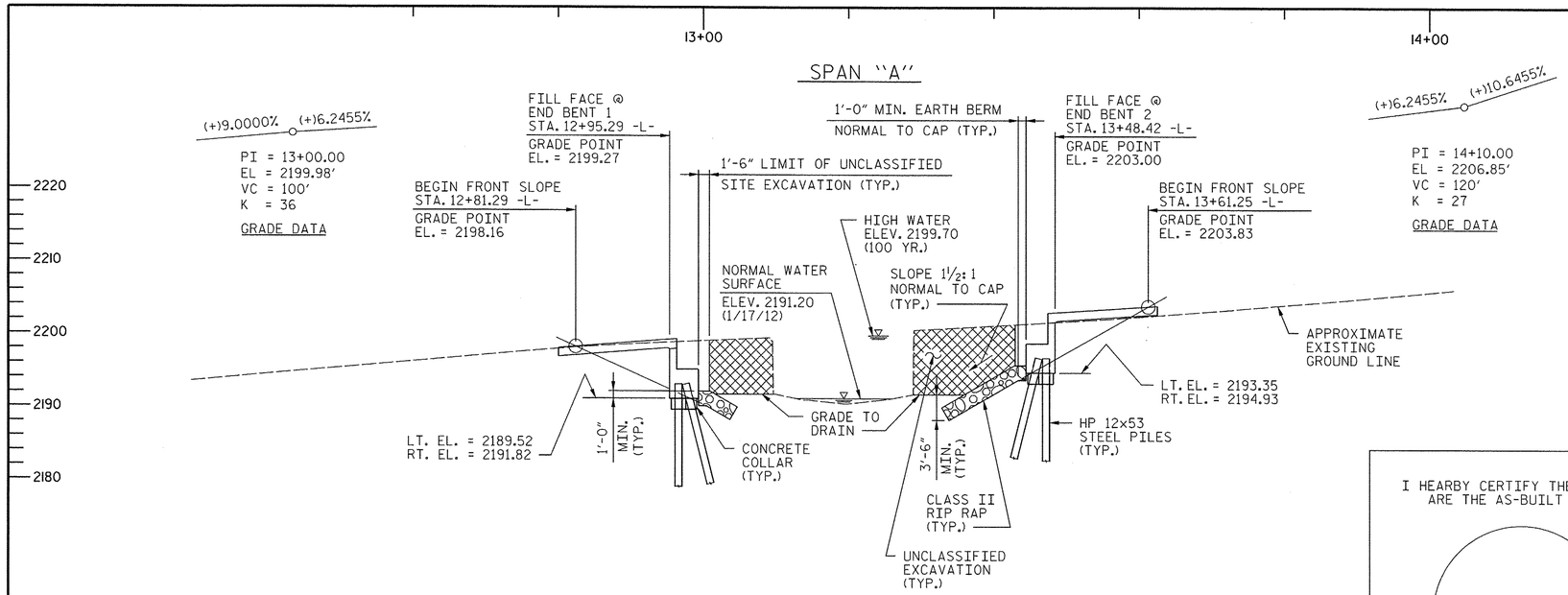

SECTION ALONG ℄ -L-

(SECTIONS AT END BENTS ARE AT RIGHT ANGLES)

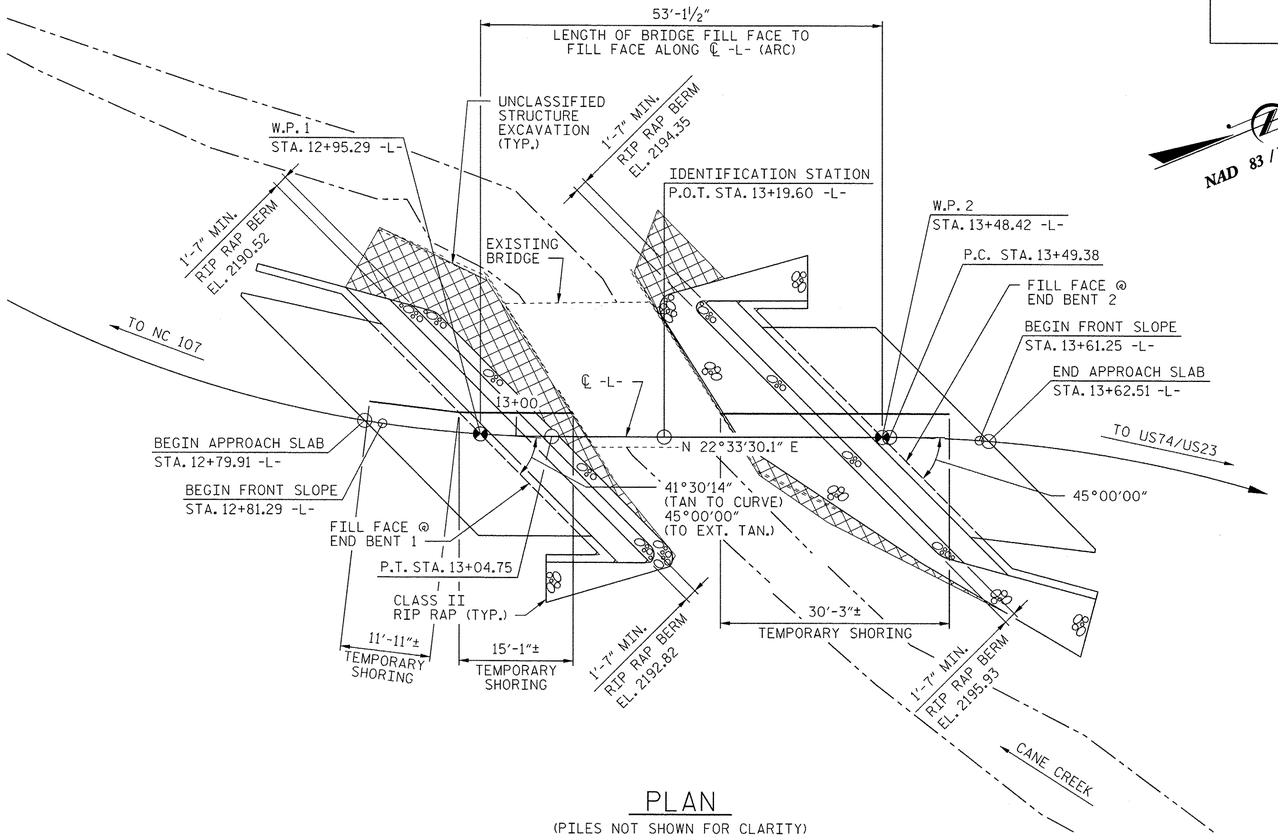

PLAN

(PILES NOT SHOWN FOR CLARITY)

HORIZONTAL CURVE DATA

PI STA. 12+45.58	PI STA. 13+86.12
Δ = 46°28'37.7" (LT)	Δ = 23°42'45.8" (RT)
D = 36°57'54.1"	D = 32°44'25.6"
L = 125.73'	L = 72.43'
T = 66.56'	T = 36.74'
R = 155.00'	R = 175.00'

HYDRAULIC DATA

DESIGN DISCHARGE	800 CFS
FREQUENCY OF DESIGN FLOOD	25 YR.
DESIGN HIGH WATER ELEVATION	2197.0
DRAINAGE AREA	2.6 SQ. MI.
BASE DISCHARGE (Q 100)	1,100 CFS
BASE HIGH WATER ELEVATION	2199.7

OVERTOPPING FLOOD DATA

OVERTOPPING DISCHARGE	810 CFS
FREQUENCY OF OVERTOPPING FLOOD	25± YR.
OVERTOPPING FLOOD ELEVATION	2198.8

I HEARBY CERTIFY THESE PLANS
ARE THE AS-BUILT PLANS

NAD 83 / NSRS 2007

-L- SUPERELEVATION TRANSITIONS

STATION	SUPER LT.	SUPER RT.
1250+00	.00	.00
1265+00	.01 RT.	.01 RT.
1280+00	.02 RT.	.02 RT.
1365+00	.02 RT.	.02 RT.
1380+00	.03 RT.	.03 RT.
1395+00	.04 RT.	.04 RT.

PROJECT NO. 17BP.14.R.66

JACKSON **COUNTY**

STATION: 13+19.60 -L-

SHEET 1 OF 4 REPLACES BRIDGE NO. 310

AECOM
AECOM TECHNICAL SERVICES, INC.
701 CORPORATE CENTER DRIVE, SUITE 475
RALEIGH, NC 27607
(919) 854-6200 www.aecom.com
AECOM License No. F-0342

NORTH CAROLINA PROFESSIONAL SEAL 030474 ENGINEER JOHN C. MORRISON
7/10/14

STATE OF NORTH CAROLINA
DEPARTMENT OF TRANSPORTATION
RALEIGH

GENERAL DRAWING
FOR BRIDGE ON
SR 1709 (CANE CREEK RD)
OVER CANE CREEK

26'-2" CLEAR ROADWAY - 45° SKEW

REVISIONS						SHEET NO.
NO.	BY:	DATE:	NO.	BY:	DATE:	S-01
						TOTAL SHEETS

DRAWN BY : DDL DATE : 6/14
CHECKED BY : JCM DATE : 6/14

DATE: 7/10/2014
TIME: 11:43:20 AM

USER: lweyrd
DGN: 0160025877v400_Tech_Info_Disc_Files\450_NCDOT Std Tech Base Files\BR6_310\Structure\8310_PlanElev.dgn

NOTES:

1. ALL PILES ARE STEEL HP12 x 53.
2. DIMENSIONS TO PILES ARE MEASURED TO ℄ OF PILES.

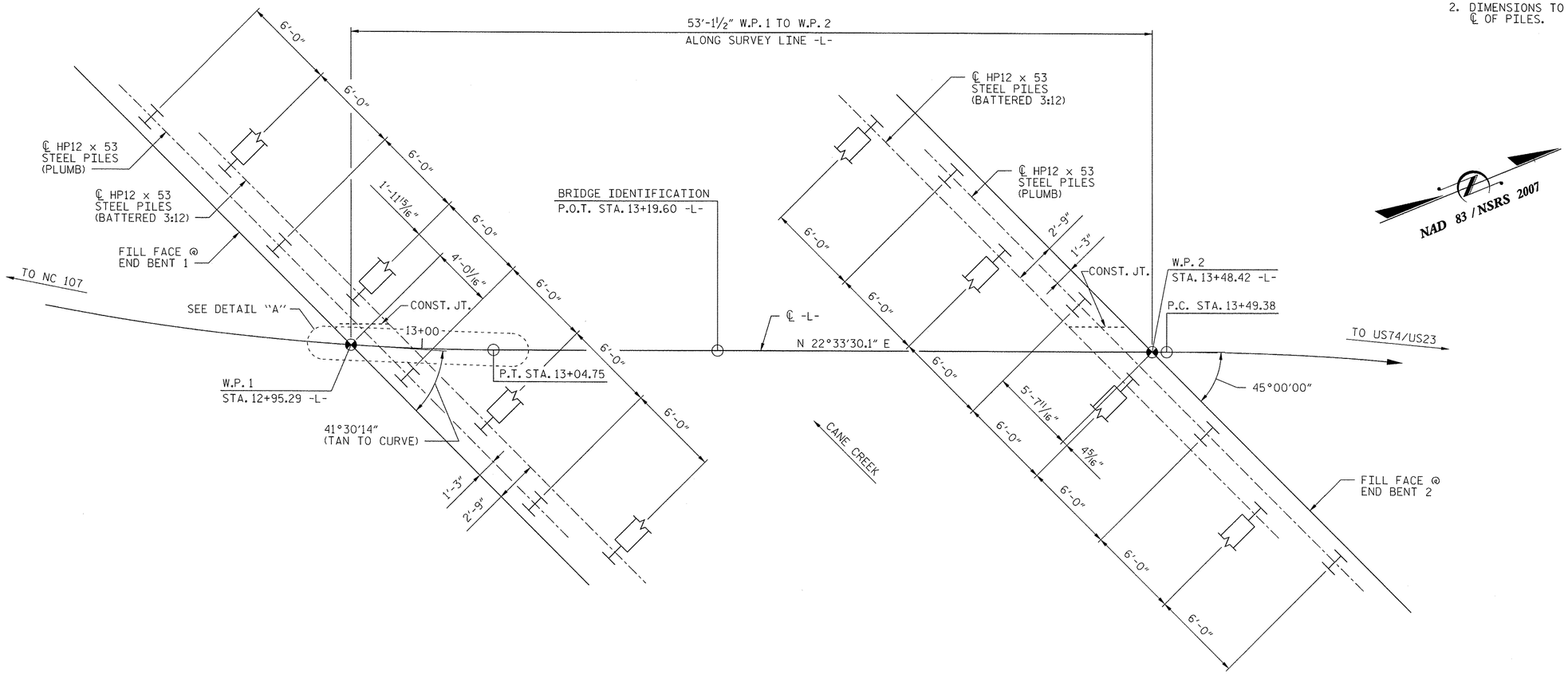

END BENT 1

END BENT 2

FOUNDATION LAYOUT

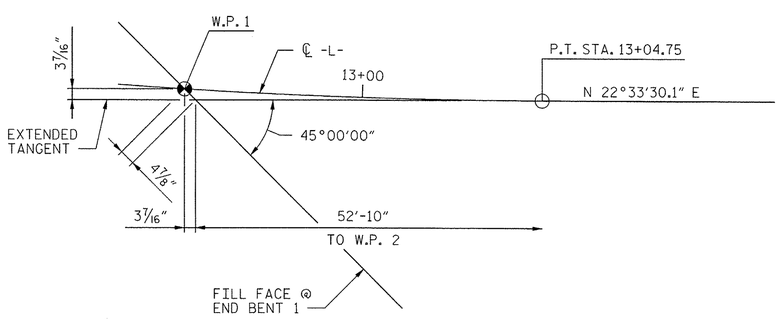

DETAIL "A"

PROJECT NO. 17BP.14.R.66

JACKSON COUNTY

STATION: 13+19.60 -L-

SHEET 2 OF 4

AECOM

AECOM TECHNICAL SERVICES, INC.
701 CORPORATE CENTER DRIVE, SUITE 475
RALEIGH, NC 27607
(919) 854-6200 www.aecom.com
AECOM License No. F-0342

NORTH CAROLINA PROFESSIONAL SEAL 030474 ENGINEER JOHN C. MORRISON
7/10/14

STATE OF NORTH CAROLINA
DEPARTMENT OF TRANSPORTATION
RALEIGH

GENERAL DRAWING
FOR BRIDGE ON
SR 1709 (CANE CREEK RD)
OVER CANE CREEK

REVISIONS						SHEET NO.
NO.	BY:	DATE:	NO.	BY:	DATE:	S-02
						TOTAL SHEETS

DRAWN BY : DDL DATE : 6/14
CHECKED BY : JCM DATE : 6/14

DATE: 7/10/2014
TIME: 11:29:23 AM

USER: lowrjrd
DGN: G:\0026387\24400_Tech_Info_Disc_Files\450_NCDOT Shift Exclusef Files\BR6_310\Structures\310_FoundationPlan.dgn

BENCH MARK: BM#1 - RR SPIKE SET IN BASE OF A 17" WALNUT TREE,
38.1977' RIGHT OF -L- STA. 12+79.42
(DIST. = 37' RIGHT OF -BL- STA. 6+72 NEAREST FT.)
ELEV. 2202.74, NAVD 1988

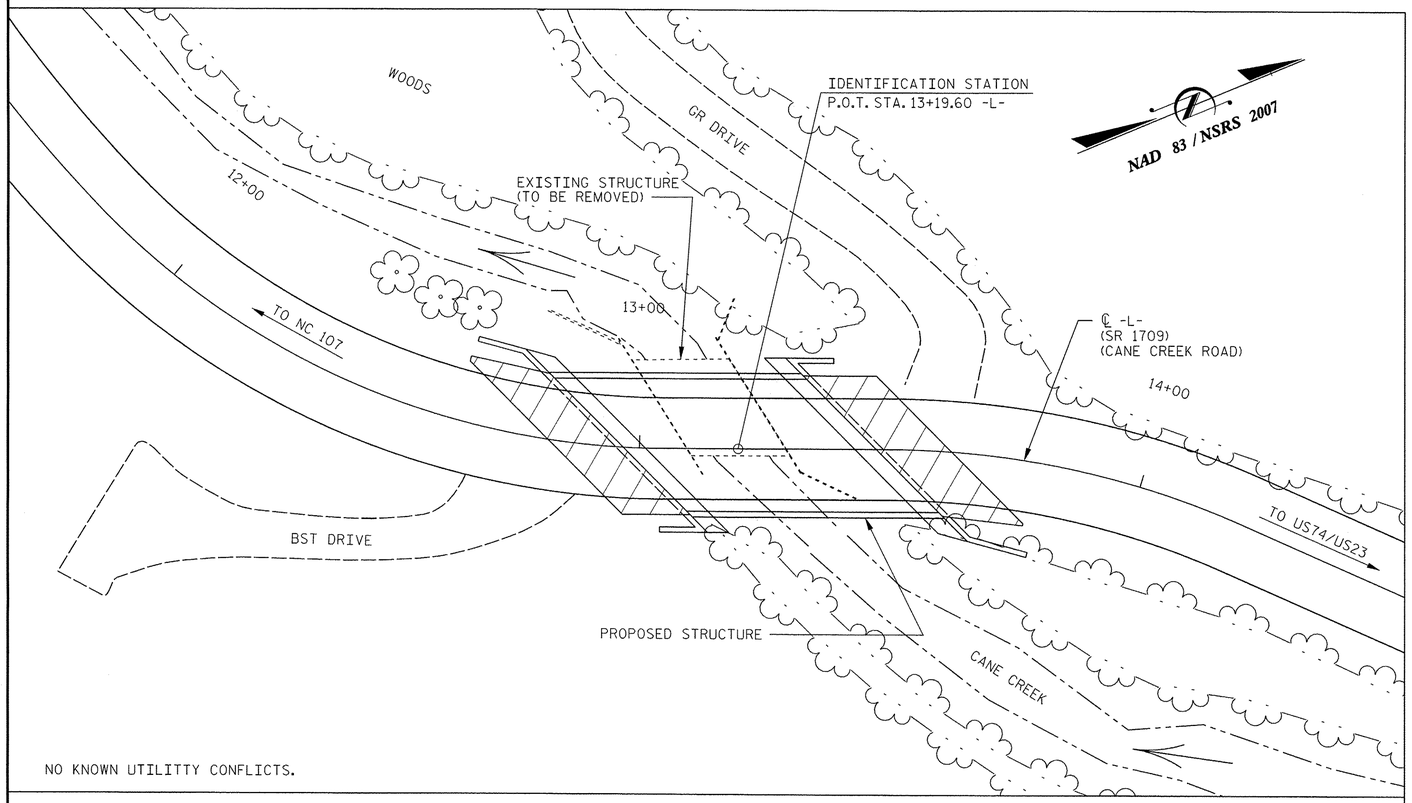

NO KNOWN UTILITTY CONFLICTS.

LOCATION SKETCH

NOTES:

ASSUMED LIVE LOAD = HL-93 OR ALTERNATE LOADING.

THIS BRIDGE HAS BEEN DESIGNED IN ACCORDANCE WITH THE AASHTO LRFD BRIDGE DESIGN SPECIFICATIONS FOR SEISMIC PERFORMANCE ZONE 1.

REMOVABLE FORMS MAY BE USED IN LIEU OF METAL STAY-IN-PLACE FORMS IN ACCORDANCE WITH ARTICLE 420-3 OF THE STANDARD SPECIFICATIONS.

THE CLASS AA CONCRETE IN THE BRIDGE DECK SHALL CONTAIN FLY ASH OR GROUND GRANULATED BLAST FURNACE SLAG AT THE SUBSTITUTION RATE SPECIFIED IN ARTICLE 1024-1 AND IN ACCORDANCE WITH ARTICLES 1024-5 AND 1024-6 OF THE STANDARD SPECIFICATIONS. NO PAYMENT WILL BE MADE FOR THIS SUBSTITUTION AS IT IS CONSIDERED INCIDENTAL TO THE COST OF THE REINFORCED CONCRETE DECK SLAB.

FOR LIMITS OF TEMPORARY SHORING FOR MAINTENANCE OF TRAFFIC, SEE TRAFFIC CONTROL PLANS. FOR PAY ITEM FOR TEMPORARY SHORING FOR MAINTENANCE OF TRAFFIC, SEE ROADWAY PLANS.

REMOVAL OF THE EXISTING BRIDGE SHALL BE PERFORMED SO AS NOT TO ALLOW DEBRIS TO FALL INTO THE WATER. THE CONTRACTOR SHALL REMOVE THE BRIDGE AND SUBMIT PLANS FOR DEMOLITION IN ACCORDANCE WITH ARTICLE 402-2 OF THE STANDARD SPECIFICATIONS.

MATERIAL SHOWN IN THE CROSS-HATCHED AREA SHALL BE EXCAVATED FOR A DISTANCE OF 25 FT± EACH SIDE OF CENTERLINE ROADWAY AS DIRECTED BY THE ENGINEER. THIS WORK WILL BE PAID FOR AT THE CONTRACT LUMP SUM PRICE FOR UNCLASSIFIED STRUCTURE EXCAVATION. SEE SECTION 412 OF THE STANDARD SPECIFICATIONS.

THE SUBSTRUCTURE OF THE EXISTING BRIDGE INDICATED ON THE PLANS IS FROM THE BEST INFORMATION AVAILABLE. SINCE THIS INFORMATION IS SHOWN FOR THE CONVENIENCE OF THE CONTRACTOR, THE CONTRACTOR SHALL HAVE NO CLAIM WHATSOEVER AGAINST THE DEPARTMENT OF TRANSPORTATION FOR ANY DELAYS OR ADDITIONAL COSTS INCURRED BASED ON DIFFERENCES BETWEEN THE EXISTING BRIDGE SUBSTRUCTURE SHOWN ON THE PLANS AND THE ACTUAL CONDITIONS AT THE PROJECT SITE.

THE EXISTING STRUCTURE CONSISTING OF A SINGLE 20'-6" SPAN. TIMBER FLOOR ON TIMBER JOIST AND TIMBER CAPS W/ TIMBER POSTS AND SILLS, AND LOCATED AT THE PROPOSED STRUCTURE SHALL BE REMOVED. THE EXISTING BRIDGE IS PRESENTLY POSTED BELOW THE LEGAL LOAD LIMIT. SHOULD THE STRUCTURAL INTEGRITY OF THE BRIDGE DETERIORATE DURING CONSTRUCTION OF THE PROPOSED BRIDGE, A LOAD LIMIT MAY BE POSTED AND MAY BE REDUCED AS FOUND NECESSARY DURING THE LIFE OF THE PROJECT.

DRIVE PILES AT END BENT 1 AND END BENT 2 TO A REQUIRED DRIVING RESISTANCE OF 100 TONS PER PILE.

PILES AT END BENT 1 AND END BENT 2 ARE DESIGNED FOR A FACTORED RESISTANCE OF 60 TONS PER PILE.

FOR PILES, SEE SPECIAL PROVISIONS AND SECTION 450 OF THE STANDARD SPECIFICATIONS.

STEEL H-PILE POINTS ARE REQUIRED FOR ALL STEEL H-PILES AT END BENT 1 AND END BENT 2. FOR STEEL PILE POINTS, SEE SECTION 450 OF THE STANDARD SPECIFICATIONS.

TESTING PILES WITH THE PDA DURING DRIVING, RESTRIKING OR REDRIVING MAY BE REQUIRED, THE ENGINEER WILL DETERMINE THE NEED FOR PDA TESTING. FOR PDA TESTING, SEE SECTION 450 OF THE STANDARD SPECIFICATIONS.

FOR SUBMITTAL OF WORKING DRAWINGS, SEE SPECIAL PROVISIONS.

FOR FALSEWORK AND FORMWORK, SEE SPECIAL PROVISIONS.

FOR CRANE SAFETY, SEE SPECIAL PROVISIONS.

FOR PRESTRESSED CONCRETE MEMBERS, SEE SPECIAL PROVISIONS.

FOR OTHER DESIGN DATA AND GENERAL NOTES, SEE SHEET SN.

FOR PILE DRIVING CRITERIA, SEE SPECIAL PROVISIONS.

THIS STRUCTURE HAS BEEN DESIGNED IN ACCORDANCE WITH HEC 18, "EVALUATING SCOUR AT BRIDGES", MAY, 2001.

TOTAL BILL OF MATERIAL

	REMOVAL OF EXISTING STRUCTURE	PDA TESTING	UNCLASSIFIED STRUCTURE EXCAVATION	REINFORCED CONCRETE DECK SLAB STAGE 2	REINFORCED CONCRETE DECK SLAB STAGE 4	GROOVING BRIDGE FLOORS	CLASS A CONCRETE STAGE 2	CLASS A CONCRETE STAGE 4	BRIDGE APPROACH SLABS	REINFORCING STEEL STAGE 2	REINFORCING STEEL STAGE 4
	LUMP SUM	EACH	LUMP SUM	SQ. FT.	SQ. FT.	SQ. FT.	CU. YD.	CU. YD.	LUMP SUM	LBS.	LBS.
SUPERSTRUCTURE	LUMP SUM	—	—	754	663	1908	—	—	LUMP SUM	—	—
END BENT No. 1	—		LUMP SUM	—	—	—	24.1	23.5	—	2706	2454
END BENT No. 2	—		LUMP SUM	—	—	—	27.5	19.8	—	2975	2183
TOTAL	LUMP SUM	1	LUMP SUM	754	663	1908	51.6	43.3	LUMP SUM	5681	4637

CONT. TOTAL BILL OF MATERIAL

	TYPE II PRESTRESSED CONCRETE GIRDERS		HP 12x53 STEEL PILES STAGE 2		HP 12x53 STEEL PILES STAGE 4		STEEL PILE POINTS STAGE 2	STEEL PILE POINTS STAGE 4	CONCRETE BARRIER RAIL	ELASTOMERIC BEARINGS	FOAM JOINT SEALS	PLAIN RIP RAP CLASS II (2'-0" THICK) STAGE 2	PLAIN RIP RAP CLASS II (2'-0" THICK) STAGE 4	GEOTEXTILE FOR DRAINAGE STAGE 2	GEOTEXTILE FOR DRAINAGE STAGE 4
	NO.	LIN. FT.	NO.	LIN. FT.	NO.	LIN. FT.	NO.	NO.	LIN. FT.	LUMP SUM	LUMP SUM	TONS	TONS	SQ. YD.	SQ. YD.
SUPERSTRUCTURE	4	188.3	—	—	—	—	—	—	102	LUMP SUM	LUMP SUM	—	—	—	—
END BENT No. 1	—	—	4	140	4	140	4	4	—	—	—	16.3	37.1	18.1	41.2
END BENT No. 2	—	—	4	140	4	140	4	4	—	—	—	8.4	27.8	9.3	30.9
TOTAL	4	188.3	8	280	8	280	8	8	102	LUMP SUM	LUMP SUM	24.7	64.9	27.4	72.1

DRAWN BY : DDL DATE : 6/14
CHECKED BY : JCM DATE : 6/14

PROJECT NO. 17BP.14.R.66
JACKSON COUNTY
STATION: 13+19.60 -L-

SHEET 3 OF 4

AECOM
AECOM TECHNICAL SERVICES, INC.
701 CORPORATE CENTER DRIVE, SUITE 475
RALEIGH, NC 27607
(919) 854-6200 www.aecom.com
AECOM License No. F-0342

NORTH CAROLINA PROFESSIONAL SEAL 030474 ENGINEER JOHN C. MORRISON
7/10/14

STATE OF NORTH CAROLINA
DEPARTMENT OF TRANSPORTATION
RALEIGH

GENERAL DRAWING
FOR BRIDGE ON
SR 1709 (CANE CREEK RD)
OVER CANE CREEK

REVISIONS						SHEET NO.
NO.	BY:	DATE:	NO.	BY:	DATE:	S-03
						TOTAL SHEETS

DATE: 7/10/2014
TIME: 11:34:07 AM
USER: lowery0
DGN: Q:\GEOE3\BRTZ\v400_Tech_Inf\a_Doc_Files\v50_NCDOT_Sht\TechDocFiles\BRG_310\Structures\B310_LocSketch.dgn

LOAD AND RESISTANCE FACTOR RATING (LRFR) SUMMARY FOR PRESTRESSED CONCRETE GIRDERS

LEVEL		VEHICLE	WEIGHT (W) (TONS)	CONTROLLING LOAD RATING (#)	MINIMUM RATING FACTORS (RF)	TONS = W × RF	STRENGTH I LIMIT STATE											SERVICE III LIMIT STATE						COMMENT NUMBER
								MOMENT					SHEAR						MOMENT					
							LIVE-LOAD FACTORS (γ_{LL})	DISTRIBUTION FACTORS (DF)	RATING FACTOR	SPAN	GIRDER LOCATION	DISTANCE FROM LEFT END OF SPAN (ft)	DISTRIBUTION FACTORS (DF)	RATING FACTOR	SPAN	GIRDER LOCATION	DISTANCE FROM LEFT END OF SPAN (ft)	LIVE-LOAD FACTORS (γ_{LL})	DISTRIBUTION FACTORS (DF)	RATING FACTOR	SPAN	GIRDER LOCATION	DISTANCE FROM LEFT END OF SPAN (ft)	
DESIGN LOAD RATING		HL-93 (INVENTORY)	N/A	1	1.13	--	1.75	0.622	1.66	A	ER	22.9	0.923	1.13	A	I	41.7	0.80	0.622	1.72	A	ER	22.9	
		HL-93 (OPERATING)	N/A		1.49	--	1.35	0.622	2.15	A	ER	22.9	0.923	1.49	A	I	41.7	N/A	--	--	--	--	--	
		HS-20 (INVENTORY)	36.000	2	1.35	48.60	1.75	0.622	2.04	A	ER	22.9	0.923	1.35	A	I	41.7	0.80	0.622	2.12	A	ER	22.9	
		HS-20 (OPERATING)	36.000		1.77	63.72	1.35	0.622	2.64	A	ER	41.7	0.923	1.77	A	I	41.7	N/A	--	--	--	--	--	
LEGAL LOAD RATING	SINGLE VEHICLE (SV)	SNSH	13.500		2.98	40.23	1.40	0.622	3.93	A	ER	22.9	0.923	2.98	A	I	41.7	0.80	0.622	3.37	A	ER	22.9	
		SNGARBS2	20.000		2.17	43.40	1.40	0.622	3.15	A	ER	27.6	0.923	2.17	A	I	41.7	0.80	0.622	2.70	A	ER	22.9	
		SNAGRIS2	22.000		2.04	44.88	1.40	0.622	3.05	A	ER	27.6	0.923	2.04	A	I	41.7	0.80	0.622	2.64	A	ER	22.9	
		SNCOTTS3	27.250		1.47	40.06	1.40	0.622	1.96	A	ER	22.9	0.923	1.47	A	I	41.7	0.80	0.622	1.68	A	ER	22.9	
		SNAGGRS4	34.925		1.26	44.01	1.40	0.622	1.72	A	ER	22.9	0.923	1.26	A	I	41.7	0.80	0.622	1.48	A	ER	22.9	
		SNS5A	35.550		1.31	46.57	1.40	0.622	1.68	A	ER	22.9	0.923	1.31	A	I	41.7	0.80	0.622	1.44	A	ER	22.9	
		SNS6A	39.950		1.21	48.34	1.40	0.622	1.58	A	ER	22.9	0.923	1.21	A	I	41.7	0.80	0.622	1.35	A	ER	22.9	
		SNS7B	42.000		1.22	51.24	1.40	0.622	1.50	A	ER	22.9	0.923	1.22	A	I	41.7	0.80	0.622	1.29	A	ER	22.9	
	TRUCK TRACTOR SEMI-TRAILER (TTST)	TNAGRIT3	33.000		1.43	47.19	1.40	0.622	1.93	A	ER	22.9	0.923	1.43	A	I	41.7	0.80	0.622	1.66	A	ER	22.9	
		TNT4A	33.075		1.37	45.31	1.40	0.622	1.95	A	ER	22.9	0.923	1.37	A	I	41.7	0.80	0.622	1.67	A	ER	22.9	
		TNT6A	41.600		1.33	55.33	1.40	0.622	1.63	A	ER	22.9	0.923	1.33	A	I	41.7	0.80	0.622	1.40	A	ER	22.9	
		TNT7A	42.000		1.23	51.66	1.40	0.622	1.66	A	ER	22.9	0.923	1.23	A	I	41.7	0.80	0.622	1.43	A	ER	22.9	
		TNT7B	42.000		1.17	49.14	1.40	0.622	1.73	A	ER	22.9	0.923	1.17	A	I	41.7	0.80	0.622	1.49	A	ER	22.9	
		TNAGRIT4	43.000		1.12	48.16	1.40	0.622	1.65	A	ER	22.9	0.923	1.12	A	I	41.7	0.80	0.622	1.41	A	ER	22.9	
		TNAGT5A	45.000		1.15	51.75	1.40	0.622	1.54	A	ER	22.9	0.923	1.15	A	I	41.7	0.80	0.622	1.32	A	ER	22.9	
		TNAGT5B	45.000	3	1.06	47.70	1.40	0.622	1.50	A	ER	22.9	0.923	1.06	A	I	41.7	0.80	0.622	1.29	A	ER	22.9	

LOAD FACTORS:

DESIGN LOAD RATING FACTORS	LIMIT STATE	γ_{DC}	γ_{DW}
	STRENGTH I	1.25	1.50
	SERVICE III	1.00	1.00

NOTES:

MINIMUM RATING FACTORS ARE BASED ON THE STRENGTH I AND SERVICE III LIMIT STATES.

ALLOWABLE STRESSES FOR SERVICE III LIMIT STATE ARE AS REQUIRED FOR DESIGN.

(#) CONTROLLING LOAD RATING

(1) DESIGN LOAD RATING (HL-93)

(2) DESIGN LOAD RATING (HS-20)

(3) LEGAL LOAD RATING **

** SEE CHART FOR VEHICLE TYPE

GIRDER LOCATION

I - INTERIOR GIRDER
EL - EXTERIOR LEFT GIRDER
ER - EXTERIOR RIGHT GIRDER

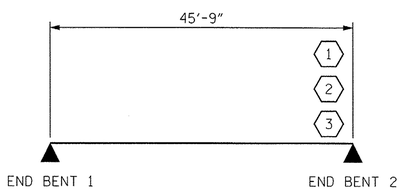

LRFR SUMMARY

FOR SPAN "A"

PROJECT NO. 17BP.14.R.66

JACKSON COUNTY

STATION: 13+19.60 -L-

SHEET 4 OF 4

AECOM

AECOM TECHNICAL SERVICES, INC.
701 CORPORATE CENTER DRIVE, SUITE 475
RALEIGH, NC 27607
(919) 854-6200 www.aecom.com
AECOM License No. F-0342

NORTH CAROLINA PROFESSIONAL SEAL 030474 ENGINEER JOHN C. MORRISON

7/10/14

STATE OF NORTH CAROLINA
DEPARTMENT OF TRANSPORTATION
RALEIGH

STANDARD

LRFR SUMMARY FOR PRESTRESSED CONCRETE GIRDERS (NON-INTERSTATE TRAFFIC)

REVISIONS								SHEET NO.
NO.	BY:	DATE:	NO.	BY:	DATE:			S-04
1			3					TOTAL SHEETS
2			4					

ASSEMBLED BY : DDL	DATE : 6/14		
CHECKED BY : JCM	DATE : 6/14		
DRAWN BY : MAA 1/08	REV. 11/12/08RR	MAA/GM	
CHECKED BY : GM/DI 2/08	REV. 10/1/11	MAA/GM	

STD. NO. LRFR1

DATE: 7/10/2014
TIME: 11:35:30 AM
USER: bwarren
DGN: G:\6023872\400_Tech_Info_Disc_Files\450_NCDOT Staff Tech Disc Files\BRR_310\Structures\B310_LRFR_24ks_ssp.dgn

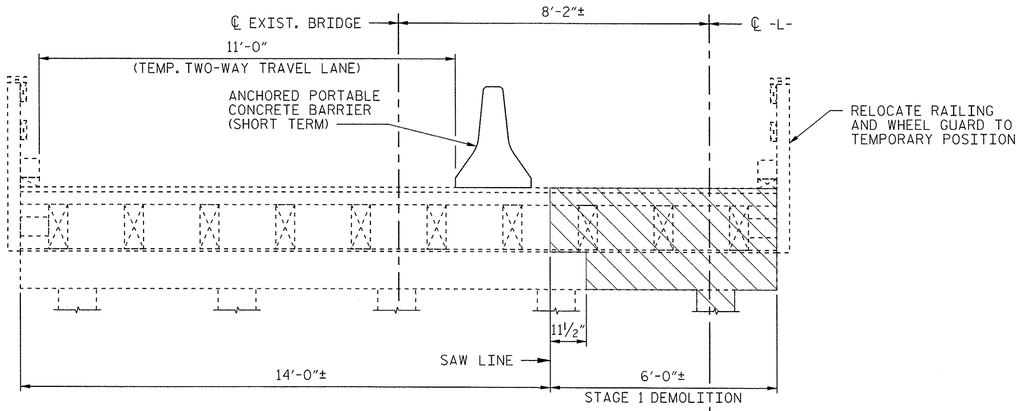

STAGE 1

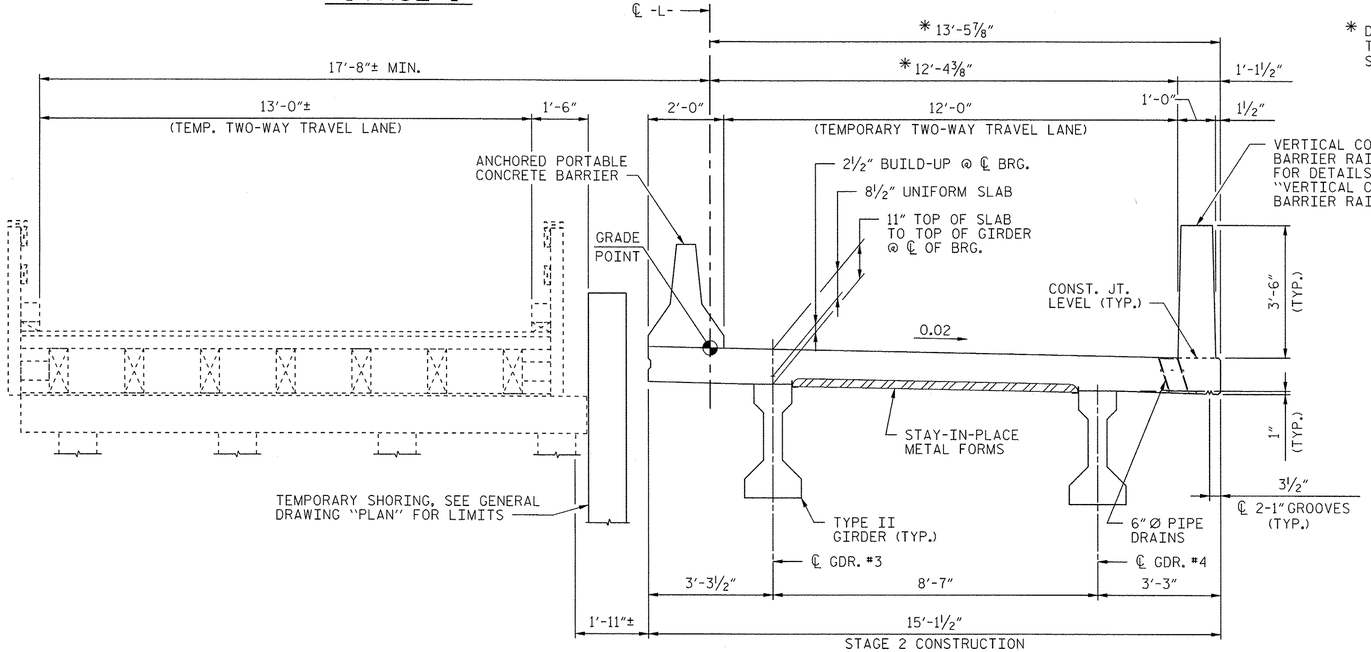

STAGE 2

* DIMENSION IS APPLICABLE TO TANGENT SECTION FROM STA. 13+04.75 TO STA. 13+49.38.

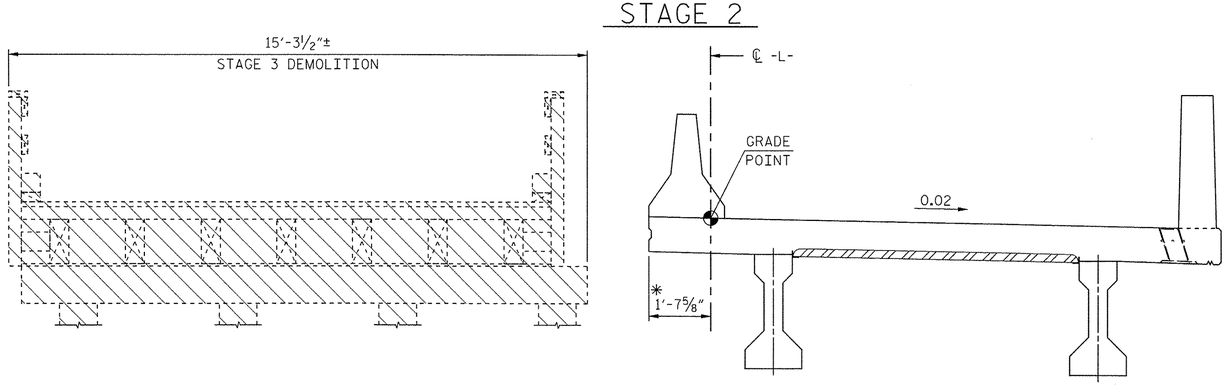

STAGE 3

NOTES:

FOR STAGE 1, USE SHORT-TERM 11'-0" TEMPORARY LANE OR SHORT/OVERNIGHT CLOSURE TO CUT AND REMOVE DECK AND RELOCATE EXISTING RAILING.

IF EXISTING PILE OR POST PLACEMENT CONFLICTS WITH SAW LINE, REMOVE DECK, BEAMS AND BEARING STRIP, BUT LEAVE POST AND CAPS IN PLACE UNTIL STAGE 3.

SEE TRAFFIC CONTROL PLANS FOR LOCATION AND PAY LIMITS OF THE ANCHORED PORTABLE CONCRETE BARRIER.

PROJECT NO. 17BP.14.R.66

JACKSON **COUNTY**

STATION: 13+19.60 -L-

SHEET 1 OF 2

AECOM
AECOM TECHNICAL SERVICES, INC.
701 CORPORATE CENTER DRIVE, SUITE 475
RALEIGH, NC 27607
(919) 854-6200 www.aecom.com
AECOM License No. F-0342

NORTH CAROLINA PROFESSIONAL SEAL 030474 ENGINEER JOHN C. MORRISON
7/10/14

STATE OF NORTH CAROLINA
DEPARTMENT OF TRANSPORTATION
RALEIGH

CONSTRUCTION SEQUENCE
(FOR STAGED CONSTRUCTION)

REVISIONS						SHEET NO.
NO.	BY:	DATE:	NO.	BY:	DATE:	S-05
						TOTAL SHEETS

DRAWN BY : DDL DATE : 6/14
CHECKED BY : JCM DATE : 6/14

DATE: 7/10/2014
TIME: 11:39:23 AM

USER: lowery4
DGN: G:\60123617\2-400_Tech_Info_Disc_Files\450_NCDOT-Staff acceptDefFiles\BRG_3-0\Structures\B30_PhaseSeq1.dgn

NOTE:

AFTER THE REMOVAL OF ANCHORED PORTABLE CONCRETE BARRIER, HOLES IN DECK SLAB SHALL BE FILLED WITH GROUT BONDED WITH AN EPOXY BONDING COMPOUND.

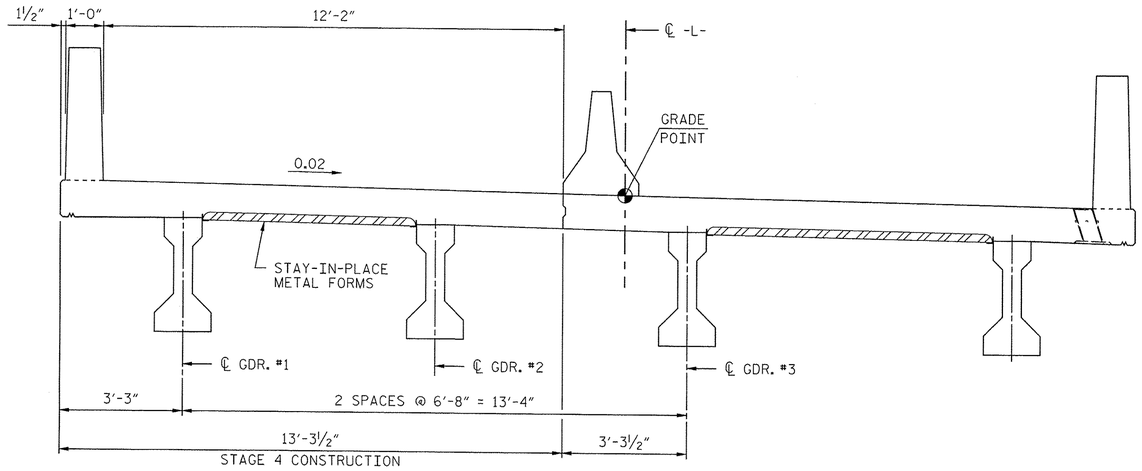

STAGE 4

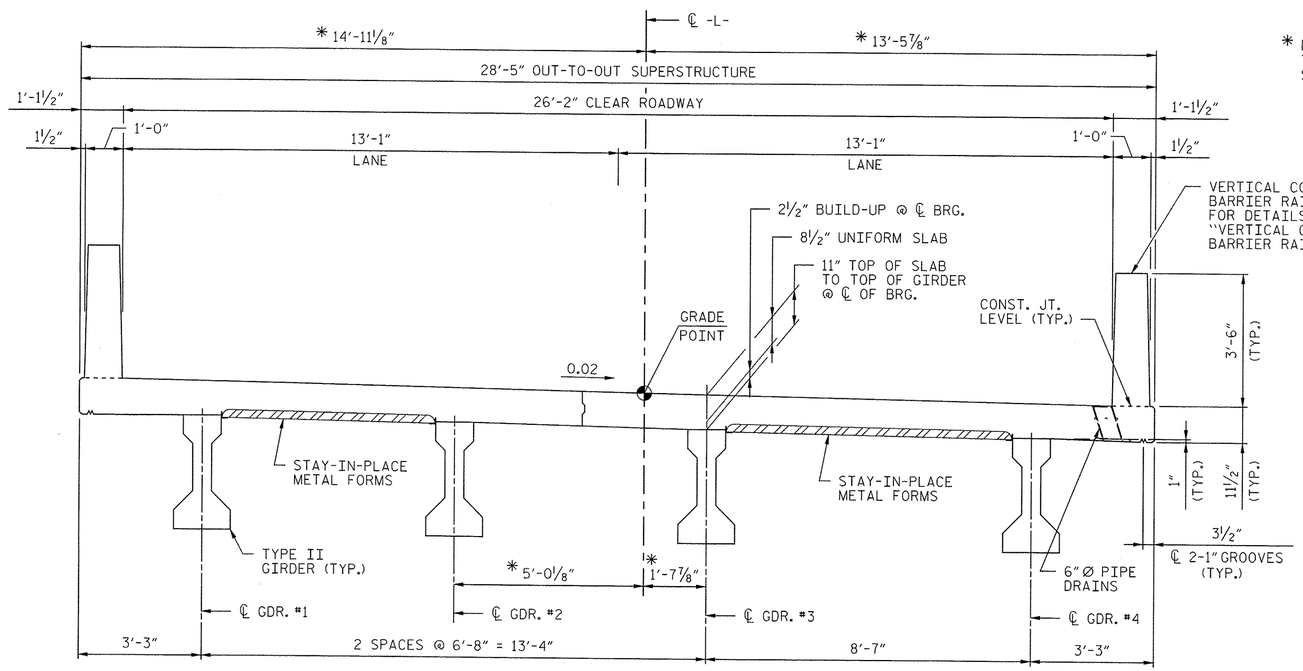

STAGE 5

* DIMENSIONS ARE APPLICABLE TO TANGENT SECTION FROM STA. 13+04.75 TO STA. 13+49.38.

PROJECT NO. 17BP.14.R.66

JACKSON COUNTY

STATION: 13+19.60 -L-

SHEET 2 OF 2

AECOM

AECOM TECHNICAL SERVICES, INC.
701 CORPORATE CENTER DRIVE, SUITE 475
RALEIGH, NC 27607
(919) 854-6200 www.aecom.com
AECOM License No. F-0342

NORTH CAROLINA PROFESSIONAL SEAL 030474 ENGINEER JOHN C. MORRISON
7/10/14

STATE OF NORTH CAROLINA
DEPARTMENT OF TRANSPORTATION
RALEIGH

CONSTRUCTION SEQUENCE
(FOR STAGED CONSTRUCTION)

REVISIONS						SHEET NO.
NO.	BY:	DATE:	NO.	BY:	DATE:	S-06
						TOTAL SHEETS

DRAWN BY : DDL DATE : 6/14
CHECKED BY : JCM DATE : 6/14

DATE: 7/10/2014
TIME: 11:40:32 AM

USER: bwyatt
DGN: C:\SDOCS\8172\400_Tech_Info_Disc_Files\450_NCDOT StdTechDocFiles\BRG_310\Structures\B310_PhaseSeq_2.dgn

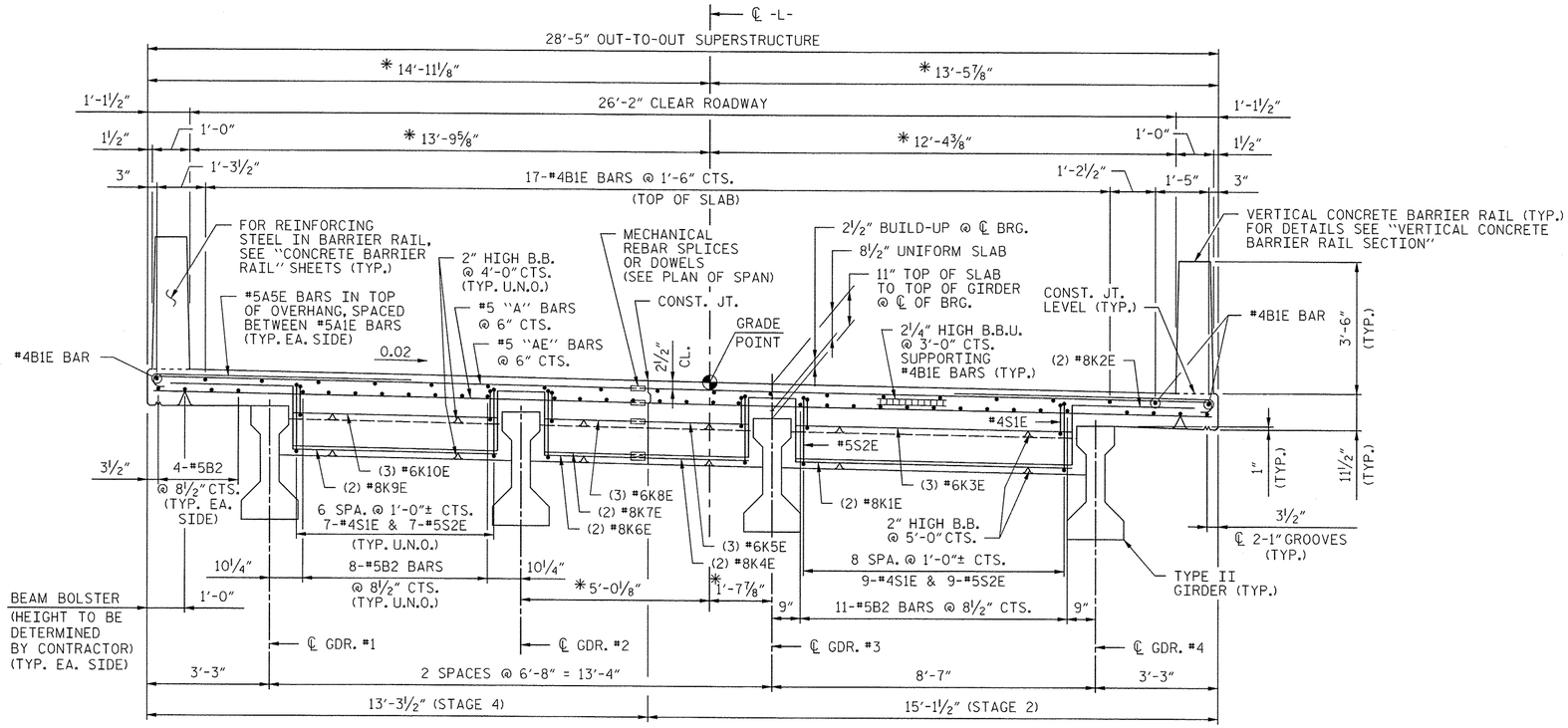

TYPICAL SECTION AT END BENT DIAPHRAGMS

(LOOKING UPSTATION)

* DIMENSIONS ARE APPLICABLE TO TANGENT SECTION FROM STA. 13+04.75 TO STA. 13+49.38.

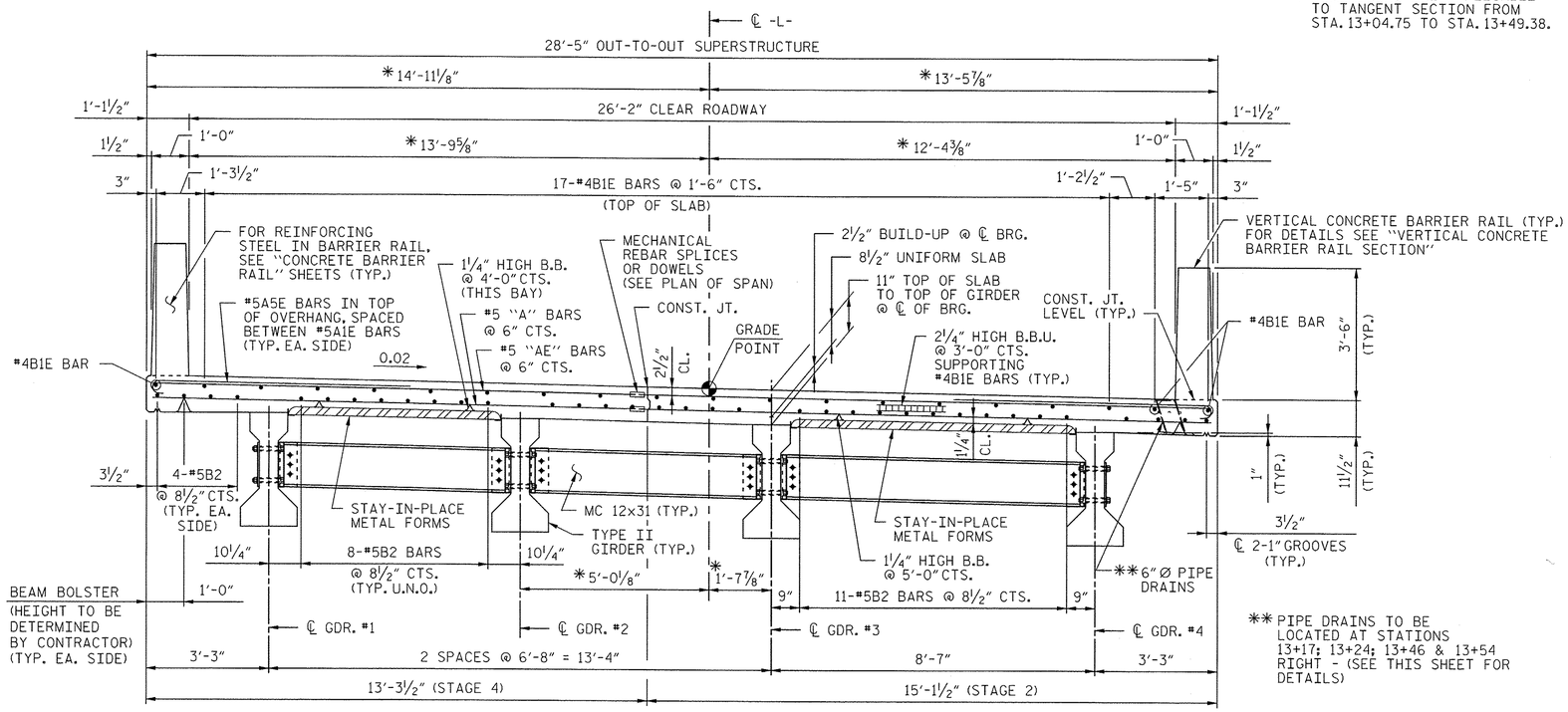

TYPICAL SECTION AT INTERMEDIATE DIAPHRAGMS

(LOOKING UPSTATION)

** PIPE DRAINS TO BE LOCATED AT STATIONS 13+17; 13+24; 13+46 & 13+54 RIGHT - (SEE THIS SHEET FOR DETAILS)

NOTES:

PROVIDE 1¼" HIGH BEAM BOLSTERS UPPER AT 4'-0" CTS. ATOP THE STAY-IN-PLACE METAL FORMS TO SUPPORT THE BOTTOM MAT OF "A" BARS. WHEN USING REMOVABLE FORMS, PROVIDE CONTINUOUS HIGH CHAIRS FOR METAL DECK (C.H.C.M.) AT 4'-0" CTS. WITH A HEIGHT TO SUPPORT THE BOTTOM MAT OF "A" BARS A CLEAR DISTANCE OF 2½" ABOVE THE TOP OF THE REMOVABLE FORM.

LONGITUDINAL STEEL MAY BE SHIFTED SLIGHTLY, AS NECESSARY, TO AVOID INTERFERENCE WITH STIRRUPS IN PRESTRESSED CONCRETE GIRDERS.

REMOVABLE FORMS MAY BE USED IN LIEU OF STAY-IN-PLACE METAL FORMS IN ACCORDANCE WITH ARTICLE 420-3 OF THE STANDARD SPECIFICATIONS.

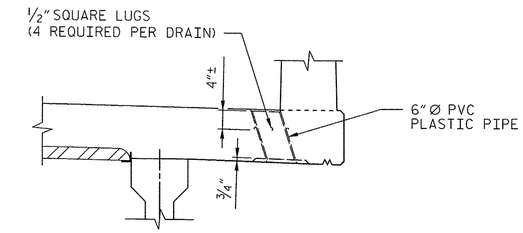

ELEVATION

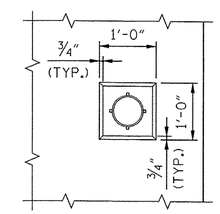

PLAN OF RECESS

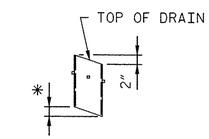

* TO BE SET TO MATCH SLOPE OF BOTTOM OF OVERHANG

(4 DRAINS REQUIRED)

PIPE DETAIL

DRAIN NOTES:

TOP OF FLOOR DRAIN TO BE SET ⅜" BELOW SURFACE OF SLAB.

4-½" SQUARE LUGS TO BE GLUED TO THE PVC PLASTIC PIPE AT EQUAL SPACES AROUND THE PIPE DRAIN APPROXIMATELY 4" FROM THE TOP OF THE PIPE.

THE 6" Ø PVC PLASTIC PIPE AND FITTINGS SHALL BE SCHEDULE 40 AND CONFORM TO ASTM D1785.

PROJECT NO. 17BP.14.R.66

JACKSON **COUNTY**

STATION: 13+19.60 -L-

AECOM
AECOM TECHNICAL SERVICES, INC.
701 CORPORATE CENTER DRIVE, SUITE 475
RALEIGH, NC 27607
(919) 854-6200 www.aecom.com
AECOM License No. F-0342

NORTH CAROLINA PROFESSIONAL SEAL 030474 ENGINEER JOHN C. MORRISON
7/10/14

STATE OF NORTH CAROLINA
DEPARTMENT OF TRANSPORTATION
RALEIGH

SUPERSTRUCTURE

TYPICAL SECTION

REVISIONS						SHEET NO.
NO.	BY:	DATE:	NO.	BY:	DATE:	S-07
						TOTAL SHEETS

DRAWN BY : DDL DATE : 6/14
CHECKED BY : JCM DATE : 6/14

DATE: 7/10/2014
TIME: 11:54:00 AM

USER: lowerjd
DGN: G:\60238772\c400_Tech_Info_Disc_Files\450_NCDOT STructure Details\BRG_310 Structures\B310_Typ Section.dgn

NOTES:

1. FOR BEARING AND SOLE PLATE SIZES, SEE "ELASTOMERIC BEARING DETAILS" SHEET.

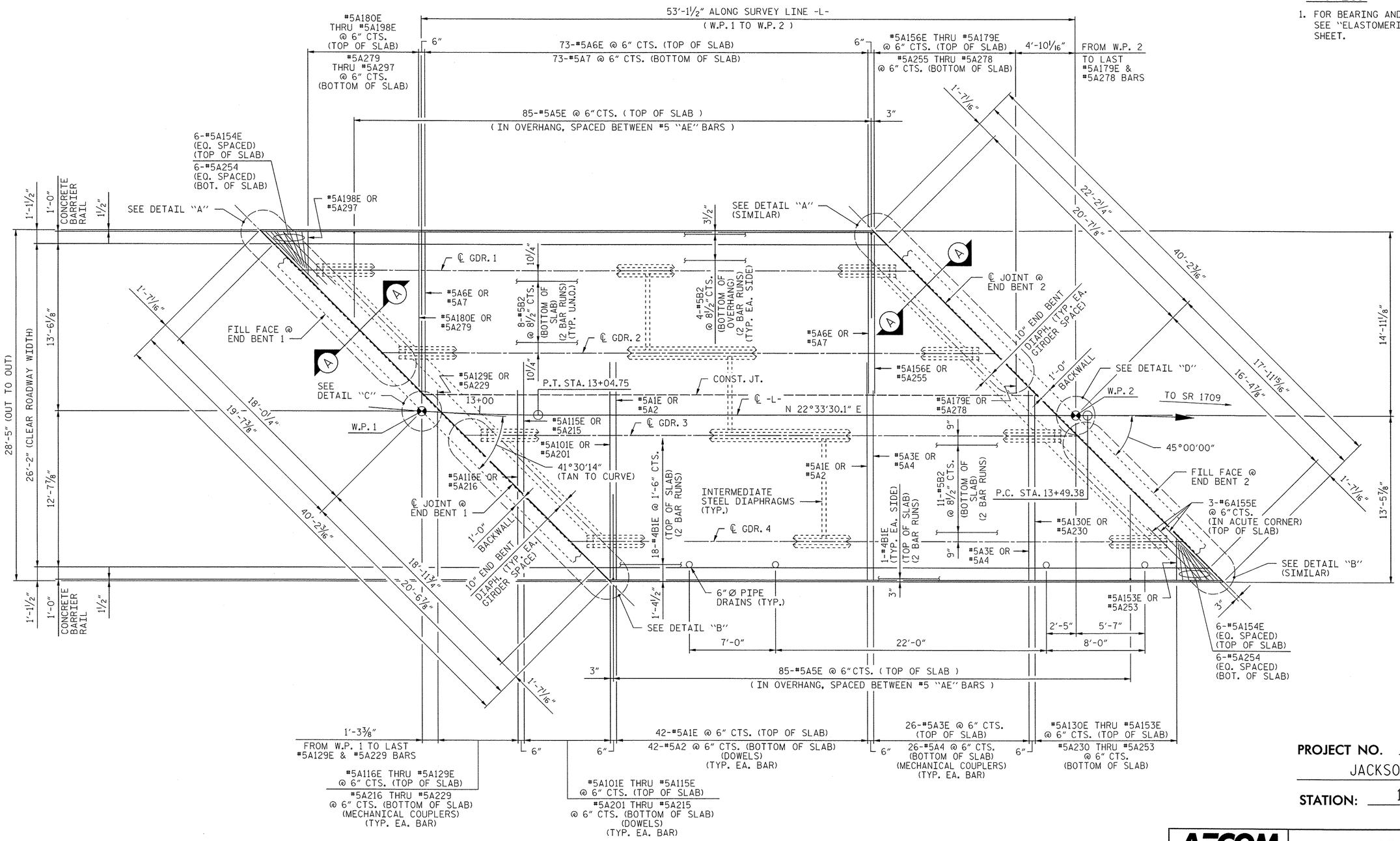

PLAN

PROJECT NO. 17BP.14.R.66

JACKSON COUNTY

STATION: 13+19.60 -L-

AECOM

AECOM TECHNICAL SERVICES, INC.
701 CORPORATE CENTER DRIVE, SUITE 475
RALEIGH, NC 27607
(919) 854-6200 www.aecom.com
AECOM License No. F-0342

NORTH CAROLINA PROFESSIONAL SEAL 030474 ENGINEER JOHN C. MORRISON
7/10/14

STATE OF NORTH CAROLINA
DEPARTMENT OF TRANSPORTATION
RALEIGH

SUPERSTRUCTURE

PLAN OF SPAN

REVISIONS						SHEET NO.
NO.	BY:	DATE:	NO.	BY:	DATE:	S-08
						TOTAL SHEETS

DRAWN BY : DDL DATE : 6/14
CHECKED BY : JCM DATE : 6/14

DATE: 7/10/2014
TIME: 11:41:24 AM

USER: lawsrvd
DGN: 0:\6623\9772\400_Tech_Info_Dlss_Files\50_NCDOT Staff ecnBeFiles\DRG_3\0\Structures\B310_Plan_of_Span.dgn

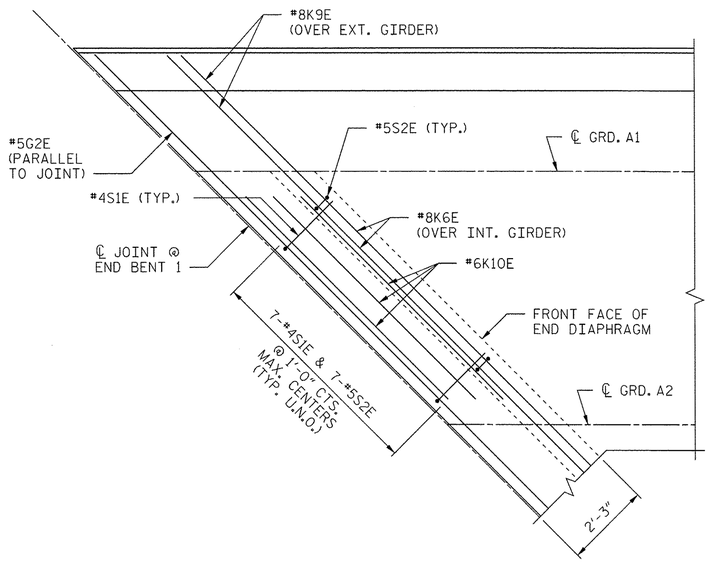

DETAIL "A"

"A" & "B" BARS NOT SHOWN

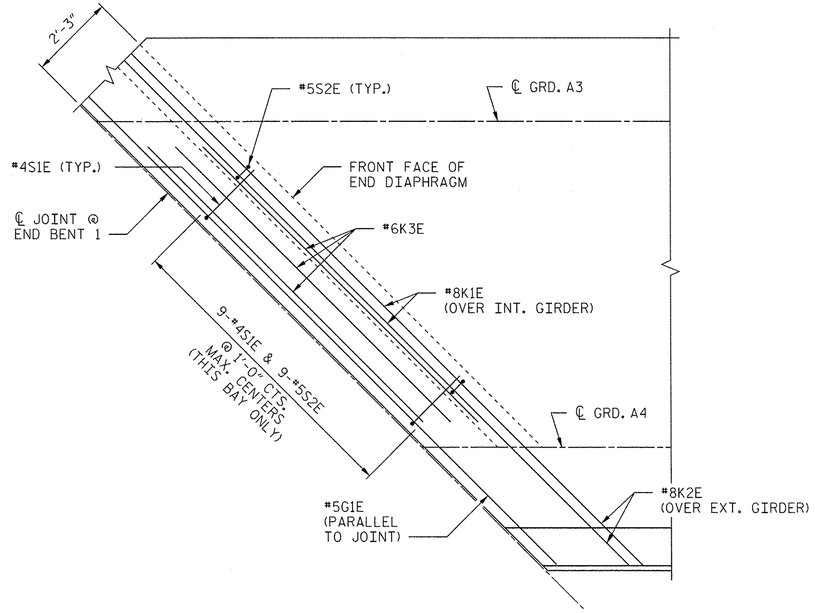

DETAIL "B"

"A" & "B" BARS NOT SHOWN

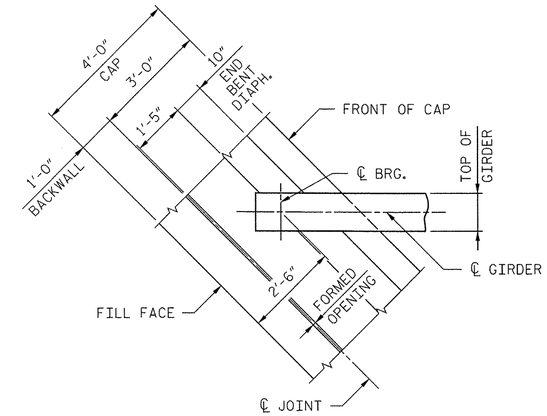

VIEW E-E

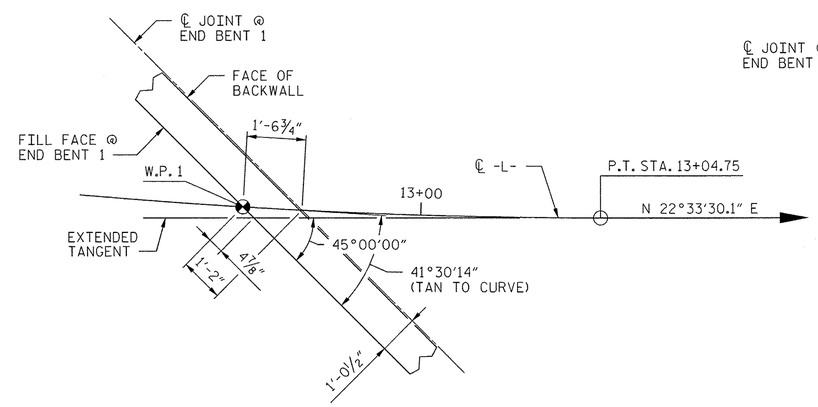

DETAIL "C"

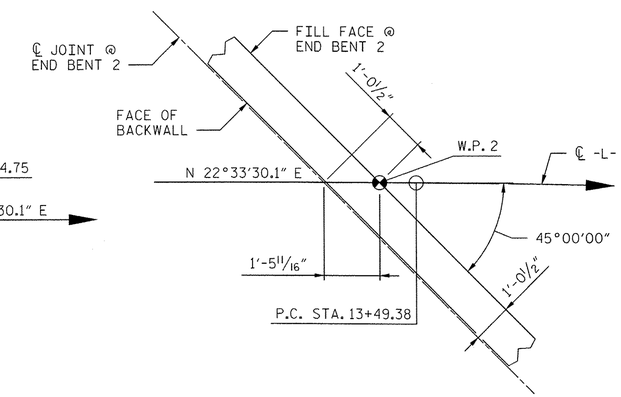

DETAIL "D"

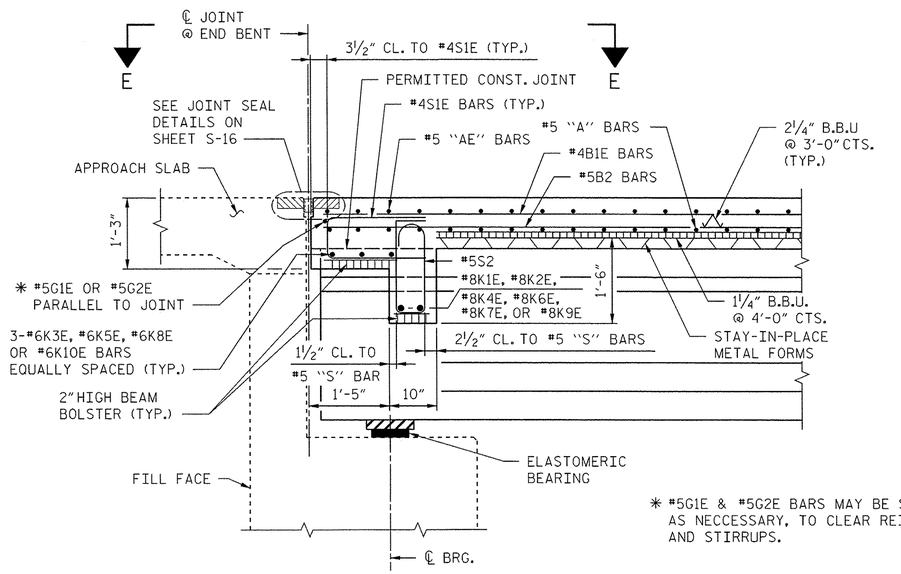

✱ #5G1E & #5G2E BARS MAY BE SHIFTED SLIGHTLY, AS NECCESSARY, TO CLEAR REINFORCING STEEL AND STIRRUPS.

SECTION A-A

PROJECT NO. 17BP.14.R.66

JACKSON **COUNTY**

STATION: 13+19.60 -L-

AECOM
AECOM TECHNICAL SERVICES, INC.
701 CORPORATE CENTER DRIVE, SUITE 475
RALEIGH, NC 27607
(919) 854-6200 www.aecom.com
AECOM License No. F-0342

NORTH CAROLINA PROFESSIONAL SEAL 030474 ENGINEER JOHN C. MORRISON
7/10/14

STATE OF NORTH CAROLINA
DEPARTMENT OF TRANSPORTATION
RALEIGH

SUPERSTRUCTURE

TYPICAL SECTION DETAILS

REVISIONS						SHEET NO.
NO.	BY:	DATE:	NO.	BY:	DATE:	S-09
						TOTAL SHEETS

DRAWN BY : DDL DATE : 6/14
CHECKED BY : JCM DATE : 6/14

DATE: 7/10/2014
TIME: 11:52:53 AM
USER: lawson4
DGN: QA\B023\B7T2\v400_Tech_Info_Disc_Files\450_NCDOT_Std'ds\DefFiles\BRG_370\Structures\0330_Typ_Sec_Dets.dgn

NOTES:

1. FOR BEARING AND SOLE PLATE SIZES, SEE "ELASTOMERIC BEARING DETAILS" SHEET.

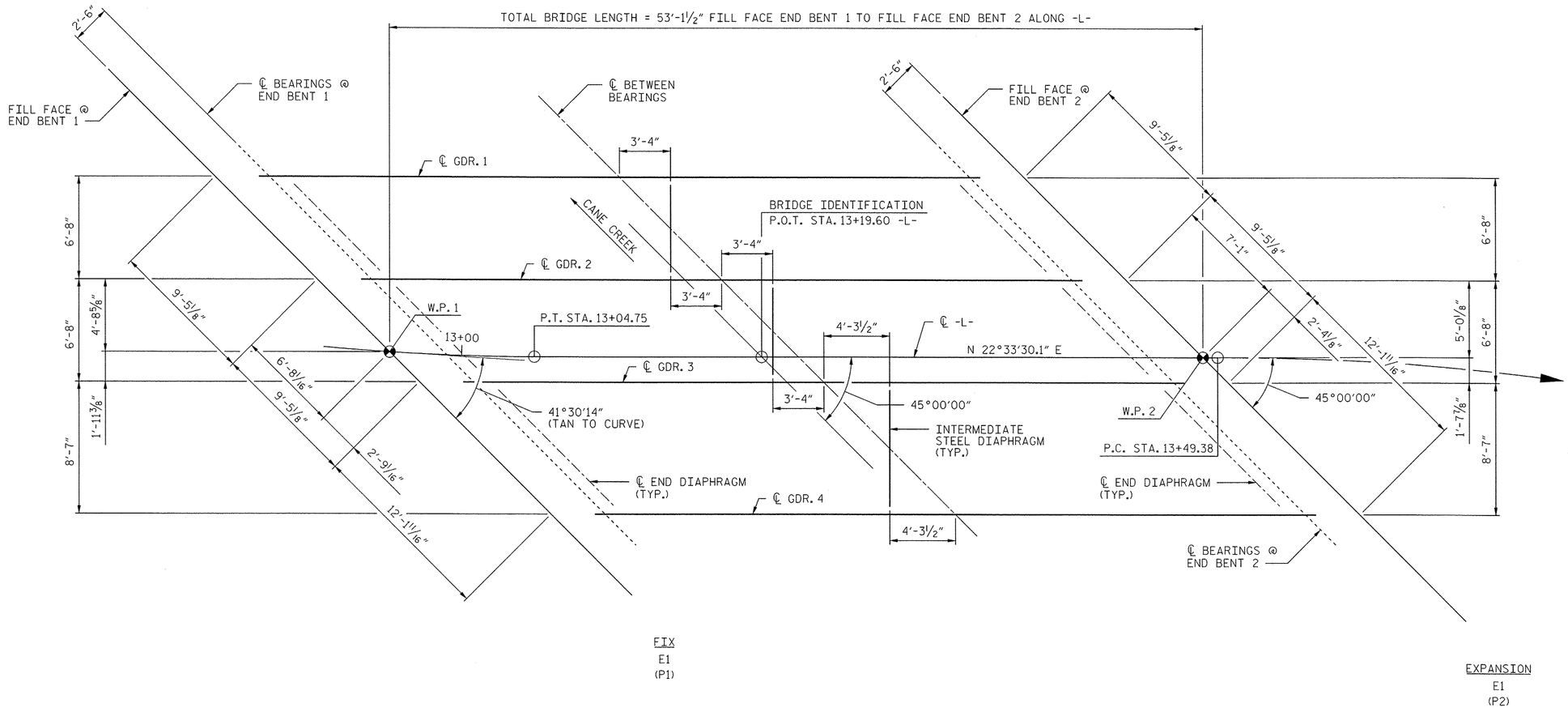

FRAMING PLAN
(SPAN "A")

PROJECT NO. 17BP.14.R.66

JACKSON COUNTY

STATION: 13+19.60 -L-

AECOM
AECOM TECHNICAL SERVICES, INC.
701 CORPORATE CENTER DRIVE, SUITE 475
RALEIGH, NC 27607
(919) 854-6200 www.aecom.com
AECOM License No. F-0342

NORTH CAROLINA PROFESSIONAL SEAL 030474 ENGINEER JOHN C. MORRISON
7/10/14

STATE OF NORTH CAROLINA
DEPARTMENT OF TRANSPORTATION
RALEIGH

SUPERSTRUCTURE

FRAMING PLAN

REVISIONS						SHEET NO.
NO.	BY:	DATE:	NO.	BY:	DATE:	S-10
						TOTAL SHEETS

DRAWN BY : DDL DATE : 6/14
CHECKED BY : JCM DATE : 6/14

DATE: 7/10/2014
TIME: 11:20:39 AM

USER: lowerjd
DGN: 0:\60123877\Cv00_Tech_Info_Disc_Files\450_NCDOT Std Tech Des Files\BRG_300\Structures\B310_FramingPlan.dgn

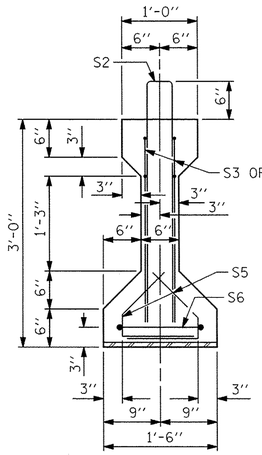

SECTION A-A

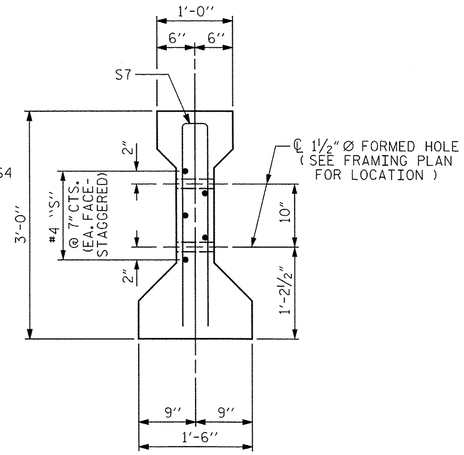

SECTION C-C

(S1 BARS NOT SHOWN)

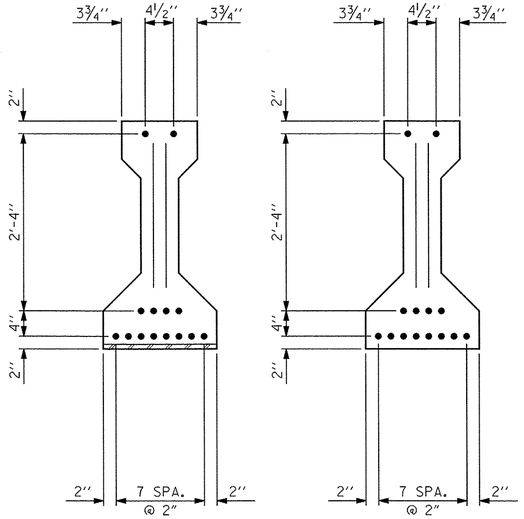

AT END OF GIRDER

AT ℄ OF GIRDER

0.6" Ø LOW RELAXATION STRAND LAYOUT

NOTES

ALL PRESTRESSING STRANDS SHALL BE 7-WIRE LOW-RELAXATION GRADE 270 STRANDS AND SHALL CONFORM TO AASHTO M203 EXCEPT FOR SAMPLING REQUIREMENTS WHICH SHALL BE IN ACCORDANCE WITH THE STANDARD SPECIFICATIONS.

APPLY EPOXY PROTECTIVE COATING TO END OF GIRDER SURFACES.

EMBEDDED PLATE "B-1" SHALL BE GALVANIZED IN ACCORDANCE WITH THE SPECIFICATIONS.

BEVEL EDGES OF PLATE "B-1" TO GIVE CLOSE FIT BUT NOT TIGHT FIT TO STEEL CASTING FORM.

ANCHOR STUDS SHALL CONFORM TO AASHTO M169 GRADES 1010 THROUGH 1020 OR APPROVED EQUAL, AND SHALL MEET THE TYPE "B" REQUIREMENTS OF SUBSECTION 7.3 OF THE ANSI/AASHTO/AWS D1.5 BRIDGE WELDING CODE.

ALL PRESTRESSED STRANDS SHALL BE CUT FLUSH WITH THE GIRDER ENDS.

THE TRANSFER OF LOAD FROM THE ANCHORAGES TO THE GIRDER SHALL BE DONE WHEN CONCRETE HAS REACHED A COMPRESSIVE STRENGTH OF NOT LESS THAN 5500 PSI.

DEPENDING ON THE TYPE OF SYSTEM USED TO SUPPORT THE DECK SLAB FORMS, PRESET ANCHORS MAY BE NECESSARY IN THE PRESTRESSED CONCRETE GIRDER.

THE TOP SURFACE OF THE GIRDER SHALL BE RAKED TO A DEPTH OF ¼" EXCEPT IN THE AREA BETWEEN THE STIRRUP AND THE EDGE OF THE GIRDER.

WHEN DRAPED STRANDS ARE DETAILED, THE LONGITUDINAL LOCATION OF THE HOLD DOWN DEVICES SHALL BE WITHIN 6" OF THE LOCATION SHOWN AND THE CENTER OF GRAVITY OF THE GROUP OF DRAPED STRANDS SHALL BE LOCATED WITHIN ½" OF THE THEORETICAL LOCATION SHOWN.

0.6" Ø L. R. GRADE 270 STRANDS

AREA (SQUARE INCHES)	ULTIMATE STRENGTH (LBS. PER STRAND)	APPLIED PRESTRESS (LBS. PER STRAND)
0.217	58,600	43,950

REINFORCING STEEL FOR ONE GIRDER

	BAR	NUMBER	SIZE	TYPE	LENGTH	WEIGHT
EXTERIOR GDR.	S1	35	#4	1	6'-10"	160
INTERIOR GDR.	S1	35	#4	1	6'-10"	160
	S2	8	#5	1	6'-10"	57
	S3	4	#5	2	3'-8"	15
	S4	4	#5	2	3'-5"	14
	S5	44	#4	3	2'-4"	69
	S6	2	#4	4	9'-2"	12
EXTERIOR GDR.	S7	2	#5	4	5'-8"	12
INTERIOR GDR.	S7	4	#5	4	5'-8"	24
EXTERIOR GDR.	S8	5	#4	STR	7'-0"	23
INTERIOR GDR.	S9	5	#4	STR	15'-0"	50

BAR TYPES

ALL BAR DIMENSIONS ARE OUT-TO-OUT

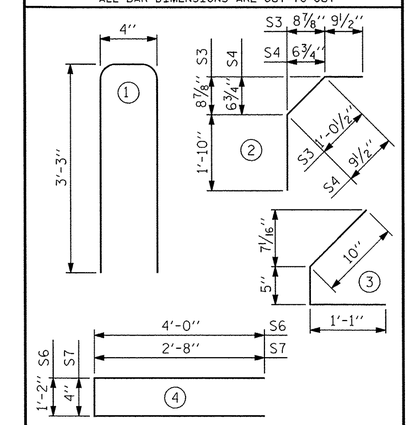

QUANTITIES FOR ONE GIRDER

	REINFORCING STEEL LB.	7000 PSI CONCRETE C.Y.	0.6" Ø L.R. STRANDS No.
EXTERIOR GIRDER	362	4.47	14
INTERIOR GIRDER	401	4.47	14

GIRDERS REQUIRED

NUMBER	LENGTH	TOTAL LENGTH
4	47'-1"	188'-4"

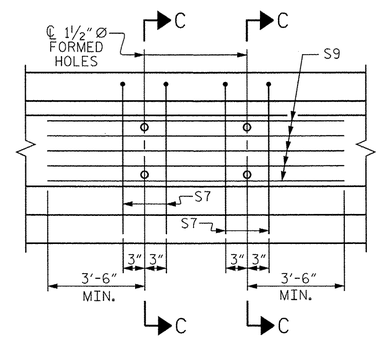

PARTIAL ELEVATION

SHOWING INTERMEDIATE DIAPHRAGM REINFORCING STEEL FOR GIRDER Nos. 2 AND 3

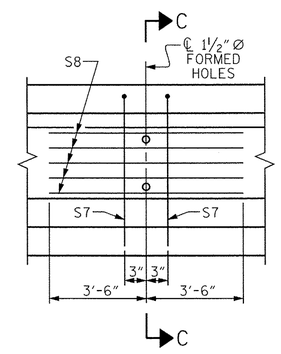

PARTIAL ELEVATION

SHOWING INTERMEDIATE DIAPHRAGM REINFORCING STEEL FOR GIRDER Nos. 1 AND 4

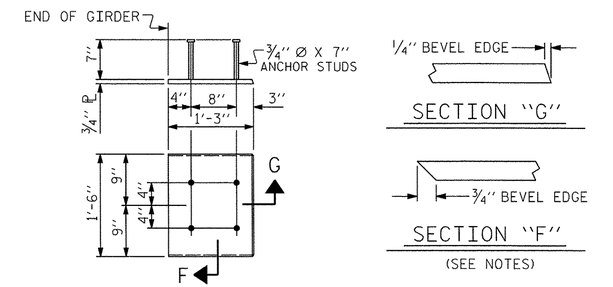

SECTION "G"

SECTION "F"

(SEE NOTES)

EMBEDDED PLATE "B-1" DETAILS

TWO EMBEDDED PLATES "B-1" ARE REQUIRED FOR EACH GIRDER.

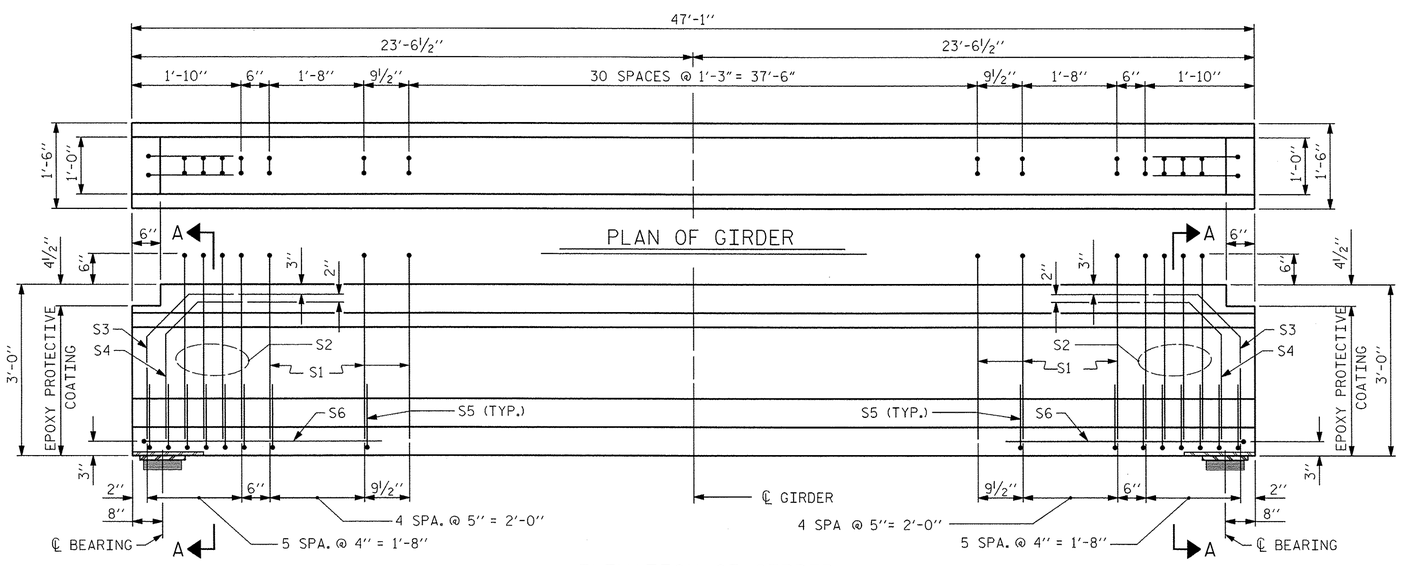

ELEVATION OF GIRDER

(SEE PARTIAL ELEVATION FOR ADDITIONAL "S" BARS)

PROJECT NO. 17BP.14.R.66

JACKSON COUNTY

STATION: 13+19.60 -L-

AECOM

AECOM TECHNICAL SERVICES, INC.
701 CORPORATE CENTER DRIVE, SUITE 475
RALEIGH, NC 27607
(919) 854-6200 www.aecom.com
AECOM License No. F-0342

NORTH CAROLINA PROFESSIONAL SEAL 030474 ENGINEER JOHN C. MORRISON
7/10/14

STATE OF NORTH CAROLINA
DEPARTMENT OF TRANSPORTATION
RALEIGH

STANDARD
AASHTO TYPE II
PRESTRESSED CONCRETE GIRDER

ASSEMBLED BY : DDL	DATE : 6/14
CHECKED BY : JCM	DATE : 6/14
DRAWN BY : JMB 12/87	REV. 8/16/99RR RWW/LES
CHECKED BY : ARB 12/87	REV. 5/1/06R TLA/GM
	REV. 10/1/11 MAA/GM

REVISIONS

NO.	BY:	DATE:	NO.	BY:	DATE:
1			3		
2			4		

SHEET NO. S-11

TOTAL SHEETS

STD. NO. PCG1

DATE: 7/10/2014
TIME: 11:57:59 AM

USER: lowmyd
DGN: G:\60238772\400_Tech_Info_Disc_Files\450_NCDOT Std Det\DesFiles\BR6_310\Structures\B310_PCG.dgn

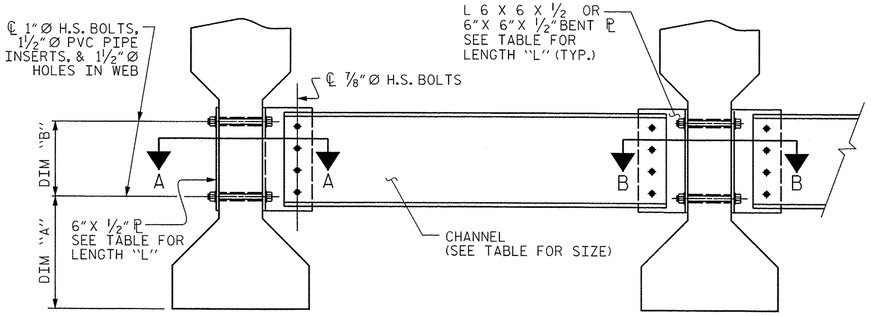

EXTERIOR GIRDER

INTERIOR GIRDER

PART SECTION AT INTERMEDIATE DIAPHRAGM

(TYPE III OR TYPE IV GIRDER SHOWN)

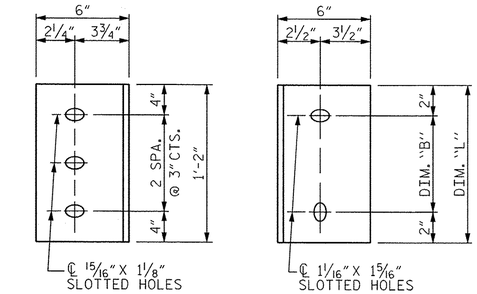

DIAPHRAGM FACE

(TYPE II GDR.)

WEB FACE

CONNECTOR PLATE DETAILS

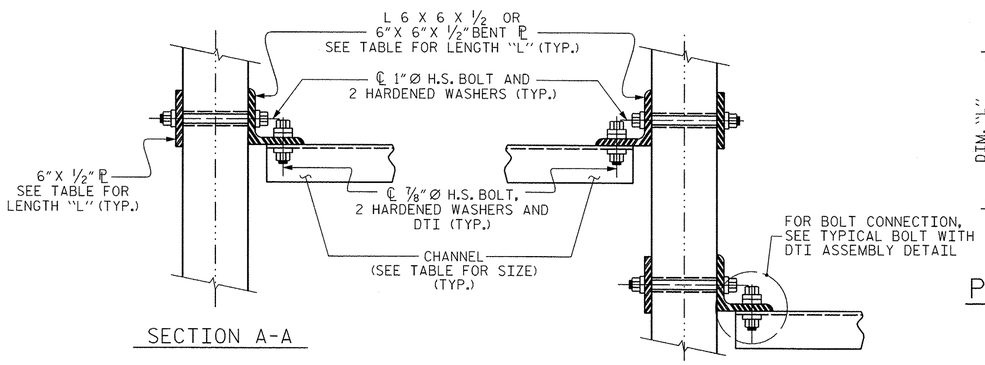

SECTION A-A

SECTION B-B

CONNECTION DETAILS

(FOR SKEW > 110°)

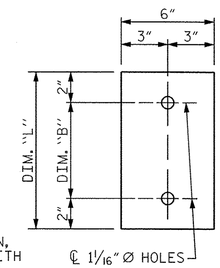

PLATE DETAILS

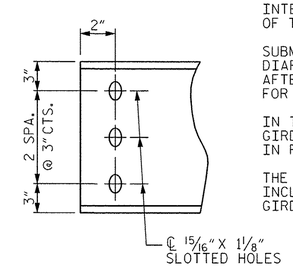

CHANNEL END

(TYPE II GDR.)

STRUCTURAL STEEL NOTES

ALL INTERMEDIATE DIAPHRAGM STEEL AND CONNECTOR PLATES SHALL BE AASHTO M270 GRADE 50 OR APPROVED EQUAL.

TENSION ON THE ASTM A325 BOLTS THROUGH THE CHANNEL MEMBER SHALL BE CALIBRATED USING DIRECT TENSION INDICATOR WASHERS IN ACCORDANCE WITH THE STANDARD SPECIFICATIONS.

TENSION ON THE ASTM A449 BOLTS THROUGH THE GIRDER WEB SHALL BE SNUG TIGHTENED FOLLOWED BY AN ADDITIONAL ¼ TURN.

THE PLATES, BENT PLATES, CHANNELS, AND ANGLES SHALL BE GALVANIZED OR METALLIZED IN ACCORDANCE WITH THE STANDARD SPECIFICATIONS. FOR THERMAL SPRAYED COATINGS (METALLIZATION), SEE SPECIAL PROVISIONS.

FOR METALLIZATION, APPLY AN 8 MIL THICK 99.99 PERCENT ZINC (W-Zn-1) THERMAL SPRAYED COATING WITH A 0.5 MIL THICK SEAL COAT TO ALL STEEL DIAPHRAGM SURFACES IN ACCORDANCE WITH THE THERMAL SPRAYED COATINGS SPECIAL PROVISION AND SECTION 442 OF THE STANDARD SPECIFICATIONS.

GALVANIZE THE HIGH STRENGTH BOLTS, NUTS, WASHERS AND DIRECT TENSION INDICATORS IN ACCORDANCE WITH THE STANDARD SPECIFICATIONS.

USE AN ASTM F436 HARDENED WASHER WITH STANDARD AND SLOTTED HOLES UNDER EACH BOLT HEAD AND NUT.

FOR BOLTS THROUGH THE GIRDER WEB, PROVIDE SUFFICIENT LENGTH OF THREADS ON ALL BOLTS TO ACCOMMODATE WASHERS AND THE THICKNESS OF CONNECTING MEMBER PLUS AT LEAST ¼" PROJECTION BEYOND THE NUT.

INTERMEDIATE DIAPHRAGM ASSEMBLY SHALL COMPLY WITH SECTION 1072 OF THE STANDARD SPECIFICATIONS.

SUBMIT TWO SETS OF WORKING DRAWINGS FOR THE INTERMEDIATE DIAPHRAGM ASSEMBLY FOR REVIEW, COMMENTS AND ACCEPTANCE. AFTER REVIEW, COMMENTS, AND ACCEPTANCE, SUBMIT SEVEN SETS FOR DISTRIBUTION.

IN THE EXTERIOR BAYS, PLACE TEMPORARY STRUTS BETWEEN PRESTRESSED GIRDERS ADJACENT TO THE STEEL DIAPHRAGMS. STRUTS SHALL REMAIN IN PLACE 3 DAYS AFTER CONCRETE IS PLACED.

THE COST OF THE STEEL DIAPHRAGMS AND ASSEMBLIES SHALL BE INCLUDED IN THE UNIT PRICE BID FOR PRESTRESSED CONCRETE GIRDERS.

TABLE

GIRDER TYPE	CHANNEL SIZE	DIM "A"	DIM "B"	DIM "L"
II	MC 12 x 31	1'-2½"	10"	1'-2"

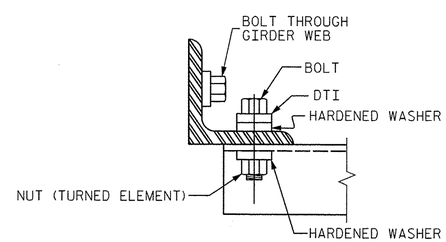

BOLT WITH DTI ASSEMBLY DETAIL

PROJECT NO. 17BP.14.R.66

JACKSON COUNTY

STATION: 13+19.60 -L-

AECOM

AECOM TECHNICAL SERVICES, INC.
701 CORPORATE CENTER DRIVE, SUITE 475
RALEIGH, NC 27607
(919) 854-6200 www.aecom.com
AECOM License No. F-0342

NORTH CAROLINA PROFESSIONAL SEAL 030474 ENGINEER JOHN C. MORRISON
7/10/14

STATE OF NORTH CAROLINA
DEPARTMENT OF TRANSPORTATION
RALEIGH

STANDARD

INTERMEDIATE STEEL DIAPHRAGMS FOR TYPE II PRESTRESSED CONCRETE GIRDERS

REVISIONS						SHEET NO.
NO.	BY:	DATE:	NO.	BY:	DATE:	S-12
1			3			TOTAL SHEETS
2			4			

ASSEMBLED BY :	DDL	DATE :	6/14
CHECKED BY :	JCM	DATE :	6/14
DRAWN BY : TLA	6/05	ADDED 10/21/05	
CHECKED BY : VC	6/05	REV. 5/1/06RRR	KMM/GM
		REV. 10/1/11	MAA/GM

STD. NO. PCG10

DATE: 7/10/2014
TIME: 11:38:27 AM

USER: lowery4
DGN: 0060235177ch001_Tech_Info_Dist_Files\450_NCDOT Std Tech Data Files\BRG_370\Structures\B370_PCG10sgh.dgn

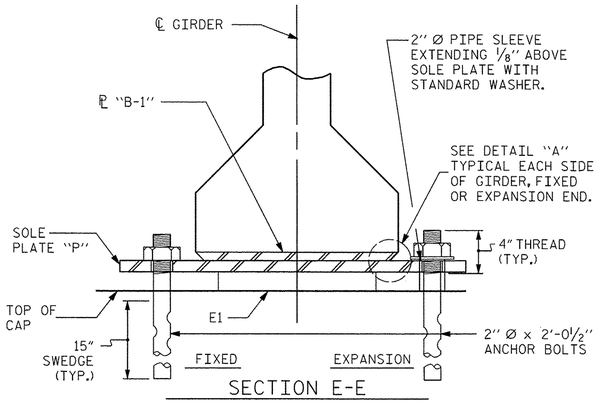

SECTION E-E

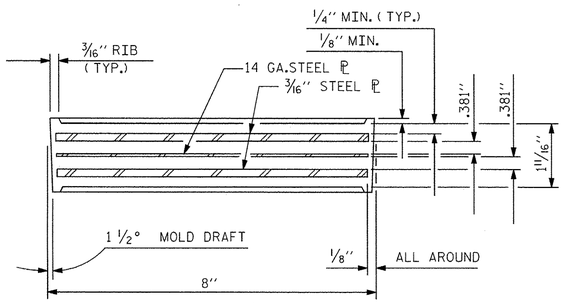

TYPICAL SECTION OF ELASTOMERIC BEARINGS

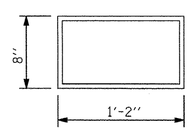

E1 (8 REQ'D)

PLAN VIEW OF ELASTOMERIC BEARING

TYPE II

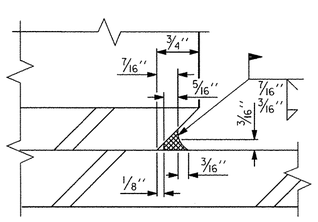

DETAIL "A"

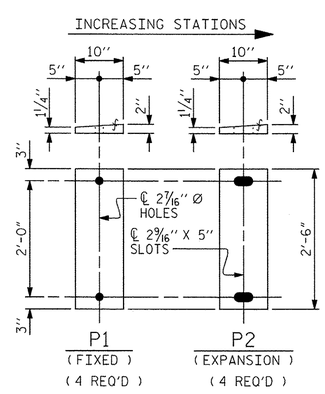

SOLE PLATE DETAILS ("P")

MAXIMUM ALLOWABLE SERVICE LOADS	
D.L.+L.L. (NO IMPACT)	
TYPE II	145 k

NOTES

ALL SOLE PLATES SHALL BE AASHTO M270 GRADE 36.

AT ALL FIXED POINTS OF SUPPORT, NUTS FOR ANCHOR BOLTS ARE TO BE TIGHTENED FINGER TIGHT AND THEN BACKED OFF 1/2 TURN. THE THREAD OF THE NUT AND BOLT SHALL THEN BE BURRED WITH A SHARP POINTED TOOL.

THE 2" Ø PIPE SLEEVE SHALL BE CUT FROM SCHEDULE 40 PVC PLASTIC PIPE. THE PVC PLASTIC PIPE SHALL MEET THE REQUIREMENTS OF ASTM D1785.

STEEL SOLE PLATES, ANCHOR BOLTS, NUTS, AND WASHERS SHALL BE GALVANIZED IN ACCORDANCE WITH THE STANDARD SPECIFICATIONS.

PRIOR TO WELDING, GRIND THE GALVANIZED SURFACE OF THE PORTION OF THE EMBEDDED PLATE AND SOLE PLATE THAT ARE TO BE WELDED. AFTER WELDING, DAMAGED GALVANIZED SURFACES SHALL BE REPAIRED IN ACCORDANCE WITH THE STANDARD SPECIFICATIONS.

WHEN WELDING THE SOLE PLATE TO THE EMBEDDED PLATE IN THE GIRDER, USE TEMPERATURE INDICATING WAX PENS, OR OTHER SUITABLE MEANS, TO ENSURE THAT THE TEMPERATURE OF THE SOLE PLATE DOES NOT EXCEED 300°F. TEMPERATURES ABOVE THIS MAY DAMAGE THE ELASTOMER.

SOLE PLATE "P", BOLTS, NUTS, WASHERS, AND PIPE SLEEVE SHALL BE INCLUDED IN THE PAY ITEM FOR PRESTRESSED CONCRETE GIRDERS.

ANCHOR BOLTS SHALL MEET THE REQUIREMENTS OF ASTM A449. NUTS SHALL MEET THE REQUIREMENTS OF AASHTO M291-DH OR AASHTO M292-2H. WASHERS SHALL MEET THE REQUIREMENTS OF AASHTO M293. SHOP DRAWINGS ARE NOT REQUIRED FOR ANCHOR BOLT, NUTS AND WASHERS. SHOP INSPECTION IS REQUIRED.

THE ELASTOMER IN THE STEEL REINFORCED BEARINGS SHALL HAVE A SHEAR MODULUS OF 0.160 KSI, IN ACCORDANCE WITH AASHTO M251.

ALL SURFACES OF BEARING PLATES SHALL BE SMOOTH AND STRAIGHT.

SEE "FRAMING PLAN" FOR SOLE PLATE LOCATIONS AND ORIENTATION.

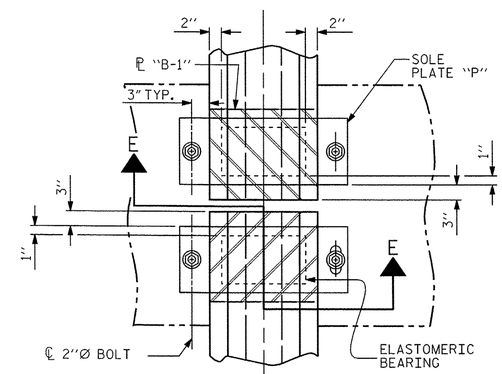

TYPICAL HALF-PLAN (SHOWING CONTINUOUS BENT) | TYPICAL HALF-PLAN (SHOWING SIMPLE SPAN BENT)

PROJECT NO. 17BP.14.R.66

JACKSON COUNTY

STATION: 13+19.60 -L-

ASSEMBLED BY : DDL	DATE : 6/14		
CHECKED BY : JCM	DATE : 6/14		
DRAWN BY : WJH 8/89	REV. 5/1/06	TLA/GM	
CHECKED BY : CRK 8/89	REV. 10/1/11	MAA/GM	
	REV. 6/13	AAC/MAA	

AECOM
AECOM TECHNICAL SERVICES, INC.
701 CORPORATE CENTER DRIVE, SUITE 475
RALEIGH, NC 27607
(919) 854-6200 www.aecom.com
AECOM License No. F-0342

NORTH CAROLINA PROFESSIONAL SEAL 030474 ENGINEER JOHN C. MORRISON
7/10/14

STATE OF NORTH CAROLINA
DEPARTMENT OF TRANSPORTATION
RALEIGH

STANDARD

ELASTOMERIC BEARING DETAILS

PRESTRESSED CONCRETE GIRDER SUPERSTRUCTURE

REVISIONS							
NO.	BY:	DATE:	NO.	BY:	DATE:	SHEET NO.	S-13
1			3			TOTAL SHEETS	
2			4				

STD. NO. EB3

DATE: 7/10/2014
TIME: 11:09:40 AM
USER: bwarren
DGN: G:\6282387\2\400_Tech_Info_Disc_Files\450_NCDOT StdTechDocFiles\BR6_30\Structure\0310_Brg0ptc.dgn

DEAD LOAD DEFLECTION TABLE FOR GIRDER

0.6"DIA. LOW-RELAXATION	SPAN "A" GIRDERS 1										
TENTH POINTS	BRG.	0.1	0.2	0.3	0.4	0.5	0.6	0.7	0.8	0.9	BRG.
CAMBER (GIRDER ALONE IN PLACE) ↑	0.000	0.0342	0.0603	0.0784	0.0890	0.0925	0.0890	0.0784	0.0603	0.0342	0.000
✳ DEFLECTION DUE TO SUPERIMPOSED DL ↓	0.000	-0.0091	-0.0187	-0.0262	-0.0309	-0.0326	-0.0309	-0.0262	-0.0187	-0.0091	0.000
✳✳ FINAL CAMBER (OR DEFLECTION) ↑	0"	5/16"	1/2"	5/8"	11/16"	3/4"	11/16"	5/8"	1/2"	5/16"	0"

DEAD LOAD DEFLECTION TABLE FOR GIRDER

0.6"DIA. LOW-RELAXATION	SPAN "A" GIRDER 2										
TENTH POINTS	BRG.	0.1	0.2	0.3	0.4	0.5	0.6	0.7	0.8	0.9	BRG.
CAMBER (GIRDER ALONE IN PLACE) ↑	0.000	0.0342	0.0603	0.0784	0.0890	0.0925	0.0890	0.0784	0.0603	0.0342	0.000
✳ DEFLECTION DUE TO SUPERIMPOSED DL ↓	0.000	-0.0092	-0.0189	-0.0264	-0.0313	-0.0329	-0.0313	-0.0264	-0.0189	-0.0092	0.000
✳✳ FINAL CAMBER (OR DEFLECTION) ↑	0"	5/16"	1/2"	5/8"	11/16"	11/16"	11/16"	5/8"	1/2"	5/16"	0"

DEAD LOAD DEFLECTION TABLE FOR GIRDER

0.6"DIA. LOW-RELAXATION	SPAN "A" GIRDER 3										
TENTH POINTS	BRG.	0.1	0.2	0.3	0.4	0.5	0.6	0.7	0.8	0.9	BRG.
CAMBER (GIRDER ALONE IN PLACE) ↑	0.000	0.0342	0.0603	0.0784	0.0890	0.0925	0.0890	0.0784	0.0603	0.0342	0.000
✳ DEFLECTION DUE TO SUPERIMPOSED DL ↓	0.000	-0.0101	-0.0208	-0.0293	-0.0346	-0.0365	-0.0346	-0.0293	-0.0208	-0.0101	0.000
✳✳ FINAL CAMBER (OR DEFLECTION) ↑	0"	5/16"	1/2"	9/16"	5/8"	11/16"	5/8"	9/16"	1/2"	5/16"	0"

DEAD LOAD DEFLECTION TABLE FOR GIRDER

0.6"DIA. LOW-RELAXATION	SPAN "A" GIRDER 4										
TENTH POINTS	BRG.	0.1	0.2	0.3	0.4	0.5	0.6	0.7	0.8	0.9	BRG.
CAMBER (GIRDER ALONE IN PLACE) ↑	0.000	0.0342	0.0603	0.0784	0.0890	0.0925	0.0890	0.0784	0.0603	0.0342	0.000
✳ DEFLECTION DUE TO SUPERIMPOSED DL ↓	0.000	-0.0099	-0.0203	-0.0286	-0.0338	-0.0356	-0.0338	-0.0286	-0.0203	-0.0099	0.000
✳✳ FINAL CAMBER (OR DEFLECTION) ↑	0"	5/16"	1/2"	5/8"	11/16"	11/16"	11/16"	5/8"	1/2"	5/16"	0"

✳ INCLUDES FUTURE WEARING SURFACE
✳✳ POSITIVE NUMBER MEANS UPWARD MOVEMENT, NEGATIVE NUMBER MEANS DOWNWARD MOVEMENT.
ALL VALUES ARE SHOWN IN FEET (DECIMAL FORM), EXCEPT "FINAL CAMBER", WHICH IS GIVEN IN INCHES (FRACTION FORM).

DATE: 7/10/2014
TIME: 11:10:20 AM

USER: teward
DGN: G:\6023877\400_Tech_Info_Disc_Files\450_NCDOT Std Tech\DesFiles\BRG_310\Structures\B310_DL_Deflect.dgn

DRAWN BY : DDL DATE : 6/14
CHECKED BY : JCM DATE : 6/14

PROJECT NO. 17BP.14.R.66
JACKSON COUNTY
STATION: 13+19.60 -L-

AECOM
AECOM TECHNICAL SERVICES, INC.
701 CORPORATE CENTER DRIVE, SUITE 475
RALEIGH, NC 27607
(919) 854-6200 www.aecom.com
AECOM License No. F-0342

NORTH CAROLINA PROFESSIONAL SEAL 030474 ENGINEER JOHN C. MORRISON
7/10/14

STATE OF NORTH CAROLINA
DEPARTMENT OF TRANSPORTATION
RALEIGH

SUPERSTRUCTURE

DEAD LOAD DEFLECTION TABLES

REVISIONS						SHEET NO.
NO.	BY:	DATE:	NO.	BY:	DATE:	S-14
						TOTAL SHEETS

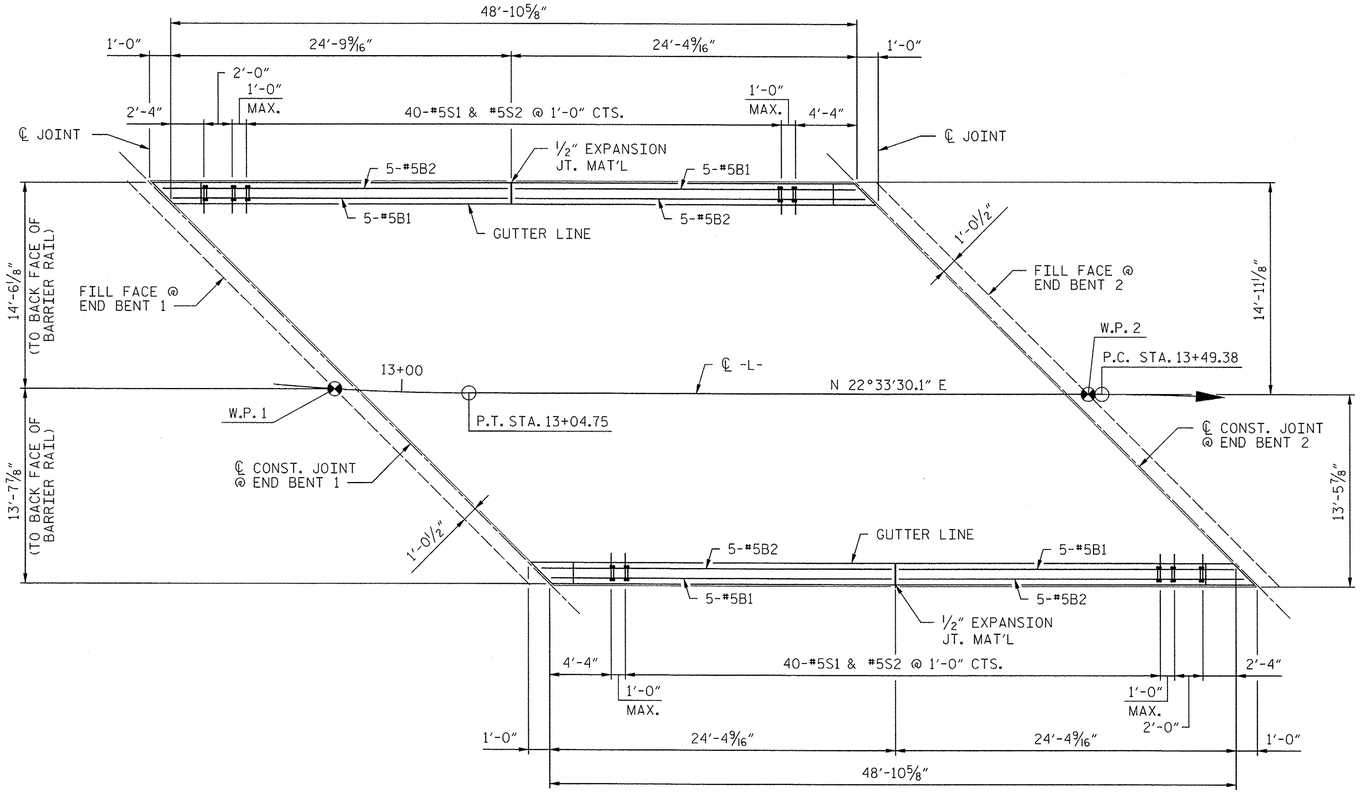

SPAN "A"

PLAN OF BARRIER RAIL REINFORCING

NOTES

THE BARRIER RAIL IN EACH SPAN SHALL NOT BE CAST UNTIL ALL SLAB CONCRETE IN THAT SPAN HAS BEEN CAST AND HAS REACHED A MINIMUM COMPRESSIVE STRENGTH OF 3,000 PSI.

WHEN FOAM JOINT SEAL IS REQUIRED, THE JOINT IN THE DECK SHALL BE SAWED PRIOR TO THE CASTING OF VERTICAL CONCRETE BARRIER RAIL.

ALL REINFORCING STEEL IN BARRIER RAILS SHALL BE EPOXY COATED.

THE #5 S3 & S4 BARS SHALL BE INSTALLED, USING AN ADHESIVE ANCHORING SYSTEM, AFTER SAWING THE JOINT. THE YIELD LOAD FOR THE #5 S3 & S4 BARS IS 18.6 KIPS. FIELD TESTING FOR THE ADHESIVE BONDING SYSTEM IS NOT REQUIRED.

GROOVED CONTRACTION JOINTS, ½" IN DEPTH, SHALL BE TOOLED IN ALL EXPOSED FACES OF THE BARRIER RAIL AND IN ACCORDANCE WITH ARTICLE 825-10(B) OF THE STANDARD SPECIFICATIONS. THE CONTRACTION JOINT SHALL BE LOCATED AT EACH THIRD POINT BETWEEN BARRIER RAIL EXPANSION JOINTS. ONLY ONE CONTRACTION JOINT IS REQUIRED AT MIDPOINT OF BARRIER RAIL SEGMENTS LESS THAN 20 FEET IN LENGTH AND NO CONTRACTION JOINTS ARE REQUIRED FOR THOSE SEGMENTS LESS THAN 10 FEET IN LENGTH.

BAR TYPES

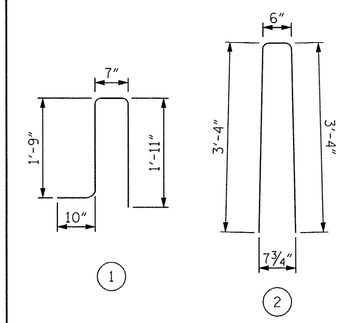

ALL BAR DIMENSIONS ARE OUT TO OUT

BILL OF MATERIAL

FOR VERTICAL CONCRETE BARRIER RAIL ONLY

BAR	NO.	SIZE	TYPE	LENGTH	WEIGHT
STAGE 2					
* B1	10	#5	STR	24'-3"	253
* B2	10	#5	STR	24'-9"	258
* S1	45	#5	1	5'-1"	239
* S2	45	#5	2	7'-2"	336
* S3	8	#5	STR	4'-0"	33
* S4	16	#5	STR	3'-6"	58
* EPOXY COATED REINFORCING STEEL				1177	LBS.
CLASS AA CONCRETE				6.0	CU. YDS.
VERTICAL CONCRETE BARRIER RAIL				51	LIN. FT.
STAGE 4					
* B1	10	#5	STR	24'-3"	253
* B2	10	#5	STR	24'-9"	258
* S1	45	#5	1	5'-1"	239
* S2	45	#5	2	7'-2"	336
* S3	8	#5	STR	4'-0"	33
* S4	16	#5	STR	3'-6"	58
* EPOXY COATED REINFORCING STEEL				1177	LBS.
CLASS AA CONCRETE				6.0	CU. YDS.
VERTICAL CONCRETE BARRIER RAIL				51	LIN. FT.

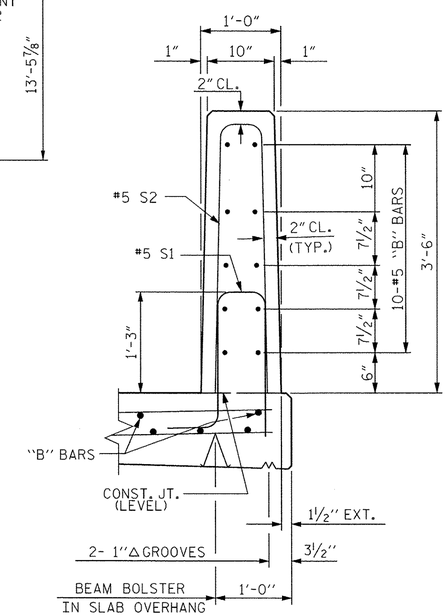

SECTION THRU RAIL

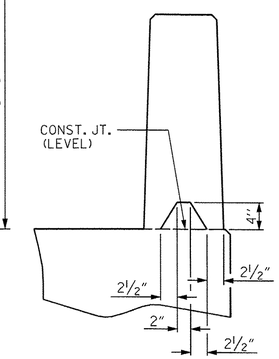

SECTION S-S

AT DAM IN OPEN JOINT (THIS IS TO BE USED ONLY WHEN SLIP FORM IS USED)

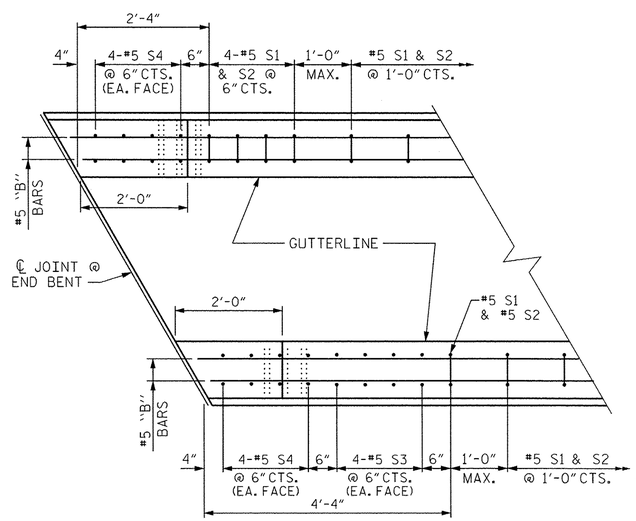

PLAN

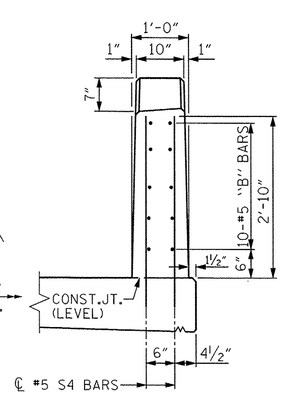

END VIEW

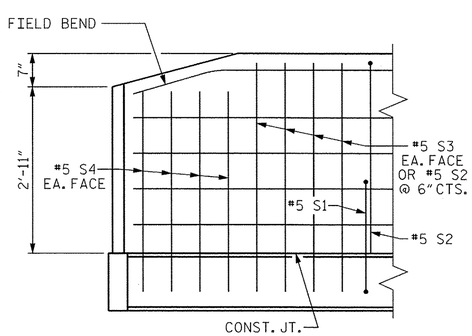

SIDE VIEW

END OF RAIL DETAILS

FOR ADHESIVE ANCHORING AT SAWED JOINTS

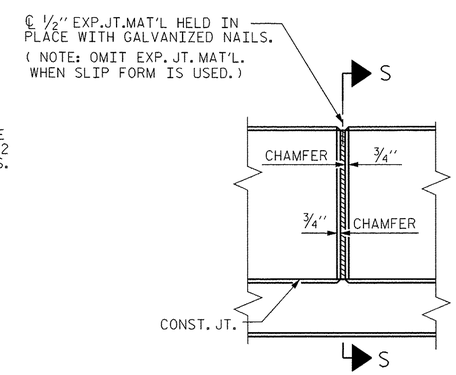

ELEVATION AT EXPANSION JOINTS

BARRIER RAIL DETAILS

PROJECT NO. 17BP.14.R.66

JACKSON COUNTY

STATION: 13+19.60 -L-

AECOM
AECOM TECHNICAL SERVICES, INC.
701 CORPORATE CENTER DRIVE, SUITE 475
RALEIGH, NC 27607
(919) 854-6200 www.aecom.com
AECOM License No. F-0342

NORTH CAROLINA PROFESSIONAL SEAL 030474 ENGINEER JOHN C. MORRISON
7/10/14

STATE OF NORTH CAROLINA
DEPARTMENT OF TRANSPORTATION
RALEIGH

VERTICAL CONCRETE BARRIER RAIL

REVISIONS								SHEET NO.
NO.	BY:	DATE:	NO.	BY:	DATE:			S-15
1			3					TOTAL SHEETS
2			4					

ASSEMBLED BY : DDL	DATE : 6/14		
CHECKED BY : JCM	DATE : 6/14		
DRAWN BY : MAA 5/10	REV. 10/1/11	MAA/GM	
CHECKED BY : GM 5/10	REV. 12/5/11	MAA/GM	
	REV. 6/13	MAA/GM	

STD. NO. CBR2 (SHT 3)

DATE: 7/10/2014
TIME: 11:55:21 AM

USER: lwang4
DGN: G:\6023877\0400_Tech_Info_Disc_Files\450_NCDOT SHE Tech Des Files\BR6_310\Structure\S310_Vert_Barrier_Rail.dgn

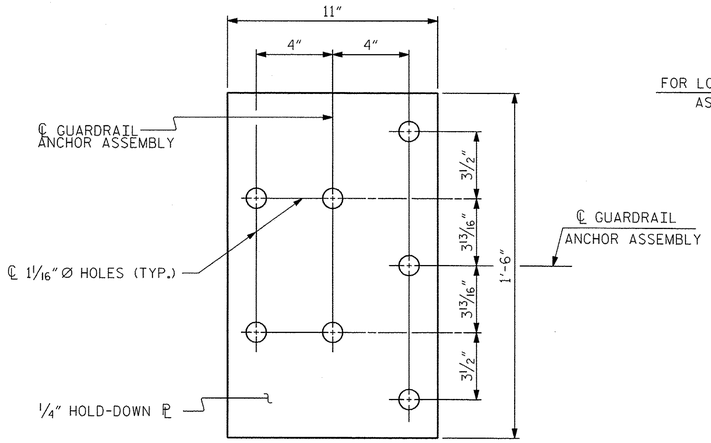

PLAN

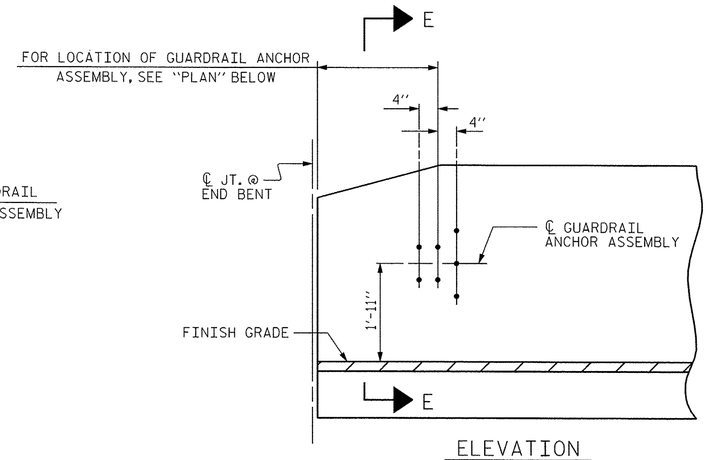

ELEVATION

NOTES

THE GUARDRAIL ANCHOR ASSEMBLY SHALL CONSIST OF A 1/4" HOLD DOWN PLATE AND 7 - 7/8" Ø BOLTS WITH NUTS AND WASHERS.

THE HOLD-DOWN PLATE SHALL CONFORM TO AASHTO M270 GRADE 36. AFTER FABRICATION, THE HOLD-DOWN PLATE SHALL BE HOT-DIP GALVANIZED IN ACCORDANCE WITH AASHTO M111.

BOLTS SHALL CONFORM TO THE REQUIREMENTS OF ASTM A307 AND NUTS SHALL CONFORM TO THE REQUIREMENTS OF AASHTO M291. BOLTS, NUTS AND WASHERS SHALL BE GALVANIZED. (AT THE CONTRACTOR'S OPTION, STAINLESS STEEL BOLTS, NUTS AND WASHERS MAY BE USED AS AN ALTERNATE FOR THE 7/8" Ø GALVANIZED BOLTS, NUTS AND WASHERS. THEY SHALL CONFORM TO OR EXCEED THE MECHANICAL REQUIREMENTS OF ASTM A307. THE USE OF THIS ALTERNATE SHALL BE APPROVED BY THE ENGINEER.)

THE GUARDRAIL ANCHOR ASSEMBLY IS REQUIRED AT ALL POINTS WHERE APPROACH GUARDRAIL IS TO BE ATTACHED TO THE END OF BARRIER RAIL. FOR POINTS OF ATTACHMENT, SEE SKETCH.

AFTER INSTALLATION, THE EXPOSED THREAD OF THE BOLT SHALL BE BURRED WITH A SHARP POINTED TOOL.

THE COST OF THE GUARDRAIL ANCHOR ASSEMBLY SHALL BE INCLUDED IN THE UNIT CONTRACT PRICE BID FOR VERTICAL CONCRETE BARRIER RAIL.

THE VERTICAL REINFORCING BARS MAY BE SHIFTED SLIGHTLY IN THE VERTICAL CONCRETE BARRIER RAIL TO CLEAR ASSEMBLY BOLTS.

THE 1 1/4" Ø HOLES SHALL BE FORMED OR DRILLED WITH A CORE BIT. IMPACT TOOLS WILL NOT BE PERMITTED. ANY CONCRETE DAMAGED BY THIS WORK SHALL BE REPAIRED TO THE SATISFACTION OF THE ENGINEER.

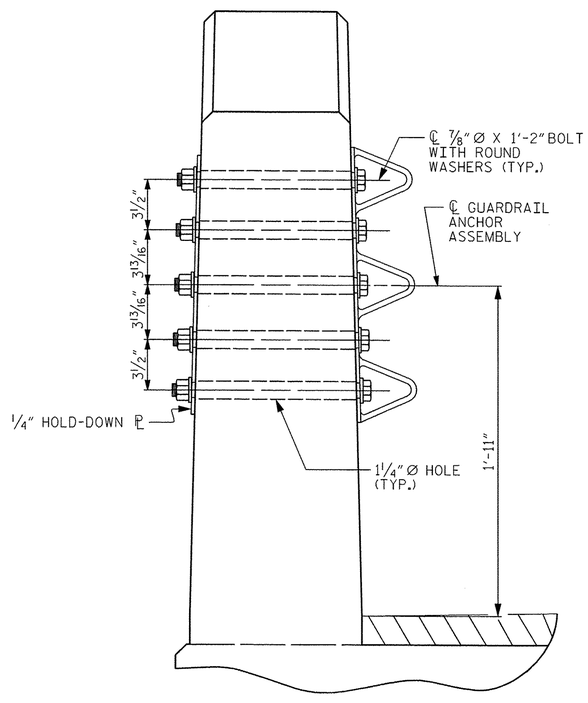

SECTION E-E

GUARDRAIL ANCHOR ASSEMBLY DETAILS

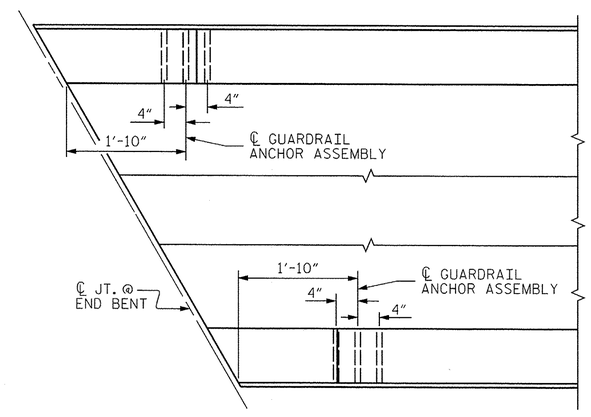

PLAN

LOCATION OF ANCHORS FOR GUARDRAIL

END BENT #1 SHOWN, END BENT #2 SIMILAR.

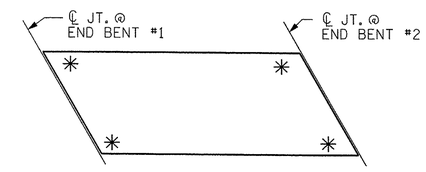

SKETCH SHOWING POINTS OF ATTACHMENT

✳ DENOTES GUARDRAIL ANCHOR ASSEMBLY

PROJECT NO. 17BP.14.R.66

JACKSON COUNTY

STATION: 13+19.60 -L-

ASSEMBLED BY :	DDL	DATE :	6/14
CHECKED BY :	JCM	DATE :	6/14
DRAWN BY : MAA 5/10	REV. 10/1/11	MAA/GM	
CHECKED BY : GM 5/10	REV. 12/5/11	MAA/GM	
	REV. 6/13	MAA/GM	

AECOM
AECOM TECHNICAL SERVICES, INC.
701 CORPORATE CENTER DRIVE, SUITE 475
RALEIGH, NC 27607
(919) 854-6200 www.aecom.com
AECOM License No. F-0342

NORTH CAROLINA PROFESSIONAL SEAL 030474 ENGINEER JOHN C. MORRISON
7/10/14

STATE OF NORTH CAROLINA
DEPARTMENT OF TRANSPORTATION
RALEIGH

STANDARD
GUARDRAIL ANCHORAGE FOR VERTICAL CONCRETE BARRIER RAIL

REVISIONS								SHEET NO.
NO.	BY:	DATE:	NO.	BY:	DATE:			S-16
1			3					TOTAL SHEETS
2			4					

STD. NO. GRA3 (Sht. 3)

USER: lawsyd
DGN: G:\82253817\2400_Tech_Info_Disc_Files\450_NCDOT Std Tech Docs Files\GR6_3\0\Structures\S310_Guardrail.dgn
DATE: 7/10/2014
TIME: 11:32:28 AM

FOR FOAM JOINT SEALS, SEE SPECIAL PROVISIONS.

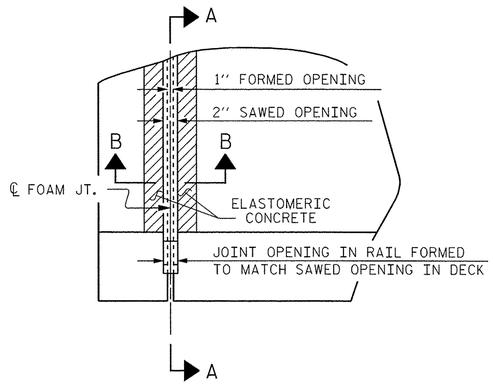

PLAN

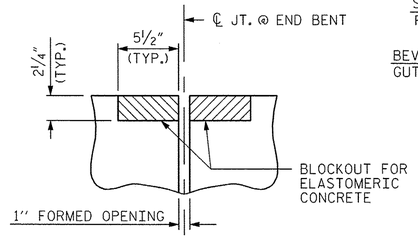

SECTION B-B
FOAM JOINT SEAL
(PRE-SAWED ELASTOMERIC CONCRETE DIMENSIONS)

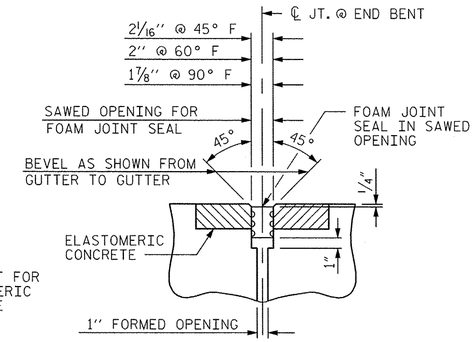

SECTION B-B
FOAM JOINT SEAL
(FOR FOAM JOINT SEAL, SEE SPECIAL PROVISIONS)

TYPICAL FORM JOINT SEAL DETAILS

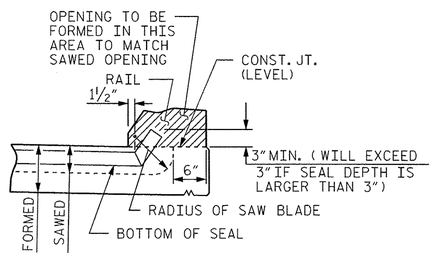

SECTION A-A
FOAM JOINT SEAL TO BE CUT, HEAT WELDED AND TURNED UP PARALLEL TO SLOPED FACE OF THE BARRIER RAIL.

ELASTOMERIC CONCRETE	
END BENT NO.	ELASTOMERIC CONCRETE * (CU. FT.)
1	6.36
2	6.36
TOTAL	12.72

* BASED ON THE MINIMUM BLOCKOUT SHOWN.

PROJECT NO. 17BP.14.R.66

JACKSON COUNTY

STATION: 13+19.60 -L-

AECOM
AECOM TECHNICAL SERVICES, INC.
701 CORPORATE CENTER DRIVE, SUITE 475
RALEIGH, NC 27607
(919) 854-6200 www.aecom.com
AECOM License No. F-0342

NORTH CAROLINA PROFESSIONAL SEAL 030474 ENGINEER JOHN C. MORRISON
7/10/14

STATE OF NORTH CAROLINA
DEPARTMENT OF TRANSPORTATION
RALEIGH

SUPERSTRUCTURE

FOAM JOINT SEAL DETAILS

REVISIONS						SHEET NO.
NO.	BY:	DATE:	NO.	BY:	DATE:	S-17
						TOTAL SHEETS

DRAWN BY : DDL DATE : 6/14
CHECKED BY : JCM DATE : 6/14

DATE: 7/10/2014
TIME: 11:37:41 AM

USER: lpeeples
DGN: G:\60238172\400_Tech_Info_Disc_Files\450_NCDOT\Draft\Sect\DesFiles\BR6_310\Structure\S310_Foam\fDets.dgn

REINFORCING STEEL SCHEDULE

STAGE 2

BAR	NO.	SIZE	TYPE	LENGTH	WEIGHT
A1E	42	#5	STR.	17'-8" ✱	774
A2	42	#5	STR.	17'-4" ✱	759
A3E	26	#5	STR.	15'-4" ✱	416
A4	26	#5	STR.	15'-4" ✱	416
A5E	85	#5	4	7'-5"	658
A101E	1	#5	STR.	17'-7" ✱	18
A102E	1	#5	STR.	17'-1" ✱	18
A103E	1	#5	STR.	16'-7" ✱	17
A104E	1	#5	STR.	16'-1" ✱	17
A105E	1	#5	STR.	15'-7" ✱	16
A106E	1	#5	STR.	15'-1" ✱	16
A107E	1	#5	STR.	14'-7" ✱	15
A108E	1	#5	STR.	14'-1" ✱	15
A109E	1	#5	STR.	13'-7" ✱	14
A110E	1	#5	STR.	13'-1" ✱	14
A111E	1	#5	STR.	12'-7" ✱	13
A112E	1	#5	STR.	12'-1" ✱	13
A113E	1	#5	STR.	11'-7" ✱	12
A114E	1	#5	STR.	11'-1" ✱	12
A115E	1	#5	STR.	10'-7" ✱	11
A116E	1	#5	STR.	7'-9" ✱	8
A117E	1	#5	STR.	7'-3" ✱	8
A118E	1	#5	STR.	6'-9" ✱	7
A119E	1	#5	STR.	6'-3" ✱	7
A120E	1	#5	STR.	5'-9" ✱	6
A121E	1	#5	STR.	5'-3" ✱	5
A122E	1	#5	STR.	4'-9" ✱	5
A123E	1	#5	STR.	4'-3" ✱	4
A124E	1	#5	STR.	3'-9" ✱	4
A125E	1	#5	STR.	3'-3" ✱	3
A126E	1	#5	STR.	2'-9" ✱	3
A127E	1	#5	STR.	2'-3" ✱	2
A128E	1	#5	STR.	1'-9" ✱	2
A129E	1	#5	STR.	1'-3" ✱	1
A130E	1	#5	STR.	14'-11"	16
A131E	1	#5	STR.	14'-5"	15
A132E	1	#5	STR.	13'-11"	15
A133E	1	#5	STR.	13'-5"	14
A134E	1	#5	STR.	12'-11"	13
A135E	1	#5	STR.	12'-5"	13
A136E	1	#5	STR.	11'-11"	12
A137E	1	#5	STR.	11'-5"	12
A138E	1	#5	STR.	10'-11"	11
A139E	1	#5	STR.	10'-5"	11
A140E	1	#5	STR.	9'-11"	10
A141E	1	#5	STR.	9'-5"	10
A142E	1	#5	STR.	8'-11"	9
A143E	1	#5	STR.	8'-5"	9
A144E	1	#5	STR.	7'-11"	8
A145E	1	#5	STR.	7'-5"	8
A146E	1	#5	STR.	6'-11"	7
A147E	1	#5	STR.	6'-5"	7
A148E	1	#5	STR.	5'-11"	6
A149E	1	#5	STR.	5'-5"	6
A150E	1	#5	STR.	4'-11"	5
A151E	1	#5	STR.	4'-5"	5
A152E	1	#5	STR.	3'-11"	4
A153E	1	#5	STR.	3'-5"	4
A154E	6	#5	STR.	3'-0"	19
A155E	3	#5	STR.	6'-0"	19
A201	1	#5	STR.	17'-3" ✱	18
A202	1	#5	STR.	16'-9" ✱	17
A203	1	#5	STR.	16'-3" ✱	17
A204	1	#5	STR.	15'-9" ✱	16

BAR	NO.	SIZE	TYPE	LENGTH	WEIGHT
A205	1	#5	STR.	15'-3" ✱	16
A206	1	#5	STR.	14'-9" ✱	15
A207	1	#5	STR.	14'-3" ✱	15
A208	1	#5	STR.	13'-9" ✱	14
A209	1	#5	STR.	13'-3" ✱	14
A210	1	#5	STR.	12'-9" ✱	13
A211	1	#5	STR.	12'-3" ✱	13
A212	1	#5	STR.	11'-9" ✱	12
A213	1	#5	STR.	11'-3" ✱	12
A214	1	#5	STR.	10'-9" ✱	11
A215	1	#5	STR.	10'-3" ✱	11
A216	1	#5	STR.	7'-9" ✱	8
A217	1	#5	STR.	7'-3" ✱	8
A218	1	#5	STR.	6'-9" ✱	7
A219	1	#5	STR.	6'-3" ✱	7
A220	1	#5	STR.	5'-9" ✱	6
A221	1	#5	STR.	5'-3" ✱	5
A222	1	#5	STR.	4'-9" ✱	5
A223	1	#5	STR.	4'-3" ✱	4
A224	1	#5	STR.	3'-9" ✱	4
A225	1	#5	STR.	3'-3" ✱	3
A226	1	#5	STR.	2'-9" ✱	3
A227	1	#5	STR.	2'-3" ✱	2
A228	1	#5	STR.	1'-9" ✱	2
A229	1	#5	STR.	1'-3" ✱	1
A230	1	#5	STR.	14'-11"	16
A231	1	#5	STR.	14'-5"	15
A232	1	#5	STR.	13'-11"	15
A233	1	#5	STR.	13'-5"	14
A234	1	#5	STR.	12'-11"	13
A235	1	#5	STR.	12'-5"	13
A236	1	#5	STR.	11'-11"	12
A237	1	#5	STR.	11'-5"	12
A238	1	#5	STR.	10'-11"	11
A239	1	#5	STR.	10'-5"	11
A240	1	#5	STR.	9'-11"	10
A241	1	#5	STR.	9'-5"	10
A242	1	#5	STR.	8'-11"	9
A243	1	#5	STR.	8'-5"	9
A244	1	#5	STR.	7'-11"	8
A245	1	#5	STR.	7'-5"	8
A246	1	#5	STR.	6'-11"	7
A247	1	#5	STR.	6'-5"	7
A248	1	#5	STR.	5'-11"	6
A249	1	#5	STR.	5'-5"	6
A250	1	#5	STR.	4'-11"	5
A251	1	#5	STR.	4'-5"	5
A252	1	#5	STR.	3'-11"	4
A253	1	#5	STR.	3'-5"	4
A254	6	#5	STR.	3'-0"	19
B1E	22	#4	STR.	25'-8"	377
B2E	38	#5	STR.	25'-9"	1,021
G1E	1	#5	STR.	18'-2" ✱	19
G2E	1	#5	STR.	21'-8" ✱	23
K1E	4	#8	5	19'-6" ✱	208
K2E	4	#8	1	16'-4"	174
K3E	6	#6	STR.	9'-11"	89
K4E	4	#8	STR.	4'-1" ✱	44
K5E	6	#6	STR.	4'-1" ✱	37
S1E	26	#4	2	4'-3"	74
S2E	26	#5	3	4'-10"	131

REINFORCING STEEL	2,383
EPOXY COATED REINFORCING STEEL	3,928

STAGE 4

BAR	NO.	SIZE	TYPE	LENGTH	WEIGHT
A5E	85	#5	4	7'-5"	658
A6E	73	#5	STR.	12'-9" ✱	971
A7	73	#5	STR.	12'-9" ✱	971
A154E	6	#5	STR.	3'-0"	19
A155E	3	#5	STR.	6'-0"	19
A156E	1	#5	STR.	12'-7" ✱	13
A157E	1	#5	STR.	12'-1" ✱	13
A158E	1	#5	STR.	11'-7" ✱	12
A159E	1	#5	STR.	11'-1" ✱	12
A160E	1	#5	STR.	10'-7" ✱	11
A161E	1	#5	STR.	10'-1" ✱	11
A162E	1	#5	STR.	9'-7" ✱	10
A163E	1	#5	STR.	9'-1" ✱	9
A164E	1	#5	STR.	8'-7" ✱	9
A165E	1	#5	STR.	8'-1" ✱	8
A166E	1	#5	STR.	7'-7" ✱	8
A167E	1	#5	STR.	7'-1" ✱	7
A168E	1	#5	STR.	6'-7" ✱	7
A169E	1	#5	STR.	6'-1" ✱	6
A170E	1	#5	STR.	5'-7" ✱	6
A171E	1	#5	STR.	5'-1" ✱	5
A172E	1	#5	STR.	4'-7" ✱	5
A173E	1	#5	STR.	4'-1" ✱	4
A174E	1	#5	STR.	3'-7" ✱	4
A175E	1	#5	STR.	3'-1" ✱	3
A176E	1	#5	STR.	2'-7" ✱	3
A177E	1	#5	STR.	2'-1" ✱	2
A178E	1	#5	STR.	1'-7" ✱	2
A179E	1	#5	STR.	1'-1" ✱	1
A180E	1	#5	STR.	12'-6"	13
A181E	1	#5	STR.	12'-0"	13
A182E	1	#5	STR.	11'-6"	12
A183E	1	#5	STR.	11'-0"	11
A184E	1	#5	STR.	10'-6"	11
A185E	1	#5	STR.	10'-0"	10
A186E	1	#5	STR.	9'-6"	10
A187E	1	#5	STR.	9'-0"	9
A188E	1	#5	STR.	8'-6"	9
A189E	1	#5	STR.	8'-0"	8
A190E	1	#5	STR.	7'-6"	8
A191E	1	#5	STR.	7'-0"	7
A192E	1	#5	STR.	6'-6"	7
A193E	1	#5	STR.	6'-0"	6
A194E	1	#5	STR.	5'-6"	6
A195E	1	#5	STR.	5'-0"	5
A196E	1	#5	STR.	4'-6"	5
A197E	1	#5	STR.	4'-0"	4
A198E	1	#5	STR.	3'-6"	4
A254	6	#5	STR.	3'-0"	19
A255	1	#5	STR.	12'-7" ✱	13
A256	1	#5	STR.	12'-1" ✱	13
A257	1	#5	STR.	11'-7" ✱	12
A258	1	#5	STR.	11'-1" ✱	12
A259	1	#5	STR.	10'-7" ✱	11
A260	1	#5	STR.	10'-1" ✱	11
A261	1	#5	STR.	9'-7" ✱	10
A262	1	#5	STR.	9'-1" ✱	9
A263	1	#5	STR.	8'-7" ✱	9
A264	1	#5	STR.	8'-1" ✱	8
A265	1	#5	STR.	7'-7" ✱	8
A266	1	#5	STR.	7'-1" ✱	7
A267	1	#5	STR.	6'-7" ✱	7
A268	1	#5	STR.	6'-1" ✱	6
A269	1	#5	STR.	5'-7" ✱	6

BAR	NO.	SIZE	TYPE	LENGTH	WEIGHT
A270	1	#5	STR.	5'-1" ✱	5
A271	1	#5	STR.	4'-7" ✱	5
A272	1	#5	STR.	4'-1" ✱	4
A273	1	#5	STR.	3'-7" ✱	4
A274	1	#5	STR.	3'-1" ✱	3
A275	1	#5	STR.	2'-7" ✱	3
A276	1	#5	STR.	2'-1" ✱	2
A277	1	#5	STR.	1'-7" ✱	2
A278	1	#5	STR.	1'-1" ✱	1
A279	1	#5	STR.	12'-6" ✱	13
A280	1	#5	STR.	12'-0"	13
A281	1	#5	STR.	11'-6"	12
A282	1	#5	STR.	11'-0"	11
A283	1	#5	STR.	10'-6"	11
A284	1	#5	STR.	10'-0"	10
A285	1	#5	STR.	9'-6"	10
A286	1	#5	STR.	9'-0"	9
A287	1	#5	STR.	8'-6"	9
A288	1	#5	STR.	8'-0"	8
A289	1	#5	STR.	7'-6"	8
A290	1	#5	STR.	7'-0"	7
A291	1	#5	STR.	6'-6"	7
A292	1	#5	STR.	6'-0"	6
A293	1	#5	STR.	5'-6"	6
A294	1	#5	STR.	5'-0"	5
A295	1	#5	STR.	4'-6"	5
A296	1	#5	STR.	4'-0"	4
A297	1	#5	STR.	3'-6"	4
B1E	18	#4	STR.	25'-9"	310
B2E	32	#5	STR.	26'-0"	868
G1E	1	#5	STR.	18'-2" ✱	19
G2E	1	#5	STR.	21'-8" ✱	23
K6E	4	#8	5	15'-10" ✱	169
K7E	4	#8	STR.	3'-2" ✱	34
K8E	6	#6	STR.	3'-2" ✱	29
K9E	4	#8	6	13'-8"	146
K10E	6	#8	STR.	7'-2"	115
S1E	20	#4	2	4'-3"	57
S2E	20	#5	3	4'-10"	101

REINFORCING STEEL	2,615
EPOXY COATED REINFORCING STEEL	2,564

✱ MECHANICAL COUPLERS ARE REQUIRED. ADJUST BAR LENGTHS AS NECESSARY FOR THE APPROVED SPLICE MECHANISM USED. FOR MECHANICAL SPLICES SEE SECTION 425-5(B) OF THE STANDARD SPECIFICATIONS.

"E" DENOTES EPOXY COATED REINFORCING STEEL.

"E" DENOTES EPOXY COATED REINFORCING STEEL.

BAR TYPES

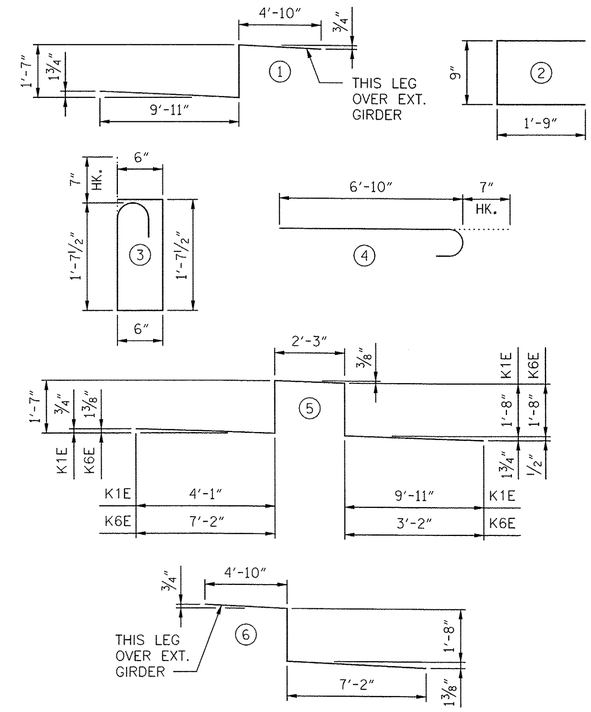

ALL BAR DIMENSIONS ARE OUT TO OUT

SUPERSTRUCTURE BILL OF MATERIAL

SPAN	CLASS AA CONCRETE	REINFORCING STEEL	EPOXY COATED REINFORCING STEEL
	(CU. YDS.)	(LBS.)	(LBS.)
"A" - STAGE 2		2,383	3,928
"A" - STAGE 4		2,615	2,564
POUR 1 - STAGE 2	29.0		
POUR 2 - STAGE 4	25.5		
✱✱TOTALS	54.5	4,998	6,492

✱✱QUANTITIES FOR BARRIER RAIL ARE INCLUDED ON "VERTICAL CONCRETE BARRIER RAIL" SHEET.

QUANTITIES FOR APPROACH SLABS ARE INCLUDED ON "BRIDGE APPROACH SLAB FOR FLEXIBLE PAVEMENT" SHEET.

PROJECT NO. 17BP.14.R.66

JACKSON **COUNTY**

STATION: 13+19.60 -L-

SHEET 1 OF 2

AECOM
AECOM TECHNICAL SERVICES, INC.
701 CORPORATE CENTER DRIVE, SUITE 475
RALEIGH, NC 27607
(919) 854-6200 www.aecom.com
AECOM License No. F-0342

NORTH CAROLINA PROFESSIONAL SEAL 030474 ENGINEER JOHN C. MORRISON
7/10/14

STATE OF NORTH CAROLINA
DEPARTMENT OF TRANSPORTATION
RALEIGH

SUPERSTRUCTURE
BILL OF MATERIAL

REVISIONS						SHEET NO.
NO.	BY:	DATE:	NO.	BY:	DATE:	S-18
						TOTAL SHEETS

DRAWN BY : DDL DATE : 6/14
CHECKED BY : JCM DATE : 6/14

DATE: 7/10/2014
TIME: 11:48:50 AM
USER: bwood
DGN: C:\SE\23872\400_Tech_Info_Disc_Files\450_NCDOT Staff Inst\BeFiles\BR6_310\Structure\8310_SuperBOM-1_2.dgn

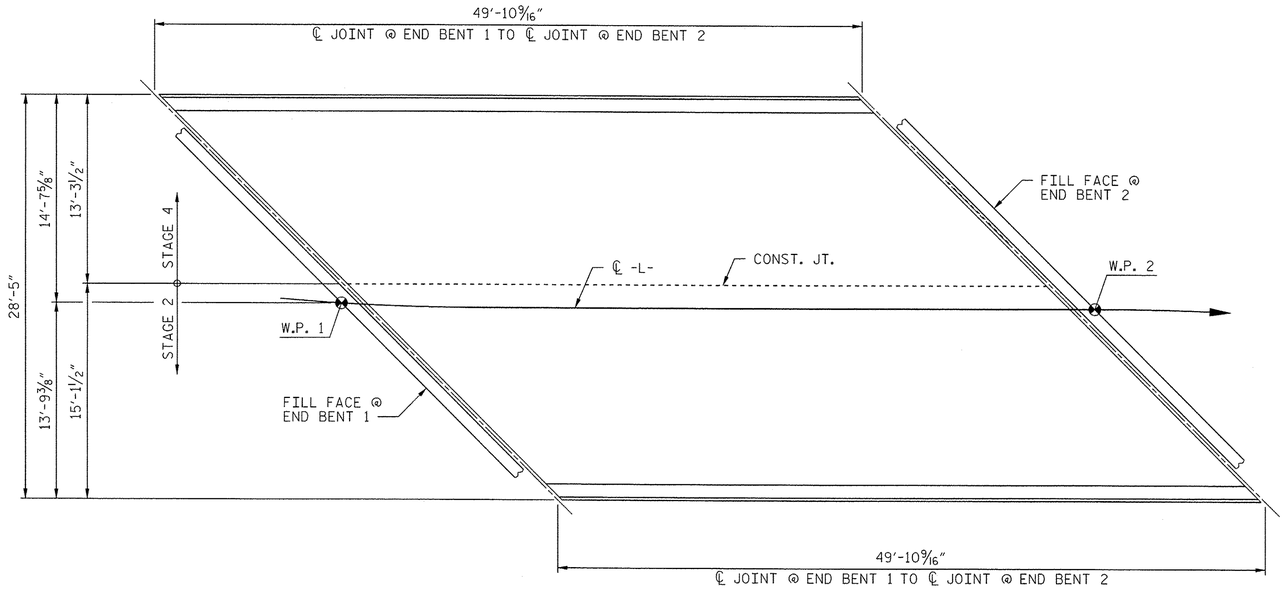

LAYOUT FOR COMPUTING AREA
OF REINFORCED CONCRETE DECK SLAB
(STAGE 2 - SQ. FEET = 754.4)
(STAGE 4 - SQ. FEET = 663.0)

SUPERSTRUCTURE REINFORCING STEEL LENGTHS ARE BASED ON THE FOLLOWING MINIMUM SPLICE LENGTHS, EXCEPT AT MECHANICAL SPLICES					
BAR SIZE	SUPERSTRUCTURE EXCEPT APPROACH SLABS, PARAPET AND BARRIER RAIL		APPROACH SLABS		PARAPET AND BARRIER RAIL
	EPOXY COATED	UNCOATED	EPOXY COATED	UNCOATED	
#4	2'-0"	1'-9"	2'-0"	1'-9"	2'-9"
#5	2'-6"	2'-2"	2'-6"	2'-2"	3'-5"
#6	3'-0"	2'-7"	3'-10"	2'-7"	4'-4"
#7	5'-3"	3'-6"			
#8	6'-10"	4'-7"			

GROOVING BRIDGE FLOORS	
APPROACH SLABS	717 SQ.FT.
BRIDGE DECK	1191 SQ.FT.
TOTAL	1908 SQ.FT.

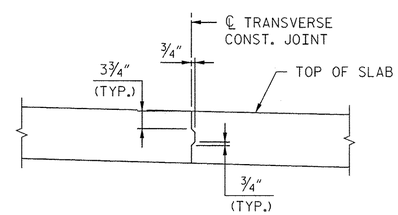

TRANSVERSE CONSTRUCTION JOINT DETAIL

(REINFORCING STEEL IN SLAB NOT SHOWN)

PROJECT NO. 17BP.14.R.66

JACKSON COUNTY

STATION: 13+19.60 -L-

SHEET 2 OF 2

AECOM

AECOM TECHNICAL SERVICES, INC.
701 CORPORATE CENTER DRIVE, SUITE 475
RALEIGH, NC 27607
(919) 854-6200 www.aecom.com
AECOM License No. F-0342

NORTH CAROLINA PROFESSIONAL SEAL 030474 ENGINEER JOHN C. MORRISON
7/10/14

STATE OF NORTH CAROLINA
DEPARTMENT OF TRANSPORTATION
RALEIGH

SUPERSTRUCTURE

BILL OF MATERIAL
DETAILS

REVISIONS						SHEET NO.
NO.	BY:	DATE:	NO.	BY:	DATE:	S-19
						TOTAL SHEETS

DRAWN BY : DDL DATE : 6/14
CHECKED BY : JCM DATE : 6/14

DATE: 7/10/2014
TIME: 11:56:20 AM

USER: lowerjxl
DGN: G:\60023877\v100_Tech_Info_Dist_Files\450_NC\DOT Std Tech Dist Files\BRG_310\Structures\B310_SuperBOM-2_2.dgn

NOTES:

SEE SHEET 3 OF 3 FOR NOTES.

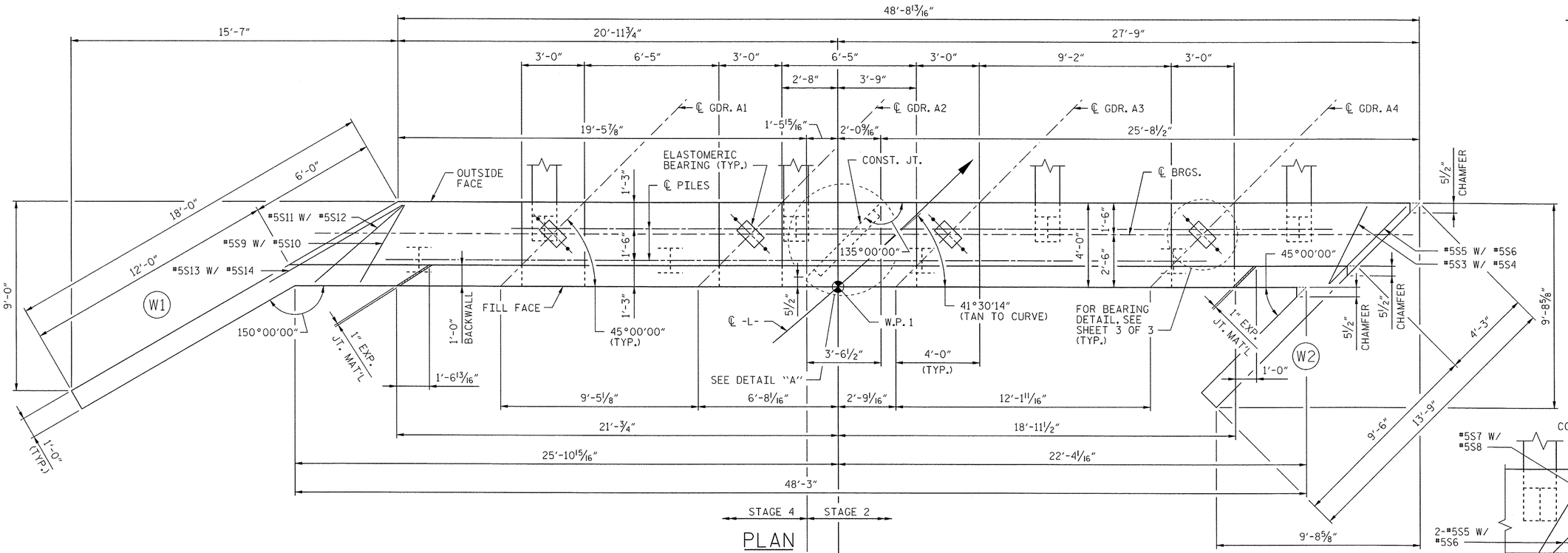

PLAN

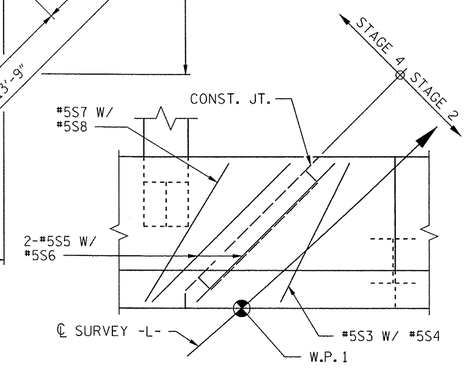

DETAIL "A"

STIRRUPS SKEWED AND SPLAYED @ JOINT

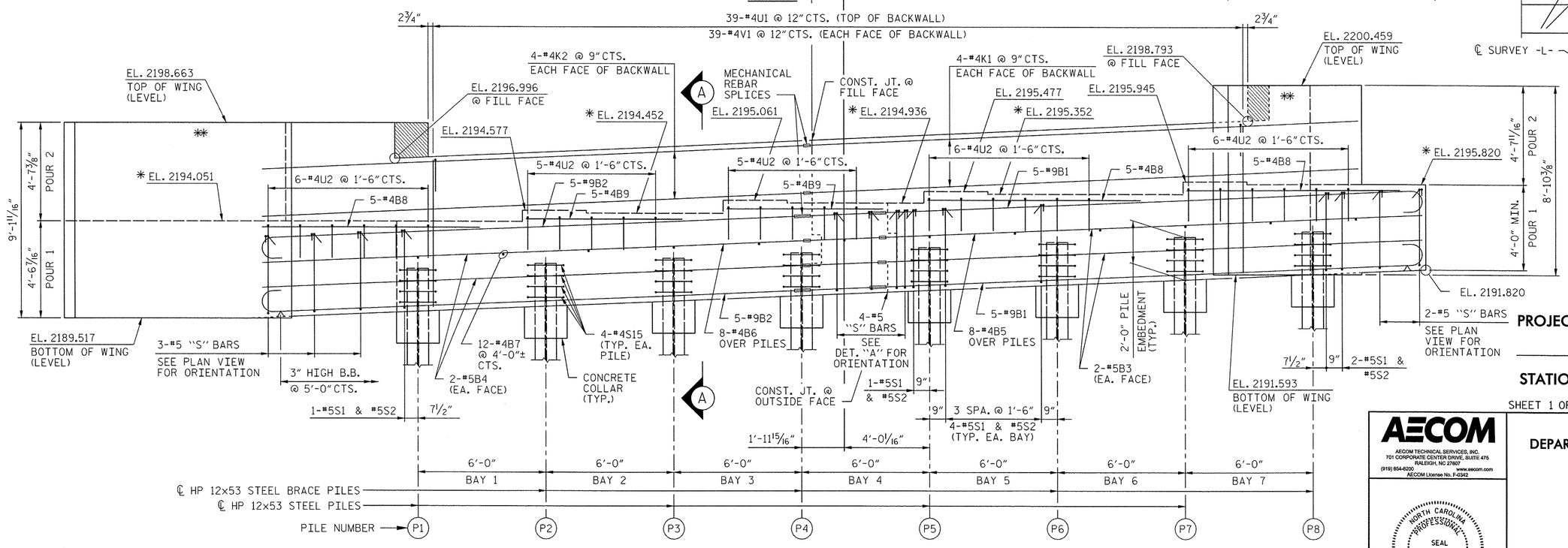

ELEVATION

* SEE SECTION "A'A"

** REINFORCING IN WING WALL NOT SHOWN FOR CLARITY, SEE END BENT DETAILS.

PROJECT NO. 17BP.14.R.66

JACKSON COUNTY

STATION: 13+19.60 -L-

SHEET 1 OF 3

AECOM

AECOM TECHNICAL SERVICES, INC.
701 CORPORATE CENTER DRIVE, SUITE 475
RALEIGH, NC 27607
(919) 854-6200 www.aecom.com
AECOM License No. F-0342

NORTH CAROLINA PROFESSIONAL SEAL 030474 ENGINEER JOHN C. MORRISON
7/10/14

STATE OF NORTH CAROLINA
DEPARTMENT OF TRANSPORTATION
RALEIGH

SUBSTRUCTURE

END BENT 1
PLAN AND ELEVATION

REVISIONS						SHEET NO.
NO.	BY:	DATE:	NO.	BY:	DATE:	S-20
						TOTAL SHEETS

DRAWN BY : DDL DATE : 6/14
CHECKED BY : JCM DATE : 6/14

DATE: 7/10/2014
TIME: 11:11:18 AM

USER: lwaqyd
DGN: G:\6023872\2400_Tech_Info_Disc_Files\450_NCDOT StdTechDocFiles\BR6_30\Structure\B30_EndBent-1_Ldgn

NOTES:

SEE SHEET 3 OF 3 FOR NOTES.

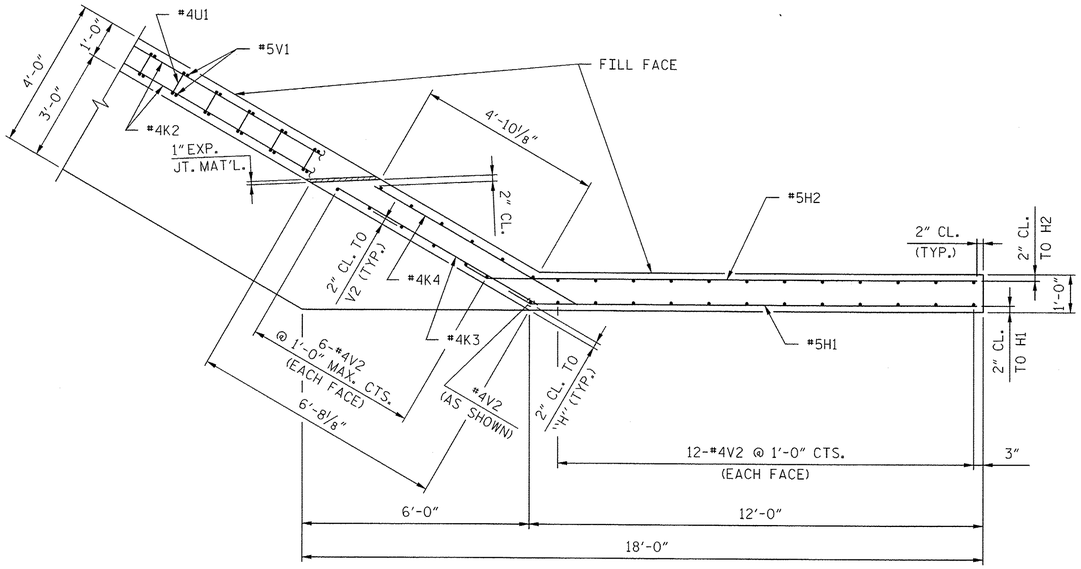

PLAN - WINGWALL 1

(STAGE 4)

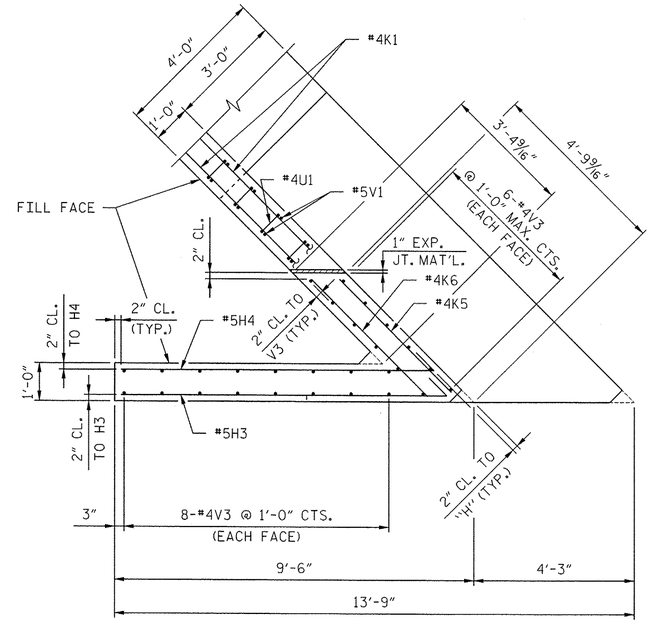

PLAN - WINGWALL 2

(STAGE 2)

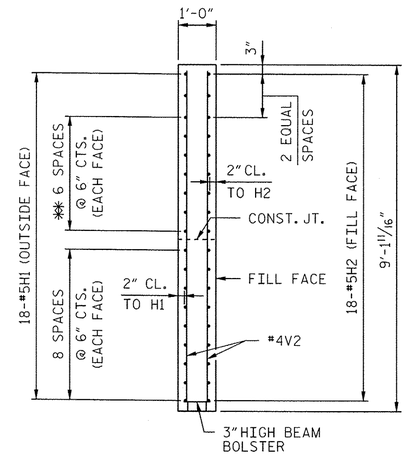

SECTION "B-B"

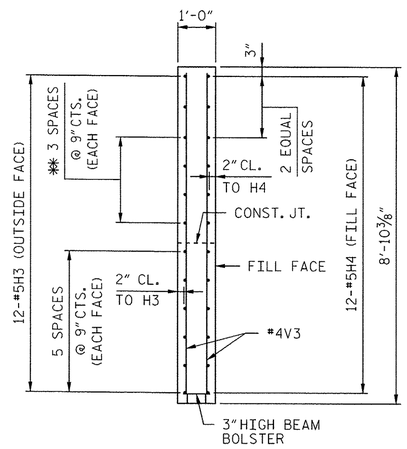

SECTION "C-C"

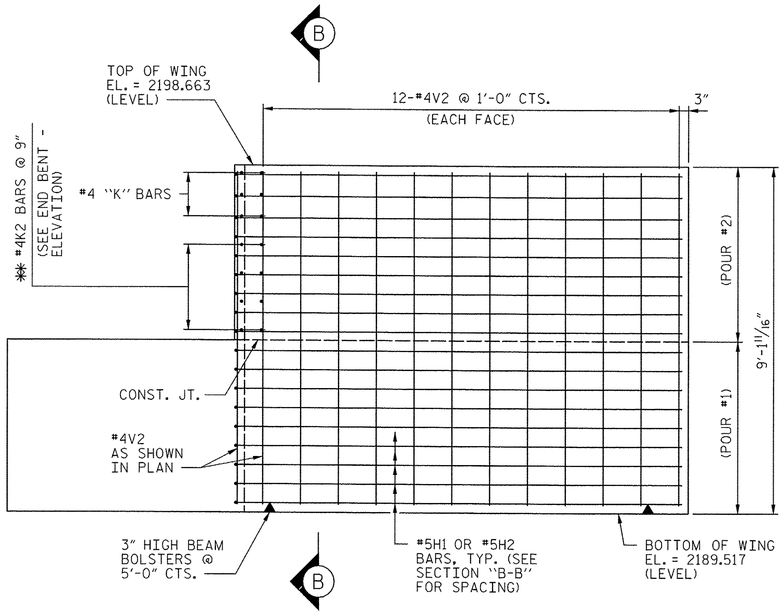

ELEVATION - WINGWALL 1

✱✱ #5 'H' BARS WILL NOT MATCH #4K2 BARS IN BACKWALL

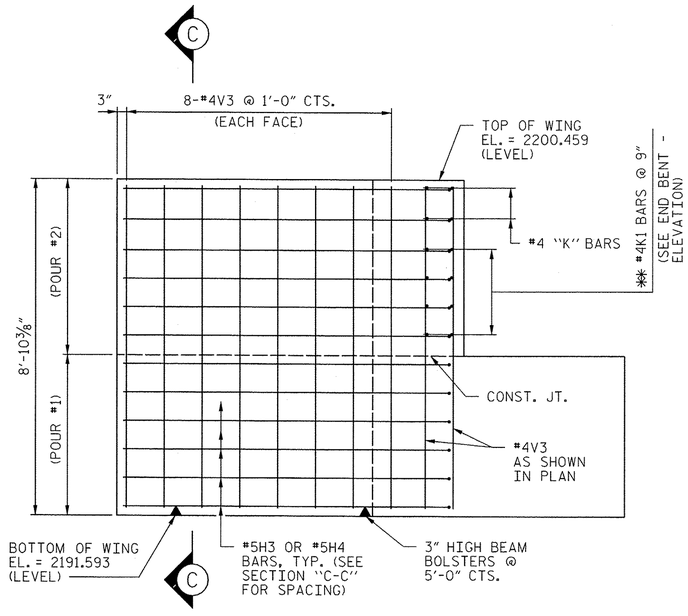

ELEVATION - WINGWALL 2

✱✱ PLACE #5 'H' BARS TO MATCH #4K1 BARS IN BACKWALL

PROJECT NO. 17BP.14.R.66

JACKSON COUNTY

STATION: 13+19.60 -L-

SHEET 2 OF 3

AECOM

AECOM TECHNICAL SERVICES, INC.
701 CORPORATE CENTER DRIVE, SUITE 475
RALEIGH, NC 27607
(919) 854-6200
www.aecom.com
AECOM License No. F-0342

NORTH CAROLINA PROFESSIONAL SEAL 030474 ENGINEER JOHN C. MORRISON
7/10/14

STATE OF NORTH CAROLINA
DEPARTMENT OF TRANSPORTATION
RALEIGH

SUBSTRUCTURE

END BENT 1
WING WALL DETAILS

REVISIONS						SHEET NO.
NO.	BY:	DATE:	NO.	BY:	DATE:	S-21
						TOTAL SHEETS

DRAWN BY : DDL DATE : 6/14
CHECKED BY : JCM DATE : 6/14

DATE: 7/10/2014
TIME: 11:52:12 AM

USER: lowens
DGN: q:\60202387\72\400_Tech_Info_Disc_Files\450_NCDOT Stuff not Deaf Files\BRG_310\Structures\B310_EndBent-1_2.dgn

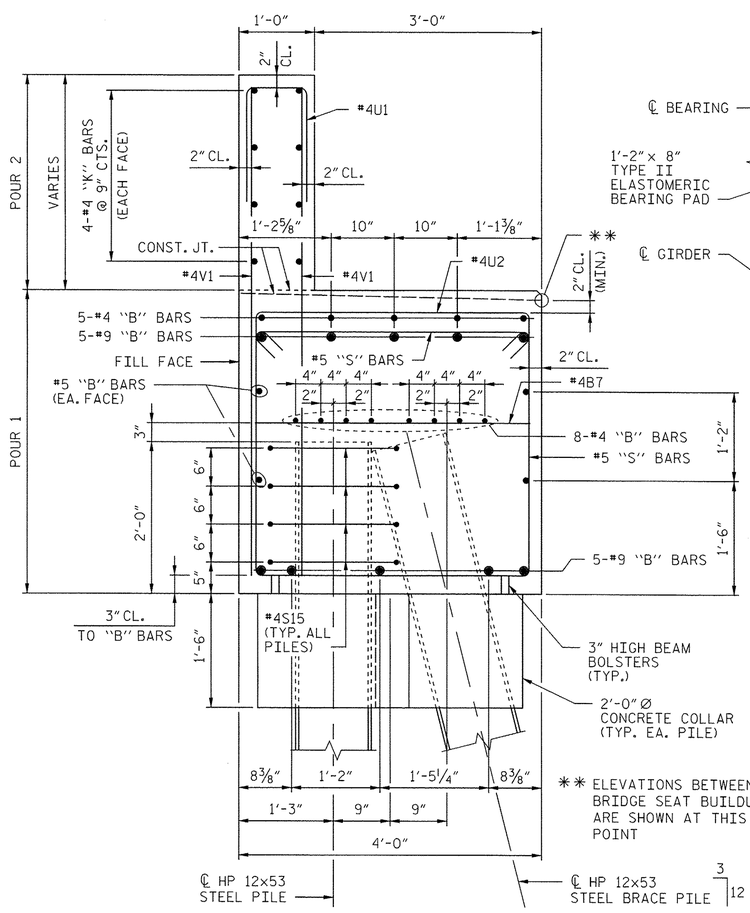

SECTION "A-A"

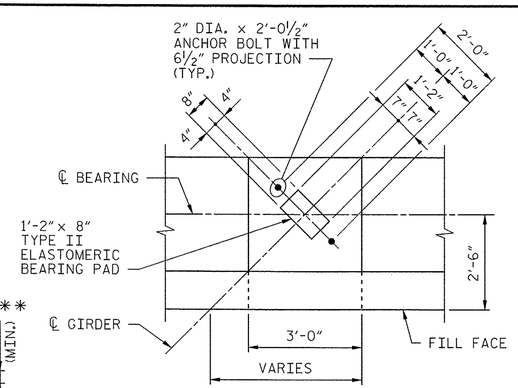

BEARING DETAIL

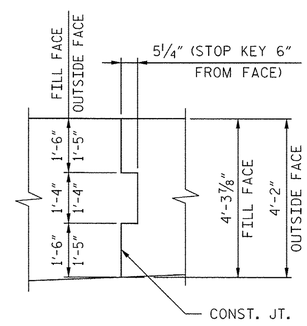

CONST. JT. DETAIL

BAR TYPES

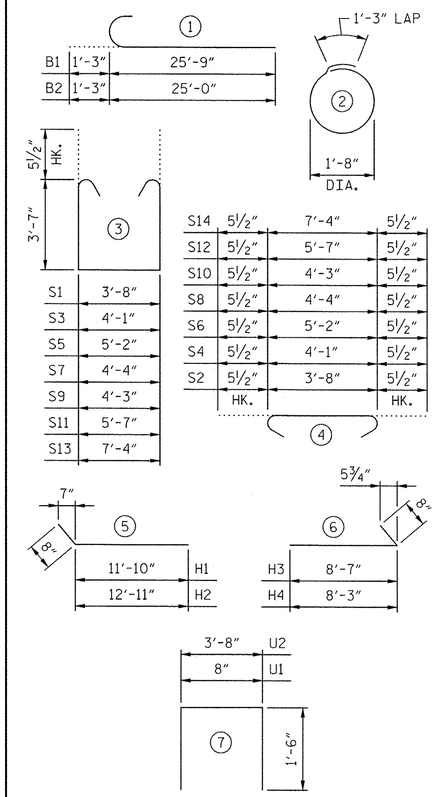

ALL BAR DIMENSIONS ARE OUT TO OUT.

BILL OF MATERIAL

END BENT 1

STAGE 2						STAGE 4					
BAR	NO.	SIZE	TYPE	LENGTH	WEIGHT	BAR	NO.	SIZE	TYPE	LENGTH	WEIGHT
B1	10	#9	1	27'-0"	918	* B2	10	#9	1	26'-3"	893
B3	4	#5	STR.	25'-10"	108	* B4	4	#5	STR.	25'-0"	104
B5	8	#4	STR.	25'-10"	138	* B6	8	#4	STR.	25'-0"	134
B7	6	#4	STR.	3'-8"	15	B7	6	#4	STR.	3'-8"	15
B8	10	#4	STR.	10'-0"	67	B8	5	#4	STR.	10'-0"	33
						* B9	10	#4	STR.	7'-4"	49
H1	18	#5	5	12'-6"	235						
H2	18	#5	5	13'-7"	255	H3	12	#5	6	9'-3"	116
						H4	12	#5	6	8'-11"	112
K1	8	#4	STR.	25'-5"	136						
K5	2	#4	STR.	4'-2"	6	K2	8	#4	STR.	25'-11"	138
K6	2	#4	STR.	4'-4"	6	K3	3	#4	STR.	6'-2"	12
						K4	3	#4	STR.	6'-3"	12
S1	15	#5	3	11'-9"	184						
S2	15	#5	4	4'-7"	72	S1	13	#5	3	11'-9"	159
S3	2	#5	3	12'-2"	25	S2	13	#5	4	4'-7"	62
S4	2	#5	4	5'-0"	10	S5	1	#5	3	13'-3"	14
S5	2	#5	3	13'-3"	28	S6	1	#5	4	6'-1"	6
S6	2	#5	4	6'-1"	13	S7	1	#5	3	12'-5"	13
S15	16	#4	2	2'-11"	31	S8	1	#5	4	5'-3"	5
						S9	1	#5	3	12'-4"	13
U1	21	#4	7	3'-8"	51	S10	1	#5	4	5'-2"	5
U2	14	#4	7	6'-8"	62	S11	1	#5	3	13'-8"	14
						S12	1	#5	4	6'-6"	7
V1	42	#4	STR.	6'-9"	189	S13	1	#5	3	15'-5"	16
V3	28	#4	STR.	8'-5"	157	S14	1	#5	4	8'-3"	9
						S15	16	#4	2	2'-11"	31
						U1	18	#4	7	3'-8"	44
						U2	14	#4	7	6'-8"	62
						V1	36	#4	STR.	6'-9"	162
						V2	37	#4	STR.	8'-8"	214
TOTAL REINFORCING STEEL				LBS.	2706	TOTAL REINFORCING STEEL				LBS.	2454

END BENT 1 TOTAL QUANTITIES - STAGE 2			END BENT 1 TOTAL QUANTITIES - STAGE 4		
CLASS A CONCRETE			CLASS A CONCRETE		
POUR #1 (CAP & LOWER WING)	C.Y.	19.4	POUR #1 (CAP & LOWER WING)	C.Y.	18.4
POUR #2 (BACKWALL & UPPER WING)	C.Y.	4.7	POUR #2 (BACKWALL & UPPER WING)	C.Y.	5.1
TOTAL	C.Y.	24.1	TOTAL	C.Y.	23.5
HP 12x53 STEEL PILES	NO.	4	HP 12x53 STEEL PILES	NO.	4
	LIN. FT.	140		LIN. FT.	140
STEEL PILE POINTS	NO.	4	STEEL PILE POINTS	NO.	4

* #9B2 BARS WILL REQUIRE FIELD CUTTING TO FIT.
* #4B9 BARS BELOW SEAT 2 WILL REQUIRE FIELD CUTTING TO FIT.
* #5B4 AND #5B6 BARS WILL REQUIRE FIELD CUTTING TO FIT.

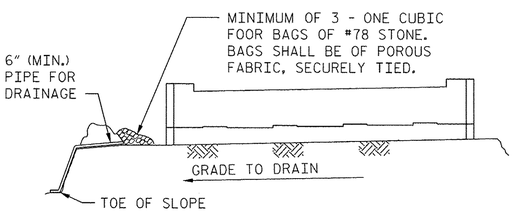

BAGGED STONE AND PIPE SHALL BE PLACED IMMEDIATELY AFTER COMPLETION OF END BENT EXCAVATION. PIPE MAY BE EITHER CONCRETE, CORRUGATED STEEL, CORRUGATED ALUMINUM ALLOY, OR CORRUGATED PLASTIC. PERFORATED PIPE WILL NOT BE ALLOWED.

BAGGED STONE SHALL REMAIN IN PLACE UNTIL THE ENGINEER DIRECTS THAT IT BE REMOVED. THE CONTRACTOR SHALL REMOVE AND DISPOSE OF SILT ACCUMULATIONS AT BAGGED STONE WHEN SO DIRECTED BY THE ENGINEER. BAGS SHALL BE REMOVED AND REPLACED WHENEVER THE ENGINEER DETERMINES THAT THEY HAVE DETERIORATED AND LOST THEIR EFFECTIVENESS.

NO SEPARATE PAYMENT WILL BE MADE FOR THIS WORK AND THE ENTIRE COST OF THIS WORK SHALL BE INCLUDED IN THE UNIT CONTRACT PRICE FOR THE SEVERAL PAY ITEMS.

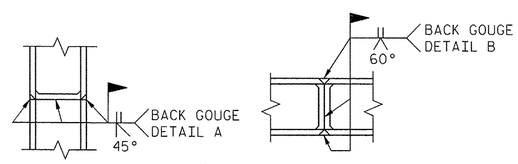

▲ PILE VERTICAL ▲ PILE HORIZONTAL OR VERTICAL

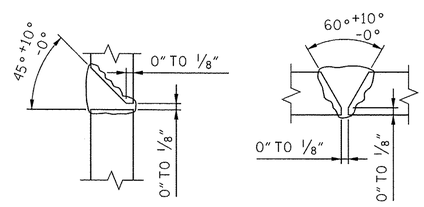

DETAIL A DETAIL B

▲ POSITION OF PILE DURING WELDING.

PILE SPLICE DETAILS

NOTES:

STIRRUPS IN CAP MAY BE SHIFTED AS NECESSARY TO CLEAR ANCHOR BOLTS.

FOR EPOXY PROTECTIVE COATING, SEE SPECIAL PROVISIONS.

BACKWALL SHALL BE PLACED BEFORE APPLYING THE EPOXY PROTECTIVE COATING.

THE TOP SURFACE AREAS OF THE END BENT CAP SHALL BE CURED IN ACCORDANCE WITH THE STANDARD SPECIFICATIONS EXCEPT THAT THE MEMBRANE CURING COMPOUND METHOD SHALL NOT BE USED.

THE TOP SURFACE OF THE CAP EXCEPT THE BRIDGE SEAT BUILDUPS SHALL BE SLOPED TRANSVERSELY FROM THE FILL FACE TO THE FRONT FACE AT THE RATE OF 2%.

FOR OTHER NOTES, SEE "FOUNDATION LAYOUT SHEET AND LONG CHORD LAYOUT" SHEET.

INSTALL THE 4" DIA. DRAIN PIPE THROUGH THE WING WALL AS REQUIRED FOR REINFORCED BRIDGE APPROACH FILLS, SEE THE ROADWAY PLANS. REINFORCING STEEL IN THE WING WALL MAY BE SHIFTED AS NECESSARY TO CLEAR THE DRAIN PIPE.

PROJECT NO. 17BP.14.R.66
JACKSON COUNTY
STATION: 13+19.60 -L-

SHEET 3 OF 3

AECOM
AECOM TECHNICAL SERVICES, INC.
701 CORPORATE CENTER DRIVE, SUITE 475
RALEIGH, NC 27607
(919) 854-6200 www.aecom.com
AECOM License No. F-0342

NORTH CAROLINA PROFESSIONAL SEAL 030474 ENGINEER JOHN C. MORRISON
7/10/14

STATE OF NORTH CAROLINA
DEPARTMENT OF TRANSPORTATION
RALEIGH

SUBSTRUCTURE
END BENT 1
SECTIONS AND DETAILS

REVISIONS						SHEET NO.
NO.	BY:	DATE:	NO.	BY:	DATE:	S-22
						TOTAL SHEETS

DRAWN BY : DDL DATE : 6/14
CHECKED BY : JCM DATE : 6/14

DATE: 7/10/2014
TIME: 11:35:25 AM

USER: twarren
DGN: C:\SE\23872\400_Tech_Info_Disc_Files\450_NCDOT Staff Use\BeamFiles\BR5_310\Structure\B310_EndBent-1_3.dgn

NOTES:

SEE SHEET 3 OF 3 FOR NOTES.

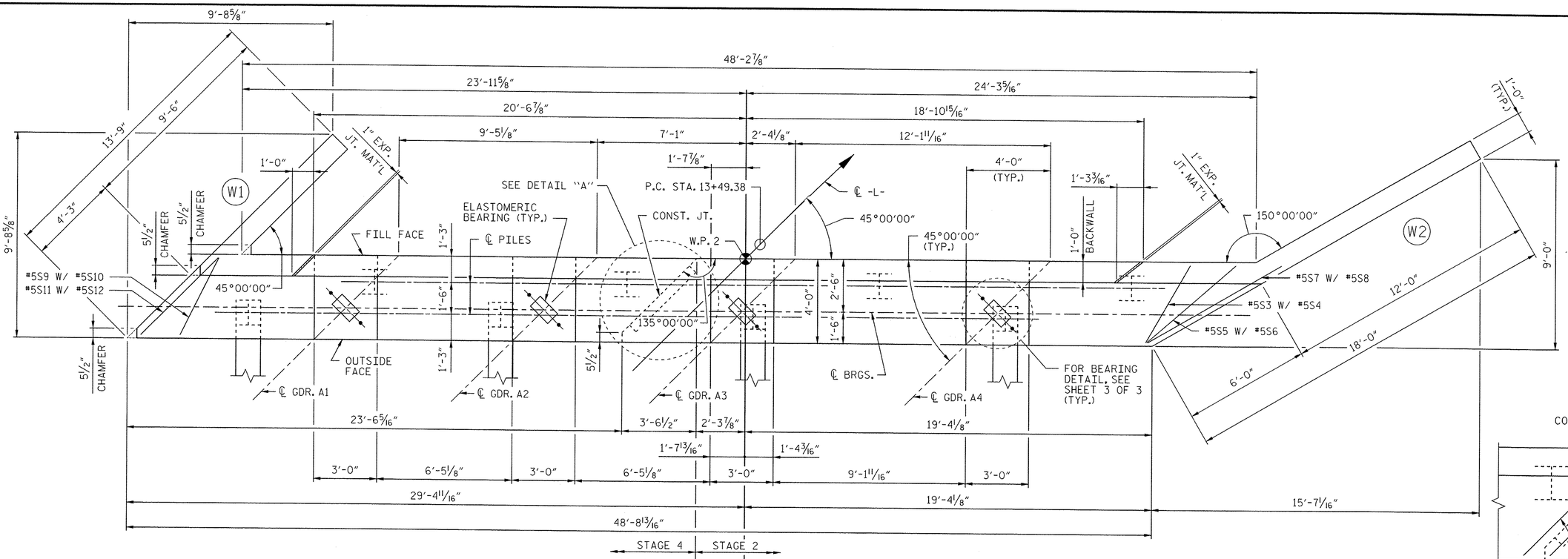

PLAN

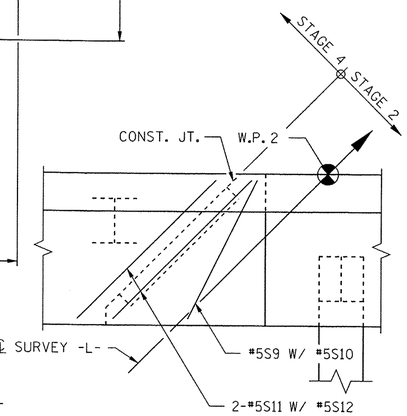

DETAIL "A"

STIRRUPS SKEWED AND SPLAYED @ JOINT

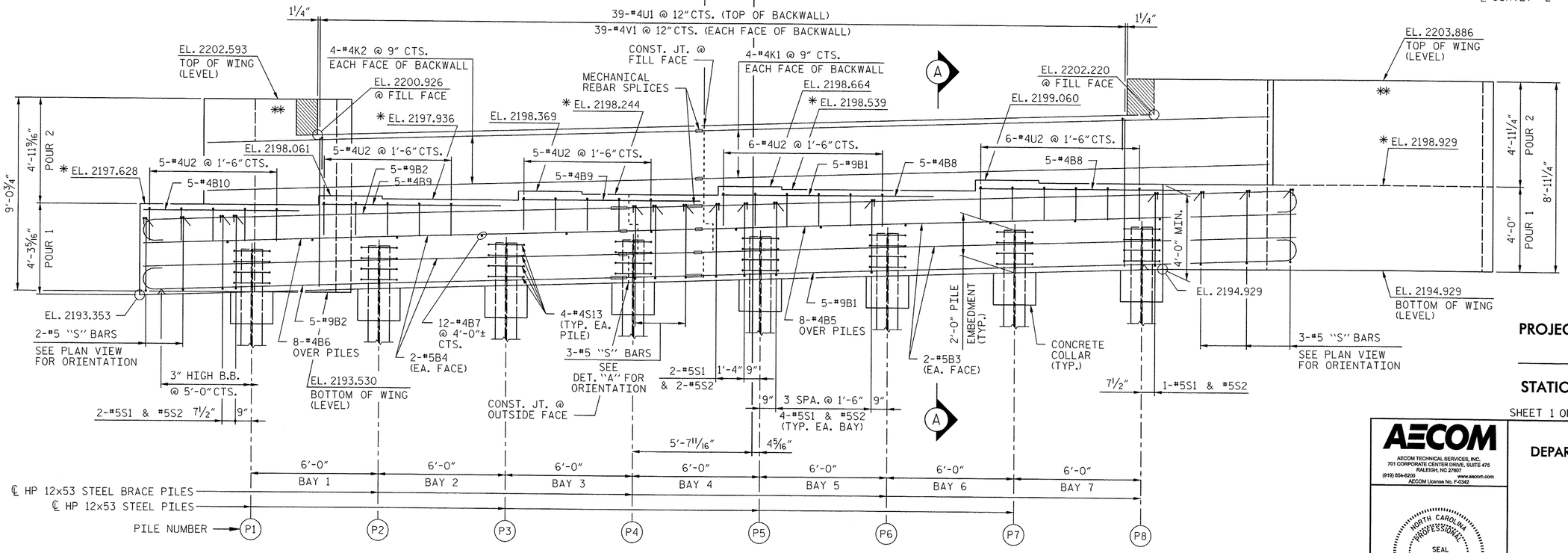

ELEVATION

* SEE SECTION "A'A"

** REINFORCING IN WING WALL NOT SHOWN FOR CLARITY, SEE END BENT DETAILS.

PROJECT NO. 17BP.14.R.66

JACKSON **COUNTY**

STATION: 13+19.60 -L-

SHEET 1 OF 3

AECOM

AECOM TECHNICAL SERVICES, INC.
701 CORPORATE CENTER DRIVE, SUITE 475
RALEIGH, NC 27607
(919) 854-6200 www.aecom.com
AECOM License No. F-0342

NORTH CAROLINA PROFESSIONAL SEAL 030474 ENGINEER JOHN C. MORRISON
John C. Morrison
7/10/14

STATE OF NORTH CAROLINA
DEPARTMENT OF TRANSPORTATION
RALEIGH

SUBSTRUCTURE

END BENT 2
PLAN AND ELEVATION

REVISIONS						SHEET NO.
NO.	BY:	DATE:	NO.	BY:	DATE:	S-23
						TOTAL SHEETS

DRAWN BY : DDL DATE : 6/14
CHECKED BY : JCM DATE : 6/14

DATE: 7/10/2014
TIME: 11:52:24 AM

USER: lowerjd
DGN: C:\SDE2\3877\2\400_Tech_Info_Disc_Files\450_NC001Skd\Tech\Bef\Files\BRG_310\Structures\B310_EndBent-2.dgn

NOTES:

SEE SHEET 3 OF 3 FOR NOTES.

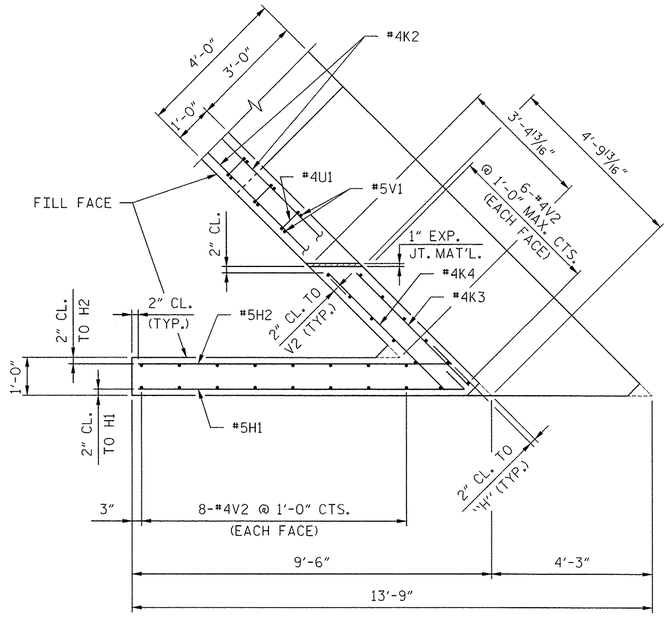

PLAN - WINGWALL 1

(STAGE 4)

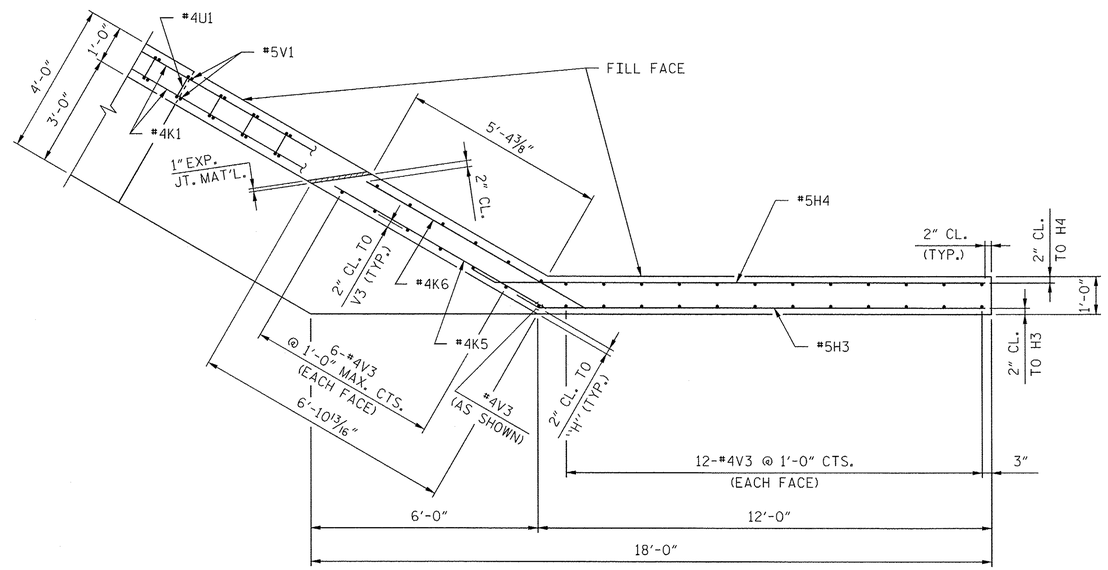

PLAN - WINGWALL 2

(STAGE 2)

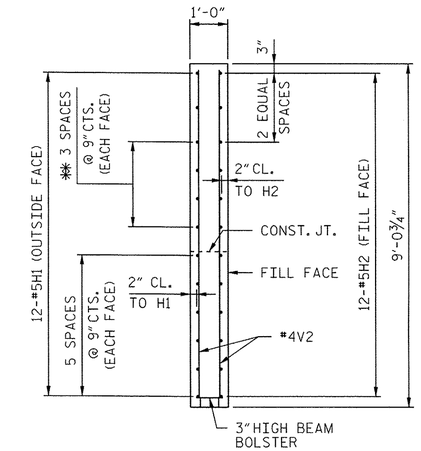

SECTION "B-B"

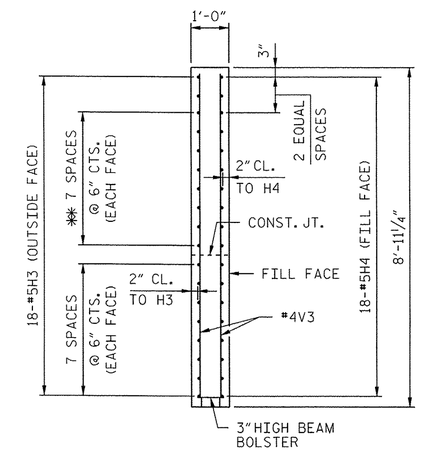

SECTION "C-C"

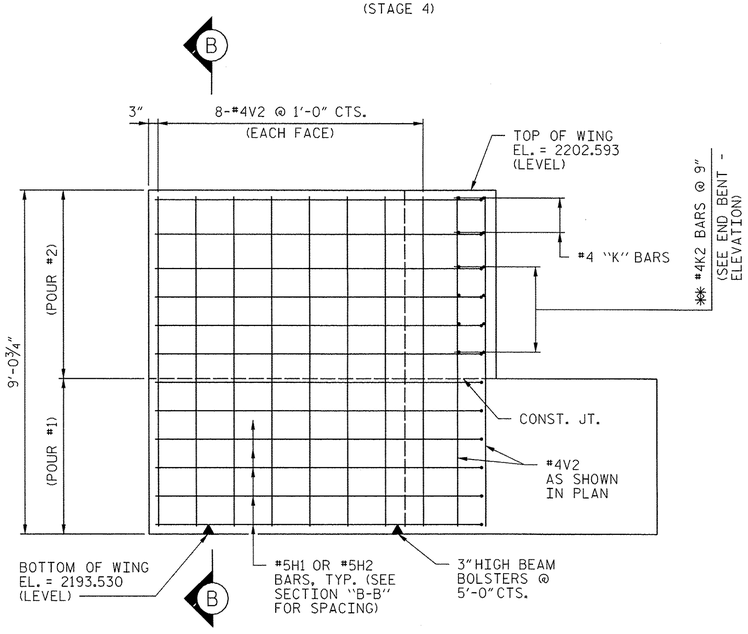

ELEVATION - WINGWALL 1

✱✱ PLACE #5 'H' BARS TO MATCH #4K2 BARS IN BACKWALL

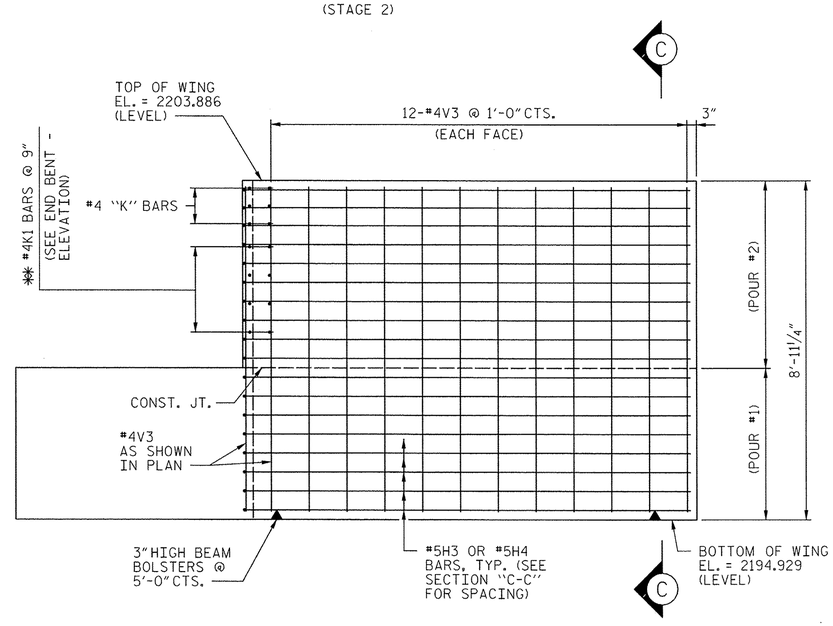

ELEVATION - WINGWALL 2

✱✱ #5 'H' BARS WILL NOT MATCH #4K1 BARS IN BACKWALL

PROJECT NO. 17BP.14.R.66

JACKSON COUNTY

STATION: 13+19.60 -L-

SHEET 2 OF 3

AECOM

AECOM TECHNICAL SERVICES, INC.
701 CORPORATE CENTER DRIVE, SUITE 475
RALEIGH, NC 27607
(919) 854-6200 www.aecom.com
AECOM License No. F-0342

NORTH CAROLINA PROFESSIONAL SEAL 030474 ENGINEER JOHN C. MORRISON 7/10/14

STATE OF NORTH CAROLINA
DEPARTMENT OF TRANSPORTATION
RALEIGH

SUBSTRUCTURE

END BENT 2
WING WALL DETAILS

REVISIONS						SHEET NO.
NO.	BY:	DATE:	NO.	BY:	DATE:	S-24
						TOTAL SHEETS

DRAWN BY : DDL DATE : 6/14
CHECKED BY : JCM DATE : 6/14

DATE: 7/10/2014
TIME: 11:24:58 AM

USER: lawerp4
DGN: G:\60238712\400_Tech_Info_Misc_Files\450_NCDOT Std Text\Dsd Files\BR6_310\Structure\S310_EndBent-2_2.dgn

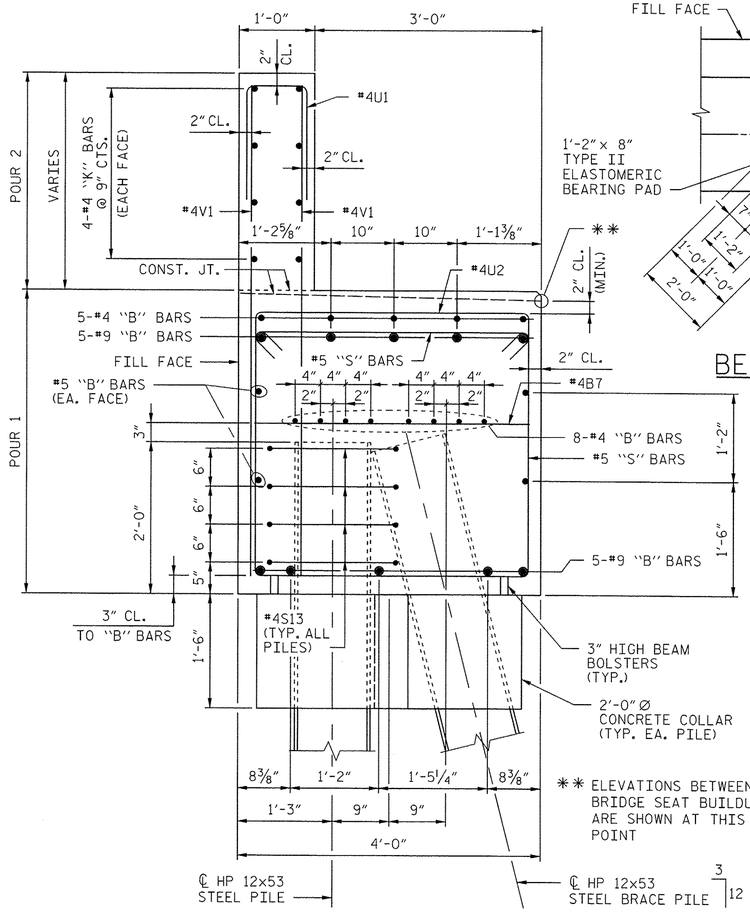

SECTION "A-A"

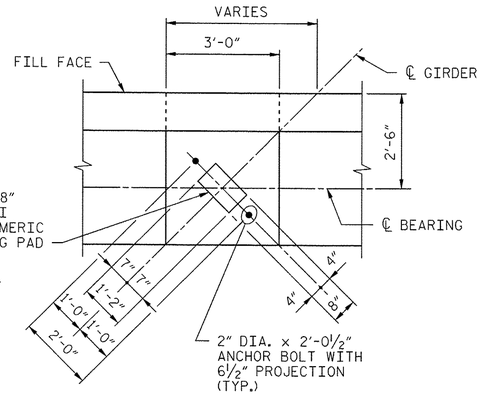

BEARING DETAIL

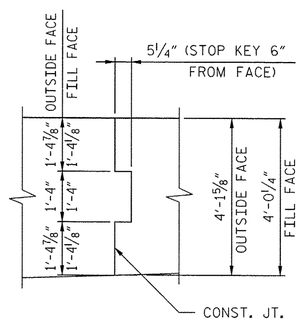

CONST. JT. DETAIL

BAR TYPES

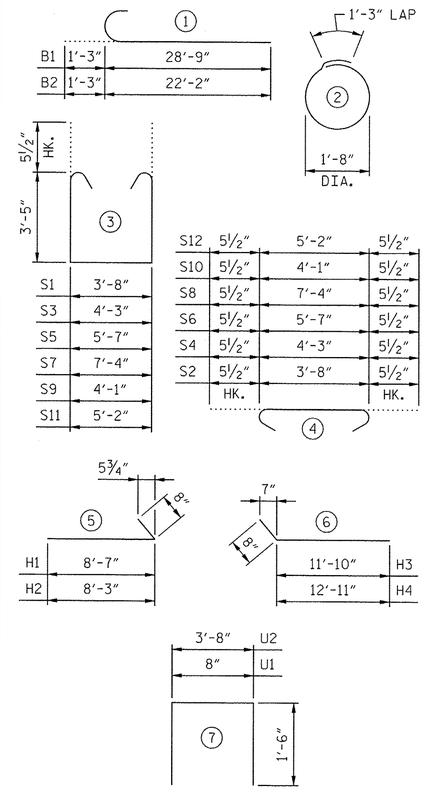

ALL BAR DIMENSIONS ARE OUT TO OUT.

BILL OF MATERIAL

END BENT 2

STAGE 2 BAR	NO.	SIZE	TYPE	LENGTH	WEIGHT
* B1	10	#9	1	30'-0"	1020
* B3	4	#5	STR.	28'-9"	120
* B5	8	#4	STR.	28'-9"	154
B7	7	#4	STR.	3'-8"	17
B8	10	#4	STR.	10'-0"	67
H3	18	#5	6	12'-6"	235
H4	18	#5	6	13'-7"	255
K1	8	#4	STR.	28'-7"	153
K5	3	#4	STR.	6'-5"	13
K6	3	#4	STR.	6'-8"	13
S1	15	#5	3	11'-5"	179
S2	15	#5	4	4'-7"	72
S3	1	#5	3	12'-0"	13
S4	1	#5	4	5'-2"	5
S5	1	#5	3	13'-4"	14
S6	1	#5	4	6'-6"	7
S7	1	#5	3	15'-1"	16
S8	1	#5	4	8'-3"	9
S9	1	#5	3	11'-10"	12
S10	1	#5	4	5'-0"	5
S11	1	#5	3	12'-11"	13
S12	1	#5	4	6'-1"	6
S13	16	#4	2	2'-11"	31
U1	24	#4	7	3'-8"	59
U2	12	#4	7	6'-8"	53
V1	48	#4	STR.	6'-11"	222
V3	37	#4	STR.	8'-7"	212
TOTAL REINFORCING STEEL				LBS.	2975

STAGE 4 BAR	NO.	SIZE	TYPE	LENGTH	WEIGHT
B2	10	#9	1	23'-5"	796
B4	4	#5	STR.	22'-2"	92
B6	8	#4	STR.	22'-2"	118
B7	5	#4	STR.	3'-8"	12
* B9	10	#4	STR.	8'-5"	56
B10	5	#4	STR.	7'-4"	24
H1	12	#5	5	9'-3"	116
H2	12	#5	5	8'-11"	112
K2	8	#4	STR.	22'-2"	118
K3	2	#4	STR.	4'-2"	6
K4	2	#4	STR.	4'-4"	6
S1	14	#5	3	11'-5"	167
S2	14	#5	4	4'-7"	67
S9	1	#5	3	11'-10"	12
S10	1	#5	4	5'-0"	5
S11	2	#5	3	12'-11"	27
S12	2	#5	4	6'-1"	13
S13	16	#4	2	2'-11"	31
U1	15	#4	7	3'-8"	37
U2	15	#4	7	6'-8"	67
V1	30	#4	STR.	6'-11"	139
V2	28	#4	STR.	8'-8"	162
TOTAL REINFORCING STEEL				LBS.	2183

END BENT 2 TOTAL QUANTITIES - STAGE 2

CLASS A CONCRETE		
POUR #1 (CAP & LOWER WING)	C.Y.	21.2
POUR #2 (BACKWALL & UPPER WING)	C.Y.	6.3
TOTAL	C.Y.	27.5
HP 12x53 STEEL PILES	NO.	4
	LIN. FT.	140
STEEL PILE POINTS	NO.	4

END BENT 2 TOTAL QUANTITIES - STAGE 4

CLASS A CONCRETE		
POUR #1 (CAP & LOWER WING)	C.Y.	15.8
POUR #2 (BACKWALL & UPPER WING)	C.Y.	4.0
TOTAL	C.Y.	19.8
HP 12x53 STEEL PILES	NO.	4
	LIN. FT.	140
STEEL PILE POINTS	NO.	4

* #9B1 BARS WILL REQUIRE FIELD CUTTING TO FIT.
* #4B9 BARS BELOW SEAT 2 WILL REQUIRE FIELD CUTTING TO FIT.
* #5B3 AND #5B5 BARS WILL REQUIRE FIELD CUTTING TO FIT.

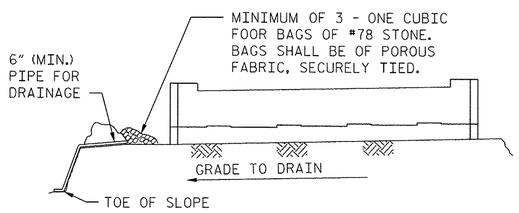

BAGGED STONE AND PIPE SHALL BE PLACED IMMEDIATELY AFTER COMPLETION OF END BENT EXCAVATION. PIPE MAY BE EITHER CONCRETE, CORRUGATED STEEL, CORRUGATED ALUMINUM ALLOY, OR CORRUGATED PLASTIC. PERFORATED PIPE WILL NOT BE ALLOWED.

BAGGED STONE SHALL REMAIN IN PLACE UNTIL THE ENGINEER DIRECTS THAT IT BE REMOVED. THE CONTRACTOR SHALL REMOVE AND DISPOSE OF SILT ACCUMULATIONS AT BAGGED STONE WHEN SO DIRECTED BY THE ENGINEER. BAGS SHALL BE REMOVED AND REPLACED WHENEVER THE ENGINEER DETERMINES THAT THEY HAVE DETERIORATED AND LOST THEIR EFFECTIVENESS.

NO SEPARATE PAYMENT WILL BE MADE FOR THIS WORK AND THE ENTIRE COST OF THIS WORK SHALL BE INCLUDED IN THE UNIT CONTRACT PRICE FOR THE SEVERAL PAY ITEMS.

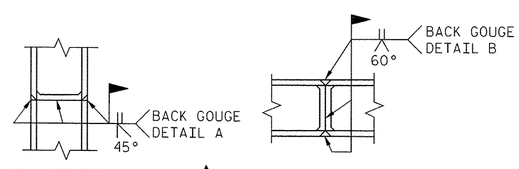

▲ PILE VERTICAL

▲ PILE HORIZONTAL OR VERTICAL

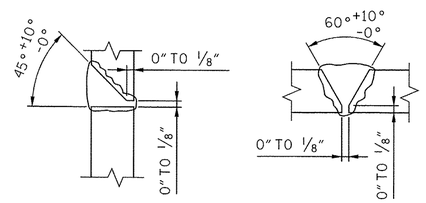

DETAIL A

DETAIL B

▲ POSITION OF PILE DURING WELDING.

PILE SPLICE DETAILS

NOTES:

STIRRUPS IN CAP MAY BE SHIFTED AS NECESSARY TO CLEAR ANCHOR BOLTS.

FOR EPOXY PROTECTIVE COATING, SEE SPECIAL PROVISIONS.

BACKWALL SHALL BE PLACED BEFORE APPLYING THE EPOXY PROTECTIVE COATING.

THE TOP SURFACE AREAS OF THE END BENT CAP SHALL BE CURED IN ACCORDANCE WITH THE STANDARD SPECIFICATIONS EXCEPT THAT THE MEMBRANE CURING COMPOUND METHOD SHALL NOT BE USED.

THE TOP SURFACE OF THE CAP EXCEPT THE BRIDGE SEAT BUILDUPS SHALL BE SLOPED TRANSVERSELY FROM THE FILL FACE TO THE FRONT FACE AT THE RATE OF 2%.

FOR OTHER NOTES, SEE "FOUNDATION LAYOUT SHEET AND LONG CHORD LAYOUT" SHEET.

INSTALL THE 4" DIA. DRAIN PIPE THROUGH THE WING WALL AS REQUIRED FOR REINFORCED BRIDGE APPROACH FILLS, SEE THE ROADWAY PLANS. REINFORCING STEEL IN THE WING WALL MAY BE SHIFTED AS NECESSARY TO CLEAR THE DRAIN PIPE.

PROJECT NO. 17BP.14.R.66

JACKSON COUNTY

STATION: 13+19.60 -L-

SHEET 3 OF 3

AECOM
AECOM TECHNICAL SERVICES, INC.
701 CORPORATE CENTER DRIVE, SUITE 475
RALEIGH, NC 27607
(919) 854-6200 www.aecom.com
AECOM License No. F-0342

NORTH CAROLINA PROFESSIONAL SEAL 030474 ENGINEER JOHN C. MORRISON
7/10/14

STATE OF NORTH CAROLINA
DEPARTMENT OF TRANSPORTATION
RALEIGH

SUBSTRUCTURE

END BENT 2
SECTIONS AND DETAILS

REVISIONS NO.	BY:	DATE:	NO.	BY:	DATE:

SHEET NO. S-25
TOTAL SHEETS

DRAWN BY : DDL DATE : 6/14
CHECKED BY : JCM DATE : 6/14

USER: dwright
DGN: G:\802\3872\400_Tech_Inf\c_Disc_Files\450_NCDOT Std Text\bDesFiles\BRG_310\Structures\B310_EndBent-2_3.dgn
DATE: 7/10/2014
TIME: 11:26:25 AM

NOTES :

FOR BERM WIDTH DIMENSIONS, SEE GENERAL DRAWING.

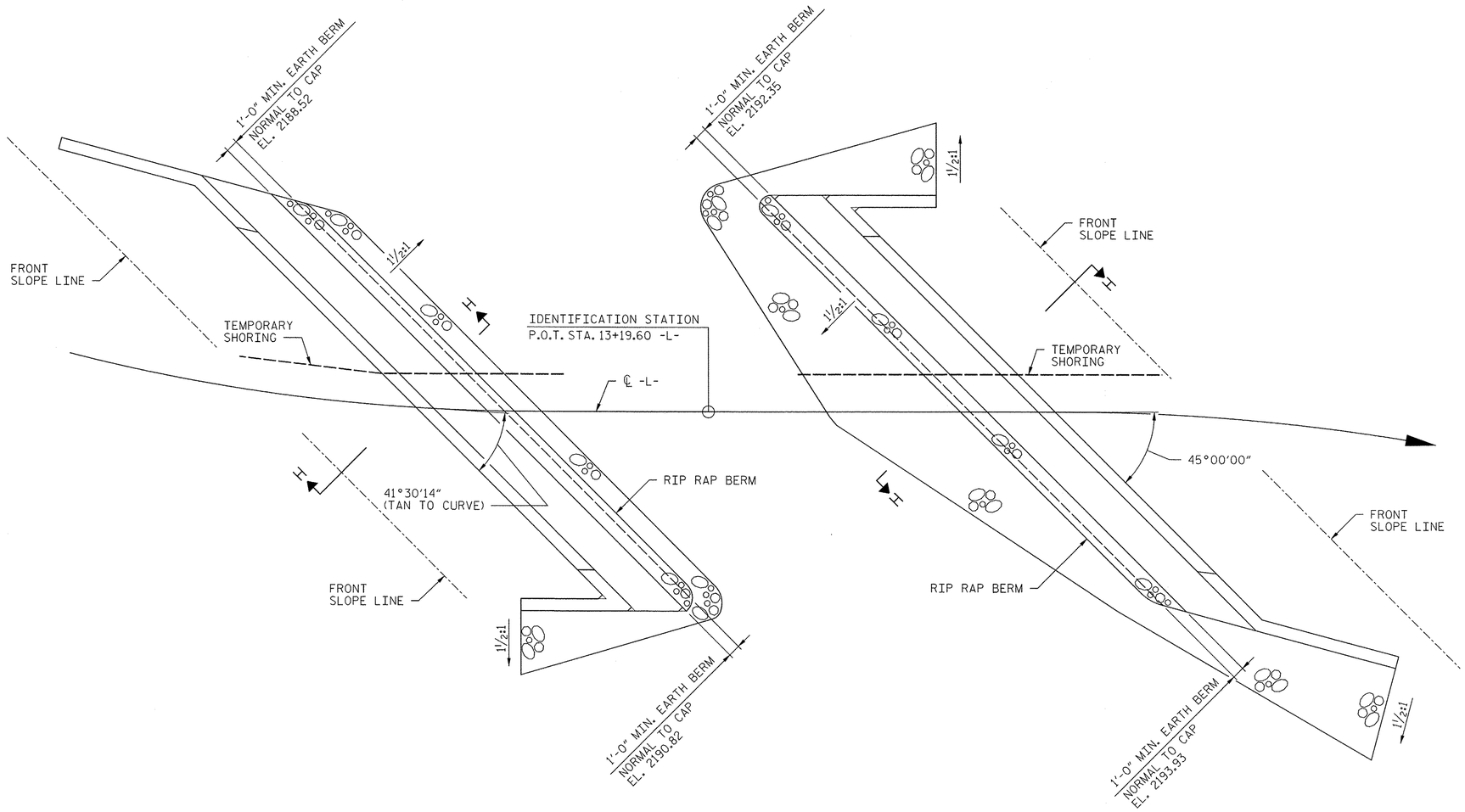

BERM RIP RAPPED

AT END BENT 1

BERM RIP RAPPED

AT END BENT 2

ESTIMATED QUANTITIES		
BRIDGE @ STA. P.O.T. 13+19.60 -L-	RIP RAP CLASS II (2'-0" THICK)	GEOTEXTILE FOR DRAINAGE
	TONS	SQUARE YARDS
END BENT 1 - STAGE 2	16.3	18.1
END BENT 2 - STAGE 2	8.4	9.3
END BENT 1 - STAGE 4	37.1	41.2
END BENT 2 - STAGE 4	27.8	30.9
TOTAL	89.6	99.5

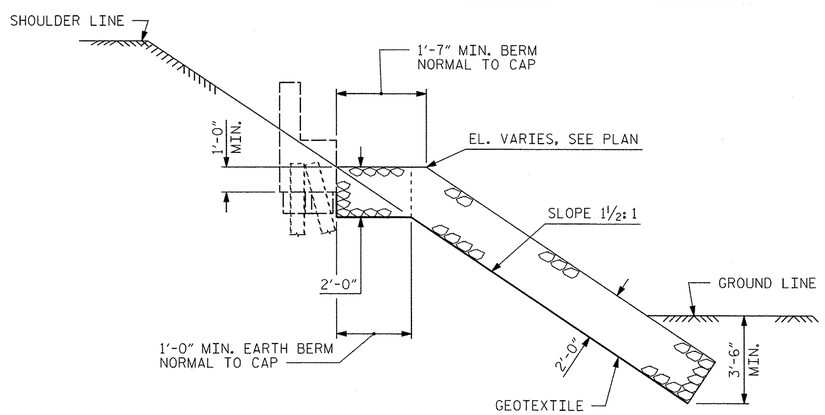

SECTION H-H

PROJECT NO. 17BP.14.R.66

JACKSON COUNTY

STATION: 13+19.60 -L-

AECOM

AECOM TECHNICAL SERVICES, INC.
701 CORPORATE CENTER DRIVE, SUITE 475
RALEIGH, NC 27607
(919) 854-6200 www.aecom.com
AECOM License No. F-0342

NORTH CAROLINA PROFESSIONAL SEAL 030474 ENGINEER JOHN C. MORRISON
7/10/14

STATE OF NORTH CAROLINA
DEPARTMENT OF TRANSPORTATION
RALEIGH

RIP RAP DETAILS

REVISIONS						SHEET NO.
NO.	BY:	DATE:	NO.	BY:	DATE:	S-26
						TOTAL SHEETS

DRAWN BY : DDL DATE : 6/14
CHECKED BY : JCM DATE : 6/14

DATE: 7/10/2014
TIME: 11:44:45 AM

USER: lowryx
DGN: U:\2023817\24\00_Tech_Info_Disc_Files\450_NCDOT Std Tech Des Files\GR6_310\Structures\S310_RipRap.dgn

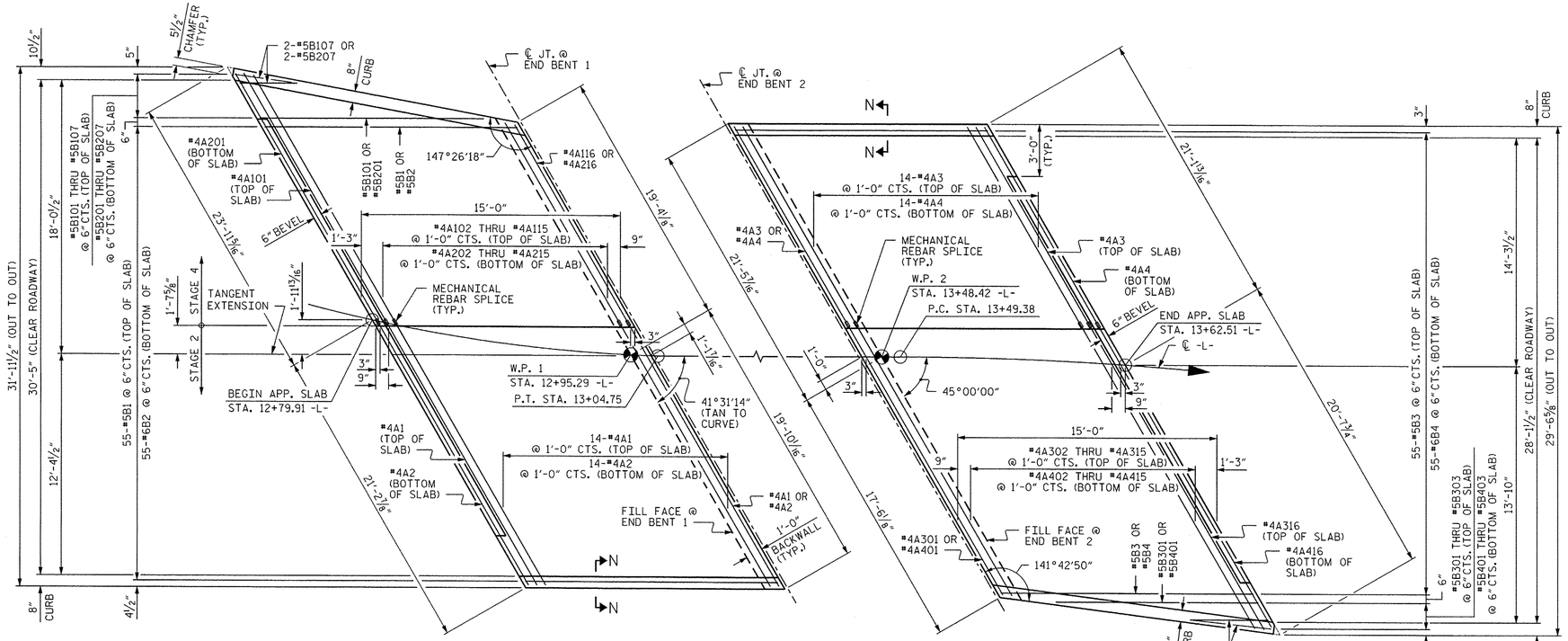

PLAN @ END BENT 1

PLAN @ END BENT 2

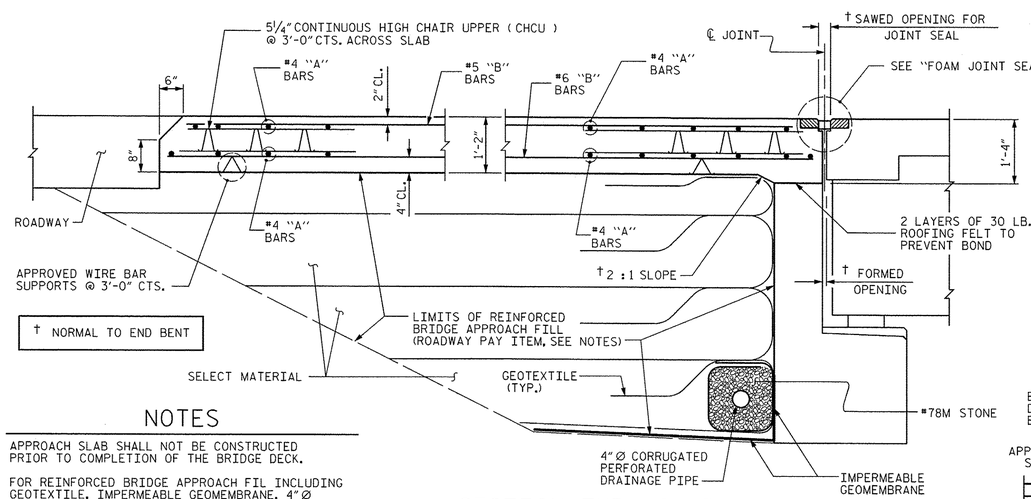

SECTION THRU SLAB

SPLICE LENGTHS		
BAR SIZE	EPOXY COATED	UNCOATED
#4	2'-0"	1'-9"
#5	2'-6"	2'-2"
#6	3'-10"	2'-7"

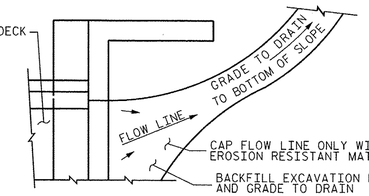

NOTE: IF THE APPROACH SLAB IS NOT CONSTRUCTED IMMEDIATELY AFTER THE BACKFILLING OF THE END BENT EXCAVATION, GRADE TO DRAIN TO THE BOTTOM OF THE SLOPE AND PROVIDE EROSION RESISTANT MATERIAL, SUCH AS FIBERGLASS ROVING OR AS DIRECTED BY THE ENGINEER TO PREVENT SOIL EROSION AND TO PROTECT THE AREA ADJACENT TO THE STRUCTURE. THE CONTRACTOR WILL BE REQUIRED TO REMOVE THESE MATERIALS PRIOR TO CONSTRUCTION OF THE APPROACH SLAB.

TEMPORARY DRAINAGE DETAIL

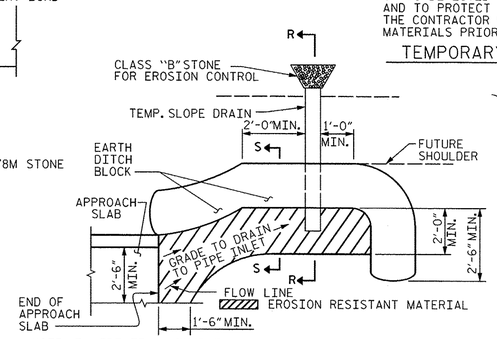

NOTE: IMMEDIATELY AFTER THE CONSTRUCTION OF THE APPROACH SLAB, THE CONTRACTOR SHALL PROVIDE TEMPORARY BERM AND SLOPE DRAIN. CONTRACTOR SHALL GRADE TO PIPE INLET AND PROVIDE EROSION RESISTANT MATERIAL AS SHOWN. THE EROSION RESISTANT MATERIAL SHALL BE EITHER 1) ASPHALT PLANT MIX, TYPE 1 OR TYPE 2, MIN. 2" DEPTH, 2) EROSION CONTROL MAT, OR 3) CONCRETE, AS DIRECTED BY THE ENGINEER. THE SLOPE DRAIN SHALL CONSIST OF A NON-PERFORATED TEMPORARY DRAINAGE PIPE, 12 INCHES IN DIAMETER.

PLAN VIEW

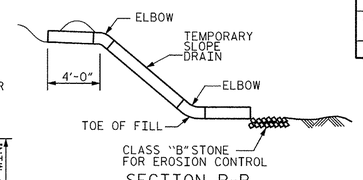

SECTION R-R

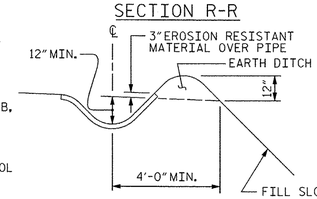

SECTION S-S

TEMPORARY BERM AND SLOPE DRAIN DETAILS

(TO BE USED WHEN SHOULDER BERM GUTTER IS REQUIRED)

NOTES

APPROACH SLAB SHALL NOT BE CONSTRUCTED PRIOR TO COMPLETION OF THE BRIDGE DECK.

FOR REINFORCED BRIDGE APPROACH FIL INCLUDING GEOTEXTILE, IMPERMEABLE GEOMEMBRANE, 4" Ø DRAINAGE PIPE, #78M STONE, AND SELECT MATERIAL, SEE ROADWAY PLANS.

AREA BETWEEN THE WINGWALL AND APPROACH SLAB SHALL BE GRADED TO DRAIN THE WATER AWAY FROM THE FILL FACE OF THE BRIDGE AND SHALL BE PAVED. SEE ROADWAY PLANS.

THE JOINT SHALL BE SAWED PRIOR TO THE CASTING OF THE BARRIER RAIL OR PARAPET AND END POST.

WITH FOAM JOINT SEAL

FOR FOAM JOINT SEALS, SEE SPECIAL PROVISIONS.

THE NOMINAL UNCOMPRESSED SEAL WIDTH OF THE FOAM JOINT SEAL SHALL BE 2½".

FOR ELASTOMERIC CONCRETE, SEE SPECIAL PROVISIONS.

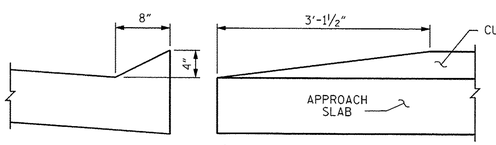

SECTION N-N

END OF CURB WITHOUT SHOULDER BERM GUTTER

CURB DETAILS

BILL OF MATERIAL					
APPROACH SLAB AT EB 1					
STAGE 2					
BAR	NO.	SIZE	TYPE	LENGTH	WEIGHT
✳ A1	16	#4	STR	21'-2" ✳✳	226
A2	16	#4	STR	21'-2" ✳✳	226
✳ B1	30	#5	STR	14'-6"	454
B2	30	#5	STR	14'-6"	454
REINFORCING STEEL				LBS.	680
✳ EPOXY COATED REINFORCING STEEL				LBS.	680
CLASS AA CONCRETE				C.Y.	9.8
STAGE 4					
BAR	NO.	SIZE	TYPE	LENGTH	WEIGHT
✳ A101	1	#4	STR	23'-2" ✳✳	15
✳ A102	1	#4	STR	22'-11" ✳✳	15
✳ A103	1	#4	STR	22'-7" ✳✳	15
✳ A104	1	#4	STR	22'-2" ✳✳	15
✳ A105	1	#4	STR	21'-9" ✳✳	15
✳ A106	1	#4	STR	21'-4" ✳✳	14
✳ A107	1	#4	STR	20'-11" ✳✳	14
✳ A108	1	#4	STR	20'-7" ✳✳	14
✳ A109	1	#4	STR	20'-2" ✳✳	13
✳ A110	1	#4	STR	19'-9" ✳✳	13
✳ A111	1	#4	STR	19'-4" ✳✳	13
✳ A112	1	#4	STR	18'-11" ✳✳	13
✳ A113	1	#4	STR	18'-7" ✳✳	12
✳ A114	1	#4	STR	18'-2" ✳✳	12
✳ A115	1	#4	STR	17'-9" ✳✳	12
✳ A116	1	#4	STR	17'-7" ✳✳	12
A201	1	#4	STR	23'-0" ✳✳	15
A202	1	#4	STR	22'-11" ✳✳	15
A203	1	#4	STR	22'-7" ✳✳	15
A204	1	#4	STR	22'-2" ✳✳	15
A205	1	#4	STR	21'-9" ✳✳	15
A206	1	#4	STR	21'-4" ✳✳	14
A207	1	#4	STR	20'-11" ✳✳	14
A208	1	#4	STR	20'-7" ✳✳	14
A209	1	#4	STR	20'-2" ✳✳	13
A210	1	#4	STR	19'-9" ✳✳	13
A211	1	#4	STR	19'-4" ✳✳	13
A212	1	#4	STR	18'-11" ✳✳	13
A213	1	#4	STR	18'-7" ✳✳	12
A214	1	#4	STR	18'-2" ✳✳	12
A215	1	#4	STR	17'-9" ✳✳	12
A216	1	#4	STR	17'-7" ✳✳	12
✳ B1	25	#5	STR	14'-6"	378
✳ B101	1	#5	STR	13'-5"	14
✳ B102	1	#5	STR	11'-8"	12
✳ B103	1	#5	STR	9'-10"	10
✳ B104	1	#5	STR	8'-1"	8
✳ B105	1	#5	STR	6'-4"	7
✳ B106	1	#5	STR	4'-7"	5
✳ B107	2	#5	STR	2'-10"	6
B2	25	#5	STR	14'-6"	378
B201	1	#5	STR	13'-5"	14
B202	1	#5	STR	11'-8"	12
B203	1	#5	STR	9'-10"	10
B204	1	#5	STR	8'-1"	8
B205	1	#5	STR	6'-4"	7
B206	1	#5	STR	4'-7"	5
B207	2	#5	STR	2'-10"	6
REINFORCING STEEL				LBS.	657
✳ EPOXY COATED REINFORCING STEEL				LBS.	657
CLASS AA CONCRETE				C.Y.	9.7

BILL OF MATERIAL					
APPROACH SLAB AT EB 2					
STAGE 2					
BAR	NO.	SIZE	TYPE	LENGTH	WEIGHT
✳ A301	1	#4	STR	21'-3" ✳✳	14
✳ A302	1	#4	STR	21'-5" ✳✳	14
✳ A303	1	#4	STR	21'-7" ✳✳	14
✳ A304	1	#4	STR	21'-9" ✳✳	15
✳ A305	1	#4	STR	21'-11" ✳✳	15
✳ A306	1	#4	STR	22'-2" ✳✳	15
✳ A307	1	#4	STR	22'-4" ✳✳	15
✳ A308	1	#4	STR	22'-6" ✳✳	15
✳ A309	1	#4	STR	22'-8" ✳✳	15
✳ A310	1	#4	STR	22'-11" ✳✳	15
✳ A311	1	#4	STR	23'-1" ✳✳	15
✳ A312	1	#4	STR	23'-3" ✳✳	16
✳ A313	1	#4	STR	23'-5" ✳✳	16
✳ A314	1	#4	STR	23'-8" ✳✳	16
✳ A315	1	#4	STR	23'-10" ✳✳	16
✳ A316	1	#4	STR	23'-11" ✳✳	16
A401	1	#4	STR	21'-3" ✳✳	14
A402	1	#4	STR	21'-5" ✳✳	14
A403	1	#4	STR	21'-7" ✳✳	14
A404	1	#4	STR	21'-9" ✳✳	15
A405	1	#4	STR	21'-11" ✳✳	15
A406	1	#4	STR	22'-2" ✳✳	15
A407	1	#4	STR	22'-4" ✳✳	15
A408	1	#4	STR	22'-6" ✳✳	15
A409	1	#4	STR	22'-8" ✳✳	15
A410	1	#4	STR	22'-11" ✳✳	15
A411	1	#4	STR	23'-1" ✳✳	15
A412	1	#4	STR	23'-3" ✳✳	16
A413	1	#4	STR	23'-5" ✳✳	16
A414	1	#4	STR	23'-8" ✳✳	16
A415	1	#4	STR	23'-10" ✳✳	16
A416	1	#4	STR	23'-8" ✳✳	16
✳ B3	25	#5	STR	14'-6"	378
✳ B301	1	#5	STR	11'-11"	12
✳ B302	1	#5	STR	8'-2"	9
✳ B303	2	#5	STR	4'-5"	9
B4	25	#5	STR	14'-6"	378
B401	1	#5	STR	11'-11"	12
B402	1	#5	STR	8'-2"	9
B403	2	#5	STR	4'-5"	9
REINFORCING STEEL				LBS.	650
✳ EPOXY COATED REINFORCING STEEL				LBS.	650
CLASS AA CONCRETE				C.Y.	10.4
STAGE 4					
BAR	NO.	SIZE	TYPE	LENGTH	WEIGHT
✳ A3	16	#4	STR	17'-3" ✳✳	184
A4	16	#4	STR	17'-3" ✳✳	184
✳ B3	30	#5	STR	14'-6"	454
B4	30	#5	STR	14'-6"	454
REINFORCING STEEL				LBS.	638
✳ EPOXY COATED REINFORCING STEEL				LBS.	638
CLASS AA CONCRETE				C.Y.	8.2

✳✳ MECHANICAL COUPLERS ARE REQUIRED. ADJUST BAR LENGTHS AS NECESSARY FOR THE APPROVED SPLICE MECHANISM USED. FOR MECHANICAL SPLICES SEE SECTION 425-5(B) OF THE STANDARD SPECIFICATIONS.

PROJECT NO. 17BP.14.R.66

JACKSON COUNTY

STATION: 13+19.60 -L-

AECOM
AECOM TECHNICAL SERVICES, INC.
701 CORPORATE CENTER DRIVE, SUITE 475
RALEIGH, NC 27607
(919) 854-6200 www.aecom.com
AECOM License No. F-0342

NORTH CAROLINA PROFESSIONAL SEAL 030474 ENGINEER JOHN C. MORRISON
7/10/14

STATE OF NORTH CAROLINA
DEPARTMENT OF TRANSPORTATION
RALEIGH

BRIDGE APPROACH SLAB FOR FLEXIBLE PAVEMENT

45° SKEW

REVISIONS						SHEET NO.
NO.	BY:	DATE:	NO.	BY:	DATE:	S-27
						TOTAL SHEETS

DRAWN BY : DDL DATE : 6/14
CHECKED BY : JCM DATE : 6/14

USER: lowerjd
DGN: ...
DATE: 7/10/2014
TIME: 11:26:16 AM

STANDARD NOTES

DESIGN DATA:

SPECIFICATIONS	A.A.S.H.T.O. (CURRENT)
LIVE LOAD	SEE PLANS
IMPACT ALLOWANCE	SEE A.A.S.H.T.O.
STRESS IN EXTREME FIBER OF	
STRUCTURAL STEEL - AASHTO M270 GRADE 36	20,000 LBS. PER SQ. IN.
- AASHTO M270 GRADE 50W	27,000 LBS. PER SQ. IN.
- AASHTO M270 GRADE 50	27,000 LBS. PER SQ. IN.
REINFORCING STEEL IN TENSION	
GRADE 60	24,000 LBS. PER SQ. IN.
CONCRETE IN COMPRESSION	1,200 LBS. PER SQ. IN.
CONCRETE IN SHEAR	SEE A.A.S.H.T.O.
STRUCTURAL TIMBER - TREATED OR	
UNTREATED - EXTREME FIBER STRESS	1,800 LBS. PER SQ. IN.
COMPRESSION PERPENDICULAR TO GRAIN OF TIMBER	375 LBS. PER SQ. IN.
EQUIVALENT FLUID PRESSURE OF EARTH	30 LBS. PER CU. FT. (MINIMUM)

MATERIAL AND WORKMANSHIP:

EXCEPT AS MAY OTHERWISE BE SPECIFIED ON PLANS OR IN THE SPECIAL PROVISIONS, ALL MATERIAL AND WORKMANSHIP SHALL BE IN ACCORDANCE WITH THE 2012 "STANDARD SPECIFICATIONS FOR ROADS AND STRUCTURES" OF THE N. C. DEPARTMENT OF TRANSPORTATION.

STEEL SHEET PILING FOR PERMANENT OR TEMPORARY APPLICATIONS SHALL BE HOT ROLLED.

CONCRETE:

UNLESS OTHERWISE REQUIRED ON PLANS, CLASS A CONCRETE SHALL BE USED FOR ALL PORTIONS OF ALL STRUCTURES WITH THE EXCEPTION THAT: CLASS AA CONCRETE SHALL BE USED IN BRIDGE SUPERSTRUCTURES, ABUTMENT BACKWALLS, AND APPROACH SLABS; AND CLASS B CONCRETE SHALL BE USED FOR SLOPE PROTECTION AND RIP RAP.

CONCRETE CHAMFERS:

UNLESS OTHERWISE NOTED ON THE PLANS, ALL EXPOSED CORNERS ON STRUCTURES SHALL BE CHAMFERED 3/4" WITH THE FOLLOWING EXCEPTIONS: TOP CORNERS OF CURBS MAY BE ROUNDED TO 1-1/2" RADIUS WHICH IS BUILT INTO CURB FORMS; CORNERS OF TRANSVERSE FLOOR EXPANSION JOINTS SHALL BE ROUNDED WITH A 1/4" FINISHING TOOL UNLESS OTHERWISE REQUIRED ON PLANS; AND CORNERS OF EXPANSION JOINTS IN THE ROADWAY FACES AND TOPS OF CURBS AND SIDEWALKS SHALL BE ROUNDED TO A 1/4" RADIUS WITH A FINISHING STONE OR TOOL UNLESS OTHERWISE REQUIRED ON PLANS.

DOWELS:

DOWELS WHEN INDICATED ON PLANS AS FOR CULVERT EXTENSIONS, SHALL BE EMBEDDED AT LEAST 12" INTO THE OLD CONCRETE AND GROUTED INTO PLACE WITH 1:2 CEMENT MORTAR.

ALLOWANCE FOR DEAD LOAD DEFLECTION, SETTLEMENT, ETC. IN CASTING SUPERSTRUCTURES:

BRIDGES SHALL BE BUILT ON THE GRADE OR VERTICAL CURVE SHOWN ON PLANS. SLABS, CURBS AND PARAPETS SHALL CONFORM TO THE GRADE OR CURVE.

ALL DIMENSIONS WHICH ARE GIVEN IN SECTION AND ARE AFFECTED BY DEAD LOAD DEFLECTIONS ARE DIMENSIONS AT CENTER LINE OF BEARING UNLESS OTHERWISE NOTED ON PLANS. IN SETTING FORMS FOR STEEL BEAM BRIDGES AND PRESTRESSED CONCRETE GIRDER BRIDGES, ADJUSTMENTS SHALL BE MADE DUE TO THE DEAD LOAD DEFLECTIONS FOR THE ELEVATIONS SHOWN. WHERE BLOCKS ARE SHOWN OVER BEAMS FOR BUILDING UP TO THE SLAB, THE VERTICAL DIMENSIONS OF THE BLOCKS SHALL BE ADJUSTED BETWEEN BEARINGS TO COMPENSATE FOR DEAD LOAD DEFLECTIONS, VERTICAL CURVE ORDINATE, AND ACTUAL BEAM CAMBER. WHERE BOTTOM OF SLAB IS IN LINE WITH BOTTOM OF TOP FLANGES, DEPTH OF SLAB BETWEEN BEARINGS SHALL BE ADJUSTED TO COMPENSATE FOR DEAD LOAD DEFLECTION, VERTICAL CURVE ORDINATE, AND ACTUAL BEAM CAMBER.

IN SETTING FALSEWORK AND FORMS FOR REINFORCED CONCRETE SPANS, AN ALLOWANCE SHALL BE MADE FOR DEAD LOAD DEFLECTIONS, SETTLEMENT OF FALSEWORK, AND PERMANENT CAMBER WHICH SHALL BE PROVIDED FOR IN ADDITION TO THE ELEVATIONS SHOWN. AFTER REMOVAL OF THE FALSEWORK, THE FINISHED STRUCTURES SHALL CONFORM TO THE PROFILE AND ELEVATIONS SHOWN ON THE PLANS AND CONSTRUCTION ELEVATIONS FURNISHED BY THE ENGINEER.

DETAILED DRAWINGS FOR FALSEWORK OR FORMS FOR BRIDGE SUPERSTRUCTURE AND ANY STRUCTURE OR PARTS OF A STRUCTURE AS NOTED ON THE PLANS SHALL BE SUBMITTED TO THE ENGINEER FOR APPROVAL BEFORE CONSTRUCTION OF THE FALSEWORK OR FORMS IS STARTED.

REINFORCING STEEL:

ALL REINFORCING STEEL SHALL BE DEFORMED. DIMENSIONS RELATIVE TO PLACEMENT OF REINFORCING ARE TO CENTERS OF BARS UNLESS OTHERWISE INDICATED IN THE PLANS. DIMENSIONS ON BAR DETAILS ARE TO CENTERS OF BARS OR ARE OUT TO OUT AS INDICATED ON PLANS.

WIRE BAR SUPPORTS SHALL BE PROVIDED FOR REINFORCING STEEL WHERE INDICATED ON THE PLANS. WHEN BAR SUPPORT PIECES ARE PLACED IN CONTINUOUS LINES, THEY SHALL BE SO PLACED THAT THE ENDS OF THE SUPPORTING WIRES SHALL BE LAPPED TO LOCK LEGS ON ADJOINING PIECES.

STRUCTURAL STEEL:

AT THE CONTRACTOR'S OPTION, HE MAY SUBSTITUTE 7/8" Ø SHEAR STUDS FOR THE 3/4" Ø STUDS SPECIFIED ON THE PLANS. THIS SUBSTITUTION SHALL BE MADE AT THE RATE OF 3 - 7/8" Ø STUDS FOR 4 - 3/4" Ø STUDS, AND STUD SPACING CHANGES SHALL BE MADE AS NECESSARY TO PROVIDE THE SAME EQUIVALENT NUMBER OF 7/8" Ø STUDS ALONG THE BEAM AS SHOWN FOR 3/4" Ø STUDS BASED ON THE RATIO OF 3 - 7/8" Ø STUDS FOR 4 - 3/4" Ø STUDS. STUDS OF THE LENGTH SPECIFIED ON THE PLANS MUST BE PROVIDED. THE MAXIMUM SPACING SHALL BE 2'-0".

EXCEPT AT THE INTERIOR SUPPORTS OF CONTINUOUS BEAMS WHERE THE COVER PLATE IS IN CONTACT WITH BEARING PLATE, THE CONTRACTOR MAY, AT HIS OPTION, SUBSTITUTE FOR THE COVER PLATES DESIGNATED ON THE PLANS COVER PLATES OF THE EQUIVALENT AREA PROVIDED THESE PLATES ARE AT LEAST 5/16" IN THICKNESS AND DO NOT EXCEED A WIDTH EQUAL TO THE FLANGE WIDTH LESS 2" OR A THICKNESS EQUAL TO 2 TIMES THE FLANGE THICKNESS. THE SIZE OF FILLET WELDS SHALL CONFORM TO THE REQUIREMENTS OF THE CURRENT ANSI/AASHTO/AWS "BRIDGE WELDING CODE". ELECTROSLAG WELDING WILL NOT BE PERMITTED.

WITH THE SOLE EXCEPTION OF EDGES AT SURFACES WHICH BEAR ON OTHER SURFACES, ALL SHARP EDGES AND ENDS OF SHAPES AND PLATES SHALL BE SLIGHTLY ROUNDED BY SUITABLE MEANS TO A RADIUS OF APPROXIMATELY 1/16 INCH OR EQUIVALENT FLAT SURFACE AT A SUITABLE ANGLE PRIOR TO PAINTING, GALVANIZING, OR METALLIZING.

HANDRAILS AND POSTS:

METAL STANDARDS AND FACES OF THE CONCRETE END POSTS FOR THE METAL RAIL SHALL BE SET NORMAL TO THE GRADE OF THE CURB, UNLESS OTHERWISE SHOWN ON PLANS. THE METAL RAIL AND TOPS OF CONCRETE POSTS USED WITH THE ALUMINUM RAIL SHALL BE BUILT PARALLEL TO THE GRADE OF THE CURB.

METAL HANDRAILS SHALL BE IN ACCORDANCE WITH THE PLANS. RAILS SHALL BE AS MANUFACTURED FOR BRIDGE RAILING. CASTINGS SHALL BE OF A UNIFORM APPEARANCE. FINS AND OTHER DEFORMATIONS RESULTING FROM CASTING OR OTHERWISE SHALL BE REMOVED IN A MANNER SO THAT A UNIFORM COLORING OF THE COMPLETED CASTING SHALL BE OBTAINED. CASTINGS WITH DISCOLORATIONS OR OF NON-UNIFORM COLORING WILL NOT BE ACCEPTED. CERTIFIED MILL REPORTS ARE REQUIRED FOR METAL RAILS AND POSTS.

SPECIAL NOTES:

GENERALLY, IN CASE OF DISCREPANCY, THIS STANDARD SHEET OF NOTES SHALL GOVERN OVER THE SPECIFICATIONS, BUT THE REMAINDER OF THE PLANS SHALL GOVERN OVER NOTES HEREON, AND SPECIAL PROVISIONS SHALL GOVERN OVER ALL. SEE SPECIFICATIONS ARTICLE 105-4.

ENGLISH

JANUARY, 1990