STATE OF NORTH CAROLINA
DEPARTMENT OF TRANSPORTATION
HIGHWAY DIVISION 14

PROPOSAL

DATE AND TIME OF BID OPENING: April 12, 2016 AT 2:00 PM

CONTRACT ID: DN11585092

WBS ELEMENT NO.: 14.1020SM, ETC..

FEDERAL AID NO.: (TO BE DETERMINED)

COUNTY: CHEROKEE, CLAY, GRAHAM, HAYWOOD, HENDERSON, JACKSON, MACON, POLK, SWAIN AND TRANSYLVANIA

TIP NO.: N/A

MILES: N/A

ROUTE NO.: VARIOUS, THROUGHOUT DIVISION 14

LOCATION: VARIOUS, THROUGHOUT DIVISION 14

TYPE OF WORK: SIGNAL REPAIR AND MAINTENANCE

NOTICE:
ALL BIDDERS SHALL COMPLY WITH ALL APPLICABLE LAWS REGULATING THE PRACTICE OF GENERAL CONTRACTING AS CONTAINED IN CHAPTER 87 OF THE GENERAL STATUTES OF NORTH CAROLINA WHICH REQUIRES THE BIDDER TO BE LICENSED BY THE N.C. LICENSING BOARD FOR CONTRACTORS WHEN BIDDING ON ANY NON-FEDERAL AID PROJECT WHERE THE BID IS $30,000 OR MORE, EXCEPT FOR CERTAIN SPECIALTY WORK AS DETERMINED BY THE LICENSING BOARD. BIDDERS SHALL ALSO COMPLY WITH ALL OTHER APPLICABLE LAWS REGULATING THE PRACTICES OF ELECTRICAL, PLUMBING, HEATING AND AIR CONDITIONING AND REFRIGERATION CONTRACTING AS CONTAINED IN CHAPTER 87 OF THE GENERAL STATUTES OF NORTH CAROLINA. NOTWITHSTANDING THESE LIMITATIONS ON BIDDING, THE BIDDER WHO IS AWARDED ANY FEDERAL - AID FUNDED PROJECT SHALL COMPLY WITH CHAPTER 87 OF THE GENERAL STATUTES OF NORTH CAROLINA FOR LICENSING REQUIREMENTS WITHIN 60 CALENDAR DAYS OF BID OPENING.

THIS IS A ROADWAY PROJECT. BID BOND IS REQUIRED.

_____
NAME OF BIDDER

_____
ADDRESS OF BIDDER

PROPOSAL FOR THE CONSTRUCTION OF

CONTRACT No. DN11585092 IN CHEROKEE, CLAY, GRAHAM, HAYWOOD, HENDERSON, JACKSON, MACON, POLK, SWAIN AND TRANSYLVANIA COUNTIES, NORTH CAROLINA

Date3/1/2016**_____ 20_____**

DEPARTMENT OF TRANSPORTATION,

RALEIGH, NORTH CAROLINA

The Bidder has carefully examined the location of the proposed work to be known as Contract No. **DN11585092**; has carefully examined the plans and specifications, which are acknowledged to be part of the proposal, the special provisions, the proposal, the form of contract, and the forms of contract payment bond and contract performance bond; and thoroughly understands the stipulations, requirements and provisions. The undersigned bidder agrees to bound upon his execution of the bid and subsequent award to him by the Department of Transportation in accordance with this proposal to provide the necessary contract payment bond and contract performance bond within fourteen days after the written notice of award is received by him. The undersigned Bidder further agrees to provide all necessary machinery, tools, labor, and other means of construction; and to do all the work and to furnish all materials, except as otherwise noted, necessary to perform and complete the said contract in accordance with *the 2012 Standard Specifications for Roads and Structures* by the dates(s) specified in the Project Special Provisions and in accordance with the requirements of the Engineer, and at the unit or lump sum prices, as the case may be, for the various items given on the sheets contained herein.

The Bidder shall provide and furnish all the materials, machinery, implements, appliances and tools, and perform the work and required labor to construct and complete State Highway Contract No. **DN11585092** in **Cherokee, Clay, Graham, Haywood, Henderson, Jackson, Macon, Polk, Swain and Transylvania Counties**, for the unit or lump sum prices, as the case may be, bid by the Bidder in his bid and according to the proposal, plans, and specifications prepared by said Department, which proposal, plans, and specifications show the details covering this project, and hereby become a part of this contract.

The published volume entitled *North Carolina Department of Transportation, Raleigh, Standard Specifications for Roads and Structures, January 2012* with all amendments and supplements thereto, is by reference incorporated into and made a part of this contract; that, except as herein modified, all the construction and work included in this contract is to be done in accordance with the specifications contained in said volume, and amendments and supplements thereto, under the direction of the Engineer.

If the proposal is accepted and the award is made, the contract is valid only when signed either by the Contract Officer or such other person as may be designated by the Secretary to sign for the Department of Transportation. The conditions and provisions herein cannot be changed except over the signature of the said Contract Officer or Division Engineer.

The quantities shown in the itemized proposal for the project are considered to be approximate only and are given as the basis for comparison of bids. The Department of Transportation may increase or decrease the quantity of any item or portion of the work as may be deemed necessary or expedient.

An increase or decrease in the quantity of an item will not be regarded as sufficient ground for an increase or decrease in the unit prices, nor in the time allowed for the completion of the work, except as provided for the contract.

Accompanying this bid is a bid bond secured by a corporate surety, or certified check payable to the order of the Department of Transportation, for five percent of the total bid price, which deposit is to be forfeited as liquidated damages in case this bid is accepted and the Bidder shall fail to provide the required payment and performance bonds with the Department of Transportation, under the condition of this proposal, within 14 calendar days after the written notice of award is received by him, as provided in the Standard Specifications; otherwise said deposit will be returned to the Bidder.

NORTH CAROLINA PROFESSIONAL SEAL 025536 ENGINEER Wanda H Austin

DocuSigned by: Wanda Austin B8811C91E31C453...

Division 14 Contract Officer

TABLE OF CONTENTS

COVER SHEET
PROPOSAL SHEET

THIS CONTRACT IS FOR TIP **N/A** CONTRACT ID **DN11585092** FOR **SIGNAL REPAIR AND MAINTENANCE** TYPE OF WORK IN **CHEROKEE, CLAY, GRAHAM, HAYWOOD, HENDERSON, JACKSON, MACON, POLK, SWAIN AND TRANSYLVANIA COUNTIES**.

SPECIAL PROVISIONS

INSTRUCTIONS TO BIDDERS....4
N. C. DEPARTMENT OF TRANSPORTATION....5
MANDATORY PRE-BID CONFERENCE (Prequalifying To Bid): 6
COMPUTER BID PREPARATION WITH EMAIL (OPTIONAL):....7
CONTRACT TIME AND LIQUIDATED DAMAGES:....7
INTERMEDIATE CONTRACT TIME NUMBER 1 AND LIQUIDATED DAMAGES:....8
NO MAJOR CONTRACT ITEMS:....9
NO SPECIALTY ITEMS:....9
SCHEDULE OF ESTIMATED COMPLETION PROGRESS:....9
DISADVANTAGED BUSINESS ENTERPRISE (DIVISIONS):....9
CERTIFICATION FOR FEDERAL-AID CONTRACTS:....22
U.S. DEPARTMENT OF TRANSPORTATION HOTLINE:....22
CARGO PREFERENCE ACT: 23
SUBSURFACE INFORMATION:....23
LOCATING EXISTING UNDERGROUND UTILITIES: 23
RESOURCE CONSERVATION AND ENV. SUSTAINABLE PRACTICES: 23
DOMESTIC STEEL: 24
GIFTS FROM VENDORS AND CONTRACTORS: 24
LIABILITY INSURANCE: 25
EMPLOYMENT:....25
STATE HIGHWAY ADMINISTRATOR TITLE CHANGE: 25
SUBLETTING OF CONTRACT: 26
DIVISION LET CONTRACT PREQUALIFICATION:....26
CONTRACT PAYMENT AND PERFORMANCE BOND:....26
ROADWAY 28
AVAILABILITY OF FUNDS – TERMINATION OF CONTRACTS 44
ERRATA 45
PLANT AND PEST QUARANTINES....47
AWARD OF CONTRACT 48
MINORITY AND FEMALE EMPLOYMENT REQUIREMENTS 53
REQUIRED CONTRACT PROVISIONS FEDERAL - AID CONSTRUCTION CONTRACTS....56
ON-THE-JOB TRAINING....65
NAME CHANGE FOR NCDENR....68
MINIMUM WAGES....69
MINIMUM WAGES....73

TRAFFIC SIGNALS ..... TS
ITS..... ITS

PROPOSAL ITEM SHEET AND SIGNATURE SHEET

ITEM SHEET(S) ……..……..T-1
SIGNATURE SHEETS… ……S-1
EXECUTION SHEET ……..U-1

INSTRUCTIONS TO BIDDERS

PLEASE READ ALL INSTRUCTIONS CAREFULLY BEFORE PREPARING AND SUBMITTING YOUR BID.

All bids shall be prepared and submitted in accordance with the following requirements. Failure to comply with any requirement may cause the bid to be considered irregular and may be grounds for rejection of the bid.

TRADITIONAL PAPER BIDS:

1. Download the entire proposal from the Connect NCDOT website and return the entire proposal with your bid. **ALL BIDDERS SHOULD CONTACT THE DIVISION 14 CONTRACTING OFFICE VIA EMAIL D14CONTRACTS@NCDOT.GOV PRIOR TO NOON THE DAY OF LETTING TO RECEIVE A VALIDATION EMAIL. Proposals submitted without the validation email may be rejected.**

2. All entries on the itemized proposal sheet (bid form) shall be written in ink or typed.

3. The Bidder shall submit a unit price for every item on the itemized proposal sheet. The unit prices for the various contract items shall be written in figures. Unit prices shall be rounded off by the Bidder to contain no more than FOUR decimal places.

4. An amount bid shall be entered on the itemized proposal sheet for every item. The amount bid for each item shall be determined by multiplying each unit bid by the quantity for that item, and shall be written in figures in the "Amount" column of the form.

5. The total amount bid shall be written in figures in the proper place on the bid form. The total amount bid shall be determined by adding the amounts bid for each item.

6. Changes to any entry shall be made by marking through the entry in ink and making the correct entry adjacent thereto in ink. A representative of the Bidder shall initial the change in ink. Do not use correction fluid, correction tape or similar product to make corrections.

7. The bid shall be properly executed on the included **Execution of Bid – Non-collusion Affidavit, Debarment Certification and Gift Ban Certification** form. All bids shall show the following information:

a. Name of corporation, partnership, limited liability company, joint venture, individual or firm, submitting bid.
Corporations that have a corporate seal should include it on the bid.

b. Name of individual or representative submitting bid and position or title held on behalf of the bidder.

c. Name, signature, and position or title of witness.

d. Completed attestation by Notary Public

Note: Signer, Witness and Notary Public must be different individuals.

8. The bid shall not contain any unauthorized additions, deletions, or conditional bids.

9. The Bidder shall not add any provision reserving the right to accept or reject an award, or to enter into a contract pursuant to an award.

10. THE PROPOSAL WITH THE ITEMIZED PROPOSAL SHEET ATTACHED SHALL BE PLACED IN A SEALED ENVELOPE AND SHALL BE DELIVERED TO AND RECEIVED IN THE NCDOT DIVISION 14 OFFICE, LOCATED AT 253 Webster Road, by 2:00 PM on, April 12, 2016.

11. The sealed bid must display the following statement on the front of the sealed envelope:

QUOTATION FOR DN11585092 – SIGNAL REPAIR AND MAINTENANCE; VARIOUS, THROUGHOUT DIVISION 14 , TO BE OPENED AT 2:00 PM on, April 12, 2016.

12. If delivered by mail, the sealed envelope shall be placed in another sealed envelope and the outer envelope shall be addressed as follows:

N. C. DEPARTMENT OF TRANSPORTATION
ATTN: Jeffrey E. Alspaugh, EI
253 Webster Road
Sylva, NC 28779

OPTIONAL COMPUTER BID PREPARATION:

1. All instructions given above for completing and returning TRADITIONAL PAPER BIDS apply, except as modified by the provision "**Computer Bid Preparation (Optional)**", if applicable.

2. Expedite software necessary for electornic bid preparation may be downloaded from the Connect NCDOT website at: https://connect.ncdot.gov/letting/Pages/EBS-Information.aspx

PROJECT SPECIAL PROVISIONS

GENERAL

MANDATORY PRE-BID CONFERENCE (Prequalifying To Bid):

(7-18-06) (Rev. 3-25-13) SPD 1-310

In order for all prospective bidders to have an extensive knowledge of the project, all prospective bidders shall attend a mandatory pre-bid conference at 9:00 AM, Tuesday, March 29, 2016.

North Carolina Department of Transportation
Division of Highways
Division 14
Traffic Engineering Offices – Trailer
233 Webster Road
Sylva, NC 28779

Contact: Steve Heim
Office Phone: 828-631-1153
Cell Phone: 828-508-6054

The pre-bid conference will include a thorough discussion of the plans, contract pay items, special provisions, etc.

Only bidders who have attended and properly registered at the above scheduled pre-bid conference and who have met all other prequalification requirements will be considered prequalified to bid on this project. A bid received from a bidder who has not attended and properly registered at the above scheduled pre-bid conference will not be accepted and considered for award.

Attendance at the pre-bid conference will not meet the requirements of proper registration unless the individual attending has registered at the pre-bid conference in accordance with the following:

(A) The individual has signed his name on the official roster prior to the above noted time for the beginning of the conference.

(B) The individual has written in the name and address of the company he or she represents.

(C) Only one company has been shown as being represented by the individual attending.

(D) The individual attending is an officer or permanent employee of the company they are representing.

Any individual arriving after the official roster has been received by the Engineer will not be eligible to bid. Attendance at any prior pre-bid conference will not meet the requirement of this provision.

COMPUTER BID PREPARATION WITH EMAIL (OPTIONAL):
(3-4-14) 102 SPD 01-050B

The bidder may elect to prepare his bid and MBE/WBE or DBE participation electronically by means of a personal computer. For electronic bid preparation the Contractor shall download the Expedite program from the NCDOT "Project Letting" website. Then download the appropriate .ebs electronic file of line items and quantities unique to each project from the Division's website.

The only entries into the program which will be permitted by the Bidder are the appropriate unit or lump sum prices for those items which must be bid in order to provide a complete bid for the project, and any MBE/WBE or DBE participation in the appropriate section of the Expedite program. When these entries have been made, the program will automatically prepare a complete set of itemized proposal sheets which will include the amount bid for the various items and the total amount bid for the project in addition to the unit or lump sum prices bid. The computer generated itemized proposal sheets shall be printed and signed by a duly authorized representative in accordance with Subarticle 102-8(A)(8). This set of itemized proposal sheets, when submitted together with the appropriate proposal, will constitute the bid and shall be delivered to the appropriate Division Office or location specified in the INSTRUCTIONS TO BIDDERS. If the Bidder submits his bid on computer generated itemized proposal sheets, bid prices shall not be written on the itemized proposal sheets bound in the proposal. The computer generated itemized proposal sheets (.ebs bid file) may also be copied to a compact disk (CD) furnished by the Contractor and shall be submitted to the Department with the bid or emailed to the Division Proposals Engineer at the time of Letting.

In the case of a discrepancy between the unit or lump sum prices submitted on the itemized proposal sheets and those contained on the CD or email attachment furnished by the Contractor, the unit or lump sum prices submitted on the printed and signed itemized proposal sheets shall prevail.

The requirements of the INSTRUCTIONS TO BIDDERS will apply to the preparation of bids except that a bid may be submitted on computer generated itemized proposal sheets in which case the entries on the itemized proposal sheets will not be required to be in ink. Changes to any entry on the computer generated itemized proposal sheets shall be made in accordance with requirement Number (6) of the INSTRUCTIONS TO BIDDERS. When the computer generated itemized proposal sheets are not signed and received with the proposal, the bid will be considered irregular.

CONTRACT TIME AND LIQUIDATED DAMAGES:
(7-1-95) (Rev. 12-18-07) 108 SP1 G10 B

The date of availability for this contract is **May 3, 2016**.

The completion date for this contract is **May 2, 2017**.

The liquidated damages for this contract are **Five Hundred Dollars ($ 500.00)** per calendar day.

INTERMEDIATE CONTRACT TIME NUMBER 1 AND LIQUIDATED DAMAGES:
(2-20-07) 108 SP1 G14 B

The Contractor shall not narrow or close a lane of traffic on **ANY ROAD**, detain and /or alter the traffic flow on or during holiday weekends, special events, or any other time when traffic is unusually heavy, including the following schedules:

HOLIDAY AND HOLIDAY WEEKEND LANE CLOSURE RESTRICTIONS

1. For **unexpected occurrence** that creates unusually high traffic volumes, as directed by the Engineer.

2. For **New Year's Day**, between the hours of **4:00 PM** December 31st and **7:00 AM** January 2nd. If New Year's Day is on a Friday, Saturday, Sunday or Monday, then until **7:00 AM** the following Tuesday.

3. For **Easter**, between the hours of **4:00 PM** Thursday and **7:00 AM** Monday.

4. For **Memorial Day**, between the hours of **4:00 PM** Friday and **7:00 AM** Tuesday.

5. For **Independence Day**, between the hours of **4:00 PM** the day before Independence Day and **7:00 AM** the day after Independence Day.

   If **Independence Day** is on a Friday, Saturday, Sunday or Monday, then between the hours of **4:00 PM** the Thursday before Independence Day and **7:00 AM** the Tuesday after Independence Day.

6. For **Labor Day**, between the hours of **4:00 PM** Friday and **7:00 AM** Tuesday.

7. For **Thanksgiving Day**, between the hours of **4:00 PM** Tuesday and **7:00 AM** Monday.

8. For **Christmas**, between the hours of **4:00 PM** the Friday before the week of Christmas Day and **7:00 AM** the following Tuesday after the week of Christmas Day.

Holidays and holiday weekends shall include New Year's, Easter, Memorial Day, Independence Day, Labor Day, Thanksgiving, and Christmas. The Contractor shall schedule his work so that lane closures are not required during these periods, unless otherwise directed by the Engineer.

The time of availability for this intermediate contract work shall be the time the Contractor begins to install all traffic control devices for lane closures according to the time restrictions listed herein.

The completion time for this intermediate contract work shall be the time the Contractor is required to complete the removal of all traffic control devices for lane closures according to the time restrictions stated herein and place traffic in the existing traffic pattern.

The liquidated damages are **Two Hundred Fifty Dollars ($ 250.00**) per hour.

NO MAJOR CONTRACT ITEMS:
(2-19-02) (Rev. 8-21-07) 104 SP1 G31

None of the items included in this contract will be major items.

NO SPECIALTY ITEMS:
(7-1-95) 108-6 SP1 G34

None of the items included in this contract will be specialty items (see Article 108-6 of the *2012 Standard Specifications*).

SCHEDULE OF ESTIMATED COMPLETION PROGRESS:
(7-15-08) (Rev. 5-19-15) 108-2 SP1 G58

The Contractor's attention is directed to the Standard Special Provision entitled *Availability of Funds Termination of Contracts* included elsewhere in this proposal. The Department of Transportation's schedule of estimated completion progress for this project as required by that Standard Special Provision is as follows:

2016	(7/01/15 - 6/30/16)	**17** % of Total Amount Bid
2017	(7/01/16 - 6/30/17)	**83** % of Total Amount Bid

The Contractor shall also furnish his own progress schedule in accordance with Article 108-2 of the *2012 Standard Specifications*. Any acceleration of the progress as shown by the Contractor's progress schedule over the progress as shown above shall be subject to the approval of the Engineer.

DISADVANTAGED BUSINESS ENTERPRISE (DIVISIONS):
(10-16-07)(Rev.4-19-16) 102-15(J) SP1 G62

Description

The purpose of this Special Provision is to carry out the U.S. Department of Transportation's policy of ensuring nondiscrimination in the award and administration of contracts financed in whole or in part with Federal funds. This provision is guided by 49 CFR Part 26.

Definitions

Additional DBE Subcontractors - Any DBE submitted at the time of bid that will not be used to meet the DBE goal. No submittal of a Letter of Intent is required.

Committed DBE Subcontractor - Any DBE submitted at the time of bid that is being used to meet the DBE goal by submission of a Letter of Intent. Or any DBE used as a replacement for a previously committed DBE firm.

Contract Goal Requirement - The approved DBE participation at time of award, but not greater than the advertised contract goal.

DBE Goal - A portion of the total contract, expressed as a percentage, that is to be performed by committed DBE subcontractor(s).

Disadvantaged Business Enterprise (DBE) - A firm certified as a Disadvantaged Business Enterprise through the North Carolina Unified Certification Program.

Goal Confirmation Letter - Written documentation from the Department to the bidder confirming the Contractor's approved, committed DBE participation along with a listing of the committed DBE firms.

Manufacturer - A firm that operates or maintains a factory or establishment that produces on the premises, the materials or supplies obtained by the Contractor.

Regular Dealer - A firm that owns, operates, or maintains a store, warehouse, or other establishment in which the materials or supplies required for the performance of the contract are bought, kept in stock, and regularly sold to the public in the usual course of business. A regular dealer engages in, as its principal business and in its own name, the purchase and sale or lease of the products in question. A regular dealer in such bulk items as steel, cement, gravel, stone, and petroleum products need not keep such products in stock, if it owns and operates distribution equipment for the products. Brokers and packagers are not regarded as manufacturers or regular dealers within the meaning of this section.

North Carolina Unified Certification Program (NCUCP) - A program that provides comprehensive services and information to applicants for DBE certification, such that an applicant is required to apply only once for a DBE certification that will be honored by all recipients of USDOT funds in the state and not limited to the Department of Transportation only. The Certification Program is in accordance with 49 CFR Part 26.

United States Department of Transportation (USDOT) - Federal agency responsible for issuing regulations (49 CFR Part 26) and official guidance for the DBE program.

Forms and Websites Referenced in this Provision

DBE Payment Tracking System - On-line system in which the Contractor enters the payments made to DBE subcontractors who have performed work on the project. https://apps.dot.state.nc.us/Vendor/PaymentTracking/

DBE-IS *Subcontractor Payment Information* - Form for reporting the payments made to all DBE firms working on the project. This form is for paper bid projects only. http://www.ncdot.org/doh/forms/files/DBE-IS.xls

RF-1 *DBE Replacement Request Form* - Form for replacing a committed DBE.
http://connect.ncdot.gov/projects/construction/Construction%20Forms/DBE%20MBE%20WBE%20Replacement%20Request%20Form.pdf

SAF *Subcontract Approval Form* - Form required for approval to sublet the contract. http://connect.ncdot.gov/projects/construction/Construction%20Forms/Subcontract%20Approval%20Form%20Rev.%202012.zip

JC-1 *Joint Check Notification Form* - Form and procedures for joint check notification. The form acts as a written joint check agreement among the parties providing full and prompt disclosure of the expected use of joint checks.
http://connect.ncdot.gov/projects/construction/Construction%20Forms/Joint%20Check%20Notification%20Form.pdf

Letter of Intent - Form signed by the Contractor and the DBE subcontractor, manufacturer or regular dealer that affirms that a portion of said contract is going to be performed by the signed DBE for the amount listed at the time of bid.
http://connect.ncdot.gov/letting/LetCentral/Letter%20of%20Intent%20to%20Perform%20as%20a%20Subcontractor.pdf

Listing of DBE Subcontractors Form - Form for entering DBE subcontractors on a project that will meet this DBE goal. This form is for paper bids only.
http://connect.ncdot.gov/municipalities/Bid%20Proposals%20for%20LGA%20Content/08%20DBE%20Subcontractors%20(Federal).docx

Subcontractor Quote Comparison Sheet - Spreadsheet for showing all subcontractor quotes in the work areas where DBEs quoted on the project. This sheet is submitted with good faith effort packages.
http://connect.ncdot.gov/business/SmallBusiness/Documents/DBE%20Subcontractor%20Quote%20Comparison%20Example.xls

DBE Goal

The following DBE goal for participation by Disadvantaged Business Enterprises is established for this contract:

Disadvantaged Business Enterprises **0** %

(A) *If the DBE goal is more than zero*, the Contractor shall exercise all necessary and reasonable steps to ensure that DBEs participate in at least the percent of the contract as set forth above as the DBE goal.

(B) *If the DBE goal is zero*, the Contractor shall make an effort to recruit and use DBEs during the performance of the contract. Any DBE participation obtained shall be reported to the Department.

Directory of Transportation Firms (Directory)

Real-time information is available about firms doing business with the Department and firms that are certified through NCUCP in the Directory of Transportation Firms. Only firms identified in the Directory as DBE certified shall be used to meet the DBE goal. The Directory can be found at the following link. https://partner.ncdot.gov/VendorDirectory/default.html

The listing of an individual firm in the directory shall not be construed as an endorsement of the firm's capability to perform certain work.

Listing of DBE Subcontractors

At the time of bid, bidders shall submit all DBE participation that they anticipate to use during the life of the contract. Only those identified to meet the DBE goal will be considered committed, even though the listing shall include both committed DBE subcontractors and additional DBE subcontractors. Additional DBE subcontractor participation submitted at the time of bid will be used toward the Department's overall race-neutral goal. Only those firms with current DBE certification at the time of bid opening will be acceptable for listing in the bidder's submittal of DBE participation. The Contractor shall indicate the following required information:

(A) *If the DBE goal is more than zero,*

(1) Bidders, at the time the bid proposal is submitted, shall submit a listing of DBE participation, including the names and addresses on *Listing of DBE Subcontractors* contained elsewhere in the contract documents in order for the bid to be considered responsive. Bidders shall indicate the total dollar value of the DBE participation for the contract.

(2) If bidders have no DBE participation, they shall indicate this on the *Listing of DBE Subcontractors* by entering the word "None" or the number "0." This form shall be completed in its entirety. **Blank forms will not be deemed to represent zero participation**. Bids submitted that do not have DBE participation indicated on the appropriate form will not be read publicly during the opening of bids. The Department will not consider these bids for award and the proposal will be rejected.

(3) The bidder shall be responsible for ensuring that the DBE is certified at the time of bid by checking the Directory of Transportation Firms. If the firm is not certified at the time of the bid-letting, that DBE's participation will not count towards achieving the DBE goal.

(B) *If the DBE goal is zero,* entries on the *Listing of DBE Subcontractors* are not required, however any DBE participation that is achieved during the project shall be reported in accordance with requirements contained elsewhere in the special provision.

DBE Prime Contractor

When a certified DBE firm bids on a contract that contains a DBE goal, the DBE firm is responsible for meeting the goal or making good faith efforts to meet the goal, just like any other bidder. In most cases, a DBE bidder on a contract will meet the DBE goal by virtue of the work it performs on the contract with its own forces. However, all the work that is performed by the DBE bidder and any other DBE subcontractors will count toward the DBE goal. The DBE bidder shall list itself along with any DBE subcontractors, if any, in order to receive credit toward the DBE goal.

For example, if the DBE goal is 45% and the DBE bidder will only perform 40% of the contract work, the prime will list itself at 40%, and the additional 5% shall be obtained through additional DBE participation with DBE subcontractors or documented through a good faith effort.

DBE prime contractors shall also follow Sections A or B listed under *Listing of DBE Subcontractor* just as a non-DBE bidder would.

Written Documentation – Letter of Intent

The bidder shall submit written documentation for each DBE that will be used to meet the DBE goal of the contract, indicating the bidder's commitment to use the DBE in the contract. This documentation shall be submitted on the Department's form titled *Letter of Intent*.

The documentation shall be received in the office of the Engineer no later than 12:00 noon of the sixth calendar day following opening of bids, unless the sixth day falls on Saturday, Sunday or an official state holiday. In that situation, it is due in the office of the Engineer no later than 12:00 noon on the next official state business day.

If the bidder fails to submit the Letter of Intent from each committed DBE to be used toward the DBE goal, or if the form is incomplete (i.e. both signatures are not present), the DBE participation will not count toward meeting the DBE goal. If the lack of this participation drops the commitment below the DBE goal, the Contractor shall submit evidence of good faith efforts, completed in its entirety, to the Engineer no later than 12:00 noon on the eighth calendar day following opening of bids, unless the eighth day falls on Saturday, Sunday or an official state holiday. In that situation, it is due in the office of the Engineer no later than 12:00 noon on the next official state business day.

Submission of Good Faith Effort

If the bidder fails to meet or exceed the DBE goal the apparent lowest responsive bidder shall submit to the Department documentation of adequate good faith efforts made to reach the DBE goal.

One complete set and 0 copies of this information shall be received in the office of the Engineer no later than 12:00 noon of the sixth calendar day following opening of bids, unless the sixth day falls on Saturday, Sunday or an official state holiday. In that situation, it is due in the office of the Engineer no later than 12:00 noon on the next official state business day.

Note: Where the information submitted includes repetitious solicitation letters, it will be acceptable to submit a representative letter along with a distribution list of the firms that were solicited. Documentation of DBE quotations shall be a part of the good faith effort submittal. This documentation may include written subcontractor quotations, telephone log notations of verbal quotations, or other types of quotation documentation.

Consideration of Good Faith Effort for Projects with DBE Goals More Than Zero

Adequate good faith efforts mean that the bidder took all necessary and reasonable steps to achieve the goal which, by their scope, intensity, and appropriateness, could reasonably be expected to obtain sufficient DBE participation. Adequate good faith efforts also mean that the bidder actively and aggressively sought DBE participation. Mere *pro forma* efforts are not considered good faith efforts.

The Department will consider the quality, quantity, and intensity of the different kinds of efforts a bidder has made. Listed below are examples of the types of actions a bidder will take in making a good faith effort to meet the goal and are not intended to be exclusive or exhaustive, nor is it intended to be a mandatory checklist.

(A) Soliciting through all reasonable and available means (e.g. attendance at pre-bid meetings, advertising, written notices, use of verifiable electronic means through the use of the NCDOT Directory of Transportation Firms) the interest of all certified DBEs who have the capability to perform the work of the contract. The bidder must solicit this interest within at least 10 days prior to bid opening to allow the DBEs to respond to the solicitation. Solicitation shall provide the opportunity to DBEs within the Division and surrounding Divisions where the project is located. The bidder must determine with certainty if the DBEs are interested by taking appropriate steps to follow up initial solicitations.

(B) Selecting portions of the work to be performed by DBEs in order to increase the likelihood that the DBE goals will be achieved.

(1) Where appropriate, break out contract work items into economically feasible units to facilitate DBE participation, even when the prime contractor might otherwise prefer to perform these work items with its own forces.

(2) Negotiate with subcontractors to assume part of the responsibility to meet the contract DBE goal when the work to be sublet includes potential for DBE participation (2nd and 3rd tier subcontractors).

(C) Providing interested DBEs with adequate information about the plans, specifications, and requirements of the contract in a timely manner to assist them in responding to a solicitation.

(D) (1) Negotiating in good faith with interested DBEs. It is the bidder's responsibility to make a portion of the work available to DBE subcontractors and suppliers and to select those portions of the work or material needs consistent with the available DBE subcontractors and suppliers, so as to facilitate DBE participation. Evidence of such negotiation includes the names, addresses, and telephone numbers of DBEs that were considered; a description of the information provided regarding the plans and specifications for the work selected for subcontracting; and evidence as to why additional agreements could not be reached for DBEs to perform the work.

(2) A bidder using good business judgment would consider a number of factors in negotiating with subcontractors, including DBE subcontractors, and would take a firm's price and capabilities as well as contract goals into consideration. However, the fact that there may be some additional costs involved in finding and using DBEs is not in itself sufficient reason for a bidder's failure to meet the contract DBE goal, as long as such costs are reasonable. Also, the ability or desire of a prime contractor to perform the work of a contract with its own organization does not relieve the bidder of the responsibility to make good faith efforts. Bidding contractors are not, however, required to accept higher quotes from DBEs if the price difference is excessive or unreasonable.

(E) Not rejecting DBEs as being unqualified without sound reasons based on a thorough investigation of their capabilities. The bidder's standing within its industry, membership in specific groups, organizations, or associates and political or social affiliations (for example, union vs. non-union employee status) are not legitimate causes for the rejection or non-solicitation of bids in the bidder's efforts to meet the project goal.

(F) Making efforts to assist interested DBEs in obtaining bonding, lines of credit, or insurance as required by the recipient or bidder.

(G) Making efforts to assist interested DBEs in obtaining necessary equipment, supplies, materials, or related assistance or services.

(H) Effectively using the services of available minority/women community organizations; minority/women contractors' groups; Federal, State, and local minority/women business assistance offices; and other organizations as allowed on a case-by-case basis to provide assistance in the recruitment and placement of DBEs. Contact within 7 days from the bid opening the Business Development Manager in the Business Opportunity and Work Force Development Unit to give notification of the bidder's inability to get DBE quotes.

(I) Any other evidence that the bidder submits which shows that the bidder has made reasonable good faith efforts to meet the DBE goal.

In addition, the Department may take into account the following:

(1) Whether the bidder's documentation reflects a clear and realistic plan for achieving the DBE goal.

(2) The bidders' past performance in meeting the DBE goals.

(3) The performance of other bidders in meeting the DBE goal. For example, when the apparent successful bidder fails to meet the DBE goal, but others meet it, you may reasonably raise the question of whether, with additional reasonable efforts the apparent successful bidder could have met the goal. If the apparent successful bidder fails to meet the DBE goal, but meets or exceeds the average DBE participation obtained by other bidders, the Department may view this,

in conjunction with other factors, as evidence of the apparent successful bidder having made a good faith effort.

If the Department does not award the contract to the apparent lowest responsive bidder, the Department reserves the right to award the contract to the next lowest responsive bidder that can satisfy to the Department that the DBE goal can be met or that an adequate good faith effort has been made to meet the DBE goal.

Non-Good Faith Appeal

The Engineer will notify the contractor verbally and in writing of non-good faith. A contractor may appeal a determination of non-good faith made by the Goal Compliance Committee. If a contractor wishes to appeal the determination made by the Committee, they shall provide written notification to the Engineer. The appeal shall be made within 2 business days of notification of the determination of non-good faith.

Counting DBE Participation Toward Meeting DBE Goal

(A) Participation

The total dollar value of the participation by a committed DBE will be counted toward the contract goal requirement. The total dollar value of participation by a committed DBE will be based upon the value of work actually performed by the DBE and the actual payments to DBE firms by the Contractor.

(B) Joint Checks

Prior notification of joint check use shall be required when counting DBE participation for services or purchases that involves the use of a joint check. Notification shall be through submission of Form JC-1 *(Joint Check Notification Form)* and the use of joint checks shall be in accordance with the Department's Joint Check Procedures.

(C) Subcontracts (Non-Trucking)

A DBE may enter into subcontracts. Work that a DBE subcontracts to another DBE firm may be counted toward the contract goal requirement. Work that a DBE subcontracts to a non-DBE firm does <u>not</u> count toward the contract goal requirement. If a DBE contractor or subcontractor subcontracts a significantly greater portion of the work of the contract than would be expected on the basis of standard industry practices, it shall be presumed that the DBE is not performing a commercially useful function. The DBE may present evidence to rebut this presumption to the Department. The Department's decision on the rebuttal of this presumption is subject to review by the Federal Highway Administration but is not administratively appealable to USDOT.

(D) Joint Venture

When a DBE performs as a participant in a joint venture, the Contractor may count toward its contract goal requirement a portion of the total value of participation with the DBE in the joint venture, that portion of the total dollar value being a distinct clearly defined portion of work that the DBE performs with its forces.

(E) Suppliers

A contractor may count toward its DBE requirement 60 percent of its expenditures for materials and supplies required to complete the contract and obtained from a DBE regular dealer and 100 percent of such expenditures from a DBE manufacturer.

(F) Manufacturers and Regular Dealers

A contractor may count toward its DBE requirement the following expenditures to DBE firms that are not manufacturers or regular dealers:

(1) The fees or commissions charged by a DBE firm for providing a *bona fide* service, such as professional, technical, consultant, or managerial services, or for providing bonds or insurance specifically required for the performance of a DOT-assisted contract, provided the fees or commissions are determined to be reasonable and not excessive as compared with fees and commissions customarily allowed for similar services.

(2) With respect to materials or supplies purchased from a DBE, which is neither a manufacturer nor a regular dealer, count the entire amount of fees or commissions charged for assistance in the procurement of the materials and supplies, or fees or transportation charges for the delivery of materials or supplies required on a job site (but not the cost of the materials and supplies themselves), provided the fees are determined to be reasonable and not excessive as compared with fees customarily allowed for similar services.

Commercially Useful Function

(A) DBE Utilization

The Contractor may count toward its contract goal requirement only expenditures to DBEs that perform a commercially useful function in the work of a contract. A DBE performs a commercially useful function when it is responsible for execution of the work of the contract and is carrying out its responsibilities by actually performing, managing, and supervising the work involved. To perform a commercially useful function, the DBE shall also be responsible with respect to materials and supplies used on the contract, for negotiating price, determining quality and quantity, ordering the material and installing (where applicable) and paying for the material itself. To determine whether a DBE is performing a commercially useful function, the Department will evaluate the amount of work subcontracted, industry practices, whether the amount the

firm is to be paid under the contract is commensurate with the work it is actually performing and the DBE credit claimed for its performance of the work, and any other relevant factors.

(B) DBE Utilization in Trucking

The following factors will be used to determine if a DBE trucking firm is performing a commercially useful function:

(1) The DBE shall be responsible for the management and supervision of the entire trucking operation for which it is responsible on a particular contract, and there shall not be a contrived arrangement for the purpose of meeting DBE goals.

(2) The DBE shall itself own and operate at least one fully licensed, insured, and operational truck used on the contract.

(3) The DBE receives credit for the total value of the transportation services it provides on the contract using trucks it owns, insures, and operates using drivers it employs.

(4) The DBE may subcontract the work to another DBE firm, including an owner-operator who is certified as a DBE. The DBE who subcontracts work to another DBE receives credit for the total value of the transportation services the subcontracted DBE provides on the contract.

(5) The DBE may also subcontract the work to a non-DBE firm, including from an owner-operator. The DBE who subcontracts the work to a non-DBE is entitled to credit for the total value of transportation services provided by the non-DBE subcontractor not to exceed the value of transportation services provided by DBE-owned trucks on the contract. Additional participation by non-DBE subcontractors receives credit only for the fee or commission it receives as a result of the subcontract arrangement. The value of services performed under subcontract agreements between the DBE and the Contractor will not count towards the DBE contract requirement.

(6) A DBE may lease truck(s) from an established equipment leasing business open to the general public. The lease must indicate that the DBE has exclusive use of and control over the truck. This requirement does not preclude the leased truck from working for others during the term of the lease with the consent of the DBE, so long as the lease gives the DBE absolute priority for use of the leased truck. This type of lease may count toward the DBE's credit as long as the driver is under the DBE's payroll.

(7) Subcontracted/leased trucks shall display clearly on the dashboard the name of the DBE that they are subcontracted/leased to and their own company name if it is not identified on the truck itself. Magnetic door signs are not permitted.

DBE Replacement

When a Contractor has relied on a commitment to a DBE firm (or an approved substitute DBE firm) to meet all or part of a contract goal requirement, the contractor shall not terminate the DBE for convenience. This includes, but is not limited to, instances in which the Contractor seeks to perform the work of the terminated subcontractor with another DBE subcontractor, a non-DBE subcontractor, or with the Contractor's own forces or those of an affiliate. A DBE may only be terminated after receiving the Engineer's written approval based upon a finding of good cause for the termination. The prime contractor must give the DBE firm five (5) calendar days to respond to the prime contractor's notice of termination and advise the prime contractor and the Department of the reasons, if any, why the firm objects to the proposed termination of its subcontract and why the Department should not approve the action.

All requests for replacement of a committed DBE firm shall be submitted to the Engineer for approval on Form RF-1 *(DBE Replacement Request)*. If the Contractor fails to follow this procedure, the Contractor may be disqualified from further bidding for a period of up to 6 months.

The Contractor shall comply with the following for replacement of a committed DBE:

(A) Performance Related Replacement

When a committed DBE is terminated for good cause as stated above, an additional DBE that was submitted at the time of bid may be used to fulfill the DBE commitment. A good faith effort will only be required for removing a committed DBE if there were no additional DBEs submitted at the time of bid to cover the same amount of work as the DBE that was terminated.

If a replacement DBE is not found that can perform at least the same amount of work as the terminated DBE, the Contractor shall submit a good faith effort documenting the steps taken. Such documentation shall include, but not be limited to, the following:

(1) Copies of written notification to DBEs that their interest is solicited in contracting the work defaulted by the previous DBE or in subcontracting other items of work in the contract.

(2) Efforts to negotiate with DBEs for specific subbids including, at a minimum:

(a) The names, addresses, and telephone numbers of DBEs who were contacted.
(b) A description of the information provided to DBEs regarding the plans and specifications for portions of the work to be performed.

(3) A list of reasons why DBE quotes were not accepted.

(4) Efforts made to assist the DBEs contacted, if needed, in obtaining bonding or insurance required by the Contractor.

(B) Decertification Replacement

(1) When a committed DBE is decertified by the Department after the SAF (*Subcontract Approval Form*) has been received by the Department, the Department will not require the Contractor to solicit replacement DBE participation equal to the remaining work to be performed by the decertified firm. The participation equal to the remaining work performed by the decertified firm will count toward the contract goal requirement.

(2) When a committed DBE is decertified prior to the Department receiving the SAF (*Subcontract Approval Form*) for the named DBE firm, the Contractor shall take all necessary and reasonable steps to replace the DBE subcontractor with another DBE subcontractor to perform at least the same amount of work to meet the DBE goal requirement. If a DBE firm is not found to do the same amount of work, a good faith effort must be submitted to NCDOT (see A herein for required documentation).

Changes in the Work

When the Engineer makes changes that result in the reduction or elimination of work to be performed by a committed DBE, the Contractor will not be required to seek additional participation. When the Engineer makes changes that result in additional work to be performed by a DBE based upon the Contractor's commitment, the DBE shall participate in additional work to the same extent as the DBE participated in the original contract work.

When the Engineer makes changes that result in extra work, which has more than a minimal impact on the contract amount, the Contractor shall seek additional participation by DBEs unless otherwise approved by the Engineer.

When the Engineer makes changes that result in an alteration of plans or details of construction, and a portion or all of the work had been expected to be performed by a committed DBE, the Contractor shall seek participation by DBEs unless otherwise approved by the Engineer.

When the Contractor requests changes in the work that result in the reduction or elimination of work that the Contractor committed to be performed by a DBE, the Contractor shall seek additional participation by DBEs equal to the reduced DBE participation caused by the changes.

Reports and Documentation

A SAF (*Subcontract Approval Form*) shall be submitted for all work which is to be performed by a DBE subcontractor. The Department reserves the right to require copies of actual subcontract agreements involving DBE subcontractors.

When using transportation services to meet the contract commitment, the Contractor shall submit a proposed trucking plan in addition to the SAF. The plan shall be submitted prior to beginning construction on the project. The plan shall include the names of all trucking firms proposed for

use, their certification type(s), the number of trucks owned by the firm, as well as the individual truck identification numbers, and the line item(s) being performed.

Within 30 calendar days of entering into an agreement with a DBE for materials, supplies or services, not otherwise documented by the SAF as specified above, the Contractor shall furnish the Engineer a copy of the agreement. The documentation shall also indicate the percentage (60% or 100%) of expenditures claimed for DBE credit.

Reporting Disadvantaged Business Enterprise Participation

The Contractor shall provide the Engineer with an accounting of payments made to all DBE firms, including material suppliers and contractors at all levels (prime, subcontractor, or second tier subcontractor). This accounting shall be furnished to the Engineer for any given month by the end of the following month. Failure to submit this information accordingly may result in the following action:

(A) Withholding of money due in the next partial pay estimate; or

(B) Removal of an approved contractor from the prequalified bidders' list or the removal of other entities from the approved subcontractors list.

While each contractor (prime, subcontractor, 2nd tier subcontractor) is responsible for accurate accounting of payments to DBEs, it shall be the prime contractor's responsibility to report all monthly and final payment information in the correct reporting manner.

Failure on the part of the Contractor to submit the required information in the time frame specified may result in the disqualification of that contractor and any affiliate companies from further bidding until the required information is submitted.

Failure on the part of any subcontractor to submit the required information in the time frame specified may result in the disqualification of that contractor and any affiliate companies from being approved for work on future projects until the required information is submitted.

Contractors reporting transportation services provided by non-DBE lessees shall evaluate the value of services provided during the month of the reporting period only.

At any time, the Engineer can request written verification of subcontractor payments.

The Contractor shall report the accounting of payments through the Department's DBE Payment Tracking System.

Failure to Meet Contract Requirements

Failure to meet contract requirements in accordance with Subarticle 102-15(J) of the *2012 Standard Specifications* may be cause to disqualify the Contractor.

CERTIFICATION FOR FEDERAL-AID CONTRACTS:

(3-21-90) SP1 G85

The prospective participant certifies, by signing and submitting this bid or proposal, to the best of his or her knowledge and belief, that:

(A) No Federal appropriated funds have been paid or will be paid, by or on behalf of the undersigned, to any person for influencing or attempting to influence an officer or employee of any Federal agency, a Member of Congress, an officer or employee of Congress, or an employee of a Member of Congress in connection with the awarding of any Federal contract, the making of any Federal grant, the making of any Federal loan, the entering into of any cooperative agreement, and the extension, continuation, renewal, amendment, or modification of any Federal contract, grant, loan, or cooperative agreement.

(B) If any funds other than Federal appropriated funds have been paid or will be paid to any person for influencing or attempting to influence an officer or employee of any Federal agency, a Member of Congress, an officer or employee of Congress, or an employee of a Member of Congress in connection with this Federal contract, grant, loan, or cooperative agreement, the undersigned shall complete and submit Standard Form-LLL, *Disclosure Form to Report Lobbying*, in accordance with its instructions.

This certification is a material representation of fact upon which reliance was placed when this transaction was made or entered into. Submission of this certification is a prerequisite for making or entering into this transaction imposed by *Section 1352, Title 31, U.S. Code*. Any person who fails to file the required certification shall be subject to a civil penalty of not less than $10,000 and not more than $100,000 for each such failure.

The prospective participant also agrees by submitting his or her bid or proposal that he or she shall require that the language of this certification be included in all lower tier subcontracts, which exceed $100,000 and that all such subrecipients shall certify and disclose accordingly.

U.S. DEPARTMENT OF TRANSPORTATION HOTLINE:

(11-22-94) 108-5 SP1 G100

To report bid rigging activities call: **1-800-424-9071**

The U.S. Department of Transportation (DOT) operates the above toll-free hotline Monday through Friday, 8:00 a.m. to 5:00 p.m. eastern time. Anyone with knowledge of possible bid rigging, bidder collusion, or other fraudulent activities should use the hotline to report such activities.

The hotline is part of the DOT's continuing effort to identify and investigate highway construction contract fraud and abuse is operated under the direction of the DOT Inspector General. All information will be treated confidentially and caller anonymity will be respected.

CARGO PREFERENCE ACT:

(2-16-16)

Privately owned United States-flag commercial vessels transporting cargoes are subject to the Cargo Preference Act (CPA) of 1954 requirements and regulations found in 46 CFR 381.7. Contractors are directed to clause (b) of 46 CFR 381.7 as follows:

(b) Contractor and Subcontractor Clauses. "Use of United States-flag vessels: The contractor agrees-

"(1) To utilize privately owned United States-flag commercial vessels to ship at least 50 percent of the gross tonnage (computed separately for dry bulk carriers, dry cargo liners, and tankers) involved, whenever shipping any equipment, material, or commodities pursuant to this contract, to the extent such vessels are available at fair and reasonable rates for United States-flag commercial vessels.

(2) To furnish within 20 days following the date of loading for shipments originating within the United States or within 30 working days following the date of loading for shipments originating outside the United States a legible copy of a rated, 'on-board' commercial ocean bill-of-lading in English for each shipment of cargo described in paragraph (b) (1) of this section to both the Contracting Officer (through the prime contractor in the case of subcontractor bills-of-lading) and to the Division of National Cargo, Office of Market Development, Maritime Administration, Washington, DC 20590.

(3) To insert the substance of the provisions of this clause in all subcontracts issued pursuant to this contract."

SUBSURFACE INFORMATION:

(7-1-95) 450 SP1 G112 A

There is **no** subsurface information available on this project. The Contractor shall make his own investigation of subsurface conditions.

LOCATING EXISTING UNDERGROUND UTILITIES:

(3-20-12) 105 SP1 G115

Revise the *2012 Standard Specifications* as follows:

Page 1-43, Article 105-8, line 28, after the first sentence, add the following:

Identify excavation locations by means of pre-marking with white paint, flags, or stakes or provide a specific written description of the location in the locate request.

RESOURCE CONSERVATION AND ENV. SUSTAINABLE PRACTICES:

(5-21-13) (Rev. 5-19-15) 104-13 SP1 G118

In accordance with North Carolina Executive Order 156, NCGS 130A-309.14(3), and NCGS 136-28.8, it is the objective of the Department to aid in the reduction of materials that become a part of our solid waste stream, to divert materials from landfills, to find ways to recycle and reuse materials, to consider and minimize, where economically feasible, the environmental impacts associated with agency land use and acquisition, construction, maintenance and facility management for the benefit of the Citizens of North Carolina.

To achieve the mission of reducing environmental impacts across the state, the Department is committed to supporting the efforts to initiate, develop and use products and construction methods that incorporate the use of recycled, solid waste products and environmentally sustainable practices in accordance with Article 104-13 of the *Standard Specifications*.

Report the quantities of reused or recycled materials either incorporated in the project or diverted from landfills and any practice that minimizes the environmental impact on the project annually on the Project Construction Reuse and Recycling Reporting Form. The Project Construction Reuse and Recycling Reporting Form and a location tool for local recycling facilities are available at:
http://connect.ncdot.gov/resources/Environmental/Pages/North-Carolina-Recycling-Locations.aspx.

Submit the Project Construction Reuse and Recycling Reporting Form by August 1 annually to valuemanagementunit@ncdot.gov. For questions regarding the form or reporting, please contact the State Value Management Engineer at 919-707-4810.

DOMESTIC STEEL:

(4-16-13) 106 SP1 G120

Revise the *2012 Standard Specifications* as follows:

P**age 1-49, Subarticle 106-1(B) Domestic Steel, lines 2-7,** replace the first paragraph with the following:

All steel and iron products that are permanently incorporated into this project shall be produced in the United States except minimal amounts of foreign steel and iron products may be used provided the combined material cost of the items involved does not exceed 0.1% of the total amount bid for the entire project or $2,500, whichever is greater. If invoices showing the cost of the material are not provided, the amount of the bid item involving the foreign material will be used for calculations. This minimal amount of foreign produced steel and iron products permitted for use is not applicable to high strength fasteners. Domestically produced high strength fasteners are required.

GIFTS FROM VENDORS AND CONTRACTORS:

(12-15-09) 107-1 SP1 G152

By Executive Order 24, issued by Governor Perdue, and *N.C.G.S.§ 133-32,* it is unlawful for any vendor or contractor (i.e. architect, bidder, contractor, construction manager, design professional, engineer, landlord, offeror, seller, subcontractor, supplier, or vendor), to make gifts or to give favors to any State employee of the Governor's Cabinet Agencies (i.e. Administration, Commerce, Correction, Crime Control and Public Safety, Cultural Resources, Environment and Natural Resources, Health and Human Services, Juvenile Justice and Delinquency Prevention, Revenue, Transportation, and the Office of the Governor). This prohibition covers those vendors and contractors who:

(A) Have a contract with a governmental agency; or
(B) Have performed under such a contract within the past year; or
(C) Anticipate bidding on such a contract in the future.

For additional information regarding the specific requirements and exemptions, vendors and contractors are encouraged to review Executive Order 24 and *N.C.G.S. § 133-32*.

Executive Order 24 also encouraged and invited other State Agencies to implement the requirements and prohibitions of the Executive Order to their agencies. Vendors and contractors should contact other State Agencies to determine if those agencies have adopted Executive Order 24.

LIABILITY INSURANCE:
(5-20-14) SP1 G160

Revise the *2012 Standard Specifications* as follows:

Page 1-60, Article 107-15 LIABILITY INSURANCE, line 16, add the following as the second sentence of the third paragraph:

Prior to beginning services, all contractors shall provide proof of coverage issued by a workers' compensation insurance carrier, or a certificate of compliance issued by the Department of Insurance for self-insured subcontractors, irrespective of whether having regularly in service fewer than three employees.

EMPLOYMENT:
(11-15-11) (Rev. 1-17-12) 108, 102 SP1 G184

Revise the *2012 Standard Specifications* as follows:

Page 1-20, Subarticle 102-15(O), delete and replace with the following:

(O) Failure to restrict a former Department employee as prohibited by Article 108-5.

Page 1-65, Article 108-5 Character of Workmen, Methods, and Equipment, line 32, delete all of line 32, the first sentence of the second paragraph and the first word of the second sentence of the second paragraph.

STATE HIGHWAY ADMINISTRATOR TITLE CHANGE:
(9-18-12) SP1 G185

Revise the *2012 Standard Specifications* as follows:

Replace all references to "State Highway Administrator" with "Chief Engineer".

SUBLETTING OF CONTRACT:

(11-18-2014) 108-6 SP1 G186

Revise the *2012 Standard Specifications* as follows:

Page 1-66, Article 108-6 Subletting of Contract, line 37, add the following as the second sentence of the first paragraph:

All requests to sublet work shall be submitted within 30 days of the date of availability or prior to expiration of 20% of the contract time, whichever date is later, unless otherwise approved by the Engineer.

Page 1-67, Article 108-6 Subletting of Contract, line 7, add the following as the second sentence of the fourth paragraph:

Purchasing materials for subcontractors is not included in the percentage of work required to be performed by the Contractor. If the Contractor sublets items of work but elects to purchase material for the subcontractor, the value of the material purchased will be included in the total dollar amount considered to have been sublet.

DIVISION LET CONTRACT PREQUALIFICATION:

(07-01-14)(6-1-15) SPD 01-410

Any firm that wishes to bid as a prime contractor shall be prequalified as a Bidder or PO Prime Contractor prior to submitting a bid. Information regarding prequalification can be found at: https://connect.ncdot.gov/business/Prequal/Pages/default.aspx.

In addition, the prime contractor and/or subcontractor(s) shall be prequalified in the work code(s) for which they identify as work items in the prime contractor's construction progress schedule that they will complete themselves. Any contractor identified as working outside their expertise may be considered in default of contract.

CONTRACT PAYMENT AND PERFORMANCE BOND:

(01-30-14) 102-8, 102-10 SPD 01-420

A performance bond in the amount of one hundred percent (100%) of the contract amount, conditioned upon the faithful performance of the contract in accordance with specifications and conditions of the contract is required for contracts of $500,000 or more. Such bond shall be solely for the protection of the North Carolina Department of Transportation and the State of North Carolina.

A payment bond in the amount of one hundred percent (100%) of the contract amount, conditioned upon the prompt payment for all labor or materials for which the Contractor, or his subcontractors, are liable is required for Construction contracts greater than $500,000. The payment bond shall be solely for the protection of persons or firms furnishing materials or performing labor for this contract for which the Contractor is liable.

The successful bidder, within fourteen (14) days after notice of award, shall provide the Department with a contract payment bond and a contract performance bond each in an amount equal to 100 percent of the amount of the contract.

PROJECT SPECIAL PROVISIONS

ROADWAY

Traffic Control is considered to be incidental to all other pay items in this contract.

REPAIR OF EXISTING PAVEMENT:

(7-1-95) (Rev. 5-20-14) 610 SP6 R58R

Description

The Contractor's attention is directed to the fact that the existing pavement shall be removed and repaired prior to resurfacing in the areas indicated in the contract.

Materials

Refer to Division 6 of the *2012 Standard Specifications*.

Item	Section
Asphalt Concrete Base Course, Type __	610

Construction Methods

The repair of the existing pavement includes, but is not limited to, the cutting of the existing pavement to a neat vertical joint and uniform line; the removal and disposal of pavement, base, and subgrade material as approved or directed by the Engineer; the coating of the area to be repaired with a tack coat; and conditioning of the surface on which the base course material is to be placed.

Do not excavate below the plane of the bottom of existing pavement, unless otherwise directed by the Engineer. Replace material excavated below existing pavement with Asphalt Concrete Base Course, Type __ in layers not to exceed 5 inch compacted.

Machine place the Asphalt Concrete Base Course, Type __ in two equal layers. Perform compaction of the base course material at transverse joint by the use of mechanical hand tamps or other equipment approved by the Engineer in order to achieve required density.

Construct the pavement repair so the surface of the complete repair matches the surface of existing pavement.

Schedule operations so all areas where pavement has been removed will be repaired and all lanes of traffic restored on the same day of the pavement removal. The Contractor will be restricted to repairing one side of the existing pavement at a time unless otherwise permitted by the Engineer.

Measurement and Payment

Asphalt Concrete Base Course, Type __ will be measured and paid in accordance with Article 610-16 of the *2012 Standard Specifications*.

Furnished asphalt binder for the mix will be paid in accordance with Article 620-4 of the *2012 Standard Specifications*.

If it becomes necessary to excavate below existing pavement, measurement and payment for all labor, equipment, and incidentals necessary to complete the excavation shall be made in accordance with Article 104-7 of the *2012 Standard Specifications*.

MATERIALS:

(2-21-12) (Rev. 3-15-16) 1000, 1002, 1005, 1016, 1018, 1024, 1050, 1074, 1078, 1080, 1081, 1086, 1084, 1087, 1092 SP10 R01

Revise the *2012 Standard Specifications* as follows:

Page 10-1, Article 1000-1, DESCRIPTION, lines 9-10, replace the last sentence of the first paragraph with the following:

Type IL, IP, IS or IT blended cement may be used instead of Portland cement.

Page 10-1, Article 1000-1, DESCRIPTION, line 14, add the following:

If any change is made to the mix design, submit a new mix design (with the exception of an approved pozzolan source change).

If any major change is made to the mix design, also submit new test results showing the mix design conforms to the criteria. Define a major change to the mix design as:

(1) A source change in coarse aggregate, fine aggregate or cement.

(2) A pozzolan class or type change (e.g. Class F fly ash to Class C fly ash).

(3) A quantitative change in coarse aggregate (applies to an increase or decrease greater than 5%), fine aggregate (applies to an increase or decrease greater than 5%), water (applies to an increase only), cement (applies to a decrease only), or pozzolan (applies to an increase or decrease greater than 5%).

Use materials which do not produce a mottled appearance through rusting or other staining of the finished concrete surface.

Page 10-1, Article 1000-2, MATERIALS, line 16; Page 10-8, Subarticle 1000-7(A), Materials, line 8; and Page 10-18, Article 1002-2, MATERIALS, line 9, add the following to the table of item references:

Item	**Section**
Type IL Blended Cement	1024-1

Page 10-1, Subarticle 1000-3(A), Composition and Design, lines 25-27, replace the second paragraph with the following:

Fly ash may be substituted for cement in the mix design up to 30% at a rate of 1.0 lb of fly ash to each pound of cement replaced.

Page 10-2, Subarticle 1000-3(A), Composition and Design, lines 12-21, delete the third paragraph through the sixth paragraph beginning with "If any change is made to the mix design, submit…" through "…(applies to a decrease only)."

Page 10-5, Table 1000-1, REQUIREMENTS FOR CONCRETE, replace with the following:

TABLE 1000-1
REQUIREMENTS FOR CONCRETE

Class of Concrete	Min. Comp. Strength at 28 days	Maximum Water-Cement Ratio				Consistency Max. Slump		Cement Content			
		Air-Entrained Concrete		Non Air-Entrained Concrete		Vibrated	Non-Vibrated	Vibrated		Non- Vibrated	
		Rounded Aggregate	Angular Aggre-gate	Rounded Aggregate	Angular Aggre-gate			Min.	Max.	Min.	Max.
Units	*psi*					*inch*	*inch*	*lb/cy*	*lb/cy*	*lb/cy*	*lb/cy*
AA	4,500	0.381	0.426	-	-	3.5	-	639	715	-	-
AA Slip Form	4,500	0.381	0.426	-	-	1.5	-	639	715	-	-
Drilled Pier	4,500	-	-	0.450	0.450	-	5-7 dry 7-9 wet	-	-	640	800
A	3,000	0.488	0.532	0.550	0.594	3.5	4	564	-	602	-
B	2,500	0.488	0.567	0.559	0.630	1.5 machine-placed 2.5 hand-placed	4	508	-	545	-
Sand Light-weight	4,500	-	0.420	-	-	4	-	715	-	-	-
Latex Modified	3,000 7 day	0.400	0.400	-	-	6	-	658	-	-	-
Flowable Fill excavatable	150 max. at 56 days	as needed	as needed	as needed	as needed	-	Flow-able	-	-	40	100
Flowable Fill non-excavatable	125	as needed	as needed	as needed	as needed	-	Flow-able	-	-	100	as needed
Pavement	4,500 design, field 650 flexural, design only	0.559	0.559	-	-	1.5 slip form 3.0 hand place	-	526	-	-	-
Precast	See Table 1077-1	as needed	as needed	-	-	6	as needed	as needed	as needed	as needed	as needed
Prestress	per contract	See Table 1078-1	See Table 1078-1	-	-	8	-	564	as needed	-	-

Page 10-6, Subarticle 1000-4(I), Use of Fly Ash, lines 36-2, replace the first paragraph with the following:

Fly ash may be substituted for cement in the mix design up to 30% at a rate of 1.0 lb of fly ash to each pound of cement replaced. Use Table 1000-1 to determine the maximum allowable water-cementitious material (cement + fly ash) ratio for the classes of concrete listed.

Page 10-7, Table 1000-3, MAXIMUM WATER-CEMENTITIOUS MATERIAL RATIO, delete the table.

Page 10-7, Article 1000-5, HIGH EARLY STRENGTH PORTLAND CEMENT CONCRETE, lines 30-31, delete the second sentence of the third paragraph.

Page 10-19, Article 1002-3, SHOTCRETE FOR TEMPORARY SUPPORT OF EXCAVATIONS, line 30, add the following at the end of Section 1002:

(H) Handling and Storing Test Panels

Notify the Area Materials Engineer when preconstruction or production test panels are made within 24 hours of shooting the panels. Field cure and protect test panels from damage in accordance with ASTM C1140 until the Department transports panels to the Materials and Tests Regional Laboratory for coring.

Page 10-23, Table 1005-1, AGGREGATE GRADATION-COARSE AGGREGATE, replace with the following:

TABLE 1005-1
AGGREGATE GRADATION - COARSE AGGREGATE

Std. Size #	Percentage of Total by Weight Passing												Remarks
	2"	1 1/2"	1"	3/4"	1/2"	3/8"	#4	#8	#10	#16	#40	#200	
4	100	90-100	20-55	0-15	-	0-5	-	-	-	-	-	**A**	Asphalt Plant Mix
467M	100	95-100	-	35-70	-	0-30	0-5	-	-	-	-	**A**	Asphalt Plant Mix
5	-	100	90-100	20-55	0-10	0-5	-	-	-	-	-	**A**	AST, Sediment Control Stone
57	-	100	95-100	-	25-60	-	0-10	0-5	-	-	-	**A**	AST, Str. Concrete, Shoulder Drain, Sediment Control Stone
57M	-	100	95-100	-	25-45	-	0-10	0-5	-	-	-	**A**	AST, Concrete Pavement
6M	-	-	100	90-100	20-55	0-20	0-8	-	-	-	-	**A**	AST
67	-	-	100	90-100	-	20-55	0-10	0-5	-	-	-	**A**	AST, Str. Concrete, Asphalt Plant Mix
78M	-	-	-	100	98-100	75-100	20-45	0-15	-	-	-	**A**	Asphalt Plant Mix, AST, Str. Conc, Weep Hole Drains
14M	-	-	-	-	-	100	35-70	5-20	-	0-8	-	**A**	Asphalt Plant Mix, AST, Weep Hole Drains, Str. Concrete
9	-	-	-	-	-	100	85-100	10-40	-	0-10	-	**A**	AST
ABC	-	100	75-97	-	55-80	-	35-55	-	25-45	-	14-30	4-12[B]	Aggregate Base Course, Aggregate Stabilization
ABC (M)	-	100	75-100	-	45-79	-	20-40	-	0-25	-	-	0-12[B]	Maintenance Stabilization
Light-weight[C]	-	-	-	-	100	80-100	5-40	0-20	-	0-10	-	0-2.5	AST

A. See Subarticle 1005-4(A).
B. See Subarticle 1005-4(B).
C. For Lightweight Aggregate used in Structural Concrete, see Subarticle 1014-2(E)(6).

Page 10-39, Article 1016-3, CLASSIFICATIONS , lines 27-32, replace with the following:

Select material is clean, unweathered durable, blasted rock material obtained from an approved source. While no specific gradation is required, the below criteria will be used to evaluate the materials for visual acceptance by the Engineer:

(A) At least 50% of the rock has a diameter of from 1.5 ft to 3 ft,

(B) 30% of the rock ranges in size from 2" to 1.5 ft in diameter, and

(C) Not more than 20% of the rock is less than 2" in diameter. No rippable rock will be permitted.

Page 10-40, Tables 1018-1 and 1018-2, PIEDMONT, WESTERN AND COASTAL AREA CRITERIA FOR ACCEPTANCE OF BORROW MATERIAL, under second column in both tables, replace second row with the following:

Acceptable, but not to be used in the top 3 ft of embankment or backfill

Page 10-46, Article 1024-1, PORTLAND CEMENT, line 33, add the following as the ninth paragraph:

Use Type IL blended cement that meets AASHTO M 240, except that the limestone content is limited to between 5 and 12% by weight and the constituents shall be interground. Class F fly ash can replace a portion of Type IL blended cement and shall be replaced as outlined in Subarticle 1000-4(I) for Portland cement. For mixes that contain cement with alkali content between 0.6% and 1.0% and for mixes that contain a reactive aggregate documented by the Department, use a pozzolan in the amount shown in Table 1024-1.

Page 10-46, Table 1024-1, POZZOLANS FOR USE IN PORTLAND CEMENT CONCRETE, replace with the following:

TABLE 1024-1
POZZOLANS FOR USE IN PORTLAND CEMENT CONCRETE

Pozzolan	Rate
Class F Fly Ash	20% - 30% by weight of required cement content with 1.0 lb Class F fly ash per lb of cement replaced
Ground Granulated Blast Furnace Slag	35%-50% by weight of required cement content with 1.0 lb slag per lb of cement replaced
Microsilica	4%-8% by weight of required cement content with 1.0 lb microsilica per lb of cement replaced

Page 10-47, Subarticle 1024-3(B), Approved Sources, lines 16-18, replace the second sentence of the second paragraph with the following:

Tests shall be performed by AASHTO's designated National Transportation Product Evaluation Program (NTPEP) laboratory for concrete admixture testing.

Page 10-65, Article 1050-1, GENERAL, line 41, replace the first sentence with the following:

All fencing material and accessories shall meet Section 106.

Page 10-115, Subarticle 1074-7(B), Gray Iron Castings, lines 10-11, replace the first two sentences with the following:

Supply gray iron castings meeting all facets of AASHTO M 306 excluding proof load. Proof load testing will only be required for new casting designs during the design process, and conformance to M306 loading (40,000 lb.) will be required only when noted on the design documents.

Page 10-126, Table 1078-1, REQUIREMENTS FOR CONCRETE, replace with the following:

TABLE 1078-1 REQUIREMENTS FOR CONCRETE		
Property	**28 Day Design Compressive Strength 6,000 psi or less**	**28 Day Design Compressive Strength greater than 6,000 psi**
Maximum Water/Cementitious Material Ratio	0.45	0.40
Maximum Slump without HRWR	3.5"	3.5"
Maximum Slump with HRWR	8"	8"
Air Content (upon discharge into forms)	5 + 2%	5 + 2%

Page 10-151, Article 1080-4, INSPECTION AND SAMPLING, lines 18-22, replace (B), (C) and (D) with the following:

(B) At least 3 panels prepared as specified in 5.5.10 of AASHTO M 300, Bullet Hole Immersion Test.

(C) At least 3 panels of 4"x6"x1/4" for the Elcometer Adhesion Pull Off Test, ASTM D4541.

(D) A certified test report from an approved independent testing laboratory for the Salt Fog Resistance Test, Cyclic Weathering Resistance Test, and Bullet Hole Immersion Test as specified in AASHTO M 300.

(E) A certified test report from an approved independent testing laboratory that the product has been tested for slip coefficient and meets AASHTO M253, Class B.

Page 10-161, Subarticle 1081-1(A), Classifications, lines 29-33, delete first 3 sentences of the description for Type 2 and replace with the following:

Type 2 - A low-modulus, general-purpose adhesive used in epoxy mortar repairs. It may be used to patch spalled, cracked or broken concrete where vibration, shock or expansion and contraction are expected.

Page 10-162, Subarticle 1081-1(A), Classifications, lines 4-7, delete the second and third sentences of the description for Type 3A. **Lines 16-22,** delete Types 6A, 6B and 6C.

Page 10-162, Subarticle 1081-1(B), Requirements, lines 26-30, replace the second paragraph with the following:

For epoxy resin systems used for embedding dowel bars, threaded rods, rebar, anchor bolts and other fixtures in hardened concrete, the manufacturer shall submit test results showing that the bonding system will obtain 125% of the specified required yield strength of the fixture. Furnish certification that, for the particular bolt grade, diameter and embedment depth required, the anchor system will not fail by adhesive failure and that there is no movement of the anchor bolt. For certification and anchorage, use 3,000 psi as the minimum Portland cement concrete compressive strength used in this test. Use adhesives that meet Section 1081.

List the properties of the adhesive on the container and include density, minimum and maximum temperature application, setting time, shelf life, pot life, shear strength and compressive strength.

Page 10-163, Table 1081-1, PROPERTIES OF MIXED EPOXY RESIN SYSTEMS, replace with the following:

TABLE 1081-1
PROPERTIES OF MIXED EPOXY RESIN SYSTEMS

Property	Type 1	Type 2	Type 3	Type 3A	Type 4A	Type 4B	Type 5
Viscosity-Poises at 77°F ± 2°F	Gel	10-30	25-75	Gel	40-150	40-150	1-6
Spindle No.	-	3	4	--	4	4	2
Speed (RPM)	-	20	20	--	10	10	50
Pot Life (Minutes)	20-50	30-60	20-50	5-50	40-80	40-80	20-60
Minimum Tensile Strength at 7 days (psi)	1,500	2,000	4,000	4,000	1,500	1,500	4,000
Tensile Elongation at 7 days (%)	30 min.	30 min.	2-5	2-5	5-15	5-15	2-5
Min. Compressive Strength of 2". mortar cubes at 24 hours	3,000 (Neat)	4,000-	6,000-	6,000 (Neat)	3,000	3,000	6,000
Min. Compressive Strength of 2" mortar cubes at 7 days	5,000 (Neat)	-	-	-	-	5,000	-
Maximum Water Absorption (%)	1.5	1.0	1.0	1.5	1.0	1.0	1.0
Min. Bond Strength Slant Shear Test at 14 days (psi)	1,500	1,500	2,000	2,000	1,500	1,500	1,500

Page 10-164, Subarticle 1081-1(E), Prequalification, lines 31-33, replace the second sentence of the first paragraph with the following:

Manufacturers choosing to supply material for Department jobs must submit an application through the Value Management Unit with the following information for each type and brand name:

Page 10-164, Subarticle 1081-1(E)(3), line 37, replace with the following:

(3) Type of the material in accordance with Articles 1081-1 and 1081-4,

Page 10-165, Subarticle 1081-1(E)(6), line 1, in the first sentence of the first paragraph replace "AASHTO M 237" with "the specifications".

Page 10-165, Subarticle 1081-1(E), Prequalification, line 9-10, delete the second sentence of the last paragraph.

Page 10-165, Subarticle 1081-1(F), Acceptance, line 14, in the first sentence of the first paragraph replace "Type 1" with "Type 3".

Page 10-169, Subarticle 1081-3(G), Anchor Bolt Adhesives, delete this subarticle.

Page 10-170, Article 1081-3, HOT BITUMEN, line 9, add the following at the end of Section 1081:

1081-4 EPOXY RESIN ADHESIVE FOR BONDING TRAFFIC MARKINGS

(A) General

This section covers epoxy resin adhesive for bonding traffic markers to pavement surfaces.

(B) Classification

The types of epoxies and their uses are as shown below:

Type I – Rapid Setting, High Viscosity, Epoxy Adhesive. This type of adhesive provides rapid adherence to traffic markers to the surface of pavement.

Type II – Standard Setting, High Viscosity, Epoxy Adhesive. This type of adhesive is recommended for adherence of traffic markers to pavement surfaces when rapid set is not required.

Type III – Rapid Setting, Low Viscosity, Water Resistant, Epoxy Adhesive. This type of rapid setting adhesive, due to its low viscosity, is appropriate only for use with embedded traffic markers.

Type IV – Standard Set Epoxy for Blade Deflecting-Type Plowable Markers.

(C) Requirements

Epoxies shall conform to the requirements set forth in AASHTO M 237.

(D) Prequalification

Refer to Subarticle 1081-1(E).

(E) Acceptance

Refer to Subarticle 1081-1(F).

Page 10-173, Article 1084-2, STEEL SHEET PILES, lines 37-38, replace first paragraph with the following:

Steel sheet piles detailed for permanent applications shall be hot rolled and meet ASTM A572 or ASTM A690 unless otherwise required by the plans. Steel sheet piles shall be coated as required by the plans. Galvanized sheet piles shall be coated in accordance with Section 1076. Metallized sheet piles shall be metallized in accordance to the Project Special Provision "Thermal Sprayed Coatings (Metallization)" with an 8 mil, 99.9% aluminum alloy coating and a 0.5 mil seal coating. Any portion of the metallized sheet piling encased in concrete shall

receive a barrier coat. The barrier coat shall be an approved waterborne coating with a low-viscosity which readily absorbs into the pores of the aluminum thermal sprayed coating. The waterborne coating shall be applied at a spreading rate that results in a theoretical 1.5 mil dry film thickness. The manufacturer shall issue a letter of certification that the resin chemistry of the waterborne coating is compatible with the 99.9% aluminum thermal sprayed alloy and suitable for tidal water applications.

Page 10-174, Subarticle 1086-1(B)(1), Epoxy, lines 18-24, replace with the following:

The epoxy shall meet Article 1081-4.

The 2 types of epoxy adhesive which may be used are Type I, Rapid Setting, and Type II, Standard Setting. Use Type II when the pavement temperature is above 60°F or per the manufacturer's recommendations whichever is more stringent. Use Type I when the pavement temperature is between 50°F and 60°F or per the manufacturer's recommendations whichever is more stringent. Epoxy adhesive Type I, Cold Set, may be used to attach temporary pavement markers to the pavement surface when the pavement temperature is between 32°F and 50°F or per the manufacturer's recommendations whichever is more stringent.

Page 10-175, Subarticle 1086-2(E), Epoxy Adhesives, line 27, replace "Section 1081" with "Article 1081-4".

Page 10-177, Subarticle 1086-3(E), Epoxy Adhesives, line 22, replace "Section 1081" with "Article 1081-4".

Page 10-179, Subarticle 1087-4(A), Composition, lines 39-41, replace the third paragraph with the following:

All intermixed and drop-on glass beads shall not contain more than 75 ppm arsenic or 200 ppm lead.

Page 10-180, Subarticle 1087-4(B), Physical Characteristics, line 8, replace the second paragraph with the following:

All intermixed and drop-on glass beads shall comply with NCGS § 136-30.2 and 23 USC § 109(r).

Page 10-181, Subarticle 1087-7(A), Intermixed and Drop-on Glass Beads, line 24, add the following after the first paragraph:

Use X-ray Fluorescence for the normal sampling procedure for intermixed and drop-on beads, without crushing, to check for any levels of arsenic and lead. If any arsenic or lead is detected, the sample shall be crushed and repeat the test using X-ray Fluorescence. If the X-ray Fluorescence test shows more than a LOD of 5 ppm, test the beads using United States Environmental Protection Agency Method 6010B, 6010C or 3052 for no more than 75 ppm arsenic or 200 ppm lead.

GROUT PRODUCTION AND DELIVERY:

(3-17-15) 1003 SP10 R20

Revise the *2012 Standard Specifications* as follows:

Replace Section 1003 with the following:

SECTION 1003
GROUT PRODUCTION AND DELIVERY

1003-1 DESCRIPTION

This section addresses cement grout to be used for structures, foundations, retaining walls, concrete barriers, embankments, pavements and other applications in accordance with the contract. Produce non-metallic grout composed of Portland cement and water and at the Contractor's option or as required, aggregate and pozzolans. Include chemical admixtures as required or needed. Provide sand cement or neat cement grout as required. Define "sand cement grout" as grout with only fine aggregate and "neat cement grout" as grout without aggregate.

The types of grout with their typical uses are as shown below:

Type 1 – A cement grout with only a 3-day strength requirement and a fluid consistency that is typically used for filling subsurface voids.

Type 2 – A nonshrink grout with strength, height change and flow conforming to ASTM C1107 that is typically used for foundations, ground anchors and soil nails.

Type 3 – A nonshrink grout with high early strength and freeze-thaw durability requirements that is typically used in pile blockouts, grout pockets, shear keys, dowel holes and recesses for concrete barriers and structures.

Type 4 – A neat cement grout with low strength, a fluid consistency and high fly ash content that is typically used for slab jacking.

Type 5 – A low slump, low mobility sand cement grout with minimal strength that is typically used for compaction grouting.

1003-2 MATERIALS

Refer to Division 10.

Item	Section
Chemical Admixtures	1024-3
Fine Aggregate	1014-1
Fly Ash	1024-5
Ground Granulated Blast Furnace Slag	1024-6
Portland Cement	1024-1
Silica Fume	1024-7
Water	1024-4

Do not use grout that contains soluble chlorides or more than 1% soluble sulfate. At the Contractor's option, use an approved packaged grout instead of the materials above except for water. Use packaged grouts that are on the NCDOT Approved Products List.

Use admixtures for grout that are on the NCDOT Approved Products List or other admixtures in accordance with Subarticle 1024-3(E) except do not use concrete additives or unclassified or other admixtures in Type 4 or 5 grout. Use Class F fly ash for Type 4 grout and Type II Portland cement for Type 5 grout.

Use well graded rounded aggregate with a gradation, liquid limit (LL) and plasticity index (PI) that meet Table 1003-1 for Type 5 grout. Fly ash may be substituted for a portion of the fines in the aggregate. Do not use any other pozzolans in Type 5 grout.

TABLE 1003-1
AGGREGATE REQUIREMENTS FOR TYPE 5 GROUT

Gradation		Maximum Liquid Limit	Maximum Plasticity Index
Sieve Designation per AASHTO M 92	**Percentage Passing (% by weight)**		
3/8"	100	N/A	N/A
No. 4	70 – 95		
No. 8	50 – 90		
No. 16	30 – 80		
No. 30	25 – 70		
No. 50	20 – 50		
No. 100	15 – 40		
No. 200	10 – 30	25	10

1003-3 COMPOSITION AND DESIGN

When using an approved packaged grout, a grout mix design submittal is not required. Otherwise, submit proposed grout mix designs for each grout mix to be used in the work. Mixes for all grout shall be designed by a Certified Concrete Mix Design Technician or an Engineer licensed by the State of North Carolina. Mix proportions shall be determined by a testing laboratory approved by the Department. Base grout mix designs on laboratory trial batches that meet Table 1003-2 and this section. With permission, the Contractor may use a quantity of chemical admixture within the range shown on the current list of approved admixtures maintained by the Materials and Tests Unit.

Submit grout mix designs in terms of saturated surface dry weights on Materials and Tests Form 312U at least 35 days before proposed use. Adjust batch proportions to compensate for surface moisture contained in the aggregates at the time of batching. Changes in the saturated surface dry mix proportions will not be permitted unless revised grout mix designs have been submitted to the Engineer and approved.

Accompany Materials and Tests Form 312U with a listing of laboratory test results of compressive strength, density and flow or slump and if applicable, aggregate gradation,

durability and height change. List the compressive strength of at least three 2" cubes at the age of 3 and 28 days.

The Engineer will review the grout mix design for compliance with the contract and notify the Contractor as to its acceptability. Do not use a grout mix until written notice has been received. Acceptance of the grout mix design or use of approved packaged grouts does not relieve the Contractor of his responsibility to furnish a product that meets the contract. Upon written request from the Contractor, a grout mix design accepted and used satisfactorily on any Department project may be accepted for use on other projects.

Perform laboratory tests in accordance with the following test procedures:

Property	**Test Method**
Aggregate Gradation[A]	AASHTO T 27
Compressive Strength	AASHTO T 106
Density (Unit Weight)	AASHTO T 121, AASHTO T 133[B], ANSI/API RP[C] 13B-1[B] (Section 4, Mud Balance)
Durability	AASHTO T 161[D]
Flow	ASTM C939 (Flow Cone)
Height Change	ASTM C1090[E]
Slump	AASHTO T 119

A. Applicable to grout with aggregate.
B. Applicable to Neat Cement Grout.
C. American National Standards Institute/American Petroleum Institute Recommended Practice.
D. Procedure A (Rapid Freezing and Thawing in Water) required.
E. Moist room storage required.

1003-4 GROUT REQUIREMENTS

Provide grout types in accordance with the contract. Use grouts with properties that meet Table 1003-2. The compressive strength of the grout will be considered the average compressive strength test results of three 2" cubes at each age. Make cubes that meet AASHTO T 106 from the grout delivered for the work or mixed on-site. Make cubes at such frequencies as the Engineer may determine and cure them in accordance with AASHTO T 106.

TABLE 1003-2 GROUT REQUIREMENTS					
Type of Grout	**Minimum Compressive Strength at**		**Height Change at 28 days**	**Flow[A]/Slump[B]**	**Minimum Durability Factor**
	3 days	**28 days**			
1	3,000 psi	–	–	10 – 30 sec	–
2	Table 1[C]			Fluid Consistency[C]	–
3	5,000 psi	–	0 – 0.2%	Per Accepted Grout Mix Design/ Approved Packaged Grout	80
4[D]	600 psi	1,500 psi	–	10 – 26 sec	–
5	–	500 psi	–	1 – 3"	–

A. Applicable to Type 1 through 4 grouts.
B. Applicable to Type 5 grout.
C. ASTM C1107.
D. Use Type 4 grout with proportions by volume of 1 part cement and 3 parts fly ash.

1003-5 TEMPERATURE REQUIREMENTS

When using an approved packaged grout, follow the manufacturer's instructions for grout and air temperature at the time of placement. Otherwise, the grout temperature at the time of placement shall be not less than 50°F nor more than 90°F. Do not place grout when the air temperature measured at the location of the grouting operation in the shade away from artificial heat is below 40°F.

1003-6 ELAPSED TIME FOR PLACING GROUT

Agitate grout continuously before placement. Regulate the delivery so the maximum interval between the placing of batches at the work site does not exceed 20 minutes. Place grout before exceeding the times in Table 1003-3. Measure the elapsed time as the time between adding the mixing water to the grout mix and placing the grout.

TABLE 1003-3 ELAPSED TIME FOR PLACING GROUT (with continuous agitation)		
Air or Grout Temperature, Whichever is Higher	**Maximum Elapsed Time**	
	No Retarding Admixture Used	**Retarding Admixture Used**
90°F or above	30 minutes	1 hr. 15 minutes
80°F through 89°F	45 minutes	1 hr. 30 minutes
79°F or below	60 minutes	1 hr. 45 minutes

1003-7 MIXING AND DELIVERY

Use grout free of any lumps and undispersed cement. When using an approved packaged grout, mix

grout in accordance with the manufacturer's instructions. Otherwise, comply with Articles 1000-8 through 1000-12 to the extent applicable for grout instead of concrete.

STANDARD SPECIAL PROVISION
AVAILABILITY OF FUNDS – TERMINATION OF CONTRACTS

(5-20-08) Z-2

General Statute 143C-6-11. (h) Highway Appropriation is hereby incorporated verbatim in this contract as follows:

(h) Amounts Encumbered. – Transportation project appropriations may be encumbered in the amount of allotments made to the Department of Transportation by the Director for the estimated payments for transportation project contract work to be performed in the appropriation fiscal year. The allotments shall be multiyear allotments and shall be based on estimated revenues and shall be subject to the maximum contract authority contained in *General Statute 143C-6-11(c)*. Payment for transportation project work performed pursuant to contract in any fiscal year other than the current fiscal year is subject to appropriations by the General Assembly. Transportation project contracts shall contain a schedule of estimated completion progress, and any acceleration of this progress shall be subject to the approval of the Department of Transportation provided funds are available. The State reserves the right to terminate or suspend any transportation project contract, and any transportation project contract shall be so terminated or suspended if funds will not be available for payment of the work to be performed during that fiscal year pursuant to the contract. In the event of termination of any contract, the contractor shall be given a written notice of termination at least 60 days before completion of scheduled work for which funds are available. In the event of termination, the contractor shall be paid for the work already performed in accordance with the contract specifications.

Payment will be made on any contract terminated pursuant to the special provision in accordance with Subarticle 108-13(E) of the *2012 Standard Specifications*.

STANDARD SPECIAL PROVISION

ERRATA

(1-17-12) (Rev. 04-21-15) Z-4

Revise the *2012 Standard Specifications* as follows:

Division 2

Page 2-7, line 31, Article 215-2 Construction Methods, replace "Article 107-26" with "Article 107-25".

Page 2-17, Article 226-3, Measurement and Payment, line 2, delete "pipe culverts,".

Page 2-20, Subarticle 230-4(B), Contractor Furnished Sources, change references as follows: Line 1, replace "(4) Buffer Zone" with "(c) Buffer Zone"; **Line 12,** replace "(5) Evaluation for Potential Wetlands and Endangered Species" with "(d) Evaluation for Potential Wetlands and Endangered Species"; and **Line 33,** replace "(6) Approval" with "(4) Approval".

Division 3

Page 3-1, after line 15, Article 300-2 Materials, replace "1032-9(F)" with "1032-6(F)".

Division 4

Page 4-77, line 27, Subarticle 452-3(C) Concrete Coping, replace "sheet pile" with "reinforcement".

Division 6

Page 6-7, line 31, Article 609-3 Field Verification of Mixture and Job Mix Formula Adjustments, replace "30" with "45".

Page 6-10, line 42, Subarticle 609-6(C)(2), replace "Subarticle 609-6(E)" with "Subarticle 609-6(D)".

Page 6-11, Table 609-1 Control Limits, replace "Max. Spec. Limit" for the Target Source of $P_{0.075}/P_{be}$ Ratio with "1.0".

Page 6-40, Article 650-2 Materials, replace "Subarticle 1012-1(F)" with "Subarticle 1012-1(E)"

Division 7

Page 7-1, Article 700-3, CONCRETE HAULING EQUIPMENT, line 33, replace "competion" with "completion".

Division 8

Page 8-23, line 10, Article 838-2 Materials, replace "Portland Cement Concrete, Class B" with "Portland Cement Concrete, Class A".

Division 10

Page 10-166, Article 1081-3 Hot Bitumen, replace "Table 1081-16" with "Table 1081-2", replace "Table 1081-17" with "Table 1081-3", and replace "Table 1081-18" with "Table 1081-4".

Division 12

Page 12-7, Table 1205-3, add "FOR THERMOPLASTIC" to the end of the title.
Page 12-8, Subarticle 1205-5(B), line 13, replace "Table 1205-2" with "Table 1205-4".
Page 12-8, Table 1205-4 and 1205-5, replace "THERMOPLASTIC" in the title of these tables with "POLYUREA".
Page 12-9, Subarticle 1205-6(B), line 21, replace "Table 1205-4" with "Table 1205-6".
Page 12-11, Subarticle 1205-8(C), line 25, replace "Table 1205-5" with "Table 1205-7".

Division 15

Page 15-4, Subarticle 1505-3(F) Backfilling, line 26, replace "Subarticle 235-4(C)" with "Subarticle 235-3(C)".
Page 15-6, Subarticle 1510-3(B), after line 21, replace the allowable leakage formula with the following: $\mathbf{W=LD\sqrt{P} \div 148{,}000}$
Page 15-6, Subarticle 1510-3(B), line 32, delete "may be performed concurrently or" and replace with "shall be performed".
Page 15-17, Subarticle 1540-3(E), line 27, delete "Type 1".

Division 17

Page 17-26, line 42, Subarticle 1731-3(D) Termination and Splicing within Interconnect Center, delete this subarticle.

Revise the *2012 Roadway Standard Drawings* as follows:

1633.01 Sheet 1 of 1, English Standard Drawing for Matting Installation, replace "1633.01" with "1631.01".

STANDARD SPECIAL PROVISION

PLANT AND PEST QUARANTINES
(Imported Fire Ant, Gypsy Moth, Witchweed, And Other Noxious Weeds)

(3-18-03) (Rev. 10-15-13) Z-04a

Within Quarantined Area

This project may be within a county regulated for plant and/or pests. If the project or any part of the Contractor's operations is located within a quarantined area, thoroughly clean all equipment prior to moving out of the quarantined area. Comply with federal/state regulations by obtaining a certificate or limited permit for any regulated article moving from the quarantined area.

Originating in a Quarantined County

Obtain a certificate or limited permit issued by the N.C. Department of Agriculture/United States Department of Agriculture. Have the certificate or limited permit accompany the article when it arrives at the project site.

Contact

Contact the N.C. Department of Agriculture/United States Department of Agriculture at 1-800-206-9333, 919-733-6932, or *http://www.ncagr.gov/plantind/* to determine those specific project sites located in the quarantined area or for any regulated article used on this project originating in a quarantined county.

Regulated Articles Include

1. Soil, sand, gravel, compost, peat, humus, muck, and decomposed manure, separately or with other articles. This includes movement of articles listed above that may be associated with cut/waste, ditch pulling, and shoulder cutting.
2. Plants with roots including grass sod.
3. Plant crowns and roots.
4. Bulbs, corms, rhizomes, and tubers of ornamental plants.
5. Hay, straw, fodder, and plant litter of any kind.
6. Clearing and grubbing debris.
7. Used agricultural cultivating and harvesting equipment.
8. Used earth-moving equipment.
9. Any other products, articles, or means of conveyance, of any character, if determined by an inspector to present a hazard of spreading imported fire ant, gypsy moth, witchweed or other noxious weeds.

STANDARD SPECIAL PROVISION

AWARD OF CONTRACT

(6-28-77)(Rev 2/16/2016) Z-6

"The North Carolina Department of Transportation, in accordance with the provisions of *Title VI of the Civil Rights Act of 1964* (78 Stat. 252) and the Regulations of the Department of Transportation (*49 C.F.R., Part 21*), issued pursuant to such act, hereby notifies all bidders that it will affirmatively insure that the contract entered into pursuant to this advertisement will be awarded to the lowest responsible bidder without discrimination on the ground of race, color, or national origin".

TITLE VI AND NONDISCRIMINATION

I. Title VI Assurance

During the performance of this contract, the contractor, for itself, its assignees and successors in interest (hereinafter referred to as the "contractor") agrees as follows:

(1) Compliance with Regulations: The contractor shall comply with the Regulation relative to nondiscrimination in Federally-assisted programs of the Department of Transportation (hereinafter, "DOT") Title 49, Code of Federal Regulations, Part 21, as they may be amended from time to time, (hereinafter referred to as the Regulations), which are herein incorporated by reference and made a part of this contract.

(2) Nondiscrimination: The Contractor, with regard to the work performed by it during the contract, shall not discriminate on the grounds of race, color, or national origin in the selection and retention of subcontractors, including procurements of materials and leases of equipment. The contractor shall not participate either directly or indirectly in the discrimination prohibited by section 21.5 of the Regulations, including employment practices when the contract covers a program set forth in Appendix B of the Regulations.

(3) Solicitations for Subcontractors, Including Procurements of Materials and Equipment: In all solicitations either by competitive bidding or negotiation made by the contractor for work to be performed under a subcontract, including procurements of materials or leases of equipment, each potential subcontractor or supplier shall be notified by the contractor of the contractor's obligations under this contract and the Regulations relative to nondiscrimination on the grounds of race, color, or national origin.

(4) Information and Reports: The contractor shall provide all information and reports required by the Regulations or directives issued pursuant thereto, and shall permit access to its books, records, accounts, other sources of information, and its facilities as may be determined by the North Carolina Department of Transportation (NCDOT) or the Federal Highway Administration (FHWA) to be pertinent to ascertain compliance with such Regulations, orders and instructions. Where any information required of a contractor is in the exclusive possession of another who fails or refuses to furnish this information the contractor shall so certify to the NCDOT, or the FHWA as appropriate, and shall set forth what efforts it has made to obtain the information.

(5) Sanctions for Noncompliance: In the event of the contractor's noncompliance with the nondiscrimination provisions of this contract, the NCDOT shall impose such contract sanctions as it or the FHWA may determine to be appropriate, including, but not limited to:

(a) Withholding of payments to the contractor under the contract until the contractor complies, and/or

(b) Cancellation, termination or suspension of the contract, in whole or in part.

(6) Incorporation of Provisions: The contractor shall include the provisions of paragraphs (1) through (6) in every subcontract, including procurements of materials and leases of equipment, unless exempt by the Regulations, or directives issued pursuant thereto.

The contractor shall take such action with respect to any subcontractor procurement as the NCDOT or the FHWA may direct as a means of enforcing such provisions including sanctions for noncompliance: provided, however, that, in the event a contractor becomes involved in, or is threatened with, litigation with a subcontractor or supplier as a result of such direction, the contractor may request the NCDOT to enter into such litigation to protect the interests of the NCDOT, and, in addition, the contractor may request the United States to enter into such litigation to protect the interests of the United States.

II. Title VI Nondiscrimination Program

Title VI of the 1964 Civil Rights Act, 42 U.S.C. 2000d, provides that: "No person in the United States shall, on the grounds of race, color, or national origin, be excluded from participation in, be denied the benefits of, or be subjected to discrimination under any program or activity receiving Federal financial assistance." The broader application of nondiscrimination law is found in other statutes, executive orders, and regulations (see Section III, Pertinent Nondiscrimination Authorities), which provide additional protections based on age, sex, disability and religion. In addition, the 1987 Civil Rights Restoration Act extends nondiscrimination coverage to all programs and activities of federal-aid recipients and contractors, including those that are not federally-funded.

Nondiscrimination Assurance

The North Carolina Department of Transportation (NCDOT) hereby gives assurance that no person shall on the ground of race, color, national origin, sex, age, and disability, be excluded from participation in, be denied the benefits of, or be otherwise subjected to discrimination under any program or activity conducted by the recipient, as provided by Title VI of the Civil Rights Act of 1964, the Civil Rights Restoration Act of 1987, and any other related Civil Rights authorities, whether those programs and activities are federally funded or not.

Obligation

During the performance of this contract, the Contractor and its subcontractors are responsible for complying with NCDOT's Title VI Program. The Contractor must ensure that NCDOT's Notice of Nondiscrimination is posted in conspicuous locations accessible to all employees and subcontractors on the jobsite, along with the Contractor's own Equal Employment Opportunity (EEO) Policy Statement. The Contractor shall physically incorporate this "**TITLE VI AND NONDISCRIMINATION**" language, in its entirety, into all its subcontracts on federally-assisted and state-funded NCDOT-owned projects, and ensure its inclusion by subcontractors into all subsequent lower tier subcontracts. The Contractor and its subcontractors shall also physically incorporate the **FHWA-1273**, in its entirety, into all subcontracts and subsequent lower tier subcontracts on **Federal-aid highway** construction contracts only. The Contractor is also responsible for making its subcontractors aware of NCDOT's Discrimination Complaints Process, as follows:

FILING OF COMPLAINTS

1. **Applicability** – These complaint procedures apply to the beneficiaries of the NCDOT's programs, activities, and services, including, but not limited to, members of the public, contractors, subcontractors, consultants, and other sub-recipients of federal and state funds.
2. **Eligibility** – Any person or class of persons who believes he/she has been subjected to discrimination or retaliation prohibited by any of the Civil Rights authorities, based upon race, color, sex, age, national origin, or disability, may file a written complaint with NCDOT's Civil Rights office. The law prohibits intimidation or retaliation of any sort. The complaint may be filed by the affected individual or a representative, and must be in writing.
3. **Time Limits and Filing Options** – A complaint must be filed no later than 180 calendar days after the following:
   - The date of the alleged act of discrimination; or
   - The date when the person(s) became aware of the alleged discrimination; or
   - Where there has been a continuing course of conduct, the date on which that conduct was discontinued or the latest instance of the conduct.

   Title VI and other discrimination complaints may be submitted to the following entities:
   - **North Carolina Department of Transportation**, Office of Equal Opportunity & Workforce Services (EOWS), External Civil Rights Section, 1511 Mail Service Center, Raleigh, NC 27699-1511; 919-508-1808 or toll free 800-522-0453
   - **US Department of Transportation**, Departmental Office of Civil Rights, External Civil Rights Programs Division, 1200 New Jersey Avenue, SE, Washington, DC 20590; 202-366-4070

     Federal Highway Administration, North Carolina Division Office, 310 New Bern Avenue, Suite 410, Raleigh, NC 27601, 919-747-7010

     Federal Highway Administration, Office of Civil Rights, 1200 New Jersey Avenue, SE, 8th Floor, E81-314, Washington, DC 20590, 202-366-0693 / 366-0752

     Federal Transit Administration, Office of Civil Rights, ATTN: Title VI Program Coordinator, East Bldg. 5th Floor – TCR, 1200 New Jersey Avenue, SE, Washington, DC 20590

     Federal Aviation Administration, Office of Civil Rights, 800 Independence Avenue, SW, Washington, DC 20591, 202-267-3258
   - **US Department of Justice**, Special Litigation Section, Civil Rights Division, 950 Pennsylvania Avenue, NW, Washington, DC 20530, 202-514-6255 or toll free 877-218-5228
4. **Format for Complaints –** Complaints must be in **writing** and **signed** by the complainant(s) or a representative and include the complainant's name, address, and telephone number. Complaints received by fax or e-mail will be acknowledged and processed. Allegations received by telephone will be reduced to writing and provided to the complainant for confirmation or revision before processing. Complaints will be accepted in other languages including Braille.
5. **Discrimination Complaint Form –** Contact NCDOT EOWS at the phone number above to receive a full copy of the Discrimination Complaint Form and procedures.

6. **Complaint Basis –** Allegations must be based on issues involving race, color, national origin, sex, age, or disability. The term "basis" refers to the complainant's membership in a protected group category. Contact this office to receive a Discrimination Complaint Form.

Protected Categories	Definition	Examples	Applicable Statutes and Regulations	
			FHWA	FTA
Race	An individual belonging to one of the accepted racial groups; or the perception, based usually on physical characteristics that a person is a member of a racial group	Black/African American, Hispanic/Latino, Asian, American Indian/Alaska Native, Native Hawaiian/Pacific Islander, White	Title VI of the Civil Rights Act of 1964; 49 CFR Part 21; 23 CFR 200	Title VI of the Civil Rights Act of 1964; 49 CFR Part 21; Circular 4702.1B
Color	Color of skin, including shade of skin within a racial group	Black, White, brown, yellow, etc.		
National Origin	Place of birth. Citizenship is not a factor. Discrimination based on language or a person's accent is also covered.	Mexican, Cuban, Japanese, Vietnamese, Chinese		
Sex	Gender	Women and Men	1973 Federal-Aid Highway Act	Title IX of the Education Amendments of 1972
Age	Persons of any age	21 year old person	Age Discrimination Act of 1975	
Disability	Physical or mental impairment, permanent or temporary, or perceived.	Blind, alcoholic, para-amputee, epileptic, diabetic, arthritic	Section 504 of the Rehabilitation Act of 1973; Americans with Disabilities Act of 1990	

III. <u>Pertinent Nondiscrimination Authorities</u>

During the performance of this contract, the contractor, for itself, its assignees, and successors in interest agrees to comply with the following non-discrimination statutes and authorities, including, but not limited to:

- Title VI of the Civil Rights Act of 1964 (42 U.S.C. § 2000d *et seq*., 78 stat. 252), (prohibits discrimination on the basis of race, color, national origin); and 49 CFR Part 21.
- The Uniform Relocation Assistance and Real Property Acquisition Policies Act of 1970, (42 U.S.C. § 4601), (prohibits unfair treatment of persons displaced or whose property has been acquired because of Federal or Federal-aid programs and projects);
- Federal-Aid Highway Act of 1973, (23 U.S.C. § 324 *et seq*.), (prohibits discrimination on the basis of sex);
- Section 504 of the Rehabilitation Act of 1973, (29 U.S.C. § 794 *et seq*.), as amended, (prohibits discrimination on the basis of disability); and 49 CFR Part 27;

- The Age Discrimination Act of 1975, as amended, (42 U.S.C. § 6101 *et seq*.), (prohibits discrimination on the basis of age);
- Airport and Airway Improvement Act of 1982, (49 USC § 471, Section 47123), as amended, (prohibits discrimination based on race, creed, color, national origin, or sex);
- The Civil Rights Restoration Act of 1987, (PL 100-209), (Broadened the scope, coverage and applicability of Title VI of the Civil Rights Act of 1964, The Age Discrimination Act of 1975 and Section 504 of the Rehabilitation Act of 1973, by expanding the definition of the terms "programs or activities" to include all of the programs or activities of the Federal-aid recipients, sub-recipients and contractors, whether such programs or activities are Federally funded or not);
- Titles II and III of the Americans with Disabilities Act, which prohibit discrimination on the basis of disability in the operation of public entities, public and private transportation systems, places of public accommodation, and certain testing entities (42 U.S.C. §§ 12131 – 12189) as implemented by Department of Transportation regulations at 49 C.F.R. parts 37 and 38;
- The Federal Aviation Administration's Non-discrimination statute (49 U.S.C. § 47123) (prohibits discrimination on the basis of race, color, national origin, and sex);
- Executive Order 12898, Federal Actions to Address Environmental Justice in Minority Populations and Low-Income Populations, which ensures discrimination against minority populations by discouraging programs, policies, and activities with disproportionately high and adverse human health or environmental effects on minority and low-income populations;
- Executive Order 13166, Improving Access to Services for Persons with Limited English Proficiency, and resulting agency guidance, national origin discrimination includes discrimination because of limited English proficiency (LEP). To ensure compliance with Title VI, you must take reasonable steps to ensure that LEP persons have meaningful access to your programs (70 Fed. Reg. at 74087 to 74100);
- Title IX of the Education Amendments of 1972, as amended, which prohibits you from discriminating because of sex in education programs or activities (20 U.S.C. 1681 et seq).
- Title VII of the Civil Rights Act of 1964 (42 U.S.C. § 2000e *et seq.*, Pub. L. 88-352), (prohibits employment discrimination on the basis of race, color, religion, sex, or national origin);
- 49 CFR Part 26, regulation to ensure nondiscrimination in the award and administration of DOT-assisted contracts in the Department's highway, transit, and airport financial assistance programs, as regards the use of Disadvantaged Business Enterprises (DBEs);
- Form FHWA-1273, "Required Contract Provisions," a collection of contract provisions and proposal notices that are generally applicable to *all Federal-aid construction projects* and must be made a part of, and physically incorporated into, *all federally-assisted contracts*, as well as appropriate subcontracts and purchase orders, particularly Sections II (Nondiscrimination) and III (Nonsegregated Facilities).

STANDARD SPECIAL PROVISION

MINORITY AND FEMALE EMPLOYMENT REQUIREMENTS

Z-7

NOTICE OF REQUIREMENTS FOR AFFIRMATIVE ACTION TO ENSURE EQUAL EMPLOYMENT OPPORTUNITY (*EXECUTIVE NUMBER 11246*)

1. The goals and timetables for minority and female participation, expressed in percentage terms for the Contractor's aggregate workforce in each trade on all construction work in the covered area, see as shown on the attached sheet entitled "Employment Goals for Minority and Female participation".

These goals are applicable to all the Contractor's construction work (whether or not it is Federal or federally assisted) performed in the covered area. If the Contractor performs construction work in a geographical area located outside of the covered area, it shall apply the goals established for such geographical area where the work is actually performed. With regard to this second area, the Contractor also is subject to the goals for both its federally involved and nonfederally involved construction.

The Contractor's compliance with the Executive Order and the regulations in *41 CFR Part 60-4* shall be based on its implementation of the Equal Opportunity Clause, specific affirmative action obligations required by the specifications set forth in *41 CFR 60-4.3(a)*, and its effort to meet the goals. The hours of minority and female employment and training must be substantially uniform throughout the length of the contract, and in each trade and the Contractor shall make a good faith effort to employ minorities and women evenly on each of its projects. The transfer of minority or female employees or trainees from Contractor to Contractor or from project to project or the sole purpose of meeting the Contractor's goals shall be a violation of the contract, the executive Order and the regulations *in 41 CFR Part 60-4*. Compliance with the goals will be measured against the total work hours performed.

2. As used in this Notice and in the contract resulting from this solicitation, the "covered area" is the county or counties shown on the cover sheet of the proposal form and contract.

EMPLOYMENT GOALS FOR MINORITY AND FEMALE PARTICIPATION

Economic Areas

Area 023 29.7%
Bertie County
Camden County
Chowan County
Gates County
Hertford County
Pasquotank County
Perquimans County

Area 024 31.7%
Beaufort County
Carteret County
Craven County
Dare County
Edgecombe County
Green County
Halifax County
Hyde County
Jones County
Lenoir County
Martin County
Nash County
Northampton County
Pamlico County
Pitt County
Tyrrell County
Washington County
Wayne County
Wilson County

Area 025 23.5%
Columbus County
Duplin County
Onslow County
Pender County

Area 026 33.5%
Bladen County
Hoke County
Richmond County
Robeson County
Sampson County
Scotland County

Area 027 24.7%
Chatham County
Franklin County
Granville County
Harnett County
Johnston County
Lee County
Person County
Vance County
Warren County

Area 028 15.5%
Alleghany County
Ashe County
Caswell County
Davie County
Montgomery County
Moore County
Rockingham County
Surry County
Watauga County
Wilkes County

Area 029 15.7%
Alexander County
Anson County
Burke County
Cabarrus County
Caldwell County
Catawba County
Cleveland County
Iredell County
Lincoln County
Polk County
Rowan County
Rutherford County
Stanly County

Area 0480 8.5%
Buncombe County
Madison County

Area 030 6.3%
Avery County
Cherokee County
Clay County
Graham County
Haywood County
Henderson County
Jackson County
McDowell County
Macon County
Mitchell County
Swain County
Transylvania County
Yancey County

SMSA Areas

Area 5720 26.6%
Currituck County

Area 9200 20.7%
Brunswick County
New Hanover County

Area 2560 24.2%
Cumberland County

Area 6640 22.8%
Durham County
Orange County
Wake County

Area 1300 16.2%
Alamance County

Area 3120 16.4%
Davidson County
Forsyth County
Guilford County
Randolph County
Stokes County
Yadkin County

Area 1520 18.3%
Gaston County
Mecklenburg County
Union County

Goals for Female

Participation in Each Trade

(Statewide) 6.9%

STANDARD SPECIAL PROVISION

REQUIRED CONTRACT PROVISIONS FEDERAL - AID CONSTRUCTION CONTRACTS

FHWA - 1273 Electronic Version - May 1, 2012 Z-8

I. General
II. Nondiscrimination
III. Nonsegregated Facilities
IV. Davis-Bacon and Related Act Provisions
V. Contract Work Hours and Safety Standards Act Provisions
VI. Subletting or Assigning the Contract
VII. Safety: Accident Prevention
VIII. False Statements Concerning Highway Projects
IX. Implementation of Clean Air Act and Federal Water Pollution Control Act
X. Compliance with Governmentwide Suspension and Debarment Requirements
XI. Certification Regarding Use of Contract Funds for Lobbying

ATTACHMENTS

A. Employment and Materials Preference for Appalachian Development Highway System or Appalachian Local Access Road Contracts (included in Appalachian contracts only)

I. GENERAL

1. Form FHWA-1273 must be physically incorporated in each construction contract funded under Title 23 (excluding emergency contracts solely intended for debris removal). The contractor (or subcontractor) must insert this form in each subcontract and further require its inclusion in all lower tier subcontracts (excluding purchase orders, rental agreements and other agreements for supplies or services).

   The applicable requirements of Form FHWA-1273 are incorporated by reference for work done under any purchase order, rental agreement or agreement for other services. The prime contractor shall be responsible for compliance by any subcontractor, lower-tier subcontractor or service provider.

   Form FHWA-1273 must be included in all Federal-aid design-build contracts, in all subcontracts and in lower tier subcontracts (excluding subcontracts for design services, purchase orders, rental agreements and other agreements for supplies or services). The design-builder shall be responsible for compliance by any subcontractor, lower-tier subcontractor or service provider.

   Contracting agencies may reference Form FHWA-1273 in bid proposal or request for proposal documents, however, the Form FHWA-1273 must be physically incorporated (not referenced) in all contracts, subcontracts and lower-tier subcontracts (excluding purchase orders, rental agreements and other agreements for supplies or services related to a construction contract).
2. Subject to the applicability criteria noted in the following sections, these contract provisions shall apply to all work performed on the contract by the contractor's own organization and with the assistance of workers under the contractor's immediate superintendence and to all work performed on the contract by piecework, station work, or by subcontract.
3. A breach of any of the stipulations contained in these Required Contract Provisions may be sufficient grounds for withholding of progress payments, withholding of final payment, termination of the contract, suspension / debarment or any other action determined to be appropriate by the contracting agency and FHWA.
4. Selection of Labor: During the performance of this contract, the contractor shall not use convict labor for any purpose within the limits of a construction project on a Federal-aid highway unless it is labor performed by convicts who are on parole, supervised release, or probation. The term Federal-aid highway does not include roadways functionally classified as local roads or rural minor collectors.

II. NONDISCRIMINATION

The provisions of this section related to 23 CFR Part 230 are applicable to all Federal-aid construction contracts and to all related construction subcontracts of $10,000 or more. The provisions of 23 CFR Part 230 are not applicable to material supply, engineering, or architectural service contracts.

In addition, the contractor and all subcontractors must comply with the following policies: Executive Order 11246, 41 CFR 60, 29 CFR 1625-1627, Title 23 USC Section 140, the Rehabilitation Act of 1973, as amended (29 USC 794), Title VI of the Civil Rights Act of 1964, as amended, and related regulations including 49 CFR Parts 21, 26 and 27; and 23 CFR Parts 200, 230, and 633.

The contractor and all subcontractors must comply with: the requirements of the Equal Opportunity Clause in 41 CFR 60-1.4(b) and, for all construction contracts exceeding $10,000, the Standard Federal Equal Employment Opportunity Construction Contract Specifications in 41 CFR 60-4.3.

Note: The U.S. Department of Labor has exclusive authority to determine compliance with Executive Order 11246 and the policies of the Secretary of Labor including 41 CFR 60, and 29 CFR 1625-1627. The contracting agency and the FHWA have the authority and the responsibility to ensure compliance with Title 23 USC Section 140, the Rehabilitation Act of 1973, as amended (29 USC 794), and Title VI of the Civil Rights Act of 1964, as amended, and related regulations including 49 CFR Parts 21, 26 and 27; and 23 CFR Parts 200, 230, and 633.

The following provision is adopted from 23 CFR 230, Appendix A, with appropriate revisions to conform to the U.S. Department of Labor (US DOL) and FHWA requirements.

1. **Equal Employment Opportunity:** Equal employment opportunity (EEO) requirements not to discriminate and to take affirmative action to assure equal opportunity as set forth under laws, executive orders, rules, regulations (28 CFR 35, 29 CFR 1630, 29 CFR 1625-1627, 41 CFR 60 and 49 CFR 27) and orders of the Secretary of Labor as modified by the provisions prescribed herein, and imposed pursuant to 23 U.S.C. 140 shall constitute the EEO and specific affirmative action standards for the contractor's project activities under this contract. The provisions of the Americans with Disabilities Act of 1990 (42 U.S.C. 12101 et seq.) set forth under 28 CFR 35 and 29 CFR 1630 are incorporated by reference in this contract. In the execution of this contract, the contractor agrees to comply with the following minimum specific requirement activities of EEO:

a. The contractor will work with the contracting agency and the Federal Government to ensure that it has made every good faith effort to provide equal opportunity with respect to all of its terms and conditions of employment and in their review of activities under the contract.
b. The contractor will accept as its operating policy the following statement:
"It is the policy of this Company to assure that applicants are employed, and that employees are treated during employment, without regard to their race, religion, sex, color, national origin, age or disability. Such action shall include: employment, upgrading, demotion, or transfer; recruitment or recruitment advertising; layoff or termination; rates of pay or other forms of compensation; and selection for training, including apprenticeship, pre-apprenticeship, and/or on-the-job training."

2. **EEO Officer:** The contractor will designate and make known to the contracting officers an EEO Officer who will have the responsibility for and must be capable of effectively administering and promoting an active EEO program and who must be assigned adequate authority and responsibility to do so.
3. **Dissemination of Policy:** All members of the contractor's staff who are authorized to hire, supervise, promote, and discharge employees, or who recommend such action, or who are substantially involved in such action, will be made fully cognizant of, and will implement, the contractor's EEO policy and contractual responsibilities to provide EEO in each grade and classification of employment. To ensure that the above agreement will be met, the following actions will be taken as a minimum:
   a. Periodic meetings of supervisory and personnel office employees will be conducted before the start of work and then not less often than once every six months, at which time the contractor's EEO policy and its implementation will be reviewed and explained. The meetings will be conducted by the EEO Officer.
   b. All new supervisory or personnel office employees will be given a thorough indoctrination by the EEO Officer, covering all major aspects of the contractor's EEO obligations within thirty days following their reporting for duty with the contractor.
   c. All personnel who are engaged in direct recruitment for the project will be instructed by the EEO Officer in the contractor's procedures for locating and hiring minorities and women.
   d. Notices and posters setting forth the contractor's EEO policy will be placed in areas readily accessible to employees, applicants for employment and potential employees.
   e. The contractor's EEO policy and the procedures to implement such policy will be brought to the attention of employees by means of meetings, employee handbooks, or other appropriate means.
4. **Recruitment:** When advertising for employees, the contractor will include in all advertisements for employees the notation: "An Equal Opportunity Employer." All such advertisements will be placed in publications having a large circulation among minorities and women in the area from which the project work force would normally be derived.
   a. The contractor will, unless precluded by a valid bargaining agreement, conduct systematic and direct recruitment through public and private employee referral sources likely to yield qualified minorities and women. To meet this requirement, the contractor will identify sources of potential minority group employees, and establish with such identified sources procedures whereby minority and women applicants may be referred to the contractor for employment consideration.
   b. In the event the contractor has a valid bargaining agreement providing for exclusive hiring hall referrals, the contractor is expected to observe the provisions of that agreement to the extent that the system meets the contractor's compliance with EEO contract provisions. Where implementation of such an agreement has the effect of discriminating against minorities or women, or obligates the contractor to do the same, such implementation violates Federal nondiscrimination provisions.
   c. The contractor will encourage its present employees to refer minorities and women as applicants for employment. Information and procedures with regard to referring such applicants will be discussed with employees.
5. **Personnel Actions:** Wages, working conditions, and employee benefits shall be established and administered, and personnel actions of every type, including hiring, upgrading, promotion, transfer, demotion, layoff, and termination, shall be taken without regard to race, color, religion, sex, national origin, age or disability. The following procedures shall be followed:
   a. The contractor will conduct periodic inspections of project sites to insure that working conditions and employee facilities do not indicate discriminatory treatment of project site personnel.
   b. The contractor will periodically evaluate the spread of wages paid within each classification to determine any evidence of discriminatory wage practices.
   c. The contractor will periodically review selected personnel actions in depth to determine whether there is evidence of discrimination. Where evidence is found, the contractor will promptly take corrective action. If the review indicates that the discrimination may extend beyond the actions reviewed, such corrective action shall include all affected persons.
   d. The contractor will promptly investigate all complaints of alleged discrimination made to the contractor in connection with its obligations under this contract, will attempt to resolve such complaints, and will take appropriate corrective action within a reasonable time. If the investigation indicates that the discrimination may affect persons other than the complainant, such corrective action shall include such other persons. Upon completion of each investigation, the contractor will inform every complainant of all of their avenues of appeal.
6. **Training and Promotion:**
   a. The contractor will assist in locating, qualifying, and increasing the skills of minorities and women who are applicants for employment or current employees. Such efforts should be aimed at developing full journey level status employees in the type of trade or job classification involved.
   b. Consistent with the contractor's work force requirements and as permissible under Federal and State regulations, the contractor shall make full use of training programs, i.e., apprenticeship, and on-the-job training programs for the geographical area of contract performance. In the event a special provision for training is provided under this contract, this subparagraph will be superseded as indicated in the special provision. The contracting agency may reserve training positions for persons who receive welfare assistance in accordance with 23 U.S.C. 140(a).
   c The contractor will advise employees and applicants for employment of available training programs and entrance requirements for each.
   d. The contractor will periodically review the training and promotion potential of employees who are minorities and women and will encourage eligible employees to apply for such training and promotion.

7. **Unions:** If the contractor relies in whole or in part upon unions as a source of employees, the contractor will use good faith efforts to obtain the cooperation of such unions to increase opportunities for minorities and women. Actions by the contractor, either directly or through a contractor's association acting as agent, will include the procedures set forth below:
   a. The contractor will use good faith efforts to develop, in cooperation with the unions, joint training programs aimed toward qualifying more minorities and women for membership in the unions and increasing the skills of minorities and women so that they may qualify for higher paying employment.
   b. The contractor will use good faith efforts to incorporate an EEO clause into each union agreement to the end that such union will be contractually bound to refer applicants without regard to their race, color, religion, sex, national origin, age or disability.
   c. The contractor is to obtain information as to the referral practices and policies of the labor union except that to the extent such information is within the exclusive possession of the labor union and such labor union refuses to furnish such information to the contractor, the contractor shall so certify to the contracting agency and shall set forth what efforts have been made to obtain such information.
   d. In the event the union is unable to provide the contractor with a reasonable flow of referrals within the time limit set forth in the collective bargaining agreement, the contractor will, through independent recruitment efforts, fill the employment vacancies without regard to race, color, religion, sex, national origin, age or disability; making full efforts to obtain qualified and/or qualifiable minorities and women. The failure of a union to provide sufficient referrals (even though it is obligated to provide exclusive referrals under the terms of a collective bargaining agreement) does not relieve the contractor from the requirements of this paragraph. In the event the union referral practice prevents the contractor from meeting the obligations pursuant to Executive Order 11246, as amended, and these special provisions, such contractor shall immediately notify the contracting agency.
8. **Reasonable Accommodation for Applicants / Employees with Disabilities:** The contractor must be familiar with the requirements for and comply with the Americans with Disabilities Act and all rules and regulations established there under. Employers must provide reasonable accommodation in all employment activities unless to do so would cause an undue hardship.
9. **Selection of Subcontractors, Procurement of Materials and Leasing of Equipment:** The contractor shall not discriminate on the grounds of race, color, religion, sex, national origin, age or disability in the selection and retention of subcontractors, including procurement of materials and leases of equipment. The contractor shall take all necessary and reasonable steps to ensure nondiscrimination in the administration of this contract.
   a. The contractor shall notify all potential subcontractors and suppliers and lessors of their EEO obligations under this contract.
   b. The contractor will use good faith efforts to ensure subcontractor compliance with their EEO obligations.
10. **Assurance Required by 49 CFR 26.13(b):**
   a. The requirements of 49 CFR Part 26 and the State DOT's U.S. DOT-approved DBE program are incorporated by reference.
   b. The contractor or subcontractor shall not discriminate on the basis of race, color, national origin, or sex in the performance of this contract. The contractor shall carry out applicable requirements of 49 CFR Part 26 in the award and administration of DOT-assisted contracts. Failure by the contractor to carry out these requirements is a material breach of this contract, which may result in the termination of this contract or such other remedy as the contracting agency deems appropriate.
11. **Records and Reports:** The contractor shall keep such records as necessary to document compliance with the EEO requirements. Such records shall be retained for a period of three years following the date of the final payment to the contractor for all contract work and shall be available at reasonable times and places for inspection by authorized representatives of the contracting agency and the FHWA.
   a. The records kept by the contractor shall document the following:
      (1) The number and work hours of minority and non-minority group members and women employed in each work classification on the project;
      (2) The progress and efforts being made in cooperation with unions, when applicable, to increase employment opportunities for minorities and women; and
      (3) The progress and efforts being made in locating, hiring, training, qualifying, and upgrading minorities and women;
   b. The contractors and subcontractors will submit an annual report to the contracting agency each July for the duration of the project, indicating the number of minority, women, and non-minority group employees currently engaged in each work classification required by the contract work. This information is to be reported on Form FHWA-1391. The staffing data should represent the project work force on board in all or any part of the last payroll period preceding the end of July. If on-the-job training is being required by special provision, the contractor will be required to collect and report training data. The employment data should reflect the work force on board during all or any part of the last payroll period preceding the end of July.

III. NONSEGREGATED FACILITIES

This provision is applicable to all Federal-aid construction contracts and to all related construction subcontracts of $10,000 or more.

The contractor must ensure that facilities provided for employees are provided in such a manner that segregation on the basis of race, color, religion, sex, or national origin cannot result. The contractor may neither require such segregated use by written or oral policies nor tolerate such use by employee custom. The contractor's obligation extends further to ensure that its employees are not assigned to perform their services at any location, under the contractor's control, where the facilities are segregated. The term "facilities" includes waiting rooms, work areas, restaurants and other eating areas, time clocks, restrooms, washrooms, locker rooms, and other storage or dressing areas, parking lots, drinking fountains, recreation or entertainment areas, transportation, and housing provided for employees. The contractor shall provide separate or single-user restrooms and necessary dressing or sleeping areas to assure privacy between sexes.

IV. DAVIS-BACON AND RELATED ACT PROVISIONS

This section is applicable to all Federal-aid construction projects exceeding $2,000 and to all related subcontracts and lower-tier subcontracts (regardless of subcontract size). The requirements apply to all projects located within the right-of-way of a roadway that is functionally classified as Federal-aid highway. This excludes roadways functionally classified as local roads or rural minor collectors, which are exempt. Contracting agencies may elect to apply these requirements to other projects.

The following provisions are from the U.S. Department of Labor regulations in 29 CFR 5.5 "Contract provisions and related matters" with minor revisions to conform to the FHWA-1273 format and FHWA program requirements.

1. **Minimum wages**
   a. All laborers and mechanics employed or working upon the site of the work, will be paid unconditionally and not less often than once a week, and without subsequent deduction or rebate on any account (except such payroll deductions as are permitted by regulations issued by the Secretary of Labor under the Copeland Act (29 CFR part 3)), the full amount of wages and bona fide fringe benefits (or cash equivalents thereof) due at time of payment computed at rates not less than those contained in the wage determination of the Secretary of Labor which is

attached hereto and made a part hereof, regardless of any contractual relationship which may be alleged to exist between the contractor and such laborers and mechanics.

Contributions made or costs reasonably anticipated for bona fide fringe benefits under section 1(b)(2) of the Davis-Bacon Act on behalf of laborers or mechanics are considered wages paid to such laborers or mechanics, subject to the provisions of paragraph 1.d. of this section; also, regular contributions made or costs incurred for more than a weekly period (but not less often than quarterly) under plans, funds, or programs which cover the particular weekly period, are deemed to be constructively made or incurred during such weekly period. Such laborers and mechanics shall be paid the appropriate wage rate and fringe benefits on the wage determination for the classification of work actually performed, without regard to skill, except as provided in 29 CFR 5.5(a)(4). Laborers or mechanics performing work in more than one classification may be compensated at the rate specified for each classification for the time actually worked therein: Provided, That the employer's payroll records accurately set forth the time spent in each classification in which work is performed. The wage determination (including any additional classification and wage rates conformed under paragraph 1.b. of this section) and the Davis-Bacon poster (WH–1321) shall be posted at all times by the contractor and its subcontractors at the site of the work in a prominent and accessible place where it can be easily seen by the workers.

b. (1) The contracting officer shall require that any class of laborers or mechanics, including helpers, which is not listed in the wage determination and which is to be employed under the contract shall be classified in conformance with the wage determination. The contracting officer shall approve an additional classification and wage rate and fringe benefits therefore only when the following criteria have been met:

(i) The work to be performed by the classification requested is not performed by a classification in the wage determination; and

(ii) The classification is utilized in the area by the construction industry; and

(iii) The proposed wage rate, including any bona fide fringe benefits, bears a reasonable relationship to the wage rates contained in the wage determination.

(2) If the contractor and the laborers and mechanics to be employed in the classification (if known), or their representatives, and the contracting officer agree on the classification and wage rate (including the amount designated for fringe benefits where appropriate), a report of the action taken shall be sent by the contracting officer to the Administrator of the Wage and Hour Division, Employment Standards Administration, U.S. Department of Labor, Washington, DC 20210. The Administrator, or an authorized representative, will approve, modify, or disapprove every additional classification action within 30 days of receipt and so advise the contracting officer or will notify the contracting officer within the 30-day period that additional time is necessary.

(3) In the event the contractor, the laborers or mechanics to be employed in the classification or their representatives, and the contracting officer do not agree on the proposed classification and wage rate (including the amount designated for fringe benefits, where appropriate), the contracting officer shall refer the questions, including the views of all interested parties and the recommendation of the contracting officer, to the Wage and Hour Administrator for determination. The Wage and Hour Administrator, or an authorized representative, will issue a determination within 30 days of receipt and so advise the contracting officer or will notify the contracting officer within the 30-day period that additional time is necessary.

(4) The wage rate (including fringe benefits where appropriate) determined pursuant to paragraphs 1.b.(2) or 1.b.(3) of this section, shall be paid to all workers performing work in the classification under this contract from the first day on which work is performed in the classification.

c. Whenever the minimum wage rate prescribed in the contract for a class of laborers or mechanics includes a fringe benefit which is not expressed as an hourly rate, the contractor shall either pay the benefit as stated in the wage determination or shall pay another bona fide fringe benefit or an hourly cash equivalent thereof.

d. If the contractor does not make payments to a trustee or other third person, the contractor may consider as part of the wages of any laborer or mechanic the amount of any costs reasonably anticipated in providing bona fide fringe benefits under a plan or program, Provided, That the Secretary of Labor has found, upon the written request of the contractor, that the applicable standards of the Davis-Bacon Act have been met. The Secretary of Labor may require the contractor to set aside in a separate account assets for the meeting of obligations under the plan or program.

2. **Withholding.** The contracting agency shall upon its own action or upon written request of an authorized representative of the Department of Labor, withhold or cause to be withheld from the contractor under this contract, or any other Federal contract with the same prime contractor, or any other federally-assisted contract subject to Davis-Bacon prevailing wage requirements, which is held by the same prime contractor, so much of the accrued payments or advances as may be considered necessary to pay laborers and mechanics, including apprentices, trainees, and helpers, employed by the contractor or any subcontractor the full amount of wages required by the contract. In the event of failure to pay any laborer or mechanic, including any apprentice, trainee, or helper, employed or working on the site of the work, all or part of the wages required by the contract, the contracting agency may, after written notice to the contractor, take such action as may be necessary to cause the suspension of any further payment, advance, or guarantee of funds until such violations have ceased.

3. **Payrolls and basic records**

a. Payrolls and basic records relating thereto shall be maintained by the contractor during the course of the work and preserved for a period of three years thereafter for all laborers and mechanics working at the site of the work. Such records shall contain the name, address, and social security number of each such worker, his or her correct classification, hourly rates of wages paid (including rates of contributions or costs anticipated for bona fide fringe benefits or cash equivalents thereof of the types described in section 1(b)(2)(B) of the Davis-Bacon Act), daily and weekly number of hours worked, deductions made and actual wages paid. Whenever the Secretary of Labor has found under 29 CFR 5.5(a)(1)(iv) that the wages of any laborer or mechanic include the amount of any costs reasonably anticipated in providing benefits under a plan or program described in section 1(b)(2)(B) of the Davis-Bacon Act, the contractor shall maintain records which show that the commitment to provide such benefits is enforceable, that the plan or program is financially responsible, and that the plan or program has been communicated in writing to the laborers or mechanics affected, and records which show the costs anticipated or the actual cost incurred in providing such benefits. Contractors employing apprentices or trainees under approved programs shall maintain written evidence of the registration of apprenticeship programs and certification of trainee programs, the registration of the apprentices and trainees, and the ratios and wage rates prescribed in the applicable programs.

b. (1) The contractor shall submit weekly for each week in which any contract work is performed a copy of all payrolls to the contracting agency. The payrolls submitted shall set out accurately and completely all of the information required to be maintained under 29 CFR 5.5(a)(3)(i), except that full social security numbers and home addresses shall not be included on weekly transmittals. Instead the payrolls shall only need to include an individually identifying number for each employee (e.g. , the last four digits of the employee's social security number). The required weekly payroll information may be submitted in any form desired. Optional Form WH–347 is available for this purpose from the Wage and Hour Division Web site at http://www.dol.gov/esa/whd/forms/ wh347instr.htm or its

successor site. The prime contractor is responsible for the submission of copies of payrolls by all subcontractors. Contractors and subcontractors shall maintain the full social security number and current address of each covered worker, and shall provide them upon request to the contracting agency for transmission to the State DOT, the FHWA or the Wage and Hour Division of the Department of Labor for purposes of an investigation or audit of compliance with prevailing wage requirements. It is not a violation of this section for a prime contractor to require a subcontractor to provide addresses and social security numbers to the prime contractor for its own records, without weekly submission to the contracting agency.

(2) Each payroll submitted shall be accompanied by a "Statement of Compliance," signed by the contractor or subcontractor or his or her agent who pays or supervises the payment of the persons employed under the contract and shall certify the following:

(i) That the payroll for the payroll period contains the information required to be provided under §5.5 (a)(3)(ii) of Regulations, 29 CFR part 5, the appropriate information is being maintained under §5.5 (a)(3)(i) of Regulations, 29 CFR part 5, and that such information is correct and complete;

(ii) That each laborer or mechanic (including each helper, apprentice, and trainee) employed on the contract during the payroll period has been paid the full weekly wages earned, without rebate, either directly or indirectly, and that no deductions have been made either directly or indirectly from the full wages earned, other than permissible deductions as set forth in Regulations, 29 CFR part 3;

(iii) That each laborer or mechanic has been paid not less than the applicable wage rates and fringe benefits or cash equivalents for the classification of work performed, as specified in the applicable wage determination incorporated into the contract.

(3) The weekly submission of a properly executed certification set forth on the reverse side of Optional Form WH–347 shall satisfy the requirement for submission of the "Statement of Compliance" required by paragraph 3.b.(2) of this section.

(4) The falsification of any of the above certifications may subject the contractor or subcontractor to civil or criminal prosecution under section 1001 of title 18 and section 231 of title 31 of the United States Code.

c. The contractor or subcontractor shall make the records required under paragraph 3.a. of this section available for inspection, copying, or transcription by authorized representatives of the contracting agency, the State DOT, the FHWA, or the Department of Labor, and shall permit such representatives to interview employees during working hours on the job. If the contractor or subcontractor fails to submit the required records or to make them available, the FHWA may, after written notice to the contractor, the contracting agency or the State DOT, take such action as may be necessary to cause the suspension of any further payment, advance, or guarantee of funds. Furthermore, failure to submit the required records upon request or to make such records available may be grounds for debarment action pursuant to 29 CFR 5.12.

4. **Apprentices and trainees**

a. Apprentices (programs of the USDOL). Apprentices will be permitted to work at less than the predetermined rate for the work they performed when they are employed pursuant to and individually registered in a bona fide apprenticeship program registered with the U.S. Department of Labor, Employment and Training Administration, Office of Apprenticeship Training, Employer and Labor Services, or with a State Apprenticeship Agency recognized by the Office, or if a person is employed in his or her first 90 days of probationary employment as an apprentice in such an apprenticeship program, who is not individually registered in the program, but who has been certified by the Office of Apprenticeship Training, Employer and Labor Services or a State Apprenticeship Agency (where appropriate) to be eligible for probationary employment as an apprentice.

The allowable ratio of apprentices to journeymen on the job site in any craft classification shall not be greater than the ratio permitted to the contractor as to the entire work force under the registered program. Any worker listed on a payroll at an apprentice wage rate, who is not registered or otherwise employed as stated above, shall be paid not less than the applicable wage rate on the wage determination for the classification of work actually performed. In addition, any apprentice performing work on the job site in excess of the ratio permitted under the registered program shall be paid not less than the applicable wage rate on the wage determination for the work actually performed. Where a contractor is performing construction on a project in a locality other than that in which its program is registered, the ratios and wage rates (expressed in percentages of the journeyman's hourly rate) specified in the contractor's or subcontractor's registered program shall be observed.

Every apprentice must be paid at not less than the rate specified in the registered program for the apprentice's level of progress, expressed as a percentage of the journeymen hourly rate specified in the applicable wage determination. Apprentices shall be paid fringe benefits in accordance with the provisions of the apprenticeship program. If the apprenticeship program does not specify fringe benefits, apprentices must be paid the full amount of fringe benefits listed on the wage determination for the applicable classification. If the Administrator determines that a different practice prevails for the applicable apprentice classification, fringes shall be paid in accordance with that determination.

In the event the Office of Apprenticeship Training, Employer and Labor Services, or a State Apprenticeship Agency recognized by the Office, withdraws approval of an apprenticeship program, the contractor will no longer be permitted to utilize apprentices at less than the applicable predetermined rate for the work performed until an acceptable program is approved.

b. Trainees (programs of the USDOL). Except as provided in 29 CFR 5.16, trainees will not be permitted to work at less than the predetermined rate for the work performed unless they are employed pursuant to and individually registered in a program which has received prior approval, evidenced by formal certification by the U.S. Department of Labor, Employment and Training Administration.

The ratio of trainees to journeymen on the job site shall not be greater than permitted under the plan approved by the Employment and Training Administration.

Every trainee must be paid at not less than the rate specified in the approved program for the trainee's level of progress, expressed as a percentage of the journeyman hourly rate specified in the applicable wage determination. Trainees shall be paid fringe benefits in accordance with the provisions of the trainee program. If the trainee program does not mention fringe benefits, trainees shall be paid the full amount of fringe benefits listed on the wage determination unless the Administrator of the Wage and Hour Division determines that there is an apprenticeship program associated with the corresponding journeyman wage rate on the wage determination which provides for less than full fringe benefits for apprentices. Any employee listed on the payroll at a trainee rate who is not registered and participating in a training plan approved by the Employment and Training Administration shall be paid not less than the applicable wage rate on the wage determination for the classification of work actually performed. In addition, any trainee performing work on the job site in excess of the ratio permitted under the registered program shall be paid not less than the applicable wage rate on the wage determination for the work actually performed.

In the event the Employment and Training Administration withdraws approval of a training program, the contractor will no longer be permitted to utilize trainees at less than the applicable predetermined rate for the work performed until an acceptable program is approved.

c. Equal employment opportunity. The utilization of apprentices, trainees and journeymen under this part shall be in conformity with the equal employment opportunity requirements of Executive Order 11246, as amended, and 29 CFR part 30.

d. Apprentices and Trainees (programs of the U.S. DOT). Apprentices and trainees working under apprenticeship and skill training programs which have been certified by the Secretary of Transportation as promoting EEO in connection with Federal-aid highway construction programs are not subject to the requirements of paragraph 4 of this Section IV. The straight time hourly wage rates for apprentices and trainees under such programs will be established by the particular programs. The ratio of apprentices and trainees to journeymen shall not be greater than permitted by the terms of the particular program.

5. **Compliance with Copeland Act requirements.** The contractor shall comply with the requirements of 29 CFR part 3, which are incorporated by reference in this contract.
6. **Subcontracts.** The contractor or subcontractor shall insert Form FHWA-1273 in any subcontracts and also require the subcontractors to include Form FHWA-1273 in any lower tier subcontracts. The prime contractor shall be responsible for the compliance by any subcontractor or lower tier subcontractor with all the contract clauses in 29 CFR 5.5.
7. **Contract termination:** debarment. A breach of the contract clauses in 29 CFR 5.5 may be grounds for termination of the contract, and for debarment as a contractor and a subcontractor as provided in 29 CFR 5.12.
8. **Compliance with Davis-Bacon and Related Act requirements.** All rulings and interpretations of the Davis-Bacon and Related Acts contained in 29 CFR parts 1, 3, and 5 are herein incorporated by reference in this contract.
9. **Disputes concerning labor standards.** Disputes arising out of the labor standards provisions of this contract shall not be subject to the general disputes clause of this contract. Such disputes shall be resolved in accordance with the procedures of the Department of Labor set forth in 29 CFR parts 5, 6, and 7. Disputes within the meaning of this clause include disputes between the contractor (or any of its subcontractors) and the contracting agency, the U.S. Department of Labor, or the employees or their representatives.
10. **Certification of eligibility.**
    a. By entering into this contract, the contractor certifies that neither it (nor he or she) nor any person or firm who has an interest in the contractor's firm is a person or firm ineligible to be awarded Government contracts by virtue of section 3(a) of the Davis-Bacon Act or 29 CFR 5.12(a)(1).
    b. No part of this contract shall be subcontracted to any person or firm ineligible for award of a Government contract by virtue of section 3(a) of the Davis-Bacon Act or 29 CFR 5.12(a)(1).
    c. The penalty for making false statements is prescribed in the U.S. Criminal Code, 18 U.S.C. 1001.

V. CONTRACT WORK HOURS AND SAFETY STANDARDS ACT

The following clauses apply to any Federal-aid construction contract in an amount in excess of $100,000 and subject to the overtime provisions of the Contract Work Hours and Safety Standards Act. These clauses shall be inserted in addition to the clauses required by 29 CFR 5.5(a) or 29 CFR 4.6. As used in this paragraph, the terms laborers and mechanics include watchmen and guards.

1. **Overtime requirements.** No contractor or subcontractor contracting for any part of the contract work which may require or involve the employment of laborers or mechanics shall require or permit any such laborer or mechanic in any workweek in which he or she is employed on such work to work in excess of forty hours in such workweek unless such laborer or mechanic receives compensation at a rate not less than one and one-half times the basic rate of pay for all hours worked in excess of forty hours in such workweek.
2. **Violation; liability for unpaid wages; liquidated damages.** In the event of any violation of the clause set forth in paragraph (1.) of this section, the contractor and any subcontractor responsible therefor shall be liable for the unpaid wages. In addition, such contractor and subcontractor shall be liable to the United States (in the case of work done under contract for the District of Columbia or a territory, to such District or to such territory), for liquidated damages. Such liquidated damages shall be computed with respect to each individual laborer or mechanic, including watchmen and guards, employed in violation of the clause set forth in paragraph (1.) of this section, in the sum of $10 for each calendar day on which such individual was required or permitted to work in excess of the standard workweek of forty hours without payment of the overtime wages required by the clause set forth in paragraph (1.) of this section.
3. **Withholding for unpaid wages and liquidated damages.** The FHWA or the contacting agency shall upon its own action or upon written request of an authorized representative of the Department of Labor withhold or cause to be withheld, from any moneys payable on account of work performed by the contractor or subcontractor under any such contract or any other Federal contract with the same prime contractor, or any other federally-assisted contract subject to the Contract Work Hours and Safety Standards Act, which is held by the same prime contractor, such sums as may be determined to be necessary to satisfy any liabilities of such contractor or subcontractor for unpaid wages and liquidated damages as provided in the clause set forth in paragraph (2.) of this section.
4. **Subcontracts.** The contractor or subcontractor shall insert in any subcontracts the clauses set forth in paragraph (1.) through (4.) of this section and also a clause requiring the subcontractors to include these clauses in any lower tier subcontracts. The prime contractor shall be responsible for compliance by any subcontractor or lower tier subcontractor with the clauses set forth in paragraphs (1.) through (4.) of this section.

VI. SUBLETTING OR ASSIGNING THE CONTRACT

This provision is applicable to all Federal-aid construction contracts on the National Highway System.

1. The contractor shall perform with its own organization contract work amounting to not less than 30 percent (or a greater percentage if specified elsewhere in the contract) of the total original contract price, excluding any specialty items designated by the contracting agency. Specialty items may be performed by subcontract and the amount of any such specialty items performed may be deducted from the total original contract price before computing the amount of work required to be performed by the contractor's own organization (23 CFR 635.116).
    a. The term “perform work with its own organization” refers to workers employed or leased by the prime contractor, and equipment owned or rented by the prime contractor, with or without operators. Such term does not include employees or equipment of a subcontractor or lower tier subcontractor, agents of the prime contractor, or any other assignees. The term may include payments for the costs of hiring leased employees from an employee leasing firm meeting all relevant Federal and State regulatory requirements. Leased employees may only be included in this term if the prime contractor meets all of the following conditions:
        (1) the prime contractor maintains control over the supervision of the day-to-day activities of the leased employees;
        (2) the prime contractor remains responsible for the quality of the work of the leased employees;
        (3) the prime contractor retains all power to accept or exclude individual employees from work on the project; and
        (4) the prime contractor remains ultimately responsible for the payment of predetermined minimum wages, the submission of payrolls, statements of compliance and all other Federal regulatory requirements.

b. "Specialty Items" shall be construed to be limited to work that requires highly specialized knowledge, abilities, or equipment not ordinarily available in the type of contracting organizations qualified and expected to bid or propose on the contract as a whole and in general are to be limited to minor components of the overall contract.

2. The contract amount upon which the requirements set forth in paragraph (1) of Section VI is computed includes the cost of material and manufactured products which are to be purchased or produced by the contractor under the contract provisions.
3. The contractor shall furnish (a) a competent superintendent or supervisor who is employed by the firm, has full authority to direct performance of the work in accordance with the contract requirements, and is in charge of all construction operations (regardless of who performs the work) and (b) such other of its own organizational resources (supervision, management, and engineering services) as the contracting officer determines is necessary to assure the performance of the contract.
4. No portion of the contract shall be sublet, assigned or otherwise disposed of except with the written consent of the contracting officer, or authorized representative, and such consent when given shall not be construed to relieve the contractor of any responsibility for the fulfillment of the contract. Written consent will be given only after the contracting agency has assured that each subcontract is evidenced in writing and that it contains all pertinent provisions and requirements of the prime contract.
5. The 30% self-performance requirement of paragraph (1) is not applicable to design-build contracts; however, contracting agencies may establish their own self-performance requirements.

VII. SAFETY: ACCIDENT PREVENTION

This provision is applicable to all Federal-aid construction contracts and to all related subcontracts.

1. In the performance of this contract the contractor shall comply with all applicable Federal, State, and local laws governing safety, health, and sanitation (23 CFR 635). The contractor shall provide all safeguards, safety devices and protective equipment and take any other needed actions as it determines, or as the contracting officer may determine, to be reasonably necessary to protect the life and health of employees on the job and the safety of the public and to protect property in connection with the performance of the work covered by the contract.
2. It is a condition of this contract, and shall be made a condition of each subcontract, which the contractor enters into pursuant to this contract, that the contractor and any subcontractor shall not permit any employee, in performance of the contract, to work in surroundings or under conditions which are unsanitary, hazardous or dangerous to his/her health or safety, as determined under construction safety and health standards (29 CFR 1926) promulgated by the Secretary of Labor, in accordance with Section 107 of the Contract Work Hours and Safety Standards Act (40 U.S.C. 3704).
3. Pursuant to 29 CFR 1926.3, it is a condition of this contract that the Secretary of Labor or authorized representative thereof, shall have right of entry to any site of contract performance to inspect or investigate the matter of compliance with the construction safety and health standards and to carry out the duties of the Secretary under Section 107 of the Contract Work Hours and Safety Standards Act (40 U.S.C.3704).

VIII. FALSE STATEMENTS CONCERNING HIGHWAY PROJECTS

This provision is applicable to all Federal-aid construction contracts and to all related subcontracts.

In order to assure high quality and durable construction in conformity with approved plans and specifications and a high degree of reliability on statements and representations made by engineers, contractors, suppliers, and workers on Federal-aid highway projects, it is essential that all persons concerned with the project perform their functions as carefully, thoroughly, and honestly as possible. Willful falsification, distortion, or misrepresentation with respect to any facts related to the project is a violation of Federal law. To prevent any misunderstanding regarding the seriousness of these and similar acts, Form FHWA-1022 shall be posted on each Federal-aid highway project (23 CFR 635) in one or more places where it is readily available to all persons concerned with the project:

18 U.S.C. 1020 reads as follows:

"Whoever, being an officer, agent, or employee of the United States, or of any State or Territory, or whoever, whether a person, association, firm, or corporation, knowingly makes any false statement, false representation, or false report as to the character, quality, quantity, or cost of the material used or to be used, or the quantity or quality of the work performed or to be performed, or the cost thereof in connection with the submission of plans, maps, specifications, contracts, or costs of construction on any highway or related project submitted for approval to the Secretary of Transportation; or

Whoever knowingly makes any false statement, false representation, false report or false claim with respect to the character, quality, quantity, or cost of any work performed or to be performed, or materials furnished or to be furnished, in connection with the construction of any highway or related project approved by the Secretary of Transportation; or

Whoever knowingly makes any false statement or false representation as to material fact in any statement, certificate, or report submitted pursuant to provisions of the Federal-aid Roads Act approved July 1, 1916, (39 Stat. 355), as amended and supplemented;

Shall be fined under this title or imprisoned not more than 5 years or both."

IX. IMPLEMENTATION OF CLEAN AIR ACT AND FEDERAL WATER POLLUTION CONTROL ACT

This provision is applicable to all Federal-aid construction contracts and to all related subcontracts.

By submission of this bid/proposal or the execution of this contract, or subcontract, as appropriate, the bidder, proposer, Federal-aid construction contractor, or subcontractor, as appropriate, will be deemed to have stipulated as follows:

1. That any person who is or will be utilized in the performance of this contract is not prohibited from receiving an award due to a violation of Section 508 of the Clean Water Act or Section 306 of the Clean Air Act.
2. That the contractor agrees to include or cause to be included the requirements of paragraph (1) of this Section X in every subcontract, and further agrees to take such action as the contracting agency may direct as a means of enforcing such requirements.

X. CERTIFICATION REGARDING DEBARMENT, SUSPENSION, INELIGIBILITY AND VOLUNTARY EXCLUSION

This provision is applicable to all Federal-aid construction contracts, design-build contracts, subcontracts, lower-tier subcontracts, purchase orders, lease agreements, consultant contracts or any other covered transaction requiring FHWA approval or that is estimated to cost $25,000 or more – as defined in 2 CFR Parts 180 and 1200.

1. **Instructions for Certification – First Tier Participants:**
   a. By signing and submitting this proposal, the prospective first tier participant is providing the certification set out below.

b. The inability of a person to provide the certification set out below will not necessarily result in denial of participation in this covered transaction. The prospective first tier participant shall submit an explanation of why it cannot provide the certification set out below. The certification or explanation will be considered in connection with the department or agency's determination whether to enter into this transaction. However, failure of the prospective first tier participant to furnish a certification or an explanation shall disqualify such a person from participation in this transaction.
c. The certification in this clause is a material representation of fact upon which reliance was placed when the contracting agency determined to enter into this transaction. If it is later determined that the prospective participant knowingly rendered an erroneous certification, in addition to other remedies available to the Federal Government, the contracting agency may terminate this transaction for cause of default.
d. The prospective first tier participant shall provide immediate written notice to the contracting agency to whom this proposal is submitted if any time the prospective first tier participant learns that its certification was erroneous when submitted or has become erroneous by reason of changed circumstances.
e. The terms "covered transaction," "debarred," "suspended," "ineligible," "participant," "person," "principal," and "voluntarily excluded," as used in this clause, are defined in 2 CFR Parts 180 and 1200. “First Tier Covered Transactions” refers to any covered transaction between a grantee or subgrantee of Federal funds and a participant (such as the prime or general contract). “Lower Tier Covered Transactions” refers to any covered transaction under a First Tier Covered Transaction (such as subcontracts). “First Tier Participant” refers to the participant who has entered into a covered transaction with a grantee or subgrantee of Federal funds (such as the prime or general contractor). “Lower Tier Participant” refers any participant who has entered into a covered transaction with a First Tier Participant or other Lower Tier Participants (such as subcontractors and suppliers).
f. The prospective first tier participant agrees by submitting this proposal that, should the proposed covered transaction be entered into, it shall not knowingly enter into any lower tier covered transaction with a person who is debarred, suspended, declared ineligible, or voluntarily excluded from participation in this covered transaction, unless authorized by the department or agency entering into this transaction.
g. The prospective first tier participant further agrees by submitting this proposal that it will include the clause titled "Certification Regarding Debarment, Suspension, Ineligibility and Voluntary Exclusion-Lower Tier Covered Transactions," provided by the department or contracting agency, entering into this covered transaction, without modification, in all lower tier covered transactions and in all solicitations for lower tier covered transactions exceeding the $25,000 threshold.
h. A participant in a covered transaction may rely upon a certification of a prospective participant in a lower tier covered transaction that is not debarred, suspended, ineligible, or voluntarily excluded from the covered transaction, unless it knows that the certification is erroneous. A participant is responsible for ensuring that its principals are not suspended, debarred, or otherwise ineligible to participate in covered transactions. To verify the eligibility of its principals, as well as the eligibility of any lower tier prospective participants, each participant may, but is not required to, check the Excluded Parties List System website (https://www.epls.gov/), which is compiled by the General Services Administration.
i. Nothing contained in the foregoing shall be construed to require the establishment of a system of records in order to render in good faith the certification required by this clause. The knowledge and information of the prospective participant is not required to exceed that which is normally possessed by a prudent person in the ordinary course of business dealings.
j. Except for transactions authorized under paragraph (f) of these instructions, if a participant in a covered transaction knowingly enters into a lower tier covered transaction with a person who is suspended, debarred, ineligible, or voluntarily excluded from participation in this transaction, in addition to other remedies available to the Federal Government, the department or agency may terminate this transaction for cause or default.

* * * * *

2. **Certification Regarding Debarment, Suspension, Ineligibility and Voluntary Exclusion – First Tier Participants:**
   a. The prospective first tier participant certifies to the best of its knowledge and belief, that it and its principals:
      (1) Are not presently debarred, suspended, proposed for debarment, declared ineligible, or voluntarily excluded from participating in covered transactions by any Federal department or agency;
      (2) Have not within a three-year period preceding this proposal been convicted of or had a civil judgment rendered against them for commission of fraud or a criminal offense in connection with obtaining, attempting to obtain, or performing a public (Federal, State or local) transaction or contract under a public transaction; violation of Federal or State antitrust statutes or commission of embezzlement, theft, forgery, bribery, falsification or destruction of records, making false statements, or receiving stolen property;
      (3) Are not presently indicted for or otherwise criminally or civilly charged by a governmental entity (Federal, State or local) with commission of any of the offenses enumerated in paragraph (a)(2) of this certification; and
      (4) Have not within a three-year period preceding this application/proposal had one or more public transactions (Federal, State or local) terminated for cause or default.
   b. Where the prospective participant is unable to certify to any of the statements in this certification, such prospective participant shall attach an explanation to this proposal.
2. **Instructions for Certification - Lower Tier Participants:**
   (Applicable to all subcontracts, purchase orders and other lower tier transactions requiring prior FHWA approval or estimated to cost $25,000 or more - 2 CFR Parts 180 and 1200)
   a. By signing and submitting this proposal, the prospective lower tier is providing the certification set out below.
   b. The certification in this clause is a material representation of fact upon which reliance was placed when this transaction was entered into. If it is later determined that the prospective lower tier participant knowingly rendered an erroneous certification, in addition to other remedies available to the Federal Government, the department, or agency with which this transaction originated may pursue available remedies, including suspension and/or debarment.
   c. The prospective lower tier participant shall provide immediate written notice to the person to which this proposal is submitted if at any time the prospective lower tier participant learns that its certification was erroneous by reason of changed circumstances.
   d. The terms "covered transaction," "debarred," "suspended," "ineligible," "participant," "person," "principal," and "voluntarily excluded," as used in this clause, are defined in 2 CFR Parts 180 and 1200. You may contact the person to which this proposal is submitted for assistance in obtaining a copy of those regulations. “First Tier Covered Transactions” refers to any covered transaction between a grantee or subgrantee of Federal funds and a participant (such as the prime or general contract). “Lower Tier Covered Transactions” refers to any covered transaction under a First Tier Covered Transaction (such as subcontracts). “First Tier Participant” refers to the participant who has entered into a covered transaction with a grantee or subgrantee of Federal funds (such as the prime or general contractor). “Lower Tier Participant” refers any

participant who has entered into a covered transaction with a First Tier Participant or other Lower Tier Participants (such as subcontractors and suppliers).

e. The prospective lower tier participant agrees by submitting this proposal that, should the proposed covered transaction be entered into, it shall not knowingly enter into any lower tier covered transaction with a person who is debarred, suspended, declared ineligible, or voluntarily excluded from participation in this covered transaction, unless authorized by the department or agency with which this transaction originated.

f. The prospective lower tier participant further agrees by submitting this proposal that it will include this clause titled "Certification Regarding Debarment, Suspension, Ineligibility and Voluntary Exclusion-Lower Tier Covered Transaction," without modification, in all lower tier covered transactions and in all solicitations for lower tier covered transactions exceeding the $25,000 threshold.

g. A participant in a covered transaction may rely upon a certification of a prospective participant in a lower tier covered transaction that is not debarred, suspended, ineligible, or voluntarily excluded from the covered transaction, unless it knows that the certification is erroneous. A participant is responsible for ensuring that its principals are not suspended, debarred, or otherwise ineligible to participate in covered transactions. To verify the eligibility of its principals, as well as the eligibility of any lower tier prospective participants, each participant may, but is not required to, check the Excluded Parties List System website (https://www.epls.gov/), which is compiled by the General Services Administration.

h. Nothing contained in the foregoing shall be construed to require establishment of a system of records in order to render in good faith the certification required by this clause. The knowledge and information of participant is not required to exceed that which is normally possessed by a prudent person in the ordinary course of business dealings.

i. Except for transactions authorized under paragraph e of these instructions, if a participant in a covered transaction knowingly enters into a lower tier covered transaction with a person who is suspended, debarred, ineligible, or voluntarily excluded from participation in this transaction, in addition to other remedies available to the Federal Government, the department or agency with which this transaction originated may pursue available remedies, including suspension and/or debarment.

* * * * *

Certification Regarding Debarment, Suspension, Ineligibility and Voluntary Exclusion--Lower Tier Participants:

1. The prospective lower tier participant certifies, by submission of this proposal, that neither it nor its principals is presently debarred, suspended, proposed for debarment, declared ineligible, or voluntarily excluded from participating in covered transactions by any Federal department or agency.
2. Where the prospective lower tier participant is unable to certify to any of the statements in this certification, such prospective participant shall attach an explanation to this proposal.

* * * * *

XI. CERTIFICATION REGARDING USE OF CONTRACT FUNDS FOR LOBBYING

This provision is applicable to all Federal-aid construction contracts and to all related subcontracts which exceed $100,000 (49 CFR 20).

1. The prospective participant certifies, by signing and submitting this bid or proposal, to the best of his or her knowledge and belief, that:
   a. No Federal appropriated funds have been paid or will be paid, by or on behalf of the undersigned, to any person for influencing or attempting to influence an officer or employee of any Federal agency, a Member of Congress, an officer or employee of Congress, or an employee of a Member of Congress in connection with the awarding of any Federal contract, the making of any Federal grant, the making of any Federal loan, the entering into of any cooperative agreement, and the extension, continuation, renewal, amendment, or modification of any Federal contract, grant, loan, or cooperative agreement.
   b. If any funds other than Federal appropriated funds have been paid or will be paid to any person for influencing or attempting to influence an officer or employee of any Federal agency, a Member of Congress, an officer or employee of Congress, or an employee of a Member of Congress in connection with this Federal contract, grant, loan, or cooperative agreement, the undersigned shall complete and submit Standard Form-LLL, "Disclosure Form to Report Lobbying," in accordance with its instructions.
2. This certification is a material representation of fact upon which reliance was placed when this transaction was made or entered into. Submission of this certification is a prerequisite for making or entering into this transaction imposed by 31 U.S.C. 1352. Any person who fails to file the required certification shall be subject to a civil penalty of not less than $10,000 and not more than $100,000 for each such failure.
3. The prospective participant also agrees by submitting its bid or proposal that the participant shall require that the language of this certification be included in all lower tier subcontracts, which exceed $100,000 and that all such recipients shall certify and disclose accordingly.

STANDARD SPECIAL PROVISION

ON-THE-JOB TRAINING

(10-16-07) (Rev. 4-21-15) Z-10

Description

The North Carolina Department of Transportation will administer a custom version of the Federal On-the-Job Training (OJT) Program, commonly referred to as the Alternate OJT Program. All contractors (existing and newcomers) will be automatically placed in the Alternate Program. Standard OJT requirements typically associated with individual projects will no longer be applied at the project level. Instead, these requirements will be applicable on an annual basis for each contractor administered by the OJT Program Manager.

On the Job Training shall meet the requirements of 23 CFR 230.107 (b), 23 USC – Section 140, this provision and the On-the-Job Training Program Manual.

The Alternate OJT Program will allow a contractor to train employees on Federal, State and privately funded projects located in North Carolina. However, priority shall be given to training employees on NCDOT Federal-Aid funded projects.

Minorities and Women

Developing, training and upgrading of minorities and women toward journeyman level status is a primary objective of this special training provision. Accordingly, the Contractor shall make every effort to enroll minority and women as trainees to the extent that such persons are available within a reasonable area of recruitment. This training commitment is not intended, and shall not be used, to discriminate against any applicant for training, whether a member of a minority group or not.

Assigning Training Goals

The Department, through the OJT Program Manager, will assign training goals for a calendar year based on the contractors' past three years' activity and the contractors' anticipated upcoming year's activity with the Department. At the beginning of each year, all contractors eligible will be contacted by the Department to determine the number of trainees that will be assigned for the upcoming calendar year. At that time the Contractor shall enter into an agreement with the Department to provide a self-imposed on-the-job training program for the calendar year. This agreement will include a specific number of annual training goals agreed to by both parties. The number of training assignments may range from 1 to 15 per contractor per calendar year. The Contractor shall sign an agreement to fulfill their annual goal for the year.\

Training Classifications

The Contractor shall provide on-the-job training aimed at developing full journeyman level workers in the construction craft/operator positions. Preference shall be given to providing training in the following skilled work classifications:

Equipment Operators	Office Engineers
Truck Drivers	Estimators
Carpenters	Iron / Reinforcing Steel Workers
Concrete Finishers	Mechanics
Pipe Layers	Welders

The Department has established common training classifications and their respective training requirements that may be used by the contractors. However, the classifications established are not all-inclusive. Where the training is oriented toward construction applications, training will be allowed in lower-level management positions such as office engineers and estimators. Contractors shall submit new classifications for specific job functions that their employees are performing. The Department will review and recommend for acceptance to FHWA the new classifications proposed by contractors, if applicable. New classifications shall meet the following requirements:

Proposed training classifications are reasonable and realistic based on the job skill classification needs, and

The number of training hours specified in the training classification is consistent with common practices and provides enough time for the trainee to obtain journeyman level status.

The Contractor may allow trainees to be trained by a subcontractor provided that the Contractor retains primary responsibility for meeting the training and this provision is made applicable to the subcontract. However, only the Contractor will receive credit towards the annual goal for the trainee.

Where feasible, 25 percent of apprentices or trainees in each occupation shall be in their first year of apprenticeship or training. The number of trainees shall be distributed among the work classifications on the basis of the contractor's needs and the availability of journeymen in the various classifications within a reasonable area of recruitment.

No employee shall be employed as a trainee in any classification in which they have successfully completed a training course leading to journeyman level status or in which they have been employed as a journeyman.

Records and Reports

The Contractor shall maintain enrollment, monthly and completion reports documenting company compliance under these contract documents. These documents and any other information as requested shall be submitted to the OJT Program Manager.

Upon completion and graduation of the program, the Contractor shall provide each trainee with a certification Certificate showing the type and length of training satisfactorily completed.

Trainee Interviews

All trainees enrolled in the program will receive an initial and Trainee/Post graduate interview conducted by the OJT program staff.

Trainee Wages

Contractors shall compensate trainees on a graduating pay scale based upon a percentage of the prevailing minimum journeyman wages (Davis-Bacon Act). Minimum pay shall be as follows:

60 percent	of the journeyman wage for the first half of the training period
75 percent	of the journeyman wage for the third quarter of the training period
90 percent	of the journeyman wage for the last quarter of the training period

In no instance shall a trainee be paid less than the local minimum wage. The Contractor shall adhere to the minimum hourly wage rate that will satisfy both the NC Department of Labor (NCDOL) and the Department.

Achieving or Failing to Meet Training Goals

The Contractor will be credited for each trainee employed by him on the contract work who is currently enrolled or becomes enrolled in an approved program and who receives training for at least 50 percent of the specific program requirement. Trainees will be allowed to be transferred between projects if required by the Contractor's scheduled workload to meet training goals.

If a contractor fails to attain their training assignments for the calendar year, they may be taken off the NCDOT's Bidders List.

Measurement and Payment

No compensation will be made for providing required training in accordance with these contract documents.

STANDARD SPECIAL PROVISION

NAME CHANGE FOR NCDENR

(1-19-16) Z-11

Description

Wherever in the 2012 Standard Specifications, Project Special Provisions, Standard Special Provisions, Permits or Plans that reference is made to "NCDENR" or "North Carolina Department of Environment and Natural Resources", replace with "NCDEQ" or "North Carolina Department of Environmental Quality" respectively, as the case may be.

STANDARD SPECIAL PROVISION
MINIMUM WAGES
GENERAL DECISION NC160099 01/08/2016 NC99

Z-099

Date: January 8, 2016

General Decision Number: NC160099 01/08/2016 NC99

Superseded General Decision Numbers: NC20150099

State: North Carolina

Construction Type: HIGHWAY

COUNTIES:

Alleghany	Jackson	Surry
Ashe	Lincoln	Swain
Avery	Macon	Transylvania
Cherokee	McDowell	Watauga
Clay	Mitchell	Wilkes
Cleveland	Polk	Yancey
Graham	Rutherford	

HIGHWAY CONSTRUCTION PROJECTS (excluding tunnels, building structures in rest area projects & railroad construction; bascule, suspension & spandrel arch bridges designed for commercial navigation, bridges involving marine construction; and other major bridges).

Note: Executive Order (EO) 13658 establishes an hourly minimum wage of $10.15 for calendar year 2016 that applies to all contracts subject to the Davis-Bacon Act for which the solicitation is issued on or after January 1, 2015. If this contract is covered by the EO, the contractor must pay all workers in any classification listed on this wage determination at least $10.15 (or the applicable wage rate listed on this wage determination, if it is higher) for all hours spent performing on the contract for calendar year 2016. The EO minimum wage rate will be adjusted annually. Additional information on contractor requirements and worker protections under the EO is available at www.dol.gov/whd/govcontracts.

Modification Number	Publication Date
0	01/08/2016

SUNC2014-001 11/13/2014

	Rates	Fringes
BLASTER	21.83	
CARPENTER	12.54	
CEMENT MASON/CONCRETE FINISHER	14.10	
ELECTRICIAN		
Electrician	19.19	2.39
Telecommunications Technician	15.13	
IRONWORKER	14.53	
LABORER		
Asphalt Raker and Spreader	12.23	
Asphalt Screed/Jackman	15.22	

	Rates	Fringes
Carpenter Tender	10.00	
Cement Mason/Concrete Finisher Tender	12.26	
Common or General	10.68	
Guardrail/Fence Installer	13.43	
Pipelayer	12.22	
Traffic Signal/Lighting Installer	15.85	
PAINTER		
Bridge	19.62	
POWER EQUIPMENT OPERATORS		
Asphalt Broom Tractor	11.00	
Bulldozer Fine	16.20	
Bulldozer Rough	13.89	
Concrete Grinder/Groover	24.66	
Crane Boom Trucks	14.44	.53
Crane Other	19.59	
Crane Rough/All-Terrain	21.25	
Drill Operator Rock	15.25	
Drill Operator Structure	20.92	
Excavator Fine	16.11	
Excavator Rough	13.10	
Grader/Blade Fine	19.24	
Grader/Blade Rough	13.07	
Loader 2 Cubic Yards or Less	13.38	
Loader Greater Than 2 Cubic Yards	16.01	
Material Transfer Vehicle (Shuttle Buggy)	17.39	
Mechanic	18.51	
Milling Machine	13.88	
Off-Road Hauler/Water Tanker	13.87	
Oiler/Greaser	14.98	
Pavement Marking Equipment	13.33	
Paver Asphalt	15.68	.05
Roller Asphalt Breakdown	14.05	.06
Roller Asphalt Finish	14.98	.04
Roller Other	11.75	
Scraper Finish	13.87	
Scraper Rough	11.53	
Slip Form Machine	20.79	
Tack Truck/Distributor Operator	14.67	.06
TRUCK DRIVER		
GVWR of 26,000 Lbs or Less	11.72	
GVWR of 26,000 Lbs or Greater	13.50	

Welders – Receive rate prescribed for craft performing operation to which welding is incidental.

Unlisted classifications needed for work not included within the scope of the classifications listed may be added after award only as provided in the labor standards contract clauses (29 CFR 5.5(a)(1)(ii)).

The body of each wage determination lists the classification and wage rates that have been found to be prevailing for the cited type(s) of construction in the area covered by the wage determination. The classifications are listed in alphabetical order of "identifiers" that indicate

whether the particular rate is a union rate (current union negotiated rate for local), a survey rate (weighted average rate) or a union average rate (weighted union average rate).

Union Rate Identifiers

A four letter classification abbreviation identifier enclosed in dotted lines beginning with characters other than "SU" or "UAVG" denotes that the union classification and rate were prevailing for that classification in the survey. Example: PLUM0198-005 07/01/2014. PLUM is an abbreviation identifier of the union which prevailed in the survey for this classification, which in this example would be Plumbers. 0198 indicates the local union number or district council number where applicable, i.e., Plumbers Local 0198. The next number, 005 in the example, is an internal number used in processing the wage determination. 07/01/2014 is the effective date of the most current negotiated rate, which in this example is July 1, 2014.

Union prevailing wage rates are updated to reflect all rate changes in the collective bargaining agreement (CBA) governing this classification and rate.

Survey Rate Identifiers

Classifications listed under the "SU" identifier indicate that no one rate prevailed for this classification in the survey and the published rate is derived by computing a weighted average rate based on all the rates reported in the survey for that classification. As this weighted average rate includes all rates reported in the survey, it may include both union and non-union rates. Example: SULA2012-007 5/13/2014. SU indicates the rates are survey rates based on a weighted average calculation of rates and are not majority rates. LA indicates the State of Louisiana. 2012 is the year of survey on which these classifications and rates are based. The next number, 007 in the example, is an internal number used in producing the wage determination. 5/13/2014 indicates the survey completion date for the classifications and rates under that identifier.

Survey wage rates are not updated and remain in effect until a new survey is conducted.

Union Average Rate Identifiers

Classification(s) listed under the UAVG identifier indicate that no single majority rate prevailed for those classifications; however, 100% of the data reported for the classifications was union data. EXAMPLE: UAVG-OH-0010 08/29/2014. UAVG indicates that the rate is a weighted union average rate. OH indicates the state. The next number, 0010 in the example, is an internal number used in producing the wage determination. 08/29/2014 indicates the survey completion date for the classifications and rates under that identifier.

A UAVG rate will be updated once a year, usually in January of each year, to reflect a weighted average of the current negotiated/CBA rate of the union locals from which the rate is based.

WAGE DETERMINATION APPEALS PROCESS

1.) Has there been an initial decision in the matter? This can be:

* an existing published wage determination
* a survey underlying a wage determination
* a Wage and Hour Division letter setting forth a position on a wage determination matter
* a conformance (additional classification and rate) ruling

On survey related matters, initial contact, including requests for summaries of surveys, should be with the Wage and Hour Regional Office for the area in which the survey was conducted because those Regional Offices have responsibility for the Davis-Bacon survey program. If the response from this initial contact is not satisfactory, then the process described in 2.) and 3.) should be followed.

With regard to any other matter not yet ripe for the formal process described here, initial contact should be with the Branch of Construction Wage Determinations. Write to:

Branch of Construction Wage Determinations
Wage and Hour Division
U. S. Department of Labor
200 Constitution Avenue, N.W.
Washington, D.C. 20210

2.) If the answer to the question in 1.) is yes, then an interested party (those affected by the action) can request review and reconsideration from the Wage and Hour Administrator (See 29 CFR Part 1.8 and 29 CFR Part 7). Write to:

Wage and Hour Administrator
U.S. Department of Labor
200 Constitution Avenue, N.W.
Washington, D.C. 20210

The request should be accompanied by a full statement of the interested party's position and by any information (wage payment data, project description, area practice material, etc.) that the requestor considers relevant to the issue.

3.) If the decision of the Administrator is not favorable, an interested party may appeal directly to the Administrative Review Board (formerly the Wage Appeals Board). Write to:

Administrative Review Board
U.S. Department of Labor
200 Constitution Avenue, N.W.
Washington, D.C. 20210

4.) All decisions by the Administrative Review Board are final.

END OF GENERAL DECISION

STANDARD SPECIAL PROVISION
MINIMUM WAGES
GENERAL DECISION NC160100 01/08/2016 NC100

Z-100

Date: January 8, 2016

General Decision Number: NC160100 01/8/2016 NC100

Superseded General Decision Numbers: NC20150100

State: North Carolina

Construction Type: HIGHWAY

COUNTIES:

Alexander	Caldwell	Henderson
Buncombe	Catawba	Madison
Burke	Haywood	

HIGHWAY CONSTRUCTION PROJECTS (excluding tunnels, building structures in rest area projects & railroad construction; bascule, suspension & spandrel arch bridges designed for commercial navigation, bridges involving marine construction; and other major bridges).

Note: Executive Order (EO) 13658 establishes an hourly minimum wage of $10.15 for calendar year 2016 that applies to all contracts subject to the Davis-Bacon Act for which the solicitation is issued on or after January 1, 2015. If this contract is covered by the EO, the contractor must pay all workers in any classification listed on this wage determination at least $10.10 (or the applicable wage rate listed on this wage determination, if it is higher) for all hours spent performing on the contract for calendar year 2016. The EO minimum wage rate will be adjusted annually. Additional information on contractor requirements and worker protections under the EO is available at www.dol.gov/whd/govcontracts.

Modification Number	Publication Date
0	01/08/2016

SUNC2014-002 11/13/2014

	Rates	Fringes
BLASTER	20.93	
CARPENTER	13.48	
CEMENT MASON/CONCRETE FINISHER	14.40	
ELECTRICIAN		
Electrician	18.79	2.62
Telecommunications Technician	14.67	1.67
IRONWORKER	12.48	
LABORER		
Asphalt Raker and Spreader	11.76	
Asphalt Screed/Jackman	15.38	.08
Carpenter Tender	10.50	
Cement Mason/Concrete Finisher Tender	11.04	
Common or General	11.90	
Guardrail/Fence Installer	13.09	
Pipelayer	12.87	

	Rates	Fringes
Traffic Signal/Lighting Installer	15.33	.22
PAINTER		
Bridge	20.67	
POWER EQUIPMENT OPERATORS		
Asphalt Broom Tractor	10.00	
Bulldozer Fine	16.28	
Bulldozer Rough	14.51	
Concrete Grinder/Groover	19.20	
Crane Boom Trucks	18.19	
Crane Other	18.69	
Crane Rough/All-Terrain	19.19	
Drill Operator Rock	15.00	
Drill Operator Structure	21.07	
Excavator Fine	16.02	
Excavator Rough	14.67	
Grader/Blade Fine	19.86	
Grader/Blade Rough	15.12	
Loader 2 Cubic Yards or Less	12.38	
Loader Greater Than 2 Cubic Yards	17.91	
Material Transfer Vehicle (Shuttle Buggy)	15.44	
Mechanic	17.86	
Milling Machine	15.08	
Off-Road Hauler/Water Tanker	11.95	
Oiler/Greaser	15.05	
Pavement Marking Equipment	11.99	
Paver Asphalt	17.84	.08
Paver Concrete	18.20	
Roller Asphalt Breakdown	15.00	.08
Roller Asphalt Finish	16.08	.07
Roller Other	12.51	.03
Scraper Finish	12.86	
Scraper Rough	13.83	
Slip Form Machine	20.38	
Tack Truck/Distributor Operator	14.81	.02
TRUCK DRIVER		
GVWR of 26,000 Lbs or Greater	13.65	
GVWR of 26,000 Lbs or Less	12.48	

Welders – Receive rate prescribed for craft performing operation to which welding is incidental.

Unlisted classifications needed for work not included within the scope of the classifications listed may be added after award only as provided in the labor standards contract clauses (29 CFR 5.5(a)(1)(ii)).

The body of each wage determination lists the classification and wage rates that have been found to be prevailing for the cited type(s) of construction in the area covered by the wage determination. The classifications are listed in alphabetical order of "identifiers" that indicate whether the particular rate is a union rate (current union negotiated rate for local), a survey rate (weighted average rate) or a union average rate (weighted union average rate).

Union Rate Identifiers

A four letter classification abbreviation identifier enclosed in dotted lines beginning with characters other than "SU" or "UAVG" denotes that the union classification and rate were prevailing for that classification in the survey. Example: PLUM0198-005 07/01/2014. PLUM is an abbreviation identifier of the union which prevailed in the survey for this classification, which in this example would be Plumbers. 0198 indicates the local union number or district council number where applicable, i.e., Plumbers Local 0198. The next number, 005 in the example, is an internal number used in processing the wage determination. 07/01/2014 is the effective date of the most current negotiated rate, which in this example is July 1, 2014.

Union prevailing wage rates are updated to reflect all rate changes in the collective bargaining agreement (CBA) governing this classification and rate.

Survey Rate Identifiers

Classifications listed under the "SU" identifier indicate that no one rate prevailed for this classification in the survey and the published rate is derived by computing a weighted average rate based on all the rates reported in the survey for that classification. As this weighted average rate includes all rates reported in the survey, it may include both union and non-union rates. Example: SULA2012-007 5/13/2014. SU indicates the rates are survey rates based on a weighted average calculation of rates and are not majority rates. LA indicates the State of Louisiana. 2012 is the year of survey on which these classifications and rates are based. The next number, 007 in the example, is an internal number used in producing the wage determination. 5/13/2014 indicates the survey completion date for the classifications and rates under that identifier.

Survey wage rates are not updated and remain in effect until a new survey is conducted.

Union Average Rate Identifiers

Classification(s) listed under the UAVG identifier indicate that no single majority rate prevailed for those classifications; however, 100% of the data reported for the classifications was union data. EXAMPLE: UAVG-OH-0010 08/29/2014. UAVG indicates that the rate is a weighted union average rate. OH indicates the state. The next number, 0010 in the example, is an internal number used in producing the wage determination. 08/29/2014 indicates the survey completion date for the classifications and rates under that identifier.

A UAVG rate will be updated once a year, usually in January of each year, to reflect a weighted average of the current negotiated/CBA rate of the union locals from which the rate is based.

WAGE DETERMINATION APPEALS PROCESS

1.) Has there been an initial decision in the matter? This can be:

* an existing published wage determination
* a survey underlying a wage determination
* a Wage and Hour Division letter setting forth a position on a wage determination matter
* a conformance (additional classification and rate) ruling

On survey related matters, initial contact, including requests for summaries of surveys, should be with the Wage and Hour Regional Office for the area in which the survey was conducted because those Regional Offices have responsibility for the Davis-Bacon survey program. If the response from this initial contact is not satisfactory, then the process described in 2.) and 3.) should be followed.

With regard to any other matter not yet ripe for the formal process described here, initial contact should be with the Branch of Construction Wage Determinations. Write to:

Branch of Construction Wage Determinations
Wage and Hour Division
U. S. Department of Labor
200 Constitution Avenue, N.W.
Washington, D.C. 20210

2.) If the answer to the question in 1.) is yes, then an interested party (those affected by the action) can request review and reconsideration from the Wage and Hour Administrator (See 29 CFR Part 1.8 and 29 CFR Part 7). Write to:

Wage and Hour Administrator
U.S. Department of Labor
200 Constitution Avenue, N.W.
Washington, D.C. 20210

The request should be accompanied by a full statement of the interested party's position and by any information (wage payment data, project description, area practice material, etc.) that the requestor considers relevant to the issue.

3.) If the decision of the Administrator is not favorable, an interested party may appeal directly to the Administrative Review Board (formerly the Wage Appeals Board). Write to:

Administrative Review Board
U.S. Department of Labor
200 Constitution Avenue, N.W.
Washington, D.C. 20210

4.) All decisions by the Administrative Review Board are final.

END OF GENERAL DECISION

SIGNAL MAINTENANCE & REPAIR:
(2-26-13)

Description

The Department will furnish the following items:
Signal Heads
Pedestrian Heads
Signal Head Hardware
Cabinets
Controllers
Detector Cards

Department furnished items will be available for pickup at the Traffic Signal Shop 79 Division of Highways Drive, Sylva NC between 8:00 AM and 9:00 AM Monday through Friday. **No exceptions will be given for the times of availability for pick up**. The Contractor shall notify the Department 48 hours in advance of picking up materials. Material ownership and the responsibility thereof is transferred to the Contractor when such material is accepted by the Contractor and transported from the Department.

The Contractor shall submit a daily work schedule to the Department. Schedules may be submitted weekly and may be emailed or faxed to the Department.

Measurement and Payment

There will be no direct payment for work covered in this section Payment at the contract unit prices for the various items in the contract will be full compensation for all work covered by this section.

SIGNAL HEADS:
(2-26-13)

Revise the *2012 Standard Specifications* as follows:

Page 17-5, Article 1705-1 Description, first paragraph, replace with the following:

Install Department furnished vehicle and pedestrian LED signal heads, visors, interconnecting brackets, wire entrance fittings, mounting assemblies, signal cable, lashing wire, pedestrian pushbuttons (and associated lead-in cable), pedestrian signal signs, grounding systems and all necessary hardware.

Page 17-8, Article 1705-4 Measurement and Payment, first paragraph, replace with the following:

Vehicle Signal Head (___) and *Pedestrian Signal Head (___)* will be measured and paid as the actual number of signal heads of each type of material (aluminum or polycarbonate), size and number of sections installed and accepted.

CONTROLLERS WITH CABINETS:
(2-26-13)

Revise the *2012 Standard Specifications* as follows:

Page 17-37, Article 1751-1 Description, first paragraph, replace the first paragraph with the following:

Install Department furnished controllers with cabinets and all necessary hardware. Install all pole or foundation mounting hardware, detector sensor cards, external electrical service disconnects, one Corbin Number 2 cabinet key, one police panel key, conflict monitors or malfunction management units, surge protection, grounding systems, AC/DC isolator cards and all necessary hardware.

Page 17-38, Article 1751-4 Measurement and Payment, first and second paragraph, replace with the following:

Controllers with Cabinet (____) will be measured and paid as the actual number of each type of controllers with cabinets installed and accepted.

Detector Card (____) will be measured and paid as the actual number installed and accepted.

CABINET BASE ADAPTER/EXTENDER:
(2-26-13)

Revise the *2012 Standard Specifications* as follows:

Page 17-40, Article 1753-1 Description, first paragraph, replace with the following:

Install cabinet base adapters and extenders with all necessary hardware for Type 170 cabinets.

Page 17-40, Article 1753-4 Measurement and Payment, first and second paragraph, replace with the following:

Cabinet Base Adapters will be measured and paid as the actual number installed and accepted.

Cabinet Base Extenders will be measured and paid as the actual number installed and accepted.

BEACON CONTROLLER ASSEMBLIES:
(2-26-13)

Revise the *2012 Standard Specifications* as follows:

Page 17-41, Article 1755-1, Description, first paragraph, replace with the following:

Install beacon controller assemblies with cabinets. Install all pole mounting hardware, solid state flashers, one Corbin Number 2 cabinet key, surge protection, grounding systems and all necessary hardware.

Page 17-41, Article 1755-4, Measurement and Payment, first paragraph, replace with the following:

Beacon Controller Assembly and Cabinet (____) will be measured and paid as the actual number installed and accepted.

NCDOT POLES:
(2-26-13)

Description

Relocate existing wood pole. Install wood or metal pole at locations specified by the Department.

Construction Method

Remove and relocate existing wood pole according to plans. Use methods to remove the pole that will not result in damage to other portions of the project or facility. Repair damage that results from the Contractor's actions at no additional cost to the Department. Furnish and install any new attachment hardware as required.

Install Department furnished wood poles in accordance with Article 1720 of the *2012 Standard Specifications*. Poles will be available for pickup from the Traffic Signal Shop, 79 Division of Highways Drive, Sylva between 8:00 AM and 9:00 AM Monday through Thursday. **No exceptions will be given for the times of availability for pick up**. The Contractor shall notify the Department 48 hours in advance of picking up materials. Material ownership and the responsibility thereof is transferred to the Contractor when such material is accepted by the Contractor and transported from the Department.

Install Department furnished metal poles in accordance with the Project Special Provisions Signals and Intelligent Transportation Systems Section 10.2B and 10.3B contained within this proposal. Poles and hardware will be available for pickup from the Traffic Signal Shop, 79 Division of Highways Drive, Sylva between 8:00 AM and 9:00 AM Monday through Thursday. **No exceptions will be given for the times of availability for pick up**. The Contractor shall notify the Department 48 hours in advance of picking up materials. Material ownership and the responsibility thereof is transferred to the Contractor when such material is accepted by the Contractor and transported from the Department.

Measurement and Payment

Relocate wood pole will be measured and paid as the actual number of poles removed and relocated within the intersection project limits. The contract unit price will be full compensation for all material and equipment necessary to remove all attachment hardware and reattach the same. No measurement will be made for installing grounding systems as these will be considered incidental to removing and relocating wood poles. Cable transfers will be paid for in accordance with Section 1735 of the *2012 Standard Specifications.*

DOT wood pole will be measured and paid as the actual number of poles transported, installed and accepted. No measurement will be made for the installation of grounding systems as these will be considered incidental to transporting and installing the wood poles.

DOT metal pole will be measured and paid as the actual number of poles transported, installed and accepted. No measurement will be made for the installation of grounding systems as these will be considered incidental to transporting and installing the metal poles.

TROUBLESHOOTING: SPECIAL

Description

Furnish troubleshooting services in accordance with the contract.

Construction Methods

Provide a 2-Man Crew with supporting equipment to troubleshoot fiber communications system. The crew should have the knowledge and skills needed to accurately diagnose a nonfunctioning system.

Measurement and Payment

Troubleshooting Fiber Communications System will be measured and paid for in the actual number of crew hours that each crew is provided during the life of the project as approved by the Engineer to provide the diagnostic services. There will be no direct payment for equipment, tools, etc. as they are considered incidental to the pay item.

Payment will be made under:

Pay Item	Pay Unit
Troubleshooting Fiber Communications System	Hour

FIBER OPTIC INSTALLATION AND REPAIR: SPECIAL

Description

Furnish labor and material to install new fiber optic communications system. Furnish labor and material to repair or modify existing fiber optic communications system.

Construction Methods

Adjust existing span and guy wire attachments in accordance with the *2012 Standard Specifications*. Furnish attachment for ¼” span wire with lashed multi-conductor cable. Furnish additional fiber cable storage racks (snow shoes), fiber optic jumpers, pig tails, connectors. Furnish labor and material to complete fusion splice at locations directed by the Department. Remove and reinstall existing fiber at locations directed by the Department.

Measurement and Payment

Adjust Span & Guy Wire Attachment will be measured and paid for in the actual number of adjustments that is provided during the life of the project as approved by the Engineer. There will be no direct payment for equipment, tools, etc. as they are considered incidental to the pay item.

Attachment with Lashed Multi-Conductor (1/4") will be measured and paid for in the actual number of attachments that is provided during the life of the project as approved by the Engineer. There will be no direct payment for equipment, tools, etc. as they are considered incidental to the pay item. Conductor cables will be paid as a separate item.

Fiber Cable Storage Racks (Snow Shoes) will be measured and paid for in the actual number of snow shoes that is provided during the life of the project as approved by the Engineer. There will be no direct payment for equipment, tools, etc. as they are considered incidental to the pay item.

Extra Fiber Optic Jumpers, Pig Tails & Connectors will be measured and paid for in the actual number of extra jumpers, pig tails or connectors that is provided not included with the work as described in Section 1731 of the *2012 Standard Specifications* during the life of the project as approved by the Engineer. There will be no direct payment for equipment, tools, etc. as they are considered incidental to the pay item.

Remove & Reinstall Existing Fiber will be measured and paid for in the actual number of linear feet that is removed and reinstalled during the life of the project as approved by the Engineer. There will be no direct payment for equipment, tools, etc. as they are considered incidental to the pay item.
Communications Cable (Fusion Splice) will be measured and paid for in the actual number of linear feet that is provided during the life of the project as approved by the Engineer. There will be no direct payment for equipment, tools, etc. as they are considered incidental to the pay item.

Payment will be made under:

Pay Item	**Pay Unit**
Adjust Span & Guy Wire Attachment	Each
Attachment with Lashed Multi-Conductor (1/4")	Each
Fiber Cable Storage Racks (Snow Shoes)	Each
Extra Fiber Optic Jumpers, Pig Tails & Connectors	Each
Remove & Reinstall Existing Fiber	Linear Feet
Communications Cable (Fusion Splice)	Linear Feet

Project Special Provisions

(Version 12.1)

Signals and Intelligent Transportation Systems

Prepared By: _____
1-Mar-16

Contents

1. SIGNAL HEADs 8
1.1. MATERIALS 8
A. General: 8
B. Vehicle Signal Heads: 9
C. Pedestrian Signal Heads: 11
D. Signal Cable: 13
E. Optically-Programmed Vehicle Signal Sections: 13
F. Louvers: 14
2. VIDEO IMAGING LOOP EMULATOR DETECTOR SYSTEMS 14
2.1. DESCRIPTION 14
2.2. MATERIALS 14
A. General: 14
B. Loop Emulator System: 16
C. Video Imaging Loop Emulator System Support: 17
2.3. CONSTRUCTION METHODS 18
2.4. MEASUREMENT AND PAYMENT 19
3. MICROWAVE VEHICLE DETECTOR 19
3.1. DESCRIPTION 19

3.2. MATERIALS 19
3.3. CONSTRUCTION METHODS 20
3.4. MEASUREMENT AND PAYMENT 21
4. TWISTED-PAIR COMMUNICATIONS CABLE 21
4.1. DESCRIPTION 21
4.2. MATERIALS 21
A. General: 21
B. Communications Cable: 21
C. Communications Cable Identification Markers (Cable Wraps): 22
4.3. CONSTRUCTION METHODS 23
A. General: 23
B. Aerial Installation: 24
C. Underground Installation: 25
D. Bonding and Splicing: 26
E. Cable Identification Markers: 27
4.4. MEASUREMENT AND PAYMENT 27
5. Communications SYSTEM SUPPORT EQUIPMENT 27
5.1. DESCRIPTION 27
5.2. MATERIALS 27
A. General: 27
B. Fiber-Optic Support Equipment 28
C. Wireless Radio Support Equipment 29
5.3. MEASUREMENT AND PAYMENT 30
6. FIBER-OPTIC TRAINING 30
6.1. DESCRIPTION 30

6.2. MATERIALS 31
6.3. MEASUREMENT AND PAYMENT 32
7. SPLICE CABINET (FIBER OPTICS) 33
7.1. DESCRIPTION 33
7.2. MATERIALS 33
7.3. CONSTRUCTION METHODS 33
A. General: 33
B. Pole Mounted: 33
C. Base Mounted: 33
7.4. MEASUREMENT AND PAYMENT 33
8. Solar Power, 900 MHZ Spread Spectrum radio 34
8.1. DESCRIPTION 34
8.2. MATERIALS 34
A. 900MHz Wireless Radio System: 34
B. Solar Powered Assembly: 36
8.3. CONSTRUCTION METHODS 38
A. Antenna Mounting: 38
B. Solar Power Assembly: 39
8.4. MEASURMENT AND PAYMENT 40
9. MODIFY Spread Spectrum Wireless radio 40
9.1. DESCRIPTION 40
9.2. MATERIALS 40
9.3. DESCRIPTION 40
9.4. MEASURE OF PAYMENT 41
10. traffic signal supports 41

10.1. METAL TRAFFIC SIGNAL SUPPORTS – ALL POLES 41
A. General: 41
B. Materials: 43
C. Construction Methods: 44
10.2. METAL STRAIN POLE 45
A. Materials: 45
B. Construction Methods: 47
10.3. METAL POLE WITH MAST ARM 47
A. Materials: 48
B. Construction Methods: 48
10.4. DRILLED PIER FOUNDATIONS FOR METAL TRAFFIC SIGNAL POLES 48
A. Description: 49
B. Soil Test and Foundation Determination: 49
C. Drilled Pier Construction: 51
10.5. CUSTOM DESIGN OF TRAFFIC SIGNAL SUPPORTS 51
A. General: 51
B. Metal Poles: 52
C. Mast Arms: 54
10.6. METAL SIGNAL POLE REMOVALS 55
A. Description: 55
B. Construction Methods: 55
10.7. POLE NUMBERING SYSTEM 55
A. New Poles 55

B. .....Reused Poles 56
10.8. ..... REUSED POLE SHAFTS AND/OR MAST ARMS 56
10.9. .....MEASUREMENT AND PAYMENT 56
11. CONTROLLERS WITH CABINETS 58
11.1. .....MATERIALS – TYPE 170E CONTROLLERS 58
11.2. .....MATERIALS – TYPE 2070L CONTROLLERS 59
11.3. ..... MATERIALS – NEMA TS-1 CONTROLLERS 60
11.4. .....MATERIALS – NEMA TS-2 TYPE 2 CONTROLLERS 60
11.5. .....MATERIALS – GENERAL CABINETS 60
11.6. ..... MATERIALS – TYPE 170E CABINETS 61
A. ..... Type 170 E Cabinets General: 61
B. ..... Type 170 E Cabinet Electrical Requirements: 61
C. .....Type 170 E Cabinet Physical Requirements: 68
D. .....Model 2018 Enhanced Conflict Monitor: 70
11.7. .....MATERIALS – NEMA TS-1 CABINETS 79
A. .....NEMA TS-1 Cabinet Physical Requirements: 79
B. .....NEMA TS-1 Cabinet Electrical Requirements: 81
C. ..... NEMA TS-1 Conflict Monitors: 86
11.8. ..... MATERIALS – NEMA TS-2 TYPE 1 CABINETS 87
A. .....NEMA TS-2 Type 1 Cabinets General: 87
B. ..... NEMA TS-2 Type 1 Cabinet Physical Requirements: 87
C. ..... NEMA TS-2 Type 1 Cabinet Electrical Requirements: 88
11.9. .....MATERIALS – TYPE 170 DETECTOR SENSOR UNITS 93
11.10. .....MATERIALS – NEMA TS-1 DETECTORS 93

11.11. MATERIALS – NEMA TS-2 DETECTOR CARDS AND RACKS 94
12. SPLICE CABINETS (TWISTED PAIR) 95
12.1. DESCRIPTION 95
12.2. MATERIALS 95
12.3. CONSTRUCTION METHODS 95
12.4. MEASUREMENT AND PAYMENT 95
13. PORTABLE TRAFFIC SIGNAL SYSTEM 96
13.1. DESCRIPTION 96
13.2. MATERIALS 96
13.3. CONSTRUCTION METHODS 98
13.4. MEASUREMENT AND PAYMENT 99
14. GPS UNIT 100
14.1. DESCRIPTION 100
14.2. MATERIALS 100
14.3. CONSTRUCTION METHODS 100
14.4. METHOD OF MEASUREMENT 100
14.5. BASIS OF PAYMENT 101
15. PUSH BUTTON INTEGRATED ACCESSIBLE PEDESTRIAN SIGNAL (APS) 101
15.1. DESCRIPTION 101
15.2. MATERIALS 101
15.3. CONSTRUCTION METHODS 102
15.4. MEASUREMENT AND PAYMENT 103
16. WIRELESS MAGNETIC SENSOR VEHICLE DETECTION SYSTEM 104
16.1. DESCRIPTION 104
16.2. MATERIALS 104

16.3. CONSTRUCTION METHODS 105
16.4. MEASUREMENT AND PAYMENT 106

1. SIGNAL HEADs

1.1. MATERIALS

A. General:

Fabricate vehicle signal head housings and end caps from die-cast aluminum. Fabricate 12-inch and 16-inch pedestrian signal head housings and end caps from die-cast aluminum. Fabricate 9-inch pedestrian signal head housings, end caps, and visors from virgin polycarbonate material. Provide visor mounting screws, door latches, and hinge pins fabricated from stainless steel. Provide interior screws, fasteners, and metal parts fabricated from stainless steel or corrosion resistant material.

Fabricate tunnel and traditional visors from sheet aluminum.

Paint all surfaces inside and outside of signal housings and doors. Paint outside surfaces of tunnel and traditional visors, messenger cable mounting assemblies, pole and pedestal mounting assemblies, and pedestrian pushbutton housings. Have electrostatically-applied, fused-polyester paint in highway yellow (Federal Standard 595C, Color Chip Number 13538) a minimum of 2.5 to 3.5 mils thick. Do not apply paint to the latching hardware or rigid vehicle signal head mounting brackets for mast-arm attachments.

Have the interior surfaces of tunnel and traditional visors painted an alkyd urea black synthetic baking enamel with a minimum gloss reflectance and meeting the requirements of MIL-E-10169, “Enamel Heat Resisting, Instrument Black.”

For pole mounting, provide side of pole mounting assemblies with framework and all other hardware necessary to make complete, watertight connections of the signal heads to the poles and pedestals. Fabricate the mounting assemblies and frames from aluminum with all necessary hardware, screws, washers, etc. to be stainless steel. Provide mounting fittings that match the positive locking device on the signal head with the serrations integrally cast into the brackets. Provide upper and lower pole plates that have a 1 ¼-inch vertical conduit entrance hubs with the hubs capped on the lower plate and 1 ½-inch horizontal hubs. Ensure that the assemblies provide rigid attachments to poles and pedestals so as to allow no twisting or swaying of the signal heads. Ensure that all raceways are free of sharp edges and protrusions, and can accommodate a minimum of ten Number 14 AWG conductors.

For pedestal mounting, provide a post-top slipfitter mounting assembly that matches the positive locking device on the signal head with serrations integrally cast into the slipfitter. Provide stainless steel hardware, screws, washers, etc. Provide a minimum of six 3/8 X 3/4-inch long square head bolts for attachment to pedestal. Provide a center post for multi-way slipfitters.

For light emitting diode (LED) traffic signal modules, provide the following requirements for inclusion on the Department’s Qualified Products List for traffic signal equipment.

1. Sample submittal,
2. Third-party independent laboratory testing results for each submitted module with evidence of testing and conformance with all of the Design Qualification Testing specified in section 6.4 of each of the following Institute of Transportation Engineers (ITE) specifications:
   - Vehicle Traffic Control Signal Heads – Light Emitting Diode (LED) Circular Signal Supplement
   - Vehicle Traffic Control Signal Heads – Light Emitting Diode (LED) Vehicle Arrow Traffic Signal Supplement

- Pedestrian Traffic Control Signal Indications –Light Emitting Diode (LED) Signal Modules.

(Note: The Department currently recognizes two approved independent testing laboratories. They are Intertek ETL Semko and Light Metrics, Incorporated with Garwood Laboratories. Independent laboratory tests from other laboratories may be considered as part of the QPL submittal at the discretion of the Department,

3. Evidence of conformance with the requirements of these specifications,
4. A manufacturer's warranty statement in accordance with the required warranty, and
5. Submittal of manufacturer's design and production documentation for the model, including but not limited to, electrical schematics, electronic component values, proprietary part numbers, bill of materials, and production electrical and photometric test parameters.
6. Evidence of approval of the product to bear the Intertek ETL Verified product label for LED traffic signal modules.

In addition to meeting the performance requirements for the minimum period of 60 months, provide a written warranty against defects in materials and workmanship for the modules for a period of 60 months after installation of the modules. During the warranty period, the manufacturer must provide new replacement modules within 45 days of receipt of modules that have failed at no cost to the State. Repaired or refurbished modules may not be used to fulfill the manufacturer's warranty obligations. Provide manufacturer's warranty documentation to the Department during evaluation of product for inclusion on Qualified Products List (QPL).

B. <u>Vehicle Signal Heads:</u>

Comply with the ITE standard "Vehicle Traffic Control Signal Heads". Provide housings with provisions for attaching backplates.

Provide visors that are 8 inches in length for 8-inch vehicle signal head sections. Provide visors that are 10 inches in length for 12-inch vehicle signal heads.

Provide a termination block with one empty terminal for field wiring for each indication plus one empty terminal for the neutral conductor. Have all signal sections wired to the termination block. Provide barriers between the terminals that have terminal screws with a minimum Number 8 thread size and that will accommodate and secure spade lugs sized for a Number 10 terminal screw.

Mount termination blocks in the yellow signal head sections on all in-line vehicle signal heads. Mount the termination block in the red section on five-section vehicle signal heads.

Furnish vehicle signal head interconnecting brackets. Provide one-piece aluminum brackets less than 4.5 inches in height and with no threaded pipe connections. Provide hand holes on the bottom of the brackets to aid in installing wires to the signal heads. Lower brackets that carry no wires and are used only for connecting the bottom signal sections together may be flat in construction.

For messenger cable mounting, provide messenger cable hangers, wire outlet bodies, balance adjusters, bottom caps, wire entrance fitting brackets, and all other hardware necessary to make complete, watertight connections of the vehicle signal heads to the messenger cable. Fabricate mounting assemblies from malleable iron or steel and provide serrated rings made of aluminum. Provide messenger cable hangers and balance adjusters that are galvanized before being painted. Fabricate balance adjuster eyebolt and eyebolt nut from stainless steel or galvanized malleable iron. Provide messenger cable hangers with U-bolt clamps. Fabricate washers, screws, bolts, clevis pins, cotter pins, nuts, and U-bolt clamps from stainless steel.

For mast-arm mounting, provide rigid vehicle signal head mounting brackets and all other hardware necessary to make complete, watertight connections of the vehicle signal heads to the mast arms and to provide a means for vertically adjusting the vehicle signal heads to proper alignment. Fabricate the mounting assemblies from aluminum, and provide serrated rings made of aluminum. Provide stainless steel cable attachment assemblies to secure the brackets to the mast arms. Ensure all fastening hardware and fasteners are fabricated from stainless steel.

Provide LED vehicular traffic signal modules (hereafter referred to as modules) that consist of an assembly that uses LEDs as the light source in lieu of an incandescent lamp for use in traffic signal sections. Use LEDs that are aluminum indium gallium phosphorus (AlInGaP) technology for red and yellow indications and indium gallium nitride (InGaN) for green indications. Install the ultra bright type LEDs that are rated for 100,000 hours of continuous operation from -40°F to +165°F. Design modules to have a minimum useful life of 60 months and to meet all parameters of this specification during this period of useful life.

For the modules, provide spade terminals crimped to the lead wires and sized for a #10 screw connection to the existing terminal block in a standard signal head. Do not provide other types of crimped terminals with a spade adapter.

Ensure the power supply is integral to the module assembly. On the back of the module, permanently mark the date of manufacture (month & year) or some other method of identifying date of manufacture.

Tint the red, yellow and green lenses to correspond with the wavelength (chromaticity) of the LED. Transparent tinting films are unacceptable. Provide a lens that is integral to the unit with a smooth outer surface.

1. LED Circular Signal Modules:

Provide modules in the following configurations: 12-inch circular sections, and 8-inch circular sections. All makes and models of LED modules purchased for use on the State Highway System shall appear on the current NCDOT Traffic Signal Qualified Products List (QPL).

Provide the manufacturer's model number and the product number (assigned by the Department) for each module that appears on the 2012 or most recent Qualified Products List. In addition, provide manufacturer's certification in accordance with Article 106-3 of the *Standard Specifications,* that each module meets or exceeds the ITE "Vehicle Traffic Control Signal Heads – Light Emitting Diode (LED) Circular Signal Supplement" dated June 27, 2005 (hereafter referred to as VTCSH Circular Supplement) and other requirements stated in this specification.

Provide modules that meet the following requirements when tested under the procedures outlined in the VTCSH Circular Supplement:

Module Type	Max. Wattage at 165° F	Nominal Wattage at 77° F
12-inch red circular	17	11
8-inch red circular	13	8
12-inch green circular	15	15
8-inch green circular	12	12

For yellow circular signal modules, provide modules tested under the procedures outlined in the VTCSH Circular Supplement to insure power required at 77° F is 22 Watts or less for the 12-inch circular module and 13 Watts or less for the 8-inch circular module.

Note: Use a wattmeter having an accuracy of ±1% to measure the nominal wattage and maximum wattage of a circular traffic signal module. Power may also be derived from voltage, current and power factor measurements.

2. LED Arrow Signal Modules

Provide 12-inch omnidirectional arrow signal modules. All makes and models of LED modules purchased for use on the State Highway System shall appear on the current NCDOT Traffic Signal Qualified Products List (QPL).

Provide the manufacturer's model number and the product number (assigned by the Department) for each module that appears on the 2012 or most recent Qualified Products List. In addition, provide manufacturer's certification in accordance with Article 106-3 of the *Standard Specifications,* that each module meets or exceeds the requirements for 12-inch omnidirectional modules specified in the ITE "Vehicle Traffic Control Signal Heads – Light Emitting Diode (LED) Vehicle Arrow Traffic Signal Supplement" dated July 1, 2007 (hereafter referred to as VTCSH Arrow Supplement) and other requirements stated in this specification.

Provide modules that meet the following requirements when tested under the procedures outlined in the VTCSH Arrow Supplement:

Module Type	Max. Wattage at 165° F	Nominal Wattage at 77° F
12-inch red arrow	12	9
12-inch green arrow	11	11

For yellow arrow signal modules, provide modules tested under the procedures outlined in the VTCSH Arrow Supplement to insure power required at 77° F is 12 Watts or less.

Note: Use a wattmeter having an accuracy of ±1% to measure the nominal wattage and maximum wattage of an arrow traffic signal module. Power may also be derived from voltage, current and power factor measurements.

C. <u>Pedestrian Signal Heads:</u>

Provide pedestrian signal heads with international symbols that meet the MUTCD. Do not provide letter indications.

Comply with the ITE standard for "Pedestrian Traffic Control Signal Indications" and the following sections of the ITE standard for "Vehicle Traffic Control Signal Heads" in effect on the date of advertisement:

- Section 3.00 - "Physical and Mechanical Requirements"
- Section 4.01 - "Housing, Door, and Visor: General"
- Section 4.04 - "Housing, Door, and Visor: Materials and Fabrication"
- Section 7.00 - "Exterior Finish"

Provide a double-row termination block with three empty terminals and number 10 screws for field wiring. Provide barriers between the terminals that accommodate a spade lug sized for number 10 terminal screws. Mount the termination block in the hand section. Wire all signal sections to the terminal block.

Where required by the plans, provide 16-inch pedestrian signal heads with traditional three-sided, rectangular visors, 6 inches long. Where required by the plans, provide 12-inch pedestrian signal heads with traditional three-sided, rectangular visors, 8 inches long.

Provide 2-inch diameter pedestrian push-buttons with weather-tight housings fabricated from die-cast aluminum and threading in compliance with the NEC for rigid metal conduit. Provide a weep hole in the housing bottom and ensure that the unit is vandal resistant.

Provide push-button housings that are suitable for mounting on flat or curved surfaces and that will accept 1/2-inch conduit installed in the top. Provide units that have a heavy duty push-button assembly with a sturdy, momentary, normally-open switch. Have contacts that are electrically insulated from the housing and push-button. Ensure that the push-buttons are rated for a minimum of 5 mA at 24 volts DC and 250 mA at 12 volts AC.

Provide standard R10-3 signs with mounting hardware that comply with the MUTCD in effect on the date of advertisement. Provide R10-3E signs for countdown pedestrian heads and R10-3B for non-countdown pedestrian heads.

Design the LED pedestrian traffic signal modules (hereafter referred to as modules) for installation into standard pedestrian traffic signal sections that do not contain the incandescent signal section reflector, lens, eggcrate visor, gasket, or socket. Provide modules that consist of an assembly that uses LEDs as the light source in lieu of an incandescent lamp. Use LEDs that are of the latest aluminum indium gallium phosphorus (AlInGaP) technology for the Portland Orange hand and countdown displays. Use LEDs that are of the latest indium gallium nitride (InGaN) technology for the Lunar White walking man displays. Install the ultra-bright type LEDs that are rated for 100,000 hours of continuous operation from -40°F to +165°F. Design modules to have a minimum useful life of 60 months and to meet all parameters of this specification during this period of useful life.

Design all modules to operate using a standard 3 - wire field installation. Provide spade terminals crimped to the lead wires and sized for a #10 screw connection to the existing terminal block in a standard pedestrian signal housing. Do not provide other types of crimped terminals with a spade adapter.

Ensure the power supply is integral to the module assembly. On the back of the module, permanently mark the date of manufacture (month & year) or some other method of identifying date of manufacture.

Provide modules in the following configuration: 16-inch displays which have the solid hand/walking man overlay on the left and the countdown on the right, and 12-inch displays which have the solid hand/walking man module as an overlay. All makes and models of LED modules purchased for use on the State Highway System shall appear on the current NCDOT Traffic Signal Qualified Products List (QPL).

Provide the manufacturer's model number and the product number (assigned by the Department) for each module that appears on the 2012 or most recent Qualified Products List. In addition, provide manufacturer's certification in accordance with Article 106-3 of the *Standard Specifications,* that each module meets or exceeds the ITE "Pedestrian Traffic Control Signal Indicators - Light Emitting Diode (LED) Signal Modules" dated August 04, 2010 (hereafter referred to as PTCSI Pedestrian Standard) and other requirements stated in this specification.

Provide modules that meet the following requirements when tested under the procedures outlined in the PTCSI Pedestrian Standard:

Module Type	Max. Wattage at 165° F	Nominal Wattage at 77° F
Hand Indication	16	13
Walking Man Indication	12	9
Countdown Indication	16	13

Note: Use a wattmeter having an accuracy of ±1% to measure the nominal wattage and maximum wattage of a circular traffic signal module. Power may also be derived from voltage, current and power factor measurements.

Provide module lens that is hard coated or otherwise made to comply with the material exposure and weathering effects requirements of the Society of Automotive Engineers (SAE) J576. Ensure all exposed components of the module are suitable for prolonged exposure to the environment, without appreciable degradation that would interfere with function or appearance.

Ensure the countdown display continuously monitors the traffic controller to automatically learn the pedestrian phase time and update for subsequent changes to the pedestrian phase time.

Ensure the countdown display begins normal operation upon the completion of the preemption sequence and no more than one pedestrian clearance cycle.

D. Signal Cable:

Furnish 16-4 and 16-7 signal cable that complies with IMSA specification 20-1 except provide the following conductor insulation colors:

- For 16-4 cable: white, yellow, red, and green
- For 16-7 cable: white, yellow, red, green, yellow with black stripe tracer, red with black stripe tracer, and green with black stripe tracer. Apply continuous stripe tracer on conductor insulation with a longitudinal or spiral pattern.

Provide a ripcord to allow the cable jacket to be opened without using a cutter. IMSA specification 19-1 will not be acceptable. Provide a cable jacket labeled with the IMSA specification number and provide conductors constructed of stranded copper.

E. Optically-Programmed Vehicle Signal Sections:

Material, equipment, and hardware furnished under this section must be pre-approved on the Department's QPL by the date of installation.

Design the programmable signal sections to tilt in two degree increments for a maximum of ten degrees above and ten degrees below horizontal, while still maintaining a common vertical axis.

Design the programmable signal sections to mount to standard signal sections to form a signal head. Ensure that the programmable signal sections have a mounting system compatible with the standard 1 ½-inch traffic signal fittings.

Provide an optical system consisting of a lamp, a diffuser, an optical limiter, and an objective lens. Ensure that all programming is accomplished optically with no hoods or louvers necessary to accomplish the programming. Provide optical masking tape with each section.

Provide a 150-Watt, 115 VAC lamp with integral reflector and rated output of 1750 lumens.

Ensure that the average rated life is at least 6000 hours.

Provide a high resolution, annular, incremental lens. Ensure that the lens and door are sealed to provide a moisture and dust proof seal. Provide a red, yellow, or green ball or arrow indication as specified by the bid list, plans, or purchase order.

F. Louvers:

Material, equipment, and hardware furnished under this section must be pre-approved on the Department's QPL by the date of installation.

Provide louvers made from sheet aluminum. Paint the louvers alkyd urea black synthetic baked enamel with a minimum gloss reflectance and meeting the requirements of MIL-E-10169, "Enamel Heat Resisting, Instrument Black."

Ensure that the louvers have a 0-degree horizontal viewing angle. Provide a minimum of 5 vanes.

2. VIDEO IMAGING LOOP EMULATOR DETECTOR SYSTEMS

2.1. DESCRIPTION

Design, furnish, provide training, and install video imaging loop emulator detection systems with all necessary hardware in accordance with the plans and specifications.

Unless otherwise specified in the contract, all loop emulator detection equipment will remain the property of the contractor.

2.2. MATERIALS

A. General:

Material and equipment furnished under this section must be pre-approved on the Department's QPL by the date of installation except miscellaneous hardware such as cables and mounting hardware do not need to be pre-approved.

Used equipment will be acceptable provided the following conditions have been met:

- Equipment is listed on the current QPL.
- Equipment is in good working condition.
- Equipment is to remain the property of the contractor.

Ensure that software is licensed for use by the Department and by any other agency responsible for maintaining or operating the loop emulation system. Provide the Department with

a license to duplicate and distribute the software as necessary for design and maintenance support.

Design and furnish video imaging loop emulator detection systems that detect vehicles at signalized intersections by processing video images and providing detection outputs to the signal controller in real time (within 112 milliseconds of vehicle arrival).

Furnish all required camera sensor units, loop emulator processor units, hardware and software packages, cabling, poles, mast arms, harnesses, camera mounting assemblies, surge protection panels, grounding systems, messenger cable and all necessary hardware. Furnish systems that allow the display of detection zones superimposed on an image of the roadway on a Department-furnished monitor or laptop computer screen. Ensure detection zones can be defined and data entered using a simple keyboard or mouse and monitor, or using a laptop PC with software.

Provide design drawings showing design details and camera sensor unit locations for review and acceptance before installation. Provide mounting height and location requirements for camera sensor units on the design based on site survey. Design video imaging loop emulator detection systems with all necessary hardware. Indicate all necessary poles, spans, mast arms, luminaire arms, cables, camera mounting assemblies and hardware to achieve the required detection zones where Department owned poles are not adequate to locate the camera sensor units. Do not design for the installation of poles in medians.

Obtain the Engineer's approval before furnishing video imaging loop emulator detection systems. The contractor is responsible for the final design of video imaging loop emulator detection systems. Review and acceptance of the designs by the Department does not relieve the contractor from the responsibility to provide fully functional systems and to ensure that the required detection zones can be provided.

Provide the ability to program each detection call (input to the controller) with the following functions:

- Full Time Delay – Delay timer is active continuously,
- Normal Delay – Delay timer is inhibited when assigned phase is green (except when used with TS 2 and 170/2070L controllers),
- Extend – Call is extended for this amount of time after vehicle leaves detection area,
- Delay Call/Extend Call – This feature uses a combination of full time delay and extend time on the same detection call. Ensure operation is as follows: Vehicle calls are received after the delay timer times out. When a call is detected, it is held until the detection area is empty and the programmed extend time expires. If another vehicle enters the detection area before the extend timer times out, the call is held and the extend time is reset. When the extend timer times out, the delay timer has to expire before another vehicle call can be received.

Provide the ability to program each detection zone as one of the following functions:

- Presence detector,
- Directional presence detector,
- Pulse detector,
- Directional pulse detector.

Ensure previously defined detector zones and configurations can be edited.

Provide each individual system with all the necessary equipment to focus and zoom the camera lenses without the need to enter the camera enclosure.

Provide systems that allow for the placement of at least 8 detection zones within the combined field of view of a single camera sensor unit. Provide a minimum of 8 detection outputs per camera.

Provide detection zones that can be overlapped. Ensure systems reliably detect vehicles when the horizontal distance from the camera sensor unit to the detection zone area is less than ten times the mounting height of the sensor. Ensure systems detect vehicles in multiple travel lanes.

Ensure systems can detect vehicle presence within a 98 to 102 percent accuracy (up to 2 percent of the vehicles missed and up to 2 percent of false detection) for clear, dry, daylight conditions, a 96 to 105 percent accuracy (up to 4 percent of the vehicles missed and up to 5 percent false detection) for dawn and dusk conditions, and a 96 percent accuracy (up to 4 percent of the vehicles missed) for night and adverse conditions (fog, snow, rain, etc.) using standard sensor optics and in the absence of occlusion.

Repair and replace all failed components within 72 hours.

The Department may conduct field-testing to ensure the accuracy of completed video imaging loop emulator detection systems.

B. <u>Loop Emulator System:</u>

Furnish loop emulator systems that receive and simultaneously process information from camera sensor units, and provides detector outputs to signal controllers.

Ensure systems provide the following:

- Operate in a typical roadside environment and meet the environmental specifications and are fully compatible with NEMA TS 1, NEMA TS 2, or Type 170/2070L controllers and cabinets,
- provide a “fail-safe” mode whereby failure of one or more of the camera sensor units or power failure of the loop emulator system will cause constant calls to be placed on the affected vehicle detection outputs to the signal controller,
- provide compensation for minor camera movement of up to 2 percent of the field of view at 400 feet without falsely detecting vehicles,
- process the video at a minimum rate of 30 times per second,
- provide separate wired connectors inside the controller cabinet for video recording each camera,
- provide remote video monitoring with a minimum refresh rate at 1 frame per second over a standard dial-up telephone line,
- provide remote video detection monitoring.

Furnish camera sensor units that comply with the following:

- have an output signal conforming to EIA RS-170 standard,
- have a nominal output impedance of 75 ohms,
- be immune to bright light sources, or have built in circuitry or protective devices to prevent damage to the sensor when pointed directly at strong light sources,
- be housed in a light colored environmental enclosure that is water proof and dust tight, and that conforms to NEMA-4 specifications or better,
- simultaneously monitor at least five travel lanes when placed at the proper mounting location with a zoom lens,
- have a sunshield attached to the environmental enclosure to minimize solar heating,
- meet FCC class B requirements for electromagnetic interference emissions,
- have a heater attached to the viewing window of the environmental enclosure to prevent ice and condensation in cold weather.

Where coaxial video cables and other cables are required between the camera sensor and other components located in the controller cabinet, furnish surge protection in the controller cabinet.

If furnishing coaxial communications cable comply with the following, as recommended by the approved loop emulator manufacturer:

- Number 20 AWG, solid bare copper conductor terminated with crimped-on BNC connectors (do not use BNC adapters) from the camera sensor to the signal controller cabinet.
- Number 22 AWG, stranded bare copper conductor terminated with crimped-on BNC connectors (do not use BNC adapters) from the camera sensor unit to the junction box, and within the signal controller cabinet.

Furnish power cable appropriately sized to meet the power requirements of the sensors. At a minimum, provide three conductor 120 VAC field power cable.

As determined during the site survey, furnish sensor junction boxes with nominal 6 x 10 x 6 inches dimensions at each sensor location. Provide terminal blocks and tie points for coaxial cable.

C. <u>Video Imaging Loop Emulator System Support:</u>

Furnish video imaging loop emulator systems with either a simple keyboard or a mouse with monitor and appropriate software, or with system software for use on department-owned laptop PCs. Ensure the system is Windows 2000 and Windows XP compatible.

Provide Windows 2000 and Windows XP compatible personal computer software, if needed, to provide remote video and video detection monitoring.

Ensure systems allow the user to edit previously defined detector configurations. When a vehicle is within a detection zone, provide for a change in color or intensity of the detection zone perimeter or other appropriate display changes on the Department-furnished monitor or laptop computer screen.

Provide cabling and interconnection hardware with 6-foot minimum length interconnection cable to interface with the system.

Provide all associated equipment manuals and documentation.

2.3. CONSTRUCTION METHODS

Arrange and conduct site surveys with the system manufacturer's representative and Department personnel to determine proper camera sensor unit selection and placement. Provide the Department at least 3 working days notice before conducting site surveys. Upon completion of the site surveys the Department will provide revised plans reflecting the findings of the site survey.

Before beginning work at locations requiring video imaging loop emulator detection systems, furnish system software. Upon activation of detection zones, provide detector configuration files. Ensure that up-to-date detection configuration files are furnished for various detection zone configurations that may be required for construction phasing.

Place into operation loop emulator detection systems. Configure loop emulator detection systems to achieve required detection in designated zones. Have a certified manufacturer's representative on site to supervise and assist with installation, set up, and testing of the system.

Install the necessary processing and communications equipment in the signal controller cabinet. Make all necessary modifications to install equipment, cabling harnesses, and camera sensor interface panels with surge suppression.

Perform modifications to camera sensor unit gain, sensitivity, and iris limits necessary to complete the installation.

Do not install camera sensor units on signal poles unless approved by the Engineer.

Install the necessary cables from each sensor to the signal controller cabinet along signal cabling routes. Install surge protection and terminate all cable conductors.

Relocate camera sensor units and reconfigure detection zones as necessary according to the plans for construction phases.

Provide at least 8 hours of training on the set up, operation, troubleshooting, and maintenance of the loop emulator detection system to a maximum of ten Department personnel. Arrange for training to be conducted by the manufacturer's representative at an approved site within the Division responsible for administration of the project. Thirty days before conducting training

submit a detailed course curriculum, draft manuals and materials, and resumes. Obtain approval of the submittal before conducting the training. At least one week before beginning training, provide three sets of complete documentation necessary to maintain and operate the system. Do not perform training until installation of loop emulator detection systems is complete.

2.4. MEASUREMENT AND PAYMENT

Actual number of site surveys, arranged, conducted, and accepted.

Actual number of luminaire arms for video imaging loop emulator detection systems furnished, installed, and accepted.

Actual number of cameras with internal loop emulator processing units furnished, installed, and accepted.

Actual number of cameras without internal loop emulator processing units furnished, installed, and accepted.

Actual number of external loop emulator processing units furnished, installed, and accepted.

Actual number of camera sensor units relocated with detection zones reconfigured installed, and accepted.

No measurement will be made of video imaging loop emulator system support or training, power and video cables, and trenching as these items will be considered incidental to furnishing and installing video imaging loop emulator detection systems.

Payment will be made under:

Site Survey .....Each
Luminaire Arm for Video System .....Each
Camera with Internal Loop Emulator Processing Unit .....Each
Camera without Internal Loop Emulator Processing Unit .....Each
External Loop Emulator Processing Unit .....Each
Relocate Camera Sensor Unit .....Each

3. MICROWAVE VEHICLE DETECTOR

3.1. DESCRIPTION

Furnish and install a microwave vehicle detection unit and manufacturer recommended cables and hardware in accordance with the plans and specifications.

3.2. MATERIALS

Provide a detector for either side-fire or forward-fire configuration with a mounting height of 16 inches or greater for normal operation. Ensure the detector will detect vehicle in sunny, cloudy, rainy, snowy, and foggy weather conditions with self-tuning to auto-adjust in

changing environmental conditions. Ensure the detector can operate from the voltage supplied by a NEMA and Type-170 traffic signal cabinet. Ensure the detector can provide detection calls to the traffic signal controller within a NEMA and Type-170 cabinet. Ensure the detector will put out a constant call in the event of a component failure or loss of power. Ensure the detector has an operating temperature range of -20 to 150 degrees F. Ensure a water resistant housing for the detector.

For advance pulse detection, ensure the detector senses vehicles in motion at a range of 200 feet with an operating frequency of 10.525 GHz +/- 25MHz.

For stop bar presence detection, ensure the detector outputs a constant call while a vehicle is in the detection zone. Ensure the presence detection unit can cover a detection zone as shown on the plans and has an effective range of at least 75 feet from the detector unit to the aim point on the road surface.

For units without an integrated card rack interface, provide Form C output relay contacts rated a minimum of 3A, 24VDC.

If a laptop is used to adjust detector settings, ensure that software is licensed for use by the Department and by any other agency responsible for maintaining or operating the microwave detection system. Provide the Department with a license to duplicate and distribute the software as necessary for design and maintenance support.

3.3. <u>CONSTRUCTION METHODS</u>

Install the microwave vehicle detector in accordance with the manufacturer's recommendations.

Monitor and maintain the detector unit during construction to ensure microwave vehicle detector is functioning properly and aimed for the detection zone shown in the plans. Refer to Subarticle 1700-3 (D) Maintenance and Repair of Materials of the *Standard Specifications* for failure to maintain the microwave detection system.

3.4. MEASUREMENT AND PAYMENT

Actual number of microwave vehicle detector units furnished, installed, and accepted.

No measurement will be made of cables or hardware, as these will be considered incidental to furnishing and installing microwave vehicle detectors.

Payment will be made under:

Microwave Vehicle Detector ..... Each

4. TWISTED-PAIR COMMUNICATIONS CABLE

4.1. DESCRIPTION

Furnish and install twisted-pair communications cable with all necessary hardware in accordance with the plans and specifications.

4.2. MATERIALS

A. General:

Furnish communications cable with all other tools, materials, and hardware required for successful completion of the work, including but not limited to communications cable identification markers (cable wraps), couplings, connectors, machine bolts, eye bolts, strandvises, cable suspension clamps, and pole bands.

B. Communications Cable:

Furnish the following:

- IMSA 20-2 or RUS CFR 1755.390 ____-pair, 19-gauge, shielded, twisted-pair communications cable (lashed to existing messenger cable)
- IMSA 20-4 ____-pair, 19-gauge, shielded, twisted-pair communications cable (self supporting)
- RUS CFR 1755.390 ____-pair, 19-gauge, shielded, twisted-pair communications cable (underground)

Have the manufacturer factory test the communications cable on reels for each pair's mutual capacitance, crosstalk loss, insulation resistance, and conductor resistance. Furnish the Engineer with a certified report for each reel showing compliance with the IMSA or RUS

specification, the factory test results, and the manufactured date of the cable. Do not use communications cable manufactured more than one year before the date of installation.

Provide sequential foot markings within one percent of the actual cable length and as required by Section 350G of the National Electrical Safety Code. Provide approximately 1/10-inch character height of the markings.

C. Communications Cable Identification Markers (Cable Wraps):

Furnish yellow communications cable identification markers that are resistant to fading when exposed to UV sources and changes in weather. Use markers designed to coil around the communications cable and that do not slide or move along the surface of the communications cable once installed. Ensure that exposure to UV light and weather does not affect the markers natural coiling effect or deteriorate its performance. Provide communications cable wraps that permit writing with an indelible marking pen and that contain the following text in black:

WARNING

NCDOT COMMUNICATIONS CABLE

CONTACT TELEPHONE NUMBER:

_____

WARNING

NCDOT COMMUNICATIONS CABLE

CONTACT TELEPHONE NUMBER:

_____

Overall Marker Dimensions: 7(l) x 4 (w) inches
Lettering Height: 3/8 inch for "WARNING"
1/4 inch for all other lettering

4.3. CONSTRUCTION METHODS

A. General:

Install communications cable on traffic signal and utility poles, and in conduits to bring the cable into and, if necessary, out of each controller cabinet.

Take all precautions necessary to ensure the communications cable is not damaged during storage and installation. Do not step on the cable nor run over the cable with vehicles or equipment. Do not pull the cable over or around obstructions, or along the ground.

Immediately cease work and notify the Engineer and the affected owner should damage to existing cables or equipment occur. Make the required repairs at no additional cost to the Department.

Provide the Engineer with three copies of the communications cable manufacturer's recommended and maximum pulling tension for each communications cable size before the installation of communications cable.

Install communications cable in continuous lengths from one signalized intersection to the next with no splices outside the cabinet.

Keep the communications cable ends sealed at all times during installation to effectively prevent the ingress of moisture. Use a silicone impregnated heat shrink cable end cap approved by the Engineer. Do not use tape to seal the cable ends.

Notify the Engineer in writing a minimum of ten days before beginning communications cable testing.

Test the integrity of the communications cable before installation based on IMSA 20-4, 19-gauge wire standard.

Test the cable insulation for a resistance of more than 500 megaohms for each insulated conductor when measured with all other insulated conductors and the shielded ground before installation. Make the measurement with a DC potential of at least 100 volts but not more than 550 volts applied for 1 minute. Furnish the test results to the Engineer.

Wire communications cable into the cabinet. Allow a minimum of 10 feet of slack for communications cable that is not immediately terminated.

B. <u>Aerial Installation:</u>

Use pole attachment hardware and roller guides with safety clips to install the aerial communications cable.

Maintain tension during the pulling process for aerial run communications cable by using a mechanical clutch (dynamometer) device approved by the Engineer. Do not exceed 80 percent of the manufacturer's maximum allowable pulling tension. Do not allow the communications cable to contact the ground or other obstructions between the poles during installation. Do not use a motorized vehicle to generate cable-pulling forces.

- **On Messenger Cable**

Double lash the communications cable to the messenger cable where the messenger cable is used solely to support the communications cable.

Wrap the communications cable to the messenger cable using aluminum ribbon wraps where the messenger cable supports other cables (i.e., traffic signal cable, lead-in cable, etc.).

- **With Integral Messenger Cable**

Use 5/8-inch diameter machine bolts to attach suspension clamps to the wood poles for attaching integral messenger cable. Provide machine bolts with washers and square nuts that are 3 inches longer than the pole diameter.

Use 5/8-inch diameter eyebolts with washers and nuts (or eyenuts if required) to attach strandvises to the wood poles at controller cabinets and poles where messenger cable is terminated into a strandvise. Secure the messenger cable to the strandvises with an eyebolt or nut so that the messenger cable will not pull out unless intentionally released. Install the cable suspension clamps directly to the jacketed messenger cable without crushing into the cable core jacket. Do not split or strip the jacket for attachment to the cable suspension clamp. Use pole bands to make acute turns at poles that cannot accommodate separate eyebolts. Use a cable suspension clamp when attaching communications cable tangent to the pole.

Strip the messenger cable from the integral communications cable that is installed in risers and controller cabinets or is lashed to existing cables. Use a figure-8 cable splitter specifically designed for splitting the communications cable at the web between the messenger cable and the conductors for removing the messenger cable. Replace the entire segment of communications cable at no additional cost to the Department if the communications cable, shield, conductors, or messenger cable are damaged. Do not splice the cable or repair the insulation. Install two cable-lashing straps at the end of each split to prevent further splitting of the figure-8 web.

C. <u>Underground Installation:</u>

Install underground communications cable in 2-inch PVC conduit using cable-pulling lubricants approved by the communications cable manufacturer and the Engineer. Obtain the Engineer’s approval of the cable lubricant and method of pulling before the installation of underground communications cable.

Do not exceed 80 percent of the manufacturer's maximum pulling tension when installing underground communications cable.

Use a clutch device (dynamometer) so as not to exceed the allowable pulling tension if the cable is pulled by mechanical means. Do not use a motorized vehicle to generate cable-pulling forces.

Keep tension on the cable reel and the pulling line at the start of each pull. Do not release the tension in the cable if the pulling operation is halted. Restart the pulling operation by gradually increasing the tension until the cable is in motion.

Set cable reels up on the same side of the junction box as the conduit section in which the cable is to be installed. Place the reel level and align the reel with the conduit section such that the cable will pass from the top of the reel in a smooth bend into the conduit without twisting. Do not pull the cable from the bottom of the reel. Manually feed the cable by rotating the reel. Do not pull the cable through intermediate junction boxes, pull boxes, handholes, or openings in conduit unless otherwise approved by the Engineer.

D. <u>Bonding and Splicing:</u>

Terminate all cable pairs in a neatly arranged manner. Use binding-type screw terminal strips of sufficient size to terminate all cable pairs. Clean the terminals before terminating the cable. Apply non-insulated, Number 18-20, spade crimp terminals to the cable using a calibrated ratchet type crimp tool. Solder the terminals and coat the binding-type screw terminal strips and connections with a corrosive-prevention material after crimping.

Splice communications cable within the controller cabinets and splice cabinets. Do not splice within pull boxes.

Ground the shield of the outgoing cable (going away from the master controller) to a ground rod using insulated (green) number 14 AWG standard copper wire at all controller cabinet locations. Leave the shield of the incoming cable ungrounded. Bond and ground the cable shields as required by RUS CFR 1755.200.

E. Cable Identification Markers:

Install one communications cable identification marker within 3 feet of all pole attachment points and at locations where more than one cable originates or terminates. Install one communications cable identification marker in all pull boxes where communications cable is installed.

4.4. MEASUREMENT AND PAYMENT

Actual linear feet of twisted-pair communications cable furnished, installed, and accepted. Measurement will be made by calculating the difference in length markings located on the outer jacket of the twisted-pair communications cable from the start of the cable run to the end of the cable run for each cable run. All pairs shall be terminated before determining the length of cable run.

No measurement will be made of communications cable identification markers as these will be considered incidental to furnishing and installing communications cable.

Payment will be made under:

Communications Cable (___-Twisted-pair) .....Linear Foot

5. Communications SYSTEM SUPPORT EQUIPMENT

5.1. DESCRIPTION

Furnish communications system support equipment with all necessary hardware in accordance with the plans and specifications.

5.2. MATERIALS

A. General:

Furnish equipment with test probes/leads, batteries (for battery-operated units), line cords (for AC-operated units), and carrying cases. Provide operating instructions and maintenance manuals with each item.

Before starting any system testing or training, furnish all communications system support equipment.

B. Fiber-Optic Support Equipment

B.1 Fiber-optic Restoration Kit:

Furnish a fully functional fiber-optic restoration kit consisting of the following items

(minimum):

- Plier-type strippers
- Non-niks fiber stripper tool with procedures
- Buffer tube stripper tool with procedures
- Fiber-optic Cleaver (average cut less than 0.5 degrees from perpendicular) Diamond Blade
- Screw driver set
- 48 Alcohol wipes
- Tape, ¾-inch, electrician
- Chemical removal wipes
- Metal ruler
- Tweezers
- Crimping pliers
- Mechanical Splice Manual
- Mechanical Splice Fixture
- 12, Non-adhesive, mechanical splices
- 2 Mechanical Splice Trays, 12 Mechanical Splice Devices, Compatible with the Interconnect Centers being installed in the Traffic Signal Controller Cabinets
- Scissors
- Hard-sided, padded, storage case

B.2 Fiber-optic Power Meter:

Furnish fiber-optic power meters for measuring absolute power and link losses, as well as

monitoring power levels and testing threshold levels. Provide the following features:

- Spectral range ..... 750 nm to 1700 nm
- Calibrated wavelengths ..... 850, 1310, and 1550 nm
- Accuracy ..... ± 3 percent (± 0.1 dB) at -20 dBm at 70 degrees F at calibrated wavelengths
- Readout resolution ..... 4 digits, 0.01 dBm
- Display ..... Backlit LCD
- Fiber-optic connector ..... ST type
- Power-up stabilization ..... Less than five seconds at ambient temperature
- Tone threshold settings ..... User selectable from 1 to 35 dB, plus OFF
- Analog output port
  - Voltage ..... 0 to + 1 V FSD of linear power range
  - Output impedance ..... 5 kilohms, nominal
- Temperature
  - Operating ..... 32 to 122 degrees F

Storage ..... 0 to 150 degrees F

- Relative humidity ..... 5 to 95 percent, non-condensing
- Battery power ..... Alkaline: 28 hours; NiCad: 8 hours (recharger and NiCad batteries provided)
- Carrying case

B.3 Optical Light Generator:

Furnish optical light generators for measuring absolute power and link losses, as well as monitoring power levels and testing threshold levels. Provide the following features:

- Calibrated wavelengths ..... 1310 nm, and 1550 nm
- Accuracy ..... 3 percent at 70 degrees F at calibrated wavelengths
- Fiber-optic connector ..... ST type
- Power-up stabilization ..... Less than five seconds at ambient temperature
- Temperature
  - Operating ..... 32 to 122 degrees F
  - Storage ..... -10 to 150 degrees F
- Relative humidity ..... 5 to 95 percent, non-condensing
- Battery power ..... Alkaline: 28 hours; NiCad: 8 hours (recharger and NiCad batteries provided)
- Carrying case

B.4 SMFO Transceiver (For Emergency Restoration):

Furnish SMFO transceivers identical to the type installed in the traffic signal controller cabinets to be used for emergency restoration of the system and the fiber-optic communications system.

C. <u>Wireless Radio Support Equipment</u>

C.1 Wireless Radio Modem

Furnish wireless radio modem identical to the type installed in the traffic signal controller cabinets to be used for emergency restoration of the system and the wireless communications system.

C.2 Lightning Arrestor

Furnish wireless radio lightning arrestors identical to the type installed in the traffic signal controller cabinets to be used for emergency restoration of the transient voltage suppression equipment.

5.3. MEASUREMENT AND PAYMENT

Actual number of fiber-optic restoration kits furnished and accepted.

Actual number of fiber-optic power meters furnished and accepted.

Actual number of optical light generators furnished and accepted.

Actual number of fiber-optic transceivers furnished and accepted.

Actual number of wireless radio modems furnished and accepted.

Actual number of wireless radio lightning arrestors furnished and accepted.

Payment will be made under:

Furnish Fiber-optic Restoration Kit .....Each
Furnish Fiber-optic Power Meter .....Each
Furnish Fiber-optic Light Generator .....Each
Furnish Fiber-optic Transceiver .....Each
Furnish Wireless Radio Modem .....Each
Furnish Wireless Lightning Arrestor .....Each

6. FIBER-OPTIC TRAINING

6.1. DESCRIPTION

Provide training for the installation, operation and maintenance of the fiber-optic communications cable, fiber-optic transceivers, interconnect centers, splice trays and other related fiber-optic equipment in accordance with the plans and specifications.

6.2. MATERIALS

Provide training to properly install, operate, maintain, diagnose and repair each piece of equipment associated with the fiber-optic system. Provide approved manufacturer's representatives or other qualified personnel to conduct training courses. Provide training for a minimum of fifteen Department personnel.

Before beginning the training course, submit detailed course curricula, draft manuals, and handouts, and resumes of the instructors for review and approval. The Engineer may request modification of the material and request courses desired by the Department.

Conduct all training courses at a location provided by the Department within the Division and at a time mutually agreed upon, but not later than the start of fiber-optic cable testing. Provide training material, manuals, and other handouts to serve not only as subject guidance, but also as quick reference for use by the students. Deliver course material in reproducible form immediately following the course.

Record each training course onto DVD(s) and deliver to the Engineer.

Provide instruction on basic fiber-optic theories and principals as well as the installation, operation, maintenance, identification, detection, and correction of malfunctions in fiber-optic communications cable and related hardware. Include field level troubleshooting as an integral part of the training.

Provide training for the fiber-optic system for the following categories and for the minimum number of hours shown:

COURSE OUTLINES (L = Lecture; D = Demonstration; H = Hands-on by Student)

TRANSCEIVER

DAY 1 (4 Hours)
Safety - (L)
Introduction to transceivers - (L)
Review of Maintenance Manual - (L)
Review of Operations Manual - (L)
Question and answer session

FIBER-OPTIC CABLE SYSTEM

DAY 1 (8 Hours)
Safety - (L)
Introduction to fiber optics, theory, and principals - (L)
Fiber and cable types -(L, H)
National Electrical Code considerations - (L, H)
- plenum and riser type cable
- out door cable, etc.

Introduction to terminating hardware, end equipment, and applications - (L, D, H)
- connectors (ST, SC, etc.)
- splice enclosure, splice trays, and connector panels
- cable placement techniques

Question and answer session

DAY 2 (8 Hours)
Cable handling and preparation (sheath removal, grip installation, etc.) - (L, D, H)
Splicing and terminating methods - (L, D, H)
- mechanical splicing using various techniques
- fusion splicing
- field termination of connectors types

Introduction to cable plant testing procedures - (L, D, H)
- proper usage of optical light generator and power meter
- optical time domain reflectometer usage

Class project (build working system using cables/connectors made by attendees) - (L, D, H)
Question and answer session

DAY 3 (4 Hours)
Class project -- Testing and troubleshooting -- (L, D, H)
Cable system maintenance and restoration -- (L)
Question and answer session

6.3. MEASUREMENT AND PAYMENT

Lump sum for fiber-optic training with training packages completed and accepted.

Payment will be made under:

Fiber-optic Training ..... Lump Sum

7. SPLICE CABINET (FIBER OPTICS)

7.1. DESCRIPTION

Furnish and install splice cabinets and all necessary hardware in accordance with the plans and specifications for the purpose of splicing and terminating fiber-optic cable.

7.2. MATERIALS

Furnish NEMA Type 4 splice cabinets of sufficient size to accommodate the fiber-optic interconnect center. Provide sufficient size so that the equipment installed will not occupy more than 60 percent of the total cabinet volume.

7.3. CONSTRUCTION METHODS

A. General:

Locate cabinets so as not to obstruct sight distance of vehicles turning on red.

B. Pole Mounted:

Install pole-mounted splice cabinets. Install cabinets approximately five feet from the ground line to the top of the cabinet. Secure the cabinet to the pole using an approved installation method.

C. Base Mounted:

Install base mounted cabinets as shown on the plans and as approved by the Engineer. Refer to Section 1750 - Signal Cabinet Foundations of the *Standard Specifications* for installation requirements for the foundations. The following exceptions are made:

- Install only the required number of conduits as shown on the plans plus one additional spare stub out conduit.
- Do not provide a 24-inch working area on the backside of the cabinet. Provide only a 24-inch working area measured from the front of the cabinet and 3 inch lip measured from the sides and back of the cabinet.
- All other requirements apply.

7.4. MEASUREMENT AND PAYMENT

Actual number of fiber-optic splice cabinets (pole mounted) furnished, installed, and accepted.

Actual number of fiber-optic splice cabinets (base mounted) furnished, installed, and accepted.

No measurement will be made for the cabinet foundation as it will be covered under Section 1750 – Signal Cabinet Foundations of the *Standard Specifications*.

Payment will be made under:

Fiber-optic Splice Cabinet (_____) .....Each

8. Solar Power, 900 MHZ Spread Spectrum radio

8.1. DESCRIPTION

Furnish an operational Solar Power, 900MHz Spread Spectrum Radio System installed in a NEMA Type 3R enclosure for pole mounting.

Furnish material and workmanship conforming to the *National Electrical Code* (NEC), the *National Electrical Safety Code* (NESC), Underwriter's Laboratories (UL) or a third-party listing agency accredited by the North Carolina Department of Insurance, and all local safety codes in effect on the date of advertisement. Comply with all regulations and codes imposed by the owner of affected utility poles.

8.2. MATERIALS

A. 900MHz Wireless Radio System:

Furnish a 900 MHz Radio that complies with Section 1098-18 (B) of the 2012 Standard Specifications for Roads and Structures.

Furnish 8.5 dB or 13 dB gain Directional Antenna (Yagi Antenna) that complies with Section 1098-18 (D) of the 2012 Standard Specifications for Roads and Structures.

Furnish 3dB or 6 dB Omni Directional Antenna that complies with Section 1098-18 (E) of the 2012 Standard Specifications for Roads and Structures.

Furnish Antenna Mounting Hardware Kits that comply with Section 1098-18 (F) of the 2012 Standard Specifications for Roads and Structures.

Furnish 400 Series Coaxial Cable that complies with Section 1098-18 (G) of the 2012 Standard Specifications for Roads and Structures.

Furnish Standard N-Type Connectors that comply with Section 1098-18 (H) of the 2012 Standard Specifications for Roads and Structures.

Furnish Coaxial Cable Shield Grounding and Weatherproofing Kits that comply with Section 1098-18 (I) of the 2012 Standard Specifications for Roads and Structures.

Furnish Lightning Arrestors that comply with Section 1098-18 (J) of the 2012 Standard Specifications for Roads and Structures.

Furnish Coaxial Cable – Power Divider (Splitter) that complies with Section 1098-18 (K) of the 2012 Standard Specifications for Roads and Structures.

Furnish 1 inch and 2 inch Rigid Metallic Conduit that complies with Section 1091-3 (B) of the 2012 Standard Specifications for Roads and Structures.

Furnish 1 inch clamp-on aluminum weatherheads and 1 1/2 inch heat shrink tubing that complies with Section 1098-4 of the 2012 Standard Specifications for Roads and Structures.

B. <u>Solar Powered Assembly:</u>

B.1 General:

Furnish a Solar Power Assembly consisting of the following:

- Solar Array
- Solar Charge Controller
- Battery(ies)
- NEMA 3R Equipment Cabinet

Ensure that DC disconnects are supplied between the Solar Array and the Solar Charge Controller, and between the Solar Charge Controller and the Battery(ies), and between the Battery(ies) and any other equipment.

B.2 Solar Power System Design Requirements:

Provide to the Engineer for Approval, a submittal package with Engineering Calculations consisting of, as a minimum, schematic drawing, technical data sheets, and supporting documentation. Ensure the documentation demonstrates, in theory, that the battery(ies) will provide for continuous operation for a minimum of ten (10) consecutive days with no additional charging under the following conditions:

a) Fully powering the Wireless Repeater Radio operating 24 hours a day with 50% of that time being in a standby (sleep) mode; and 50% of the time being in operational mode.

Provide drawings showing dimension, location of required equipment, cabinet electrical diagrams, part numbers and descriptions of required equipment and accessories to the Engineer.

B.3 Solar Array:

Furnish solar modules made in North America and have a minimum 20 year factory warranty. The solar array should have a minimum peak output of 85 Watts. Solar modules must be UL listed, FM Class I, Div II, Group C&D approved. For the solar array, power wiring should be 10-2, stranded copper, double insulated, sunlight resistant, 600V 90C rated cable. Ensure the

solar array mount is manufactured from an aluminum alloy or stainless steel and is capable of withstanding 140 mph winds.

B.4 Solar Charger Controller:

Furnish a Pulse Width Modulation (PWM) solar charge controller that is UL listed, with a minimum 20A solid state, low voltage disconnect. The solar charge controller must be sealed with internal temperature compensation, lightning protection, reverse polarity protection, and LED indicators. Furnish controllers with the capability of 3 functions: battery charging, load control, and diversion regulation. Controllers must be furnished with fully adjustable DIP switches and RS-232 communications port to adjust the unit's operational modes. Ensure the solar charge controller is listed as a FM Class I, Div. II, Groups ABCD device and has the CE mark.

B.5 Batteries:

Provide a 12V gel electrolyte, non-spillable, maintenance free battery. The battery(ies) should be able to provide power for 10 days without being charged by the Solar Array. Furnish battery(ies) with a minimum operating temperature of -76° F to 140°F.

B.6 NEMA 3R Equipment Cabinet:

Provide a NEMA 3R type Equipment Cabinet enclosure that is of a pole mount design, with compartments to house the battery(ies) and electronic components separately. Ensure that the equipment installed inside the cabinet does not occupy more than 60% of the total cabinet volume.

Ensure that the battery compartment and the electronic equipment compartments are ventilated with a screen and louvered vents. Equip vents with standard-size, replaceable furnace type vent filters. Size the filter tray to adequately house and secure the filter in place. Ensure there are no obstructions on the interior face of the door to interfere with easy removal and replacement of filter.

Provide an enclosure that is fabricated with unpainted, natural, aluminum that complies with Section 7 of NEMA TS-2-1998. Ensure the equipment cabinet enclosure shell is fitted with one (1) Corbin Number 2 Key, lifting handles, exhaust ports. Provide all necessary hardware to mount the enclosure securely to the pole. Provide hardware that is stainless steel or a Department approved non-corrosive alternate including the hinges and lifting handle.

Provide roof with slope (from front to back) at a minimum ratio of 1" drop per 2 feet. Ensure roof is flush with front of the door. Ensure each exterior cabinet plane surface is constructed of a single sheet of seamless aluminum.

Provide a handle and three point latching mechanism designed to be disassembled using hand tools. Provide a shaft connecting the latching plate to the door handle by passing through the door within a bushing, bearing, or equivalent device. Provide a latching plate at least 1/8 inch thick and that mates securely with the lock bolt. Provide a lock bolt with a flat end (no bevel) and that has at least 1/4 inch of length in contact with the latching plate.

Ensure that the handle and lock are positioned so that the lock does not lie in the path of the rotating handle as the door is unlatched and that the handle points down in the latched position.

Provide a main door opening that encompasses the full frontal area of the cabinet shell. Ensure that the cabinet shell is sturdy and does not exhibit noticeable flexing, bending or distortion under normal conditions, except that a minor amount of flexing is permitted in the main door when the cabinet is open. In such case, the flexing must not result in permanent deformation of the door.

A police panel door is not required for these cabinets.

Equipment in the equipment cabinet enclosure will be shelf mounted. Provide one equipment shelf in the cabinet that extends the practical width of the cabinet. Ensure that the shelf can be moved up and down within the cabinet. Do not locate permanently mounted equipment in such a way that will restrict access to terminals. Ensure all components are arranged for easy access during servicing. When modular in construction, provide guides and positive connection devices to ensure proper pin alignment and connection.

Arrange equipment and terminals within the cabinet so that they will not interfere with the entrance, tracing and connection of conductors or other cables. Ensure all incoming and outgoing conductors are connected to terminal blocks. Ensure all field terminals are readily accessible without having to remove equipment to gain access. Ensure terminals are not located on the underside of shelf or at any other place where they are not readily visible or where they may present a hazard to personnel who might inadvertently touch them.

Provide terminal blocks that are made of electrical grade thermoplastic or thermosetting plastic. Ensure each terminal block is of closed back design and has recessed-screw terminals with molded barriers between terminals. Ensure each terminal consists of two terminal screws with removable shorting bar between them. Ensure all terminal blocks and terminals are labeled with their intended functions. Provide labels that are visible and easy to read when the terminal blocks are wired.

8.3. CONSTRUCTION METHODS

A. Antenna Mounting:

The Engineer will approve final locations of any solar powered radio systems. Install the antenna, antenna mounting hardware, coaxial cable, power divider, antenna splitter cable and additional antenna at locations where it is determined that a dual antenna configuration is necessary to accommodate communications in multiple directions.

Install antenna in accordance with the antenna manufacturer’s recommendations. Secure the antenna mounting hardware to the pole and route the coaxial cable such that no strain is placed on the N-Type Male coaxial connectors.

Install the coaxial cable shield grounding system by removing the outer jacket of the coaxial cable without damaging the cable shield. Install the shield grounding system following the cable manufacturer's recommendations. Install and weatherproof the connection using the appropriate weatherproofing materials and following the manufacturer's recommendations. On wood poles, secure the #6 AWG grounding lead cable to the pole ground using split bolt or compression type fitting or an Engineer approved method. On metal poles, secure the #6 AWG grounding lead cable to the pole using an Engineer approved method.

Install the coaxial cable in a 1 1/2 inch riser with heat shrink tubing for connecting into the equipment cabinet. Do not exceed the 1-inch bend radius of the coaxial cable as it traverses from the cabinet to the antenna assembly. Connect the lightning arrestor to the coaxial cable in the equipment cabinet. Properly ground and secure the arrestor in the cabinet. Permanently label all cables entering the cabinet.

Place a copy of all manufacturer equipment specifications and instruction and maintenance manuals in the equipment cabinet.

B. <u>Solar Power Assembly:</u>

Do not obstruct the sight distance of vehicles when locating and installing the equipment cabinet. Mount equipment cabinet so that the height to the middle of the cabinet is 4 feet above grade. Secure the cabinet to the pole using ¾" stainless steel straps or a method approved by the Engineer.

Ensure that the equipment cabinet along with solar array(s) and its mounting hardware are capable of surviving sustains winds of 140 MPH. Ensure the solar array(s) does not obstruct the view of traffic and that the array(s) are arranged for optimal sunlight exposure for charging of the battery(ies).

Run field wiring from the solar power array(s) to the equipment cabinet through 1 inch riser with weatherhead and make connections inside the equipment cabinets as required. Install separate DC disconnects between the solar array and the solar charger controller and between the solar charger controller and the battery(ies), and between the battery(ies) and any other equipment. Ensure the DC disconnect allows personnel working on the system to safely isolate critical items from each other while performing maintenance and trouble shooting. Ensure that all wiring including grounding of the solar photovoltaic system meets the requirements of Article 690 of the National Electric Code (NEC) and these project special provisions.

To protect against high voltage power surges, furnish and install one grounding electrode at the equipment cabinet.

Terminate all wires using spade connectors under binding screws on terminal blocks. Label

all terminal blocks and terminals for easy identification. Label all wires and harnesses for

easy identification. Neatly secure all wiring and harness inside the cabinet in a method approved by the Engineer.

Provide and leave all data interface cables, installation manuals, and specifications and materials used to program any equipment in the Equipment Cabinet. Program all equipment for operation.

8.4. MEASURMENT AND PAYMENT

Actual number of Solar Power, 900MHz Spread Spectrum Radio Systems furnished, installed and accepted.

This item includes the appropriate sized Solar Power Assembly (Solar Array, Solar Charger Controller, Battery, NEMA 3R equipment cabinet), 1 inch riser with weatherhead, 1 1/2 inch riser with heat shrink tubing, antenna(s), radio, data interface cable/serial cable, coaxial cable, lightning arrestor, radio frequency signal jumper, coaxial cable power divider (Splitter), coaxial cable connectors, coaxial cable shield grounding system with weatherproofing, labeling and any integration, installation materials and configuration software necessary to complete this work, including the Solar Power System Design Calculations and warranties, will be incidental.

Payment will be made under:

Solar Power, 900MHz Spread Spectrum Radio ..... Each

9. MODIFY Spread Spectrum Wireless radio

9.1. DESCRIPTION

Make modifications to existing Spread Spectrum Radio installations.

9.2. MATERIALS

Material, equipment, and hardware furnished under this section shall be pre-approved on the Departments' QPL.

Reference Article 1098-18 "Spread Spectrum Wireless Radio" of the Standard Specifications for Roads and Structures.

9.3. DESCRIPTION

This item of work involves making modifications to existing wireless installations which include relocating an existing radio from an existing cabinet to a new cabinet, and/or relocating existing components of the radio system from an existing pole to new poles (wood poles, metal strain poles, metal poles with mast arms, etc.). This item of work includes, but may not be limited to, the following:

Relocating existing radio from an existing cabinet to a new cabinet

Relocating or installing new Coaxial Cable
Furnishing and installing new N-Type Connectors
Furnishing new Coaxial Cable and Shield Grounding Kits
Relocating Antenna Mounting Hardware
Relocating Antennas

This item of work may also involve converting an existing standalone radio site to a repeater site. This item of work includes, but may not be limited to, the following:

Furnishing and installing new antenna(s)
Furnishing and installing new antenna mounting hardware kits
Furnishing and installing new 6 foot coaxial cable jumpers with N-Type Connectors
Furnishing and installing new coaxial cable – power divider (Splitters)

9.4. MEASURE OF PAYMENT

Modify Radio Installation will be measured as the actual number of modified radio installations that are modified and accepted.

This item includes relocating the radio, and furnishing and/or relocating and installing coaxial cable, N-Type Connectors, coaxial cable shield grounding kits, antenna mounting hardware, antennas, coaxial cable and power dividers. This item of work may also involve furnishing and installing new decals and furnishing or relocating signs. This item of work may also involve re-programming the radio.

Payment for new risers will be covered separately.

Payment will be made under:
Modify Radio Installation.....Each

10. traffic signal supports

10.1. METAL TRAFFIC SIGNAL SUPPORTS – ALL POLES

A. General:

Furnish and install metal strain poles and metal poles with mast arms, grounding systems, and all necessary hardware. The work covered by this special provision includes requirements for the design, fabrication, and installation of both standard and custom/site specifically designed metal traffic signal supports and associated foundations.

Provide metal traffic signal support systems that contain no guy assemblies, struts, or stay braces. Provide designs of completed assemblies with hardware that equals or exceeds AASHTO *Standard Specifications for Structural Supports for Highway Signs, Luminaires and Traffic Signals* 4th Edition, 2001 (hereafter called 4th Edition AASHTO), including the latest interim specifications. Provide assemblies with a round or near-round (18 sides or

more) cross-section, or a multi sided cross section with no less than six sides. The sides may be straight, convex, or concave.

Pole heights shown on signal plans are estimated from available data for bid purposes. Prior to furnishing metal signal poles, use field measurements and adjusted cross-sections to determine whether pole heights are sufficient to obtain required clearances. If pole heights are not sufficient, the Contractor should immediately notify the Engineer of the required revised pole heights.

Ensure that metal signal poles permit cables to be installed inside poles and any required mast arms. For holes in the poles and arms used to accommodate cables, provide full-circumference grommets. Arm flange plate wire access holes should be deburred, non grommeted, and oversized to fit around the 2” diameter grommeted shaft flange plate wire access hole.

After fabrication, have steel poles, required mast arms, and all parts used in the assembly hot-dip galvanized per section 1076. Design structural assemblies with weep holes large enough and properly located to drain molten zinc during galvanization process. Provide hot-dip galvanizing on structures that meets or exceeds ASTM Standard A-123. Provide galvanizing on hardware that meets or exceeds ASTM Standard A-153. Ensure that threaded material is brushed and retapped as necessary after galvanizing. Perform repair of damaged galvanizing that complies with the following:

Repair of Galvanizing ..... Article 1076-6

Standard Drawings for Metal Poles are available that supplement these project special provisions. These drawings are located on the Department’s website:

http://www.ncdot.gov/doh/preconstruct/traffic/ITSS/ws/mpoles/poles.html

Comply with article 1098-1B “General Requirements” of the *2012 STANDARD SPECIFICATIONS FOR ROADS & STRUCTURES*, hereinafter referred to as the *Standard Specifications* for submittal requirements. Furnish shop drawings for approval. Provide the copies of detailed shop drawings for each type of structure as summarized below. Ensure that shop drawings include material specifications for each component and identify welds by

type and size on the drawing details, not in table format. Do not release structures for fabrication until shop drawings have been approved by NCDOT. Provide an itemized bill of materials for all structural components and associated connecting hardware on the drawings.

Comply with article 1098-1A "General Requirements" of the *Standard Specifications* for Qualified Products List (QPL) submittals. All shop drawings must include project location description, signal inventory number(s) and a project number or work order number on the drawings.

Summary of information required for metal pole review submittal:

Item	**Hardcopy Submittal**	**Electronic Submittal**	**Comments / Special Instructions**
Sealed, Approved Signal Plan/Loading Diagram	1	1	All structure design information needs to reflect the latest approved signal plans
Custom Pole Shop Drawings	4 sets	1 set	Submit drawings on 11" x 17" format media Show NCDOT inventory number(s) in or above the title block
Standard Pole Shop Drawings (from the QPL)	4 sets	1 set	Submit drawings on 11" x 17" format media Show NCDOT inventory number(s) in or above the title block
Structure Calculations	1 set	1 set	Not required for Standard QPL Poles
Standard Pole Foundation Drawings	1 set	1 set	Submit drawings on 11" x 17" format media. Submit a completed Standard Foundation Selection form for each pole using foundation table on Metal Pole Drawing M-8.
Custom Foundation Drawings	4 sets	1 set	Submit drawings on 11" x 17" format media. If QPL Poles are used, include the corresponding QPL pole shop drawings with this submittal.
Foundation Calculations	1	1	Not required for Standard QPL Poles
Soil Boring Logs and Report	1	1	Report should include a location plan and a soil classification report including soil capacity, water level, hammer efficiency, soil bearing pressure, soil density, etc. for each pole.

NOTE – All shop drawings and custom foundation design drawings must be sealed by a professional Engineer licensed in the state of North Carolina. All geotechnical information must be sealed by either a Professional Engineer or geologist licensed in the state of North Carolina. Include a title block and revision block on the shop drawings and foundation designs showing the NCDOT inventory number.

Shop drawings and foundation drawings may be submitted together or separately for approval. However, shop drawings must be approved before foundations can be reviewed. Foundation designs will be returned without review if the associated shop drawing has not been approved. Incomplete submittals will be returned without review.

B. Materials:

Fabricate metal pole and arm shaft from coil or plate steel to meet the requirements of ASTM A 595 Grade A tubes. For structural steel shapes, plates and bars use A572 Gr 50 min or ASTM A709 Gr 50 min.. Provide pole and arm shafts that are round in cross section or multisided tubular shapes and have a uniform linear taper of 0.14 in/ft. Construct shafts from one piece of

single ply plate or coil so there are no circumferential weld splices. Galvanize in accordance with AASHTO M 111 and/or ASTM A 123 or an approved equivalent.

Use the submerged arc process or other NCDOT previously approved process suitable for pole shaft and arms to continuously weld pole shafts and arm shafts along their entire length. The longitudinal seam weld will be finished flush to the outside contour of the base metal. Ensure shafts have no circumferential welds except at the lower end joining the shaft to the pole base and arm base. Provide welding that conforms to Article 1072-20 of the *Standard Specifications*, except that no field welding on any part of the pole will be permitted unless approved by a qualified engineer.

Refer to Metal Pole Standard Drawing Sheets M2 through M5 for fabrication details. Fabricate anchor bases from plate steel meeting, as a minimum, the requirements of ASTM A 36M or cast steel meeting the requirements of ASTM A 27M Grade 485-250, AASHTO M270 Gr 36 or an approved equivalent. Conform to the applicable bolt pattern and orientation as shown on Metal Pole Standard Drawing Sheet M2.

Ensure all hardware is galvanized steel or stainless steel. The Contractor is responsible for ensuring that the designer/fabricator specifies connecting hardware and/or materials that do not create a dissimilar metal corrosive reaction.

Unless otherwise required by the design, ensure each anchor rod is 2” diameter and 60” length. Provide 10” minimum thread projection at the top of the rod, and 8” minimum at the bottom of the rod. Use anchor rod assembly and drilled pier foundation materials that meet the *Foundations and Anchor Rod Assemblies for Metal Poles* provision.

For each structural bolt and other steel hardware, hot dip galvanizing shall conform to the requirements of AASHTO M 232 (ASTM A 153). Ensure end caps for poles or mast arms are constructed of cast aluminum conforming to Aluminum Alloy 356.0F.

Provide a circular anchor bolt lock plate that will be secured to the anchor bolts at the embedded end with 2 washers and 2 nuts. Provide a base plate template that matches the bolt circle diameter of the anchor bolt lock plate. Construct plates and templates from ¼” minimum thick steel with a minimum width of 4”. Galvanizing is not required.

Provide 4 heavy hex nuts and 4 flat washers for each anchor bolt. For nuts, use AASHTO M291 grade 2H, DH, or DH3 or equivalent material. For flat washers, use AASHTO M293 or equivalent material.

C. Construction Methods:

Erect signal support poles only after concrete has attained a minimum allowable compressive strength of 3000 psi. Install anchor rod assemblies in accordance with the *Foundations and Anchor Rod Assemblies for Metal Poles* provision.

For further construction methods, see construction methods for Metal Strain Pole, or Metal Pole with Mast Arm.

Connect poles to grounding electrodes and bond them to the electrical service grounding electrodes.

For holes in the poles used to accommodate cables, install grommets before wiring pole or arm. Do not cut or split grommets.

Attach the terminal compartment cover to the pole by a sturdy chain or cable. Ensure the chain or cable is long enough to permit the cover to hang clear of the compartment opening when

the cover is removed, and is strong enough to prevent vandalism. Ensure the chain or cable will not interfere with service to the cables in the pole base.

Attach cap to pole with a sturdy chain or cable. Ensure the chain or cable is long enough to permit the cap to hang clear of the opening when the cap is removed.

Perform repair of damaged galvanizing that complies with the *Standard Specifications*, Article 1076-6 "Repair of Galvanizing."

Install galvanized wire mesh around the perimeter of the base plate to cover the gap between the base plate and top of foundation for debris and pest control.

Install a ¼" thick plate for concrete foundation tag to include: concrete grade, depth, diameter, and reinforcement sizes of the installed foundation.

10.2. METAL STRAIN POLE

A. Materials:

Provide either steel or aluminum poles as indicated on the plans.

Comply with the following for Aluminum Poles:

- Have poles fabricated from Aluminum Association Alloy 6061-T6, 6063-T6, or approved equivalent. The structural requirement does not pertain to castings that are decorative only.
- Have shafts tapered by spinning and cold-working a seamless extruded tube of the aluminum alloy.
- Have shafts with no circumferential welds except at the lower end joining the shaft to the base.
- Ensure aluminum poles are properly protected from damage prior to shipment.
- Have bases of the shaft fabricated in accordance with the Aluminum Association Alloy 356.0-T6, and of adequate strength, shape and size, and capable of withstanding the design load of the shaft.
- Have aluminum surfaces in contact with concrete or dissimilar metal coated with bituminous paint.

Comply with the following for Steel Poles:

- Have shafts of the tapered tubular type and fabricated of steel conforming to ASTM A-595 Grade A or an approved equivalent.
- Have galvanization in accordance with AASHTO M 111 (ASTM A 123).
- Have shafts that are continuously welded for the entire length by the submerged arc process, and with exposed welds ground or rolled smooth and flush with the base metal. Provide welding that conforms to Article 1072-20 per *Standard Specification* except that no field welding on any part of the pole will be permitted.
- Have anchor bases for steel poles fabricated from plate steel meeting as a minimum the requirements of ASTM A 36M or cast steel meeting the requirements of ASTM A 27M Grade 485-250 or an approved equivalent.

For each strain pole, provide 2 messenger cable (span wire) clamps and associated hardware for attachment of support cable of the messenger cable suspension. Ensure that diameter of the clamp is appropriate to its location on the pole and that the diameter of the clamps is appropriately designed to be adjustable from 1'-6" below the top, down to 6'-6" below the top of the pole. Do not attach more than one support cable to a messenger cable clamp.

For strain poles, provide a minimum of three (3) 2 inch (50 mm) holes equipped with an associated coupling and weatherhead on the messenger cable load side of the pole to accommodate passage of signal cables from inside the pole to the suspension. Provide galvanized threaded plugs for all unused couplings at pole entrance points. Refer to Metal Pole Standard Drawing Sheet M3 for fabrication details.

Provide a grounding lug(s) in the approximate vicinity of the messenger cable clamp for bonding and grounding messenger cable. Lugs must accept #4 or #6 AWG wire to bond messenger cables to the pole in order to provide an effective ground fault circuit path. Refer to Metal Pole Standard Drawing Sheet M6 for construction details.

Have poles permanently stamped above the hand holes with the identification tag details as shown on Metal Pole Standard Drawing Sheet M2.

Provide liquid tight flexible metal conduit (Type LFMC), liquid tight flexible nonmetallic conduit (Type LFNC), high density polyethylene conduit (Type HDPE), or approved equivalent to isolate conductors feeding luminaires.

Fabricate poles from a single piece of steel or aluminum with single line seam weld with no transverse butt welds. Fabrication of two ply pole shafts is unacceptable with the exception of fluted shafts. Provide tapers for all shafts that begin at base and that have diameters which decrease uniformly at the rate of not more than 0.14 inch per foot (11.7 millimeters per meter) of length.

Ensure that allowable pole deflection does not exceed that allowed per 4th Edition AASHTO. For messenger cable poles (with primarily transverse loads), ensure that maximum deflection at the top of the pole does not exceed 2.5 percent of the pole height. For mast arm poles (with primarily moment loads), ensure that maximum angular rotation of the top of the pole does not exceed 1° 40'.

Provide four anchor nuts and four washers for each anchor bolt. Ensure that anchor bolts have required diameters, lengths, and positions, and will develop strengths comparable to their respective poles.

Provide a terminal compartment with cover and screws in each pole that encompasses the hand hole and contains a 12-terminal barrier type terminal block. Provide two terminal screws with a removable shorting bar between them for each termination. Furnish terminal compartment covers attached to the pole by a sturdy chain or cable approved by the Engineer. Ensure that the chain or cable is long enough to permit the cover to hang clear of the compartment opening when the cover is removed, and is strong enough to prevent vandals from being able to disconnect the cover from the pole. Ensure that the chain or cable will not interfere with service to the cables in the pole base.

Install grounding lugs that will accept #4 or #6 AWG wire to electrically bond messenger cables to the pole. Refer to Metal Pole Standard Drawing Sheet M6 for construction details.

For each pole, provide a 1/2 inch minimum thread diameter, coarse thread stud and nut for grounding which will accommodate #6 AWG ground wire. Ensure that the lug is electrically bonded to the pole and is conveniently located inside the pole at the hand hole.

Provide a removable pole cap with stainless steel attachment screws for the top of each pole. Ensure that the cap is cast aluminum conforming to Aluminum Association Alloy 356.0F. Furnish cap attached to the pole with a sturdy chain or cable approved by the Engineer. Ensure that the chain or cable is long enough to permit the cap to hang clear of the pole-top opening when the cap is removed.

When required by the plans, furnish couplings 42 inches above the bottom of the base for mounting of pedestrian pushbuttons. Provide mounting points consisting of 1-1/2 inch internally threaded half-couplings that comply with the NEC and that are mounted within the poles. Ensure that couplings are essentially flush with the outside surfaces of the poles and are installed before any required galvanizing. Provide a threaded plug in each mounting point. Ensure that the surface of the plug is essentially flush with the outer end of the mounting point when installed and has a recessed hole to accommodate a standard wrench.

B. Construction Methods:

Install metal poles, hardware, and fittings as shown on the manufacturer's installation drawings. Install metal poles so that when the pole is fully loaded it is within 2 degrees of vertical. Install poles with the manufacturer's recommended "rake." Use threaded leveling nuts to establish rake if required.

10.3. METAL POLE WITH MAST ARM

Provide signal support mast arm assemblies. Comply with the previous Section – Metal Strain Pole – except as noted herein.

Provide pole plates and associated gussets and fittings for attachment of required mast arms.

As part of each mast arm attachment, provide a cable passage hole in the pole to allow

passage of signal cables from the pole to the arm.

Ensure that allowable mast arm deflection does not exceed that allowed per 4th Edition AASHTO. Also when arm is fully loaded, tip of the arm shall not go below the arm attachment point with the pole for all load conditions per 4th Edition AASHTO.

Furnish all arm plates and necessary attachment hardware, including bolts and brackets.

Provide two extra bolts for each arm.

Provide grommet holes on the arms to accommodate cables for the signals.

Provide arms with weatherproof connections for attaching to the shaft of the pole.

Provide hardware that is galvanized steel, stainless steel, or corrosive-resistant aluminum.

Provide a removable end cap with stainless steel attachment screws for the end of each mast arm. Ensure that the cap is cast aluminum conforming to Aluminum Association Alloy 356.0F. Furnish cap attached to the arm with a sturdy chain or cable approved by the Engineer. Ensure that the chain or cable is long enough to permit the cap to hang clear of the arm end opening when the cap is removed.

Comply with the following for Aluminum Arms:

- Conform to Aluminum Association Alloy 6061-T6, 6063-T6 or approved equivalent.
- Conform to the welding requirements of the aluminum poles.
- Have satin brush finished and furnish individually wrapped.

Comply with the following for Steel Luminaire Arms:

- In addition to tapered tube, luminaire arms may be standard weight black steel pipe conforming to ASTM A 53-90a, Type E or Type S, Grade B or an approved equivalent.
- Conform to the welding requirements of the steel poles.
- After all fabricating, cutting, punching, and welding are completed, luminaire arms should be hot-dipped galvanized inside and outside.
- In accordance with the National Electrical Code (NEC) Article 230.2(E), provide identification of the electrical source provider for the luminaire feeder circuit with contact information on a permanent label located in the pole hand hole in the vicinity of the feeder circuit raceway.

A. Materials:

Fabrication of two ply pole shafts and arms is unacceptable with the exception of fluted members.

After all fabricating, cutting, punching, and welding are completed, hot-dip galvanize the structure in accordance with the AASHTO M 111 or equivalent.

B. Construction Methods:

Install horizontal-type arms with sufficient manufactured rise to keep arm from deflecting

below the arm attachment height.

Attach cap to the mast arm with a sturdy chain or cable. Ensure that the chain or cable is long enough to permit the cap to hang clear of the arm opening when the cap is removed.

For mast arm poles, use full penetration welds with back-up ring at the pole base and at the arm base connection.

10.4. DRILLED PIER FOUNDATIONS FOR METAL TRAFFIC SIGNAL POLES

Analysis procedures and formulas shall be based on AASHTO, ACI code and per FHWA manuals. Design methods based on engineering publications or research papers needs to have prior approval from NCDOT. The Department reserves the right to accept or disapprove any method used for the analysis.

Use a Factor of Safety of 1.33 for torsion and 2.0 for bending for the foundation design.

Foundation design for lateral load shall not exceed 1” lateral deflection at top of foundation.

Design all custom foundations to carry the maximum capacity of each metal pole. For standard case strain poles only, if a custom foundation is designed, use the actual moment reactions from the Standard Foundation Selection Table shown on Standard Drawing No. M8.

When poor soil conditions are encountered which could create an excessively large foundation design, consideration may be given to allowing an exemption to the maximum capacity design. The contractor must gain approval from the engineer before reducing a foundation's capacity. On projects where poor soil is known to be present, it is advisable that the contractor consider getting foundations approved before releasing poles for fabrication.

A. Description:

Furnish and install foundations for NCDOT metal poles with all necessary hardware in accordance with the plans and specifications.

Metal Pole Standards have been developed and implemented by NCDOT for use at signalized intersections in North Carolina. If the plans call for a standard pole, then a standard foundation may be selected from the plans. However, the Contractor is not required to use a standard foundation. If the Contractor chooses to design a non-standard site-specific foundation for a standard pole or if the plans call for a non-standard site-specific pole, design the foundation to conform to the applicable provisions in the NCDOT Metal Pole Standards and Section B4 (Non-Standard Foundation Design) below. If non-standard site specific foundations are designed for standard QPL approved strain poles, the foundation designer must use the design moment specified by load case on Metal Pole Standard Drawing Sheet M8. Failure to conform to this requirement will be grounds for rejection of the design.

If the Contractor chooses to design a non-standard foundation for a standard pole and the soil test results indicate a standard foundation is feasible for the site, the Contractor will be paid the cost of the standard foundation (drilled pier and wing wall, if applicable). Any additional costs associated with a non-standard site-specific foundation including additional materials, labor and equipment will be considered incidental to the cost of the standard foundation. All costs for the non-standard foundation design will also be considered incidental to the cost of the standard foundation.

B. Soil Test and Foundation Determination:

1. General:

Drilled piers are reinforced concrete sections, cast-in-place against in situ, undisturbed material. Drilled piers are of straight shaft type and vertical.

Some standard drilled piers for supporting poles with mast arms may require wing walls to resist torsional rotation. Based upon this provision and the results of the required soil test, a drilled pier length and wing wall requirement may be determined and constructed in accordance with the plans.

For non-standard site-specific poles, the contractor-selected pole fabricator will determine if the addition of wing walls is necessary for the supporting foundations.

2. Soil Test:

Perform a soil test at each proposed metal pole location. Complete all required fill placement and excavation at each signal pole location to finished grade before drilling each boring. Soil tests performed that are not in compliance with this requirement may be rejected and will not be paid. Drill one boring to a depth of 26 feet within a 25 foot radius of each proposed foundation.

Perform standard penetration tests (SPT) in accordance with ASTM D 1586 at depths of 1,

2.5, 5, 7.5, 10, 15, 20 and 26 feet. Discontinue the boring if one of the following occurs:

- A total of 100 blows have been applied in any 2 consecutive 6-in. intervals.
- A total of 50 blows have been applied with < 3-in. penetration.

Describe each intersection as the "Intersection of (*Route or SR #*), *(Street Name)* and (*Route or SR #*), *(Street Name)*, _____ County, Signal Inventory No. _____". Label borings with "B-*N, S, E, W, NE, NW, SE or SW*" corresponding to the quadrant location within the intersection. Pole numbers should be made available to the Drill Contractor. Include pole numbers in the boring label if they are available. If they are not available, ensure the boring labels can be cross-referenced to corresponding pole numbers. For each boring, submit a legible (hand written or typed) boring log signed and sealed by a licensed Geologist or Professional Engineer registered in North Carolina. Include on each boring the SPT blow counts and N-values at each depth, depth of the boring, and a general description of the soil types encountered.

3. Standard Foundation Determination:

Use the following method for determining the Design N-value:

$$N_{AVG} = \frac{(N@1' + N@2.5' + \ldots\ldots\ldots N@\text{Deepest Boring Depth})}{\text{Total Number of N-values}}$$

$$Y = (N@1')^2 + (N@2.5')^2 + \ldots\ldots\ldots (N@\text{Deepest Boring Depth})^2$$

$$Z = (N@1' + N@2.5' + \ldots\ldots\ldots N@\text{Deepest Boring Depth})$$

$$N_{STD\ DEV} = \left(\frac{(\text{Total Number of N-values} \times Y) - Z^2}{(\text{Total Number of N-values}) \times (\text{Total Number of N-values} - 1)} \right)^{0.5}$$

Design N-value equals lesser of the following two conditions:

$N_{AVG} - (N_{STD\ DEV} \times 0.45)$

Or

$$\text{Average of First Four N-Values} = \frac{(N@1' + N@2.5' + N@5' + N@7.5')}{4}$$

Note: If less than 4 N-values are obtained because of criteria listed in Section 2 above, use average of N-values collected for second condition. Do not include the N-value at the deepest boring depth for above calculations if the boring is discontinued at or before the required boring depth because of criteria listed in Section 2 above. Use N-value of zero for weight of hammer or weight of rod. If N-value is greater than 50, reduce N-value to 50 for calculations.

If standard NCDOT strain poles are shown on the plans and the Contractor chooses to use standard foundations, determine a drilled pier length, "L," for each signal pole from the Standard Foundations Chart (sheet M 8) based on the Design N-value and the predominant soil type. For each standard pole location, submit a completed "Metal Pole Standard Foundation Selection Form" signed by the Contractor's representative. Signature on form is for verification purposes only. Include the Design N-value calculation and resulting drilled pier length, "L," on each form.

If non-standard site-specific poles are shown on the plans, submit completed boring logs collected in accordance with Section 2 (Soil Test) above along with pole loading diagrams from the plans to the contractor-selected pole fabricator to assist in the pole and foundation design.

If one of the following occurs, the Standard Foundations Chart shown on the plans may not be used and a non-standard foundation may be required. In such case, contact the Engineer.

- The Design N-value is less than 4.
- The drilled pier length, "L", determined from the Standard Foundations Chart, is greater than the depth of the corresponding boring.

In the case where a standard foundation cannot be used, the Department will be responsible for the additional cost of the non-standard foundation.

Foundation designs are based on level ground around the traffic signal pole. If the slope around the edge of the drilled pier is steeper than 8:1 (H:V) or the proposed foundation will be less than 10 feet from the top of an embankment slope, the Contractor is responsible for providing slope information to the foundation designer and to the Engineer so it can be considered in the design.

The "Metal Pole Standard Foundation Selection Form" may be found at:

http://www.ncdot.gov/doh/preconstruct/highway/geotech/formdet/misc/MetalPole.pdf

If assistance is needed, contact the Engineer.

4. Non-Standard Foundation Design:

Design non-standard foundations based upon site-specific soil test information collected in accordance with Section 2 (Soil Test) above. Design drilled piers for side resistance only in accordance with Section 4.6 of the *AASHTO Standard Specifications for Highway Bridges*. Use the computer software LPILE version 5.0 or later manufactured by Ensoft, Inc. to analyze drilled piers. Use the computer software gINT version 8.0 or later manufactured by Bentley Systems, Inc. with the current NCDOT gINT library and data template to produce SPT boring logs. Provide a drilled pier foundation for each pole with a length and diameter that result in a horizontal lateral movement of less than 1 inch at the top of the pier and a horizontal rotational movement of less than 1 inch at the edge of the pier. Contact the Engineer for pole loading diagrams for standard poles to be used for non-standard foundation designs. Submit any non-standard foundation designs including drawings, calculations, and soil boring logs to the Engineer for review and approval before construction.

C. <u>Drilled Pier Construction:</u>

Construct drilled pier foundations in accordance with the *Foundations and Anchor Rod Assemblies for Metal Poles* provision.

10.5. CUSTOM DESIGN OF TRAFFIC SIGNAL SUPPORTS

A. <u>General:</u>

Design traffic signal supports with foundations consisting of metal strain poles or metal poles with mast arms.

The lengths of the metal signal poles shown on the plans are estimated from available data for bid purposes. Determine the actual length of each pole from field measurements and adjusted cross-sections. Furnish the revised pole heights to the Engineer. Use all other dimensional requirements shown on the plans.

Ensure each pole includes an identification tag with information and location positions as defined on Metal Pole Standard Drawing Sheets M2, M3 and M4. All pole shaft tags must

include the NCDOT Inventory number followed by the pole number shown on the traffic signal or ITS (non-signalized locations) plan.

Design all traffic signal support structures using the following 4th Edition AASHTO specifications:

- Design for a 50 year service life as recommended by Table 3-3.
- Use the wind pressure map developed from 3-second gust speeds, as provided in Article 3.8.
- Ensure signal support structures include natural wind gust loading and truck-induced gust loading in the fatigue design, as provided for in Articles 11.7.3 and 11.7.4, respectively. Designs need not consider periodic galloping forces.
- Assume the natural wind gust speed in North Carolina is 11.2 mph. For natural wind fatigue stress calculations, utilize a drag coefficient (C_d) computed for 11.2 mph wind velocity and not the basic wind speed velocity.
- Design for Category II fatigue, as provided for in Article 11.6, unless otherwise specified.
- Calculate all stresses using applicable equations from Section 5. The Maximum allowable stress ratios for all signal support designs are 0.9.
- Conform to article 10.4.2 and 11.8 for all deflection requirements.

Ensure that the design permits cables to be installed inside poles and mast arms.

Unless otherwise specified by special loading criteria, the computed surface area for ice load on signal heads is:

- 3-section, 12-inch, Surface area: 26.0 ft^2 (17.0 ft^2 without back plate)
- 4-section, 12-inch, Surface area: 32.0 ft^2 (21.0 ft^2 without back plate)
- 5-section, 12-inch, Surface area: 42.0 ft^2 (29.0 ft^2 without back plate)

The ice loading for signal heads defined above includes the additional surface area that back plates will induce. Special loading criteria may be specified in instances where back plates will not be installed on signal heads. Refer to the Loading Schedule on each Metal Pole Loading Diagram for revised signal head surface areas. The pole designer should revise ice loads accordingly in this instance. Careful examination of the plans when this is specified is important as this may impact sizing of the metal support structure and foundation design which could affect proposed bid quotes. All maximum stress ratios of 0.9 still apply.

Assume the combined minimum weight of a messenger cable bundle (including messenger cable, signal cable and detector lead-in cables) is 1.3 lbs/ft. Assume the combined minimum diameter of this cable bundle is 1.3 inches.

Ensure that designs provide a removable pole cap with stainless steel attachment screws for each pole top and mast arm end.

B. <u>Metal Poles:</u>

Submit design drawings for approval including pre-approved QPL pole drawings. Show all the necessary details and calculations for the metal poles including the foundation and connections. Include signal inventory number on design drawings. Include as part of the design calculations the ASTM specification numbers for the materials to be used. Provide the types and sizes of welds on the design drawings. Include a Bill of Materials on design drawings. Ensure design drawings and calculations are signed, dated, and sealed by the responsible professional engineer licensed in the state of North Carolina. Immediately bring to the attention of the Engineer any structural deficiency that becomes apparent in any assembly or member of any assembly as a result of the design requirements imposed by these specifications, the plans, or the typical drawings. Said Professional Engineer is wholly responsible for the design of all poles and

arms. Review and acceptance of these designs by the Department does not relieve the said Professional Engineer of his responsibility. Do not fabricate the assemblies until receipt of the Department's approval of the design drawings.

For mast arm poles, provide designs with provisions for pole plates and associated gussets and fittings for mast arm attachment. As part of each mast arm attachment, provide a grommeted 2" diameter hole on the shaft side of the connection to allow passage of the signal cables from the pole to the arm.

Where ice is present, assume wind loads as shown in Figure 3-5 of the 4th Edition AASHTO Specification for Group III loading.

For each strain pole, provide two messenger cable clamps and associated hardware to attach the messenger support cable. Ensure that the diameter of the clamps is appropriately designed to be adjustable from 18 inches below the top, down to 6'-6" below the top of the pole. Do not attach more than one messenger support cable to a messenger cable clamp.

Provide a grounding lug(s) in the approximate vicinity of the messenger cable clamp for bonding and grounding messenger cable. Lugs must accept #4 or #6 AWG wire to bond messenger cables to the pole in order to provide an effective ground fault circuit path. Refer to Metal Pole Standard Drawing Sheet M6 for construction details.

Design tapers for all pole shafts that begin at the base with diameters that decrease uniformly at the rate of 0.14 inch per foot of length.

Design a base plate on each pole. The minimum base plate thickness for all poles is determined by the following criteria:

Case 1 Circular or rectangular solid base plate with the upright pole welded to the top surface of base plate with full penetration butt weld, and where no stiffeners are provided. A base plate with a small center hole, which is less than 1/3 of the upright diameter, and located concentrically with the upright pole, may be considered as a solid base plate.

The magnitude of bending moment in the base plate, induced by the anchoring force of each anchor bolt is $M = (P \times D_1) / 2$, where

M = bending moment at the critical section of the base plate induced by one anchor bolt

P = anchoring force of each anchor bolt

D_1 = horizontal distance between the anchor bolt center and the outer face of the upright, or the difference between the bolt circle radius and the outside radius of the upright

Locate the critical section at the face of the anchor bolt and perpendicular to the bolt circle radius. The overlapped part of two adjacent critical sections is considered ineffective.

Case 2 Circular or rectangular base plate with the upright pole socketed into and attached to the base plate with two lines of fillet weld, and where no stiffeners are provided, or any base plate with a center hole that is larger in diameter than 1/3 of the upright diameter.

The magnitude of bending moment induced by the anchoring force of each anchor bolt is $M = P \times D_2$,

where P = anchoring force of each anchor bolt

D_2 = horizontal distance between the face of the upright and the face of the anchor bolt nut

Locate the critical section at the face of the anchor bolt top nut and perpendicular to the radius of the bolt circle. The overlapped part of two adjacent critical sections is considered ineffective.

If the base plate thickness calculated for Case 2 is less than Case 1, use the thickness calculated for Case 1.

The following additional owner requirements apply concerning pole base plates.

- Ensure that whichever case governs as defined above, the anchor bolt diameter is set to match the base plate thickness. If the minimum diameter required for the anchor bolt exceeds the thickness required for the base plate, set the base plate thickness equal to the required bolt diameter.
- For dual mast arm supports, or for single mast arm supports 50’ or greater, use a minimum 8 bolt orientation with 2” diameter anchor bolts, and a 2” thick base plate.
- For all metal poles with mast arms, use a full penetration groove weld with a backing ring to connect the pole upright component to the base. Refer to Metal Pole Standard Drawing Sheet M4.

Ensure that designs have anchor bolt holes with a diameter 1/4 inch larger than the anchor bolt diameters in the base plate.

Ensure that the anchor bolts have the required diameters, lengths, and positions, and will develop strengths comparable to their respective poles.

Provide designs with a 6 x 12-inch hand hole with a reinforcing frame for each pole.

Provide designs with a terminal compartment with cover and screws in each pole that encompasses the hand hole and contains provisions for a 12-terminal barrier type terminal block.

For each pole, provide designs with provisions for a 1/2 inch minimum thread diameter, coarse thread stud and nut for grounding which will accommodate a #6 AWG ground wire. Ensure the lug is electrically bonded to the pole and is conveniently located inside the pole at the hand hole.

When required, design couplings on the pole for mounting pedestrian pushbuttons at a height of 42 inches above the bottom of the base. Provide mounting points consisting of 1-1/2 inch internally threaded half-couplings that comply with the NEC that are mounted within the poles. Ensure the couplings are essentially flush with the outside surfaces of the poles and are installed before any required galvanizing. Provide a threaded plug for each half coupling. Ensure that the surface of the plug is essentially flush with the outer end of the mounting point when installed and has a recessed hole to accommodate a standard wrench.

C. <u>Mast Arms:</u>

Design all arm plates and necessary attachment hardware, including bolts and brackets as required by the plans.

Design for grommeted holes on the arms to accommodate the cables for the signals if specified.

Design arms with weatherproof connections for attaching to the shaft of the pole.

Always use a full penetration groove weld with a backing ring to connect the mast arm to the pole. Refer to Metal Pole Standard Drawing Sheet M5.

Capacity of tapped flange plate must be sufficient to develop the full capacity of the connecting bolts. In all cases the flange plate of both arm and shaft must be at least as thick as the arm connecting bolts are in diameter.

10.6. METAL SIGNAL POLE REMOVALS

A. Description:

Remove and dispose of existing metal signal poles including mast arms, and remove and dispose of existing foundations, associated anchor bolts, electrical wires and connections.

B. Construction Methods:

1. Foundations:

Remove and promptly dispose of the metal signal pole foundations including reinforcing steel, electrical wires, and anchor bolts to a minimum depth of two feet below the finished ground elevation. At the Contractor's option, remove the complete foundation.

2. Metal Poles:

Assume ownership of the metal signal poles, remove the metal signal poles, and promptly transport the metal signal poles from the project. Use methods to remove the metal signal poles and attached traffic signal equipment that will not result in damage to other portions of the project or facility. Repair damages that are a result of the Contractor's actions at no additional cost to the Department.

Transport and properly dispose of the materials.

Backfill and compact disturbed areas to match the finished ground elevation. Seed unpaved areas.

Use methods to remove the foundations that will not result in damage to other portions of the project or facility. Repair damages that are a result of the Contractor's actions at no cost to the Department.

10.7. POLE NUMBERING SYSTEM

A. New Poles

Attach an identification tag to each pole shaft and mast arm section as shown on Metal Pole Standard Drawing Sheet M2 "Typical Fabrication Details Common To All Metal Poles".

B. Reused Poles

Do not remove the original identification tag(s) from the pole shaft and/or mast arm sections. Add a new identification tag based on the new location for any reused poles and/or mast arms.

10.8. REUSED POLE SHAFTS AND/OR MAST ARMS

Provide shop drawings along with new foundation designs for review and approval prior to furnishing and/or installing any reused metal poles and/or mast arms. Use the same requirements as specified for new materials as stated above in these Special Provisions.

For reused pole shaft and mast arm combinations, it is preferable to use the original shafts and arms that were used together at the time of original installation.

10.9. MEASUREMENT AND PAYMENT

Actual number of metal strain signal poles (without regard to height or load capacity) furnished, installed and accepted.

Actual number of metal poles with single mast arms furnished, installed, and accepted.

Actual number of metal poles with dual mast arms furnished, installed, and accepted.

Actual number of reused metal strain signal poles (without regard to height or load capacity) furnished, installed and accepted.

Actual number of reused metal strain signal poles (without regard to height or load capacity) installed and accepted.

Actual number of reused metal poles with single mast arms furnished, installed, and accepted.

Actual number of reused metal poles with single mast arms installed and accepted.

Actual number of reused metal poles with dual mast arms furnished, installed, and accepted.

Actual number of reused metal poles with dual mast arms installed and accepted.

Actual number of soil tests with SPT borings drilled furnished and accepted.

Actual volume of concrete poured in cubic yards of drilled pier foundation furnished, installed and accepted.

Actual number of foundations with wing walls furnished, installed and accepted, excluding foundation length. Refer to method of measurement above for drilled pier foundation.

Actual number of designs for metal strain poles furnished and accepted.

Actual number of designs for mast arms with metal poles furnished and accepted.

Actual number of metal signal pole foundations removed and disposed.

Actual number of metal signal poles removed and disposed.

No measurement will be made for foundation designs prepared with metal pole designs, as these will be considered incidental to designing signal support structures.

Payment will be made under:

Metal Strain Signal Pole Each
Metal Pole with Single Mast Arm
.....Each
Metal Pole with Dual Mast Arm
.....Each
Furnish and Install Reused Metal Strain Signal PoleEach
Install Reused Metal Strain Signal Pole Each
Furnish and Install Reused Metal Pole with Single Mast Arm
.....Each
Install Reused Metal Pole with Single Mast Arm
.....Each
Furnish and Install Reused Metal Pole with Dual Mast Arm
.....Each
Install Reused Metal Pole with Dual Mast Arm
.....Each
Soil Test
.....Each
Drilled Pier Foundation.....Cubic Yard
Foundation with Wing Walls (_____)
.....Each
Metal Strain Pole Design
Each
Mast Arm with Metal Pole Design
Each

Metal Pole Foundation Removal .....Each

Metal Pole Removal Each

11. CONTROLLERS WITH CABINETS

11.1. MATERIALS – TYPE 170E CONTROLLERS

Conform to the CALTRANS *Traffic Signal Control Equipment Specifications* and addendum 8, *Specifications for Model 170E Enhanced Controller Unit and Associated Model 412C and Model 172 Modules* except as required herein.

Provide model 412C Program Modules as defined in CALTRANS Addendum 8 except as specified otherwise herein. Provide program module delivery with Memory Select #4 Configuration except that all RAM must be DALLAS Non-volatile RAM or an approved equal. Ensure that the removal of the program module from the controller will place the intersection into flash.

Provide diagnostic software or removable diagnostic PROM modules that will test and diagnose the following:

- systems of the controller, including the internal memory, Program Module, Real Time Clock, I/O circuitry, display, and keyboard;
- systems of the cabinet, including the output file, input file, police panel, flashing operation, and cabinet switches; and
- systems of the conflict monitor by checking all possible conflicts in a logical sequence and resetting the conflict monitor each time, and by testing red failure function and red detect cable disconnects.

Ensure that the automatic reset function can be enabled by inserting a diagnostic plug in the jack labeled “Conflict Monitor Test” in the “TEST” position.

In addition to CALTRANS system communications capability between a central computer and master controller and master to local controller communications, provide communications capability with the intersection conflict monitor via an RS-232C/D port on the monitor. Ensure controller receives data from the conflict monitor through a controller Asynchronous Communications Interface Adapter (ACIA) determined by the controller software manufacturer. Ensure that with the appropriate software, the controller is capable of communicating directly through a laptop nine pin serial port to the same monitor RS-232C/D to retrieve all event log information.

Furnish a communications connecting cable with the following pin connections.

170		Conflict Monitor DB-9
RX pin L	Connect to	TX pin 2
TX pin K	Connect to	RX pin 3
+5 pin D	Connect to	DTR pin 4
GND pin N	Connect to	GND pin 5

Provide a male DB-9 connector on the cable for connection to the monitor.

Provide socket mounting for through-hole mount devices with 14 or more pins. Ensure that all sockets are AUGAT-500 series machined sockets, or equal.

Provide a moisture resistant coating on all circuit boards. Mount circuit boards vertically.

11.2. MATERIALS – TYPE 2070L CONTROLLERS

Conform to CALTRANS *Transportation Electrical Equipment Specifications* (TEES) (dated August 16, 2002, plus Errata 1 dated October 27, 2003 and Errata 2 dated June 08, 2004) except as required herein.

Furnish Model 2070L controllers. Ensure that removal of the CPU module from the controller will place the intersection into flash.

The Department will provide software at the beginning of the burning-in period. Contractor shall give 5 working days notice before needing software. Program software provided by the Department.

Provide model 2070L controllers with the latest version of OS9 operating software and device drivers, composed of the unit chassis and at a minimum the following modules and assemblies:

- MODEL 2070 1B, CPU Module, Single Board
- MODEL 2070-2A, Field I/O Module (FI/O)
- MODEL 2070-3B, Front Panel Module (FP), Display B (8x40)
- MODEL 2070-4A, Power Supply Module, 10 AMP
- MODEL 2070-7A, Async Serial Com Module (9-pin RS-232)

Furnish one additional MODEL 2070-7A, Async Serial Com Module (9-pin RS-232) for all master controller locations.

For each master location and central control center, furnish a U.S. Robotics V.92 or approved equivalent auto-dial/auto-answer external modem to accomplish the interface to the Department-furnished microcomputers. Include all necessary hardware to ensure telecommunications.

11.3. MATERIALS – NEMA TS-1 CONTROLLERS

Furnish NEMA TS-1 controller (*insert model number here)*, or approved equivalent. Include a NEMA standard overlap card.

Ensure that all components are arranged for easy access during servicing. When modular in construction, provide guides and positive connection devices to insure proper pin alignment and connection.

Provide a moisture resistant coating on all circuit boards.

11.4. MATERIALS – NEMA TS-2 TYPE 2 CONTROLLERS

Furnish NEMA TS-2, Type 2 (*insert model number here)*, or approved equivalent. Include a NEMA standard overlap card.

Ensure that all components are arranged for easy access during servicing. When modular in construction, provide guides and positive connection devices to insure proper pin alignment and connection.

Provide a moisture resistant coating on all circuit boards.

11.5. MATERIALS – GENERAL CABINETS

Provide a moisture resistant coating on all circuit boards.

Provide one 20 mm diameter radial lead UL-recognized metal oxide varistor (MOV) between each load switch field terminal and equipment ground. Electrical performance is outlined below.

PROPERTIES OF MOV SURGE PROTECTOR	
Maximum Continuous Applied Voltage at 185° F	150 VAC (RMS) 200 VDC
Maximum Peak 8x20µs Current at 185° F	6500 A
Maximum Energy Rating at 185° F	80 J
Voltage Range 1 mA DC Test at 77° F	212-268 V
Max. Clamping Voltage 8x20µs, 100A at 77° F	395 V
Typical Capacitance (1 MHz) at 77° F	1600 pF

Provide a power line surge protector that is a two-stage device that will allow connection of the radio frequency interference filter between the stages of the device. Ensure that a maximum continuous current is at least 10A at 120V. Ensure that the device can withstand a minimum of 20 peak surge current occurrences at 20,000A for an 8x20 microsecond waveform. Provide a maximum clamp voltage of 395V at 20,000A with a nominal series inductance of 200µh. Ensure that the voltage does not exceed 395V. Provide devices that comply with the following:

Frequency (Hz)	Minimum Insertion Loss (dB)
60	0
10,000	30
50,000	55
100,000	50
500,000	50
2,000,000	60
5,000,000	40
10,000,000	20
20,000,000	25

11.6. MATERIALS – TYPE 170E CABINETS

A. Type 170 E Cabinets General:

Conform to the city of Los Angeles' Specification No. 54-053-08, *Traffic Signal Cabinet Assembly Specification* (dated July 2008), except as required herein.

Furnish model 336S pole mounted cabinets configured for 8 vehicle phases, 4 pedestrian phases, and 6 overlaps. When overlaps are required, provide auxiliary output files for the overlaps. Do not reassign load switches to accommodate overlaps unless shown on electrical details. Provide 336S pole mounted cabinets that are 46" high with 40" high internal rack assemblies.

Furnish model 332 base mounted cabinets configured for 8 vehicle phases, 4 pedestrian phases, and 6 overlaps. When overlaps are required, provide auxiliary output files for the overlaps. Do not reassign load switches to accommodate overlaps unless shown on electrical details.

Provide model 200 load switches, model 222 loop detector sensors, model 252 AC isolators, and model 242 DC isolators according to the electrical details. As a minimum, provide one (1) model 2018 conflict monitor, one (1) model 206L power supply unit, two (2) model 204 flashers, one (1) DC isolator (located in slot I14), and four (4) model 430 flash transfer relays (provide seven (7) model 430 flash transfer relays if auxiliary output file is installed) with each cabinet.

B. Type 170 E Cabinet Electrical Requirements:

Provide a cabinet assembly designed to ensure that upon leaving any cabinet switch or conflict monitor initiated flashing operation, the controller starts up in the programmed start up phases and start up interval.

Furnish two sets of non-fading cabinet wiring diagrams and schematics in a paper envelope or container and placed in the cabinet drawer.

All AC+ power is subject to radio frequency signal suppression.

Provide surge suppression in the cabinet for each type of cabinet device. Provide surge protection for the full capacity of the cabinet input file. Provide surge suppression devices that

operate properly over a temperature range of -40º F to +185º F. Ensure the surge suppression devices provide both common and differential modes of protection.

Provide a pluggable power line surge protector that is installed on the back of the PDA (power distribution assembly) chassis to filter and absorb power line noise and switching transients. Ensure the device incorporates LEDs for failure indication and provides a dry relay contact closure for the purpose of remote sensing. Ensure the device meets the following specifications:

Peak Surge Current (Single pulse, 8x20µs)……..20,000A
Occurrences (8x20µs waveform)……..10 minimum @ 20,000A
Maximum Clamp Voltage…….395VAC
Operating Current……..15 amps
Response Time……..< 5 nanoseconds

Provide a loop surge suppressor for each set of loop terminals in the cabinet. Ensure the device meets the following specifications:

Peak Surge Current (6 times, 8x20µs)
(Differential Mode)…….400A
(Common Mode)……1,000A
Occurrences (8x20µs waveform)……..500 min @ 200A
Maximum Clamp Voltage
(Differential Mode @400A)……35V
(Common Mode @1,000A)…….35V
Response Time……..< 5 nanoseconds
Maximum Capacitance……..35 pF

Provide a data communications surge suppressor for each communications line entering or leaving the cabinet. Ensure the device meets the following specifications:

Peak Surge Current (Single pulse, 8x20µs)……..10,000A
Occurrences (8x20µs waveform)……..100 min @ 2,000A
Maximum Clamp Voltage…….Rated for equipment protected
Response Time……..< 1 nanosecond
Maximum Capacitance…….1,500 pF
Maximum Series Resistance…….15Ω

Provide a DC signal surge suppressor for each DC input channel in the cabinet. Ensure the device meets the following specifications:

Peak Surge Current (Single pulse, 8x20µs)……..10,000A
Occurrences (8x20µs waveform)……..100 @ 2,000A
Maximum Clamp Voltage……30V
Response Time……..< 1 nanosecond

Provide a 120 VAC signal surge suppressor for each AC+ interconnect signal input. Ensure the device meets the following specifications:

Peak Surge Current (Single pulse, 8x20µs)……..20,000A
Maximum Clamp Voltage……350VAC
Response Time……..< 200 nanoseconds
Discharge Voltage……<200 Volts @ 1,000A
Insulation Resistance……≥100 MΩ

Provide conductors for surge protection wiring that are of sufficient size (ampacity) to withstand maximum overcurrents which could occur before protective device thresholds are attained and current flow is interrupted.

If additional surge protected power outlets are needed to accommodate fiber transceivers, modems, etc., install a UL listed, industrial, heavy-duty type power outlet strip with a minimum rating of 15 A / 125 VAC, 60 Hz. Provide a strip that has a minimum of 3 grounded outlets. Ensure the power outlet strip plugs into one of the controller unit receptacles located on the rear of the PDA. Ensure power outlet strip is mounted securely; provide strain relief if necessary.

Provide a door switch in the front and a door switch in the rear of the cabinet that will provide the controller unit with a Door Ajar alarm when either the front or the rear door is open. Ensure the door switches apply DC ground to the Input File when either the front door or the rear door is open.

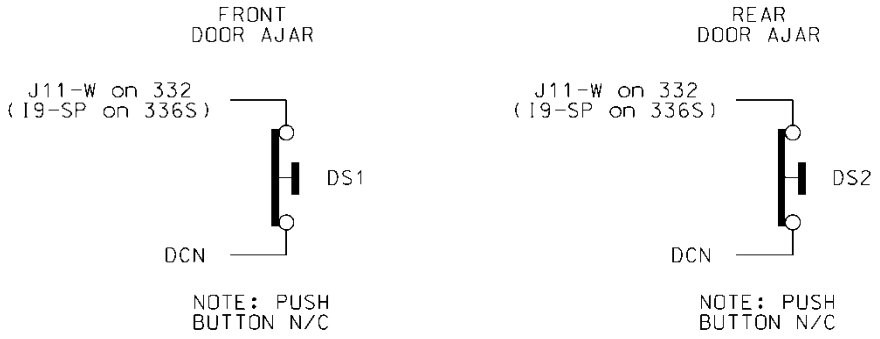

Furnish a fluorescent fixture in the rear across the top of the cabinet and another fluorescent fixture in the front across the top of the cabinet at a minimum. Ensure that the fixtures provide sufficient light to illuminate all terminals, labels, switches, and devices in the cabinet. Conveniently locate the fixtures so as not to interfere with a technician's ability to perform work on any devices or terminals in the cabinet. Provide a protective diffuser to cover exposed bulbs. Install 16 watt T-4 lamps in the fluorescent fixtures. Provide a door switch to provide power to

each fixture when the respective door is open. Wire the fluorescent fixtures to the 15 amp ECB (equipment circuit breaker).

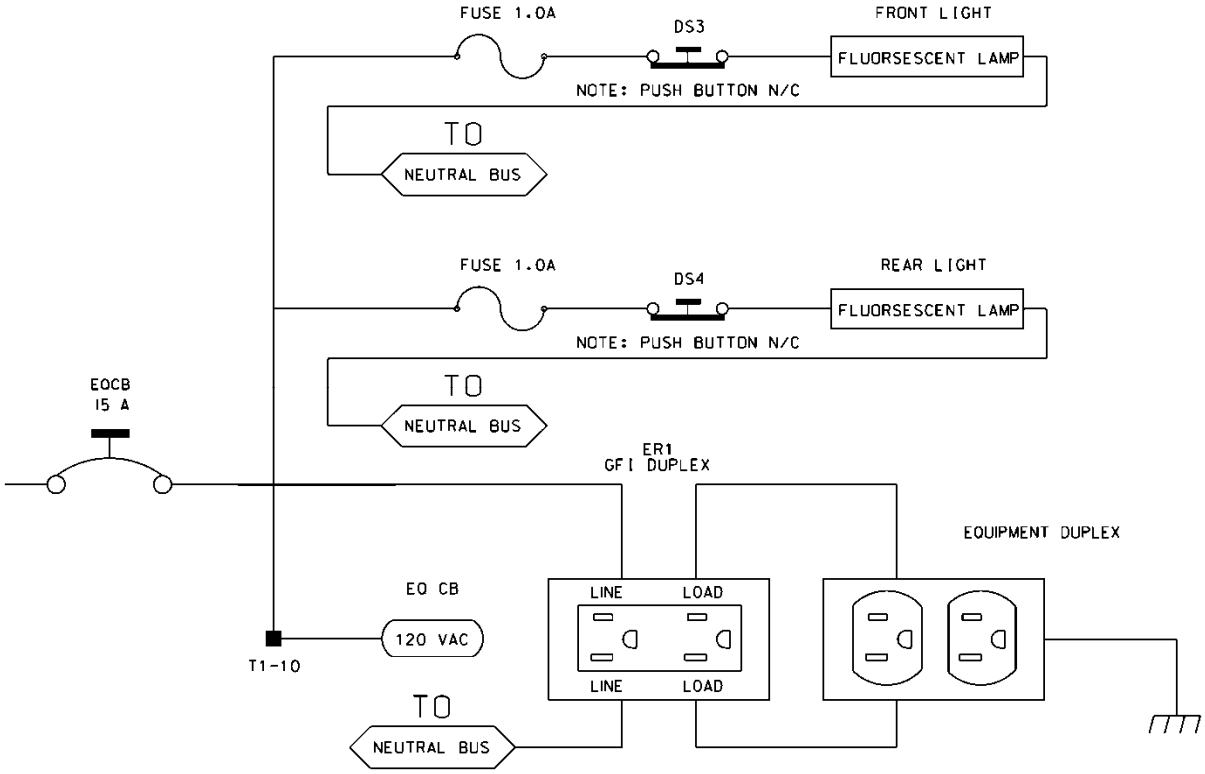

Furnish a police panel with a police panel door. For model 336S cabinets, mount the police panel on the rear door. Ensure that the police panel door permits access to the police panel when the main door is closed. Ensure that no rainwater can enter the cabinet even with the police panel door open. Provide a police panel door hinged on the right side as viewed from the front. Provide a police panel door lock that is keyed to a standard police/fire call box key. In addition to the requirements of LA Specification No. 54-053-08, provide the police panel with a toggle switch connected to switch the intersection operation between normal stop-and-go operation (AUTO) and manual operation (MANUAL). Ensure that manual control can be implemented using inputs and software such that the controller provides full programmed clearance times for the yellow clearance and red clearance for each phase while under manual control.

Provide a 1/4-inch locking phone jack in the police panel for a hand control to manually control the intersection. Provide sufficient room in the police panel for storage of a hand control and cord.

Ensure the 336S cabinet Input File is wired as follows:

336S Cabinet Port-Bit/C-1 Pin Assignment														
Slot #	1	2	3	4	5	6	7	8	9	10	11	12	13	14
C-1 (Spares)	59	60	61	62	63	64	65	66	75	76	77	78	79	80
Port C-1	3-2 56	1-1 39	3-4 58	1-3 41	3-1 55	1-2 40	3-3 57	1-4 42	2-5 51	5-5 71	5-6 72	5-1 67	5-2 68	6-7 81
Port C-1	2-1 47	1-5 43	2-3 49	1-7 45	2-2 48	1-6 44	2-4 50	1-8 46	2-6 52	5-7 73	5-8 74	5-3 69	5-4 70	6-8 82

For model 332 base mounted cabinets, ensure terminals J14-E and J14-K are wired together on the rear of the Input File. Connect TB9-12 (J14 Common) on the Input Panel to T1-2 (AC-) on the rear of the PDA.

Provide detector test switches mounted at the top of the cabinet rack or other convenient location which may be used to place a call on each of eight phases based on the chart below. Provide three positions for each switch: On (place call), Off (normal detector operation), and Momentary On (place momentary call and return to normal detector operation after switch is released). Ensure that the switches are located such that the technician can read the controller display and observe the intersection.

Connect detector test switches for cabinets as follows:

336S Cabinet		332 Cabinet	
Detector Call Switches	**Terminals**	**Detector Call Switches**	**Terminals**
Phase 1	I1-F	Phase 1	I1-W
Phase 2	I2-F	Phase 2	I4-W
Phase 3	I3-F	Phase 3	I5-W
Phase 4	I4-F	Phase 4	I8-W
Phase 5	I5-F	Phase 5	J1-W
Phase 6	I6-F	Phase 6	J4-W
Phase 7	I7-F	Phase 7	J5-W
Phase 8	I8-F	Phase 8	J8-W

Provide the PCB 28/56 connector for the conflict monitor unit (CMU) with 28 independent contacts per side, dual-sided with 0.156 inch contact centers. Provide the PCB 28/56 connector contacts with solder eyelet terminations. Ensure all connections to the PCB 28/56 connector are soldered to the solder eyelet terminations.

Ensure that all cabinets have the CMU connector wired according to the 332 cabinet connector pin assignments (include all wires for auxiliary output file connection). Wire pins 13, 16, R, and U of the CMU connector to a separate 4 pin plug, P1, as shown below. Provide a second plug, P2, which will mate with P1 and is wired to the auxiliary output file as shown below. Provide an additional plug, P3, which will mate with P1 and is wired to the pedestrian yellow circuits as shown below. When no auxiliary output file is installed in the cabinet, provide wires for the green and yellow inputs for channels 11, 12, 17, and 18, the red inputs for channels 17 and 18, and the wires for the P2 plug. Terminate the two-foot wires with ring type lugs, insulated, and bundled for optional use.

	P1		P2		P3	
PIN	**FUNCTION**	**CONN TO**	**FUNCTION**	**CONN TO**	**FUNCTION**	**CONN TO**
1	CH-9G	CMU-13	OLA-GRN	A123	2P-YEL	114
2	CH-9Y	CMU-16	OLA-YEL	A122	4P-YEL	105
3	CH-10G	CMU-R	OLB-GRN	A126	6P-YEL	120
4	CH-10Y	CMU-U	OLB-YEL	A125	8P-YEL	111

Connect the P20 terminal assembly (red monitor board) to a connector installed on the front of the type 2018 enhanced conflict monitor through a 3-1/2 foot 20-wire ribbon cable. Ensure that the ribbon cable connector and the connector on the conflict monitor are keyed to ensure proper connection. Ensure that removal of the P20 ribbon cable will cause the conflict monitor to recognize a latching fault condition and place the cabinet into flashing operation.

Wire the P20 connector to the traffic signal red displays to provide inputs to the conflict monitor as shown below. Ensure the pedestrian Don't Walk circuits are wired to channels 13 through 16 of the P20 connector. When no auxiliary output file is installed in the cabinet, provide wires for channels 9 through 12 reds. Terminate the two-foot wires with ring type lugs, insulated, and bundled for optional use.

Pin #	Function	Pin #	Function
1	Channel 15 Red	11	Channel 9 Red
2	Channel 16 Red	12	Channel 8 Red
3	Channel 14 Red	13	Channel 7 Red
4	GND	14	Channel 6 Red
5	Channel 13 Red	15	Channel 5 Red
6	Special Function 2	16	Channel 4 Red
7	Channel 12 Red	17	Channel 3 Red
8	Special Function 1	18	Channel 2 Red
9	Channel 10 Red	19	Channel 1 Red
10	Channel 11 Red	20	Red Enable

Ensure the controller unit outputs to the auxiliary output file are pre-wired to the C5 connector. When no auxiliary output file is installed in the cabinet, connect the C5 connector to a storage socket located on the Input Panel or on the rear of the PDA.

In addition to the requirements of LA Specification No. 54-053-08, ensure relay K1 on the Power Distribution Assembly (PDA) is a four pole relay and K2 on the PDA is a two pole relay.

Provide a two pole, ganged circuit breaker for the flash bus circuit. Ensure the flash bus circuit breaker is an inverse time circuit breaker rated for 10 amps at 120 VAC with a minimum of 10,000 RMS symmetrical amperes short circuit current rating. Do not provide the auxiliary

switch feature on the flash bus circuit breaker. Ensure the ganged flash bus circuit breaker is certified by the circuit breaker manufacturer to provide gang tripping operation.

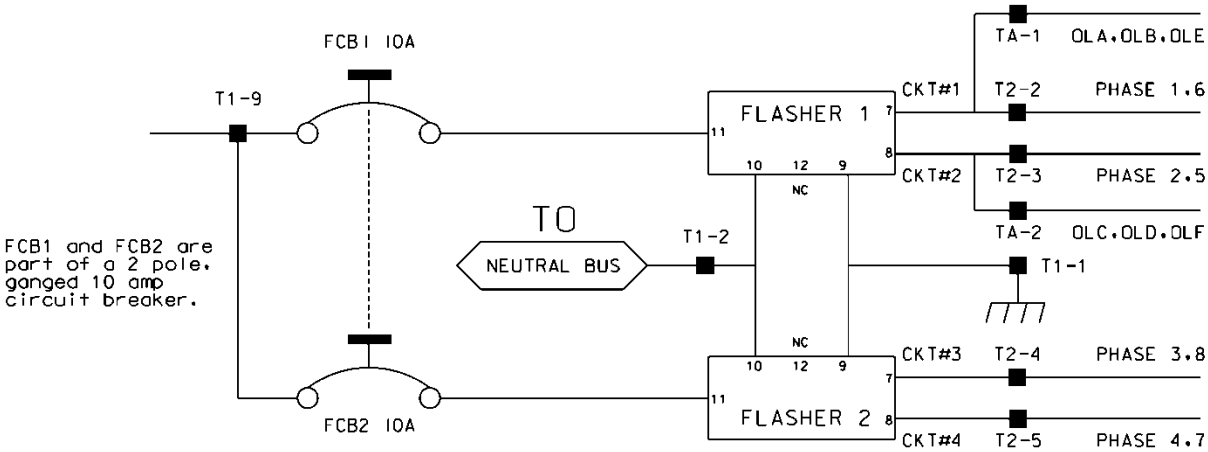

Ensure auxiliary output files are wired as follows:

AUXILIARY OUTPUT FILE TERMINAL BLOCK TA ASSIGNMENTS	
POSITION	**FUNCTION**
1	Flasher Unit #1, Circuit 1/FTR1 (OLA, OLB)/FTR3 (OLE)
2	Flasher Unit #1, Circuit 2/FTR2 (OLC, OLD)/FTR3 (OLF)
3	Flash Transfer Relay Coils
4	AC -
5	Power Circuit 5
6	Power Circuit 5
7	Equipment Ground Bus
8	NC

Provide four spare load resistors mounted in each cabinet. Ensure each load resistor is rated as shown in the table below. Wire one side of each load resistor to AC-. Connect the other side of each resistor to a separate terminal on a four (4) position terminal block. Mount the load resistors and terminal block either inside the back of Output File No. 1 or on the upper area of the Service Panel.

ACCEPTABLE LOAD RESISTOR VALUES	
VALUE (ohms)	**WATTAGE**
1.5K – 1.9 K	25W (min)
2.0K – 3.0K	10W (min)

Provide Model 200 load switches, Model 204 flashers, Model 242 DC isolators, Model 252 AC isolators, and Model 206L power supply units that conform to CALTRANS' "*Transportation Electrical Equipment Specifications*" dated March 12, 2009 with Erratum 1.

C. <u>Type 170 E Cabinet Physical Requirements:</u>

Do not mold, cast, or scribe the name "City of Los Angeles" on the outside of the cabinet door as specified in LA Specification No. 54-053-08. Do not provide a Communications Terminal Panel as specified in LA Specification No. 54-053-08. Do not provide terminal block TBB on the Service Panel. Do not provide Cabinet Verification Test Program software or associated test jigs as specified in LA Specification No. 54-053-08.

Furnish unpainted, natural, aluminum cabinet shells. Ensure that all non-aluminum hardware on the cabinet is stainless steel or a Department approved non-corrosive alternate.

Ensure the lifting eyes, gasket channels, police panel, and all supports welded to the enclosure and doors are fabricated from 0.125 inch minimum thickness aluminum sheet and meet the same standards as the cabinet and doors.

Provide front and rear doors with latching handles that allow padlocking in the closed position. Furnish 0.75 inch minimum diameter stainless steel handles with a minimum 0.5 inch shank. Place the padlocking attachment at 4.0 inches from the handle shank center to clear the lock and key. Provide an additional 4.0 inches minimum gripping length.

Provide Corbin #2 locks on the front and rear doors. Provide one (1) Corbin #2 and one (1) police master key with each cabinet. Ensure main door locks allow removal of keys in the locked position only.

Provide a surge protection panel with 16 loop surge protection devices and designed to allow sufficient free space for wire connection/disconnection and surge protection device replacement. For model 332 cabinets, provide an additional 20 loop surge protection devices. Provide an additional two AC+ interconnect surge devices to protect one slot and eight DC surge protection devices to protect four slots. Provide no protection devices on slot I14.

For pole mounted cabinets, mount surge protection devices for the AC+ interconnect inputs, inductive loop detector inputs, and low voltage DC inputs on a swing down panel assembly fabricated from sturdy aluminum. Attach the swing down panel to the bottom rear cabinet rack assembly using thumb screws. Ensure the swing down panel allows for easy removal of the input file without removing the surge protection panel assembly or its parts. Have the surge protection devices mounted horizontally on the panel and soldered to the feed through terminals of four 14 position terminal blocks with #8 screws mounted on the other side. Ensure the top row of terminals is connected to the upper slots and the bottom row of terminals is connected to the bottom slots. Provide a 15 position copper equipment ground bus attached to the field terminal side (outside) of the swing down panel for termination of loop lead-in shield grounds. Ensure that a Number 4 AWG green wire connects the surge protection panel assembly ground bus to the main cabinet equipment ground.

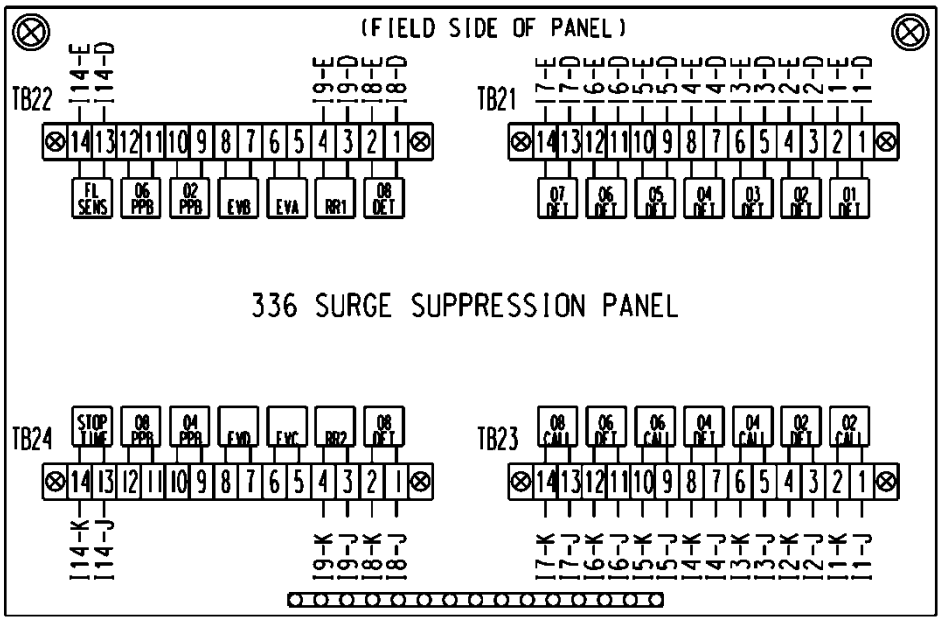

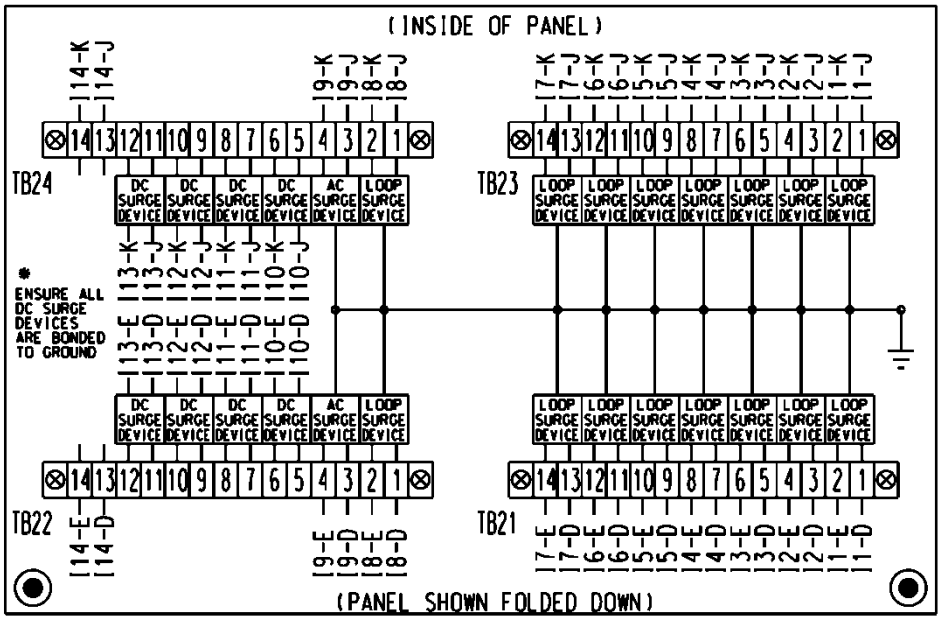

For base mounted cabinets, mount surge protection panels on the left side of the cabinet as viewed from the rear. Attach each panel to the cabinet rack assembly using bolts and make it easily removable. Mount the surge protection devices in vertical rows on each panel and connect the devices to one side of 12 position, double row terminal blocks with #8 screws. For each surge protection panel, terminate all grounds from the surge protection devices on a copper equipment ground bus attached to the surge protection panel. Wire the terminals to the rear of a standard input file using spade lugs for input file protection.

Provide permanent labels that indicate the slot and the pins connected to each terminal that may be viewed from the rear cabinet door. Label and orient terminals so that each pair of inputs

is next to each other. Indicate on the labeling the input file (I or J), the slot number (1-14) and the terminal pins of the input slots (either D & E for upper or J & K for lower).

Provide a minimum 14 x 16 inch pull out, hinged top shelf located immediately below controller mounting section of the cabinet. Ensure the shelf is designed to fully expose the table surface outside the controller at a height approximately even with the bottom of the controller. Ensure the shelf has a storage bin interior which is a minimum of 1 inch deep and approximately the same dimensions as the shelf. Provide an access to the storage area by lifting the hinged top of the shelf. Fabricate the shelf and slide from aluminum or stainless steel and ensure the assembly can support the 2070L controller plus 15 pounds of additional weight. Ensure shelf has a locking mechanism to secure it in the fully extended position and does not inhibit the removal of the 2070L controller or removal of cards inside the controller when fully extended. Provide a locking mechanism that is easily released when the shelf is to be returned to its non-use position directly under the controller.

D. <u>Model 2018 Enhanced Conflict Monitor:</u>

Furnish Model 2018 Enhanced Conflict Monitors that provide monitoring of 18 channels. Ensure each channel consists of a green, yellow, and red field signal input. Ensure that the conflict monitor meets or exceeds CALTRANS' Transportation Electrical Equipment Specifications dated March 12, 2009 with Erratum 1 (hereafter referred to as CALTRANS' 2009 TEES) for a model 210 monitor unit and other requirements stated in this specification.

Ensure the conflict monitor is provided with an 18 channel conflict programming card. Pin EE and Pin T of the conflict programming card shall be connected together. Pin 16 of the conflict programming card shall be floating. Ensure that the absence of the conflict programming card will cause the conflict monitor to trigger (enter into fault mode), and remain in the triggered state until the programming card is properly inserted and the conflict monitor is reset.

Provide a conflict monitor that incorporates LED indicators into the front panel to dynamically display the status of the monitor under normal conditions and to provide a comprehensive review of field inputs with monitor status under fault conditions. Ensure that the monitor indicates the channels that were active during a conflict condition and the channels that experienced a failure for all other per channel fault conditions detected. Ensure that these indications and the status of each channel are retained until the Conflict Monitor is reset. Furnish LED indicators for the following:

- AC Power (Green LED indicator)
- VDC Failed (Red LED indicator)
- WDT Error (Red LED indicator)
- Conflict (Red LED indicator)
- Red Fail (Red LED indicator)
- Dual Indication (Red LED indicator)
- Yellow/Clearance Failure (Red LED indicator)
- PCA/PC Ajar (Red LED indicator)
- Monitor Fail/Diagnostic Failure (Red LED indicator)
- 54 Channel Status Indicators (1 Red, 1 Yellow, and 1 Green LED indicator for each of the 18 channels)

Provide a switch to set the Red Fail fault timing. Ensure that when the switch is in the ON position the Red Fail fault timing value is set to 1350 +/- 150ms (2018 mode). Ensure that when the switch is in the OFF position the Red Fail fault timing value is set to 850 +/- 150ms (210 mode).

Provide a switch to set the Watchdog fault timing. Ensure that when the switch is in the ON position the Watchdog fault timing value is set to 1.0 +/- 0.1s (2018 mode). Ensure that when the switch is in the OFF position the Watchdog fault timing value is set to 1.5 +/- 0.1s (210 mode).

Provide a jumper or switch to set the AC line brown-out levels. Ensure that when the jumper is present or the switch is in the ON position the AC line dropout voltage threshold is 98 +/- 2 Vrms, the AC line restore voltage threshold is 103 +/- 2 Vrms, and the AC line brown-out timing value is set to 400 +/- 50ms (2018 mode). Ensure that when the jumper is not present or the switch is in the OFF position the AC line dropout voltage threshold is 92 +/- 2 Vrms, the AC line restore voltage threshold is 98 +/- 2 Vrms, and the AC line brown-out timing value is set to 80 +/- 17ms (210 mode).

Provide a jumper or switch that will enable and disable the Watchdog Latch function. Ensure that when the jumper is not present or the switch is in the OFF position the Watchdog Latch function is disabled. In this mode of operation, a Watchdog fault will be reset following a power loss, brownout, or power interruption. Ensure that when the jumper is present or the switch is in the ON position the Watchdog Latch function is enabled. In this mode of operation, a Watchdog fault will be retained until a Reset command is issued.

Provide a jumper that will reverse the active polarity for pin #EE (output relay common). Ensure that when the jumper is not present pin #EE (output relay common) will be considered ‘Active’ at a voltage greater than 70 Vrms and ‘Not Active’ at a voltage less than 50 Vrms (Caltrans mode). Ensure that when the jumper is present pin #EE (output relay common) will be considered ‘Active’ at a voltage less than 50 Vrms and ‘Not Active’ at a voltage greater than 70 Vrms (Failsafe mode).

In addition to the connectors required by CALTRANS’ 2009 TEES, provide the conflict monitor with a red interface connector mounted on the front of the monitor. Ensure the connector is a 20 pin, right angle, male connector with latching clip locks and polarizing keys. Ensure the right angle solder tails are designed for a 0.062” thick printed circuit board. Keying of the connector shall be between pins 3 and 5, and between 17 and 19. Ensure the connector has two rows of pins with the odd numbered pins on one row and the even pins on the other row. Ensure the connector pin row spacing is 0.10” and pitch is 0.10”. Ensure the mating length of the connector pins is 0.24”. Ensure the pins are finished with gold plating 30µ” thick.

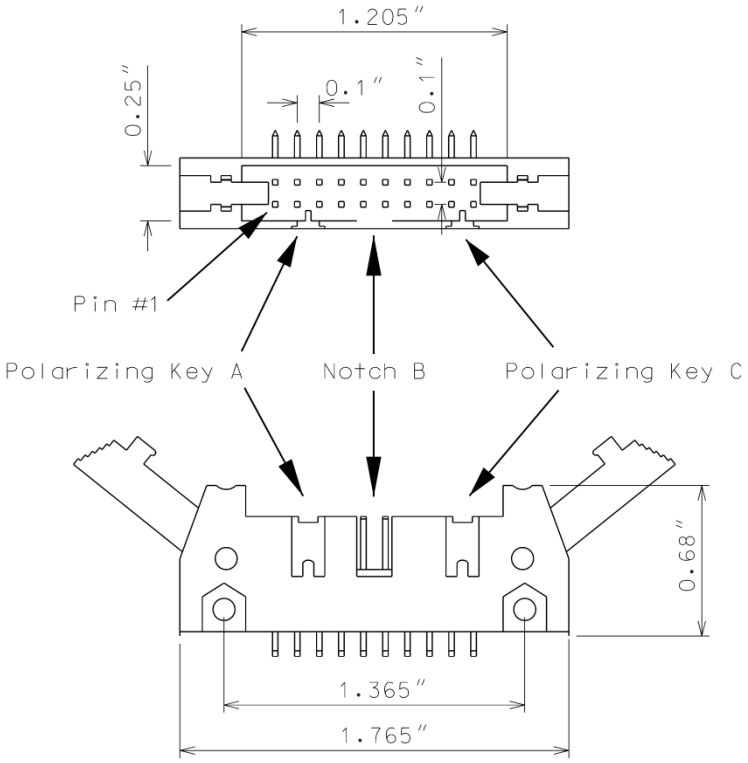

Ensure the red interface connector pins on the monitor have the following functions:

Pin #	Function	Pin #	Function
1	Channel 15 Red	2	Channel 16 Red
3	Channel 14 Red	4	Chassis Ground
5	Channel 13 Red	6	Special Function 2
7	Channel 12 Red	8	Special Function 1
9	Channel 10 Red	10	Channel 11 Red
11	Channel 9 Red	12	Channel 8 Red
13	Channel 7 Red	14	Channel 6 Red
15	Channel 5 Red	16	Channel 4 Red
17	Channel 3 Red	18	Channel 2 Red
19	Channel 1 Red	20	Red Enable

Ensure that the removal of the P-20 red interface ribbon cable will cause the monitor to recognize a latching fault condition and place the cabinet into flashing operation.

Provide Special Function 1 and Special Function 2 inputs to the unit which shall disable only Red Fail Monitoring when either input is sensed active. A Special Function input shall be sensed

active when the input voltage exceeds 70 Vrms with a minimum duration of 550 ms. A Special Function input shall be sensed not active when the input voltage is less than 50 Vrms or the duration is less than 250 ms. A Special Function input is undefined by these specifications and may or may not be sensed active when the input voltage is between 50 Vrms and 70 Vrms or the duration is between 250 ms and 550 ms.

Ensure the conflict monitor recognizes field signal inputs for each channel that meet the following requirements:

- consider a Red input greater than 70 Vrms and with a duration of at least 500 ms as an "on" condition;
- consider a Red input less than 50 Vrms or with a duration of less than 200 ms as an "off" condition (no valid signal);
- consider a Red input between 50 Vrms and 70 Vrms or with a duration between 200 ms and 500 ms to be undefined by these specifications;
- consider a Green or Yellow input greater than 25 Vrms and with a duration of at least 500 ms as an "on" condition;
- consider a Green or Yellow input less than 15 Vrms or with a duration of less than 200 ms as an "off" condition; and
- consider a Green or Yellow input between 15 Vrms and 25 Vrms or with a duration between 200 ms and 500 ms to be undefined by these specifications.

Provide a conflict monitor that recognizes the faults specified by CALTRANS' 2009 TEES and the following additional faults. Ensure the conflict monitor will trigger upon detection of a fault and will remain in the triggered (in fault mode) state until the unit is reset at the front panel or through the external remote reset input for the following failures:

1. **Red Monitoring or Absence of Any Indication (Red Failure):** A condition in which no "on" voltage signal is detected on any of the green, yellow, or red inputs to a given monitor channel. If a signal is not detected on at least one input (R, Y, or G) of a conflict monitor channel for a period greater than 1000 ms when used with a 170 controller and 1500 ms when used with a 2070L controller, ensure monitor will trigger and put the intersection into flash. If the absence of any indication condition lasts less that 750 ms when used with a 170 controller and 1200 ms when used with a 2070L controller, ensure conflict monitor will not trigger. Red fail monitoring shall be enabled on a per channel basis by the use of switches located on the conflict monitor. Have red monitoring occur when all of the following input conditions are in effect:

    a) Red Enable input to monitor is active (Red Enable voltages are "on" at greater than 70 Vrms, off at less than 50 Vrms, undefined between 50 and 70 Vrms), and

    b) Neither Special Function 1 nor Special Function 2 inputs are active.

    c) Pin #EE (output relay common) is not active

2. **Short/Missing Yellow Indication Fault (Clearance Error):** Yellow indication following a green is missing or shorter than 2.7 seconds (with ± 0.1-second accuracy). If a channel fails to detect an "on" signal at the Yellow input for a minimum of 2.7 seconds (± 0.1 second) following the detection of an "on" signal at a Green input for that channel, ensure that the monitor triggers and generates a clearance/short yellow error fault indication. Short/missing yellow (clearance) monitoring shall be enabled on a per channel basis by the use of switches located on the conflict monitor. This fault shall not occur when the channel is programmed for Yellow Inhibit, when the Red Enable signal is inactive or pin #EE (output relay common) is active.
3. **Dual Indications on the Same Channel:** In this condition, more than one indication (R,Y,G) is detected as "on" at the same time on the same channel. If dual indications are detected for a period greater than 500 ms, ensure that the conflict monitor triggers and displays the proper failure indication (Dual Ind fault). If this condition is detected for less than 200 ms, ensure that the monitor does not trigger. G-Y-R dual indication monitoring shall be enabled on a per channel basis by the use of switches located on the conflict monitor. G-Y dual indication monitoring shall be enabled for all channels by use of a switch located on the conflict monitor. This fault shall not occur when the Red Enable signal is inactive or pin #EE (output relay common) is active.
4. **Configuration Settings Change:** The configuration settings are comprised of (as a minimum) the permissive diode matrix, dual indication switches, yellow disable jumpers, any option switches, any option jumpers, and the Watchdog Enable switch. Ensure the conflict monitor compares the current configuration settings with the previous stored configuration settings on power-up, on reset, and periodically during operation. If any of the configuration settings are changed, ensure that the conflict monitor triggers and causes the program card indicator to flash. Ensure that configuration change faults are only reset by depressing and holding the front panel reset button for a minimum of three seconds. Ensure the external remote reset input does not reset configuration change faults.

Ensure the conflict monitor will trigger and the AC Power indicator will flash at a rate of 2 Hz ± 20% with a 50% duty cycle when the AC Line voltage falls below the "drop-out" level. Ensure the conflict monitor will resume normal operation when the AC Line voltage returns above the "restore" level. Ensure the AC Power indicator will remain illuminated when the AC voltage returns above the "restore" level. Should an AC Line power interruption occur while the monitor is in the fault mode, then upon restoration of AC Line power, the monitor will remain in the fault mode and the correct fault and channel indicators will be displayed.

Provide a flash interval of at least 6 seconds and at most 10 seconds in duration following a power-up, an AC Line interruption, or a brownout restore. Ensure the conflict monitor will suspend all fault monitoring functions, close the Output relay contacts, and flash the AC indicator at a rate of 4 Hz ± 20% with a 50% duty cycle during this interval. Ensure the termination of the flash interval after at least 6 seconds if the Watchdog input has made 5 transitions between the True and False state and the AC Line voltage is greater than the "restore" level. If the watchdog input has not made 5 transitions between the True and False state within 10 ± 0.5 seconds, the monitor shall enter a WDT error fault condition.

Ensure the conflict monitor will monitor an intersection with a minimum of four approaches using the four-section Flashing Yellow Arrow (FYA) vehicle traffic signal as outlined by the NCHRP 3-54 research project for protected-permissive left turn signal displays. Ensure the

conflict monitor will operate in the FYA mode and FYAc (Compact) mode as specified below to monitor each channel for the following fault conditions: Conflict, Red Fail, Dual Indication, and Clearance. Provide a switch to select between the FYA mode and FYAc mode. Provide a switch to select each FYA phase movement for monitoring.

FYA mode

FYA Signal Head	Phase 1	Phase 3	Phase 5	Phase 7
Red Arrow	Channel 9 Red	Channel 10 Red	Channel 11 Red	Channel 12 Red
Yellow Arrow	Channel 9 Yellow	Channel 10 Yellow	Channel 11 Yellow	Channel 12 Yellow
Flashing Yellow Arrow	Channel 9 Green	Channel 10 Green	Channel 11 Green	Channel 12 Green
Green Arrow	Channel 1 Green	Channel 3 Green	Channel 5 Green	Channel 7 Green

FYAc mode

FYA Signal Head	Phase 1	Phase 3	Phase 5	Phase 7
Red Arrow	Channel 1 Red	Channel 3 Red	Channel 5 Red	Channel 7 Red
Yellow Arrow	Channel 1 Yellow	Channel 3 Yellow	Channel 5 Yellow	Channel 7 Yellow
Flashing Yellow Arrow	Channel 1 Green	Channel 3 Green	Channel 5 Green	Channel 7 Green
Green Arrow	Channel 9 Green	Channel 9 Yellow	Channel 10 Green	Channel 10 Yellow

Ensure that the conflict monitor will log at least nine of the most recent events detected by the monitor in non-volatile EEPROM memory (or equivalent). For each event, record at a minimum the time, date, type of event, status of each field signal indication with RMS voltage, and specific channels involved with the event. Ensure the conflict monitor will log the following events: monitor reset, configuration, previous fault, and AC line. Furnish the signal sequence log that shows all channel states (Greens, Yellows, and Reds) and the Red Enable State for a minimum of 2 seconds prior to the current fault trigger point. Ensure the display resolution of the inputs for the signal sequence log is not greater than 50 ms.

Provide a RS-232C/D compliant port (DB-9 female connector) on the front panel of the conflict monitor in order to provide communications from the conflict monitor to the 170/2070L controller or to a Department-furnished laptop computer. Electrically isolate the port interface electronics from all monitor electronics, excluding Chassis Ground. Ensure that the controller can receive all event log information through a controller Asynchronous Communications

Interface Adapter (Type 170E) or Async Serial Comm Module (2070L). Provide a Windows based graphic user interface software to communicate directly through the same monitor RS-232C/D compliant port to retrieve and view all event log information to a Department-furnished laptop computer. The RS-232C/D compliant port on the monitor shall allow the monitor to function as a DCE device with pin connections as follows:

Conflict Monitor RS-232C/D (DB-9 Female) Pinout		
Pin Number	**Function**	**I/O**
1	DCD	O
2	TX Data	O
3	RX Data	I
4	DTR	I
5	Ground	-
6	DSR	O
7	CTS	I
8	RTS	O
9	NC	-

MONITOR BOARD EDGE CONNECTOR

Pin #	Function (Back Side)	Pin #	Function (Component Side)
1	Channel 2 Green	A	Channel 2 Yellow
2	Channel 13 Green	B	Channel 6 Green
3	Channel 6 Yellow	C	Channel 15 Green
4	Channel 4 Green	D	Channel 4 Yellow
5	Channel 14 Green	E	Channel 8 Green
6	Channel 8 Yellow	F	Channel 16 Green
7	Channel 5 Green	H	Channel 5 Yellow
8	Channel 13 Yellow	J	Channel 1 Green
9	Channel 1 Yellow	K	Channel 15 Yellow
10	Channel 7 Green	L	Channel 7 Yellow
11	Channel 14 Yellow	M	Channel 3 Green
12	Channel 3 Yellow	N	Channel 16 Yellow
13	Channel 9 Green	P	Channel 17 Yellow
14	Channel 17 Green	R	Channel 10 Green
15	Channel 11 Yellow	S	Channel 11 Green
16	Channel 9 Yellow	T	Channel 18 Yellow
17	Channel 18 Green	U	Channel 10 Yellow
--		--	
18	Channel 12 Yellow	V	Channel 12 Green
19	Channel 17 Red	W	Channel 18 Red
20	Chassis Ground	X	Not Assigned
21	AC-	Y	DC Common
22	Watchdog Timer	Z	External Test Reset
23	+24VDC	AA	+24VDC
24	Tied to Pin 25	BB	Stop Time (Output)
25	Tied to Pin 24	CC	Not Assigned
26	Not Assigned	DD	Not Assigned
27	Relay Output, Side #3, N.O.	EE	Relay Output,Side #2,Common
28	Relay Output, Side #1, N.C.	FF	AC+

-- Slotted for keying between Pins 17/U and 18/V

CONFLICT PROGRAM CARD PIN ASSIGNMENTS

Pin #	Function (Back Side)	Pin #	Function (Component Side)
1	Channel 2 Green	A	Channel 1 Green
2	Channel 3 Green	B	Channel 2 Green
3	Channel 4 Green	C	Channel 3 Green
4	Channel 5 Green	D	Channel 4 Green
5	Channel 6 Green	E	Channel 5 Green
6	Channel 7 Green	F	Channel 6 Green
7	Channel 8 Green	H	Channel 7 Green
8	Channel 9 Green	J	Channel 8 Green
9	Channel 10 Green	K	Channel 9 Green
10	Channel 11 Green	L	Channel 10 Green
11	Channel 12 Green	M	Channel 11 Green
12	Channel 13 Green	N	Channel 12 Green
13	Channel 14 Green	P	Channel 13 Green
14	Channel 15 Green	R	Channel 14 Green
15	Channel 16 Green	S	Channel 15 Green
16	N/C	T	PC AJAR
17	Channel 1 Yellow	U	Channel 9 Yellow
18	Channel 2 Yellow	V	Channel 10 Yellow
19	Channel 3 Yellow	W	Channel 11 Yellow
20	Channel 4 Yellow	X	Channel 12 Yellow
21	Channel 5 Yellow	Y	Channel 13 Yellow
22	Channel 6 Yellow	Z	Channel 14 Yellow
23	Channel 7 Yellow	AA	Channel 15 Yellow
24	Channel 8 Yellow	BB	Channel 16 Yellow
--		--	
25	Channel 17 Green	CC	Channel 17 Yellow
26	Channel 18 Green	DD	Channel 18 Yellow
27	Channel 16 Green	EE	PC AJAR (Program Card)
28	Yellow Inhibit Common	FF	Channel 17 Green

-- Slotted for keying between Pins 24/BB and 25/CC

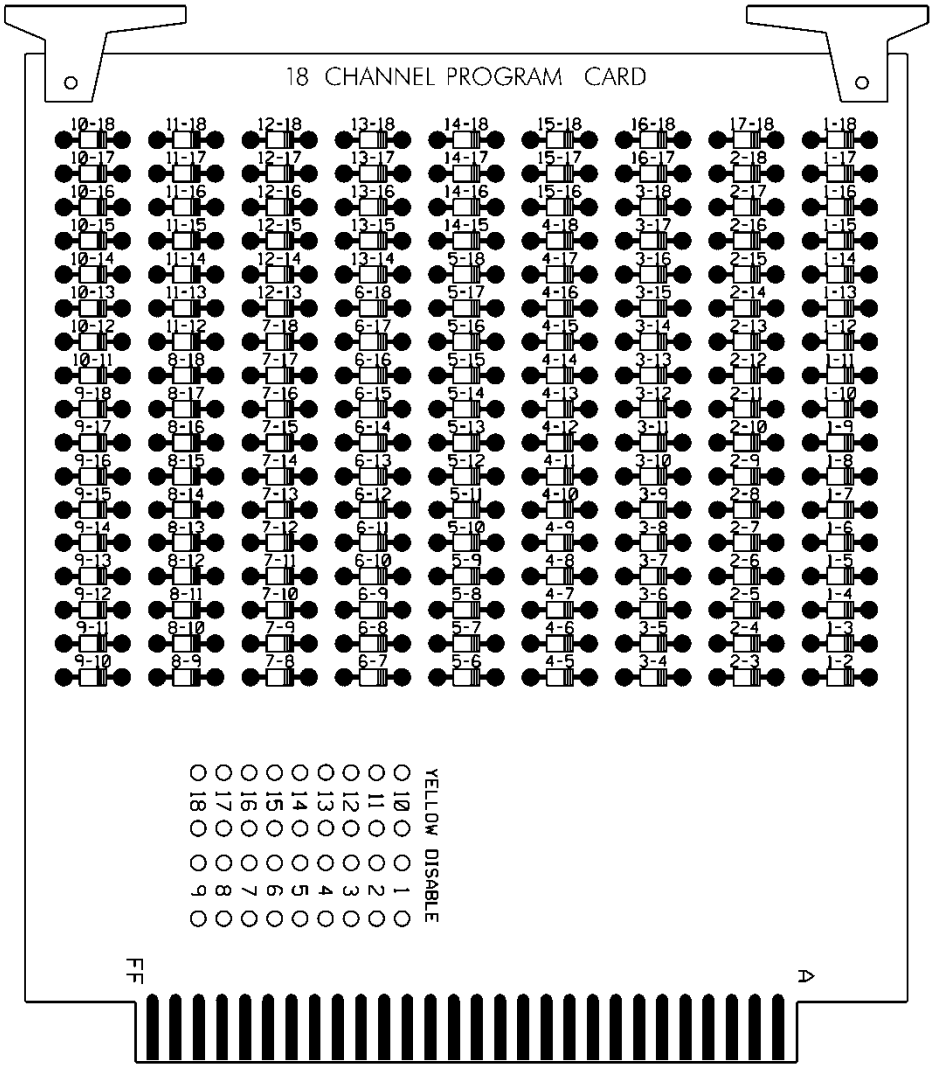

11.7. MATERIALS – NEMA TS-1 CABINETS

A. NEMA TS-1 Cabinet Physical Requirements:

Furnish unpainted, natural, aluminum cabinet shells. Ensure that all non-aluminum hardware on the cabinet is stainless steel or a Department approved non-corrosive alternate. Provide a roof with a slope from front to back at a minimum ratio of 1-inch drop per 2 feet. Ensure that each exterior cabinet plane surface is constructed of a single sheet of aluminum and is seamless.

Provide a handle and three point latching mechanism designed to be disassembled using hand tools. Provide a shaft connecting the latching plate to the door handle by passing through the door within a bushing, bearing, or equivalent device. Provide a latching plate at least 3/16 inch thick and that mates securely with the lock bolt. Provide a lock bolt with a flat end (no bevel) and that has at least 1/4 inch of length in contact with the latching plate.

Ensure that the handle and lock are positioned so that the lock does not lie in the path of the rotating handle as the door is unlatched and that the handle points down in the latched position.

Provide a cabinet that is neat in appearance. Provide continuous welds made from the inside wherever possible. On the exterior, provide smooth and flush joints. Ensure there are no superfluous holes in the outside of the cabinet. Ensure that no screws, bolts, nuts or rivets protrude to the outside of the cabinet shell. Ensure cabinet surface is smooth and free of blemishes and discoloration.

Provide a main door opening that encompasses the full frontal area of the cabinet shell exclusive of the area reserved for plenums and flanges. Provide a rear door in base-mounted cabinets, unless otherwise specified. Ensure that the rear door complies with all requirements for the front door, except as follows:

- Hinge rear door on the left side as viewed from the rear of the cabinet shell facing the door.
- No police compartment is required on a rear door.

Ensure that the cabinet shell is sturdy and does not exhibit noticeable flexing, bending or distortion under normal conditions except that a minor amount of flexing is permitted in the main door and rear door only when the cabinet is open. In such case, the flexing must not result in permanent deformation of the door or damage to components mounted on the door. Ensure that pedestal-mounted cabinets have sufficient framing around the slipfitter attachment so that no noticeable flexing will occur at or about this point.

Ensure that the cabinet is large enough to accommodate all of the required equipment, specified future equipment, and wiring within the cabinet to provide sufficient room for servicing. Provide ample space in the bottom of the cabinet for the entrance and forming of all necessary wires and cables without interference with the operation, viewing, and servicing of the equipment. Ensure that the size of the cabinet permits all required and specified future equipment to be mounted in the upright position with sufficient space around it to provide adequate ventilation. Ensure at least 2 inches of clearance is provided around all vents and fans to insure proper air circulation. Ensure the interior size of the cabinets is at least:

Pole- and pedestal-mounted controller cabinets:	4.98 ft^3
Base-mounted controller cabinets:	11.6 ft^3
Pole- and pedestal-mounted on-street master cabinets:	3.5 ft^3
Base-mounted on-street master cabinets:	7.52 ft^3

If specified on the bid list or the plans, controller cabinets as small as 3.3 ft^3 may be provided for pole- and pedestal-mounted cabinets provided all other requirements are satisfied. Unless otherwise noted, ensure that cabinets do not exceed the following dimensions:

	Maximum Outside Dimensions		
Type of Cabinet	**Height**	**Width**	**Depth**
Pole-mounted	52 inches	30 inches	22 inches
Pedestal-mounted	36 inches	30 inches	22 inches
Base-mounted	None	None	None

Provide at least 2 sturdy shelves having an unobstructed depth of at least 13 inches. Ensure top shelf is at least 12 inches below the top of the door opening. Secure any card rack to the walls or shelves. Ensure equipment and components mounted on the cabinet walls require no more than the use of a screwdriver to accomplish their easy removal for servicing. Ensure shelf-mounted units are placed in their proper positions on the shelves without having to twist or turn them during the placement process.

Provide a minimum 12 x 14 inch plastic envelope or container located in the cabinet so that it is convenient for service personnel. Furnish two sets of non-fading cabinet wiring diagrams and schematics in a paper envelope or container and placed in the plastic envelope or container.

Provide a roof with a shield that prevents water from dripping into the cabinet. Equip the roof with a thermostatically controlled exhaust fan and suitably screened exhaust vents that will permit the flow of air for which the fan is rated. Ensure that base-mounted cabinets have a fan rated for at least 12 gal./s and pole- and pedestal-mounted cabinets have a fan rated for at least 6 gal./s. Ensure that the fan does not protrude to the outside of the cabinet and that it is mounted in such a way that it can be easily removed for servicing. Fusing the fan is not required. Ensure that the roof assembly is formed in such a way that it facilitates air exhaust from the fan.

Provide an additional vent or vents at or near the bottom to permit the intake of air. Ensure that the size of the vents permit the flow of air corresponding to the rated flow of the fan. Ensure that the vents are not smaller than 29.45 in^2. Equip the vents with standard-size replaceable fiberglass filters. Ensure that the vents do not permit the entrance of rain or snow.

Furnish a fluorescent fixture as required by NEMA TS-2 Specifications with a second lighting fixture mounted under the bottom shelf to light the terminals. Ensure that the second fixture is a fluorescent lighting fixture that complies with NEMA TS-2 Specifications or is a flexible gooseneck fixture containing a protected incandescent reflector bulb of a least 25 Watts. Furnish all bulbs. Ensure that the lamps are door switch actuated.

Provide the cabinet with an adjustable thermostat located in the upper portion of the inside the roof and connected to control the fan. Ensure that it is manually adjustable within the range of at least 78 to 170 degrees F with a calibrated scale. Ensure that the thermostat has contacts rated for use with the fan. Ensure that the thermostat turns the fan on at the set temperature and turns it off when the temperature is 4.5 degrees F below the set temperature.

Provide sufficient electrical and electronic noise suppression in the cabinet to enable all equipment in it to function properly. Ensure cabinet is equipped with one or more radio interference filters connected between the stages of the power line surge protector. Ensure filter(s) minimize interference generated in the cabinet in both the broadcast and aircraft frequencies. Ensure filter(s) provide attenuation of at least 50 decibels over a frequency range of 200 kilohertz to 75 megahertz. Provide filters that are hermetically sealed in metal cases and are insulated. Ensure filter is rated at least at the rated current of the main circuit breaker, 125-volt, 60 Hertz.

B. <u>NEMA TS-1 Cabinet Electrical Requirements:</u>

Provide duplex receptacle in the cabinet located conveniently for service personnel and in such a position that no electrical hazard will be presented to such personnel when using the receptacle. Ensure that the receptacle is a 3-wire ground fault interrupt type that will also accept a standard 2-prong, non-grounding plug. Ensure that the receptacle is reserved for the use of service personnel. Ensure normal control cabinet equipment is not connected to the receptacle.

Provide the cabinet with a NEMA standard circuit breaker box having at least two circuit breakers. Alternatively, provide circuit breakers that are installed in such a way that personnel servicing the cabinet, including the rear of the back panel, cannot inadvertently be exposed to a hazard. Ensure that a terminal block connected to the circuit breakers accommodates service wire as large as Number 6 AWG. Ensure that these circuit breakers are in addition to any fuses that are a part of the individual control equipment components. Provide a clear plastic guard or the equivalent to prevent incidental contact and shock hazard that protects exposed 120-volt AC terminals on the power panel.

Provide a cabinet with a ground bus having at least 20 terminals. Ensure that the bus is attached and electrically bonded to the wall of the cabinet and located conveniently to the traffic signal load circuits. Provide terminals to accommodate Number 10, 12, and 14 AWG conductors. Ensure that at least one terminal on each end is grounded and accommodates a Number 4 AWG conductor.

Provide a cabinet with an AC Neutral bus having at least 24 terminals. Ensure bus is isolated electrically from the cabinet ground. Provide terminals to accommodate Number 10, 12, and 14 AWG conductors. Ensure bus bar is conveniently located near the traffic signal load circuits.

Provide surge suppression in the cabinet and ensure that all devices operate over the temperature range of –40 to 185 degrees F.

Provide a loop surge suppresser for each set of loop terminals in the cabinet. Use terminal mount or stud mount devices for terminating the loop surge suppresser. Ensure that the device can withstand a minimum of 25 peak surge current occurrences at 100A in differential and common modes for a 10x700 microsecond waveform. Ensure that the maximum breakover voltage is 170V and the maximum on state clamping voltage is 30V. Provide a maximum response time less than 5 nanoseconds and an off state leakage current less than 10µA with a nominal capacitance less than 220pf for both differential and common modes.

Provide surge suppression on each communications line entering or leaving a cabinet. Ensure that the communications surge suppresser can withstand at least 80 occurrences of an 8x20 microsecond waveform at 2000A, or a 10x700 microsecond waveform at 400A. Provide a maximum clamping voltage suited to the equipment protected. Provide a maximum response time less than 1 nanosecond with a nominal capacitance less than 1500pf and a series resistance less than 15Ω.

Ensure that no direct inter-equipment connection is made. Ensure that all equipment is connected to other items of equipment at the cabinet terminal blocks.

Provide the capability for each item of equipment from the cabinet to be removed without disconnecting individual wires. Provide the equipment with suitable MS-type or other multi-pin connectors, or mount in card racks that provide for automatic connection of the card when it is inserted in the rack. Ensure that connectors for the controller A, B and C harnesses, for shelf-mounted detectors and for conflict monitors are metal and separately bonded to the chassis.

Ensure that functionally equivalent equipment is electrically and mechanically interchangeable.

Ensure that all equipment and circuit cards are designed or keyed so that it is physically impossible to connect the unit to the wrong connector or insert it into an incorrect slot. Equip the cabinet with terminal blocks (strips) for the termination of all field conductors and all internal wires and harness conductors. Ensure that all wires are terminated at the terminals. Provide field terminals that are readily accessible without the removal of equipment and located conveniently to the wires, cables and harnesses. Ensure that each terminal block is of electrical grade thermoplastic or thermosetting plastic and each terminal block is a closed back design and has recessed-screw terminals with molded barriers between the terminals.

Ensure that each terminal of a terminal block consists of two terminal screws with a removable shorting bar between them. However, if the terminal block is part of a fabricated panel, each terminal may consist of a single terminal screw with a feed-through binding post to which conductors are soldered behind the panel. Exception: Terminal blocks used for field wiring connections are not required to have removable shorting bars unless required by a specific

manufacturer's design. Ensure that each terminal block is labeled with a block designation and each terminal is labeled with a number. Ensure that all terminal functions are also labeled on the back panel or terminal blocks. Provide labels that are visible when the terminal block is fully wired. Ensure that the labels are shown on the cabinet wiring diagrams. Ensure that no terminals are closer than 4 inches to the bottom of the cabinet and provide those in base-mounted cabinets at least 6 inches from the bottom. Ensure that terminals serving similar functions are grouped together. Ensure that no terminals are located on the under side of shelves or at other places where they are not readily visible and accessible or where they may be a hazard to personnel who might inadvertently touch them. Provide police panel, if required, with an enclosure over the terminals of its components to prevent hazard to personnel. Cardboard and other types of flexible covers are not acceptable.

Ensure all equipment in the cabinet is connected to the cabinet, to the other items of equipment, and to the field circuits at the cabinet terminal blocks by means of neatly trained harnesses.

Provide harnesses in the cabinet for non-permanently mounted equipment that are long enough to allow the equipment to be relocated in an upright position to the roof of the cabinet or to be located to the ground 12 inches below cabinet level. Provide a secondary ground conductor of sufficient size to safely carry any fault current for harnesses that supply power or an AC+ input greater than 24 volts. Ensure that all harnesses are neatly dressed along the cabinet walls either parallel to or perpendicular to the floor. Ensure that they do not run diagonally. Ensure that the harness, which connects the components on the door to the remainder of the cabinet does not touch the doorjamb in any door position, including fully open.

Ensure that each conductor, including unused conductors, within or entering the cabinet is connected to a terminal. Ensure that no more than two conductors are connected to any single terminal screw with the following exception. Multiple conductors may be attached to a terminal used to distribute AC and DC power functions (AC+, AC-, Earth Ground, 24VDC, Logic Ground, etc.) or similar multi-use signals under the following conditions:

- it is unlikely that the conductors attached to such terminals will be removed by the cabinet user and,
- there exists at least one terminal for each of the functions that has two or fewer conductors connected to it that is available for customer use.

This exception does not alter other requirements in these specifications that define the required number of terminals for power or other specific circuits. This provision does not apply to terminals on the load side of the load switches.

Ensure that each conductor has a crimped spade lug when connected to a terminal screw. Terminations to the back panel may be soldered. Connections such as quick connectors and barrel connectors are not acceptable. No in-line splices are permitted in any conductor.

Ensure outgoing circuits are of the same polarity as the line side of the AC supply. Ensure that the common return is of the same polarity as the grounded side of the AC supply.

Ensure all wiring is formed into neatly packaged and neatly dressed harnesses and laced, braided or tied with nylon tie wraps at closely spaced intervals. Where wires, cables or harnesses must be attached to the cabinet walls or door for support or to prevent undue wear or flexing, ensure attachment is made using nylon tie straps or metal clamps with rubber or neoprene insulators. Ensure that these attachment devices are screwed to the cabinet. Stick-on clamps or straps are not permitted.

Ensure that all field wiring and all internal conductors that are likely to be disconnected from time to time are tagged with non-fading, permanent sleeve labels at the ends of the conductors at the terminals. Ensure that sleeve labels are shrunk tightly to grip the conductors. Alternatively, hot stamp labels on the insulation of internal conductors at intervals of no greater than 4 inches. Ensure that all jumpers are wire conductors or metal plates. Using printed circuit back panels or back panels with wire tracks on boards are not permitted.

Provide 3 terminals (2 for loop conductors and 1 for shield) for each loop shown on the plans or required by the bid list. As a minimum, ensure cabinet provides sufficient terminals for 4 loops and detectors in Type 2 cabinets, 8 loops and detectors in Type 4 cabinets, and 16 loops and detectors in Type 8 cabinets. Provide a loop detector surge protector connected to each detector loop input.

Furnish the cabinet with a neatly labeled test switch panel mounted on the inside of the cabinet door. Ensure that the panel contains the following components that are connected to provide the functions indicated. Unless otherwise required, provide switches that are heavy-duty toggle switches.

1) **Detector Circuit Test Switch:** Ensure each detector circuit test switch is a three-position (on-normal-momentary on) switch. Ensure each switch is connected to the controller's or communications unit's detector input and in parallel with its associated detector's output so service personnel can place both momentary and constant calls on the device to be actuated. When in the normal position (center position), ensure switch has no effect on the device to be actuated. In all cases, the detector is to remain connected to the device to be actuated. Provide a detector circuit test switch for each vehicle detector input connected to the controller and each pedestrian detector input to the controller regardless of how many of the controller's phases are in use. In addition, provide detector circuit test switches connected to the system detector inputs of the communications unit if required by the plans or the bid list. As a minimum, provide the following numbers of switches:

Type of Cabinet	Vehicle Detector Switches	Pedestrian Detector Switches
Type 2 cabinet	2	2
Type 4 cabinet	4	4
Type 8 cabinet	8	4

2) **Technician Flash Switch:** Provide the test switch panel with a toggle switch for switching the intersection operation between normal stop-and-go (AUTO) operation and flashing operation. Protect this switch against accidental activation by a flip-up switch guard that does not affect switch position when closed.
3) **Controller Power Switch:** Provide a test switch panel that contains a toggle switch connected to remove power from the controller and all auxiliary equipment but ensure it does not interrupt power to the flasher. Ensure that this switch is protected against accidental activation by a flip-up switch guard that does not affect switch position when closed.
4) **Preemption Test Switches:** Provide a preemption test switch for each distinct preemption operation required by the plans or the bid list. Ensure that the switch is located on the inside of the door or on the left or right inside wall of the cabinet at an easily accessible location. Ensure that the switch is protected against accidental activation by a flip-up switch guard that does not affect switch position when closed.

Provide the cabinet with a police panel that is furnished with the indicated components connected:

1) **Police Panel Construction:** Provide a police panel with a door on it in the main door that is accessible when the main door is closed and will not allow water to enter the cabinet when the police door is open. Ensure that the police panel door is hinged on the right side as viewed facing it and has a lock that is keyed with two furnished keys and keyed to a standard police/fire call box key for each cabinet.
2) **Emergency Flash Switch:** Provide the police panel with a toggle switch for switching the intersection operation between normal stop-and-go (AUTO) operation and flashing operation.
3) **Signal Switch:** Provide the police panel with a toggle switch connected to permit power to be turned on and off to the field signal indicators. When in the off position, ensure that the power it removes is from the field signal indicators and that the controller and all equipment in the cabinet continue to operate normally.
4) **Automatic/Manual Switch:** Provide the police panel with a toggle switch connected to switch the intersection operation between normal stop-and-go operation (AUTO) and manual operation (MANUAL) using a hand control. Ensure that the manual control is implemented using only the Manual Control Enable and Interval Advance functions of the controller.
5) **Hand Control:** Provide a hand control with each cabinet for the police panel if specifically required by the plans or the bid list. Provide the hand control as a standard traffic signal manual control push-button connected on one end of a 10 feet coil cord with a 1/4 inch locking phone plug on the other end. Provide a locking phone jack in the police panel for this hand control to effect manual control of the intersection as described above. Ensure the plug and jack lock together so they will not disconnect even when the cord is stretched to its limit. Ensure police panel has room for storage of the hand control.

Provide the cabinet with one or as many as needed solid state flashers to operate the signal displays when the intersection is operated in the flashing mode. Provide the cabinet with a flasher socket for each flasher and make it part of the cabinet back panel. Ensure that the cabinet is wired so that it is possible to select either flashing red or flashing yellow for each signal circuit by switching a jumper plug on the back panel or by switching jumpers using simple hand tools. Ensure that disassembly of and access to the rear of the back panel is not required to effect a flash color change. Ensure that movement of no more than three jumpers is required to change the flash color for any signal circuit. Ensure that the cabinet is wired to effect the switch between normal stop-and-go operation and flashing operation. Provide the following flashing operation:

- Ensure that the controller controls the planned change from stop-and-go operation to flashing operation.
- Ensure that upon actuation of the emergency flash switch in the police panel or the technician flash switch in the test switch panel or upon command of the conflict monitor, the signal indicators are disconnected from the load switches and the appropriate signal indicators are connected to flashing power. Ensure all other signal indicators are dark. Ensure this change takes place immediately upon actuation regardless of the signal indicators being displayed.
- Regardless of the mode of entry into flashing operation, ensure that the return to normal stop-and-go operation occurs only when the controller begins to time the major street WALK interval (green interval if WALK is not used). Ensure that this is accomplished via the activation of the external start input.
- Ensure that the operation of the intersection controller is not affected when the technician flash switch or the communications unit initiates flashing operation, if any, and the

controller continues to operate normally. Ensure that the controller stops timing when actuated by the emergency flash switch or the conflict monitor.

Furnish all cabinets, except pretimed cabinets, with optical isolation circuits connected between the pedestrian push-buttons and the pedestrian detector inputs of the controllers and the two-pulse pedestrian detector logic units, if any. Ensure all electronic components for the isolation circuits are contained on a circuit board that can be easily disconnected from its receptacle. Provide isolation circuits for the following number of pedestrian detector circuits:

Type 2 cabinet:	2
Type 4 cabinet:	4
Type 8 cabinet:	4

Ensure that the voltage present at the pedestrian push-buttons does not exceed 24 volts.

C. <u>NEMA TS-1 Conflict Monitors:</u>

Furnish NEMA TS-1 conflict monitor with programming card. Ensure that the absence of the programming card will cause the conflict monitor to trigger, and remain in the triggered state until reset.

Provide a conflict monitor that recognizes the following faults in addition to those specified by NEMA TS-1 Section 6. Ensure that the conflict monitor will trigger as required by the NEMA Specifications:

- Yellow indication missing or shorter than 2.7 seconds (with ± 0.1 second accuracy);
- Walk indication without green vehicle indication on same channel;
- Dual Indications on the same channel.

Ensure that the tests for short and missing yellows and for dual indications be turned on or off per channel. Ensure that the test for walk without green be selectable for each unit. If one of the additional optional fault tests are enabled and an associated fault is detected, ensure that the conflict monitor remains in the triggered state until the unit is reset unless otherwise specified.

When the conflict monitor is triggered, provide a visual indication of the type of event that triggered the unit. Ensure that these indications and the status of each channel be retained until the conflict monitor is reset.

Ensure that the conflict monitor allows user selected latching of the CVM, 24V I, and 24V II inputs. When the conflict monitor is set for latching operation and one of these events is triggered, ensure that the monitor is reset before returning to normal operation.

Provide nonvolatile memory in the conflict monitor that retains a log of events containing the failure type, channel status, date, time for the nine most recent faults, and the date and time of the ten most recent power failures at a minimum. Ensure that the conflict monitor outputs the event log on request to a printer and uploads the event log on request to a Department-furnished personal computer via the RS-232C serial port. Provide the RS-232C serial port mounted on the front.

Provide a conflict monitor with the number of channels required by the plans or bid list. Where required by the plans or bid list, ensure that the conflict monitor is supplied with a wiring harness set. Ensure that the harness is fitted with the proper connector and the harness is 10 feet in length.

11.8. MATERIALS – NEMA TS-2 TYPE 1 CABINETS

A. NEMA TS-2 Type 1 Cabinets General:

Comply with the *NEMA Standards Publication TS-2* (NEMA TS-2) except as otherwise stated herein.

Furnish unpainted, natural, aluminum cabinet shells that comply with Section 7 of NEMA TS-2. Ensure all non-aluminum hardware on the cabinet is stainless steel or a Department approved non-corrosive alternate. Provide a roof with a slope from front to back at a minimum ratio of 1 inch drop per 2 feet. Ensure that each exterior cabinet plane surface is constructed of a single sheet of aluminum and is seamless.

Ensure all components are arranged for easy access during servicing. When modular in construction, provide guides and positive connection devices to insure proper pin alignment and connection.

Provide a moisture resistant coating on all circuit boards.

B. NEMA TS-2 Type 1 Cabinet Physical Requirements:

Provide a handle and three point latching mechanism designed to be disassembled using hand tools. Provide a shaft connecting the latching plate to the door handle by passing through the door within a bushing, bearing, or equivalent device. Provide a latching plate at least 3/16 inch thick and that mates securely with the lock bolt. Provide a lock bolt with a flat end (no bevel) and that has at least 1/4 inch of length in contact with the latching plate.

Ensure that the handle and lock are positioned so that the lock does not lie in the path of the rotating handle as the door is unlatched and that the handle points down in the latched position.

Provide continuous welds made from the inside wherever possible. On the exterior, provide smooth and flush joints. Ensure that no screws, bolts, or rivets protrude to outside of cabinet shell.

Provide a main door opening that encompasses the full frontal area of the cabinet shell exclusive of the area reserved for plenums and flanges. Provide a rear door in base-mounted cabinets, unless otherwise specified. Ensure that the rear door complies with all requirements for the front door, except as follows:

* Hinge the rear door on the left side as viewed from the rear of the cabinet shell facing the door.
* No police compartment is required on a rear door.

Ensure that the cabinet shell is sturdy and does not exhibit noticeable flexing, bending or distortion under normal conditions except that a minor amount of flexing is permitted in the main door and rear door only when the cabinet is open. In such case, the flexing must not result in permanent deformation of the door or damage to components mounted on the door. Ensure that pedestal-mounted cabinets have sufficient framing around the slipfitter attachment so that no noticeable flexing will occur at or about this point.

Provide NEMA TS-2, Type 1 cabinets with 2 shelves. Ensure top shelf has an unobstructed depth of at least 12 inches for base-mounted cabinets. Ensure top shelf has an unobstructed shelf depth of at least 13 inches for pole-mounted cabinets. Locate the top shelf at least 12 inches below the top of the door opening. Provide a lower shelf for mounting detector racks, its associated BIU, and other auxiliary equipment. Locate the lower shelf at least 10 inches below the top shelf, and provide at least 13 inches of unobstructed shelf depth. Secure card racks and associated BIU connector housings to the shelf by a removable means. Place the rack so that the front of the rack is not obscured by any object and so that backpanel terminals are not obscured even when the rack is fully utilized.

Provide a back panel hinged at the bottom for access during service.

Provide a minimum 12 x 14 inch plastic envelope or container located in the cabinet so that it is convenient for service personnel.

Furnish two sets of non-fading cabinet wiring diagrams and schematics in a paper envelope or container and placed in the plastic envelope or container.

Do not locate permanently mounted equipment in such a way that will restrict access to terminals.

C. <u>NEMA TS-2 Type 1 Cabinet Electrical Requirements:</u>

Provide a neutral that is not connected to the earth ground or the logic ground anywhere within the cabinet. Ensure the earth ground bus and the neutral ground bus each have ten compression type terminals each of which can accommodate wires ranging from number 14 through number 4.

Provide surge suppression in the cabinet and ensure that all devices operate over the temperature range of -40 to 185 degrees F.

Provide a loop surge suppresser for each set of loop terminals in the cabinet. Use terminal mount or stud mount devices for terminating the loop surge suppresser. Ensure that the device can withstand a minimum of 25 peak surge current occurrences at 100A in differential and common modes for a 10x700 microsecond waveform. Ensure that the maximum breakover voltage is 170V and the maximum on-state clamping voltage is 30V. Provide a maximum response time less than 5 nanoseconds and an off-state leakage current less than 10 µA. Ensure that a nominal capacitance less than 220pf for both differential and common modes.

Provide surge suppression on each communications line entering or leaving a cabinet. Ensure that the communications surge suppresser can withstand at least 80 occurrences of an 8x20 microsecond waveform at 2000A, or a 10x700 microsecond waveform at 400A. Provide a maximum clamping voltage suited to the equipment protected. Provide a maximum response time less than 1 nanosecond with a nominal capacitance less than 1500pf and a series resistance less than 15 Ω.

Furnish a fluorescent fixture as required by NEMA TS-2 Specifications with a second lighting fixture mounted under the bottom shelf to light the terminals. Ensure that the second fixture is a fluorescent lighting fixture that complies with NEMA TS-2 Specifications or is a flexible gooseneck fixture containing a protected incandescent reflector bulb of at least 25 Watts. Furnish all bulbs. Ensure that the lamps are door switch actuated.

Provide connector type harnesses for all equipment installed in the cabinet, including detector racks. Furnish a harness with connectors to adapt the NEMA TS-2, Type 2 controller "A" connector to the NEMA TS-2, Type 1 "A" connector furnished with the cabinet assembly.

Tag all conductors that are likely to be disconnected from time to time with non-fading, permanent sleeve labels at the ends of the conductors.

In cabinets that are not base mounted, have no terminals closer than 4 inches to the bottom of the cabinet.

Fasten all wiring and harness supports to the cabinet with screws or other removable mechanical means. Do not use adhesives.

Provide harnesses in the cabinet for non-permanently mounted equipment that are long enough to allow the equipment to be relocated in an upright position to the roof of the cabinet or to be located to the ground 1 foot below cabinet level.

Do not locate terminals on the underside of shelves or at other places where they are not readily visible and accessible, or where they may be a hazard to personnel. Provide a clear plastic guard for exposed 120 volt AC terminals on the power panel and the rear of terminal facilities accessible from the rear door.

Provide compression type earth grounds with 10 position terminal buses sized for four Number 14 AWG wires. Provide screw-type terminals for signal feed, detector lead-in, NEMA I/Os, backpanels, and interconnect terminals. Provide screw terminals for all other devices not defined by NEMA TS-2 Specifications. Ensure that wiring by the manufacturer is terminated either on double terminal strips with crimped-on lugs or soldered to rear terminals.

Ensure that upon leaving any cabinet or malfunction management unit (MMU) initiated flashing operation, the controller reverts to its programmed start-up operation through the use of the START UP FLASH CALL feature. Do not require special controller software to implement the return from flash in the start up mode of operation. Wire one of the output relays of the MMU to apply a logic ground to the STOP TIME input for rings 1 and 2 when the MMU initiates flashing operation because of a sensed failure. Ensure that the MMU is interlocked within the cabinet control circuitry as to prevent normal signal operation with the MMU disconnected. Ensure that the 24Vdc supply to the load switches is disconnected when cabinet flashing operation is initialized. Provide a momentary pushbutton, or equivalent method, to apply 24Vdc to the load switches during cabinet flash for troubleshooting purposes.

Unless otherwise required, provide switches that are heavy-duty toggle switches.

Provide a technician panel mounted on the inside of the door with an EQUIPMENT POWER (ON/OFF) switch and an AUTO/FLASH switch. Ensure switches are protected against accidental activation by a flip-up switch guard that does not affect switch position when closed. Provide an EQUIPMENT POWER (ON/OFF) toggle switch that connects or disconnects protected equipment power to all devices in the cabinet and does not affect AC power to the flasher. Provide an AUTO/FLASH toggle switch which immediately places the intersection into flashing operation, disconnects the STOP TIME input generated by the MMU, and applies a logic ground to the LOCAL FLASH STATUS input of the MMU. When placed in the AUTO position, ensure that this switch causes the return of the intersection to normal operation at the programmed start up phases and intervals via the START-UP FLASH CALL feature of the controller unit. Provide a DETECTOR CHANNEL CALL three position detector test switch (on, normal, momentary on) installed for every detector channel in the detector racks. Provide four pedestrian detector test switches (on normal, momentary on) to the 4 pedestrian detector inputs of BIU no. 1. The

switches may be installed on the door or on the non-door hinge side of the cabinet at the front of the cabinet.

Provide a police compartment constructed such that neither water nor dust will enter the interior of the cabinet through the police compartment, even when the police compartment door is open. Provide a rigid enclosure over the terminals of its components. Do not use flexible guards. Provide a SIGNAL POWER (ON/OFF) switch, an AUTO/FLASH switch, and an AUTO/MANUAL switch. Provide a locking jack for an optional manual push-button. Provide a SIGNAL POWER (ON/OFF) toggle switch which, when in the "OFF" position, disconnects AC power to the field terminals, applies logic ground to the LOCAL FLASH STATUS input of the MMU, and disconnects the STOP TIME input generated by the MMU. Ensure that a means to prevent recognition of red failure by the malfunction management unit is used and the switch does not affect power to equipment in the cabinet. When the SIGNAL POWER switch is switched to the "ON" position, ensure controller reverts to the programmed start-up phases and intervals via the START-UP FLASH CALL feature of the controller unit. Provide an AUTO/FLASH toggle switch that immediately places the intersection into flashing operation, and applies logic ground to the MMU LOCAL FLASH STATUS input. When placed in the AUTO position, ensure this switch allows the return of the intersection to normal operation at the programmed start-up phases and intervals via THE START-UP FLASH CALL feature of the controller unit. Provide an AUTO/MANUAL toggle switch that selects between normal operation (in the AUTO position) and manually controlled operation (in the MANUAL position). When in the MANUAL position, ensure that a logic ground is applied to the Manual Control Enable input of the controller. Ensure that only when a logic ground signal is applied to Manual Control Enable, the optional manual push-button can be used to advance the phases by applying and removing a logic ground signal to the Interval Advance input.

Provide one flash transfer relay and flasher for each corresponding socket. Provide 2 spare terminals for each flasher circuit output. Provide 1 MMU and 1 cabinet DC power supply (shelf mounted) with all necessary harnesses wired to the appropriate cabinet/back panel termination points. Terminate unused MMU inputs. Provide BIUs with sockets and terminal facilities. BIUs 3 and 4 may be mounted in a rack separate from the back panel.

Provide a minimum of 2 sets of loop terminals and a single earth ground terminal between the 2 sets of loop wire terminals for each slot in each detector rack provided.

In cabinets with less than 16 loadbay positions, provide flash transfer relay circuits for load switches used to implement pedestrian signals that are brought out to separate terminals but not connected for flashing operation when pedestrian signals are assigned to the load switch channel. Ensure that the flash circuit inputs and outputs are available for easy connection to allow conversion of a pedestrian movement load switch for use as an overlap (vehicle phase) movement load switch. Provide a reserved flash transfer relay circuit for four vehicle movements and all necessary flash transfer relay input and output wiring and flash circuit wiring that can be made available at each pedestrian load switch position.

Comply with the applicable tables for the type of cabinet furnished:

TS-2 Type 1 Cabinet Configurations

Cabinet Configuration	Load Switch Sockets	Flash Relay Sockets	Flasher Sockets	BIU's Required (Back Panel/ Detector)	Detector Rack Type/ Quantity	TS-2 Cabinet Type*
NC-1	4	2	1	1/1	1/1	4**
NC-2	8	4	1	1/1	2/1	5
NC-3	12	6	1	2/1	2/1	6
NC-3A	12	6	1	2/2	2/2	6
NC-3B	12	6	1	2/2	2/1 1/1	6
NC-4	12	6	1	†3/1	2/1	6
NC-4A	12	6	1	†3/2	2/2	6
NC-4B	12	6	1	†3/2	2/1 1/1	6
NC-5	12	6	1	‡4/1	2/1	6
NC-5A	12	6	1	‡4/2	2/2	6
NC-5B	12	6	1	‡4/2	2/1 1/1	6
NC-6	16	6	1	2/2	2/2	6
NC-6A	16	6	1	2/2	2/1 1/1	6
NC-7	16	6	1	†3/2	2/2	6
NC-7A	16	6	1	†3/2	2/1 1/1	6
NC-8	16	6	1	‡4/2	2/2	6
NC-8A	16	6	1	‡4/2	2/1 1/1	6

*See NEMA TS-2-1998, Table 7-1 for actual dimensions.

**Type 5 cabinet may be substituted for four position base mount cabinet.

† BIU 3 required along with BIU 1, BIU 2, and detector BIU(s).

‡ BIU 3 and BIU 4 required along with BIU 1, BIU 2, and detector BIU(s).

8-Position Loadbay Cabinet Phase Assignments

PHASE /OL NUMBER	MALFUNCTION MANAGEMENT UNIT CHANNEL ASSIGNMENT	ASSIGNED TO LOAD SWITCH POSITION NUMBER	ASSIGNED TO FLASH RELAY NUMBER	ASSIGNED TO FLASHER CIRCUIT/	PROGRAM FLASH COLOR
1	1	1	1	1	R
2	2	2	1	2	Y
3	3	3	2	1	R
4	4	4	2	2	R
2 PED-O/LA †	5	5	†3	†1	D
4 PED O/L .B†	6	6	†3	†2	D
O/L C	7	7	4	1	R
O/L D	8	8	4	2	R

† Prepare this load switch position for the pedestrian movement indicated. Wire pedestrian signals to flash dark. Make flash circuitry for this load switch position available and accessible at a separate terminal to allow connection to the load switch and field terminal circuit for a vehicle movement at a later date if desired.

12-Position Loadbay Cabinet Phase Assignments

PHASE /OL NUMBER	MALFUNCTION MANAGEMENT UNIT CHANNEL ASSIGNMENT	ASSIGNED TO LOAD SWITCH POSITION NUMBER	ASSIGNED TO FLASH RELAY NUMBER	ASSIGNED TO FLASHER CIRCUIT/	PROGRAM FLASH COLOR
1	1	1	1	1	R
2	2	2	1	2	Y
3	3	3	2	1	R
4	4	4	2	2	R
5	5	5	3	2	R
6	6	6	3	1	Y
7	7	7	4	2	R
8	8	8	4	1	R
2 PED or O/L A†	9	9	†5	†1	D
4 PED or O/L B†	10	10	†5	†2	D
6 PED or O/C†	11	11	†6	†1	D
8 PED or O/L D†	12	12	†6	†2	D

† Prepare this load switch position for the pedestrian movement indicated. Wire pedestrian signals to flash dark. Make flash circuitry for this load switch position available and accessible at a separate terminal to allow connection to the load switch and field terminal circuit for a vehicle movement at a later date.

16 Position Loadbay Cabinet Phase Assignments

PHASE /OL NUMBER	MALFUNCTION MANAGEMENT UNIT CHANNEL ASSIGNMENT	ASSIGNED TO LOAD SWITCH POSITION NUMBER	ASSIGNED TO FLASH RELAY NUMBER	ASSIGNED TO FLASHER CIRCUIT/	PROGRAM FLASH COLOR
1	1	1	1	1	R
2	2	2	1	2	Y
3	3	3	2	1	R
4	4	4	2	2	R
5	5	5	3	2	R
6	6	6	3	1	Y
7	7	7	4	2	R
8	8	8	4	1	R
2 PED	9	9	-	-	D
4 PED	10	10	-	-	D
6 PED	11	11	-	-	D
8 PED	12	12	-	-	D
O/L A	13	13	5	1	R
O/L B	14	14	5	2	R
O/L C	15	15	6	1	R
O/L D	16	16	6	2	R

Provide flasher circuits and flash transfer relay outputs and inputs that are brought out to terminals which provide a convenient means of changing flash color and flash circuit at each load switch position. Ensure that changing flash color of a given phase or overlap involves no more than moving three wires. Ensure that the selected phase or overlap flash color load switch output is easily movable to connect to the normally open flash transfer relay input assigned to the phase or overlap. Ensure that the common output of the flash transfer relay circuit assigned to the phase or overlap is easily movable to the selected field terminal (input) of the phase or overlap flash color. Ensure that the non-flashed load switch output is easily moved to provide power directly to the phase or overlap field terminal for that color.

In cabinets requiring a Type 1 detector rack, route to and terminate on a conveniently located terminal block on the back panel or elsewhere in the cabinet, the eight unused detector BIU Vehicle Call inputs. Tie the 8 unused detector BIU Detector Status inputs to the logic ground.

Provide detector racks and associated detector rack BIUs that are removable and replaceable from the cabinet either as a complete assembly or separately. Ensure that disconnection and reconnection of these units is through quick disconnect type connectors.

11.9. MATERIALS – TYPE 170 DETECTOR SENSOR UNITS

Furnish detector sensor units that comply with Chapter 5 Section 1, “General Requirements,” and Chapter 5 Section 2, “Model 222 & 224 Loop Detector Sensor Unit Requirements,” of the CALTRANS “Transportation Electrical Equipment Specifications” dated March 12, 2009 with Erratum 1.

11.10. MATERIALS – NEMA TS-1 DETECTORS

Furnish NEMA TS-1 single-channel or multi-channel detectors.

Provide multi-channel detectors that sequentially scan each of its channels. Ensure that the multi-channel detectors can turn a channel off and disable its operation from the front panel.

Provide channels with a minimum of eight sensitivity levels.

Ensure detector units meet the requirements of NEMA TS-1 Specifications except as follows:

- Class 2 vehicle output is maintained for a minimum of 4 minutes, and
- Class 3 vehicle output is maintained for a minimum of 30 minutes, maximum 120 minutes.

Where required, furnish detectors equipped with required timing features. Provide a delay that is settable in one-second increments (maximum) over the range of zero to thirty seconds. Provide an extend that is settable in 1/4 second increments (maximum) over the range of 0 to 15 seconds. Provide detectors that can set both delay and extend timing for the same channel. If both timings are set, ensure the delay operates first. After the delay condition has been satisfied, ensure that the extend timer operates normally and that it is not necessary to satisfy the delay timing for an actuation arriving during the extend portion.

Ensure detectors register a permanent call during tuning operations, as a result of a loop fault, and when power is removed. Ensure detectors completely self-tune within 10 seconds after application of power or restoration of interrupted power and within 10 seconds after correction of a loop fault.

Provide detectors that monitor the loop for fault conditions on each channel. Upon detection of a fault condition, even if the condition is subsequently corrected, ensure the detectors provide an indication of the occurrence and maintain the indication until a manual reset. The fault conditions are:

- An open-circuited loop system;
- A short to ground; and
- A 25 percent reduction in inductance.

Ensure a two-channel detector operates normally with the same loop connected to both channels.

Provide lightning and surge protection that is incorporated into the design of the detector. Ensure that each channel operates properly when used with the loop detector surge protector.

In addition to NEMA TS-1 Specifications, ensure each channel is capable of tuning to and operating on any loop system inductance within the range of 50 to 2,000 µh. Ensure that the channel will operate properly even on a loop system that has a single-point short to earth ground.

Provide detectors with a durably finished nonferrous housing. Ensure that the removal of the housing can be accomplished by using simple hand tools. Ensure each printed circuit board has a moisture resistant coating and that the components are readily accessible with the housing removed.

Provide a wiring harness with a minimum length of 6 feet for each detector. Ensure each wire is permanently labeled, numbered, or color-coded.

11.11. MATERIALS – NEMA TS-2 DETECTOR CARDS AND RACKS

Furnish NEMA TS-2 multi-channel detector cards and racks.

Provide cards that sequentially scan each of its channels. Provide channels with a minimum of eight sensitivity levels.

On a multi-channel detector, ensure that it is possible to turn a channel off and disable its operation from the front panel.

Ensure that detector units meet the requirements of NEMA TS-2 Specifications except as follows:

- Class 2 vehicle output is maintained for a minimum of 4 minutes, and
- Class 3 vehicle output is maintained for a minimum of 30 minutes, maximum 120 minutes.

Where required, furnish detector cards equipped with required timing features. Provide a delay that is settable in one second increments (maximum) over the range of zero to thirty seconds. Provide an extend that is settable in 1/4 second increments (maximum) over the range of 0 to 15 seconds. Provide cards that can set both delay and extend timing for the same channel. If both timings are set, ensure that the delay operates first. After the delay condition has been satisfied, ensure that the extend timer operates normally and that it is not necessary to satisfy the delay timing for an actuation arriving during the extend portion.

Ensure that two-channel detector cards operate normally with the same loop connected to both channels.

Provide lightning and surge protection that is incorporated into the design of the detector. Ensure that each channel operates properly when used with the loop detector surge protector.

In addition to NEMA TS-2 Specifications, ensure that each channel is capable of tuning to and operating on any loop system inductance within the range of 50 to 2,000 µh. Ensure that the channel will operate properly even on a loop system that has a single-point short to earth ground.

12. SPLICE CABINETS (TWISTED PAIR)

12.1. DESCRIPTION

Furnish and install splice cabinets and all necessary hardware in accordance with the plans and specifications for the purpose of splicing and terminating twisted-pair cable.

12.2. MATERIALS

Furnish NEMA Type 4 splice cabinets of sufficient size to accommodate barrier-type termination strips to terminate all cable pairs under binding-type screws. Provide sufficient size so that the equipment installed will not occupy more than 60 percent of the total cabinet volume.

12.3. CONSTRUCTION METHODS

Install pole-mounted splice cabinets. Install cabinets approximately five feet from the ground line to the top of the cabinet. Locate cabinets so as not to obstruct sight distance of vehicles turning on red. Secure the cabinet to the pole using an approved installation method.

12.4. MEASUREMENT AND PAYMENT

Actual number of twisted-pair splice cabinets furnished, installed, and accepted.

Payment will be made under:

Twisted-pair Splice Cabinet Each		

13. PORTABLE TRAFFIC SIGNAL SYSTEM

13.1. DESCRIPTION

Furnish, install, place in operation, repair, maintain, relocate, and remove portable traffic signal systems. Comply with the provisions of Section 1700 of the 2012 *Standard Specifications for Roads and Structures.*

13.2. MATERIALS

Provide a complete portable traffic signal system that is totally mobile and capable of being relocated as traffic conditions demand. Design the system for operation both with and without an external power source. Furnish two signal control trailers with two vehicle signal heads per trailer and one operator unit for each portable traffic signal system. Furnish transmitters, generators, batteries, controls, back-up systems and all other components necessary to operate the system.

Ensure each system meets the physical display and operational requirements of conventional traffic signals as specified in PART IV of the *Manual on Uniform Traffic Control Devices (MUTCD)* and the *North Carolina Supplement to the MUTCD* in effect on the date of advertisement.

Used equipment will be acceptable if the equipment is in good working condition. Contractor retains ownership of the portable traffic signal systems.

Provide yellow 12-inch aluminum or polycarbonate vehicle signal heads with 10-inch tunnel visors, backplates and Light Emitting Diode (LED) modules. Provide aluminum signal heads and backplates listed on the Department's Qualified Products List (QPL) for traffic signal equipment. Provide polycarbonate signal heads and visors that comply with the provisions pertaining to Signal Heads within these *Project Special Provisions* with the following exceptions:

Fabricate signal head housings, end caps, and visors from virgin polycarbonate material. Provide U.V. stabilized polycarbonate plastic with a minimum thickness of 0.1 ± 0.01 inches that is highway yellow (Federal Standard 595C, Color Chip 13538). Ensure the color is incorporated into the plastic material before molding the signal head housings and end caps. Ensure the plastic formulation provides the following physical properties in the assembly (tests may be performed on separately molded specimens):

Test	**Required**	**Method**
Specific Gravity	1.17 minimum	ASTM D 792
Vicat Softening Temperature, ^{o}F	305-325	ASTM D 1525
Brittleness Temperature, ^{o}F	Below –200	ASTM D 746
Flammability	Self-extinguishing	ASTM D 635
Tensile Strength, yield, PSI	8500 minimum	ASTM D 638
Elongation at yield, %	5.5-8.5	ASTM D 638
Shear, strength, yield, PSI	5500 minimum	ASTM D 732
Izod impact strength, ft-lb/in [notched, 1/8 inch]	15 minimum	ASTM D 256
Fatigue strength, PSI at 2.5 mm cycles	950 minimum	ASTM D 671

To minimize signal head movement due to wind, mount top and bottom of signal heads to the signal head supports.

Provide 120V AC powered LED modules listed on the QPL, or provide 12V DC powered LED modules that meet the *ITE VTCSH Part 2: Light Emitting Diode (LED) Vehicle Signal Modules (Interim Purchase Specification)* with the exception of paragraphs 5.2, 5.3, 5.7, and testing associated with 120V AC. Ensure DC powered LED modules operate with input power between 9V DC and 15V DC.

Provide trailers that have durable paint in highway orange, Federal Standard 595C Color Chip ID # 12473 with a minimum paint thickness of 2.5 mils.

Provide trailers with a 12-volt trailer lighting system complying with *Federal Motor Carrier Safety Regulations 393*, safety chains, and a 2-inch ball hitch. When provided, locate generators, fuel tanks, batteries and electronic controls in protective housings that are provided with locks to restrict access.

Design the trailer assembly and signal supports to withstand an 80 MPH wind load with the signal supports raised in the operating position. Provide independent certification from a registered Professional Engineer that the assembly meets this 80 MPH wind load requirement. Provide a reliable hydraulic, electric or manual means for raising and lowering the signal support members. Provide screw-type stabilizing and leveling devices with a self-leveling foot to support the unit in the operating position on slopes 1V:3H or flatter when detached from the transporting vehicle.

During manual operation, ensure the system provides a means of informing the operator of signal indications, such as a light on the back of each signal head that illuminates when the signal displays a red indication.

Design the portable traffic signal system to perform without interruption during the time it is in operation.

Where a traffic actuated system is required, provide a system control unit that is capable of pre-timed operation, traffic actuated operation, a variable green time interval dependent upon vehicle actuations, and programmable yellow clearance and red clearance intervals. Furnish all sensors to monitor vehicle demands for vehicle actuation per the Project Special Provisions and Section 1098 of the Standard Specifications.

Design the systems to be fail-safe. Ensure the system monitors the following conditions: lack of green, yellow, and red signal indication voltage, total loss of indication on any approach, presence of multiple signal indications on any approach, conflicting green/yellow signal indications, and low power condition. In the event any of these conditions are detected, immediately begin flashing operation of red indications in all directions.

Provide either hard-wired, microwave, or radio controlled type communications for pre-timed and traffic actuated portable traffic signal systems. In the event a loss of communication is detected, immediately begin flashing operation of red indications in all directions.

Ensure systems that use wireless communication links continuously monitor and verify proper transmission and reception of data used to monitor and control each signal head. Ensure ambient mobile or other radio transmissions or adverse weather conditions do not affect the system. Encode signal transmissions digitally to protect radio transmissions from interference. Do not violate FCC regulations and ensure radio frequencies are appropriate for portable signal equipment applications.

Upon detecting a malfunction, ensure all signals go to a flashing red condition and the operator is notified by a reliable means approved by the Engineer. Provide a battery back-up system for generator and direct current powered signal systems to power the warning means and "flashing red" condition. Provide a back-up system with a 72-hour minimum reserve.

Ensure the system meets the Environmental Standards for traffic signals in accordance with NEMA TS-1, Section 2.

13.3. CONSTRUCTION METHODS

Do not use portable traffic signal systems in a work area with intersecting streets or driveways, unless directed by the Engineer.

Do not install portable traffic signal within 300 feet of at-grade railroad crossing.

During automatic operation, ensure the motorist has an unobstructed view of opposing traffic.

Ensure the distance between signal units does not exceed 500 feet unless otherwise shown on the plans or directed by the Engineer. If modification to the distance between signal units is required after the units are positioned, relocate the signals or the system and make the necessary timing revisions only as directed by the Engineer.

Submit a traffic signal timing plan to the Engineer for approval a minimum of two weeks prior to installation. Include the following items in the plan: distance between stop bars, speed limit to be posted during operation, each approach grade, recommended yellow change interval, recommended red clearance interval, recommended minimum and maximum green intervals. Make timing changes to approved signal timing plan only as authorized by the Engineer. Keep a written record of all timing changes.

Allow only trained operators to set up and operate the system. Provide an experienced operator at all times for each portable traffic signal system during periods of manual operation. Do not violate yellow change and red clearance intervals during periods of manual operation. During manual operation, ensure the operator has an unobstructed view of the motorists and all signal head units. Locate the operator as close to the center of the operation as possible.

Perform all maintenance operations required by the system manufacturer including periodic cleaning of the systems. Ensure properly skilled and trained maintenance personnel are available to maintain the system in good working order and to perform all emergency and preventive maintenance as recommended by the system manufacturer.

Furnish the Engineer with the name, office telephone number, cellular (mobile) telephone number, and pager number of the supervisory employee who will be responsible for maintenance and repair of equipment during all hours.

For all failures, malfunctions, or damage to this equipment, begin necessary repairs within four hours of notification. Complete repairs within eight hours of notification. Comply with Section 150 for maintenance of traffic flow. The inability to contact the supervisory employee or prearranged alternate will not extend repair time requirements.

In the event that the system becomes inoperative, be prepared at all times to revert to flagging operations or suspend all construction activities requiring the use of the portable traffic signal system until the system is restored to proper operation. Implement flagging operations as shown on 2012 Roadway Standard Drawing No. 1101.02 Sheet 1 (Closure of one lane of a Two-lane, Two-way Highway).

When not in operation, remove signal heads from the view of traffic or cover signal heads with burlap bags or bags made of non-ripping material specifically designed for covering signal heads. Do not use trash bags of any type. Remove, cover, fold, or turn all inappropriate signs so that they are not readable by oncoming traffic.

13.4. MEASUREMENT AND PAYMENT

Actual number of portable traffic signal systems furnished, installed, operated, removed, and accepted.

No measurement will be made for operation, relocation, maintenance, removal of each system, or use of flaggers during repair periods as these will be considered incidental to furnishing, installing, and operating the portable traffic signal systems.

No measurement will be made for signal controller, communication cable, messenger cable, wireless communication, inductive loop sawcut, loop emulator detection system, machine vision detection system, microwave detection system, detector channel/unit, detector lead-in cable, trenching, vehicle signal heads, signal head support assemblies, signal cable, and

traffic signal software as these will be considered incidental to furnishing, installing, and operating the portable traffic signal systems.

Payment will be made under:

Portable	Traffic	Signal	System	(actuated)	Each
Portable	Traffic	Signal	System	(pre-timed)	Each

14. GPS UNIT

14.1. DESCRIPTION

Furnish and install a GPS unit in the traffic signal cabinet for time synchronization in accordance with the plans and specifications. Comply with the provisions of Section 1700 of the 2012 Standard Specifications for Roads and Structures.

14.2. MATERIALS

Provide Trimble Acutime Gold GPS Smart Antenna, or an approved equivalent, for time synchronization that is compatible with Oasis 2070 controller software.

14.3. CONSTRUCTION METHODS

Mount GPS antenna on pole adjacent to cabinet at a minimum height of 10’ insuring that the antenna can acquire enough satellites to be accurate. Use ¾” rigid metallic conduit with appropriate fittings for mounting the antenna and running the lead-in cable. Provide GPS antenna lead-in cable that is not more than 50’ in length. Provide a drip loop in the cable before it enters the conduit. Insure the cable entry point into the conduit is waterproof. If a pole is not within 30’ of the cabinet, the GPS antenna may be mounted to the top of the cabinet, while insuring that the connection point into the cabinet is waterproof.

14.4. METHOD OF MEASUREMENT

Actual number of GPS units furnished, installed, and accepted.

No measurement will be made for interface cables and connectors, as these are considered incidental to furnishing and installing the GPS unit assemblies.

14.5. BASIS OF PAYMENT

The quantity of GPS units, measured as provided above, will be paid for at the contract unit price each for "GPS Unit."

Payment will be made under:

GPS Unit ..... Each

15. PUSH BUTTON INTEGRATED ACCESSIBLE PEDESTRIAN SIGNAL (APS)

15.1. DESCRIPTION

Furnish and install push button integrated accessible pedestrian signals that include pedestrian push button, push button locator tone, raised tactile arrow, audio and vibro-tactile walk indications, automatic volume adjustment, pedestrian information sign, and all necessary hardware. Furnish the R10-3e with appropriate arrow direction for the pedestrian information sign.

15.2. MATERIALS

Provide the accessible pedestrian signals with a 2-inch diameter pedestrian push button that contains a tactile arrow whose direction can be easily adjusted in the field. Ensure each push button actuates a sturdy, momentary, normally-open switch with a minimum rating of 20 million actuations. Include on the button, a raised tactile arrow having a high visual contrast with the remainder of the button face. Ensure the housing is weather-tight and fabricated from aluminum. Ensure the housing is suitable for mounting on wood and metal poles. Paint surfaces of the pedestrian push button housing in highway yellow, unless otherwise specified, with an electrostatically-applied, fused-polyester paint method. Ensure the thickness of the paint is a minimum of 2.5 mils. Provide the pedestrian information sign that is integral to the housing.

Ensure the accessible pedestrian signals can provide tones, sounds, and speech messages that are synchronized at an intersection. Provide a means for adjusting the base sound level for the tones, sounds, and speech messages. Ensure the tones, sounds, and speech messages will adjust automatically to the ambient noise level up to a maximum of 100 dBA. Provide the custom speech messages in both English and Spanish languages. Ensure you can program the accessible pedestrian signal by a means not readily accessible by unauthorized persons.

Ensure each push button provides a standard locator tone that is deactivated when the traffic signal is operating in the flash mode. Provide a user-programmable audible beaconing feature that is initiated by an extended push button press of one second or more. Ensure the audible beaconing feature increases the volume of the push button locator tone during the pedestrian change interval of the called pedestrian phase and operates in one of the following ways:

A. The louder audible walk indication and louder locator tone comes from the far end of the crosswalk, as pedestrians cross the street,

B. The louder locator tone comes from both ends of the crosswalk, or

C. The louder locator tone comes from an additional speaker that is aimed at the center of the crosswalk and that is mounted on a pedestrian signal head.

Provide confirmation of the push button activation by an LED pilot light. Ensure the pilot light remains illuminated until the pedestrian's green or WALKING PERSON (symbolizing WALK) signal indication is displayed. Ensure each press of the pushbutton initiates a "wait" speech message during all intervals except the Walk interval.

Ensure you can select a percussive tone and custom speech message to sound during the "Walk" interval. Provide a push button that vibrates during the "Walk" interval. Ensure the "Walk" indications have the same duration as the illuminated pedestrian signals except when the signal is programmed to rest in the walk interval. Ensure the "Walk" indications are deactivated when the traffic control signal is operating in a flashing mode. When audible "Walk" indications are selected as a percussive tone, ensure the tone repeats at 8 to 10 ticks per second and consists of multiple frequencies with a dominant component at 880 Hz.

Ensure the accessible pedestrian signals are weatherproof and suitable for operation in wet locations. Ensure proper operation over a temperature range of -30ºF (-34ºC) to 165ºF (+74ºC). Ensure all circuit boards have a moisture resistant coating. Ensure the equipment interfaces and operates properly in a Type-170E cabinet.

15.3. CONSTRUCTION METHODS

Comply with the requirements of Section 1705 of the *Standard Specifications*. Install in accordance with the manufacturer's recommendations.

Mount push button integrated accessible pedestrian signals in a tamperproof manner on wood and metal poles, signal pedestals, or pushbutton posts as indicated in the signal plans.

Install each pushbutton so that the tactile arrow is pointed in the direction of travel and is aligned parallel to the direction of travel on the associated crosswalk.

Ensure pushbuttons are separated by a distance of at least 10 feet such that they clearly indicate which crosswalk has the WALK indication. Where there are constraints on a

particular corner that make it impractical to provide the 10 feet of separation between the two pushbuttons, the pushbuttons may be placed closer together or on the same pole, with approval by the Engineer. If two pushbuttons are placed on the same pole or with less than 10 feet separation, provide a speech walk message for the WALK indication and a speech pushbutton information message.

Adjust the intensity of the pushbutton locator tones so they are audible 6 feet to 12 feet from the pushbutton, or to the building line, whichever is less. Ensure the pushbutton locator tones are no more than 5 dBA louder than ambient sound. Configure audible "Walk" indication to be audible at the nearest end of the associated crosswalk.

If speech messages are used, have each recorded custom speech message approved by the Engineer in advance.

15.4. **MEASUREMENT AND PAYMENT**

Actual number of push button integrated accessible pedestrian signal detector stations furnished, installed, and accepted.

Actual number of central control units for APS detector stations furnished, installed, and accepted.

Actual number of push button posts furnished, installed, and accepted.

No measurement will be made of cables or hardware, as these will be considered incidental to furnishing and installing push button integrated accessible pedestrian signals.

APS Detector Stations……...……Each

Central Control Units For APS Detector Stations…….……Each

Push button Posts……...……Each

16. WIRELESS MAGNETIC SENSOR VEHICLE DETECTION SYSTEM

16.1. DESCRIPTION

Furnish a vehicle detection system that uses battery-powered magnetic field sensors for pavement installation that communicate traffic detection data by wireless communication to a transceiver for a local traffic signal cabinet. Ensure each sensor responds to the change in the earth's local magnetic field resulting from the presence and passage of a vehicle. Ensure the system contains sensor(s), transceiver(s), and any other device(s) to provide detection data to a traffic signal controller.

16.2. MATERIALS

Provide magnetic sensors to detect vehicle traffic such as cars, trucks, and motorcycles. Ensure each sensor is sized for an installation into a 4-inch diameter by 3-inch deep hole. Ensure the sensor provides vehicle traffic data for volume and occupancy. Ensure the sensor holds a detection call when a vehicle is stopped in its detection field. Provide a sensor to simulate a detection zone of a 6' x 6' inductive loop. Provide a combination of sensors to simulate a detection zone of a 6' x 40' quadrupole inductive loop and a 6' x 60' quadrupole inductive loop. Ensure the sensors operate as specified by the intersection design plans.

Provide two-way wireless communication between the sensors and the transceiver devices. Ensure no disruption to the wireless communication when the transceiver devices are located on the side of the road surface. Ensure that the sensors can communicate with the transceiver devices for a minimum distance of 100 feet. Ensure all wireless communications within the system operate in an unlicensed frequency band and avoid interference with other devices operating in the unlicensed frequency band. Provide at least 16 frequency channels that are user-configurable.

Provide each sensor to transmit its detection data within 150 ms of a detected event. Ensure the sensor samples the earth's magnetic field at a rate of 128 Hz or faster. Ensure that each sensor transmits a unique identifying code. Ensure that each sensor automatically recalibrates its threshold values in response to changes in the ambient magnetic field based on user-programmed criteria.

Furnish each sensor that is manufactured as a single housing module that conforms to NEMA Type 6P enclosure. Ensure that the components of the sensor are fully encapsulated within the housing to prevent moisture from degrading the components. Ensure the sensor operates at temperatures from -37 degrees F to 176 degrees F. Provide battery-power with an average life expectancy of 10 years when the sensor is operating under normal traffic conditions.

Provide a clear injection molded clamshell style case made of polypropylene for protecting the sensor in the roadway. Ensure case protects the sensor from sealant material. Ensure the case holds the sensor in place and is form-fitting to ensure cured sealant does not collapse when exposed to traffic loads.

Furnish the transceiver to provide detection data to the traffic signal cabinet and ensure the traffic signal controller receives each sensor detection call. Ensure the traffic signal controller receives both presence mode and pulse mode detection calls.

Provide indications inside the traffic signal cabinet to display each channel detection status and fault condition. Provide a switch inside the traffic signal cabinet to select presence mode and pulse mode for each channel. Provide user-selectable sensitivity levels for vehicle detection. Furnish equipment to operate in Type 332 and 336S traffic signal cabinets.

Provide software for installation and use on personal computers to upload and download configuration data to each sensor. Ensure application software is compatible with Windows 2000 and Windows XP operating systems. Ensure software does not require administrative permissions to load and operate. Ensure the software can retrieve and store detection data from the sensors. Ensure the software on the personal computer transmits data from the personal computer to each sensor through the transceiver by wireless communication. Also, provide any update to the firmware in each sensor by wireless communication. Provide a license to the Department to allow the duplication of the personal computer software as needed to design, install and maintain these systems.

16.3. CONSTRUCTION METHODS

Install the wireless magnetic sensor vehicle detector system in accordance with the manufacturer's recommendations. Enclose the wireless magnetic sensor in a molded clamshell style case before installation into the roadway. When installing each sensor into the hole, ensure epoxy sufficiently covers the sensor in the road surface.

Arrange and conduct site surveys with the system manufacturer's representative and Department personnel to determine proper sensor and transceiver selection and placement. Provide the Department at least 3 working days notice before conducting site surveys. The Engineer will approve final locations of sensors, transceivers and any necessary repeaters.

Install the transceiver in such a manner that avoids conflicts with other utilities and as specified in the manufacturer's recommendations. Secure the transceiver mounting hardware to the pole and route the cabling such that no strain is placed on connectors.

Before beginning work at locations that require a wireless magnetic sensor vehicle detector system, furnish system software. Upon activation of the system, provide detector configuration files.

Place system into operation. Configure wireless magnetic sensor vehicle detector system to achieve required detection in designated areas. Have a certified manufacturer's representative on site to supervise and assist with installation, set up, and testing of the system.

Install the necessary processing and communications equipment in the signal controller cabinet. Make all necessary modifications to install equipment in cabinet. Ensure the traffic signal controller receives each sensor detection call.

Place a copy of all manufacturer equipment specifications and instruction and maintenance manuals in the equipment cabinet.

Provide at least 4 hours of training on the set up, operation, troubleshooting, and maintenance of the wireless magnetic sensor vehicle detector system to a maximum of ten Department personnel. Arrange for training to be conducted by the manufacturer's representative at an approved site within the Division responsible for administration of the project. Thirty days before conducting training submit a detailed course curriculum, draft manuals and materials, and resumes. Obtain approval of the submittal before conducting the training. At least one week before beginning training, provide three sets of complete documentation necessary to maintain

and operate the system. Do not perform training until installation of the wireless magnetic sensor vehicle detector system is complete.

16.4. MEASUREMENT AND PAYMENT

Actual number of wireless magnetic sensor vehicle detector systems furnished, installed, and accepted.

No measurement will be made of cables or hardware, as these will be considered incidental to furnishing and installing wireless magnetic sensor vehicle detector system.

Payment will be made under:

Wireless Magnetic Sensor Vehicle Detector

System.....……..Each

T-1

DN11585092 SIGNAL REPAIR AND MAINTENANCE

ITEM #	Section #	ITEM	Qty.	UNIT	Unit Cost	Extented Cost
1	800	MOBILIZATION	50	EA		
2	SP	EMERGENCY MOBILIZATION	1	EA.		
3	1098	Furnish and Install Meter Service (New Install)	15	EA		
4	903	SUPPORTS, WOOD (6X6X8)	10	EA.		
5	1098	Furnish & Install Meter Base & Disconnect To Existing Service (	8	EA		
6	1705	VEHICLE SIG HEAD (3 SECTION)	200	EA.		
7	1705	VEHICLE SIG HEAD (5 SECTION)	25	EA.		
8	1705	VEHICLE SIG HEAD (4 SECTION)	30	EA.		
9	1705	PEDESTRIAN SIGNAL HEAD	30	EA.		
10	1705	SIGNAL CABLE (16-7)	2500	LFT.		
11	1706	BACKPLATE	10	EA.		
12	1710	MESSENGER CABLE (3/8")	2500	LFT		
13	1710	MESSENGER CABLE (1/4")	2500	LFT		
14	1715	DIRECTIONAL DRILL (1) 2" PVC	1000	LFT		
15	1715	DIRECTIONAL DRILL (2) 2" PVC	1000	LFT		
16	1715	DIRECTIONAL DRILL (3) 2" PVC	1000	LFT		
17	1715	TRENCHING (UNPAVED) (1,2,3) 2" PVC	5000	LFT		
18	1715	TRACER WIRE	6000	LFT		
19	1715	TRENCHING (PAVED) (1,2,3) 2" PVC	500	LFT		
20	1716	JUNCTION BOX (STANDARD)	100	EA.		
21	1716	JB (OVERSIZED, HEAVY DUTY)	10	EA.		
22	1720	WOOD POLE (35', CLASS 3)	60	EA.		
23	1720	WOOD POLE (40', CLASS 3)	5	EA.		
24	1720	WOOD POLE (45', CLASS 3)	5	EA.		

25	1720	WOOD POLE (60', CLASS III)	1	EA.		
26	1721	GUY ASSEMBLY	100	EA.		
27	1722	1" RISER W/ WEATHERHEAD	100	EA.		
28	1722	2" RISER W/ WEATHERHEAD	100	EA.		
29	1725	INDUCTIVE LOOP SAWCUT	15000	LFT		
30	1726	LEAD-IN CABLE (#18-4, AERIAL)	15000	LFT		
31	1726	LEAD-IN CABLE(#18-4, BURIED)	15000	LFT		
32	1735	CABLE TRANSFER	15	EA.		
33	1743	SIGNAL PEDESTAL WITH FOUNDATION	1	EA.		
34	1745	SIGN FOR SIGNALS	10	EA.		
35	1750	SIGNAL CABINET FOUNDATION	10	EA.		
36	1751	CONTROLLER WITH CAB (BASE Mounted)	10	EA.		
37	1705	Vehicle Signal HEAD (1-Section)	100	EA.		
38	1751	Install DETECTOR CARD (Pole or Base Mount)	25	EA.		
39	1753	CABINET BASE EXTENDER	10	EA.		
40	1753	CABINET BASE ADAPTER	2	EA.		
41	1755	BEACON CONTROLLER ASSEMB & CAB Pole	5	EA.		
42	1747	LED BLANKOUT SIGN	1	EA.		
43	SP	Set DOT Wood Pole	5	EA.		
44	SP	Install DOT METAL Strain Pole	5	EA.		
45	SP	SOIL TEST	5	EA.		
46	SP	METAL POLE REMOVAL	2	EA.		
47	SP	DRILLED PIER FOUNDATION	20	CYD		
48	SP	METAL POLE FOUNDATION REMOVAL	2	EA.		
49	SP	900 MHZ WIRELESS REPEATER STANDALONE Radio	1	EA.		

50	SP	900 MHZ RADIO SYSTEM	1	EA.		
51	654	ASPHALT PLANT MIX, PAVEMENT REPAIR	1	TON		
52	710	4" PORTLAND CEM CONC PVMT, W/O DOWELS	1	SYD		
53	225	UNCLASS EXCAV-ROCK	1	CYD		
54	225	UNCLASS EXCAV-SOIL	1	CYD		
55	SP	REMOVE CABINET BASE	5	EA.		
56	SP	REMOVE TRAFFIC SIGNAL CABINET	5	EA.		
57	SP	REMOVE SPANWIRE	4000	LFT		
58	SP	REMOVE SIGNAL HEAD	20	EA.		
59	SP	RELOCATE WOOD POLE	5	EA.		
60	SP	REMOVE WOOD POLE	5	EA.		
61	1752-4	CONDUIT ENTRACE INTO EXISTING Foundation	1	EA.		
62	1752-4	MODIFY FOUNDATION FOR CONTROLLER Cabinet	2	EA.		
63	1705	Install LED in existing Signal Head	500	EA		
64	1751	CONTROLLER WITH CAB (Pole Mounted)	5	EA.		
65	SP	FIELD VIDEO CODEC UNIT (TRANSMITTER)	1	EA.		
66	SP	CCTV CAMERA ASSEMBLY	1	EA		
67	SP	OFFICE VIDEO CODEC UNIT (RECEIVER)	5	EA.		
68	1743-4	Type I Pedestal and Foundation	5	EA.		
69	1743-4	Type II Pedestal and Foundation	5	EA.		
70	1743-4	Type III Pedestal with Foundation	5	EA.		
71	SP	Troubleshooting Fiber Communications System	1	HR		
72	1730	Communications Cable (12 Fiber)	1000	LF		
73	1730	Communications Cable (24 Fiber)	1000	LF		
74	1730	Communications Cable (36 Fiber)	1	LF		

75	1730	Communications Cable (48 Fiber)	1	LF		
76	1730	Drop Cable	100	LF		
77	1731	Splice Inclosure	2	EA.		
78	1731	Modify Splice Inclosure	2	EA.		
79	1731	Interconnect Center	2	EA.		
80	1732	Fiber-Optic Transceiver, Drop and repeat	2	EA.		
81	1732	Fiber-Optic Transceiver, Self Healing Ring	2	EA.		
82	1733	Delineator Marker	5	EA.		
83	1734	Remove Existing Communication Cable	500	LF		
84	SP	Adjust Span and Guy Wire Attachment	2	EA.		
85	SP	Attachment W/lashed Multi-Conductor (1/4")	1	EA.		
86	SP	Extra Fiber Optic Jummpers,Pigtails,& Connectors	1	EA.		
87	SP	Remove and Reinstall Existing Fiber	5	EA.		
88	SP	Screw-in Foundation (Anchs) Supp by Contr. Type II	1	EA		
89	SP	Furnish and Install 26' Mtl. Strain Pole	2	EA		
90	SP	Furnish and Install 30' Mtl. Strain Pole	2	EA		
91	SP	Furnish and Install 35' Mtl. Strain Pole	2	EA		
92	SP	Furnish and Install Single Mtl. Mast Arm Pole	4	EA		
93	SP	Furnish and Install Double Mtl. Mast Arm Pole	4	EA		
		TOTAL BID AMOUNT	**$**			

LISTING OF DBE SUBCONTRACTORS

Sheet _____ of _____

Firm Name and Address	Item No.	Item Description	* Agreed upon Unit Price	** Dollar Volume of Item
Name Address				
Name Address				
Name Address				
Name Address				
Name Address				
Name Address				
Name Address				

***** The Dollar Volume shown in this column shall be the Actual Price Agreed Upon by the Prime Contractor and the DBE subcontractor, and these prices will be used to determine the percentage of the DBE participation in the contract.
** Dollar Volume of DBE Subcontractor Percentage of Total Contract Bid Price:
If firm is a Material Supplier Only, show Dollar Volume as 60% of Agreed Upon Amount from Letter of Intent.
If firm is a Manufacturer, show Dollar Volume as 100% of Agreed Upon Amount from Letter of Intent.

LISTING OF DBE SUBCONTRACTORS

Sheet _____ of _____

Firm Name and Address	Item No.	Item Description	* Agreed upon Unit Price	** Dollar Volume of Item
Name Address				
Name Address				
Name Address				
Name Address				
Name Address				

**** Dollar Volume of DBE Subcontractor $_____**

Percentage of Total Contract Bid Price _____%

*** The Dollar Volume shown in this column shall be the Actual Price Agreed Upon by the Prime Contractor and the DBE subcontractor, and these prices will be used to determine the percentage of the DBE participation in the contract.**

**** Dollar Volume of DBE Subcontractor Percentage of Total Contract Bid Price:**
If firm is a Material Supplier Only, show Dollar Volume as 60% of Agreed Upon Amount from Letter of Intent.
If firm is a Manufacturer, show Dollar Volume as 100% of Agreed Upon Amount from Letter of Intent.

STATE OF NORTH CAROLINA
DEPARTMENT OF TRANSPORTATION
RALEIGH, NC

BID BOND

Contract Number: DN11585092 County: Cherokee, Clay, Graham, Haywood, Henderson, Jackson, Macon, Polk, Swain and Transylvania

KNOW ALL MEN BY THESE PRESENTS, That we, the PRINCIPAL CONTRACTOR (hereafter, PRINCIPAL) and SURETY above named, are held and firmly bound unto the Department of Transportation in the full and just sum of five (5) percent of the total amount bid by the Principal for the project stated above, for the payment of which sum well and truly to be made, we bind ourselves, our heirs, executors, administrators, and successors, jointly and severally, firmly by these presents.

NOW, THEREFORE, the condition of this obligation is: the Principal shall not withdraw its bid within sixty (60) days after the opening of the bids, or within such other time period as may be provided in the proposal, and if the Board of Transportation shall award a contract to the Principal, the Principal shall, within fourteen (14) calendar days after written notice of award is received by him, provide bonds with good and sufficient surety, as required for the faithful performance of the contract and for the protection of all persons supplying labor, material, and equipment for the prosecution of the work. In the event the Principal requests permission to withdraw his bid due to mistake in accordance with the provisions of Article 103-3 of the *Standard Specifications for Roads and Structures*, the conditions and obligations of this Bid Bond shall remain in full force and effect until the Department of Transportation makes a final determination to either allow the bid to be withdrawn or to proceed with award of the contract. In the event a determination is made to award the contract, the Principal shall have fourteen (14) calendar days to comply with the requirements set forth above. In the event the Principal withdraws its bid after bids are opened except as provided in Article 103-3, or after award of the contract has been made fails to execute such additional documents as may be required and to provide the required bonds within the time period specified above, then the amount of the bid bond shall be immediately paid to the Department of Transportation as liquidated damages.

IN TESTIMONY WHEREOF, the Principal and Surety have caused these presents to be duly signed and sealed.

This the _____ day of _____, 20 _____

_____
Surety

By _____
General Agent or Attorney-in-Fact Signature

Seal of Surety

_____
Print or type Signer's Name

BID BOND

CORPORATION

SIGNATURE OF CONTRACTOR (Principal)

_____
Full name of Corporation

_____
Address as prequalified

By _____
Signature of **President**, **Vice President**, **Assistant Vice President**
Select appropriate title

_____
Print or type Signer's name

Affix Corporate Seal

Attest _____
Signature of **Secretary**, **Assistant Secretary**
Select appropriate title

_____
Print or type Signer's name

BID BOND

LIMITED LIABILITY COMPANY

SIGNATURE OF CONTRACTOR (Principal)

Name of Contractor _____

Full name of Firm

_____

Address as prequalified

Signature of Member/ Manager/Authorized Agent _____

Individually

_____

Print or type Signer's name

BID BOND

INDIVIDUAL DOING BUSINESS UNDER A FIRM NAME

SIGNATURE OF CONTRACTOR (Principal)

Name of Contractor _____
Individual Name

Trading and doing business as _____
Full name of Firm

_____
Address as prequalified

Signature of Contractor _____
Individually

_____
Print or type Signer's name

_____
Signature of Witness

_____
Print or type Signer's name

BID BOND

INDIVIDUAL DOING BUSINESS IN HIS OWN NAME

SIGNATURE OF CONTRACTOR (Principal)

Name of Contractor _____
Print or type Individual Name

_____
Address as prequalified

Signature of Contractor _____
Individually

_____
Print or type Signer's name

_____
Signature of Witness

_____
Print or type Signer's name

BID BOND

PARTNERSHIP

SIGNATURE OF CONTRACTOR (Principal)

_____
Full name of Partnership

_____
Address as prequalified

By _____
Signature of Partner

_____
Print or type Signer's name

_____
Signature of Witness

_____
Print or type Signer’s name

BID BOND
JOINT VENTURE (2 or 3)
SIGNATURE OF CONTRACTORS (Principal)

Instructions to Bidders: **2 Joint Ventures**, Fill in lines (1), (2) and (3) and execute. **3 Joint Venturers** Fill in lines (1), (2), (3), (4) and execute. Line (1), print or type the name of Joint Venture. On line (2), print or type the name of one of the joint venturers and execute below in the appropriate manner required by Article 102-8 of the *Specifications*. On Line (3), print or type the name of second joint venturer and execute below in the appropriate manner required by said article of the Specifications. On Line (4), print or type the name of the third joint venturer, if applicable and execute below in the appropriate manner required by said article of the Specifications. This form of execution must be strictly followed.

Signature of Witness or Attest	By	Signature of Contractor
Print or type Signer's name		Print or type Signer's name

and

Signature of Witness or Attest	By	Signature of Contractor
Print or type Signer's name		Print or type Signer's name

and

Signature of Witness or Attest	By	Signature of Contractor
Print or type Signer's name		Print or type Signer's name

ADDENDUM(S)

ADDENDUM #1

I, _____ representing _____
(SIGNATURE)

Acknowledge receipt of Addendum #1.

ADDENDUM #2

I, _____ representing _____
(SIGNATURE)

Acknowledge receipt of Addendum #2.

ADDENDUM #3

I, _____ representing _____
(SIGNATURE)

Acknowledge receipt of Addendum #3.

AWARD LIMITS ON MULTIPLE PROJECTS

It is the desire of the Proposer to be awarded contracts, the value of which will not exceed a total of $_____, for those projects indicated below on which bids are being opened on the same date as shown in the Proposal Form. Individual projects shall be indicated by placing the project number and county in the appropriate place below. Projects not selected will not be subject to an award limit.

_____	_____
(Project Number)	(County)
_____	_____
(Project Number)	(County)
_____	_____
(Project Number)	(County)
_____	_____
(Project Number)	(County)

*If a Proposer desires to limit the total amount of work awarded to him in this letting, he shall state such limit in the space provided above in the second line of this form.

It is agreed that in the event that I am (we are) the successful bidder on indicated projects, the total value of which is more that the above stipulated award limits, the Board of Transportation will award me (us) projects from among those indicated which have a total value not exceeding the award limit and which will result in the best advantage to the Department of Transportation.

_____
**Signature of Authorized Person

**Only those persons authorized to sign bids under the provisions of Article 102-8, Item 7, shall be authorized to sign this form.

EXECUTION OF BID

NON-COLLUSION AFFIDAVIT, DEBARMENT CERTIFICATION AND GIFT BAN CERTIFICATION

CORPORATION

The person executing the bid, on behalf of the Bidder, being duly sworn, solemnly swears (or affirms) that neither he, nor any official, agent or employee of the bidder has entered into any agreement, participated in any collusion, or otherwise taken any action which is in restraint of free competitive bidding in connection with any bid or contract, that the bidder has not been convicted of violating *N.C.G.S. § 133-24* within the last three years, and that the Bidder intends to do the work with its own bonafide employees or subcontractors and is not bidding for the benefit of another contractor.

In addition, execution of this bid in the proper manner also constitutes the Bidder's certification of status under penalty of perjury under the laws of the United States in accordance with the Debarment Certification attached, provided that the Debarment Certification also includes any required statements concerning exceptions that are applicable.

N.C.G.S. § 133-32 and Executive Order 24 prohibit the offer to, or acceptance by, any State Employee of any gift from anyone with a contract with the State, or from any person seeking to do business with the State. By execution of any response in this procurement, you attest, for your entire organization and its employees or agents, that you are not aware that any such gift has been offered, accepted, or promised by any employees of your organization.

SIGNATURE OF CONTRACTOR

_____
Full name of Corporation

_____
Address as Prequalified

Attest _____ By _____

Secretary/Assistant Secretary
Select appropriate title

President/Vice President/Assistant Vice President
Select appropriate title

_____
Print or type Signer's name

_____
Print or type Signer's name

CORPORATE SEAL

AFFIDAVIT MUST BE NOTARIZED

Subscribed and sworn to before me this the

_____ day of _____ 20__.

NOTARY SEAL

_____
Signature of Notary Public

of _____County

State of _____

My Commission Expires:_____

EXECUTION OF BID
NON-COLLUSION AFFIDAVIT, DEBARMENT CERTIFICATION AND GIFT BAN CERTIFICATION

PARTNERSHIP

The person executing the bid, on behalf of the Bidder, being duly sworn, solemnly swears (or affirms) that neither he, nor any official, agent or employee of the bidder has entered into any agreement, participated in any collusion, or otherwise taken any action which is in restraint of free competitive bidding in connection with any bid or contract, that the bidder has not been convicted of violating *N.C.G.S. § 133-24* within the last three years, and that the Bidder intends to do the work with its own bonafide employees or subcontractors and is not bidding for the benefit of another contractor.

In addition, execution of this bid in the proper manner also constitutes the Bidder's certification of status under penalty of perjury under the laws of the United States in accordance with the Debarment Certification attached, provided that the Debarment Certification also includes any required statements concerning exceptions that are applicable.

N.C.G.S. § 133-32 and Executive Order 24 prohibit the offer to, or acceptance by, any State Employee of any gift from anyone with a contract with the State, or from any person seeking to do business with the State. By execution of any response in this procurement, you attest, for your entire organization and its employees or agents, that you are not aware that any such gift has been offered, accepted, or promised by any employees of your organization.

SIGNATURE OF CONTRACTOR

_____ By _____

Signature of Witness — Signature of Partner

_____ _____

Print or type Signer's name — Print or type Signer's name

AFFIDAVIT MUST BE NOTARIZED

Subscribed and sworn to before me this the

_____ day of _____ 20__.

NOTARY SEAL

_____

Signature of Notary Public

of _____County

State of _____

My Commission Expires:_____

EXECUTION OF BID
NON-COLLUSION AFFIDAVIT, DEBARMENT CERTIFICATION AND GIFT BAN CERTIFICATION

LIMITED LIABILITY COMPANY

The person executing the bid, on behalf of the Bidder, being duly sworn, solemnly swears (or affirms) that neither he, nor any official, agent or employee of the bidder has entered into any agreement, participated in any collusion, or otherwise taken any action which is in restraint of free competitive bidding in connection with any bid or contract, that the bidder has not been convicted of violating *N.C.G.S. § 133-24* within the last three years, and that the Bidder intends to do the work with its own bonafide employees or subcontractors and is not bidding for the benefit of another contractor.

In addition, execution of this bid in the proper manner also constitutes the Bidder's certification of status under penalty of perjury under the laws of the United States in accordance with the Debarment Certification attached, provided that the Debarment Certification also includes any required statements concerning exceptions that are applicable.

N.C.G.S. § 133-32 and Executive Order 24 prohibit the offer to, or acceptance by, any State Employee of any gift from anyone with a contract with the State, or from any person seeking to do business with the State. By execution of any response in this procurement, you attest, for your entire organization and its employees or agents, that you are not aware that any such gift has been offered, accepted, or promised by any employees of your organization.

SIGNATURE OF CONTRACTOR

_____
Full Name of Firm

_____
Address as Prequalified

_____ Signature of Witness	_____ Signature of Member/Manager/Authorized Agent *Select appropriate title*
_____ Print or type Signer's name	_____ Print or type Signer's Name

AFFIDAVIT MUST BE NOTARIZED

Subscribed and sworn to before me this the

_____ day of _____ 20__.

NOTARY SEAL

_____
Signature of Notary Public

of _____County

State of _____

My Commission Expires:_____

EXECUTION OF BID
NON-COLLUSION AFFIDAVIT, DEBARMENT CERTIFICATION AND GIFT BAN CERTIFICATION

JOINT VENTURE (2) or (3)

The person executing the bid, on behalf of the Bidder, being duly sworn, solemnly swears (or affirms) that neither he, nor any official, agent or employee of the bidder has entered into any agreement, participated in any collusion, or otherwise taken any action which is in restraint of free competitive bidding in connection with any bid or contract, that the bidder has not been convicted of violating *N.C.G.S. § 133-24* within the last three years, and that the Bidder intends to do the work with its own bonafide employees or subcontractors and is not bidding for the benefit of another contractor.

In addition, execution of this bid in the proper manner also constitutes the Bidder's certification of status under penalty of perjury under the laws of the United States in accordance with the Debarment Certification attached, provided that the Debarment Certification also includes any required statements concerning exceptions that are applicable.

N.C.G.S. § 133-32 and Executive Order 24 prohibit the offer to, or acceptance by, any State Employee of any gift from anyone with a contract with the State, or from any person seeking to do business with the State. By execution of any response in this procurement, you attest, for your entire organization and its employees or agents, that you are not aware that any such gift has been offered, accepted, or promised by any employees of your organization.

SIGNATURE OF CONTRACTOR

Instructions: **2 Joint Venturers** Fill in lines (1), (2) and (3) and execute. **3 Joint Venturers** Fill in lines (1), (2), (3) and (4) and execute. On Line (1), fill in the name of the Joint Venture Company. On Line (2), fill in the name of one of the joint venturers and execute below in the appropriate manner. On Line (3), print or type the name of the other joint venturer and execute below in the appropriate manner. On Line (4), fill in the name of the third joint venturer, if applicable and execute below in the appropriate manner.

Signature of Witness or Attest	By	Signature of Contractor
Print or type Signer's name		Print or type Signer's name
If Corporation, affix Corporate Seal	and	
Signature of Witness or Attest	By	Signature of Contractor
Print or type Signer's name		Print or type Signer's name
If Corporation, affix Corporate Seal	and	
Signature of Witness or Attest	By	Signature of Contractor
Print or type Signer's name		Print or type Signer's name
If Corporation, affix Corporate Seal		

NOTARY SEAL
Affidavit must be notarized for Line (2)
Subscribed and sworn to before me this
_____day of_____ 20___
_____
Signature of Notary Public
of _____County
State of _____
My Commission Expires:_____

NOTARY SEAL
Affidavit must be notarized for Line (3)
Subscribed and sworn to before me this
_____day of _____ 20___
_____
Signature of Notary Public
of _____County
State of _____
My Commission Expires:_____

NOTARY SEAL
Affidavit must be notarized for Line (4)
Subscribed and sworn to before me this
____day of _____ 20_____
_____
Signature of Notary Public
of _____County
State of _____
My Commission Expires:_____

EXECUTION OF BID
NON-COLLUSION AFFIDAVIT, DEBARMENT CERTIFICATION AND GIFT BAN CERTIFICATION

INDIVIDUAL DOING BUSINESS UNDER A FIRM NAME

The person executing the bid, on behalf of the Bidder, being duly sworn, solemnly swears (or affirms) that neither he, nor any official, agent or employee of the bidder has entered into any agreement, participated in any collusion, or otherwise taken any action which is in restraint of free competitive bidding in connection with any bid or contract, that the bidder has not been convicted of violating *N.C.G.S. § 133-24* within the last three years, and that the Bidder intends to do the work with its own bonafide employees or subcontractors and is not bidding for the benefit of another contractor.

In addition, execution of this bid in the proper manner also constitutes the Bidder's certification of status under penalty of perjury under the laws of the United States in accordance with the Debarment Certification attached, provided that the Debarment Certification also includes any required statements concerning exceptions that are applicable.

N.C.G.S. § 133-32 and Executive Order 24 prohibit the offer to, or acceptance by, any State Employee of any gift from anyone with a contract with the State, or from any person seeking to do business with the State. By execution of any response in this procurement, you attest, for your entire organization and its employees or agents, that you are not aware that any such gift has been offered, accepted, or promised by any employees of your organization.

SIGNATURE OF CONTRACTOR

Name of Contractor _____
Individual name

Trading and doing business as _____
Full name of Firm

_____	_____
Signature of Witness	Signature of Contractor, Individually
_____	_____
Print or type Signer's name	Print or type Signer's name

AFFIDAVIT MUST BE NOTARIZED

Subscribed and sworn to before me this the

_____ day of _____ 20__.

_____
Signature of Notary Public

of _____County

State of _____

My Commission Expires:_____

NOTARY SEAL

EXECUTION OF BID
NON-COLLUSION AFFIDAVIT, DEBARMENT CERTIFICATION AND GIFT BAN CERTIFICATION

INDIVIDUAL DOING BUSINESS IN HIS OWN NAME

The person executing the bid, on behalf of the Bidder, being duly sworn, solemnly swears (or affirms) that neither he, nor any official, agent or employee of the bidder has entered into any agreement, participated in any collusion, or otherwise taken any action which is in restraint of free competitive bidding in connection with any bid or contract, that the bidder has not been convicted of violating *N.C.G.S. § 133-24* within the last three years, and that the Bidder intends to do the work with its own bonafide employees or subcontractors and is not bidding for the benefit of another contractor.

In addition, execution of this bid in the proper manner also constitutes the Bidder's certification of status under penalty of perjury under the laws of the United States in accordance with the Debarment Certification attached, provided that the Debarment Certification also includes any required statements concerning exceptions that are applicable.

N.C.G.S. § 133-32 and Executive Order 24 prohibit the offer to, or acceptance by, any State Employee of any gift from anyone with a contract with the State, or from any person seeking to do business with the State. By execution of any response in this procurement, you attest, for your entire organization and its employees or agents, that you are not aware that any such gift has been offered, accepted, or promised by any employees of your organization.

SIGNATURE OF CONTRACTOR

Name of Contractor _____
Print or type Individual name

_____
Address as Prequalified

_____
Signature of Contractor, Individually

_____
Print or type Signer's Name

_____
Signature of Witness

_____
Print or type Signer's name

AFFIDAVIT MUST BE NOTARIZED

Subscribed and sworn to before me this the

NOTARY SEAL

_____ day of _____ 20__.

_____
Signature of Notary Public

of _____County

State of _____

My Commission Expires:_____

DEBARMENT CERTIFICATION

Conditions for certification:

1. The prequalified bidder shall provide immediate written notice to the Department if at any time the bidder learns that his certification was erroneous when he submitted his debarment certification or explanation filed with the Department, or has become erroneous because of changed circumstances.

2. The terms *covered transaction, debarred, suspended, ineligible, lower tier covered transaction, participant, person, primary covered transaction, principal, proposal,* and *voluntarily excluded*, as used in this provision, have the meanings set out in the Definitions and Coverage sections of the rules implementing Executive Order 12549. A copy of the Federal Rules requiring this certification and detailing the definitions and coverages may be obtained from the Contract Officer of the Department.

3. The prequalified bidder agrees by submitting this form, that he will not knowingly enter into any lower tier covered transaction with a person who is debarred, suspended, declared ineligible, or voluntarily excluded from participation in NCDOT contracts, unless authorized by the Department.

4. For Federal Aid projects, the prequalified bidder further agrees that by submitting this form he will include the Federal-Aid Provision titled *Required Contract Provisions Federal-Aid Construction Contract (Form FHWA PR* 1273) provided by the Department, without subsequent modification, in all lower tier covered transactions.

5. The prequalified bidder may rely upon a certification of a participant in a lower tier covered transaction that he is not debarred, suspended, ineligible, or voluntarily excluded from the covered transaction, unless he knows that the certification is erroneous. The bidder may decide the method and frequency by which he will determine the eligibility of his subcontractors.

6. Nothing contained in the foregoing shall be construed to require establishment of a system of records in order to render in good faith the certification required by this provision. The knowledge and information of a participant is not required to exceed that which is normally possessed by a prudent person in the ordinary course of business dealings.

7. Except as authorized in paragraph 6 herein, the Department may terminate any contract if the bidder knowingly enters into a lower tier covered transaction with a person who is suspended, debarred, ineligible, or voluntarily excluded from participation in this transaction, in addition to other remedies available by the Federal Government.

DEBARMENT CERTIFICATION

The prequalified bidder certifies to the best of his knowledge and belief, that he and his principals:

a. Are not presently debarred, suspended, proposed for debarment, declared ineligible, or voluntarily excluded from covered transactions by any Federal department or agency;

b. Have not within a three-year period preceding this proposal been convicted of or had a civil judgment rendered against them for commission of fraud or a criminal offense in connection with obtaining, attempting to obtain, or performing a public (Federal, State or local) transaction or contract under a public transaction; violation of Federal or State antitrust statutes or commission of embezzlement, theft, forgery, bribery, falsification or destruction of records; making false statements; or receiving stolen property;

c. Are not presently indicted for or otherwise criminally or civilly charged by a governmental entity (Federal, State or local) with commission of any of the offenses enumerated in paragraph b. of this certification; and

d. Have not within a three-year period preceding this proposal had one or more public transactions (Federal, State or local) terminated for cause or default.

e. Will submit a revised Debarment Certification immediately if his status changes and will show in his bid proposal an explanation for the change in status.

If the prequalified bidder cannot certify that he is not debarred, he shall provide an explanation with this submittal. An explanation will not necessarily result in denial of participation in a contract.

Failure to submit a non-collusion affidavit and debarment certification will result in the prequalified bidder's bid being considered non-responsive.

☐ Check here if an explanation is attached to this certification.

Execution of Contract

Contract No: DN11585092

County: Cherokee, Clay, Graham, Haywood, Henderson, Jackson, Macon, Polk, Swain and Transylvania

ACCEPTED BY THE DEPARTMENT

_____

Proposals Engineer

_____

Date

EXECUTION OF CONTRACT AND BONDS
APPROVED AS TO FORM:

_____

Division Engineer

_____

Date