This electronic collection of documents is provided for the convenience of the user and is Not a Certified Document –

The documents contained herein were originally issued and sealed by the individuals whose names and license numbers appear on each page, on the dates appearing with their signature on that page.
This file or an individual page shall not be considered a certified document.

DocuSign Envelope ID: 80037108-2E4D-4A39-BE63-BDE673EDF3EA

PROJECT: R-5771

CONTRACT: DN00557

See Sheet 1-A For Index of Sheets
See Sheet 1-B For Symbology

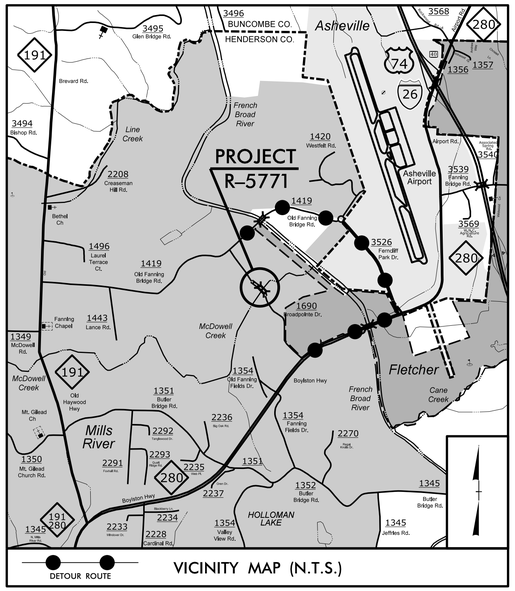

VICINITY MAP (N.T.S.)

STATE OF NORTH CAROLINA
DIVISION OF HIGHWAYS

HENDERSON COUNTY

STATE	STATE PROJECT REFERENCE NO.	SHEET NO.	TOTAL SHEETS
N.C.	R-5771	1	

STATE PROJ. NO.	F.A. PROJ. NO.	DESCRIPTION
46877.1.1	APD-1690(001)	P.E.
46877.2.1	APD-1690(001)	R/W & UTILITIES
46877.3.1	APD-1690(001)	CONST.

LOCATION: SR 1690 (BROADPOINTE DRIVE) INCLUDING BRIDGE #107 OVER McDOWELL CREEK

TYPE OF WORK: GRADING, DRAINAGE, PAVING, AND STRUCTURE

NAD 83/2011

4

BEGIN PROJECT R-5771
-L- POT STA. 12+50.00

END PROJECT R-5771
-L- POT STA. 25+50.00

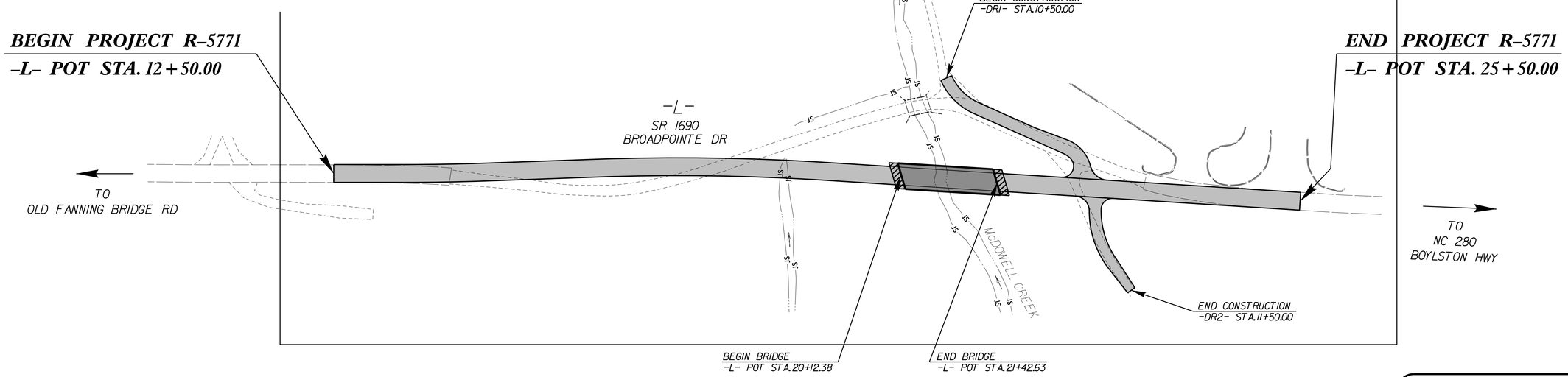

DOCUMENT NOT CONSIDERED FINAL UNLESS ALL SIGNATURES COMPLETED

NCDOT CONTACT:

STEVE CANNON, PE
DISTRICT 1 ENGINEER, DIV. 14
(828) 891-7911

GRAPHIC SCALES

50 25 0 50 100
PLANS

50 25 0 50 100
PROFILE (HORIZONTAL)

10 5 0 10 20
PROFILE (VERTICAL)

DESIGN DATA

ADT 2000 = 120
ADT 2037 = 2,000+
T = 7 %
V = 30 MPH

FUNCTIONAL CLASSIFICATION:
RURAL COLLECTOR

SUB-REGIONAL TIER

PROJECT LENGTH

LENGTH ROADWAY PROJECT R-5771	=	***0.221 mile***
LENGTH STRUCTURES PROJECT R-5771	=	***0.025 mile***
TOTAL LENGTH PROJECT R-5771	=	***0.246 mile***

Prepared For:
DIVISION OF HIGHWAYS
Division 14, 253 Webster Road, Sylva, NC 28779
By:
M A Engineering Consultants, Inc.
598 East Chatham Street - Suite 137
Cary, NC 27511
Phone: 919.297.0220 Fax: 919.297.0221
NC License: F-0160

2012 STANDARD SPECIFICATIONS

RIGHT OF WAY DATE:
DECEMBER 14, 2016

LETTING DATE:
MAY 23, 2017

ROBERT W. PORTER, JR PE
PROJECT ENGINEER

KEVIN S. HUTCHENS PE
PROJECT DESIGN ENGINEER

HYDRAULICS ENGINEER
3/28/2017
DocuSigned by: Scott W. Brookhart
461B108428B4498...
P.E.
SIGNATURE:

NORTH CAROLINA PROFESSIONAL SEAL 20117 ENGINEER SCOTT W. BROOKHART

ROADWAY DESIGN ENGINEER
3/28/2017
DocuSigned by: Robert W. Porter, Jr
9BC7F0B0B7B1445...
P.E.
SIGNATURE:

NORTH CAROLINA PROFESSIONAL SEAL 19814 ENGINEER ROBERT W. PORTER, JR.

STATE OF NORTH CAROLINA DEPARTMENT OF TRANSPORTATION

3/28/2017
5:\roadway\proj\R5771_Rdy_tsh.dgn
3:27:26 PM

DocuSign Envelope ID: 80037108-2E4D-4A39-BE63-BDE673EDF3EA

8/17/99

GENERAL NOTES:

2012 SPECIFICATIONS
EFFECTIVE: 01-17-2012
REVISED: 10-31-2014

GRADING AND SURFACING OR RESURFACING AND WIDENING:

THE GRADE LINES SHOWN DENOTE THE FINISHED ELEVATION OF THE PROPOSED SURFACING AT GRADE POINTS SHOWN ON THE TYPICAL SECTIONS. WHERE NO GRADE LINES ARE SHOWN, THE PROFILES SHOWN DENOTE THE TOP ELEVATION OF THE EXISTING PAVEMENT ALONG THE CENTER LINE OF SURVEY ON WHICH THE PROPOSED RESURFACING WILL BE PLACED. GRADE LINES MAY BE ADJUSTED BY THE ENGINEER IN ORDER TO SECURE A PROPER TIE-IN.

CLEARING:

CLEARING ON THIS PROJECT SHALL BE PERFORMED TO THE LIMITS ESTABLISHED BY METHOD II.

SUPERELEVATION:

ALL CURVES ON THIS PROJECT SHALL BE SUPERELEVATED IN ACCORDANCE WITH STD. NO. 225.04 USING THE RATE OF SUPERELEVATION AND RUNOFF SHOWN ON THE PLANS. SUPERELEVATION IS TO BE REVOLVED ABOUT THE GRADE POINTS SHOWN ON THE TYPICAL SECTIONS.

SHOULDER CONSTRUCTION:

ASPHALT, EARTH, AND CONCRETE SHOULDER CONSTRUCTION ON THE HIGH SIDE OF SUPERELEVATED CURVES SHALL BE IN ACCORDANCE WITH STD. NO. 560.01

SIDE ROADS:

THE CONTRACTOR WILL BE REQUIRED TO DO ALL NECESSARY WORK TO PROVIDE SUITABLE CONNECTIONS WITH ALL ROADS, STREETS, AND DRIVES ENTERING THIS PROJECT. THIS WORK WILL BE PAID FOR AT THE CONTRACT UNIT PRICE FOR THE PARTICULAR ITEMS INVOLVED.

GUARDRAIL:

THE GUARDRAIL LOCATIONS SHOWN ON THE PLANS MAY BE ADJUSTED DURING CONSTRUCTION AS DIRECTED BY THE ENGINEER. THE CONTRACTOR SHOULD CONSULT WITH THE ENGINEER PRIOR TO ORDERING GUARDRAIL MATERIAL.

TEMPORARY SHORING:

SHORING REQUIRED FOR THE MAINTENANCE OF TRAFFIC WILL BE PAID FOR AS "EXTRA WORK" IN ACCORDANCE WITH SECTION 104-7.

END BENTS:

THE ENGINEER SHALL CHECK THE STRUCTURE END BENT PLANS, DETAILS, AND CROSS-SECTIONS PRIOR TO SETTING OF THE SLOPE STAKES FOR THE EMBANKMENT OR EXCAVATION APPROACHING A BRIDGE.

UTILITIES:

UTILITY OWNERS ON THIS PROJECT ARE:
POWER - Duke Energy
PHONE - AT & T
GAS - PSNC
WATER - City of Asheville
SEWER - Henderson County

ANY RELOCATION OF EXISTING UTILITIES WILL BE ACCOMPLISHED BY OTHERS, EXCEPT AS SHOWN ON THE PLANS.

RIGHT-OF-WAY MARKERS:

RIGHT-OF-WAY MARKERS ON THIS PROJECT SHALL BE PLACED BY OTHERS AND BY CONTRACT IN ACCORDANCE WITH DESIGNATED SYMBOLS.

2012 ROADWAY ENGLISH STANDARD DRAWINGS

EFF. 01-17-2012
REV. 02-29-2016

The following Roadway Standards as appear in "Roadway Standard Drawings" Highway Design Branch - N. C. Department of Transportation - Raleigh, N. C., Dated January, 2012 are applicable to this project and by reference hereby are considered a part of these plans:

STD.NO.	TITLE
DIVISION 2 - EARTHWORK	
200.02	Method of Clearing - Method II
225.02	Guide for Grading Subgrade - Secondary and Local
225.04	Method of Obtaining Superelevation - Two Lane Pavement
DIVISION 3 - PIPE CULVERTS	
300.01	Method of Pipe Installation
310.10	Driveway Pipe Construction
DIVISION 4 - MAJOR STRUCTURES	
422.10	Reinforced Bridge Approach Fills
DIVISION 5 - SUBGRADE, BASES AND SHOULDERS	
560.01	Method of Shoulder Construction - High Side of Superelevated Curve - Method I
DIVISION 8 - INCIDENTALS	
806.01	Concrete Right-of-Way Marker
838.01	Concrete Endwall for Single and Double Pipe Culverts - 15" thru 48" Pipe 90 Skew
838.11	Brick Endwall for Single and Double Pipe Culverts - 15" thru 48" Pipe 90 Skew
838.80	Precast Endwalls - 12" thru 72" Pipe 90 Skew
840.00	Concrete Base Pad for Drainage Structures
840.04	Concrete Open Throat Catch Basin - 12" thru 48" Pipe
840.05	Brick Open Throat Catch Basin - 12" thru 48" Pipe
840.25	Anchorage for Frames - Brick or Concrete or Precast
840.29	Frames and Narrow Slot Flat Grates
840.35	Traffic Bearing Grated Drop Inlet - for Cast Iron Double Frame and Grates
840.45	Precast Drainage Structure
840.46	Traffic Bearing Precast Drainage Structure
840.66	Drainage Structure Steps
846.01	Concrete Curb, Gutter and Curb & Gutter
846.04	Drop Inlet Installation in Shoulder Berm Gutter
862.01	Guardrail Placement
862.02	Guardrail Installation
876.01	Rip Rap in Channels
876.02	Guide for Rip Rap at Pipe Outlets
876.04	Drainage Ditches with Class 'B' Rip Rap

INDEX OF SHEETS

SHEET NUMBER	SHEET
1	TITLE SHEET
1A	INDEX OF SHEETS, GENERAL NOTES, AND LIST OF STANDARD DRAWINGS
1B	CONVENTIONAL SYMBOLS
1C-1	SURVEY CONTROL SHEET
2A-1	PAVEMENT SCHEDULE AND TYPICAL SECTIONS
2C-1	STRUCTURE ANCHOR UNITS, GUARDRAIL ANCHOR UNIT, TYPE III
3B-1	SUMMARIES OF EARTHWORK, PAVEMENT REMOVAL, DRAINAGE, AND GUARDRAIL
3G-1	SUMMARIES OF BRIDGE WAITING PERIODS, SETTLEMENT GAUGES, AND EMBANKMENT WAITING PERIODS
4	PLAN SHEET
5	PROFILE SHEET
TMP-1 THRU TMP-3	TRANSPORTATION MANAGEMENT PLANS
PMP-1 THRU PMP-2	PAVEMENT MARKING PLANS
EC-1 THRU EC-4	EROSION CONTROL PLANS
SIGN-1 THRU SIGN-3	SIGNING PLANS
UC-1 THRU UC-5	UTILITY CONSTRUCTION PLANS
UO-1 THRU UO-2	UTILITIES BY OTHERS PLANS
X-1A	CROSS-SECTION SUMMARY
X-1 THRU X-15	CROSS-SECTIONS
S-1 THRU S-29	STRUCTURE PLANS

PROJECT REFERENCE NO.	SHEET NO.
R-5771	1A

ROADWAY DESIGN ENGINEER

NORTH CAROLINA PROFESSIONAL SEAL 19814 ENGINEER ROBERT W. PORTER, JR.

DocuSigned by: Robert W. Porter, Jr.
96CF5B0D3A7F4B0...
3/28/2017

DOCUMENT NOT CONSIDERED FINAL UNLESS ALL SIGNATURES COMPLETED

M A Engineering Consultants, Inc.
NC License: F-0160
598 East Chatham Street Suite 137 Cary, NC 27511
Phone: 919.297.0220 Fax: 919.297.0221

3/28/2017
12:50:44 PM
s:\proj\R5771_rdy_psh01A.dgn

04/06/15

PROJECT REFERENCE NO.	SHEET NO.
R-5771	1B

STATE OF NORTH CAROLINA, DIVISION OF HIGHWAYS

CONVENTIONAL PLAN SHEET SYMBOLS

Note: Not to Scale **S.U.E. = Subsurface Utility Engineering*

BOUNDARIES AND PROPERTY:

- State Line
- County Line
- Township Line
- City Line
- Reservation Line
- Property Line
- Existing Iron Pin — EIP
- Property Corner
- Property Monument — ECM
- Parcel/Sequence Number — 123
- Existing Fence Line
- Proposed Woven Wire Fence
- Proposed Chain Link Fence
- Proposed Barbed Wire Fence
- Existing Wetland Boundary — WLB
- Proposed Wetland Boundary — WLB
- Existing Endangered Animal Boundary — EAB
- Existing Endangered Plant Boundary — EPB
- Existing Historic Property Boundary — HPB
- Known Contamination Area: Soil
- Potential Contamination Area: Soil
- Known Contamination Area: Water
- Potential Contamination Area: Water
- Contaminated Site: Known or Potential

BUILDINGS AND OTHER CULTURE:

- Gas Pump Vent or U/G Tank Cap
- Sign — S
- Well — W
- Small Mine
- Foundation
- Area Outline
- Cemetery
- Building
- School
- Church
- Dam

HYDROLOGY:

- Stream or Body of Water
- Hydro, Pool or Reservoir
- Jurisdictional Stream — JS
- Buffer Zone 1 — BZ 1
- Buffer Zone 2 — BZ 2
- Flow Arrow
- Disappearing Stream
- Spring
- Wetland
- Proposed Lateral, Tail, Head Ditch — FLOW
- False Sump

RAILROADS:

- Standard Gauge — CSX TRANSPORTATION
- RR Signal Milepost — MILEPOST 35
- Switch — SWITCH
- RR Abandoned
- RR Dismantled

RIGHT OF WAY:

- Baseline Control Point
- Existing Right of Way Marker
- Existing Right of Way Line
- Proposed Right of Way Line — RW
- Proposed Right of Way Line with Iron Pin and Cap Marker — RW
- Proposed Right of Way Line with Concrete or Granite R/W Marker — RW
- Proposed Control of Access Line with Concrete C/A Marker — CA
- Existing Control of Access — CA
- Proposed Control of Access — CA
- Existing Easement Line — E
- Proposed Temporary Construction Easement — E
- Proposed Temporary Drainage Easement — TDE
- Proposed Permanent Drainage Easement — PDE
- Proposed Permanent Drainage / Utility Easement — DUE
- Proposed Permanent Utility Easement — PUE
- Proposed Temporary Utility Easement — TUE
- Proposed Aerial Utility Easement — AUE
- Proposed Permanent Easement with Iron Pin and Cap Marker

ROADS AND RELATED FEATURES:

- Existing Edge of Pavement
- Existing Curb
- Proposed Slope Stakes Cut — C
- Proposed Slope Stakes Fill — F
- Proposed Curb Ramp — CR
- Existing Metal Guardrail
- Proposed Guardrail
- Existing Cable Guiderail
- Proposed Cable Guiderail
- Equality Symbol
- Pavement Removal

VEGETATION:

- Single Tree
- Single Shrub
- Hedge
- Woods Line
- Orchard
- Vineyard — Vineyard

EXISTING STRUCTURES:

MAJOR:

- Bridge, Tunnel or Box Culvert — CONC
- Bridge Wing Wall, Head Wall and End Wall — CONC WW

MINOR:

- Head and End Wall — CONC HW
- Pipe Culvert
- Footbridge
- Drainage Box: Catch Basin, DI or JB — CB
- Paved Ditch Gutter
- Storm Sewer Manhole — S
- Storm Sewer — S

UTILITIES:

POWER:

- Existing Power Pole
- Proposed Power Pole
- Existing Joint Use Pole
- Proposed Joint Use Pole
- Power Manhole — P
- Power Line Tower
- Power Transformer
- U/G Power Cable Hand Hole
- H-Frame Pole
- U/G Power Line LOS B (S.U.E.*) — P
- U/G Power Line LOS C (S.U.E.*) — P
- U/G Power Line LOS D (S.U.E.*) — P

TELEPHONE:

- Existing Telephone Pole
- Proposed Telephone Pole
- Telephone Manhole — T
- Telephone Pedestal — T
- Telephone Cell Tower
- U/G Telephone Cable Hand Hole — HH
- U/G Telephone Cable LOS B (S.U.E.*) — T
- U/G Telephone Cable LOS C (S.U.E.*) — T
- U/G Telephone Cable LOS D (S.U.E.*) — T
- U/G Telephone Conduit LOS B (S.U.E.*) — TC
- U/G Telephone Conduit LOS C (S.U.E.*) — TC
- U/G Telephone Conduit LOS D (S.U.E.*) — TC
- U/G Fiber Optics Cable LOS B (S.U.E.*) — T FO
- U/G Fiber Optics Cable LOS C (S.U.E.*) — T FO
- U/G Fiber Optics Cable LOS D (S.U.E.*) — T FO

WATER:

- Water Manhole — W
- Water Meter
- Water Valve
- Water Hydrant
- U/G Water Line LOS B (S.U.E*)
- U/G Water Line LOS C (S.U.E*)
- U/G Water Line LOS D (S.U.E*)
- Above Ground Water Line — A/G Water

TV:

- TV Pedestal — C
- TV Tower
- U/G TV Cable Hand Hole — HH
- U/G TV Cable LOS B (S.U.E.*) — TV
- U/G TV Cable LOS C (S.U.E.*) — TV
- U/G TV Cable LOS D (S.U.E.*) — TV
- U/G Fiber Optic Cable LOS B (S.U.E.*) — TV FO
- U/G Fiber Optic Cable LOS C (S.U.E.*) — TV FO
- U/G Fiber Optic Cable LOS D (S.U.E.*) — TV FO

GAS:

- Gas Valve
- Gas Meter
- U/G Gas Line LOS B (S.U.E.*) — G
- U/G Gas Line LOS C (S.U.E.*) — G
- U/G Gas Line LOS D (S.U.E.*) — G
- Above Ground Gas Line — A/G Gas

SANITARY SEWER:

- Sanitary Sewer Manhole
- Sanitary Sewer Cleanout
- U/G Sanitary Sewer Line — SS
- Above Ground Sanitary Sewer — A/G Sanitary Sewer
- SS Forced Main Line LOS B (S.U.E.*) — FSS
- SS Forced Main Line LOS C (S.U.E.*) — FSS
- SS Forced Main Line LOS D (S.U.E.*) — FSS

MISCELLANEOUS:

- Utility Pole
- Utility Pole with Base
- Utility Located Object
- Utility Traffic Signal Box — S
- Utility Unknown U/G Line LOS B (S.U.E.*) — ?UTL
- U/G Tank; Water, Gas, Oil
- Underground Storage Tank, Approx. Loc. — UST
- A/G Tank; Water, Gas, Oil
- Geoenvironmental Boring
- U/G Test Hole LOS A (S.U.E.*)
- Abandoned According to Utility Records — AATUR
- End of Information — E.O.I.

PROJECT REFERENCE NO.	SHEET NO.
R-5771	1C-1
Location and Surveys	

SURVEY CONTROL SHEET R-5771

-FINAL-

BL

POINT	DESC.	NORTH	EAST	ELEVATION	L STATION	OFFSET
101	G-101	628560.3520	941357.5580	2073.42	11+06.80	26.38 LT
1	BL-1	628130.0230	941644.0930	2055.88	16+22.67	11.96 RT
2	BL-2	627852.9050	941999.9430	2054.27	20+51.51	119.12 LT
3	BL-3	627537.6570	942057.0530	2094.66	23+46.05	6.93 RT
4	BL-4	627315.8720	942164.9400	2106.70	25+90.57	39.10 RT

BM1 ELEVATION = 2074.11'
N 628336.77 E 941411.00
L STATION 13+17.46 65.66' RIGHT
CHISELED SQUARE ON SE CORNER OF
CONCRETE PAD

BM2 ELEVATION = 2103.36'
N 627339.48 E 942216.90
L STATION 25+99.50 17.26' LEFT
CHISELED SQUARE IN BACK OF CONC CURB

-FINAL- ROW MARKER CONCRETE OR GRANITE-E

ALIGN	STATION	OFFSET	NORTH	EAST
L	12+84.44	-30.00	628420.74571	941467.46540
L	13+44.35	-30.00	628372.92349	941503.55977
L	14+55.63	-30.00	628286.14043	941571.49918
L	16+01.84	-30.00	628172.62736	941663.64411
L	19+11.46	-87.96	627952.60794	941896.77383
L	20+23.65	-125.00	627879.39169	941989.50264
L	21+30.44	-118.43	627786.64886	942042.85972
L	21+63.54	-104.76	627751.49837	942049.68833
L	23+17.25	-52.09	627594.20945	942090.43140
L	23+42.71	-45.08	627569.10067	942098.61438
L	24+57.55	-31.28	627465.65875	942150.38196
L	25+13.51	30.00	627385.19786	942130.07175
L	24+00.00	30.00	627479.92007	942067.52733
L	23+40.00	95.00	627494.17407	941980.22427
L	21+50.00	95.00	627652.72849	941875.53188
L	20+75.00	60.00	627734.60120	941863.41333
L	19+11.46	60.00	627871.07808	941773.29858
L	16+71.64	56.00	628064.71859	941639.49311
L	15+44.72	55.49	628163.09651	941561.26765
L	14+73.10	44.17	628225.83143	941524.92159
L	12+84.44	30.00	628384.59993	941419.57508

-FINAL- ROW MARKER IRON PIN AND CAP-E

ALIGN	STATION	OFFSET	NORTH	EAST
L	24+18.42	-33.08	627499.30750	942130.31706
L	25+13.51	-30.00	627418.25862	942180.14157

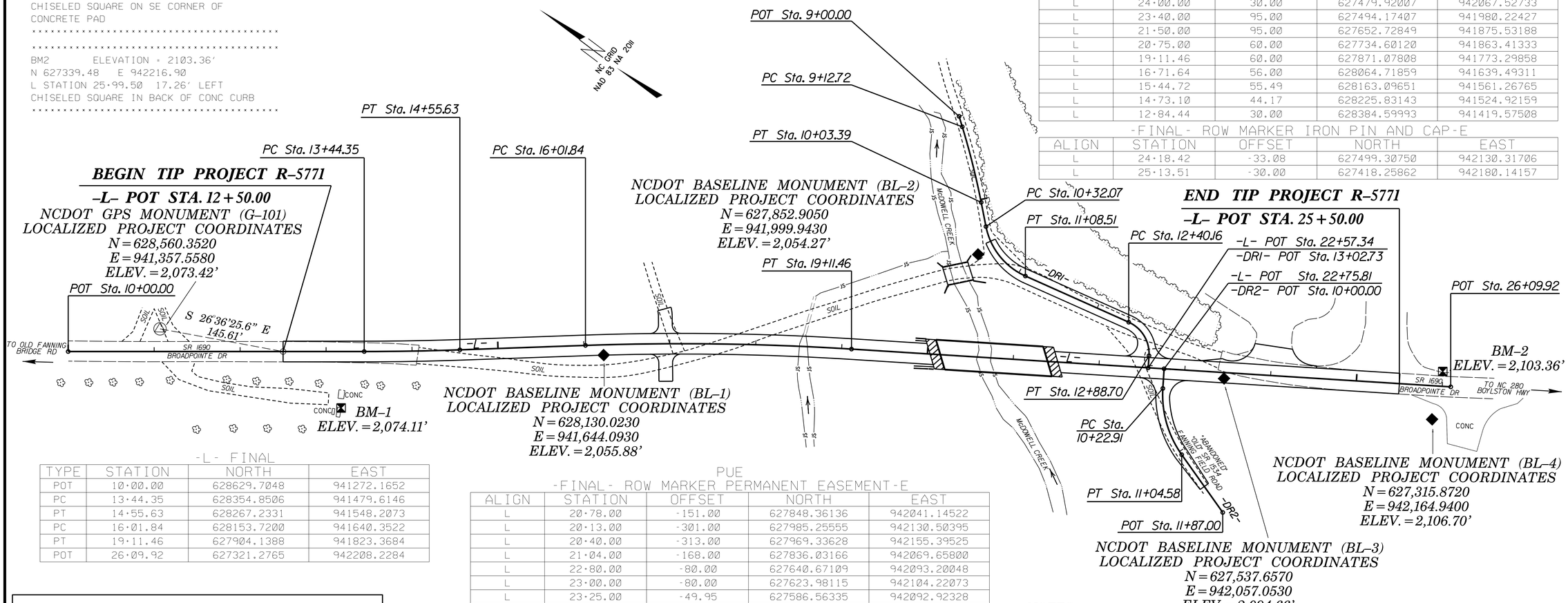

-L- FINAL

TYPE	STATION	NORTH	EAST
POT	10+00.00	628629.7048	941272.1652
PC	13+44.35	628354.8506	941479.6146
PT	14+55.63	628267.2331	941548.2073
PC	16+01.84	628153.7200	941640.3522
PT	19+11.46	627904.1388	941823.3684
POT	26+09.92	627321.2765	942208.2284

PUE
-FINAL- ROW MARKER PERMANENT EASEMENT-E

ALIGN	STATION	OFFSET	NORTH	EAST
L	20+78.00	-151.00	627848.36136	942041.14522
L	20+13.00	-301.00	627985.25555	942130.50395
L	20+40.00	-313.00	627969.33628	942155.39525
L	21+04.00	-168.00	627836.03166	942069.65800
L	22+80.00	-80.00	627640.67109	942093.20048
L	23+00.00	-80.00	627623.98115	942104.22073
L	23+25.00	-49.95	627586.56335	942092.92328
L	23+30.00	95.00	627502.51904	941974.71415
L	23+38.00	190.00	627443.49687	941899.84504
L	23+08.00	193.00	627466.87874	941880.81117
L	22+99.00	95.00	627528.38845	941957.63276

DUE
-FINAL- ROW MARKER PERMANENT EASEMENT-E

ALIGN	STATION	OFFSET	NORTH	EAST
L	20+37.00	-128.09	627869.95123	941999.43416
L	20+37.00	-143.00	627878.16764	942011.87773
L	20+78.00	-151.00	627848.36136	942041.14522

DATUM DESCRIPTION

THE LOCALIZED COORDINATE SYSTEM DEVELOPED FOR THIS PROJECT IS BASED ON THE STATE PLANE COORDINATES ESTABLISHED BY NCDOT FOR MONUMENT "G-101"
WITH NAD 83/NA 2011 STATE PLANE GRID COORDINATES OF
NORTHING: 628560.352(ft) EASTING: 941357.558(ft)
ELEVATION: 2073.42(ft)
THE AVERAGE COMBINED GRID FACTOR USED ON THIS PROJECT (GROUND TO GRID) IS: .9997828952
THE N.C. LAMBERT GRID BEARING AND LOCALIZED HORIZONTAL GROUND DISTANCE FROM "G-101" TO -L- STATION 12+50.00 IS
S 26°36'25.6" E 145.61'
ALL LINEAR DIMENSIONS ARE LOCALIZED HORIZONTAL DISTANCES
VERTICAL DATUM USED IS NAVD 88

GEOID MODEL – G12ANC
NOTE: DRAWING NOT TO SCALE

NOTES:

1. THE CONTROL DATA FOR THIS PROJECT CAN BE FOUND ELECTRONICALLY BY SELECTING PROJECT CONTROL DATA AT:
HTTPS://CONNECT.NCDOT.GOV/RESOURCES/LOCATION/

THE FILES TO BE FOUND ARE AS FOLLOWS:
R-5771_LS_CONTROL.TXT

SITE CALIBRATION INFORMATION HAS NOT BEEN PROVIDED FOR THIS PROJECT. IF FURTHER INFORMATION IS NEEDED, PLEASE CONTACT THE LOCATION AND SURVEYS UNIT.

△ INDICATES GEODETIC CONTROL MONUMENTS USED OR SET FOR HORIZONTAL PROJECT CONTROL BY THE NCDOT LOCATION AND SURVEYS UNIT.
PROJECT CONTROL ESTABLISHED USING GLOBAL POSITIONING SYSTEM.

6/2/99
3/28/2017
12:59:00 PM
\proj\r5771_ls_1C-1.dgn

DocuSign Envelope ID: 80037108-2E4D-4A39-BE63-BDE673EDF3EA

PROJECT REFERENCE NO.	SHEET NO.
R-5771	2A-1

ROADWAY DESIGN ENGINEER

NORTH CAROLINA PROFESSIONAL SEAL 19814 ENGINEER ROBERT W. PORTER, JR.

DocuSigned by: Robert W. Porter, Jr.
98CF5B6E3A7...
3/28/2017

PAVEMENT DESIGN ENGINEER

PAVEMENT DESIGN PROVIDED BY NCDOT

DOCUMENT NOT CONSIDERED FINAL UNLESS ALL SIGNATURES COMPLETED

M A Engineering Consultants, Inc.
NC License: F-0160
598 East Chatham Street Suite 137 Cary, NC 27511
Phone: 919.297.0220 Fax: 919.297.0221

PAVEMENT SCHEDULE

C1	PROP. APPROX. 2.0" ASPHALT CONCRETE SURFACE COURSE, TYPE S9.5B, AT AN AVERAGE RATE OF 224 Lbs PER SQUARE YARD.
C2	PROP. VAR. DEPTH ASPHALT CONCRETE SURFACE COURSE, TYPE S9.5B, AT AN AVERAGE RATE OF 112 LBS. PER SQ. YARD PER 1" DEPTH, TO BE PLACED IN LAYERS NOT LESS THAN 1.5" OR GREATER THAN 2" IN DEPTH.
D1	PROP. APPROX. 2.5" ASPHALT CONCRETE INTERMEDIATE COURSE, TYPE I19.0B, AT AN AVERAGE RATE OF 285.0 Lbs PER SQUARE YARD.
D2	PROP. VAR. DEPTH ASPHALT CONCRETE INTERMEDIATE COURSE, TYPE I19.0B, AT AN AVERAGE RATE OF 114 LBS. PER SQ. YARD PER 1" DEPTH TO BE PLACED IN LAYERS NOT LESS THAN 2.5" IN DEPTH OR GREATER THAN 4" IN DEPTH.
E1	PROP. APPROX. 4" ASPHALT CONCRETE INTERMEDIATE COURSE, TYPE B25.0B, AT AN AVERAGE RATE OF 456 Lbs PER SQUARE YARD.
E2	PROP. VAR. DEPTH ASPHALT CONCRETE BASE COURSE, TYPE B25.0B, AT AN AVERAGE RATE OF 114 LBS. PER SQ. YARD PER 1" DEPTH TO BE PLACED IN LAYERS NOT LESS THAN 3" IN DEPTH OR GREATER THAN 5.5" IN DEPTH.
F1	ASPHALT SURFACE TREATMENT, MAT & DOUBLE SEAL
J1	8" AGGREGATE BASE COURSE
R1	SHOULDER BERM GUTTER
T	EARTH MATERIAL
U	EXISTING PAVEMENT
W	VARIABLE DEPTH ASPHALT PAVEMENT (SEE STANDARD WEDGING DETAIL THIS SHEET)

PAVEMENT EDGE SLOPES AND TRENCH SLOPES ARE 1:1 UNLESS SHOWN OTHERWISE.

WEDGING DETAIL

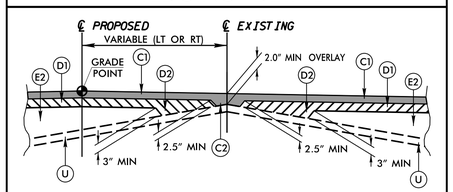

DETAIL SHOWING METHOD OF WEDGING

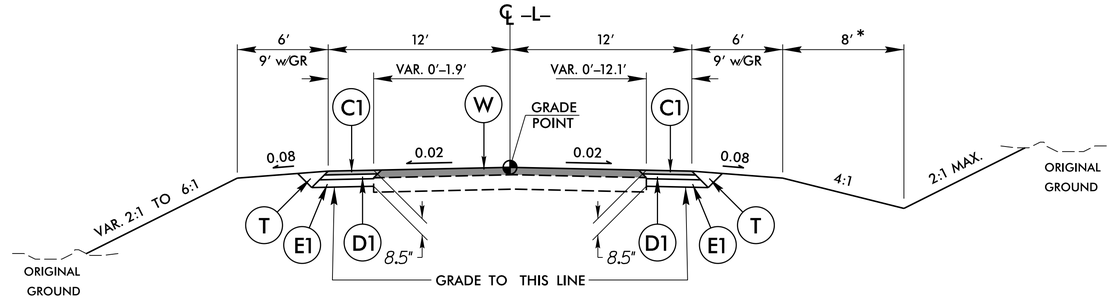

TYPICAL SECTION NO. 1

FROM -L- STA. 12+50.00 TO STA. 13+50.00
FROM -L- STA. 23+50.00 TO STA. 25+50.00

*NOTE: USE 6' DITCH WIDTH AT THE FOLLOWING LOCATIONS:
FROM -L- STA. 12+50.00 TO STA. 14+00.00 LT. & RT.
FROM -L- STA. 25+00.00 TO STA. 25+50.00 RT.

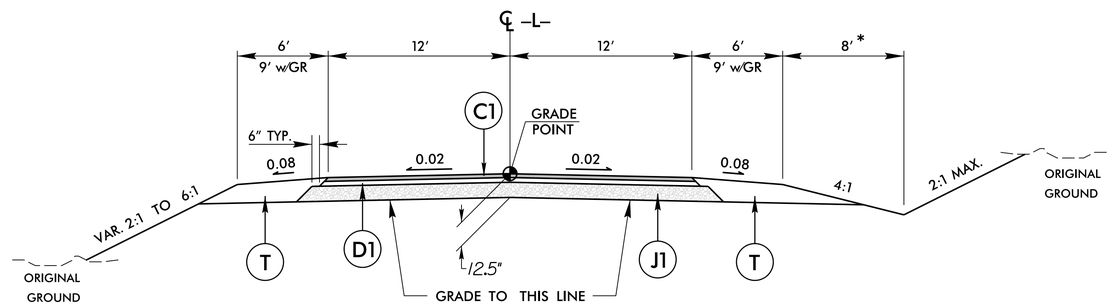

TYPICAL SECTION NO. 2

FROM -L- STA. 13+50.00 TO STA. 20+12.38 (BEGIN BRIDGE)
FROM -L- STA. 21+42.63 (END BRIDGE) TO STA. 23+50.00

USE C1, D1, & J1 TO PAVE SHOULDER AREAS IN FRONT OF GUARDRAIL AT LOCATIONS SHOWN IN PLANS

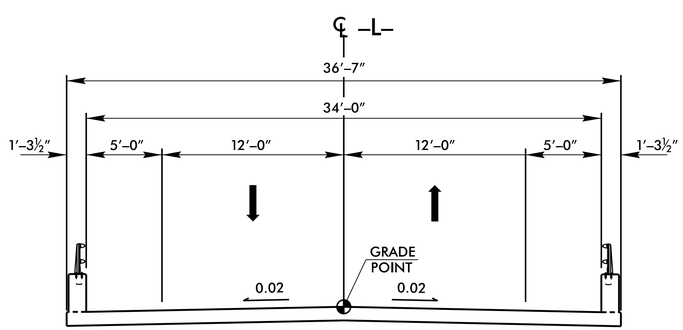

TYPICAL SECTION ON STRUCTURE

FROM -L- STA. 20+12.38 TO STA. 21+42.63

NOTE: USE BICYCLE SAFE 54" HIGH BRIDGE RAIL.

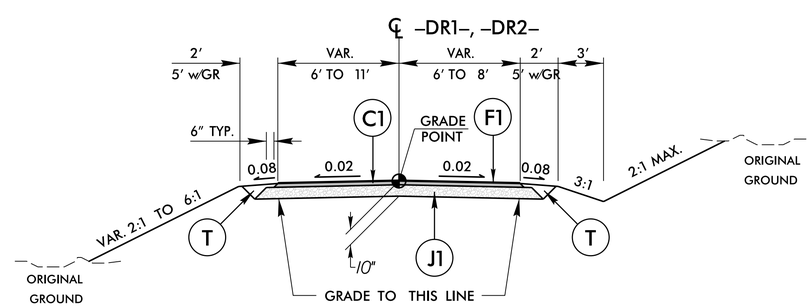

TYPICAL SECTION NO. 3

FROM -DR1- STA. 10+50.00 TO STA. 12+90.73
FROM -DR2- STA. 10+12.00 TO STA. 11+50.00

USE -L- PAVEMENT DESIGN AT THE FOLLOWING LOCATIONS:
FROM -DR1- STA. 12+80.00 TO 12+90.73
FROM -DR2- STA. 10+12.00 TO 10+18.00

SHOULDER BERM GUTTER DETAIL

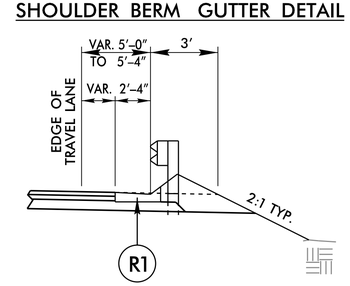

USE SHOULDER BERM GUTTER DETAIL IN CONJUNCTION WITH TYP. SEC. NO. 2

FROM -L- STA. 19+79.00 TO 19+95.25 LT.
FROM -L- STA. 19+79.00 TO 20+07.63 RT.

3/28/2017
12:36:06 PM
C:\pwworking\proj\R5771_Rdy_typ.dgn

DocuSign Envelope ID: 2AB5A403-0F4F-439E-AF33-A577D32F465

STATE OF NORTH CAROLINA
DEPT. OF TRANSPORTATION
DIVISION OF HIGHWAYS
RALEIGH, N.C.

ENGLISH DETAIL DRAWING FOR
STRUCTURE ANCHOR UNITS
GUARDRAIL ANCHOR UNIT, TYPE III FOR ATTACHMENT TO RAIL ON BRIDGE - SUB REGIONAL TIER

SHEET 2 OF 7
862d03

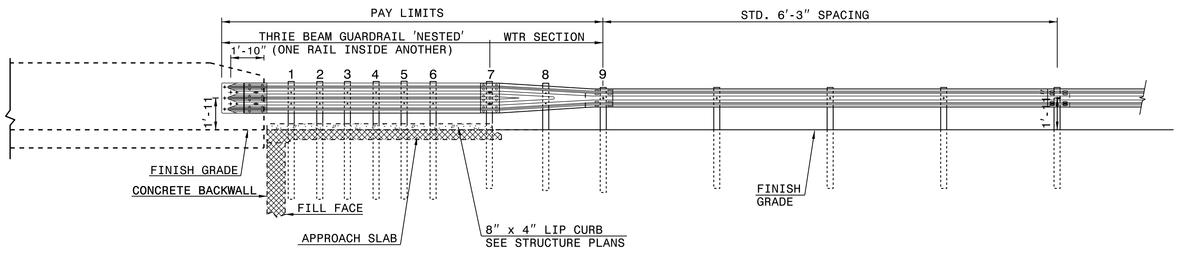

ELEVATION

NOTE:
**POST NOT REQUIRED FOR SKEW ANGLES GREATER THAN 150° OR LESS THAN 30° UNLESS OTHERWISE DIRECTED BY THE ENGINEER.
*THE DISTANCE FROM END OF BRIDGE RAIL TO CENTER LINE OF THE FIRST POST SHOULD BE 11½" IF CONCRETE BACKWALL IS NOT PRESENT.
-SHOULDER BERM GUTTER MUST BE INSTALLED TO THE LIMITS 8" x 4" LIP CURB IS SHOWN IF ANCHOR UNIT IS NOT ADJACENT TO AN APPROACH SLAB.
-MEASURE GUARDRAIL HEIGHT FROM THE TOP OF ADJACENT SURFACE (SHOULDER, BERM, OR GUTTER).
-LAP JOINTS IN THE DIRECTION OF TRAFFIC FLOW.
-SEE SHEET 3 FOR POST SECTIONS 1 THRU 9.

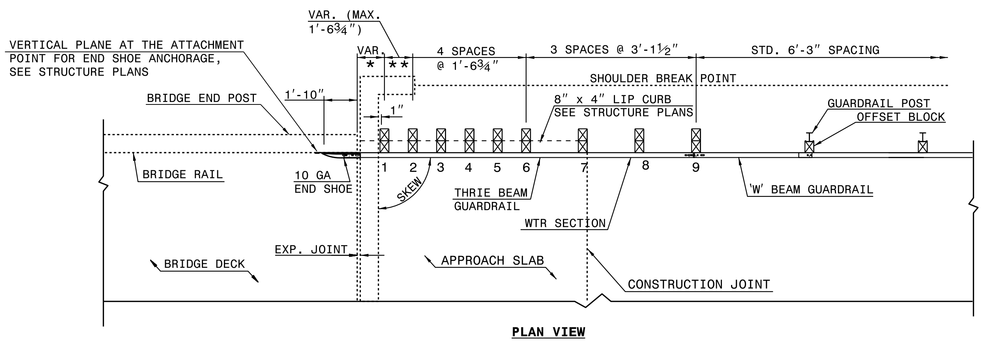

PLAN VIEW

GUARDRAIL ANCHOR UNIT, TYPE III FOR ATTACHMENT TO RAIL ON BRIDGE - SUB REGIONAL TIER

STATE OF NORTH CAROLINA
DEPT. OF TRANSPORTATION
DIVISION OF HIGHWAYS
RALEIGH, N.C.

ENGLISH DETAIL DRAWING FOR
STRUCTURE ANCHOR UNITS
GUARDRAIL ANCHOR UNIT, TYPE III FOR ATTACHMENT TO RAIL ON BRIDGE - SUB REGIONAL TIER

SHEET 2 OF 7
862d03

STATE OF NORTH CAROLINA
DEPT. OF TRANSPORTATION
DIVISION OF HIGHWAYS
RALEIGH, N.C.

ENGLISH DETAIL DRAWING FOR
STRUCTURE ANCHOR UNITS
GUARDRAIL ANCHOR UNIT, TYPE III

SHEET 3 OF 7
862d03

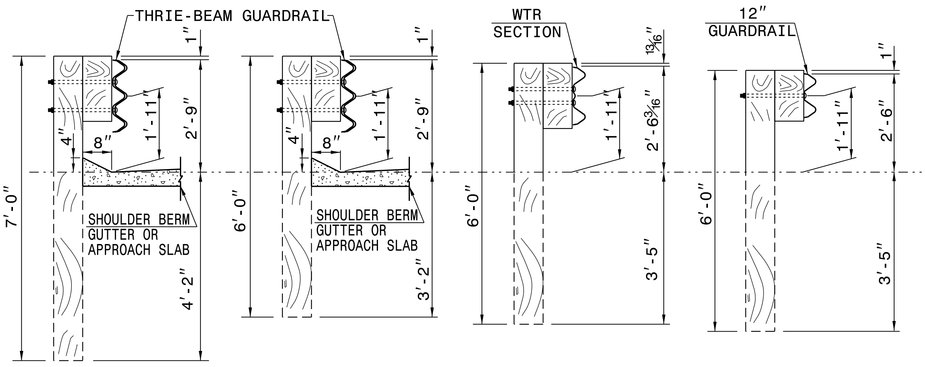

SECTION OF THRIE BEAM POSTS 1 THRU 6 | **SECTION OF THRIE BEAM POST 7** | **SECTION OF WTR BEAM POST 8** | **SECTION OF 'W' BEAM POST 9**

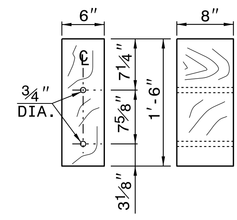

THRIE BEAM OFFSET BLOCK

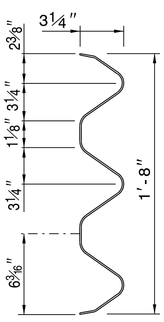

THRIE-BEAM SECTION

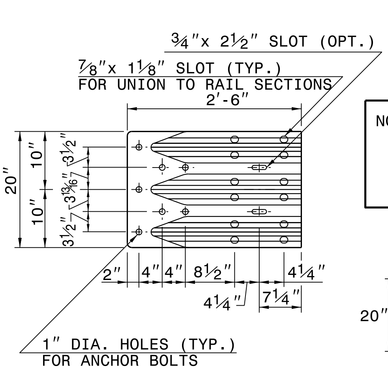

END SHOE

NOTE: THE MID POST AND OFFSET BLOCK OF THE WTR SECTION WILL REQUIRE SPECIAL BOLT HOLE DRILLING IN THE THRIE BEAM OFFSET BLOCK AND LINE POST.

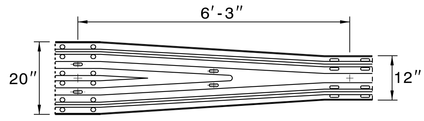

WTR SECTION
ELEVATION VIEW

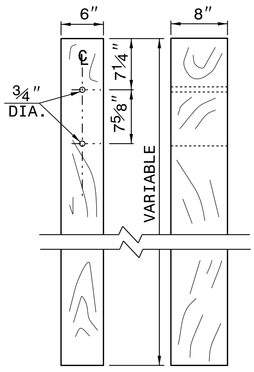

THRIE BEAM LINE POST

STATE OF NORTH CAROLINA
DEPT. OF TRANSPORTATION
DIVISION OF HIGHWAYS
RALEIGH, N.C.

ENGLISH DETAIL DRAWING FOR
STRUCTURE ANCHOR UNITS
GUARDRAIL ANCHOR UNIT, TYPE III

SHEET 3 OF 7
862d03

CONTRACT STANDARDS AND DEVELOPMENT UNIT
Office 919-707-6950 FAX 919-250-4119

SEE TITLE BLOCK

ORIGINAL BY: J. HOWERTON DATE: 06-22-12
MODIFIED BY: DATE:
CHECKED BY: DATE:
FILE SPEC.:

DOCUMENT NOT CONSIDERED FINAL UNLESS ALL SIGNATURES COMPLETED

DocuSigned by: J. Howerton
DEP-B3117D0C0A0A...
3/28/2017

NORTH CAROLINA PROFESSIONAL SEAL 022966 ENGINEER J. S. Howerton

PROJECT REFERENCE NO. R-5771
SHEET NO. 2C-1

4/04/06

COMPUTED BY: RWP	DATE: 03-03-17
CHECKED BY: KSH	DATE: 03-16-17

STATE OF NORTH CAROLINA
DIVISION OF HIGHWAYS

PROJECT REFERENCE NO.	SHEET NO.
R-5771	3B-1

M A Engineering Consultants, Inc. NC License: F-0160
598 East Chatham Street Suite 137 Cary, NC 27511
Phone: 919.297.0220 Fax: 919.297.0221

SUMMARY OF EARTHWORK

IN CUBIC YARDS

LOCATION	UNCLASSIFIED EXCAVATION	UNDERCUT	EMBT+%	BORROW	WASTE
-L- 12+50.00 TO 20+20 (BEGIN BRIDGE)	1,692	750	6,477	4,785	750
-L- 21+40 (END BRIDGE) TO 25+50.00	79		9,258	9,179	
-DR1- 10+50.00 TO 12+90.73	110		454	344	
-DR2- 10+12.00 TO 11+50.00	13		1,103	1,090	
TOTAL	1,894	750	17,292	15,398	750
ESTIMATED LOSS DUE TO CLEARING AND GRUBBING	300			300	
ESTIMATED SHOULDER MATERIAL			322	322	
UNDERCUT (CONTINGENCY UNDERCUT FOR EMBANKMENT STABILITY AND SUBGRADE STABILITY TO BE USED AT THE DISCRETION OF THE ENGINEER)		750	863	863	750
PROJECT TOTAL	2,194	1,500	18,477	16,883	1,500
ESTIMATED 5% TO REPLACE TOPSOIL ON BORROW PIT				845	
GRAND TOTAL	2,194	1,500	18,477	17,728	1,500
SAY	2,200	1,500		17,800	
ESTIMATED DRAINAGE DITCH EXCAVATION = 450 CY					
THE FOLLOWING CONTINGENCY QUANTITIES ARE PER THE "ROADWAY SUBSURFACE INVESTIGATION - RECOMMENDATIONS" LETTER DATED MARCH 15, 2017 AND ARE TO BE USED AT THE DISCRETION OF THE ENGINEER:					
SELECT GRANULAR MATERIAL = 2,700 CY					
SELECT GRANULAR MATERIAL (CLASS III) = 150 CY					
GEOTEXTILE FOR SOIL STABILIZATION = 2,700 SY					

APPROXIMATE QUANTITIES ONLY. CLEARING AND GRUBBING, UNCLASSIFIED EXCAVATION, FINE GRADING, AND REMOVAL OF EXISTING PAVEMENT WILL BE PAID FOR AT THE CONTRACT LUMP SUM PRICE FOR "GRADING".

NOTE: Earthwork quantities are calculated by the Roadway Design Unit. These earthwork quantities are based in part on subsurface data provided by the Geotechnical Engineering Unit.

SUMMARY OF PAVEMENT REMOVAL

IN SQUARE YARDS

LOCATION	ASPHALT REMOVAL	ASPHALT BREAK-UP	CONCRETE REMOVAL	CONCRETE BREAK-UP
-L- 13+50 TO 14+09	148			
-L- 23+38 TO 23+67	32			
TOTAL	180			
SAY	185			

NOTE: Invert Elevations are for Bid Purposes only and shall not be used for project construction stakeout. See "Standard Specifications For Roads and Structures, Section 300-5".

SUB-REGIONAL & REGIONAL LIST OF PIPES, ENDWALLS, ETC. (FOR PIPES 48" & UNDER)

STATION / SIZE / THICKNESS OR GAUGE	LOCATION (LT,RT, OR CL)	STRUCTURE NO. FROM	STRUCTURE NO. TO	TOP ELEVATION	INVERT ELEVATION	INVERT ELEVATION	SLOPE CRITICAL	DRAINAGE PIPE (RCP, CSP, CAAP, HDPE, or PVC) 12"	15"	18"	24"	30"	36"	42"	48"	DO NOT USE RCP	DO NOT USE CSP	DO NOT USE CAAP	DO NOT USE HDPE	C.S. PIPE 15" .064	18" .064	24" .064	30" .079	36" .079	42" .109	48" .109	R.C. PIPE, CLASS III (UNLESS OTHERWISE NOTED) 15"	18"	24"	30"	36"	42"	48"		15" RCP-IV	30" RCP-IV	
-L- 18+60	CL	401			2045.1	2044.8																														144	
-L- 19+92	RT	402		2063.8	2059.8																																
		402	403		2059.8	2058.8																													32		
-L- 19+92	LT	403		2063.8	2058.8																																
-L- 19+84 (OUT)	LT	403	404		2058.8	2049.4			36																												
-DR1- 10+58	CL	405			2053.5	2052.0																													40		
-L- 23+16	RT	407		2076.3	2071.3																																
-L- 22+25 (OUT)	RT	407	406		2071.3	2057.9																	92														
-DR2- 11+10 (IN)	LT	408	407		2074.8	2073.4					20																										
-L- 16+95	LT	409																																			
-L- 16+95	RT	410																																			
-L- 18+65	RT	411																														32					
TOTAL									36		20												92									32			72	144	

STATION	*** R. C. PIPE CULVERTS, CONTRACTOR DESIGN PIPE		15" SIDE DRAIN PIPE	18" SIDE DRAIN PIPE	24" SIDE DRAIN PIPE	ENDWALLS STD. 838.01, STD. 838.11 OR STD. 838.80 (UNLESS NOTED OTHERWISE) CU. YDS. R.C.P.	C.S.P.	QUANTITIES FOR DRAINAGE STRUCTURES * TOTAL L.F. FOR PAY QUANTITY SHALL BE COL. 'A' + (1.3 X COL.'B') PER EACH (0' THRU 5.0')	LIN. *FT. A 5.0' THRU 10.0'	LIN. *FT. B 10.0' AND ABOVE	C.B. STD. 840.01 OR STD. 840.02	FRAME, GRATES AND HOOD STANDARD 840.03 TYPE OF GRATE E	F	G		CONCRETE TRANSITIONAL SECTION CATCH BASIN	DROP INLET	C.B. STD. 840.04 OR 840.05	D.I. STD. 840.14 OR STD. 840.15	D.I. FRAME & GRATE STD. 840.16	G.D.I. TYPE "A" STD. 840.17 OR 840.26	G.D.I. TYPE "B" STD. 840.18 OR 840.27	G.D.I. TYPE "D" STD. 840.19 OR 840.28	T.B.D.I. STD. 840.35	J.B. STD. 840.31 OR 840.32		G.D.I. (N.S.) FRAME WITH GRATE STD. 840.24	G.D.I. (N.S.) FRAME WITH TWO GRATES STD. 840.24	G.D.I. (N.S.) FRAME WITH TWO GRATES STD. 840.29	M.H. FRAME & COVER STD. 840.54				DRAINAGE PIPE ELBOWS NO. & SIZE	CORR. STEEL ELBOWS NO. & SIZE	CONC. COLLARS CL. "B" C.Y. STD 840.72	CONC. & BRICK PIPE PLUG, C.Y. STD. 840.71	PIPE REMOVAL LIN.FT.	REMARKS
-L- 18+60						3.1																																44	USE 2 @ 72' EACH, BURIED 6"
-L- 19+92								1																1					1										
-L- 19+92								1																1					1										
-L- 19+84 (OUT)																																		2@15"					
-DR1- 10+58																																							
-L- 23+16								1										1																				35	REMOVE 35' OF EX. 24" HDPE (-L- 23+88)
-L- 22+25 (OUT)																																			2@30"				
-DR2- 11+10 (IN)																																							
-L- 16+95			36																																				
-L- 16+95			36																																				
-L- 18+65						4.5																																	BURIED 9"
TOTAL			72			7.6		3										1						2					2					2@15"	2@30"			79	

ABBREVIATIONS

C.B.	CATCH BASIN
N.D.I.	NARROW DROP INLET
D.I.	DROP INLET
G.D.I.	GRATED DROP INLET
G.D.I. (N.S.)	GRATED DROP INLET (NARROW SLOT)
J.B.	JUNCTION BOX
M.H.	MANHOLE
T.B.D.I.	TRAFFIC BEARING DROP INLET
T.B.J.B.	TRAFFIC BEARING JUNCTION BOX

GUARDRAIL SUMMARY

"N" = DISTANCE FROM EDGE OF LANE TO FACE OF GUARDRAIL.
TOTAL SHOULDER WIDTH = DISTANCE FROM EDGE OF TRAVEL LANE TO SHOULDER BREAK POINT.
FLARE LENGTH = DISTANCE FROM LAST SECTION OF PARALLEL GUARDRAIL TO END OF GUARDRAIL.

W = TOTAL WIDTH OF FLARE FROM BEGINNING OF TAPER TO END OF GUARDRAIL.
G = GATING IMPACT ATTENUATOR TYPE 350
NG = NON-GATING IMPACT ATTENUATOR TYPE 350

SURVEY LINE	BEG. STA.	END STA.	LOCATION	LENGTH STRAIGHT	LENGTH SHOP CURVED	LENGTH DOUBLE FACED	WARRANT POINT APPROACH END	WARRANT POINT TRAILING END	"N" DIST. FROM E.O.L.	TOTAL SHOUL. WIDTH	FLARE LENGTH APPROACH END	FLARE LENGTH TRAILING END	W APPROACH END	W TRAILING END	ANCHORS			GRAU 350 TL-2		TYPE III				IMPACT ATTENUATOR TYPE 350 EA	G	NG	SINGLE FACED GUARDRAIL	REMOVE EXISTING GUARDRAIL	REMOVE AND STOCKPILE EXISTING GUARDRAIL	REMARKS
-L-	18+01	20+21	RT	168.75				19+00	5' - 6'	8' - 9'		50'		1'				1		1										
-L-	18+41	20+09	LT	218.75			19+00		5' - 6'	8' - 9'	50'		1'					1		1										
-L-	21+33	22+28	LT	93.75			22+00		5' - 6'	8' - 9'	50'		1'					1		1										GUARDRAIL SHORTENED DUE TO DRIVEWAY -DR1-
-L- /-DR2-	-L- 21+46 RT	-DR2- 10+90 RT	NA	131.25	62.50			23+00	5' - 6'	8' - 9'		50'		1'				1		1										GUARDRAIL SHORTENED DUE TO DRIVEWAY -DR2-
			TOTAL (LF):	612.50	62.50									TOTAL (EA)				4		4										
			TOTAL DEDUCTION FOR ANCHOR UNITS (LF):	175.00	0									DEDUCTION PER TYPE (LF)				25.00		18.75										
			TOTAL GUARDRAIL LENGTH (LF):	437.50	62.50									TOTAL DEDUCTION PER TYPE (LF)				100.00		75.00										
			SAY (LF):	450.00	75.00		ADDITIONAL GUARDRAIL POSTS: SAY 5 EA							TOTAL DEDUCTION (LF)					175.00											

3/28/2017
r:\roadway\proj\R5771_rdy_psh03B-1_sum.dgn
4:18:51 PM

COMPUTED BY: Hamm, J. R. DATE: 03/16/2017		PROJECT NO.	SHEET NO.
CHECKED BY: Hunsberger, W. S. DATE: 03/16/2017		R-5771	3G-1

STATE OF NORTH CAROLINA
DIVISION OF HIGHWAYS

SUMMARY OF SUBSURFACE DRAINAGE

LINE	Station	Station	Location LT/RT/CL	Drain Type* UD	LF
CONTINGENCY					
				TOTAL LF:	0

*UD = Underdrain
*BD = Blind Drain
*SD = Subsurface Drain

SUMMARY OF BRIDGE WAITING PERIODS

Bridge Description	End Bent/ Bent No.	MONTHS
Bridge # 107 over McDowell Creek	End Bent 1	2
	End Bent 2	2

SUMMARY OF SETTLEMENT GAUGES

Gauge No.	LINE	Approx. Station	Approx. Offset
1	-L-	19+75	RT
1	-L-	21+75	RT
		TOTAL GAUGES (EACH):	2

SUMMARY OF ROCK PLATING

LINE	Beginning Slope	Approx. Station	Ending Slope	Approx. Station	Location LT/RT	Rock Plating Detail No. 1/2/3/4	Riprap Class* 1/2/B	SY
							TOTAL SY:	0

*Use Class 1, 2 or B riprap if riprap class is not shown for rock plating location.

SUMMARY OF EMBANKMENT WAITING PERIODS

LINE	Station	Station	MONTHS
-L-	18+00	20+30	2
-L-	21+12	21+76	2

SUMMARY OF SURCHARGES AND SURCHARGE WAITING PERIODS

LINE	Station	Station	Surcharge Height FT	MONTHS

SUMMARY OF REINFORCED SOIL SLOPES (RSS)

LINE	Beginning Slope	Approx. Station	Ending Slope	Approx. Station	Location LT/RT	SY
					TOTAL SY:	0

SUMMARY OF GEOTEXTILE FOR PAVEMENT STABILIZATION

LINE	Station	Station	SY
CONTINGENCY			
		TOTAL SY:	0

SUMMARY OF AGGREGATE SUBGRADE/STABILIZATION

LINE	Station	Station	Aggregate Type ASU/AST	Aggregate Thickness INCHES	Shallow Undercut CY	Class IV Subgrade Stabilization TONS	Geotextile for Soil Stabilization SY	Stabilizer Aggregate TONS	Class IV Aggregate Stabilization TONS
CONTINGENCY									
				TOTAL CY/TONS/SY:	0	0	0*	0	0

ASU = Aggregate Subgrade, AST = Aggregate Stabilizatior
*Total

DocuSign Envelope ID: 80037108-2E4D-4A39-BE63-BDE673EDF3EA

PROJECT REFERENCE NO.	SHEET NO.
R-5771	4
R/W SHEET NO.	

ROADWAY DESIGN ENGINEER
NORTH CAROLINA PROFESSIONAL SEAL 19814 ENGINEER
Robert W. Hoffman, Jr., P.E.
06CF5D6E6E7E1AE...
3/28/2017

HYDRAULICS ENGINEER
NORTH CAROLINA PROFESSIONAL SEAL 20117 ENGINEER
Scott M. Bradshaw
461B10842389A66...
3/28/2017

DOCUMENT NOT CONSIDERED FINAL UNLESS ALL SIGNATURES COMPLETED

M A Engineering Consultants, Inc.
NC License: F-0160
598 East Chatham Street Suite 137 Cary, NC 27511
Phone: 919.297.0220 Fax: 919.297.0221

FOR –L–, –DR1–, & –DR2– PROFILES, SEE SHEET NO. 5

FOR STRUCTURE PLANS, SEE SHEET S-1 THRU S-29

SE NOTE
TRANSITION SUPERELEVATION USING 5' INCREMENTS (NOT SHOWN FOR CLARITY)

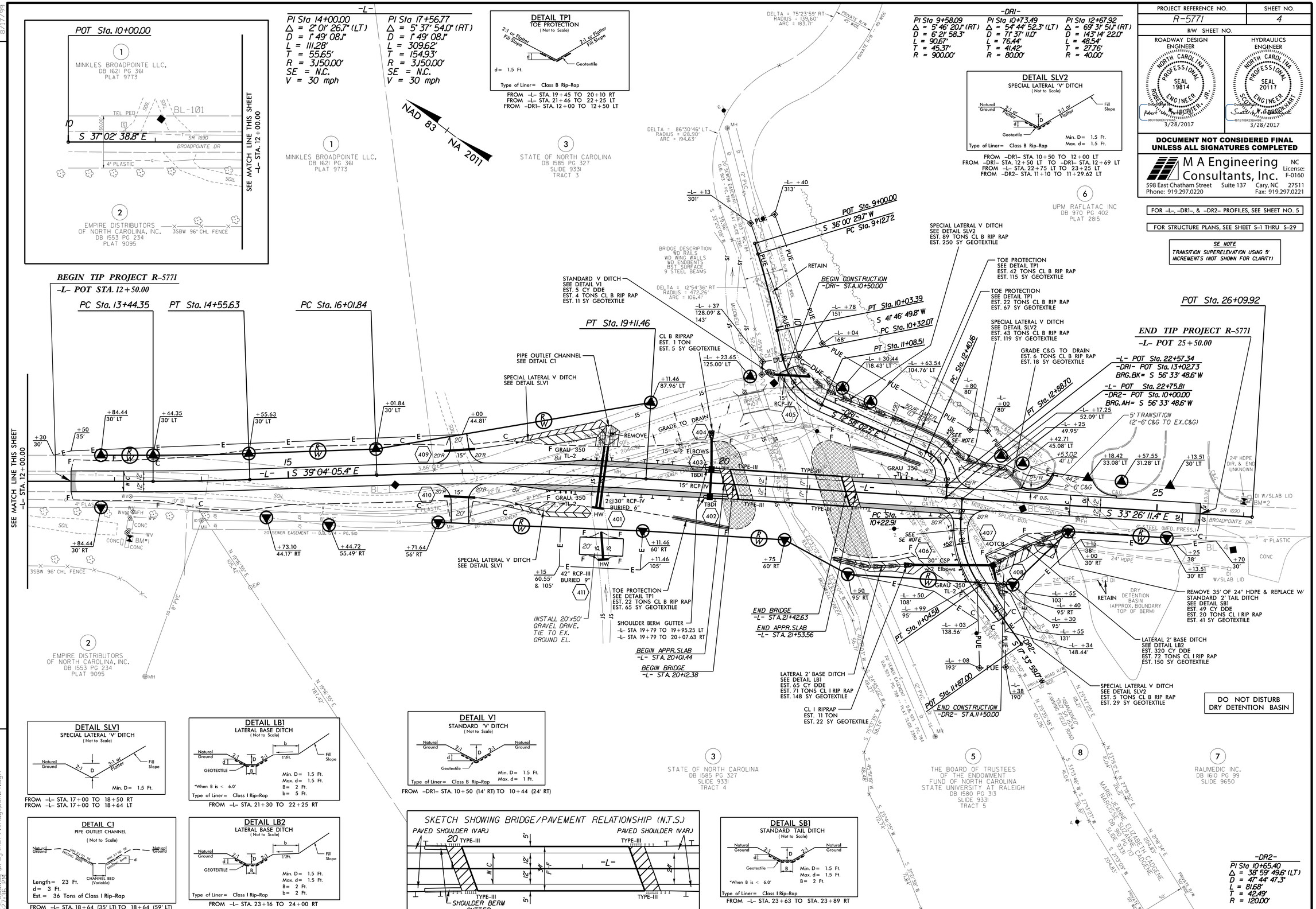

DocuSign Envelope ID: 80037108-2E4D-4A39-BE63-BDE673EDF3EA

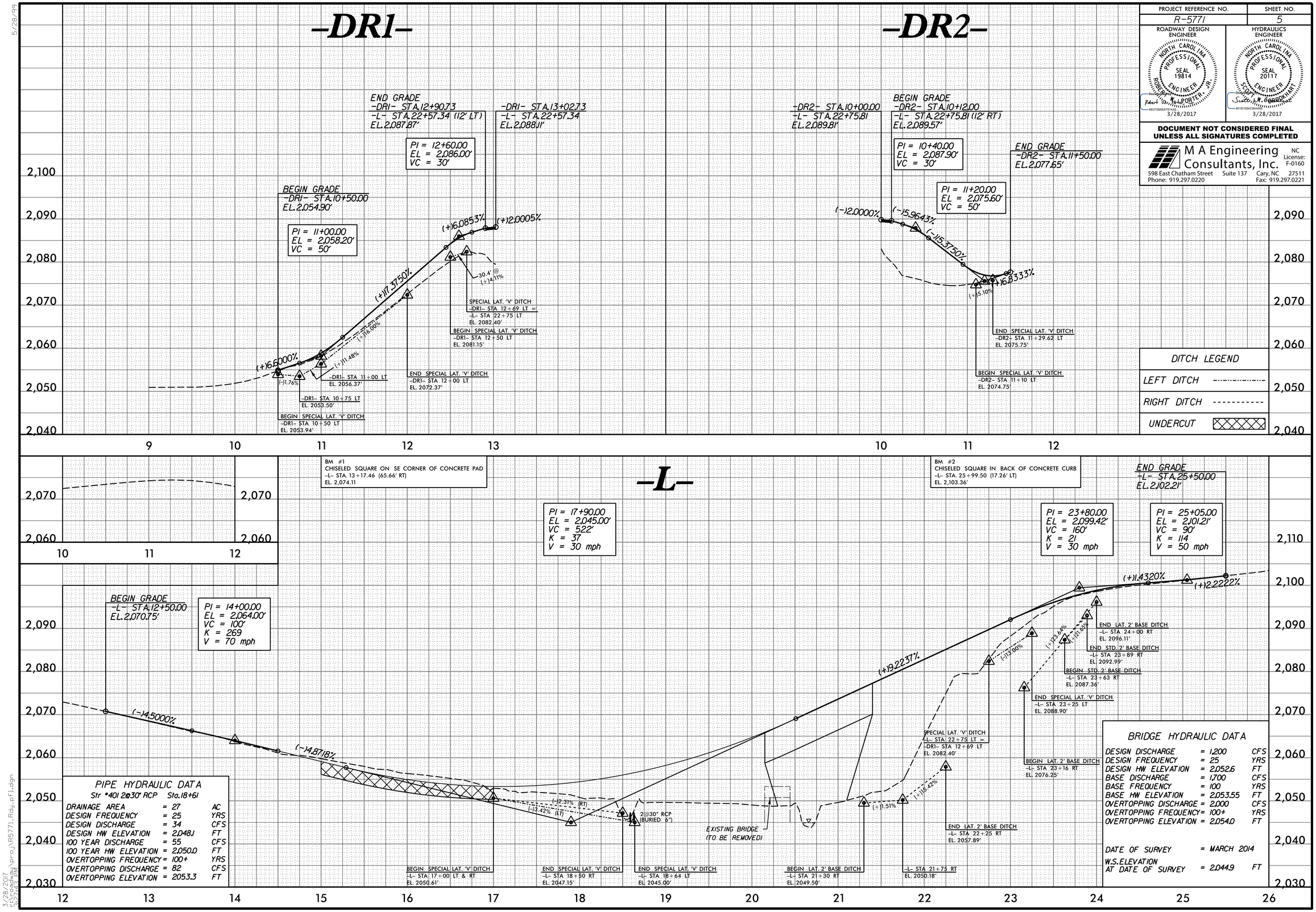

PROJECT REFERENCE NO.	SHEET NO.
R-5771	5

ROADWAY DESIGN ENGINEER
NORTH CAROLINA PROFESSIONAL SEAL 19814 ENGINEER ROBERT W. HUNTSPORTER JR.
DocuSigned by: Robert W. Huntsporter Jr.
98CF5B6E8E7147...
3/28/2017

HYDRAULICS ENGINEER
NORTH CAROLINA PROFESSIONAL SEAL 20117 ENGINEER SCOTT M. GROOKKART
DocuSigned by: Scott M. Grookkart
4F1B1D6C2B3A4DF...
3/28/2017

DOCUMENT NOT CONSIDERED FINAL UNLESS ALL SIGNATURES COMPLETED

M A Engineering Consultants, Inc.
NC License: F-0160
598 East Chatham Street Suite 137 Cary, NC 27511
Phone: 919.297.0220 Fax: 919.297.0221

5/28/99

3/28/2017
C:\pwworking\proj\R5771_Rdy_pfl.dgn
$$$$$$.pm

DocuSign Envelope ID: 02E0D176-D589-4AAD-9AB6-D7EB2DD8B804

PROJECT: R-5771

PROJ. REFERENCE NO.	SHEET NO.
R-5771	TMP-1

RAMEY KEMP & ASSOCIATES, INC.
Transportation Engineers
5808 Faringdon Place, Suite 100
Raleigh, North Carolina 27609
919-872-5115 Tel, 919-878-5416 Fax.
www.rameykemp.com
NC License No. C-0910

STATE OF NORTH CAROLINA
DIVISION OF HIGHWAYS

TRANSPORTATION MANAGEMENT PLAN

HENDERSON COUNTY

BRIDGE NO. 107 ON SR 1690 (BROADPOINTE DRIVE) OVER McDOWELL CREEK

ROADWAY STANDARD DRAWINGS

THE FOLLOWING ROADWAY STANDARDS AS SHOWN IN "ROADWAY STANDARD DRAWINGS" - PROJECT SERVICES UNIT - N.C. DEPARTMENT OF TRANSPORTATION - RALEIGH, N.C., DATED JANUARY 2012 ARE APPLICABLE TO THIS PROJECT AND BY REFERENCE HEREBY ARE CONSIDERED A PART OF THESE PLANS:

STD. NO.	TITLE
1101.03	TEMPORARY ROAD CLOSURES
1101.11	TRAFFIC CONTROL DESIGN TABLES
1110.01	STATIONARY WORK ZONE SIGNS
1145.01	BARRICADES
1205.01	PAVEMENT MARKINGS - LINE TYPES AND OFFSETS
1205.02	PAVEMENT MARKINGS - TWO LANE AND MULTILANE ROADWAYS
1205.12	PAVEMENT MARKINGS - BRIDGES
1261.01	GUARDRAIL AND BARRIER DELINEATORS - INSTALLATION SPACING
1261.02	GUARDRAIL AND BARRIER DELINEATORS - TYPES AND MOUNTING
1262.01	GUARDRAIL END DELINEATION

INDEX OF SHEETS

SHEET NO.	TITLE
TMP-1	ROADWAY STANDARD DRAWINGS. INDEX OF SHEETS AND LEGEND
TMP-2	GENERAL NOTES AND PHASING
TMP-3	DETOUR SIGNING

LEGEND

GENERAL

- DIRECTION OF TRAFFIC FLOW
- DIRECTION OF PEDESTRIAN TRAFFIC FLOW
- EXIST. PVMT.
- NORTH ARROW
- PROPOSED PVMT.
- WORK AREA
- REMOVAL

TRAFFIC CONTROL DEVICES

- BARRICADE (TYPE III)
- CONE
- DRUM — SKINNY DRUM — TUBULAR MARKER
- TEMPORARY CRASH CUSHION
- FLASHING ARROW PANEL (TYPE C)
- FLAGGER
- LAW ENFORCEMENT
- TRUCK MOUNTED IMPACT ATTENUATOR (TMIA)
- CHANGEABLE MESSAGE SIGN

TEMPORARY SIGNING

- PORTABLE SIGN
- STATIONARY SIGN
- STATIONARY OR PORTABLE SIGN

PAVEMENT MARKERS

- CRYSTAL/CRYSTAL
- CRYSTAL/RED
- YELLOW/YELLOW

PAVEMENT MARKING SYMBOLS

- PAVEMENT MARKING SYMBOLS

DOCUMENT NOT CONSIDERED FINAL UNLESS ALL SIGNATURES COMPLETED

APPROVED: William J. Hamilton DATE: 3/22/2017
A96660704648484

SEAL

NORTH CAROLINA PROFESSIONAL SEAL 32396 ENGINEER WILLIAM J. HAMILTON

DIVISION OF HIGHWAYS STATE OF NORTH CAROLINA DEPARTMENT OF TRANSPORTATION WORK ZONE TRAFFIC CONTROL

ROADWAY STANDARD DRAWINGS, INDEX OF SHEETS & LEGEND

DocuSign Envelope ID: 02E0D176-D589-4AAD-9AB6-D7EB2DD8B804

PROJ. REFERENCE NO.	SHEET NO.
R-5771	TMP-2

RAMEY KEMP & ASSOCIATES, INC.
Transportation Engineers
5808 Farlington Place, Suite 100
Raleigh, North Carolina 27609
919-872-5115 Tel. 919-878-8416 Fax.
www.rameykemp.com
NC License No. C-0910

GENERAL NOTES

CHANGES MAY BE REQUIRED WHEN PHYSICAL DIMENSIONS IN THE DETAIL DRAWING, STANDARD DETAILS AND ROADWAY DETAILS ARE NOT ATTAINABLE TO MEET FIELD CONDITIONS OR RESULT IN DUPLICATE OR UNDESIRED OVERLAPPING OF DEVICES. MODIFICATION MAY INCLUDE: MOVING, SUPPLEMENTING, COVERING, OR REMOVAL OF DEVICES AS DIRECTED BY THE ENGINEER.

THE FOLLOWING GENERAL NOTES APPLY AT ALL TIMES FOR THE DURATION OF THE CONSTRUCTION PROJECT EXCEPT WHEN OTHERWISE NOTED IN THE PLAN OR DIRECTED BY THE ENGINEER.

TRAFFIC PATTERN ALTERATIONS

A) NOTIFY THE ENGINEER TWENTY ONE (21) CALENDAR DAYS PRIOR TO ANY TRAFFIC PATTERN ALTERATION SIGNING.

SIGNING

B) INSTALL ADVANCED WORK ZONE WARNING SIGNS WHEN WORK IS WITHIN 40 FT FROM THE EDGE OF TRAVEL LANE AND NO MORE THAN THREE (3) DAYS PRIOR TO THE BEGINNING OF CONSTRUCTION.

C) PROVIDE SIGNING AND DEVICES REQUIRED TO CLOSE THE ROAD ACCORDING TO THE ROADWAY STANDARD DRAWINGS AND TRAFFIC CONTROL PLANS.

PROVIDE SIGNING REQUIRED FOR THE OFF-SITE DETOUR ROUTE AS SHOWN IN THE TRAFFIC CONTROL PLANS.

D) COVER OR REMOVE ALL SIGNS AND DEVICES REQUIRED TO CLOSE THE ROAD WHEN ROAD CLOSURE IS NOT IN OPERATION.

COVER OR REMOVE ALL SIGNS AND DEVICES REQUIRED FOR THE OFF-SITE DETOUR WHEN THE DETOUR IS NOT IN OPERATION.

E) ENSURE ALL NECESSARY SIGNING IS IN PLACE PRIOR TO ALTERING ANY TRAFFIC PATTERN.

F) PLACE TYPE III BARRICADES, WITH "ROAD CLOSED" SIGN R11-2 ATTACHED, OF SUFFICIENT LENGTH TO CLOSE ENTIRE ROAD.

PAVEMENT MARKINGS AND MARKERS

G) INSTALL PAVEMENT MARKINGS ON THE FINAL SURFACE AS FOLLOWS:

ROAD NAME	MARKING	MARKERS
SR 1690 (BROADPOINTE DRIVE)	PAINT	NONE

H) TIE PROPOSED PAVEMENT MARKING LINES TO EXISTING PAVEMENT MARKING LINES.

I) REMOVE/REPLACE ANY CONFLICTING/DAMAGED PAVEMENT MARKINGS.

J) PASSING ZONE WILL BE DETERMINED IN THE FIELD AND MUST BE APPROVED BY THE ENGINEER.

PHASING

PHASE I

PRIOR TO ANY CONSTRUCTION OPERATIONS, PLACE AND COVER OFF-SITE DETOUR SIGNING AS SHOWN ON TMP-3 AND IN ACCORDANCE WITH RSD 1101.03 (SHEET 1 OF 9).

PHASE II

USING OFF-SITE DETOUR, UNCOVER DETOUR SIGNS, CLOSE -L- (SR 1690) TO TRAFFIC AND CONSTRUCT BRIDGE, APPROACHES AND ROADWAY UP TO AND INCLUDING FINAL LAYER OF SURFACE COURSE.

PHASE III

UPON COMPLETION OF BRIDGE, APPROACHES AND ROADWAY, PLACE FINAL PAVEMENT MARKING IN ACCORDANCE WITH RSD 1205.02 AND 1205.12. REMOVE BARRICADES AND DETOUR SIGNS AND OPEN -L- (SR 1690) TO TRAFFIC.

DOCUMENT NOT CONSIDERED FINAL UNLESS ALL SIGNATURES COMPLETED

APPROVED: William J. Hamilton DATE: 7/22/2017

SEAL

NORTH CAROLINA PROFESSIONAL SEAL 32396 ENGINEER WILLIAM J. HAMILTON

DIVISION OF HIGHWAYS STATE OF NORTH CAROLINA DEPARTMENT OF TRANSPORTATION WORK ZONE TRAFFIC CONTROL

GENERAL NOTES AND PHASING

DocuSign Envelope ID: 02E0D176-D589-4AAD-9AB6-D7EB2DD8B804

PROJ. REFERENCE NO.	SHEET NO.
R-5771	TMP-3

RAMEY KEMP & ASSOCIATES, INC.
Transportation Engineers
5808 Faringdon Place, Suite 100
Raleigh, North Carolina 27609
919-872-5115 Tel. 919-878-0416 Fax.
www.ramey-kemp.com
NC License No. C-0910

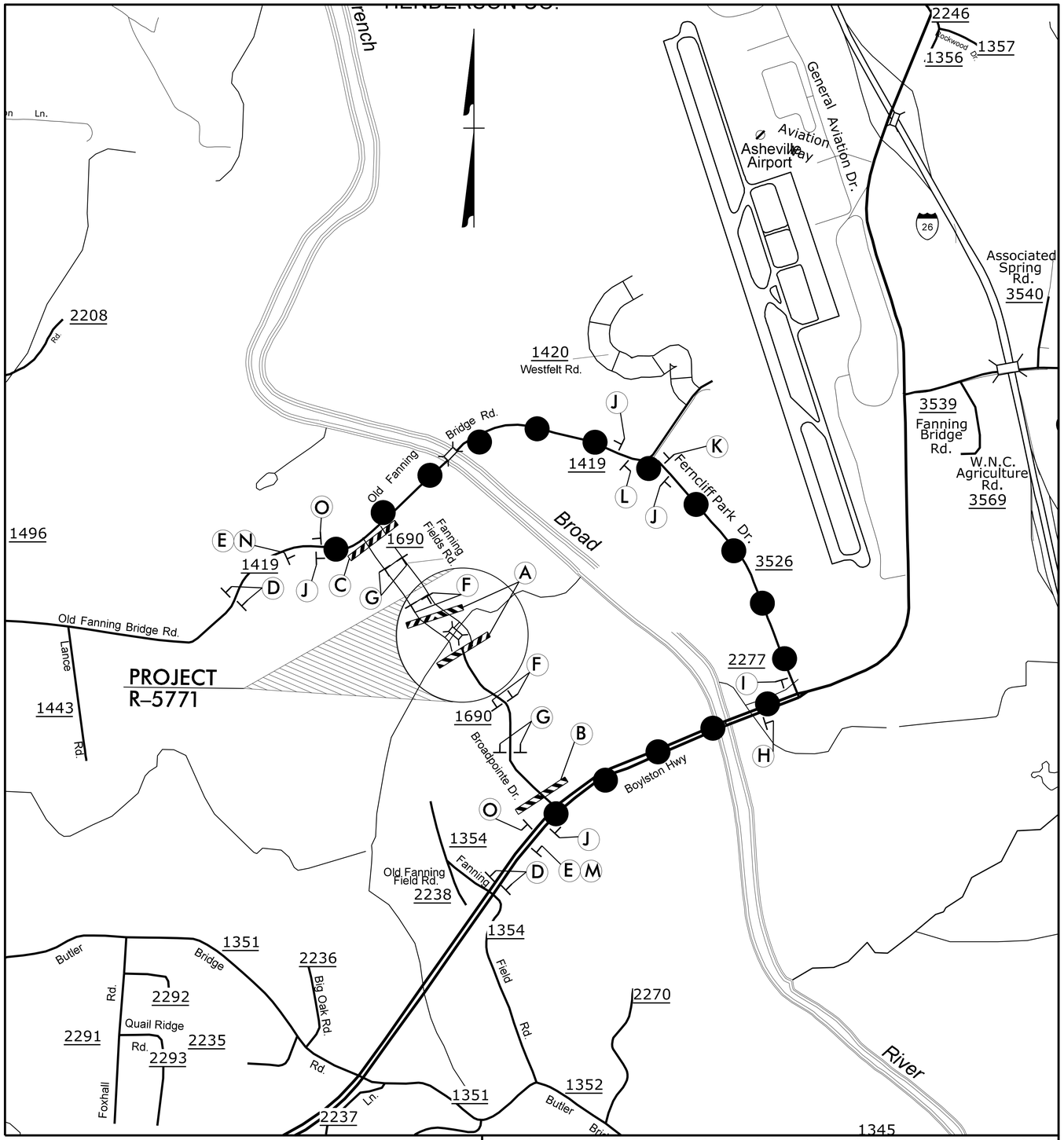

SEE RSD 1101.03, SHEET 1 OF 9, FOR SIGN DISTANCE AND APPLICABLE NOTES.

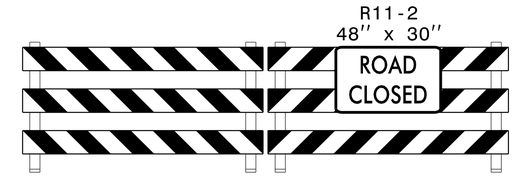

TYPE III BARRICADE(S)
(A)

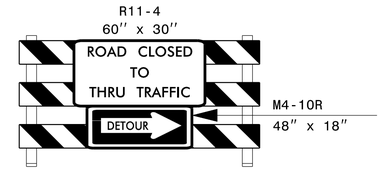

TYPE III BARRICADE
(B)

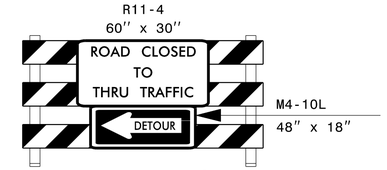

TYPE III BARRICADE
(C)

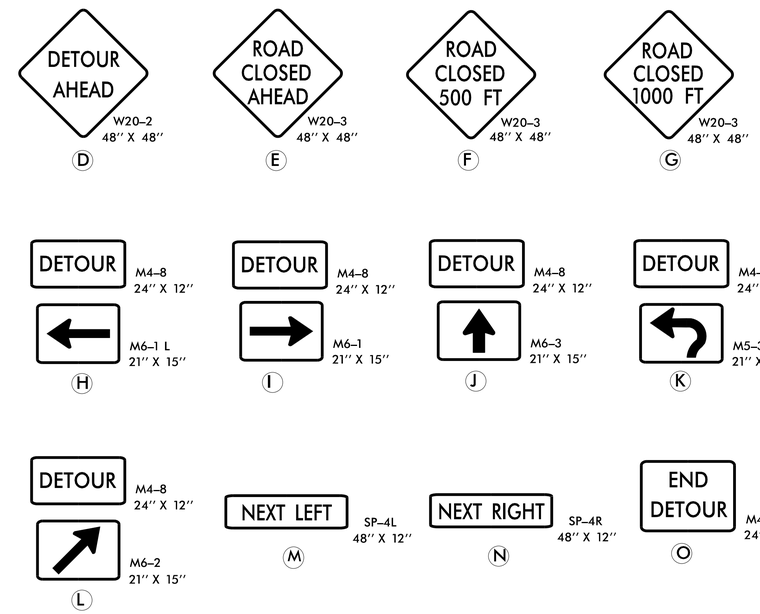

PROPOSED DETOUR	
DETOUR ROUTE	●●●●
DETOUR LENGTH	2 MILES

DOCUMENT NOT CONSIDERED FINAL UNLESS ALL SIGNATURES COMPLETED

APPROVED: William J. Hamilton DATE: 3/22/2017

SEAL

NORTH CAROLINA PROFESSIONAL SEAL 32396 ENGINEER WILLIAM J. HAMILTON

DIVISION OF HIGHWAYS · STATE OF NORTH CAROLINA · DEPARTMENT OF TRANSPORTATION · WORK ZONE TRAFFIC CONTROL

DETOUR SIGNING

DocuSign Envelope ID: 02E0D176-D589-4AAD-9AB6-D7EB2DD8B804

T.I.P.: R-5771

TIP NO.	SHEET NO.
R-5771	PMP-1

APPROVED: DocuSigned by: William J. Hamilton A05600704648484...

DATE: 3/22/2017

SEAL

NORTH CAROLINA PROFESSIONAL SEAL 32396 ENGINEER WILLIAM J. HAMILTON

DOCUMENT NOT CONSIDERED FINAL UNLESS ALL SIGNATURES COMPLETED

STATE OF NORTH CAROLINA
DEPARTMENT OF TRANSPORTATION

PAVEMENT MARKING PLAN

HENDERSON COUNTY

LOCATION: SR 1690 (BROADPOINTE DRIVE) INCLUDING BRIDGE #107 OVER McDOWELL CREEK

ROADWAY STANDARD DRAWING

THE FOLLOWING ROADWAY STANDARDS AS APPEAR IN "ROADWAY STANDARD DRAWINGS" - PROJECT SERVICES UNIT - N.C. DEPARTMENT OF TRANSPORTATION - RALEIGH, N.C., DATED JANUARY 2012 ARE APPLICABLE TO THIS PROJECT AND BY REFERENCE HEREBY ARE CONSIDERED A PART OF THESE PLANS:

STD. NO.	TITLE
1205.01	PAVEMENT MARKINGS - LINE TYPES AND OFFSETS
1205.02	PAVEMENT MARKINGS - TWO-LANE AND MULTILANE ROADWAYS
1205.04	PAVEMENT MARKINGS - INTERSECTIONS
1205.05	PAVEMENT MARKINGS - TURN LANES
1205.08	PAVEMENT MARKINGS - SYMBOLS AND WORD MESSAGES
1205.09	PAVEMENT MARKINGS - PAINTED ISLANDS
1250.01	RAISED PAVEMENT MARKERS - INSTALLATION SPACING
1251.01	RAISED PAVEMENT MARKERS - PERMANENT AND TEMPORARY

INDEX

SHEET NO.	DESCRIPTION
PMP-1	PAVEMENT MARKING PLAN COVER SHEET AND PAVEMENT MARKING SCHEDULE
PMP-2	PAVEMENT MARKING DETAILS

GENERAL NOTES

THE FOLLOWING GENERAL NOTES APPLY AT ALL TIMES FOR THE DURATION OF THE CONSTRUCTION PROJECT, EXCEPT WHEN OTHERWISE NOTED IN THE PLAN, OR DIRECTED BY THE ENGINEER.

A) INSTALL PAVEMENT MARKINGS AND PAVEMENT MARKERS ON THE FINAL SURFACE AS FOLLOWS:

ROAD NAME	MARKING	MARKER
ASPHALT SURFACE	THERMOPLASTIC	RAISED MARKERS

B) TIE PROPOSED PAVEMENT MARKING LINES TO EXISTING PAVEMENT MARKING LINES.

C) REMOVE/REPLACE ANY CONFLICTING/DAMAGED PAVEMENT MARKINGS AND MARKERS.

D) STOP BAR LOCATION AT NON-SIGNALIZED INTERSECTIONS MAY BE ADJUSTED AS DIRECTED BY THE ENGINEER.

E) UNLESS OTHERWISE SPECIFIED, HEATED-IN-PLACE THERMOPLASTIC MAY BE USED IN LIEU OF COLD APPLIED PLASTIC FOR STOP BARS, SYMBOLS, CHARACTERS AND DIAGONALS ON ASPHALT OR CONCRETE ROADWAYS. IF HEATED-IN-PLACE IS USED, IT SHALL BE PAID FOR USING THE COLD APPLIED PAY ITEM.

F) TYPE III COLD APPLIED PLASTIC MAY BE USED IN LIEU OF TYPE II COLD APPLIED PLASTIC. IF TYPE III COLD APPLIED PLASTIC IS USED, IT SHALL BE PAID FOR USING THE TYPE II COLD APPLIED PLASTIC PAY ITEM.

PAVEMENT MARKING SCHEDULE

SYMBOL	DESCRIPTION
THERMOPLASTIC(4", 90 MILS)	
TA	WHITE EDGELINE
THERMOPLASTIC(4", 120 MILS)	
TI	YELLOW DOUBLE CENTER
THERMOPLASTIC(24", 120 MILS)	
T2	WHITE STOPBAR

PLAN PREPARED BY: Ramey Kemp & Associates

W.JASON HAMILTON, P.E., PTOE — PROJECT MANAGER

TIMOTHY S. POPELKA, EI — PROJECT ENGINEER

RAMEY KEMP & ASSOCIATES, INC.
Transportation Engineers
5808 Farlington Place, Suite 100
Raleigh, North Carolina 27609
919-872-5115 Tel. 919-878-5418 Fax.
www.rameykemp.com

DocuSign Envelope ID: 02E0D176-D589-4AAD-9AB6-D7EB2DD8B804

TIP NO.	SHEET NO.
R-5771	PMP-2

APPROVED: DocuSigned by: William J. Hamilton A05600704648484...

DATE: 3/22/2017

SEAL

NORTH CAROLINA PROFESSIONAL SEAL 32396 ENGINEER WILLIAM J. HAMILTON

DOCUMENT NOT CONSIDERED FINAL UNLESS ALL SIGNATURES COMPLETED

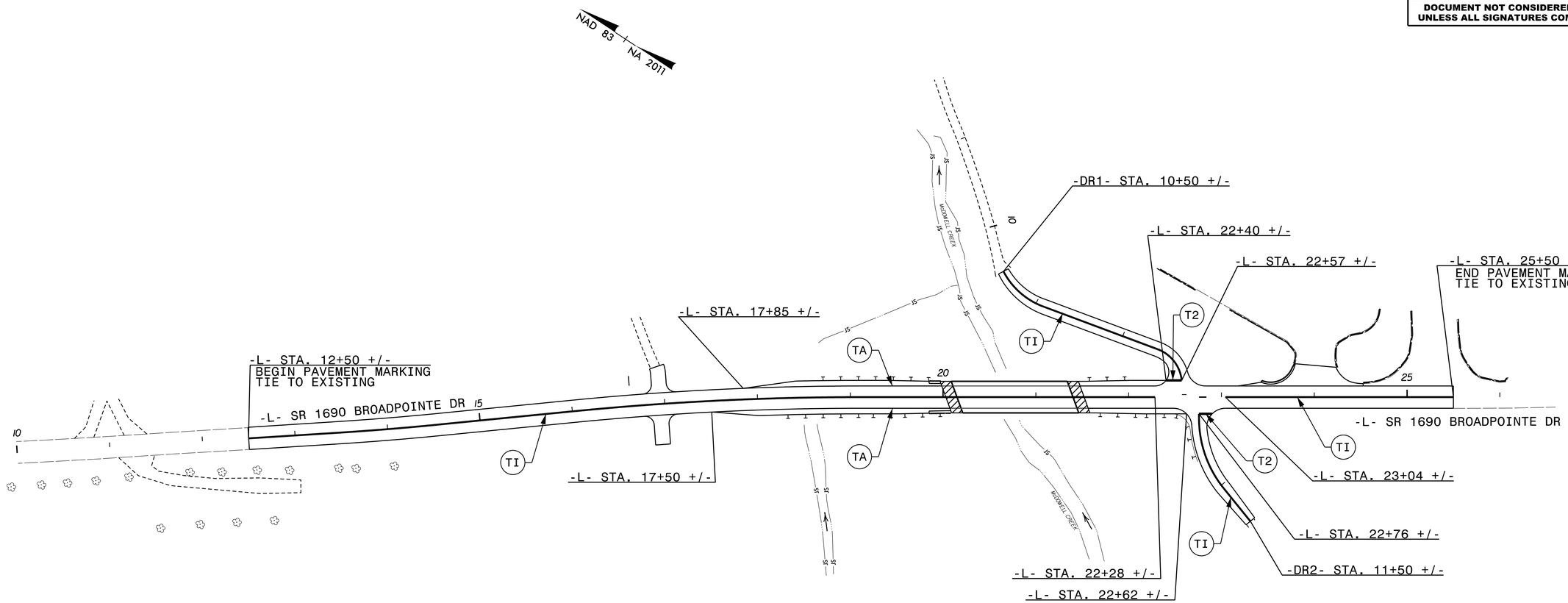

Prepared in the offices of:

RAMEY KEMP & ASSOCIATES, INC.
Transportation Engineers
5808 Faringdon Place, Suite 100
Raleigh, North Carolina 27609
919-872-5115 Tel. 919-878-5416 Fax.
www.rameykemp.com

PROPOSED PAVEMENT MARKING DETAIL

PROJECT: R-5771

CONTRACT:

EROSION AND SEDIMENT CONTROL MEASURES

Std. #	Description	Symbol
1630.03	Temporary Silt Ditch	TSD
1630.05	Temporary Diversion	TD
1605.01	Temporary Silt Fence	
1606.01	Special Sediment Control Fence	
1622.01	Temporary Berms and Slope Drains	
1630.02	Silt Basin Type B	
1633.01	Temporary Rock Silt Check Type-A	
	Temporary Rock Silt Check Type-A with Matting and Polyacrylamide (PAM)	
1633.02	Temporary Rock Silt Check Type-B	
	Wattle / Coir Fiber Wattle	EW CFW
	Wattle / Coir Fiber Wattle with Polyacrylamide (PAM)	
1634.01	Temporary Rock Sediment Dam Type-A	
1634.02	Temporary Rock Sediment Dam Type-B	
1635.01	Rock Pipe Inlet Sediment Trap Type-A	
1635.02	Rock Pipe Inlet Sediment Trap Type-B	
1630.04	Stilling Basin	
1630.06	Special Stilling Basin	
	Rock Inlet Sediment Trap:	
1632.01	Type A	A
1632.02	Type B	B
1632.03	Type C	C
	Skimmer Basin	
	Tiered Skimmer Basin	
	Infiltration Basin	

STATE OF NORTH CAROLINA
DIVISION OF HIGHWAYS

PLAN FOR PROPOSED HIGHWAY EROSION CONTROL

HENDERSON COUNTY

LOCATION: SR 1690 (BROADPOINTE DRIVE) INCLUDING BRIDGE #107 OVER McDOWELL CREEK

TYPE OF WORK: GRADING, DRAINAGE, PAVING, AND STRUCTURE

STATE	STATE PROJECT REFERENCE NO.	SHEET NO.	TOTAL SHEETS
N.C.	R-5771	EC-1	

STATE PROJ. NO.	F.A. PROJ. NO.	DESCRIPTION
46877.1.1	APD-1690(001)	P.E.
46877.2.1	APD-1690(001)	R/W & UTILITIES
46877.3.1	APD-1690(001)	CONST.

NAD 83/2011

4

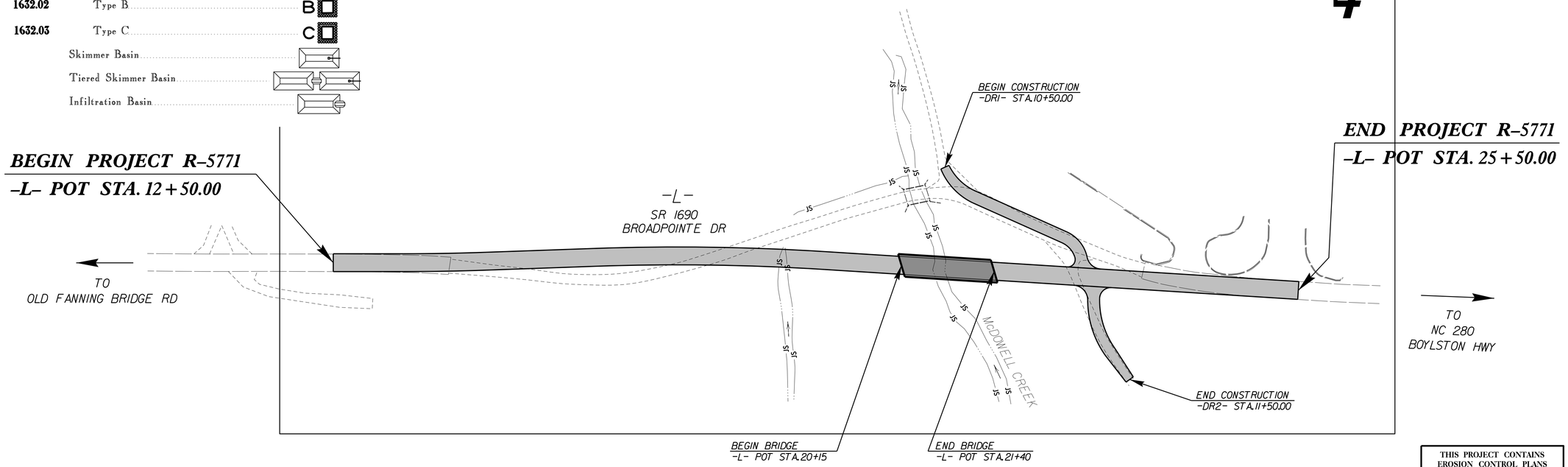

THIS PROJECT CONTAINS EROSION CONTROL PLANS FOR CLEARING AND GRUBBING PHASE OF CONSTRUCTION.

THIS PROJECT IS WITHIN THE MUNICIPAL BOUNDARIES OF MILLS RIVER.

CLEARING ON THIS PROJECT SHALL BE PERFORMED TO THE LIMITS ESTABLISHED BY METHOD II.

GRAPHIC SCALES

50 25 0 50 100

PLANS

ROADSIDE ENVIRONMENTAL UNIT
DIVISION OF HIGHWAYS
STATE OF NORTH CAROLINA

THESE EROSION AND SEDIMENT CONTROL PLANS COMPLY WITH THE REGULATIONS SET FORTH BY THE NCG-010000 GENERAL CONSTRUCTION PERMIT EFFECTIVE AUGUST 3, 2011 ISSUED BY THE NORTH CAROLINA DEPARTMENT OF ENVIRONMENT AND NATURAL RESOURCES DIVISION OF WATER QUALITY.

2012 STANDARD SPECIFICATIONS

Prepared In the Office of:

M A Engineering Consultants, Inc.
598 East Chatham Street - Suite 137
Cary, NC 27511
Phone: 919.297.0220 Fax: 919.297.0221
NC License: F-0160

for:

NCDOT DIVISION 14

NCDOT CONTACT: STEVE CANNON, PE

DISTRICT 1 ENGINEER, DIV. 14

Designed by:

PAUL H. CAMERON, PE — ***3624***

NAME — *LEVEL IIIA CERTIFICATION NO.*

Roadway Standard Drawings

The following roadway english standards as appear in "Roadway Standard Drawings"– Roadway Design Unit – N. C. Department of Transportation – Raleigh, N. C., dated January 2012 and the latest revison thereto are applicable to this project and by reference hereby are considered a part of these plans.

1604.01	Railroad Erosion Control Detail	1632.01	Rock Inlet Sediment Trap Type A
1605.01	Temporary Silt Fence	1632.02	Rock Inlet Sediment Trap Type B
1606.01	Special Sediment Control Fence	1632.03	Rock Inlet Sediment Trap Type C
1607.01	Gravel Construction Entrance	1633.01	Temporary Rock Silt Check Type A
1622.01	Temporary Berms and Slope Drains	1633.02	Temporary Rock Silt Check Type B
1630.01	Riser Basin	1634.01	Temporary Rock Sediment Dam Type A
1630.02	Silt Basin Type B	1634.02	Temporary Rock Sediment Dam Type B
1630.03	Temporary Silt Ditch	1635.01	Rock Pipe Inlet Sediment Trap Type A
1630.04	Stilling Basin	1635.02	Rock Pipe Inlet Sediment Trap Type B
1630.05	Temporary Diversion	1640.01	Coir Fiber Baffle
1630.06	Special Stilling Basin	1645.01	Temporary Stream Crossing
1631.01	Matting Installation		

3/28/2017
r:\Hydraulics\EC\R5771_EC_EC1_tsh.dgn
12:29:40 PM

PROJECT REFERENCE NO.	SHEET NO.
R-5771	EC-2

WATTLE WITH POLYACRYLAMIDE (PAM) DETAIL

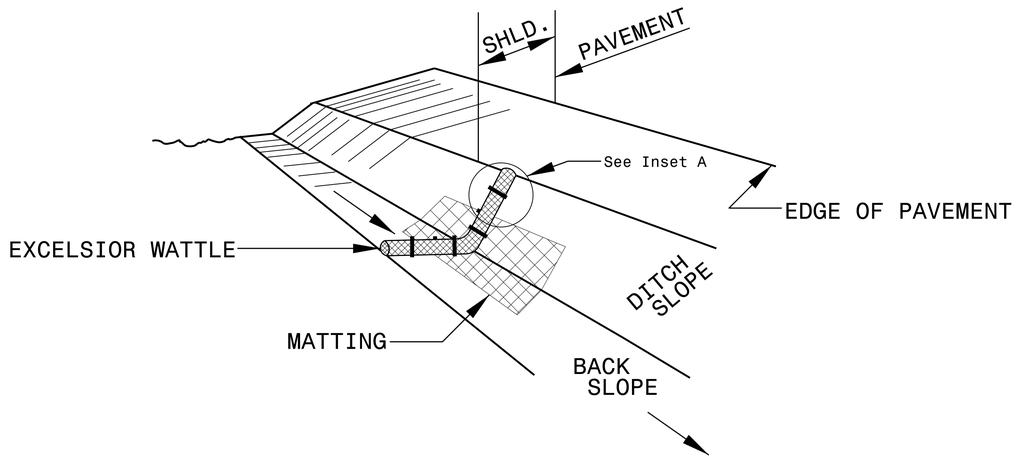

ISOMETRIC VIEW

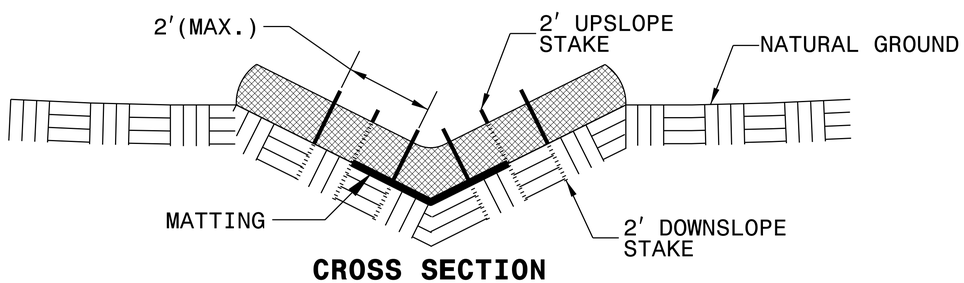

CROSS SECTION VEE DITCH

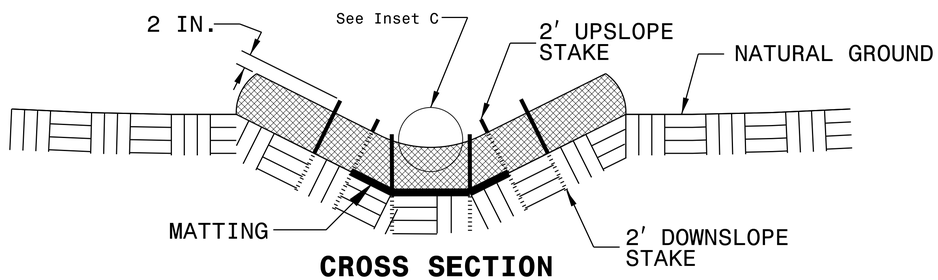

CROSS SECTION TRAPEZOIDAL DITCH

NOTES:

USE MINIMUM 12 IN. DIAMETER EXCELSIOR WATTLE.

USE 2 FT. WOODEN STAKES WITH A 2 IN. BY 2 IN. NOMINAL CROSS SECTION.

ONLY INSTALL WATTLE(S) TO A HEIGHT IN DITCH SO FLOW WILL NOT WASH AROUND WATTLE AND SCOUR DITCH SLOPES AND AS DIRECTED.

INSTALL A MINIMUM OF 2 UPSLOPE STAKES AND 4 DOWNSLOPE STAKES AT AN ANGLE TO WEDGE WATTLE TO BOTTOM OF DITCH.

PROVIDE STAPLES MADE OF 0.125 IN. DIAMETER STEEL WIRE FORMED INTO A U SHAPE NOT LESS THAN 12″ IN LENGTH.

INSTALL STAPLES APPROXIMATELY EVERY 1 LINEAR FOOT ON BOTH SIDES OF WATTLE AND AT EACH END TO SECURE IT TO THE SOIL.

INSTALL MATTING IN ACCORDANCE WITH SECTION 1631 OF THE STANDARD SPECIFICATIONS.

PRIOR TO POLYACRYLAMIDE (PAM) APPLICATION, OBTAIN A SOIL SAMPLE FROM PROJECT LOCATION, AND FROM OFFSITE MATERIAL, AND ANALYZE FOR APPROPRIATE PAM FLOCCULANT TO BE APPLIED TO EACH WATTLE.

INITIALLY APPLY 2 OUNCES OF ANIONIC OR NEUTRALLY CHARGED PAM OVER WATTLE WHERE WATER WILL FLOW AND 1 OUNCE OF PAM ON MATTING ON EACH SIDE OF WATTLE. REAPPLY PAM AFTER EVERY RAINFALL EVENT THAT IS EQUAL TO OR EXCEEDS 0.50 IN.

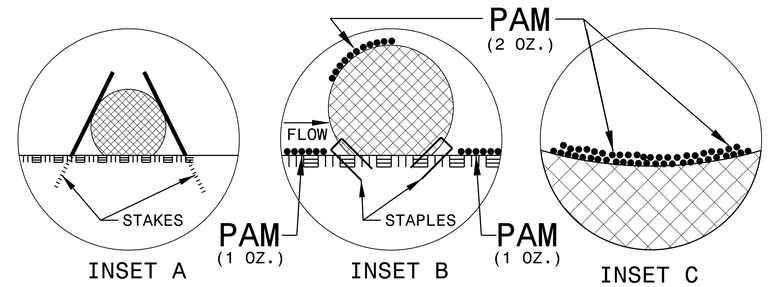

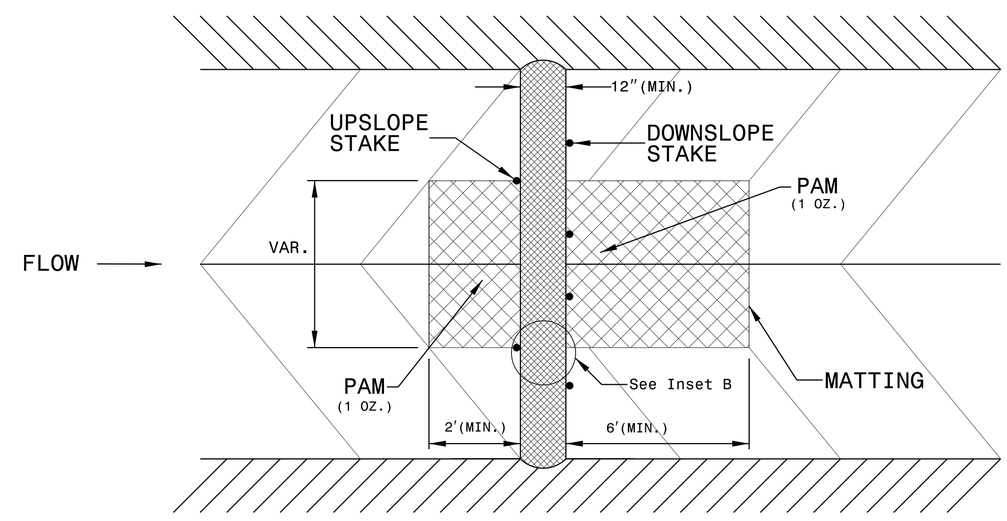

TOP VIEW

REVISIONS

8/17/99

3/28/2017
12:09:42 PM
Files\EC\R5771_EC_EC2.dgn

7/2/99

PROJECT REFERENCE NO.	SHEET NO.
R-5771	EC-3

M A Engineering Consultants, Inc.
598 East Chatham Street Suite 137 Cary, NC 27511
Phone: 919.297.0220 Fax: 919.297.0221

DIVISION OF HIGHWAYS
STATE OF NORTH CAROLINA

SOIL STABILIZATION SUMMARY SHEET

GEOTEXTILE FOR EROSION CONTROL

CONST SHEET NO.	LINE	FROM STATION	TO STATION	SIDE	ESTIMATE (SY)
4	L	1700	1850	RT	165
4	L	1700	1864	LT	195
4	L	2130	2175	RT	45
4	L	1250	1269	LT	20
4	L	1050	1075	RT	25
				SUBTOTAL	450
MISCELLANEOUS MATTING TO BE INSTALLED AS DIRECTED BY THE ENGINEER					5980
				TOTAL	6430
				SAY	6450

SOIL STABILIZATION TIME FRAMES

SITE DESCRIPTION	STABILIZATION TIME	TIMEFRAME EXCEPTIONS
PERIMETER DIKES, SWALES, DITCHES AND SLOPES	7 DAYS	NONE
HIGH QUALITY WATER (HQW) ZONES	7 DAYS	NONE
SLOPES STEEPER THAN 3:1	7 DAYS	IF SLOPES ARE 10' OR LESS IN LENGTH AND ARE NOT STEEPER THAN 2:1, 14 DAYS ARE ALLOWED.
SLOPES 3:1 OR FLATTER	14 DAYS	7 DAYS FOR SLOPES GREATER THAN 50' IN LENGTH.
ALL OTHER AREAS WITH SLOPES FLATTER THAN 4:1	14 DAYS	NONE, EXCEPT FOR PERIMETERS AND HQW ZONES.

PROJECT REFERENCE NO.	SHEET NO.
R-5771	EC-4

M A Engineering Consultants, Inc.
NC License: F-0160
598 East Chatham Street Suite 137 Cary, NC 27511
Phone: 919.297.0220 Fax: 919.297.0221

INSTALL MATTING FOR EROSION CONTROL IN THE PROPOSED DITCH LINE AS NOTED ON EC-3

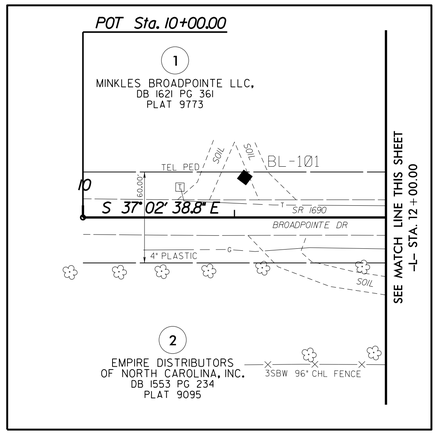

DETAIL TP1
TOE PROTECTION
(Not to Scale)

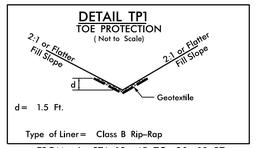

d= 1.5 Ft.
Type of Liner= Class B Rip-Rap
FROM -L- STA. 19+45 TO 20+10 RT
FROM -L- STA. 21+46 TO 22+25 LT
FROM -DR1- STA. 12+00 TO 12+50 LT

DETAIL SLV2
SPECIAL LATERAL 'V' DITCH
(Not to Scale)

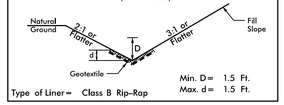

Min. D= 1.5 Ft.
Max. d= 1.5 Ft.
Type of Liner= Class B Rip-Rap
FROM -DR1- STA. 10+50 TO 12+00 LT
FROM -DR1- STA. 12+50 LT TO -DR1- STA. 12+69 LT
FROM -L- STA. 22+75 LT TO 23+25 LT
FROM -DR2- STA. 11+10 TO 11+29.62 LT

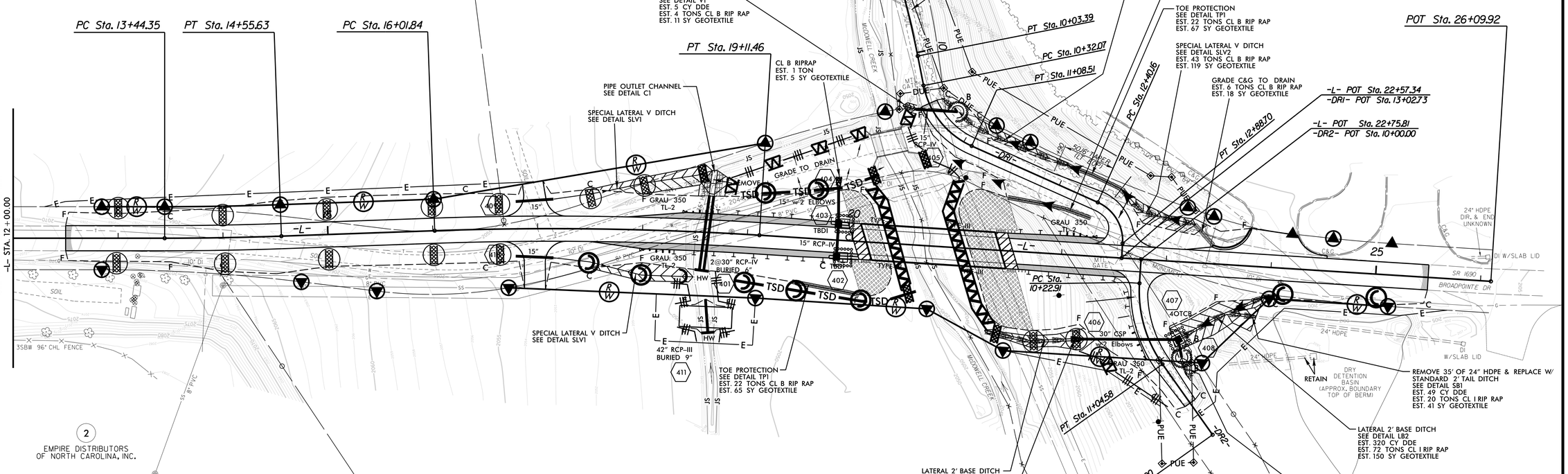

DETAIL SLV1
SPECIAL LATERAL 'V' DITCH
(Not to Scale)

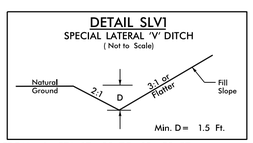

Min. D= 1.5 Ft.
FROM -L- STA. 17+00 TO 18+50 RT
FROM -L- STA. 17+00 TO 18+64 LT

DETAIL LB1
LATERAL BASE DITCH
(Not to Scale)

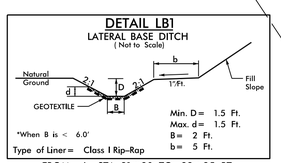

*When B is < 6.0'
Min. D= 1.5 Ft.
Max. d= 1.5 Ft.
B= 2 Ft.
b= 5 Ft.
Type of Liner= Class I Rip-Rap
FROM -L- STA. 21+30 TO 22+25 RT

DETAIL V1
STANDARD 'V' DITCH
(Not to Scale)

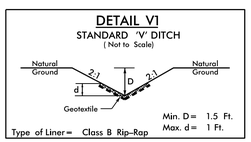

Min. D= 1.5 Ft.
Max. d= 1 Ft.
Type of Liner= Class B Rip-Rap
FROM -DR1- STA. 10+50 (14' RT) TO 10+44 (24' RT)

DETAIL C1
PIPE OUTLET CHANNEL
(Not to Scale)

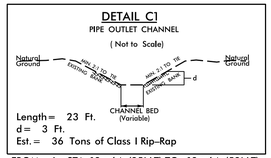

Length= 23 Ft.
d= 3 Ft.
Est.= 36 Tons of Class I Rip-Rap
FROM -L- STA. 18+64 (35' LT) TO 18+64 (59' LT)

DETAIL LB2
LATERAL BASE DITCH
(Not to Scale)

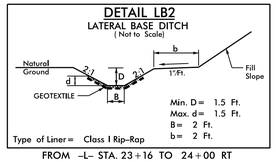

Min. D= 1.5 Ft.
Max. d= 1.5 Ft.
B= 2 Ft.
b= 2 Ft.
Type of Liner= Class I Rip-Rap
FROM -L- STA. 23+16 TO 24+00 RT

DETAIL SB1
STANDARD TAIL DITCH
(Not to Scale)

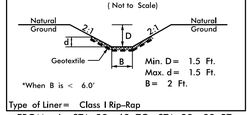

*When B is < 6.0'
Min. D= 1.5 Ft.
Max. d= 1.5 Ft.
B= 2 Ft.
Type of Liner= Class I Rip-Rap
FROM -L- STA. 23+63 TO STA. 23+89 RT

REVISIONS

8/17/99

3/28/2017
12:29:46 PM

DocuSign Envelope ID: 02E0D176-D589-4AAD-9AB6-D7EB2DD8B804

T.I.P.: R-5771

STATE OF NORTH CAROLINA
DEPARTMENT OF TRANSPORTATION

TIP NO.	SHEET NO.
R-5771	SIGN-1

APPROVED: DocuSigned by: William J. Hamilton A0560D704648484...

DATE: 3/22/2017

SEAL

NORTH CAROLINA PROFESSIONAL SEAL 32396 ENGINEER WILLIAM J. HAMILTON

DOCUMENT NOT CONSIDERED FINAL UNLESS ALL SIGNATURES COMPLETED

SIGNING PLAN
HENDERSON COUNTY

LOCATION: SR 1690 (BROADPOINTE DRIVE) INCLUDING BRIDGE #107 OVER McDOWELL CREEK

ROADWAY STANDARD DRAWING

THE FOLLOWING ROADWAY STANDARDS AS APPEAR IN "ROADWAY STANDARD DRAWINGS" - PROJECT SERVICES UNIT - N.C. DEPARTMENT OF TRANSPORTATION - RALEIGH, N.C., DATED JANUARY 2012 ARE APPLICABLE TO THIS PROJECT AND BY REFERENCE HEREBY ARE CONSIDERED A PART OF THESE PLANS:

STD. NO.	TITLE
904.10	ORIENTATION OF GROUND MOUNTED SIGNS
904.50	MOUNTING OF TYPE 'D', 'E' AND 'F' SIGNS ON 'U' CHANNEL POSTS

GENERAL NOTES

- SIGNS FURNISHED BY STATE
- IF REMOVAL OR RELOCATION OF SIGNS ON PRIVATE STREET (NON-STATE MAINTAINED) IS REQUIRED DUE TO CONSTRUCTION, THE CONTRACTOR SHALL INFORM THE ENGINEER. THE WORK WILL BE COMPLETED BY OTHERS.
- WHEN NOT STATIONED OR DIMENSIONED ON PLANS, ALL 'E' AND 'F' SIGNS SHALL BE FIELD LOCATED BY THE ENGINEER
- ALL EXISTING SIGNS ON "U" CHANNEL POST WITHIN THE PROJECT LIMITS SHALL BE REMOVED AND DISPOSED OF UNLESS OTHERWISE NOTED ON PLANS.
- WHEN EXISTING SIGNS ARE REMOVED AND INSTALLED ON NEW SUPPORTS, THE RE-ERECTION SHALL IMMEDIATELY FOLLOW THE REMOVAL.
- THE BACKGROUND FOR TYPE E & F SIGNS SHALL BE TYPE C REFLECTIVE SHEETING.

SUMMARY OF QUANTITIES

ITEM NO. DESC. NO.	ITEM NO. SECT. NO.	ITEM DESCRIPTION	QUANTITY	UNIT
4072000000	903	SUPPORTS, 3 LB STEEL U-CHANNEL	50	L.F.
4102000000	904	SIGN ERECTION, TYPE E	3	EA.
4155000000	907	DISPOSAL OF SIGN SYSTEM, U-CHANNEL	3	EA.

INDEX

SHEET NO.	DESCRIPTION
SIGN-1	TITLE SHEET
SIGN-2	TYPE E SIGNS
SIGN-3	EXISTING AND PROPOSED SIGNING DETAIL

PLAN PREPARED BY: Ramey Kemp & Associates

W.JASON HAMILTON, P.E., PTOE — PROJECT MANAGER

TIMOTHY S. POPELKA, EI — PROJECT ENGINEER

RAMEY KEMP & ASSOCIATES, INC. Transportation Engineers
5808 Faringdon Place, Suite 100
Raleigh, North Carolina 27609
919-872-5115 Tel, 919-878-5416 Fax.
www.rameykemp.com

DocuSign Envelope ID: 02E0D176-D589-4AAD-9AB6-D7EB2DD8B804

401 QUANTITY REQ'D 3

36 X 36
R1-1

ONE "U" POST PER SIGN

TIP NO.	SHEET NO.
R-5771	SIGN-2

APPROVED: DocuSigned by: William J. Hamilton A056D704648484...

DATE: 3/22/2017

SEAL

NORTH CAROLINA PROFESSIONAL SEAL 32396 ENGINEER WILLIAM J. HAMILTON

DOCUMENT NOT CONSIDERED FINAL UNLESS ALL SIGNATURES COMPLETED

Prepared in the offices of:
RAMEY KEMP & ASSOCIATES, INC.
Transportation Engineers
5808 Faringdon Place, Suite 100
Raleigh, North Carolina 27609
919-872-5115 Tel. 919-878-5416 Fax.
www.rameykemp.com

TYPE "E" SIGNS

DocuSign Envelope ID: 02E0D176-D589-4AAD-9AB6-D7EB2DD8B804

TIP NO.	SHEET NO.
R-5771	SIGN-3

APPROVED: DocuSigned by: William J. Hamilton A056ED704648484...

DATE: 3/22/2017

SEAL

NORTH CAROLINA PROFESSIONAL SEAL 32396 ENGINEER WILLIAM J. HAMILTON

DOCUMENT NOT CONSIDERED FINAL UNLESS ALL SIGNATURES COMPLETED

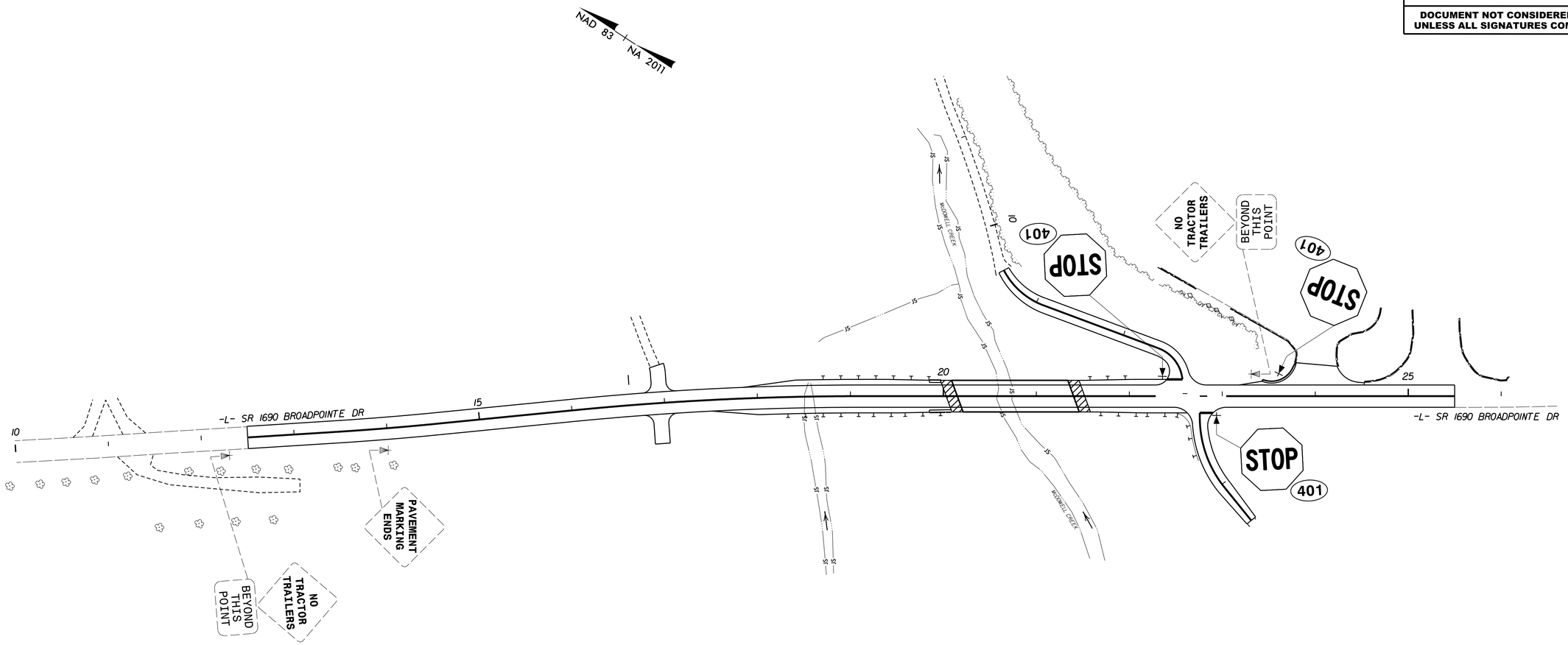

Prepared in the offices of:

RAMEY KEMP & ASSOCIATES, INC.
Transportation Engineers
5808 Farrington Place, Suite 100
Raleigh, North Carolina 27609
919-872-5115 Tel, 919-878-5416 Fax,
www.rameykemp.com

EXISTING AND PROPOSED SIGNING DETAIL

DocuSign Envelope ID: 5E2A2891-D788-443E-8B85-91A4624CA35B

09/08/99

TIP PROJECT: R-5771

T.I.P. NO.	SHEET NO.
R-5771	UC-1

STATE OF NORTH CAROLINA
DIVISION OF HIGHWAYS

UTILITY CONSTRUCTION PLANS
HENDERSON COUNTY

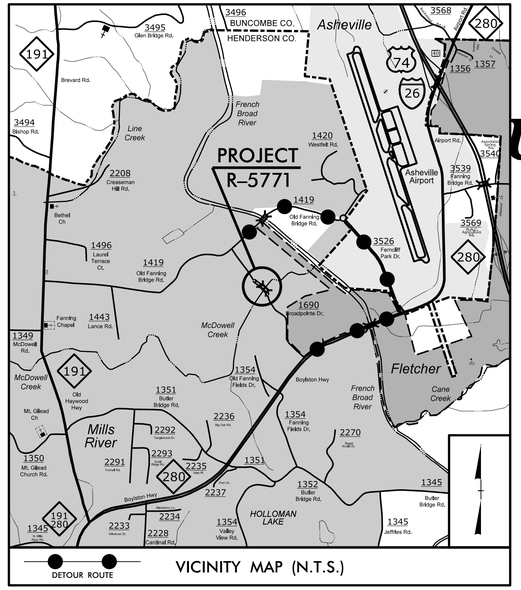

VICINITY MAP (N.T.S.)

LOCATION: SR 1690 (BROADPOINTE DRIVE) INCLUDING BRIDGE #107 OVER McDOWELL CREEK

TYPE OF WORK: SEWER MANHOLE ADJUSTMENT AND WATER LINE BETTERMENTS

UC-4

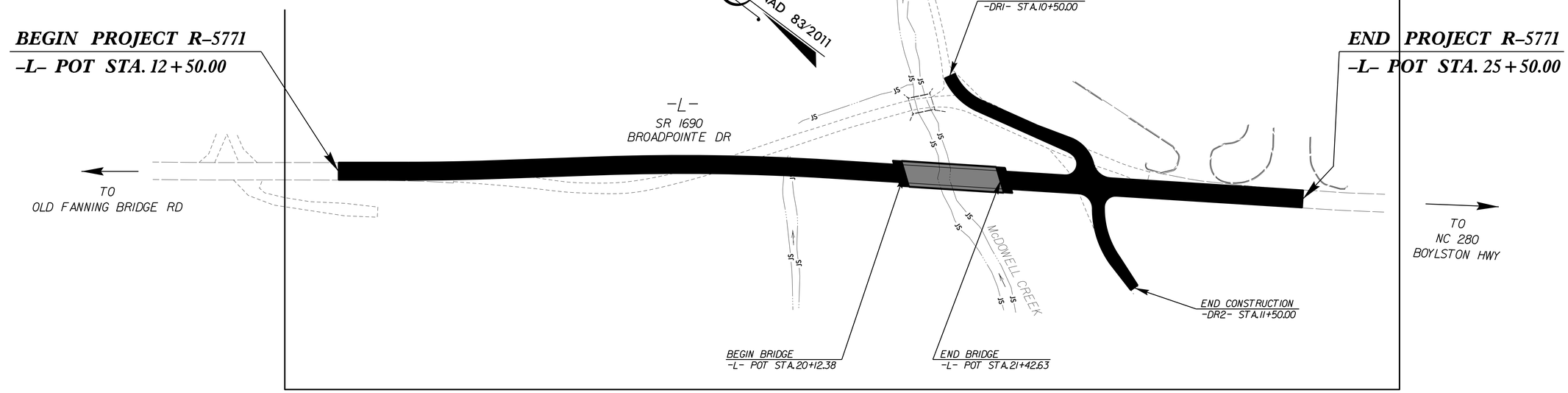

DOCUMENT NOT CONSIDERED FINAL UNTIL ALL SIGNATURES ARE COMPLETED

GRAPHIC SCALES

50 25 0 50 100
PLANS

10 5 0 10 20
PROFILE (HORIZONTAL)

10 5 0 10 20
PROFILE (VERTICAL)

INDEX OF SHEETS

SHEET NO.:	DESCRIPTION:
UC-1	TITLE SHEET
UC-2	UTILITY SYMBOLOGY
UC-3	NOTES
UC-4	UTILITY CONSTRUCTION SHEET
UC-5	PROFILE SHEET

WATER AND SEWER OWNERS ON PROJECT

(A) WATER: CITY OF ASHEVILLE
(B) SANITARY SEWER: HENDERSON COUNTY

PREPARED IN THE OFFICE OF

M A Engineering Consultants, Inc.
598 East Chatham Street - Suite 137
Cary, NC 27511
Phone: 919.297.0220 Fax: 919.297.0221
NC License: F-0160

KEVIN C. ZDEB, PE	CONSULTANT CONTACT #1
WEBB WHITE	CONSULTANT CONTACT #2
GARY BLUE	CONSULTANT CONTACT #3

SEAL

NORTH CAROLINA PROFESSIONAL ENGINEER SEAL 21611 KEVIN C. ZDEB
Docusigned by: SEAL
Kevin C. Zdeb
3/28/2017

DIVISION OF HIGHWAYS
DIVISION 14 – DISTRICT 1
4142 HAYWOOD ROAD
MILLS RIVER, NC 28742
PHONE (828) 891-7911
FAX (828) 891-5026

STEVE CANNON, PE	DISTRICT ENGINEER
BOB GOLDING	UTILITIES COORDINATOR

3/28/2017
r:\Utilities\Rdy_Ut\Proj\R5771_ut_UC-01_tsh.dgn
11:17:02 AM

PROJECT REFERENCE NO.	SHEET NO.
R-5771	UC-2

STATE OF NORTH CAROLINA
DIVISION OF HIGHWAYS

UTILITIES PLAN SHEET SYMBOLS

PROPOSED WATER SYMBOLS

- Water Line (Sized as Shown) — 12" WL
- 11¼ Degree Bend
- 22½ Degree Bend
- 45 Degree Bend
- 90 Degree Bend
- Plug
- Tee
- Cross
- Reducer
- Gate Valve — GV
- Butterfly Valve — BV
- Tapping Valve — TGV
- Line Stop — LS
- Line Stop with Bypass — LS/BP
- Blow Off — BO
- Fire Hydrant — PFH
- Relocate Fire Hydrant — RFH
- Remove Fire Hydrant — REM FH
- Water Meter — PWM
- Relocate Water Meter — RWM
- Remove Water Meter — REM WM
- Water Pump Station — PS(W)
- RPZ Backflow Preventer — PRPZ
- DCV Backflow Preventer — PBFP
- Relocate RPZ Backflow Preventer — RRPZ
- Relocate DCV Backflow Preventer — RBFP

PROPOSED SEWER SYMBOLS

- Gravity Sewer Line (Sized as Shown) — 12" SS
- Force Main Sewer Line (Sized as Shown) — 12" FSS
- Manhole (Sized per Note)
- Sewer Pump Station — PS(SS)

PROPOSED MISCELLANOUS UTILITIES SYMBOLS

- Power Pole
- Telephone Pole
- Joint Use Pole
- Telephone Pedestal — TEL PED
- Utility Line by Others (Type as Shown) — PROP O/H POW LINES
- Trenchless Installation — 12" TL INSTALL
- Encasement by Open Cut — 24" ENCAS BY OC
- Encasement — 24" ENCASEMENT
- Thrust Block
- Air Release Valve — AR
- Utility Vault — UV
- Concrete Pier — CP
- Steel Pier — SP
- Plan Note — NOTE
- Pay Item Note — PAY ITEM

EXISTING UTILITIES SYMBOLS

- Power Pole
- Telephone Pole
- Joint Use Pole
- Utility Pole
- Utility Pole with Base
- H-Frame Pole
- Power Transmission Line Tower
- Water Manhole
- Power Manhole
- Telephone Manhole
- Sanitary Sewer Manhole
- Hand Hole for Cable
- Power Transformer
- Telephone Pedestal
- CATV Pedestal
- Gas Valve
- Gas Meter
- Located Miscellaneous Utility Object
- Abandoned According to Utility Records — AATUR
- End of Information — E.O.I.
- *Underground Power Line — P
- *Underground Telephone Cable — T
- *Underground Telephone Conduit — TC
- *Underground Fiber Optics Telephone Cable — T FO
- *Underground TV Cable — TV
- *Underground Fiber Optics TV Cable — TV FO
- *Underground Gas Pipeline — G
- Aboveground Gas Pipeline — A/G Gas
- *Underground Water Line — W
- Aboveground Water Line — A/G Water
- *Underground Gravity Sanitary Sewer Line — SS
- Aboveground Gravity Sanitary Sewer Line — A/G Sanitary Sewer
- *Underground SS Forced Main Line — FSS
- Underground Unknown Utility Line — ?UTL
- SUE Test Hole
- Water Meter
- Water Valve
- Fire Hydrant
- Sanitary Sewer Cleanout

*For Existing Utilities

- Utility Line Drawn from Record (Type as Shown) — W
- Designated Utility Line (Type as Shown) — W

REV: 2/1/2012

5/14/99
3/28/2017
r:\Utilities\Proj\R5771_ut_UC_02_sym.dgn

DocuSign Envelope ID: 5E2A2891-D788-443E-8B85-91A4624CA35B

PROJECT REFERENCE NO.	SHEET NO.
R-5771	UC-3

DESIGNED BY: GJB
DRAWN BY: GJB
CHECKED BY: KCZ
APPROVED BY: KCZ
REVISED:

NORTH CAROLINA DEPARTMENT OF TRANSPORTATION

HWY DIVISION 14 - DIST. 1
PHONE:(828)891-7911
FAX: (828)891-5026

NORTH CAROLINA PROFESSIONAL SEAL ENGINEER KEVIN C. ZAK 23611

DocuSigned by: SEAL
Kevin C. Zak
3/28/2017

UTILITY CONSTRUCTION PLANS ONLY

UTILITY CONSTRUCTION

M A Engineering Consultants, Inc.
598 East Chatham Street - Suite 137
Cary, NC 27511
Phone: 919.297.0220 Fax: 919.297.0221
NC License: F-0160

DOCUMENT NOT CONSIDERED FINAL UNTIL ALL SIGNATURES ARE COMPLETED

UTILITY CONSTRUCTION

GENERAL NOTES:

1. THE PROPOSED UTILITY CONSTRUCTION SHALL MEET THE APPLICABLE REQUIREMENTS OF THE NC DEPARTMENT OF TRANSPORTATION'S "STANDARD SPECIFICATIONS FOR ROADS AND STRUCTURES" DATED JANUARY 2012.

2. THE EXISTING WATER LINE UTILITIES BELONG TO THE CITY OF ASHEVILLE.

CONTACT: SONIA SALGADO, PE
PHONE: 828-259-5534

THE EXISTING SANITARY GRAVITY SEWER UTILITIES BELONG TO HENDERSON COUNTY.

CONTACT: GREG WIGGINS
PHONE: 828-694-6608

3. ALL WATER LINES TO BE INSTALLED WITHIN COMPLIANCE OF THE RULES AND REGULATIONS OF THE NORTH CAROLINA DEPARTMENT OF ENVIRONMENTAL AND NATURAL RESOURCES, DIVISION OF ENVIRONMENTAL HEALTH.

4. THE UTILITY OWNER OWNS THE EXISTING UTILITY FACILITIES AND WILL OWN THE NEW UTILITY FACILITIES AFTER ACCEPTANCE BY THE DEPARTMENT. THE DEPARTMENT OWNS THE CONSTRUCTION CONTRACT AND HAS ADMINISTRATIVE AUTHORITY. COMMUNICATIONS AND DECISIONS BETWEEN THE CONTRACTOR AND UTILITY OWNER ARE NOT BINDING UPON THE DEPARTMENT OR THIS CONTRACT UNLESS AUTHORIZED BY THE ENGINEER. AGREEMENTS BETWEEN THE UTILITY OWNER AND CONTRACTOR FOR THE WORK THAT IS NOT PART OF THIS CONTRACT OR IS SECONDARY TO THIS CONTRACT ARE ALLOWED, BUT ARE NOT BINDING UPON THE DEPARTMENT.

5. PROVIDE ACCESS FOR THE DEPARTMENT PERSONNEL AND THE OWNER'S REPRESENTATIVES TO ALL PHASES OF CONSTRUCTION. NOTIFY DEPARTMENT PERSONNEL AND THE UTILITY OWNER TWO WEEKS PRIOR TO COMMENCEMENT OF ANY WORK AND ONE WEEK PRIOR TO SERVICE INTERRUPTION. KEEP UTILITY OWNERS' REPRESENTATIVES INFORMED OF WORK PROGRESS AND PROVIDE OPPROTUNITY FOR INSPECTION OF CONSTRUCTION AND TESTING.

6. THE PLANS DEPICT THE BEST AVAILABLE INFORMATION FOR THE LOCATION, SIZE, AND TYPE OF MATERIAL FOR ALL EXISTING UTILITIES. MAKE INVESTIGATIONS FOR DETERMINING THE EXACT LOCATION, SIZE, AND TYPE MATERIAL OF THE EXISTING FACILITIES AS NECESSARY FOR THE CONSTRUCTION OF THE PROPOSED UTILITIES AND FOR AVOIDING DAMAGE TO EXISTING FACILITIES. REPAIR ANY DAMAGE INCURRED TO EXISTING FACILITIES TO THE ORIGINAL OR BETTER CONDITION AT NO ADDITONAL COST TO THE DEPARTMENT.

7. MAKE FINAL CONNECTIONS OF THE NEW WORK TO THE EXISTING SYSTEM WHERE INDICATED ON THE PLANS, AS REQUIRED TO FIT THE ACTUAL CONDITIONS, OR AS DIRECTED.

8. MAKE CONNECTIONS BETWEEN EXISTING AND PROPOSED UTILITIES AT TIMES MOST CONVENIENT TO THE PUBLIC, WITHOUT ENDANGERING THE UTILITY SERVICE, AND IN ACCORDANCE WITH THE UTILITY OWNER'S REQUIREMENTS. MAKE CONNECTIONS ON WEEKENDS, AT NIGHT, AND ON HOLIDAYS IF NECESSARY.

9. ALL UTILITY MATERIALS SHALL BE APPROVED PRIOR TO DELIVERY TO THE PROJECT. SEE 1500-7, " SUBMITTALS AND RECORDS" IN SECTION 1500 OF THE STANDARD SPECIFICATIONS.

10. CONTRACTOR SHALL NOT OPERATE ANY VALVES ON THE EXISTING UTILITY SYSTEMS. CONTRACTOR SHALL CONTACT THE UTILITY OWNER TO CONDUCT STRATEGIC OPERATION OF VALVES FOR SERVICE INTERRUPTION IN ORDER TO PERFORM SPECIFIC WORK.

PROJECT SPECIFIC NOTES:

1. PROPOSED 12" STEEL ENCASEMENT PIPE IS A BETTERMENT FOR NCSU AGRICULTURE. CONTRACTOR SHALL ONLY INSTALL THE ENCASEMENT PIPE AND SEAL THE ENDS WITH A REMOVABLE PLUG. NCSU SHALL INSTALL WATER LINE AT A FUTURE DATE.

2. PROPOSED 24" STEEL ENCASEMENT PIPE IS A BETTERMENT FOR THE CITY OF ASHEVILLE. CONTRACTOR SHALL ONLY INSTALL THE ENCASEMENT PIPE AND SEAL THE ENDS WITH A REMOVABLE PLUG. THE CITY OF ASHEVILLE SHALL INSTALL WATER LINE AT A FUTURE DATE.

3. THE CITY OF ASHEVILLE SHALL SUPPLY THE 24" ENCASEMENT PIPE AND DELIVER IT TO THE PROJECT SITE. CONTRACTOR SHALL COORDINATE WITH THE CITY OF ASHEVILLE CONTACT FOR DELIVERY.

4. PROPOSED 12" STEEL ENCASEMENT PIPE SHALL BE 12.75" OUTSIDE DIAMETER WITH 0.250" WALL THICKNESS.

5. PROPOSED 24" STEEL ENCASEMENT PIPE SHALL BE 24.00" OUTSIDE DIAMETER WITH 0.250" WALL THICKNESS.

6. CONTRACTOR'S ATTENTION IS DIRECTED TO SECTIONS 102, 107, AND 1550 OF THE STANDARD SPECIFICATIONS CONCERNING TRENCHLESS INSTALLATION. IT IS THE CONTRACTOR'S RESPONSIBILITY TO HAVE BORE DESIGNED AND SEALED BY A LICENSED NORTH CAROLINA PROFESSIONAL ENGINEER. NO DAMAGE IS ALLOWED TO RIVER, STREAM, CREEK, WETLANDS, OR BUFFER ZONES.

PROJECT QUANTITIES

ITEM NUMBER	DESCRIPTION	QUANTITY	
5781000000-E	UTILITY MANHOLE WALL, 4' DIA.	6.2	LF
5835600000-E	12" ENCASEMENT PIPE	124	LF
5836000000-E	24" ENCASEMENT PIPE	84	LF
5872200000-E	TRENCHLESS INSTALLATION OF 24" IN SOIL	21	LF
5872210000-E	TRENCHLESS INSTALLATION OF 24" NOT IN SOIL	21	LF

3/28/2017
C:\Users\Rdg_Ut\Proj\R5771_ut_UC-03_not.dgn
11:20:05 AM

DocuSign Envelope ID: 5E2A2891-D788-443E-8B85-91A4624CA35B

PROJECT REFERENCE NO.	SHEET NO.
R-5771	UC-04

DESIGNED BY: GJB
DRAWN BY: GJB
CHECKED BY: KCZ
APPROVED BY: KCZ
REVISED:

NORTH CAROLINA DEPARTMENT OF TRANSPORTATION
HWY DIVISION 14 - DIST. 1
PHONE:(828)891-7911
FAX: (828)891-5026

NORTH CAROLINA PROFESSIONAL SEAL ENGINEER KEVIN C. ZAK 23611
Docu Sign Envelope ID: 5E2A2891-D788-443E-8B85-91A4624CA35B
3/28/2017

UTILITY CONSTRUCTION PLANS ONLY

UTILITY CONSTRUCTION

DOCUMENT NOT CONSIDERED FINAL UNLESS ALL SIGNATURES COMPLETED

M A Engineering Consultants, Inc.
NC License: F-0160
598 East Chatham Street Suite 137 Cary, NC 27511
Phone: 919.297.0220 Fax: 919.297.0221

UTILITY OWNERS ON THIS PROJECT:

CITY OF ASHEVILLE
WATER LINE: 10" DI
CONTACT: SONIA SALGADO, PE
PHONE: 828-259-5534

HENDERSON COUNTY
SANITARY GRAVITY SEWER: 8" PVC
CONTACT: GREG WIGGINS
PHONE: 828-694-6608

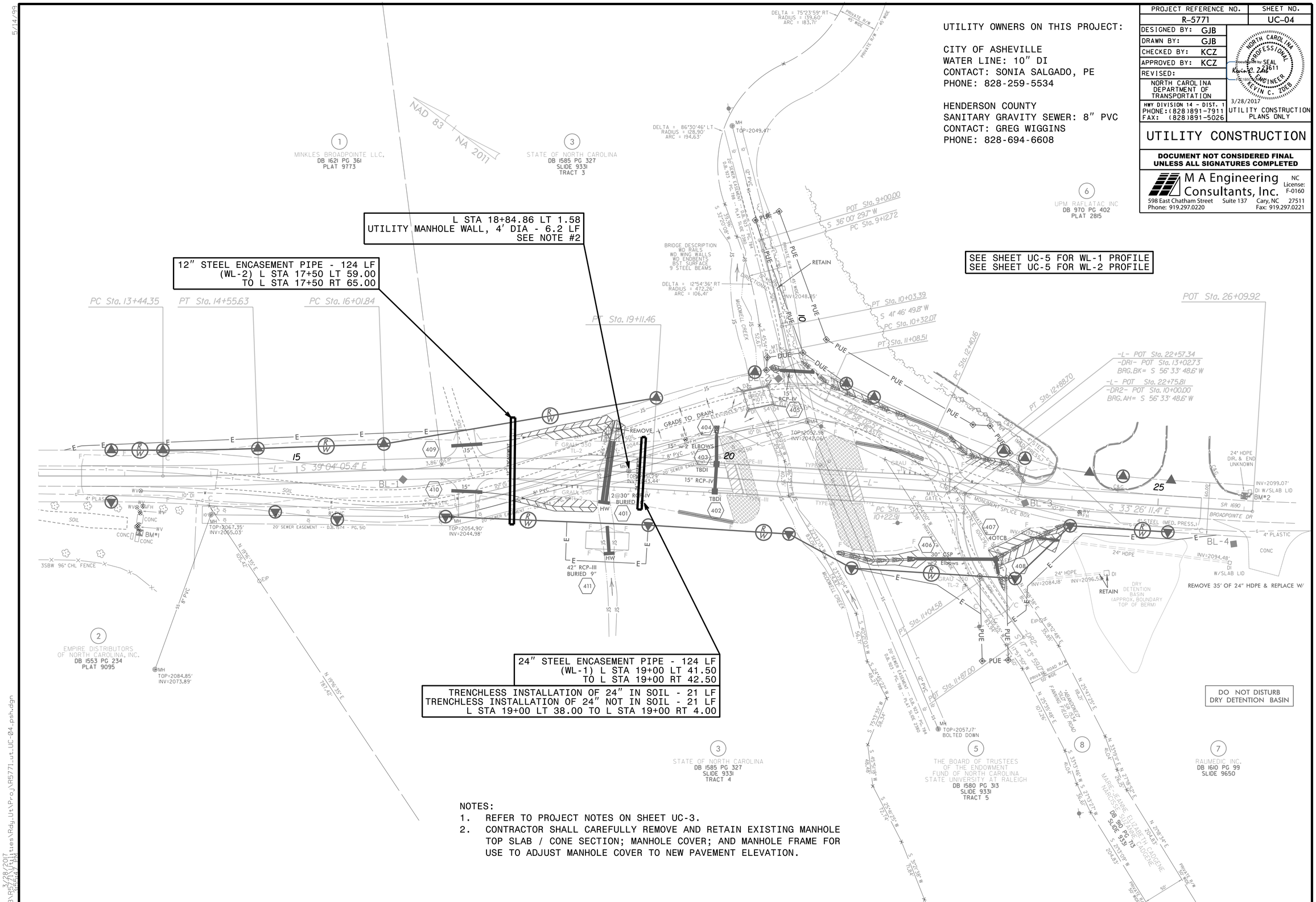

NOTES:
1. REFER TO PROJECT NOTES ON SHEET UC-3.
2. CONTRACTOR SHALL CAREFULLY REMOVE AND RETAIN EXISTING MANHOLE TOP SLAB / CONE SECTION; MANHOLE COVER; AND MANHOLE FRAME FOR USE TO ADJUST MANHOLE COVER TO NEW PAVEMENT ELEVATION.

5/14/99
3/28/2017
659\093\R5771_Utilities\Rdy_Ut\Proj\R5771_ut_UC-04_psh.dgn

DocuSign Envelope ID: 5E2A2891-D788-443E-8B85-91A4624CA35B

5/28/93

PROJECT REFERENCE NO.	SHEET NO.
R-5771	UC-05

DESIGNED BY: KCZ
DRAWN BY: GJB
CHECKED BY: KCZ
APPROVED BY: KCZ
REVISED:

NORTH CAROLINA DEPARTMENT OF TRANSPORTATION

UTILITIES ENGINEERING SEC.
PHONE:(919)707-6690
FAX:(919)250-4151

NORTH CAROLINA PROFESSIONAL SEAL 027661 ENGINEER KEVIN C. ZOEB
DocuSigned by: Kevin C. Zoeb
3/28/2017

UTILITY CONSTRUCTION PLANS ONLY

UTILITY CONSTRUCTION

M A Engineering Consultants, Inc.
NC License: F-0160
598 East Chatham Street Suite 137 Cary, NC 27511
Phone: 919.297.0220 Fax: 919.297.0221

DOCUMENT NOT CONSIDERED FINAL UNLESS ALL SIGNATURES COMPLETED

-WL-1-

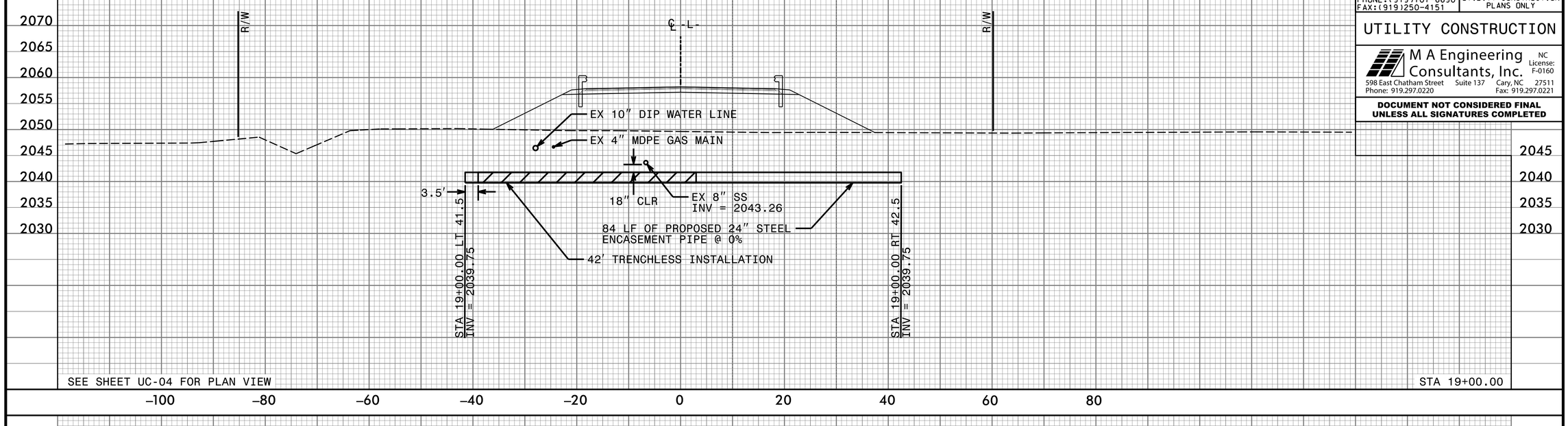

-WL-2-

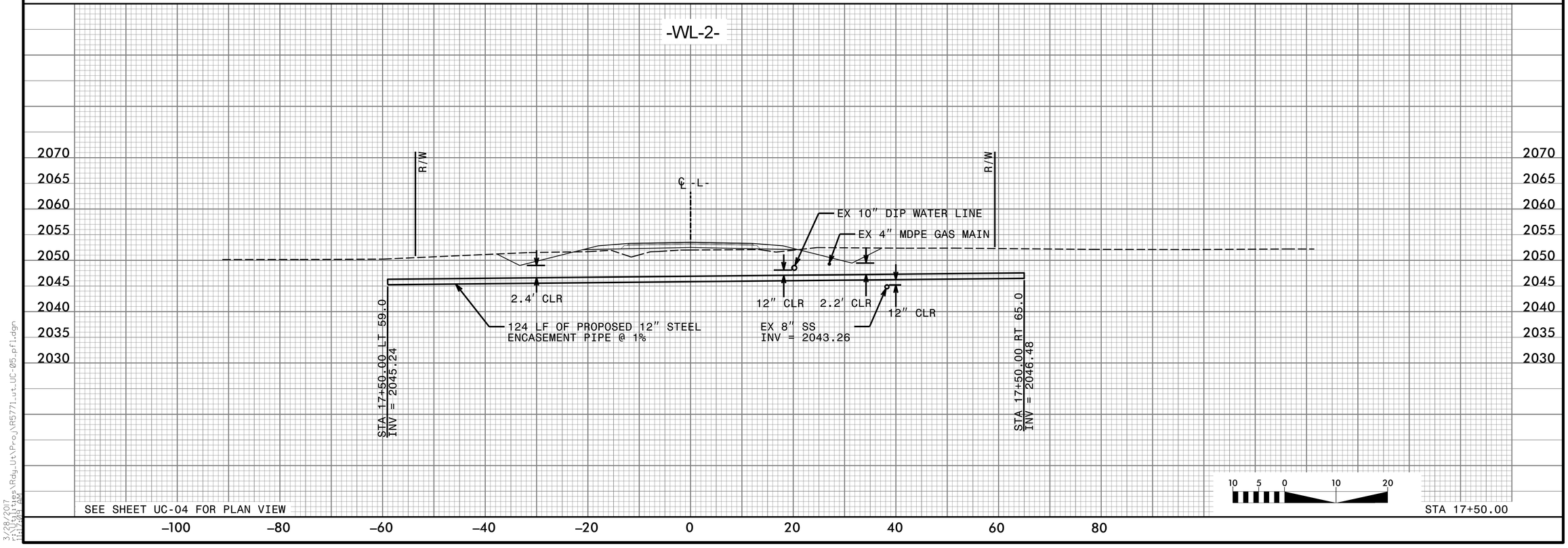

3/28/2017
J:\PROJECTS\Rdy_Uts\Proj\R5771_ut_UC-05_pfl.dgn
11:17:03 AM

TIP PROJECT: R-5771

T.I.P. NO.	SHEET NO.
R-5771	UO-1

NOTE:
ALL UTILITY WORK SHOWN ON THIS SHEET IS DONE BY OTHERS.
NO PAYMENT WILL BE MADE TO THE CONTRACTOR FOR UTILITY WORK SHOWN ON THIS SHEET.

STATE OF NORTH CAROLINA
DIVISION OF HIGHWAYS

UTILITIES BY OTHERS PLANS
HENDERSON COUNTY

LOCATION: SR 1690 (BROADPOINTE DRIVE) INCLUDING BRIDGE #107 OVER McDOWELL CREEK

TYPE OF WORK: RELOCATION OF POWER AND PHONE

See Sheet 1-A For Index of Sheets
See Sheet 1-B For Symbology

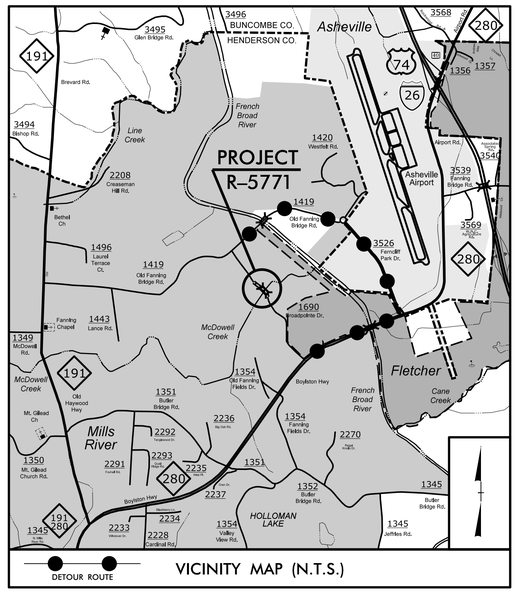

VICINITY MAP (N.T.S.)

NAD 83/2011

UO-2

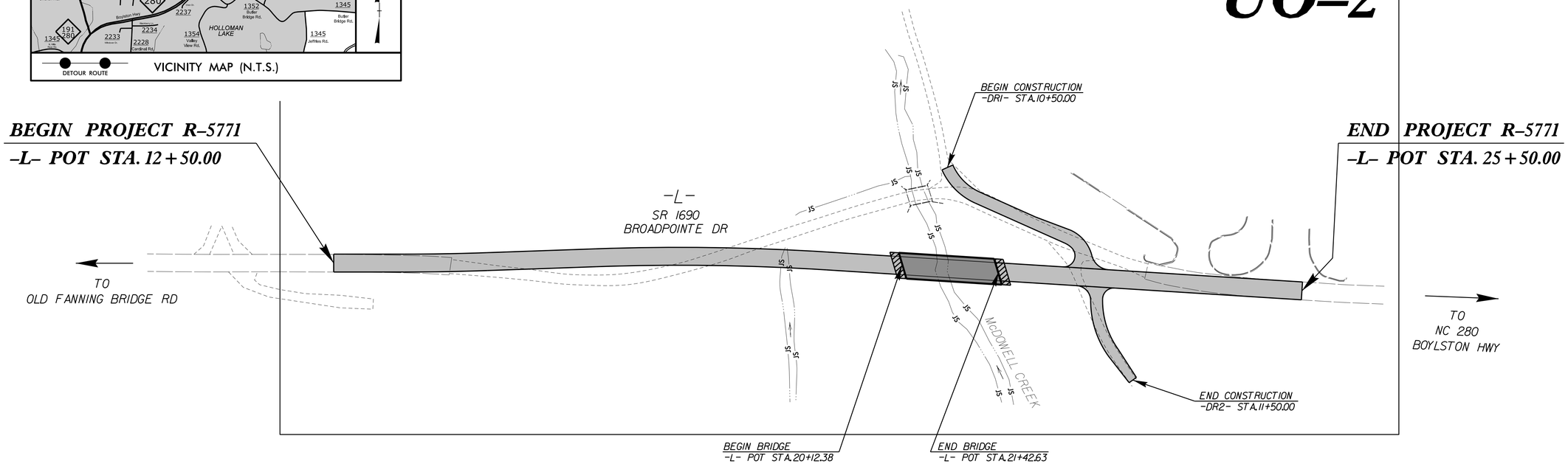

GRAPHIC SCALES

50 25 0 50 100
PLANS

50 25 0 50 100
PROFILE (HORIZONTAL)

10 5 0 10 20
PROFILE (VERTICAL)

INDEX OF SHEETS

SHEET NO.:	DESCRIPTION:
UO-1	TITLE SHEET
UO-2	UBO PLAN SHEET

UTILITY OWNERS WITH CONFLICTS

(A) POWER - DUKE ENERGY
(B) PHONE - AT&T

PREPARED IN THE OFFICE OF:

M A Engineering Consultants, Inc.
598 East Chatham Street - Suite 137
Cary, NC 27511
Phone: 919.297.0220 Fax: 919.297.0221
NC License: F-0160

WEBB WHITE — UTILITY PROJECT MANAGER

DIVISION OF HIGHWAYS
DIVISION 14
4142 HAYWOOD ROAD
MILLS RIVER, NC 28742

STEVE CANNON, PE — DISTRICT ENGINEER
BOB GOLDING — UTILITY COORDINATOR

09/08/99

3/28/2017
r:\utilities\rdy_ut\proj\R5771LU0_tsh.dgn
10:51:16 AM

PROJECT REFERENCE NO.	SHEET NO.
R-5771	U0-02

UTILITIES BY OTHERS

NOTE:
ALL UTILITY WORK SHOWN ON THIS SHEET WILL BE DONE BY OTHERS. NO PAYMENT WILL BE MADE TO THE CONTRACTOR FOR UTILITY WORK SHOWN ON THIS SHEET.

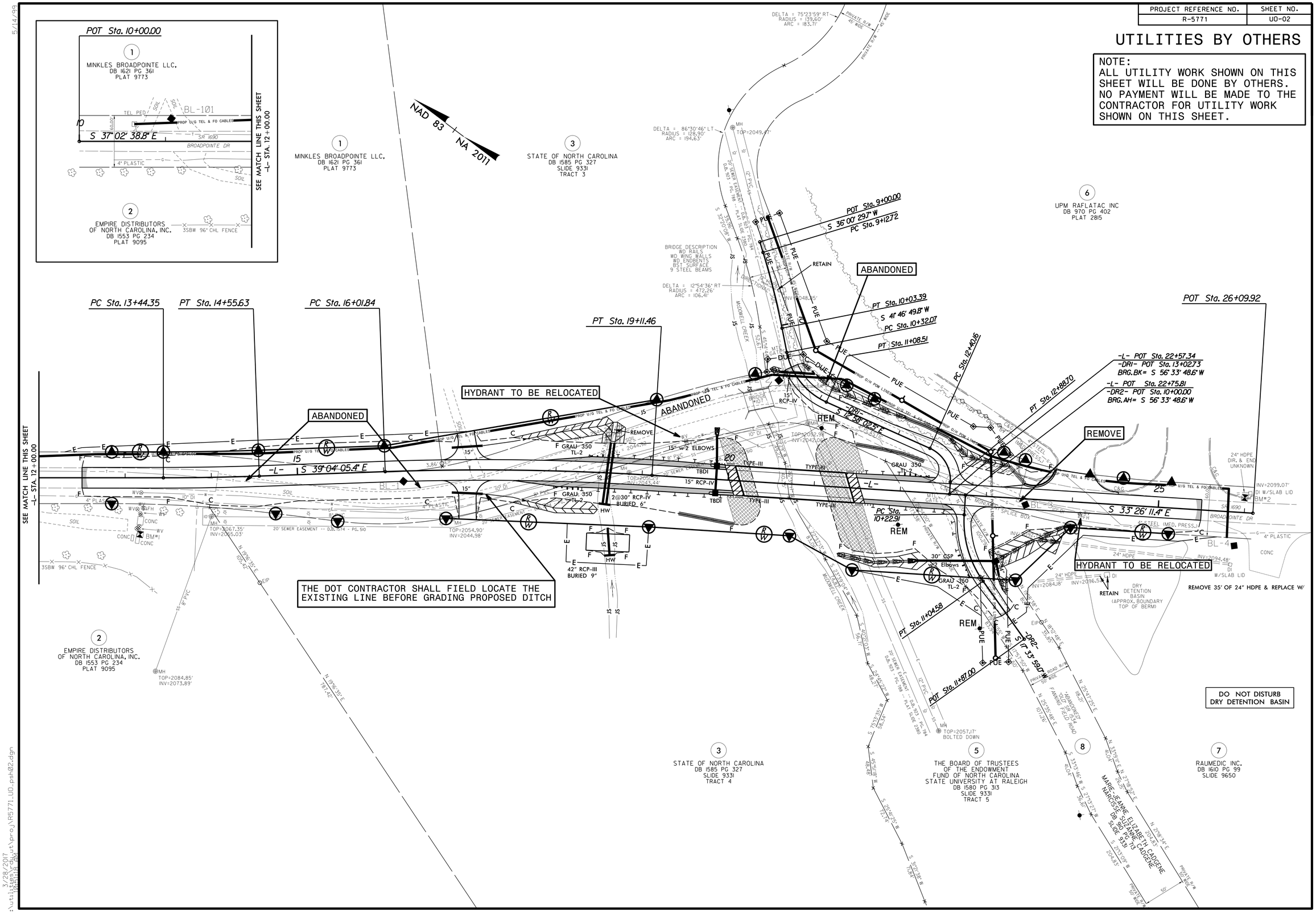

5/14/99

3/28/2017
r:\utilities\proj\R5771_U0_psh02.dgn